100880972



Welcome to the 2020 Edition of the New York State Codes



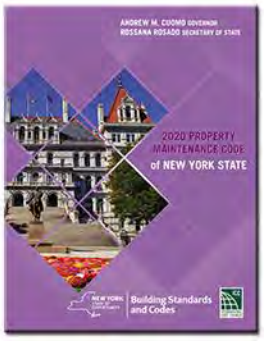

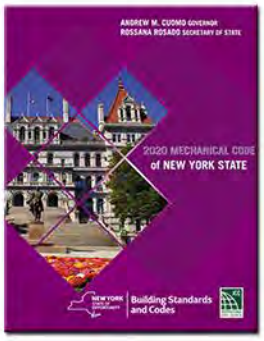

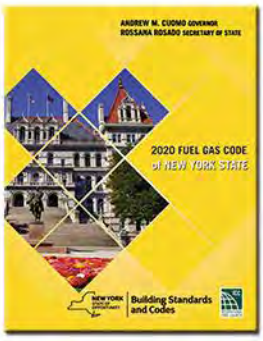







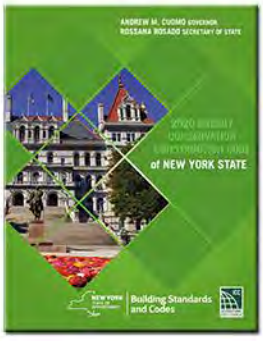

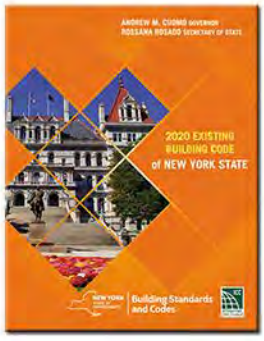

Helpful links:

- ICC Website
- ICC Product Store
- Digital Product FAQ
- ES Evaluation Reports of products not prescribed in the code

NEW YORK STATE OF OPPORTUNITY. | Building Standards and Codes

100880972

ANDREW M. CUOMO GOVERNOR
ROSSANA ROSADO SECRETARY OF STATE



2020 BUILDING CODE of NEW YORK STATE

NEW YORK STATE OF OPPORTUNITY.

Building Standards and Codes

ICC INTERNATIONAL CODE COUNCIL®

INTERNATIONAL CODE COUNCIL®

Copyright © 2019 ICC & NYSDOS. ALL RIGHTS RESERVED. Accessed by Lauren Gualdino (lgualdino@briarcliffmanor.org), (-) Order Number #100880972 on May 08, 2020 07:05 AM (PDT) pursuant to License Agreement with ICC & NYSDOS. No further reproduction, no

100880972

ANDREW M. CUOMO GOVERNOR
ROSSANA ROSADO SECRETARY OF STATE

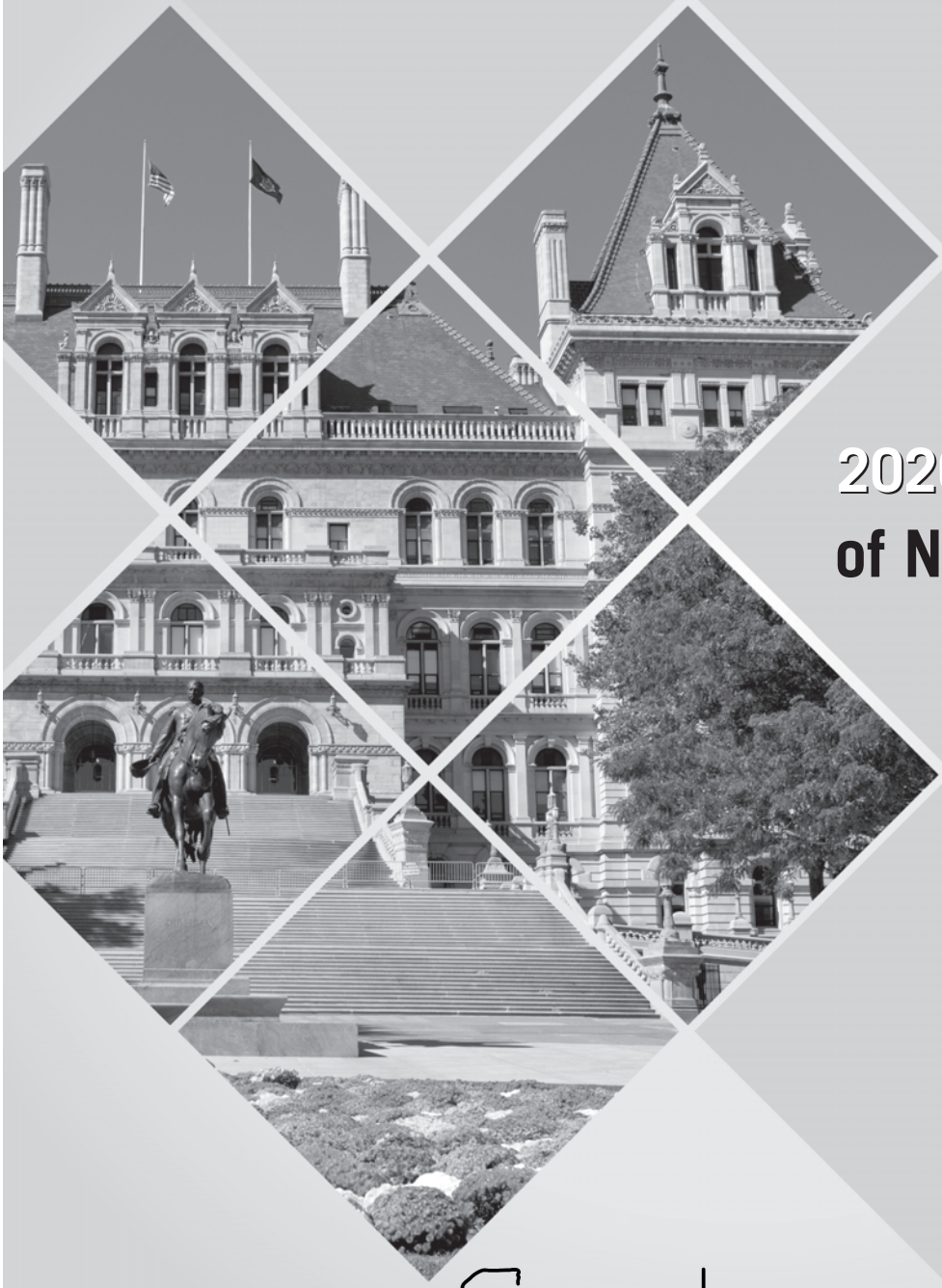

2020 BUILDING CODE of NEW YORK STATE

NEW YORK STATE OF OPPORTUNITY.

Building Standards and Codes

ICC INTERNATIONAL CODE COUNCIL®

INTERNATIONAL CODE COUNCIL®

Copyright © 2019 ICC & NYSDOS. ALL RIGHTS RESERVED. Accessed by Lauren Gualdino (lgualdino@briarcliffmanor.org), (-) Order Number #100880972 on May 08, 2020 07:05 AM (PDT) pursuant to License Agreement with ICC & NYSDOS. No further reproduction, no

100880972

2020 Building Code of New York State

Publication Date: November 2019

ISBN: 978-1-60983-941-3

COPYRIGHT © 2019
by
INTERNATIONAL CODE COUNCIL, INC.
and
NEW YORK STATE DEPARTMENT OF STATE

ALL RIGHTS RESERVED. This 2020 *Building Code of New York State* is a copyrighted work owned by the International Code Council, Inc. ("ICC"). This work contains: (1) portions of the ICC International Codes® (I-Codes®); (2) material that is a derivative of the I-Codes; and (3) wholly original materials prepared by the New York State Department of State (NYSDOS) or by the New York State Fire Prevention and Building Code Council (the "Code Council"). The International Code Council, Inc., has copyright ownership of the I-Codes. The International Code Council and the New York State Department of State have joint copyright ownership of the material that is a derivative of the I-Codes. The New York State Department of State has copyright ownership of the wholly original materials prepared by the New York State Department of State and/or by the Code Council. As to the ICC International Codes, all rights, including the right of reproduction in whole or in part in any form, are reserved to the International Code Council. As to the material that is derivative of the I-Codes, all rights, including the right of reproduction in whole or in part in any form, are reserved to the International Code Council and the New York State Department of State, jointly. As to the wholly original materials prepared by the New York State Department of State or by the Code Council, all rights, including the right of reproduction in whole or in part in any form, are reserved to the New York State Department of State. Without advance written permission from the copyright owner, no part of this book may be reproduced, distributed or transmitted in any form or by any means, including, without limitation, electronic, optical or mechanical means (by way of example, and not limitation, photocopying or recording by or in an information storage retrieval system). For information on use rights and permissions, please contact: ICC Publications, 4051 Flossmoor Road, Country Club Hills, IL 60478. Phone 1-888-ICC-SAFE (422-7233).

Trademarks: "International Code Council," the "International Code Council" logo, "ICC," the "ICC" logo, "International Building Code," "IBC" and other names and trademarks appearing in this book are registered trademarks of the International Code Council, Inc., and/or its licensors (as applicable), and may not be used without permission.

T024578

PRINTED IN THE USA

INTERNATIONAL CODE COUNCIL®

Copyright © 2019 ICC & NYSDOS. ALL RIGHTS RESERVED. Accessed by Lauren Gualdino (lgualdino@briarcliffmanor.org), (-) Order Number #100880972 on May 08, 2020 07:05 AM (PDT) pursuant to License Agreement with ICC & NYSDOS. No further reproduction, no

100880972

ACKNOWLEDGMENTS

With gratitude, the Department of State acknowledges the contributions of the following individuals in the creation of the 2020 Codes of New York State:

STATE FIRE PREVENTION AND BUILDING CODE COUNCIL

Rossana Rosado	Chair – Secretary of State, New York State Department of State Designee - Matthew W. Tebo, Esq.
Francis J. Nerney, Jr.	State Fire Administrator, Office of Fire Prevention and Control Designee - Paul Martin
RuthAnne Visnauskas	Commissioner, Division of Housing and Community Renewal Designee - Michael Weber Designee - Joseph Palozzola
Roberta Reardon	Commissioner, New York State Department of Labor Designee - Vincent R. Rapacciuolo
Honorable Bill de Blasio	Mayor, City of New York Designee - Keith Wen, NYC Department of Buildings
Honorable Michael R. Sabatino, Jr.	Councilmember, City of Yonkers
Claudia K. Braymer, Esq.	County Board of Supervisors, Warren County
David A. Seeley	Supervisor, Town of Irondequoit
Timothy DeRuyscher, P.E. FSFPE	Professional Engineer Representative
Patrick Dolan	Trade Union Representative, Steamfitters Union, 638
Shawn Hamlin, R.A.	Registered Architect Representative, Hamlin Design Group
Robert Hughes	Code Enforcement Representative, Village of Pleasantville
Dominic Marinelli	Persons with Disabilities Representative, United Spinal Association
Joseph J. Toomey	Fire Service Representative, Albany Fire Department
William W. Tuyn	Builders Representative, Forbes Capretto Homes

DEPARTMENT OF STATE

Rossana Rosado	Secretary of State
Brendan Hughes	Executive Deputy Secretary of State
James W. Leary, Esq.	Assistant Executive Deputy Secretary of State
Mark P. Pattison	Deputy Secretary of State for Local Government
Matthew W. Tebo, Esq.	Deputy Secretary of State for Agency Transformation and External Affairs
John R. Addario, P.E.	Director of the Division of Building Standards and Codes
Brian Tollisen, P.E.	Deputy Director of the Division of Building Standards and Codes
Gerard A. Hathaway, R.A.	Assistant Director for Code Development
Kevin Duerr-Clark, P. E.	Assistant Director for Technical Support
Francis “Nick” McAndrew, P.E.	Assistant Director for Educational Services
Joseph Hill, R.A.	Assistant Director for Code Administration
Jeffrey M. Hinderliter, P.E.	Professional Engineer
Emma Gonzalez-Laders, R.A., LEED AP	Senior Architect
Daniel Carroll	Code Compliance Specialist I
Janet Miller	Program Aide
Joseph P. Ball, Esq.	Supervising Attorney
Panagiota K. Hyde, Esq.	Senior Attorney

IN MEMORIAM

John H. Flanagan	Code Enforcement Representative, Code Council Member (2003–2017)
Honorable Judith Kennedy	Mayor, City of Newburgh, Code Council Member (2013–2018)
Brendan Fitzgerald	Executive Deputy Secretary of State (2016–2018)

INTERNATIONAL CODE COUNCIL®
Copyright © 2019 ICC & NYSDOS. ALL RIGHTS RESERVED. Accessed by Lauren Gualdino (lgualdino@briarcliffmanor.org), (-) Order Number #100880972 on May 08, 2020 07:05 AM (PDT) pursuant to License Agreement with ICC & NYSDOS. No further reproduction, no

100880972

INTERNATIONAL CODE COUNCIL®
Copyright © 2019 ICC & NYSDOS. ALL RIGHTS RESERVED. Accessed by Lauren Gualdino (lgualdino@briarcliffmanor.org), (-) Order Number #100880972 on May 08, 2020 07:05 AM (PDT) pursuant to License Agreement with ICC & NYSDOS. No further reproduction, no

100880972

PREFACE

Introduction

The *Building Code of New York State* establishes minimum requirements for building systems using prescriptive and performance-related provisions. It is founded on broad-based principles that make possible the use of new materials and new building designs. This 2020 edition was developed as a derivative work of the 2018 edition of the *International Building Code*® (IBC®) published by the International Code Council® (ICC®).

Intention

This code is intended to establish provisions that adequately protect public health, safety and welfare; that do not unnecessarily increase construction costs; that do not restrict the use of new materials, products or methods of construction; and that do not give preferential treatment to particular types or classes of materials, products or methods of construction.

Letter Designations in Front of Section Numbers

The bracketed letter designations for committees responsible for portions of this code are as follows:

ICC Code Development Committee

[A] = Administrative Code Development Committee;

[BE] = IBC—Egress Code Development Committee;

[BF] = IBC—Fire Safety Code Development Committee;

[BG] = IBC—General Code Development Committee;

[BS] = IBC—Structural Code Development Committee;

[E] = International Commercial Energy Conservation Code Development Committee or International Residential Energy Conservation Code Development Committee;

[EB] = International Existing Building Code Development Committee;

[F] = International Fire Code Development Committee;

[FG] = International Fuel Gas Code Development Committee;

[M] = International Mechanical Code Development Committee; and

[P] = International Plumbing Code Development Committee.

New York State Code Development

[NY] = New York State Department of State.

Marginal Markings

Solid vertical lines in the margins within the body of the code indicate a technical change from the requirements of the 2015 edition of the I-Codes®. Deletion indicators in the form of an arrow (➡) are provided in the margin where an entire section, paragraph, exception or table has been deleted or an item in a list of items or a table has been deleted.

INTERNATIONAL CODE COUNCIL®
Copyright © 2019 ICC & NYSDOS. ALL RIGHTS RESERVED. Accessed by Lauren Gualdino (lgualdino@briarcliffmanor.org), (-) Order Number #100880972 on May 08, 2020 07:05 AM (PDT) pursuant to License Agreement with ICC & NYSDOS. No further reproduction, no

100880972

A single asterisk [*] placed in the margin indicates that text or a table has been relocated within the code. A double asterisk [**] placed in the margin indicates that the text or table immediately following it has been relocated there from elsewhere in the code. The following table indicates such relocations in the 2020 edition of the *Building Code of New York State*.

2020 LOCATION	2015 LOCATION
705.2.3.1	1406.3
705.2.4	1406.4
708.4.2	718.3.2
708.4.2	718.3.3
708.4.2	718.4.2
708.4.2	718.4.3
2304.11.1.1	602.4.3
2304.11.1.2	602.4.4
2304.11.1.3	602.4.5
2304.11.3	602.4.6
2304.11.3.2	602.4.6.1
2304.11.3.1	602.4.6.2
2304.11.4.1	602.4.7
2304.11.2	602.4.8
2304.11.2.2	602.4.8.1
2304.11.2.1	602.4.8.2
T2304.11.4.1	602.4

Italicized Terms

Selected words and terms defined in Chapter 2, Definitions, are italicized where they appear in code text and the Chapter 2 definition applies. Where such words and terms are not italicized, common-use definitions apply. The words and terms selected have code-specific definitions that the user should read carefully to facilitate better understanding of the code. **Note:** In Sections 1903 through 1905, italics indicate provisions that differ from ACI 318.

INTERNATIONAL CODE COUNCIL®
Copyright © 2019 ICC & NYSDOS. ALL RIGHTS RESERVED. Accessed by Lauren Gualdino (lgualdino@briarcliffmanor.org), (-) Order Number #100880972 on May 08, 2020 07:05 AM (PDT) pursuant to License Agreement with ICC & NYSDOS. No further reproduction, no

100880972

EFFECTIVE USE OF THE BUILDING CODE OF NEW YORK STATE

The *Building Code of New York State* (BCNYS) is a code that provides minimum requirements to safeguard the public health, safety and general welfare of the occupants of new and existing buildings and structures.

The BCNYS addresses structural strength, means of egress, sanitation, adequate lighting and ventilation, accessibility, energy conservation and life safety in regard to new and existing buildings, facilities and systems.

The BCNYS applies to all occupancies, including one- and two-family dwellings and townhouses that are not within the scope of the *Residential Code of New York State* (RCNYS). The RCNYS is referenced for coverage of detached one- and two-family dwellings and townhouses as defined in the exception to Section 101.2 and the definition for "Townhouse" in Chapter 2. The BCNYS applies to all types of buildings and structures unless exempted.

Arrangement and Format of the 2020 BCNYS

Before applying the requirements of the BCNYS, it is beneficial to understand its arrangement and format. The BCNYS, like other codes published by ICC, is arranged and organized to follow sequential steps that generally occur during a plan review or inspection.

Chapters	Subjects
1–2	Administration and definitions
3	Use and occupancy classifications
4, 31	Special requirements for specific occupancies or elements
5–6	Height and area limitations based on type of construction
7–9	Fire resistance and protection requirements
10	Requirements for evacuation
11	Specific requirements to allow use and access to a building for persons with disabilities
12–13, 27–30	Building systems, such as lighting, HVAC, plumbing fixtures, elevators
14–26	Structural components—performance and stability
32	Encroachment outside of property lines
33	Safeguards during construction
35	Referenced standards
Appendices A–P	Appendices

INTERNATIONAL CODE COUNCIL®
Copyright © 2019 ICC & NYSDOS. ALL RIGHTS RESERVED. Accessed by Lauren Gualdino (lgualdino@briarcliffmanor.org), (-) Order Number #100880972 on May 08, 2020 07:05 AM (PDT) pursuant to License Agreement with ICC & NYSDOS. No further reproduction, no

100880972

The BCNYS requirements for hazardous materials, fire-resistance-rated construction, interior finish, fire protection systems, means of egress, emergency and standby power, and temporary structures are directly correlated with the requirements of the *Fire Code of New York State* (FCNYS). The following chapters/sections of the BCNYS are correlated to the FCNYS:

BCNYS Chapter/Section	FCNYS Chapter/Section	Subject
Sections 307, 414, 415	Chapters 50–67	Hazardous materials and Group H requirements
Chapter 7	Chapter 7	Fire-resistance-rated construction (Fire and smoke protection features in the IFC)
Chapter 8	Chapter 8	Interior finish, decorative materials and furnishings
Chapter 9	Chapter 9	Fire protection systems
Chapter 10	Chapter 10	Means of egress
Chapter 27	Section 604	Standby and emergency power
Section 3103	Chapter 31	Temporary structures

The BCNYS requirements for smoke control systems, and smoke and fire dampers are directly correlated to the requirements of the *Mechanical Code of New York State* (MCNYS). BCNYS Chapter 28 is a reference to the MCNYS and the *Fuel Gas Code of New York State* (FGCNYS) for chimneys, fireplaces and barbecues, and all aspects of mechanical systems. The following chapters/sections of the BCNYS are correlated with the MCNYS:

BCNYS Chapter/Section	MCNYS Chapter/Section	Subject
Section 717	Section 607	Smoke and fire dampers
Section 909	Section 513	Smoke control

The BCNYS requirements for plumbing fixtures and toilet rooms are directly correlated to the requirements of the *Plumbing Code of New York State* (PCNYS). The following chapters/sections of the BCNYS are correlated with the PCNYS:

BCNYS Chapter/Section	PCNYS Chapter/Section	Subject
Chapter 29	Chapters 3 & 4	Plumbing fixtures and facilities

The following is a chapter-by-chapter synopsis of the scope and intent of the provisions of the *Building Code of New York State*.

Chapter 1 Scope and Administration. Chapter 1 establishes the limits of applicability of the code and describes how the code is to be applied and enforced. Section 101 identifies which buildings and structures come under its purview and references other codes as applicable. Standards and codes are scoped to the extent referenced (see Section 102.4).

Chapter 2 Definitions. An alphabetical listing of all defined terms is located in Chapter 2. Defined terms that are pertinent to a specific chapter or section are also found in that chapter or section with a reference back to Chapter 2 for the definition. While a defined term may be listed in one chapter or another, the meaning is applicable throughout the code.

Codes are technical documents and every word, term and punctuation mark can impact the meaning of the code text and the intended results. The code often uses terms that have a unique meaning in the code and the code meaning can differ substantially from the ordinarily understood meaning of the term as used outside of the code. Where understanding of a term's definition is especially key to or necessary for understanding a particular code provision, the term is shown in *italics* wherever it appears in the code.

INTERNATIONAL CODE COUNCIL®
Copyright © 2019 ICC & NYSDOS. ALL RIGHTS RESERVED. Accessed by Lauren Gualdino (lgualdino@briarcliffmanor.org), (-) Order Number #100880972 on May 08, 2020 07:05 AM (PDT) pursuant to License Agreement with ICC & NYSDOS. No further reproduction, no

100880972

The user of the code should be familiar with and consult this chapter because the definitions are essential to the correct administration and enforcement of the code. Where a term is not defined, such terms shall have the ordinarily accepted meaning.

Chapter 3 Use and Occupancy Classification. Chapter 3 provides for the classification of buildings, structures and parts thereof based on the purpose or purposes for which they are used. Section 302 identifies the groups into which all buildings, structures and parts thereof must be classified. Sections 303 through 312 identify the occupancy characteristics of each group classification. In some sections, specific group classifications having requirements in common are collectively organized such that one term applies to all. For example, Groups A-1, A-2, A-3, A-4 and A-5 are individual groups for assembly-type buildings. The general term "Group A," however, includes each of these individual groups. Other groups include Business (B), Educational (E), Factory (F-1, F-2), High Hazard (H-1, H-2, H-3, H-4, H-5), Institutional (I-1, I-2, I-3, I-4), Mercantile (M), Residential (R-1, R-2, R-3, R-4), Storage (S-1, S-2) and Utility (U). In some occupancies, the smaller number means a higher hazard, but that is not always the case.

Defining the use of the buildings is very important as it sets the tone for the remaining chapters of the code. Occupancy works with the height, area and construction type requirements in Chapters 5 and 6, as well as the special provisions in Chapter 4, to determine "equivalent risk," or providing a reasonable level of protection or life safety for building occupants. The determination of equivalent risk involves three interdependent considerations: (1) the level of fire hazard associated with the specific occupancy of the facility; (2) the reduction of fire hazard by limiting the floor area and the height of the building based on the fuel load (combustible contents and burnable building components); and (3) the level of overall fire resistance provided by the type of construction used for the building. The greater the potential fire hazards indicated as a function of the group, the lesser the height and area allowances for a particular construction type.

Occupancy classification also plays a key part in organizing and prescribing the appropriate protection measures. As such, threshold requirements for fire protection and means of egress systems are based on occupancy classification (see Chapters 9 and 10). Other sections of the code also contain requirements respective to the classification of building groups. For example, Section 706 specifies requirements for fire wall fire-resistance ratings that are tied to the occupancy classification of a building and Section 803.11 contains interior finish requirements that are dependent upon the occupancy classification. The use of the space, rather than the occupancy of the building, is utilized for determining occupant loading (Section 1004) and live loading (Section 1607).

Over the useful life of a building, the activities in the building will evolve and change. Where the provisions of the code address uses differently, moving from one activity to another or from one level of activity to another is, by definition, a change of occupancy. The new occupancy must be in compliance with the applicable provisions of the *Existing Building Code of New York State* (EBCNYS).

Chapter 4 Special Detailed Requirements Based on Use and Occupancy. Chapter 4 contains the requirements for protecting special uses and occupancies, which are supplemental to the remainder of the code. Chapter 4 contains provisions that may alter requirements found elsewhere in the code; however, the general requirements of the code still apply unless modified within the chapter. For example, the height and area limitations established in Chapter 5 apply to all special occupancies unless Chapter 4 contains height and area limitations. In this case, the limitations in Chapter 4 supersede those in other sections. An example of this is the height and area limitations for open parking garages given in Section 406.5.4, which supersede the limitations given in Sections 504 and 506.

In some instances, it may not be necessary to apply the provisions of Chapter 4. For example, if a covered mall building complies with the provisions of the code for Group M, Section 402 does not apply; however, other sections that address a use, process or operation must be applied to that specific occupancy, such as stages and platforms, special amusement buildings and hazardous materials (Sections 410, 411 and 414).

The chapter includes requirements for buildings and conditions that apply to one or more groups, such as high-rise buildings, underground buildings or atriums. Special uses may also imply specific occupancies and operations, such as for Group H, hazardous materials, application of flammable finishes, drying rooms, organic coatings and combustible storage or hydrogen fuel gas rooms, all of which are coordinated with the FCNYS. Unique consideration is taken for special use areas, such as covered mall buildings, motor-vehicle-related occupancies, special amusement buildings and aircraft-related occupancies. Special facilities within other occupancies are considered, such as stages and platforms, motion picture projection rooms, children's play structures and storm shelters. Finally, in order that the overall package of protection features can be easily understood, unique

INTERNATIONAL CODE COUNCIL®
Copyright © 2019 ICC & NYSDOS. ALL RIGHTS RESERVED. Accessed by Lauren Gualdino (lgualdino@briarcliffmanor.org), (-) Order Number #100880972 on May 08, 2020 07:05 AM (PDT) pursuant to License Agreement with ICC & NYSDOS. No further reproduction, no

100880972

considerations for specific occupancies are addressed: Groups I-1, I-2, I-3, R-1, R-2, R-3 and R-4; ambulatory care facilities and live/work units

Chapter 5 General Building Heights and Areas. Chapter 5 contains the provisions that regulate the minimum type of construction for area limits and height limits based on the occupancy of the building. Height and area increases (including allowances for basements, mezzanines and equipment platforms) are permitted based on open frontage for fire department access, separation and the type of sprinkler protection provided (Sections 503–506, 510). These thresholds are reduced for buildings over three stories in height in accordance with Sections 506.2.3 and 506.2.4. Provisions include the protection and/or separation of incidental uses (Table 509), accessory occupancies (Section 508.2) and mixed uses in the same building (Sections 506.2.2, 506.2.4, 508.3, 508.4 and 510). Unlimited area buildings are permitted in certain occupancies when they meet special provisions (Section 507).

Tables 504.3, 504.4 and 506.2 are the keystones in setting thresholds for building size based on the building's use and the materials with which it is constructed. If one then looks at Tables 504.3, 504.4 and 506.2, the relationship among group classification, allowable heights and areas and types of construction becomes apparent. Respective to each group classification, the greater the fire-resistance rating of structural elements, as represented by the type of construction, the greater the floor area and height allowances. The greater the potential fire hazards indicated as a function of the group, the lesser the height and area allowances for a particular construction type. In addition, the tables list criteria for buildings with and without automatic sprinkler systems.

Chapter 6 Types of Construction. The interdependence of these fire safety considerations can be seen by first looking at Tables 601 and 602, which show the fire-resistance ratings of the principal structural elements comprising a building in relation to the five classifications for types of construction. Type I construction is the classification that generally requires the highest fire-resistance ratings for structural elements, whereas Type V construction, which is considered a combustible type of construction, generally requires the least amount of fire-resistance-rated structural elements. The greater the potential fire hazards indicated as a function of the group, the lesser the height and area allowances for a particular construction type. Section 603 includes a list of combustible elements that can be part of a noncombustible building (Types I and II construction).

Chapter 7 Fire and Smoke Protection Features. The provisions of Chapter 7 present the fundamental concepts of fire performance that all buildings are expected to achieve in some form. This chapter identifies the acceptable materials, techniques and methods by which proposed construction can be designed and evaluated against to determine a building's ability to limit the impact of fire. The fire-resistance-rated construction requirements within Chapter 7 provide passive resistance to the spread and effects of fire. Types of separations addressed include fire walls, fire barriers, fire partitions, horizontal assemblies, smoke barriers and smoke partitions. A fire produces heat that can weaken structural components and smoke products that cause property damage and place occupants at risk. The requirements of Chapter 7 work in unison with height and area requirements (Chapter 5), active fire detection and suppression systems (Chapter 9) and occupant egress requirements (Chapter 10) to contain a fire should it occur while helping ensure occupants are able to safely exit.

Chapter 8 Interior Finishes. This chapter contains the performance requirements for controlling fire growth within buildings by restricting interior finish and decorative materials. Past fire experience has shown that interior finish and decorative materials are key elements in the development and spread of fire. The provisions of Chapter 8 require materials used as interior finishes and decorations to meet certain flame-spread index or flame-propagation criteria based on the relative fire hazard associated with the occupancy. As smoke is also a hazard associated with fire, this chapter contains limits on the smoke development characteristics of interior finishes. The performance of the material is evaluated based on test standards.

Chapter 9 Fire Protection Systems. Chapter 9 prescribes the minimum requirements for active systems of fire protection equipment to perform the following functions: detect a fire; alert the occupants or fire department of a fire emergency; and control smoke and control or extinguish the fire. Generally, the requirements are based on the occupancy, the height and the area of the building, because these are the factors that most affect fire-fighting capabilities and the relative hazard of a specific building or portion thereof. This chapter parallels and is substantially duplicated in Chapter 9 of the *Fire Code of New York State* (FCNYS); however, the FCNYS Chapter 9 also contains

INTERNATIONAL CODE COUNCIL®
Copyright © 2019 ICC & NYSDOS. ALL RIGHTS RESERVED. Accessed by Lauren Gualdino (lgualdino@briarcliffmanor.org), (-) Order Number #100880972 on May 08, 2020 07:05 AM (PDT) pursuant to License Agreement with ICC & NYSDOS. No further reproduction, no

100880972

periodic testing criteria that are not contained in the BCNYS. In addition, the special fire protection system requirements based on use and occupancy found in BCNYS Chapter 4 are duplicated in FCNYS Chapter 9 as a user convenience.

Chapter 10 Means of Egress. The general criteria set forth in Chapter 10 regulating the design of the means of egress are established as the primary method for protection of people in buildings by allowing timely relocation or evacuation of building occupants. Both prescriptive and performance language is utilized in this chapter to provide for a basic approach in the determination of a safe exiting system for all occupancies. It addresses all portions of the egress system (i.e., exit access, exits and exit discharge) and includes design requirements as well as provisions regulating individual components. The requirements detail the size, arrangement, number and protection of means of egress components. Functional and operational characteristics also are specified for the components that will permit their safe use without special knowledge or effort. The means of egress protection requirements work in coordination with other sections of the code, such as protection of vertical openings (see Chapter 7), interior finish (see Chapter 8), fire suppression and detection systems (see Chapter 9) and numerous others, all having an impact on life safety. Chapter 10 of the BCNYS is duplicated in Chapter 10 of the FCNYS; however, the FCNYS contains one additional section on the means of egress system in existing buildings.

Chapter 11 Accessibility. Chapter 11 contains provisions that set forth requirements for accessibility of buildings and their associated sites and facilities for people with physical disabilities. The fundamental philosophy of the code on the subject of accessibility is that everything is required to be accessible. This is reflected in the basic applicability requirement (see Section 1103.1). The code's scoping requirements then address the conditions under which accessibility is not required in terms of exceptions to this general mandate. While the BCNYS contains scoping provisions for accessibility (for example, what, where and how many), ICC A117.1, *Accessible and Usable Buildings and Facilities*, is the referenced standard for the technical provisions (in other words, how).

There are many accessibility issues that not only benefit people with disabilities, but also provide a tangible benefit to people without disabilities. This type of requirement can be set forth in the code as generally applicable without necessarily identifying it specifically as an accessibility-related issue. Such a requirement would then be considered as having been "mainstreamed." For example, visible alarms are located in Chapter 9 and accessible means of egress and ramp requirements are addressed in Chapter 10.

Accessibility criteria for existing buildings are addressed in the *Existing Building Code of New York State* (EBCNYS).

Appendix E is supplemental information included in the code to address accessibility for items in the 2010 *ADA Standards for Accessible Design* that were not typically enforceable through the standard traditional building code enforcement approach system (for example, beds, room signage). The *Residential Code of New York State* (RCNYS) references Chapter 11 for accessibility provisions; therefore, this chapter may be applicable to housing covered under the RCNYS.

Chapter 12 Interior Environment. Chapter 12 provides minimum standards for the interior environment of a building. The standards address the minimum sizes of spaces, minimum temperature levels, and minimum light and ventilation levels. The collection of requirements addresses limiting sound transmission through walls, ventilation of attic spaces and under floor spaces (crawl spaces). Finally, the chapter provides minimum standards for toilet and bathroom construction, including privacy shielding and standards for walls, partitions and floors to resist water intrusion and damage.

Chapter 13 Energy Efficiency. The purpose of Chapter 13 is to provide minimum design requirements that will promote efficient utilization of energy in buildings. The requirements are directed toward the design of building envelopes with adequate thermal resistance and low air leakage, and toward the design and selection of mechanical, water heating, electrical and illumination systems that promote effective use of depletable energy resources. For the specifics of these criteria, Chapter 13 requires design and construction in compliance with the *Energy Conservation Construction Code of New York State* (ECCCNYS).

Chapter 14 Exterior Walls. This chapter addresses requirements for exterior walls of buildings. Minimum standards for wall covering materials, installation of wall coverings and the ability of the wall to provide weather protection are provided. This chapter also requires exterior walls that are close to lot lines, or that are bearing walls for certain types of construction, to comply with the min-

INTERNATIONAL CODE COUNCIL®
Copyright © 2019 ICC & NYSDOS. ALL RIGHTS RESERVED. Accessed by Lauren Gualdino (lgualdino@briarcliffmanor.org), (-) Order Number #100880972 on May 08, 2020 07:05 AM (PDT) pursuant to License Agreement with ICC & NYSDOS. No further reproduction, no

100880972

imum fire-resistance ratings specified in Chapters 6 and 7. The installation of each type of wall covering, be it wood, masonry, vinyl, metal composite material or an exterior insulation and finish system, is critical to its long-term performance in protecting the interior of the building from the elements and the spread of fire. Limitations on the use of combustible materials on exterior building elements such as balconies, eaves, decks and architectural trim are also addressed in this chapter.

Chapter 15 Roof Assemblies and Rooftop Structures. Chapter 15 provides standards for both roof assemblies and structures that sit on top of the roofs of buildings. The criteria address roof construction and covering, including the weather-protective barrier at the roof and, in most circumstances, a fire-resistant barrier. The chapter is prescriptive in nature and is based on decades of experience with various traditional materials, but it also addresses newer products such as photovoltaic shingles. These prescriptive rules are very important for satisfying performance of one type of roof covering or another. Section 1510 addresses rooftop structures, including penthouses, tanks, towers and spires. Rooftop penthouses larger than prescribed in this chapter must be treated as a story under Chapter 5.

Chapter 16 Structural Design. Chapter 16 prescribes minimum structural loading requirements for use in the design and construction of buildings and structural components. It includes minimum design loads, assignment of risk categories and permitted design methodologies. Standards are provided for minimum design loads (live, dead, snow, wind, rain, flood, ice and earthquake as well as the required load combinations). The application of these loads and adherence to the serviceability criteria will enhance the protection of life and property. The chapter references and relies on many nationally recognized design standards. A key standard is the American Society of Civil Engineers' *Minimum Design Loads for Buildings and Other Structures* (ASCE 7). Structural design must address the conditions of the site and location. Therefore, maps are provided of rainfall, seismic, snow and wind criteria in different regions.

Chapter 17 Special Inspections and Tests. Chapter 17 provides a variety of procedures and criteria for testing materials and assemblies, labeling materials and assemblies and special inspection of structural assemblies. This chapter expands on the inspections of Chapter 1 by requiring special inspection where indicated and, in some cases, structural observation. It also spells out additional responsibilities for the owner, contractor, design professionals and special inspectors. Proper assembly of structural components, proper quality of materials used and proper application of materials are essential to ensuring that a building, once constructed, complies with the structural and fire-resistance minimums of the code and the approved design. To determine this compliance often requires continuous or frequent inspection and testing. Chapter 17 establishes standards for special inspection, testing and reporting of the work to the building official.

Chapter 18 Soils and Foundations. Chapter 18 provides criteria for geotechnical and structural considerations in the selection, design and installation of foundation systems to support the loads from the structure above. This chapter includes requirements for soils investigation and site preparation for receiving a foundation, including the allowed load-bearing values for soils and for protecting the foundation from water intrusion. Section 1808 addresses the basic requirements for all foundation types. Later sections address foundation requirements that are specific to shallow foundations and deep foundations. Due care must be exercised in the planning and design of foundation systems based on obtaining sufficient soils information, the use of accepted engineering procedures, experience and good technical judgment.

Chapter 19 Concrete. This chapter provides minimum accepted practices for the design and construction of buildings and structural components using concrete-both plain and reinforced. Chapter 19 relies primarily on the reference to American Concrete Institute (ACI) 318, *Building Code Requirements for Structural Concrete*. This chapter also includes references to additional standards. Structural concrete must be designed and constructed to comply with this code and all listed standards. There are specific sections of the chapter addressing concrete slabs, anchorage to concrete and shotcrete. Because of the variable properties of material and numerous design and construction options available in the uses of concrete, due care and control throughout the construction process is necessary.

Chapter 20 Aluminum. Chapter 20 contains standards for the use of aluminum in building construction. Only the structural applications of aluminum are addressed. This chapter does not address the use of aluminum in specialty products such as storefront or window framing or archi-

INTERNATIONAL CODE COUNCIL®
Copyright © 2019 ICC & NYSDOS. ALL RIGHTS RESERVED. Accessed by Lauren Gualdino (lgualdino@briarcliffmanor.org), (-) Order Number #100880972 on May 08, 2020 07:05 AM (PDT) pursuant to License Agreement with ICC & NYSDOS. No further reproduction, no

100880972

tectural hardware. The use of aluminum in heating, ventilating or air-conditioning systems is addressed in the *Mechanical Code of New York State* (MCNYS). This chapter references national standards from the Aluminum Association for use of aluminum in building construction, AA ASM 35, *Aluminum Sheet Metal Work in Building Construction*, and AA ADM 1, *Aluminum Design Manual*. By utilizing the standards set forth, a proper application of this material can be obtained.

Chapter 21 Masonry. This chapter provides comprehensive and practical requirements for masonry construction. The provisions of Chapter 21 require minimum accepted practices and the use of standards for the design and construction of masonry structures. The provisions address: material specifications and test methods; types of wall construction; criteria for engineered and empirical designs; and required details of construction, including the execution of construction. Masonry design methodologies including allowable stress design, strength design and empirical design are covered by provisions of this chapter. Also addressed are masonry fireplaces and chimneys, masonry heaters and glass unit masonry. Fire-resistant construction using masonry is also required to comply with Chapter 7. Masonry foundations are also subject to the requirements of Chapter 18.

Chapter 22 Steel. Chapter 22 provides the requirements necessary for the design and construction of structural steel (including composite construction), cold-formed steel, steel joists, steel cable structures and steel storage racks. This chapter specifies appropriate design and construction standards for these types of structures. It also provides a road map of the applicable technical requirements for steel structures. Because steel is a noncombustible building material, it is commonly associated with Types I and II construction; however, it is permitted to be used in all types of construction. Chapter 22 requires that the design and use of steel materials be in accordance with the specifications and standards of the American Institute of Steel Construction, the American Iron and Steel Institute, the Steel Joist Institute and the American Society of Civil Engineers.

Chapter 23 Wood. This chapter provides minimum requirements for the design of buildings and structures that use wood and wood-based products. The chapter is organized around three design methodologies: allowable stress design (ASD), load and resistance factor design (LRFD) and conventional light-frame construction. Included in this chapter are references to design and manufacturing standards for various wood and wood-based products; general construction requirements; design criteria for lateral force-resisting systems and specific requirements for the application of the three design methods. In general, only Type III, IV or V buildings may be constructed, in part or in whole, of wood.

Chapter 24 Glass and Glazing. This chapter establishes regulations for glass and glazing that, when installed in buildings and structures, are subjected to wind, snow and dead loads. Engineering and design requirements are included in the chapter. Additional structural requirements are found in Chapter 16. Another concern of this chapter is glass and glazing used in areas where it is likely to be impacted by the occupants. Section 2406 identifies hazardous locations where glazing installed must either be safety glazing or blocked to prevent human impact. Safety glazing must meet stringent standards and be appropriately marked or identified. Additional requirements are provided for glass and glazing in guards, handrails, elevator hoistways and elevator cars, as well as in athletic facilities.

Chapter 25 Gypsum Board, Gypsum Panel Products and Plaster. Chapter 25 contains the provisions and referenced standards that regulate the design, construction and quality of gypsum board, gypsum panel products and plaster. It also addresses reinforced gypsum concrete. These represent the most common interior and exterior finish materials in the building industry. This chapter primarily addresses quality-control-related issues with regard to material specifications and installation requirements. Most products are manufactured under the control of industry standards. The building official or inspector primarily needs to verify that the appropriate product is used and properly installed for the intended use and location. While often simply used as wall and ceiling coverings, proper design and application are necessary to provide weather resistance and required fire protection for both structural and nonstructural building components.

Chapter 26 Plastic. The use of plastics in building construction and components is addressed in Chapter 26. This chapter provides standards addressing foam plastic insulation, foam plastics used as interior finish and trim, and other plastic veneers used on the inside or outside of a building. Plastic siding is regulated by Chapter 14. Sections 2606 through 2611 address the use of light-transmit-

INTERNATIONAL CODE COUNCIL®
Copyright © 2019 ICC & NYSDOS. ALL RIGHTS RESERVED. Accessed by Lauren Gualdino (lgualdino@briarcliffmanor.org), (-) Order Number #100880972 on May 08, 2020 07:05 AM (PDT) pursuant to License Agreement with ICC & NYSDOS. No further reproduction, no

100880972

ting plastics in various configurations such as walls, roof panels, skylights, signs and as glazing. Requirements for the use of fiber-reinforced polymers, fiberglass-reinforced polymers and reflective plastic core insulation are also contained in this chapter. Additionally, requirements specific to the use of wood-plastic composites and plastic lumber are contained in this chapter. Some plastics exhibit rapid flame spread and heavy smoke density characteristics when exposed to fire. Exposure to the heat generated by a fire can cause some plastics to deform, which can affect their performance. The requirements and limitations of this chapter are necessary to control the use of plastic and foam plastic products such that they do not compromise the safety of building occupants.

Chapter 27 Electrical. Since electrical systems and components are an integral part of almost all structures, it is necessary for the code to address the installation of such systems. For this purpose, Chapter 27 references the *National Electrical Code* (NEC). In addition, Section 2702 addresses emergency and standby power requirements. Such systems must comply with the *Fire Code of New York State* (FCNYS) and referenced standards. This section also provides references to the various code sections requiring emergency and standby power, such as high-rise buildings and buildings containing hazardous materials.

Chapter 28 Mechanical Systems. Nearly all buildings will include mechanical systems. This chapter provides references to the *Mechanical Code of New York State* (MCNYS) and the *Fuel Gas Code of New York State* (FGCNYS) for the design and installation of mechanical systems. In addition, Chapter 21 of this code is referenced for masonry chimneys, fireplaces and barbecues

Chapter 29 Plumbing Systems. Chapter 29 regulates the minimum number of plumbing fixtures that must be provided for every type of building. This chapter also regulates the location of the required fixtures in various types of buildings. The regulations in this chapter come directly from Chapters 3 and 4 of the *Plumbing Code of New York State* (PCNYS).

Chapter 30 Elevators and Conveying Systems. Chapter 30 provides standards for the installation of elevators into buildings. Referenced standards provide the requirements for the elevator system and mechanisms. Detailed standards are provided in the chapter for hoistway enclosures, machine rooms and requirements for sizing of elevators. Beginning in the 2015 edition of this code, the elevator lobby requirements were moved from Chapter 7 to Chapter 30 to pull all the elevator-related construction requirements together. New provisions were added in the 2009 edition for fire service access elevators required in high-rise buildings and for the optional choice of occupant evacuation elevators (see Section 403).

Chapter 31 Special Construction. Chapter 31 contains a collection of regulations for a variety of unique structures and architectural features. Pedestrian walkways and tunnels connecting two buildings are addressed in Section 3104. Membrane and air-supported structures are addressed by Section 3102. Safeguards for swimming pool safety are addressed by Section 3109. Standards for temporary structures, including permit requirements, are provided in Section 3103. Structures as varied as awnings, marquees, signs, telecommunication and broadcast towers and automatic vehicular gates are also addressed (see Sections 3105 through 3108 and 3110).

Chapter 32 Encroachments into the Public Right-of-way. Buildings and structures from time to time are designed to extend over a property line and into the public right-of-way. Local regulations outside of the building code usually set limits to such encroachments, and such regulations take precedence over the provisions of this chapter. Standards are provided for encroachments below grade for structural support, vaults and areaways. Encroachments above grade are divided into below 8 feet, 8 feet to 15 feet, and above 15 feet, because of headroom and vehicular height issues. This includes steps, columns, awnings, canopies, marquees, signs, windows and balconies. Similar architectural features above grade are also addressed. Pedestrian walkways must also comply with Chapter 31.

Chapter 33 Safeguards During Construction. Chapter 33 provides safety requirements during construction and demolition of buildings and structures. These requirements are intended to protect the public from injury and adjoining property from damage. In addition the chapter provides for the progressive installation and operation of exit stairways and standpipe systems during construction.

INTERNATIONAL CODE COUNCIL®
Copyright © 2019 ICC & NYSDOS. ALL RIGHTS RESERVED. Accessed by Lauren Gualdino (lgualdino@briarcliffmanor.org), (-) Order Number #100880972 on May 08, 2020 07:05 AM (PDT) pursuant to License Agreement with ICC & NYSDOS. No further reproduction, no

100880972

Chapter 34 Reserved.

Chapter 35 Referenced Standards. The code contains numerous references to standards that are used to regulate materials and methods of construction. Chapter 35 contains a comprehensive list of all standards that are referenced in the code, including the appendices. The standards are part of the code to the extent of the reference to the standard. Compliance with the referenced standard is necessary for compliance with this code. By providing specifically adopted standards, the construction and installation requirements necessary for compliance with the code can be readily determined. The basis for code compliance is, therefore, established and available on an equal basis to the building official, contractor, designer and owner.

Chapter 35 is organized in a manner that makes it easy to locate specific standards. It lists all of the referenced standards, alphabetically, by acronym of the promulgating agency of the standard. Each agency's standards are then listed in either alphabetical or numeric order based upon the standard identification. The list also contains the title of the standard; the edition (date) of the standard referenced; any addenda; and the section or sections of this code that reference the standard.

Appendices. Appendices are provided in the BCNYS to offer supplemental criteria to the provisions in the main chapters of the code. Appendices provide additional information for administration of the Department of Building Safety as well as standards not typically administered by all building departments. Appendices have the same force and effect as the first 35 chapters of the BCNYS only when explicitly adopted (see Section 101.2.2).

Appendix A Employee Qualifications. This appendix is informative and not part of the code. Effective administration and enforcement of the code depends on the training and expertise of the personnel employed by the jurisdiction and his or her knowledge of the codes. Appendix A provides optional standards for experience, training and certification for the building official and the other staff mentioned in Chapter 1.

Appendix B Reserved.

Appendix C Group U—Agricultural Buildings. This appendix is informative and not part of the code. Appendix C provides a more liberal set of standards for the construction of agricultural buildings, rather than strictly following the Utility building provision, reflective of their specific usage and limited occupant load. The provisions of this appendix, when adopted, allow reasonable heights and areas commensurate with the risk of agricultural buildings.

Appendix D Fire Districts. This appendix is informative and not part of the code. Fire districts have been a tool used to limit conflagration hazards in areas of a city with intense and concentrated development. Fire district standards restrict certain occupancies within the district, as well as setting higher minimum construction standards.

Appendix E Supplementary Accessibility Requirements. The Architectural and Transportation Barriers Compliance Board (U.S. Access Board) has revised and updated its accessibility guidelines for buildings and facilities covered by the Americans with Disabilities Act (ADA) and the Architectural Barriers Act (ABA). Appendix E includes scoping requirements contained in the 2010 *ADA Standards for Accessible Design* that are not in Chapter 11 and not otherwise mentioned or mainstreamed throughout the code. Items in the appendix address subjects not typically addressed in building codes (for example, beds, room signage, transportation facilities).

Appendix F Rodentproofing. The provisions of this appendix are minimum mechanical methods to prevent the entry of rodents into a building. These standards, when used in conjunction with cleanliness and maintenance programs, can significantly reduce the potential of rodents invading a building.

Appendix G Flood-resistant Construction. This appendix is informative and not part of the code. Appendix G is intended to fulfill the flood-plain management and administrative requirements of the National Flood Insurance Program (NFIP) that are not included in the code. Communities that adopt the IBC and Appendix G will meet the minimum requirements of NFIP as set forth in Title 44 of the Code of Federal Regulations.

INTERNATIONAL CODE COUNCIL®
Copyright © 2019 ICC & NYSDOS. ALL RIGHTS RESERVED. Accessed by Lauren Gualdino (lgualdino@briarcliffmanor.org), (-) Order Number #100880972 on May 08, 2020 07:05 AM (PDT) pursuant to License Agreement with ICC & NYSDOS. No further reproduction, no

100880972

Appendix H Signs. This appendix is informative and not part of the code. Appendix H gathers in one place the various code standards that regulate the construction and protection of outdoor signs. Whenever possible, this appendix provides standards in performance language, thus allowing the widest possible application.

Appendix I Patio Covers. Appendix I provides standards applicable to the construction and use of patio covers. It is limited in application to patio covers accessory to dwelling units. Covers of patios and other outdoor areas associated with restaurants, mercantile buildings, offices, nursing homes or other nondwelling occupancies would be subject to standards in the main code and not this appendix.

Appendix J Grading. This appendix is informative and not part of the code. Appendix J provides standards for the grading of properties. This appendix also provides standards for administration and enforcement of a grading program including permit and inspection requirements. Appendix J was originally developed in the 1960s and used for many years in jurisdictions throughout the western states. It is intended to provide consistent and uniform code requirements anywhere grading is considered an issue.

Appendix K Administrative Provisions. This appendix is informative and not part of the code. Appendix K primarily provides administrative provisions for jurisdictions adopting and enforcing NFPA 70-the *National Electrical Code* (NEC). Annex H of NFPA 70 also contains administrative provisions for the NEC; however, some of its provisions are not compatible with BCNYS Chapter 1. Section K110 also contains technical provisions that are unique to this appendix and are in addition to technical standards of NFPA 70.

Appendix L Earthquake Recording Instrumentation. This appendix is informative and not part of the code. The purpose of this appendix is to foster the collection of ground motion data, particularly from strong-motion earthquakes. When this ground motion data is synthesized, it may be useful in developing future improvements to the earthquake provisions of the code.

Appendix M Tsunami-Generated Flood Hazard. This appendix is informative and not part of the code. Addressing a tsunami risk for all types of construction in a tsunami hazard zone through building code requirements would typically not be cost effective, making tsunami-resistant construction impractical at an individual building level. However, this appendix does allow the adoption and enforcement of requirements for tsunami hazard zones that regulate the presence of high-risk or high-hazard structures.

Appendix N Replicable Buildings. This appendix is informative and not part of the code. Many jurisdictions have recognized the need for some form of expedited review process for replicable buildings. By codifying the approach contained in the ICC G1-2010 *Guidelines for Replicable Buildings*, this appendix provides jurisdictions with a means of incorporating replicable building requirements into their building code adoption process. The intent is to streamline the plan review process at the local level by removing redundant reviews.

Appendix O Assistive Listening Systems Performance Standards. Section 378(10) of Article 18 of Executive Law requires the *Uniform Code* to establish standards for assistive listening systems in places of public assembly. This appendix is a performance standard to regulate these systems, which are intended for use by persons who are deaf or hard of hearing and require the use of such a system to improve their reception of sound.

Appendix P Diaper Changing Stations. In 2018, the New York State Legislature passed regulations requiring certain occupancies to install and maintain baby diaper changing stations that would be available to both men and women. This appendix establishes the standards for the installation of diaper changing stations in all newly constructed buildings that have one or more areas classified as Group A occupancy or Group M occupancies and in all existing buildings that have one or more areas classified as Group A occupancy or Group M occupancy and undergo a substantial renovation.

INTERNATIONAL CODE COUNCIL®
Copyright © 2019 ICC & NYSDOS. ALL RIGHTS RESERVED. Accessed by Lauren Gualdino (lgualdino@briarcliffmanor.org), (-) Order Number #100880972 on May 08, 2020 07:05 AM (PDT) pursuant to License Agreement with ICC & NYSDOS. No further reproduction, no

100880972

TABLE OF CONTENTS

CHAPTER 1 SCOPE AND ADMINISTRATION 1

Section

101 Title, Scope, and Purpose 1
102 Applicability 2
103 Administration and Enforcement 4
104 Materials, Equipment and Methods of Construction 5
105 Building Permits, Construction Inspections, Stop Work Orders, Certificates of Occupancy and Operating Permits 5
106 Submittal Documents 7
107 Service Utilities 8
108 Temporary Structures 8
109 Inspection of Solid Fuel Burning Heating Appliances, Chimneys and Flues 8

CHAPTER 2 DEFINITIONS 11

Section

201 General 11
202 Definitions 11

CHAPTER 3 OCCUPANCY CLASSIFICATION AND USE 43

Section

301 Scope 43
302 Occupancy Classification and Use Designation 43
303 Assembly Group A 43
304 Business Group B 44
305 Educational Group E 44
306 Factory Group F 44
307 High-hazard Group H 45
308 Institutional Group I 49
309 Mercantile Group M 50
310 Residential Group R 50
311 Storage Group S 51
312 Utility and Miscellaneous Group U 52

CHAPTER 4 SPECIAL DETAILED REQUIREMENTS BASED ON OCCUPANCY AND USE 53

Section

401 Scope 53
402 Covered Mall and Open Mall Buildings 53
403 High-rise Buildings 57
404 Atriums 60
405 Underground Buildings 61
406 Motor-vehicle-related Occupancies 62
407 Group I-2 66
408 Group I-3 69
409 Motion Picture Projection Rooms 71
410 Stages, Platforms and Technical Production Areas 72
411 Special Amusement Buildings 74
412 Aircraft-related Occupancies 74
413 Combustible Storage 78
414 Hazardous Materials 78
415 Groups H-1, H-2, H-3, H-4 and H-5 81
416 Spray Application of Flammable Finishes 91
417 Drying Rooms 92
418 Organic Coatings 92
419 Live/work Units 92
420 Groups I-1, R-1, R-2, R-3 and R-4 93
421 Hydrogen Fuel Gas Rooms 94
422 Ambulatory Care Facilities 94
423 Storm Shelters 95
424 Children's Play Structures 95
425 Hyperbaric Facilities 96
426 Combustible Dusts, Grain Processing and Storage 96
427 Medical Gas Systems 97
428 Higher Education Laboratories 97
429 Health Care Facilities 99
430 Live Fire Training Facilities 100

CHAPTER 5 GENERAL BUILDING HEIGHTS AND AREAS 101

Section

501 General 101
502 Building Address 101
503 General Building Height and Area Limitations . . . 101
504 Building Height and Number of Stories 101
505 Mezzanines and Equipment Platforms 102
506 Building Area 105
507 Unlimited Area Buildings 109
508 Mixed Use and Occupancy 111

INTERNATIONAL CODE COUNCIL®
Copyright © 2019 ICC & NYSDOS. ALL RIGHTS RESERVED. Accessed by Lauren Gualdino (lgualdino@briarcliffmanor.org), (-) Order Number #100880972 on May 08, 2020 07:05 AM (PDT) pursuant to License Agreement with ICC & NYSDOS. No further reproduction, no

100880972

509 Incidental Uses 112
510 Special Provisions 113

CHAPTER 6 TYPES OF CONSTRUCTION 117
Section
601 General 117
602 Construction Classification 117
603 Combustible Material in Types I and II Construction 118

CHAPTER 7 FIRE AND SMOKE PROTECTION FEATURES 121
Section
701 General 121
702 Multiple Use Fire Assemblies 121
703 Fire-resistance Ratings and Fire Tests 121
704 Fire-resistance Rating of Structural Members 122
705 Exterior Walls 124
706 Fire Walls 128
707 Fire Barriers 130
708 Fire Partitions 132
709 Smoke Barriers 133
710 Smoke Partitions 134
711 Floor and Roof Assemblies 134
712 Vertical Openings 135
713 Shaft Enclosures 136
714 Penetrations 138
715 Fire-resistant Joint Systems 141
716 Opening Protectives 142
717 Ducts and Air Transfer Openings 148
718 Concealed Spaces 153
719 Fire-resistance Requirements for Plaster 155
720 Thermal- and Sound-insulating Materials 155
721 Prescriptive Fire Resistance 156
722 Calculated Fire Resistance 156

CHAPTER 8 INTERIOR FINISHES 209
Section
801 Scope 209
802 General 209
803 Wall and Ceiling Finishes 209
804 Interior Floor Finish 212
805 Combustible Materials in Types I and II Construction 213
806 Decorative Materials and Trim 213
807 Insulation 214
808 Acoustical Ceiling Systems 214

CHAPTER 9 FIRE PROTECTION AND LIFE SAFETY SYSTEMS 215
Section
901 General 215
902 Fire Pump and Riser Room Size 216
903 Automatic Sprinkler Systems 216
904 Alternative Automatic Fire-extinguishing Systems 222
905 Standpipe Systems 225
906 Portable Fire Extinguishers 227
907 Fire Alarm and Detection Systems 229
908 Emergency Alarm Systems 239
909 Smoke Control Systems 240
910 Smoke and Heat Removal 248
911 Fire Command Center 249
912 Fire Department Connections 250
913 Fire Pumps 251
914 Emergency Responder Safety Features 251
915 Carbon Monoxide Detection 251
916 Gas Detection Systems 252
917 Mass Notification Systems 252
918 Emergency Responder Radio Coverage 252

CHAPTER 10 MEANS OF EGRESS 253
Section
1001 Administration 253
1002 Maintenance and Plans 253
1003 General Means of Egress 253
1004 Occupant Load 254
1005 Means of Egress Sizing 255
1006 Number of Exits and Exit Access Doorways 257
1007 Exit and Exit Access Doorway Configuration 259
1008 Means of Egress Illumination 260
1009 Accessible Means of Egress 261
1010 Doors, Gates and Turnstiles 264
1011 Stairways 272
1012 Ramps 275
1013 Exit Signs 276
1014 Handrails 277
1015 Guards 279

INTERNATIONAL CODE COUNCIL®
Copyright © 2019 ICC & NYSDOS. ALL RIGHTS RESERVED. Accessed by Lauren Gualdino (lgualdino@briarcliffmanor.org), (-) Order Number #100880972 on May 08, 2020 07:05 AM (PDT) pursuant to License Agreement with ICC & NYSDOS. No further reproduction, no

100880972

1016 Exit Access 280
1017 Exit Access Travel Distance 281
1018 Aisles 282
1019 Exit Access Stairways and Ramps 282
1020 Corridors 282
1021 Egress Balconies 284
1022 Exits 284
1023 Interior Exit Stairways and Ramps 284
1024 Exit Passageways 286
1025 Luminous Egress Path Markings 287
1026 Horizontal Exits 288
1027 Exterior Exit Stairways and Ramps 289
1028 Exit Discharge 290
1029 Assembly 291
1030 Emergency Escape and Rescue 298

CHAPTER 11 ACCESSIBILITY 299

Section

1101 General 299
1102 Compliance 299
1103 Scoping Requirements 299
1104 Accessible Route 300
1105 Accessible Entrances 301
1106 Parking and Passenger Loading Facilities 301
1107 Dwelling Units and Sleeping Units 302
1108 Special Occupancies 306
1109 Other Features and Facilities 308
1110 Recreational Facilities 311
1111 Signage 313

CHAPTER 12 INTERIOR ENVIRONMENT 315

Section

1201 General 315
1202 Ventilation 315
1203 Temperature Control 317
1204 Lighting 317
1205 Yards or Courts 318
1206 Sound Transmission 318
1207 Interior Space Dimensions 318
1208 Access to Unoccupied Spaces 319
1209 Toilet and Bathroom Requirements 319

CHAPTER 13 ENERGY EFFICIENCY 321

Section

1301 General 321

CHAPTER 14 EXTERIOR WALLS 323

Section

1401 General 323
1402 Performance Requirements 323
1403 Materials 324
1404 Installation of Wall Coverings 324
1405 Combustible Materials on the Exterior Side of Exterior Walls 330
1406 Metal Composite Materials (MCM) 330
1407 Exterior Insulation and Finish Systems (EIFS) 333
1408 High-pressure Decorative Exterior-grade Compact Laminates (HPL) 333
1409 Plastic Composite Decking 334

CHAPTER 15 ROOF ASSEMBLIES AND ROOFTOP STRUCTURES 335

Section

1501 General 335
1502 Roof Drainage 335
1503 Weather Protection 335
1504 Performance Requirements 335
1505 Fire Classification 337
1506 Materials 338
1507 Requirements for Roof Coverings 338
1508 Roof Insulation 349
1509 Radiant Barriers Installed Above Deck 350
1510 Rooftop Structures 350
1511 Reroofing 352
1512 Photovoltaic Panels and Modules 353

CHAPTER 16 STRUCTURAL DESIGN 355

Section

1601 General 355
1602 Notations 355
1603 Construction Documents 355
1604 General Design Requirements 356
1605 Load Combinations 359
1606 Dead Loads 361
1607 Live Loads 361
1608 Snow Loads 367
1609 Wind Loads 367
1610 Soil Lateral Loads 375
1611 Rain Loads 375
1612 Flood Loads 376

INTERNATIONAL CODE COUNCIL®
Copyright © 2019 ICC & NYSDOS. ALL RIGHTS RESERVED. Accessed by Lauren Gualdino (lgualdino@briarcliffmanor.org), (-) Order Number #100880972 on May 08, 2020 07:05 AM (PDT) pursuant to License Agreement with ICC & NYSDOS. No further reproduction, no

100880972

1613 Earthquake Loads 378
1614 Atmospheric Ice Loads 383
1615 Tsunami Loads 383
1616 Structural Integrity 383

CHAPTER 17 SPECIAL INSPECTIONS AND TESTS. 387

Section
1701 General 387
1702 New Materials 387
1703 Approvals 387
1704 Special Inspections and Tests, Contractor Responsibility and Structural Observation 388
1705 Required Special Inspections and Tests 390
1706 Design Strengths of Materials 398
1707 Alternative Test Procedure 398
1708 In-situ Load Tests 398
1709 Preconstruction Load Tests 399

CHAPTER 18 SOILS AND FOUNDATIONS. 401

Section
1801 General 401
1802 Design Basis 401
1803 Geotechnical Investigations 401
1804 Excavation, Grading and Fill. 403
1805 Dampproofing and Waterproofing 404
1806 Presumptive Load-bearing Values of Soils. 405
1807 Foundation Walls, Retaining Walls and Embedded Posts and Poles 406
1808 Foundations 410
1809 Shallow Foundations 415
1810 Deep Foundations 416

CHAPTER 19 CONCRETE 431

Section
1901 General 431
1902 Definitions 431
1903 Specifications for Tests and Materials 431
1904 Durability Requirements 431
1905 Modifications to ACI 318 432
1906 Structural Plain Concrete. 434
1907 Minimum Slab Provisions 434
1908 Shotcrete 434

CHAPTER 20 ALUMINUM 437

Section
2001 General 437
2002 Materials 437

CHAPTER 21 MASONRY 439

Section
2101 General 439
2102 Notations 439
2103 Masonry Construction Materials. 439
2104 Construction 440
2105 Quality Assurance. 440
2106 Seismic Design 440
2107 Allowable Stress Design 440
2108 Strength Design of Masonry 441
2109 Empirical Design of Adobe Masonry 441
2110 Glass Unit Masonry 443
2111 Masonry Fireplaces 443
2112 Masonry Heaters 445
2113 Masonry Chimneys 446
2114 Dry-stack Masonry 450

CHAPTER 22 STEEL 451

Section
2201 General 451
2202 Identification of Steel for Structural Purposes . . . 451
2203 Protection of Steel for Structural Purposes 451
2204 Connections. 451
2205 Structural Steel 451
2206 Composite Structural Steel and Concrete Structures 452
2207 Steel Joists. 452
2208 Steel Cable Structures 453
2209 Steel Storage Racks. 453
2210 Cold-formed Steel. 453
2211 Cold-formed Steel Light-frame Construction. . . . 453

CHAPTER 23 WOOD 455

Section
2301 General 455
2302 Design Requirements 455
2303 Minimum Standards and Quality 455
2304 General Construction Requirements 459

INTERNATIONAL CODE COUNCIL®
Copyright © 2019 ICC & NYSDOS. ALL RIGHTS RESERVED. Accessed by Lauren Gualdino (lgualdino@briarcliffmanor.org), (-) Order Number #100880972 on May 08, 2020 07:05 AM (PDT) pursuant to License Agreement with ICC & NYSDOS. No further reproduction, no

100880972

2305 General Design Requirements for Lateral Force-resisting Systems 472
2306 Allowable Stress Design 474
2307 Load and Resistance Factor Design 475
2308 Conventional Light-frame Construction 475
2309 Wood Frame Construction Manual 506

CHAPTER 24 GLASS AND GLAZING 527

Section
2401 General 527
2402 Glazing Replacement 527
2403 General Requirements for Glass 527
2404 Wind, Snow, Seismic and Dead Loads on Glass 527
2405 Sloped Glazing and Skylights 529
2406 Safety Glazing 530
2407 Glass in Handrails and Guards 532
2408 Glazing in Athletic Facilities 532
2409 Glass in Walkways, Elevator Hoistways and Elevator Cars 533

CHAPTER 25 GYPSUM BOARD, GYPSUM PANEL PRODUCTS AND PLASTER 535

Section
2501 General 535
2502 Performance 535
2503 Inspection 535
2504 Vertical and Horizontal Assemblies 535
2505 Shear Wall Construction 535
2506 Gypsum Board and Gypsum Panel Product Materials 535
2507 Lathing and Plastering 535
2508 Gypsum Construction 536
2509 Showers and Water Closets 537
2510 Lathing and Furring for Cement Plaster (Stucco) 538
2511 Interior Plaster 539
2512 Exterior Plaster 539
2513 Exposed Aggregate Plaster 540
2514 Reinforced Gypsum Concrete 540

CHAPTER 26 PLASTIC 541

Section
2601 General 541
2602 Finish and Trim 541
2603 Foam Plastic Insulation 541
2604 Interior Finish and Trim 545
2605 Plastic Veneer 547
2606 Light-transmitting Plastics 547
2607 Light-transmitting Plastic Wall Panels 549
2608 Light-transmitting Plastic Glazing 550
2609 Light-transmitting Plastic Roof Panels 550
2610 Light-transmitting Plastic Skylight Glazing 551
2611 Light-transmitting Plastic Interior Signs 552
2612 Plastic Composites 552
2613 Fiber-reinforced Polymer 552
2614 Reflective Plastic Core Insulation 553

CHAPTER 27 ELECTRICAL 555

Section
2701 General 555
2702 Emergency and Standby Power Systems 555

CHAPTER 28 MECHANICAL SYSTEMS 557

Section
2801 General 557

CHAPTER 29 PLUMBING SYSTEMS 559

Section
2901 General 559
2902 Minimum Plumbing Facilities 559

CHAPTER 30 ELEVATORS AND CONVEYING SYSTEMS 565

Section
3001 General 565
3002 Hoistway Enclosures 565
3003 Emergency Operations 566
3004 Conveying Systems 566
3005 Machine Rooms 566
3006 Elevator Lobbies and Hoistway Opening Protection 567
3007 Fire Service Access Elevator 568
3008 Occupant Evacuation Elevators 569

CHAPTER 31 SPECIAL CONSTRUCTION 573

Section
3101 General 573
3102 Membrane Structures 573
3103 Temporary Structures 574
3104 Pedestrian Walkways and Tunnels 574

INTERNATIONAL CODE COUNCIL®
Copyright © 2019 ICC & NYSDOS. ALL RIGHTS RESERVED. Accessed by Lauren Gualdino (lgualdino@briarcliffmanor.org), (-) Order Number #100880972 on May 08, 2020 07:05 AM (PDT) pursuant to License Agreement with ICC & NYSDOS. No further reproduction, no

100880972

3105 Awnings and Canopies 576
3106 Marquees 576
3107 Signs 576
3108 Telecommunication and Broadcast Towers 576
3109 Swimming Pools, Spas and Hot Tubs 576
3110 Automatic Vehicular Gates 579
3111 Solar Energy Systems 579
3112 Greenhouses 580
3113 Relocatable Buildings 580

CHAPTER 32 ENCROACHMENTS INTO THE PUBLIC RIGHT-OF-WAY 581

Section
3201 General 581
3202 Encroachments 581

CHAPTER 33 SAFEGUARDS DURING CONSTRUCTION 583

Section
3301 General 583
3302 Construction Safeguards 583
3303 Demolition 583
3304 Site Work 583
3305 Sanitary 584
3306 Protection of Pedestrians 584
3307 Protection of Adjoining Property 585
3308 Temporary Use of Streets, Alleys and Public Property 585
3309 Fire Extinguishers 585
3310 Means of Egress 585
3311 Standpipes 585
3312 Automatic Sprinkler System 586
3313 Water Supply for Fire Protection 586
3314 Fire Watch During Construction 586

CHAPTER 34 RESERVED 587

CHAPTER 35 REFERENCED STANDARDS 589

APPENDIX A EMPLOYEE QUALIFICATIONS 619

Section
A101 Building Official Qualifications 619
A102 Referenced Standards 619

APPENDIX B RESERVED 621

APPENDIX C GROUP U—AGRICULTURAL BUILDINGS 623

Section
C101 General 623
C102 Allowable Height and Area 623
C103 Mixed Occupancies 623
C104 Exits 623

APPENDIX D FIRE DISTRICTS 625

Section
D101 General 625
D102 Building Restrictions 625
D103 Changes to Buildings 626
D104 Buildings Located Partially in the Fire District 626
D105 Exceptions to Restrictions in Fire District 626
D106 Referenced Standards 626

APPENDIX E SUPPLEMENTARY ACCESSIBILITY REQUIREMENTS 629

Section
E101 General 629
E102 Definitions 629
E103 Accessible Route 629
E104 Special Occupancies 629
E105 Other Features and Facilities 629
E106 Telephones 630
E107 Signage 631
E108 Bus Stops 631
E109 Transportation Facilities and Stations 632
E110 Airports 632
E111 Referenced Standards 633

APPENDIX F RODENTPROOFING 635

Section
F101 General 635

APPENDIX G FLOOD-RESISTANT CONSTRUCTION 637

Section
G101 Administration 637
G102 Applicability 637
G103 Powers and Duties 637
G104 Permits 638
G105 Variances 639

INTERNATIONAL CODE COUNCIL®
Copyright © 2019 ICC & NYSDOS. ALL RIGHTS RESERVED. Accessed by Lauren Gualdino (lgualdino@briarcliffmanor.org), (-) Order Number #100880972 on May 08, 2020 07:05 AM (PDT) pursuant to License Agreement with ICC & NYSDOS. No further reproduction, no

100880972

G201 Definitions 640
G301 Subdivisions 640
G401 Site Improvement 640
G501 Manufactured Homes 641
G601 Recreational Vehicles 641
G701 Tanks 641
G801 Other Building Work 641
G901 Temporary Structures and Temporary Storage 641
G1001 Utility and Miscellaneous Group U 642
G1101 Referenced Standards 642

APPENDIX H SIGNS 643
Section
H101 General 643
H102 Definitions 643
H103 Location 643
H104 Identification 643
H105 Design and Construction 644
H106 Electrical 644
H107 Combustible Materials 644
H108 Animated Devices 644
H109 Ground Signs 644
H110 Roof Signs 645
H111 Wall Signs 645
H112 Projecting Signs 645
H113 Marquee Signs 646
H114 Portable Signs 646
H115 Referenced Standards 646

APPENDIX I PATIO COVERS 647
Section
I101 General 647
I102 Definition 647
I103 Exterior Walls and Openings 647
I104 Height 647
I105 Structural Provisions 647

APPENDIX J GRADING 649
Section
J101 General 649
J102 Definitions 649
J103 Permits Required 649
J104 Permit Application and Submittals 649
J105 Inspections 650
J106 Excavations 650
J107 Fills 650
J108 Setbacks 650
J109 Drainage and Terracing 652
J110 Erosion Control 652
J111 Referenced Standards 652

APPENDIX K ADMINISTRATIVE PROVISIONS 653
Section
K101 General 653
K102 Applicability 653
K103 Permits 653
K104 Construction Documents 654
K105 Alternative Engineered Design 654
K106 Required Inspections 654
K107 Prefabricated Construction 654
K108 Testing 655
K109 Reconnection 655
K110 Condemning Electrical Systems 655
K111 Electrical Provisions 655

APPENDIX L EARTHQUAKE RECORDING INSTRUMENTATION 657
Section
L101 General 657

APPENDIX M TSUNAMI-GENERATED FLOOD HAZARD 659
Section
M101 Refuge Structures for Vertical Evacuation from Tsunami-generated Flood Hazard 659
M102 Referenced Standards 659

APPENDIX N REPLICABLE BUILDINGS 661
Section
N101 Administration 661
N102 Definitions 661
N103 Replicable Design Requirements 661
N104 Replicable Design Submittal Requirements 661
N105 Review and Approval of Replicable Design 662
N106 Site-specific Application of Approved Replicable Design 662
N107 Site-specific Review and Approval of Replicable Design 662

INTERNATIONAL CODE COUNCIL®
Copyright © 2019 ICC & NYSDOS. ALL RIGHTS RESERVED. Accessed by Lauren Gualdino (lgualdino@briarcliffmanor.org), (-) Order Number #100880972 on May 08, 2020 07:05 AM (PDT) pursuant to License Agreement with ICC & NYSDOS. No further reproduction, no

100880972

APPENDIX O ASSISTIVE LISTENING SYSTEMS PERFORMANCE STANDARDS . . . 663

Section

O101 General 663

O102 Induction Loop System 663

O103 Infrared System 663

O104 FM System 664

APPENDIX P DIAPER CHANGING STATIONS. 665

Section

P101 Introduction 665

P102 Purpose 665

P103 Definitions 665

P104 General Requirements 666

P105 Accessibility, Construction and Installation Requirements 667

P106 Signage 667

P107 Maintenance 667

P108 Historic Buildings 667

INDEX 669

INTERNATIONAL CODE COUNCIL®

Copyright © 2019 ICC & NYSDOS. ALL RIGHTS RESERVED. Accessed by Lauren Gualdino (lgualdino@briarcliffmanor.org), (-) Order Number #100880972 on May 08, 2020 07:05 AM (PDT) pursuant to License Agreement with ICC & NYSDOS. No further reproduction, no

[NY] CHAPTER 1

SCOPE AND ADMINISTRATION

[NY] SECTION 101
TITLE, SCOPE, AND PURPOSE

[NY] 101.1 Title. This publication shall be known as the 2020 edition of the *Building Code of New York State* and is hereinafter referred to as "this code." This code is part of the New York State Uniform Fire Prevention and Building Code (the "Uniform Code").

[NY] 101.1.1 Amendments of New York State code books. In Chapter 1, the term "New York State code books" shall include the *Residential Code of New York State*, the *Building Code of New York State* (i.e., this publication), the *Plumbing Code of New York State*, the *Mechanical Code of New York State*, the *Fuel Gas Code of New York State*, the *Fire Code of New York State*, the *Property Maintenance Code of New York State*, the *Existing Building Code of New York State*, and the *Energy Conservation Construction Code of New York State*. Provisions in any one or more of the New York State code books may be amended from time to time by provisions in 19 NYCRR Parts 1220 to 1227 or 19 NYCRR Part 1240, as currently in effect and as hereafter amended from time to time. If this publication is now or hereafter so amended, references in this publication to "this code" shall be deemed to be refences to this publication as so amended. If any other New York State code book is now or hereafter so amended, references in this code to such other New York State code book shall be deemed to be references to such New York State code book as so amended.

[NY] 101.2 Scope. The provisions of this code shall apply to the construction, *alteration*, relocation, enlargement, replacement, *repair*, *equipment*, use and occupancy, location, maintenance, removal and demolition of every *building* or *structure* or any appurtenances connected or attached to such *buildings* or *structures*.

Exceptions:

1. Application of the provisions of the *Residential Code of New York State* to the construction, alteration, movement, enlargement, replacement, *repair, equipment*, use and occupancy, location, removal and demolition of the following buildings and structures, provided that such building or structure is not more than three *stories above grade plane* in height, and their *accessory structures* not more than three *stories above grade plane* in height:
    1.1. Detached one-family *dwellings*,
    1.2. Detached two-family *dwellings,* in which each *dwelling unit* has a separate *means of egress*,
    1.3. *Townhouses*,
    1.4. *Bed and breakfast dwellings*,
    1.5 *Live/work units* that (1) are located in *townhouses*, and (2) comply with the requirements of Section 419 of this code; and
    1.6 Owner-occupied *lodging houses* that (1) have five or fewer guestrooms and (2) are provided with a residential fire sprinkler system complying with Section P2904 of the *Residential Code of New York State*.
2. *Agricultural buildings,* including barns, sheds, poultry houses and other buildings and equipment on the premises that are used directly and solely for agricultural purposes, shall not be subject to the construction-related provisions of this code.
3. Construction trailers that are used as temporary offices for the purpose of monitoring construction at a construction site shall not be subject to this code.
4. *Structures* such as radio and television transmission, communication and wind generation towers, and ground-mounted photovoltaic arrays that are neither a building appurtenance nor are attached to a *building* shall not be subject to this code.
5. Standards for construction of sleeping quarters in a *children's overnight camp* as defined in Public Health Law Section 1392(1) shall be governed by Public Health Law Section 1394(1) and the regulations promulgated by the Public Health Council. See Executive Law Section 378(1). As of the date of this publication, the Public Health Council's regulations for *children's overnight camps* are found in 10 NYCRR Subpart 7-2 ("Children's Camps").

[NY] 101.2.1 Facilities regulated by State Departments and Agencies. Where a building or premises under the custody, licensure, supervision or jurisdiction of a department or agency of the State of New York is regulated as a one- or two-family dwelling or multiple single-family dwelling (*townhouse*), in accordance with established laws or regulations of that department or agency, said *buildings* or premises, such as a community residence or hospice residence, and their *accessory structures* shall comply with the *Residential Code of New York State*.

[NY] 101.2.2 Appendices. Provisions in the following appendices have been adopted and are part of this code:

Appendix E	Supplemental Accessibility Requirements
Appendix F	Rodent Proofing
Appendix I	Patio Covers
Appendix O	Assistive Listening Systems Performance Standards
Appendix P	Diaper Changing Stations

INTERNATIONAL CODE COUNCIL®
Copyright © 2019 ICC & NYSDOS. ALL RIGHTS RESERVED. Accessed by Lauren Gualdino (lgualdino@briarcliffmanor.org), (-) Order Number #100880972 on May 08, 2020 07:05 AM (PDT) pursuant to License Agreement with ICC & NYSDOS. No further reproduction, no

100880972

In addition, the following appendices are included for informational purposes:

Appendix A	Employee Qualifications
Appendix C	Group U—Agricultural Buildings
Appendix D	Fire Districts
Appendix G	Flood-Resistant Construction
Appendix H	Signs
Appendix J	Grading
Appendix K	Administrative Provisions
Appendix L	Earthquake Recording Instrumentation
Appendix M	Tsunami-Generated Flood Hazard
Appendix N	Replicable Buildings

[NY] 101.3 Intent. The purpose of this code is to establish the minimum requirements to provide a reasonable level of safety, public health and general welfare through structural strength, *means of egress* facilities, stability, sanitation, adequate light and ventilation, energy conservation, and safety to life and property from fire, explosion and other hazards, and to provide a reasonable level of safety to fire fighters and emergency responders during emergency operations.

[NY] 101.4 Referenced codes. The other codes and publications listed or referred to in Sections 101.4.1 through 101.4.7 and referenced elsewhere in this code shall be considered to be part of the requirements of this code to the prescribed extent of each such reference.

[NY] 101.4.1 Gas. The provisions of the *Fuel Gas Code of New York State* and the other publications incorporated by reference in 19 NYCRR Part 1224 shall apply to the design, installation, maintenance, alteration, and inspection of fuel gas *piping and equipment, fuel gas-fired appliances, and fuel gas-fired appliance venting* systems, that are permanently installed and specifically addressed in the *Fuel Gas Code of New York State*. These requirements apply to gas piping systems extending from the point of delivery to the inlet connections of appliances and the installation and operation of residential and commercial gas appliances and related accessories, and *gaseous hydrogen systems.*

[NY] 101.4.2 Mechanical. The provisions of the *Mechanical Code of New York State* and the other publications incorporated by reference in 19 NYCRR Part 1223 shall apply to the design, installation, maintenance, *alteration*, and inspection of mechanical systems that are permanently installed and utilized to provide control of environmental conditions and related processes within buildings. The *Mechanical Code of New York State* also regulates those mechanical systems, system components, *equipment*, and appliances specifically addressed therein.

[NY] 101.4.3 Plumbing. The provisions of the *Plumbing Code of New York State* and the other publications incorporated by reference in 19 NYCRR Part 1222 shall apply to the erection, installation, alteration, repairs, relocation, replacement, addition to, use or maintenance of plumbing systems within this jurisdiction. The *Plumbing Code of New York State* also regulates nonflammable medical gas, inhalation anesthetic, vacuum piping, nonmedical oxygen systems and sanitary and condensate vacuum collection systems.

[NY] 101.4.4 Property maintenance. The provisions of the *Property Maintenance Code of New York State* and the other publications incorporated by reference in 19 NYCRR Part 1226 shall apply to all existing residential and nonresidential structures and all existing *premises* and constitute minimum requirements and standards for *premises*, structures, equipment, and facilities for light, *ventilation*, space, heating, sanitation, protection from the elements, a reasonable level of safety from fire and other hazards, and for a reasonable level of sanitary maintenance; the responsibility of *owners*, an owner's authorized agent, *operators* and *occupants*; the *occupancy* of existing structures and premises, and for administration, enforcement and penalties.

[NY] 101.4.5 Fire prevention. The provisions of the *Fire Code of New York State* and the other publications incorporated by reference in 19 NYCRR Part 1225 shall apply to matters relating to structures, processes, premises, and safeguards regarding all of the following:

1. The hazard of fire and explosion arising from the storage, handling or use of structures, materials or devices.
2. Conditions hazardous to life, property or public welfare in the occupancy of structures or premises.
3. Fire hazards in the structure or on the premises from occupancy or operation.
4. Matters related to the construction, extension, repair, alteration or removal of fire suppression or alarm systems.
5. Conditions affecting the safety of fire fighters and emergency responders during emergency operations.

[NY] 101.4.6 Energy. The provisions of the *Energy Conservation Construction Code of New York State* and the other publications incorporated by reference in 19 NYCRR Part 1240 shall apply to all matters governing the design and construction of buildings for energy efficiency.

[NY] 101.4.7 Existing buildings. The provisions of the *Existing Building Code of New York State* and the other publications incorporated by reference in 19 NYCRR Part 1227 shall apply to matters governing the *repair*, *alteration*, *change of occupancy*, *addition* to and relocation of *existing buildings*.

[NY] SECTION 102 APPLICABILITY

[NY] 102.1 General. Where there is a conflict between a general requirement and a specific requirement, the specific requirement shall be applicable. Where, in any specific case, different sections of this code specify different materials, methods of construction or other requirements, the most restrictive shall govern.

INTERNATIONAL CODE COUNCIL®
Copyright © 2019 ICC & NYSDOS. ALL RIGHTS RESERVED. Accessed by Lauren Gualdino (lgualdino@briarcliffmanor.org), (-) Order Number #100880972 on May 08, 2020 07:05 AM (PDT) pursuant to License Agreement with ICC & NYSDOS. No further reproduction, no

100880972

[NY] 102.2 Other laws and regulations. This code is part of the New York State Uniform Fire Prevention and Building Code (the *Uniform Code*) promulgated pursuant to Article 18 of the New York State Executive Law. The provisions of this code shall not be deemed to nullify any federal, state or local law, ordinance, administrative code, rule or regulation relating to any matter as to which the *Uniform Code* does not provide.

However:

1. Pursuant to Section 383(1) of the Executive Law, and except as otherwise provided in paragraphs a, b, and c of Section 383(1) of the Executive Law, the provisions of the *Uniform Code* supersede any other provision of a general, special or local law, ordinance, administrative code, rule or regulation inconsistent or in conflict with the *Uniform Code*;
2. Pursuant to Section 379(3) of the Executive Law, no city, town, village, county or other municipality shall have the power to supersede, void, repeal, or make less restrictive any provision of the *Uniform Code*.
3. The ability of any city, town, or village, or the County of Nassau, to enact or adopt, and to enforce, a local law or ordinance imposing higher or more restrictive standards for construction within the jurisdiction of such city, town, village, or county that are applicable generally to such city, town, village, or county in the *Uniform Code* is subject to the provisions and requirements of Section 379 of the Executive Law.

Nothing in Section 102.2 shall be construed as:

1. Affecting the authority of the State Labor Department to enforce a safety or health standard issued under provisions of Sections 27 and 27-a of the Labor Law.
2. Relieving a person from complying with a stricter standard issued pursuant to the Occupational Safety and Health Act of 1970, as amended.
3. Superseding, limiting, impairing or otherwise affecting any provision the *Uniform Code*, as now in effect and as hereafter amended from time to time.

[NY] 102.2.1 Other New York Codes, Rules and Regulations (NYCRR). Additional New York Codes, Rules and Regulations exist that may affect new and existing buildings, structures, systems and equipment. Such regulations include, but are not limited to:

1. 19 NYCRR Part 300 (Universal Symbol of Access).
2. 19 NYCRR Part 1261 (Recordkeeping—Smoke Detectors in Multiple Dwellings).
3. 19 NYCRR Part 1264 (Identification of Buildings Utilizing Truss Type Construction).
4. 19 NYCRR Part 1265 (Residential Structures with Truss Type Construction, Pre-Engineered Wood Construction and/or Timber Construction).

[NY] 102.2.2 Change in use or occupancy. No change shall be made in the use or occupancy of any *building* or *structure* unless such *building* or *structure* is made to comply with (1) the applicable requirements of this code, (2) the requirements of the *Existing Building Code of New York State*, (3) other applicable provisions of the *Uniform Code* and (4) the applicable provisions of the *Energy Code*.

[NY] 102.3 Application of references. References to chapter or section numbers, or to provisions not specifically identified by number, shall be construed to refer to such chapter, section or provision of this code.

[NY] 102.4 Referenced codes and standards. The codes and standards referenced in this code shall be considered to be part of the requirements of this code to the prescribed extent of each such reference and as further regulated in Sections 102.4.1 and 102.4.2.

[NY] 102.4.1 Conflicts. Where conflicts occur between provisions of this code and referenced codes and standards, the provisions of this code shall apply.

[NY] 102.4.2 Provisions in referenced codes and standards. Where the extent of the reference to a referenced code or standard that is not one of the New York State code books listed in Section 101.4 includes subject matter that is within the scope of this code or the New York State code books listed in Section 101.4, the provisions of this code or the New York State code books listed in Section 101.4, as applicable, shall take precedence over the provisions in such referenced code or standard.

[NY] 102.5 Partial invalidity. In the event that any part or provision of this code is held by a court of competent jurisdiction to be illegal or void, this shall not have the effect of making void or illegal any of the other parts or provisions.

[NY] 102.6 Existing structures. The legal occupancy of any structure existing on the effective date of this code shall be permitted to continue without change, except as otherwise specifically provided in this code, the *Existing Building Code of New York State*, the *Property Maintenance Code of New York State*, the *Fire Code of New York State*, or any other applicable provision of the *Uniform Code*. For the purposes of this section, the "effective date of this code" shall be deemed to be 90th day after the date on which the Notice of Adoption of the rule incorporating this code by reference in Part 1221 of the New York Codes, Rules, and Regulations shall have been published in the State Register.

[NY] 102.7 Factory manufactured buildings (modular buildings). *Factory manufactured buildings* shall be constructed and installed in accordance with the requirements of the *Uniform Code* and shall bear an *Insignia of Approval* issued in accordance with 19 NYCRR Part 1209 (entitled "Regulations and Fees for Factory Manufactured Buildings"), as currently in effect and as hereafter amended from time to time.

Exception: An *Insignia of Approval* shall not be required for the following buildings:

1. Modular buildings with structural components that cannot be inspected at the installation site but can be inspected in accordance with Section 1704 at the manufacturing facility in which it was built.

INTERNATIONAL CODE COUNCIL®
Copyright © 2019 ICC & NYSDOS. ALL RIGHTS RESERVED. Accessed by Lauren Gualdino (lgualdino@briarcliffmanor.org), (-) Order Number #100880972 on May 08, 2020 07:05 AM (PDT) pursuant to License Agreement with ICC & NYSDOS. No further reproduction, no

100880972

2. Buildings of Group S or U occupancy having an area not exceeding 400 square feet and not customarily used for human occupancy.

[NY] SECTION 103 ADMINISTRATION AND ENFORCEMENT

[NY] 103.1 Administration and enforcement. The *Uniform Code* shall be administered and enforced by the *authority having jurisdiction*. The identity of the *authority having jurisdiction* in a given situation is determined in accordance with Article 18 of the Executive Law and the regulations promulgated by the Secretary of State pursuant to Executive Law Section 381(1). In general, the *authority having jurisdiction* is the local government (city, town or village) in which the *building* or *structure* is located. In certain situations, the *authority having jurisdiction* may be the county in which the *building* or *structure* is located. In certain other cases, the State, the Secretary of State (acting through the Department of State) or some other State agency may be the *authority having jurisdiction*. The *authority having jurisdiction* responsible for administration and enforcement of the *Uniform Code* is also responsible for administration and enforcement of the *Energy Code*.

Administration and enforcement of the *Uniform Code* and *Energy Code* shall be in accordance with the following, as applicable:

1. Where a city, town, village or county is the *authority having jurisdiction*:
   - 1.1. Such, city, town, village or county shall provide for administration and enforcement of the *Uniform Code* and *Energy Code* by local law, ordinance, other appropriate regulation, or combination thereof.
   - 1.2. The *Code Enforcement Program* established by such local law, ordinance or other appropriate regulation, or combination thereof, must include, at a minimum, the features described in *Part 1203* and must satisfy all other requirements of *Part 1203*.
   - 1.3. Such city, town, village or county shall administer and enforce the *Uniform Code* in accordance with the *Code Enforcement Program* established by such local law, ordinance or other appropriate regulation, or combination thereof.
2. Where the State is the *authority having jurisdiction* pursuant to 19 NYCRR Section 1201.2(d):
   - 2.1. The *Code Enforcement Program* shall be as established by *Part 1204*.
   - 2.2. The State, acting through one or more State agencies, shall administer and enforce the *Uniform Code* and *Energy Code* in accordance with *Part 1204*.
3. Where the Department of State is the *authority having jurisdiction*:
   - 3.1. The *Code Enforcement Program* shall be as established by *Part 1202*.
   - 3.2. The Department of State shall administer and enforce the *Uniform Code* and *Energy Code* in accordance with *Part 1202*.
4. Where any governmental unit or agency not included in paragraphs 1, 2, and 3 above is the *authority having jurisdiction*:
   - 4.1. Such governmental unit or agency shall provide for administration and enforcement of the *Uniform Code* and *Energy Code* by regulation.
   - 4.2. The *Code Enforcement Program* established by such regulation must include, at a minimum, the features described *Part 1203* and must satisfy all other requirements of *Part 1203*.
   - 4.3. Such governmental unit or agency shall administer and enforce the *Uniform Code* and *Energy Code* in accordance with the *Code Enforcement Program* established by such regulation.

Every governmental unit or agency thereof charged with administration and enforcement of the *Uniform Code* shall exercise its powers in due and proper manner so as to extend to the public protection from the hazards of fire and inadequate building construction.

Any person or entity constructing or renovating a *building* or *structure*, changing the use or occupancy of a *building* or *structure*, or engaging in any other activity that is subject to the provisions of the *Code Enforcement Program* of the *authority having jurisdiction* responsible for administration and enforcement of the *Uniform Code* with respect to such building shall comply with all applicable provisions of such *Code Enforcement Program*.

In addition, persons and entities who construct, renovate, use and occupy *buildings* and *structures* shall comply with all applicable provisions of Section 105 of this code.

[NY] 103.2 Due process. Nothing in Chapter 1, or elsewhere in this code, or elsewhere in the *Uniform Code* or in any regulation promulgated pursuant to Executive Law Section 381(1), shall be construed as authorizing any *authority having jurisdiction* to administer and enforce the *Uniform Code* in a manner that deprives any person or entity of due process of law. In particular, but not by way of limitation, nothing in Chapter 1, or elsewhere in this code or elseware in the *Uniform Code,* or in any regulation promulgated pursuant to Executive Law Section 381(1), relating to posting, placarding and/or condemnation of *buildings* or *structures* that are unsafe, unfit for human occupancy or unlawful shall be construed as authorizing any *authority having jurisdiction* to post, placard or condemn any such *building* or *structure* and/or to remove any *owner* or occupant or cause any *owner* or occupant to be removed from any such *building* or *structure* without providing such notice and opportunity to be heard (and, if applicable, right of appeal) as may be required under the applicable circumstances by applicable Constitutional provisions.

[NY] 103.2.1 Imminent danger. In cases of imminent danger, posting, placarding, and condemning a *building* or *structure* and removing *owners* and occupants or causing *owners* and occupants to be removed without first providing an opportunity to be heard shall be permitted to the

INTERNATIONAL CODE COUNCIL®
Copyright © 2019 ICC & NYSDOS. ALL RIGHTS RESERVED. Accessed by Lauren Gualdino (lgualdino@briarcliffmanor.org), (-) Order Number #100880972 on May 08, 2020 07:05 AM (PDT) pursuant to License Agreement with ICC & NYSDOS. No further reproduction, no

100880972

extent consistent with applicable Constitutional provisions, provided that the affected persons and entities are afforded the opportunity for a post-action hearing to the extent required by applicable Constitutional provisions.

[NY] 103.3 Application for variance or appeal. An application for a variance or modification of any provision or requirement of *Uniform Code* shall be in accordance with the provisions of *Part 1205.* An appeal of any order or determination, or the failure within a reasonable time to make an order or determination, of an administrative official charged to enforce or purporting to enforce the *Uniform Code* may be made in accordance with the provisions of *Part 1205*.

[NY] SECTION 104
MATERIALS, EQUIPMENT AND METHODS OF CONSTRUCTION

[NY] 104.1 Approved materials and equipment. Materials, equipment, and devices approved by the *building official* shall be constructed and installed in accordance with such approval. Materials, equipment and devices tested by an *approved* testing laboratory shall be permitted to be constructed and installed in accordance with such approval.

[NY] 104.1.1 Used materials and equipment. Used materials, equipment, and devices shall not be reused unless they meet the requirements of this code for new materials.

[NY] 104.2 Waivers, variances, and modifications. Nothing in this code or elsewhere in the *Uniform Code* shall be construed as permitting any *building official* or any *authority having jurisdiction* to waive, vary, modify, or otherwise alter any provision or requirement of this code or any other provision or requirement of the *Uniform Code*. Provisions or requirements of the *Uniform Code* may be varied or modified only in accordance with procedures established by *Part 1205* or by such other regulations as may hereafter be promulgated by the Secretary of State pursuant to Section 381(1)(f) of the Executive Law.

[NY] 104.3 Alternative materials, equipment, appliances, designs, and methods of construction. The provisions of this code are not intended to prevent the installation of any materials, *equipment*, or *appliances* not specifically prescribed by this code, or to prohibit any designs or methods of construction not specifically prescribed by this code, provided that such alternative materials, *equipment*, *appliances*, designs, or methods of construction: (1) are not specifically prohibited by any provision of this code, by any other provision of the *Uniform Code*, or by the *Energy Code,* and (2) shall have been approved, in writing, by the building official. Alternative materials, *equipment*, *appliances*, designs, or methods of construction may be *approved* only when the *building official* shall have determined, in writing, that such alternative is:

1. Satisfactory and complies with the intent of the provisions and requirements of the *Uniform Code*.
2. Not less than the equivalent of that prescribed in the *Uniform Code* in quality, strength, effectiveness, fire resistance, durability, and safety.

Nothing in this Section 104.3 shall be construed as permitting any *building official* or any *authority having jurisdiction* to waive, vary, modify or otherwise alter any provision or requirement of this code or any other provision or requirement of the *Uniform Code*. Provisions or requirements of the *Uniform Code* may be varied or modified only pursuant to procedures established *Part 1205* or by such other regulations as may hereafter be promulgated by the Secretary of State pursuant to Section 381(1)(f) of the Executive Law.

[NY] 104.4 Workmanship. Repairs, maintenance work, alterations or installations which are caused directly or indirectly by the enforcement of the *Uniform Code* shall be executed and installed in a *workmanlike* manner and in accordance with *Uniform Code* and the manufacturer's installation instructions.

[NY] SECTION 105
BUILDING PERMITS, CONSTRUCTION INSPECTIONS, STOP WORK ORDERS, CERTIFICATES OF OCCUPANCY, AND OPERATING PERMITS

[NY] 105.1 Purpose. The purpose of Section 105 is to include in the *Uniform Code* provisions requiring persons and entities who construct, renovate, use and occupy buildings and structures to apply for and obtain *building permits*, to facilitate construction inspections, to obey stop work orders, to obtain *certificates of occupancy*, and to obtain *operating permits*. The provisions in Section 105 are considered to be integral parts of the *Uniform Code's* standards for construction, maintenance, and fire protection equipment and systems.

[NY] 105.1.1 Definition. For the purpose of Section 105, the term "other applicable law" shall include the *authority having jurisdiction's Code Enforcement Program*; any local law, ordinance, or regulation establishing the *authority having jurisdiction's Code Enforcement Program*; and any other applicable statute, regulation, rule, local law, or ordinance.

[NY] 105.2 Building permits. No person or entity shall commence, perform, or continue any work that must conform with the *Uniform Code* and/or *Energy Code* unless:

1. Such person or entity has applied to the *authority having jurisdiction* for a *building permit*,
2. The *authority having jurisdiction* has issued a *building permit* authorizing such work,
3. Such *building permit* has not been revoked or suspended, and
4. Such *building permit* has not expired.

[NY] 105.2.1 Work exempt from building permit requirement. A *building permit* shall not be required for work in any category that is excluded from the *building permit* requirement by the *authority having jurisdiction's Code Enforcement Program*, provided that *Part 1203* allows an *authority having jurisdiction* to exclude such category of work from the *building permit* requirement. Exemptions from *building permit* requirements shall not

INTERNATIONAL CODE COUNCIL®
Copyright © 2019 ICC & NYSDOS. ALL RIGHTS RESERVED. Accessed by Lauren Gualdino (lgualdino@briarcliffmanor.org), (-) Order Number #100880972 on May 08, 2020 07:05 AM (PDT) pursuant to License Agreement with ICC & NYSDOS. No further reproduction, no

100880972

be deemed to grant authorization for any work to be done in any manner in violation of any provision the *Uniform Code*, any provision of the *Energy Code*, or any provision of any other applicable law.

[NY] 105.2.2 Applications for building permits. A person or entity applying for a *building permit* shall submit an application to the *authority having jurisdiction*. An application for a *building permit* shall include all of the following:

1. *Construction documents* that satisfy the requirements of Section 106.2;
2. Any and all other submittal documents required by Section 106;
3. Any and all other information and documentation that may be required by the stricter of the *authority having jurisdiction's Code Enforcement Program* or a *Part 1203—Compliant Code Enforcement Program*; and
4. Such other information and documentation as the *authority having jurisdiction* may determine to be necessary to allow the *authority having jurisdiction* to determine whether the proposed work conforms with the *Uniform Code*, the *Energy Code*, and other applicable laws.

[NY] 105.2.3 Approval of construction documents. When the *authority having jurisdiction* issues a *building permit*, the *authority having jurisdiction* shall *approve* the *construction documents* in writing. Work shall be installed in accordance with the *approved construction documents* and the terms and conditions, if any, of the *building permit*.

[NY] 105.2.4 Validity of building permit. The issuance or granting of a *building permit* shall not be construed to be a *permit* for, or an approval of, any violation of any provision of the *Uniform Code*, the *Energy Code*, or any other applicable law. A *building permit* purporting to give authority to violate or cancel any provision of the *Uniform Code*, the *Energy Code*, or any other applicable law shall not be valid. The issuance of a *building permit* based on *construction documents* and other data shall not prevent the *building official* from requiring the correction of errors in the *construction documents* and other data.

[NY] 105.2.5 Suspension or revocation of building permit. The *authority having jurisdiction* is authorized to suspend or revoke a *building permit* wherever the *building permit* is issued in error; or on the basis of incorrect, inaccurate or incomplete information; or in violation of any provision of the *Uniform Code*, the *Energy Code*, or any other applicable law. Any such suspension or revocation shall be in writing, signed by an authorized agent of the *authority having jurisdiction*.

[NY] 105.2.6 Placement of building permit and approved construction documents. The *building permit,* or a copy thereof, and at least one set of *approved construction documents* shall be kept on the site of the work until the completion of the project. The *approved construction documents* shall be open to inspection by any authorized representative of the *authority having jurisdiction*.

[NY] 105.3 Construction inspections. Any person or entity performing work for which a *building permit* has been issued shall keep work accessible and exposed until the work has been inspected and accepted by the *authority having jurisdiction*, or its authorized agent, at each element of the construction process that is applicable to the work and specified in the stricter of the *authority having jurisdiction's Code Enforcement Program* or a *Part 1203—Compliant Code Enforcement Program*.

[NY] 105.3.1 Inspection requests. It shall be the duty of the holder of the *building permit* or their duly authorized agent to notify the *building official* when work is ready for inspection. It shall be the duty of the *building permit* holder to provide access to and means for inspections of such work that are required by this code.

[NY] 105.4 Stop work orders. The *authority having jurisdiction* is authorized to issue a stop work order to halt work that is being performed without a required *building permit*; work that is being performed after a required *building permit* has been revoked or suspended or has expired; work that is being conducted in a dangerous or unsafe manner; or work that is contrary to provisions of the *Uniform Code*, the *Energy Code*, the *approved construction documents*, or the terms and conditions (if any) of the *building permit*. No person or entity shall commence, perform or continue any work if the *authority having jurisdiction* has issued a stop work order with respect to such work.

[NY] 105.5 Certificates of occupancy. Where the stricter of the *authority having jurisdiction's Code Enforcement Program* or a *Part 1203—Compliant Code Enforcement Program* requires a *certificate of occupancy* for permission to use or occupy a *building* or *structure*, or any portion thereof, no person or entity shall use or occupy such building or structure, or such portion thereof, unless:

1. The *authority having jurisdiction* has issued such *certificate of occupancy*,
2. Such *certificate of occupancy* has not been revoked or suspended.
3. In the case of a temporary *certificate of occupancy*, such temporary *certificate of occupancy* has not expired.

[NY] 105.5.1 Authorized uses and occupancies. Where a *certificate of occupancy* has been issued for a building or structure, or any portion thereof, no person or entity shall use or occupy such *building* or *structure*, or such portion thereof, for any use or occupancy other than that authorized by such *certificate of occupancy*.

[NY] 105.5.2 Change in use or occupancy. Without regard to whether a *certificate of occupancy* shall have been issued, no person or entity shall convert the use or occupancy of a building or structure, or any portion thereof, from one use or occupancy to another without first obtaining a *building permit* to perform the work, if any,

INTERNATIONAL CODE COUNCIL®
Copyright © 2019 ICC & NYSDOS. ALL RIGHTS RESERVED. Accessed by Lauren Gualdino (lgualdino@briarcliffmanor.org), (-) Order Number #100880972 on May 08, 2020 07:05 AM (PDT) pursuant to License Agreement with ICC & NYSDOS. No further reproduction, no

100880972

required for such conversion; performing such work, if any; and obtaining a *certificate of occupancy* from the *authority having jurisdiction*.

[NY] 105.6 Operating permits. Where the stricter of the *authority having jurisdiction's Code Enforcement Program* or a *Part 1203—Compliant Code Enforcement Program* requires an operating permit to conduct an activity or to use a category of building, no person or entity shall conduct such activity or use such category of building without obtaining an operating *permit* from the *authority having jurisdiction*. The procedures for applying for, issuing, revoking, and suspending operating *permits* shall be as set forth in the stricter of the *authority having jurisdiction's Code Enforcement Program* or a *Part 1203—Compliant Code Enforcement Program*.

[NY] 105.7 Violations. Any violation of any provision set forth in Sections 105.2 through 105.6 shall be a violation of the *Uniform Code*, and any person or entity violating any such provision shall be subject to the penalties prescribed in Executive Law Section 382(2). In addition, to the extent that any act or omission that violates any provision set forth in Sections 105.2 through 105.6 is also a violation of any other applicable law, any person or entity guilty of such act or omission shall also be subject to the penalties prescribed in or otherwise applicable to a violation of such other applicable law.

[NY] SECTION 106
SUBMITTAL DOCUMENTS

[NY] 106.1 General. Submittal documents consisting of *construction documents*, statements of *special inspections*, geotechnical reports and other data shall be submitted with each application for a *building permit*.

[NY] 106.2 Construction documents. *Construction documents* shall be in accordance with Sections 106.2.1 through 106.2.9.

[NY] 106.2.1 Information on construction documents. *Construction documents* (1) shall define the scope of the proposed work; (2) shall be of sufficient clarity to indicate the location, nature and extent of the proposed work; (3) shall show in detail that the proposed work will conform to the provisions of the *Uniform Code*, the *Energy Code*, and other applicable codes, laws, ordinances, and regulations; (4) shall include all information required by any provision of this code (including but not limited to the information described in Sections 106.2.2 through 106.2.8), all information required by any other applicable provision of the *Uniform Code*, and all information required by any applicable provision of the *Energy Code*; and (5) shall include any and all additional information and documentation that may be required by the stricter of the *Code Enforcement Program* of the *authority having jurisdiction* or a *Part 1203—Compliant Code Enforcement Program*.

[NY] 106.2.1.1 Manufacturer's installation instructions. Manufacturer's installation instructions, as required by any applicable provision of the *Uniform Code* or by any applicable provision of the *Energy Code*, shall be available on the job site at the time of inspection.

[NY] 106.2.2 Fire protection system shop drawings. Shop drawings for the *fire protection system(s)* shall be submitted to indicate conformance to Chapter 9, any other applicable provision of the *Uniform Code*, and the *construction documents.* Such shop drawings shall be *approved* prior to the start of system installation. Shop drawings shall contain all information as required by the referenced installation standards in Chapter 9 or in any other applicable provision of the *Uniform Code*.

[NY] 106.2.3 Means of egress. The *construction documents* shall show in sufficient detail the location, construction, size and character of all portions of the means of egress including the path of the *exit discharge* to the *public way* in compliance with the provisions of the *Uniform Code*. In other than occupancies in Groups R-2, R-3, and I-1, the *construction documents* shall designate the number of occupants to be accommodated on every floor, and in all rooms and spaces.

[NY] 106.2.4 Exterior wall envelope. *Construction documents* for all buildings shall describe the *exterior wall envelope* in sufficient detail to determine compliance with the *Uniform Code* and the *Energy Code*. The *construction documents* shall provide details of the *exterior wall envelope* as required, including flashing, intersections with dissimilar materials, corners, end details, control joints, intersections at roof, eaves or parapets, means of drainage, water-resistive membrane and details around openings.

The *construction documents* shall include manufacturer's installation instructions that provide supporting documentation that the proposed penetration and opening details described in the *construction documents* maintain the weather resistance of the *exterior wall envelope*. The supporting documentation shall fully describe the *exterior wall system* that was tested, where applicable, as well as the test procedure used.

[NY]106.2.5 Exterior balconies and elevated walking surfaces. Where balconies or other elevated walking surfaces are exposed to water from direct or blowing rain, snow, or irrigation, and the structural framing is protected by an impervious moisture barrier, the *construction documents* shall include details for all elements of the impervious moisture barrier system. The *construction documents* shall include manufacturer's installation instructions.

[NY] 106.2.6 Site plan. The *construction documents* submitted with the application for *building permit* shall be accompanied by a site plan showing to scale the size and location of new construction and existing structures on the site, distances from *lot lines*, the established street grades and the proposed finished grades and, as applicable, *flood hazard areas*, *floodways*, and *design flood elevations*; and it shall be drawn in accordance with an accurate boundary line survey. In the case of demolition, the site plan shall show construction to be demolished and the location and size of existing structures and construction that are to remain on the site or plot. The *building official* is authorized to waive or modify the requirement for a site plan

INTERNATIONAL CODE COUNCIL®
Copyright © 2019 ICC & NYSDOS. ALL RIGHTS RESERVED. Accessed by Lauren Gualdino (lgualdino@briarcliffmanor.org), (-) Order Number #100880972 on May 08, 2020 07:05 AM (PDT) pursuant to License Agreement with ICC & NYSDOS. No further reproduction, no

100880972

where the application for a *building permit* is for *alteration* or *repair* or where otherwise warranted.

[NY] 106.2.6.1 Design flood elevations. Where *design flood elevations* are not specified, they shall be established in accordance with Section 1612.3.1.

[NY] 106.2.6.2 Flood hazard documentation. If located in a *flood hazard area*, documentation of the elevation of the lowest floor as required in Section 1612.4 shall be submitted to the *building official* prior to the final inspection.

[NY] 106.2.7 Structural information. The *construction documents* shall provide the information specified in Section 1603.

[NY] 106.2.8 Relocatable buildings. *Construction documents* for relocatable buildings shall comply with Section 3112.

[NY] 106.2.9 Design professional. *Construction documents* shall be prepared by a registered *design professional* where required by Article 145 or Article 147 of the New York State Education Law, by the stricter of *Code Enforcement Program* of the *authority having jurisdiction* or a *Part 1203—Compliant Code Enforcement Program*, or by any other applicable statute, regulation, or local law or ordinance.

[NY] SECTION 107
SERVICE UTILITIES

[NY] 107.1 Connection of service utilities. Connections from a utility, source of energy, fuel or power to any building or system which is regulated by *Uniform Code* shall be made in accordance with the requirements of the *Uniform Code*; the regulations of the public utility providing such utility, source of energy, fuel or power; and the regulations of any governmental unit or agency having jurisdiction over such utility, source of energy, fuel or power.

[NY] 107.1.1 Temporary connection. Where approved by the *building official*, temporary connections from a utility, source of energy, fuel or power to a *building* or system may be made. Temporary connections shall be made in accordance with Section 107.1.

[NY] 107.2 Notice of disconnection of service utilities. The *owner* or the *owner's* authorized agent shall notify the *building official* of the disconnection of any utility service to the building, *structure*, or system regulated by the *Uniform Code*.

[NY] SECTION 108
TEMPORARY STRUCTURES

[NY] 108.1 General. Temporary structures shall conform to Chapter 31 of this code and Chapter 31 of the *Fire Code of New York State*.

[NY] SECTION 109
INSPECTION OF SOLID FUEL-BURNING HEATING APPLIANCES, CHIMNEYS AND FLUES

[NY] 109.1 General. This Section 109 is made part of the *Uniform Code* pursuant to Executive Law Section 378(5-c).

[NY] 109.2 Permit. Prior to the installation of any solid fuel burning heating appliance, *chimney* or flue in any *dwelling* used as a residence, the *owner* thereof, or his agent, shall first secure a *permit* from the *authority having jurisdiction*.

[NY] 109.3 Installation and inspection. An appropriate and qualified inspector, as determined by the *authority having jurisdiction*, shall cause an inspection to be made of the solid fuel burning heating appliance, *chimney* or flue at a time when such inspection will best determine conformity of such installation with the *Uniform Code*.

Exception: The *authority having jurisdiction* may waive such inspection for good cause shown.

[NY] 109.4 Certificate of approval. Upon approval of such installation, the *building official* or other appropriate official of the *authority having jurisdiction* shall issue a certificate evidencing compliance with the appropriate provisions of the *Uniform Code* (such certificate being hereinafter referred to as a "certificate of approval"). No *owner* of any *dwelling* used as a residence shall operate, or cause to be operated, any solid fuel-burning heating appliance until such installation, including *chimney* and flue, has been approved and a certificate of approval has been obtained from the *authority having jurisdiction*.

[NY] 109.4.1 Accidental fire. In the event of an accidental fire in a *solid* fuel-burning heating appliance, *chimney* or flue requiring the services of a fire department, the chief of the responding fire department may issue a temporary thirty-day certificate indicating substantial conformity with the *Uniform Code*.

The *authority having jurisdiction* shall cause an inspection to be made by an official inspector, as determined by the *Code Enforcement Program* of the *authority having jurisdiction*, and a new certificate to be issued indicating conformity of such *solid* fuel-burning heating appliance, chimney or flue with the *Uniform Code*.

[NY] 109.4.2 Liability. Pursuant to Executive Law Section 378(5-c)(f), the issuance of a certificate of approval shall not be deemed to give rise to any claim or cause of action for damages against the *authority having jurisdiction* or any official of the *authority having jurisdiction* for damages resulting from operation or use of such *solid* fuel-burning heating appliance, *chimney* or flue.

[NY] 109.5 Fee. The *authority having jurisdiction* may establish and collect a reasonable fee for such inspection from the owner of such property or such owner's agent.

[NY] 109.6 Violations. Pursuant to Executive Law Section 378(5-c)(h), any violation of this Section 109 shall be deemed a violation and shall be punishable by a fine not to exceed two hundred fifty dollars.

INTERNATIONAL CODE COUNCIL®
Copyright © 2019 ICC & NYSDOS. ALL RIGHTS RESERVED. Accessed by Lauren Gualdino (lgualdino@briarcliffmanor.org), (-) Order Number #100880972 on May 08, 2020 07:05 AM (PDT) pursuant to License Agreement with ICC & NYSDOS. No further reproduction, no

100880972

[NY] 109.7 Emergency repair. Where equipment replacements and *repairs* must be performed in an emergency situation and where a delay occasioned by the requirement of securing a *permit* could reasonably be expected to cause irreparable damage to the property or serious personal injury to the occupants or other person, the *owner* or his agent may commence such installation without first obtaining such *permit* provided application therefor is filed within three business days after such work is commenced.

INTERNATIONAL CODE COUNCIL®
Copyright © 2019 ICC & NYSDOS. ALL RIGHTS RESERVED. Accessed by Lauren Gualdino (lgualdino@briarcliffmanor.org), (-) Order Number #100880972 on May 08, 2020 07:05 AM (PDT) pursuant to License Agreement with ICC & NYSDOS. No further reproduction, no

INTERNATIONAL CODE COUNCIL®

Copyright © 2019 ICC & NYSDOS. ALL RIGHTS RESERVED. Accessed by Lauren Gualdino (lgualdino@briarcliffmanor.org), (-) Order Number #100880972 on May 08, 2020 07:05 AM (PDT) pursuant to License Agreement with ICC & NYSDOS. No further reproduction, no

100880972

CHAPTER 2
DEFINITIONS

SECTION 201
GENERAL

201.1 Scope. Unless otherwise expressly stated, the following words and terms shall, for the purposes of this code, have the meanings shown in this chapter.

201.2 Interchangeability. Words used in the present tense include the future; words stated in the masculine gender include the feminine and neuter; the singular number includes the plural and the plural, the singular.

201.3 Terms defined in other codes. Where terms are not defined in this code and are defined in the *Energy Conservation Code of New York State*, *Fuel Gas Code of New York State*, *Fire Code of New York State*, *Mechanical Code of New York State* or *Plumbing Code of New York State,* such terms shall have the meanings ascribed to them as in those codes.

201.4 Terms not defined. Where terms are not defined through the methods authorized by this section, such terms shall have ordinarily accepted meanings such as the context implies.

SECTION 202
DEFINITIONS

[BG] 24-HOUR BASIS. The actual time that a person is an occupant within a facility for the purpose of receiving care. It shall not include a facility that is open for 24 hours and is capable of providing care to someone visiting the facility during any segment of the 24 hours.

[BS] AAC MASONRY. *Masonry* made of autoclaved aerated concrete (AAC) units, manufactured without internal reinforcement and bonded together using thin- or thick-bed *mortar*.

[BE] ACCESSIBLE. A *site*, *building*, *facility* or portion thereof that complies with Chapter 11.

[BE] ACCESSIBLE MEANS OF EGRESS. A continuous and unobstructed way of egress travel from any *accessible* point in a *building* or *facility* to a *public way*.

[BE] ACCESSIBLE ROUTE. A continuous, unobstructed path that complies with Chapter 11.

[BE] ACCESSIBLE UNIT. A *dwelling unit* or *sleeping unit* that complies with this code and the provisions for Accessible units in ICC A117.1.

[BS] ACCREDITATION BODY. An *approved*, third-party organization that is independent of the grading and inspection agencies, and the lumber mills, and that initially accredits and subsequently monitors, on a continuing basis, the competency and performance of a grading or inspection agency related to carrying out specific tasks.

[A] ADDITION. An extension or increase in floor area, number of stories or height of a building or structure.

[BS] ADHERED MASONRY VENEER. *Veneer* secured and supported through the adhesion of an *approved* bonding material applied to an *approved backing*.

[BS] ADOBE CONSTRUCTION. Construction in which the exterior *load-bearing* and *nonload-bearing walls* and partitions are of unfired clay *masonry units*, and floors, roofs and interior framing are wholly or partly of wood or other *approved* materials.

Adobe, stabilized. Unfired clay *masonry units* to which admixtures, such as emulsified asphalt, are added during the manufacturing process to limit the units' water absorption so as to increase their durability.

Adobe, unstabilized. Unfired clay *masonry units* that do not meet the definition of "Adobe, stabilized."

[F] AEROSOL CONTAINER. A metal can or plastic container up to a maximum size of 33.8 fluid ounces (1000 ml), or a glass bottle up to a maximum size of 4 fluid ounces (118 ml), designed and intended to dispense an aerosol.

[F] AEROSOL PRODUCT. A combination of a container, a propellant and a material that is dispensed. Aerosol products shall be classified by means of the calculation of their chemical heats of combustion and shall be designated Level 1, Level 2 or Level 3.

Level 1 aerosol products. Those with a total chemical heat of combustion that is less than or equal to 8,600 British thermal units per pound (Btu/lb) (20 kJ/g).

Level 2 aerosol products. Those with a total chemical heat of combustion that is greater than 8,600 Btu/lb (20 kJ/g), but less than or equal to 13,000 Btu/lb (30 kJ/g).

Level 3 aerosol products. Those with a total chemical heat of combustion that is greater than 13,000 Btu/lb (30 kJ/g).

[BS] AGGREGATE. In roofing, crushed stone, crushed slag or water-worn gravel used for surfacing for *roof coverings*.

[NY] AGRICULTURAL BUILDING. A structure designed and constructed to house farm equipment, farm implements, poultry, livestock, hay, grain, or other horticultural products. This structure shall not be a place of human habitation or a place of employment where agricultural products are processed, treated or packaged, nor shall it be a place used by the public.

[BF] AIR-IMPERMEABLE INSULATION. An insulation having an air permeance equal to or less than 0.02 l/s × m^2 at 75 pa pressure differential tested in accordance with ASTM E2178 or ASTM E283.

[BG] AIR-INFLATED STRUCTURE. A structure that uses air-pressurized membrane beams, arches or other elements to enclose space. Occupants of such a structure do not occupy the pressurized area used to support the structure.

[BG] AIR-SUPPORTED STRUCTURE. A structure wherein the shape of the structure is attained by air pressure

INTERNATIONAL CODE COUNCIL®
Copyright © 2019 ICC & NYSDOS. ALL RIGHTS RESERVED. Accessed by Lauren Gualdino (lgualdino@briarcliffmanor.org), (-) Order Number #100880972 on May 08, 2020 07:05 AM (PDT) pursuant to License Agreement with ICC & NYSDOS. No further reproduction, no

100880972

and occupants of the structure are within the elevated pressure area. Air-supported structures are of two basic types:

Double skin. Similar to a single skin, but with an attached liner that is separated from the outer skin and provides an airspace which serves for insulation, acoustic, aesthetic or similar purposes.

Single skin. Where there is only the single outer skin and the air pressure is directly against that skin.

[BE] AISLE. An unenclosed *exit access* component that defines and provides a path of egress travel.

[BE] AISLE ACCESSWAY. That portion of an *exit access* that leads to an *aisle*.

[F] ALARM NOTIFICATION APPLIANCE. A *fire alarm system* component such as a bell, horn, speaker, light or text display that provides audible, tactile or visible outputs, or any combination thereof.

[F] ALARM SIGNAL. A signal indicating an emergency requiring immediate action, such as a signal indicative of fire.

[F] ALARM VERIFICATION FEATURE. A feature of *automatic* fire detection and alarm systems to reduce unwanted alarms wherein *smoke detectors* report alarm conditions for a minimum period of time, or confirm alarm conditions within a given time period, after being *automatically* reset, in order to be accepted as a valid alarm-initiation signal.

[BS] ALLOWABLE STRESS DESIGN. A method of proportioning structural members, such that elastically computed stresses produced in the members by *nominal loads* do not exceed *specified* allowable stresses (also called "working stress design").

[A] ALTERATION. Any construction or renovation to an *existing structure* other than *repair* or *addition*.

[BE] ALTERNATING TREAD DEVICE. A device that has a series of steps between 50 and 70 degrees (0.87 and 1.22 rad) from horizontal, usually attached to a center support rail in an alternating manner so that the user does not have both feet on the same level at the same time.

[BG] AMBULATORY CARE FACILITY. Buildings or portions thereof used to provide medical, surgical, psychiatric, nursing or similar care on a less than 24-hour basis to persons who are rendered *incapable of self-preservation* by the services provided or staff has accepted responsibility for care recipients already incapable.

[BG] ANCHOR BUILDING. An exterior perimeter building of a group other than H having direct access to a *covered or open mall building* but having required *means of egress* independent of the mall.

[BS] ANCHORED MASONRY VENEER. *Veneer* secured with *approved* mechanical fasteners to an *approved backing*.

[BF] ANNULAR SPACE. The opening around the penetrating item.

[F] ANNUNCIATOR. A unit containing one or more indicator lamps, alphanumeric displays or other equivalent means in which each indication provides status information about a circuit, condition or location.

[A] APPROVED. Acceptable to the *building official*.

[A] APPROVED AGENCY. An established and recognized agency that is regularly engaged in conducting tests, furnishing inspection services or furnishing product certification where such agency has been *approved* by the *building official*.

[BS] APPROVED FABRICATOR. An established and qualified person, firm or corporation *approved* by the *building official* pursuant to Chapter 17 of this code.

[A] APPROVED SOURCE. An independent person, firm or corporation, *approved* by the *building official*, who is competent and experienced in the application of engineering principles to materials, methods or systems analyses.

[BS] AREA (for masonry).

Gross cross-sectional. The *area* delineated by the out-to-out *specified* dimensions of *masonry* in the plane under consideration.

Net cross-sectional. The *area* of *masonry units*, grout and *mortar* crossed by the plane under consideration based on out-to-out *specified* dimensions.

[BG] AREA, BUILDING. The area included within surrounding *exterior walls,* or *exterior walls* and *fire walls,* exclusive of vent *shafts* and *courts*. Areas of the building not provided with surrounding walls shall be included in the building area if such areas are included within the horizontal projection of the roof or floor above.

[BE] AREA OF REFUGE. An area where persons unable to use *stairways* can remain temporarily to await instructions or assistance during emergency evacuation.

[BE] AREA OF SPORT ACTIVITY. That portion of an indoor or outdoor space where the play or practice of a sport occurs.

[BG] AREAWAY. A subsurface space adjacent to a building open at the top or protected at the top by a grating or *guard*.

ASSEMBLY SEATING, MULTILEVEL. See "Multilevel assembly seating."

[NY] ASSISTIVE LISTENING SYSTEM. A permanent system that reinforces sound transmission within an area from a source to a receiver/transducer to be used by the hearing impaired within that area.

[BG] ATRIUM. An opening connecting two or more *stories* other than enclosed *stairways*, elevators, hoistways, escalators, plumbing, electrical, air-conditioning or other equipment, which is closed at the top and not defined as a mall. *Stories*, as used in this definition, do not include balconies within assembly groups or *mezzanines* that comply with Section 505.

[BG] ATTIC. The space between the ceiling framing of the top story and the underside of the roof.

[F] AUDIBLE ALARM NOTIFICATION APPLIANCE. A notification appliance that alerts by the sense of hearing.

[NY] AUTHORITY HAVING JURISDICTION. The governmental unit or agency responsible for administration and enforcement of the *Uniform Code*.

INTERNATIONAL CODE COUNCIL®
Copyright © 2019 ICC & NYSDOS. ALL RIGHTS RESERVED. Accessed by Lauren Gualdino (lgualdino@briarcliffmanor.org), (-) Order Number #100880972 on May 08, 2020 07:05 AM (PDT) pursuant to License Agreement with ICC & NYSDOS. No further reproduction, no

100880972

[F] AUTOMATIC. As applied to fire protection devices, a device or system providing an emergency function without the necessity for human intervention and activated as a result of a predetermined temperature rise, rate of temperature rise or combustion products.

[F] AUTOMATIC FIRE-EXTINGUISHING SYSTEM. An *approved* system of devices and equipment which *automatically* detects a fire and discharges an *approved* fire-extinguishing agent onto or in the area of a fire.

[F] AUTOMATIC SMOKE DETECTION SYSTEM. A *fire alarm system* that has initiation devices that utilize *smoke detectors* for protection of an area such as a room or space with detectors to provide early warning of fire.

[F] AUTOMATIC SPRINKLER SYSTEM. An *automatic sprinkler system*, for fire protection purposes, is an integrated system of underground and overhead piping designed in accordance with fire protection engineering standards. The system includes a suitable water supply. The portion of the system above the ground is a network of specially sized or hydraulically designed piping installed in a structure or area, generally overhead, and to which *automatic* sprinklers are connected in a systematic pattern. The system is usually activated by heat from a fire and discharges water over the fire area.

[F] AUTOMATIC WATER MIST SYSTEM. A system consisting of a water supply, a pressure source and a distribution piping system with attached nozzles, which, at or above a minimum operating pressure defined by its listing, discharges water in fine droplets meeting the requirements of NFPA 750 for the purpose of the control, suppression or extinguishment of a fire. Such systems include wet-pipe, dry-pipe and preaction types. The systems are designed as engineered, preengineered, local-application or total-flooding systems.

[F] AVERAGE AMBIENT SOUND LEVEL. The root mean square, A-weighted sound pressure level measured over a 24-hour period, or the time any person is present, whichever time period is less.

[BG] AWNING. An architectural projection that provides weather protection, identity or decoration and is partially or wholly supported by the building to which it is attached. An awning is comprised of a lightweight *frame structure* over which a covering is attached.

[BF] BACKING. The wall or surface to which the *veneer* is secured.

[BE] BALANCED DOOR. A door equipped with double-pivoted hardware so designed as to cause a semicounterbalanced swing action when opening.

[F] BALED COTTON. A natural seed fiber wrapped in and secured with industry accepted materials, usually consisting of burlap, woven polypropylene, polyethylene or cotton or sheet polyethylene, and secured with steel, synthetic or wire bands or wire; also includes linters (lint removed from the cottonseed) and motes (residual materials from the ginning process).

[F] BALED COTTON, DENSELY PACKED. Cotton made into banded bales with a packing density of not less than 22 pounds per cubic foot (360 kg/m^3), and dimensions complying with the following: a length of 55 inches (1397 mm), a width of 21 inches (533.4 mm) and a height of 27.6 to 35.4 inches (701 to 899 mm).

[BS] BALLAST. In roofing, ballast comes in the form of large stones or paver systems or light-weight interlocking paver systems and is used to provide uplift resistance for roofing systems that are not adhered or mechanically attached to the *roof deck*.

[F] BARRICADE. A structure that consists of a combination of walls, floor and roof, which is designed to withstand the rapid release of energy in an *explosion* and which is fully confined, partially vented or fully vented; or other effective method of shielding from explosive materials by a natural or artificial barrier.

Artificial barricade. An artificial mound or revetment a minimum thickness of 3 feet (914 mm).

Natural barricade. Natural features of the ground, such as hills, or timber of sufficient density that the surrounding exposures that require protection cannot be seen from the magazine or building containing explosives when the trees are bare of leaves.

[BS] BASE FLOOD. The *flood* having a 1-percent chance of being equaled or exceeded in any given year.

[BS] BASE FLOOD ELEVATION. The elevation of the *base flood*, including wave height, relative to the National Geodetic Vertical Datum (NGVD), North American Vertical Datum (NAVD) or other datum specified on the *Flood Insurance Rate Map* (FIRM).

[BS] BASEMENT (for flood loads). The portion of a building having its floor subgrade (below ground level) on all sides. This definition of "Basement" is limited in application to the provisions of Section 1612.

[BG] BASEMENT. A *story* that is not a *story above grade plane* (see "*Story above grade plane*"). This definition of "Basement" does not apply to the provisions of Section 1612 for flood *loads.*

[BS] BEARING WALL STRUCTURE. A building or other structure in which vertical *loads* from floors and roofs are primarily supported by walls.

[NY] BED AND BREAKFAST DWELLING. An owner-occupied residence resulting from a conversion of a one-family dwelling, used for providing overnight accommodations and a morning meal to not more than ten transient lodgers, and containing not more than five bedrooms for such lodgers.

[BS] BED JOINT. The horizontal layer of *mortar* on which a *masonry unit* is laid.

[BE] BLEACHERS. Tiered seating supported on a dedicated structural system and two or more rows high and is not a building element (see "*Grandstand*").

[BG] BOARDING HOUSE. A building arranged or used for lodging for compensation, with or without meals, and not occupied as a single-family unit.

[F] BOILING POINT. The temperature at which the vapor pressure of a *liquid* equals the atmospheric pressure of 14.7 pounds per square inch (psia) (101 kPa) or 760 mm of mercury. Where an accurate boiling point is unavailable for the material in question, or for mixtures which do not have a con-

INTERNATIONAL CODE COUNCIL®
Copyright © 2019 ICC & NYSDOS. ALL RIGHTS RESERVED. Accessed by Lauren Gualdino (lgualdino@briarcliffmanor.org), (-) Order Number #100880972 on May 08, 2020 07:05 AM (PDT) pursuant to License Agreement with ICC & NYSDOS. No further reproduction, no

100880972

stant boiling point, for the purposes of this classification, the 20-percent evaporated point of a distillation performed in accordance with ASTM D86 shall be used as the boiling point of the *liquid*.

[BS] BRACED WALL LINE. A straight line through the building plan that represents the location of the lateral resistance provided by the wall bracing.

[BS] BRACED WALL PANEL. A full-height section of wall constructed to resist in-plane shear loads through interaction of framing members, sheathing material and anchors. The panel's length meets the requirements of its particular bracing method and contributes toward the total amount of bracing required along its *braced wall line*.

[BE] BREAKOUT. For revolving doors, a process whereby wings or door panels can be pushed open manually for *means of egress* travel.

[BS] BRICK.

Calcium silicate (sand lime brick). A pressed and subsequently autoclaved unit that consists of sand and lime, with or without the inclusion of other materials.

Clay or shale. A solid or hollow *masonry unit* of clay or shale, usually formed into a rectangular *prism*, then burned or fired in a kiln; brick is a ceramic product.

Concrete. A concrete *masonry unit* made from Portland cement, water, and suitable aggregates, with or without the inclusion of other materials.

[A] BUILDING. Any structure utilized or intended for supporting or sheltering any occupancy.

BUILDING AREA. See "Area, building."

[BG] BUILDING ELEMENT. A fundamental component of building construction, listed in Table 601, which may or may not be of fire-resistance-rated construction and is constructed of materials based on the building type of construction.

BUILDING HEIGHT. See "Height, building."

[BS] BUILDING-INTEGRATED PHOTOVOLTAIC (BIPV) PRODUCT. A building product that incorporates photovoltaic modules and functions as a component of the building envelope.

[BS] BUILDING-INTEGRATED PHOTOVOLTAIC ROOF PANEL (BIPV ROOF PANEL). A photovoltaic panel that functions as a component of the building envelope.

[BG] BUILDING LINE. The line established by law, beyond which a building shall not extend, except as specifically provided by law.

[A] BUILDING OFFICIAL. The officer or other designated authority charged with the administration and enforcement of this code, or a duly authorized representative.

[NY] BUILDING PERMIT. A building permit, construction permit, demolition permit or permit that authorizes the performance of work.

[BS] BUILT-UP ROOF COVERING. Two or more layers of felt cemented together and surfaced with a cap sheet, mineral *aggregate*, smooth coating or similar surfacing material.

[BG] CABLE-RESTRAINED, AIR-SUPPORTED STRUCTURE. A structure in which the uplift is resisted by cables or webbings which are anchored to either foundations or dead men. Reinforcing cable or webbing is attached by various methods to the membrane or is an integral part of the membrane. This is not a cable-supported structure.

[BG] CANOPY. A permanent structure or architectural projection of rigid construction over which a covering is attached that provides weather protection, identity or decoration. A canopy is permitted to be structurally independent or supported by attachment to a building on one or more sides.

[NY] CAPACITOR ENERGY STORAGE SYSTEM. A stationary, rechargeable *energy storage system* consisting of capacitors, chargers, controls and associated electrical equipment designed to provide electrical power to a *building* or facility. The system is typically used to provide standby or emergency power, an uninterruptable power supply, load shedding, load sharing or similar capabilities.

[F] CARBON DIOXIDE EXTINGUISHING SYSTEMS. A system supplying carbon dioxide (CO_2) from a pressurized vessel through fixed pipes and nozzles. The system includes a manual- or *automatic*-actuating mechanism.

[F] CARBON MONOXIDE ALARM. A single- or multiple-station alarm intended to detect carbon monoxide gas and alert occupants by a distinct audible signal. It incorporates a sensor, control components and an alarm notification appliance in a single unit.

[F] CARBON MONOXIDE DETECTOR. A device with an integral sensor to detect carbon monoxide gas and transmit an alarm signal to a connected alarm control unit.

[BG] CARE SUITE. In Group I-2 occupancies, a group of treatment rooms, care recipient sleeping rooms and the support rooms or spaces and circulation space within the suite where staff are in attendance for supervision of all care recipients within the suite, and the suite is in compliance with the requirements of Section 407.4.4.

[BS] CAST STONE. A building stone manufactured from Portland cement concrete precast and used as a *trim*, *veneer* or facing on or in buildings or structures.

[F] CEILING LIMIT. The maximum concentration of an airborne contaminant to which one may be exposed. The ceiling limits utilized are those published in DOL 29 CFR Part 1910.1000. The ceiling Recommended Exposure Limit (REL-C) concentrations published by the U.S. National Institute for Occupational Safety and Health (NIOSH), Threshold Limit Value—Ceiling (TLV-C) concentrations published by the American Conference of Governmental Industrial Hygienists (ACGIH), Ceiling Workplace Environmental Exposure Level (WEEL-Ceiling) Guides published by the American Industrial Hygiene Association (AIHA), and other *approved*, consistent measures are allowed as surrogates for hazardous substances not listed in DOL 29 CFR Part 1910.1000.

[BF] CEILING RADIATION DAMPER. A *listed* device installed in a ceiling membrane of a fire-resistance-rated floor/ceiling or roof/ceiling assembly to limit *automatically* the radiative heat transfer through an air inlet/outlet opening. Ceiling radiation dampers include air terminal units, ceiling dampers and ceiling air diffusers.

INTERNATIONAL CODE COUNCIL®
Copyright © 2019 ICC & NYSDOS. ALL RIGHTS RESERVED. Accessed by Lauren Gualdino (lgualdino@briarcliffmanor.org), (-) Order Number #100880972 on May 08, 2020 07:05 AM (PDT) pursuant to License Agreement with ICC & NYSDOS. No further reproduction, no

100880972

[BG] CELL (Group I-3 occupancy). A room within a housing unit in a detention or correctional facility used to confine inmates or prisoners.

[BS] CELL (masonry). A void space having a gross cross-sectional *area* greater than $1^1/_2$ square inches (967 mm^2).

[BG] CELL TIER. Levels of *cells* vertically stacked above one another within a *housing unit*.

[BS] CEMENT PLASTER. A mixture of Portland or blended cement, Portland cement or blended cement and hydrated lime, masonry cement or plastic cement and aggregate and other *approved* materials as specified in this code.

[BF] CERAMIC FIBER BLANKET. A high-temperature *mineral wool* insulation material made of alumina-silica ceramic or calcium magnesium silicate soluble fibers and weighing 4 to 10 pounds per cubic foot (pcf) (64 to 160 kg/m^3).

[BS] CERTIFICATE OF COMPLIANCE. A certificate stating that materials and products meet specified standards or that work was done in compliance with *approved construction documents*.

[NY] CERTIFICATE OF OCCUPANCY. A document issued by the *authority having jurisdiction* certifying that the building complies with the *approved construction documents* that have been submitted to and approved by the *authority having jurisdiction*, indicating it to be in a condition suitable for occupancy.

[A] CHANGE OF OCCUPANCY. A change in the use of a building or a portion a building which results in one of the following:

1. A change of occupancy classification.
2. A change from one group to another group within an occupancy classification.
3. Any change in use within a group for which there is a change in application of the requirements of this code.

[NY] CHILDREN'S OVERNIGHT CAMP. A property consisting of a tract of land and any tents, vehicles, buildings or other structures that may be pertinent to its use, any part of which may be occupied by persons under eighteen years of age under general supervision for the purpose of outdoor or indoor organized activities and on which provisions are made for overnight occupancy of children. However, the term "children's overnight camp" shall not include any place or facility which has been excepted from the State Sanitary Code by the Commissioner of the New York State Department of Health pursuant to Section 1392(1) of the Public Health Law.

[BG] CHILDREN'S PLAY STRUCTURE. A structure composed of one or more components, where the user enters a play environment.

[M] CHIMNEY. A primarily vertical structure containing one or more flues, for the purpose of carrying gaseous products of combustion and air from a fuel-burning appliance to the outdoor atmosphere.

Factory-built chimney. A *listed* and *labeled chimney* composed of factory-made components, assembled in the field in accordance with manufacturer's instructions and the conditions of the listing.

Masonry chimney. A field-constructed *chimney* composed of solid masonry units, bricks, stones, or concrete.

Metal chimney. A field-constructed *chimney* of metal.

[M] CHIMNEY TYPES.

High-heat appliance type. An *approved* chimney for removing the products of combustion from fuel-burning, high-heat appliances producing combustion gases in excess of 2000°F (1093°C) measured at the appliance flue outlet (see Section 2113.11.3).

Low-heat appliance type. An *approved* chimney for removing the products of combustion from fuel-burning, low-heat appliances producing combustion gases not in excess of 1000°F (538°C) under normal operating conditions, but capable of producing combustion gases of 1400°F (760°C) during intermittent forces firing for periods up to 1 hour. Temperatures shall be measured at the appliance flue outlet.

Masonry type. A field-constructed chimney of solid *masonry units* or stones.

Medium-heat appliance type. An *approved* chimney for removing the products of combustion from fuel-burning, medium-heat appliances producing combustion gases not exceeding 2000°F (1093°C) measured at the appliance flue outlet (see Section 2113.11.2).

[BE] CIRCULATION PATH. An exterior or interior way of passage from one place to another for pedestrians.

[F] CLEAN AGENT. Electrically nonconducting, volatile or gaseous fire extinguishant that does not leave a residue upon vaporation.

[BF] CLIMATE ZONE. A geographical region that has been assigned climatic criteria as specified in Chapters 3CE and 3RE of the *Energy Conservation Construction Code of New York State*.

[BG] CLINIC, OUTPATIENT. Buildings or portions thereof used to provide *medical care* on less than a 24-hour basis to persons who are not rendered *incapable of self-preservation* by the services provided.

[F] CLOSED SYSTEM. The *use* of a *solid* or *liquid hazardous material* involving a closed vessel or system that remains closed during normal operations where vapors emitted by the product are not liberated outside of the vessel or system and the product is not exposed to the atmosphere during normal operations; and all *uses* of *compressed gases.* Examples of closed systems for *solids* and *liquids* include product conveyed through a piping system into a closed vessel, system or piece of equipment.

[BS] COASTAL A ZONE. Area within a *special flood hazard area*, landward of a V zone or landward of an open coast without mapped *coastal high-hazard areas*. In a coastal A zone, the principal source of flooding must be astronomical tides, storm surges, seiches or tsunamis, not riverine flooding. During the base flood conditions, the potential for breaking wave height shall be greater than or equal to $1^1/_2$ feet (457 mm). The inland limit of the coastal A zone is (a) the Limit of Moderate Wave Action if delineated on a FIRM, or (b) designated by the *authority having jurisdiction*.

INTERNATIONAL CODE COUNCIL®
Copyright © 2019 ICC & NYSDOS. ALL RIGHTS RESERVED. Accessed by Lauren Gualdino (lgualdino@briarcliffmanor.org), (-) Order Number #100880972 on May 08, 2020 07:05 AM (PDT) pursuant to License Agreement with ICC & NYSDOS. No further reproduction, no

100880972

[BS] COASTAL HIGH-HAZARD AREA. Area within the *special flood hazard area* extending from offshore to the inland limit of a primary dune along an open coast and any other area that is subject to high-velocity wave action from storms or seismic sources, and shown on a Flood Insurance Rate Map (FIRM) or other flood hazard map as velocity Zone V, VO, VE or V1-30.

[NY] CODE ENFORCEMENT PROGRAM. The program under which an *authority having jurisdiction* administers and enforces this code, as such program is currently in effect and as such program may hereafter be amended from time to time.

[BS] COLLAR JOINT. Vertical longitudinal space between *wythes* of *masonry* or between *masonry wythe* and backup construction that is permitted to be filled with *mortar* or grout.

[BS] COLLECTOR. A horizontal *diaphragm* element parallel and in line with the applied force that collects and transfers *diaphragm* shear forces to the vertical elements of the lateral force-resisting system or distributes forces within the *diaphragm*, or both.

[BF] COMBINATION FIRE/SMOKE DAMPER. A *listed* device installed in ducts and air transfer openings designed to close *automatically* upon the detection of heat and resist the passage of flame and smoke. The device is installed to operate *automatically*, controlled by a smoke detection system, and where required, is capable of being positioned from a *fire command center*.

[BS] COMBINED PILE RAFT. A geotechnical composite construction that combines the bearing effect of both foundation elements, raft and piles, by taking into account interactions between the foundation elements and the subsoil.

[F] COMBUSTIBLE DUST. Finely divided *solid* material that is 420 microns or less in diameter and which, when dispersed in air in the proper proportions, could be ignited by a flame, spark or other source of ignition. Combustible dust will pass through a U.S. No. 40 standard sieve.

[F] COMBUSTIBLE FIBERS. Readily ignitable and free-burning materials in a fibrous or shredded form, such as cocoa fiber, cloth, cotton, excelsior, hay, hemp, henequen, istle, jute, kapok, oakum, rags, sisal, Spanish moss, straw, tow, wastepaper, certain synthetic fibers or other like materials. This definition does not include densely packed baled cotton.

[F] COMBUSTIBLE LIQUID. A *liquid* having a closed cup *flash point* at or above 100°F (38°C). Combustible liquids shall be subdivided as follows:

Class II. *Liquids* having a closed cup *flash point* at or above 100°F (38°C) and below 140°F (60°C).

Class IIIA. *Liquids* having a closed cup *flash point* at or above 140°F (60°C) and below 200°F (93°C).

Class IIIB. *Liquids* having a closed cup *flash point* at or above 200°F (93°C).

The category of combustible liquids does not include *compressed gases* or *cryogenic fluids*.

[F] COMMERCIAL MOTOR VEHICLE. A motor vehicle used to transport passengers or property where the motor vehicle meets one of the following:

1. Has a gross vehicle weight rating of 10,000 pounds (4540 kg) or more.
2. Is designed to transport 16 or more passengers, including the driver.

[BE] COMMON PATH OF EGRESS TRAVEL. That portion of *exit access* travel distance measured from the most remote point of each room, area or space to that point where the occupants have separate and distinct access to two *exits* or *exit access* doorways.

[BE] COMMON USE. Interior or exterior *circulation paths*, rooms, spaces or elements that are not for public use and are made available for the shared use of two or more people.

[F] COMPRESSED GAS. A material or mixture of materials that meets both of the following:

1. Is a gas at 68°F (20°C) or less at 14.7 pounds per square inch atmosphere (psia) (101 kPa) of pressure.
2. Has a *boiling point* of 68°F (20°C) or less at 14.7 psia (101 kPa) which is either liquefied, nonliquefied or in solution, except those gases which have no other health- or physical-hazard properties are not considered to be compressed until the pressure in the packaging exceeds 41 psia (282 kPa) at 68°F (20°C).

The states of a compressed gas are categorized as follows:

1. Nonliquefied compressed gases are gases, other than those in solution, which are in a packaging under the charged pressure and are entirely gaseous at a temperature of 68°F (20°C).
2. Liquefied compressed gases are gases that, in a packaging under the charged pressure, are partially *liquid* at a temperature of 68°F (20°C).
3. Compressed gases in solution are nonliquefied gases that are dissolved in a solvent.
4. Compressed gas mixtures consist of a mixture of two or more compressed gases contained in a packaging, the hazard properties of which are represented by the properties of the mixture as a whole.

[BS] CONCRETE.

Carbonate aggregate. Concrete made with aggregates consisting mainly of calcium or magnesium carbonate, such as limestone or dolomite, and containing 40 percent or less quartz, chert or flint.

Cellular. A lightweight insulating concrete made by mixing a preformed foam with Portland cement slurry and having a dry unit weight of approximately 30 pcf (480 kg/m^3).

Lightweight aggregate. Concrete made with aggregates of expanded clay, shale, slag or slate or sintered fly ash or any natural lightweight aggregate meeting ASTM C330 and possessing equivalent fire-resistance properties and weighing 85 to 115 pcf (1360 to 1840 kg/m^3).

INTERNATIONAL CODE COUNCIL®
Copyright © 2019 ICC & NYSDOS. ALL RIGHTS RESERVED. Accessed by Lauren Gualdino (lgualdino@briarcliffmanor.org), (-) Order Number #100880972 on May 08, 2020 07:05 AM (PDT) pursuant to License Agreement with ICC & NYSDOS. No further reproduction, no

100880972

Perlite. A lightweight insulating concrete having a dry unit weight of approximately 30 pcf (480 kg/m^3) made with perlite concrete aggregate. Perlite aggregate is produced from a volcanic rock which, when heated, expands to form a glass-like material of cellular structure.

Sand-lightweight. Concrete made with a combination of expanded clay, shale, slag, slate, sintered fly ash, or any natural lightweight aggregate meeting ASTM C330 and possessing equivalent fire-resistance properties and natural sand. Its unit weight is generally between 105 and 120 pcf (1680 and 1920 kg/m^3).

Siliceous aggregate. Concrete made with normal-weight aggregates consisting mainly of silica or compounds other than calcium or magnesium carbonate, which contains more than 40-percent quartz, chert or flint.

Vermiculite. A light weight insulating concrete made with vermiculite concrete aggregate which is laminated micaceous material produced by expanding the ore at high temperatures. When added to a Portland cement slurry the resulting concrete has a dry unit weight of approximately 30 pcf (480 kg/m^3).

[BG] CONGREGATE LIVING FACILITIES. A building or part thereof that contains *sleeping units* where residents share bathroom or kitchen facilities, or both.

[F] CONSTANTLY ATTENDED LOCATION. A designated location at a facility staffed by trained personnel on a continuous basis where alarm or supervisory signals are monitored and facilities are provided for notification of the fire department or other emergency services.

[A] CONSTRUCTION DOCUMENTS. Written, graphic and pictorial documents prepared or assembled for describing the design, location and physical characteristics of the elements of a project necessary for obtaining a building *permit*.

[BG] CONSTRUCTION TYPES. See Section 602.

Type I. See Section 602.2.

Type II. See Section 602.2.

Type III. See Section 602.3.

Type IV. See Section 602.4.

Type V. See Section 602.5.

➡ **[BF] CONTINUOUS INSULATION (ci).** Insulating material that is continuous across all structural members without thermal bridges other than fasteners and service openings. It is installed on the interior or exterior, or is integral to any opaque surface of the building envelope.

[F] CONTROL AREA. Spaces within a building where quantities of *hazardous materials* not exceeding the maximum allowable quantities per control area are stored, dispensed, *used* or handled. See the definition of "Outdoor control area" in the *Fire Code of New York State*.

[BS] CONTROLLED LOW-STRENGTH MATERIAL. A self-compacted, cementitious material used primarily as a backfill in place of compacted fill.

[BS] CONVENTIONAL LIGHT-FRAME CONSTRUCTION. Construction whose primary structural elements are formed by a system of repetitive wood-framing members. See Section 2308 for conventional light-frame construction provisions.

[BG] CORNICE. A projecting horizontal molded element located at or near the top of an architectural feature.

[BE] CORRIDOR. An enclosed *exit access* component that defines and provides a path of egress travel.

CORRIDOR, OPEN-ENDED. See "Open-ended corridor."

[BF] CORRIDOR DAMPER. A *listed* device intended for use where air ducts penetrate or terminate at horizontal openings in the ceilings of fire-resistance-rated corridors, where the corridor ceiling is permitted to be constructed as required for the corridor walls.

[BS] CORROSION RESISTANCE. The ability of a material to withstand deterioration of its surface or its properties when exposed to its environment.

[F] CORROSIVE. A chemical that causes visible destruction of, or irreversible alterations in, living tissue by chemical action at the point of contact. A chemical shall be considered corrosive if, when tested on the intact skin of albino rabbits by the method described in DOTn 49 CFR, Part 173.137, such chemical destroys or changes irreversibly the structure of the tissue at the point of contact following an exposure period of 4 hours. This term does not refer to action on inanimate surfaces.

[BG] COURT. An open, uncovered space, unobstructed to the sky, bounded on three or more sides by exterior building walls or other enclosing devices.

[BG] COVERED MALL BUILDING. A single building enclosing a number of tenants and occupants, such as retail stores, drinking and dining establishments, entertainment and amusement facilities, passenger transportation terminals, offices and other similar uses wherein two or more tenants have a main entrance into one or more malls. *Anchor buildings* shall not be considered as a part of the covered mall building. The term "covered mall building" shall include *open mall buildings* as defined below.

Mall. A roofed or covered common pedestrian area within a *covered mall building* that serves as access for two or more tenants and not to exceed three levels that are open to each other. The term "mall" shall include open malls as defined below.

Open mall. An unroofed common pedestrian way serving a number of tenants not exceeding three levels. Circulation at levels above grade shall be permitted to include open exterior balconies leading to *exits* discharging at grade.

Open mall building. Several structures housing a number of tenants, such as retail stores, drinking and dining establishments, entertainment and amusement facilities, offices, and other similar uses, wherein two or more tenants have a main entrance into one or more open malls. *Anchor buildings* are not considered as a part of the open mall building.

[BS] CRIPPLE WALL. A framed stud wall extending from the top of the foundation to the underside of floor framing for the lowest occupied floor level.

INTERNATIONAL CODE COUNCIL®
Copyright © 2019 ICC & NYSDOS. ALL RIGHTS RESERVED. Accessed by Lauren Gualdino (lgualdino@briarcliffmanor.org), (-) Order Number #100880972 on May 08, 2020 07:05 AM (PDT) pursuant to License Agreement with ICC & NYSDOS. No further reproduction, no

100880972

[F] CRITICAL CIRCUIT. A circuit that requires continuous operation to ensure safety of the structure and occupants.

[BS] CROSS-LAMINATED TIMBER. A prefabricated engineered wood product consisting of not less than three layers of solid-sawn lumber or *structural composite lumber* where the adjacent layers are cross oriented and bonded with structural adhesive to form a solid wood element.

[F] CRYOGENIC FLUID. A *liquid* having a *boiling point* lower than -150°F (-101°C) at 14.7 pounds per square inch atmosphere (psia) (an absolute pressure of 101 kPa).

[BG] CUSTODIAL CARE. Assistance with day-to-day living tasks; such as assistance with cooking, taking medication, bathing, using toilet facilities and other tasks of daily living. Custodial care includes persons receiving care who have the ability to respond to emergency situations and evacuate at a slower rate and/or who have mental and psychiatric complications.

[BS] DALLE GLASS. A decorative composite glazing material made of individual pieces of glass that are embedded in a cast matrix of concrete or epoxy.

DAMPER. See "*Ceiling radiation damper*," "*Combination fire/smoke damper*," "*Corridor damper*," "*Fire damper*" and "*Smoke damper*."

[BS] DANGEROUS. Any building, structure or portion thereof that meets any of the conditions described below shall be deemed dangerous:

1. The building or structure has collapsed, has partially collapsed, has moved off its foundation or lacks the necessary support of the ground.
2. There exists a significant risk of collapse, detachment or dislodgment of any portion, member, appurtenance or ornamentation of the building or structure under service loads.

[F] DAY BOX. A portable magazine designed to hold explosive materials constructed in accordance with the requirements for a Type 3 magazine as defined and classified in Chapter 56 of the *Fire Code of New York State*.

[BS] DEAD LOAD. The weight of materials of construction incorporated into the building, including but not limited to walls, floors, roofs, ceilings, *stairways*, built-in partitions, finishes, cladding and other similarly incorporated architectural and structural items, and the weight of fixed service equipment, such as cranes, plumbing stacks and risers, electrical feeders, heating, ventilating and air-conditioning systems and *automatic sprinkler systems*.

[BS] DECORATIVE GLASS. A carved, leaded or *Dalle glass* or glazing material whose purpose is decorative or artistic, not functional; whose coloring, texture or other design qualities or components cannot be removed without destroying the glazing material and whose surface, or assembly into which it is incorporated, is divided into segments.

[F] DECORATIVE MATERIALS. All materials applied over the building *interior finish* for decorative, acoustical or other effect including, but not limited to, curtains, draperies, fabrics and streamers; and all other materials utilized for decorative effect including, but not limited to, bulletin boards, artwork, posters, photographs, batting, cloth, cotton, hay, stalks, straw, vines, leaves, trees, moss and similar items, foam plastics and materials containing foam plastics. Decorative materials do not include wall coverings, ceiling coverings, floor coverings, ordinary window shades, *interior finish* and materials 0.025 inch (0.64 mm) or less in thickness applied directly to and adhering tightly to a substrate.

[BS] DEEP FOUNDATION. A deep foundation is a foundation element that does not satisfy the definition of a *shallow foundation*.

[BE] DEFEND-IN-PLACE. A method of emergency response that engages building components and trained staff to provide occupant safety during an emergency. Emergency response involves remaining in place, relocating within the building, or both, without evacuating the building.

[A] DEFERRED SUBMITTAL. Those portions of the design that are not submitted at the time of the application and that are to be submitted to the *building official* within a specified period.

[F] DEFLAGRATION. An exothermic reaction, such as the extremely rapid oxidation of a flammable dust or vapor in air, in which the reaction progresses through the unburned material at a rate less than the velocity of sound. A deflagration can have an explosive effect.

[BF] DELAYED-ACTION CLOSER. A self-closing device that incorporates a delay prior to the initiation of closing. Delayed-action closers are mechanical devices with an adjustable delay.

[F] DELUGE SYSTEM. A sprinkler system employing open sprinklers attached to a piping system connected to a water supply through a valve that is opened by the operation of a detection system installed in the same areas as the sprinklers. When this valve opens, water flows into the piping system and discharges from all sprinklers attached thereto.

[BS] DESIGN DISPLACEMENT. See Section 1905.1.1.

[BS] DESIGN EARTHQUAKE GROUND MOTION. The earthquake ground motion that buildings and structures are specifically proportioned to resist in Section 1613.

[BS] DESIGN FLOOD. The *flood* associated with the greater of the following two areas:

1. Area with a flood plain subject to a 1-percent or greater chance of *flooding* in any year.
2. Area designated as a *flood hazard area* on a community's flood hazard map, or otherwise legally designated.

[BS] DESIGN FLOOD ELEVATION. The elevation of the "*design flood*," including wave height, relative to the datum specified on the community's legally designated flood hazard map. In areas designated as Zone AO, the *design flood elevation* shall be the elevation of the highest existing grade of the building's perimeter plus the depth number (in feet) specified on the flood hazard map. In areas designated as Zone AO where a depth number is not specified on the map, the depth number shall be taken as being equal to 2 feet (610 mm).

DESIGN PROFESSIONAL, REGISTERED. See "Registered design professional."

INTERNATIONAL CODE COUNCIL®
Copyright © 2019 ICC & NYSDOS. ALL RIGHTS RESERVED. Accessed by Lauren Gualdino (lgualdino@briarcliffmanor.org), (-) Order Number #100880972 on May 08, 2020 07:05 AM (PDT) pursuant to License Agreement with ICC & NYSDOS. No further reproduction, no

100880972

DESIGN PROFESSIONAL IN RESPONSIBLE CHARGE, REGISTERED. See "Registered design professional in responsible charge."

[BS] DESIGN STRENGTH. The product of the nominal strength and a *resistance factor* (or strength reduction factor).

[BS] DESIGNATED SEISMIC SYSTEM. Those nonstructural components that require design in accordance with Chapter 13 of ASCE 7 and for which the component importance factor, I_p, is greater than 1 in accordance with Section 13.1.3 of ASCE 7.

[F] DETACHED BUILDING. A separate single-*story* building, without a basement or crawl space, used for the storage or *use* of *hazardous materials* and located an *approved* distance from all structures.

[BS] DETAILED PLAIN CONCRETE STRUCTURAL WALL. See Section 1905.1.1.

[BE] DETECTABLE WARNING. A standardized surface feature built in or applied to walking surfaces or other elements to warn visually impaired persons of hazards on a *circulation path*.

[F] DETECTOR, HEAT. A fire detector that senses heat—either abnormally high temperature or rate of rise, or both.

[F] DETONATION. An exothermic reaction characterized by the presence of a shock wave in the material which establishes and maintains the reaction. The reaction zone progresses through the material at a rate greater than the velocity of sound. The principal heating mechanism is one of shock compression. Detonations have an explosive effect.

[BG] DETOXIFICATION FACILITIES. Facilities that provide treatment for substance abuse, serving care recipients who are *incapable of self-preservation* or who are harmful to themselves or others.

[BS] DIAPHRAGM. A horizontal or sloped system acting to transmit lateral forces to vertical elements of the lateral force-resisting system. When the term "diaphragm" is used, it shall include horizontal bracing systems.

Diaphragm, blocked. In *light-frame construction*, a diaphragm in which all sheathing edges not occurring on a framing member are supported on and fastened to blocking.

Diaphragm boundary. In *light-frame construction*, a location where shear is transferred into or out of the diaphragm sheathing. Transfer is either to a boundary element or to another force-resisting element.

Diaphragm chord. A diaphragm boundary element perpendicular to the applied load that is assumed to take axial stresses due to the diaphragm moment.

Diaphragm, unblocked. A diaphragm that has edge nailing at supporting members only. Blocking between supporting structural members at panel edges is not included. Diaphragm panels are field nailed to supporting members.

[BS] DIMENSIONS (for Chapter 21).

Nominal. The *specified dimension* plus an allowance for the *joints* with which the units are to be laid. Nominal dimensions are usually stated in whole numbers. Thickness is given first, followed by height and then length.

Specified. Dimensions specified for the manufacture or construction of a unit, *joint* or element.

[BE] DIRECT ACCESS. A path of travel from a space to an immediately adjacent space through an opening in the common wall between the two spaces.

[F] DISPENSING. The pouring or transferring of any material from a container, tank or similar vessel, whereby vapors, dusts, fumes, mists or gases are liberated to the atmosphere.

DOOR, BALANCED. See "Balanced door."

DOOR, LOW-ENERGY POWER-OPERATED. See "Low-energy power-operated door."

DOOR, POWER-ASSISTED. See "Power-assisted door."

DOOR, POWER-OPERATED. See "Power-operated door."

DOORWAY, EXIT ACCESS. See "Exit access doorway."

[BG] DORMITORY. A space in a building where group sleeping accommodations are provided in one room, or in a series of closely associated rooms, for persons not members of the same family group, under joint occupancy and single management, as in college dormitories or fraternity houses.

[BF] DRAFTSTOP. A material, device or construction installed to restrict the movement of air within open spaces of concealed areas of building components such as crawl spaces, floor/ceiling assemblies, roof/ceiling assemblies and *attics*.

DRAG STRUT. See "Collector."

[BS] DRILLED SHAFT. A cast-in-place deep foundation element, also referred to as a caisson, drilled pier or bored pile, constructed by drilling a hole (with or without permanent casing or drilling fluid) into soil or rock and filling it with fluid concrete after the drilling equipment is removed.

Socketed drilled shaft. A drilled shaft with a permanent pipe or tube casing that extends down to bedrock and an uncased socket drilled into the bedrock.

[F] DRY-CHEMICAL EXTINGUISHING AGENT. A powder composed of small particles, usually of sodium bicarbonate, potassium bicarbonate, urea-potassium-based bicarbonate, potassium chloride or monoammonium phosphate, with added particulate material supplemented by special treatment to provide resistance to packing, resistance to moisture absorption (caking) and the proper flow capabilities.

[BS] DRY FLOODPROOFING. A combination of design modifications that results in a building or structure, including the attendant utilities and equipment and sanitary facilities, being watertight with walls substantially impermeable to the passage of water and with structural components having the capacity to resist *loads* as identified in ASCE 7.

[A] DWELLING. A building that contains one or two *dwelling units* used, intended or designed to be used, rented, leased, let or hired out to be occupied for living purposes.

[A] DWELLING UNIT. A single unit providing complete, independent living facilities for one or more persons, including permanent provisions for living, sleeping, eating, cooking and sanitation.

DWELLING UNIT OR SLEEPING UNIT, MULTISTORY. See "Multistory unit."

INTERNATIONAL CODE COUNCIL®
Copyright © 2019 ICC & NYSDOS. ALL RIGHTS RESERVED. Accessed by Lauren Gualdino (lgualdino@briarcliffmanor.org), (-) Order Number #100880972 on May 08, 2020 07:05 AM (PDT) pursuant to License Agreement with ICC & NYSDOS. No further reproduction, no

100880972

[BE] EGRESS COURT. A *court* or *yard* which provides access to a *public way* for one or more *exits*.

[BF] ELECTRICAL CIRCUIT PROTECTIVE SYSTEM. A specific construction of devices, materials, or coatings installed as a fire-resistive barrier system applied to electrical system components, such as cable trays, conduits and other raceways, open run cables and conductors, cables, and conductors.

[F] ELEVATOR GROUP. A grouping of elevators in a building located adjacent or directly across from one another that responds to common hall call buttons.

[F] EMERGENCY ALARM SYSTEM. A system to provide indication and warning of emergency situations involving *hazardous materials*.

[F] EMERGENCY CONTROL STATION. An *approved* location on the premises where signals from emergency equipment are received and which is staffed by trained personnel.

[BE] EMERGENCY ESCAPE AND RESCUE OPENING. An operable window, door or other similar device that provides for a means of escape and access for rescue in the event of an emergency.

[F] EMERGENCY POWER SYSTEM. A source of automatic electric power of a required capacity and duration to operate required life safety, fire alarm, detection and ventilation systems in the event of a failure of the primary power. Emergency power systems are required for electrical loads where interruption of the primary power could result in loss of human life or serious injuries.

[F] EMERGENCY VOICE/ALARM COMMUNICATIONS. Dedicated manual or *automatic* facilities for originating and distributing voice instructions, as well as alert and evacuation signals pertaining to a fire emergency, to the occupants of a building.

[BE] EMPLOYEE WORK AREA. All or any portion of a space used only by employees and only for work. *Corridors*, toilet rooms, kitchenettes and break rooms are not employee work areas.

[NY] ENERGY CODE. The *New York State Energy Conservation Construction Code* adopted pursuant to Article 11 of the New York State Energy Law.

[NY] ENERGY CONSERVATION CONSTRUCTION CODE OF NEW YORK STATE. The 2020 edition of the publication entitled "Energy Conservation Construction Code of New York State," published by the International Code Council, Inc. (publication date November 2019).

[NY] ENERGY STORAGE SYSTEM. One or more devices, assembled together, capable of storing energy in order to supply electrical energy at a future time, not to include a stand-alone 12-volt car battery or an electric motor vehicle.

[BS] ENGINEERED WOOD RIM BOARD. A full-depth structural composite lumber, wood structural panel, structural glued laminated timber or prefabricated wood I-joist member designed to transfer horizontal (shear) and vertical (compression) loads, provide attachment for diaphragm sheathing, siding and exterior deck ledgers, and provide lateral support at the ends of floor or roof joists or rafters.

ENTRANCE, PUBLIC. See "Public entrance."

ENTRANCE, RESTRICTED. See "Restricted entrance."

ENTRANCE, SERVICE. See "Service entrance."

[BG] EQUIPMENT PLATFORM. An unoccupied, elevated platform used exclusively for mechanical systems or industrial process equipment, including the associated elevated walkways, stairways, alternating tread devices and ladders necessary to access the platform (see Section 505.3).

[BS] ESSENTIAL FACILITIES. Buildings and other structures that are intended to remain operational in the event of extreme environmental loading from *flood*, wind, snow or earthquakes.

[F] EXHAUSTED ENCLOSURE. An appliance or piece of equipment that consists of a top, a back and two sides providing a means of local exhaust for capturing gases, fumes, vapors and mists. Such enclosures include laboratory hoods, exhaust fume hoods and similar appliances and equipment used to locally retain and exhaust the gases, fumes, vapors and mists that could be released. Rooms or areas provided with general *ventilation*, in themselves, are not exhausted enclosures.

[NY] EXISTING BUILDING. A *building* that is legally occupied and/or for which a *certificate of occupancy* authorizing its use(s) has been issued, without regard to the date on which such legal occupancy began or the date on which such certificate of occupancy was issued.

[NY] EXISTING BUILDING CODE OF NEW YORK STATE. The 2020 edition of the publication entitled "Existing Building Code of New York State," published by the International Code Council, Inc. (publication date November 2019).

[NY] EXISTING STRUCTURE. A *structure* that is legally occupied and/or for which a *certificate of occupancy* authorizing its use(s) has been issued, without regard to the date on which such legal occupancy began or the date on which such certificate of occupancy was issued.

[BE] EXIT. That portion of a *means of egress* system between the *exit access* and the *exit discharge* or *public way*. Exit components include exterior exit doors at the *level of exit discharge*, *interior exit stairways* and *ramps*, *exit passageways*, *exterior exit stairways* and *ramps* and *horizontal exits*.

[BE] EXIT ACCESS. That portion of a *means of egress* system that leads from any occupied portion of a building or structure to an *exit*.

[BE] EXIT ACCESS DOORWAY. A door or access point along the path of egress travel from an occupied room, area or space where the path of egress enters an intervening room, *corridor*, *exit access stairway* or *ramp*.

[BE] EXIT ACCESS RAMP. A *ramp* within the exit access portion of the means of egress system.

[BE] EXIT ACCESS STAIRWAY. A *stairway* within the exit access portion of the means of egress system.

[BE] EXIT DISCHARGE. That portion of a *means of egress* system between the termination of an *exit* and a *public way*.

[BE] EXIT DISCHARGE, LEVEL OF. The *story* at the point at which an *exit* terminates and an *exit discharge* begins.

INTERNATIONAL CODE COUNCIL®
Copyright © 2019 ICC & NYSDOS. ALL RIGHTS RESERVED. Accessed by Lauren Gualdino (lgualdino@briarcliffmanor.org), (-) Order Number #100880972 on May 08, 2020 07:05 AM (PDT) pursuant to License Agreement with ICC & NYSDOS. No further reproduction, no

100880972

EXIT, HORIZONTAL. See "Horizontal exit."

[BE] EXIT PASSAGEWAY. An *exit* component that is separated from other interior spaces of a building or structure by fire-resistance-rated construction and opening protectives, and provides for a protected path of egress travel in a horizontal direction to an *exit* or to the *exit discharge*.

[BF] EXPANDED VINYL WALL COVERING. Wall covering consisting of a woven textile backing, an expanded vinyl base coat layer and a nonexpanded vinyl skin coat. The expanded base coat layer is a homogeneous vinyl layer that contains a blowing agent. During processing, the blowing agent decomposes, causing this layer to expand by forming closed cells. The total thickness of the wall covering is approximately 0.055 inch to 0.070 inch (1.4 mm to 1.78 mm).

[F] EXPLOSION. An effect produced by the sudden violent expansion of gases, which may be accompanied by a shock wave or disruption, or both, of enclosing materials or structures. An explosion could result from any of the following:

1. Chemical changes such as rapid oxidation, *deflagration* or *detonation*, decomposition of molecules and runaway polymerization (usually *detonation*s).
2. Physical changes such as pressure tank ruptures.
3. Atomic changes (nuclear fission or fusion).

[F] EXPLOSIVE. A chemical compound, mixture or device, the primary or common purpose of which is to function by explosion. The term includes, but is not limited to: dynamite, black powder, pellet powder, initiating explosives, detonators, safety fuses, squibs, detonating cord, igniter cord, and igniters.

The term "explosive" includes any material determined to be within the scope of USC Title 18: Chapter 40 and also includes any material classified as an explosive other than consumer fireworks, 1.4G by the *hazardous materials* regulations of DOTn 49 CFR Parts 100-185.

High explosive. Explosive material, such as dynamite, which can be caused to detonate by means of a No. 8 test blasting cap when unconfined.

Low explosive. Explosive material that will burn or deflagrate when ignited. It is characterized by a rate of reaction that is less than the speed of sound. Examples of low explosives include, but are not limited to: black powder; safety fuse; igniters; igniter cord; fuse lighters; fireworks; and propellants, 1.3C.

Mass-detonating explosives. Division 1.1, 1.2 and 1.5 explosives alone or in combination, or loaded into various types of ammunition or containers, most of which can be expected to explode virtually instantaneously when a small portion is subjected to fire, severe concussion, impact, the impulse of an initiating agent or the effect of a considerable discharge of energy from without. Materials that react in this manner represent a mass explosion hazard. Such an explosive will normally cause severe structural damage to adjacent objects. Explosive propagation could occur immediately to other items of ammunition and explosives stored sufficiently close to and not adequately protected from the initially exploding pile with a time interval short enough so that two or more quantities must be considered as one for quantity-distance purposes.

UN/DOTn Class 1 explosives. The former classification system used by DOTn included the terms "high" and "low" explosives as defined herein. The following terms further define explosives under the current system applied by DOTn for all explosive materials defined as hazard Class 1 materials. Compatibility group letters are used in concert with the division to specify further limitations on each division noted (i.e., the letter G identifies the material as a pyrotechnic substance or article containing a pyrotechnic substance and similar materials).

Division 1.1. Explosives that have a mass explosion hazard. A mass explosion is one which affects almost the entire load instantaneously.

Division 1.2. Explosives that have a projection hazard but not a mass explosion hazard.

Division 1.3. Explosives that have a fire hazard and either a minor blast hazard or a minor projection hazard or both, but not a mass explosion hazard.

Division 1.4. Explosives that pose a minor explosion hazard. The explosive effects are largely confined to the package and no projection of fragments of appreciable size or range is to be expected. An external fire must not cause virtually instantaneous explosion of almost the entire contents of the package.

Division 1.5. Very insensitive explosives. This division is comprised of substances that have a mass explosion hazard, but that are so insensitive there is very little probability of initiation or of transition from burning to *detonation* under normal conditions of transport.

Division 1.6. Extremely insensitive articles which do not have a mass explosion hazard. This division is comprised of articles that contain only extremely insensitive detonating substances and which demonstrate a negligible probability of accidental initiation or propagation.

[BE] EXTERIOR EXIT RAMP. An *exit* component that serves to meet one or more *means of egress* design requirements, such as required number of *exits* or *exit access* travel distance, and is open to *yards*, *courts* or *public ways*.

[BE] EXTERIOR EXIT STAIRWAY. An *exit* component that serves to meet one or more *means of egress* design requirements, such as required number of *exits* or *exit access* travel distance, and is open to *yards*, *courts* or *public ways*.

[BF] EXTERIOR INSULATION AND FINISH SYSTEMS (EIFS). EIFS are nonstructural, nonload-bearing, *exterior wall* cladding systems that consist of an insulation board attached either adhesively or mechanically, or both, to the substrate; an integrally reinforced base coat and a textured protective finish coat.

[BF] EXTERIOR INSULATION AND FINISH SYSTEMS (EIFS) WITH DRAINAGE. An EIFS that incorporates a means of drainage applied over a *water-resistive barrier*.

[BF] EXTERIOR SURFACES. Weather-exposed surfaces.

[BF] EXTERIOR WALL. A wall, bearing or nonbearing, that is used as an enclosing wall for a building, other than a

INTERNATIONAL CODE COUNCIL®
Copyright © 2019 ICC & NYSDOS. ALL RIGHTS RESERVED. Accessed by Lauren Gualdino (lgualdino@briarcliffmanor.org), (-) Order Number #100880972 on May 08, 2020 07:05 AM (PDT) pursuant to License Agreement with ICC & NYSDOS. No further reproduction, no

100880972

fire wall, and that has a slope of 60 degrees (1.05 rad) or greater with the horizontal plane.

[BF] EXTERIOR WALL COVERING. A material or assembly of materials applied on the exterior side of *exterior walls* for the purpose of providing a weather-resisting barrier, insulation or for aesthetics, including but not limited to, *veneers,* siding, *exterior insulation and finish systems*, architectural *trim* and embellishments such as *cornices*, soffits, facias, gutters and leaders.

[BF] EXTERIOR WALL ENVELOPE. A system or assembly of *exterior wall* components, including *exterior wall* finish materials, that provides protection of the building structural members, including framing and sheathing materials, and conditioned interior space, from the detrimental effects of the exterior environment.

[BF] F RATING. The time period that the *through-penetration firestop system* limits the spread of fire through the penetration when tested in accordance with ASTM E814 or UL 1479.

[BF] FABRIC PARTITION. A partition consisting of a finished surface made of fabric, without a continuous rigid backing, that is directly attached to a framing system in which the vertical framing members are spaced greater than 4 feet (1219 mm) on center.

[BS] FABRICATED ITEM. Structural, load-bearing or lateral load-resisting members or assemblies consisting of materials assembled prior to installation in a building or structure, or subjected to operations such as heat treatment, thermal cutting, cold working or reforming after manufacture and prior to installation in a building or structure. Materials produced in accordance with standards referenced by this code, such as rolled structural steel shapes, steel reinforcing bars, *masonry units* and *wood structural panels*, or in accordance with a referenced standard that provides requirements for quality control done under the supervision of a third-party quality control agency, are not "fabricated items."

[F] FABRICATION AREA. An area within a semiconductor fabrication facility and related research and development areas in which there are processes using hazardous production materials. Such areas are allowed to include ancillary rooms or areas such as dressing rooms and offices that are directly related to the fabrication area processes.

[A] FACILITY. All or any portion of buildings, structures, *site* improvements, elements and pedestrian or vehicular routes located on a *site*.

[BS] FACTORED LOAD. The product of a *nominal load* and a *load factor*.

[NY] FACTORY MANUFACTURED BUILDINGS (MODULAR BUILDINGS). A commercial or residential structure constructed by a method or system of construction whereby the structure or its components are wholly or in substantial part manufactured in manufacturing facilities, and whereby all portions may not be reasonably inspected at the installation site without disassembly or destruction thereof. The term includes buildings intended or designed for permanent installation, or assembly and permanent installation, on a building site and *relocatable buildings* in compliance with Section 3113 of this code.

[BS] FENESTRATION. Products classified as either vertical fenestration or skylights and sloped glazing, installed in such a manner as to preserve the weather-resistant barrier of the wall or roof in which they are installed. Fenestration includes products with glass or other transparent or translucent materials.

[BS] FENESTRATION, VERTICAL. Windows that are fixed or movable, opaque doors, glazed doors, glazed block and combination opaque and glazed doors installed in a wall at less than 15 degrees from the vertical.

[BS] FIBER-CEMENT (BACKER BOARD, SIDING, SOFFIT, TRIM AND UNDERLAYMENT) PRODUCTS. Manufactured thin section composites of hydraulic cementitious matrices and discrete nonasbestos fibers.

[BF] FIBER-REINFORCED POLYMER. A polymeric composite material consisting of reinforcement fibers, such as glass, impregnated with a fiber-binding polymer which is then molded and hardened. Fiber-reinforced polymers are permitted to contain cores laminated between fiber-reinforced polymer facings.

[BS] FIBERBOARD. A fibrous, homogeneous panel made from lignocellulosic fibers (usually wood or cane) and having a density of less than 31 pounds per cubic foot (pcf) (497 kg/m^3) but more than 10 pcf (160 kg/m^3).

FIELD NAILING. See "Nailing, field."

FIRE ALARM BOX, MANUAL. See "Manual fire alarm box."

[F] FIRE ALARM CONTROL UNIT. A system component that receives inputs from *automatic* and manual *fire alarm* devices and may be capable of supplying power to detection devices and transponders or off-premises transmitters. The control unit may be capable of providing a transfer of power to the notification appliances and transfer of condition to relays or devices.

[F] FIRE ALARM SIGNAL. A signal initiated by a *fire alarm-initiating device* such as a *manual fire alarm box*, *automatic fire detector*, waterflow switch or other device whose activation is indicative of the presence of a fire or fire signature.

[F] FIRE ALARM SYSTEM. A system or portion of a combination system consisting of components and circuits arranged to monitor and annunciate the status of *fire alarm* or *supervisory signal-initiating device*s and to initiate the appropriate response to those signals.

[BF] FIRE AREA. The aggregate floor area enclosed and bounded by *fire walls*, *fire barriers*, *exterior walls* or *horizontal assemblies* of a building. Areas of the building not provided with surrounding walls shall be included in the fire area if such areas are included within the horizontal projection of the roof or floor next above.

[BF] FIRE BARRIER. A fire-resistance-rated wall assembly of materials designed to restrict the spread of fire in which continuity is maintained.

[NY] FIRE CODE OF NEW YORK STATE. The 2020 edition of the publication entitled "Fire Code of New York State," published by the International Code Council, Inc. (publication date November 2019).

INTERNATIONAL CODE COUNCIL®
Copyright © 2019 ICC & NYSDOS. ALL RIGHTS RESERVED. Accessed by Lauren Gualdino (lgualdino@briarcliffmanor.org), (-) Order Number #100880972 on May 08, 2020 07:05 AM (PDT) pursuant to License Agreement with ICC & NYSDOS. No further reproduction, no

100880972

[F] FIRE COMMAND CENTER. The principal attended or unattended location where the status of detection, alarm communications and control systems is displayed, and from which the systems can be manually controlled.

[BF] FIRE DAMPER. A *listed* device installed in ducts and air transfer openings designed to close *automatically* upon detection of heat and resist the passage of flame. Fire dampers are classified for use in either static systems that will *automatically* shut down in the event of a fire, or in dynamic systems that continue to operate during a fire. A dynamic fire damper is tested and rated for closure under elevated temperature airflow.

[F] FIRE DETECTOR, AUTOMATIC. A device designed to detect the presence of a fire signature and to initiate action.

[BF] FIRE DOOR. The door component of a *fire door assembly*.

[BF] FIRE DOOR ASSEMBLY. Any combination of a *fire door*, frame, hardware and other accessories that together provide a specific degree of fire protection to the opening.

FIRE DOOR ASSEMBLY, FLOOR. See "Floor fire door assembly."

[BF] FIRE EXIT HARDWARE. *Panic hardware* that is *listed* for use on *fire door assemblies*.

[F] FIRE LANE. A road or other passageway developed to allow the passage of fire apparatus. A fire lane is not necessarily intended for vehicular traffic other than fire apparatus.

[BF] FIRE PARTITION. A vertical assembly of materials designed to restrict the spread of fire in which openings are protected.

[BF] FIRE PROTECTION RATING. The period of time that an opening protective will maintain the ability to confine a fire as determined by tests specified in Section 716. Ratings are stated in hours or minutes.

[F] FIRE PROTECTION SYSTEM. *Approved* devices, equipment and systems or combinations of systems used to detect a fire, activate an alarm, extinguish or control a fire, control or manage smoke and products of a fire or any combination thereof.

[BF] FIRE-RATED GLAZING. Glazing with either a *fire protection rating* or a *fire-resistance rating*.

[BF] FIRE RESISTANCE. That property of materials or their assemblies that prevents or retards the passage of excessive heat, hot gases or flames under conditions of use.

[BF] FIRE-RESISTANCE RATING. The period of time a building element, component or assembly maintains the ability to confine a fire, continues to perform a given structural function, or both, as determined by the tests, or the methods based on tests, prescribed in Section 703.

[BF] FIRE-RESISTANT JOINT SYSTEM. An assemblage of specific materials or products that are designed, tested and fire-resistance rated in accordance with either ASTM E1966 or UL 2079 to resist for a prescribed period of time the passage of fire through *joints* made in or between fire-resistance-rated assemblies.

[F] FIRE SAFETY FUNCTIONS. Building and fire control functions that are intended to increase the level of life safety for occupants or to control the spread of harmful effects of fire.

[BF] FIRE SEPARATION DISTANCE. The distance measured from the building face to one of the following:

1. The closest interior *lot line*.
2. To the centerline of a street, an alley or *public way*.
3. To an imaginary line between two buildings on the lot.

The distance shall be measured at right angles from the face of the wall.

[BF] FIRE WALL. A fire-resistance-rated wall having protected openings, which restricts the spread of fire and extends continuously from the foundation to or through the roof, with sufficient structural stability under fire conditions to allow collapse of construction on either side without collapse of the wall.

[BF] FIRE WINDOW ASSEMBLY. A window constructed and glazed to give protection against the passage of fire.

[BF] FIREBLOCKING. Building materials, or materials *approved* for use as fireblocking, installed to resist the free passage of flame to other areas of the building through concealed spaces.

[M] FIREPLACE. A hearth and fire chamber or similar prepared place in which a fire may be made and which is built in conjunction with a chimney.

[BS] FIREPLACE THROAT. The opening between the top of the firebox and the smoke chamber.

FIRESTOP, MEMBRANE-PENETRATION. See "Membrane-penetration firestop."

FIRESTOP, PENETRATION. See "Penetration firestop."

FIRESTOP SYSTEM, THROUGH-PENETRATION. See "Through-penetration firestop system."

[F] FIREWORKS. Any composition or device for the purpose of producing a visible or audible effect for entertainment purposes by combustion, *deflagration* or *detonation* that meets the definition of 1.4G fireworks or 1.3G fireworks.

Fireworks, 1.3G. Large fireworks devices, which are explosive materials, intended for use in fireworks displays and designed to produce audible or visible effects by combustion, *deflagration* or *detonation*. Such 1.3G fireworks include, but are not limited to, firecrackers containing more than 130 milligrams (2 grains) of explosive composition, aerial shells containing more than 40 grams of pyrotechnic composition, and other display pieces which exceed the limits for classification as 1.4G fireworks. Such 1.3G fireworks are also described as fireworks, UN0335 by the DOTn.

Fireworks, 1.4G. Small fireworks devices containing restricted amounts of pyrotechnic composition designed primarily to produce visible or audible effects by combustion or deflagration that complies with the construction, chemical composition and labeling regulations of the DOTn for fireworks, UN0336, and the U.S. Consumer Product Safety Commission (CPSC) as set forth in CPSC 16 CFR: Parts 1500 and 1507.

INTERNATIONAL CODE COUNCIL®
Copyright © 2019 ICC & NYSDOS. ALL RIGHTS RESERVED. Accessed by Lauren Gualdino (lgualdino@briarcliffmanor.org), (-) Order Number #100880972 on May 08, 2020 07:05 AM (PDT) pursuant to License Agreement with ICC & NYSDOS. No further reproduction, no

100880972

[BG] FIXED BASE OPERATOR (FBO). A commercial business granted the right by the airport sponsor to operate on an airport and provide aeronautical services, such as fueling, hangaring, tie-down and parking, aircraft rental, aircraft maintenance and flight instruction.

[BE] FIXED SEATING. Furniture or fixture designed and installed for the use of sitting and secured in place including bench-type seats and seats with or without backs or armrests.

[BF] FLAME SPREAD. The propagation of flame over a surface.

[BF] FLAME SPREAD INDEX. A comparative measure, expressed as a dimensionless number, derived from visual measurements of the spread of flame versus time for a material tested in accordance with ASTM E84 or UL 723.

[F] FLAMMABLE GAS. A material that is a gas at 68°F (20°C) or less at 14.7 pounds per square inch atmosphere (psia) (101 kPa) of pressure [a material that has a *boiling point* of 68°F (20°C) or less at 14.7 psia (101 kPa)], which also meets one of the following:

1. Is ignitable at 14.7 psia (101 kPa) when in a mixture of 13 percent or less by volume with air.
2. Has a flammable range at 14.7 psia (101 kPa) with air of at least 12 percent, regardless of the lower limit.

The limits specified shall be determined at 14.7 psi (101 kPa) of pressure and a temperature of 68°F (20°C) in accordance with ASTM E681.

[F] FLAMMABLE LIQUEFIED GAS. A liquefied compressed gas which, under a charged pressure, is partially liquid at a temperature of 68°F (20°C) and which is flammable.

[F] FLAMMABLE LIQUID. A *liquid* having a closed cup *flash point* below 100°F (38°C). Flammable liquids are further categorized into a group known as Class I liquids. The Class I category is subdivided as follows:

Class IA. *Liquids* having a *flash point* below 73°F (23°C) and a *boiling point* below 100°F (38°C).

Class IB. *Liquids* having a *flash point* below 73°F (23°C) and a *boiling point* at or above 100°F (38°C).

Class IC. *Liquids* having a *flash point* at or above 73°F (23°C) and below 100°F (38°C). The category of flammable liquids does not include *compressed gases* or *cryogenic fluids*.

[F] FLAMMABLE MATERIAL. A material capable of being readily ignited from common sources of heat or at a temperature of 600°F (316°C) or less.

[F] FLAMMABLE SOLID. A *solid*, other than a blasting agent or *explosive*, that is capable of causing fire through friction, absorption or moisture, spontaneous chemical change, or retained heat from manufacturing or processing, or which has an ignition temperature below 212°F (100°C) or which burns so vigorously and persistently when ignited as to create a serious hazard. A chemical shall be considered a flammable *solid* as determined in accordance with the test method of CPSC 16 CFR; Part 1500.44, if it ignites and burns with a self-sustained flame at a rate greater than 0.1 inch (2.5 mm) per second along its major axis.

[F] FLAMMABLE VAPORS OR FUMES. The concentration of flammable constituents in air that exceeds 25 percent of their *lower flammable limit (LFL).*

[F] FLASH POINT. The minimum temperature in degrees Fahrenheit at which a *liquid* will give off sufficient vapors to form an ignitable mixture with air near the surface or in the container, but will not sustain combustion. The flash point of a *liquid* shall be determined by appropriate test procedure and apparatus as specified in ASTM D56, ASTM D93 or ASTM D3278.

[BE] FLIGHT. A continuous run of rectangular treads, *winders* or combination thereof from one landing to another.

[BS] FLOOD or FLOODING. A general and temporary condition of partial or complete inundation of normally dry land from:

1. The overflow of inland or tidal waters.
2. The unusual and rapid accumulation or runoff of surface waters from any source.

[BS] FLOOD DAMAGE-RESISTANT MATERIALS. Any construction material capable of withstanding direct and prolonged contact with floodwaters without sustaining any damage that requires more than cosmetic *repair*.

FLOOD, DESIGN. See "Design flood."

FLOOD ELEVATION, DESIGN. See "Design flood elevation."

[BS] FLOOD HAZARD AREA. The greater of the following two areas:

1. The area within a flood plain subject to a 1-percent or greater chance of *flooding* in any year.
2. The area designated as a flood hazard area on a community's flood hazard map, or otherwise legally designated.

FLOOD HAZARD AREAS, SPECIAL. See "Special flood hazard area."

[BS] FLOOD INSURANCE RATE MAP (FIRM). An official map of a community on which the Federal Emergency Management Agency (FEMA) has delineated both the *special flood hazard areas* and the risk premium zones applicable to the community.

[BS] FLOOD INSURANCE STUDY. The official report provided by the Federal Emergency Management Agency containing the Flood Insurance Rate Map (FIRM), the Flood Boundary and Floodway Map (FBFM), the water surface elevation of the *base flood* and supporting technical data.

[BS] FLOODWAY. The channel of the river, creek or other watercourse and the adjacent land areas that must be reserved in order to discharge the *base flood* without cumulatively increasing the water surface elevation more than a designated height.

[BE] FLOOR AREA, GROSS. The floor area within the inside perimeter of the *exterior walls* of the building under consideration, exclusive of vent *shafts* and *courts*, without deduction for *corridors*, *stairways*, *ramps*, closets, the thickness of interior walls, columns or other features. The floor area of a building, or portion thereof, not provided with surrounding *exterior walls* shall be the usable area under the hor-

INTERNATIONAL CODE COUNCIL®
Copyright © 2019 ICC & NYSDOS. ALL RIGHTS RESERVED. Accessed by Lauren Gualdino (lgualdino@briarcliffmanor.org), (-) Order Number #100880972 on May 08, 2020 07:05 AM (PDT) pursuant to License Agreement with ICC & NYSDOS. No further reproduction, no

100880972

izontal projection of the roof or floor above. The gross floor area shall not include *shafts* with no openings or interior *courts*.

[BE] FLOOR AREA, NET. The actual occupied area not including unoccupied accessory areas such as *corridors*, *stairways*, *ramps*, toilet rooms, mechanical rooms and closets.

[BF] FLOOR FIRE DOOR ASSEMBLY. A combination of a *fire door*, a frame, hardware and other accessories installed in a horizontal plane, which together provide a specific degree of fire protection to a through-opening in a fire-resistance-rated floor (see Section 712.1.13.1).

[F] FOAM-EXTINGUISHING SYSTEM. A special system discharging a foam made from concentrates, either mechanically or chemically, over the area to be protected.

[BF] FOAM PLASTIC INSULATION. A plastic that is intentionally expanded by the use of a foaming agent to produce a reduced-density plastic containing voids consisting of open or closed cells distributed throughout the plastic for thermal insulating or acoustical purposes and that has a density less than 20 pounds per cubic foot (pcf) (320 kg/m^3).

[BE] FOLDING AND TELESCOPIC SEATING. Tiered seating having an overall shape and size that is capable of being reduced for purposes of moving or storing and is not a building element.

[BG] FOOD COURT. A public seating area located in the *mall* that serves adjacent food preparation tenant spaces.

[BG] FOSTER CARE FACILITIES. Facilities that provide care to more than five children, $2^1/_2$ years of age or less.

[BS] FOUNDATION PIER (for Chapter 21). An isolated vertical foundation member whose horizontal dimension measured at right angles to its thickness does not exceed three times its thickness and whose height is equal to or less than four times its thickness.

[BS] FRAME STRUCTURE. A building or other structure in which vertical *loads* from floors and roofs are primarily supported by columns.

[NY] FREEBOARD. A factor of safety expressed in feet (mm) above the design flood elevation.

[F] FUEL CELL POWER SYSTEM, STATIONARY. A stationary energy-generation system that converts the chemical energy of a fuel and oxidant to electric energy (DC or AC electricity) by an electrochemical process.

Field-fabricated fuel cell power system. A *stationary fuel cell power system* that is assembled at the job site and is not a preengineered or prepackaged factory-assembled fuel cell power system.

Preengineered fuel cell power system. A *stationary fuel cell power system* consisting of components and modules that are produced in a factory and shipped to the job site for assembly.

Prepackaged fuel cell power system. A *stationary fuel cell power system* that is factory assembled as a single, complete unit and shipped as a complete unit for installation at the job site.

[NY] FUEL GAS CODE OF NEW YORK STATE. The 2020 edition of the publication entitled "Fuel Gas Code of New York State," published by the International Code Council, Inc. (publication date November 2019).

[BS] GABLE. The triangular portion of a wall beneath the end of a dual-slope, pitched, or mono-slope roof or portion thereof and above the top plates of the story or level of the ceiling below.

[BE] GAMING. To deal, operate, carry on, conduct, maintain or expose for play any game played with cards, dice, equipment or any mechanical, electromechanical or electronic device or machine for money, property, checks, credit or any representative of value except where occurring at private home or operated by a charitable or educational organization.

[BE] GAMING AREA. Single or multiple areas of a building or facility where gaming machines or tables are present and gaming occurs, including but not limited to, primary casino gaming areas, VIP gaming areas, high-roller gaming areas, bar tops, lobbies, dedicated rooms or spaces such as in retail or restaurant establishments, sports books and tournament areas.

[BE] GAMING MACHINE TYPE. Categorization of gaming machines per type of game played on them, including, but not limited to, slot machines, video poker and video keno.

[BE] GAMING TABLE TYPE. Categorization of gaming tables per the type of game played on them, including, but not limited to, baccarat, bingo, blackjack/21, craps, pai gow, poker, roulette.

[F] GAS CABINET. A fully enclosed, ventilated noncombustible enclosure used to provide an isolated environment for *compressed gas* cylinders in storage or *use*. Doors and access ports for exchanging cylinders and accessing pressure-regulating controls are allowed to be included.

[F] GAS DETECTION SYSTEM. A system or portion of a combination system that utilizes one or more stationary sensors to detect the presence of a specified gas at a specified concentration and initiate one or more responses required by this code, such as notifying a responsible person, activating an alarm signal, or activating or deactivating equipment. A self-contained gas detection and alarm device is not classified as a gas detection system.

[F] GAS ROOM. A separately ventilated, fully enclosed room in which only *compressed gases* and associated equipment and supplies are stored or *used.*

[F] GASEOUS HYDROGEN SYSTEM. An assembly of piping, devices and apparatus designed to generate, store, contain, distribute or transport a nontoxic, gaseous hydrogen-containing mixture having not less than 95-percent hydrogen gas by volume and not more than 1-percent oxygen by volume. Gaseous hydrogen systems consist of items such as *compressed gas* containers, reactors and appurtenances, including pressure regulators, pressure relief devices, manifolds, pumps, compressors and interconnecting piping and tubing and controls.

[BF] GLASS FIBERBOARD. Fibrous glass roof insulation consisting of inorganic glass fibers formed into rigid boards

INTERNATIONAL CODE COUNCIL®
Copyright © 2019 ICC & NYSDOS. ALL RIGHTS RESERVED. Accessed by Lauren Gualdino (lgualdino@briarcliffmanor.org), (-) Order Number #100880972 on May 08, 2020 07:05 AM (PDT) pursuant to License Agreement with ICC & NYSDOS. No further reproduction, no

using a binder. The board has a top surface faced with asphalt and kraft reinforced with glass fiber.

[BS] GRADE (LUMBER). The classification of lumber in regard to strength and utility in accordance with American Softwood Lumber Standard DOC PS 20 and the grading rules of an *approved* lumber rules-writing agency.

[BE] GRADE FLOOR OPENING. A window or other opening located such that the sill height of the opening is not more than 44 inches (1118 mm) above or below the finished ground level adjacent to the opening.

[BG] GRADE PLANE. A reference plane representing the average of finished ground level adjoining the building at *exterior walls*. Where the finished ground level slopes away from the *exterior walls*, the reference plane shall be established by the lowest points within the area between the building and the *lot line* or, where the *lot line* is more than 6 feet (1829 mm) from the building, between the building and a point 6 feet (1829 mm) from the building.

GRADE PLANE, STORY ABOVE. See "Story above grade plane."

[BE] GRANDSTAND. Tiered seating supported on a dedicated structural system and two or more rows high and is not a building element (see "*Bleachers*").

[BG] GREENHOUSE. A structure or thermally isolated area of a building that maintains a specialized sunlit environment used for and essential to the cultivation, protection or maintenance of plants.

[BG] GROSS LEASABLE AREA. The total floor area designed for tenant occupancy and exclusive use. The area of tenant occupancy is measured from the centerlines of joint partitions to the outside of the tenant walls. All tenant areas, including areas used for storage, shall be included in calculating gross leasable area.

[BG] GROUP HOME. A facility for social rehabilitation, substance abuse or mental health problems that contains a group housing arrangement that provides *custodial care* but does not provide medical care.

[BE] GUARD. A building component or a system of building components located at or near the open sides of elevated walking surfaces that minimizes the possibility of a fall from the walking surface to a lower level.

[BG] GUESTROOM. A room used or intended to be used by one or more guests for living or sleeping purposes.

[BS] GYPSUM BOARD. The generic name for a family of sheet products consisting of a noncombustible core primarily of gypsum with paper surfacing. Gypsum wallboard, gypsum sheathing, gypsum base for gypsum veneer plaster, exterior gypsum soffit board, predecorated gypsum board and water-resistant gypsum backing board complying with the standards listed in Tables 2506.2, 2507.2 and Chapter 35 are types of gypsum board.

[BS] GYPSUM PANEL PRODUCT. The general name for a family of sheet products consisting essentially of gypsum.

[BS] GYPSUM PLASTER. A mixture of calcined gypsum or calcined gypsum and lime and aggregate and other *approved* materials as specified in this code.

[BS] GYPSUM VENEER PLASTER. *Gypsum plaster* applied to an *approved* base in one or more coats normally not exceeding $^1/_4$ inch (6.4 mm) in total thickness.

[BG] HABITABLE SPACE. A space in a building for living, sleeping, eating or cooking. Bathrooms, toilet rooms, closets, halls, storage or utility spaces and similar areas are not considered habitable spaces.

[F] HALOGENATED EXTINGUISHING SYSTEM. A fire-extinguishing system using one or more atoms of an element from the halogen chemical series: fluorine, chlorine, bromine and iodine.

[F] HANDLING. The deliberate transport by any means to a point of storage or *use*.

[BE] HANDRAIL. A horizontal or sloping rail intended for grasping by the hand for guidance or support.

[BS] HARDBOARD. A fibrous-felted, homogeneous panel made from lignocellulosic fibers consolidated under heat and pressure in a hot press to a density not less than 31 pcf (497 kg/m^3).

HARDWARE. See "Fire exit hardware" and "Panic hardware."

[F] HAZARDOUS MATERIALS. Those chemicals or substances that are *physical hazards* or *health hazards* as classified in Section 307 and the *Fire Code of New York State*, whether the materials are in usable or waste condition.

[F] HAZARDOUS PRODUCTION MATERIAL (HPM). A *solid*, *liquid* or gas associated with semiconductor manufacturing that has a degree-of-hazard rating in health, flammability or instability of Class 3 or 4 as ranked by NFPA 704 and which is *used* directly in research, laboratory or production processes which have as their end product materials that are not hazardous.

[BS] HEAD JOINT. Vertical *mortar joint* placed between *masonry units* within the *wythe* at the time the *masonry units* are laid.

[F] HEALTH HAZARD. A classification of a chemical for which there is statistically significant evidence that acute or chronic health effects are capable of occurring in exposed persons. The term "health hazard" includes chemicals that are *toxic* or *highly toxic*, and *corrosive*.

HEAT DETECTOR. See "Detector, heat."

[BG] HEIGHT, BUILDING. The vertical distance from *grade plane* to the average height of the highest roof surface.

[BS] HELICAL PILE. Manufactured steel deep foundation element consisting of a central shaft and one or more helical bearing plates. A helical pile is installed by rotating it into the ground. Each helical bearing plate is formed into a screw thread with a uniform defined pitch.

[F] HELIPAD. A structural surface that is used for the landing, taking off, taxiing and parking of helicopters.

[F] HELIPORT. An area of land or water or a structural surface that is used, or intended for use, for the landing and taking off of helicopters, and any appurtenant areas that are used, or intended for use, for heliport buildings or other heliport facilities.

INTERNATIONAL CODE COUNCIL®

Copyright © 2019 ICC & NYSDOS. ALL RIGHTS RESERVED. Accessed by Lauren Gualdino (lgualdino@briarcliffmanor.org), (-) Order Number #100880972 on May 08, 2020 07:05 AM (PDT) pursuant to License Agreement with ICC & NYSDOS. No further reproduction, no

100880972

[F] HELISTOP. The same as "heliport," except that no fueling, defueling, maintenance, repairs or storage of helicopters is permitted.

[F] HIGHER EDUCATION LABORATORY. Laboratories in Group B occupancies used for educational purposes above the 12th grade. Storage, use and handling of chemicals in such laboratories shall be limited to purposes related to testing, analysis, teaching, research or developmental activities on a nonproduction basis.

[F] HIGHLY TOXIC. A material which produces a lethal dose or lethal concentration that falls within any of the following categories:

1. A chemical that has a median lethal dose (LD_{50}) of 50 milligrams or less per kilogram of body weight when administered orally to albino rats weighing between 200 and 300 grams each.
2. A chemical that has a median lethal dose (LD_{50}) of 200 milligrams or less per kilogram of body weight when administered by continuous contact for 24 hours (or less if death occurs within 24 hours) with the bare skin of albino rabbits weighing between 2 and 3 kilograms each.
3. A chemical that has a median lethal concentration (LC_{50}) in air of 200 parts per million by volume or less of gas or vapor, or 2 milligrams per liter or less of mist, fume or dust, when administered by continuous inhalation for 1 hour (or less if death occurs within 1 hour) to albino rats weighing between 200 and 300 grams each.

Mixtures of these materials with ordinary materials, such as water, might not warrant classification as *highly toxic*. While this system is basically simple in application, any hazard evaluation that is required for the precise categorization of this type of material shall be performed by experienced, technically competent persons.

[BF] HIGH-PRESSURE DECORATIVE EXTERIOR-GRADE COMPACT LAMINATE (HPL). Panels consisting of layers of cellulose fibrous material impregnated with thermosetting resins and bonded together by a high-pressure process to form a homogeneous nonporous core suitable for exterior use.

[BF] HIGH-PRESSURE DECORATIVE EXTERIOR-GRADE COMPACT LAMINATE (HPL) SYSTEM. An *exterior wall covering* fabricated using HPL in a specific assembly including *joints*, seams, attachments, substrate, framing and other details as appropriate to a particular design.

[BG] HIGH-RISE BUILDING. A building with an occupied floor located more than 75 feet (22 860 mm) above the lowest level of fire department vehicle access.

[A] HISTORIC BUILDINGS. Any building or structure that is one or more of the following:

1. Listed or certified as eligible for listing by the State Historic Preservation Officer or the Keeper of the National Register of Historic Places, in the National Register of Historic Places.
2. Designated as historic under an applicable state or local law.
3. Certified as a contributing resource within a National Register, state designated or locally designated historic district.

[BF] HORIZONTAL ASSEMBLY. A fire-resistance-rated floor or *roof assembly* of materials designed to restrict the spread of fire in which continuity is maintained.

[BE] HORIZONTAL EXIT. An *exit* component consisting of fire-resistance-rated construction and opening protectives intended to compartmentalize portions of a building thereby creating refuge areas that afford safety from the fire and smoke from the area of fire origin.

[BG] HOSPITALS AND PSYCHIATRIC HOSPITALS. Facilities that provide care or treatment for the medical, psychiatric, obstetrical, or surgical treatment of care recipients who are *incapable of self-preservation*.

[BG] HOUSING UNIT. A *dormitory* or a group of *cells* with a common dayroom in Group I-3.

HPM. See "Hazardous Production Material."

[F] HPM ROOM. A room used in conjunction with or serving a Group H-5 occupancy, where *HPM* is stored or *used* and which is classified as a Group H-2, H-3 or H-4 occupancy.

[BS] HURRICANE-PRONE REGIONS. Areas vulnerable to hurricanes defined as:

1. The U. S. Atlantic Ocean and Gulf of Mexico coasts where the basic design wind speed, *V* for Risk Category II buildings is greater than 115 mph (51.4 m/s);
2. Hawaii, Puerto Rico, Guam, Virgin Islands and American Samoa.

[F] HYDROGEN FUEL GAS ROOM. A room or space that is intended exclusively to house a *gaseous hydrogen system*.

[BS] ICE-SENSITIVE STRUCTURE. A structure for which the effect of an atmospheric ice *load* governs the design of a structure or portion thereof. This includes, but is not limited to, lattice structures, guyed masts, overhead lines, light suspension and cable-stayed bridges, aerial cable systems (e.g., for ski lifts or logging operations), amusement rides, open catwalks and platforms, flagpoles and signs.

[F] IMMEDIATELY DANGEROUS TO LIFE AND HEALTH (IDLH). The concentration of airborne contaminants which poses a threat of death, immediate or delayed permanent adverse health effects, or effects that could prevent escape from such an environment. This contaminant concentration level is established by the National Institute of Occupational Safety and Health (NIOSH) based on both toxicity and flammability. It generally is expressed in parts per million by volume (ppmv/v) or milligrams per cubic meter (mg/m^3). If adequate data do not exist for precise establishment of IDLH concentrations, an independent certified industrial hygienist, industrial toxicologist, appropriate regulatory agency or other source *approved* by the *building official* shall make such determination.

[BS] IMPACT LOAD. The *load* resulting from moving machinery, elevators, craneways, vehicles and other similar forces and kinetic *loads*, pressure and possible surcharge from fixed or moving *loads*.

INTERNATIONAL CODE COUNCIL®
Copyright © 2019 ICC & NYSDOS. ALL RIGHTS RESERVED. Accessed by Lauren Gualdino (lgualdino@briarcliffmanor.org), (-) Order Number #100880972 on May 08, 2020 07:05 AM (PDT) pursuant to License Agreement with ICC & NYSDOS. No further reproduction, no

100880972

[BG] INCAPABLE OF SELF-PRESERVATION. Persons who, because of age, physical limitations, mental limitations, chemical dependency or medical treatment, cannot respond as an individual to an emergency situation.

[F] INCOMPATIBLE MATERIALS. Materials that, when mixed, have the potential to react in a manner that generates heat, fumes, gases or byproducts which are hazardous to life or property.

[F] INERT GAS. A gas that is capable of reacting with other materials only under abnormal conditions such as high temperatures, pressures and similar extrinsic physical forces. Within the context of the code, inert gases do not exhibit either physical or health hazard properties as defined (other than acting as a simple asphyxiant) or hazard properties other than those of a *compressed gas*. Some of the more common inert gases include argon, helium, krypton, neon, nitrogen and xenon.

[F] INITIATING DEVICE. A system component that originates transmission of a change-of-state condition, such as in a *smoke detector*, *manual fire alarm box* or supervisory switch.

[NY] INSIGNIA OF APPROVAL. The certificate, tab or tag issued by the New York State Department of State Division of Building Standards and Codes to indicate compliance with the standards, rules and regulations established for factory manufactured buildings.

[BE] INTENDED TO BE OCCUPIED AS A RESIDENCE. This refers to a *dwelling unit* or *sleeping unit* that can or will be used all or part of the time as the occupant's place of abode.

[BE] INTERIOR EXIT RAMP. An *exit* component that serves to meet one or more *means of egress* design requirements, such as required number of *exits* or *exit access* travel distance, and provides for a protected path of egress travel to the *exit discharge* or *public way*.

[BE] INTERIOR EXIT STAIRWAY. An *exit* component that serves to meet one or more *means of egress* design requirements, such as required number of *exits* or *exit access* travel distance, and provides for a protected path of egress travel to the *exit discharge* or *public way*.

[BF] INTERIOR FINISH. Interior finish includes *interior wall and ceiling finish* and *interior floor finish*.

[BF] INTERIOR FLOOR FINISH. The exposed floor surfaces of buildings including coverings applied over a finished floor or *stair*, including risers.

[BF] INTERIOR FLOOR-WALL BASE. *Interior floor finish trim* used to provide a functional or decorative border at the intersection of walls and floors.

[BF] INTERIOR SURFACES. Surfaces other than weather exposed surfaces.

[BF] INTERIOR WALL AND CEILING FINISH. The exposed *interior surfaces* of buildings, including but not limited to: fixed or movable walls and partitions; toilet room privacy partitions; columns; ceilings; and interior wainscoting, paneling or other finish applied structurally or for decoration, acoustical correction, surface insulation, structural fire resistance or similar purposes, but not including *trim*.

[BS] INTERLAYMENT. A layer of felt or nonbituminous saturated felt not less than 18 inches (457 mm) wide, shingled between each course of a wood-shake *roof covering*.

[NY] INTERNATIONAL SYMBOL OF ACCESSIBILITY. A sign or symbol that conforms to the accessibility symbol identified in the "Official Compilation of Codes Rules and Regulations of the State of New York," 19 NYCRR Part 300, "Universal Symbol of Access."

[BF] INTUMESCENT FIRE-RESISTANT COATINGS. Thin film liquid mixture applied to substrates by brush, roller, spray or trowel which expands into a protective foamed layer to provide fire-resistant protection of the substrates when exposed to flame or intense heat.

[BS] JOINT. The opening in or between adjacent assemblies that is created due to building tolerances, or is designed to allow independent movement of the building in any plane caused by thermal, seismic, wind or any other loading.

[A] JURISDICTION. The governmental unit that has adopted this code.

[BF] L RATING. The air leakage rating of a *through penetration firestop system* or a fire-resistant *joint* system when tested in accordance with UL 1479 or UL 2079, respectively.

[A] LABEL. An identification applied on a product by the manufacturer that contains the name of the manufacturer, the function and performance characteristics of the product or material and the name and identification of an *approved agency*, and that indicates that the representative sample of the product or material has been tested and evaluated by an *approved agency* (see Section 1703.5, "Manufacturer's designation" and "Mark").

[A] LABELED. Equipment, materials or products to which has been affixed a *label*, seal, symbol or other identifying *mark* of a nationally recognized testing laboratory, *approved* agency or other organization concerned with product evaluation that maintains periodic inspection of the production of the above-labeled items and whose labeling indicates either that the equipment, material or product meets identified standards or has been tested and found suitable for a specified purpose.

[F] LABORATORY SUITE. A fire-rated, enclosed laboratory area providing one or more laboratory spaces within a Group B educational occupancy that includes ancillary uses such as offices, bathrooms and corridors that are contiguous with the laboratory area, and are constructed in accordance with Section 428.

LEVEL OF EXIT DISCHARGE. See "Exit discharge, level of."

[BF] LIGHT-DIFFUSING SYSTEM. Construction consisting in whole or in part of lenses, panels, grids or baffles made with light-transmitting plastics positioned below independently mounted electrical light sources, skylights or light-transmitting plastic roof panels. Lenses, panels, grids and baffles that are part of an electrical fixture shall not be considered as a light-diffusing system.

INTERNATIONAL CODE COUNCIL®
Copyright © 2019 ICC & NYSDOS. ALL RIGHTS RESERVED. Accessed by Lauren Gualdino (lgualdino@briarcliffmanor.org), (-) Order Number #100880972 on May 08, 2020 07:05 AM (PDT) pursuant to License Agreement with ICC & NYSDOS. No further reproduction, no

100880972

[BS] LIGHT-FRAME CONSTRUCTION. Construction whose vertical and horizontal structural elements are primarily formed by a system of repetitive wood or cold-formed steel framing members.

[BF] LIGHT-TRANSMITTING PLASTIC ROOF PANELS. Structural plastic panels other than skylights that are fastened to structural members, or panels or sheathing and that are used as light-transmitting media in the plane of the roof.

[BF] LIGHT-TRANSMITTING PLASTIC WALL PANELS. Plastic materials that are fastened to structural members, or to structural panels or sheathing, and that are used as light-transmitting media in *exterior walls*.

[BS] LIMIT OF MODERATE WAVE ACTION. Line shown on FIRMs to indicate the inland limit of the $1^1/_2$-foot (457 mm) breaking wave height during the base flood.

[BS] LIMIT STATE. A condition beyond which a structure or member becomes unfit for service and is judged to be no longer useful for its intended function (serviceability limit state) or to be unsafe (strength limit state).

[F] LIQUID. A material that has a melting point that is equal to or less than 68°F (20°C) and a *boiling point* that is greater than 68°F (20°C) at 14.7 pounds per square inch absolute (psia) (101 kPa). When not otherwise identified, the term "liquid" includes both *flammable* and *combustible liquids.*

[F] LIQUID STORAGE ROOM. A room classified as a Group H-3 occupancy used for the storage of *flammable* or *combustible liquids* in a closed condition.

[F] LIQUID USE, DISPENSING AND MIXING ROOM. A room in which Class I, II and IIIA *flammable* or *combustible liquids* are *used,* dispensed or mixed in open containers.

[A] LISTED. Equipment, materials, products or services included in a list published by an organization acceptable to the *building* official and concerned with evaluation of products or services that maintains periodic inspection of production of listed equipment or materials or periodic evaluation of services and whose listing states either that the equipment, material, product or service meets identified standards or has been tested and found suitable for a specified purpose.

[NY] LIVE FIRE TRAINING FACILITIES. As defined by NFPA 1402, fire service training centers, fire training structures and props, gas-fueled and flammable liquid-fueled live fire training systems, mobile fire training props, and associated training props.

[BG] LIVE/WORK UNIT. A *dwelling unit* or *sleeping unit* in which a significant portion of the space includes a nonresidential use that is operated by the tenant.

[BS] LIVE LOAD. A *load* produced by the use and occupancy of the building or other structure that does not include construction or environmental *loads* such as wind load, snow load, rain load, earthquake load, flood load or *dead load*.

[BS] LIVE LOAD, ROOF. A *load* on a roof produced:

1. During maintenance by workers, equipment and materials;
2. During the life of the structure by movable objects such as planters or other similar small decorative appurtenances that are not occupancy related; or
3. By the use and occupancy of the roof such as for roof gardens or assembly areas.

[BS] LOAD AND RESISTANCE FACTOR DESIGN (LRFD). A method of proportioning structural members and their connections using load and *resistance factors* such that no applicable *limit state* is reached when the structure is subjected to appropriate *load* combinations. The term "LRFD" is used in the design of steel and wood structures.

[BS] LOAD EFFECTS. Forces and deformations produced in structural members by the applied *loads*.

[BS] LOAD FACTOR. A factor that accounts for deviations of the actual *load* from the *nominal load*, for uncertainties in the analysis that transforms the *load* into a *load effect*, and for the probability that more than one extreme *load* will occur simultaneously.

[BS] LOADS. Forces or other actions that result from the weight of building materials, occupants and their possessions, environmental effects, differential movement and restrained dimensional changes. Permanent loads are those loads in which variations over time are rare or of small magnitude, such as *dead loads*. All other loads are variable loads (see "*Nominal loads*").

[BG] LODGING HOUSE. A one-family dwelling where one or more occupants are primarily permanent in nature and rent is paid for guest rooms.

[A] LOT. A portion or parcel of land considered as a unit.

[A] LOT LINE. A line dividing one lot from another, or from a street or any public place.

[BE] LOW-ENERGY POWER-OPERATED DOOR. A swinging, sliding or folding door that opens automatically upon an action by a pedestrian such as pressing a push plate or waving a hand in front of a sensor. The door closes automatically, and operates with decreased forces and decreased speeds (see "Power-assisted door" and "Power-operated door").

[F] LOWER FLAMMABLE LIMIT (LFL). The minimum concentration of vapor in air at which propagation of flame will occur in the presence of an ignition source. The LFL is sometimes referred to as "LEL" or "lower explosive limit."

[BS] LOWEST FLOOR. The lowest floor of the lowest enclosed area, including *basement*, but excluding any unfinished or flood-resistant enclosure, usable solely for vehicle parking, building access or limited storage provided that such enclosure is not built so as to render the structure in violation of Section 1612.

[BS] MAIN WINDFORCE-RESISTING SYSTEM. An assemblage of structural elements assigned to provide support and stability for the overall structure. The system generally receives wind loading from more than one surface.

MALL BUILDING, COVERED and MALL BUILDING, OPEN. See "Covered mall building."

[F] MANUAL FIRE ALARM BOX. A manually operated device used to initiate an *alarm signal*.

INTERNATIONAL CODE COUNCIL®
Copyright © 2019 ICC & NYSDOS. ALL RIGHTS RESERVED. Accessed by Lauren Gualdino (lgualdino@briarcliffmanor.org), (-) Order Number #100880972 on May 08, 2020 07:05 AM (PDT) pursuant to License Agreement with ICC & NYSDOS. No further reproduction, no

100880972

[A] MANUFACTURER'S DESIGNATION. An identification applied on a product by the manufacturer indicating that a product or material complies with a specified standard or set of rules (see "*Label*" and "*Mark*").

[A] MARK. An identification applied on a product by the manufacturer indicating the name of the manufacturer and the function of a product or material (see "*Label*" and "Manufacturer's designation").

[BG] MARQUEE. A *canopy* that has a top surface which is sloped less than 25 degrees from the horizontal and is located less than 10 feet (3048 mm) from operable openings above or adjacent to the level of the marquee.

[BS] MASONRY. A built-up construction or combination of building units or materials of clay, shale, concrete, glass, gypsum, stone or other *approved* units bonded together with or without *mortar* or grout or other accepted methods of joining.

Glass unit masonry. Masonry composed of glass units bonded by *mortar*.

Plain masonry. Masonry in which the tensile resistance of the masonry is taken into consideration and the effects of stresses in reinforcement are neglected.

Reinforced masonry. Masonry construction in which reinforcement acting in conjunction with the masonry is used to resist forces.

Solid masonry. Masonry consisting of solid masonry units laid contiguously with the *joints* between the units filled with *mortar*.

Unreinforced (plain) masonry. Masonry in which the tensile resistance of masonry is taken into consideration and the resistance of the reinforcing steel, if present, is neglected.

[BS] MASONRY UNIT. *Brick*, tile, stone, glass block or concrete block conforming to the requirements specified in Section 2103.

Hollow. A masonry unit whose net cross-sectional *area* in any plane parallel to the load-bearing surface is less than 75 percent of its gross cross-sectional *area* measured in the same plane.

Solid. A masonry unit whose net cross-sectional *area* in every plane parallel to the load-bearing surface is 75 percent or more of its gross cross-sectional *area* measured in the same plane.

[BF] MASTIC FIRE-RESISTANT COATINGS. Liquid mixture applied to a substrate by brush, roller, spray or trowel that provides fire-resistant protection of a substrate when exposed to flame or intense heat.

[BE] MEANS OF EGRESS. A continuous and unobstructed path of vertical and horizontal egress travel from any occupied portion of a building or structure to a *public way*. A means of egress consists of three separate and distinct parts: the *exit access*, the *exit* and the *exit discharge*.

[BG] MECHANICAL-ACCESS OPEN PARKING GARAGES. *Open parking garages* employing parking machines, lifts, elevators or other mechanical devices for vehicles moving from and to street level and in which public occupancy is prohibited above the street level.

[NY] MECHANICAL CODE OF NEW YORK STATE. The 2020 edition of the publication entitled "Mechanical Code of New York State," published by the International Code Council, Inc. (publication date November 2019).

[BF] MECHANICAL EQUIPMENT SCREEN. A rooftop structure, not covered by a roof, used to aesthetically conceal plumbing, electrical or mechanical equipment from view.

[BG] MEDICAL CARE. Care involving medical or surgical procedures, nursing or for psychiatric purposes.

[BG] MEMBRANE-COVERED CABLE STRUCTURE. A nonpressurized structure in which a mast and cable system provides support and tension to the membrane weather barrier and the membrane imparts stability to the structure.

[BG] MEMBRANE-COVERED FRAME STRUCTURE. A nonpressurized building wherein the structure is composed of a rigid framework to support a tensioned membrane which provides the weather barrier.

[BF] MEMBRANE PENETRATION. A breach in one side of a floor-ceiling, roof-ceiling or wall assembly to accommodate an item installed into or passing through the breach.

[BF] MEMBRANE-PENETRATION FIRESTOP. A material, device or construction installed to resist for a prescribed time period the passage of flame and heat through openings in a protective membrane in order to accommodate cables, cable trays, conduit, tubing, pipes or similar items.

[BF] MEMBRANE-PENETRATION FIRESTOP SYSTEM. An assemblage consisting of a fire-resistance-rated floor-ceiling, roof-ceiling or wall assembly, one or more penetrating items installed into or passing through the breach in one side of the assembly and the materials or devices, or both, installed to resist the spread of fire into the assembly for a prescribed period of time.

[NY] MERCHANDISE PAD. A merchandise pad is an area for display of merchandise surrounded by *aisles*, permanent fixtures or walls. Merchandise pads contain elements such as nonfixed and moveable fixtures, cases, racks, counters and partitions.

[BF] METAL COMPOSITE MATERIAL (MCM). A factory-manufactured panel consisting of metal skins bonded to both faces of a solid plastic core.

[BF] METAL COMPOSITE MATERIAL (MCM) SYSTEM. An *exterior wall covering* fabricated using MCM in a specific assembly including *joints,* seams, attachments, substrate, framing and other details as appropriate to a particular design.

[BS] METAL ROOF PANEL. An interlocking metal sheet having a minimum installed weather exposure of 3 square feet (0.279 m^2) per sheet.

[BS] METAL ROOF SHINGLE. An interlocking metal sheet having an installed weather exposure less than 3 square feet (0.279 m^2) per sheet.

[BG] MEZZANINE. An intermediate level or levels between the floor and ceiling of any *story* and in accordance with Section 505.

[BS] MICROPILE. A micropile is a bored, grouted-in-place *deep foundation* element that develops its load-carrying

INTERNATIONAL CODE COUNCIL®
Copyright © 2019 ICC & NYSDOS. ALL RIGHTS RESERVED. Accessed by Lauren Gualdino (lgualdino@briarcliffmanor.org), (-) Order Number #100880972 on May 08, 2020 07:05 AM (PDT) pursuant to License Agreement with ICC & NYSDOS. No further reproduction, no

100880972

capacity by means of a bond zone in soil, bedrock or a combination of soil and bedrock.

[BF] MINERAL BOARD. A rigid felted thermal insulation board consisting of either felted *mineral fiber* or cellular beads of expanded aggregate formed into flat rectangular units.

[BF] MINERAL FIBER. Insulation composed principally of fibers manufactured from rock, slag or glass, with or without binders.

[BF] MINERAL WOOL. Synthetic vitreous fiber insulation made by melting predominately igneous rock or furnace slag, and other inorganic materials, and then physically forming the melt into fibers.

[BS] MODIFIED BITUMEN ROOF COVERING. One or more layers of polymer-modified asphalt sheets. The sheet materials shall be fully adhered or mechanically attached to the substrate or held in place with an *approved* ballast layer.

[BS] MORTAR. A mixture consisting of cementitious materials, fine aggregates, water, with or without admixtures, that is used to construct unit masonry assemblies.

[BS] MORTAR, SURFACE-BONDING. A mixture to bond concrete *masonry units* that contains hydraulic cement, glass fiber reinforcement with or without inorganic fillers or organic modifiers and water.

[BE] MULTILEVEL ASSEMBLY SEATING. Seating that is arranged in distinct levels where each level is comprised of either multiple rows, or a single row of box seats accessed from a separate level.

[F] MULTIPLE-STATION ALARM DEVICE. Two or more single-station alarm devices that can be interconnected such that actuation of one causes all integral or separate audible alarms to operate. A multiple-station alarm device can consist of one single-station alarm device having connections to other detectors or to a *manual fire alarm box*.

[F] MULTIPLE-STATION SMOKE ALARM. Two or more single-station alarm devices that are capable of interconnection such that actuation of one causes the appropriate *alarm signal* to operate in all interconnected alarms.

[BE] MULTISTORY UNIT. A *dwelling unit* or *sleeping unit* with *habitable space* located on more than one *story*.

[BS] NAILING, BOUNDARY. A special nailing pattern required by design at the boundaries of *diaphragms*.

[BS] NAILING, EDGE. A special nailing pattern required by design at the edges of each panel within the assembly of a *diaphragm* or *shear wall*.

[BS] NAILING, FIELD. Nailing required between the sheathing panels and framing members at locations other than *boundary nailing* and *edge nailing*.

[BS] NATURALLY DURABLE WOOD. The heartwood of the following species except for the occasional piece with corner sapwood, provided 90 percent or more of the width of each side on which it occurs is heartwood.

Decay resistant. Redwood, cedar, black locust and black walnut.

Termite resistant. Redwood, Alaska yellow cedar, Eastern red cedar and Western red cedar.

[BS] NOMINAL LOADS. The magnitudes of the *loads* specified in Chapter 16 (dead, live, soil, wind, snow, rain, *flood* and earthquake).

[BS] NOMINAL SIZE (LUMBER). The commercial size designation of width and depth, in standard sawn lumber and glued-laminated lumber *grades*; somewhat larger than the standard net size of dressed lumber, in accordance with DOCPS 20 for sawn lumber and with the ANSI/AWC NDS for glued-laminated lumber.

[BG] NONCOMBUSTIBLE MEMBRANE STRUCTURE. A membrane structure in which the membrane and all component parts of the structure are noncombustible.

[BS] NONSTRUCTURAL CONCRETE. Any element made of plain or reinforced concrete that is not part of a structural system required to transfer either gravity or lateral loads to the ground.

[F] NORMAL TEMPERATURE AND PRESSURE (NTP). A temperature of 70°F (21°C) and a pressure of 1 atmosphere [14.7 psia (101 kPa)].

[BE] NOSING. The leading edge of treads of *stairs* and of landings at the top of *stairway flights*.

NOTIFICATION ZONE. See "Zone, notification."

[F] NUISANCE ALARM. An alarm caused by mechanical failure, malfunction, improper installation or lack of proper maintenance, or an alarm activated by a cause that cannot be determined.

[BG] NURSING HOMES. Facilities that provide care, including both intermediate care facilities and skilled nursing facilities where any of the persons are *incapable of self-preservation*.

[BE] OCCUPANT LOAD. The number of persons for which the *means of egress* of a building or portion thereof is designed.

[BG] OCCUPIABLE SPACE. A room or enclosed space designed for human occupancy in which individuals congregate for amusement, educational or similar purposes or in which occupants are engaged at labor, and which is equipped with *means of egress* and light and *ventilation* facilities meeting the requirements of this code.

[BG] OPEN PARKING GARAGE. A structure or portion of a structure with the openings as described in Section 406.5.2 on two or more sides that is used for the parking or storage of private motor vehicles as described in Section 406.5.3.

[F] OPEN SYSTEM. The *use* of a *solid* or *liquid hazardous material* involving a vessel or system that is continuously open to the atmosphere during normal operations and where vapors are liberated, or the product is exposed to the atmosphere during normal operations. Examples of open systems for *solids* and *liquids* include dispensing from or into open beakers or containers, dip tank and plating tank operations.

[BE] OPEN-AIR ASSEMBLY SEATING. Seating served by *means of egress* that is not subject to smoke accumulation within or under a structure and is open to the atmosphere.

[BE] OPEN-ENDED CORRIDOR. An interior corridor that is open on each end and connects to an exterior *stairway*

INTERNATIONAL CODE COUNCIL®
Copyright © 2019 ICC & NYSDOS. ALL RIGHTS RESERVED. Accessed by Lauren Gualdino (lgualdino@briarcliffmanor.org), (-) Order Number #100880972 on May 08, 2020 07:05 AM (PDT) pursuant to License Agreement with ICC & NYSDOS. No further reproduction, no

100880972

or *ramp* at each end with no intervening doors or separation from the corridor.

[BF] OPENING PROTECTIVE. A fire door assembly, fire shutter assembly, fire window assembly or glass-block assembly in a fire-resistance-rated wall or partition.

[F] OPERATING BUILDING. A building occupied in conjunction with the manufacture, transportation or *use* of explosive materials. Operating buildings are separated from one another with the use of intraplant or intraline distances.

[NY] OPERATING PERMIT. A permit required under the stricter of the *authority having jurisdiction's Code Enforcement Program* or a *Part 1203—Compliant Code Enforcement Program* to conduct a specified activity or to use a specified category of building.

[BS] ORDINARY PRECAST STRUCTURAL WALL. See Section 1905.1.1.

[BS] ORDINARY REINFORCED CONCRETE STRUCTURAL WALL. See Section 1905.1.1.

[BS] ORDINARY STRUCTURAL PLAIN CONCRETE WALL. See Section 1905.1.1.

[F] ORGANIC PEROXIDE. An organic compound that contains the bivalent -O-O- structure and which may be considered to be a structural derivative of hydrogen peroxide where one or both of the hydrogen atoms have been replaced by an organic radical. Organic peroxides can pose an *explosion* hazard (*detonation* or *deflagration*) or they can be shock sensitive. They can also decompose into various unstable compounds over an extended period of time.

Class I. Those formulations that are capable of *deflagration* but not *detonation*.

Class II. Those formulations that burn very rapidly and that pose a moderate reactivity hazard.

Class III. Those formulations that burn rapidly and that pose a moderate reactivity hazard.

Class IV. Those formulations that burn in the same manner as ordinary combustibles and that pose a minimal reactivity hazard.

Class V. Those formulations that burn with less intensity than ordinary combustibles or do not sustain combustion and that pose no reactivity hazard.

Unclassified detonable. Organic peroxides that are capable of *detonation*. These peroxides pose an extremely high *explosion* hazard through rapid explosive decomposition.

[BS] ORTHOGONAL. To be in two horizontal directions, at 90 degrees (1.57 rad) to each other.

[BS] OTHER STRUCTURES (for Chapters 16-23). Structures, other than buildings, for which *loads* are specified in Chapter 16.

OUTPATIENT CLINIC. See "Clinic, outpatient."

[A] OWNER. Any person, agent, operator, entity, firm or corporation having any legal or equitable interest in the property; or recorded in the official records of the state, county or municipality as holding an interest or title to the property; or otherwise having possession or control of the property, including the guardian of the estate of any such person, and the executor or administrator of the estate of such person if ordered to take possession of real property by a court.

[F] OXIDIZER. A material that readily yields oxygen or other *oxidizing gas*, or that readily reacts to promote or initiate combustion of combustible materials and, if heated or contaminated, can result in vigorous self-sustained decomposition.

Class 4. An oxidizer that can undergo an explosive reaction due to contamination or exposure to thermal or physical shock and that causes a severe increase in the burning rate of combustible materials with which it comes into contact. Additionally, the oxidizer causes a severe increase in the burning rate and can cause spontaneous ignition of combustibles.

Class 3. An oxidizer that causes a severe increase in the burning rate of combustible materials with which it comes in contact.

Class 2. An oxidizer that will cause a moderate increase in the burning rate of combustible materials with which it comes in contact.

Class 1. An oxidizer that does not moderately increase the burning rate of combustible materials.

[F] OXIDIZING GAS. A gas that can support and accelerate combustion of other materials more than air does.

[BS] PANEL (PART OF A STRUCTURE). The section of a floor, wall or roof comprised between the supporting frame of two adjacent rows of columns and girders or column bands of floor or roof construction.

[BE] PANIC HARDWARE. A door-latching assembly incorporating a device that releases the latch upon the application of a force in the direction of egress travel. See "Fire exit hardware."

[NY] PART 1202. The regulations set forth in 19 NYCRR Part 1202 ("Uniform Code: Administration and Enforcement in Certain Local Governments"), as currently in effect and as hereafter amended from time to time.

[NY] PART 1203. The regulations set forth in 19 NYCRR Part 1203 ("Uniform Code: Minimum Standards for Administration and Enforcement"), as currently in effect and as hereafter amended from time to time.

[NY] PART 1203—COMPLIANT CODE ENFORCEMENT PROGRAM. A code enforcement program that includes the features required by Part 1203 and satisfies the requirements of Part 1203.

[NY] PART 1204. The regulations set forth in 19 NYCRR Part 1204 ("Uniform Code: Administration and Enforcement by State Agencies"), as currently in effect and as hereafter amended from time to time.

[NY] PART 1205. The regulations set forth in 19 NYCRR Part 1205 ("Uniform Code: Variance Procedures"), as currently in effect and as hereafter amended from time to time.

[BS] PARTICLEBOARD. A generic term for a panel primarily composed of cellulosic materials (usually wood), generally in the form of discrete pieces or particles, as distinguished from fibers. The cellulosic material is combined with synthetic resin or other suitable bonding system

INTERNATIONAL CODE COUNCIL®
Copyright © 2019 ICC & NYSDOS. ALL RIGHTS RESERVED. Accessed by Lauren Gualdino (lgualdino@briarcliffmanor.org), (-) Order Number #100880972 on May 08, 2020 07:05 AM (PDT) pursuant to License Agreement with ICC & NYSDOS. No further reproduction, no

100880972

by a process in which the interparticle bond is created by the bonding system under heat and pressure.

[BF] PENETRATION FIRESTOP. A through-penetration firestop or a *membrane-penetration firestop*.

[BG] PENTHOUSE. An enclosed, unoccupied rooftop structure used for sheltering mechanical and electrical equipment, tanks, elevators and related machinery, and vertical *shaft* openings.

[BS] PERFORMANCE CATEGORY. A designation of wood structural panels as related to the panel performance used in Chapter 23.

[A] PERMIT. An official document or certificate issued by the *building official* that authorizes performance of a specified activity.

[A] PERSON. An individual, heirs, executors, administrators or assigns, and also includes a firm, partnership or corporation, its or their successors or assigns, or the agent of any of the aforesaid.

[BG] PERSONAL CARE SERVICE. The care of persons who do not require *medical care*. Personal care involves responsibility for the safety of the persons while inside the building.

[BE] PHOTOLUMINESCENT. Having the property of emitting light that continues for a length of time after excitation by visible or invisible light has been removed.

[BS] PHOTOVOLTAIC MODULE. A complete, environmentally protected unit consisting of solar cells, optics and other components, exclusive of tracker, designed to generate DC power when exposed to sunlight.

[BS] PHOTOVOLTAIC PANEL. A collection of modules mechanically fastened together, wired and designed to provide a field-installable unit.

[BS] PHOTOVOLTAIC PANEL SYSTEM. A system that incorporates discrete photovoltaic panels, that converts solar radiation into electricity, including rack support systems.

[BS] PHOTOVOLTAIC SHINGLES. A *roof covering* resembling shingles that incorporates photovoltaic modules.

[F] PHYSICAL HAZARD. A chemical for which there is evidence that it is a *combustible liquid*, *cryogenic fluid*, *explosive*, flammable (*solid*, *liquid* or gas), *organic peroxide* (*solid* or *liquid*), *oxidizer* (*solid* or *liquid*), *oxidizing gas*, *pyrophoric* (*solid*, *liquid* or gas), *unstable (reactive) material* (*solid*, *liquid* or gas) or *water-reactive material* (*solid* or *liquid*).

[F] PHYSIOLOGICAL WARNING THRESHOLD LEVEL. A concentration of airborne contaminants, normally expressed in parts per million (ppm) or milligrams per cubic meter (mg/m^3), that represents the concentration at which persons can sense the presence of the contaminant due to odor, irritation or other quick-acting physiological response. When used in conjunction with the permissible exposure limit (PEL) the physiological warning threshold levels are those consistent with the classification system used to establish the PEL. See the definition of "Permissible exposure limit (PEL)" in the *Fire Code of New York State*.

PLACE OF RELIGIOUS WORSHIP. See "Religious worship, place of."

[BF] PLASTIC, APPROVED. Any thermoplastic, thermosetting or reinforced thermosetting plastic material that conforms to combustibility classifications specified in the section applicable to the application and plastic type.

[BF] PLASTIC COMPOSITE. A generic designation that refers to wood/plastic composites, plastic lumber and similar materials.

[BF] PLASTIC GLAZING. Plastic materials that are glazed or set in a frame or sash.

[BF] PLASTIC LUMBER. A manufactured product made primarily of plastic materials (filled or unfilled) which is generally rectangular in cross section.

[BG] PLATFORM. A raised area within a building used for worship, the presentation of music, plays or other entertainment; the head table for special guests; the raised area for lecturers and speakers; boxing and wrestling rings; theater-in-the-round *stages*; and similar purposes wherein, other than horizontal sliding curtains, there are no overhead hanging curtains, drops, scenery or stage effects other than lighting and sound. A temporary platform is one installed for not more than 30 days.

[NY] PLUMBING CODE OF NEW YORK STATE. The 2020 edition of the publication entitled "Plumbing Code of New York State," published by the International Code Council, Inc. (publication date November 2019).

[BF] POLYPROPYLENE SIDING. A shaped material, made principally from polypropylene homopolymer, or copolymer, which in some cases contains fillers or reinforcements, that is used to clad *exterior walls* of buildings.

[BS] PORCELAIN TILE. Tile that conforms to the requirements of ANSI A137.1.3, Section 3.0 for ceramic tile having an absorption of 0.5 percent or less in accordance with ANSI A137.1, Section 4.1 and Section 6.1 Table 10.

[BS] POSITIVE ROOF DRAINAGE. The drainage condition in which consideration has been made for all loading deflections of the *roof deck*, and additional slope has been provided to ensure drainage of the roof within 48 hours of precipitation.

[BE] POWER-ASSISTED DOOR. Swinging door which opens by reduced pushing or pulling force on the door-operating hardware. The door closes automatically after the pushing or pulling force is released and functions with decreased forces. See "Low-energy power-operated door" and "Power-operated door."

[BE] POWER-OPERATED DOOR. Swinging, sliding, or folding door which opens automatically when approached by a pedestrian or opens automatically upon an action by a pedestrian. The door closes automatically and includes provisions such as presence sensors to prevent entrapment. See "Low energy power-operated door" and "Power-assisted door."

[BS] PREFABRICATED WOOD I-JOIST. Structural member manufactured using sawn or structural composite lumber flanges and wood structural panel webs bonded

INTERNATIONAL CODE COUNCIL®
Copyright © 2019 ICC & NYSDOS. ALL RIGHTS RESERVED. Accessed by Lauren Gualdino (lgualdino@briarcliffmanor.org), (-) Order Number #100880972 on May 08, 2020 07:05 AM (PDT) pursuant to License Agreement with ICC & NYSDOS. No further reproduction, no

100880972

together with exterior exposure adhesives, which forms an "I" cross-sectional shape.

[BS] PRESTRESSED MASONRY. *Masonry* in which internal stresses have been introduced to counteract potential tensile stresses in *masonry* resulting from applied *loads*.

[BG] PRIMARY STRUCTURAL FRAME. The primary structural frame shall include all of the following structural members:

1. The columns.
2. Structural members having direct connections to the columns, including girders, beams, trusses and spandrels.
3. Members of the floor construction and roof construction having direct connections to the columns.
4. Bracing members that are essential to the vertical stability of the primary structural frame under gravity loading shall be considered part of the primary structural frame whether or not the bracing member carries gravity *loads.*

[BG] PRIVATE GARAGE. A building or portion of a building in which motor vehicles used by the owner or tenants of the building or buildings on the premises are stored or kept, without provisions for repairing or servicing such vehicles for profit.

[NY] PROPERTY MAINTENANCE CODE OF NEW YORK STATE. The 2020 edition of the publication entitled "Property Maintenance Code of New York State," published by the International Code Council, Inc. (publication date November 2019).

[BG] PROSCENIUM WALL. The wall that separates the *stage* from the auditorium or assembly seating area.

PSYCHIATRIC HOSPITALS. See "Hospitals."

[BE] PUBLIC ENTRANCE. An entrance that is not a *service entrance* or a *restricted entrance*.

[A] PUBLIC WAY. A street, alley or other parcel of land open to the outside air leading to a street, that has been deeded, dedicated or otherwise permanently appropriated to the public for public use and which has a clear width and height of not less than 10 feet (3048 mm).

[BE] PUBLIC-USE AREAS. Interior or exterior rooms or spaces that are made available to the general public.

[F] PYROPHORIC. A chemical with an auto-ignition temperature in air, at or below a temperature of 130°F (54.4°C).

[F] PYROTECHNIC COMPOSITION. A chemical mixture that produces visible light displays or sounds through a self-propagating, heat-releasing chemical reaction which is initiated by ignition.

[BF] RADIANT BARRIER. A material having a low-emittance surface of 0.1 or less installed in building assemblies.

[BE] RAMP. A walking surface that has a running slope steeper than one unit vertical in 20 units horizontal (5-percent slope).

RAMP, EXIT ACCESS. See "Exit access ramp."

RAMP, EXTERIOR EXIT. See "Exterior exit ramp."

RAMP, INTERIOR EXIT. See "Interior exit ramp."

[BG] RAMP-ACCESS OPEN PARKING GARAGES. *Open parking garages* employing a series of continuously rising floors or a series of interconnecting ramps between floors permitting the movement of vehicles under their own power from and to the street level.

[A] RECORD DRAWINGS. Drawings ("as builts") that document the location of all devices, appliances, wiring sequences, wiring methods and connections of the components of a *fire alarm system* as installed.

[BF] REFLECTIVE PLASTIC CORE INSULATION. An insulation material packaged in rolls, that is less than $^1/_2$ inch (12.7 mm) thick, with not less than one exterior low-emittance surface (0.1 or less) and a core material containing voids or cells.

[NY] REGISTERED DESIGN PROFESSIONAL. An individual who is a licensed and registered architect (RA) in accordance with Article 147 of the New York State Education Law or a licensed and registered professional engineer (PE) in accordance with Article 145 of the New York State Education Law.

[A] REGISTERED DESIGN PROFESSIONAL IN RESPONSIBLE CHARGE. A *registered design professional* engaged by the owner or the owner's authorized agent to review and coordinate certain aspects of the project, as determined by the *building official*, for compatibility with the design of the building or structure, including submittal documents prepared by others, deferred submittal documents and phased submittal documents.

[BG] RELIGIOUS WORSHIP, PLACE OF. A building or portion thereof intended for the performance of religious services.

[A] RELOCATABLE BUILDING. A partially or completely assembled building constructed and designed to be reused multiple times and transported to different building sites.

[A] REPAIR. The reconstruction, replacement or renewal of any part of an existing building for the purpose of its maintenance or to correct damage.

[BG] REPAIR GARAGE. A building, structure or portion thereof used for servicing or repairing motor vehicles.

[BS] REROOFING. The process of recovering or replacing an existing *roof covering*. See "Roof recover" and "Roof replacement."

[BG] RESIDENTIAL AIRCRAFT HANGAR. An accessory building less than 2,000 square feet (186 m^2) and 20 feet (6096 mm) in *building height* constructed on a one- or two-family property where aircraft are stored. Such use will be considered as a residential accessory use incidental to the dwelling.

[NY] RESIDENTIAL CODE OF NEW YORK STATE. The 2020 edition of the publication entitled "Residential Code of New York State," published by the International Code Council, Inc. (publication date November 2019).

[BS] RESISTANCE FACTOR. A factor that accounts for deviations of the actual strength from the *nominal strength* and the manner and consequences of failure (also called "strength reduction factor").

INTERNATIONAL CODE COUNCIL®
Copyright © 2019 ICC & NYSDOS. ALL RIGHTS RESERVED. Accessed by Lauren Gualdino (lgualdino@briarcliffmanor.org), (-) Order Number #100880972 on May 08, 2020 07:05 AM (PDT) pursuant to License Agreement with ICC & NYSDOS. No further reproduction, no

100880972

[BE] RESTRICTED ENTRANCE. An entrance that is made available for *common use* on a controlled basis, but not public use, and that is not a *service entrance*.

[BG] RETRACTABLE AWNING. A retractable *awning* is a cover with a frame that retracts against a building or other structure to which it is entirely supported.

[BS] RISK CATEGORY. A categorization of buildings and other structures for determination of *flood*, wind, snow, ice and earthquake *loads* based on the risk associated with unacceptable performance.

[BS] RISK-TARGETED MAXIMUM CONSIDERED EARTHQUAKE (MCE_R) GROUND MOTION RESPONSE ACCELERATIONS. The most severe earthquake effects considered by this code, determined for the orientation that results in the largest maximum response to horizontal ground motions and with adjustment for targeted risk.

[BS] ROOF ASSEMBLY (For application to Chapter 15 only). A system designed to provide weather protection and resistance to design *loads.* The system consists of a *roof covering* and *roof deck* or a single component serving as both the roof covering and the *roof deck*. A roof assembly can include an underlayment, a thermal barrier, insulation or a *vapor retarder*.

[BS] ROOF COATING. A fluid-applied, adhered coating used for roof maintenance or *roof repair*, or as a component of a *roof covering system* or *roof assembly*.

[BS] ROOF COVERING. The covering applied to the *roof deck* for weather resistance, fire classification or appearance.

ROOF COVERING SYSTEM. See "Roof assembly."

[BS] ROOF DECK. The flat or sloped surface constructed on top of the *exterior walls* of a building or other supports for the purpose of enclosing the *story* below, or sheltering an area, to protect it from the elements, not including its supporting members or vertical supports.

ROOF DRAINAGE, POSITIVE. See "Positive roof drainage."

[BS] ROOF RECOVER. The process of installing an additional *roof covering* over a prepared existing *roof covering* without removing the existing *roof covering*.

[BS] ROOF REPAIR. Reconstruction or renewal of any part of an existing roof for the purposes of correcting damage or restoring the pre-damage condition.

[BS] ROOF REPLACEMENT. The process of removing the existing *roof covering*, repairing any damaged substrate and installing a new *roof covering*.

[BG] ROOF VENTILATION. The natural or mechanical process of supplying conditioned or unconditioned air to, or removing such air from, *attics,* cathedral ceilings or other enclosed spaces over which a *roof assembly* is installed.

[BG] ROOFTOP STRUCTURE. A structure erected on top of the *roof deck* or on top of any part of a building.

[BS] RUNNING BOND. The placement of *masonry units* such that *head joints* in successive courses are horizontally offset at least one-quarter the unit length.

[BG] SALLYPORT. A security vestibule with two or more doors or gates where the intended purpose is to prevent continuous and unobstructed passage by allowing the release of only one door or gate at a time.

[BE] SCISSOR STAIRWAY. Two interlocking *stairways* providing two separate paths of egress located within one *exit* enclosure.

[BS] SCUPPER. An opening in a wall or parapet that allows water to drain from a roof.

[BG] SECONDARY MEMBERS. The following structural members shall be considered secondary members and not part of the *primary structural frame*:

1. Structural members not having direct connections to the columns.
2. Members of the floor construction and roof construction not having direct connections to the columns.
3. Bracing members other than those that are part of the *primary structural frame*.

[BS] SEISMIC DESIGN CATEGORY. A classification assigned to a structure based on its *risk category* and the severity of the *design earthquake ground motion* at the site.

[BS] SEISMIC FORCE-RESISTING SYSTEM. That part of the structural system that has been considered in the design to provide the required resistance to the prescribed seismic forces.

[BF] SELF-CLOSING. As applied to a *fire door* or other opening protective, means equipped with a device that will ensure closing after having been opened.

[BE] SELF-LUMINOUS. Illuminated by a self-contained power source, other than batteries, and operated independently of external power sources.

SELF-PRESERVATION, INCAPABLE OF. See "Incapable of self-preservation."

[BG] SELF-SERVICE STORAGE FACILITY. Real property designed and used for the purpose of renting or leasing individual storage spaces to customers for the purpose of storing and removing personal property on a self-service basis.

[F] SERVICE CORRIDOR. A fully enclosed passage used for transporting *HPM* and purposes other than required *means of egress*.

[BE] SERVICE ENTRANCE. An entrance intended primarily for delivery of goods or services.

[BF] SHAFT. An enclosed space extending through one or more *stories* of a building, connecting vertical openings in successive floors, or floors and roof.

[BF] SHAFT ENCLOSURE. The walls or construction forming the boundaries of a *shaft*.

[BS] SHALLOW FOUNDATION. A shallow foundation is an individual or strip footing, a mat foundation, a slab-on-grade foundation or a similar foundation element.

[BS] SHEAR WALL (for Chapter 23). A wall designed to resist lateral forces parallel to the plane of a wall.

Shear wall, perforated. A wood structural panel sheathed wall with openings, that has not been specifically designed and detailed for force transfer around openings.

INTERNATIONAL CODE COUNCIL®
Copyright © 2019 ICC & NYSDOS. ALL RIGHTS RESERVED. Accessed by Lauren Gualdino (lgualdino@briarcliffmanor.org), (-) Order Number #100880972 on May 08, 2020 07:05 AM (PDT) pursuant to License Agreement with ICC & NYSDOS. No further reproduction, no

100880972

Shear wall segment, perforated. A section of shear wall with full-height sheathing that meets the height-to-width ratio limits of Section 4.3.4 of AWC SDPWS.

[BS] SHINGLE FASHION. A method of installing roof or wall coverings, water-resistive barriers, flashing or other building components such that upper layers of material are placed overlapping lower layers of material to provide for drainage via gravity and moisture control.

[BS] SINGLE-PLY MEMBRANE. A roofing membrane that is field applied using one layer of membrane material (either homogeneous or composite) rather than multiple layers.

[F] SINGLE-STATION SMOKE ALARM. An assembly incorporating the detector, the control equipment and the alarm-sounding device in one unit, operated from a power supply either in the unit or obtained at the point of installation.

[BG] SITE. A parcel of land bounded by a *lot line* or a designated portion of a public right-of-way.

[BS] SITE CLASS. A classification assigned to a site based on the types of soils present and their engineering properties as defined in Section 1613.2.2.

[BS] SITE COEFFICIENTS. The values of F_a and F_v indicated in Tables 1613.2.3(1) and 1613.2.3(2), respectively.

[BG] SITE-FABRICATED STRETCH SYSTEM. A system, fabricated on site and intended for acoustical, tackable or aesthetic purposes, that is composed of three elements:

1. A frame (constructed of plastic, wood, metal or other material) used to hold fabric in place.
2. A core material (infill, with the correct properties for the application).
3. An outside layer, composed of a textile, fabric or vinyl, that is stretched taut and held in place by tension or mechanical fasteners via the frame.

[BS] SKYLIGHT, UNIT. A factory-assembled, glazed fenestration unit, containing one panel of glazing material that allows for natural lighting through an opening in the *roof assembly* while preserving the weather-resistant barrier of the roof.

[BS] SKYLIGHTS AND SLOPED GLAZING. Glass or other transparent or translucent glazing material installed at a slope of 15 degrees (0.26 rad) or more from vertical. Unit skylights, *tubular daylighting devices*, glazing materials, solariums, sunrooms, roofs and sloped walls are included in this definition.

[A] SLEEPING UNIT. A single unit that provides rooms or spaces for one or more persons, includes permanent provisions for sleeping and can include provisions for living, eating and either sanitation or kitchen facilities but not both. Such rooms and spaces that are also part of a dwelling unit are not sleeping units.

[F] SMOKE ALARM. A single- or multiple-station alarm responsive to smoke. See "Multiple-station smoke alarm" and "Single-station smoke alarm."

[BF] SMOKE BARRIER. A continuous membrane, either vertical or horizontal, such as a wall, floor or ceiling assembly, that is designed and constructed to restrict the movement of smoke.

[BG] SMOKE COMPARTMENT. A space within a building enclosed by *smoke barriers* on all sides, including the top and bottom.

[BF] SMOKE DAMPER. A *listed* device installed in ducts and air transfer openings designed to resist the passage of smoke. The device is installed to operate *automatically*, controlled by a smoke detection system, and where required, is capable of being positioned from a *fire command center*.

[F] SMOKE DETECTOR. A *listed* device that senses visible or invisible particles of combustion.

[BF] SMOKE PARTITION. A wall assembly that extends from the top of the foundation or floor below to the underside of the floor or roof sheathing, deck or slab above or to the underside of the ceiling above where the ceiling membrane is constructed to limit the transfer of smoke.

[BF] SMOKE-DEVELOPED INDEX. A comparative measure, expressed as a dimensionless number, derived from measurements of smoke obscuration versus time for a material tested in accordance with ASTM E84.

[BF] SMOKEPROOF ENCLOSURE. An *exit stairway* or *ramp* designed and constructed so that the movement of the products of combustion produced by a fire occurring in any part of the building into the enclosure is limited.

[BE] SMOKE-PROTECTED ASSEMBLY SEATING. Seating served by *means of egress* that is not subject to smoke accumulation within or under a structure for a specified design time by means of passive design or by mechanical ventilation.

[BG] SOFT CONTAINED PLAY EQUIPMENT STRUCTURE. A children's play structure containing one or more components where the user enters a play environment that utilizes pliable materials.

[F] SOLID. A material that has a melting point, decomposes or sublimes at a temperature greater than 68°F (20°C).

[BG] SPECIAL AMUSEMENT BUILDING. A special amusement building is any temporary or permanent building or portion thereof that is occupied for amusement, entertainment or educational purposes and that contains a device or system that conveys passengers or provides a walkway along, around or over a course in any direction so arranged that the *means of egress* path is not readily apparent due to visual or audio distractions or is intentionally confounded or is not readily available because of the nature of the attraction or mode of conveyance through the building or structure.

[BS] SPECIAL FLOOD HAZARD AREA. The land area subject to flood hazards and shown on a *Flood Insurance Rate Map* or other flood hazard map as Zone A, AE, A1-30, A99, AR, AO, AH, V, VO, VE or V1-30.

[BS] SPECIAL INSPECTION. Inspection of construction requiring the expertise of an *approved special inspector* in

INTERNATIONAL CODE COUNCIL®
Copyright © 2019 ICC & NYSDOS. ALL RIGHTS RESERVED. Accessed by Lauren Gualdino (lgualdino@briarcliffmanor.org), (-) Order Number #100880972 on May 08, 2020 07:05 AM (PDT) pursuant to License Agreement with ICC & NYSDOS. No further reproduction, no

100880972

order to ensure compliance with this code and the *approved construction documents*.

Continuous special inspection. Special inspection by the *special inspector* who is present continuously when and where the work to be inspected is being performed.

Periodic special inspection. Special inspection by the *special inspector* who is intermittently present where the work to be inspected has been or is being performed.

[BS] SPECIAL INSPECTOR. A qualified person employed or retained by an *approved* agency and *approved* by the *building official* as having the competence necessary to inspect a particular type of construction requiring *special inspection.*

[BS] SPECIAL STRUCTURAL WALL. See Section 1905.1.1.

[BS] SPECIFIED COMPRESSIVE STRENGTH OF MASONRY, f'_m. Minimum compressive strength, expressed as force per unit of net cross-sectional area, required of the *masonry* used in construction by the *approved construction documents*, and upon which the project design is based. Whenever the quantity f'_m is under the radical sign, the square root of numerical value only is intended and the result has units of pounds per square inch (psi) (MPa).

[BF] SPLICE. The result of a factory and/or field method of joining or connecting two or more lengths of a *fire-resistant joint system* into a continuous entity.

SPORT ACTIVITY, AREA OF. See "Area of sport activity."

[F] SPRAY ROOM. A room designed to accommodate spraying operations.

[BF] SPRAYED FIRE-RESISTANT MATERIALS. Cementitious or fibrous materials that are sprayed to provide fire-resistant protection of the substrates.

[BG] STAGE. A space within a building utilized for entertainment or presentations, which includes overhead hanging curtains, drops, scenery or stage effects other than lighting and sound.

[BE] STAIR. A change in elevation, consisting of one or more risers.

[BE] STAIRWAY. One or more *flights* of *stairs*, either exterior or interior, with the necessary landings and platforms connecting them, to form a continuous and uninterrupted passage from one level to another.

STAIRWAY, EXIT ACCESS. See "Exit access stairway."

STAIRWAY, EXTERIOR EXIT. See "Exterior exit stairway."

STAIRWAY, INTERIOR EXIT. See "Interior exit stairway."

STAIRWAY, SCISSOR. See "Scissor stairway."

[BE] STAIRWAY, SPIRAL. A *stairway* having a closed circular form in its plan view with uniform section-shaped treads attached to and radiating from a minimum-diameter supporting column.

[F] STANDBY POWER SYSTEM. A source of automatic electric power of a required capacity and duration to operate required building, hazardous materials or ventilation systems in the event of a failure of the primary power. Standby power systems are required for electrical loads where interruption of the primary power could create hazards or hamper rescue or fire-fighting operations.

[F] STANDPIPE, TYPES OF. Standpipe types are as follows:

Automatic dry. A dry standpipe system, normally filled with pressurized air, that is arranged through the use of a device, such as dry pipe valve, to admit water into the system piping *automatically* upon the opening of a hose valve. The water supply for an *automatic* dry standpipe system shall be capable of supplying the system demand.

Automatic wet. A wet standpipe system that has a water supply that is capable of supplying the system demand *automatically.*

Manual dry. A dry standpipe system that does not have a permanent water supply attached to the system. Manual dry standpipe systems require water from a fire department pumper to be pumped into the system through the fire department connection in order to meet the system demand.

Manual wet. A wet standpipe system connected to a water supply for the purpose of maintaining water within the system but does not have a water supply capable of delivering the system demand attached to the system. Manual-wet standpipe systems require water from a fire department pumper (or the like) to be pumped into the system in order to meet the system demand.

Semiautomatic dry. A dry standpipe system that is arranged through the use of a device, such as a deluge valve, to admit water into the system piping upon activation of a remote control device located at a hose connection. A remote control activation device shall be provided at each hose connection. The water supply for a semiautomatic dry standpipe system shall be capable of supplying the system demand.

[F] STANDPIPE SYSTEM, CLASSES OF. Standpipe classes are as follows:

Class I system. A system providing $2^1/_2$-inch (64 mm) hose connections to supply water for use by fire departments and those trained in handling heavy fire streams.

Class II system. A system providing $1^1/_2$-inch (38 mm) hose stations to supply water for use primarily by the building occupants or by the fire department during initial response.

Class III system. A system providing $1^1/_2$-inch (38 mm) hose stations to supply water for use by building occupants and $2^1/_2$-inch (64 mm) hose connections to supply a larger volume of water for use by fire departments and those trained in handling heavy fire streams.

[BS] STEEL CONSTRUCTION, COLD-FORMED. That type of construction made up entirely or in part of *steel structural members* cold formed to shape from sheet or strip steel such as *roof deck*, floor and wall panels, studs, floor joists, roof joists and other structural elements.

INTERNATIONAL CODE COUNCIL®
Copyright © 2019 ICC & NYSDOS. ALL RIGHTS RESERVED. Accessed by Lauren Gualdino (lgualdino@briarcliffmanor.org), (-) Order Number #100880972 on May 08, 2020 07:05 AM (PDT) pursuant to License Agreement with ICC & NYSDOS. No further reproduction, no

100880972

[BS] STEEL ELEMENT, STRUCTURAL. Any *steel structural member* of a building or structure consisting of rolled shapes, pipe, hollow structural sections, plates, bars, sheets, rods or steel castings other than cold-formed steel or steel joist members.

[BS] STEEL JOIST. Any *steel structural member* of a building or structure made of hot-rolled or cold-formed solid or open-web sections, or riveted or welded bars, strip or sheet steel members, or slotted and expanded, or otherwise deformed rolled sections.

[BF] STEEP SLOPE. A roof slope greater than two units vertical in 12 units horizontal (17-percent slope).

[BS] STONE MASONRY. *Masonry* composed of field, quarried or *cast stone* units bonded by *mortar*.

[F] STORAGE, HAZARDOUS MATERIALS. The keeping, retention or leaving of hazardous materials in closed containers, tanks, cylinders, or similar vessels; or vessels supplying operations through closed connections to the vessel.

[BS] STORAGE RACKS. Cold-formed or hot-rolled steel structural members which are formed into steel storage racks, including pallet storage racks, movable-shelf racks, rack-supported systems, automated storage and retrieval systems (stacker racks), push-back racks, pallet-flow racks, case-flow racks, pick modules and rack-supported platforms. Other types of racks, such as drive-in or drive-through racks, cantilever racks, portable racks or racks made of materials other than steel, are not considered storage racks for the purpose of this code.

[BG] STORM SHELTER. A building, structure or portions thereof, constructed in accordance with ICC 500 and designated for use during a severe wind storm event, such as a hurricane or tornado.

Community storm shelter. A storm shelter not defined as a "Residential storm shelter."

Residential storm shelter. A storm shelter serving occupants of *dwelling units* and having an *occupant load* not exceeding 16 persons.

[BG] STORY. That portion of a building included between the upper surface of a floor and the upper surface of the floor or roof next above (see "*Basement*," "*Building height,*" "*Grade plane" and* "*Mezzanine*"). A story is measured as the vertical distance from top to top of two successive tiers of beams or finished floor surfaces and, for the topmost story, from the top of the floor finish to the top of the ceiling joists or, where there is not a ceiling, to the top of the roof rafters.

[BG] STORY ABOVE GRADE PLANE. Any *story* having its finished floor surface entirely above *grade plane*, or in which the finished surface of the floor next above is:

1. More than 6 feet (1829 mm) above *grade plane*; or
2. More than 12 feet (3658 mm) above the finished ground level at any point.

[BS] STRENGTH (For Chapter 21).

Design strength. Nominal strength multiplied by a strength reduction factor.

Nominal strength. Strength of a member or cross section calculated in accordance with these provisions before application of any strength-reduction factors.

Required strength. Strength of a member or cross section required to resist *factored loads*.

[BS] STRENGTH (for Chapter 16).

Nominal strength. The capacity of a structure or member to resist the effects of *loads*, as determined by computations using *specified* material strengths and dimensions and equations derived from accepted principles of structural mechanics or by field tests or laboratory tests of scaled models, allowing for modeling effects and differences between laboratory and field conditions.

Required strength. Strength of a member, cross section or connection required to resist *factored loads* or related internal moments and forces in such combinations as stipulated by these provisions.

Strength design. A method of proportioning structural members such that the computed forces produced in the members by *factored loads* do not exceed the member design strength [also called "*load and resistance factor design*" (LRFD)]. The term "strength design" is used in the design of concrete and *masonry* structural elements.

[BS] STRUCTURAL COMPOSITE LUMBER. Structural member manufactured using wood elements bonded together with exterior adhesives. Examples of structural composite lumber are:

Laminated strand lumber (LSL). A composite of wood strand elements with wood fibers primarily oriented along the length of the member, where the least dimension of the wood strand elements is 0.10 inch (2.54 mm) or less and their average lengths not less than 150 times the least dimension of the wood strand elements.

Laminated veneer lumber (LVL). A composite of wood *veneer* sheet elements with wood fibers primarily oriented along the length of the member, where the *veneer* element thicknesses are 0.25 inches (6.4 mm) or less.

Oriented strand lumber (OSL). A composite of wood strand elements with wood fibers primarily oriented along the length of the member, where the least dimension of the wood strand elements is 0.10 inches (2.54 mm) or less and their average lengths not less than 75 times and less than 150 times the least dimension of the strand elements.

Parallel strand lumber (PSL). A composite of wood strand elements with wood fibers primarily oriented along the length of the member where the least dimension of the wood strand elements is 0.25 inches (6.4 mm) or less and their average lengths not less than 300 times the least dimension of the wood strand elements.

[BS] STRUCTURAL GLUED-LAMINATED TIMBER. An engineered, stress-rated product of a timber laminating plant, comprised of assemblies of specially selected and prepared wood laminations in which the grain of all laminations is approximately parallel longitudinally and the laminations are bonded with adhesives.

INTERNATIONAL CODE COUNCIL®
Copyright © 2019 ICC & NYSDOS. ALL RIGHTS RESERVED. Accessed by Lauren Gualdino (lgualdino@briarcliffmanor.org), (-) Order Number #100880972 on May 08, 2020 07:05 AM (PDT) pursuant to License Agreement with ICC & NYSDOS. No further reproduction, no

100880972

[BS] STRUCTURAL OBSERVATION. The visual observation of the structural system by a *registered design professional* for general conformance to the *approved construction documents*.

[A] STRUCTURE. That which is built or constructed.

[BS] SUBSTANTIAL DAMAGE. Damage of any origin sustained by a structure whereby the cost of restoring the structure to its before-damaged condition would equal or exceed 50 percent of the market value of the structure before the damage occurred.

[BS] SUBSTANTIAL IMPROVEMENT. Any *repair*, reconstruction, rehabilitation, *alteration*, *addition* or other improvement of a building or structure, the cost of which equals or exceeds 50 percent of the market value of the structure before the improvement or repair is started. If the structure has sustained *substantial damage*, any *repairs* are considered substantial improvement regardless of the actual *repair* work performed. The term does not, however, include either:

1. Any project for improvement of a building required to correct existing health, sanitary or safety code violations identified by the *building official* and that are the minimum necessary to assure safe living conditions.
2. Any *alteration* of a historic structure provided that the *alteration* will not preclude the structure's continued designation as a historic structure.

[BG] SUNROOM. A one-*story* structure attached to a building with a glazing area in excess of 40 percent of the gross area of the structure's *exterior walls* and roof.

[F] SUPERVISING STATION. A facility that receives signals and at which personnel are in attendance at all times to respond to these signals.

[F] SUPERVISORY SERVICE. The service required to monitor performance of guard tours and the operative condition of fixed suppression systems or other systems for the protection of life and property.

[F] SUPERVISORY SIGNAL. A signal indicating the need of action in connection with the supervision of guard tours, the fire suppression systems or equipment or the maintenance features of related systems.

[F] SUPERVISORY SIGNAL-INITIATING DEVICE. An initiation device, such as a valve supervisory switch, water-level indicator or low-air pressure switch on a dry-pipe sprinkler system, whose change of state signals an off-normal condition and its restoration to normal of a fire protection or life safety system, or a need for action in connection with guard tours, fire suppression systems or equipment or maintenance features of related systems.

[BS] SUSCEPTIBLE BAY. A roof or portion thereof with either of the following:

1. A slope less than $^1/_4$-inch per foot (0.0208 rad).
2. On which water is impounded, in whole or in part, and the secondary drainage system is functional but the primary drainage system is blocked.

A roof surface with a slope of $^1/_4$-inch per foot (0.0208 rad) or greater towards points of free drainage is not a susceptible bay.

[NY] SWIMMING POOL. Any structure, basin, chamber or tank which is intended for swimming, diving, recreational bathing or wading and which contains, is designated to contain, or is capable of containing water more than 24 inches (610 mm) deep at any point. This includes in-ground, above-ground and on-ground pools; indoor pools; hot tubs; spas and wading pools.

[BF] T RATING. The time period that the *penetration firestop system*, including the penetrating item, limits the maximum temperature rise to 325°F (163°C) above its initial temperature through the penetration on the nonfire side when tested in accordance with ASTM E814 or UL 1479.

[BG] TECHNICAL PRODUCTION AREA. Open elevated areas or spaces intended for entertainment technicians to walk on and occupy for servicing and operating entertainment technology systems and equipment. Galleries, including fly and lighting galleries, gridirons, catwalks, and similar areas are designed for these purposes.

[BG] TENSILE MEMBRANE STRUCTURE. A membrane structure having a shape that is determined by tension in the membrane and the geometry of the support structure. Typically, the structure consists of both flexible elements (e.g., membrane and cables), nonflexible elements (e.g., struts, masts, beams and arches) and the anchorage (e.g., supports and foundations). This includes frame-supported tensile membrane structures.

[F] TENT. A structure, enclosure, umbrella structure or shelter, with or without sidewalls or drops, constructed of fabric or pliable material supported in any manner except by air or the contents it protects (see "Umbrella structure").

[BG] THERMAL ISOLATION. A separation of conditioned spaces, between a *sunroom* and a *dwelling unit*, consisting of existing or new walls, doors or windows.

[BF] THERMOPLASTIC MATERIAL. A plastic material that is capable of being repeatedly softened by increase of temperature and hardened by decrease of temperature.

[BF] THERMOSETTING MATERIAL. A plastic material that is capable of being changed into a substantially nonreformable product when cured.

[BF] THROUGH PENETRATION. A breach in both sides of a floor, floor-ceiling or wall assembly to accommodate an item passing through the breaches**.**

[BF] THROUGH-PENETRATION FIRESTOP SYSTEM. An assemblage consisting of a fire-resistance-rated floor, floor-ceiling, or wall assembly, one or more penetrating items passing through the breaches in both sides of the assembly and the materials or devices, or both, installed to resist the spread of fire through the assembly for a prescribed period of time.

[BS] TIE, WALL. Metal connector that connects *wythes* of *masonry* walls together.

INTERNATIONAL CODE COUNCIL®
Copyright © 2019 ICC & NYSDOS. ALL RIGHTS RESERVED. Accessed by Lauren Gualdino (lgualdino@briarcliffmanor.org), (-) Order Number #100880972 on May 08, 2020 07:05 AM (PDT) pursuant to License Agreement with ICC & NYSDOS. No further reproduction, no

100880972

[BS] TIE-DOWN (HOLD-DOWN). A device used to resist uplift of the chords of *shear walls.*

[BS] TILE, STRUCTURAL CLAY. A hollow *masonry unit* composed of burned clay, shale, fire clay or mixture thereof, and having parallel *cells*.

[F] TIRES, BULK STORAGE OF. Storage of tires where the area available for storage exceeds 20,000 cubic feet (566 m^3).

[NY] TOWNHOUSE. A single-family dwelling unit constructed in a group of three or more attached units in which each unit (1) extends from the foundation to roof, (2) has open space on at least two sides, and (3) has a separate *means of egress*.

[F] TOXIC. A chemical falling within any of the following categories:

1. A chemical that has a median lethal dose (LD_{50}) of more than 50 milligrams per kilogram, but not more than 500 milligrams per kilogram of body weight when administered orally to albino rats weighing between 200 and 300 grams each.
2. A chemical that has a median lethal dose (LD_{50}) of more than 200 milligrams per kilogram, but not more than 1,000 milligrams per kilogram of body weight when administered by continuous contact for 24 hours (or less if death occurs within 24 hours) with the bare skin of albino rabbits weighing between 2 and 3 kilograms each.
3. A chemical that has a median lethal concentration (LC_{50}) in air of more than 200 parts per million, but not more than 2,000 parts per million by volume of gas or vapor, or more than 2 milligrams per liter but not more than 20 milligrams per liter of mist, fume or dust, when administered by continuous inhalation for 1 hour (or less if death occurs within 1 hour) to albino rats weighing between 200 and 300 grams each.

[BG] TRANSIENT. Occupancy of a *dwelling unit* or *sleeping unit* for not more than 30 days.

[BG] TRANSIENT AIRCRAFT. Aircraft based at another location and that is at the transient location for not more than 90 days.

[BS] TREATED WOOD. Wood products that are conditioned to enhance fire-retardant or preservative properties.

Fire-retardant-treated wood. Wood products that, when impregnated with chemicals by a pressure process or other means during manufacture, exhibit reduced surface-burning characteristics and resist propagation of fire.

Preservative-treated wood. Wood products that, conditioned with chemicals by a pressure process or other means, exhibit reduced susceptibility to damage by fungi, insects or marine borers.

[BF] TRIM. Picture molds, chair rails, baseboards, *handrails*, door and window frames and similar decorative or protective materials used in fixed applications.

[F] TROUBLE SIGNAL. A signal initiated by the *fire alarm system* or device indicative of a fault in a monitored circuit or component.

[BS] TSUNAMI DESIGN GEODATABASE. The ASCE database (version 2016-1.0) of Tsunami Design Zone maps and associated design data for the states of Alaska, California, Hawaii, Oregon and Washington.

[BS] TSUNAMI DESIGN ZONE. An area identified on the Tsunami Design Zone map between the shoreline and the inundation limit, within which certain structures designated in Chapter 16 are designed for or protected from inundation.

[BS] TUBULAR DAYLIGHTING DEVICE (TDD). A non-operable *fenestration* unit primarily designed to transmit daylight from a roof surface to an interior ceiling via a tubular conduit. The basic unit consists of an exterior glazed weathering surface, a light-transmitting tube with a reflective interior surface, and an interior-sealing device such as a translucent ceiling panel. The unit can be factory assembled, or field-assembled from a manufactured kit.

24-HOUR BASIS. See "24-hour basis" located preceding "AAC masonry."

[BE] TYPE A UNIT. A *dwelling unit* or *sleeping unit* designed and constructed for accessibility in accordance with this code and the provisions for *Type A units* in ICC A117.1.

[BE] TYPE B UNIT. A *dwelling unit* or *sleeping unit* designed and constructed for accessibility in accordance with this code and the provisions for *Type B units* in ICC A117.1, consistent with the design and construction requirements of the federal Fair Housing Act.

[F] UMBRELLA STRUCTURE. A structure, enclosure or shelter with or without sidewalls or drops, constructed of fabric or pliable material supported by a central pole or poles (see "Tent").

[BS] UNDERLAYMENT. One or more layers of a material that is applied to a steep-slope *roof covering* deck under the roof covering and resists liquid water that penetrates the roof covering.

[NY] UNIFORM CODE. The New York State Uniform Fire Prevention and Building Code adopted pursuant to Article 18 of the New York State Executive Law, as currently in effect and as hereafter amended from time to time.

UNIT SKYLIGHT. See "Skylight, unit."

[F] UNSTABLE (REACTIVE) MATERIAL. A material, other than an explosive, which in the pure state or as commercially produced, will vigorously polymerize, decompose, condense or become self-reactive and undergo other violent chemical changes, including *explosion*, when exposed to heat, friction or shock, or in the absence of an inhibitor, or in the presence of contaminants, or in contact with *incompatible materials*. Unstable (reactive) materials are subdivided as follows:

Class 4. Materials that in themselves are readily capable of *detonation* or explosive decomposition or explosive reaction at *normal temperatures and pressures*. This class includes materials that are sensitive to mechanical or localized thermal shock at *normal temperatures and pressures.*

Class 3. Materials that in themselves are capable of *detonation* or of explosive decomposition or explosive reaction but which require a strong initiating source or which must be heated under confinement before initiation. This class

INTERNATIONAL CODE COUNCIL®
Copyright © 2019 ICC & NYSDOS. ALL RIGHTS RESERVED. Accessed by Lauren Gualdino (lgualdino@briarcliffmanor.org), (-) Order Number #100880972 on May 08, 2020 07:05 AM (PDT) pursuant to License Agreement with ICC & NYSDOS. No further reproduction, no

100880972

includes materials that are sensitive to thermal or mechanical shock at elevated temperatures and pressures.

Class 2. Materials that in themselves are normally unstable and readily undergo violent chemical change but do not detonate. This class includes materials that can undergo chemical change with rapid release of energy at *normal temperatures and pressures*, and that can undergo violent chemical change at elevated temperatures and pressures.

Class 1. Materials that in themselves are normally stable but which can become unstable at elevated temperatures and pressure.

[F] USE (MATERIAL). Placing a material into action, including *solids, liquids* and gases.

[BF] VAPOR PERMEABLE. The property of having a moisture vapor permeance rating of 5 perms (2.9×10^{-10} kg/Pa × s × m^2) or greater, when tested in accordance with the desiccant method using Procedure A of ASTM E96. A vapor permeable material permits the passage of moisture vapor.

[BF] VAPOR RETARDER CLASS. A measure of a material or assembly's ability to limit the amount of moisture that passes through that material or assembly. Vapor retarder class shall be defined using the desiccant method with Procedure A of ASTM E96 as follows:

Class I: 0.1 perm or less.

Class II: 0.1 < perm ≤ 1.0 perm.

Class III: 1.0 < perm ≤ 10 perm.

[BS] VEGETATIVE ROOF. An assembly of interacting components designed to waterproof a building's top surface that includes, by design, vegetation and related landscape elements.

[BS] VEHICLE BARRIER. A component or a system of components, near open sides or walls of garage floors or ramps that act as a restraint for vehicles.

[BG] VEHICULAR GATE. A gate that is intended for use at a vehicular entrance or exit to a facility, building or portion thereof, and that is not intended for use by pedestrian traffic.

[BF] VENEER. A facing attached to a wall for the purpose of providing ornamentation, protection or insulation, but not counted as adding strength to the wall.

[M] VENTILATION. The natural or mechanical process of supplying conditioned or unconditioned air to, or removing such air from, any space.

[BF] VINYL SIDING. A shaped material, made principally from rigid polyvinyl chloride (PVC), that is used as an *exterior wall covering*.

[F] VISIBLE ALARM NOTIFICATION APPLIANCE. A notification appliance that alerts by the sense of sight.

[BG] WALKWAY, PEDESTRIAN. A walkway used exclusively as a pedestrian trafficway.

[BS] WALL (for Chapter 21). A vertical element with a horizontal length-to-thickness ratio greater than three, used to enclose space.

Cavity wall. A wall built of *masonry units* or of concrete, or a combination of these materials, arranged to provide an airspace within the wall, and in which the inner and outer parts of the wall are tied together with metal ties.

Dry-stacked, surface-bonded wall. A wall built of concrete *masonry units* where the units are stacked dry, without *mortar* on the bed or *head joints*, and where both sides of the wall are coated with a surface-bonding *mortar*.

Parapet wall. The part of any wall entirely above the roof line.

[BS] WALL, LOAD-BEARING. Any wall meeting either of the following classifications:

1. Any metal or wood stud wall that supports more than 100 pounds per linear foot (1459 N/m) of vertical load in addition to its own weight.
2. Any *masonry* or concrete wall that supports more than 200 pounds per linear foot (2919 N/m) of vertical load in addition to its own weight.

[BS] WALL, NONLOAD-BEARING. Any wall that is not a *load-bearing wall*.

[F] WATER-REACTIVE MATERIAL. A material that explodes; violently reacts; produces *flammable*, *toxic* or other hazardous gases; or evolves enough heat to cause autoignition or ignition of combustibles upon exposure to water or moisture. Water-reactive materials are subdivided as follows:

Class 3. Materials that react explosively with water without requiring heat or confinement.

Class 2. Materials that react violently with water or have the ability to boil water. Materials that produce *flammable*, *toxic* or other hazardous gases or evolve enough heat to cause autoignition or ignition of combustibles upon exposure to water or moisture.

Class 1. Materials that react with water with some release of energy, but not violently.

[BF] WATER-RESISTIVE BARRIER. A material behind an *exterior wall covering* that is intended to resist liquid water that has penetrated behind the exterior covering from further intruding into the *exterior wall* assembly.

[BF] WEATHER-EXPOSED SURFACES. Surfaces of walls, ceilings, floors, roofs, soffits and similar surfaces exposed to the weather except the following:

1. Ceilings and roof soffits enclosed by walls, fascia, bulkheads or beams that extend not less than 12 inches (305 mm) below such ceiling or roof soffits.
2. Walls or portions of walls beneath an unenclosed roof area, where located a horizontal distance from an open exterior opening equal to not less than twice the height of the opening.
3. Ceiling and roof soffits located a minimum horizontal distance of 10 feet (3048 mm) from the outer edges of the ceiling or roof soffits.

[F] WET-CHEMICAL EXTINGUISHING SYSTEM. A solution of water and potassium-carbonate-based chemical, potassium-acetate-based chemical or a combination thereof, forming an extinguishing agent.

[BE] WHEELCHAIR SPACE. A space for a single wheelchair and its occupant.

INTERNATIONAL CODE COUNCIL®
Copyright © 2019 ICC & NYSDOS. ALL RIGHTS RESERVED. Accessed by Lauren Gualdino (lgualdino@briarcliffmanor.org), (-) Order Number #100880972 on May 08, 2020 07:05 AM (PDT) pursuant to License Agreement with ICC & NYSDOS. No further reproduction, no

100880972

[BS] WINDBORNE DEBRIS REGION. Areas within hurricane-prone regions located:

1. Within 1 mile (1.61 km) of the coastal mean high-water line where the basic design wind speed, *V*, is 130 mph (58 m/s) or greater; or
2. In areas where the basic design wind speed is 140 mph (63.6 m/s) or greater.

For *Risk Category* II buildings and structures and *Risk Category* III buildings and structures, except health care facilities, the windborne debris region shall be based on Figure 1609.3.(1). For *Risk Category* IV buildings and structures and *Risk Category* III health care facilities, the windborne debris region shall be based on Figure 1609.3(2).

WINDFORCE-RESISTING SYSTEM, MAIN. See "Main windforce-resisting system."

[BS] WIND SPEED, *V*. Basic design wind speeds.

[BS] WIND SPEED, V_{asd}. Allowable stress design wind speeds.

[BE] WINDER. A tread with nonparallel edges.

[BS] WIRE BACKING. Horizontal strands of tautened wire attached to surfaces of vertical supports which, when covered with the building paper, provide a *backing* for cement plaster.

[F] WIRELESS PROTECTION SYSTEM. A system or a part of a system that can transmit and receive signals without the aid of wire.

[BS] WOOD/PLASTIC COMPOSITE. A composite material made primarily from wood or cellulose-based materials and plastic.

[BS] WOOD SHEAR PANEL. A wood floor, roof or wall component sheathed to act as a *shear wall* or *diaphragm*.

[BS] WOOD STRUCTURAL PANEL. A panel manufactured from *veneers*, wood strands or wafers or a combination of *veneer* and wood strands or wafers bonded together with waterproof synthetic resins or other suitable bonding systems. Examples of wood structural panels are:

Composite panels. A wood structural panel that is comprised of wood *veneer* and reconstituted wood-based material and bonded together with waterproof adhesive.

Oriented strand board (OSB). A mat-formed wood structural panel comprised of thin rectangular wood strands arranged in cross-aligned layers with surface layers normally arranged in the long panel direction and bonded with waterproof adhesive.

Plywood. A wood structural panel comprised of plies of wood *veneer* arranged in cross-aligned layers. The plies are bonded with waterproof adhesive that cures on application of heat and pressure.

[F] WORKSTATION. A defined space or an independent principal piece of equipment using *HPM* within a *fabrication area* where a specific function, laboratory procedure or research activity occurs. *Approved* or *listed hazardous materials storage cabinets*, *flammable liquid* storage cabinets or *gas cabinets* serving a workstation are included as part of the workstation. A workstation is allowed to contain *ventilation* equipment, fire protection devices, detection devices, electrical devices and other processing and scientific equipment.

[BS] WYTHE. Each continuous, vertical section of a wall, one *masonry unit* in thickness.

[BG] YARD. An open space, other than a *court*, unobstructed from the ground to the sky, except where specifically provided by this code, on the lot on which a building is situated.

[F] ZONE. A defined area within the protected premises. A zone can define an area from which a signal can be received, an area to which a signal can be sent or an area in which a form of control can be executed.

[F] ZONE, NOTIFICATION. An area within a building or facility covered by notification appliances which are activated simultaneously.

INTERNATIONAL CODE COUNCIL®
Copyright © 2019 ICC & NYSDOS. ALL RIGHTS RESERVED. Accessed by Lauren Gualdino (lgualdino@briarcliffmanor.org), (-) Order Number #100880972 on May 08, 2020 07:05 AM (PDT) pursuant to License Agreement with ICC & NYSDOS. No further reproduction, no

100880972

CHAPTER 3

OCCUPANCY CLASSIFICATION AND USE

SECTION 301
SCOPE

301.1 General. The provisions of this chapter shall control the classification of all buildings and structures as to occupancy and use. Different classifications of occupancy and use represent varying levels of hazard and risk to building occupants and adjacent properties.

SECTION 302
OCCUPANCY CLASSIFICATION AND USE DESIGNATION

➡ **302.1 Occupancy classification.** Occupancy classification is the formal designation of the primary purpose of the building, structure or portion thereof. Structures shall be classified into one or more of the occupancy groups listed in this section based on the nature of the hazards and risks to building occupants generally associated with the intended purpose of the building or structure. An area, room or space that is intended to be occupied at different times for different purposes shall comply with all applicable requirements associated with such potential multipurpose. Structures containing multiple occupancy groups shall comply with Section 508. Where a structure is proposed for a purpose that is not specifically listed in this section, such structure shall be classified in the occupancy it most nearly resembles based on the fire safety and relative hazard. Occupied roofs shall be classified in the group that the occupancy most nearly resembles, according to the fire safety and relative hazard, and shall comply with Section 503.1.4.

1. Assembly (see Section 303): Groups A-1, A-2, A-3, A-4 and A-5.
2. Business (see Section 304): Group B.
3. Educational (see Section 305): Group E.
4. Factory and Industrial (see Section 306): Groups F-1 and F-2.
5. High Hazard (see Section 307): Groups H-1, H-2, H-3, H-4 and H-5.
6. Institutional (see Section 308): Groups I-1, I-2, I-3 and I-4.
7. Mercantile (see Section 309): Group M.
8. Residential (see Section 310): Groups R-1, R-2, R-3 and R-4.
9. Storage (see Section 311): Groups S-1 and S-2.
10. Utility and Miscellaneous (see Section 312): Group U.

302.2 Use designation. Occupancy groups contain subordinate uses having similar hazards and risks to building occupants. Uses include, but are not limited to, those functional designations listed within the occupancy group descriptions in Section 302.1. Certain uses require specific limitations and controls in accordance with the provisions of Chapter 4 and elsewhere in this code.

SECTION 303
ASSEMBLY GROUP A

303.1 Assembly Group A. Assembly Group A occupancy includes, among others, the use of a building or structure, or a portion thereof, for the gathering of persons for purposes such as civic, social or religious functions; recreation, food or drink consumption or awaiting transportation.

303.1.1 Small buildings and tenant spaces. A building or tenant space used for assembly purposes with an *occupant load* of less than 50 persons shall be classified as a Group B occupancy.

303.1.2 Small assembly spaces. The following rooms and spaces shall not be classified as Assembly occupancies:

1. A room or space used for assembly purposes with an *occupant load* of less than 50 persons and accessory to another occupancy shall be classified as a Group B occupancy or as part of that occupancy.
2. A room or space used for assembly purposes that is less than 750 square feet (70 m^2) in area and accessory to another occupancy shall be classified as a Group B occupancy or as part of that occupancy.

303.1.3 Associated with Group E occupancies. A room or space used for assembly purposes that is associated with a Group E occupancy is not considered a separate occupancy.

303.1.4 Accessory to places of religious worship. Accessory religious educational rooms and religious auditoriums with *occupant loads* of less than 100 per room or space are not considered separate occupancies.

303.2 Assembly Group A-1. Group A-1 occupancy includes assembly uses, usually with fixed seating, intended for the production and viewing of the performing arts or motion pictures including, but not limited to:

Motion picture theaters
Symphony and concert halls
Television and radio studios admitting an audience
Theaters

303.3 Assembly Group A-2. Group A-2 occupancy includes assembly uses intended for food and/or drink consumption including, but not limited to:

Banquet halls
Casinos (gaming areas)
Nightclubs
Restaurants, cafeterias and similar dining facilities (including associated commercial kitchens)
Taverns and bars

INTERNATIONAL CODE COUNCIL®
Copyright © 2019 ICC & NYSDOS. ALL RIGHTS RESERVED. Accessed by Lauren Gualdino (lgualdino@briarcliffmanor.org), (-) Order Number #100880972 on May 08, 2020 07:05 AM (PDT) pursuant to License Agreement with ICC & NYSDOS. No further reproduction, no

100880972

303.4 Assembly Group A-3. Group A-3 occupancy includes assembly uses intended for worship, recreation or amusement and other assembly uses not classified elsewhere in Group A including, but not limited to:

Amusement arcades
Art galleries
Bowling alleys
Community halls
Courtrooms
Dance halls (not including food or drink consumption)
Exhibition halls
Funeral parlors
Greenhouses for the conservation and exhibition of plants that provide public access.
Gymnasiums (without spectator seating)
Indoor *swimming pools* (without spectator seating)
Indoor tennis courts (without spectator seating)
Lecture halls
Libraries
Museums
Places of religious worship
Pool and billiard parlors
Waiting areas in transportation terminals

303.5 Assembly Group A-4. Group A-4 occupancy includes assembly uses intended for viewing of indoor sporting events and activities with spectator seating including, but not limited to:

Arenas
Skating rinks
Swimming pools
Tennis courts

303.6 Assembly Group A-5. Group A-5 occupancy includes assembly uses intended for participation in or viewing outdoor activities including, but not limited to:

Amusement park structures
Bleachers
Grandstands
Stadiums

SECTION 304
BUSINESS GROUP B

304.1 Business Group B. Business Group B occupancy includes, among others, the use of a building or structure, or a portion thereof, for office, professional or service-type transactions, including storage of records and accounts. Business occupancies shall include, but not be limited to, the following:

Airport traffic control towers
Ambulatory care facilities
Animal hospitals, kennels and pounds
Banks
Barber and beauty shops
Car wash
Civic administration
Clinic, outpatient
Dry cleaning and laundries: pick-up and delivery stations and self-service
Educational occupancies for students above the 12th grade
Electronic data processing
Food processing establishments and commercial kitchens not associated with restaurants, cafeterias and similar dining facilities not more than 2,500 square feet (232 m^2) in area.
Laboratories: testing and research
Motor vehicle showrooms
Post offices
Print shops
Professional services (architects, attorneys, dentists, physicians, engineers, etc.)
Radio and television stations
Telephone exchanges
Training and skill development not in a school or academic program (this shall include, but not be limited to, tutoring centers, martial arts studios, gymnastics and similar uses regardless of the ages served, and where not classified as a Group A occupancy)

SECTION 305
EDUCATIONAL GROUP E

305.1 Educational Group E. Educational Group E occupancy includes, among others, the use of a building or structure, or a portion thereof, by six or more persons at any one time for educational purposes through the 12th grade.

305.1.1 Accessory to places of religious worship. Religious educational rooms and religious auditoriums, which are accessory to *places of religious worship* in accordance with Section 303.1.4 and have *occupant loads* of less than 100 per room or space, shall be classified as Group A-3 occupancies.

305.2 Group E, day care facilities. This group includes buildings and structures or portions thereof occupied by more than five children older than $2^1/_2$ years of age who receive educational, supervision or *personal care services* for fewer than 24 hours per day.

305.2.1 Within places of religious worship. Rooms and spaces within *places of religious worship* providing such day care during religious functions shall be classified as part of the primary occupancy.

305.2.2 Five or fewer children. A facility having five or fewer children receiving such day care shall be classified as part of the primary occupancy.

305.2.3 Five or fewer children in a dwelling unit. A facility such as the above within a *dwelling unit* and having five or fewer children receiving such day care shall be classified as a Group R-3 occupancy or shall comply with the *Residential Code of New York State*.

SECTION 306
FACTORY GROUP F

306.1 Factory Industrial Group F. Factory Industrial Group F occupancy includes, among others, the use of a building or structure, or a portion thereof, for assembling, disassembling, fabricating, finishing, manufacturing, packaging, repair or

INTERNATIONAL CODE COUNCIL®
Copyright © 2019 ICC & NYSDOS. ALL RIGHTS RESERVED. Accessed by Lauren Gualdino (lgualdino@briarcliffmanor.org), (-) Order Number #100880972 on May 08, 2020 07:05 AM (PDT) pursuant to License Agreement with ICC & NYSDOS. No further reproduction, no

100880972

processing operations that are not classified as a Group H hazardous or Group S storage occupancy.

306.2 Moderate-hazard factory industrial, Group F-1. Factory industrial uses that are not classified as Factory Industrial F-2 Low Hazard shall be classified as F-1 Moderate Hazard and shall include, but not be limited to, the following:

Aircraft (manufacturing, not to include repair)
Appliances
Athletic equipment
Automobiles and other motor vehicles
Bakeries
Beverages: over 16-percent alcohol content
Bicycles
Boats
Brooms or brushes
Business machines
Cameras and photo equipment
Canvas or similar fabric
Carpets and rugs (includes cleaning)
Clothing
Construction and agricultural machinery
Disinfectants
Dry cleaning and dyeing
Electric generation plants
Electronics
Engines (including rebuilding)
Food processing establishments and commercial kitchens not associated with restaurants, cafeterias and similar dining facilities more than 2,500 square feet (232 m^2) in area.
Furniture
Hemp products
Jute products
Laundries
Leather products
Machinery
Metals
Millwork (sash and door)
Motion pictures and television filming (without spectators)
Musical instruments
Optical goods
Paper mills or products
Photographic film
Plastic products
Printing or publishing
Recreational vehicles
Refuse incineration
Shoes
Soaps and detergents
Textiles
Tobacco
Trailers
Upholstering
Wood; distillation
Woodworking (cabinet)

306.3 Low-hazard factory industrial, Group F-2. Factory industrial uses that involve the fabrication or manufacturing of noncombustible materials that during finishing, packing or processing do not involve a significant fire hazard shall be classified as F-2 occupancies and shall include, but not be limited to, the following:

Beverages: up to and including 16-percent alcohol content
Brick and masonry
Ceramic products
Foundries
Glass products
Gypsum
Ice
Metal products (fabrication and assembly)

SECTION 307
HIGH-HAZARD GROUP H

[F] 307.1 High-hazard Group H. High-hazard Group H occupancy includes, among others, the use of a building or structure, or a portion thereof, that involves the manufacturing, processing, generation or storage of materials that constitute a physical or health hazard in quantities in excess of those allowed in *control areas* complying with Section 414, based on the maximum allowable quantity limits for *control areas* set forth in Tables 307.1(1) and 307.1(2). Hazardous occupancies are classified in Groups H-1, H-2, H-3, H-4 and H-5 and shall be in accordance with this section, the requirements of Section 415 and the *Fire Code of New York State*. Hazardous materials stored, or used on top of roofs or canopies, shall be classified as outdoor storage or use and shall comply with the *Fire Code of New York State*.

[F] 307.1.1 Uses other than Group H. An occupancy that stores, uses or handles hazardous materials as described in one or more of the following items shall not be classified as Group H, but shall be classified as the occupancy that it most nearly resembles.

1. Buildings and structures occupied for the application of flammable finishes, provided that such buildings or areas conform to the requirements of Section 416 and the *Fire Code of New York State*.
2. Wholesale and retail sales and storage of flammable and combustible liquids in mercantile occupancies conforming to the *Fire Code of New York State*.
3. Closed piping system containing flammable or combustible liquids or gases utilized for the operation of machinery or equipment.
4. Cleaning establishments that utilize combustible liquid solvents having a flash point of 140°F (60°C) or higher in closed systems employing equipment *listed* by an *approved* testing agency, provided that this occupancy is separated from all other areas of the building by 1-hour *fire barriers* constructed in accordance with Section 707 or 1-hour *horizontal assemblies* constructed in accordance with Section 711, or both.
5. Cleaning establishments that utilize a liquid solvent having a flash point at or above 200°F (93°C).

INTERNATIONAL CODE COUNCIL®
Copyright © 2019 ICC & NYSDOS. ALL RIGHTS RESERVED. Accessed by Lauren Gualdino (lgualdino@briarcliffmanor.org), (-) Order Number #100880972 on May 08, 2020 07:05 AM (PDT) pursuant to License Agreement with ICC & NYSDOS. No further reproduction, no

100880972

6. Liquor stores and distributors without bulk storage.
7. Refrigeration systems.
8. The storage or utilization of materials for agricultural purposes on the premises.
9. Stationary storage battery systems installed in accordance with the *Fire Code of New York State.*
10. Corrosive personal or household products in their original packaging used in retail display.
11. Commonly used corrosive building materials.
12. Buildings and structures occupied for aerosol product storage shall be classified as Group S-1, provided that such buildings conform to the requirements of the *Fire Code of New York State*.
13. Display and storage of nonflammable solid and nonflammable or noncombustible liquid hazardous materials in quantities not exceeding the maximum allowable quantity per *control area* in Group M or S occupancies complying with Section 414.2.5.
14. The storage of black powder, smokeless propellant and small arms primers in Groups M and R-3 and special industrial explosive devices in Groups B, F, M and S, provided such storage conforms to the quantity limits and requirements prescribed in the *Fire Code of New York State*.
15. Stationary fuel cell power systems installed in accordance with the *Fire Code of New York State.*
16. Capacitor energy storage systems in accordance with the *Fire Code of New York State.*
17. Group B higher education laboratory occupancies complying with Section 428 and Chapter 38 of the *Fire Code of New York State.*

[F] 307.2 Hazardous materials. Hazardous materials in any quantity shall conform to the requirements of this code, including Section 414, and the *Fire Code of New York State*.

[F] 307.3 High-hazard Group H-1. Buildings and structures containing materials that pose a detonation hazard shall be classified as Group H-1. Such materials shall include, but not be limited to, the following:

Detonable pyrophoric materials

Explosives:

Division 1.1
Division 1.2

TABLE 307.1(1)
MAXIMUM ALLOWABLE QUANTITY PER CONTROL AREA OF HAZARDOUS MATERIALS POSING A PHYSICAL HAZARD[a, j, m, n, p]

MATERIAL	CLASS	GROUP WHEN THE MAXIMUM ALLOWABLE QUANTITY IS EXCEEDED	STORAGE[b]			USE-CLOSED SYSTEMS[b]			USE-OPEN SYSTEMS[b]	
			Solid pounds (cubic feet)	Liquid gallons (pounds)	Gas cubic feet at NTP	Solid pounds (cubic feet)	Liquid gallons (pounds)	Gas cubic feet at NTP	Solid pounds (cubic feet)	Liquid gallons (pounds)
Combustible dust	NA	H-2	See Note q	NA	NA	See Note q	NA	NA	See Note q	NA
Combustible fiber[q]	Loose Baled[o]	H-3	(100) (1,000)	NA	NA	(100) (1,000)	NA	NA	(20) (200)	NA
Combustible liquid[c, i]	II IIIA IIIB	H-2 or H-3 H-2 or H-3 NA	NA	120[d, e] 330[d, e] 13,200[e, f]	NA	NA	120[d] 330[d] 13,200[f]	NA	NA	30[d] 80[d] 3,300[f]
Cryogenic flammable	NA	H-2	NA	45[d]	NA	NA	45[d]	NA	NA	10[d]
Cryogenic inert	NA	NA	NA	NA	NL	NA	NA	NL	NA	NA
Cryogenic oxidizing	NA	H-3	NA	45[d]	NA	NA	45[d]	NA	NA	10[d]
Explosives	Division 1.1 Division 1.2 Division 1.3 Division 1.4 Division 1.4G Division 1.5 Division 1.6	H-1 H-1 H-1 or H-2 H-3 H-3 H-1 H-1	1[e, g] 1[e, g] 5[e, g] 50[e, g] 125[e, l] 1[e, g] 1[e, g]	(1)[e, g] (1)[e, g] (5)[e, g] (50)[e, g] NA (1)[e, g] NA	NA	0.25[g] 0.25[g] 1[g] 50[g] NA 0.25[g] NA	(0.25)[g] (0.25)[g] (1)[g] (50)[g] NA (0.25)[g] NA	NA	0.25[g] 0.25[g] 1[g] NA NA 0.25[g] NA	(0.25)[g] (0.25)[g] (1)[g] NA NA (0.25)[g] NA
Flammable gas	Gaseous Liquefied	H-2	NA	NA (150)[d, e]	1,000[d, e] NA	NA	NA (150)[d, e]	1,000[d, e] NA	NA	NA
Flammable liquid[c]	IA IB and IC	H-2 or H-3	NA	30[d, e] 120[d, e]	NA	NA	30[d] 120[d]	NA	NA	10[d] 30[d]
Flammable liquid, combination (IA, IB, IC)	NA	H-2 or H-3	NA	120[d, e, h]	NA	NA	120[d, h]	NA	NA	30[d, h]

(continued)

INTERNATIONAL CODE COUNCIL®
Copyright © 2019 ICC & NYSDOS. ALL RIGHTS RESERVED. Accessed by Lauren Gualdino (lgualdino@briarcliffmanor.org), (-) Order Number #100880972 on May 08, 2020 07:05 AM (PDT) pursuant to License Agreement with ICC & NYSDOS. No further reproduction, no

100880972

TABLE 307.1(1)—continued
MAXIMUM ALLOWABLE QUANTITY PER CONTROL AREA OF HAZARDOUS MATERIALS POSING A PHYSICAL HAZARD[a, j, m, n, p]

MATERIAL	CLASS	GROUP WHEN THE MAXIMUM ALLOWABLE QUANTITY IS EXCEEDED	STORAGE[b]			USE-CLOSED SYSTEMS[b]			USE-OPEN SYSTEMS[b]	
			Solid pounds (cubic feet)	Liquid gallons (pounds)	Gas cubic feet at NTP	Solid pounds (cubic feet)	Liquid gallons (pounds)	Gas cubic feet at NTP	Solid pounds (cubic feet)	Liquid gallons (pounds)
Flammable solid	NA	H-3	125[d, e]	NA	NA	125[d]	NA	NA	25[d]	NA
Inert gas	Gaseous Liquefied	NA NA	NA NA	NA NA	NL NL	NA NA	NA NA	NL NL	NA NA	NA NA
Organic peroxide	UD I II III IV V	H-1 H-2 H-3 H-3 NA NA	1[e, g] 5[d, e] 50[d, e] 125[d, e] NL NL	(1)[e, g] (5)[d, e] (50)[d, e] (125)[d, e] NL NL	NA	0.25[g] 1[d] 50[d] 125[d] NL NL	(0.25)[g] (1)[d] (50)[d] (125)[d] NL NL	NA	0.25[g] 1[d] 10[d] 25[d] NL NL	(0.25)[g] (1)[d] (10)[d] (25)[d] NL NL
Oxidizer	4 3[k] 2 1	H-1 H-2 or H-3 H-3 NA	1[g] 10[d, e] 250[d, e] 4,000[e, f]	(1)[e, g] (10)[d, e] (250)[d, e] (4,000)[e, f]	NA	0.25[g] 2[d] 250[d] 4,000[f]	(0.25)[g] (2)[d] (250)[d] (4,000)[f]	NA	0.25[g] 2[d] 50[d] 1,000[f]	(0.25)[g] (2)[d] (50)[d] (1,000)[f]
Oxidizing gas	Gaseous Liquefied	H-3	NA	NA (150)[d, e]	1,500[d, e] NA	NA	NA (150)[d, e]	1,500[d, e] NA	NA	NA
Pyrophoric	NA	H-2	4[e, g]	(4)[e, g]	50[e, g]	1[g]	(1)[g]	10[e, g]	0	0
Unstable (reactive)	4 3 2 1	H-1 H-1 or H-2 H-3 NA	1[e, g] 5[d, e] 50[d, e] NL	(1)[e, g] (5)[d, e] (50)[d, e] NL	10[e, g] 50[d, e] 750[d, e] NL	0.25[g] 1[d] 50[d] NL	(0.25)[g] (1)[d] (50)[d] NL	2[e, g] 10[d, e] 750[d, e] NL	0.25[g] 1[d] 10[d] NL	(0.25)[g] (1)[d] (10)[d] NL
Water reactive	3 2 1	H-2 H-3 NA	5[d, e] 50[d, e] NL	(5)[d, e] (50)[d, e] NL	NA	5[d] 50[d] NL	(5)[d] (50)[d] NL	NA	1[d] 10[d] NL	(1)[d] (10)[d] NL

For SI: 1 cubic foot = 0.028 m^3, 1 pound = 0.454 kg, 1 gallon = 3.785 L.

NL = Not Limited; NA = Not Applicable; UD = Unclassified Detonable.

a. For use of control areas, see Section 414.2.

b. The aggregate quantity in use and storage shall not exceed the quantity listed for storage.

c. The quantities of alcoholic beverages in retail and wholesale sales occupancies shall not be limited provided the liquids are packaged in individual containers not exceeding 1.3 gallons. In retail and wholesale sales occupancies, the quantities of medicines, foodstuffs or consumer products, and cosmetics containing not more than 50 percent by volume of water-miscible liquids with the remainder of the solutions not being flammable, shall not be limited, provided that such materials are packaged in individual containers not exceeding 1.3 gallons.

d. Maximum allowable quantities shall be increased 100 percent in buildings equipped throughout with an automatic sprinkler system in accordance with Section 903.3.1.1. Where Note e also applies, the increase for both notes shall be applied accumulatively.

e. Maximum allowable quantities shall be increased 100 percent when stored in approved storage cabinets, day boxes, gas cabinets, gas rooms or exhausted enclosures or in listed safety cans in accordance with Section 5003.9.10 of the *Fire Code of New York State*. Where Note d also applies, the increase for both notes shall be applied accumulatively.

f. Quantities shall not be limited in a building equipped throughout with an automatic sprinkler system in accordance with Section 903.3.1.1.

g. Allowed only in buildings equipped throughout with an automatic sprinkler system in accordance with Section 903.3.1.1.

h. Containing not more than the maximum allowable quantity per control area of Class IA, IB or IC flammable liquids.

i. The maximum allowable quantity shall not apply to fuel oil storage complying with Section 603.3.2 of the *Fire Code of New York State*.

j. Quantities in parentheses indicate quantity units in parentheses at the head of each column.

k. A maximum quantity of 220 pounds of solid or 22 gallons of liquid Class 3 oxidizers is allowed when such materials are necessary for maintenance purposes, operation or sanitation of equipment when the storage containers and the manner of storage are approved.

l. Net weight of the pyrotechnic composition of the fireworks. Where the net weight of the pyrotechnic composition of the fireworks is not known, 25 percent of the gross weight of the fireworks, including packaging, shall be used.

m. For gallons of liquids, divide the amount in pounds by 10 in accordance with Section 5003.1.2 of the *Fire Code of New York State*.

n. For storage and display quantities in Group M and storage quantities in Group S occupancies complying with Section 414.2.5, see Tables 414.2.5(1) and 414.2.5(2).

o. Densely packed baled cotton that complies with the packing requirements of ISO 8115 shall not be included in this material class.

p. The following shall not be included in determining the maximum allowable quantities:

1. Liquid or gaseous fuel in fuel tanks on vehicles.
2. Liquid or gaseous fuel in fuel tanks on motorized equipment operated in accordance with the *Fire Code of New York State*.
3. Gaseous fuels in piping systems and fixed appliances regulated by the *Fuel Gas Code of New York State*.
4. Liquid fuels in piping systems and fixed appliances regulated by the *Mechanical Code of New York State*.
5. Alcohol-based hand rubs classified as Class I or II liquids in dispensers that are installed in accordance with Sections 5705.5 and 5705.5.1 of the *Fire Code of New York State*. The location of the alcohol-based hand rub (ABHR) dispensers shall be provided in the construction documents.

q. Where manufactured, generated or used in such a manner that the concentration and conditions create a fire or explosion hazard based on information prepared in accordance with Section 414.1.3.

INTERNATIONAL CODE COUNCIL®
Copyright © 2019 ICC & NYSDOS. ALL RIGHTS RESERVED. Accessed by Lauren Gualdino (lgualdino@briarcliffmanor.org), (-) Order Number #100880972 on May 08, 2020 07:05 AM (PDT) pursuant to License Agreement with ICC & NYSDOS. No further reproduction, no

100880972

[F] TABLE 307.1(2)
MAXIMUM ALLOWABLE QUANTITY PER CONTROL AREA OF HAZARDOUS MATERIALS POSING A HEALTH HAZARD[a, c, f, h, i]

MATERIAL	STORAGE[b]			USE-CLOSED SYSTEMS[b]			USE-OPEN SYSTEMS[b]	
	Solid pounds[d, e]	Liquid gallons (pounds)[d, e]	Gas cubic feet at NTP (pounds)[d]	Solid pounds[d]	Liquid gallons (pounds)[d]	Gas cubic feet at NTP (pounds)[d]	Solid pounds[d]	Liquid gallons (pounds)[d]
Corrosives	5,000	500	Gaseous 810[e] Liquefied (150)	5,000	500	Gaseous 810[e] Liquefied (150)	1,000	100
Highly Toxic	10	(10)	Gaseous 20[g] Liquefied (4)[g]	10	(10)	Gaseous 20[g] Liquefied (4)[g]	3	(3)
Toxic	500	(500)	Gaseous 810[e] Liquefied (150)[e]	500	(500)	Gaseous 810[e] Liquefied (150)[e]	125	(125)

For SI: 1 cubic foot = 0.028 m^3, 1 pound = 0.454 kg, 1 gallon = 3.785 L.

a. For use of control areas, see Section 414.2.
b. The aggregate quantity in use and storage shall not exceed the quantity listed for storage.
c. In retail and wholesale sales occupancies, the quantities of medicines, foodstuffs or consumer products, and cosmetics containing not more than 50 percent by volume of water-miscible liquids and with the remainder of the solutions not being flammable, shall not be limited, provided that such materials are packaged in individual containers not exceeding 1.3 gallons.
d. Maximum allowable quantities shall be increased 100 percent in buildings equipped throughout with an approved automatic sprinkler system in accordance with Section 903.3.1.1. Where Note e also applies, the increase for both notes shall be applied accumulatively.
e. Maximum allowable quantities shall be increased 100 percent where stored in approved storage cabinets, gas cabinets or exhausted enclosures as specified in the *Fire Code of New York State*. Where Note d also applies, the increase for both notes shall be applied accumulatively.
f. For storage and display quantities in Group M and storage quantities in Group S occupancies complying with Section 414.2.5, see Tables 414.2.5(1) and 414.2.5(2).
g. Allowed only where stored in approved exhausted gas cabinets or exhausted enclosures as specified in the *Fire Code of New York State*.
h. Quantities in parentheses indicate quantity units in parentheses at the head of each column.
i. For gallons of liquids, divide the amount in pounds by 10 in accordance with Section 5003.1.2 of the *Fire Code of New York State*.

Division 1.3
Division 1.4
Division 1.5
Division 1.6

Organic peroxides, unclassified detonable

Oxidizers, Class 4

Unstable (reactive) materials, Class 3 detonable and Class 4

[F] 307.3.1 Occupancies containing explosives not classified as H-1. The following occupancies containing explosive materials shall be classified as follows:

1. Division 1.3 explosive materials that are used and maintained in a form where either confinement or configuration will not elevate the hazard from a mass fire to mass explosion hazard shall be allowed in H-2 occupancies.
2. Articles, including articles packaged for shipment, that are not regulated as a Division 1.4 explosive under Bureau of Alcohol, Tobacco, Firearms and Explosives regulations, or unpackaged articles used in process operations that do not propagate a detonation or deflagration between articles shall be allowed in H-3 occupancies.

[F] 307.4 High-hazard Group H-2. Buildings and structures containing materials that pose a deflagration hazard or a hazard from accelerated burning shall be classified as Group H-2. Such materials shall include, but not be limited to, the following:

Class I, II or IIIA flammable or combustible liquids that are used or stored in normally open containers or systems, or in closed containers or systems pressurized at more than 15 pounds per square inch gauge (103.4 kPa).
Combustible dusts where manufactured, generated or used in such a manner that the concentration and conditions create a fire or explosion hazard based on information prepared in accordance with Section 414.1.3.
Cryogenic fluids, flammable.
Flammable gases.
Organic peroxides, Class I.
Oxidizers, Class 3, that are used or stored in normally open containers or systems, or in closed containers or systems pressurized at more than 15 pounds per square inch gauge (103 kPa).
Pyrophoric liquids, solids and gases, nondetonable.
Unstable (reactive) materials, Class 3, nondetonable.
Water-reactive materials, Class 3.

[F] 307.5 High-hazard Group H-3. Buildings and structures containing materials that readily support combustion or that pose a physical hazard shall be classified as Group H-3. Such materials shall include, but not be limited to, the following:

Class I, II or IIIA flammable or combustible liquids that are used or stored in normally closed containers or systems pressurized at 15 pounds per square inch gauge (103.4 kPa) or less.
Combustible fibers, other than densely packed baled cotton, where manufactured, generated or used in such a manner that the concentration and conditions create a fire or explosion hazard based on information prepared in accordance with Section 414.1.3.
Consumer fireworks, 1.4G (Class C, Common)
Cryogenic fluids, oxidizing
Flammable solids
Organic peroxides, Class II and III

INTERNATIONAL CODE COUNCIL®
Copyright © 2019 ICC & NYSDOS. ALL RIGHTS RESERVED. Accessed by Lauren Gualdino (lgualdino@briarcliffmanor.org), (-) Order Number #100880972 on May 08, 2020 07:05 AM (PDT) pursuant to License Agreement with ICC & NYSDOS. No further reproduction, no

100880972

Oxidizers, Class 2
Oxidizers, Class 3, that are used or stored in normally closed containers or systems pressurized at 15 pounds per square inch gauge (103 kPa) or less
Oxidizing gases
Unstable (reactive) materials, Class 2
Water-reactive materials, Class 2

[F] 307.6 High-hazard Group H-4. Buildings and structures containing materials that are health hazards shall be classified as Group H-4. Such materials shall include, but not be limited to, the following:

Corrosives
Highly toxic materials
Toxic materials

[F] 307.7 High-hazard Group H-5. Semiconductor fabrication facilities and comparable research and development areas in which hazardous production materials (HPM) are used and the aggregate quantity of materials is in excess of those listed in Tables 307.1(1) and 307.1(2) shall be classified as Group H-5. Such facilities and areas shall be designed and constructed in accordance with Section 415.11.

[F] 307.8 Multiple hazards. Buildings and structures containing a material or materials representing hazards that are classified in one or more of Groups H-1, H-2, H-3 and H-4 shall conform to the code requirements for each of the occupancies so classified.

SECTION 308
INSTITUTIONAL GROUP I

308.1 Institutional Group I. Institutional Group I occupancy includes, among others, the use of a building or structure, or a portion thereof, in which care or supervision is provided to persons who are or are not capable of self-preservation without physical assistance or in which persons are detained for penal or correctional purposes or in which the liberty of the occupants is restricted. Institutional occupancies shall be classified as Group I-1, I-2, I-3 or I-4.

➡

308.2 Institutional Group I-1. Institutional Group I-1 occupancy shall include buildings, structures or portions thereof for more than 16 persons, excluding staff, who reside on a 24-hour basis in a supervised environment and receive custodial care. Buildings of Group I-1 shall be classified as one of the occupancy conditions specified in Section 308.2.1 or 308.2.2. This group shall include, but not be limited to, the following:

Alcohol and drug centers
Assisted living facilities
Congregate care facilities
Group homes
Halfway houses
Residential board and care facilities
Social rehabilitation facilities

308.2.1 Condition 1. This occupancy condition shall include buildings in which all persons receiving custodial care who, without any assistance, are capable of responding to an emergency situation to complete building evacuation.

308.2.2 Condition 2. This occupancy condition shall include buildings in which there are any persons receiving custodial care who require limited verbal or physical assistance while responding to an emergency situation to complete building evacuation.

308.2.3 Six to 16 persons receiving custodial care. A facility housing not fewer than six and not more than 16 persons receiving custodial care shall be classified as Group R-4.

308.2.4 Five or fewer persons receiving custodial care. A facility with five or fewer persons receiving custodial care shall be classified as Group R-3 or shall comply with the *Residential Code of New York State* provided an *automatic sprinkler system* is installed in accordance with Section 903.3.1.3 or Section P2904 of the *Residential Code of New York State.*

308.3 Institutional Group I-2. Institutional Group I-2 occupancy shall include buildings and structures used for *medical care* on a 24-hour basis for more than five persons who are *incapable of self-preservation*. This group shall include, but not be limited to, the following:

Foster care facilities
Detoxification facilities
Hospitals
Nursing homes
Psychiatric hospitals

308.3.1 Occupancy conditions. Buildings of Group I-2 shall be classified as one of the occupancy conditions specified in Section 308.3.1.1 or 308.3.1.2.

308.3.1.1 Condition 1. This occupancy condition shall include facilities that provide nursing and medical care but do not provide emergency care, surgery, obstetrics or in-patient stabilization units for psychiatric or detoxification, including but not limited to nursing homes and foster care facilities.

308.3.1.2 Condition 2. This occupancy condition shall include facilities that provide nursing and medical care and could provide emergency care, surgery, obstetrics or in-patient stabilization units for psychiatric or detoxification, including but not limited to hospitals.

308.3.2 Five or fewer persons receiving medical care. A facility with five or fewer persons receiving medical care shall be classified as Group R-3 or shall comply with the *Residential Code of New York State* provided an *automatic sprinkler system* is installed in accordance with Section 903.3.1.3 or Section P2904 of the *Residential Code of New York State*.

308.4 Institutional Group I-3. Institutional Group I-3 occupancy shall include buildings and structures that are inhabited by more than five persons who are under restraint or security. A Group I-3 facility is occupied by persons who are generally *incapable of self-preservation* due to security measures not under the occupants' control. This group shall include, but not be limited to, the following:

Correctional centers
Detention centers
Jails

INTERNATIONAL CODE COUNCIL®
Copyright © 2019 ICC & NYSDOS. ALL RIGHTS RESERVED. Accessed by Lauren Gualdino (lgualdino@briarcliffmanor.org), (-) Order Number #100880972 on May 08, 2020 07:05 AM (PDT) pursuant to License Agreement with ICC & NYSDOS. No further reproduction, no

100880972

Prerelease centers
Prisons
Reformatories

Buildings of Group I-3 shall be classified as one of the occupancy conditions specified in Sections 308.4.1 through 308.4.5 (see Section 408.1).

308.4.1 Condition 1. This occupancy condition shall include buildings in which free movement is allowed from sleeping areas, and other spaces where access or occupancy is permitted, to the exterior via *means of egress* without restraint. A Condition 1 facility is permitted to be constructed as Group R.

308.4.2 Condition 2. This occupancy condition shall include buildings in which free movement is allowed from sleeping areas and any other occupied *smoke compartment* to one or more other *smoke compartments.* Egress to the exterior is impeded by locked *exits*.

308.4.3 Condition 3. This occupancy condition shall include buildings in which free movement is allowed within individual *smoke compartments*, such as within a residential unit comprised of individual *sleeping units* and group activity spaces, where egress is impeded by remote-controlled release of *means of egress* from such a *smoke compartment* to another *smoke compartment*.

308.4.4 Condition 4. This occupancy condition shall include buildings in which free movement is restricted from an occupied space. Remote-controlled release is provided to permit movement from *sleeping units*, activity spaces and other occupied areas within the *smoke compartment* to other *smoke compartments.*

308.4.5 Condition 5. This occupancy condition shall include buildings in which free movement is restricted from an occupied space. Staff-controlled manual release is provided to permit movement from *sleeping units*, activity spaces and other occupied areas within the *smoke compartment* to other *smoke compartments*.

308.5 Institutional Group I-4, day care facilities. Institutional Group I-4 occupancy shall include buildings and structures occupied by more than five persons of any age who receive *custodial care* for fewer than 24 hours per day by persons other than parents or guardians, relatives by blood, marriage or adoption, and in a place other than the home of the person cared for. This group shall include, but not be limited to, the following:

Adult day care
Child day care

308.5.1 Classification as Group E. A child day care facility that provides care for more than five but not more than 100 children $2^1/_2$ years or less of age, where the rooms in which the children are cared for are located on a *level of exit discharge* serving such rooms and each of these child care rooms has an *exit* door directly to the exterior, shall be classified as Group E.

308.5.2 Within a place of religious worship. Rooms and spaces within *places of religious worship* providing such care during religious functions shall be classified as part of the primary occupancy.

308.5.3 Five or fewer persons receiving care. A facility having five or fewer persons receiving *custodial care* shall be classified as part of the primary occupancy.

308.5.4 Five or fewer persons receiving care in a dwelling unit. A facility such as the above within a *dwelling unit* and having five or fewer persons receiving *custodial care* shall be classified as a Group R-3 occupancy or shall comply with the *Residential Code of New York State.*

SECTION 309
MERCANTILE GROUP M

309.1 Mercantile Group M. Mercantile Group M occupancy includes, among others, the use of a building or structure or a portion thereof for the display and sale of merchandise, and involves stocks of goods, wares or merchandise incidental to such purposes and accessible to the public. Mercantile occupancies shall include, but not be limited to, the following:

Department stores
Drug stores
Markets
Greenhouses for display and sale of plants that provide public access.
Motor fuel-dispensing facilities
Retail or wholesale stores
Sales rooms

309.2 Quantity of hazardous materials. The aggregate quantity of nonflammable solid and nonflammable or noncombustible liquid hazardous materials stored or displayed in a single *control area* of a Group M occupancy shall not exceed the quantities in Table 414.2.5(1).

SECTION 310
RESIDENTIAL GROUP R

310.1 Residential Group R. Residential Group R includes, among others, the use of a building or structure, or a portion thereof, for sleeping purposes when not classified as an Institutional Group I or when not regulated by the *Residential Code of New York State*.

310.2 Residential Group R-1. Residential Group R-1 occupancies containing *sleeping units* where the occupants are primarily *transient* in nature, including:

Boarding houses (*transient*) with more than 10 occupants
Congregate living facilities (*transient)* with more than 10 occupants
Hotels (*transient*)
Motels (*transient*)

310.3 Residential Group R-2. Residential Group R-2 occupancies containing *sleeping units* or more than two *dwelling units* where the occupants are primarily permanent in nature, including:

Apartment houses
Congregate living facilities (nontransient) with more than 16 occupants
Boarding houses (nontransient)
Convents
Dormitories

INTERNATIONAL CODE COUNCIL®
Copyright © 2019 ICC & NYSDOS. ALL RIGHTS RESERVED. Accessed by Lauren Gualdino (lgualdino@briarcliffmanor.org), (-) Order Number #100880972 on May 08, 2020 07:05 AM (PDT) pursuant to License Agreement with ICC & NYSDOS. No further reproduction, no

100880972

Fraternities and sororities
Monasteries
Hotels (nontransient)
Live/work units
Motels (nontransient)
Vacation timeshare properties

310.4 Residential Group R-3. Residential Group R-3 occupancies where the occupants are primarily permanent in nature and not classified as Group R-1, R-2, R-4 or I, including:

Buildings that do not contain more than two *dwelling units*
Care facilities that provide accommodations for five or fewer persons receiving care
Congregate living facilities (nontransient) with 16 or fewer occupants

Boarding houses (nontransient)
Convents
Dormitories
Fraternities and sororities
Monasteries

Congregate living facilities (*transient*) with 10 or fewer occupants

Boarding houses (transient)

Lodging houses (*transient*) with five or fewer *guest rooms* and 10 or fewer occupants

310.4.1 Care facilities within a dwelling. Care facilities for five or fewer persons receiving care that are within a single-family dwelling are permitted to comply with the *Residential Code of New York State* provided an *automatic sprinkler system* is installed in accordance with Section 903.3.1.3 or Section P2904 of the *Residential Code of New York State*.

310.4.2 Lodging houses. Owner-occupied *lodging houses* with five or fewer *guest rooms* and 10 or fewer total occupants shall be permitted to be constructed in accordance with the *Residential Code of New York State*.

310.5 Residential Group R-4. Residential Group R-4 occupancy shall include buildings, structures or portions thereof for more than five but not more than 16 persons, excluding staff, who reside on a 24-hour basis in a supervised residential environment and receive *custodial care*. Buildings of Group R-4 shall be classified as one of the occupancy conditions specified in Section 310.5.1 or 310.5.2. This group shall include, but not be limited to, the following:

Alcohol and drug centers
Assisted living facilities
Congregate care facilities
Group homes
Halfway houses
Residential board and care facilities
Social rehabilitation facilities

Group R-4 occupancies shall meet the requirements for construction as defined for Group R-3, except as otherwise provided for in this code.

310.5.1 Condition 1. This occupancy condition shall include buildings in which all persons receiving custodial care, without any assistance, are capable of responding to an emergency situation to complete building evacuation.

310.5.2 Condition 2. This occupancy condition shall include buildings in which there are any persons receiving custodial care who require limited verbal or physical assistance while responding to an emergency situation to complete building evacuation.

SECTION 311
STORAGE GROUP S

311.1 Storage Group S. Storage Group S occupancy includes, among others, the use of a building or structure, or a portion thereof, for storage that is not classified as a hazardous occupancy.

311.1.1 Accessory storage spaces. A room or space used for storage purposes that is accessory to another occupancy shall be classified as part of that occupancy.

311.2 Moderate-hazard storage, Group S-1. Storage Group S-1 occupancies are buildings occupied for storage uses that are not classified as Group S-2, including, but not limited to, storage of the following:

Aerosol products, Levels 2 and 3
Aircraft hangar (storage and repair)
Bags: cloth, burlap and paper
Bamboos and rattan
Baskets
Belting: canvas and leather
Books and paper in rolls or packs
Boots and shoes
Buttons, including cloth covered, pearl or bone
Cardboard and cardboard boxes
Clothing, woolen wearing apparel
Cordage
Dry boat storage (indoor)
Furniture
Furs
Glues, mucilage, pastes and size
Grains
Horns and combs, other than celluloid
Leather
Linoleum
Lumber
Motor vehicle repair garages complying with the maximum allowable quantities of hazardous materials listed in Table 307.1(1) (see Section 406.8)
Photo engravings
Resilient flooring
Self-service storage facility (mini-storage)
Silks
Soaps
Sugar
Tires, bulk storage of
Tobacco, cigars, cigarettes and snuff
Upholstery and mattresses
Wax candles

311.3 Low-hazard storage, Group S-2. Storage Group S-2 occupancies include, among others, buildings used for the storage of noncombustible materials such as products on wood pallets or in paper cartons with or without single thickness divisions; or in paper wrappings. Such products are per-

INTERNATIONAL CODE COUNCIL®
Copyright © 2019 ICC & NYSDOS. ALL RIGHTS RESERVED. Accessed by Lauren Gualdino (lgualdino@briarcliffmanor.org), (-) Order Number #100880972 on May 08, 2020 07:05 AM (PDT) pursuant to License Agreement with ICC & NYSDOS. No further reproduction, no

100880972

mitted to have a negligible amount of plastic *trim*, such as knobs, handles or film wrapping. Group S-2 storage uses shall include, but not be limited to, storage of the following:

Asbestos
Beverages up to and including 16-percent alcohol in metal, glass or ceramic containers
Cement in bags
Chalk and crayons
Dairy products in nonwaxed coated paper containers
Dry cell batteries
Electrical coils
Electrical motors
Empty cans
Food products
Foods in noncombustible containers
Fresh fruits and vegetables in nonplastic trays or containers
Frozen foods
Glass
Glass bottles, empty or filled with noncombustible liquids
Gypsum board
Inert pigments
Ivory
Meats
Metal cabinets
Metal desks with plastic tops and *trim*
Metal parts
Metals
Mirrors
Oil-filled and other types of distribution transformers
Parking garages, open or enclosed
Porcelain and pottery
Stoves
Talc and soapstones
Washers and dryers

SECTION 312
UTILITY AND MISCELLANEOUS GROUP U

[NY] 312.1 General. Buildings and structures of an accessory character and miscellaneous structures not classified in any specific occupancy shall be constructed, equipped and maintained to conform to the requirements of this code commensurate with the fire and life hazard incidental to their occupancy. Group U shall include, but not be limited to, the following:

Agricultural buildings
Aircraft hangars, accessory to a one- or two-family residence (see Section 412.4)
Barns
Carports
Communication equipment structures with a *gross floor area* of less than 1,500 square feet (139 m^2)
Fences more than 6 feet (1829 mm) in height
Grain silos, accessory to a residential occupancy
➡ *Live fire training facilities*
Livestock shelters
Private garages
Retaining walls
Sheds
Stables
Tanks
Towers

312.1.1 Greenhouses. Greenhouses not classified as another occupancy shall be classified as Use Group U.

INTERNATIONAL CODE COUNCIL®
Copyright © 2019 ICC & NYSDOS. ALL RIGHTS RESERVED. Accessed by Lauren Gualdino (lgualdino@briarcliffmanor.org), (-) Order Number #100880972 on May 08, 2020 07:05 AM (PDT) pursuant to License Agreement with ICC & NYSDOS. No further reproduction, no

100880972

CHAPTER 4

SPECIAL DETAILED REQUIREMENTS BASED ON OCCUPANCY AND USE

SECTION 401 SCOPE

401.1 Detailed occupancy and use requirements. In addition to the occupancy and construction requirements in this code, the provisions of this chapter apply to the occupancies and use described herein.

SECTION 402 COVERED MALL AND OPEN MALL BUILDINGS

402.1 Applicability. The provisions of this section shall apply to buildings or structures defined herein as *covered or open mall buildings* not exceeding three floor levels at any point nor more than three *stories above grade plane*. Except as specifically required by this section, *covered and open mall buildings* shall meet applicable provisions of this code.

Exceptions:

1. Foyers and lobbies of Groups B, R-1 and R-2 are not required to comply with this section.
2. Buildings need not comply with the provisions of this section where they totally comply with other applicable provisions of this code.

402.1.1 Open mall building perimeter line. For the purpose of this code, a perimeter line shall be established. The perimeter line shall encircle all buildings and structures that comprise the *open mall building* and shall encompass any open-air interior walkways, open-air courtyards or similar open-air spaces. The perimeter line shall define the extent of the *open mall building*. *Anchor buildings* and parking structures shall be outside of the perimeter line and are not considered as part of the *open mall building*.

402.2 Open space. A *covered mall building* and attached *anchor buildings* and parking garages shall be surrounded on all sides by a permanent open space or not less than 60 feet (18 288 mm). An *open mall building* and *anchor buildings* and parking garages adjoining the perimeter line shall be surrounded on all sides by a permanent open space of not less than 60 feet (18 288 mm).

Exception: The permanent open space of 60 feet (18 288 mm) shall be permitted to be reduced to not less than 40 feet (12 192 mm), provided that the following requirements are met:

1. The reduced open space shall not be allowed for more than 75 percent of the perimeter of the *covered or open mall building* and *anchor buildings*.
2. The *exterior wall* facing the reduced open space shall have a *fire-resistance rating* of not less than 3 hours.
3. Openings in the *exterior wall* facing the reduced open space shall have opening protectives with a *fire protection rating* of not less than 3 hours.
4. Group E, H, I or R occupancies are not located within the *covered or open mall building* or *anchor buildings*.

402.3 Lease plan. Each *owner* of a *covered mall building* or of an *open mall building* shall provide both the building and fire departments with a lease plan showing the location of each occupancy and its *exits* after the certificate of occupancy has been issued. Modifications or changes in occupancy or use from that shown on the lease plan shall not be made without prior approval of the *building official*.

402.4 Construction. The construction of *covered and open mall buildings*, *anchor buildings* and parking garages associated with a *mall* building shall comply with Sections 402.4.1 through 402.4.3.

402.4.1 Area and types of construction. The *building area* and type of construction of *covered mall* or *open mall buildings, anchor buildings* and parking garages shall comply with this section.

402.4.1.1 Covered and open mall buildings. The *building area* of any *covered mall* or *open mall building* shall not be limited provided that the *covered mall* or *open mall building* does not exceed three floor levels at any point nor three *stories above grade plane*, and is of Type I, II, III or IV construction.

402.4.1.2 Anchor buildings. The *building area* and *building height* of any *anchor building* shall be based on the type of construction as required by Section 503 as modified by Sections 504 and 506.

Exception: The *building area* of any *anchor building* shall not be limited provided that the *anchor building* is not more than three *stories above grade plane*, and is of Type I, II, III or IV construction.

402.4.1.3 Parking garage. The *building area* and *building height* of any parking garage shall be based on the type of construction as required by Sections 406.5 and 406.6, respectively.

402.4.2 Fire-resistance-rated separation. Fire-resistance-rated separation is not required between tenant spaces and the *mall*. Fire-resistance-rated separation is not required between a *food court* and adjacent tenant spaces or the *mall*.

402.4.2.1 Tenant separations. Each tenant space shall be separated from other tenant spaces by a *fire partition* complying with Section 708. A tenant separation wall is not required between any tenant space and the *mall*.

INTERNATIONAL CODE COUNCIL®
Copyright © 2019 ICC & NYSDOS. ALL RIGHTS RESERVED. Accessed by Lauren Gualdino (lgualdino@briarcliffmanor.org), (-) Order Number #100880972 on May 08, 2020 07:05 AM (PDT) pursuant to License Agreement with ICC & NYSDOS. No further reproduction, no

100880972

402.4.2.2 Anchor building separation. An *anchor building* shall be separated from the *covered or open mall building* by *fire walls* complying with Section 706.

Exceptions:

1. *Anchor buildings* of not more than three *stories above grade plane* that have an occupancy classification the same as that permitted for tenants of the *mall building* shall be separated by 2-hour fire-resistance-rated *fire barriers* complying with Section 707.
2. The exterior walls of *anchor buildings* separated from an *open mall building* by an *open mall* shall comply with Table 602.

402.4.2.2.1 Openings between anchor building and mall. Except for the separation between Group R-1 *sleeping units* and the *mall*, openings between *anchor buildings* of Type IA, IB, IIA or IIB construction and the *mall* need not be protected.

402.4.2.3 Parking garages. An attached garage for the storage of passenger vehicles having a capacity of not more than nine persons and *open parking garages* shall be considered as a separate building where it is separated from the *covered or open mall building* or *anchor building* by not less than 2-hour *fire barriers* constructed in accordance with Section 707 or *horizontal assemblies* constructed in accordance with Section 711, or both.

➡ Parking garages, which are separated from *covered mall buildings*, *open mall buildings* or *anchor buildings,* shall comply with the provisions of Table 602.

Pedestrian walkways and tunnels that connect garages to *mall* buildings or *anchor buildings* shall be constructed in accordance with Section 3104.

402.4.3 Open mall construction. Floor assemblies in, and *roof assemblies* over, the *open mall* of an *open mall building* shall be open to the atmosphere for not less than 20 feet (6096 mm), measured perpendicular from the face of the tenant spaces on the lowest level, from edge of balcony to edge of balcony on upper floors and from edge of roof line to edge of roof line. The openings within, or the unroofed area of, an *open mall* shall extend from the lowest/grade level of the open mall through the entire *roof assembly*. Balconies on upper levels of the *mall* shall not project into the required width of the opening.

402.4.3.1 Pedestrian walkways. *Pedestrian walkways* connecting balconies in an *open mall* shall be located not less than 20 feet (6096 mm) from any other *pedestrian walkway.*

[F] 402.5 Automatic sprinkler system. *Covered* and *open mall buildings* and buildings connected shall be equipped throughout with an *automatic sprinkler system* in accordance with Section 903.3.1.1, which shall comply with all of the following:

1. The *automatic sprinkler system* shall be complete and operative throughout occupied space in the *mall building* prior to occupancy of any of the tenant spaces. Unoccupied tenant spaces shall be similarly protected unless provided with *approved* alternative protection.
2. Sprinkler protection for the *mall* of a *covered mall building* shall be independent from that provided for tenant spaces or *anchor buildings*.
3. Sprinkler protection for the tenant spaces of an *open mall building* shall be independent from that provided for *anchor buildings.*
4. Sprinkler protection shall be provided beneath exterior circulation balconies located adjacent to an *open mall*.
5. Where tenant spaces are supplied by the same system, they shall be independently controlled.

Exception: An *automatic sprinkler system* shall not be required in spaces or areas of *open parking garages* separated from the *covered or open mall building* in accordance with Section 402.4.2.3 and constructed in accordance with Section 406.5.

402.6 Interior finishes and features. Interior finishes within the *mall* and installations within the *mall* shall comply with Sections 402.6.1 through 402.6.4.

402.6.1 Interior finish. *Interior wall* and *ceiling finishes* within the *mall* of a *covered mall building* and within the *exits* of *covered or open mall buildings* shall have a minimum *flame spread index* and smoke-developed index of Class B in accordance with Chapter 8. *Interior floor finishes* shall meet the requirements of Section 804.

402.6.2 Kiosks. Kiosks and similar structures (temporary or permanent) located within the *mall* of a *covered mall building* or within the perimeter line of an *open mall building* shall meet the following requirements:

1. Combustible kiosks or other structures shall not be located within a *covered* or *open mall* unless constructed of any of the following materials:
   1.1. *Fire-retardant-treated* wood complying with Section 2303.2.
   1.2. Foam plastics having a maximum heat release rate not greater than 100 kW (105 Btu/h) when tested in accordance with the exhibit booth protocol in UL 1975 or when tested in accordance with NFPA 289 using the 20 kW ignition source.
   1.3. Aluminum composite material (ACM) meeting the requirements of Class A *interior finish* in accordance with Chapter 8 when tested as an assembly in the maximum thickness intended.
2. Kiosks or similar structures located within the *mall* shall be provided with *approved automatic sprinkler system* and detection devices.
3. The horizontal separation between kiosks or groupings thereof and other structures within the *mall* shall be not less than 20 feet (6096 mm).

INTERNATIONAL CODE COUNCIL®
Copyright © 2019 ICC & NYSDOS. ALL RIGHTS RESERVED. Accessed by Lauren Gualdino (lgualdino@briarcliffmanor.org), (-) Order Number #100880972 on May 08, 2020 07:05 AM (PDT) pursuant to License Agreement with ICC & NYSDOS. No further reproduction, no

100880972

4. Each kiosk or similar structure or groupings thereof shall have an area not greater than 300 square feet (28 m^2).

402.6.3 Children's play structures. Children's play structures located within the *mall* of a *covered mall building* or within the perimeter line of an *open mall building* shall comply with Section 424. The horizontal separation between children's play structures, kiosks and similar structures within the *mall* shall be not less than 20 feet (6096 mm).

402.6.4 Plastic signs. Plastic signs affixed to the storefront of any tenant space facing a *mall* or *open mall* shall be limited as specified in Sections 402.6.4.1 through 402.6.4.5.

402.6.4.1 Area. Plastic signs shall be not more than 20 percent of the wall area facing the *mall*.

402.6.4.2 Height and width. Plastic signs shall be not greater than 36 inches (914 mm) in height, except that where the sign is vertical, the height shall be not greater than 96 inches (2438 mm) and the width shall be not greater than 36 inches (914 mm).

402.6.4.3 Location. Plastic signs shall be located not less than 18 inches (457 mm) from adjacent tenants.

402.6.4.4 Plastics other than foam plastics. Plastics other than foam plastics used in signs shall be light-transmitting plastics complying with Section 2606.4 or shall have a self-ignition temperature of 650°F (343°C) or greater when tested in accordance with ASTM D1929, and a *flame spread index* not greater than 75 and smoke-developed index not greater than 450 when tested in the manner intended for use in accordance with ASTM E84 or UL 723 or meet the acceptance criteria of Section 803.1.1.1 when tested in accordance with NFPA 286.

402.6.4.4.1 Encasement. Edges and backs of plastic signs in the *mall* shall be fully encased in metal.

402.6.4.5 Foam plastics. Foam plastics used in signs shall have flame-retardant characteristics such that the sign has a maximum heat-release rate of 150 kilowatts when tested in accordance with UL 1975 or when tested in accordance with NFPA 289 using the 20 kW ignition source, and the foam plastics shall have the physical characteristics specified in this section. Foam plastics used in signs installed in accordance with Section 402.6.4 shall not be required to comply with the *flame spread* and smoke-developed indices specified in Section 2603.3.

402.6.4.5.1 Density. The density of foam plastics used in signs shall be not less than 20 pounds per cubic foot (pcf) (320 kg/ m^3).

402.6.4.5.2 Thickness. The thickness of foam plastic signs shall not be greater than $^1/_2$ inch (12.7 mm).

[F] 402.7 Emergency systems. *Covered and open mall buildings*, *anchor buildings* and associated parking garages shall be provided with emergency systems complying with Sections 402.7.1 through 402.7.5.

[F] 402.7.1 Standpipe system. *Covered and open mall buildings* shall be equipped throughout with a standpipe system as required by Section 905.3.3.

[F] 402.7.2 Smoke control. Where a *covered mall building* contains an *atrium*, a smoke control system shall be provided in accordance with Section 404.5.

Exception: A smoke control system is not required in *covered mall buildings* where an *atrium* connects only two stories.

[F] 402.7.3 Emergency power. *Covered mall buildings* greater than 50,000 square feet (4645 m^2) in area and *open mall buildings* greater than 50,000 square feet (4645 m^2) within the established perimeter line shall be provided with emergency power that is capable of operating the *emergency voice/alarm communication system* in accordance with Section 2702.

[F] 402.7.4 Emergency voice/alarm communication system. Where the total floor area is greater than 50,000 square feet (4645 m^2) within either a *covered mall building* or within the perimeter line of an *open mall building*, an *emergency voice/alarm communication system* shall be provided.

The fire department shall have access to any *emergency voice/alarm communication systems* serving a *mall*, required or otherwise. The systems shall be provided in accordance with Section 907.5.2.2.

[F] 402.7.5 Fire department access to equipment. Rooms or areas containing controls for air-conditioning systems, *automatic fire-extinguishing systems, automatic sprinkler systems* or other detection, suppression or control elements shall be identified for use by the fire department.

402.8 Means of egress. *Covered mall buildings, open mall buildings* and each tenant space within a mall building shall be provided with *means of egress* as required by this section and this code. Where there is a conflict between the requirements of this code and the requirements of Sections 402.8.1 through 402.8.8, the requirements of Sections 402.8.1 through 402.8.8 shall apply.

402.8.1 Mall width. For the purpose of providing required egress, *malls* are permitted to be considered as *corridors* but need not comply with the requirements of Section 1005.1 of this code where the width of the *mall* is as specified in this section.

402.8.1.1 Minimum width. The aggregate clear egress width of the *mall* in either a *covered or open mall building* shall be not less than 20 feet (6096 mm). The *mall* width shall be sufficient to accommodate the *occupant load* served. Any portion of the minimum required aggregate egress width shall be not less than 10 feet (3048 mm) measured to a height of 8 feet (2438 mm) between any projection of a tenant space bordering the *mall* and the nearest kiosk, vending machine, bench, display opening, *food court* or other obstruction to *means of egress* travel.

402.8.2 Determination of occupant load. The *occupant load* permitted in any individual tenant space in a *covered or open mall building* shall be determined as required by

INTERNATIONAL CODE COUNCIL®
Copyright © 2019 ICC & NYSDOS. ALL RIGHTS RESERVED. Accessed by Lauren Gualdino (lgualdino@briarcliffmanor.org), (-) Order Number #100880972 on May 08, 2020 07:05 AM (PDT) pursuant to License Agreement with ICC & NYSDOS. No further reproduction, no

100880972

this code. *Means of egress* requirements for individual tenant spaces shall be based on the *occupant load* thus determined.

402.8.2.1 Occupant formula. In determining required *means of egress* of the *mall*, the number of occupants for whom *means of egress* are to be provided shall be based on *gross leasable area* of the *covered or open mall building* (excluding *anchor buildings*) and the *occupant load* factor as determined by Equation 4-1.

$$OLF = (0.00007)(GLA) + 25 \qquad \textbf{(Equation 4-1)}$$

where:

OLF = The *occupant load* factor (square feet per person).

GLA = The *gross leasable area* (square feet).

Exception: Tenant spaces attached to a *covered or open mall building* but with a *means of egress* system that is totally independent of the *open mall* of an *open mall building* or of a *covered mall building* shall not be considered as *gross leasable area* for determining the required *means of egress* for the *mall building*.

402.8.2.2 OLF range. The *occupant load* factor (*OLF*) is not required to be less than 30 and shall not exceed 50.

402.8.2.3 Anchor buildings. The *occupant load* of *anchor buildings* opening into the *mall* shall not be included in computing the total number of occupants for the *mall*.

402.8.2.4 Food courts. The *occupant load* of a *food court* shall be determined in accordance with Section 1004. For the purposes of determining the *means of egress* requirements for the *mall*, the *food court occupant load* shall be added to the *occupant load* of the *covered or open mall building* as calculated in Section 402.8.2.1.

402.8.3 Number of means of egress. Wherever the distance of travel to the *mall* from any location within a tenant space used by persons other than employees is greater than 75 feet (22 860 mm) or the tenant space has an *occupant load* of 50 or more, not fewer than two *means of egress* shall be provided.

402.8.4 Arrangements of means of egress. Assembly occupancies with an *occupant load* of 500 or more located within a *covered mall building* shall be so located such that their entrance will be immediately adjacent to a principal entrance to the *mall* and shall have not less than one-half of their required *means of egress* opening directly to the exterior of the *covered mall building*. Assembly occupancies located within the perimeter line of an *open mall building* shall be permitted to have their main *exit* open to the *open mall*.

402.8.4.1 Anchor building means of egress. Required *means of egress* for *anchor buildings* shall be provided independently from the *mall means of egress* system. The *occupant load* of *anchor buildings* opening into the *mall* shall not be included in determining *means of egress* requirements for the *mall*. The path of egress travel of *malls* shall not exit through *anchor buildings*. *Malls* terminating at an *anchor building* where other *means of egress* has not been provided shall be considered as a dead-end *mall*.

402.8.5 Distance to exits. Within each individual tenant space in a *covered or open mall building*, the distance of travel from any point to an *exit* or entrance to the *mall* shall be not greater than 200 feet (60 960 mm).

The distance of travel from any point within a *mall* of a *covered mall building* to an *exit* shall be not greater than 200 feet (60 960 mm). The maximum distance of travel from any point within an *open mall* to the perimeter line of the *open mall building* shall be not greater than 200 feet (60 960 mm).

402.8.6 Access to exits. Where more than one *exit* is required, they shall be so arranged that it is possible to travel in either direction from any point in a *mall* of a *covered mall building* to separate *exits* or from any point in an *open mall* of an *open mall building* to two separate locations on the perimeter line, provided that neither location is an exterior wall of an *anchor building* or parking garage. The width of an *exit passageway* or *corridor* from a *mall* shall be not less than 66 inches (1676 mm).

Exception: Access to exits is permitted by way of a dead-end *mall* that does not exceed a length equal to twice the width of the *mall* measured at the narrowest location within the dead-end portion of the *mall*.

402.8.6.1 Exit passageways. Where *exit passageways* provide a secondary *means of egress* from a tenant space, the *exit passageways* shall be constructed in accordance with Section 1024.

402.8.7 Service areas fronting on exit passageways. Mechanical rooms, electrical rooms, building service areas and service elevators are permitted to open directly into *exit passageways*, provided that the *exit passageway* is separated from such rooms with not less than 1-hour *fire barriers* constructed in accordance with Section 707 or *horizontal assemblies* constructed in accordance with Section 711, or both. The *fire protection rating* of openings in the *fire barriers* shall be not less than 1 hour.

402.8.8 Security grilles and doors. Horizontal sliding or vertical security grilles or doors that are a part of a required *means of egress* shall conform to the following:

1. Doors and grilles shall remain in the full open position during the period of occupancy by the general public.
2. Doors or grilles shall not be brought to the closed position when there are 10 or more persons occupying spaces served by a single *exit* or 50 or more persons occupying spaces served by more than one *exit*.
3. The doors or grilles shall be openable from within without the use of any special knowledge or effort where the space is occupied.
4. Where two or more *exits* are required, not more than one-half of the *exits* shall be permitted to include either a horizontal sliding or vertical rolling grille or door.

INTERNATIONAL CODE COUNCIL®
Copyright © 2019 ICC & NYSDOS. ALL RIGHTS RESERVED. Accessed by Lauren Gualdino (lgualdino@briarcliffmanor.org), (-) Order Number #100880972 on May 08, 2020 07:05 AM (PDT) pursuant to License Agreement with ICC & NYSDOS. No further reproduction, no

100880972

SECTION 403
HIGH-RISE BUILDINGS

403.1 Applicability. *High-rise buildings* shall comply with Sections 403.2 through 403.6.

Exception: The provisions of Sections 403.2 through 403.6 shall not apply to the following buildings and structures:

1. Airport traffic control towers in accordance with Section 412.2.
2. *Open parking garages* in accordance with Section 406.5.
3. The portion of a building containing a Group A-5 occupancy in accordance with Section 303.6.
4. Special industrial occupancies in accordance with Section 503.1.1.
5. Buildings containing any one of the following:
   - 5.1. A Group H-1 occupancy.
   - 5.2. A Group H-2 occupancy in accordance with Section 415.8, 415.9.2, 415.9.3 or 426.1.
   - 5.3. A Group H-3 occupancy in accordance with Section 415.8.

403.2 Construction. The construction of *high-rise buildings* shall comply with the provisions of Sections 403.2.1 through 403.2.4.

403.2.1 Reduction in fire-resistance rating. The *fire-resistance rating* reductions listed in Sections 403.2.1.1 and 403.2.1.2 shall be allowed in buildings that have sprinkler control valves equipped with supervisory initiating devices and water-flow initiating devices for each floor.

403.2.1.1 Type of construction. The following reductions in the minimum *fire-resistance rating* of the building elements in Table 601 shall be permitted as follows:

1. For buildings not greater than 420 feet (128 m) in *building height*, the *fire-resistance rating* of the building elements in Type IA construction shall be permitted to be reduced to the minimum *fire-resistance ratings* for the building elements in Type IB.

   Exception: The required *fire-resistance rating* of columns supporting floors shall not be reduced.

2. In other than Group F-1, H-2, H-3, H-5, M and S-1 occupancies, the *fire-resistance rating* of the building elements in Type IB construction shall be permitted to be reduced to the *fire-resistance ratings* in Type IIA.
3. The *building height* and *building area* limitations of a building containing building elements with reduced *fire-resistance ratings* shall be permitted to be the same as the building without such reductions.

403.2.1.2 Shaft enclosures. For buildings not greater than 420 feet (128 m) in *building height*, the required *fire-resistance rating* of the *fire barriers* enclosing vertical *shafts*, other than *interior exit stairway* and elevator hoistway enclosures, is permitted to be reduced to 1 hour where automatic sprinklers are installed within the *shafts* at the top and at alternate floor levels.

403.2.2 Seismic considerations. For seismic considerations, see Chapter 16.

[BS] 403.2.3 Structural integrity of interior exit stairways and elevator hoistway enclosures. For *high-rise buildings* of *Risk Category* III or IV in accordance with Section 1604.5, and for all buildings that are more than 420 feet (128 m) in *building height*, enclosures for *interior exit stairways* and elevator hoistway enclosures shall comply with Sections 403.2.3.1 through 403.2.3.4.

[BS] 403.2.3.1 Wall assembly. The wall assemblies making up the enclosures for *interior exit stairways* and elevator hoistway enclosures shall meet or exceed Soft Body Impact Classification Level 2 as measured by the test method described in ASTM C1629/C1629M.

[BS] 403.2.3.2 Wall assembly materials. The face of the wall assemblies making up the enclosures for *interior exit stairways* and elevator hoistway enclosures that are not exposed to the interior of the enclosures for *interior exit stairways* or elevator hoistway enclosure shall be constructed in accordance with one of the following methods:

1. The wall assembly shall incorporate not fewer than two layers of impact-resistant construction board each of which meets or exceeds Hard Body Impact Classification Level 2 as measured by the test method described in ASTM C1629/C1629M.
2. The wall assembly shall incorporate not fewer than one layer of impact-resistant construction material that meets or exceeds Hard Body Impact Classification Level 3 as measured by the test method described in ASTM C1629/C1629M.
3. The wall assembly incorporates multiple layers of any material, tested in tandem, that meets or exceeds Hard Body Impact Classification Level 3 as measured by the test method described in ASTM C1629/C1629M.

[BS] 403.2.3.3 Concrete and masonry walls. Concrete or masonry walls shall be deemed to satisfy the requirements of Sections 403.2.3.1 and 403.2.3.2.

[BS] 403.2.3.4 Other wall assemblies. Any other wall assembly that provides impact resistance equivalent to that required by Sections 403.2.3.1 and 403.2.3.2 for Hard Body Impact Classification Level 3, as measured by the test method described in ASTM C1629/C1629M, shall be permitted.

403.2.4 Sprayed fire-resistant materials (SFRM). The bond strength of the SFRM installed throughout the building shall be in accordance with Table 403.2.4.

INTERNATIONAL CODE COUNCIL®
Copyright © 2019 ICC & NYSDOS. ALL RIGHTS RESERVED. Accessed by Lauren Gualdino (lgualdino@briarcliffmanor.org), (-) Order Number #100880972 on May 08, 2020 07:05 AM (PDT) pursuant to License Agreement with ICC & NYSDOS. No further reproduction, no

100880972

TABLE 403.2.4
MINIMUM BOND STRENGTH

HEIGHT OF BUILDING[a]	SFRM MINIMUM BOND STRENGTH
Up to 420 feet	430 psf
Greater than 420 feet	1,000 psf

For SI: 1 foot = 304.8 mm, 1 pound per square foot (psf) = 0.0479 kN/m^2.
a. Above the lowest level of fire department vehicle access.

[F] 403.3 Automatic sprinkler system. Buildings and structures shall be equipped throughout with an *automatic sprinkler system* in accordance with Section 903.3.1.1 and a secondary water supply where required by Section 403.3.3.

Exception: An *automatic sprinkler system* shall not be required in spaces or areas of:

1. *Open parking garages* in accordance with Section 406.5.
2. Telecommunications equipment buildings used exclusively for telecommunications equipment, associated electrical power distribution equipment, batteries and standby engines, provided that those spaces or areas are equipped throughout with an automatic fire detection system in accordance with Section 907.2 and are separated from the remainder of the building by not less than 1-hour *fire barriers* constructed in accordance with Section 707 or not less than 2-hour *horizontal assemblies* constructed in accordance with Section 711, or both.

[F] 403.3.1 Number of sprinkler risers and system design. Each sprinkler system zone in buildings that are more than 420 feet (128 m) in *building height* shall be supplied by not fewer than two risers. Each riser shall supply sprinklers on alternate floors. If more than two risers are provided for a zone, sprinklers on adjacent floors shall not be supplied from the same riser.

[F] 403.3.1.1 Riser location. Sprinkler risers shall be placed in *interior exit stairways* and ramps that are remotely located in accordance with Section 1007.1.

[F] 403.3.2 Water supply to required fire pumps. In buildings that are more than 420 feet (128 m) in *building height*, required fire pumps shall be supplied by connections to not fewer than two water mains located in different streets. Separate supply piping shall be provided between each connection to the water main and the pumps. Each connection and the supply piping between the connection and the pumps shall be sized to supply the flow and pressure required for the pumps to operate.

Exception: Two connections to the same main shall be permitted provided that the main is valved such that an interruption can be isolated so that the water supply will continue without interruption through not fewer than one of the connections.

[F] 403.3.3 Secondary water supply. An automatic secondary on-site water supply having a capacity not less than the hydraulically calculated sprinkler demand, including the hose stream requirement, shall be provided for *high-rise buildings* assigned to Seismic Design Category C, D, E or F as determined by Section 1613. An additional fire pump shall not be required for the secondary water supply unless needed to provide the minimum design intake pressure at the suction side of the fire pump supplying the *automatic sprinkler system*. The secondary water supply shall have a duration of not less than 30 minutes.

[F] 403.3.4 Fire pump room. Fire pumps shall be located in rooms protected in accordance with Section 913.2.1.

[F] 403.4 Emergency systems. The detection, alarm and emergency systems of *high-rise buildings* shall comply with Sections 403.4.1 through 403.4.8.

[F] 403.4.1 Smoke detection. Smoke detection shall be provided in accordance with Section 907.2.12.1.

[F] 403.4.2 Fire alarm system. A *fire alarm* system shall be provided in accordance with Section 907.2.12.

[F] 403.4.3 Standpipe system. A *high-rise building* shall be equipped with a standpipe system as required by Section 905.3.

[F] 403.4.4 Emergency voice/alarm communication system. An *emergency voice/alarm communication system* shall be provided in accordance with Section 907.5.2.2.

[F] 403.4.5 Emergency responder radio coverage. Emergency responder radio coverage shall be provided in accordance with Section 510 of the *Fire Code of New York State*.

[F] 403.4.6 Fire command. A *fire command center* complying with Section 911 shall be provided in a location *approved* by the fire code official.

[F] 403.4.7 Smoke removal. To facilitate smoke removal in post-fire salvage and overhaul operations, buildings and structures shall be equipped with natural or mechanical *ventilation* for removal of products of combustion in accordance with one of the following:

1. Easily identifiable, manually operable windows or panels shall be distributed around the perimeter of each floor at not more than 50-foot (15 240 mm) intervals. The area of operable windows or panels shall be not less than 40 square feet (3.7 m^2) per 50 linear feet (15 240 mm) of perimeter.

   Exceptions:

   1. In Group R-1 occupancies, each *sleeping unit* or suite having an *exterior wall* shall be permitted to be provided with 2 square feet (0.19 m^2) of venting area in lieu of the area specified in Item 1.
   2. Windows shall be permitted to be fixed provided that glazing can be cleared by fire fighters.

2. Mechanical air-handling equipment providing one exhaust air change every 15 minutes for the area involved. Return and exhaust air shall be moved directly to the outside without recirculation to other portions of the building.
3. Any other *approved* design that will produce equivalent results.

INTERNATIONAL CODE COUNCIL®
Copyright © 2019 ICC & NYSDOS. ALL RIGHTS RESERVED. Accessed by Lauren Gualdino (lgualdino@briarcliffmanor.org), (-) Order Number #100880972 on May 08, 2020 07:05 AM (PDT) pursuant to License Agreement with ICC & NYSDOS. No further reproduction, no

100880972

[F] 403.4.8 Standby and emergency power. A standby power system complying with Section 2702 and Section 3003 shall be provided for the standby power loads specified in Section 403.4.8.3. An emergency power system complying with Section 2702 shall be provided for the emergency power loads specified in Section 403.4.8.4.

[F] 403.4.8.1 Equipment room. If the standby or emergency power system includes a generator set inside a building, the system shall be located in a separate room enclosed with 2-hour *fire barriers* constructed in accordance with Section 707 or *horizontal assemblies* constructed in accordance with Section 711, or both. System supervision with manual start and transfer features shall be provided at the *fire command center*.

Exception: In Group I-2, Condition 2, manual start and transfer features for the critical branch of the emergency power are not required to be provided at the *fire command center*.

[F] 403.4.8.2 Fuel line piping protection. Fuel lines supplying a generator set inside a building shall be separated from areas of the building other than the room the generator is located in by an approved method or assembly that has a fire-resistance rating of not less than 2 hours. Where the building is protected throughout with an automatic sprinkler system installed in accordance with Section 903.3.1.1 or 903.3.1.2, the required fire-resistance rating shall be reduced to 1 hour.

[F] 403.4.8.3 Standby power loads. The following are classified as standby power loads:

1. *Ventilation* and automatic fire detection equipment for *smokeproof* enclosures.
2. Elevators.
3. Where elevators are provided in a *high-rise building* for *accessible means of egress*, fire service access or occupant self-evacuation, the standby power system shall also comply with Sections 1009.4, 3007 or 3008, as applicable.

[F] 403.4.8.4 Emergency power loads. The following are classified as emergency power loads:

1. Exit signs and *means of egress* illumination required by Chapter 10.
2. Elevator car lighting.
3. *Emergency voice/alarm communications systems*.
4. Automatic fire detection systems.
5. *Fire alarm* systems.
6. Electrically powered fire pumps.
7. Power and lighting for the fire command center required by Section 403.4.6.

403.5 Means of egress and evacuation. The *means of egress* in *high-rise buildings* shall comply with Sections 403.5.1 through 403.5.6.

403.5.1 Remoteness of interior exit stairways. Required *interior exit stairways* shall be separated by a distance not less than 30 feet (9144 mm) or not less than one-fourth of the length of the maximum overall diagonal dimension of the building or area to be served, whichever is less. The distance shall be measured in a straight line between the nearest points of the enclosure surrounding the *interior exit stairways*. In buildings with three or more *interior exit stairways,* not fewer than two of the *interior exit stairways* shall comply with this section. Interlocking or *scissor stairways* shall be counted as one *interior exit stairway.*

403.5.2 Additional interior exit stairway. For buildings other than Group R-2 and their ancillary spaces that are more than 420 feet (128 m) in *building height*, one additional *interior exit stairway* meeting the requirements of Sections 1011 and 1023 shall be provided in addition to the minimum number of *exits* required by Section 1006.3. The total capacity of any combination of remaining *interior exit stairways* with one *interior exit stairway* removed shall be not less than the total capacity required by Section 1005.1. *Scissor stairways* shall not be considered the additional *interior exit stairway* required by this section.

Exceptions:

1. An additional *interior exit stairway* shall not be required to be installed in buildings having elevators used for occupant self-evacuation in accordance with Section 3008.
2. An additional *interior exit stairway* shall not be required for other portions of the building where the highest occupiable floor level in those areas is less than 420 feet (128 m) in *building height.*

403.5.3 Stairway door operation. *Stairway* doors other than the *exit discharge* doors shall be permitted to be locked from the *stairway* side. *Stairway* doors that are locked from the *stairway* side shall be capable of being unlocked simultaneously without unlatching upon a signal from the *fire command center.*

403.5.3.1 Stairway communication system. A telephone or other two-way communications system connected to an *approved constantly attended station* shall be provided at not less than every fifth floor in each *stairway* where the doors to the *stairway* are locked.

403.5.4 Smokeproof enclosures. Every required *interior exit stairway* serving floors more than 75 feet (22 860 mm) above the lowest level of fire department vehicle access shall be a *smokeproof enclosure* in accordance with Sections 909.20 and 1023.11.

403.5.5 Luminous egress path markings. Luminous egress path markings shall be provided in accordance with Section 1025.

INTERNATIONAL CODE COUNCIL®
Copyright © 2019 ICC & NYSDOS. ALL RIGHTS RESERVED. Accessed by Lauren Gualdino (lgualdino@briarcliffmanor.org), (-) Order Number #100880972 on May 08, 2020 07:05 AM (PDT) pursuant to License Agreement with ICC & NYSDOS. No further reproduction, no

100880972

403.5.6 Emergency escape and rescue. Emergency escape and rescue openings specified in Section 1030 are not required.

403.6 Elevators. Elevator installation and operation in *high-rise buildings* shall comply with Chapter 30 and Sections 403.6.1 and 403.6.2.

403.6.1 Fire service access elevator. In buildings with an occupied floor more than 120 feet (36 576 mm) above the lowest level of fire department vehicle access, not fewer than two fire service access elevators, or all elevators, whichever is less, shall be provided in accordance with Section 3007. Each fire service access elevator shall have a capacity of not less than 3,500 pounds (1588 kg) and shall comply with Section 3002.4.

403.6.2 Occupant evacuation elevators. Where installed in accordance with Section 3008, passenger elevators for general public use shall be permitted to be used for occupant self-evacuation.

SECTION 404
ATRIUMS

404.1 General. In other than Group H occupancies, and where permitted by Section 712.1.7, the provisions of Sections 404.1 through 404.10 shall apply to buildings or structures containing vertical openings defined as "Atriums."

404.2 Use. The floor of the *atrium* shall not be used for other than low fire hazard uses and only *approved* materials and decorations in accordance with the *Fire Code of New York State* shall be used in the *atrium* space.

Exception: The *atrium* floor area is permitted to be used for any *approved* use where the individual space is provided with an *automatic sprinkler system* in accordance with Section 903.3.1.1.

[F] 404.3 Automatic sprinkler protection. An *approved automatic sprinkler system* shall be installed throughout the entire building.

Exceptions:

1. That area of a building adjacent to or above the *atrium* need not be sprinklered provided that portion of the building is separated from the *atrium* portion by not less than 2-hour *fire barriers* constructed in accordance with Section 707 or *horizontal assemblies* constructed in accordance with Section 711, or both.
2. Where the ceiling of the *atrium* is more than 55 feet (16 764 mm) above the floor, sprinkler protection at the ceiling of the *atrium* is not required.

[F] 404.4 Fire alarm system. A *fire alarm* system shall be provided in accordance with Section 907.2.13.

404.5 Smoke control. A smoke control system shall be installed in accordance with Section 909.

Exception: In other than Group I-2, and Group I-1, Condition 2, smoke control is not required for *atriums* that connect only two *stories*.

404.6 Enclosure of atriums. *Atrium* spaces shall be separated from adjacent spaces by a 1-hour *fire barrier* constructed in accordance with Section 707 or a *horizontal assembly* constructed in accordance with Section 711, or both.

Exceptions:

1. A *fire barrier* is not required where a glass wall forming a smoke partition is provided. The glass wall shall comply with all of the following:
   1.1. Automatic sprinklers are provided along both sides of the separation wall and doors, or on the room side only if there is not a walkway on the *atrium* side. The sprinklers shall be located between 4 inches and 12 inches (102 mm and 305 mm) away from the glass and at intervals along the glass not greater than 6 feet (1829 mm). The sprinkler system shall be designed so that the entire surface of the glass is wet upon activation of the sprinkler system without obstruction;
   1.2. The glass wall shall be installed in a gasketed frame in a manner that the framing system deflects without breaking (loading) the glass before the sprinkler system operates; and
   1.3. Where glass doors are provided in the glass wall, they shall be either *self-closing* or automatic-closing.
2. A *fire barrier* is not required where a glass-block wall assembly complying with Section 2110 and having a $^{3}/_{4}$-hour *fire protection rating* is provided.
3. A *fire barrier* is not required between the *atrium* and the adjoining spaces of up to three floors of the *atrium* provided that such spaces are accounted for in the design of the smoke control system.
4. A fire barrier is not required between the atrium and the adjoining spaces where the atrium is not required to be provided with a smoke control system.

[F] 404.7 Standby power. Equipment required to provide smoke control shall be provided with standby power in accordance with Section 909.11.

404.8 Interior finish. The *interior finish* of walls and ceilings of the *atrium* shall be not less than Class B. Sprinkler protection shall not result in a reduction in class.

404.9 Exit access travel distance. *Exit access* travel distance for areas open to an *atrium* shall comply with the requirements of this section.

404.9.1 Egress not through the atrium. Where required access to the *exits* is not through the *atrium*, *exit access* travel distance shall comply with Section 1017.

404.9.2 Exit access travel distance at the level of exit discharge. Where the path of egress travel is through an *atrium* space, *exit access* travel distance at the *level of exit discharge* shall be determined in accordance with Section 1017.

INTERNATIONAL CODE COUNCIL®
Copyright © 2019 ICC & NYSDOS. ALL RIGHTS RESERVED. Accessed by Lauren Gualdino (lgualdino@briarcliffmanor.org), (-) Order Number #100880972 on May 08, 2020 07:05 AM (PDT) pursuant to License Agreement with ICC & NYSDOS. No further reproduction, no

100880972

404.9.3 Exit access travel distance at other than the level of exit discharge. Where the path of egress travel is not at the *level of exit discharge* from the *atrium*, that portion of the total permitted *exit access* travel distance that occurs within the *atrium* shall be not greater than 200 feet (60 960 mm).

404.10 Interior exit stairways. Not greater than 50 percent of *interior exit stairways* are permitted to egress through an *atrium* on the *level of exit discharge* in accordance with Section 1028.

SECTION 405
UNDERGROUND BUILDINGS

405.1 General. The provisions of Sections 405.2 through 405.9 apply to building spaces having a floor level used for human occupancy more than 30 feet (9144 mm) below the finished floor of the lowest *level of exit discharge*.

Exceptions: The provisions of Section 405 are not applicable to the following buildings or portions of buildings:

1. One- and two-family *dwellings*, sprinklered in accordance with Section 903.3.1.3.
2. Parking garages provided with *automatic sprinkler systems* in compliance with Section 405.3.
3. Fixed guideway transit systems.
4. *Grandstands*, *bleachers*, stadiums, arenas and similar facilities.
5. Where the lowest *story* is the only *story* that would qualify the building as an underground building and has an area not greater than 1,500 square feet (139 m^2) and has an *occupant load* less than 10.
6. Pumping stations and other similar mechanical spaces intended only for limited periodic use by service or maintenance personnel.

405.2 Construction requirements. The underground portion of the building shall be of Type I construction.

[F] 405.3 Automatic sprinkler system. The highest *level of exit discharge* serving the underground portions of the building and all levels below shall be equipped with an *automatic sprinkler system* installed in accordance with Section 903.3.1.1. Water-flow switches and control valves shall be supervised in accordance with Section 903.4.

405.4 Compartmentation. Compartmentation shall be in accordance with Sections 405.4.1 through 405.4.3.

405.4.1 Number of compartments. A building having a floor level more than 60 feet (18 288 mm) below the finished floor of the lowest *level of exit discharge* shall be divided into not fewer than two compartments of approximately equal size. Such compartmentation shall extend through the highest *level of exit discharge* serving the underground portions of the building and all levels below.

Exception: The lowest *story* need not be compartmented where the area is not greater than 1,500 square feet (139 m^2) and has an *occupant load* of less than 10.

405.4.2 Smoke barrier penetration. The compartments shall be separated from each other by a *smoke barrier* in accordance with Section 709. Penetrations between the two compartments shall be limited to plumbing and electrical piping and conduit that are firestopped in accordance with Section 714. Doorways shall be protected by *fire door assemblies* that comply with Section 716, automatic-closing by smoke detection in accordance with Section 716.2.6.6 and installed in accordance with NFPA 105 and Section 716.2.2.1. Where provided, each compartment shall have an air supply and an exhaust system independent of the other compartments.

405.4.3 Elevators. Where elevators are provided, each compartment shall have direct access to an elevator. Where an elevator serves more than one compartment, an enclosed elevator lobby shall be provided and shall be separated from each compartment by a *smoke barrier* in accordance with Section 709. Doorways in the smoke barrier shall be protected by fire door assemblies that comply with Section 716, shall comply with the smoke and draft control assembly requirements of Section 716.2.2.1 with the UL 1784 test conducted without an artificial bottom seal, and shall be automatic-closing by smoke detection in accordance with Section 716.2.6.6.

405.5 Smoke control system. A smoke control system shall be provided in accordance with Sections 405.5.1 and 405.5.2.

405.5.1 Control system. A smoke control system is required to control the migration of products of combustion in accordance with Section 909 and the provisions of this section. Smoke control shall restrict movement of smoke to the general area of fire origin and maintain *means of egress* in a usable condition.

405.5.2 Compartment smoke control system. Where compartmentation is required, each compartment shall have an independent smoke control system. The system shall be automatically activated and capable of manual operation in accordance with Sections 907.2.17 and 907.2.18.

[F] 405.6 Fire alarm systems. A *fire alarm* system shall be provided where required by Sections 907.2.17 and 907.2.18.

405.7 Means of egress. *Means of egress* shall be in accordance with Sections 405.7.1 and 405.7.2.

405.7.1 Number of exits. Each floor level shall be provided with not fewer than two *exits*. Where compartmentation is required by Section 405.4, each compartment shall have not fewer than one *exit* and not fewer than one *exit access* doorway into the adjoining compartment.

405.7.2 Smokeproof enclosure. Every required *stairway* serving floor levels more than 30 feet (9144 mm) below the finished floor of its *level of exit discharge* shall comply with the requirements for a *smokeproof enclosure* as provided in Section 1023.11.

[F] 405.8 Standby and emergency power. A standby power system complying with Section 2702 shall be provided for the standby power loads specified in Section 405.8.1. An emergency power system complying with Section 2702 shall be provided for the emergency power loads specified in Section 405.8.2.

[F] 405.8.1 Standby power loads. The following are classified as standby power loads:

1. Smoke control system.
2. *Ventilation* and automatic fire detection equipment for *smokeproof* enclosures.
3. Elevators, as required in Section 3003.

INTERNATIONAL CODE COUNCIL®
Copyright © 2019 ICC & NYSDOS. ALL RIGHTS RESERVED. Accessed by Lauren Gualdino (lgualdino@briarcliffmanor.org), (-) Order Number #100880972 on May 08, 2020 07:05 AM (PDT) pursuant to License Agreement with ICC & NYSDOS. No further reproduction, no

100880972

[F] 405.8.2 Emergency power loads. The following are classified as emergency power loads:

1. *Emergency voice/alarm communications systems*.
2. *Fire alarm* systems.
3. Automatic fire detection systems.
4. Elevator car lighting.
5. Means of egress and exit sign illumination as required by Chapter 10.
6. Fire pumps.

[F] 405.9 Standpipe system. The underground building shall be equipped throughout with a standpipe system in accordance with Section 905.

SECTION 406
MOTOR-VEHICLE-RELATED OCCUPANCIES

406.1 General. All motor-vehicle-related occupancies shall comply with Section 406.2. Private garages and carports shall also comply with Section 406.3. Open public parking garages shall also comply with Sections 406.4 and 406.5. Enclosed public parking garages shall also comply with Sections 406.4 and 406.6. Motor fuel-dispensing facilities shall also comply with Section 406.7. Repair garages shall also comply with Section 406.8.

406.2 Design. Private garages and carports, open and enclosed public parking garages, motor fuel-dispensing facilities and repair garages shall comply with Sections 406.2.1 through 406.2.9.

406.2.1 Automatic garage door openers and vehicular gates. Automatic garage door openers shall be listed and labeled in accordance with UL 325. Where provided, automatic vehicular gates shall comply with Section 3110.

406.2.2 Clear height. The clear height of each floor level in vehicle and pedestrian traffic areas shall be not less than 7 feet (2134 mm). Canopies under which fuels are dispensed shall have a clear height in accordance with Section 406.7.2.

Exception: A lower clear height is permitted for a parking tier in mechanical-access open parking garages where approved by the building official.

406.2.3 Accessible parking spaces. Where parking is provided, accessible parking spaces, access aisles and vehicular routes serving accessible parking shall be provided in accordance with Section 1106.

406.2.4 Floor surfaces. Floor surfaces shall be of concrete or similar approved noncombustible and nonabsorbent materials. The area of floor used for the parking of automobiles or other vehicles shall be sloped to facilitate the movement of liquids to a drain or toward the main vehicle entry doorway. The surface of vehicle fueling pads in motor fuel-dispensing facilities shall be in accordance with Section 406.7.1.

Exceptions:

1. Asphalt parking surfaces shall be permitted at ground level for public parking garages and private carports.
2. Floors of Group S-2 parking garages shall not be required to have a sloped surface.
3. Slip-resistant, nonabsorbent, interior floor finishes having a critical radiant flux not more than 0.45 W/cm^2, as determined by ASTM E648 or NFPA 253, shall be permitted in repair garages.

406.2.5 Sleeping rooms. Openings between a motor vehicle-related occupancy and a room used for sleeping purposes shall not be permitted.

406.2.6 Fuel dispensing. The dispensing of fuel shall only be permitted in motor fuel-dispensing facilities in accordance with Section 406.7.

406.2.7 Electric vehicle charging stations. Where provided, electric vehicle charging stations shall be installed in accordance with NFPA 70. Electric vehicle charging system equipment shall be listed and labeled in accordance with UL 2202. Electric vehicle supply equipment shall be listed and labeled in accordance with UL 2594. Accessibility to electric vehicle charging stations shall be provided in accordance with Chapter 11.

406.2.8 Mixed occupancies and uses. Mixed uses shall be allowed in the same building as public parking garages and repair garages in accordance with Section 508.1. Mixed uses in the same building as an open parking garage are subject to Sections 402.4.2.3, 406.5.11, 508.1, 510.3, 510.4 and 510.7.

406.2.9 Equipment and appliances. Equipment and appliances shall be installed in accordance with Sections 406.2.9.1 through 406.2.9.3 and the *Mechanical Code of New York State, Fuel Gas Code of New York State* and NFPA 70.

406.2.9.1 Elevation of ignition sources. Equipment and appliances having an ignition source and located in hazardous locations and public garages, private garages, repair garages, automotive motor fuel-dispensing facilities and parking garages shall be elevated such that the source of ignition is not less than 18 inches (457 mm) above the floor surface on which the equipment or appliance rests. For the purpose of this section, rooms or spaces that are not part of the living space of a dwelling unit and that communicate directly with a private garage through openings shall be considered to be part of the private garage.

Exception: Elevation of the ignition source is not required for appliances that are listed as flammable vapor ignition resistant.

406.2.9.1.1 Parking garages. Connection of a parking garage with any room in which there is a fuel-fired appliance shall be by means of a vestibule providing a two-doorway separation, except that a single door is permitted where the sources of ignition in the appliance are elevated in accordance with Section 406.2.9.

Exception: This section shall not apply to appliance installations complying with Section 406.2.9.2 or 406.2.9.3.

INTERNATIONAL CODE COUNCIL®
Copyright © 2019 ICC & NYSDOS. ALL RIGHTS RESERVED. Accessed by Lauren Gualdino (lgualdino@briarcliffmanor.org), (-) Order Number #100880972 on May 08, 2020 07:05 AM (PDT) pursuant to License Agreement with ICC & NYSDOS. No further reproduction, no

100880972

406.2.9.2 Public garages. Appliances located in public garages, motor fuel-dispensing facilities, repair garages or other areas frequented by motor vehicles shall be installed not less than 8 feet (2438 mm) above the floor. Where motor vehicles are capable of passing under an appliance, the appliance shall be installed at the clearances required by the appliance manufacturer and not less than 1 foot (305 mm) higher than the tallest vehicle garage door opening.

Exception: The requirements of this section shall not apply where the appliances are protected from motor vehicle impact and installed in accordance with Section 406.2.9.1 and NFPA 30A.

406.2.9.3 Private garages. Appliances located in private garages and carports shall be installed with a minimum clearance of 6 feet (1829 mm) above the floor.

Exception: The requirements of this section shall not apply where the appliances are protected from motor vehicle impact and are installed in accordance with Section 406.2.9.1.

406.3 Private garages and carports. Private garages and carports shall comply with Sections 406.2 and 406.3, or they shall comply with Sections 406.2 and 406.4.

406.3.1 Classification. Private garages and carports shall be classified as Group U occupancies. Each private garage shall be not greater than 1,000 square feet (93 m^2) in area. Multiple private garages are permitted in a building where each private garage is separated from the other private garages by 1-hour *fire barriers* in accordance with Section 707, or 1-hour *horizontal assemblies* in accordance with Section 711, or both.

406.3.2 Separation. For other than private garages adjacent to dwelling units, the separation of private garages from other occupancies shall comply with Section 508. Separation of private garages from *dwelling units* shall comply with Sections 406.3.2.1 and 406.3.2.2.

406.3.2.1 Dwelling unit separation. The private garage shall be separated from the *dwelling unit* and its *attic* area by means of gypsum board, not less than $^1/_2$ inch (12.7 mm) in thickness, applied to the garage side. Garages beneath habitable rooms shall be separated from all habitable rooms above by not less than a $^5/_8$-inch (15.9 mm) Type X gypsum board or equivalent and $^1/_2$-inch (12.7 mm) gypsum board applied to structures supporting the separation from habitable rooms above the garage. Door openings between a private garage and the *dwelling unit* shall be equipped with either solid wood doors or solid or honeycomb core steel doors not less than $1^3/_8$ inches (34.9 mm) in thickness, or doors in compliance with Section 716.2.2.1 with a fire protection rating of not less than 20 minutes. Doors shall be *self-closing* and self-latching.

406.3.2.2 Ducts. Ducts in a private garage and ducts penetrating the walls or ceilings separating the *dwelling unit* from the garage, including its *attic* area, shall be constructed of sheet steel of not less than 0.019 inch (0.48 mm) in thickness and shall not have openings into the garage.

406.3.3 Carports. Carports shall be open on not fewer than two sides. Carports open on fewer than two sides shall be considered to be a garage and shall comply with the requirements for private garages.

406.3.3.1 Carport separation. A separation is not required between a Group R-3 and U carport, provided that the carport is entirely open on two or more sides and there are not enclosed areas above.

406.4 Public parking garages. Parking garages, other than *private garages*, shall be classified as public parking garages and shall comply with the provisions of Sections 406.2 and 406.4 and shall be classified as either an *open parking garage* or an enclosed parking garage. *Open parking garages* shall also comply with Section 406.5. Enclosed parking garages shall also comply with Section 406.6. See Section 510 for special provisions for parking garages.

406.4.1 Guards. Guards shall be provided in accordance with Section 1015. Guards serving as *vehicle barriers* shall comply with Sections 406.4.2 and 1015.

406.4.2 Vehicle barriers. *Vehicle barriers* not less than 2 feet 9 inches (835 mm) in height shall be placed where the vertical distance from the floor of a drive lane or parking space to the ground or surface directly below is greater than 1 foot (305 mm). *Vehicle barriers* shall comply with the loading requirements of Section 1607.9.

Exception: *Vehicle barriers* are not required in vehicle storage compartments in a mechanical access parking garage.

406.4.3 Ramps. Vehicle ramps shall not be considered as required *exits* unless pedestrian facilities are provided. Vehicle ramps that are utilized for vertical circulation as well as for parking shall not exceed a slope of 1:15 (6.67 percent).

406.5 Open parking garages. *Open parking garages* shall comply with Sections 406.2, 406.4 and 406.5.

406.5.1 Construction. *Open parking garages* shall be of Type I, II or IV construction. *Open parking garages* shall meet the design requirements of Chapter 16. For *vehicle barriers*, see Section 406.4.2.

406.5.2 Openings. For natural *ventilation* purposes, the exterior side of the structure shall have uniformly distributed openings on two or more sides. The area of such openings in *exterior walls* on a tier shall be not less than 20 percent of the total perimeter wall area of each tier. The aggregate length of the openings considered to be providing natural *ventilation* shall be not less than 40 percent of the perimeter of the tier. Interior walls shall be not less than 20 percent open with uniformly distributed openings.

Exception: Openings are not required to be distributed over 40 percent of the building perimeter where the required openings are uniformly distributed over two opposing sides of the building.

INTERNATIONAL CODE COUNCIL®
Copyright © 2019 ICC & NYSDOS. ALL RIGHTS RESERVED. Accessed by Lauren Gualdino (lgualdino@briarcliffmanor.org), (-) Order Number #100880972 on May 08, 2020 07:05 AM (PDT) pursuant to License Agreement with ICC & NYSDOS. No further reproduction, no

100880972

406.5.2.1 Openings below grade. Where openings below grade provide required natural *ventilation*, the outside horizontal clear space shall be one and one-half times the depth of the opening. The width of the horizontal clear space shall be maintained from grade down to the bottom of the lowest required opening.

406.5.3 Mixed occupancies and uses. Mixed uses shall be allowed in the same building as an *open parking garage* subject to the provisions of Sections 402.4.2.3, 406.5.11, 508.1, 510.3, 510.4 and 510.7.

406.5.4 Area and height. Area and height of *open parking garages* shall be limited as set forth in Chapter 5 for Group S-2 occupancies and as further provided for in Section 508.1.

406.5.4.1 Single use. Where the *open parking garage* is used exclusively for the parking or storage of private motor vehicles, and the building is without other uses, the area and height shall be permitted to comply with Table 406.5.4, along with increases allowed by Section 406.5.5.

Exception: The grade-level tier is permitted to contain an office, waiting and toilet rooms having a total combined area of not more than 1,000 square feet (93 m^2). Such area need not be separated from the *open parking garage*.

In *open parking garages* having a spiral or sloping floor, the horizontal projection of the structure at any cross section shall not exceed the allowable area per parking tier. In the case of an *open parking garage* having a continuous spiral floor, each 9 feet 6 inches (2896 mm) of height, or portion thereof, shall be considered under these provisions to be a tier.

➡ **406.5.5 Area and height increases.** The allowable area and height of *open parking garages* shall be increased in accordance with the provisions of this section. Garages with sides open on three-fourths of the building's perimeter are permitted to be increased by 25 percent in area and one tier in height. Garages with sides open around the entire building's perimeter are permitted to be increased by 50 percent in area and one tier in height. For a side to be considered open under these provisions, the total area of openings along the side shall be not less than 50 percent of the interior area of the side at each tier and such openings shall be equally distributed along the length of the tier. For purposes of calculating the interior area of the side, the height shall not exceed 7 feet (2134 mm).

Allowable tier areas in Table 406.5.4 shall be increased for *open parking garages* constructed to heights less than the table maximum. The gross tier area of the garage shall not exceed that permitted for the higher structure. Not fewer than three sides of each such larger tier shall have continuous horizontal openings not less than 30 inches (762 mm) in clear height extending for not less than 80 percent of the length of the sides. All parts of such larger tier shall be not more than 200 feet (60 960 mm) horizontally from such an opening. In addition, each such opening shall face a street or *yard* accessible to a street with a width of not less than 30 feet (9144 mm) for the full length of the opening, and standpipes shall be provided in each such tier.

Open parking garages of Type II construction, with all sides open, shall be unlimited in allowable area where the *building height* does not exceed 75 feet (22 860 mm). For a side to be considered open, the total area of openings along the side shall be not less than 50 percent of the interior area of the side at each tier and such openings shall be equally distributed along the length of the tier. For purposes of calculating the interior area of the side, the height shall not exceed 7 feet (2134 mm). All portions of tiers shall be within 200 feet (60 960 mm) horizontally from such openings or other natural *ventilation* openings as defined in Section 406.5.2. These openings shall be permitted to be provided in *courts* with a minimum dimension of 20 feet (6096 mm) for the full width of the openings.

406.5.6 Fire separation distance. *Exterior walls* and openings in *exterior walls* shall comply with Tables 601 and 602. The distance to an adjacent *lot line* shall be determined in accordance with Table 602 and Section 705.

406.5.7 Means of egress. Where persons other than parking attendants are permitted, *open parking garages* shall meet the *means of egress* requirements of Chapter 10. Where persons other than parking attendants are not permitted, there shall be not fewer than two *exit stairways.* Each *exit stairway* shall be not less than 36 inches (914 mm) in width. Lifts shall be permitted to be installed for use of employees only, provided that they are completely enclosed by noncombustible materials.

TABLE 406.5.4
OPEN PARKING GARAGES AREA AND HEIGHT

TYPE OF CONSTRUCTION	AREA PER TIER (square feet)	HEIGHT (in tiers)		
		Ramp access	Mechanical access	
			Automatic sprinkler system	
			No	Yes
IA	Unlimited	Unlimited	Unlimited	Unlimited
IB	Unlimited	12 tiers	12 tiers	18 tiers
IIA	50,000	10 tiers	10 tiers	15 tiers
IIB	50,000	8 tiers	8 tiers	12 tiers
IV	50,000	4 tiers	4 tiers	4 tiers

For SI: 1 square foot = 0.0929 m^2.

INTERNATIONAL CODE COUNCIL®
Copyright © 2019 ICC & NYSDOS. ALL RIGHTS RESERVED. Accessed by Lauren Gualdino (lgualdino@briarcliffmanor.org), (-) Order Number #100880972 on May 08, 2020 07:05 AM (PDT) pursuant to License Agreement with ICC & NYSDOS. No further reproduction, no

100880972

[F] 406.5.8 Standpipe system. An *open parking garage* shall be equipped with a standpipe system as required by Section 905.3.

406.5.9 Enclosure of vertical openings. Enclosure shall not be required for vertical openings except as specified in Section 406.5.7.

406.5.10 Ventilation. *Ventilation*, other than the percentage of openings specified in Section 406.5.2, shall not be required.

406.5.11 Prohibitions. The following uses and alterations are not permitted:

1. Vehicle repair work.
2. Parking of buses, trucks and similar vehicles.
3. Partial or complete closing of required openings in exterior walls by tarpaulins or any other means.
4. Dispensing of fuel.

406.6 Enclosed parking garages. Enclosed parking garages shall comply with Sections 406.2, 406.4 and 406.6.

406.6.1 Heights and areas. Enclosed vehicle parking garages and portions thereof that do not meet the definition of *open parking garages* shall be limited to the allowable heights and areas specified in Sections 504 and 506 as modified by Section 507. Roof parking is permitted.

406.6.2 Ventilation. A mechanical *ventilation* system and exhaust system shall be provided in accordance with Chapters 4 and 5 of the *Mechanical Code of New York State*.

Exception: Mechanical ventilation shall not be required for enclosed parking garages that are accessory to one- and two-family dwellings.

[F] 406.6.3 Automatic sprinkler system. An enclosed parking garage shall be equipped with an *automatic sprinkler system* in accordance with Section 903.2.10.

406.7 Motor fuel-dispensing facilities. Motor fuel-dispensing facilities shall comply with the *Fire Code of New York State* and Sections 406.2 and 406.7.

406.7.1 Vehicle fueling pad. The vehicle shall be fueled on noncoated concrete or other *approved* paving material having a resistance not exceeding 1 megohm as determined by the methodology in EN 1081.

406.7.2 Canopies. Canopies under which fuels are dispensed shall have a clear, unobstructed height of not less than 13 feet 6 inches (4115 mm) to the lowest projecting element in the vehicle drive-through area. Canopies and their supports over pumps shall be of noncombustible materials, *fire-retardant-treated wood* complying with Chapter 23, heavy timber complying with Section 2304.11 or construction providing 1-hour *fire resistance*. Combustible materials used in or on a *canopy* shall comply with one of the following:

1. Shielded from the pumps by a noncombustible element of the *canopy*, or heavy timber complying with Section 2304.11.
2. Plastics covered by aluminum facing having a thickness of not less than 0.010 inch (0.30 mm) or corrosion-resistant steel having a base metal thickness of not less than 0.016 inch (0.41 mm). The plastic shall have a *flame spread index* of 25 or less and a smoke-developed index of 450 or less when tested in the form intended for use in accordance with ASTM E84 or UL 723 and a self-ignition temperature of 650°F (343°C) or greater when tested in accordance with ASTM D1929.
3. Panels constructed of light-transmitting plastic materials shall be permitted to be installed in *canopies* erected over motor vehicle fuel-dispensing station fuel dispensers, provided that the panels are located not less than 10 feet (3048 mm) from any building on the same *lot* and face *yards* or streets not less than 40 feet (12 192 mm) in width on the other sides. The aggregate areas of plastics shall be not greater than 1,000 square feet (93 m^2). The maximum area of any individual panel shall be not greater than 100 square feet (9.3 m^2).

406.7.2.1 Canopies used to support gaseous hydrogen systems. *Canopies* that are used to shelter dispensing operations where flammable compressed gases are located on the roof of the *canopy* shall be in accordance with the following:

1. The *canopy* shall meet or exceed Type I construction requirements.
2. Operations located under *canopies* shall be limited to refueling only.
3. The *canopy* shall be constructed in a manner that prevents the accumulation of hydrogen gas.

406.8 Repair garages. Repair garages shall be constructed in accordance with the *Fire Code of New York State* and Sections 406.2 and 406.8. This occupancy shall not include motor fuel-dispensing facilities, as regulated in Section 406.7.

406.8.1 Ventilation. Repair garages shall be mechanically ventilated in accordance with the *Mechanical Code of New York State*. The *ventilation* system shall be controlled at the entrance to the garage.

[F] 406.8.2 Gas detection system. Repair garages used for repair of vehicles fueled by nonodorized gases including but not limited to hydrogen and nonodorized LNG, shall be provided with a gas detection system that complies with Section 916. The gas detection system shall be designed to detect leakage of nonodorized gaseous fuel. Where lubrication or chassis service pits are provided in garages used for repairing nonodorized LNG-fueled vehicles, gas sensors shall be provided in such pits.

[F] 406.8.2.1 System activation. Activation of a gas detection alarm shall result in all of the following:

1. Initiation of distinct audible and visual alarm signals in the repair garage, where the ventilation system is interlocked with gas detection.

INTERNATIONAL CODE COUNCIL®
Copyright © 2019 ICC & NYSDOS. ALL RIGHTS RESERVED. Accessed by Lauren Gualdino (lgualdino@briarcliffmanor.org), (-) Order Number #100880972 on May 08, 2020 07:05 AM (PDT) pursuant to License Agreement with ICC & NYSDOS. No further reproduction, no

100880972

2. Deactivation of all heating systems located in the repair garage.
3. Activation of the mechanical *ventilation* system, where the system is interlocked with gas detection.

[F] 406.8.2.2 Failure of the gas detection system. Failure of the *gas detection system* shall automatically deactivate the heating system, activate the mechanical ventilation system where the system is interlocked with the *gas detection system*, and cause a trouble signal to sound at an approved location.

[F] 406.8.3 Automatic sprinkler system. A repair garage shall be equipped with an *automatic sprinkler system* in accordance with Section 903.2.9.1.

SECTION 407
GROUP I-2

407.1 General. Occupancies in Group I-2 shall comply with the provisions of Sections 407.1 through 407.11 and other applicable provisions of this code.

407.2 Corridors continuity and separation. *Corridors* in occupancies in Group I-2 shall be continuous to the *exits* and shall be separated from other areas in accordance with Section 407.3 except spaces conforming to Sections 407.2.1 through 407.2.6.

407.2.1 Waiting and similar areas. Waiting areas, public-use areas or group meeting spaces constructed as required for *corridors* shall be permitted to be open to a *corridor*, only where all of the following criteria are met:

1. The spaces are not occupied as care recipient's sleeping rooms, treatment rooms, incidental uses in accordance with Section 509, or hazardous uses.
2. The open space is protected by an automatic fire detection system installed in accordance with Section 907.
3. The *corridors* onto which the spaces open, in the same *smoke compartment*, are protected by an automatic fire detection system installed in accordance with Section 907, or the *smoke compartment* in which the spaces are located is equipped throughout with quick-response sprinklers in accordance with Section 903.3.2.
4. The space is arranged so as not to obstruct access to the required *exits*.

407.2.2 Care providers' stations. Spaces for care providers', supervisory staff, doctors' and nurses' charting, communications and related clerical areas shall be permitted to be open to the *corridor*, where such spaces are constructed as required for *corridors.*

407.2.3 Psychiatric treatment areas. Areas wherein psychiatric care recipients who are not capable of self-preservation are housed, or group meeting or multipurpose therapeutic spaces other than incidental uses in accordance with Section 509, under continuous supervision by facility staff, shall be permitted to be open to the *corridor*, where the following criteria are met:

1. Each area does not exceed 1,500 square feet (140 m^2).
2. The area is located to permit supervision by the facility staff.
3. The area is arranged so as not to obstruct any access to the required *exits*.
4. The area is equipped with an automatic fire detection system installed in accordance with Section 907.2.
5. Not more than one such space is permitted in any one *smoke compartment*.
6. The walls and ceilings of the space are constructed as required for *corridors*.

407.2.4 Gift shops. Gift shops and associated storage that are less than 500 square feet (455 m^2) in area shall be permitted to be open to the *corridor* where such spaces are constructed as required for *corridors.*

407.2.5 Nursing home housing units. In Group I-2, Condition 1 occupancies, in areas where nursing home residents are housed, shared living spaces, group meeting or multipurpose therapeutic spaces shall be permitted to be open to the *corridor*, where all of the following criteria are met:

1. The walls and ceilings of the space are constructed as required for *corridors*.
2. The spaces are not occupied as resident sleeping rooms, treatment rooms, incidental uses in accordance with Section 509, or hazardous uses.
3. The open space is protected by an automatic fire detection system installed in accordance with Section 907.
4. The *corridors* onto which the spaces open, in the same *smoke compartment*, are protected by an automatic fire detection system installed in accordance with Section 907, or the *smoke compartment* in which the spaces are located is equipped throughout with quick-response sprinklers in accordance with Section 903.3.2.
5. The space is arranged so as not to obstruct access to the required *exits*.

407.2.6 Nursing home cooking facilities. In Group I-2, Condition 1 occupancies, rooms or spaces that contain a cooking facility with domestic cooking appliances shall be permitted to be open to the corridor where all of the following criteria are met:

1. The number of care recipients housed in the smoke compartment shall not be greater than 30.
2. The number of care recipients served by the cooking facility shall not be greater than 30.
3. Not more than one cooking facility area shall be permitted in a smoke compartment.

INTERNATIONAL CODE COUNCIL®
Copyright © 2019 ICC & NYSDOS. ALL RIGHTS RESERVED. Accessed by Lauren Gualdino (lgualdino@briarcliffmanor.org), (-) Order Number #100880972 on May 08, 2020 07:05 AM (PDT) pursuant to License Agreement with ICC & NYSDOS. No further reproduction, no

100880972

4. The types of domestic cooking appliances permitted shall be limited to ovens, cooktops, ranges, warmers and microwaves.
5. The corridor shall be a clearly identified space delineated by construction or floor pattern, material or color.
6. The space containing the domestic cooking facility shall be arranged so as not to obstruct access to the required exit.
7. Domestic cooking hoods installed and constructed in accordance with Section 505 of the *Mechanical Code of New York State* shall be provided over cooktops and ranges.
8. Cooktops and ranges shall be protected in accordance with Section 904.13.
9. A shut-off for the fuel and electrical power supply to the cooking equipment shall be provided in a location that is accessible only to staff.
10. A timer shall be provided that automatically deactivates the cooking appliances within a period of not more than 120 minutes.
11. A portable fire extinguisher shall be provided. Installation shall be in accordance with Section 906, and the extinguisher shall be located within a 30-foot (9144 mm) distance of travel from each domestic cooking appliance.

407.3 Corridor wall construction. *Corridor* walls shall be constructed as smoke partitions in accordance with Section 710.

407.3.1 Corridor doors. *Corridor* doors, other than those in a wall required to be rated by Section 509.4 or for the enclosure of a vertical opening or an *exit*, shall not have a required *fire protection rating* and shall not be required to be equipped with *self-closing* or automatic-closing devices, but shall provide an effective barrier to limit the transfer of smoke and shall be equipped with positive latching. Roller latches are not permitted. Other doors shall conform to Section 716.

407.4 Means of egress. Group I-2 occupancies shall be provided with means of egress complying with Chapter 10 and Sections 407.4.1 through 407.4.4. The fire safety and evacuation plans provided in accordance with Section 1002.2 shall identify the building components necessary to support a *defend-in-place* emergency response in accordance with Sections 403 and 404 of the *Fire Code of New York State*.

407.4.1 Direct access to a corridor. Habitable rooms in Group I-2 occupancies shall have an *exit access* door leading directly to a *corridor*.

Exceptions:

1. Rooms with *exit* doors opening directly to the outside at ground level.
2. Rooms arranged as *care suites* complying with Section 407.4.4.

407.4.1.1 Locking devices. Locking devices that restrict access to a care recipient's room from the *corridor* and that are operable only by staff from the *corridor* side shall not restrict the *means of egress* from the care recipient's room.

Exceptions:

1. This section shall not apply to rooms in psychiatric treatment and similar care areas.
2. Locking arrangements in accordance with Section 1010.1.9.7.

407.4.2 Distance of travel. The distance of travel between any point in a Group I-2 occupancy sleeping room, not located in a *care suite*, and an *exit access* door in that room shall be not greater than 50 feet (15 240 mm).

407.4.3 Projections in nursing home corridors. In Group I-2, Condition 1 occupancies, where the corridor width is not less than 96 inches (2440 mm), projections shall be permitted for furniture where all of the following criteria are met:

1. The furniture is attached to the floor or to the wall.
2. The furniture does not reduce the clear width of the corridor to less than 72 inches (1830 mm) except where other encroachments are permitted in accordance with Section 1005.7.
3. The furniture is positioned on only one side of the *corridor*.
4. Each arrangement of furniture is 50 square feet (4.6 m^2) maximum in area.
5. Furniture arrangements are separated by 10 feet (3048 mm) minimum.
6. Placement of furniture is considered as part of the fire and safety plans in accordance with Section 1002.2.

407.4.4 Group I-2 care suites. *Care suites* in Group I-2 shall comply with Sections 407.4.4.1 through 407.4.4.4 and either Section 407.4.4.5 or 407.4.4.6.

407.4.4.1 Exit access through care suites. *Exit* access from all other portions of a building not classified as a *care suite* shall not pass through a *care suite*. In a *care suite* required to have more than one *exit*, one *exit access* is permitted to pass through an adjacent *care suite* provided that all of the other requirements of Sections 407.4 and 1016.2 are satisfied.

407.4.4.2 Separation. *Care suites* shall be separated from other portions of the building, including other care suites, by a smoke partition complying with Section 710.

407.4.4.3 Access to corridor. Movement from habitable rooms shall not require passage through more than three doors and 100 feet (30 480 mm) distance of travel within the suite.

Exception: The distance of travel shall be permitted to be increased to 125 feet (38 100 mm) where an automatic smoke detection system is provided throughout the *care suite* and installed in accordance with NFPA 72.

INTERNATIONAL CODE COUNCIL®
Copyright © 2019 ICC & NYSDOS. ALL RIGHTS RESERVED. Accessed by Lauren Gualdino (lgualdino@briarcliffmanor.org), (-) Order Number #100880972 on May 08, 2020 07:05 AM (PDT) pursuant to License Agreement with ICC & NYSDOS. No further reproduction, no

100880972

407.4.4.4 Doors within care suites. Doors in care suites serving habitable rooms shall be permitted to comply with one of the following:

1. Manually operated horizontal sliding doors permitted in accordance with Exception 9 to Section 1010.1.2.
2. Power-operated doors permitted in accordance with Exception 7 to Section 1010.1.2.
3. Means of egress doors complying with Section 1010.

407.4.4.5 Care suites containing sleeping room areas. Sleeping rooms shall be permitted to be grouped into care suites where one of the following criteria is met:

1. The *care suite* is not used as an *exit access* for more than eight care recipient beds.
2. The arrangement of the *care suite* allows for direct and constant visual supervision into the sleeping rooms by care providers.
3. An automatic smoke detection system is provided in the sleeping rooms and installed in accordance with NFPA 72.

407.4.4.5.1 Area. *Care suites* containing sleeping rooms shall be not greater than 7,500 square feet (696 m^2) in area.

Exception: *Care suites* containing sleeping rooms shall be permitted to be not greater than 10,000 square feet (929 m^2) in area where an automatic smoke detection system is provided throughout the *care suite* and installed in accordance with NFPA 72.

407.4.4.5.2 Exit access. Any sleeping room, or any *care suite* that contains sleeping rooms, of more than 1,000 square feet (93 m^2) shall have not fewer than two *exit access* doors from the *care suite* located in accordance with Section 1007.

407.4.4.6 Care suites not containing sleeping rooms. Areas not containing sleeping rooms, but only treatment areas and the associated rooms, spaces or circulation space, shall be permitted to be grouped into *care suites* and shall conform to the limitations in Sections 407.4.4.6.1 and 407.4.4.6.2.

407.4.4.6.1 Area. *Care suites* of rooms, other than sleeping rooms, shall have an area not greater than 12,500 square feet (1161 m^2).

Exception: *Care suites* not containing sleeping rooms shall be permitted to be not greater than 15,000 square feet (1394 m^2) in area where an automatic smoke detection system is provided throughout the *care suite* in accordance with Section 907.

407.4.4.6.2 Exit access. *Care suites*, other than sleeping rooms, with an area of more than 2,500 square feet (232 m^2) shall have not fewer than two *exit access* doors from the *care suite* located in accordance with Section 1007.

407.5 Smoke barriers. *Smoke barriers* shall be provided to subdivide every *story* used by persons receiving care, treatment or sleeping into not fewer than two smoke compartments. Smoke barriers shall be provided to subdivide other *stories* with an *occupant load* of 50 or more persons, into not fewer than two *smoke compartments*. The *smoke barrier* shall be in accordance with Section 709.

407.5.1 Smoke compartment size. Stories shall be divided into smoke compartments with an area of not more than 22,500 square feet (2092 m^2) in Group I-2 occupancies.

Exceptions:

1. A smoke compartment in Group I-2, Condition 2 is permitted to have an area of not more than 40,000 square feet (3716 m^2) provided that all patient sleeping rooms within that smoke compartment are configured for single patient occupancy and any suite within the smoke compartment complies with Section 407.4.4.
2. A smoke compartment in Group I-2, Condition 2 without patient sleeping rooms is permitted to have an area of not more than 40,000 square feet (3716 m^2).

407.5.2 Exit access travel distance. The distance of travel from any point in a smoke compartment to a smoke barrier door shall be not greater than 200 feet (60 960 mm).

407.5.3 Refuge area. Refuge areas shall be provided within each *smoke compartment*. The size of the refuge area shall accommodate the occupants and care recipients from the adjoining *smoke compartment*. Where a *smoke compartment* is adjoined by two or more *smoke compartments*, the minimum area of the refuge area shall accommodate the largest *occupant load* of the adjoining compartments. The size of the refuge area shall provide the following:

1. Not less than 30 net square feet (2.8 m^2) for each care recipient confined to bed or stretcher.
2. Not less than 6 square feet (0.56 m^2) for each ambulatory care recipient not confined to bed or stretcher and for other occupants.

Areas or spaces permitted to be included in the calculation of refuge area are *corridors*, sleeping areas, treatment rooms, lounge or dining areas and other low-hazard areas.

407.5.4 Independent egress. A *means of egress* shall be provided from each *smoke compartment* created by *smoke barriers* without having to return through the smoke compartment from which *means of egress* originated. Smoke compartments that do not contain an exit shall be provided with direct access to not less than two adjacent smoke compartments.

407.5.5 Horizontal assemblies. *Horizontal assemblies* supporting *smoke barriers* required by this section shall be designed to resist the movement of smoke. Elevator lobbies shall be in accordance with Section 3006.2.

INTERNATIONAL CODE COUNCIL®
Copyright © 2019 ICC & NYSDOS. ALL RIGHTS RESERVED. Accessed by Lauren Gualdino (lgualdino@briarcliffmanor.org), (-) Order Number #100880972 on May 08, 2020 07:05 AM (PDT) pursuant to License Agreement with ICC & NYSDOS. No further reproduction, no

100880972

407.6 Automatic-closing doors. Automatic-closing doors with hold-open devices shall comply with Sections 709.5 and 716.2.

[F] 407.7 Automatic sprinkler system. *Smoke compartments* containing sleeping rooms shall be equipped throughout with an *automatic sprinkler* system in accordance with Sections 903.3.1.1 and 903.3.2.

[F] 407.8 Fire alarm system. A *fire alarm* system shall be provided in accordance with Section 907.2.6.

[F] 407.9 Automatic fire detection. *Corridors* in Group I-2, Condition 1 occupancies and spaces permitted to be open to the *corridors* by Section 407.2 shall be equipped with an automatic fire detection system.

Group I-2, Condition 2 occupancies shall be equipped with smoke detection as required in Section 407.2.

Exceptions:

1. *Corridor* smoke detection is not required where sleeping rooms are provided with *smoke detectors* that comply with UL 268. Such detectors shall provide a visual display on the *corridor* side of each sleeping room and an audible and visual alarm at the care provider's station attending each unit.
2. *Corridor* smoke detection is not required where sleeping room doors are equipped with automatic door-closing devices with integral *smoke detectors* on the unit sides installed in accordance with their listing, provided that the integral detectors perform the required alerting function.

407.10 Secured yards. Grounds are permitted to be fenced and gates therein are permitted to be equipped with locks, provided that safe dispersal areas having 30 net square feet (2.8 m^2) for bed and stretcher care recipients and 6 net square feet (0.56 m^2) for ambulatory care recipients and other occupants are located between the building and the fence. Such provided safe dispersal areas shall be located not less than 50 feet (15 240 mm) from the building they serve.

[F] 407.11 Electrical systems. In Group I-2 occupancies, the essential electrical system for electrical components, equipment and systems shall be designed and constructed in accordance with the provisions of Chapter 27 and NFPA 99.

SECTION 408
GROUP I-3

408.1 General. Occupancies in Group I-3 shall comply with the provisions of Sections 408.1 through 408.11 and other applicable provisions of this code (see Section 308.5).

408.2 Other occupancies. Buildings or portions of buildings in Group I-3 occupancies where security operations necessitate the locking of required *means of egress* shall be permitted to be classified as a different occupancy. Occupancies classified as other than Group I-3 shall meet the applicable requirements of this code for that occupancy where provisions are made for the release of occupants at all times.

Means of egress from detention and correctional occupancies that traverse other use areas shall, as a minimum, conform to requirements for detention and correctional occupancies.

Exception: It is permissible to exit through a *horizontal exit* into other contiguous occupancies that do not conform to detention and correctional occupancy egress provisions but that do comply with requirements set forth in the appropriate occupancy, as long as the occupancy is not a Group H use.

408.3 Means of egress. Except as modified or as provided for in this section, the *means of egress* provisions of Chapter 10 shall apply.

408.3.1 Door width. Doors to resident *sleeping units* shall have a clear width of not less than 28 inches (711 mm).

408.3.2 Sliding doors. Where doors in a *means of egress* are of the horizontal-sliding type, the force to slide the door to its fully open position shall be not greater than 50 pounds (220 N) with a perpendicular force against the door of 50 pounds (220 N).

408.3.3 Guard tower doors. A hatch or trap door not less than 16 square feet (610 m^2) in area through the floor and having dimensions of not less than 2 feet (610 mm) in any direction shall be permitted to be used as a portion of the *means of egress* from guard towers.

408.3.4 Spiral stairways. *Spiral stairways* that conform to the requirements of Section 1011.10 are permitted for access to and between staff locations.

408.3.5 Ship's ladders. Ship's ladders shall be permitted for egress from control rooms or elevated facility observation rooms in accordance with Section 1011.15.

408.3.6 Exit discharge. *Exits* are permitted to discharge into a fenced or walled courtyard. Enclosed *yards* or *courts* shall be of a size to accommodate all occupants, be located not less than 50 feet (15 240 mm) from the building and have an area of not less than 15 square feet (1.4 m^2) per person.

408.3.7 Sallyports. A *sallyport* shall be permitted in a *means of egress* where there are provisions for continuous and unobstructed passage through the *sallyport* during an emergency egress condition.

408.3.8 Interior exit stairway and ramp construction. One *interior exit stairway* or *ramp* in each building shall be permitted to have glazing installed in doors and interior walls at each landing level providing access to the *interior exit stairway or ramp*, provided that the following conditions are met:

1. The *interior exit stairway or ramp* shall not serve more than four floor levels.
2. *Exit* doors shall be not less than $^3/_4$-hour *fire door assemblies* complying with Section 716.
3. The total area of glazing at each floor level shall not exceed 5,000 square inches (3.2 m^2) and individual panels of glazing shall not exceed 1,296 square inches (0.84 m^2).
4. The glazing shall be protected on both sides by an *automatic sprinkler system*. The sprinkler system

INTERNATIONAL CODE COUNCIL®
Copyright © 2019 ICC & NYSDOS. ALL RIGHTS RESERVED. Accessed by Lauren Gualdino (lgualdino@briarcliffmanor.org), (-) Order Number #100880972 on May 08, 2020 07:05 AM (PDT) pursuant to License Agreement with ICC & NYSDOS. No further reproduction, no

100880972

shall be designed to wet completely the entire surface of any glazing affected by fire when actuated.

5. The glazing shall be in a gasketed frame and installed in such a manner that the framing system will deflect without breaking (loading) the glass before the sprinkler system operates.
6. Obstructions, such as curtain rods, drapery traverse rods, curtains, drapes or similar materials shall not be installed between the automatic sprinklers and the glazing.

408.4 Locks. Egress doors are permitted to be locked in accordance with the applicable use condition. Doors from a refuge area to the outside are permitted to be locked with a key in lieu of locking methods described in Section 408.4.1. The keys to unlock the exterior doors shall be available at all times and the locks shall be operable from both sides of the door.

408.4.1 Remote release. Remote release of locks on doors in a *means of egress* shall be provided with reliable means of operation, remote from the resident living areas, to release locks on all required doors. In Occupancy Condition 3 or 4, the arrangement, accessibility and security of the release mechanisms required for egress shall be such that with the minimum available staff at any time, the lock mechanisms are capable of being released within 2 minutes.

Exception: Provisions for remote locking and unlocking of occupied rooms in Occupancy Condition 4 are not required provided that not more than 10 locks are necessary to be unlocked in order to move occupants from one smoke compartment to a refuge area within 3 minutes. The opening of necessary locks shall be accomplished with not more than two separate keys.

[F] 408.4.2 Power-operated doors and locks. Power-operated sliding doors or power-operated locks for swinging doors shall be operable by a manual release mechanism at the door. Emergency power shall be provided for the doors and locks in accordance with Section 2702.

Exceptions:

1. Emergency power is not required in facilities with 10 or fewer locks complying with the exception to Section 408.4.1.
2. Emergency power is not required where remote mechanical operating releases are provided.

408.4.3 Redundant operation. Remote release, mechanically operated sliding doors or remote release, mechanically operated locks shall be provided with a mechanically operated release mechanism at each door, or shall be provided with a redundant remote release control.

408.4.4 Relock capability. Doors remotely unlocked under emergency conditions shall not automatically relock when closed unless specific action is taken at the remote location to enable doors to relock.

408.5 Protection of vertical openings. Any vertical opening shall be protected by a *shaft enclosure* in accordance with Section 713, or shall be in accordance with Section 408.5.1.

408.5.1 Floor openings. Openings in floors within a *housing unit* are permitted without a *shaft enclosure*, provided that all of the following conditions are met:

1. The entire normally occupied areas so interconnected are open and unobstructed so as to enable observation of the areas by supervisory personnel.
2. *Means of egress* capacity is sufficient for all occupants from all interconnected *cell tiers* and areas.
3. The height difference between the floor levels of the highest and lowest *cell tiers* shall not exceed 23 feet (7010 mm).
4. Egress from any portion of the *cell tier* to an *exit* or *exit access* door shall not require travel on more than one additional floor level within the *housing unit*.

408.5.2 Shaft openings in communicating floor levels. Where a floor opening is permitted between communicating floor levels of a *housing unit* in accordance with Section 408.5.1, plumbing chases serving vertically staked individual *cells* contained with the *housing unit* shall be permitted without a *shaft enclosure*.

408.6 Smoke barrier. Occupancies in Group I-3 shall have *smoke barriers* complying with Sections 408.6 and 709 to divide every *story* occupied by residents for sleeping, or any other *story* having an *occupant load* of 50 or more persons, into not fewer than two *smoke compartments*.

Exception: Spaces having a direct *exit* to one of the following, provided that the locking arrangement of the doors involved complies with the requirements for doors at the *smoke barrier* for the use condition involved:

1. A *public way*.
2. A building separated from the resident housing area by a 2-hour fire-resistance-rated assembly or 50 feet (15 240 mm) of open space.
3. A secured y*ard* or *court* having a holding space 50 feet (15 240 mm) from the housing area that provides 6 square feet (0.56 m^2) or more of refuge area per occupant, including residents, staff and visitors.

408.6.1 Smoke compartments. The number of residents in any *smoke compartment* shall be not more than 200. The distance of travel to a door in a *smoke barrier* from any room door required as exit access shall be not greater than 150 feet (45 720 mm). The distance of travel to a door in a *smoke barrier* from any point in a room shall be not greater than 200 feet (60 960 mm).

408.6.2 Refuge area. Not less than 6 net square feet (0.56 m^2) per occupant shall be provided on each side of each *smoke barrier* for the total number of occupants in adjoining *smoke compartments*. This space shall be readily available wherever the occupants are moved across the *smoke barrier* in a fire emergency.

408.6.3 Independent egress. A *means of egress* shall be provided from each *smoke compartment* created by *smoke barriers* without having to return through the *smoke compartment* from which *means of egress* originates.

INTERNATIONAL CODE COUNCIL®
Copyright © 2019 ICC & NYSDOS. ALL RIGHTS RESERVED. Accessed by Lauren Gualdino (lgualdino@briarcliffmanor.org), (-) Order Number #100880972 on May 08, 2020 07:05 AM (PDT) pursuant to License Agreement with ICC & NYSDOS. No further reproduction, no

100880972

408.7 Security glazing. In occupancies in Group I-3, windows and doors in 1-hour *fire barriers* constructed in accordance with Section 707, *fire partitions* constructed in accordance with Section 708 and *smoke barriers* constructed in accordance with Section 709 shall be permitted to have security glazing installed provided that the following conditions are met.

1. Individual panels of glazing shall not exceed 1,296 square inches (0.84 m^2).
2. The glazing shall be protected on both sides by an *automatic sprinkler system*. The sprinkler system shall be designed to, when actuated, wet completely the entire surface of any glazing affected by fire.
3. The glazing shall be in a gasketed frame and installed in such a manner that the framing system will deflect without breaking (loading) the glass before the sprinkler system operates.
4. Obstructions, such as curtain rods, drapery traverse rods, curtains, drapes or similar materials shall not be installed between the automatic sprinklers and the glazing.

408.8 Subdivision of resident housing areas. Sleeping areas and any contiguous day room, group activity space or other common spaces where residents are housed shall be separated from other spaces in accordance with Sections 408.8.1 through 408.8.4.

408.8.1 Occupancy Conditions 3 and 4. Each sleeping area in Occupancy Conditions 3 and 4 shall be separated from the adjacent common spaces by a smoke-tight partition where the distance of travel from the sleeping area through the common space to the *corridor* exceeds 50 feet (15 240 mm).

408.8.2 Occupancy Condition 5. Each sleeping area in Occupancy Condition 5 shall be separated from adjacent sleeping areas, *corridors* and common spaces by a smoke-tight partition. Additionally, common spaces shall be separated from the *corridor* by a smoke-tight partition.

408.8.3 Openings in room face. The aggregate area of openings in a solid sleeping room face in Occupancy Conditions 2, 3, 4 and 5 shall not exceed 120 square inches (0.77 m^2). The aggregate area shall include all openings including door undercuts, food passes and grilles. Openings shall be not more than 36 inches (914 mm) above the floor. In Occupancy Condition 5, the openings shall be closeable from the room side.

408.8.4 Smoke-tight doors. Doors in openings in partitions required to be smoke tight by Section 408.8 shall be substantial doors, of construction that will resist the passage of smoke. Latches and door closures are not required on *cell* doors.

408.9 Windowless buildings. For the purposes of this section, a windowless building or portion of a building is one with nonopenable windows, windows not readily breakable or without windows. Windowless buildings shall be provided with an engineered smoke control system to provide a tenable environment for exiting from the *smoke compartment* in the area of fire origin in accordance with Section 909 for each windowless *smoke compartment*.

[F] 408.10 Fire alarm system. A *fire alarm* system shall be provided in accordance with Section 907.2.6.3.

[F] 408.11 Automatic sprinkler system. Group I-3 occupancies shall be equipped throughout with an *automatic sprinkler system* in accordance with Section 903.2.6.

SECTION 409
MOTION PICTURE PROJECTION ROOMS

409.1 General. The provisions of Sections 409.1 through 409.5 shall apply to rooms in which ribbon-type cellulose acetate or other safety film is utilized in conjunction with electric arc, xenon or other light-source projection equipment that develops hazardous gases, dust or radiation. Where cellulose nitrate film is utilized or stored, such rooms shall comply with NFPA 40.

409.1.1 Projection room required. Every motion picture machine projecting film as mentioned within the scope of this section shall be enclosed in a projection room. Appurtenant electrical equipment, such as rheostats, transformers and generators, shall be within the projection room or in an adjacent room of equivalent construction.

409.2 Construction of projection rooms. Every projection room shall be of permanent construction consistent with the construction requirements for the type of building in which the projection room is located. Openings are not required to be protected.

The room shall have a floor area of not less than 80 square feet (7.44 m^2) for a single machine and not less than 40 square feet (3.7 m^2) for each additional machine. Each motion picture projector, floodlight, spotlight or similar piece of equipment shall have a clear working space of not less than 30 inches by 30 inches (762 mm by 762 mm) on each side and at the rear thereof, but only one such space shall be required between two adjacent projectors. The projection room and the rooms appurtenant thereto shall have a ceiling height of not less than 7 feet 6 inches (2286 mm). The aggregate of openings for projection equipment shall not exceed 25 percent of the area of the wall between the projection room and the auditorium. Openings shall be provided with glass or other *approved* material, so as to close completely the opening.

409.3 Projection room and equipment ventilation. *Ventilation* shall be provided in accordance with the *Mechanical Code of New York State*.

409.3.1 Supply air. Each projection room shall be provided with adequate air supply inlets so arranged as to provide well-distributed air throughout the room. Air inlet ducts shall provide an amount of air equivalent to the amount of air being exhausted by projection equipment. Air is permitted to be taken from the outside; from adjacent spaces within the building, provided that the volume and infiltration rate are sufficient; or from the building air-conditioning system, provided that it is so arranged as to provide sufficient air when other systems are not in operation.

INTERNATIONAL CODE COUNCIL®
Copyright © 2019 ICC & NYSDOS. ALL RIGHTS RESERVED. Accessed by Lauren Gualdino (lgualdino@briarcliffmanor.org), (-) Order Number #100880972 on May 08, 2020 07:05 AM (PDT) pursuant to License Agreement with ICC & NYSDOS. No further reproduction, no

100880972

409.3.2 Exhaust air. Projection rooms are permitted to be exhausted through the lamp exhaust system. The lamp exhaust system shall be positively interconnected with the lamp so that the lamp will not operate unless there is the required airflow. Exhaust air ducts shall terminate at the exterior of the building in such a location that the exhaust air cannot be readily recirculated into any air supply system. The projection room *ventilation* system is permitted to also serve appurtenant rooms, such as the generator and rewind rooms.

409.3.3 Projection machines. Each projection machine shall be provided with an exhaust duct that will draw air from each lamp and exhaust it directly to the outside of the building. The lamp exhaust is permitted to serve to exhaust air from the projection room to provide room air circulation. Such ducts shall be of rigid materials, except for a flexible connector *approved* for the purpose. The projection lamp or projection room exhaust system, or both, is permitted to be combined but shall not be interconnected with any other exhaust or return system, or both, within the building.

409.4 Lighting control. Provisions shall be made for control of the auditorium lighting and the *means of egress* lighting systems of theaters from inside the projection room and from not less than one other convenient point in the building.

409.5 Miscellaneous equipment. Each projection room shall be provided with rewind and film storage facilities.

SECTION 410
STAGES, PLATFORMS AND TECHNICAL PRODUCTION AREAS

410.1 Applicability. The provisions of Sections 410.1 through 410.7 shall apply to all parts of buildings and structures that contain *stages* or *platforms* and similar appurtenances as herein defined.

➡

410.2 Stages. *Stage* construction shall comply with Sections 410.2.1 through 410.2.7.

410.2.1 Stage construction. *Stages* shall be constructed of materials as required for floors for the type of construction of the building in which such *stages* are located.

Exception: *Stages* need not be constructed of the same materials as required for the type of construction provided that the construction complies with one of the following:

1. *Stages* of Type IIB or IV construction with a nominal 2-inch (51 mm) wood deck, provided that the *stage* is separated from other areas in accordance with Section 410.2.4.
2. In buildings of Type IIA, IIIA and VA construction, a fire-resistance-rated floor is not required, provided that the space below the *stage* is equipped with an *automatic sprinkler system or fire-extinguishing system* in accordance with Section 903 or 904.
3. In all types of construction, the finished floor shall be constructed of wood or *approved* noncombustible materials. Openings through *stage* floors shall be equipped with tight-fitting, solid wood trap doors with *approved* safety locks.

410.2.1.1 Stage height and area. *Stage* areas shall be measured to include the entire performance area and adjacent backstage and support areas not separated from the performance area by fire-resistance-rated construction. *Stage* height shall be measured from the lowest point on the *stage* floor to the highest point of the roof or floor deck above the *stage*.

410.2.2 Technical production areas: galleries, gridirons and catwalks. Beams designed only for the attachment of portable or fixed theater equipment, gridirons, galleries and catwalks shall be constructed of *approved* materials consistent with the requirements for the type of construction of the building; and a *fire-resistance rating* shall not be required. These areas shall not be considered to be floors, *stories*, *mezzanines* or levels in applying this code.

Exception: Floors of fly galleries and catwalks shall be constructed of any *approved* material.

410.2.3 Exterior stage doors. Where protection of openings is required, exterior *exit* doors shall be protected with *fire door assemblies* that comply with Section 716. Exterior openings that are located on the *stage* for *means of egress* or loading and unloading purposes, and that are likely to be open during occupancy of the theater, shall be constructed with vestibules to prevent air drafts into the auditorium.

410.2.4 Proscenium wall. Where the *stage* height is greater than 50 feet (15 240 mm), all portions of the *stage* shall be completely separated from the seating area by a proscenium wall with not less than a 2-hour *fire-resistance rating* extending continuously from the foundation to the roof.

410.2.5 Proscenium curtain. Where a proscenium wall is required to have a *fire-resistance rating*, the *stage* opening shall be provided with a fire curtain complying with NFPA 80, horizontal sliding doors complying with Section 716 having a fire protection rating of not less than 1 hour, or an *approved* water curtain complying with Section 903.3.1.1 or, in facilities not utilizing the provisions of smoke-protected assembly seating in accordance with Section 1029.6.2, a smoke control system complying with Section 909 or natural *ventilation* designed to maintain the smoke level not less than 6 feet (1829 mm) above the floor of the *means of egress*.

410.2.6 Scenery. Combustible materials used in sets and scenery shall meet the fire propagation performance criteria of Test Method 1 or Test Method 2, as appropriate, of NFPA 701, in accordance with Section 806 and the *Fire Code of New York State*. Foam plastics and materials containing foam plastics shall comply with Section 2603 and the *Fire Code of New York State*.

410.2.7 Stage ventilation. Emergency *ventilation* shall be provided for *stages* larger than 1,000 square feet (93 m^2) in floor area, or with a *stage* height greater than 50 feet (15 240 mm). Such *ventilation* shall comply with Section 410.2.7.1 or 410.2.7.2.

INTERNATIONAL CODE COUNCIL®
Copyright © 2019 ICC & NYSDOS. ALL RIGHTS RESERVED. Accessed by Lauren Gualdino (lgualdino@briarcliffmanor.org), (-) Order Number #100880972 on May 08, 2020 07:05 AM (PDT) pursuant to License Agreement with ICC & NYSDOS. No further reproduction, no

100880972

410.2.7.1 Roof vents. Two or more vents constructed to open automatically by *approved* heat-activated devices and with an aggregate clear opening area of not less than 5 percent of the area of the *stage* shall be located near the center and above the highest part of the *stage* area. Supplemental means shall be provided for manual operation of the ventilator. Curbs shall be provided as required for skylights in Section 2610.2. Vents shall be *labeled*.

[F] 410.2.7.2 Smoke control. Smoke control in accordance with Section 909 shall be provided to maintain the smoke layer interface not less than 6 feet (1829 mm) above the highest level of the assembly seating or above the top of the proscenium opening where a proscenium wall is provided in compliance with Section 410.2.4.

410.3 Platform construction. Permanent *platforms* shall be constructed of materials as required for the type of construction of the building in which the permanent *platform* is located. Permanent *platforms* are permitted to be constructed of *fire-retardant-treated wood* for Types I, II and IV construction where the *platforms* are not more than 30 inches (762 mm) above the main floor, and not more than one-third of the room floor area and not more than 3,000 square feet (279 m^2) in area. Where the space beneath the permanent *platform* is used for storage or any purpose other than equipment, wiring or plumbing, the floor assembly shall be not less than 1-hour fire-resistance-rated construction. Where the space beneath the permanent *platform* is used only for equipment, wiring or plumbing, the underside of the permanent *platform* need not be protected.

410.3.1 Temporary platforms. *Platforms* installed for a period of not more than 30 days are permitted to be constructed of any materials permitted by this code. The space between the floor and the *platform* above shall only be used for plumbing and electrical wiring to *platform* equipment.

410.4 Dressing and appurtenant rooms. Dressing and appurtenant rooms shall comply with Sections 410.4.1 and 410.4.2.

410.4.1 Separation from stage. The *stage* shall be separated from dressing rooms, scene docks, property rooms, workshops, storerooms and compartments appurtenant to the *stage* and other parts of the building by *fire barriers* constructed in accordance with Section 707 or *horizontal assemblies* constructed in accordance with Section 711, or both. The *fire-resistance rating* shall be not less than 2 hours for *stage* heights greater than 50 feet (15 240 mm) and not less than 1 hour for *stage* heights of 50 feet (15 240 mm) or less.

410.4.2 Separation from each other. Dressing rooms, scene docks, property rooms, workshops, storerooms and compartments appurtenant to the *stage* shall be separated from each other by not less than 1-hour *fire barriers* constructed in accordance with Section 707 or *horizontal assemblies* constructed in accordance with Section 711, or both.

410.5 Means of egress. Except as modified or as provided for in this section, the provisions of Chapter 10 shall apply.

410.5.1 Arrangement. Where two or more *exits* or *exit access doorways* from the *stage* are required in accordance with Section 1006.2, not fewer than one *exit* or *exit access doorway* shall be provided on each side of a *stage*.

410.5.2 Stairway and ramp enclosure. *Exit access stairways* and *ramps* serving a *stage* or *platform* are not required to be enclosed. *Exit access stairways* and ramps serving *technical production areas* are not required to be enclosed.

410.5.3 Technical production areas. *Technical production areas* shall be provided with means of egress and means of escape in accordance with Sections 410.5.3.1 through 410.5.3.5.

410.5.3.1 Number of means of egress. Not fewer than one *means of egress* shall be provided from *technical production areas*.

410.5.3.2 Exit access travel distance. The *exit access* travel distance shall be not greater than 300 feet (91 440 mm) for buildings without a sprinkler system and 400 feet (122 mm) for buildings equipped throughout with an *automatic sprinkler system* in accordance with Section 903.3.1.1.

410.5.3.3 Two means of egress. Where two *means of egress* are required, the *common path of travel* shall be not greater than 100 feet (30 480 mm).

Exception: A means of escape to a roof in place of a second *means of egress* is permitted.

410.5.3.4 Path of egress travel. The following *exit access* components are permitted where serving *technical production areas:*

1. *Stairways*.
2. *Ramps*.
3. *Spiral stairways*.
4. Catwalks.
5. *Alternating tread devices*.
6. Permanent ladders.

410.5.3.5 Width. The path of egress travel within and from technical support areas shall be not less than 22 inches (559 mm).

[F] 410.6 Automatic sprinkler system. *Stages* shall be equipped with an *automatic sprinkler system* in accordance with Section 903.3.1.1. Sprinklers shall be installed under the roof and gridiron and under all catwalks and galleries over the *stage*. Sprinklers shall be installed in dressing rooms, performer lounges, shops and storerooms accessory to such *stages.*

Exceptions:

1. Sprinklers are not required under *stage* areas less than 4 feet (1219 mm) in clear height that are utilized exclusively for storage of tables and chairs, provided that the concealed space is separated from

INTERNATIONAL CODE COUNCIL®
Copyright © 2019 ICC & NYSDOS. ALL RIGHTS RESERVED. Accessed by Lauren Gualdino (lgualdino@briarcliffmanor.org), (-) Order Number #100880972 on May 08, 2020 07:05 AM (PDT) pursuant to License Agreement with ICC & NYSDOS. No further reproduction, no

100880972

the adjacent spaces by Type X gypsum board not less than $^5/_8$-inch (15.9 mm) in thickness.

2. Sprinklers are not required for *stages* 1,000 square feet (93 m^2) or less in area and 50 feet (15 240 mm) or less in height where curtains, scenery or other combustible hangings are not retractable vertically. Combustible hangings shall be limited to a single main curtain, borders, legs and a single backdrop.
3. Sprinklers are not required within portable orchestra enclosures on *stages*.

[F] 410.7 Standpipes. Standpipe systems shall be provided in accordance with Section 905.

SECTION 411
SPECIAL AMUSEMENT BUILDINGS

411.1 General. *Special amusement buildings* having an *occupant load* of 50 or more shall comply with the requirements for the appropriate Group A occupancy and Sections 411.1 through 411.7. *Special amusement buildings* having an *occupant load* of less than 50 shall comply with the requirements for a Group B occupancy and Sections 411.1 through 411.7.

Exception: *Special amusement buildings* or portions thereof that are without walls or a roof and constructed to prevent the accumulation of smoke need not comply with this section.

For flammable *decorative materials*, see the *Fire Code of New York State*.

[F] 411.2 Automatic fire detection. *Special amusement buildings* shall be equipped with an automatic fire detection system in accordance with Section 907.

[F] 411.3 Automatic sprinkler system. *Special amusement buildings* shall be equipped throughout with an *automatic sprinkler system* in accordance with Section 903.3.1.1. Where the *special amusement building* is temporary, the sprinkler water supply shall be of an *approved* temporary means.

Exception: Automatic sprinklers are not required where the total floor area of a temporary *special amusement building* is less than 1,000 square feet (93 m^2) and the exit access travel distance from any point to an exit is less than 50 feet (15 240 mm).

[F] 411.4 Alarm. Actuation of a single *smoke detector*, the *automatic sprinkler system* or other automatic fire detection device shall immediately sound an alarm at the building at a *constantly attended location* from which emergency action can be initiated including the capability of manual initiation of requirements in Section 907.2.11.

[F] 411.5 Emergency voice/alarm communications system. An *emergency voice/alarm communications system* shall be provided in accordance with Sections 907.2.11 and 907.5.2.2, is permitted to serve as a public address system and shall be audible throughout the entire *special amusement building*.

411.6 Exit marking. Exit signs shall be installed at the required *exit* or *exit access doorways* of amusement buildings in accordance with this section and Section 1013. *Approved* directional exit markings shall be provided. Where mirrors, mazes or other designs are utilized that disguise the path of egress travel such that they are not apparent, *approved* and *listed* low-level exit signs that comply with Section 1013.5, and directional path markings *listed* in accordance with UL 1994, shall be provided and located not more than 8 inches (203 mm) above the walking surface and on or near the path of egress travel. Such markings shall become visible in an emergency. The directional exit marking shall be activated by the automatic fire detection system and the *automatic sprinkler system* in accordance with Section 907.2.11.

411.6.1 Photoluminescent exit signs. Where *photoluminescent exit* signs are installed, activating light source and viewing distance shall be in accordance with the listing and markings of the signs.

411.7 Interior finish. The *interior finish* shall be Class A in accordance with Section 803.1.

SECTION 412
AIRCRAFT-RELATED OCCUPANCIES

412.1 General. Aircraft-related occupancies shall comply with Sections 412.1 through 412.7 and the *Fire Code of New York State*.

412.2 Airport traffic control towers. The provisions of Sections 412.2.1 through 412.2.6 shall apply to airport traffic control towers occupied only for the following uses:

1. Airport traffic control cab.
2. Electrical and mechanical equipment rooms.
3. Airport terminal radar and electronics rooms.
4. Office spaces incidental to the tower operation.
5. Lounges for employees, including sanitary facilities.

412.2.1 Construction. The construction of airport traffic control towers shall comply with the provisions of Sections 412.2.1.1 through 412.2.1.3.

412.2.1.1 Type of construction. Airport traffic control towers shall be constructed to comply with the height limitations of Table 412.2.1.1.

TABLE 412.2.1.1
HEIGHT LIMITATIONS FOR AIRPORT TRAFFIC CONTROL TOWERS

TYPE OF CONSTRUCTION	HEIGHT[a] (feet)
IA	Unlimited
IB	240
IIA	100
IIB	85
IIIA	65

For SI: 1 foot = 304.8 mm, 1 square foot = 0.0929 m^2.
a. Height to be measured from grade plane to cab floor.

INTERNATIONAL CODE COUNCIL®
Copyright © 2019 ICC & NYSDOS. ALL RIGHTS RESERVED. Accessed by Lauren Gualdino (lgualdino@briarcliffmanor.org), (-) Order Number #100880972 on May 08, 2020 07:05 AM (PDT) pursuant to License Agreement with ICC & NYSDOS. No further reproduction, no

100880972

[BS] 412.2.1.1.2 Structural integrity of interior exit stairways and elevator hoistway enclosures. Enclosures for interior exit stairways and elevator hoistway enclosures shall comply with Section 403.2.3 in airport traffic control towers where the control cab is located more than 75 feet (22 860 mm) above the lowest level of fire department vehicle access.

412.2.1.1.3 Sprayed fire-resistant materials (SFRM). The bond strength of the SFRM installed in airport traffic control towers shall be in accordance with Section 403.2.4 where the control cab is located more than 75 feet (22 860 mm) above the lowest level of fire department vehicle access.

412.2.2 Means of egress and evacuation. The means of egress in airport traffic control towers shall comply with Sections 412.2.2.1 through 412.2.2.3.

412.2.2.1 Stairways. Stairways in airport traffic control towers shall be in accordance with Section 1011. Exit stairways shall be smokeproof enclosures complying with one of the alternatives provided in Section 909.20.

Exception: Stairways in airport traffic control towers are not required to comply with Section 1011.12.

412.2.2.2 Exit access. From observation levels, airport traffic control towers shall be permitted to have a single means of exit access for a distance of travel not greater than 100 feet (30 480 mm). Exit access stairways from the observation level need not be enclosed.

412.2.2.3 Number of exits. Not less than one *exit stairway* shall be permitted for airport traffic control towers of any height provided that the *occupant load* per floor is not greater than 15 and the area per floor does not exceed 1,500 square feet (140 m^2).

412.2.2.3.1 Interior finish. Where an airport traffic control tower is provided with only one exit stairway, interior wall and ceiling finishes shall be either Class A or Class B.

412.2.2.3.2 Exit separation. Where an airport traffic control tower is equipped throughout with an automatic sprinkler system in accordance with Section 903.3.1.1 and two exits are required, the exit separation distance required by Section 1007 shall be not less than one-fourth of the length of the maximum overall dimension of the area served.

[F] 412.2.3 Emergency systems. The detection, alarm and emergency systems of airport traffic control towers shall comply with Sections 412.2.3.1 through 412.2.3.3.

[F] 412.2.3.1 Automatic smoke detection systems. Airport traffic control towers shall be provided with an automatic smoke detection system installed in accordance with Section 907.2.21.

[F] 412.2.3.2 Fire command center. A fire command center shall be provided in airport traffic control towers where the control cab is located more than 75 feet (22 860 mm) above the lowest level of fire department vehicle access. The fire command center shall comply with Section 911.

Exceptions:

1. The fire command center shall be located in the airport control tower or an adjacent contiguous building where building functions are interdependent.
2. The room shall be not less than 150 square feet (14 m^2) in area with a minimum dimension of 10 feet (3048 mm).
3. The following features shall not be required in an airport traffic control tower fire command center.
   - 3.1. Emergency voice/alarm control unit.
   - 3.2. Public address system.
   - 3.3. Status indicators and controls for the air distributions centers.
   - 3.4. Generator supervision devices, manual start and transfer features.
   - 3.5. Elevator emergency or standby power switches where emergency or standby power is provided.

[F] 412.2.3.3 Smoke removal. Smoke removal in airport traffic control towers shall be provided in accordance with Section 403.4.7.

[F] 412.2.4 Automatic sprinkler system. Where an occupied floor is located more than 35 feet (10 668 mm) above the lowest level of fire department vehicle access, airport traffic control towers shall be equipped with an *automatic sprinkler system* in accordance with Section 903.3.1.1.

[F] 412.2.4.1 Fire pump room. Fire pumps shall be located in rooms that are separated from all other areas of the building by 2-hour fire barriers constructed in accordance with Section 707 or 2-hour horizontal assemblies constructed in accordance with Section 711, or both.

Exception: Separation is not required for fire pumps physically separated in accordance with NFPA 20.

[F] 412.2.5 Protection of elevator wiring and cables. Wiring and cables serving elevators in airport traffic control towers shall be protected in accordance with Section 3007.8.1.

412.2.5.1 Elevators for occupant evacuation. Where provided in addition to an exit stairway, occupant evacuation elevators shall be in accordance with Section 3008.

412.2.6 Accessibility. Airport traffic control towers shall be *accessible* except as specified in Section 1104.4.

412.3 Aircraft hangars. Aircraft hangars shall be in accordance with Sections 412.3.1 through 412.3.6.

412.3.1 Exterior walls. *Exterior walls* located less than 30 feet (9144 mm) from *lot lines* or a *public way* shall have a *fire-resistance rating* not less than 2 hours.

INTERNATIONAL CODE COUNCIL®
Copyright © 2019 ICC & NYSDOS. ALL RIGHTS RESERVED. Accessed by Lauren Gualdino (lgualdino@briarcliffmanor.org), (-) Order Number #100880972 on May 08, 2020 07:05 AM (PDT) pursuant to License Agreement with ICC & NYSDOS. No further reproduction, no

100880972

412.3.2 Basements. Where hangars have *basements*, floors over *basements* shall be of Type IA construction and shall be made tight against seepage of water, oil or vapors. There shall not be openings or communication between *basements* and the hangar. Access to *basements* shall be from outside only.

412.3.3 Floor surface. Floors shall be graded and drained to prevent water or fuel from remaining on the floor. Floor drains shall discharge through an oil separator to the sewer or to an outside vented sump.

Exception: Aircraft hangars with individual lease spaces not exceeding 2,000 square feet (186 m^2) each in which servicing, repairing or washing is not conducted and fuel is not dispensed shall have floors that are graded toward the door, but shall not require a separator.

412.3.4 Heating equipment. Heating equipment shall be placed in another room separated by 2-hour *fire barriers* constructed in accordance with Section 707 or *horizontal assemblies* constructed in accordance with Section 711, or both. Entrance shall be from the outside or by means of a vestibule providing a two-doorway separation.

Exceptions:

1. Unit heaters and vented infrared radiant heating equipment suspended not less than 10 feet (3048 mm) above the upper surface of wings or engine enclosures of the highest aircraft that are permitted to be housed in the hangar need not be located in a separate room provided that they are mounted not less than 8 feet (2438 mm) above the floor in shops, offices and other sections of the hangar communicating with storage or service areas.
2. Entrance to the separated room shall be permitted by a single interior door provided that the sources of ignition in the appliances are not less than 18 inches (457 mm) above the floor.

412.3.5 Finishing. The process of "doping," involving use of a volatile flammable solvent, or of painting, shall be carried on in a separate *detached building* equipped with *automatic fire-extinguishing equipment* in accordance with Section 903.

[F] 412.3.6 Fire suppression. Aircraft hangars shall be provided with a fire suppression system designed in accordance with NFPA 409, based on the classification for the hangar given in Table 412.3.6.

Exception: Where a *fixed base operator* has separate repair facilities on site, Group II hangars operated by a *fixed base operator* used for storage of *transient aircraft* only shall have a fire suppression system, but the system is exempt from foam requirements.

[F] 412.3.6.1 Hazardous operations. Any Group III aircraft hangar according to Table 412.3.6 that contains hazardous operations including, but not limited to, the following shall be provided with a Group I or II fire suppression system in accordance with NFPA 409 as applicable:

1. Doping.
2. Hot work including, but not limited to, welding, torch cutting and torch soldering.
3. Fuel transfer.
4. Fuel tank repair or maintenance not including defueled tanks in accordance with NFPA 409, inerted tanks or tanks that have never been fueled.
5. Spray finishing operations.
6. Total fuel capacity of all aircraft within the unsprinklered single *fire area* in excess of 1,600 gallons (6057 L).
7. Total fuel capacity of all aircraft within the maximum single *fire area* in excess of 7,500 gallons (28 390 L) for a hangar with an *automatic sprinkler system* in accordance with Section 903.3.1.1.

[F] TABLE 412.3.6
HANGAR FIRE SUPPRESSION REQUIREMENTS[a, b, c]

MAXIMUM SINGLE FIRE AREA (square feet)	TYPE OF CONSTRUCTION								
	IA	IB	IIA	IIB	IIIA	IIIB	IV	VA	VB
≥ 40,001	Group I	Group I	Group I	Group I	Group I	Group I	Group I	Group I	Group I
40,000	Group II	Group II	Group II	Group II	Group II	Group II	Group II	Group II	Group II
30,000	Group III	Group II	Group II	Group II	Group II	Group II	Group II	Group II	Group II
20,000	Group III	Group III	Group II	Group II	Group II	Group II	Group II	Group II	Group II
15,000	Group III	Group III	Group III	Group II	Group III	Group II	Group III	Group II	Group II
12,000	Group III	Group III	Group III	Group III	Group III	Group III	Group III	Group II	Group II
8,000	Group III	Group III	Group III	Group III	Group III	Group III	Group III	Group III	Group II
5,000	Group III	Group III	Group III	Group III	Group III	Group III	Group III	Group III	Group III

For SI: 1 foot = 304.8 mm, 1 square foot = 0.0929 m^2.

a. Aircraft hangars with a door height greater than 28 feet shall be provided with fire suppression for a Group I hangar regardless of maximum fire area.

b. Groups shall be as classified in accordance with NFPA 409.

c. Membrane structures complying with Section 3102 shall be classified as a Group IV hangar.

INTERNATIONAL CODE COUNCIL®
Copyright © 2019 ICC & NYSDOS. ALL RIGHTS RESERVED. Accessed by Lauren Gualdino (lgualdino@briarcliffmanor.org), (-) Order Number #100880972 on May 08, 2020 07:05 AM (PDT) pursuant to License Agreement with ICC & NYSDOS. No further reproduction, no

100880972

[F] 412.3.6.2 Separation of maximum single fire areas. Maximum single *fire areas* established in accordance with hangar classification and construction type in Table 412.3.6 shall be separated by 2-hour *fire walls* constructed in accordance with Section 706. In determining the maximum single *fire area* as set forth in Table 412.3.6, ancillary uses that are separated from aircraft servicing areas by a *fire barrier* of not less than 1 hour, constructed in accordance with Section 707, shall not be included in the area.

412.4 Residential aircraft hangars. *Residential aircraft hangars* shall comply with Sections 412.4.1 through 412.4.5.

412.4.1 Fire separation. A hangar shall not be attached to a *dwelling* unless separated by a *fire barrier* having a *fire-resistance rating* of not less than 1 hour. Such separation shall be continuous from the foundation to the underside of the roof and unpierced except for doors leading to the *dwelling unit*. Doors into the *dwelling unit* shall be equipped with *self-closing* devices and conform to the requirements of Section 716 with a noncombustible raised sill not less than 4 inches (102 mm) in height. Openings from a hangar directly into a room used for sleeping purposes shall not be permitted.

412.4.2 Egress. A hangar shall provide two *means of egress*. One of the doors into the dwelling shall be considered as meeting only one of the two *means of egress*.

[**F] 412.4.3 Smoke alarms.** *Smoke alarms* shall be provided within the hangar in accordance with Section 907.2.21.

412.4.4 Independent systems. Electrical, mechanical and plumbing drain, waste and vent (DWV) systems installed within the hangar shall be independent of the systems installed within the dwelling. Building sewer lines shall be permitted to be connected outside the structures.

Exception: *Smoke detector* wiring and feed for electrical subpanels in the hangar.

412.4.5 Height and area limits. *Residential aircraft hangars* shall be not greater than 2,000 square feet (186 m^2) in area and 20 feet (6096 mm) in *building height*.

[F] 412.5 Aircraft paint hangars. Aircraft painting operations shall be conducted in an aircraft paint hangar that complies with the provisions of Sections 412.5.1 through 412.5.8. Buildings and structures, or parts thereof, used for the application of flammable finishes shall comply with the applicable provisions of Section 416.

[F] 412.5.1 Occupancy classification. Aircraft paint hangars shall be classified in accordance with the provisions of Section 307.1. Aircraft paint hangars shall comply with the applicable requirements of this code and the *Fire Code of New York State* for such occupancy.

412.5.2 Construction. Aircraft paint hangars shall be of Type I or II construction.

[F] 412.5.3 Spray equipment cleaning operations. Spray equipment cleaning operations shall be conducted in a liquid use, dispensing and mixing room.

[F] 412.5.4 Operations. Only those flammable liquids necessary for painting operations shall be permitted in quantities less than the maximum allowable quantities per *control area* in Table 307.1(1). Spray equipment cleaning operations exceeding the maximum allowable quantities per control area in Table 307.1(1) shall be conducted in a liquid use, dispensing and mixing room.

[F] 412.5.5 Storage. Storage of flammable or combustible liquids exceeding the maximum allowable quantities per control area in Table 307.1(1) shall be in a liquid storage room.

[F] 412.5.6 Fire suppression. Aircraft paint hangars shall be provided with fire suppression as required by NFPA 409.

[F] 412.5.7 Ventilation. Aircraft paint hangars shall be provided with *ventilation* as required in the *Mechanical Code of New York State*.

[F] 412.5.8 Electrical. Electrical equipment and devices within the aircraft paint hangar shall comply with NFPA 70.

[F] 412.5.8.1 Class I, Division I hazardous locations. The area within 10 feet (3048 mm) horizontally from aircraft surfaces and from the floor to 10 feet (3048 mm) above the aircraft surface shall be classified as a Class I, Division I location.

[F] 412.5.8.2 Class I, Division 2 hazardous locations. The area horizontally from aircraft surfaces between 10 feet (3048 mm) and 30 feet (9144 mm) and from the floor to 30 feet (9144 mm) above the aircraft surface shall be classified as a Class I, Division 2 location.

412.6 Aircraft manufacturing facilities. In buildings used for the manufacturing of aircraft, exit access travel distances indicated in Section 1017.1 shall be increased in accordance with the following:

1. The building shall be of Type I or II construction.
2. Exit access travel distance shall not exceed the distances given in Table 412.6.

412.6.1 Ancillary areas. Rooms, areas and spaces ancillary to the primary manufacturing area shall be permitted to egress through such area having a minimum height as indicated in Table 412.6. Exit access travel distance within the ancillary room, area or space shall not exceed that indicated in Table 1017.2 based on the occupancy classification of that ancillary area. Total exit access travel distance shall not exceed that indicated in Table 412.6.

[F] 412.7 Heliports and helistops. *Heliports* and *helistops* shall be permitted to be erected on buildings or other locations where they are constructed in accordance with Sections 412.7.1 through 412.7.5.

[F] 412.7.1 Size. The landing area for helicopters less than 3,500 pounds (1588 kg) shall be not less than 20 feet (6096 mm) in length and width. The landing area shall be surrounded on all sides by a clear area having an average width at roof level of 15 feet (4572 mm), and all widths shall be not less than 5 feet (1524 mm).

[F] 412.7.2 Design. Helicopter landing areas and the supports thereof on the roof of a building shall be noncombustible construction. Landing areas shall be designed to

INTERNATIONAL CODE COUNCIL®
Copyright © 2019 ICC & NYSDOS. ALL RIGHTS RESERVED. Accessed by Lauren Gualdino (lgualdino@briarcliffmanor.org), (-) Order Number #100880972 on May 08, 2020 07:05 AM (PDT) pursuant to License Agreement with ICC & NYSDOS. No further reproduction, no

100880972

confine any flammable liquid spillage to the landing area itself and provisions shall be made to drain such spillage away from any *exit* or *stairway* serving the helicopter landing area or from a structure housing such *exit* or *stairway*. For structural design requirements, see Section 1607.6.

412.7.3 Means of egress. The *means of egress* from *heliports* and *helistops* shall comply with the provisions of Chapter 10. Landing areas located on buildings or structures shall have two or more *means of egress*. For landing areas less than 60 feet (18 288 mm) in length or less than 2,000 square feet (186 m^2) in area, the second *means of egress* is permitted to be a fire escape, *alternating tread device* or ladder leading to the floor below.

[F] 412.7.4 Rooftop heliports and helistops. Rooftop *heliports* and *helistops* shall comply with NFPA 418.

[F] 412.7.5 Standpipe system. In buildings equipped with a standpipe system, the standpipe shall extend to the roof level in accordance with Section 905.3.6.

SECTION 413
COMBUSTIBLE STORAGE

413.1 General. High-piled stock or rack storage in any occupancy group shall comply with the *Fire Code of New York State*.

413.2 Attic, under-floor and concealed spaces. *Attic*, under-floor and concealed spaces used for storage of combustible materials shall be protected on the storage side as required for 1-hour fire-resistance-rated construction. Openings shall be protected by assemblies that are *self-closing* and are of noncombustible construction or solid wood core not less than $1^3/_4$ inch (45 mm) in thickness.

Exception: Neither fire-resistance-rated construction nor opening protectives are required in any of the following locations:

1. Areas protected by *approved automatic sprinkler systems*.
2. Group R-3 and U occupancies.

SECTION 414
HAZARDOUS MATERIALS

[F] 414.1 General. The provisions of Sections 414.1 through 414.6 shall apply to buildings and structures occupied for the manufacturing, processing, dispensing, use or storage of hazardous materials.

[F] 414.1.1 Other provisions. Buildings and structures with an occupancy in Group H shall comply with this section and the applicable provisions of Section 415 and the *Fire Code of New York State*.

[F] 414.1.2 Materials. The safe design of hazardous material occupancies is material dependent. Individual material requirements are found in Sections 307 and 415, the *Mechanical Code of New York State* and the *Fire Code of New York State*.

[F] 414.1.2.1 Aerosol products. Level 2 and 3 aerosol products shall be stored and displayed in accordance with the *Fire Code of New York State*. See Section 311.2 and the *Fire Code of New York State* for occupancy group requirements.

[F] 414.1.3 Information required. A report shall be submitted to the *building official* identifying the maximum expected quantities of hazardous materials to be stored, used in a *closed system* and used in an *open system*, and subdivided to separately address hazardous material classification categories based on Tables 307.1(1) and 307.1(2). The methods of protection from such hazards, including but not limited to *control areas*, fire protection systems and Group H occupancies shall be indicated in the report and on the *construction documents*. The opinion and report shall be prepared by a qualified person, firm or corporation *approved* by the *building official* and provided without charge to the enforcing agency.

For buildings and structures with an occupancy in Group H, separate floor plans shall be submitted identifying the locations of anticipated contents and processes so as to reflect the nature of each occupied portion of every building and structure.

[F] 414.2 Control areas. *Control areas* shall comply with Sections 414.2.1 through 414.2.5 and the *Fire Code of New York State*.

Exception: Higher education laboratories in accordance with Section 428 and Chapter 38 of the *Fire Code of New York State*.

[F] 414.2.1 Construction requirements. *Control areas* shall be separated from each other by *fire barriers* constructed in accordance with Section 707 or *horizontal assemblies* constructed in accordance with Section 711, or both.

TABLE 412.6
AIRCRAFT MANUFACTURING EXIT ACCESS TRAVEL DISTANCE

HEIGHT (feet)[b]	MANUFACTURING AREA (sq. ft.)[a]					
	≥ 150,000	≥ 200,000	≥ 250,000	≥ 500,000	≥ 750,000	≥ 1,000,000
≥ 25	400	450	500	500	500	500
≥ 50	400	500	600	700	700	700
≥ 75	400	500	700	850	1,000	1,000
≥ 100	400	500	750	1,000	1,250	1,500

For SI: 1 foot = 304.8 mm.

a. Contiguous floor area of the aircraft manufacturing facility having the indicated height.

b. Minimum height from finished floor to bottom of ceiling or roof slab or deck.

INTERNATIONAL CODE COUNCIL®
Copyright © 2019 ICC & NYSDOS. ALL RIGHTS RESERVED. Accessed by Lauren Gualdino (lgualdino@briarcliffmanor.org), (-) Order Number #100880972 on May 08, 2020 07:05 AM (PDT) pursuant to License Agreement with ICC & NYSDOS. No further reproduction, no

100880972

[F] 414.2.2 Percentage of maximum allowable quantities. The percentage of maximum allowable quantities of hazardous materials per *control area* permitted at each floor level within a building shall be in accordance with Table 414.2.2.

[F] 414.2.3 Number. The maximum number of *control areas* within a building shall be in accordance with Table 414.2.2.

[F] 414.2.4 Fire-resistance rating requirements. The required *fire-resistance rating* for *fire barriers* shall be in accordance with Table 414.2.2. The floor assembly of the *control area* and the construction supporting the floor of the *control area* shall have a *fire-resistance rating* of not less than 2 hours.

Exception: The floor assembly of the *control area* and the construction supporting the floor of the *control area* are allowed to be 1-hour fire-resistance-rated in buildings of Types IIA, IIIA, IV and VA construction, provided that both of the following conditions exist:

1. The building is equipped throughout with an *automatic sprinkler system* in accordance with Section 903.3.1.1.
2. The building is three or fewer *stories above grade plane*.

[F] 414.2.5 Hazardous material in Group M display and storage areas and in Group S storage areas. Hazardous materials located in Group M and Group S occupancies shall be in accordance with Sections 414.2.5.1 through 414.2.5.3.

[F] 414.2.5.1 Nonflammable solids and nonflammable and noncombustible liquids. The aggregate quantity of nonflammable solid and nonflammable or noncombustible liquid hazardous materials permitted within a single *control* area of a Group M display and storage area, a Group S storage area or an outdoor *control* area is permitted to exceed the maximum allowable quantities per *control area* specified in Tables 307.1(1) and 307.1(2) without classifying the building or use as a Group H occupancy, provided that the materials are displayed and stored in accordance with the *Fire Code of New York State* and quantities do not exceed the maximum allowable specified in Table 414.2.5(1).

[F] 414.2.5.2 Flammable and combustible liquids. In Group M occupancy wholesale and retail sales uses, indoor storage of flammable and combustible liquids shall not exceed the maximum allowable quantities per control area as indicated in Table 414.2.5(2), provided that the materials are displayed and stored in accordance with the *Fire Code of New York State*.

[F] 414.2.5.3 Aerosol products. The maximum quantity of aerosol products in Group M occupancy retail display areas, storage areas adjacent to retail display areas and retail storage areas shall be in accordance with the *Fire Code of New York State*.

[F] 414.3 Ventilation. Rooms, areas or spaces in which explosive, corrosive, combustible, flammable or highly toxic dusts, mists, fumes, vapors or gases are or have the potential to be emitted due to the processing, use, handling or storage of materials shall be mechanically ventilated where required by this code, the *Fire Code of New York State* or the *Mechanical Code of New York State*.

Emissions generated at workstations shall be confined to the area in which they are generated as specified in the *Fire Code of New York State* and the *Mechanical Code of New York State*.

[F] 414.4 Hazardous material systems. Systems involving hazardous materials shall be suitable for the intended application. Controls shall be designed to prevent materials from entering or leaving process or reaction systems at other than the intended time, rate or path. Automatic controls, where provided, shall be designed to be fail safe.

[F] 414.5 Inside storage, dispensing and use. The inside storage, dispensing and use of hazardous materials shall be in accordance with Sections 414.5.1 through 414.5.3 of this code and the *Fire Code of New York State*.

[F] TABLE 414.2.2
DESIGN AND NUMBER OF CONTROL AREAS

STORY		PERCENTAGE OF THE MAXIMUM ALLOWABLE QUANTITY PER CONTROL AREA[a]	NUMBER OF CONTROL AREAS PER STORY	FIRE-RESISTANCE RATING FOR FIRE BARRIERS IN HOURS[b]
Above grade plane	Higher than 9	5	1	2
	7–9	5	2	2
	6	12.5	2	2
	5	12.5	2	2
	4	12.5	2	2
	3	50	2	1
	2	75	3	1
	1	100	4	1
Below grade plane	1	75	3	1
	2	50	2	1
	Lower than 2	Not Allowed	Not Allowed	Not Allowed

a. Percentages shall be of the maximum allowable quantity per control area shown in Tables 307.1(1) and 307.1(2), with all increases allowed in the notes to those tables.

b. Separation shall include fire barriers and horizontal assemblies as necessary to provide separation from other portions of the building.

INTERNATIONAL CODE COUNCIL®
Copyright © 2019 ICC & NYSDOS. ALL RIGHTS RESERVED. Accessed by Lauren Gualdino (lgualdino@briarcliffmanor.org), (-) Order Number #100880972 on May 08, 2020 07:05 AM (PDT) pursuant to License Agreement with ICC & NYSDOS. No further reproduction, no

100880972

[F] 414.5.1 Explosion control. Explosion control shall be provided in accordance with the *Fire Code of New York State* as required by Table 414.5.1 where quantities of hazardous materials specified in that table exceed the maximum allowable quantities in Table 307.1(1) or where a structure, room or space is occupied for purposes involving explosion hazards as required by Section 415 or the *Fire Code of New York State*.

[F] 414.5.2 Emergency or standby power. Where required by the *Fire Code of New York State* or this code, mechanical ventilation, treatment systems, temperature control, alarm, detection or other electrically operated systems shall be provided with emergency or standby power in accordance with Section 2702. For storage and use areas for highly toxic or toxic materials, see Sections 6004.2.2.8 and 6004.3.4.2 of the *Fire Code of New York State*.

[F] 414.5.2.1 Exempt applications. Emergency or standby power is not required for the mechanical ventilation systems provided for any of the following:

1. Storage of Class IB and IC flammable and combustible liquids in closed containers not exceeding 6.5 gallons (25 L) capacity.
2. Storage of Class 1 and 2 oxidizers.
3. Storage of Class II, III, IV and V organic peroxides.
4. Storage of asphyxiant, irritant and radioactive gases.

[F] 414.5.2.2 Fail-safe engineered systems. Standby power for mechanical ventilation, treatment systems and temperature control systems shall not be required where an approved fail-safe engineered system is installed.

[F] TABLE 414.2.5(1)
MAXIMUM ALLOWABLE QUANTITY PER INDOOR AND OUTDOOR CONTROL AREA IN GROUP M AND S OCCUPANCIES
NONFLAMMABLE SOLIDS AND NONFLAMMABLE AND NONCOMBUSTIBLE LIQUIDS[d, e, f]

CONDITION		MAXIMUM ALLOWABLE QUANTITY PER CONTROL AREA	
Material[a]	Class	Solids pounds	Liquids gallons
A. Health-hazard materials—nonflammable and noncombustible solids and liquids			
1. Corrosives[b, c]	Not Applicable	9,750	975
2. Highly toxics	Not Applicable	20[b, c]	2[b, c]
3. Toxics[b, c]	Not Applicable	1,000	100
B. Physical-hazard materials—nonflammable and noncombustible solids and liquids			
1. Oxidizers[b, c]	4	Not Allowed	Not Allowed
	3	1,350[g]	115
	2	2,250[h]	225
	1	18,000[i, j]	1,800[i, j]
2. Unstable (reactives)[b, c]	4	Not Allowed	Not Allowed
	3	550	55
	2	1,150	115
	1	Not Limited	Not Limited
3. Water reactives	3[b, c]	550	55
	2[b, c]	1,150	115
	1	Not Limited	Not Limited

For SI: 1 pound = 0.454 kg, 1 gallon = 3.785 L.

a. Hazard categories are as specified in the *Fire Code of New York State*.

b. Maximum allowable quantities shall be increased 100 percent in buildings that are sprinklered in accordance with Section 903.3.1.1. Where Note c also applies, the increase for both notes shall be applied accumulatively.

c. Maximum allowable quantities shall be increased 100 percent where stored in approved storage cabinets, in accordance with the *Fire Code of New York State*. Where Note b also applies, the increase for both notes shall be applied accumulatively.

d. See Table 414.2.2 for design and number of control areas.

e. Allowable quantities for other hazardous material categories shall be in accordance with Section 307.

f. Maximum quantities shall be increased 100 percent in outdoor control areas.

g. Maximum amounts shall be increased to 2,250 pounds where individual packages are in the original sealed containers from the manufacturer or packager and do not exceed 10 pounds each.

h. Maximum amounts shall be increased to 4,500 pounds where individual packages are in the original sealed containers from the manufacturer or packager and do not exceed 10 pounds each.

i. The permitted quantities shall not be limited in a building equipped throughout with an automatic sprinkler system in accordance with Section 903.3.1.1.

j. Quantities are unlimited in an outdoor control area.

INTERNATIONAL CODE COUNCIL®
Copyright © 2019 ICC & NYSDOS. ALL RIGHTS RESERVED. Accessed by Lauren Gualdino (lgualdino@briarcliffmanor.org), (-) Order Number #100880972 on May 08, 2020 07:05 AM (PDT) pursuant to License Agreement with ICC & NYSDOS. No further reproduction, no

100880972

TABLE 414.2.5(2)
MAXIMUM ALLOWABLE QUANTITY OF FLAMMABLE AND COMBUSTIBLE LIQUIDS IN WHOLESALE AND RETAIL SALES OCCUPANCIES PER CONTROL AREA[a]

TYPE OF LIQUID	MAXIMUM ALLOWABLE QUANTITY PER CONTROL AREA (gallons)		
	Sprinklered in accordance with note b densities and arrangements	Sprinklered in accordance with Tables 5704.3.6.3(4) through 5704.3.6.3(8) and 5704.3.7.5.1 of the *Fire Code of New York State*	Nonsprinklered
Class IA	60	60	30
Class IB, IC, II and IIIA	7,500[c]	15,000[c]	1,600
Class IIIB	Unlimited	Unlimited	13,200

For SI: 1 foot = 304.8 mm, 1 square foot = 0.0929 m^2, 1 gallon = 3.785 L, 1 gallon per minute per square foot = 40.75 L/min/m^2.

a. Control areas shall be separated from each other by not less than a 1-hour fire barrier wall.

b. To be considered as sprinklered, a building shall be equipped throughout with an approved automatic sprinkler system with a design providing minimum densities as follows:
   1. For uncartoned commodities on shelves 6 feet or less in height where the ceiling height does not exceed 18 feet, quantities are those permitted with a minimum sprinkler design density of Ordinary Hazard Group 2.
   2. For cartoned, palletized or racked commodities where storage is 4 feet 6 inches or less in height and where the ceiling height does not exceed 18 feet, quantities are those permitted with a minimum sprinkler design density of 0.21 gallon per minute per square foot over the most remote 1,500-square-foot area.

c. Where wholesale and retail sales or storage areas exceed 50,000 square feet in area, the maximum allowable quantities are allowed to be increased by 2 percent for each 1,000 square feet of area in excess of 50,000 square feet, up to not more than 100 percent of the table amounts. A control area separation is not required. The cumulative amounts, including amounts attained by having an additional control area, shall not exceed 30,000 gallons.

[F] 414.5.3 Spill control, drainage and containment. Rooms, buildings or areas occupied for the storage of solid and liquid hazardous materials shall be provided with a means to control spillage and to contain or drain off spillage and fire protection water discharged in the storage area where required in the *Fire Code of New York State*. The methods of spill control shall be in accordance with the *Fire Code of New York State*.

[F] 414.6 Outdoor storage, dispensing and use. The outdoor storage, dispensing and use of hazardous materials shall be in accordance with the *Fire Code of New York State*.

[F] 414.6.1 Weather protection. Where weather protection is provided for sheltering outdoor hazardous material storage or use areas, such areas shall be considered outdoor storage or use where the weather protection structure complies with Sections 414.6.1.1 through 414.6.1.3.

[F] 414.6.1.1 Walls. Walls shall not obstruct more than one side of the structure.

Exception: Walls shall be permitted to obstruct portions of multiple sides of the structure, provided that the obstructed area is not greater than 25 percent of the structure's perimeter.

[F] 414.6.1.2 Separation distance. The distance from the structure to buildings, *lot lines*, *public ways* or *means of egress* to a *public way* shall be not less than the distance required for an outside hazardous material storage or use area without weather protection.

[F] 414.6.1.3 Noncombustible construction. The overhead structure shall be of *approved* noncombustible construction with a maximum area of 1,500 square feet (140 m^2).

Exception: The maximum area is permitted to be increased as provided by Section 506.

SECTION 415
GROUPS H-1, H-2, H-3, H-4 AND H-5

[F] 415.1 General. The provisions of Sections 415.1 through 415.11 shall apply to the storage and use of hazardous materials in excess of the maximum allowable quantities per *control area* listed in Section 307.1.

[F] 415.2 Compliance. Buildings and structures with an occupancy in Group H shall comply with the applicable provisions of Section 414 and the *Fire Code of New York State.*

[F] 415.3 Automatic fire detection systems. Group H occupancies shall be provided with an automatic fire detection system in accordance with Section 907.2.

[F] 415.4 Automatic sprinkler system. Group H occupancies shall be equipped throughout with an *automatic sprinkler system* in accordance with Section 903.2.5.

[F] 415.5 Emergency alarms. Emergency alarms for the detection and notification of an emergency condition in Group H occupancies shall be provided as set forth herein.

[F] 415.5.1 Storage. An approved manual emergency alarm system shall be provided in buildings, rooms or areas used for storage of hazardous materials. Emergency alarm-initiating devices shall be installed outside of each interior exit or exit access door of storage buildings, rooms or areas. Activation of an emergency alarm-initiating device shall sound a local alarm to alert occupants of an emergency situation involving hazardous materials.

[F] 415.5.2 Dispensing, use and handling. Where hazardous materials having a hazard ranking of 3 or 4 in accordance with NFPA 704 are transported through corridors, interior exit stairways or ramps, or exit passageways, there shall be an emergency telephone system, a local manual alarm station or an approved alarm-initiating device at not more than 150-foot (45 720 mm) intervals and at each exit and exit access doorway throughout the

INTERNATIONAL CODE COUNCIL®
Copyright © 2019 ICC & NYSDOS. ALL RIGHTS RESERVED. Accessed by Lauren Gualdino (lgualdino@briarcliffmanor.org), (-) Order Number #100880972 on May 08, 2020 07:05 AM (PDT) pursuant to License Agreement with ICC & NYSDOS. No further reproduction, no

100880972

transport route. The signal shall be relayed to an approved central, proprietary or remote station service or constantly attended on-site location and shall initiate a local audible alarm.

[F] 415.5.3 Supervision. Emergency alarm systems required by Section 415.5.1 or 415.5.2 shall be electrically supervised and monitored by an approved central, proprietary or remote station service or shall initiate an audible and visual signal at a constantly attended on-site location.

[F] 415.5.4 Emergency alarm systems. *Emergency alarm systems* required by Section 415.5.1 or 415.5.2 shall be provided with emergency or standby power in accordance with Section 2702.2.

[F] 415.6 Fire separation distance. Group H occupancies shall be located on property in accordance with the other provisions of this chapter. In Groups H-2 and H-3, not less than 25 percent of the perimeter wall of the occupancy shall be an *exterior wall*.

Exceptions:

1. *Liquid use, dispensing and mixing rooms* having a floor area of not more than 500 square feet (46.5 m^2) need not be located on the outer perimeter of the building where they are in accordance with the *Fire Code of New York State* and NFPA 30.

[F] TABLE 414.5.1
EXPLOSION CONTROL REQUIREMENTS[a, h]

MATERIAL	CLASS	EXPLOSION CONTROL METHODS	
		Barricade construction	Explosion (deflagration) venting or explosion (deflagration) prevention systems[b]
HAZARD CATEGORY			
Combustible dusts[c]	—	Not Required	Required
Cryogenic flammables	—	Not Required	Required
Explosives	Division 1.1 Division 1.2 Division 1.3 Division 1.4 Division 1.5 Division 1.6	Required Required Not Required Not Required Required Required	Not Required Not Required Required Required Not Required Not Required
Flammable gas	Gaseous Liquefied	Not Required Not Required	Required Required
Flammable liquid	IA[d] IB[e]	Not Required Not Required	Required Required
Organic peroxides	U I	Required Required	Not Permitted Not Permitted
Oxidizer liquids and solids	4	Required	Not Permitted
Pyrophoric gas	—	Not Required	Required
Unstable (reactive)	4 3 Detonable 3 Nondetonable	Required Required Not Required	Not Permitted Not Permitted Required
Water-reactive liquids and solids	3 2[g]	Not Required Not Required	Required Required
SPECIAL USES			
Acetylene generator rooms	—	Not Required	Required
Grain processing	—	Not Required	Required
Liquefied petroleum gas-distribution facilities	—	Not Required	Required
Where explosion hazards exist[f]	Detonation Deflagration	Required Not Required	Not Permitted Required

a. See Section 414.1.3.
b. See the *Fire Code of New York State*.
c. As generated during manufacturing or processing.
d. Storage or use.
e. In open use or dispensing.
f. Rooms containing dispensing and use of hazardous materials where an explosive environment can occur because of the characteristics or nature of the hazardous materials or as a result of the dispensing or use process.
g. A method of explosion control shall be provided where Class 2 water-reactive materials can form potentially explosive mixtures.
h. Explosion venting is not required for Group H-5 fabrication areas complying with Section 415.11.1 and the *Fire Code of New York State.*

INTERNATIONAL CODE COUNCIL®
Copyright © 2019 ICC & NYSDOS. ALL RIGHTS RESERVED. Accessed by Lauren Gualdino (lgualdino@briarcliffmanor.org), (-) Order Number #100880972 on May 08, 2020 07:05 AM (PDT) pursuant to License Agreement with ICC & NYSDOS. No further reproduction, no

100880972

2. *Liquid storage rooms* having a floor area of not more than 1,000 square feet (93 m^2) need not be located on the outer perimeter where they are in accordance with the *Fire Code of New York State* and NFPA 30.
3. Spray paint booths that comply with the *Fire Code of New York State* need not be located on the outer perimeter.

[F] 415.6.1 Group H occupancy minimum fire separation distance. Regardless of any other provisions, buildings containing Group H occupancies shall be set back to the minimum *fire separation distance* as set forth in Sections 415.6.1.1 through 415.6.1.4. Distances shall be measured from the walls enclosing the occupancy to *lot lines*, including those on a public way. Distances to assumed *lot lines* established for the purpose of determining exterior wall and opening protection are not to be used to establish the minimum *fire separation distance* for buildings on sites where explosives are manufactured or used where separation is provided in accordance with the quantity distance tables specified for explosive materials in the *Fire Code of New York State*.

[F] 415.6.1.1 Group H-1. Group H-1 occupancies shall be set back not less than 75 feet (22 860 mm) and not less than required by the *Fire Code of New York State*.

Exception: Fireworks manufacturing buildings separated in accordance with NFPA 1124.

[F] 415.6.1.2 Group H-2. Group H-2 occupancies shall be set back not less than 30 feet (9144 mm) where the area of the occupancy is greater than 1,000 square feet (93 m^2) and it is not required to be located in a *detached building*.

[F] 415.6.1.3 Groups H-2 and H-3. Group H-2 and H-3 occupancies shall be set back not less than 50 feet (15 240 mm) where a *detached building* is required (see Table 415.6.2).

[F] 415.6.1.4 Explosive materials. Group H-2 and H-3 occupancies containing materials with explosive characteristics shall be separated as required by the *Fire Code of New York State*. Where separations are not specified, the distances required shall be determined by a technical report issued in accordance with Section 414.1.3.

[F] 415.6.2 Detached buildings for Group H-1, H-2 or H-3 occupancy. The storage or use of hazardous materials in excess of those amounts listed in Table 415.6.2 shall be in accordance with the applicable provisions of Sections 415.7 and 415.8.

[F] 415.6.2.1 Wall and opening protection. Where a *detached building* is required by Table 415.6.2, wall and opening protection based on *fire separation distance* is not required.

[F] 415.7 Special provisions for Group H-1 occupancies. Group H-1 occupancies shall be in detached buildings not used for other purposes. Roofs shall be of lightweight construction with suitable thermal insulation to prevent sensitive material from reaching its decomposition temperature. Group H-1 occupancies containing materials that are in themselves both physical and health hazards in quantities exceeding the maximum allowable quantities per *control area* in Table 307.1(2) shall comply with requirements for both Group H-1 and H-4 occupancies.

[F] 415.7.1 Floors in storage rooms. Floors in storage areas for organic peroxides, pyrophoric materials and unstable (reactive) materials shall be of liquid-tight, noncombustible construction.

[F] 415.8 Special provisions for Group H-2 and H-3 occupancies. Group H-2 and H-3 occupancies containing quantities of hazardous materials in excess of those set forth in Table 415.6.2 shall be in *detached buildings* used for manufacturing, processing, dispensing, use or storage of hazardous materials. Materials listed for Group H-1 occupancies in Section 307.3 are permitted to be located within Group H-2 or H-3 *detached buildings* provided that the amount of materials per *control area* do not exceed the maximum allowed quantity specified in Table 307.1(1).

[F] 415.8.1 Multiple hazards. Group H-2 or H-3 occupancies containing materials that are in themselves both physical and health hazards in quantities exceeding the maximum allowable quantities per *control area* in Table 307.1(2) shall comply with requirements for Group H-2, H-3 or H-4 occupancies as applicable.

[F] 415.8.2 Separation of incompatible materials. Hazardous materials other than those listed in Table 415.6.2 shall be allowed in manufacturing, processing, dispensing, use or storage areas when separated from incompatible materials in accordance with the provisions of the *Fire Code of New York State.*

[F] 415.8.3 Water reactives. Group H-2 and H-3 occupancies containing water-reactive materials shall be resistant to water penetration. Piping for conveying liquids shall not be over or through areas containing water reactives, unless isolated by *approved* liquid-tight construction.

Exception: Fire protection piping shall be permitted over or through areas containing water reactives without isolating it with liquid-tight construction.

[F] 415.8.4 Floors in storage rooms. Floors in storage areas for organic peroxides, oxidizers, pyrophoric materials, unstable (reactive) materials and water-reactive solids and liquids shall be of liquid-tight, noncombustible construction.

[F] 415.8.5 Waterproof room. Rooms or areas used for the storage of water-reactive solids and liquids shall be constructed in a manner that resists the penetration of water through the use of waterproof materials. Piping carrying water for other than *approved automatic sprinkler systems* shall not be within such rooms or areas.

[F] 415.9 Group H-2. Occupancies in Group H-2 shall be constructed in accordance with Sections 415.9.1 through 415.9.3 and the *Fire Code of New York State*.

[F] 415.9.1 Flammable and combustible liquids. The storage, handling, processing and transporting of flammable and combustible liquids in Group H-2 and H-3 occu-

INTERNATIONAL CODE COUNCIL®
Copyright © 2019 ICC & NYSDOS. ALL RIGHTS RESERVED. Accessed by Lauren Gualdino (lgualdino@briarcliffmanor.org), (-) Order Number #100880972 on May 08, 2020 07:05 AM (PDT) pursuant to License Agreement with ICC & NYSDOS. No further reproduction, no

100880972

pancies shall be in accordance with Sections 415.9.1.1 through 415.9.1.9, the *Mechanical Code of New York State* and the *Fire Code of New York State*.

[F] 415.9.1.1 Mixed occupancies. Where the storage tank area is located in a building of two or more occupancies and the quantity of liquid exceeds the maximum allowable quantity for one *control area*, the use shall be completely separated from adjacent occupancies in accordance with the requirements of Section 508.4.

[F] 415.9.1.1.1 Height exception. Where storage tanks are located within a building not more than one story above grade plane, the height limitation of Section 504 shall not apply for Group H.

[F] 415.9.1.2 Tank protection. Storage tanks shall be noncombustible and protected from physical damage. *Fire barriers* or *horizontal assemblies* or both around the storage tanks shall be permitted as the method of protection from physical damage.

[F] 415.9.1.3 Tanks. Storage tanks shall be *approved* tanks conforming to the requirements of the *Fire Code of New York State*.

[F] 415.9.1.4 Leakage containment. A liquid-tight containment area compatible with the stored liquid shall be provided. The method of spill control, drainage control and secondary containment shall be in accordance with the *Fire Code of New York State*.

Exception: Rooms where only double-wall storage tanks conforming to Section 415.9.1.3 are used to store Class I, II and IIIA flammable and combustible liquids shall not be required to have a leakage containment area.

[F] 415.9.1.5 Leakage alarm. An *approved* automatic alarm shall be provided to indicate a leak in a storage tank and room. The alarm shall sound an audible signal, 15 dBa above the ambient sound level, at every point of entry into the room in which the leaking storage tank is located. An *approved* sign shall be posted on every entry door to the tank storage room indicating the potential hazard of the interior room environment, or the sign shall state: WARNING, WHEN ALARM SOUNDS, THE ENVIRONMENT WITHIN THE ROOM MAY BE HAZARDOUS. The leakage alarm shall be supervised in accordance with Chapter 9 to transmit a trouble signal.

[F] 415.9.1.6 Tank vent. Storage tank vents for Class I, II or IIIA liquids shall terminate to the outdoor air in accordance with the *Fire Code of New York State*.

[F] 415.9.1.7 Room ventilation. Storage tank areas storing Class I, II or IIIA liquids shall be provided with mechanical *ventilation*. The mechanical *ventila-*

[F] TABLE 415.6.2
DETACHED BUILDING REQUIRED

A DETACHED BUILDING IS REQUIRED WHERE THE QUANTITY OF MATERIAL EXCEEDS THAT LISTED HEREIN			
Material	**Class**	**Solids and Liquids (tons)[a, b]**	**Gases (cubic feet)[a, b]**
Explosives	Division 1.1 Division 1.2 Division 1.3 Division 1.4 Division 1.4[c] Division 1.5 Division 1.6	Maximum Allowable Quantity Maximum Allowable Quantity Maximum Allowable Quantity Maximum Allowable Quantity 1 Maximum Allowable Quantity Maximum Allowable Quantity	Not Applicable
Oxidizers	Class 4	Maximum Allowable Quantity	Maximum Allowable Quantity
Unstable (reactives) detonable	Class 3 or 4	Maximum Allowable Quantity	Maximum Allowable Quantity
Oxidizer, liquids and solids	Class 3 Class 2	1,200 2,000	Not Applicable Not Applicable
Organic peroxides	Detonable Class I Class II Class III	Maximum Allowable Quantity Maximum Allowable Quantity 25 50	Not Applicable Not Applicable Not Applicable Not Applicable
Unstable (reactives) nondetonable	Class 3 Class 2	1 25	2,000 10,000
Water reactives	Class 3 Class 2	1 25	Not Applicable Not Applicable
Pyrophoric gases	Not Applicable	Not Applicable	2,000

For SI: 1 ton = 906 kg, 1 cubic foot = 0.02832 m^3, 1 pound = 0.454 kg.

a. For materials that are detonable, the distance to other buildings or lot lines shall be in accordance with Section 415.6 of this code or Chapter 56 of the *Fire Code of New York State* based on trinitrotoluene (TNT) equivalence of the material, whichever is greater.

b. "Maximum Allowable Quantity" means the maximum allowable quantity per control area set forth in Table 307.1(1).

c. Limited to Division 1.4 materials and articles, including articles packaged for shipment, that are not regulated as an explosive under Bureau of Alcohol, Tobacco, Firearms and Explosives (BATF) regulations or unpackaged articles used in process operations that do not propagate a detonation or deflagration between articles, provided that the net explosive weight of individual articles does not exceed 1 pound.

INTERNATIONAL CODE COUNCIL®
Copyright © 2019 ICC & NYSDOS. ALL RIGHTS RESERVED. Accessed by Lauren Gualdino (lgualdino@briarcliffmanor.org), (-) Order Number #100880972 on May 08, 2020 07:05 AM (PDT) pursuant to License Agreement with ICC & NYSDOS. No further reproduction, no

100880972

tion system shall be in accordance with the *Mechanical Code of New York State* and the *Fire Code of New York State*.

[F] 415.9.1.8 Explosion venting. Where Class I liquids are being stored, explosion venting shall be provided in accordance with the *Fire Code of New York State*.

[F] 415.9.1.9 Tank openings other than vents. Tank openings other than vents from tanks inside buildings shall be designed to ensure that liquids or vapor concentrations are not released inside the building.

[F] 415.9.2 Liquefied petroleum gas facilities. The construction and installation of liquefied petroleum gas facilities shall be in accordance with the requirements of this code, the *Fire Code of New York State,* the *Mechanical Code of New York State*, the *Fuel Gas Code of New York State* and NFPA 58.

[F] 415.9.3 Dry cleaning plants. The construction and installation of dry cleaning plants shall be in accordance with the requirements of this code, the *Mechanical Code of New York State*, the *Plumbing Code of New York State* and NFPA 32. Dry cleaning solvents and systems shall be classified in accordance with the *Fire Code of New York State*.

[F] 415.10 Groups H-3 and H-4. Groups H-3 and H-4 shall be constructed in accordance with the applicable provisions of this code and the *Fire Code of New York State*.

[F] 415.10.1 Flammable and combustible liquids. The storage, handling, processing and transporting of flammable and combustible liquids in Group H-3 occupancies shall be in accordance with Section 415.9.1.

[F] 415.10.2 Gas rooms. Where gas rooms are provided, such rooms shall be separated from other areas by not less than 1-hour *fire barriers* constructed in accordance with Section 707 or *horizontal assemblies* constructed in accordance with Section 711, or both.

[F] 415.10.3 Floors in storage rooms. Floors in storage areas for corrosive liquids and highly toxic or toxic materials shall be of liquid-tight, noncombustible construction.

[F] 415.10.4 Separation of highly toxic solids and liquids. Highly toxic solids and liquids not stored in *approved* hazardous materials storage cabinets shall be isolated from other hazardous materials storage by not less than 1-hour *fire barriers* constructed in accordance with Section 707 or *horizontal assemblies* constructed in accordance with Section 711, or both.

[F] 415.11 Group H-5. In addition to the requirements set forth elsewhere in this code, Group H-5 shall comply with the provisions of Sections 415.11.1 through 415.11.11 and the *Fire Code of New York State.*

[F] 415.11.1 Fabrication areas. *Fabrication areas* shall comply with Sections 415.11.1.1 through 415.11.1.8.

[F] 415.11.1.1 Hazardous materials. Hazardous materials and hazardous production materials (HPM) shall comply with Sections 415.11.1.1.1 and 415.11.1.1.2.

[F] 415.11.1.1.1 Aggregate quantities. The aggregate quantities of hazardous materials stored and used in a single *fabrication area* shall not exceed the quantities set forth in Table 415.11.1.1.1.

Exception: The quantity limitations for any hazard category in Table 415.11.1.1.1 shall not apply where the *fabrication area* contains quantities of hazardous materials not exceeding the maximum allowable quantities per *control area* established by Tables 307.1(1) and 307.1(2).

[F] 415.11.1.1.2 Hazardous production materials. The maximum quantities of hazardous production materials (HPM) stored in a single *fabrication area* shall not exceed the maximum allowable quantities per *control area* established by Tables 307.1(1) and 307.1(2).

[F] 415.11.1.2 Separation. *Fabrication areas*, whose sizes are limited by the quantity of hazardous materials allowed by Table 415.11.1.1.1, shall be separated from each other, from *corridors* and from other parts of the building by not less than 1-hour *fire barriers* constructed in accordance with Section 707 or *horizontal assemblies* constructed in accordance with Section 711, or both.

Exceptions:

1. Doors within such *fire barrier* walls, including doors to *corridors*, shall be only *self-closing fire door assemblies* having a *fire protection rating* of not less than $^3/_4$ hour.
2. Windows between *fabrication areas* and *corridors* are permitted to be fixed glazing *listed* and labeled for a *fire protection rating* of not less than $^3/_4$ hour in accordance with Section 716.

[F] 415.11.1.3 Location of occupied levels. Occupied levels of *fabrication areas* shall be located at or above the first *story above grade plane*.

[F] 415.11.1.4 Floors. Except for surfacing, floors within *fabrication areas* shall be of noncombustible construction.

Openings through floors of *fabrication areas* are permitted to be unprotected where the interconnected levels are used solely for mechanical equipment directly related to such *fabrication areas (*see Section 415.11.1.5).

Floors forming a part of an occupancy separation shall be liquid tight.

[F] 415.11.1.5 Shafts and openings through floors. Elevator hoistways, vent *shafts* and other openings through floors shall be enclosed where required by Sections 712 and 713. Mechanical, duct and piping penetrations within a *fabrication area* shall not extend through more than two floors. The *annular space* around penetrations for cables, cable trays, tubing, piping, conduit or ducts shall be sealed at the floor level to restrict the movement of air. The *fabrication area*,

INTERNATIONAL CODE COUNCIL®
Copyright © 2019 ICC & NYSDOS. ALL RIGHTS RESERVED. Accessed by Lauren Gualdino (lgualdino@briarcliffmanor.org), (-) Order Number #100880972 on May 08, 2020 07:05 AM (PDT) pursuant to License Agreement with ICC & NYSDOS. No further reproduction, no

100880972

[F] TABLE 415.11.1.1.1
QUANTITY LIMITS FOR HAZARDOUS MATERIALS IN A SINGLE FABRICATION AREA IN GROUP H-5[a]

HAZARD CATEGORY		SOLIDS (pounds per square foot)	LIQUIDS (gallons per square foot)	GAS (cubic feet @ NTP/square foot)
PHYSICAL-HAZARD MATERIALS				
Combustible dust		Note b	Not Applicable	Not Applicable
Combustible fiber	Loose Baled	Note b Notes b and c	Not Applicable	Not Applicable
Combustible liquid Combination Class	II IIIA IIIB I, II and IIIA	Not Applicable	0.01 0.02 Not Limited 0.04	Not Applicable
Cryogenic gas	Flammable Oxidizing	Not Applicable	Not Applicable	Note d 1.25
Explosives		Note b	Note b	Note b
Flammable gas	Gaseous Liquefied	Not Applicable	Not Applicable	Note d Note d
Flammable liquid Combination Class Combination Class	IA IB IC IA, IB and IC I, II and IIIA	Not Applicable	0.0025 0.025 0.025 0.025 0.04	Not Applicable
Flammable solid		0.001	Not Applicable	Not Applicable
Organic peroxide	Unclassified detonable Class I Class II Class III Class IV Class V	Note b Note b 0.025 0.1 Not Limited Not Limited	Not Applicable	Not Applicable
Oxidizing gas Combination of gaseous and liquefied	Gaseous Liquefied	Not Applicable	Not Applicable	1.25 1.25 1.25
Oxidizer Combination Class	Class 4 Class 3 Class 2 Class 1 1, 2, 3	Note b 0.003 0.003 0.003 0.003	Note b 0.03 0.03 0.03 0.03	Not Applicable
Pyrophoric materials		0.01	0.00125	Notes d and e
Unstable (reactive)	Class 4 Class 3 Class 2 Class 1	Note b 0.025 0.1 Not Limited	Note b 0.0025 0.01 Not Limited	Note b Note b Note b Not Limited
Water reactive	Class 3 Class 2 Class 1	Note b 0.25 Not Limited	0.00125 0.025 Not Limited	Not Applicable
HEALTH-HAZARD MATERIALS				
Corrosives		Not Limited	Not Limited	Not Limited
Highly toxic		Not Limited	Not Limited	Note d
Toxics		Not Limited	Not Limited	Note d

For SI: 1 pound per square foot = 4.882 kg/m^2, 1 gallon per square foot = 40.7 L/m^2, 1 cubic foot @ NTP/square foot = 0.305 m^3 @ NTP/m^2, 1 cubic foot = 0.02832 m^3.

a. Hazardous materials within piping shall not be included in the calculated quantities.

b. Quantity of hazardous materials in a single fabrication shall not exceed the maximum allowable quantities per control area in Tables 307.1(1) and 307.1(2).

c. Densely packed baled cotton that complies with the packing requirements of ISO 8115 shall not be included in this material class.

d. The aggregate quantity of flammable, pyrophoric, toxic and highly toxic gases shall not exceed the greater of 0.2 cubic feet at NTP/square foot or 9,000 cubic feet at NTP.

e. The aggregate quantity of pyrophoric gases in the building shall not exceed the amounts set forth in Table 415.6.2.

INTERNATIONAL CODE COUNCIL®
Copyright © 2019 ICC & NYSDOS. ALL RIGHTS RESERVED. Accessed by Lauren Gualdino (lgualdino@briarcliffmanor.org), (-) Order Number #100880972 on May 08, 2020 07:05 AM (PDT) pursuant to License Agreement with ICC & NYSDOS. No further reproduction, no

100880972

including the areas through which the ductwork and piping extend, shall be considered to be a single conditioned environment.

[F] 415.11.1.6 Ventilation. Mechanical exhaust *ventilation* at the rate of not less than 1 cubic foot per minute per square foot [0.0051 $m^3/(s \cdot m^2)$] of floor area shall be provided throughout the portions of the *fabrication area* where HPM are used or stored. The exhaust air duct system of one *fabrication area* shall not connect to another duct system outside that *fabrication area* within the building.

A *ventilation* system shall be provided to capture and exhaust gases, fumes and vapors at workstations.

Two or more operations at a workstation shall not be connected to the same exhaust system where either one or the combination of the substances removed could constitute a fire, explosion or hazardous chemical reaction within the exhaust duct system.

Exhaust ducts penetrating *fire barriers* constructed in accordance with Section 707 or *horizontal assemblies* constructed in accordance with Section 711 shall be contained in a *shaft* of equivalent fire-resistance-rated construction. Exhaust ducts shall not penetrate *fire walls*.

Fire dampers shall not be installed in exhaust ducts.

[F] 415.11.1.7 Transporting hazardous production materials to fabrication areas. HPM shall be transported to *fabrication areas* through enclosed piping or tubing systems that comply with Section 415.11.6, through *service corridors* complying with Section 415.11.3, or in *corridors* as permitted in the exception to Section 415.11.2. The handling or transporting of HPM within *service corridors* shall comply with the *Fire Code of New York State*.

[F] 415.11.1.8 Electrical. Electrical equipment and devices within the *fabrication area* shall comply with NFPA 70. The requirements for hazardous locations need not be applied where the average air change is not less than four times that set forth in Section 415.11.1.6 and where the number of air changes at any location is not less than three times that required by Section 415.11.1.6. The use of recirculated air shall be permitted.

[F] 415.11.1.8.1 Workstations. Workstations shall not be energized without adequate exhaust *ventilation*. See Section 415.11.1.6 for workstation exhaust *ventilation* requirements.

[F] 415.11.2 Corridors. *Corridors* shall comply with Chapter 10 and shall be separated from *fabrication area*s as specified in Section 415.11.1.2. *Corridors* shall not contain HPM and shall not be used for transporting such materials except through closed piping systems as provided in Section 415.11.6.4.

Exception: Where existing *fabrication areas* are altered or modified, HPM is allowed to be transported in existing *corridors*, subject to the following conditions:

1. Nonproduction HPM is allowed to be transported in *corridors* if utilized for maintenance, lab work and testing.
2. Where existing *fabrication areas* are altered or modified, HPM is allowed to be transported in existing *corridors*, subject to the following conditions:
   - 2.1. Corridors. *Corridors* adjacent to the *fabrication area* where the alteration work is to be done shall comply with Section 1020 for a length determined as follows:
     - 2.1.1. The length of the common wall of the *corridor* and the *fabrication area*; and
     - 2.1.2. For the distance along the *corridor* to the point of entry of HPM into the *corridor* serving that *fabrication area*.
   - 2.2. *Emergency alarm system.* There shall be an emergency telephone system, a local manual alarm station or other *approved* alarm-initiating device within *corridors* at not more than 150-foot (45 720 mm) intervals and at each *exit* and doorway. The signal shall be relayed to an *approved* central, proprietary or remote station service or the emergency control station and shall initiate a local audible alarm.
   - 2.3. Pass-throughs. *Self-closing* doors having a *fire protection rating* of not less than 1 hour shall separate pass-throughs from existing *corridors.* Pass-throughs shall be constructed as required for the *corridors* and protected by an *approved automatic sprinkler system.*

[F] 415.11.3 Service corridors. *Service corridors* within a Group H-5 occupancy shall comply with Sections 415.11.3.1 through 415.11.3.4.

[F] 415.11.3.1 Use conditions. *Service corridors* shall be separated from *corridors* as required by Section 415.11.1.2. *Service corridors* shall not be used as a required *corridor*.

[F] 415.11.3.2 Mechanical ventilation. Service corridors shall be mechanically ventilated as required by Section 415.11.1.6 or at not less than six air changes per hour.

[F] 415.11.3.3 Means of egress. The distance of travel from any point in a *service corridor* to an *exit*, *exit access corridor* or door into a *fabrication area* shall be not greater than 75 feet (22 860 mm). Dead ends shall be not greater than 4 feet (1219 mm) in length. There shall be not less than two *exits*, and not more than one-

INTERNATIONAL CODE COUNCIL®
Copyright © 2019 ICC & NYSDOS. ALL RIGHTS RESERVED. Accessed by Lauren Gualdino (lgualdino@briarcliffmanor.org), (-) Order Number #100880972 on May 08, 2020 07:05 AM (PDT) pursuant to License Agreement with ICC & NYSDOS. No further reproduction, no

100880972

half of the required *means of egress* shall require travel into a *fabrication area*. Doors from *service corridors* shall swing in the direction of egress travel and shall be *self-closing*.

[F] 415.11.3.4 Minimum width. The clear width of a *service corridor* shall be not less than 5 feet (1524 mm), or 33 inches (838 mm) wider than the widest cart or truck used in the *service corridor*, whichever is greater.

[F] 415.11.3.5 Emergency alarm system. *Emergency alarm systems* shall be provided in accordance with this section and Sections 415.5.1 and 415.5.2. The maximum allowable quantity per *control area* provisions shall not apply to *emergency alarm systems* required for HPM.

[F] 415.11.3.5.1 Service corridors. An *emergency alarm system* shall be provided in *service corridors*, with not fewer than one alarm device in each *service corridor*.

[F] 415.11.3.5.2 Corridors and interior exit stairways and ramps. Emergency alarms for *corridors*, *interior exit stairways* and *ramps* and *exit passageways* shall comply with Section 415.5.2.

[F] 415.11.3.5.3 Liquid storage rooms, HPM rooms and gas rooms. Emergency alarms for liquid storage rooms, HPM rooms and gas rooms shall comply with Section 415.5.1.

[F] 415.11.3.5.4 Alarm-initiating devices. An *approved* emergency telephone system, local alarm manual pull stations, or other *approved* alarm-initiating devices are allowed to be used as emergency alarm-initiating devices.

[F] 415.11.3.5.5 Alarm signals. Activation of the *emergency alarm system* shall sound a local alarm and transmit a signal to the emergency control station.

[F] 415.11.4 Storage of hazardous production materials. Storage of hazardous production materials (HPM) in *fabrication areas* shall be within *approved* or *listed* storage cabinets or gas cabinets or within a workstation. The storage of HPM in quantities greater than those listed in Section 5004.2 of the *Fire Code of New York State* shall be in liquid storage rooms, HPM rooms or gas rooms as appropriate for the materials stored. The storage of other hazardous materials shall be in accordance with other applicable provisions of this code and the *Fire Code of New York State*.

[F] 415.11.5 HPM rooms, gas rooms, liquid storage room construction. HPM rooms, gas rooms and liquid shall be constructed in accordance with Sections 415.11.5.1 through 415.11.5.9.

[F] 415.11.5.1 HPM rooms and gas rooms. HPM rooms and gas rooms shall be separated from other areas by *fire barriers* constructed in accordance with Section 707 or *horizontal assemblies* constructed in accordance with Section 711, or both. The *fire-resistance rating* shall be not less than 2 hours where the area is 300 square feet (27.9 m^2) or more and not less than 1 hour where the area is less than 300 square feet (27.9 m^2).

[F] 415.11.5.2 Liquid storage rooms. Liquid storage rooms shall be constructed in accordance with the following requirements:

1. Rooms greater than 500 square feet (46.5 m^2) in area, shall have not fewer than one exterior door *approved* for fire department access.
2. Rooms shall be separated from other areas by *fire barriers* constructed in accordance with Section 707 or *horizontal assemblies* constructed in accordance with Section 711, or both. The *fire-resistance rating* shall be not less than 1 hour for rooms up to 150 square feet (13.9 m^2) in area and not less than 2 hours where the room is more than 150 square feet (13.9 m^2) in area.
3. Shelving, racks and wainscotting in such areas shall be of noncombustible construction or wood of not less than 1-inch (25 mm) nominal thickness or fire-retardant-treated wood complying with Section 2303.2.
4. Rooms used for the storage of Class I flammable liquids shall not be located in a *basement*.

[F] 415.11.5.3 Floors. Except for surfacing, floors of HPM rooms and liquid storage rooms shall be of noncombustible liquid-tight construction. Raised grating over floors shall be of noncombustible materials.

[F] 415.11.5.4 Location. Where HPM rooms, liquid storage rooms and gas rooms are provided, they shall have not fewer than one *exterior wall* and such wall shall be not less than 30 feet (9144 mm) from *lot lines*, including *lot lines* adjacent to *public ways*.

[F] 415.11.5.5 Explosion control. Explosion control shall be provided where required by Section 414.5.1.

[F] 415.11.5.6 Exits. Where two *exits* are required from HPM rooms, liquid storage rooms and gas rooms, one shall be directly to the outside of the building.

[F] 415.11.5.7 Doors. Doors in a *fire barrier* wall, including doors to *corridors*, shall be *self-closing fire door assemblies* having a *fire protection rating* of not less than $^3/_4$ hour.

[F] 415.11.5.8 Ventilation. Mechanical exhaust ventilation shall be provided in liquid storage rooms, HPM rooms and gas rooms at the rate of not less than 1 cubic foot per minute per square foot (0.044 L/s/m^2) of floor area or six air changes per hour.

Exhaust ventilation for gas rooms shall be designed to operate at a negative pressure in relation to the surrounding areas and direct the exhaust ventilation to an exhaust system.

INTERNATIONAL CODE COUNCIL®
Copyright © 2019 ICC & NYSDOS. ALL RIGHTS RESERVED. Accessed by Lauren Gualdino (lgualdino@briarcliffmanor.org), (-) Order Number #100880972 on May 08, 2020 07:05 AM (PDT) pursuant to License Agreement with ICC & NYSDOS. No further reproduction, no

100880972

[F] 415.11.5.9 Emergency alarm system. An *approved emergency alarm system* shall be provided for HPM rooms, liquid storage rooms and gas rooms.

Emergency alarm-initiating devices shall be installed outside of each interior *exit* door of such rooms.

Activation of an emergency alarm-initiating device shall sound a local alarm and transmit a signal to the emergency control station.

An *approved* emergency telephone system, local alarm manual pull stations or other *approved* alarm-initiating devices are allowed to be used as emergency alarm-initiating devices.

[F] 415.11.6 Piping and tubing. Hazardous production materials piping and tubing shall comply with this section and ASME B31.3.

[F] 415.11.6.1 HPM having a health-hazard ranking of 3 or 4. Systems supplying HPM liquids or gases having a health-hazard ranking of 3 or 4 shall be welded throughout, except for connections, to the systems that are within a ventilated enclosure if the material is a gas, or an *approved* method of drainage or containment is provided for the connections if the material is a liquid.

[F] 415.11.6.2 Location in service corridors. Hazardous production materials supply piping or tubing in *service corridors* shall be exposed to view.

[F] 415.11.6.3 Excess flow control. Where HPM gases or liquids are carried in pressurized piping above 15 pounds per square inch gauge (psig) (103.4 kPa), excess flow control shall be provided. Where the piping originates from within a liquid storage room, HPM room or gas room, the excess flow control shall be located within the liquid storage room, HPM room or gas room. Where the piping originates from a bulk source, the excess flow control shall be located as close to the bulk source as practical.

[F] 415.11.6.4 Installations in corridors and above other occupancies. The installation of HPM piping and tubing within the space defined by the walls of *corridors* and the floor or roof above, or in concealed spaces above other occupancies, shall be in accordance with Sections 415.11.6.1 through 415.11.6.3 and the following conditions:

1. Automatic sprinklers shall be installed within the space unless the space is less than 6 inches (152 mm) in the least dimension.
2. *Ventilation* not less than six air changes per hour shall be provided. The space shall not be used to convey air from any other area.
3. Where the piping or tubing is used to transport HPM liquids, a receptor shall be installed below such piping or tubing. The receptor shall be designed to collect any discharge or leakage and drain it to an *approved* location. The 1-hour enclosure shall not be used as part of the receptor.
4. HPM supply piping and tubing and nonmetallic waste lines shall be separated from the corridor and from occupancies other than Group H-5 by fire barriers or by an approved method or assembly that has a fire-resistance rating of not less than 1 hour. Access openings into the enclosure shall be protected by approved fire-protection-rated assemblies.
5. Readily accessible manual or automatic remotely activated fail-safe emergency shutoff valves shall be installed on piping and tubing other than waste lines at the following locations:
    5.1. At branch connections into the *fabrication area*.
    5.2. At entries into *corridors*.

Exception: Transverse crossings of the *corridors* by supply piping that is enclosed within a ferrous pipe or tube for the width of the *corridor* need not comply with Items 1 through 5.

[F] 415.11.6.5 Identification. Piping, tubing and HPM waste lines shall be identified in accordance with ANSI A13.1 to indicate the material being transported.

[F] 415.11.7 Gas detection systems. A gas detection system complying with Section 916 shall be provided for HPM gases where the physiological warning threshold level of the gas is at a higher level than the accepted permissible exposure limit (PEL) for the gas and for flammable gases in accordance with Sections 415.11.7.1 through 415.11.7.2.

[F] 415.11.7.1 Where required. A *gas detection system* shall be provided in the areas identified in Sections 415.11.7.1.1 through 415.11.7.1.4.

[F] 415.11.7.1.1 Fabrication areas. A *gas detection system* shall be provided in *fabrication areas* where HPM gas is used in the *fabrication area*.

[F] 415.11.7.1.2 HPM rooms. A *continuous gas detection system* shall be provided in HPM rooms where HPM gas is used in the room.

[F] 415.11.7.1.3 Gas cabinets, exhausted enclosures and gas rooms. A *gas detection system* shall be provided in gas cabinets and exhausted enclosures for HPM gas. A *gas detection system* shall be provided in gas rooms where HPM gases are not located in gas cabinets or exhausted enclosures.

[F] 415.11.7.1.4 Corridors. Where HPM gases are transported in piping placed within the space defined by the walls of a *corridor* and the floor or roof above the *corridor*, a *gas detection system* shall be provided where piping is located and in the *corridor*.

Exception: A *gas detection system* is not required for occasional transverse crossings of the *corridors* by supply piping that is enclosed in a ferrous pipe or tube for the width of the *corridor*.

INTERNATIONAL CODE COUNCIL®
Copyright © 2019 ICC & NYSDOS. ALL RIGHTS RESERVED. Accessed by Lauren Gualdino (lgualdino@briarcliffmanor.org), (-) Order Number #100880972 on May 08, 2020 07:05 AM (PDT) pursuant to License Agreement with ICC & NYSDOS. No further reproduction, no

100880972

[F] 415.11.7.2 Gas detection system operation. The *gas detection system* shall be capable of monitoring the room, area or equipment in which the HPM gas is located at or below all the following gas concentrations:

1. Immediately dangerous to life and health (IDLH) values where the monitoring point is within an exhausted enclosure, ventilated enclosure or gas cabinet.
2. Permissible exposure limit (PEL) levels where the monitoring point is in an area outside an exhausted enclosure, ventilated enclosure or gas cabinet.
3. For flammable gases, the monitoring detection threshold level shall be vapor concentrations in excess of 25 percent of the lower flammable limit (LFL) where the monitoring is within or outside an exhausted enclosure, ventilated enclosure or gas cabinet.
4. Except as noted in this section, monitoring for highly toxic and toxic gases shall also comply with Chapter 60 of the *Fire Code of New York State*.

[F] 415.11.7.2.1 Alarms. The gas detection system shall initiate a local alarm and transmit a signal to the emergency control station when a short-term hazard condition is detected. The alarm shall be both visual and audible and shall provide warning both inside and outside the area where the gas is detected. The audible alarm shall be distinct from all other alarms.

[F] 415.11.7.2.2 Shutoff of gas supply. The gas detection system shall automatically close the shutoff valve at the source on gas supply piping and tubing related to the system being monitored for which gas is detected when a short-term hazard condition is detected. Automatic closure of shutoff valves shall comply with the following:

1. Where the gas detection sampling point initiating the gas detection system alarm is within a gas cabinet or exhausted enclosure, the shutoff valve in the gas cabinet or exhausted enclosure for the specific gas detected shall automatically close.
2. Where the gas detection sampling point initiating the gas detection system alarm is within a room and compressed gas containers are not in gas cabinets or an exhausted enclosure, the shutoff valves on all gas lines for the specific gas detected shall automatically close.
3. Where the gas detection sampling point initiating the gas detection system alarm is within a piping distribution manifold enclosure, the shutoff valve supplying the manifold for the compressed gas container of the specific gas detected shall automatically close.

Exception: Where the gas detection sampling point initiating the gas detection system alarm is at the use location or within a gas valve enclosure of a branch line downstream of a piping distribution manifold, the shutoff valve for the branch line located in the piping distribution manifold enclosure shall automatically close.

[F] 415.11.8 Manual fire alarm system. An *approved* manual *fire alarm* system shall be provided throughout buildings containing Group H-5. Activation of the alarm system shall initiate a local alarm and transmit a signal to the emergency control station. The *fire alarm* system shall be designed and installed in accordance with Section 907.

[F] 415.11.9 Emergency control station. An emergency control station shall be provided in accordance with Sections 415.11.9.1 through 415.11.9.3.

[F] 415.11.9.1 Location. The emergency control station shall be located on the premises at an *approved* location outside the *fabrication area*.

[F] 415.11.9.2 Staffing. Trained personnel shall continuously staff the emergency control station.

[F] 415.11.9.3 Signals. The emergency control station shall receive signals from emergency equipment and alarm and detection systems. Such emergency equipment and alarm and detection systems shall include, but not be limited to, the following where such equipment or systems are required to be provided either in this chapter or elsewhere in this code:

1. *Automatic sprinkler system* alarm and monitoring systems.
2. Manual *fire alarm* systems.
3. *Emergency alarm systems.*
4. *Gas detection systems.*
5. Smoke detection systems.
6. Emergency power system.
7. Automatic detection and alarm systems for pyrophoric liquids and Class 3 water-reactive liquids required in Section 2705.2.3.4 of the *Fire Code of New York State*.
8. Exhaust *ventilation* flow alarm devices for pyrophoric liquids and Class 3 water-reactive liquids cabinet exhaust *ventilation* systems required in Section 2705.2.3.4 of the *Fire Code of New York State*.

[F] 415.11.10 Emergency power system. An emergency power system shall be provided in Group H-5 occupancies in accordance with Section 2702. The emergency power system shall supply power automatically to the electrical systems specified in Section 415.11.10.1 when the normal electrical supply system is interrupted.

INTERNATIONAL CODE COUNCIL®
Copyright © 2019 ICC & NYSDOS. ALL RIGHTS RESERVED. Accessed by Lauren Gualdino (lgualdino@briarcliffmanor.org), (-) Order Number #100880972 on May 08, 2020 07:05 AM (PDT) pursuant to License Agreement with ICC & NYSDOS. No further reproduction, no

100880972

[F] 415.11.10.1 Required electrical systems. Emergency power shall be provided for electrically operated equipment and connected control circuits for the following systems:

1. HPM exhaust *ventilation* systems.
2. HPM gas cabinet *ventilation* systems.
3. HPM exhausted enclosure *ventilation* systems.
4. HPM gas room *ventilation* systems.
5. HPM gas detection systems.
6. *Emergency alarm systems*.
7. Manual and automatic *fire alarm* systems.
8. *Automatic sprinkler system* monitoring and alarm systems.
9. Automatic alarm and detection systems for pyrophoric liquids and Class 3 water-reactive liquids required in Section 2705.2.3.4 of the *Fire Code of New York State*.
10. Flow alarm switches for pyrophoric liquids and Class 3 water-reactive liquids cabinet exhaust *ventilation* systems required in Section 2705.2.3.4 of the *Fire Code of New York State*.
11. Electrically operated systems required elsewhere in this code or in the *Fire Code of New York State* applicable to the use, storage or handling of HPM.

[F] 415.11.10.2 Exhaust ventilation systems. Exhaust *ventilation* systems are allowed to be designed to operate at not less than one-half the normal fan speed on the emergency power system where it is demonstrated that the level of exhaust will maintain a safe atmosphere.

[F] 415.11.11 Automatic sprinkler system protection in exhaust ducts for HPM. An *approved automatic sprinkler system* shall be provided in exhaust ducts conveying gases, vapors, fumes, mists or dusts generated from HPM in accordance with Sections 415.11.11.1 through 415.11.11.3 and the *Mechanical Code of New York State*.

[F] 415.11.11.1 Metallic and noncombustible nonmetallic exhaust ducts. An *approved automatic sprinkler system* shall be provided in metallic and noncombustible nonmetallic exhaust ducts where all of the following conditions apply:

1. Where the largest cross-sectional diameter is equal to or greater than 10 inches (254 mm).
2. The ducts are within the building.
3. The ducts are conveying flammable gases, vapors or fumes.

[F] 415.11.11.2 Combustible nonmetallic exhaust ducts. *Automatic sprinkler system* protection shall be provided in combustible nonmetallic exhaust ducts where the largest cross-sectional diameter of the duct is equal to or greater than 10 inches (254 mm).

Exception: Ducts need not be provided with automatic sprinkler protection as follows:

1. Ducts *listed* or *approved* for applications without *automatic sprinkler system* protection.
2. Ducts not more than 12 feet (3658 mm) in length installed below ceiling level.

[F] 415.11.11.3 Automatic sprinkler locations. Sprinkler systems shall be installed at 12-foot (3658 mm) intervals in horizontal ducts and at changes in direction. In vertical ducts, sprinklers shall be installed at the top and at alternate floor levels.

SECTION 416
SPRAY APPLICATION OF FLAMMABLE FINISHES

[F] 416.1 General. The provisions of this section shall apply to the construction, installation and use of buildings and structures, or parts thereof, for the spray application of flammable finishes. Operations and equipment shall comply with the *Fire Code of New York State*.

[F] 416.2 Spray rooms. Spray rooms shall be enclosed with not less than 1-hour *fire barriers* constructed in accordance with Section 707 or *horizontal assemblies* constructed in accordance with Section 711, or both. Floors shall be waterproofed and drained in an *approved* manner.

[F] 416.2.1 Construction. Walls and ceilings of spray rooms shall be constructed of noncombustible materials or the interior surface shall be completely covered with noncombustible materials. Aluminum shall not be used.

[F] 416.2.2 Surfaces. The interior surfaces of spray rooms shall be smooth and shall be so constructed to permit the free passage of exhaust air from all parts of the interior and to facilitate washing and cleaning, and shall be so designed to confine residues within the room.

[F] 416.2.3 Ventilation. Mechanical *ventilation* and interlocks with the spraying operation shall be in accordance with the *Fire Code of New York State* and *Mechanical Code of New York State*.

[F] 416.3 Spraying spaces. Spraying spaces shall be ventilated with an exhaust system to prevent the accumulation of flammable mist or vapors in accordance with the *Mechanical Code of New York State*. Where such spaces are not separately enclosed, noncombustible spray curtains shall be provided to restrict the spread of flammable vapors.

[F] 416.3.1 Surfaces. The interior surfaces of spraying spaces shall be smooth; shall be so constructed to permit the free passage of exhaust air from all parts of the interior and to facilitate washing and cleaning; and shall be so designed to confine residues within the spraying space. Aluminum shall not be used.

INTERNATIONAL CODE COUNCIL®
Copyright © 2019 ICC & NYSDOS. ALL RIGHTS RESERVED. Accessed by Lauren Gualdino (lgualdino@briarcliffmanor.org), (-) Order Number #100880972 on May 08, 2020 07:05 AM (PDT) pursuant to License Agreement with ICC & NYSDOS. No further reproduction, no

100880972

[F] 416.4 Spray booths. Spray booths shall be designed, constructed and operated in accordance with the *Fire Code of New York State*.

[F] 416.5 Fire protection. An *automatic sprinkler system* or *fire-extinguishing system* shall be provided in all spray rooms and spray booths, and shall be installed in accordance with Chapter 9.

SECTION 417
DRYING ROOMS

[F] 417.1 General. A drying room or dry kiln installed within a building shall be constructed entirely of *approved* noncombustible materials or assemblies of such materials regulated by the *approved* rules or as required in the general and specific sections of this chapter for special occupancies and where applicable to the general requirements of the *Mechanical Code of New York State*.

[F] 417.2 Piping clearance. Overhead heating pipes shall have a clearance of not less than 2 inches (51 mm) from combustible contents in the dryer.

[F] 417.3 Insulation. Where the operating temperature of the dryer is 175°F (79°C) or more, metal enclosures shall be insulated from adjacent combustible materials by not less than 12 inches (305 mm) of airspace, or the metal walls shall be lined with $^1/_4$-inch (6.4 mm) insulating mill board or other *approved* equivalent insulation.

[F] 417.4 Fire protection. Drying rooms designed for high-hazard materials and processes, including special occupancies as provided for in Chapter 4, shall be protected by an *approved automatic fire-extinguishing system* complying with the provisions of Chapter 9.

SECTION 418
ORGANIC COATINGS

[F] 418.1 Building features. Manufacturing of organic coatings shall be done only in buildings that do not have pits or *basements.*

[F] 418.2 Location. Organic coating manufacturing operations and operations incidental to or connected therewith shall not be located in buildings having other occupancies.

[F] 418.3 Process mills. Mills operating with close clearances and that process flammable and heat-sensitive materials, such as nitrocellulose, shall be located in a *detached building* or noncombustible structure.

[F] 418.4 Tank storage. Storage areas for flammable and combustible liquid tanks inside of structures shall be located at or above grade and shall be separated from the processing area by not less than 2-hour *fire barriers* constructed in accordance with Section 707 or *horizontal assemblies* constructed in accordance with Section 711, or both.

[F] 418.5 Nitrocellulose storage. Nitrocellulose storage shall be located on a detached pad or in a separate structure or a room enclosed with not less than 2-hour *fire barriers* constructed in accordance with Section 707 or *horizontal assemblies* constructed in accordance with Section 711, or both.

[F] 418.6 Finished products. Storage rooms for finished products that are flammable or combustible liquids shall be separated from the processing area by not less than 2-hour *fire barriers* constructed in accordance with Section 707 or *horizontal assemblies* constructed in accordance with Section 711, or both.

SECTION 419
LIVE/WORK UNITS

419.1 General. A *live/work unit* shall comply with Sections 419.1 through 419.9.

Exception: Dwelling or sleeping units that include an office that is less than 10 percent of the area of the *dwelling unit* are permitted to be classified as *dwelling units* with accessory occupancies in accordance with Section 508.2.

419.1.1 Limitations. All of the following shall apply to live/work areas:

1. The *live/work unit* is permitted to be not greater than 3,000 square feet (279 m^2) in area.
2. The nonresidential area is permitted to be not more than 50 percent of the area of each *live/work unit*.
3. The nonresidential area function shall be limited to the first or main floor only of the *live/work unit*.
4. Not more than five nonresidential workers or employees are allowed to occupy the nonresidential area at any one time.

419.2 Occupancies. *Live/work units* shall be classified as a Group R-2 occupancy. Separation requirements found in Sections 420 and 508 shall not apply within the *live/work unit* where the *live/work unit* is in compliance with Section 419. Nonresidential uses that would otherwise be classified as either a Group H or S occupancy shall not be permitted in a *live/work unit*.

Exception: Storage shall be permitted in the *live/work unit* provided that the aggregate area of storage in the nonresidential portion of the *live/work unit* shall be limited to 10 percent of the space dedicated to nonresidential activities.

419.3 Means of egress. Except as modified by this section, the *means of egress* components for a *live/work unit* shall be designed in accordance with Chapter 10 for the function served.

419.3.1 Egress capacity. The egress capacity for each element of the *live/work unit* shall be based on the occupant load for the function served in accordance with Table 1004.5.

419.3.2 Spiral stairways. *Spiral stairways* that conform to the requirements of Section 1011.10 shall be permitted.

419.4 Vertical openings. Floor openings between floor levels of a *live/work unit* are permitted without enclosure.

[F] 419.5 Fire protection. The *live/work unit* shall be provided with a monitored *fire alarm* system where required by Section 907.2.9 and an *automatic sprinkler system* in accordance with Section 903.2.8.

INTERNATIONAL CODE COUNCIL®
Copyright © 2019 ICC & NYSDOS. ALL RIGHTS RESERVED. Accessed by Lauren Gualdino (lgualdino@briarcliffmanor.org), (-) Order Number #100880972 on May 08, 2020 07:05 AM (PDT) pursuant to License Agreement with ICC & NYSDOS. No further reproduction, no

100880972

419.6 Structural. Floors within a *live/work unit* shall be designed for the live loads in Table 1607.1, based on the function within the space.

419.7 Accessibility. Accessibility shall be designed in accordance with Chapter 11 for the function served.

419.8 Ventilation. The applicable *ventilation* requirements of the *Mechanical Code of New York State* shall apply to each area within the *live/work unit* for the function within that space.

419.9 Plumbing facilities. The nonresidential area of the *live/work unit* shall be provided with minimum plumbing facilities as specified by Chapter 29, based on the function of the nonresidential area. Where the nonresidential area of the *live/work unit* is required to be *accessible* by Section 1107.6.2.1, the plumbing fixtures specified by Chapter 29 shall be *accessible*.

SECTION 420
GROUPS I-1, R-1, R-2, R-3 AND R-4

420.1 General. Occupancies in Groups I-1, R-1, R-2, R-3 and R-4 shall comply with the provisions of Sections 420.1 through 420.10 and other applicable provisions of this code.

420.2 Separation walls. Walls separating *dwelling units* in the same building, walls separating *sleeping units* in the same building and walls separating *dwelling* or *sleeping units* from other occupancies contiguous to them in the same building shall be constructed as *fire partitions* in accordance with Section 708.

420.3 Horizontal separation. Floor assemblies separating *dwelling units* in the same buildings, floor assemblies separating *sleeping units* in the same building and floor assemblies separating *dwelling* or *sleeping units* from other occupancies contiguous to them in the same building shall be constructed as *horizontal assemblies* in accordance with Section 711.

[F] 420.4 Automatic sprinkler system. Group R occupancies shall be equipped throughout with an *automatic sprinkler system* in accordance with Section 903.2.8. Group I-1 occupancies shall be equipped throughout with an *automatic sprinkler system* in accordance with Section 903.2.6. Quick-response or residential automatic sprinklers shall be installed in accordance with Section 903.3.2.

[F] 420.5 Fire alarm systems and smoke alarms. Fire alarm systems and smoke alarms shall be provided in Group I-1, R-1 and R-2 occupancies in accordance with Sections 907.2.6, 907.2.8 and 907.2.9, respectively. Single- or multiple-station smoke alarms shall be provided in Groups I-1, R-2, R-3 and R-4 in accordance with Section 907.2.10.

420.6 Smoke barriers in Group I-1, Condition 2. Smoke barriers shall be provided in Group I-1, Condition 2 to subdivide every story used by persons receiving care, treatment or sleeping and to provide other stories with an occupant load of 50 or more persons, into not fewer than two smoke compartments. Such stories shall be divided into smoke compartments with an area of not more than 22,500 square feet (2092 m^2) and the distance of travel from any point in a smoke compartment to a smoke barrier door shall not exceed 200 feet (60 960 mm). The smoke barrier shall be in accordance with Section 709.

420.6.1 Refuge area. Refuge areas shall be provided within each smoke compartment. The size of the refuge area shall accommodate the occupants and care recipients from the adjoining smoke compartment. Where a smoke compartment is adjoined by two or more smoke compartments, the minimum area of the refuge area shall accommodate the largest occupant load of the adjoining compartments. The size of the refuge area shall provide the following:

1. Not less than 15 net square feet (1.4 m^2) for each care recipient.
2. Not less than 6 net square feet (0.56 m^2) for other occupants.

Areas or spaces permitted to be included in the calculation of the refuge area are corridors, lounge or dining areas and other low-hazard areas.

420.7 Group I-1 assisted living housing units. In Group I-1 occupancies, where a fire-resistance corridor is provided in areas where assisted living residents are housed, shared living spaces, group meeting or multipurpose therapeutic spaces open to the corridor shall be in accordance with all of the following criteria:

1. The walls and ceilings of the space are constructed as required for corridors.
2. The spaces are not occupied as resident sleeping rooms, treatment rooms, incidental uses in accordance with Section 509, or hazardous uses.
3. The open space is protected by an automatic fire detection system installed in accordance with Section 907.
4. In Group I-1, Condition 1, the corridors onto which the spaces open are protected by an automatic fire detection system installed in accordance with Section 907, or the spaces are equipped throughout with quick-response sprinklers in accordance with Section 903.3.2.
5. In Group I-1, Condition 2, the corridors onto which the spaces open, in the same smoke compartment, are protected by an automatic fire detection system installed in accordance with Section 907, or the smoke compartment in which the spaces are located is equipped throughout with quick-response sprinklers in accordance with Section 903.3.2.
6. The space is arranged so as not to obstruct access to the required exits.

420.8 Group I-1 cooking facilities. In Group I-1 occupancies, rooms or spaces that contain cooking facilities with domestic cooking appliances shall be in accordance with all of the following criteria:

1. In Group I-1, Condition 1 occupancies, the number of care recipients served by one cooking facility shall not be greater than 30.
2. In Group I-1, Condition 2 occupancies, the number of care recipients served by one cooking facility and

INTERNATIONAL CODE COUNCIL®
Copyright © 2019 ICC & NYSDOS. ALL RIGHTS RESERVED. Accessed by Lauren Gualdino (lgualdino@briarcliffmanor.org), (-) Order Number #100880972 on May 08, 2020 07:05 AM (PDT) pursuant to License Agreement with ICC & NYSDOS. No further reproduction, no

100880972

within the same smoke compartment shall not be greater than 30.

3. The types of domestic cooking appliances permitted shall be limited to ovens, cooktops, ranges, warmers and microwaves.
4. The space containing the domestic cooking facilities shall be arranged so as not to obstruct access to the required exit.
5. Domestic cooking hoods installed and constructed in accordance with Section 505 of the *Mechanical Code of New York State* shall be provided over cooktops or ranges.
6. Cooktops and ranges shall be protected in accordance with Section 904.13.
7. A shutoff for the fuel and electrical supply to the cooking equipment shall be provided in a location that is accessible only to staff.
8. A timer shall be provided that automatically deactivates the cooking appliances within a period of not more than 120 minutes.
9. A portable fire extinguisher shall be provided. Installation shall be in accordance with Section 906 and the extinguisher shall be located within a 30-foot (9144 mm) distance of travel from each domestic cooking appliance.

420.8.1 Cooking facilities open to the corridor. Cooking facilities located in a room or space open to a corridor, aisle or common space shall comply with Section 420.8.

420.9 Group R cooking facilities. In Group R occupancies, cooking appliances used for domestic cooking operations shall be in accordance with Section 917.2 of the *Mechanical Code of New York State*.

420.10 Group R-2 dormitory cooking facilities. Domestic cooking appliances for use by residents of Group R-2 college dormitories shall be in accordance with Sections 420.10.1 and 420.10.2.

420.10.1 Cooking appliances. Where located in Group R-2 college dormitories, domestic cooking appliances for use by residents shall be in compliance with all of the following:

1. The types of domestic cooking appliances shall be limited to ovens, cooktops, ranges, warmers, coffee makers and microwaves.
2. Domestic cooking appliances shall be limited to approved locations.
3. Cooktops and ranges shall be protected in accordance with Section 904.13.
4. Cooktops and ranges shall be provided with a domestic cooking hood installed and constructed in accordance with Section 505 of the *Mechanical Code of New York State*.

420.10.2 Cooking appliances in sleeping rooms. Cooktops, ranges and ovens shall not be installed or used in sleeping rooms.

SECTION 421
HYDROGEN FUEL GAS ROOMS

[F] 421.1 General. Where required by the *Fire Code of New York State*, hydrogen fuel gas rooms shall be designed and constructed in accordance with Sections 421.1 through 421.7.

[F] 421.2 Location. Hydrogen fuel gas rooms shall not be located below grade.

[F] 421.3 Design and construction. Hydrogen fuel gas rooms not classified as Group H shall be separated from other areas of the building in accordance with Section 509.1.

[F] 421.3.1 Pressure control. Hydrogen fuel gas rooms shall be provided with a ventilation system designed to maintain the room at a negative pressure in relation to surrounding rooms and spaces.

[F] 421.3.2 Windows. Operable windows in interior walls shall not be permitted. Fixed windows shall be permitted where in accordance with Section 716.

[F] 421.4 Exhaust ventilation. Hydrogen fuel gas rooms shall be provided with mechanical exhaust ventilation in accordance with the applicable provisions of Section 502.16.1 of the *Mechanical Code of New York State*.

[F] 421.5 Gas detection system. Hydrogen fuel gas rooms shall be provided with a *gas detection system* that complies with Sections 421.5.1, 421.5.2, and 916.

[F] 421.5.1 System activation. Activation of a gas detection alarm shall result in both of the following:

1. Initiation of distinct audible and visible alarm signals both inside and outside of the hydrogen fuel gas room.
2. Automatic activation of the mechanical exhaust ventilation system.

[F] 421.5.2 Failure of the gas detection system. Failure of the *gas detection system* shall automatically activate the mechanical exhaust ventilation system, stop hydrogen generation, and cause a trouble signal to sound at an approved location.

[F] 421.6 Explosion control. Explosion control shall be provided where required by Section 414.5.1.

[F] 421.7 Standby power. Mechanical *ventilation* and gas detection systems shall be provided with a standby power system in accordance with Section 2702.

SECTION 422
AMBULATORY CARE FACIILITIES

422.1 General. Occupancies classified as *ambulatory care facilities* shall comply with the provisions of Sections 422.1 through 422.6 and other applicable provisions of this code.

422.2 Separation. *Ambulatory care facilities* where the potential for four or more care recipients are to be *incapable of self-preservation* at any time shall be separated from adjacent spaces, *corridors* or tenants with a *fire partition* installed in accordance with Section 708.

422.3 Smoke compartments. Where the aggregate area of one or more *ambulatory care facilities* is greater than 10,000

INTERNATIONAL CODE COUNCIL®
Copyright © 2019 ICC & NYSDOS. ALL RIGHTS RESERVED. Accessed by Lauren Gualdino (lgualdino@briarcliffmanor.org), (-) Order Number #100880972 on May 08, 2020 07:05 AM (PDT) pursuant to License Agreement with ICC & NYSDOS. No further reproduction, no

100880972

square feet (929 m^2) on one *story*, the *story* shall be provided with a *smoke barrier* to subdivide the *story* into not fewer than two *smoke compartments*. The area of any one such *smoke compartment* shall be not greater than 22,500 square feet (2090 m^2). The distance of travel from any point in a *smoke compartment* to a *smoke barrier* door shall be not greater than 200 feet (60 960 mm). The *smoke barrier* shall be installed in accordance with Section 709 with the exception that *smoke barriers* shall be continuous from outside wall to an outside wall, a floor to a floor, or from a *smoke barrier* to a *smoke barrier* or a combination thereof.

422.3.1 Means of egress. Where ambulatory care facilities require smoke compartmentation in accordance with Section 422.3, the fire safety evacuation plans provided in accordance with Section 1002.2 shall identify the building components necessary to support a *defend-in-place* emergency response in accordance with Sections 403 and 404 of the *Fire Code of New York State*.

422.3.2 Refuge area. Not less than 30 net square feet (2.8 m^2) for each nonambulatory care recipient shall be provided within the aggregate area of *corridors,* care recipient rooms, treatment rooms, lounge or dining areas and other low-hazard areas within each *smoke compartment.* Each occupant of an *ambulatory care facility* shall be provided with access to a refuge area without passing through or utilizing adjacent tenant spaces.

422.3.3 Independent egress. A *means of egress* shall be provided from each *smoke compartment* created by smoke barriers without having to return through the *smoke compartment* from which *means of egress* originated.

[F] 422.4 Automatic sprinkler systems. *Automatic sprinkler systems* shall be provided for *ambulatory care facilities* in accordance with Section 903.2.2.

[F] 422.5 Fire alarm systems. A *fire alarm* system shall be provided for *ambulatory care facilities* in accordance with Section 907.2.2.

[F] 422.6 Electrical systems. In ambulatory care facilities, the essential electrical system for electrical components, equipment and systems shall be designed and constructed in accordance with the provisions of Chapter 27 and NFPA 99.

SECTION 423
STORM SHELTERS

423.1 General. This section applies to the construction of storm shelters constructed as separate detached buildings or constructed as rooms or spaces within buildings for the purpose of providing protection from storms that produce high winds, such as tornadoes and hurricanes during the storm. Such structures shall be designated to be hurricane shelters, tornado shelters, or combined hurricane and tornado shelters. Design of facilities for use as emergency shelters after the storm are outside the scope of ICC 500 and shall comply with Table 1604.5 as a Risk Category IV Structure.

423.2 Construction. In addition to other applicable requirements in this code, storm shelters shall be constructed in accordance with ICC 500. Buildings or structures that are also designated as emergency shelters shall also comply with Table 1604.5 as Risk Category IV structures.

423.3 Critical emergency operations. In areas where the shelter design wind speed for tornados in accordance with Figure 304.2(1) of ICC 500 is 250 mph, 911 call stations, emergency operation centers and fire, rescue, ambulance and police stations shall comply with Table 1604.5 as a Risk Category IV structure and shall be provided with a storm shelter constructed in accordance with ICC 500.

423.4 Group E occupancies. In areas where the shelter design wind speed for tornados is 250 mph in accordance with Figure 304.2(1) of ICC 500, all Group E occupancies with an occupant load of 50 or more shall have a storm shelter constructed in accordance with ICC 500.

Exceptions:

1. Group E day care facilities.
2. Group E occupancies accessory to places of religious worship.
3. Buildings meeting the requirements for shelter design in ICC 500.

423.4.1 Required occupant capacity. The required occupant capacity of the storm shelter shall include all of the buildings on the site and shall be the greater of the following:

1. The total occupant load of the classrooms, vocational rooms and offices in the Group E occupancy.
2. The occupant load of any indoor assembly space that is associated with the Group E occupancy.

Exceptions:

1. Where a new building is being added on an existing Group E site, and where the new building is not of sufficient size to accommodate the required occupant capacity of the storm shelter for all of the buildings on the site, the storm shelter shall at a minimum accommodate the required occupant capacity for the new building.
2. Where approved by the *building official*, the required occupant capacity of the shelter shall be permitted to be reduced by the occupant capacity of any existing storm shelters on the site.

423.4.2 Location. Storm shelters shall be located within the buildings they serve or shall be located where the maximum distance of travel from not fewer than one exterior door of each building to a door of the shelter serving that building does not exceed 1,000 feet (305 m).

SECTION 424
CHILDREN'S PLAY STRUCTURES

424.1 General. Children's play structures installed inside all occupancies covered by this code that exceed 10 feet (3048 mm) in height or 150 square feet (14 m^2) in area shall comply with Sections 424.2 through 424.5.

INTERNATIONAL CODE COUNCIL®
Copyright © 2019 ICC & NYSDOS. ALL RIGHTS RESERVED. Accessed by Lauren Gualdino (lgualdino@briarcliffmanor.org), (-) Order Number #100880972 on May 08, 2020 07:05 AM (PDT) pursuant to License Agreement with ICC & NYSDOS. No further reproduction, no

100880972

424.2 Materials. Children's play structures shall be constructed of noncombustible materials or of combustible materials that comply with the following:

1. *Fire-retardant-treated* wood complying with Section 2303.2.
2. Light-transmitting plastics complying with Section 2606.
3. Foam plastics (including the pipe foam used in soft-contained play equipment structures) having a maximum heat-release rate not greater than 100 kilowatts when tested in accordance with UL 1975 or when tested in accordance with NFPA 289, using the 20 kW ignition source.
4. Aluminum composite material (ACM) meeting the requirements of Class A *interior finish* in accordance with Chapter 8 when tested as an assembly in the maximum thickness intended for use.
5. Textiles and films complying with the fire propagation performance criteria contained in Test Method 1 or Test Method 2, as appropriate, of NFPA 701.
6. Plastic materials used to construct rigid components of soft-contained play equipment structures (such as tubes, windows, panels, junction boxes, pipes, slides and decks) exhibiting a peak rate of heat release not exceeding 400 kW/ m^2 when tested in accordance with ASTM E1354 at an incident heat flux of 50 kW/m^2 in the horizontal orientation at a thickness of 6 mm.
7. Ball pool balls, used in soft-contained play equipment structures, having a maximum heat-release rate not greater than 100 kilowatts when tested in accordance with UL 1975 or when tested in accordance with NFPA 289, using the 20 kW ignition source. The minimum specimen test size shall be 36 inches by 36 inches (914 mm by 914 mm) by an average of 21 inches (533 mm) deep, and the balls shall be held in a box constructed of galvanized steel poultry netting wire mesh.
8. Foam plastics shall be covered by a fabric, coating or film meeting the fire propagation performance criteria contained in Test Method 1 or Test Method 2, as appropriate, of NFPA 701.
9. The floor covering placed under the children's play structure shall exhibit a Class I interior floor finish classification, as described in Section 804, when tested in accordance with ASTM E648 or NFPA 253.

[F] 424.3 Fire protection. Children's play structures shall be provided with the same level of *approved* fire suppression and detection devices required for other structures in the same occupancy.

424.4 Separation. Children's play structures shall have a horizontal separation from building walls, partitions and from elements of the *means of egress* of not less than 5 feet (1524 mm). Children's play structures shall have a horizontal separation from other children's play structures of not less than 20 feet (6090 mm).

424.5 Area limits. Children's play structures shall be not greater than 300 square feet (28 m^2) in area, unless a special investigation, acceptable to the building official, has demonstrated adequate fire safety.

SECTION 425
HYPERBARIC FACILITIES

425.1 Hyperbaric facilities. Hyperbaric facilities shall meet the requirements contained in Chapter 14 of NFPA 99.

SECTION [F] 426
COMBUSTIBLE DUSTS, GRAIN PROCESSING AND STORAGE

[F] 426.1 General. The provisions of Sections 426.1.1 through 426.1.7 shall apply to buildings in which materials that produce combustible dusts are stored or handled. Buildings that store or handle combustible dusts shall comply with NFPA 652 and the applicable provisions of NFPA 61, NFPA 85, NFPA 120, NFPA 484, NFPA 654, NFPA 655 and NFPA 664 and the *Fire Code of New York State*.

[F] 426.1.1 Type of construction and height exceptions. Buildings shall be constructed in compliance with the height, number of stories and area limitations specified in Sections 504 and 506; except that where erected of Type I or II construction, the heights and areas of grain elevators and similar structures shall be unlimited, and where of Type IV construction, the maximum building height shall be 65 feet (19 812 mm) and except further that, in isolated areas, the maximum building height of Type IV structures shall be increased to 85 feet (25 908 mm).

[F] 426.1.2 Grinding rooms. Every room or space occupied for grinding or other operations that produce combustible dusts in such a manner that the room or space is classified as a Group H-2 occupancy shall be enclosed with fire barriers constructed in accordance with Section 707 or horizontal assemblies constructed in accordance with Section 711, or both. The fire-resistance rating of the enclosure shall be not less than 2 hours where the area is not more than 3,000 square feet (279 m^2), and not less than 4 hours where the area is greater than 3,000 square feet (279 m^2).

[F] 426.1.3 Conveyors. Conveyors, chutes, piping and similar equipment passing through the enclosures of rooms or spaces shall be constructed dirt tight and vapor tight, and be of *approved* noncombustible materials complying with Chapter 30.

[F] 426.1.4 Explosion control. Explosion control shall be provided as specified in the *Fire Code of New York State,* or spaces shall be equipped with the equivalent mechanical *ventilation* complying with the *Mechanical Code of New York State*.

[F] 426.1.5 Grain elevators. Grain elevators, malt houses and buildings for similar occupancies shall not be located within 30 feet (9144 mm) of interior *lot lines* or structures on the same *lot*, except where erected along a railroad right-of-way.

[F] 426.1.6 Coal pockets. Coal pockets located less than 30 feet (9144 mm) from interior lot lines or from struc-

INTERNATIONAL CODE COUNCIL®
Copyright © 2019 ICC & NYSDOS. ALL RIGHTS RESERVED. Accessed by Lauren Gualdino (lgualdino@briarcliffmanor.org), (-) Order Number #100880972 on May 08, 2020 07:05 AM (PDT) pursuant to License Agreement with ICC & NYSDOS. No further reproduction, no

100880972

tures on the same lot shall be constructed of not less than Type IB construction. Where more than 30 feet (9144 mm) from interior *lot lines*, or where erected along a railroad right-of-way, the minimum type of construction of such structures not more than 65 feet (19 812 mm) in *building height* shall be Type IV.

[F] 426.1.7 Tire rebuilding. Buffing operations shall be located in a room separated from the remainder of the building housing the tire rebuilding or tire recapping operation by a 1-hour *fire barrier*.

Exception: Buffing operations are not required to be separated where all of the following conditions are met:

1. Buffing operations are equipped with an *approved* continuous automatic water-spray system directed at the point of cutting action.
2. Buffing machines are connected to particle-collecting systems providing a minimum air movement of 1,500 cubic feet per minute (cfm) (0.71 m^3/s) in volume and 4,500 feet per minute (fpm) (23 m/s) in-line velocity.
3. The collecting system shall discharge the rubber particles to an *approved* outdoor noncombustible or fire-resistant container, which is emptied at frequent intervals to prevent overflow.

SECTION 427
MEDICAL GAS SYSTEMS

[F] 427.1 General. Medical gases at health care-related facilities intended for patient or veterinary care shall comply with Sections 427.2 through 427.2.3 in addition to requirements of Chapter 53 of the *Fire Code of New York State*.

[F] 427.2 Interior supply location. Medical gases shall be located in areas dedicated to the storage of such gases without other storage or uses. Where containers of medical gases in quantities greater than the permitted amount are located inside the buildings, they shall be located in a 1-hour exterior room, 1-hour interior room or a gas cabinet in accordance with Section 427.2.1, 427.2.2 or 427.2.3, respectively. Rooms or areas where medical gases are stored or used in quantities exceeding the maximum allowable quantity per control area as set forth in Tables 307.1(1) and 307.1(2) shall be in accordance with Group H occupancies.

[F] 427.2.1 One-hour exterior room. A 1-hour exterior room shall be a room or enclosure separated from the remainder of the building by fire barriers constructed in accordance with Section 707 or horizontal assemblies constructed in accordance with Section 711, or both, with a fire-resistance rating of not less than 1 hour. Openings between the room or enclosure and interior spaces shall be provided with self-closing smoke- and draft-control assemblies having a fire protection rating of not less than 1 hour. Rooms shall have not less than one exterior wall that is provided with not less than two vents. Each vent shall have a minimum free air opening of not less than 36 square inches (232 cm^2) for each 1,000 cubic feet (28 m^3) at normal temperature and pressure (NTP) of gas stored in the room and shall be not less than 72 square inches (465 cm^2) in aggregate free opening area. One vent shall be within 6 inches (152 mm) of the floor and one shall be within 6 inches (152 mm) of the ceiling. Rooms shall be provided with not fewer than one automatic fire sprinkler to provide container cooling in case of fire.

[F] 427.2.2 One-hour interior room. Where an exterior wall cannot be provided for the room, a 1-hour interior room or enclosure shall be provided and separated from the remainder of the building by fire barriers constructed in accordance with Section 707 or horizontal assemblies constructed in accordance with Section 711, or both, with a fire-resistance rating of not less than 1 hour. Openings between the room or enclosure and interior spaces shall be provided with self-closing smoke- and draft-control assemblies having a fire protection rating of not less than 1 hour. An automatic sprinkler system shall be installed within the room. The room shall be exhausted through a duct to the exterior. Supply and exhaust ducts shall be enclosed in a 1-hour rated shaft enclosure from the room to the exterior. Approved mechanical ventilation shall comply with the *Mechanical Code of New York State* and be provided with a minimum rate of 1 cubic foot per minute per square foot (0.00508 $m^3/s/m^2$) of the area of the room.

[F] 427.2.3 Gas cabinets. Gas cabinets shall be constructed in accordance with Section 5003.8.6 of the *Fire Code of New York State* and shall comply with the following:

1. Cabinets shall be exhausted to the exterior through a dedicated exhaust duct system installed in accordance with Chapter 5 of the *Mechanical Code of New York State*.
2. Supply and exhaust ducts shall be enclosed in a 1-hour rated shaft enclosure from the cabinet to the exterior. The average velocity of ventilation at the face of access ports or windows shall be not less than 200 feet per minute (1.02 m/s) with a minimum of 150 feet per minute (0.76 m/s) at any point of the access port or window.
3. Cabinets shall be provided with an automatic sprinkler system internal to the cabinet.

SECTION 428
HIGHER EDUCATION LABORATORIES

[F] 428.1 Scope. *Higher education laboratories* complying with the requirements of Sections 428.1 through 428.4 shall be permitted to exceed the maximum allowable quantities of hazardous materials in control areas set forth in Tables 307.1(1) and 307.1(2) without requiring classification as a Group H occupancy. Except as specified in Section 428, such laboratories shall comply with all applicable provisions of this code and the *Fire Code of New York State*.

[F] 428.2 Application. The provisions of Section 428 shall be applied as exceptions or additions to applicable requirements of this code. Unless specifically modified by Section 428, the storage, use and handling of hazardous materials shall comply with all other provisions in Chapters 38 and 50 through 67 of the *Fire Code of New York State* and this code

INTERNATIONAL CODE COUNCIL®
Copyright © 2019 ICC & NYSDOS. ALL RIGHTS RESERVED. Accessed by Lauren Gualdino (lgualdino@briarcliffmanor.org), (-) Order Number #100880972 on May 08, 2020 07:05 AM (PDT) pursuant to License Agreement with ICC & NYSDOS. No further reproduction, no

100880972

for quantities not exceeding the maximum allowable quantity.

[F] 428.3 Laboratory suite construction. Where laboratory suites are provided, they shall be constructed in accordance with this section and Chapter 38 of the *Fire Code of New York State*. The number of laboratory suites and percentage of maximum allowable quantities of hazardous materials in laboratory suites shall be in accordance with Table 428.3.

[F] 428.3.1 Separation from other nonlaboratory areas. Laboratory suites shall be separated from other portions of the building in accordance with the most restrictive of the following:

1. Fire barriers and horizontal assemblies as required in Table 428.3. Fire barriers shall be constructed in accordance with Section 707 and horizontal assemblies constructed in accordance with Section 711.

   Exception: Where an individual laboratory suite occupies more than one story, the fire-resistance rating of intermediate floors contained within the laboratory suite shall comply with the requirements of this code.

2. Separations as required by Section 508.

[F] 428.3.2 Separation from other laboratory suites. Laboratory suites shall be separated from other laboratory suites in accordance with Table 428.3.

[F] 428.3.3 Floor assembly fire resistance. The floor assembly supporting laboratory suites and the construction supporting the floor of laboratory suites shall have a fire-resistance rating of not less than 2 hours.

Exception: The floor assembly of the laboratory suites and the construction supporting the floor of the laboratory suites are allowed to be 1-hour fire-resistance rated in buildings of Types IIA, IIIA and VA construction, provided that the building is three or fewer stories.

[F] 428.3.4 Maximum number. The maximum number of laboratory suites shall be in accordance with Table 428.3. Where a building contains both laboratory suites and control areas, the total number of laboratory suites and control areas within a building shall not exceed the maximum number of laboratory suites in accordance with Table 428.3.

[F] 428.3.5 Means of egress. Means of egress shall be in accordance with Chapter 10.

[F] 428.3.6 Standby or emergency power. Standby or emergency power shall be provided in accordance with Section 414.5.2 where laboratory suites are located above the sixth story above grade plane or located in a story below grade plane.

[F] 428.3.7 Ventilation. Ventilation shall be in accordance with Chapter 7 of NFPA 45, and the *Mechanical Code of New York State*.

[F] 428.3.8 Liquid-tight floor. Portions of laboratory suites where hazardous materials are present shall be provided with a liquid-tight floor.

[F] 428.3.9 Automatic fire-extinguishing systems. Buildings containing laboratory suites shall be equipped throughout with an approved automatic sprinkler system in accordance with Section 903.3.1.1.

[F] 428.4 Percentage of maximum allowable quantity in each laboratory suite. The percentage of maximum allowable quantities of hazardous materials in each laboratory suite shall be in accordance with Table 428.3.

[F] TABLE 428.3
DESIGN AND NUMBER OF LABORATORY SUITES PER FLOOR

FLOOR LEVEL		PERCENTAGE OF THE MAXIMUM ALLOWABLE QUANTITY PER LAB SUITE[a]	NUMBER OF LAB SUITES PER FLOOR	FIRE-RESISTANCE RATING FOR FIRE BARRIERS IN HOURS[b]
Above Grade Plane	21+	Not allowed	Not Permitted	Not Permitted
	16-20	25	1	2[c]
	11-15	50	1	2[c]
	7-10	50	2	2[c]
	4-6	75	4	1
	3	100	4	1
	1-2	100	6	1
Below Grade Plane	1	75	4	1
	2	50	2	1
	Lower than 2	Not Allowed	Not Allowed	Not Allowed

a. Percentages shall be of the maximum allowable quantity per control area shown in Tables 307.1(1) and 307.1(2), with all increases allowed in the footnotes to those tables.
b. Fire barriers shall include walls, floors and ceilings necessary to provide separation from other portions of the building.
c. Vertical fire barriers separating laboratory suites from other spaces on the same floor shall be permitted to be 1-hour fire-resistance rated.

INTERNATIONAL CODE COUNCIL®
Copyright © 2019 ICC & NYSDOS. ALL RIGHTS RESERVED. Accessed by Lauren Gualdino (lgualdino@briarcliffmanor.org), (-) Order Number #100880972 on May 08, 2020 07:05 AM (PDT) pursuant to License Agreement with ICC & NYSDOS. No further reproduction, no

100880972

[NY] SECTION 429
HEALTH CARE FACILITIES

[NY] 429.1 General. Health care facilities located in special flood hazard areas shall comply with the provisions of this section and other applicable provisions of this code.

[NY] 429.2 Temporary external generators, boilers and chillers. Connections for temporary external generators, boilers and chillers shall be provided in:

1. Group I-1, I-2 and R-4, Condition 2 occupancies in accordance with Section 429.2.1.
2. Hospitals in accordance with Section 429.2.2.
3. Nursing homes in accordance with Section 429.2.3.

[NY] 429.2.1 Group I-1, I-2 and R-4, Condition 2 occupancies. An occupancy that is classified as Group I-1, I-2 or R-4, Condition 2 occupancy shall comply with the following:

1. **Connections for temporary external generators.** Electrical connections shall be provided to allow for the connection of temporary external generators. The generators shall be capable of providing power for at least 72 hours to each of the following systems:
   1.1. Exit signs and means of egress illumination required by Chapter 10.
   1.2. Fire alarm systems.
   1.3. For buildings having occupied floors located 75 feet (22 860 mm) above the lowest level of fire department access, at least one elevator that serves all floors.
   1.4. Lighting sufficient to maintain illumination in accordance with Section 1205.3, for spaces primarily used to provide medical services to persons and spaces intended to be used for sleeping purposes.

   Exception: Connections for temporary external generators shall not be required for buildings with emergency or standby power systems that are permanently installed above the minimum flood elevation required by Sections 1612.4 through 1612.4.1.1 and ASCE 24 and are capable of providing power for at least 72 hours to the systems identified in Item 1 of this section. Natural gas shall be a permitted fuel supply.
2. **Flood protection for temporary external generator connections.** Electrical connections installed in accordance with Item 1 of Section 429.2.1 shall be located at or above the minimum flood elevation required by Sections 1612.4 through 1612.4.1.1 and ASCE 24.
3. **Emergency connection plan.** A plan shall be submitted to the *building official* that identifies how the temporary external generators will be connected and capable of providing power to the occupancy in accordance with Item 1 of Section 429.2.1.

[NY] 429.2.2 Hospitals. An occupancy that is a hospital shall comply with the following:

1. **Connections for temporary external generators.** Electrical connections shall be provided to allow for the connection of temporary generators. The generators shall be capable of providing power for at least 72 hours to the following systems:
   1.1. All electrical services serving such occupancy for which emergency or standby power must be provided in accordance with Chapter 27 and any other applicable local, state or federal law or rule.
   1.2. Air conditioning and cooling systems serving such occupancy, sufficient to maintain temperature in accordance with Section 1204, for spaces primarily used for the provision of medical services to persons and spaces intended to be used for sleeping purposes.

   Exception: Connections for temporary external generators shall not be required for buildings that have emergency or standby power systems that are permanently installed above the minimum flood elevation required by Sections 1612.4 through 1612.4.1.1 and ASCE 24 and serve spaces primarily used for the provision of medical services to persons or spaces intended to be used for sleeping purposes.
2. **Connections for temporary external boilers and chillers.** Where boiler and chiller plants are located below the flood elevation specified in Section 429.2.1, connections shall be provided to allow for the connection of temporary external boilers and chillers plants. Temporary external boiler and chiller plants shall be capable of maintaining temperature in accordance with Section 1204 for at least 72 hours.

   Exception: Connections for temporary external boiler and chiller plants shall not be required where such plants do not serve spaces primarily used for the provision of medical services to persons or spaces intended to be used for sleeping purposes.
3. **Flood protection for temporary external generator, boiler and chiller connections.** Electrical connections installed in accordance with Item 1 of Section 429.2.2 and connections installed in accordance with Item 2 of Section 429.2.2 shall be located at or above the minimum flood elevation required by Sections 1612.4 through 1612.4.1.1 and ASCE 24.
4. **Emergency connection plan.** An emergency connection plan shall be submitted to the building official for approval. The plan shall include the following:
   4.1. For an occupancy required to comply with Item 1 of Section 429.2.2, a plan that identifies how the temporary external generators will be connected and capable of providing power for the occupancy in accordance with such Item.

INTERNATIONAL CODE COUNCIL®
Copyright © 2019 ICC & NYSDOS. ALL RIGHTS RESERVED. Accessed by Lauren Gualdino (lgualdino@briarcliffmanor.org), (-) Order Number #100880972 on May 08, 2020 07:05 AM (PDT) pursuant to License Agreement with ICC & NYSDOS. No further reproduction, no

100880972

4.2. For an occupancy required to comply with Item 2 of Section 429.2.2, a plan that identifies how the temporary external boilers and chillers will be connected and capable of maintaining temperature in accordance with such Item.

[NY] 429.2.3 Nursing homes. An occupancy that is a nursing home shall comply with the following:

1. **Connections for temporary external generators.** Electrical connections shall be provided to allow for the connection of temporary generators. The generators shall be capable of providing power for at least 72 hours to all electrical services serving such occupancy for which emergency or standby power must be provided in accordance with Chapter 27 and any other applicable local, state or federal law or rule.

   Exception: Connections for temporary external generators shall not be required for buildings that have emergency or standby power systems that are permanently installed above the minimum flood elevation required by Sections 1612.4 through 1612.4.1.1 and ASCE 24 and serve spaces primarily used for the provision of medical services to persons or spaces intended to be used for sleeping purposes.

2. **Flood protection for temporary external generator, boiler and chiller connections.** Electrical connections installed in accordance with Item 1 of Section 429.2.2 and connections installed in accordance with Item 2 of Section 429.2.2 shall be located at or above the minimum flood elevation required by Sections 1612.4 through 1612.4.1.1 and ASCE 24.

3. **Emergency connection plan.** An emergency connection plan shall be submitted to the *building official* for approval. The plan shall include how the temporary external generators will be connected and capable of providing power for the occupancy.

[NY] SECTION 430
LIVE FIRE TRAINING FACILITES

[NY] 430.1 Live fire training facilities. *Live fire training facilities* shall be designed, constructed, and maintained in accordance with NFPA 1402 and NFPA 1403 and, where required by NFPA 1402 and NFPA 1403, this code.

INTERNATIONAL CODE COUNCIL®
Copyright © 2019 ICC & NYSDOS. ALL RIGHTS RESERVED. Accessed by Lauren Gualdino (lgualdino@briarcliffmanor.org), (-) Order Number #100880972 on May 08, 2020 07:05 AM (PDT) pursuant to License Agreement with ICC & NYSDOS. No further reproduction, no

100880972

CHAPTER 5
GENERAL BUILDING HEIGHTS AND AREAS

SECTION 501
GENERAL

501.1 Scope. The provisions of this chapter control the height and area of structures hereafter erected and *additions* to existing structures.

SECTION 502
BUILDING ADDRESS

[F] 502.1 Address identification. New and existing buildings shall be provided with *approved* address identification. The address identification shall be legible and placed in a position that is visible from the street or road fronting the property. Address identification characters shall contrast with their background. Address numbers shall be Arabic numbers or alphabetical letters. Numbers shall not be spelled out. Each character shall be a minimum of 4 inches (102 mm) high with a minimum stroke width of $^1/_2$ inch (12.7 mm). Where required by the fire code official, address identification shall be provided in additional approved locations to facilitate emergency response. Where access is by means of a private road and the building address cannot be viewed from the public way, a monument, pole or other approved sign or means shall be used to identify the structure. Address identification shall be maintained.

SECTION 503
GENERAL BUILDING HEIGHT AND AREA LIMITATIONS

503.1 General. Unless otherwise specifically modified in Chapter 4 and this chapter, *building height*, number of *stories* and *building area* shall not exceed the limits specified in Sections 504 and 506 based on the type of construction as determined by Section 602 and the occupancies as determined by Section 302 except as modified hereafter. *Building height*, number of *stories* and *building* area provisions shall be applied independently. For the purposes of determining area limitations, height limitations and type of construction, each portion of a building separated by one or more *fire walls* complying with Section 706 shall be considered to be a separate building.

503.1.1 Special industrial occupancies. Buildings and structures designed to house special industrial processes that require large areas and unusual *building heights* to accommodate craneways or special machinery and equipment, including, among others, rolling mills; structural metal fabrication shops and foundries; or the production and distribution of electric, gas or steam power, shall be exempt from the *building height*, number of *stories* and *building area* limitations specified in Sections 504 and 506.

503.1.2 Buildings on same lot. Two or more buildings on the same lot shall be regulated as separate buildings or shall be considered as portions of one building where the *building height*, number of *stories* of each building and the aggregate *building area* of the buildings are within the limitations specified in Sections 504 and 506. The provisions of this code applicable to the aggregate building shall be applicable to each *building*.

503.1.3 Type I construction. Buildings of Type I construction permitted to be of unlimited tabular *building heights and areas* are not subject to the special requirements that allow unlimited area buildings in Section 507 or unlimited *building height* in Sections 503.1.1 and 504.3 or increased *building heights and areas* for other types of construction.

503.1.4 Occupied roofs. A roof level or portion thereof shall be permitted to be used as an occupied roof provided the occupancy of the roof is an occupancy that is permitted by Table 504.4 for the story immediately below the roof. The area of the occupied roofs shall not be included in the building area as regulated by Section 506.

Exceptions:

1. The occupancy located on an occupied roof shall not be limited to the occupancies allowed on the *story* immediately below the roof where the building is equipped throughout with an *automatic sprinkler system* in accordance with Section 903.3.1.1 or 903.3.1.2 and occupant notification in accordance with Section 907.5 is provided in the area of the occupied roof.
2. Assembly occupancies shall be permitted on roofs of open parking garages of Type I or Type II construction, in accordance with the exception to Section 903.2.1.6.

503.1.4.1 Enclosures over occupied roof areas. Elements or structures enclosing the occupied roof areas shall not extend more than 48 inches (1220 mm) above the surface of the occupied roof.

Exception: Penthouses constructed in accordance with Section 1510.2 and towers, domes, spires and cupolas constructed in accordance with Section 1510.5.

SECTION 504
BUILDING HEIGHT AND NUMBER OF STORIES

504.1 General. The height, in feet, and the number of *stories* of a building shall be determined based on the type of construction, occupancy classification and whether there is an *automatic sprinkler system* installed throughout the building.

Exception: The *building height* of one-*story* aircraft hangars, aircraft paint hangars and buildings used for the manufacturing of aircraft shall not be limited where the building is provided with an *automatic sprinkler system* or *automatic fire-extinguishing system* in accordance with Chapter 9 and is entirely surrounded by *public ways* or *yards* not less in width than one and one-half times the *building height*.

INTERNATIONAL CODE COUNCIL®
Copyright © 2019 ICC & NYSDOS. ALL RIGHTS RESERVED. Accessed by Lauren Gualdino (lgualdino@briarcliffmanor.org), (-) Order Number #100880972 on May 08, 2020 07:05 AM (PDT) pursuant to License Agreement with ICC & NYSDOS. No further reproduction, no

100880972

504.1.1 Unlimited area buildings. The height of unlimited area buildings shall be designed in accordance with Section 507.

504.1.2 Special provisions. The special provisions of Section 510 permit the use of special conditions that are exempt from, or modify, the specific requirements of this chapter regarding the allowable heights of buildings based on the occupancy classification and type of construction, provided the special condition complies with the provisions specified in Section 510.

504.2 Mixed occupancy. In a building containing mixed occupancies in accordance with Section 508, no individual occupancy shall exceed the height and number of *story* limits specified in this section for the applicable occupancies.

504.3 Height in feet. The maximum height, in feet, of a building shall not exceed the limits specified in Table 504.3.

Exception: Towers, spires, steeples and other roof structures shall be constructed of materials consistent with the required type of construction of the building except where other construction is permitted by Section 1510.2.4. Such structures shall not be used for habitation or storage. The structures shall be unlimited in height where of noncombustible materials and shall not extend more than 20 feet (6096 mm) above the allowable building height where of combustible materials (see Chapter 15 for additional requirements).

504.4 Number of stories. The maximum number of *stories* of a building shall not exceed the limits specified in Table 504.4.

SECTION 505
MEZZANINES AND EQUIPMENT PLATFORMS

505.1 General. *Mezzanines* shall comply with Section 505.2. *Equipment platforms* shall comply with Section 505.3.

505.2 Mezzanines. A *mezzanine* or *mezzanines* in compliance with Section 505.2 shall be considered a portion of the *story* below. Such *mezzanines* shall not contribute to either the *building area* or number of *stories* as regulated by Section

TABLE 504.3
ALLOWABLE BUILDING HEIGHT IN FEET ABOVE GRADE PLANE[a]

OCCUPANCY CLASSIFICATION	TYPE OF CONSTRUCTION									
	SEE FOOTNOTES	TYPE I		TYPE II		TYPE III		TYPE IV	TYPE V	
		A	B	A	B	A	B	HT	A	B
A, B, E, F, M, S, U	NS[b]	UL	160	65	55	65	55	65	50	40
	S	UL	180	85	75	85	75	85	70	60
H-1, H-2, H-3, H-5	NS[c, d]	UL	160	65	55	65	55	65	50	40
	S									
H-4	NS[c, d]	UL	160	65	55	65	55	65	50	40
	S	UL	180	85	75	85	75	85	70	60
I-1 Condition 1, I-3	NS[d, e]	UL	160	65	55	65	55	65	50	40
	S	UL	180	85	75	85	75	85	70	60
I-1 Condition 2, I-2	NS[d, e, f]	UL	160	65	55	65	55	65	50	40
	S	UL	180	85						
I-4	NS[d, g]	UL	160	65	55	65	55	65	50	40
	S	UL	180	85	75	85	75	85	70	60
R[h]	NS[d]	UL	160	65	55	65	55	65	50	40
	S13D	60	60	60	60	60	60	60	50	40
	S13R	60	60	60	60	60	60	60	60	60
	S	UL	180	85	75	85	75	85	70	60

For SI: 1 foot = 304.8 mm.

UL = Unlimited; NS = Buildings not equipped throughout with an automatic sprinkler system; S = Buildings equipped throughout with an automatic sprinkler system installed in accordance with Section 903.3.1.1; S13R = Buildings equipped throughout with an automatic sprinkler system installed in accordance with Section 903.3.1.2; S13D = Buildings equipped throughout with an automatic sprinkler system installed in accordance with Section 903.3.1.3.

a. See Chapters 4 and 5 for specific exceptions to the allowable height in this chapter.

b. See Section 903.2 for the minimum thresholds for protection by an automatic sprinkler system for specific occupancies.

c. New Group H occupancies are required to be protected by an automatic sprinkler system in accordance with Section 903.2.5.

d. The NS value is only for use in evaluation of existing building height in accordance with the *Existing Building Code of New York State*.

e. New Group I-1 and I-3 occupancies are required to be protected by an automatic sprinkler system in accordance with Section 903.2.6. For new Group I-1 occupancies Condition 1, see Exception 1 of Section 903.2.6.

f. New and existing Group I-2 occupancies are required to be protected by an automatic sprinkler system in accordance with Section 903.2.6 and Section 1103.5 of the *Fire Code of New York State*.

g. For new Group I-4 occupancies, see Exceptions 2 and 3 of Section 903.2.6.

h. New Group R occupancies are required to be protected by an automatic sprinkler system in accordance with Section 903.2.8.

INTERNATIONAL CODE COUNCIL®
Copyright © 2019 ICC & NYSDOS. ALL RIGHTS RESERVED. Accessed by Lauren Gualdino (lgualdino@briarcliffmanor.org), (-) Order Number #100880972 on May 08, 2020 07:05 AM (PDT) pursuant to License Agreement with ICC & NYSDOS. No further reproduction, no

100880972

TABLE 504.4
ALLOWABLE NUMBER OF STORIES ABOVE GRADE PLANE[a, b]

OCCUPANCY CLASSIFICATION	SEE FOOTNOTES	TYPE OF CONSTRUCTION								
		TYPE I		TYPE II		TYPE III		TYPE IV	TYPE V	
		A	B	A	B	A	B	HT	A	B
A-1	NS	UL	5	3	2	3	2	3	2	1
	S	UL	6	4	3	4	3	4	3	2
A-2	NS	UL	11	3	2	3	2	3	2	1
	S	UL	12	4	3	4	3	4	3	2
A-3	NS	UL	11	3	2	3	2	3	2	1
	S	UL	12	4	3	4	3	4	3	2
A-4	NS	UL	11	3	2	3	2	3	2	1
	S	UL	12	4	3	4	3	4	3	2
A-5	NS	UL	UL	UL	UL	UL	UL	UL	UL	UL
	S	UL	UL	UL	UL	UL	UL	UL	UL	UL
B	NS	UL	11	5	3	5	3	5	3	2
	S	UL	12	6	4	6	4	6	4	3
E	NS	UL	5	3	2	3	2	3	1	1
	S	UL	6	4	3	4	3	4	2	2
F-1	NS	UL	11	4	2	3	2	4	2	1
	S	UL	12	5	3	4	3	5	3	2
F-2	NS	UL	11	5	3	4	3	5	3	2
	S	UL	12	6	4	5	4	6	4	3
H-1	NS[c, d]	1	1	1	1	1	1	1	1	NP
	S									
H-2	NS[c, d]	UL	3	2	1	2	1	2	1	1
	S									
H-3	NS[c, d]	UL	6	4	2	4	2	4	2	1
	S									
H-4	NS[c, d]	UL	7	5	3	5	3	5	3	2
	S	UL	8	6	4	6	4	6	4	3
H-5	NS[c, d]	4	4	3	3	3	3	3	3	2
	S									
I-1 Condition 1	NS[d, e]	UL	9	4	3	4	3	4	3	2
	S	UL	10	5	4	5	4	5	4	3
I-1 Condition 2	NS[d, e]	UL	9	4	3	4	3	4	3	2
	S	UL	10	5						
I-2	NS[d, f]	UL	4	2	1	1	NP	1	1	NP
	S	UL	5	3						
I-3	NS[d, e]	UL	4	2	1	2	1	2	2	1
	S	UL	5	3	2	3	2	3	3	2
I-4	NS[d, g]	UL	5	3	2	3	2	3	1	1
	S	UL	6	4	3	4	3	4	2	2
M	NS	UL	11	4	2	4	2	4	3	1
	S	UL	12	5	3	5	3	5	4	2

(continued)

INTERNATIONAL CODE COUNCIL®
Copyright © 2019 ICC & NYSDOS. ALL RIGHTS RESERVED. Accessed by Lauren Gualdino (lgualdino@briarcliffmanor.org), (-) Order Number #100880972 on May 08, 2020 07:05 AM (PDT) pursuant to License Agreement with ICC & NYSDOS. No further reproduction, no

100880972

TABLE 504.4—continued
ALLOWABLE NUMBER OF STORIES ABOVE GRADE PLANE[a, b]

OCCUPANCY CLASSIFICATION	TYPE OF CONSTRUCTION									
	SEE FOOTNOTES	TYPE I		TYPE II		TYPE III		TYPE IV	TYPE V	
		A	B	A	B	A	B	HT	A	B
R-1[h]	NS[d]	UL	11	4	4	4	4	4	3	2
	S13R	4	4						4	3
	S	UL	12	5	5	5	5	5	4	3
R-2[h]	NS[d]	UL	11	4	4	4	4	4	3	2
	S13R	4	4	4					4	3
	S	UL	12	5	5	5	5	5	4	3
R-3[h]	NS[d]	UL	11	4	4	4	4	4	3	3
	S13D	4	4						3	3
	S13R	4	4						4	4
	S	UL	12	5	5	5	5	5	4	4
R-4[h]	NS[d]	UL	11	4	4	4	4	4	3	2
	S13D	4	4						3	2
	S13R	4	4						4	3
	S	UL	12	5	5	5	5	5	4	3
S-1	NS	UL	11	4	2	3	2	4	3	1
	S	UL	12	5	3	4	3	5	4	2
S-2	NS	UL	11	5	3	4	3	4	4	2
	S	UL	12	6	4	5	4	5	5	3
U	NS	UL	5	4	2	3	2	4	2	1
	S	UL	6	5	3	4	3	5	3	2

UL = Unlimited; NP = Not Permitted; NS = Buildings not equipped throughout with an automatic sprinkler system; S = Buildings equipped throughout with an automatic sprinkler system installed in accordance with Section 903.3.1.1; S13R = Buildings equipped throughout with an automatic sprinkler system installed in accordance with Section 903.3.1.2; S13D = Buildings equipped throughout with an automatic sprinkler system installed in accordance with Section 903.3.1.3.

a. See Chapters 4 and 5 for specific exceptions to the allowable height in this chapter.
b. See Section 903.2 for the minimum thresholds for protection by an automatic sprinkler system for specific occupancies.
c. New Group H occupancies are required to be protected by an automatic sprinkler system in accordance with Section 903.2.5.
d. The NS value is only for use in evaluation of existing building height in accordance with the *Existing Building Code of New York State*.
e. New Group I-1 and I-3 occupancies are required to be protected by an automatic sprinkler system in accordance with Section 903.2.6. For new Group I-1 occupancies, Condition 1, see Exception 1 of Section 903.2.6.
f. New and existing Group I-2 occupancies are required to be protected by an automatic sprinkler system in accordance with Section 903.2.6 and 1103.5 of the *Fire Code of New York State*.
g. For new Group I-4 occupancies, see Exceptions 2 and 3 of Section 903.2.6.
h. New Group R occupancies are required to be protected by an automatic sprinkler system in accordance with Section 903.2.8.

503.1. The area of the *mezzanine* shall be included in determining the *fire area*. The clear height above and below the *mezzanine* floor construction shall be not less than 7 feet (2134 mm).

505.2.1 Area limitation. The aggregate area of a *mezzanine* or *mezzanines* within a room shall be not greater than one-third of the floor area of that room or space in which they are located. The enclosed portion of a room shall not be included in a determination of the floor area of the room in which the *mezzanine* is located. In determining the allowable *mezzanine* area, the area of the *mezzanine* shall not be included in the floor area of the room.

Exceptions:

1. The aggregate area of *mezzanines* in buildings and structures of Type I or II construction for special industrial occupancies in accordance with Section 503.1.1 shall be not greater than two-thirds of the floor area of the room.
2. The aggregate area of *mezzanines* in buildings and structures of Type I or II construction shall be not greater than one-half of the floor area of the room in buildings and structures equipped throughout with an *approved automatic sprinkler system* in accordance with Section 903.3.1.1 and an *approved emergency voice/alarm communication system* in accordance with Section 907.5.2.2.
3. The aggregate area of a *mezzanine* within a *dwelling unit* that is located in a building equipped throughout with an *approved automatic sprinkler system* in accordance with Section

INTERNATIONAL CODE COUNCIL®
Copyright © 2019 ICC & NYSDOS. ALL RIGHTS RESERVED. Accessed by Lauren Gualdino (lgualdino@briarcliffmanor.org), (-) Order Number #100880972 on May 08, 2020 07:05 AM (PDT) pursuant to License Agreement with ICC & NYSDOS. No further reproduction, no

100880972

903.3.1.1 or 903.3.1.2 shall not be greater than one-half of the floor area of the room, provided that:

3.1. Except for enclosed closets and bathrooms, the *mezzanine* shall be open to the room in which such mezzanine is located;

3.2. The opening to the room shall be unobstructed except for walls not more than 42 inches (1067 mm) in height, columns and posts; and

3.3. Exceptions to Section 505.2.3 shall not be permitted.

505.2.1.1 Aggregate area of mezzanines and equipment platforms. Where a room contains both a *mezzanine* and an *equipment platform*, the aggregate area of the two raised floor levels shall be not greater than two-thirds of the floor area of that room or space in which they are located. The area of the *mezzanine* shall not exceed the area determined in accordance with Section 505.2.1.

505.2.2 Means of egress. The *means of egress* for *mezzanines* shall comply with the applicable provisions of Chapter 10.

505.2.3 Openness. A *mezzanine* shall be open and unobstructed to the room in which such *mezzanine* is located except for walls not more than 42 inches (1067 mm) in height, columns and posts.

Exceptions:

1. *Mezzanines* or portions thereof are not required to be open to the room in which the *mezzanines* are located, provided that the *occupant load* of the aggregate area of the enclosed space is not greater than 10.
2. A *mezzanine* having two or more exits or access to exits is not required to be open to the room in which the *mezzanine* is located.
3. *Mezzanines* or portions thereof are not required to be open to the room in which the *mezzanines* are located, provided that the aggregate floor area of the enclosed space is not greater than 10 percent of the *mezzanine* area.
4. In industrial facilities, *mezzanines* used for control equipment are permitted to be glazed on all sides.
5. In occupancies other than Groups H and I, which are no more than two *stories* above *grade plane* and equipped throughout with an *automatic sprinkler system* in accordance with Section 903.3.1.1, a *mezzanine* having two or more *exits* or *access to exits* shall not be required to be open to the room in which the *mezzanine* is located.

505.3 Equipment platforms. *Equipment platforms* in buildings shall not be considered as a portion of the floor below. Such *equipment platforms* shall not contribute to either the *building area* or the number of *stories* as regulated by Section 503.1. The area of the *equipment platform* shall not be included in determining the *fire area* in accordance with Section 903. *Equipment platforms* shall not be a part of any *mezzanine* and such platforms and the walkways, *stairways*, *alternating tread devices* and ladders providing access to an *equipment platform* shall not serve as a part of the *means of egress* from the building.

505.3.1 Area limitation. The aggregate area of all *equipment platforms* within a room shall be not greater than two-thirds of the area of the room in which they are located. Where an *equipment platform* is located in the same room as a *mezzanine*, the area of the *mezzanine* shall be determined by Section 505.2.1 and the combined aggregate area of the *equipment platforms* and *mezzanines* shall be not greater than two-thirds of the room in which they are located. The area of the *mezzanine* shall not exceed the area determined in accordance with Section 505.2.1.

505.3.2 Automatic sprinkler system. Where located in a building that is required to be protected by an *automatic sprinkler system*, *equipment platforms* shall be fully protected by sprinklers above and below the platform, where required by the standards referenced in Section 903.3.

505.3.3 Guards. *Equipment platforms* shall have *guards* where required by Section 1015.2.

SECTION 506
BUILDING AREA

506.1 General. The floor area of a building shall be determined based on the type of construction, occupancy classification, whether there is an *automatic sprinkler system* installed throughout the building and the amount of building frontage on public way or open space.

506.1.1 Unlimited area buildings. Unlimited area buildings shall be designed in accordance with Section 507.

506.1.2 Special provisions. The special provisions of Section 510 permit the use of special conditions that are exempt from, or modify, the specific requirements of this chapter regarding the allowable areas of buildings based on the occupancy classification and type of construction, provided the special condition complies with the provisions specified in Section 510.

506.1.3 Basements. Basements need not be included in the total allowable floor area of a building provided the total area of such basements does not exceed the area permitted for a one-story above grade plane building.

506.2 Allowable area determination. The allowable area of a building shall be determined in accordance with the applicable provisions of Sections 506.2.1 through 506.2.4 and Section 506.3.

506.2.1 Single-occupancy, one-story buildings. The allowable area of a single-occupancy building with no more than one *story above grade plane* shall be determined in accordance with Equation 5-1:

$$A_a = A_t + (NS \times I_f) \qquad \textbf{(Equation 5-1)}$$

where:

A_a = Allowable area (square feet).

INTERNATIONAL CODE COUNCIL®
Copyright © 2019 ICC & NYSDOS. ALL RIGHTS RESERVED. Accessed by Lauren Gualdino (lgualdino@briarcliffmanor.org), (-) Order Number #100880972 on May 08, 2020 07:05 AM (PDT) pursuant to License Agreement with ICC & NYSDOS. No further reproduction, no

100880972

A_t = Tabular allowable area factor (NS, S1, S13R or S13D value, as applicable) in accordance with Table 506.2.

NS = Tabular allowable area factor in accordance with Table 506.2 for nonsprinklered building (regardless of whether the building is sprinklered).

I_f = Area factor increase due to frontage (percent) as calculated in accordance with Section 506.3.

506.2.2 Mixed-occupancy, one-story buildings. The allowable area of a mixed-occupancy building with no more than one *story above grade plane* shall be determined in accordance with the applicable provisions of Section 508.1 based on Equation 5-1 for each applicable occupancy.

506.2.2.1 Group H-2 or H-3 mixed occupancies. For a building containing Group H-2 or H-3 occupancies, the allowable area shall be determined in accordance with Section 508.4.2, with the sprinkler system increase applicable only to the portions of the building not classified as Group H-2 or H-3.

506.2.3 Single-occupancy, multistory buildings. The allowable area of a single-occupancy building with more than one *story above grade plane* shall be determined in accordance with Equation 5-2:

$$A_a = [A_t + (NS \times I_f)] \times S_a \qquad \textbf{(Equation 5-2)}$$

where:

A_a = Allowable area (square feet).

A_t = Tabular allowable area factor (NS, S13R, S13D or SM value, as applicable) in accordance with Table 506.2.

NS = Tabular allowable area factor in accordance with Table 506.2 for a nonsprinklered building (regardless of whether the building is sprinklered).

I_f = Area factor increase due to frontage (percent) as calculated in accordance with Section 506.3.

S_a = Actual number of building *stories* above grade plane, not to exceed three. For buildings equipped throughout with an *automatic sprinkler system* installed in accordance with Section 903.3.1.2, use the actual number of building *stories above grade plane*, not to exceed four.

No individual story shall exceed the allowable area (A_a) as determined by Equation 5-2 using the value of $S_a = 1$.

506.2.4 Mixed-occupancy, multistory buildings. Each story of a mixed-occupancy building with more than one *story above grade plane* shall individually comply with the applicable requirements of Section 508.1. For buildings with more than three *stories above grade plane*, the total building area shall be such that the aggregate sum of the ratios of the actual area of each *story* divided by the allowable area of such stories, determined in accordance with Equation 5-3 based on the applicable provisions of Section 508.1, shall not exceed three.

$$A_a = [A_t + (NS \times I_f)] \qquad \textbf{(Equation 5-3)}$$

where:

A_a = Allowable area (square feet).

A_t = Tabular allowable area factor (NS, S13R, S13D or SM value, as applicable) in accordance with Table 506.2.

NS = Tabular allowable area factor in accordance with Table 506.2 for a nonsprinklered building (regardless of whether the building is sprinklered).

I_f = Area factor increase due to frontage (percent) as calculated in accordance with Section 506.3.

Exception: For buildings designed as separated occupancies under Section 508.4 and equipped throughout with an *automatic sprinkler system* installed in accordance with Section 903.3.1.2, the total building area shall be such that the aggregate sum of the ratios of the actual area of each *story* divided by the allowable area of such stories determined in accordance with Equation 5-3 based on the applicable provisions of Section 508.1, shall not exceed four.

506.2.4.1 Group H-2 or H-3 mixed occupancies. For a building containing Group H-2 or H-3 occupancies, the allowable area shall be determined in accordance with Section 508.4.2, with the sprinkler system increase applicable only to the portions of the building not classified as Group H-2 or H-3.

506.3 Frontage increase. Every building shall adjoin or have access to a public way to receive an area factor increase based on frontage. Area factor increase shall be determined in accordance with Sections 506.3.1 through 506.3.3.

506.3.1 Minimum percentage of perimeter. To qualify for an area factor increase based on frontage, a building shall have not less than 25 percent of its perimeter on a public way or open space. Such open space shall be either on the same lot or dedicated for public use and shall be accessed from a street or approved *fire lane*.

506.3.2 Minimum frontage distance. To qualify for an area factor increase based on frontage, the public way or open space adjacent to the building perimeter shall have a minimum distance (W) of 20 feet (6096 mm) measured at right angles from the building face to any of the following:

1. The closest interior lot line.
2. The entire width of a street, alley or public way.
3. The exterior face of an adjacent building on the same property.

Where the value of W is greater than 30 feet (9144 mm), a value of 30 feet (9144 mm) shall be used in calculating the building area increase based on frontage, regardless of the actual width of the public way or open space. Where the value of W varies along the perimeter of the building, the calculation performed in accordance with Equation 5-5 shall be based on the weighted average calculated in accordance with Equation 5-4.

INTERNATIONAL CODE COUNCIL®
Copyright © 2019 ICC & NYSDOS. ALL RIGHTS RESERVED. Accessed by Lauren Gualdino (lgualdino@briarcliffmanor.org), (-) Order Number #100880972 on May 08, 2020 07:05 AM (PDT) pursuant to License Agreement with ICC & NYSDOS. No further reproduction, no

100880972

TABLE 506.2
ALLOWABLE AREA FACTOR (A_t = NS, S1, S13R, S13D or SM, as applicable) IN SQUARE FEET[a, b]

OCCUPANCY CLASSIFICATION	SEE FOOTNOTES	TYPE OF CONSTRUCTION								
		TYPE I		TYPE II		TYPE III		TYPE IV	TYPE V	
		A	B	A	B	A	B	HT	A	B
A-1	NS	UL	UL	15,500	8,500	14,000	8,500	15,000	11,500	5,500
	S1	UL	UL	62,000	34,000	56,000	34,000	60,000	46,000	22,000
	SM	UL	UL	46,500	25,500	42,000	25,500	45,000	34,500	16,500
A-2	NS	UL	UL	15,500	9,500	14,000	9,500	15,000	11,500	6,000
	S1	UL	UL	62,000	38,000	56,000	38,000	60,000	46,000	24,000
	SM	UL	UL	46,500	28,500	42,000	28,500	45,000	34,500	18,000
A-3	NS	UL	UL	15,500	9,500	14,000	9,500	15,000	11,500	6,000
	S1	UL	UL	62,000	38,000	56,000	38,000	60,000	46,000	24,000
	SM	UL	UL	46,500	28,500	42,000	28,500	45,000	34,500	18,000
A-4	NS	UL	UL	15,500	9,500	14,000	9,500	15,000	11,500	6,000
	S1	UL	UL	62,000	38,000	56,000	38,000	60,000	46,000	24,000
	SM	UL	UL	46,500	28,500	42,000	28,500	45,000	34,500	18,000
A-5	NS	UL	UL	UL	UL	UL	UL	UL	UL	UL
	S1									
	SM									
B	NS	UL	UL	37,500	23,000	28,500	19,000	36,000	18,000	9,000
	S1	UL	UL	150,000	92,000	114,000	76,000	144,000	72,000	36,000
	SM	UL	UL	112,500	69,000	85,500	57,000	108,000	54,000	27,000
E	NS	UL	UL	26,500	14,500	23,500	14,500	25,500	18,500	9,500
	S1	UL	UL	106,000	58,000	94,000	58,000	102,000	74,000	38,000
	SM	UL	UL	79,500	43,500	70,500	43,500	76,500	55,500	28,500
F-1	NS	UL	UL	25,000	15,500	19,000	12,000	33,500	14,000	8,500
	S1	UL	UL	100,000	62,000	76,000	48,000	134,000	56,000	34,000
	SM	UL	UL	75,000	46,500	57,000	36,000	100,500	42,000	25,500
F-2	NS	UL	UL	37,500	23,000	28,500	18,000	50,500	21,000	13,000
	S1	UL	UL	150,000	92,000	114,000	72,000	202,000	84,000	52,000
	SM	UL	UL	112,500	69,000	85,500	54,000	151,500	63,000	39,000
H-1	NS[c]	21,000	16,500	11,000	7,000	9,500	7,000	10,500	7,500	NP
	S1									
H-2	NS[c]	21,000	16,500	11,000	7,000	9,500	7,000	10,500	7,500	3,000
	S1									
	SM									
H-3	NS[c]	UL	60,000	26,500	14,000	17,500	13,000	25,500	10,000	5,000
	S1									
	SM									
H-4	NS[c, d]	UL	UL	37,500	17,500	28,500	17,500	36,000	18,000	6,500
	S1	UL	UL	150,000	70,000	114,000	70,000	144,000	72,000	26,000
	SM	UL	UL	112,500	52,500	85,500	52,500	108,000	54,000	19,500
H-5	NS[c, d]	UL	UL	37,500	23,000	28,500	19,000	36,000	18,000	9,000
	S1	UL	UL	150,000	92,000	114,000	76,000	144,000	72,000	36,000
	SM	UL	UL	112,500	69,000	85,500	57,000	108000	54,000	27,000

(continued)

INTERNATIONAL CODE COUNCIL®
Copyright © 2019 ICC & NYSDOS. ALL RIGHTS RESERVED. Accessed by Lauren Gualdino (lgualdino@briarcliffmanor.org), (-) Order Number #100880972 on May 08, 2020 07:05 AM (PDT) pursuant to License Agreement with ICC & NYSDOS. No further reproduction, no

100880972

TABLE 506.2—continued
ALLOWABLE AREA FACTOR (A_t = NS, S1, S13R, S13D or SM, as applicable) IN SQUARE FEET[a, b]

OCCUPANCY CLASSIFICATION	SEE FOOTNOTES	TYPE OF CONSTRUCTION								
		TYPE I		TYPE II		TYPE III		TYPE IV	TYPE V	
		A	B	A	B	A	B	HT	A	B
I-1	NS[d, e]	UL	55,000	19,000	10,000	16,500	10,000	18,000	10,500	4,500
	S1	UL	220,000	76,000	40,000	66,000	40,000	72,000	42,000	18,000
	SM	UL	165,000	57,000	30,000	49,500	30,000	54,000	31,500	13,500
I-2	NS[d, f]	UL	UL	15,000	11,000	12,000	NP	12,000	9,500	NP
	S1	UL	UL	60,000	44,000	48,000	NP	48,000	38,000	NP
	SM	UL	UL	45,000	33,000	36,000	NP	36,000	28,500	NP
I-3	NS[d, e]	UL	UL	15,000	10,000	10,500	7,500	12,000	7,500	5,000
	S1	UL	UL	45,000	40,000	42,000	30,000	48,000	30,000	20,000
	SM	UL	UL	45,000	30,000	31,500	22,500	36,000	22,500	15,000
I-4	NS[d, g]	UL	60,500	26,500	13,000	23,500	13,000	25,500	18,500	9,000
	S1	UL	121,000	106,000	52,000	94,000	52,000	102,000	74,000	36,000
	SM	UL	181,500	79,500	39,000	70,500	39,000	76,500	55,500	27,000
M	NS	UL	UL	21,500	12,500	18,500	12,500	20,500	14,000	9,000
	S1	UL	UL	86,000	50,000	74,000	50,000	82,000	56,000	36,000
	SM	UL	UL	64,500	37,500	55,500	37,500	61,500	42,000	27,000
R-1[h]	NS[d]	UL	UL	24,000	16,000	24,000	16,000	20,500	12,000	7,000
	S13R									
	S1	UL	UL	96,000	64,000	96,000	64,000	82,000	48,000	28,000
	SM	UL	UL	72,000	48,000	72,000	48,000	61,500	36,000	21,000
R-2[h]	NS[d]	UL	UL	24,000	16,000	24,000	16,000	20,500	12,000	7,000
	S13R									
	S1	UL	UL	96,000	64,000	96,000	64,000	82,000	48,000	28,000
	SM	UL	UL	72,000	48,000	72,000	48,000	61,500	36,000	21,000
R-3[h]	NS[d]	UL	UL	UL	UL	UL	UL	UL	UL	UL
	S13D									
	S13R									
	S1									
	SM									
R-4[h]	NS[d]	UL	UL	24,000	16,000	24,000	16,000	20,500	12,000	7,000
	S13D									
	S13R									
	S1	UL	UL	96,000	64,000	96,000	64,000	82,000	48,000	28,000
	SM	UL	UL	72,000	48,000	72,000	48,000	61,500	36,000	21,000
S-1	NS	UL	48,000	26,000	17,500	26,000	17,500	25,500	14,000	9,000
	S1	UL	192,000	104,000	70,000	104,000	70,000	102,000	56,000	36,000
	SM	UL	144,000	78,000	52,500	78,000	52,500	76,500	42,000	27,000
S-2	NS	UL	79,000	39,000	26,000	39,000	26,000	38,500	21,000	13,500
	S1	UL	316,000	156,000	104,000	156,000	104,000	154,000	84,000	54,000
	SM	UL	237,000	117,000	78,000	117,000	78,000	115,500	63,000	40,500
U	NS[i]	UL	35,500	19,000	8,500	14,000	8,500	18,000	9,000	5,500
	S1	UL	142,000	76,000	34,000	56,000	34,000	72,000	36,000	22,000
	SM	UL	106,500	57,000	25,500	42,000	25,500	54,000	27,000	16,500

(continued)

INTERNATIONAL CODE COUNCIL®
Copyright © 2019 ICC & NYSDOS. ALL RIGHTS RESERVED. Accessed by Lauren Gualdino (lgualdino@briarcliffmanor.org), (-) Order Number #100880972 on May 08, 2020 07:05 AM (PDT) pursuant to License Agreement with ICC & NYSDOS. No further reproduction, no

100880972

TABLE 506.2—continued
ALLOWABLE AREA FACTOR (A_t = NS, S1, S13R, S13D or SM, as applicable) IN SQUARE FEET[a, b]

For SI: 1 square foot = 0.0929 m^2.

UL = Unlimited; NP = Not Permitted; NS = Buildings not equipped throughout with an automatic sprinkler system; S1 = Buildings a maximum of one story above grade plane equipped throughout with an automatic sprinkler system installed in accordance with Section 903.3.1.1; SM = Buildings two or more stories above grade plane equipped throughout with an automatic sprinkler system installed in accordance with Section 903.3.1.1; S13R = Buildings equipped throughout with an automatic sprinkler system installed in accordance with Section 903.3.1.2; S13D = Buildings equipped throughout with an automatic sprinkler system installed in accordance with Section 903.3.1.3.

a. See Chapters 4 and 5 for specific exceptions to the allowable height in this chapter.
b. See Section 903.2 for the minimum thresholds for protection by an automatic sprinkler system for specific occupancies.
c. New Group H occupancies are required to be protected by an automatic sprinkler system in accordance with Section 903.2.5.
d. The NS value is only for use in evaluation of existing building area in accordance with the *Existing Building Code of New York State*.
e. New Group I-1 and I-3 occupancies are required to be protected by an automatic sprinkler system in accordance with Section 903.2.6. For new Group I-1 occupancies, Condition 1, see Exception 1 of Section 903.2.6.
f. New and existing Group I-2 occupancies are required to be protected by an automatic sprinkler system in accordance with Section 903.2.6 and Section 1103.5 of the *Fire Code of New York State*.
g. New Group I-4 occupancies see Exceptions 2 and 3 of Section 903.2.6.
h. New Group R occupancies are required to be protected by an automatic sprinkler system in accordance with Section 903.2.8.
i. The maximum allowable area for a single-story nonsprinklered Group U greenhouse is permitted to be 9,000 square feet, or the allowable area shall be permitted to comply with Table C102.1 of Appendix C.

$$W = (L_1 \times w_1 + L_2 \times w_2 + L_3 \times w_3 \ldots)/F \qquad \textbf{(Equation 5-4)}$$

where:

W (Width: weighted average) = Calculated width of public way or open space (feet).

L_n = Length of a portion of the exterior perimeter wall.

w_n = Width (≥ 20 feet) of a public way or open space associated with that portion of the exterior perimeter wall.

F = Building perimeter that fronts on a public way or open space having a width of 20 feet (6096 mm) or more.

Exception: Where a building meets the requirements of Section 507, as applicable, except for compliance with the minimum 60-foot (18 288 mm) *public way* or *yard* requirement, and the value of W is greater than 30 feet (9144 mm), the value of W shall not exceed 60 feet (18 288 mm).

506.3.3 Amount of increase. The area factor increase based on frontage shall be determined in accordance with Equation 5-5:

$$I_f = [F/P - 0.25]W/30 \qquad \textbf{(Equation 5-5)}$$

where:

I_f = Area factor increase due to frontage.

F = Building perimeter that fronts on a *public way* or open space having minimum distance of 20 feet (6096 mm).

P = Perimeter of entire building (feet).

W = Width of *public way* or open space (feet) in accordance with Section 506.3.2.

SECTION 507
UNLIMITED AREA BUILDINGS

507.1 General. The area of buildings of the occupancies and configurations specified in Sections 507.1 through 507.13 shall not be limited. Basements not more than one story below grade plane shall be permitted.

507.1.1 Accessory occupancies. Accessory occupancies shall be permitted in unlimited area buildings in accordance with the provisions of Section 508.2, otherwise the requirements of Sections 507.3 through 507.13 shall be applied, where applicable.

507.2 Measurement of open spaces. Where Sections 507.3 through 507.13 require buildings to be surrounded and adjoined by *public ways* and *yards*, those open spaces shall be determined as follows:

1. Yards shall be measured from the building perimeter in all directions to the closest interior *lot lines* or to the exterior face of an opposing building located on the same *lot*, as applicable.
2. Where the building fronts on a *public way*, the entire width of the *public way* shall be used.

507.2.1 Reduced open space. The *public ways* or *yards* of 60 feet (18 288 mm) in width required in Sections 507.3, 507.4, 507.5, 507.6 and 507.12 shall be permitted to be reduced to not less than 40 feet (12 192 mm) in width provided all of the following requirements are met:

1. The reduced width shall not be allowed for more than 75 percent of the perimeter of the building.
2. The *exterior walls* facing the reduced width shall have a *fire-resistance rating* of not less than 3 hours.
3. Openings in the *exterior walls* facing the reduced width shall have opening protectives with a *fire protection rating* of not less than 3 hours.

507.3 Nonsprinklered, one-story buildings. The area of a Group F-2 or S-2 building not more than one *story* in height shall not be limited where the building is surrounded and adjoined by *public ways* or *yards* not less than 60 feet (18 288 mm) in width.

507.4 Sprinklered, one-story buildings. The area of a Group A-4 building not more than one *story above grade plane* of other than Type V construction, or the area of a

INTERNATIONAL CODE COUNCIL®
Copyright © 2019 ICC & NYSDOS. ALL RIGHTS RESERVED. Accessed by Lauren Gualdino (lgualdino@briarcliffmanor.org), (-) Order Number #100880972 on May 08, 2020 07:05 AM (PDT) pursuant to License Agreement with ICC & NYSDOS. No further reproduction, no

100880972

Group B, F, M or S building no more than one story above grade plane of any construction type, shall not be limited where the building is provided with an *automatic sprinkler system* throughout in accordance with Section 903.3.1.1 and is surrounded and adjoined by *public ways* or *yards* not less than 60 feet (18 288 mm) in width.

Exceptions:

1. Buildings and structures of Type I or II construction for rack storage facilities that do not have access by the public shall not be limited in height, provided that such buildings conform to the requirements of Sections 507.4 and 903.3.1.1 and Chapter 32 of the *Fire Code of New York State*.
2. The *automatic sprinkler system* shall not be required in areas occupied for indoor participant sports, such as tennis, skating, swimming and equestrian activities in occupancies in Group A-4, provided that all of the following criteria are met:
    2.1. *Exit* doors directly to the outside are provided for occupants of the participant sports areas.
    2.2. The building is equipped with a *fire alarm system* with *manual fire alarm boxes* installed in accordance with Section 907.
    2.3. An *automatic sprinkler system* is provided in storage rooms, press boxes, concession booths or other spaces ancillary to the sport activity space.

507.4.1 Mixed occupancy buildings with Groups A-1 and A-2. Group A-1 and A-2 occupancies of other than Type V construction shall be permitted within mixed occupancy buildings of unlimited area complying with Section 507.4, provided all of the following criteria are met:

1. Group A-1 and A-2 occupancies are separated from other occupancies as required for separated occupancies in Section 508.4.4 with no reduction allowed in the *fire-resistance rating* of the separation based upon the installation of an *automatic sprinkler system*.
2. Each area of the portions of the building used for Group A-1 or A-2 occupancies shall not exceed the maximum allowable area permitted for such occupancies in Section 503.1.
3. *Exit* doors from Group A-1 and A-2 occupancies shall discharge directly to the exterior of the building.

507.5 Two-story buildings. The area of a Group B, F, M or S building not more than two *stories above grade plane* shall not be limited where the building is equipped throughout with an *automatic sprinkler system* in accordance with Section 903.3.1.1 and is surrounded and adjoined by *public ways* or *yards* not less than 60 feet (18 288 mm) in width.

507.6 Group A-3 buildings of Type II construction. The area of a Group A-3 building not more than one *story above grade plane*, used as a *place of religious worship*, community hall, dance hall, exhibition hall, gymnasium, lecture hall, indoor *swimming pool* or tennis court of Type II construction, shall not be limited provided all of the following criteria are met:

1. The building shall not have a *stage* other than a *platform*.
2. The building shall be equipped throughout with an *automatic sprinkler system* in accordance with Section 903.3.1.1.
3. The building shall be surrounded and adjoined by *public ways* or *yards* not less than 60 feet (18 288 mm) in width.

507.7 Group A-3 buildings of Type III and IV construction. The area of a Group A-3 building of Type III or IV construction, with not more than one *story above grade plane* and used as a *place of religious worship*, community hall, dance hall, exhibition hall, gymnasium, lecture hall, indoor *swimming pool* or tennis court, shall not be limited provided all of the following criteria are met:

1. The building shall not have a *stage* other than a *platform*.
2. The building shall be equipped throughout with an *automatic sprinkler system* in accordance with Section 903.3.1.1.
3. The assembly floor shall be located at or within 21 inches (533 mm) of street or grade level and all *exits* are provided with ramps complying with Section 1012 to the street or grade level.
4. The building shall be surrounded and adjoined by *public ways* or *yards* not less than 60 feet (18 288 mm) in width.

507.8 Group H-2, H-3 and H-4 occupancies. Group H-2, H-3 and H-4 occupancies shall be permitted in unlimited area buildings containing Group F or S occupancies in accordance with Sections 507.4 and 507.5 and the provisions of Sections 507.8.1 through 507.8.4.

507.8.1 Allowable area. The aggregate floor area of Group H occupancies located in an unlimited area building shall not exceed 10 percent of the area of the building nor the area limitations for the Group H occupancies as specified in Section 506 based on the perimeter of each Group H floor area that fronts on a *public way* or open space.

507.8.1.1 Located within the building. The aggregate floor area of Group H occupancies not located at the perimeter of the building shall not exceed 25 percent of the area limitations for the Group H occupancies as specified in Section 506.

507.8.1.1.1 Liquid use, dispensing and mixing rooms. Liquid use, dispensing and mixing rooms having a floor area of not more than 500 square feet (46.5 m^2) need not be located on the outer perimeter of the building where they are in accordance with the *Fire Code of New York State* and NFPA 30.

507.8.1.1.2 Liquid storage rooms. Liquid storage rooms having a floor area of not more than 1,000 square feet (93 m^2) need not be located on the outer

INTERNATIONAL CODE COUNCIL®
Copyright © 2019 ICC & NYSDOS. ALL RIGHTS RESERVED. Accessed by Lauren Gualdino (lgualdino@briarcliffmanor.org), (-) Order Number #100880972 on May 08, 2020 07:05 AM (PDT) pursuant to License Agreement with ICC & NYSDOS. No further reproduction, no

100880972

perimeter where they are in accordance with the *Fire Code of New York State* and NFPA 30.

507.8.1.1.3 Spray paint booths. Spray paint booths that comply with the *Fire Code of New York State* need not be located on the outer perimeter.

507.8.2 Located on building perimeter. Except as provided for in Section 507.8.1.1, Group H occupancies shall be located on the perimeter of the building. In Group H-2 and H-3 occupancies, not less than 25 percent of the perimeter of such occupancies shall be an *exterior wall*.

507.8.3 Occupancy separations. Group H occupancies shall be separated from the remainder of the unlimited area building and from each other in accordance with Table 508.4.

507.8.4 Height limitations. For two-*story,* unlimited area buildings, Group H occupancies shall not be located more than one *story above grade plane* unless permitted based on the allowable height and number of *stories* and feet as specified in Section 504 based on the type of construction of the unlimited area building.

507.9 Unlimited mixed occupancy buildings with Group H-5. The area of a Group B, F, H-5, M or S building not more than two *stories above grade plane* shall not be limited where the building is equipped throughout with an *automatic sprinkler system* in accordance with Section 903.3.1.1, and is surrounded and adjoined by *public ways* or *yards* not less than 60 feet (18 288 mm) in width, provided all of the following criteria are met:

1. Buildings containing Group H-5 occupancy shall be of Type I or II construction.
2. Each area used for Group H-5 occupancy shall be separated from other occupancies as required in Sections 415.11 and 508.4.
3. Each area used for Group H-5 occupancy shall not exceed the maximum allowable area permitted for such occupancies in Section 503.1 including modifications of Section 506.

   Exception: Where the Group H-5 occupancy exceeds the maximum allowable area, the Group H-5 shall be subdivided into areas that are separated by 2-hour fire barriers.

507.10 Aircraft paint hangar. The area of a Group H-2 aircraft paint hangar not more than one *story above grade plane* shall not be limited where such aircraft paint hangar complies with the provisions of Section 412.5 and is surrounded and adjoined by *public ways* or *yards* not less in width than one and one-half times the *building height*.

507.11 Group E buildings. The area of a Group E building not more than one *story above grade plane*, of Type II, IIIA or IV construction, shall not be limited provided all of the following criteria are met:

1. Each classroom shall have not less than two *means of egress*, with one of the *means of egress* being a direct *exit* to the outside of the building complying with Section 1022.
2. The building is equipped throughout with an *automatic sprinkler system* in accordance with Section 903.3.1.1.
3. The building is surrounded and adjoined by *public ways* or *yards* not less than 60 feet (18 288 mm) in width.

507.12 Motion picture theaters. In buildings of Type II construction, the area of a motion picture theater located on the first *story above grade plane* shall not be limited where the building is provided with an *automatic sprinkler system* throughout in accordance with Section 903.3.1.1 and is surrounded and adjoined by *public ways* or *yards* not less than 60 feet (18 288 mm) in width.

507.13 Covered and open mall buildings and anchor buildings. The area of *covered and open mall buildings* and *anchor buildings* not exceeding three *stories* in height that comply with Section 402 shall not be limited.

SECTION 508
MIXED USE AND OCCUPANCY

508.1 General. Each portion of a building shall be individually classified in accordance with Section 302.1. Where a building contains more than one occupancy group, the building or portion thereof shall comply with the applicable provisions of Section 508.2, 508.3 or 508.4, or a combination of these sections.

Exceptions:

1. Occupancies separated in accordance with Section 510.
2. Where required by Table 415.6.2, areas of Group H-1, H-2 and H-3 occupancies shall be located in a *detached building* or structure.
3. Uses within *live/work units*, complying with Section 419, are not considered separate occupancies.

508.2 Accessory occupancies. Accessory occupancies are those occupancies that are ancillary to the main occupancy of the building or portion thereof. Accessory occupancies shall comply with the provisions of Sections 508.2.1 through 508.2.4.

508.2.1 Occupancy classification. Accessory occupancies shall be individually classified in accordance with Section 302.1. The requirements of this code shall apply to each portion of the building based on the occupancy classification of that space.

508.2.2 Allowable building height. The allowable height and number of *stories* of the building containing accessory occupancies shall be in accordance with Section 504 for the main occupancy of the building.

508.2.3 Allowable building area. The allowable area of the building shall be based on the applicable provisions of Section 506 for the main occupancy of the building. Aggregate accessory occupancies shall not occupy more than 10 percent of the floor area of the story in which they are located and shall not exceed the tabular values for nonsprinklered buildings in Table 506.2 for each such accessory occupancy.

INTERNATIONAL CODE COUNCIL®
Copyright © 2019 ICC & NYSDOS. ALL RIGHTS RESERVED. Accessed by Lauren Gualdino (lgualdino@briarcliffmanor.org), (-) Order Number #100880972 on May 08, 2020 07:05 AM (PDT) pursuant to License Agreement with ICC & NYSDOS. No further reproduction, no

100880972

508.2.4 Separation of occupancies. No separation is required between accessory occupancies and the main occupancy.

Exceptions:

1. Group H-2, H-3, H-4 and H-5 occupancies shall be separated from all other occupancies in accordance with Section 508.4.
2. Group I-1, R-1, R-2 and R-3 *dwelling units* and *sleeping units* shall be separated from other *dwelling* or *sleeping units* and from accessory occupancies contiguous to them in accordance with the requirements of Section 420.

508.3 Nonseparated occupancies. Buildings or portions of buildings that comply with the provisions of this section shall be considered as nonseparated occupancies.

508.3.1 Occupancy classification. Nonseparated occupancies shall be individually classified in accordance with Section 302.1. The requirements of this code shall apply to each portion of the building based on the occupancy classification of that space. In addition, the most restrictive provisions of Chapter 9 that apply to the nonseparated occupancies shall apply to the total nonseparated occupancy area.

508.3.1.1 High-rise buildings. Where nonseparated occupancies occur in a *high-rise building,* the most restrictive requirements of Section 403 that apply to the nonseparated occupancies shall apply throughout the *high-rise building.*

508.3.1.2 Group I-2, Condition 2 occupancies. Where one of the nonseparated occupancies is Group I-2, Condition 2, the most restrictive requirements of Sections 407, 509 and 712 shall apply throughout the fire area containing the Group I-2 occupancy. The most restrictive requirements of Chapter 10 shall apply to the path of egress from the Group I-2, Condition 2 occupancy up to and including the exit discharge.

508.3.2 Allowable building area, height and number of stories. The allowable *building area, height* and number of *stories* of the building or portion thereof shall be based on the most restrictive allowances for the occupancy groups under consideration for the type of construction of the building in accordance with Section 503.1.

508.3.3 Separation. No separation is required between nonseparated occupancies.

Exceptions:

1. Group H-2, H-3, H-4 and H-5 occupancies shall be separated from all other occupancies in accordance with Section 508.4.
2. Group I-1, R-1, R-2 and R-3 *dwelling units* and *sleeping units* shall be separated from other *dwelling* or *sleeping units* and from other occupancies contiguous to them in accordance with the requirements of Section 420.

508.4 Separated occupancies. Buildings or portions of buildings that comply with the provisions of this section shall be considered as separated occupancies.

508.4.1 Occupancy classification. Separated occupancies shall be individually classified in accordance with Section 302.1. Each separated space shall comply with this code based on the occupancy classification of that portion of the building. The most restrictive provisions of Chapter 9 that apply to the separate occupancies shall apply to the total nonfire-barrier-separated occupancy areas. Occupancy separations that serve to define fire area limits established in Chapter 9 for requiring a fire protection system shall also comply with Section 901.7.

508.4.2 Allowable building area. In each *story*, the *building area* shall be such that the sum of the ratios of the actual *building area* of each separated occupancy divided by the allowable *building* area of each separated occupancy shall not exceed 1.

508.4.3 Allowable building height and number of stories. Each separated occupancy shall comply with the *building height limitations* and *story* limitations based on the type of construction of the building in accordance with Section 503.1.

Exception: Special provisions of Section 510 shall permit occupancies at *building heights* and number of *stories* other than provided in Section 503.1.

508.4.4 Separation. Individual occupancies shall be separated from adjacent occupancies in accordance with Table 508.4.

508.4.4.1 Construction. Required separations shall be *fire barriers* constructed in accordance with Section 707 or *horizontal assemblies* constructed in accordance with Section 711, or both, so as to completely separate adjacent occupancies.

SECTION 509
INCIDENTAL USES

509.1 General. Incidental uses located within single occupancy or mixed occupancy buildings shall comply with the provisions of this section. Incidental uses are ancillary functions associated with a given occupancy that generally pose a greater level of risk to that occupancy and are limited to those uses listed in Table 509.

Exception: Incidental uses within and serving a *dwelling unit* are not required to comply with this section.

509.2 Occupancy classification. Incidental uses shall not be individually classified in accordance with Section 302.1. Incidental uses shall be included in the building occupancies within which they are located.

509.3 Area limitations. Incidental uses shall not occupy more than 10 percent of the *building area* of the *story* in which they are located.

INTERNATIONAL CODE COUNCIL®
Copyright © 2019 ICC & NYSDOS. ALL RIGHTS RESERVED. Accessed by Lauren Gualdino (lgualdino@briarcliffmanor.org), (-) Order Number #100880972 on May 08, 2020 07:05 AM (PDT) pursuant to License Agreement with ICC & NYSDOS. No further reproduction, no

100880972

TABLE 508.4
REQUIRED SEPARATION OF OCCUPANCIES (HOURS)[f]

OCCUPANCY	A, E		I-1[a], I-3, I-4		I-2		R[a]		F-2, S-2[b], U		B[e], F-1, M, S-1		H-1		H-2		H-3, H-4		H-5	
	S	NS	S	NS	S	NS	S	NS	S	NS	S	NS	S	NS	S	NS	S	NS	S	NS
A, E	N	N	1	2	2	NP	1	2	N	1	1	2	NP	NP	3	4	2	3	2	NP
I-1[a], I-3, I-4	—	—	N	N	2	NP	1	NP	1	2	1	2	NP	NP	3	NP	2	NP	2	NP
I-2	—	—	—	—	N	N	2	NP	2	NP	2	NP	NP	NP	3	NP	2	NP	2	NP
R[a]	—	—	—	—	—	—	N	N	1[c]	2[c]	1	2	NP	NP	3	NP	2	NP	2	NP
F-2, S-2[b], U	—	—	—	—	—	—	—	—	N	N	1	2	NP	NP	3	4	2	3	2	NP
B[e], F-1, M, S-1	—	—	—	—	—	—	—	—	—	—	N	N	NP	NP	2	3	1	2	1	NP
H-1	—	—	—	—	—	—	—	—	—	—	—	—	N	NP	NP	NP	NP	NP	NP	NP
H-2	—	—	—	—	—	—	—	—	—	—	—	—	—	—	N	NP	1	NP	1	NP
H-3, H-4	—	—	—	—	—	—	—	—	—	—	—	—	—	—	—	—	1[d]	NP	1	NP
H-5	—	—	—	—	—	—	—	—	—	—	—	—	—	—	—	—	—	—	N	NP

S = Buildings equipped throughout with an automatic sprinkler system installed in accordance with Section 903.3.1.1.
NS = Buildings not equipped throughout with an automatic sprinkler system installed in accordance with Section 903.3.1.1.
N = No separation requirement.
NP = Not Permitted.
a. See Section 420.
b. The required separation from areas used only for private or pleasure vehicles shall be reduced by 1 hour but not to less than 1 hour.
c. See Section 406.3.2.
d. Separation is not required between occupancies of the same classification.
e. See Section 422.2 for ambulatory care facilities.
f. Occupancy separations that serve to define fire area limits established in Chapter 9 for requiring fire protection systems shall also comply with Section 707.3.10 and Table 707.3.10 in accordance with Section 901.7.

509.4 Separation and protection. The incidental uses listed in Table 509 shall be separated from the remainder of the building or equipped with an *automatic sprinkler system*, or both, in accordance with the provisions of that table.

509.4.1 Separation. Where Table 509 specifies a fire-resistance-rated separation, the incidental uses shall be separated from the remainder of the *building* by a *fire barrier* constructed in accordance with Section 707 or a *horizontal assembly* constructed in accordance with Section 711, or both. Construction supporting 1-hour *fire barriers* or *horizontal assemblies* used for incidental use separations in buildings of Type IIB, IIIB and VB construction is not required to be fire-resistance rated unless required by other sections of this code.

509.4.2 Protection. Where Table 509 permits an *automatic sprinkler system* without a *fire barrier*, the incidental uses shall be separated from the remainder of the building by construction capable of resisting the passage of smoke. The walls shall extend from the top of the foundation or floor assembly below to the underside of the ceiling that is a component of a fire-resistance-rated floor assembly or roof assembly above or to the underside of the floor or roof sheathing, deck or slab above. Doors shall be self- or automatic-closing upon detection of smoke in accordance with Section 716.2.6.6. Doors shall not have air transfer openings and shall not be undercut in excess of the clearance permitted in accordance with NFPA 80. Walls surrounding the incidental use shall not have air transfer openings unless provided with smoke dampers in accordance with Section 710.8.

509.4.2.1 Protection limitation. Where an *automatic sprinkler system* is provided in accordance with Table 509, only the space occupied by the incidental use need be equipped with such a system.

SECTION 510
SPECIAL PROVISIONS

510.1 General. The provisions in Sections 510.2 through 510.9 shall permit the use of special conditions that are exempt from, or modify, the specific requirements of this chapter regarding the allowable *building heights and areas* of buildings based on the occupancy classification and type of construction, provided the special condition complies with the provisions specified in this section for such condition and other applicable requirements of this code. The provisions of Sections 510.2 through 510.8 are to be considered independent and separate from each other.

510.2 Horizontal building separation allowance. A building shall be considered as separate and distinct buildings for the purpose of determining area limitations, continuity of *fire walls*, limitation of number of *stories* and type of construction where all of the following conditions are met:

1. The buildings are separated with a *horizontal assembly* having a *fire-resistance rating* of not less than 3 hours. Where vertical offsets are provided as part of a horizontal assembly, the vertical offset and the structure supporting the vertical offset shall have a *fire-resistance rating* of not less than 3 hours.

INTERNATIONAL CODE COUNCIL®
Copyright © 2019 ICC & NYSDOS. ALL RIGHTS RESERVED. Accessed by Lauren Gualdino (lgualdino@briarcliffmanor.org), (-) Order Number #100880972 on May 08, 2020 07:05 AM (PDT) pursuant to License Agreement with ICC & NYSDOS. No further reproduction, no

100880972

[NY]TABLE 509
INCIDENTAL USES

ROOM OR AREA	SEPARATION AND/OR PROTECTION
Furnace room where any piece of equipment is over 400,000 Btu per hour input	1 hour or provide automatic sprinkler system
Rooms with boilers where the largest piece of equipment is over 15 psi and 10 horsepower	1 hour or provide automatic sprinkler system
Refrigerant machinery room	1 hour or provide automatic sprinkler system
Hydrogen fuel gas rooms, not classified as Group H	1 hour in Group B, F, M, S and U occupancies; 2 hours in Group A, E, I and R occupancies.
Incinerator rooms	2 hours and provide automatic sprinkler system
Paint shops, not classified as Group H, located in occupancies other than Group F	2 hours; or 1 hour and provide automatic sprinkler system
In Group E occupancies, laboratories and vocational shops not classified as Group H	1 hour or provide automatic sprinkler system
In Group I-2 occupancies, laboratories not classified as Group H	1 hour and provide automatic sprinkler system
In ambulatory care facilities, laboratories not classified as Group H	1 hour or provide automatic sprinkler system
Laundry rooms over 100 square feet	1 hour or provide automatic sprinkler system
In Group I-2, laundry rooms over 100 square feet	1 hour
Group I-3 cells and Group I-2 patient rooms equipped with padded surfaces	1 hour
In Group I-2, physical plant maintenance shops	1 hour
In ambulatory care facilities or Group I-2 occupancies, waste and linen collection rooms with containers that have an aggregate volume of 10 cubic feet or greater	1 hour
In other than ambulatory care facilities and Group I-2 occupancies, waste and linen collection rooms over 100 square feet	1 hour or provide automatic sprinkler system
In ambulatory care facilities or Group I-2 occupancies, storage rooms greater than 100 square feet	1 hour
Energy storage systems having an energy capacity greater than the threshold quantity specified in Table 1206.1 of the *Fire Code of New York State*	2 hours
Electrical installations and transformers	See Sections 110.26 through 110.34 and Sections 450.8 through 450.48 of NFPA 70 for protection and separation requirements.

For SI: 1 square foot = 0.0929 m^2, 1 pound per square inch (psi) = 6.9 kPa, 1 British thermal unit (Btu) per hour = 0.293 watts, 1 horsepower = 746 watts, 1 gallon = 3.785 L, 1 cubic foot = 0.0283 m^3.

2. The building below, including the *horizontal assembly*, is of Type IA construction.
3. *Shaft*, *stairway*, *ramp* and escalator enclosures through the *horizontal assembly* shall have not less than a 2-hour *fire-resistance rating* with opening protectives in accordance with Section 716.

   Exception: Where the enclosure walls below the *horizontal assembly* have not less than a 3-hour *fire-resistance rating* with opening protectives in accordance with Section 716, the enclosure walls extending above the *horizontal assembly* shall be permitted to have a 1-hour *fire-resistance rating*, provided:

   1. The building above the *horizontal assembly* is not required to be of Type I construction;
   2. The enclosure connects fewer than four *stories*; and
   3. The enclosure opening protectives above the *horizontal assembly* have a *fire protection rating* of not less than 1 hour.
4. The building or buildings above the *horizontal assembly* shall be permitted to have multiple Group A occupancy uses, each with an *occupant load* of less 300, or Group B, M, R or S occupancies.
5. The building below the *horizontal assembly* shall be protected throughout by an *approved automatic sprinkler system* in accordance with Section 903.3.1.1, and shall be permitted to be any occupancy allowed by this code except Group H.
6. The maximum *building height* in feet (mm) shall not exceed the limits set forth in Section 504.3 for the building having the smaller allowable height as measured from the *grade plane*.

510.3 Group S-2 enclosed parking garage with Group S-2 open parking garage above. A Group S-2 enclosed parking garage with not more than one *story* above *grade plane* and located below a Group S-2 *open parking garage* shall be classified as a separate and distinct building for the purpose of determining the type of construction where all of the following conditions are met:

1. The allowable area of the building shall be such that the sum of the ratios of the actual area divided by the allowable area for each separate occupancy shall not exceed 1.

INTERNATIONAL CODE COUNCIL®
Copyright © 2019 ICC & NYSDOS. ALL RIGHTS RESERVED. Accessed by Lauren Gualdino (lgualdino@briarcliffmanor.org), (-) Order Number #100880972 on May 08, 2020 07:05 AM (PDT) pursuant to License Agreement with ICC & NYSDOS. No further reproduction, no

100880972

2. The Group S-2 enclosed parking garage is of Type I or II construction and is at least equal to the *fire-resistance* requirements of the Group S-2 *open parking garage*.
3. The height and the number of tiers of the Group S-2 *open parking garage* shall be limited as specified in Table 406.5.4.
4. The floor assembly separating the Group S-2 enclosed parking garage and Group S-2 *open parking garage* shall be protected as required for the floor assembly of the Group S-2 enclosed parking garage. Openings between the Group S-2 enclosed parking garage and Group S-2 *open parking garage*, except *exit* openings, shall not be required to be protected.
5. The Group S-2 enclosed parking garage is used exclusively for the parking or storage of private motor vehicles, but shall be permitted to contain an office, waiting room and toilet room having a total area of not more than 1,000 square feet (93 m^2) and mechanical equipment rooms incidental to the operation of the building.

510.4 Parking beneath Group R. Where a maximum one *story above grade plane* Group S-2 parking garage, enclosed or open, or combination thereof, of Type I construction or open of Type IV construction, with grade entrance, is provided under a building of Group R, the number of *stories* to be used in determining the minimum type of construction shall be measured from the floor above such a parking area. The floor assembly between the parking garage and the Group R above shall comply with the type of construction required for the parking garage and shall also provide a *fire-resistance rating* not less than the mixed occupancy separation required in Section 508.4.

510.5 Group R-1 and R-2 buildings of Type IIIA construction. The height limitation for buildings of Type IIIA construction in Groups R-1 and R-2 shall be increased to six *stories* and 75 feet (22 860 mm) where the first floor assembly above the *basement* has a *fire-resistance rating* of not less than 3 hours and the floor area is subdivided by 2-hour fire-resistance-rated *fire walls* into areas of not more than 3,000 square feet (279 m^2).

510.6 Group R-1 and R-2 buildings of Type IIA construction. The height limitation for buildings of Type IIA construction in Groups R-1 and R-2 shall be increased to nine *stories* and 100 feet (30 480 mm) where the building is separated by not less than 50 feet (15 240 mm) from any other building on the *lot* and from *lot lines*, the *exits* are segregated in an area enclosed by a 2-hour fire-resistance-rated *fire wall* and the first floor assembly has a *fire-resistance rating* of not less than $1^1/_2$ hours.

510.7 Open parking garage beneath Groups A, I, B, M and R. *Open parking garages* constructed under Groups A, I, B, M and R shall not exceed the height and area limitations permitted under Section 406.5. The height and area of the portion of the building above the *open parking garage* shall not exceed the limitations in Section 503 for the upper occupancy. The height, in both feet and *stories*, of the portion of the building above the *open parking garage* shall be measured from *grade plane* and shall include both the *open parking garage* and the portion of the building above the parking garage.

510.7.1 Fire separation. *Fire barriers* constructed in accordance with Section 707 or *horizontal assemblies* constructed in accordance with Section 711 between the parking occupancy and the upper occupancy shall correspond to the required *fire-resistance rating* prescribed in Table 508.4 for the uses involved. The type of construction shall apply to each occupancy individually, except that structural members, including main bracing within the open parking structure, which is necessary to support the upper occupancy, shall be protected with the more restrictive fire-resistance-rated assemblies of the groups involved as shown in Table 601. *Means of egress* for the upper occupancy shall conform to Chapter 10 and shall be separated from the parking occupancy by *fire barriers* having not less than a 2-hour *fire-resistance rating* as required by Section 707 with *self-closing* doors complying with Section 716 or *horizontal assemblies* having not less than a 2-hour *fire-resistance rating* as required by Section 711, with *self-closing* doors complying with Section 716. *Means of egress* from the *open parking garage* shall comply with Section 406.5.

510.8 Group B or M buildings with Group S-2 open parking garage above. Group B or M occupancies located below a Group S-2 open parking garage of a lesser type of construction shall be considered as a separate and distinct building from the Group S-2 *open parking garage* for the purpose of determining the type of construction where all of the following conditions are met:

1. The buildings are separated with a *horizontal assembly* having a *fire-resistance rating* of not less than 2 hours.
2. The occupancies in the building below the *horizontal assembly* are limited to Groups B and M.
3. The occupancy above the *horizontal assembly* is limited to a Group S-2 *open parking garage*.
4. The building below the *horizontal assembly* is of Type IA construction.

   Exception: The building below the *horizontal assembly* shall be permitted to be of Type IB or II construction, but not less than the type of construction required for the Group S-2 *open parking garage* above, where the building below is not greater than *one story* in height above grade plane.
5. The height and area of the building below the *horizontal assembly* does not exceed the limits set forth in Section 503.
6. The height and area of the Group S-2 *open parking garage* does not exceed the limits set forth in Section 406.5. The height, in both feet and *stories*, of the Group S-2 *open parking garage* shall be measured from *grade plane* and shall include the building below the *horizontal assembly*.
7. *Exits* serving the Group S-2 *open parking garage* discharge directly to a street or *public way* and are separated from the building below the *horizontal assembly* by 2-hour *fire barriers* constructed in accordance with

INTERNATIONAL CODE COUNCIL®
Copyright © 2019 ICC & NYSDOS. ALL RIGHTS RESERVED. Accessed by Lauren Gualdino (lgualdino@briarcliffmanor.org), (-) Order Number #100880972 on May 08, 2020 07:05 AM (PDT) pursuant to License Agreement with ICC & NYSDOS. No further reproduction, no

100880972

Section 707 or 2-hour *horizontal assemblies* constructed in accordance with Section 711, or both.

510.9 Multiple buildings above a horizontal assembly. Where two or more buildings are provided above the *horizontal assembly* separating a Group S-2 parking garage or building below from the buildings above in accordance with the special provisions in Section 510.2, 510.3 or 510.8, the buildings above the *horizontal assembly* shall be regarded as separate and distinct buildings from each other and shall comply with all other provisions of this code as applicable to each separate and distinct building.

INTERNATIONAL CODE COUNCIL®
Copyright © 2019 ICC & NYSDOS. ALL RIGHTS RESERVED. Accessed by Lauren Gualdino (lgualdino@briarcliffmanor.org), (-) Order Number #100880972 on May 08, 2020 07:05 AM (PDT) pursuant to License Agreement with ICC & NYSDOS. No further reproduction, no

100880972

CHAPTER 6

TYPES OF CONSTRUCTION

SECTION 601
GENERAL

601.1 Scope. The provisions of this chapter shall control the classification of buildings as to type of construction.

SECTION 602
CONSTRUCTION CLASSIFICATION

602.1 General. Buildings and structures erected or to be erected, altered or extended in height or area shall be classified in one of the five construction types defined in Sections 602.2 through 602.5. The building elements shall have a *fire-resistance rating* not less than that specified in Table 601 and exterior walls shall have a *fire-resistance rating* not less than that specified in Table 602. Where required to have a *fire-resistance rating* by Table 601, building elements shall comply with the applicable provisions of Section 703.2. The protection of openings, ducts and air transfer openings in building elements shall not be required unless required by other provisions of this code.

602.1.1 Minimum requirements. A building or portion thereof shall not be required to conform to the details of a type of construction higher than that type which meets the minimum requirements based on occupancy even though certain features of such a building actually conform to a higher type of construction.

602.2 Types I and II. Types I and II construction are those types of construction in which the building elements listed in Table 601 are of noncombustible materials, except as permitted in Section 603 and elsewhere in this code.

602.3 Type III. Type III construction is that type of construction in which the exterior walls are of noncombustible materials and the interior building elements are of any material permitted by this code. *Fire-retardant-treated wood* framing and sheathing complying with Section 2303.2 shall be permitted within *exterior wall* assemblies of a 2-hour rating or less.

602.4 Type IV. Type IV construction is that type of construction in which the exterior walls are of noncombustible materials and the interior building elements are of solid wood, laminated wood, heavy timber (HT) or structural composite lumber (SCL) without concealed spaces. The minimum dimensions for permitted materials including solid timber, glued-laminated timber, structural composite lumber (SCL), and cross-laminated timber and details of Type IV construction shall comply with the provisions of this section and Section 2304.11. Exterior walls complying with Section 602.4.1 or 602.4.2 shall be permitted. Interior walls and partitions not less than 1-hour fire-resistance rating or heavy timber complying with Section 2304.11.2.2 shall be permitted.

602.4.1 Fire-retardant-treated wood in exterior walls. *Fire-retardant-treated wood* framing and sheathing com-

TABLE 601
FIRE-RESISTANCE RATING REQUIREMENTS FOR BUILDING ELEMENTS (HOURS)

BUILDING ELEMENT	TYPE I		TYPE II		TYPE III		TYPE IV	TYPE V	
	A	B	A	B	A	B	HT	A	B
Primary structural frame[f] (see Section 202)	3[a, b]	2[a, b]	1[b]	0	1[b]	0	HT	1[b]	0
Bearing walls Exterior[e, f] Interior	 3 3[a]	 2 2[a]	 1 1	 0 0	 2 1	 2 0	 2 1/HT	 1 1	 0 0
Nonbearing walls and partitions Exterior	See Table 602								
Nonbearing walls and partitions Interior[d]	0	0	0	0	0	0	See Section 2304.11.2	0	0
Floor construction and associated secondary members (see Section 202)	2	2	1	0	1	0	HT	1	0
Roof construction and associated secondary members (see Section 202)	1 1/2[b]	1[b,c]	1[b,c]	0[c]	1[b,c]	0	HT	1[b,c]	0

For SI: 1 foot = 304.8 mm.

a. Roof supports: Fire-resistance ratings of primary structural frame and bearing walls are permitted to be reduced by 1 hour where supporting a roof only.

b. Except in Group F-1, H, M and S-1 occupancies, fire protection of structural members in roof construction shall not be required, including protection of primary structural frame members, roof framing and decking where every part of the roof construction is 20 feet or more above any floor immediately below. Fire-retardant-treated wood members shall be allowed to be used for such unprotected members.

c. In all occupancies, heavy timber complying with Section 2304.11 shall be allowed where a 1-hour or less fire-resistance rating is required.

d. Not less than the fire-resistance rating required by other sections of this code.

e. Not less than the fire-resistance rating based on fire separation distance (see Table 602).

f. Not less than the fire-resistance rating as referenced in Section 704.10.

INTERNATIONAL CODE COUNCIL®
Copyright © 2019 ICC & NYSDOS. ALL RIGHTS RESERVED. Accessed by Lauren Gualdino (lgualdino@briarcliffmanor.org), (-) Order Number #100880972 on May 08, 2020 07:05 AM (PDT) pursuant to License Agreement with ICC & NYSDOS. No further reproduction, no

100880972

plying with Section 2303.2 shall be permitted within exterior wall assemblies not less than 6 inches (152 mm) in thickness with a 2-hour rating or less.

602.4.2 Cross-laminated timber in exterior walls. *Cross-laminated timber* complying with Section 2303.1.4 shall be permitted within exterior wall assemblies not less than 6 inches (152 mm) in thickness with a 2-hour rating or less, provided the exterior surface of the cross-laminated timber is protected by one the following:

1. *Fire-retardant-treated wood* sheathing complying with Section 2303.2 and not less than $^{15}/_{32}$ inch (12 mm) thick;
2. *Gypsum board* not less than $^{1}/_{2}$ inch (12.7 mm) thick; or
3. A noncombustible material.

602.4.3 Exterior structural members. Where a horizontal separation of 20 feet (6096 mm) or more is provided, wood columns and arches conforming to heavy timber sizes complying with Section 2304.11 shall be permitted to be used externally.

602.5 Type V. Type V construction is that type of construction in which the structural elements, *exterior walls* and interior walls are of any materials permitted by this code.

SECTION 603
COMBUSTIBLE MATERIAL IN TYPES I AND II CONSTRUCTION

603.1 Allowable materials. Combustible materials shall be permitted in buildings of Type I or II construction in the following applications and in accordance with Sections 603.1.1 through 603.1.3:

1. *Fire-retardant-treated wood* shall be permitted in:
   - 1.1. Nonbearing partitions where the required *fire-resistance rating* is 2 hours or less.
   - 1.2. Nonbearing *exterior walls* where fire-resistance-rated construction is not required.
   - 1.3. Roof construction, including girders, trusses, framing and decking.

     Exception: In buildings of Type IA construction exceeding two *stories above grade plane*, *fire-retardant-treated wood* is not permitted in roof construction where the vertical distance from the upper floor to the roof is less than 20 feet (6096 mm).
   - 1.4. Balconies, porches, decks and exterior stairways not used as required exits on buildings three stories or less above grade plane.
2. Thermal and acoustical insulation, other than foam plastics, having a *flame spread index* of not more than 25.

   Exceptions:

   1. Insulation placed between two layers of noncombustible materials without an intervening airspace shall be allowed to have a *flame spread index* of not more than 100.
   2. Insulation installed between a finished floor and solid decking without intervening airspace shall be allowed to have a *flame spread index* of not more than 200.
3. Foam plastics in accordance with Chapter 26.
4. Roof coverings that have an A, B or C classification.
5. *Interior floor finish* and floor covering materials installed in accordance with Section 804.
6. Millwork such as doors, door frames, window sashes and frames.
7. *Interior wall and ceiling finishes* installed in accordance with Section 803.

TABLE 602
FIRE-RESISTANCE RATING REQUIREMENTS FOR EXTERIOR WALLS BASED ON FIRE SEPARATION DISTANCE[a, d, g]

FIRE SEPARATION DISTANCE = X (feet)	TYPE OF CONSTRUCTION	OCCUPANCY GROUP H[e]	OCCUPANCY GROUP F-1, M, S-1[f]	OCCUPANCY GROUP A, B, E, F-2, I, R[i], S-2, U[h]
X < 5[b]	All	3	2	1
5 ≤ X < 10	IA Others	3 2	2 1	1 1
10 ≤ X < 30	IA, IB IIB, VB Others	2 1 1	1 0 1	1[c] 0 1[c]
X ≥ 30	All	0	0	0

For SI: 1 foot = 304.8 mm.

a. Load-bearing exterior walls shall also comply with the fire-resistance rating requirements of Table 601.
b. See Section 706.1.1 for party walls.
c. Open parking garages complying with Section 406 shall not be required to have a fire-resistance rating.
d. The fire-resistance rating of an exterior wall is determined based upon the fire separation distance of the exterior wall and the story in which the wall is located.
e. For special requirements for Group H occupancies, see Section 415.6.
f. For special requirements for Group S aircraft hangars, see Section 412.3.1.
g. Where Table 705.8 permits nonbearing exterior walls with unlimited area of unprotected openings, the required fire-resistance rating for the exterior walls is 0 hours.
h. [NY] Reserved.
i. For a Group R-3 building of Type II-B or Type V-B construction, the exterior wall shall not be required to have a fire-resistance rating where the fire separation distance is 5 feet (1523 mm) or greater.

INTERNATIONAL CODE COUNCIL®
Copyright © 2019 ICC & NYSDOS. ALL RIGHTS RESERVED. Accessed by Lauren Gualdino (lgualdino@briarcliffmanor.org), (-) Order Number #100880972 on May 08, 2020 07:05 AM (PDT) pursuant to License Agreement with ICC & NYSDOS. No further reproduction, no

100880972

8. *Trim* installed in accordance with Section 806.
9. Where not installed greater than 15 feet (4572 mm) above grade, show windows, nailing or furring strips and wooden bulkheads below show windows, including their frames, aprons and show cases.
10. Finish flooring installed in accordance with Section 805.
11. Partitions dividing portions of stores, offices or similar places occupied by one tenant only and that do not establish a *corridor* serving an *occupant load* of 30 or more shall be permitted to be constructed of *fire-retardant-treated wood*, 1-hour fire-resistance-rated construction or of wood panels or similar light construction up to 6 feet (1829 mm) in height.
12. Stages and platforms constructed in accordance with Sections 410.2 and 410.3, respectively.
13. Combustible *exterior wall coverings*, balconies and similar projections and bay or oriel windows in accordance with Chapter 14 and Section 705.2.3.1.
14. Blocking such as for handrails, millwork, cabinets and window and door frames.
15. Light-transmitting plastics as permitted by Chapter 26.
16. Mastics and caulking materials applied to provide flexible seals between components of *exterior wall* construction.
17. Exterior plastic veneer installed in accordance with Section 2605.2.
18. Nailing or furring strips as permitted by Section 803.15.
19. Heavy timber as permitted by Note c to Table 601 and Sections 602.4.3 and 705.2.3.1.
20. Aggregates, component materials and admixtures as permitted by Section 703.2.2.
21. Sprayed fire-resistant materials and intumescent and mastic fire-resistant coatings, determined on the basis of *fire resistance* tests in accordance with Section 703.2 and installed in accordance with Sections 1705.14 and 1705.15, respectively.
22. Materials used to protect penetrations in fire-resistance-rated assemblies in accordance with Section 714.
23. Materials used to protect joints in fire-resistance-rated assemblies in accordance with Section 715.
24. Materials allowed in the concealed spaces of buildings of Types I and II construction in accordance with Section 718.5.
25. Materials exposed within plenums complying with Section 602 of the *Mechanical Code of New York State*.
26. Wall construction of freezers and coolers of less than 1,000 square feet (92.9 m^2), in size, lined on both sides with noncombustible materials and the building is protected throughout with an *automatic sprinkler system* in accordance with Section 903.3.1.1.

603.1.1 Ducts. The use of nonmetallic ducts shall be permitted where installed in accordance with the limitations of the *Mechanical Code of New York State*.

603.1.2 Piping. The use of combustible piping materials shall be permitted where installed in accordance with the limitations of the *Mechanical Code of New York State* and the *Plumbing Code of New York State*.

603.1.3 Electrical. The use of electrical wiring methods with combustible insulation, tubing, raceways and related components shall be permitted where installed in accordance with the limitations of this code.

INTERNATIONAL CODE COUNCIL®
Copyright © 2019 ICC & NYSDOS. ALL RIGHTS RESERVED. Accessed by Lauren Gualdino (lgualdino@briarcliffmanor.org), (-) Order Number #100880972 on May 08, 2020 07:05 AM (PDT) pursuant to License Agreement with ICC & NYSDOS. No further reproduction, no

100880972

INTERNATIONAL CODE COUNCIL®
Copyright © 2019 ICC & NYSDOS. ALL RIGHTS RESERVED. Accessed by Lauren Gualdino (lgualdino@briarcliffmanor.org), (-) Order Number #100880972 on May 08, 2020 07:05 AM (PDT) pursuant to License Agreement with ICC & NYSDOS. No further reproduction, no

100880972

CHAPTER 7

FIRE AND SMOKE PROTECTION FEATURES

SECTION 701
GENERAL

701.1 Scope. The provisions of this chapter shall govern the materials, systems and assemblies used for structural *fire resistance* and fire-resistance-rated construction separation of adjacent spaces to safeguard against the spread of fire and smoke within a building and the spread of fire to or from buildings.

SECTION 702
MULTIPLE USE FIRE ASSEMBLIES

702.1 Multiple use fire assemblies. Fire assemblies that serve multiple purposes in a building shall comply with all of the requirements that are applicable for each of the individual fire assemblies.

SECTION 703
FIRE-RESISTANCE RATINGS AND FIRE TESTS

703.1 Scope. Materials prescribed herein for *fire resistance* shall conform to the requirements of this chapter.

703.2 Fire-resistance ratings. The *fire-resistance rating* of building elements, components or assemblies shall be determined in accordance with the test procedures set forth in ASTM E119 or UL 263 or in accordance with Section 703.3. The *fire-resistance rating* of penetrations and *fire-resistant joint systems* shall be determined in accordance Sections 714 and 715, respectively.

703.2.1 Nonsymmetrical wall construction. Interior walls and partitions of nonsymmetrical construction shall be tested with both faces exposed to the furnace, and the assigned *fire-resistance rating* shall be the shortest duration obtained from the two tests conducted in compliance with ASTM E119 or UL 263. Where evidence is furnished to show that the wall was tested with the least fire-resistant side exposed to the furnace, subject to acceptance of the *building official*, the wall need not be subjected to tests from the opposite side (see Section 705.5 for *exterior walls*).

703.2.2 Combustible components. Combustible aggregates are permitted in gypsum and Portland cement concrete mixtures for fire-resistance-rated construction. Any component material or admixture is permitted in assemblies if the resulting tested assembly meets the *fire-resistance* test requirements of this code.

703.2.3 Restrained classification. Fire-resistance-rated assemblies tested under ASTM E119 or UL 263 shall not be considered to be restrained unless evidence satisfactory to the *building official* is furnished by the *registered design professional* showing that the construction qualifies for a restrained classification in accordance with ASTM E119 or UL 263. Restrained construction shall be identified on the *construction documents*.

703.2.4 Supplemental features. Where materials, systems or devices that have not been tested as part of a fire-resistance-rated assembly are incorporated into the building element, component or assembly, sufficient data shall be made available to the *building official* to show that the required *fire-resistance rating* is not reduced.

703.2.5 Exterior bearing walls. In determining the *fire-resistance rating* of exterior bearing walls, compliance with the ASTM E119 or UL 263 criteria for unexposed surface temperature rise and ignition of cotton waste due to passage of flame or gases is required only for a period of time corresponding to the required *fire-resistance rating* of an exterior nonbearing wall with the same *fire separation distance*, and in a building of the same group. Where the *fire-resistance rating* determined in accordance with this exception exceeds the *fire-resistance rating* determined in accordance with ASTM E119 or UL 263, the fire exposure time period, water pressure and application duration criteria for the hose stream test of ASTM E119 or UL 263 shall be based on the *fire-resistance rating* determined in accordance with this section.

[NY] 703.3 Methods for determining fire resistance. The application of any of the methods listed in this section shall be based on the fire exposure and acceptance criteria specified in ASTM E119 or UL 263. The required *fire resistance* of a building element, component or assembly shall be permitted to be established by any of the following methods or procedures:

1. *Fire-resistance* designs documented in approved sources.
2. Prescriptive designs of fire-resistance-rated building elements, components or assemblies as prescribed in Section 721.
3. Calculations in accordance with Section 722.
4. Engineering analysis based on a comparison of building element, component or assemblies designs having *fire-resistance ratings* as determined by the test procedures set forth in ASTM E119 or UL 263.
5. Alternative protection methods as allowed by Section 104.3.
6. *Fire-resistance* designs certified by an approved agency.

[NY] 703.4 Automatic sprinklers. Under the prescriptive fire-resistance requirements of this code, the *fire-resistance rating* of a building element, component or assembly shall be established without the use of *automatic sprinklers* or any other fire suppression system being incorporated as part of the assembly tested in accordance with the fire exposure, procedures and acceptance criteria specified in ASTM E119 or UL 263. However, this section shall not prohibit or limit the duties and powers of the *building official* allowed by Sections 104.2 and 104.3.

INTERNATIONAL CODE COUNCIL®
Copyright © 2019 ICC & NYSDOS. ALL RIGHTS RESERVED. Accessed by Lauren Gualdino (lgualdino@briarcliffmanor.org), (-) Order Number #100880972 on May 08, 2020 07:05 AM (PDT) pursuant to License Agreement with ICC & NYSDOS. No further reproduction, no

100880972

703.5 Noncombustibility tests. The tests indicated in Sections 703.5.1 and 703.5.2 shall serve as criteria for acceptance of building materials as set forth in Sections 602.2, 602.3 and 602.4 in Types I, II, III and IV construction. The term "noncombustible" does not apply to the flame spread characteristics of *interior finish* or *trim* materials. A material shall not be classified as a noncombustible building construction material if it is subject to an increase in combustibility or flame spread beyond the limitations herein established through the effects of age, moisture or other atmospheric conditions.

703.5.1 Elementary materials. Materials required to be noncombustible shall be tested in accordance with ASTM E136.

703.5.2 Composite materials. Materials having a structural base of noncombustible material as determined in accordance with Section 703.5.1 with a surfacing not more than 0.125 inch (3.18 mm) thick that has a *flame spread index* not greater than 50 when tested in accordance with ASTM E84 or UL 723 shall be acceptable as noncombustible materials.

703.6 Fire-resistance-rated glazing. Fire-resistance-rated glazing, when tested in accordance with ASTM E119 or UL 263 and complying with the requirements of Section 707, shall be permitted. Fire-resistance-rated glazing shall bear a *label* marked in accordance with Table 716.1(1) issued by an agency and shall be permanently identified on the glazing.

703.7 Marking and identification. Where there is an accessible concealed floor, floor-ceiling or *attic* space, *fire walls*, *fire barriers*, *fire partitions*, *smoke barriers* and smoke partitions or any other wall required to have protected openings or penetrations shall be effectively and permanently identified with signs or stenciling in the concealed space. Such identification shall:

1. Be located within 15 feet (4572 mm) of the end of each wall and at intervals not exceeding 30 feet (9144 mm) measured horizontally along the wall or partition.
2. Include lettering not less than 3 inches (76 mm) in height with a minimum $^{3}/_{8}$-inch (9.5 mm) stroke in a contrasting color incorporating the suggested wording, "FIRE AND/OR SMOKE BARRIER—PROTECT ALL OPENINGS," or other wording.

SECTION 704
FIRE-RESISTANCE RATING OF STRUCTURAL MEMBERS

704.1 Requirements. The *fire-resistance ratings* of structural members and assemblies shall comply with this section and the requirements for the type of construction as specified in Table 601. The *fire-resistance ratings* shall be not less than the ratings required for the fire-resistance-rated assemblies supported by the structural members.

Exception: *Fire barriers*, *fire partitions*, *smoke barriers* and *horizontal assemblies* as provided in Sections 707.5, 708.4, 709.4 and 711.2, respectively.

704.2 Column protection. Where columns are required to have protection to achieve a *fire-resistance rating*, the entire column shall be provided individual encasement protection by protecting it on all sides for the full column height, including connections to other structural members, with materials having the required *fire-resistance rating*. Where the column extends through a ceiling, the encasement protection shall be continuous from the top of the foundation or floor/ceiling assembly below through the ceiling space to the top of the column.

Exception: Columns that meet the limitations of Section 704.4.1.

704.3 Protection of the primary structural frame other than columns. Members of the primary structural frame other than columns that are required to have protection to achieve a *fire-resistance rating* and support more than two floors or one floor and roof, or support a load-bearing wall or a nonload-bearing wall more than two stories high, shall be provided individual encasement protection by protecting them on all sides for the full length, including connections to other structural members, with materials having the required *fire-resistance rating*.

Exception: Individual encasement protection on all sides shall be permitted on all exposed sides provided that the extent of protection is in accordance with the required *fire-resistance rating*, as determined in Section 703.

704.4 Protection of secondary members. Secondary members that are required to have protection to achieve a *fire-resistance rating* shall be protected by individual encasement protection.

704.4.1 Light-frame construction. Studs, columns and boundary elements that are integral elements in *walls* of light-frame construction and are located entirely between the top and bottom plates or tracks shall be permitted to have required *fire-resistance ratings* provided by the membrane protection provided for the *wall*.

704.4.2 Horizontal assemblies. *Horizontal assemblies* are permitted to be protected with a membrane or ceiling where the membrane or ceiling provides the required *fire-resistance rating* and is installed in accordance with Section 711.

704.5 Truss protection. The required thickness and construction of fire-resistance-rated assemblies enclosing trusses shall be based on the results of full-scale tests or combinations of tests on truss components or on *approved* calculations based on such tests that satisfactorily demonstrate that the assembly has the required *fire resistance*.

704.6 Attachments to structural members. The edges of lugs, brackets, rivets and bolt heads attached to structural members shall be permitted to extend to within 1 inch (25 mm) of the surface of the fire protection.

704.7 Reinforcing. Thickness of protection for concrete or masonry reinforcement shall be measured to the outside of the reinforcement except that stirrups and spiral reinforcement ties are permitted to project not more than 0.5-inch (12.7 mm) into the protection.

704.8 Embedments and enclosures. Pipes, wires, conduits, ducts or other service facilities shall not be embedded in the required fire protective covering of a structural member that is required to be individually encased.

704.9 Impact protection. Where the fire protective covering of a structural member is subject to impact damage from

INTERNATIONAL CODE COUNCIL®
Copyright © 2019 ICC & NYSDOS. ALL RIGHTS RESERVED. Accessed by Lauren Gualdino (lgualdino@briarcliffmanor.org), (-) Order Number #100880972 on May 08, 2020 07:05 AM (PDT) pursuant to License Agreement with ICC & NYSDOS. No further reproduction, no

100880972

moving vehicles, the handling of merchandise or other activity, the fire protective covering shall be protected by corner guards or by a substantial jacket of metal or other noncombustible material to a height adequate to provide full protection, but not less than 5 feet (1524 mm) from the finished floor.

Exception: Corner protection is not required on concrete columns in parking garages.

704.10 Exterior structural members. Load-bearing structural members located within the *exterior walls* or on the outside of a building or structure shall be provided with the highest *fire-resistance rating* as determined in accordance with the following:

1. As required by Table 601 for the type of building element based on the type of construction of the building.
2. As required by Table 601 for exterior bearing walls based on the type of construction.
3. As required by Table 602 for *exterior walls* based on the *fire separation distance*.

704.11 Bottom flange protection. Fire protection is not required at the bottom flange of lintels, shelf angles and plates, spanning not more than 6 feet 4 inches (1931 mm) whether part of the primary structural frame or not, and from the bottom flange of lintels, shelf angles and plates not part of the structural frame, regardless of span.

704.12 Seismic isolation systems. *Fire-resistance ratings* for the isolation system shall meet the *fire-resistance rating* required for the columns, walls or other structural elements in which the isolation system is installed in accordance with Table 601. Isolation systems required to have a *fire-resistance rating* shall be protected with *approved* materials or construction assemblies designed to provide the same degree of *fire resistance* as the structural element in which the system is installed when tested in accordance with ASTM E119 or UL 263 (see Section 703.2).

Such isolation system protection applied to isolator units shall be capable of retarding the transfer of heat to the isolator unit in such a manner that the required gravity load-carrying capacity of the isolator unit will not be impaired after exposure to the standard time-temperature curve fire test prescribed in ASTM E119 or UL 263 for a duration not less than that required for the *fire-resistance rating* of the structure element in which the system is installed.

Such isolation system protection applied to isolator units shall be suitably designed and securely installed so as not to dislodge, loosen, sustain damage or otherwise impair its ability to accommodate the seismic movements for which the isolator unit is designed and to maintain its integrity for the purpose of providing the required fire-resistance protection.

704.13 Sprayed fire-resistant materials (SFRM). Sprayed fire-resistant materials (SFRM) shall comply with Sections 704.13.1 through 704.13.5.

704.13.1 Fire-resistance rating. The application of SFRM shall be consistent with the *fire-resistance rating* and the listing, including, but not limited to, minimum thickness and dry density of the applied SFRM, method of application, substrate surface conditions and the use of bonding adhesives, sealants, reinforcing or other materials.

704.13.2 Manufacturer's installation instructions. The application of SFRM shall be in accordance with the manufacturer's installation instructions. The instructions shall include, but are not limited to, substrate temperatures and surface conditions and SFRM handling, storage, mixing, conveyance, method of application, curing and ventilation.

704.13.3 Substrate condition. The SFRM shall be applied to a substrate in compliance with Sections 704.13.3.1 and 704.13.3.2.

704.13.3.1 Surface conditions. Substrates to receive SFRM shall be free of dirt, oil, grease, release agents, loose scale and any other condition that prevents adhesion. The substrates shall be free of primers, paints and encapsulants other than those fire tested and *listed* by a nationally recognized testing agency. Primed, painted or encapsulated steel shall be allowed, provided that testing has demonstrated that required adhesion is maintained.

704.13.3.2 Primers, paints and encapsulants. Where the SFRM is to be applied over primers, paints or encapsulants other than those specified in the listing, the material shall be field tested in accordance with ASTM E736. Where testing of the SFRM with primers, paints or encapsulants demonstrates that required adhesion is maintained, SFRM shall be permitted to be applied to primed, painted or encapsulated wide flange steel shapes in accordance with the following conditions:

1. The beam flange width does not exceed 12 inches (305 mm); or
2. The column flange width does not exceed 16 inches (400 mm); or
3. The beam or column web depth does not exceed 16 inches (400 mm).
4. The average and minimum bond strength values shall be determined based on not fewer than five bond tests conducted in accordance with ASTM E736. Bond tests conducted in accordance with ASTM E736 shall indicate an average bond strength of not less than 80 percent and an individual bond strength of not less than 50 percent, when compared to the bond strength of the SFRM as applied to clean uncoated $^{1}/_{8}$-inch-thick (3.2 mm) steel plate.

704.13.4 Temperature. A minimum ambient and substrate temperature of 40°F (4.44°C) shall be maintained during and for not fewer than 24 hours after the application of the SFRM, unless the manufacturer's instructions allow otherwise.

704.13.5 Finished condition. The finished condition of SFRM applied to structural members or assemblies shall not, upon complete drying or curing, exhibit cracks, voids, spalls, delamination or any exposure of the substrate. Surface irregularities of SFRM shall be deemed acceptable.

INTERNATIONAL CODE COUNCIL®
Copyright © 2019 ICC & NYSDOS. ALL RIGHTS RESERVED. Accessed by Lauren Gualdino (lgualdino@briarcliffmanor.org), (-) Order Number #100880972 on May 08, 2020 07:05 AM (PDT) pursuant to License Agreement with ICC & NYSDOS. No further reproduction, no

100880972

SECTION 705
EXTERIOR WALLS

705.1 General. *Exterior walls* shall comply with this section.

705.2 Projections. Cornices, eave overhangs, exterior balconies and similar projections extending beyond the exterior wall shall conform to the requirements of this section and Section 1405. Exterior egress balconies and exterior exit stairways and ramps shall comply with Sections 1021 and 1027, respectively. Projections shall not extend any closer to the line used to determine the *fire separation distance* than shown in Table 705.2.

Exception: Buildings on the same lot and considered as portions of one building in accordance with Section 705.3 are not required to comply with this section for projections between the buildings.

TABLE 705.2
MINIMUM DISTANCE OF PROJECTION

FIRE SEPARATION DISTANCE-FSD (feet)	MINIMUM DISTANCE FROM LINE USED TO DETERMINE FSD
0 to less than 2	Projections not permitted
2 to less than 3	24 inches
3 to less than 5	24 inches plus 8 inches for every foot of FSD beyond 3 feet or fraction thereof
5 or greater	40 inches

For SI: 1 foot = 304.8 mm; 1 inch = 25.4 mm.

705.2.1 Types I and II construction. Projections from walls of Type I or II construction shall be of noncombustible materials or combustible materials as allowed by Sections 705.2.3.1 and 705.2.4.

705.2.2 Type III, IV or V construction. Projections from walls of Type III, IV or V construction shall be of any *approved* material.

705.2.3 Combustible projections. Combustible projections extending to within 5 feet (1524 mm) of the line used to determine the *fire separation distance* shall be of not less than 1-hour *fire-resistance-rated* construction, heavy timber construction, complying with Section 2304.11, *fire-retardant-treated wood* or as permitted by Section 705.2.3.1.

Exception: Type VB construction shall be allowed for combustible projections in Group R-3 and U occupancies with a *fire separation distance* greater than or equal to 5 feet (1524 mm).

705.2.3.1 Balconies and similar projections. Balconies and similar projections of combustible construction other than fire-retardant-treated wood shall be fire-resistance rated where required by Table 601 for floor construction or shall be of heavy timber construction in accordance with Section 2304.11. The aggregate length of the projections shall not exceed 50 percent of the building's perimeter on each floor.

Exceptions:

1. On buildings of Types I and II construction, three stories or less above grade plane, fire-retardant-treated wood shall be permitted for balconies, porches, decks and exterior stairways not used as required exits.
2. Untreated wood and plastic composites that comply with ASTM D7032 and Section 2612 are permitted for pickets, rails and similar guard components that are limited to 42 inches (1067 mm) in height.
3. Balconies and similar projections on buildings of Types III, IV and V construction shall be permitted to be of Type V construction and shall not be required to have a *fire-resistance rating* where sprinkler protection is extended to these areas.
4. Where sprinkler protection is extended to the balcony areas, the aggregate length of the balcony on each floor shall not be limited.

705.2.4 Bay and oriel windows. Bay and oriel windows constructed of combustible materials shall conform to the type of construction required for the building to which they are attached.

Exception: Fire-retardant-treated wood shall be permitted on buildings three stories or less above grade plane of Type I, II, III or IV construction.

705.3 Buildings on the same lot. For the purposes of determining the required wall and opening protection, projections and roof-covering requirements, buildings on the same lot shall be assumed to have an imaginary line between them.

Where a new building is to be erected on the same lot as an existing building, the location of the assumed imaginary line with relation to the existing building shall be such that the *exterior wall* and opening protection of the existing building meet the criteria as set forth in Sections 705.5 and 705.8.

Exceptions:

1. Two or more buildings on the same lot shall be either regulated as separate buildings or shall be considered as portions of one building if the aggregate area of such buildings is within the limits specified in Chapter 5 for a single building. Where the buildings contain different occupancy groups or are of different types of construction, the area shall be that allowed for the most restrictive occupancy or construction.
2. Where an S-2 parking garage of Construction Type I or IIA is erected on the same lot as a Group R-2 building, and there is no *fire separation distance* between these buildings, then the adjoining *exterior walls* between the buildings are permitted to have occupant use openings in accordance with Section 706.8. However, opening protectives in such openings shall only be required in the exterior wall of the S-2 parking garage, not in the exterior wall openings in the R-2 building, and these opening protectives in the exterior wall of the S-2 parking garage shall be not less than $1^1/_2$-hour *fire protection rating*.

705.4 Materials. *Exterior walls* shall be of materials permitted by the building type of construction.

705.5 Fire-resistance ratings. *Exterior walls* shall be fire-resistance rated in accordance with Tables 601 and 602 and this section. The required *fire-resistance rating* of *exterior walls* with a *fire separation distance* of greater than 10 feet (3048 mm) shall be rated for exposure to fire from the inside.

INTERNATIONAL CODE COUNCIL®
Copyright © 2019 ICC & NYSDOS. ALL RIGHTS RESERVED. Accessed by Lauren Gualdino (lgualdino@briarcliffmanor.org), (-) Order Number #100880972 on May 08, 2020 07:05 AM (PDT) pursuant to License Agreement with ICC & NYSDOS. No further reproduction, no

100880972

The required *fire-resistance rating* of *exterior walls* with a *fire separation distance* of less than or equal to 10 feet (3048 mm) shall be rated for exposure to fire from both sides.

705.6 Structural stability. *Exterior walls* shall extend to the height required by Section 705.11. Interior structural elements that brace the exterior wall but that are not located within the plane of the exterior wall shall have the minimum *fire-resistance rating* required in Table 601 for that structural element. Structural elements that brace the exterior wall but are located outside of the exterior wall or within the plane of the exterior wall shall have the minimum *fire-resistance rating* required in Tables 601 and 602 for the exterior wall.

705.7 Unexposed surface temperature. Where protected openings are not limited by Section 705.8, the limitation on the rise of temperature on the unexposed surface of *exterior walls* as required by ASTM E119 or UL 263 shall not apply. Where protected openings are limited by Section 705.8, the limitation on the rise of temperature on the unexposed surface of *exterior walls* as required by ASTM E119 or UL 263 shall not apply provided that a correction is made for radiation from the unexposed *exterior wall* surface in accordance with the following formula:

$$A_e = A + (A_f \times F_{eo}) \qquad \textbf{(Equation 7-1)}$$

where:

A_e = Equivalent area of protected openings.

A = Actual area of protected openings.

A_f = Area of *exterior wall* surface in the *story* under consideration exclusive of openings, on which the temperature limitations of ASTM E119 or UL 263 for walls are exceeded.

F_{eo} = An "equivalent opening factor" derived from Figure 705.7 based on the average temperature of the unexposed wall surface and the *fire-resistance rating* of the wall.

705.8 Openings. Openings in *exterior walls* shall comply with Sections 705.8.1 through 705.8.6.

705.8.1 Allowable area of openings. The maximum area of unprotected and protected openings permitted in an *exterior wall* in any *story* of a building shall not exceed the

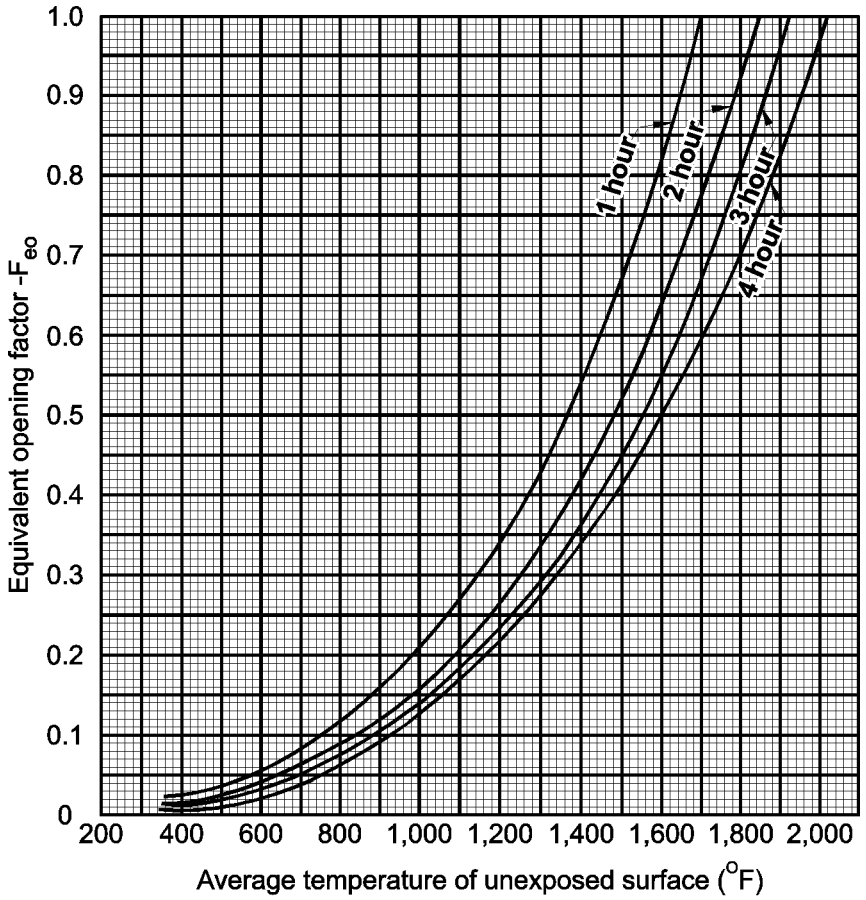

For SI: °C = [(°F) - 32] / 1.8.

FIGURE 705.7
EQUIVALENT OPENING FACTOR

INTERNATIONAL CODE COUNCIL®
Copyright © 2019 ICC & NYSDOS. ALL RIGHTS RESERVED. Accessed by Lauren Gualdino (lgualdino@briarcliffmanor.org), (-) Order Number #100880972 on May 08, 2020 07:05 AM (PDT) pursuant to License Agreement with ICC & NYSDOS. No further reproduction, no

100880972

percentages specified in Table 705.8 based on the *fire separation distance* of each individual story.

Exceptions:

1. In other than Group H occupancies, unlimited unprotected openings are permitted in the first *story* above grade plane where the wall faces one of the following:
   1.1. A street and has a *fire separation distance* of more than 15 feet (4572 mm).
   1.2. An unoccupied space. The unoccupied space shall be on the same lot or dedicated for public use, shall be not less than 30 feet (9144 mm) in width and shall have access from a street by a posted fire lane in accordance with the *Fire Code of New York State*.
2. Buildings whose exterior bearing walls, exterior nonbearing walls and exterior primary structural frame are not required to be fire-resistance rated shall be permitted to have unlimited unprotected openings.

TABLE 705.8
MAXIMUM AREA OF EXTERIOR WALL OPENINGS BASED ON FIRE SEPARATION DISTANCE AND DEGREE OF OPENING PROTECTION

FIRE SEPARATION DISTANCE (feet)	DEGREE OF OPENING PROTECTION	ALLOWABLE AREA[a]
0 to less than 3[b, c, k]	Unprotected, Nonsprinklered (UP, NS)	Not Permitted[k]
	Unprotected, Sprinklered (UP, S)[i]	Not Permitted[k]
	Protected (P)	Not Permitted[k]
3 to less than 5[d, e]	Unprotected, Nonsprinklered (UP, NS)	Not Permitted
	Unprotected, Sprinklered (UP, S)[i]	15%
	Protected (P)	15%
5 to less than 10[e, f, j]	Unprotected, Nonsprinklered (UP, NS)	10%[h]
	Unprotected, Sprinklered (UP, S)[i]	25%
	Protected (P)	25%
10 to less than 15[e, f, g, j]	Unprotected, Nonsprinklered (UP, NS)	15%[h]
	Unprotected, Sprinklered (UP, S)[i]	45%
	Protected (P)	45%
15 to less than 20[f, g, j]	Unprotected, Nonsprinklered (UP, NS)	25%
	Unprotected, Sprinklered (UP, S)[i]	75%
	Protected (P)	75%
20 to less than 25[f, g, j]	Unprotected, Nonsprinklered (UP, NS)	45%
	Unprotected, Sprinklered (UP, S)[i]	No Limit
	Protected (P)	No Limit
25 to less than 30[f, g, j]	Unprotected, Nonsprinklered (UP, NS)	70%
	Unprotected, Sprinklered (UP, S)[i]	No Limit
	Protected (P)	No Limit
30 or greater	Unprotected, Nonsprinklered (UP, NS)	No Limit
	Unprotected, Sprinklered (UP, S)[i]	No Limit
	Protected (P)	No Limit

For SI: 1 foot = 304.8 mm.

UP, NS = Unprotected openings in buildings not equipped throughout with an automatic sprinkler system in accordance with Section 903.3.1.1.

UP, S = Unprotected openings in buildings equipped throughout with an automatic sprinkler system in accordance with Section 903.3.1.1.

P = Openings protected with an opening protective assembly in accordance with Section 705.8.2.

a. Values indicated are the percentage of the area of the exterior wall, per story.
b. For the requirements for fire walls of buildings with differing heights, see Section 706.6.1.
c. For openings in a fire wall for buildings on the same lot, see Section 706.8.
d. The maximum percentage of unprotected and protected openings shall be 25 percent for Group R-3 occupancies.
e. Unprotected openings shall not be permitted for openings with a fire separation distance of less than 15 feet for Group H-2 and H-3 occupancies.
f. The area of unprotected and protected openings shall not be limited for Group R-3 occupancies, with a fire separation distance of 5 feet or greater.
g. The area of openings in an open parking structure with a fire separation distance of 10 feet or greater shall not be limited.
h. Includes buildings accessory to Group R-3.
i. Not applicable to Group H-1, H-2 and H-3 occupancies.
j. [NY] Reserved.
k. For openings between S-2 parking garage and Group R-2 building, see Section 705.3, Exception 2.

INTERNATIONAL CODE COUNCIL®
Copyright © 2019 ICC & NYSDOS. ALL RIGHTS RESERVED. Accessed by Lauren Gualdino (lgualdino@briarcliffmanor.org), (-) Order Number #100880972 on May 08, 2020 07:05 AM (PDT) pursuant to License Agreement with ICC & NYSDOS. No further reproduction, no

100880972

705.8.2 Protected openings. Where openings are required to be protected, opening protectives shall comply with Section 716.

Exception: Opening protectives are not required where the building is equipped throughout with an *automatic sprinkler system* in accordance with Section 903.3.1.1 and the exterior openings are protected by a water curtain using automatic sprinklers *approved* for that use.

705.8.3 Unprotected openings. Where unprotected openings are permitted, windows and doors shall be constructed of any *approved* materials. Glazing shall conform to the requirements of Chapters 24 and 26.

705.8.4 Mixed openings. Where both unprotected and protected openings are located in the *exterior wall* in any *story* of a building, the total area of openings shall be determined in accordance with the following:

$$(A_p/a_p) + (A_u/a_u) \le 1 \qquad \textbf{(Equation 7-2)}$$

where:

A_p = Actual area of protected openings, or the equivalent area of protected openings, A_e (see Section 705.7).

a_p = Allowable area of protected openings.

A_u = Actual area of unprotected openings.

a_u = Allowable area of unprotected openings.

705.8.5 Vertical separation of openings. Openings in *exterior walls* in adjacent *stories* shall be separated vertically to protect against fire spread on the exterior of the buildings where the openings are within 5 feet (1524 mm) of each other horizontally and the opening in the lower *story* is not a protected opening with a *fire protection rating* of not less than $^3/_4$ hour. Such openings shall be separated vertically not less than 3 feet (914 mm) by spandrel girders, *exterior walls* or other similar assemblies that have a *fire-resistance rating* of not less than 1 hour, rated for exposure to fire from both sides, or by flame barriers that extend horizontally not less than 30 inches (762 mm) beyond the *exterior wall*. Flame barriers shall have a *fire-resistance rating* of not less than 1 hour. The unexposed surface temperature limitations specified in ASTM E119 or UL 263 shall not apply to the flame barriers unless otherwise required by the provisions of this code.

Exceptions:

1. This section shall not apply to buildings that are three *stories* or less above *grade plane*.
2. This section shall not apply to buildings equipped throughout with an *automatic sprinkler system* in accordance with Section 903.3.1.1 or 903.3.1.2.
3. Open parking garages.

705.8.6 Vertical exposure. For buildings on the same lot, opening protectives having a *fire protection rating* of not less than $^3/_4$ hour shall be provided in every opening that is less than 15 feet (4572 mm) vertically above the roof of an adjacent building or structure based on assuming an imaginary line between them. The opening protectives are required where the *fire separation distances* from the imaginary line to each building or structure are less than 15 feet (4572 mm).

Exceptions:

1. Opening protectives are not required where the roof assembly of the adjacent building or structure has a *fire-resistance rating* of not less than 1 hour for a minimum distance of 10 feet (3048 mm) from the *exterior wall* facing the imaginary line and the entire length and span of the supporting elements for the fire-resistance-rated roof assembly has a *fire-resistance rating* of not less than 1 hour.
2. Buildings on the same lot and considered as portions of one building in accordance with Section 705.3 are not required to comply with Section 705.8.6.

705.9 Joints. Joints made in or between *exterior walls* required by this section to have a *fire-resistance rating* shall comply with Section 715.

Exception: Joints in *exterior walls* that are permitted to have unprotected openings.

705.9.1 Voids. The void created at the intersection of a floor/ceiling assembly and an exterior curtain wall assembly shall be protected in accordance with Section 715.4.

705.10 Ducts and air transfer openings. Penetrations by air ducts and air transfer openings in fire-resistance-rated *exterior walls* required to have protected openings shall comply with Section 717.

Exception: Foundation vents installed in accordance with this code are permitted.

705.11 Parapets. Parapets shall be provided on *exterior walls* of buildings.

Exceptions: A parapet need not be provided on an *exterior wall* where any of the following conditions exist:

1. The wall is not required to be *fire-resistance rated* in accordance with Table 602 because of *fire separation distance*.
2. The building has an area of not more than 1,000 square feet (93 m^2) on any floor.
3. Walls that terminate at roofs of not less than 2-hour fire-resistance-rated construction or where the roof, including the deck or slab and supporting construction, is constructed entirely of noncombustible materials.
4. One-hour fire-resistance-rated *exterior walls* that terminate at the underside of the roof sheathing, deck or slab, provided that:
   4.1. Where the roof/ceiling framing elements are parallel to the walls, such framing and elements supporting such framing shall not be of less than 1-hour fire-resistance-rated construction for a width of 4 feet (1220 mm) for Groups R and U and 10 feet (3048 mm) for other occupancies, measured from the interior side of the wall.

INTERNATIONAL CODE COUNCIL®
Copyright © 2019 ICC & NYSDOS. ALL RIGHTS RESERVED. Accessed by Lauren Gualdino (lgualdino@briarcliffmanor.org), (-) Order Number #100880972 on May 08, 2020 07:05 AM (PDT) pursuant to License Agreement with ICC & NYSDOS. No further reproduction, no

100880972

4.2. Where roof/ceiling framing elements are not parallel to the wall, the entire span of such framing and elements supporting such framing shall not be of less than 1-hour fire-resistance-rated construction.

4.3. Openings in the roof shall not be located within 5 feet (1524 mm) of the 1-hour fire-resistance-rated *exterior wall* for Groups R and U and 10 feet (3048 mm) for other occupancies, measured from the interior side of the wall.

4.4. The entire building shall be provided with not less than a Class B roof covering.

5. In Groups R-2 and R-3 where the entire building is provided with a Class C roof covering, the *exterior wall* shall be permitted to terminate at the underside of the roof sheathing or deck in Types III, IV and V construction, provided that one or both of the following criteria is met:

5.1. The roof sheathing or deck is constructed of *approved* noncombustible materials or of *fire-retardant-treated wood* for a distance of 4 feet (1220 mm).

5.2. The roof is protected with 0.625-inch (16 mm) Type X gypsum board directly beneath the underside of the roof sheathing or deck, supported by not less than nominal 2-inch (51 mm) ledgers attached to the sides of the roof framing members for a minimum distance of 4 feet (1220 mm).

6. Where the wall is permitted to have not less than 25 percent of the *exterior wall* areas containing unprotected openings based on *fire separation distance* as determined in accordance with Section 705.8.

705.11.1 Parapet construction. Parapets shall have the same *fire-resistance rating* as that required for the supporting wall, and on any side adjacent to a roof surface, shall have noncombustible faces for the uppermost 18 inches (457 mm), including counterflashing and coping materials. The height of the parapet shall be not less than 30 inches (762 mm) above the point where the roof surface and the wall intersect. Where the roof slopes toward a parapet at a slope greater than two units vertical in 12 units horizontal (16.7-percent slope), the parapet shall extend to the same height as any portion of the roof within a *fire separation distance* where protection of wall openings is required, but the height shall be not less than 30 inches (762 mm).

SECTION 706
FIRE WALLS

706.1 General. *Fire walls* shall be constructed in accordance with Sections 706.2 through 706.11. The extent and location of such *fire walls* shall provide a complete separation. Where a *fire wall* separates occupancies that are required to be separated by a *fire barrier* wall, the most restrictive requirements of each separation shall apply.

706.1.1 Party walls. Any wall located on a *lot line* between adjacent buildings, which is used or adapted for joint service between the two buildings, shall be constructed as a *fire wall* in accordance with Section 706. Party walls shall be constructed without openings and shall create separate buildings.

Exceptions:

1. Openings in a party wall separating an *anchor building* and a mall shall be in accordance with Section 402.4.2.2.1.
2. *Fire walls* are not required on lot lines dividing a building for ownership purposes where the aggregate height and area of the portions of the building located on both sides of the lot line do not exceed the maximum height and area requirements of this code. For the building official's review and approval, he or she shall be provided with copies of dedicated access easements and contractual agreements that permit the owners of portions of the building located on either side of the lot line access to the other side for purposes of maintaining fire and life safety systems necessary for the operation of the building.

706.2 Structural stability. *Fire walls* shall be designed and constructed to allow collapse of the structure on either side without collapse of the wall under fire conditions. *Fire walls* designed and constructed in accordance with NFPA 221 shall be deemed to comply with this section.

Exception: In Seismic Design Categories D through F, where double *fire walls* are used in accordance with NFPA 221, floor and roof sheathing not exceeding $^3/_4$ inch (19.05 mm) thickness shall be permitted to be continuous through the wall assemblies of light frame construction.

706.3 Materials. *Fire walls* shall be of any *approved* noncombustible materials.

Exception: Buildings of Type V construction.

706.4 Fire-resistance rating. *Fire walls* shall have a *fire-resistance rating* of not less than that required by Table 706.4.

TABLE 706.4
FIRE WALL FIRE-RESISTANCE RATINGS

GROUP	FIRE-RESISTANCE RATING (hours)
A, B, E, H-4, I, R-1, R-2, U	3[a]
F-1, H-3[b], H-5, M, S-1	3
H-1, H-2	4[b]
F-2, S-2, R-3, R-4	2

a. In Type II or V construction, walls shall be permitted to have a 2-hour fire-resistance rating.

b. For Group H-1, H-2 or H-3 buildings, also see Sections 415.7 and 415.8.

706.5 Horizontal continuity. *Fire walls* shall be continuous from *exterior wall* to *exterior wall* and shall extend not less

INTERNATIONAL CODE COUNCIL®
Copyright © 2019 ICC & NYSDOS. ALL RIGHTS RESERVED. Accessed by Lauren Gualdino (lgualdino@briarcliffmanor.org), (-) Order Number #100880972 on May 08, 2020 07:05 AM (PDT) pursuant to License Agreement with ICC & NYSDOS. No further reproduction, no

100880972

than 18 inches (457 mm) beyond the exterior surface of *exterior walls.*

Exceptions:

1. *Fire walls* shall be permitted to terminate at the interior surface of combustible exterior sheathing or siding provided that the *exterior wall* has a *fire-resistance rating* of not less than 1 hour for a horizontal distance of not less than 4 feet (1220 mm) on both sides of the *fire wall*. Openings within such *exterior walls* shall be protected by opening protectives having a *fire protection rating* of not less than $^3/_4$ hour.
2. *Fire walls* shall be permitted to terminate at the interior surface of noncombustible exterior sheathing, exterior siding or other noncombustible exterior finishes provided that the sheathing, siding or other exterior noncombustible finish extends a horizontal distance of not less than 4 feet (1220 mm) on both sides of the *fire wall*.
3. *Fire walls* shall be permitted to terminate at the interior surface of noncombustible exterior sheathing where the building on each side of the *fire wall* is protected by an *automatic sprinkler system* installed in accordance with Section 903.3.1.1 or 903.3.1.2.

706.5.1 Exterior walls. Where the *fire wall* intersects *exterior walls*, the *fire-resistance rating* and opening protection of the *exterior walls* shall comply with one of the following:

1. The *exterior walls* on both sides of the *fire wall* shall have a 1-hour *fire-resistance rating* with $^3/_4$-hour protection where opening protection is required by Section 705.8. The *fire-resistance rating* of the *exterior wall* shall extend not less than 4 feet (1220 mm) on each side of the intersection of the *fire wall* to *exterior wall*. *Exterior wall* intersections at *fire walls* that form an angle equal to or greater than 180 degrees (3.14 rad) do not need *exterior wall* protection.
2. Buildings or spaces on both sides of the intersecting *fire wall* shall assume to have an imaginary *lot line* at the *fire wall* and extending beyond the exterior of the *fire wall*. The location of the assumed line in relation to the *exterior walls* and the *fire wall* shall be such that the *exterior wall* and opening protection meet the requirements set forth in Sections 705.5 and 705.8. Such protection is not required for *exterior walls* terminating at *fire walls* that form an angle equal to or greater than 180 degrees (3.14 rad).

706.5.2 Horizontal projecting elements. *Fire walls* shall extend to the outer edge of horizontal projecting elements such as balconies, roof overhangs, canopies, marquees and similar projections that are within 4 feet (1220 mm) of the *fire wall*.

Exceptions:

1. Horizontal projecting elements without concealed spaces, provided that the *exterior wall* behind and below the projecting element has not less than 1-hour fire-resistance-rated construction for a distance not less than the depth of the projecting element on both sides of the *fire wall*. Openings within such *exterior walls* shall be protected by opening protectives having a *fire protection rating* of not less than $^3/_4$ hour.
2. Noncombustible horizontal projecting elements with concealed spaces, provided that a minimum 1-hour fire-resistance-rated wall extends through the concealed space. The projecting element shall be separated from the building by not less than 1-hour fire-resistance-rated construction for a distance on each side of the *fire wall* equal to the depth of the projecting element. The wall is not required to extend under the projecting element where the building *exterior wall* is not less than 1-hour *fire-resistance rated* for a distance on each side of the *fire wall* equal to the depth of the projecting element. Openings within such *exterior walls* shall be protected by opening protectives having a *fire protection rating* of not less than $^3/_4$ hour.
3. For combustible horizontal projecting elements with concealed spaces, the *fire wall* need only extend through the concealed space to the outer edges of the projecting elements. The *exterior wall* behind and below the projecting element shall be of not less than 1-hour fire-resistance-rated construction for a distance not less than the depth of the projecting elements on both sides of the *fire wall*. Openings within such *exterior walls* shall be protected by opening protectives having a *fire protection rating* of not less than $^3/_4$ hour.

706.6 Vertical continuity. *Fire walls* shall extend from the foundation to a termination point not less than 30 inches (762 mm) above both adjacent roofs.

Exceptions:

1. Stepped buildings in accordance with Section 706.6.1.
2. Two-hour fire-resistance-rated walls shall be permitted to terminate at the underside of the roof sheathing, deck or slab, provided that:
   2.1. The lower roof assembly within 4 feet (1220 mm) of the wall has not less than a 1-hour *fire-resistance rating* and the entire length and span of supporting elements for the rated roof assembly has a *fire-resistance rating* of not less than 1 hour.
   2.2. Openings in the roof shall not be located within 4 feet (1220 mm) of the *fire wall*.
   2.3. Each building shall be provided with not less than a Class B roof covering.
3. Walls shall be permitted to terminate at the underside of noncombustible roof sheathing, deck or slabs where both buildings are provided with not less than a Class B roof covering. Openings in the roof shall not be located within 4 feet (1220 mm) of the *fire wall*.

INTERNATIONAL CODE COUNCIL®
Copyright © 2019 ICC & NYSDOS. ALL RIGHTS RESERVED. Accessed by Lauren Gualdino (lgualdino@briarcliffmanor.org), (-) Order Number #100880972 on May 08, 2020 07:05 AM (PDT) pursuant to License Agreement with ICC & NYSDOS. No further reproduction, no

100880972

4. In buildings of Types III, IV and V construction, walls shall be permitted to terminate at the underside of combustible roof sheathing or decks, provided that all of the following requirements are met:
    4.1. Roof openings are not less than 4 feet (1220 mm) from the *fire wall*.
    4.2. The roof is covered with a minimum Class B roof covering.
    4.3. The roof sheathing or deck is constructed of *fire-retardant-treated wood* for a distance of 4 feet (1220 mm) on both sides of the wall or the roof is protected with $^{5}/_{8}$-inch (15.9 mm) Type X gypsum board directly beneath the underside of the roof sheathing or deck, supported by not less than 2-inch (51 mm) nominal ledgers attached to the sides of the roof framing members for a distance of not less than 4 feet (1220 mm) on both sides of the *fire wall*.
5. In buildings designed in accordance with Section 510.2, *fire walls* located above the 3-hour *horizontal assembly* required by Section 510.2, Item 1 shall be permitted to extend from the top of this *horizontal assembly*.
6. Buildings with sloped roofs in accordance with Section 706.6.2.

706.6.1 Stepped buildings. Where a *fire wall* serves as an *exterior wall* for a building and separates buildings having different roof levels, such wall shall terminate at a point not less than 30 inches (762 mm) above the lower roof level, provided the *exterior wall* for a height of 15 feet (4572 mm) above the lower roof is not less than 1-hour fire-resistance-rated construction from both sides with openings protected by fire assemblies having a *fire protection rating* of not less than $^{3}/_{4}$ hour.

Exception: Where the *fire wall* terminates at the underside of the roof sheathing, deck or slab of the lower roof, provided that:

1. The lower roof assembly within 10 feet (3048 mm) of the wall has not less than a 1-hour *fire-resistance rating* and the entire length and span of supporting elements for the rated roof assembly has a *fire-resistance rating* of not less than 1 hour.
2. Openings in the lower roof shall not be located within 10 feet (3048 mm) of the *fire wall*.

706.6.2 Buildings with sloped roofs. Where a *fire wall* serves as an interior wall for a building, and the roof on one side or both sides of the *fire wall* slopes toward the *fire wall* at a slope greater than two units vertical in 12 units horizontal (2:12), the *fire wall* shall extend to a height equal to the height of the roof located 4 feet (1219 mm) from the *fire wall* plus 30 inches (762 mm). The extension of the *fire wall* shall be not less than 30 inches (762 mm).

706.7 Combustible framing in fire walls. Adjacent combustible members entering into a concrete or masonry *fire wall* from opposite sides shall not have less than a 4-inch (102 mm) distance between embedded ends. Where combustible members frame into hollow walls or walls of hollow units, hollow spaces shall be solidly filled for the full thickness of the wall and for a distance not less than 4 inches (102 mm) above, below and between the structural members, with noncombustible materials *approved* for *fireblocking.*

706.8 Openings. Each opening through a *fire wall* shall be protected in accordance with Section 716 and shall not exceed 156 square feet (15 m^2). The aggregate width of openings at any floor level shall not exceed 25 percent of the length of the wall.

Exceptions:

1. Openings are not permitted in party walls constructed in accordance with Section 706.1.1.
2. Openings shall not be limited to 156 square feet (15 m^2) where both buildings are equipped throughout with an *automatic sprinkler system* installed in accordance with Section 903.3.1.1.

706.9 Penetrations. Penetrations of *fire walls* shall comply with Section 714.

706.10 Joints. Joints made in or between *fire walls* shall comply with Section 715.

706.11 Ducts and air transfer openings. Ducts and air transfer openings shall not penetrate *fire walls*.

Exception: Penetrations by ducts and air transfer openings of *fire walls* that are not on a *lot line* shall be allowed provided that the penetrations comply with Section 717. The size and aggregate width of all openings shall not exceed the limitations of Section 706.8.

SECTION 707
FIRE BARRIERS

707.1 General. *Fire barriers* installed as required elsewhere in this code or the *Fire Code of New York State* shall comply with this section.

707.2 Materials. *Fire barriers* shall be of materials permitted by the building type of construction.

707.3 Fire-resistance rating. The *fire-resistance rating* of *fire barriers* shall comply with this section.

707.3.1 Shaft enclosures. The *fire-resistance rating* of the *fire barrier* separating building areas from a shaft shall comply with Section 713.4.

707.3.2 Interior exit stairway and ramp construction. The *fire-resistance rating* of the *fire barrier* separating building areas from an *interior exit stairway* or *ramp* shall comply with Section 1023.1.

707.3.3 Enclosures for exit access stairways. The *fire-resistance rating* of the *fire barrier* separating building areas from an *exit access stairway* or *ramp* shall comply with Section 713.4.

INTERNATIONAL CODE COUNCIL®
Copyright © 2019 ICC & NYSDOS. ALL RIGHTS RESERVED. Accessed by Lauren Gualdino (lgualdino@briarcliffmanor.org), (-) Order Number #100880972 on May 08, 2020 07:05 AM (PDT) pursuant to License Agreement with ICC & NYSDOS. No further reproduction, no

100880972

707.3.4 Exit passageway. The *fire-resistance rating* of the *fire barrier* separating building areas from an *exit* passageway shall comply with Section 1024.3.

707.3.5 Horizontal exit. The *fire-resistance rating* of the separation between building areas connected by a horizontal *exit* shall comply with Section 1026.1.

707.3.6 Atriums. The *fire-resistance rating* of the *fire barrier* separating atriums shall comply with Section 404.6.

707.3.7 Incidental uses. The *fire barrier* separating incidental uses from other spaces in the building shall have a *fire-resistance rating* of not less than that indicated in Table 509.

707.3.8 Control areas. *Fire barriers* separating *control areas* shall have a *fire-resistance rating* of not less than that required in Section 414.2.4.

707.3.9 Separated occupancies. Where the provisions of Section 508.4 are applicable, the *fire barrier* separating mixed occupancies shall have a *fire-resistance rating* of not less than that indicated in Table 508.4 based on the occupancies being separated.

707.3.10 Fire areas. The *fire barriers, fire walls* or *horizontal assemblies*, or combination thereof, separating a single occupancy into different *fire areas* shall have a *fire-resistance rating* of not less than that indicated in Table 707.3.10. The *fire barriers, fire walls* or *horizontal assemblies*, or combination thereof, separating *fire areas* of mixed occupancies shall have a *fire-resistance rating* of not less than the highest value indicated in Table 707.3.10 for the occupancies under consideration.

TABLE 707.3.10
FIRE-RESISTANCE RATING REQUIREMENTS FOR FIRE BARRIERS, FIRE WALLS OR HORIZONTAL ASSEMBLIES BETWEEN FIRE AREAS

OCCUPANCY GROUP	FIRE-RESISTANCE RATING (hours)
H-1, H-2	4
F-1, H-3, S-1	3
A, B, E, F-2, H-4, H-5, I, M, R, S-2	2
U	1

707.4 Exterior walls. Where exterior walls serve as a part of a required fire-resistance-rated shaft or stairway or ramp enclosure, or separation, such walls shall comply with the requirements of Section 705 for exterior walls and the fire-resistance-rated enclosure or separation requirements shall not apply.

Exception: Exterior walls required to be *fire-resistance rated* in accordance with Section 1021 for exterior egress balconies, Section 1023.7 for interior exit stairways and ramps and Section 1027.6 for exterior exit stairways and ramp.

707.5 Continuity. *Fire barriers* shall extend from the top of the foundation or floor/ceiling assembly below to the underside of the floor or roof sheathing, slab or deck above and shall be securely attached thereto. Such *fire barriers* shall be continuous through concealed space, such as the space above a suspended ceiling. Joints and voids at intersections shall comply with Sections 707.8 and 707.9.

Exceptions:

1. Shaft enclosures shall be permitted to terminate at a top enclosure complying with Section 713.12.
2. *Interior exit stairway* and *ramp* enclosures required by Section 1023 and *exit access stairway* and *ramp* enclosures required by Section 1019 shall be permitted to terminate at a top enclosure complying with Section 713.12.

707.5.1 Supporting construction. The supporting construction for a *fire barrier* shall be protected to afford the required *fire-resistance rating* of the *fire barrier* supported. Hollow vertical spaces within a *fire barrier* shall be fireblocked in accordance with Section 718.2 at every floor level.

Exceptions:

1. The maximum required *fire-resistance rating* for assemblies supporting *fire barriers* separating tank storage as provided for in Section 415.9.1.2 shall be 2 hours, but not less than required by Table 601 for the building construction type.
2. Supporting construction for 1-hour *fire barriers* required by Table 509 in buildings of Types IIB, IIIB and VB construction is not required to be *fire-resistance rated* unless required by other sections of this code.

707.6 Openings. Openings in a *fire barrier* shall be protected in accordance with Section 716. Openings shall be limited to a maximum aggregate width of 25 percent of the length of the wall, and the maximum area of any single opening shall not exceed 156 square feet (15 m^2). Openings in enclosures for *exit access stairways* and *ramps*, *interior exit stairways* and *ramps* and *exit passageways* shall also comply with Sections 1019, 1023.4 and 1024.5, respectively.

Exceptions:

1. Openings shall not be limited to 156 square feet (15 m^2) where adjoining floor areas are equipped throughout with an automatic sprinkler system in accordance with Section 903.3.1.1.
2. Openings shall not be limited to 156 square feet (15 m^2) or an aggregate width of 25 percent of the length of the wall where the opening protective is a *fire door* serving enclosures for exit access stairways and ramps, and interior exit stairways and ramps.
3. Openings shall not be limited to 156 square feet (15 m^2) or an aggregate width of 25 percent of the length of the wall where the opening protective has been tested in accordance with ASTM E119 or UL 263 and has a minimum *fire-resistance rating* not less than the *fire-resistance rating* of the wall.
4. Fire window assemblies permitted in atrium separation walls shall not be limited to a maximum aggregate width of 25 percent of the length of the wall.

INTERNATIONAL CODE COUNCIL®
Copyright © 2019 ICC & NYSDOS. ALL RIGHTS RESERVED. Accessed by Lauren Gualdino (lgualdino@briarcliffmanor.org), (-) Order Number #100880972 on May 08, 2020 07:05 AM (PDT) pursuant to License Agreement with ICC & NYSDOS. No further reproduction, no

100880972

5. Openings shall not be limited to 156 square feet (15 m^2) or an aggregate width of 25 percent of the length of the wall where the opening protective is a *fire door assembly* in a *fire barrier* separating an enclosure for *exit access* stairways and ramps, and interior exit stairways and ramps from an exit passageway in accordance with Section 1023.3.1.

707.7 Penetrations. Penetrations of *fire barriers* shall comply with Section 714.

707.7.1 Prohibited penetrations. Penetrations into enclosures for *exit access stairways* and *ramps*, *interior exit stairways* and *ramps*, and *exit passageways* shall be allowed only where permitted by Sections 1019, 1023.5 and 1024.6, respectively.

707.8 Joints. Joints made in or between *fire barriers*, and joints made at the intersection of *fire barriers* with underside of a fire-resistance-rated floor or roof sheathing, slab or deck above, and the exterior vertical wall intersection shall comply with Section 715.

707.9 Voids at intersections. The voids created at the intersection of a *fire barrier* and a nonfire-resistance-rated roof assembly or a nonfire-resistance-rated exterior wall assembly shall be filled. An approved material or system shall be used to fill the void, and shall be securely installed in or on the intersection for its entire length so as not to dislodge, loosen or otherwise impair its ability to accommodate expected building movements and to retard the passage of fire and hot gases.

707.10 Ducts and air transfer openings. Penetrations in a *fire barrier* by ducts and air transfer openings shall comply with Section 717.

SECTION 708
FIRE PARTITIONS

708.1 General. The following wall assemblies shall comply with this section.

1. Separation walls as required by Section 420.2 for Group I-1 and Group R occupancies.
2. Walls separating tenant spaces in *covered and open mall buildings* as required by Section 402.4.2.1.
3. Corridor walls as required by Section 1020.1.
4. Enclosed elevator lobby separation as required by Section 3006.2.
5. Egress balconies as required by Section 1021.2

708.2 Materials. The walls shall be of materials permitted by the building type of construction.

708.3 Fire-resistance rating. *Fire partitions* shall have a *fire-resistance rating* of not less than 1 hour.

Exceptions:

1. Corridor walls permitted to have a $^1/_2$-hour *fire-resistance rating* by Table 1020.1.
2. *Dwelling unit* and *sleeping unit* separations in buildings of Types IIB, IIIB and VB construction shall have *fire-resistance ratings* of not less than $^1/_2$ hour in buildings equipped throughout with an *automatic sprinkler system* in accordance with Section 903.3.1.1.

708.4 Continuity. *Fire partitions* shall extend from the top of the foundation or floor/ceiling assembly below and be securely attached to one of the following:

1. The underside of the floor or roof sheathing, deck or slab above.
2. The underside of a floor/ceiling or roof/ceiling assembly having a fire-resistance rating that is not less than the *fire-resistance rating* of the *fire partition*.

Exceptions:

1. *Fire partitions* shall not be required to extend into a crawl space below where the floor above the crawl space has a minimum 1-hour *fire-resistance rating*.
2. *Fire partitions* serving as a corridor wall shall not be required to extend above the lower membrane of a corridor ceiling provided that the corridor ceiling membrane is equivalent to corridor wall membrane, and either of the following conditions is met:
   2.1. The room-side membrane of the corridor wall extends to the underside of the floor or roof sheathing, deck or slab of a fire-resistance-rated floor or roof above.
   2.2. The building is equipped with an automatic sprinkler system installed throughout in accordance with Section 903.3.1.1 or 903.3.1.2, including automatic sprinklers installed in the space between the top of the *fire partition* and underside of the floor or roof sheathing, deck or slab above.
3. *Fire partitions* serving as a corridor wall shall be permitted to terminate at the upper membrane of the corridor ceiling assembly where the corridor ceiling is constructed as required for the corridor wall.
4. *Fire partitions* separating tenant spaces in a covered or open mall building complying with Section 402.4.2.1 shall not be required to extend above the underside of a ceiling. Such ceiling shall not be required to be part of a fire-resistance-rated assembly, and the attic or space above the ceiling at tenant separation walls shall not be required to be subdivided by *fire partitions*.

708.4.1 Supporting construction. The supporting construction for a *fire partition* shall have a *fire-resistance rating* that is equal to or greater than the required fire-resistance rating of the supported *fire partition*.

Exception: In buildings of Types IIB, IIIB and VB construction, the supporting construction requirement shall not apply to *fire partitions* separating tenant spaces in covered and open mall buildings, *fire partitions* separating dwelling units, *fire partitions* separating sleeping units and *fire partitions* serving as corridor walls.

708.4.2 Fireblocks and draftstops in combustible construction. In combustible construction where *fire partitions* do not extend to the underside of the floor or roof **

INTERNATIONAL CODE COUNCIL®
Copyright © 2019 ICC & NYSDOS. ALL RIGHTS RESERVED. Accessed by Lauren Gualdino (lgualdino@briarcliffmanor.org), (-) Order Number #100880972 on May 08, 2020 07:05 AM (PDT) pursuant to License Agreement with ICC & NYSDOS. No further reproduction, no

100880972

sheathing, deck or slab above, the space above and along the line of the *fire partition* shall be provided with one of the following:

1. *Fireblocking* up to the underside of the floor or roof sheathing, deck or slab above using materials complying with Section 718.2.1.
2. Draftstopping up to the underside of the floor or roof sheathing, deck or slab above using materials complying with Section 718.3.1 for floors or Section 718.4.1 for attics.

Exceptions:

1. Buildings equipped with an automatic sprinkler system installed throughout in accordance with Section 903.3.1.1, or in accordance with Section 903.3.1.2 provided that protection is provided in the space between the top of the *fire partition* and underside of the floor or roof sheathing, deck or slab above as required for systems complying with Section 903.3.1.1.
2. Where corridor walls provide a sleeping unit or dwelling unit separation, draftstopping shall only be required above one of the corridor walls.
3. In Group R-2 occupancies with fewer than four dwelling units, *fireblocking* and draftstopping shall not be required.
4. In Group R-2 occupancies up to and including four stories in height in buildings not exceeding 60 feet (18 288 mm) in height above grade plane, the attic space shall be subdivided by *draftstops* into areas not exceeding 3,000 square feet (279 m^2) or above every two dwelling units, whichever is smaller.
5. In Group R-3 occupancies with fewer than three dwelling units, fire-blocking and draftstopping shall not be required in floor assemblies.

708.5 Exterior walls. Where *exterior walls* serve as a part of a required fire-resistance-rated separation, such walls shall comply with the requirements of Section 705 for *exterior walls*, and the fire-resistance-rated separation requirements shall not apply.

Exception: Exterior walls required to be fire-resistance rated in accordance with Section 1021.2 for exterior egress balconies, Section 1023.7 for interior exit stairways and ramps and Section 1027.6 for exterior exit stairways and ramps.

708.6 Openings. Openings in a *fire partition* shall be protected in accordance with Section 716.

708.7 Penetrations. Penetrations of *fire partitions* shall comply with Section 714.

708.8 Joints. Joints made in or between *fire partitions* shall comply with Section 715.

708.9 Ducts and air transfer openings. Penetrations in a *fire partition* by ducts and air transfer openings shall comply with Section 717.

SECTION 709
SMOKE BARRIERS

709.1 General. Vertical and horizontal *smoke barriers* shall comply with this section.

709.2 Materials. *Smoke barriers* shall be of materials permitted by the building type of construction.

709.3 Fire-resistance rating. A 1-hour *fire-resistance rating* is required for *smoke barriers*.

Exception: *Smoke barriers* constructed of minimum 0.10-inch-thick (2.5 mm) steel in Group I-3 buildings.

709.4 Continuity. *Smoke barriers* shall form an effective membrane continuous from the top of the foundation or floor/ceiling assembly below to the underside of the floor or roof sheathing, deck or slab above, including continuity through concealed spaces, such as those found above suspended ceilings, and interstitial structural and mechanical spaces. The supporting construction shall be protected to afford the required *fire-resistance rating* of the wall or floor supported in buildings of other than Type IIB, IIIB or VB construction. *Smoke barrier* walls used to separate *smoke compartments* shall comply with Section 709.4.1. *Smoke-barrier* walls used to enclose areas of refuge in accordance with Section 1009.6.4 or to enclose elevator lobbies in accordance with Section 405.4.3, 3007.6.2, or 3008.6.2 shall comply with Section 709.4.2.

Exception: *Smoke-barrier* walls are not required in interstitial spaces where such spaces are designed and constructed with ceilings or *exterior walls* that provide resistance to the passage of fire and smoke equivalent to that provided by the *smoke-barrier* walls.

709.4.1 Smoke-barrier walls separating smoke compartments. *Smoke-barrier* walls used to separate *smoke compartments* shall form an effective membrane continuous from outside wall to outside wall.

709.4.2 Smoke-barrier walls enclosing areas of refuge or elevator lobbies. *Smoke-barrier* walls used to enclose areas of refuge in accordance with Section 1009.6.4, or to enclose elevator lobbies in accordance with Section 405.4.3, 3007.6.2, or 3008.6.2, shall form an effective membrane enclosure that terminates at a *fire barrier* wall having a level of *fire protection rating* not less than 1 hour, another *smoke barrier* wall or an outside wall. A smoke and draft control door assembly as specified in Section 716.2.2.1.1 shall not be required at each elevator hoistway door opening or at each exit doorway between an area of refuge and the exit enclosure.

709.5 Openings. Openings in a *smoke barrier* shall be protected in accordance with Section 716.

Exceptions:

1. In Group I-1, Condition 2, Group I-2 and *ambulatory care facilities*, where a pair of opposite-swinging doors are installed across a corridor in accordance with Section 709.5.1, the doors shall not be required to be protected in accordance with Section 716. The doors shall be close fitting within operational tolerances, and shall not have a center mullion or undercuts in excess of $^3/_4$ inch (19.1 mm),

INTERNATIONAL CODE COUNCIL®
Copyright © 2019 ICC & NYSDOS. ALL RIGHTS RESERVED. Accessed by Lauren Gualdino (lgualdino@briarcliffmanor.org), (-) Order Number #100880972 on May 08, 2020 07:05 AM (PDT) pursuant to License Agreement with ICC & NYSDOS. No further reproduction, no

100880972

louvers or grilles. The doors shall have head and jamb stops, and astragals or rabbets at meeting edges. Where permitted by the door manufacturer's listing, positive-latching devices are not required. Factory-applied or field-applied protective plates are not required to be labeled.

2. In Group I-1, Condition 2, Group I-2 and *ambulatory care facilities*, special purpose horizontal sliding, accordion or folding doors installed in accordance with Section 1010.1.4.3 and protected in accordance with Section 716.

709.5.1 Group I-2 and ambulatory care facilities. In Group I-2 and ambulatory care facilities, where doors protecting openings in *smoke barriers* are installed across a corridor and have hold-open devices, the doors shall be automatic-closing in accordance with Section 716.2.6.6. Such doors shall have a vision panel with fire-protection-rated glazing materials in fire-protection-rated frames, the area of which shall not exceed that tested.

709.6 Penetrations. Penetrations of *smoke barriers* shall comply with Section 714.

709.7 Joints. Joints made in or between *smoke barriers* shall comply with Section 715.

709.8 Ducts and air transfer openings. Penetrations in a *smoke barrier* by ducts and air transfer openings shall comply with Section 717.

SECTION 710
SMOKE PARTITIONS

710.1 General. Smoke partitions installed as required elsewhere in the code shall comply with this section.

710.2 Materials. The walls shall be of materials permitted by the building type of construction.

710.3 Fire-resistance rating. Unless required elsewhere in the code, smoke partitions are not required to have a *fire-resistance rating*.

710.4 Continuity. Smoke partitions shall extend from the top of the foundation or floor below to the underside of the floor or roof sheathing, deck or slab above or to the underside of the ceiling above where the ceiling membrane is constructed to limit the transfer of smoke.

710.5 Openings. Openings in smoke partitions shall comply with Sections 710.5.1 and 710.5.2.

710.5.1 Windows. Windows in smoke partitions shall be sealed to resist the free passage of smoke or be automatic-closing upon detection of smoke.

710.5.2 Doors. Doors in smoke partitions shall comply with Sections 710.5.2.1 through 710.5.2.3.

710.5.2.1 Louvers. Doors in smoke partitions shall not include louvers.

710.5.2.2 Smoke and draft control doors. Where required elsewhere in the code, doors in smoke partitions shall meet the requirements for a smoke and draft control door assembly tested in accordance with UL 1784. The air leakage rate of the door assembly shall not exceed 3.0 cubic feet per minute per square foot [0.015424 $m^3/(s \cdot m^2)$] of door opening at 0.10 inch (24.9 Pa) of water for both the ambient temperature test and the elevated temperature exposure test. Installation of smoke doors shall be in accordance with NFPA 105.

710.5.2.2.1 Smoke and draft control door labeling. Smoke and draft control doors complying only with UL 1784 shall be permitted to show the letter "S" on the manufacturer's labeling.

710.5.2.3 Self- or automatic-closing doors. Where required elsewhere in the code, doors in smoke partitions shall be self- or automatic-closing by smoke detection in accordance with Section 716.2.6.6.

710.6 Penetrations. The space around penetrating items shall be filled with an *approved* material to limit the free passage of smoke.

710.7 Joints. Joints shall be filled with an *approved* material to limit the free passage of smoke.

710.8 Ducts and air transfer openings. The space around a duct penetrating a smoke partition shall be filled with an *approved* material to limit the free passage of smoke. Air transfer openings in smoke partitions shall be provided with a *smoke damper* complying with Section 717.3.2.2.

Exception: Where the installation of a *smoke damper* will interfere with the operation of a required smoke control system in accordance with Section 909, *approved* alternative protection shall be utilized.

SECTION 711
FLOOR AND ROOF ASSEMBLIES

711.1 General. *Horizontal assemblies* shall comply with Section 711.2. Nonfire-resistance-rated floor and roof assemblies shall comply with Section 711.3.

711.2 Horizontal assemblies. *Horizontal assemblies* shall comply with Sections 711.2.1 through 711.2.6.

711.2.1 Materials. Assemblies shall be of materials permitted by the building type of construction.

711.2.2 Continuity. Assemblies shall be continuous without vertical openings, except as permitted by this section and Section 712.

711.2.3 Supporting construction. The supporting construction shall be protected to afford the required *fire-resistance rating* of the *horizontal assembly* supported.

Exception: In buildings of Type IIB, IIIB or VB construction, the construction supporting the *horizontal assembly* is not required to be fire-resistance rated at the following:

1. *Horizontal assemblies* at the separations of incidental uses as specified by Table 509 provided that the required *fire-resistance rating* does not exceed 1 hour.
2. *Horizontal assemblies* at the separations of *dwelling units* and *sleeping units* as required by Section 420.3.

INTERNATIONAL CODE COUNCIL®
Copyright © 2019 ICC & NYSDOS. ALL RIGHTS RESERVED. Accessed by Lauren Gualdino (lgualdino@briarcliffmanor.org), (-) Order Number #100880972 on May 08, 2020 07:05 AM (PDT) pursuant to License Agreement with ICC & NYSDOS. No further reproduction, no

100880972

3. *Horizontal assemblies* at *smoke barriers* constructed in accordance with Section 709.

711.2.4 Fire-resistance rating. The *fire-resistance rating* of *horizontal assemblies* shall comply with Sections 711.2.4.1 through 711.2.4.6 but shall be not less than that required by the building type of construction.

711.2.4.1 Separating mixed occupancies. Where the *horizontal assembly* separates mixed occupancies, the assembly shall have a *fire-resistance rating* of not less than that required by Section 508.4 based on the occupancies being separated.

711.2.4.2 Separating fire areas. Where the *horizontal assembly* separates a single occupancy into different fire areas, the assembly shall have a *fire-resistance rating* of not less than that required by Section 707.3.10.

711.2.4.3 Dwelling units and sleeping units. *Horizontal assemblies* serving as dwelling or sleeping unit separations in accordance with Section 420.3 shall be not less than 1-hour *fire-resistance-rated* construction.

Exception: *Horizontal assemblies* separating *dwelling units* and *sleeping units* shall be not less than $^1/_2$-hour fire-resistance-rated construction in a building of Types IIB, IIIB and VB construction, where the building is equipped throughout with an *automatic sprinkler system* in accordance with Section 903.3.1.1.

711.2.4.4 Separating smoke compartments. Where the *horizontal assembly* is required to be a *smoke barrier*, the assembly shall comply with Section 709.

711.2.4.5 Separating incidental uses. Where the *horizontal assembly* separates incidental uses from the remainder of the building, the assembly shall have a *fire-resistance rating* of not less than that required by Section 509.

711.2.4.6 Other separations. Where a *horizontal assembly* is required by other sections of this code, the assembly shall have a *fire-resistance rating* of not less than that required by that section.

711.2.5 Ceiling panels. Where the weight of lay-in ceiling panels, used as part of fire-resistance-rated floor/ceiling or roof/ceiling assemblies, is not adequate to resist an upward force of 1 pound per square foot (48 Pa), wire or other *approved* devices shall be installed above the panels to prevent vertical displacement under such upward force.

711.2.6 Unusable space. In 1-hour fire-resistance-rated floor/ceiling assemblies, the ceiling membrane is not required to be installed over unusable crawl spaces. In 1-hour fire-resistance-rated roof assemblies, the floor membrane is not required to be installed where unusable *attic* space occurs above.

711.3 Nonfire-resistance-rated floor and roof assemblies. Nonfire-resistance-rated floor, floor/ceiling, roof and roof/ceiling assemblies shall comply with Sections 711.3.1 and 711.3.2.

711.3.1 Materials. Assemblies shall be of materials permitted by the building type of construction.

711.3.2 Continuity. Assemblies shall be continuous without vertical openings, except as permitted by Section 712.

SECTION 712
VERTICAL OPENINGS

712.1 General. Each vertical opening shall comply in accordance with one of the protection methods in Sections 712.1.1 through 712.1.16.

712.1.1 Shaft enclosures. Vertical openings contained entirely within a shaft enclosure complying with Section 713 shall be permitted.

712.1.2 Individual dwelling unit. Unconcealed vertical openings totally within an individual residential dwelling unit and connecting four stories or less shall be permitted.

712.1.3 Escalator openings. Where a building is equipped throughout with an *automatic sprinkler system* in accordance with Section 903.3.1.1, vertical openings for escalators shall be permitted where protected in accordance with Section 712.1.3.1 or 712.1.3.2.

712.1.3.1 Opening size. Protection by a draft curtain and closely spaced sprinklers in accordance with NFPA 13 shall be permitted where the area of the vertical opening between stories does not exceed twice the horizontal projected area of the escalator. In other than Groups B and M, this application is limited to openings that do not connect more than four stories.

712.1.3.2 Automatic shutters. Protection of the vertical opening by approved shutters at every penetrated floor shall be permitted in accordance with this section. The shutters shall be of noncombustible construction and have a *fire-resistance rating* of not less than 1.5 hours. The shutter shall be so constructed as to close immediately upon the actuation of a smoke detector installed in accordance with Section 907.3.1 and shall completely shut off the well opening. Escalators shall cease operation when the shutter begins to close. The shutter shall operate at a speed of not more than 30 feet per minute (152.4 mm/s) and shall be equipped with a sensitive leading edge to arrest its progress where in contact with any obstacle, and to continue its progress on release therefrom.

712.1.4 Penetrations. Penetrations, concealed and unconcealed, shall be permitted where protected in accordance with Section 714.

712.1.5 Joints. Joints shall be permitted where complying with Section 712.1.5.1 or 712.1.5.2, as applicable.

712.1.5.1 Joints in or between horizontal assemblies. Joints made in or between *horizontal assemblies* shall comply with Section 715. The void created at the intersection of a floor/ceiling assembly and an exterior curtain wall assembly shall be permitted where protected in accordance with Section 715.4.

712.1.5.2 Joints in or between nonfire-resistance-rated floor assemblies. Joints in or between floor assemblies without a required *fire-resistance rating* shall be permitted where they comply with one of the following:

1. The joint shall be concealed within the cavity of a wall.
2. The joint shall be located above a ceiling.

INTERNATIONAL CODE COUNCIL®
Copyright © 2019 ICC & NYSDOS. ALL RIGHTS RESERVED. Accessed by Lauren Gualdino (lgualdino@briarcliffmanor.org), (-) Order Number #100880972 on May 08, 2020 07:05 AM (PDT) pursuant to License Agreement with ICC & NYSDOS. No further reproduction, no

100880972

3. The joint shall be sealed, treated or covered with an *approved* material or system to resist the free passage of flame and the products of combustion.

   Exception: Joints meeting one of the exceptions listed in Section 715.1.

712.1.6 Ducts and air transfer openings. Penetrations by ducts and air transfer openings shall be protected in accordance with Section 717. Grease ducts shall be protected in accordance with the *Mechanical Code of New York State*.

712.1.7 Atriums. In other than Group H occupancies, atriums complying with Section 404 shall be permitted.

712.1.8 Masonry chimney. Approved vertical openings for masonry chimneys shall be permitted where the *annular space* is fireblocked at each floor level in accordance with Section 718.2.5.

712.1.9 Two-story openings. In other than Groups I-2 and I-3, a vertical opening that is not used as one of the applications listed in this section shall be permitted if the opening complies with all of the following items:

1. Does not connect more than two stories.
2. Does not penetrate a horizontal assembly that separates fire areas or *smoke barriers* that separate *smoke compartments*.
3. Is not concealed within the construction of a wall or a floor/ceiling assembly.
4. Is not open to a corridor in Group I and R occupancies.
5. Is not open to a corridor on nonsprinklered floors.
6. Is separated from floor openings and air transfer openings serving other floors by construction conforming to required shaft enclosures.

712.1.10 Parking garages. Vertical openings in parking garages for automobile ramps, elevators and duct systems shall comply with Section 712.1.10.1, 712.1.10.2 or 712.1.10.3, as applicable.

712.1.10.1 Automobile ramps. Vertical openings for automobile ramps in parking garages shall be permitted where constructed in accordance with Sections 406.5 and 406.6.

712.1.10.2 Elevators. Vertical openings for elevator hoistways in parking garages that serve only the parking garage, and complying with Sections 406.5 and 406.6, respectively, shall be permitted.

712.1.10.3 Duct systems. Vertical openings for mechanical exhaust or supply duct systems in parking garages complying with Sections 406.5 and 406.6, respectively, shall be permitted to be unenclosed where such duct system is contained within and serves only the parking garage.

712.1.11 Mezzanine. Vertical openings between a mezzanine complying with Section 505 and the floor below shall be permitted.

712.1.12 Exit access stairways and ramps. Vertical openings containing *exit access stairways* or *ramps* in accordance with Section 1019 shall be permitted.

712.1.13 Openings. Vertical openings for floor fire doors and access doors shall be permitted where protected by Section 712.1.13.1 or 712.1.13.2.

712.1.13.1 Horizontal fire door assemblies. Horizontal *fire door* assemblies used to protect openings in fire-resistance-rated *horizontal assemblies* shall be tested in accordance with NFPA 288, and shall achieve a *fire-resistance rating* not less than the assembly being penetrated. Horizontal *fire door* assemblies shall be labeled by an *approved agency*. The *label* shall be permanently affixed and shall specify the manufacturer, the test standard and the *fire-resistance rating*.

712.1.13.2 Access doors. Access doors shall be permitted in ceilings of fire-resistance-rated floor/ceiling and roof/ceiling assemblies, provided that such doors are tested in accordance with ASTM E119 or UL 263 as horizontal assemblies and labeled by an approved agency for such purpose.

712.1.14 Group I-3. In Group I-3 occupancies, vertical openings shall be permitted in accordance with Section 408.5.

712.1.15 Skylights. Skylights and other penetrations through a fire-resistance-rated roof deck or slab are permitted to be unprotected, provided that the structural integrity of the fire-resistance-rated roof assembly is maintained. Unprotected skylights shall not be permitted in roof assemblies required to be fire-resistance rated in accordance with Section 705.8.6. The supporting construction shall be protected to afford the required *fire-resistance rating* of the *horizontal assembly* supported.

712.1.16 Openings otherwise permitted. Vertical openings shall be permitted where allowed by other sections of this code.

SECTION 713
SHAFT ENCLOSURES

713.1 General. The provisions of this section shall apply to shafts required to protect openings and penetrations through floor/ceiling and roof/ceiling assemblies. *Interior exit stairways* and *ramps* shall be enclosed in accordance with Section 1023.

713.2 Construction. Shaft enclosures shall be constructed as *fire barriers* in accordance with Section 707 or horizontal assemblies in accordance with Section 711, or both.

713.3 Materials. The shaft enclosure shall be of materials permitted by the building type of construction.

713.4 Fire-resistance rating. Shaft enclosures shall have a *fire-resistance rating* of not less than 2 hours where connecting four *stories* or more, and not less than 1 hour where connecting less than four *stories*. The number of *stories* connected by the shaft enclosure shall include any basements

INTERNATIONAL CODE COUNCIL®
Copyright © 2019 ICC & NYSDOS. ALL RIGHTS RESERVED. Accessed by Lauren Gualdino (lgualdino@briarcliffmanor.org), (-) Order Number #100880972 on May 08, 2020 07:05 AM (PDT) pursuant to License Agreement with ICC & NYSDOS. No further reproduction, no

100880972

but not any *mezzanines*. Shaft enclosures shall have a *fire-resistance rating* not less than the floor assembly penetrated, but need not exceed 2 hours. Shaft enclosures shall meet the requirements of Section 703.2.1.

713.5 Continuity. Shaft enclosures shall be constructed as *fire barriers* in accordance with Section 707 or *horizontal assemblies* constructed in accordance with Section 711, or both, and shall have continuity in accordance with Section 707.5 for *fire barriers* or Section 711.2.2 for *horizontal assemblies,* as applicable.

713.6 Exterior walls. Where *exterior walls* serve as a part of a required shaft enclosure, such walls shall comply with the requirements of Section 705 for *exterior walls* and the fire-resistance-rated enclosure requirements shall not apply.

Exception: Exterior walls required to be fire-resistance rated in accordance with Section 1021.2 for exterior egress balconies, Section 1023.7 for interior *exit* stairways and ramps and Section 1027.6 for exterior *exit* stairways and ramps.

713.7 Openings. Openings in a shaft enclosure shall be protected in accordance with Section 716 as required for *fire barriers*. Doors shall be self- or automatic-closing by smoke detection in accordance with Section 716.2.6.6.

713.7.1 Prohibited openings. Openings other than those necessary for the purpose of the shaft shall not be permitted in shaft enclosures.

713.8 Penetrations. Penetrations in a shaft enclosure shall be protected in accordance with Section 714 as required for *fire barriers*. Structural elements, such as beams or joists, where protected in accordance with Section 714 shall be permitted to penetrate a shaft enclosure.

713.8.1 Prohibited penetrations. Penetrations other than those necessary for the purpose of the shaft shall not be permitted in shaft enclosures.

Exception: *Membrane penetrations* shall be permitted on the outside of shaft enclosures. Such penetrations shall be protected in accordance with Section 714.4.2.

713.9 Joints. Joints in a shaft enclosure shall comply with Section 715.

713.10 Duct and air transfer openings. Penetrations of a shaft enclosure by ducts and air transfer openings shall comply with Section 717.

713.11 Enclosure at the bottom. Shafts that do not extend to the bottom of the building or structure shall comply with one of the following:

1. They shall be enclosed at the lowest level with construction of the same *fire-resistance rating* as the lowest floor through which the shaft passes, but not less than the rating required for the shaft enclosure.
2. They shall terminate in a room having a use related to the purpose of the shaft. The room shall be separated from the remainder of the building by *fire barriers* constructed in accordance with Section 707 or *horizontal assemblies* constructed in accordance with Section 711, or both. The *fire-resistance rating* and opening protectives shall be not less than the protection required for the shaft enclosure.
3. They shall be protected by *approved fire dampers* installed in accordance with their listing at the lowest floor level within the shaft enclosure.

Exceptions:

1. The fire-resistance-rated room separation is not required, provided that the only openings in or penetrations of the shaft enclosure to the interior of the building occur at the bottom. The bottom of the shaft shall be closed off around the penetrating items with materials permitted by Section 718.3.1 for draftstopping, or the room shall be provided with an *approved automatic sprinkler system*.
2. A shaft enclosure containing a waste or linen chute shall not be used for any other purpose and shall discharge in a room protected in accordance with Section 713.13.4.
3. The fire-resistance-rated room separation and the protection at the bottom of the shaft are not required provided that there are no combustibles in the shaft and there are no openings or other penetrations through the shaft enclosure to the interior of the building.

713.12 Enclosure at top. A shaft enclosure that does not extend to the underside of the roof sheathing, deck or slab of the building shall be enclosed at the top with construction of the same *fire-resistance rating* as the topmost floor penetrated by the shaft, but not less than the *fire-resistance rating* required for the shaft enclosure.

713.13 Waste and linen chutes and incinerator rooms. Waste and linen chutes shall comply with the provisions of NFPA 82, Chapter 6 and shall meet the requirements of Sections 712 and 713.13.1 through 713.13.6. Incinerator rooms shall meet the provisions of Sections 713.13.4 through 713.13.5.

Exception: Chutes serving and contained within a single dwelling unit.

713.13.1 Waste and linen. A shaft enclosure containing a recycling, or waste or linen chute shall not be used for any other purpose and shall be enclosed in accordance with Section 713.4. A shaft enclosure shall be permitted to contain recycling and waste chutes. Openings into the shaft, from access rooms and discharge rooms, shall be protected in accordance with this section and Section 716. Openings into chutes shall not be located in *corridors*. Doors into chutes shall be self-closing. Discharge doors shall be self- or automatic-closing upon the actuation of a smoke detector in accordance with Section 716.2.6.6, except that heat-activated closing devices shall be permitted between the shaft and the discharge room.

713.13.2 Materials. A shaft enclosure containing a waste, recycling, or linen chute shall be constructed of materials as permitted by the building type of construction.

713.13.3 Chute access rooms. Access openings for waste or linen chutes shall be located in rooms or compartments enclosed by not less than 1-hour *fire barriers* constructed in accordance with Section 707 or *horizontal assemblies* constructed in accordance with Section 711, or both.

INTERNATIONAL CODE COUNCIL®
Copyright © 2019 ICC & NYSDOS. ALL RIGHTS RESERVED. Accessed by Lauren Gualdino (lgualdino@briarcliffmanor.org), (-) Order Number #100880972 on May 08, 2020 07:05 AM (PDT) pursuant to License Agreement with ICC & NYSDOS. No further reproduction, no

100880972

Openings into the access rooms shall be protected by opening protectives having a *fire protection rating* of not less than $^3/_4$ hour. Doors shall be self- or automatic-closing upon the detection of smoke in accordance with Section 716.2.6.6. The room or compartment shall be configured to allow the access door to the room or compartment to close and latch with the access panel to the refuse or laundry chute in any position.

713.13.4 Chute discharge room. Waste or linen chutes shall discharge into an enclosed room separated by *fire barriers* with a *fire-resistance rating* not less than the required fire rating of the shaft enclosure and constructed in accordance with Section 707 or *horizontal assemblies* constructed in accordance with Section 711, or both. Openings into the discharge room from the remainder of the building shall be protected by opening protectives having a *fire protection rating* equal to the protection required for the shaft enclosure. Doors shall be self- or automatic-closing upon the detection of smoke in accordance with Section 716.2.6.6. Waste chutes shall not terminate in an incinerator room. Waste and linen rooms that are not provided with chutes need only comply with Table 509.

713.13.5 Incinerator room. Incinerator rooms shall comply with Table 509.

713.13.6 Automatic sprinkler system. An *approved automatic sprinkler system* shall be installed in accordance with Section 903.2.11.2.

713.14 Elevator, dumbwaiter and other hoistways. Elevator, dumbwaiter and other hoistway enclosures shall be constructed in accordance with Sections 712 and 713, and Chapter 30.

SECTION 714
PENETRATIONS

714.1 Scope. The provisions of this section shall govern the materials and methods of construction used to protect *through penetrations* and *membrane penetrations* of *horizontal assemblies* and fire-resistance-rated wall assemblies.

714.1.1 Ducts and air transfer openings. Penetrations of fire-resistance-rated walls by ducts that are not protected with *dampers* shall comply with Sections 714.3 through 714.4.3. Penetrations of *horizontal assemblies* not protected with a shaft as permitted by Section 717.6, and not required to be protected with *fire dampers* by other sections of this code, shall comply with Sections 714.5 through 714.6.2. Ducts and air transfer openings that are protected with *dampers* shall comply with Section 717.

714.2 Installation. A listed *penetration firestop* system shall be installed in accordance with the manufacturer's installation instructions and the listing criteria.

714.3 Installation details. Where sleeves are used, they shall be securely fastened to the assembly penetrated. The space between the item contained in the sleeve and the sleeve itself and any space between the sleeve and the assembly penetrated shall be protected in accordance with this section. Insulation and coverings on or in the penetrating item shall not penetrate the assembly unless the specific material used has been tested as part of the assembly in accordance with this section.

714.4 Fire-resistance-rated walls. Penetrations into or through *fire walls*, *fire barriers*, *smoke barrier* walls and *fire partitions* shall comply with Sections 714.4.1 through 714.4.3. Penetrations in *smoke barrier* walls shall also comply with Section 714.5.4.

714.4.1 Through penetrations. *Through penetrations* of fire-resistance-rated walls shall comply with Section 714.4.1.1 or 714.4.1.2.

Exception: Where the penetrating items are steel, ferrous or copper pipes, tubes or conduits, the *annular space* between the penetrating item and the fire-resistance-rated wall is permitted to be protected by either of the following measures:

1. In concrete or masonry walls where the penetrating item is a maximum 6-inch (152 mm) nominal diameter and the area of the opening through the wall does not exceed 144 square inches (0.0929 m^2), concrete, grout or mortar is permitted where installed the full thickness of the wall or the thickness required to maintain the *fire-resistance rating*.
2. The material used to fill the *annular space* shall prevent the passage of flame and hot gases sufficient to ignite cotton waste when subjected to ASTM E119 or UL 263 time-temperature fire conditions under a minimum positive pressure differential of 0.01 inch (2.49 Pa) of water at the location of the penetration for the time period equivalent to the *fire-resistance rating* of the construction penetrated.

714.4.1.1 Fire-resistance-rated assemblies. *Through penetrations* shall be protected using systems installed as tested in the *approved* fire-resistance-rated assembly.

714.4.1.2 Through-penetration firestop system. *Through penetrations* shall be protected by an *approved penetration firestop* system installed as tested in accordance with ASTM E814 or UL 1479, with a minimum positive pressure differential of 0.01 inch (2.49 Pa) of water and shall have an *F rating* of not less than the required *fire-resistance rating* of the wall penetrated.

714.4.2 Membrane penetrations. *Membrane penetrations* shall comply with Section 714.4.1. Where walls or partitions are required to have a *fire-resistance rating*, recessed fixtures shall be installed such that the required *fire resistance* will not be reduced.

Exceptions:

1. *Membrane penetrations* of maximum 2-hour fire-resistance-rated walls and partitions by steel electrical boxes that do not exceed 16 square inches (0.0 103 m^2) in area, provided that the aggregate area of the openings through the membrane does not exceed 100 square inches (0.0645 m^2) in any 100 square feet (9.29 m^2) of wall area. The *annu-*

INTERNATIONAL CODE COUNCIL®
Copyright © 2019 ICC & NYSDOS. ALL RIGHTS RESERVED. Accessed by Lauren Gualdino (lgualdino@briarcliffmanor.org), (-) Order Number #100880972 on May 08, 2020 07:05 AM (PDT) pursuant to License Agreement with ICC & NYSDOS. No further reproduction, no

100880972

lar space between the wall membrane and the box shall not exceed $^1/_8$ inch (3.2 mm). Such boxes on opposite sides of the wall or partition shall be separated by one of the following:

1.1. By a horizontal distance of not less than 24 inches (610 mm) where the wall or partition is constructed with individual noncommunicating stud cavities.

1.2. By a horizontal distance of not less than the depth of the wall cavity where the wall cavity is filled with cellulose loose-fill, rockwool or slag *mineral wool* insulation.

1.3. By solid *fireblocking* in accordance with Section 718.2.1.

1.4. By protecting both outlet boxes with *listed* putty pads.

1.5. By other *listed* materials and methods.

2. *Membrane penetrations* by *listed* electrical boxes of any material, provided that such boxes have been tested for use in fire-resistance-rated assemblies and are installed in accordance with the instructions included in the listing. The *annular space* between the wall membrane and the box shall not exceed $^1/_8$ inch (3.2 mm) unless *listed* otherwise. Such boxes on opposite sides of the wall or partition shall be separated by one of the following:

2.1. By the horizontal distance specified in the listing of the electrical boxes.

2.2. By solid *fireblocking* in accordance with Section 718.2.1.

2.3. By protecting both boxes with *listed* putty pads.

2.4. By other *listed* materials and methods.

3. *Membrane penetrations* by electrical boxes of any size or type, that have been *listed* as part of a wall opening protective material system for use in fire-resistance-rated assemblies and are installed in accordance with the instructions included in the listing.

4. *Membrane penetrations* by boxes other than electrical boxes, provided that such penetrating items and the *annular space* between the wall membrane and the box, are protected by an *approved membrane penetration firestop system* installed as tested in accordance with ASTM E814 or UL 1479, with a minimum positive pressure differential of 0.01 inch (2.49 Pa) of water, and shall have an F and T rating of not less than the required *fire-resistance rating* of the wall penetrated and be installed in accordance with their listing.

5. The *annular space* created by the penetration of an automatic sprinkler, provided that it is covered by a metal escutcheon plate.

6. *Membrane penetrations* of maximum 2-hour fire-resistance-rated walls and partitions by steel electrical boxes that exceed 16 square inches (0.0 103 m^2) in area, or steel electrical boxes of any size having an aggregate area through the membrane exceeding 100 square inches (0.0645 m^2) in any 100 square feet (9.29 m^2) of wall area, provided that such penetrating items are protected by listed putty pads or other listed materials and methods, and installed in accordance with the listing.

714.4.3 Dissimilar materials. Noncombustible penetrating items shall not connect to combustible items beyond the point of firestopping unless it can be demonstrated that the *fire-resistance* integrity of the wall is maintained.

714.5 Horizontal assemblies. Penetrations of a *fire-resistance-rated* floor, floor/ceiling assembly or the ceiling membrane of a roof/ceiling assembly not required to be enclosed in a shaft by Section 712.1 shall be protected in accordance with Sections 714.5.1 through 714.5.4.

714.5.1 Through penetrations. *Through penetrations* of *horizontal assemblies* shall comply with Section 714.5.1.1 or 714.5.1.2.

Exceptions:

1. Penetrations by steel, ferrous or copper conduits, pipes, tubes or vents or concrete or masonry items through a single fire-resistance-rated floor assembly where the *annular space* is protected with materials that prevent the passage of flame and hot gases sufficient to ignite cotton waste when subjected to ASTM E119 or UL 263 time-temperature fire conditions under a minimum positive pressure differential of 0.01 inch (2.49 Pa) of water at the location of the penetration for the time period equivalent to the *fire-resistance rating* of the construction penetrated. Penetrating items with a maximum 6-inch (152 mm) nominal diameter shall not be limited to the penetration of a single fire-resistance-rated floor assembly, provided that the aggregate area of the openings through the assembly does not exceed 144 square inches (92 900 mm^2) in any 100 square feet (9.3 m^2) of floor area.

2. Penetrations in a single concrete floor by steel, ferrous or copper conduits, pipes, tubes or vents with a maximum 6-inch (152 mm) nominal diameter, provided that the concrete, grout or mortar is installed the full thickness of the floor or the thickness required to maintain the *fire-resistance rating*. The penetrating items shall not be limited to the penetration of a single concrete floor, provided that the area of the opening through each floor does not exceed 144 square inches (92 900 mm^2).

3. Penetrations by *listed* electrical boxes of any material, provided that such boxes have been tested for use in fire-resistance-rated assemblies and installed in accordance with the instructions included in the listing.

INTERNATIONAL CODE COUNCIL®
Copyright © 2019 ICC & NYSDOS. ALL RIGHTS RESERVED. Accessed by Lauren Gualdino (lgualdino@briarcliffmanor.org), (-) Order Number #100880972 on May 08, 2020 07:05 AM (PDT) pursuant to License Agreement with ICC & NYSDOS. No further reproduction, no

100880972

714.5.1.1 Fire-resistance-rated assemblies. *Through penetrations* shall be protected using systems installed as tested in the *approved* fire-resistance-rated assembly.

714.5.1.2 Through-penetration firestop system. *Through penetrations* shall be protected by an *approved through-penetration firestop system* installed and tested in accordance with ASTM E814 or UL 1479, with a minimum positive pressure differential of 0.01 inch of water (2.49 Pa). The system shall have an F rating/T rating of not less than 1 hour but not less than the required rating of the floor penetrated.

Exceptions:

1. Floor penetrations contained and located within the cavity of a wall above the floor or below the floor do not require a *T rating*.
2. Floor penetrations by floor drains, tub drains or shower drains contained and located within the concealed space of a *horizontal assembly* do not require a *T rating*.
3. Floor penetrations of maximum 4-inch (102 mm) nominal diameter metal conduit or tubing penetrating directly into metal-enclosed electrical power switchgear do not require a *T rating*.

714.5.2 Membrane penetrations. Penetrations of membranes that are part of a *horizontal assembly* shall comply with Section 714.5.1.1 or 714.5.1.2. Where floor/ceiling assemblies are required to have a *fire-resistance rating*, recessed fixtures shall be installed such that the required *fire resistance* will not be reduced.

Exceptions:

1. *Membrane penetrations* by steel, ferrous or copper conduits, pipes, tubes or vents, or concrete or masonry items where the *annular space* is protected either in accordance with Section 714.5.1 or to prevent the free passage of flame and the products of combustion. The aggregate area of the openings through the membrane shall not exceed 100 square inches (64 500 mm^2) in any 100 square feet (9.3 m^2) of ceiling area in assemblies tested without penetrations.
2. Ceiling *membrane penetrations* of maximum 2-hour *horizontal assemblies* by steel electrical boxes that do not exceed 16 square inches (10 323 mm^2) in area, provided that the aggregate area of such penetrations does not exceed 100 square inches (44 500 mm^2) in any 100 square feet (9.29 m^2) of ceiling area, and the *annular space* between the ceiling membrane and the box does not exceed $^1/_8$ inch (3.2 mm).
3. *Membrane penetrations* by electrical boxes of any size or type, that have been *listed* as part of an opening protective material system for use in *horizontal assemblies* and are installed in accordance with the instructions included in the listing.
4. *Membrane penetrations* by *listed* electrical boxes of any material, provided that such boxes have been tested for use in fire-resistance-rated assemblies and are installed in accordance with the instructions included in the listing. The *annular space* between the ceiling membrane and the box shall not exceed $^1/_8$ inch (3.2 mm) unless *listed* otherwise.
5. The *annular space* created by the penetration of a fire sprinkler, provided that it is covered by a metal escutcheon plate.
6. Noncombustible items that are cast into concrete building elements and that do not penetrate both top and bottom surfaces of the element.
7. The ceiling membrane of 1- and 2-hour fire-resistance-rated *horizontal assemblies* is permitted to be interrupted with the double wood top plate of a wall assembly that is sheathed with Type X gypsum wallboard, provided that all penetrating items through the double top plates are protected in accordance with Section 714.5.1.1 or 714.5.1.2 and the ceiling membrane is tight to the top plates.
8. Ceiling membrane penetrations by listed luminaires (light fixtures) or by luminaires protected with listed materials, which have been tested for use in fire-resistance-rated assemblies and are installed in accordance with the instructions included in the listing.

714.5.3 Dissimilar materials. Noncombustible penetrating items shall not connect to combustible materials beyond the point of firestopping unless it can be demonstrated that the *fire-resistance* integrity of the *horizontal assembly* is maintained.

714.5.4 Penetrations in smoke barriers. Penetrations in *smoke barriers* shall be protected by an approved *through-penetration firestop system* installed and tested in accordance with the requirements of UL 1479 for air leakage. The *L rating* of the system measured at 0.30 inch (7.47 Pa) of water in both the ambient temperature and elevated temperature tests shall not exceed either of the following:

1. 5.0 cfm per square foot (0.025 $m^3/s \cdot m^2$) of penetration opening for each *through-penetration firestop system*.
2. A total cumulative leakage of 50 cfm (0.024 m^3/s) for any 100 square feet (9.3 m^2) of wall area, or floor area.

714.6 Nonfire-resistance-rated assemblies. Penetrations of nonfire-resistance-rated floor or floor/ceiling assemblies or the ceiling membrane of a nonfire-resistance-rated roof/ceiling assembly shall meet the requirements of Section 713 or shall comply with Section 714.6.1 or 714.6.2.

714.6.1 Noncombustible penetrating items. Noncombustible penetrating items that connect not more than five *stories* are permitted, provided that the *annular space* is filled to resist the free passage of flame and the products of combustion with an *approved* noncombustible material or with a fill, void or cavity material that is tested and classified for use in *through-penetration firestop systems*.

INTERNATIONAL CODE COUNCIL®
Copyright © 2019 ICC & NYSDOS. ALL RIGHTS RESERVED. Accessed by Lauren Gualdino (lgualdino@briarcliffmanor.org), (-) Order Number #100880972 on May 08, 2020 07:05 AM (PDT) pursuant to License Agreement with ICC & NYSDOS. No further reproduction, no

100880972

714.6.2 Penetrating items. Penetrating items that connect not more than two *stories* are permitted, provided that the *annular space* is filled with an *approved* material to resist the free passage of flame and the products of combustion.

SECTION 715
FIRE-RESISTANT JOINT SYSTEMS

715.1 General. Joints installed in or between fire-resistance-rated walls, floor or floor/ceiling assemblies and roofs or roof/ceiling assemblies shall be protected by an approved *fire-resistant joint system* designed to resist the passage of fire for a time period not less than the required *fire-resistance rating* of the wall, floor or roof in or between which the system is installed. *Fire-resistant joint systems* shall be tested in accordance with Section 715.3.

Exception: *Fire-resistant joint systems* shall not be required for joints in all of the following locations:

1. Floors within a single *dwelling unit*.
2. Floors where the joint is protected by a shaft enclosure in accordance with Section 713.
3. Floors within atriums where the space adjacent to the atrium is included in the volume of the atrium for smoke control purposes.
4. Floors within malls.
5. Floors and ramps within parking garages or structures constructed in accordance with Sections 406.5 and 406.6.
6. Mezzanine floors.
7. Walls that are permitted to have unprotected openings.
8. Roofs where openings are permitted.
9. Control joints not exceeding a maximum width of 0.625 inch (15.9 mm) and tested in accordance with ASTM E119 or UL 263.
10. The intersection of exterior curtain wall assemblies and the roof slab or roof deck.

715.1.1 Curtain wall assembly. The void created at the intersection of a floor/ceiling assembly and an exterior curtain wall assembly shall be protected in accordance with Section 715.4.

715.2 Installation. A *fire-resistant joint system* shall be securely installed in accordance with the manufacturer's installation instructions and the listing criteria in or on the joint for its entire length so as not to impair its ability to accommodate expected building movements and to resist the passage of fire and hot gases.

715.3 Fire test criteria. *Fire-resistant joint systems* shall be tested in accordance with the requirements of either ASTM E1966 or UL 2079. Nonsymmetrical wall joint systems shall be tested with both faces exposed to the furnace, and the assigned *fire-resistance rating* shall be the shortest duration obtained from the two tests. Where evidence is furnished to show that the wall was tested with the least fire-resistant side exposed to the furnace, subject to acceptance of the *building official*, the wall need not be subjected to tests from the opposite side.

Exception: For *exterior walls* with a horizontal *fire separation distance* greater than 10 feet (3048 mm), the joint system shall be required to be tested for interior fire exposure only.

715.4 Exterior curtain wall/floor intersection. Where fire-resistance-rated floor or floor/ceiling assemblies are required, voids created at the intersection of the exterior curtain wall assemblies and such floor assemblies shall be sealed with an *approved* system to prevent the interior spread of fire. Such systems shall be securely installed and tested in accordance with ASTM E2307 to provide an *F rating* for a time period not less than the *fire-resistance rating* of the floor assembly. Height and *fire-resistance* requirements for curtain wall spandrels shall comply with Section 705.8.5.

Exception: Voids created at the intersection of the exterior curtain wall assemblies and such floor assemblies where the vision glass extends to the finished floor level shall be permitted to be sealed with an approved material to prevent the interior spread of fire. Such material shall be securely installed and capable of preventing the passage of flame and hot gases sufficient to ignite cotton waste where subjected to ASTM E119 time-temperature fire conditions under a minimum positive pressure differential of 0.01 inch (0.254 mm) of water column (2.5 Pa) for the time period not less than the *fire-resistance rating* of the floor assembly.

715.4.1 Exterior curtain wall/nonfire-resistance-rated floor assembly intersections. Voids created at the intersection of exterior curtain wall assemblies and nonfire-resistance-rated floor or floor/ceiling assemblies shall be sealed with an *approved* material or system to retard the interior spread of fire and hot gases between *stories*.

715.4.2 Exterior curtain wall/vertical fire barrier intersections. Voids created at the intersection of nonfire-resistance-rated exterior curtain wall assemblies and *fire barriers* shall be filled. An approved material or system shall be used to fill the void and shall be securely installed in or on the intersection for its entire length so as not to dislodge, loosen or otherwise impair its ability to accommodate expected building movements and to retard the passage of fire and hot gases.

715.5 Spandrel wall. Height and *fire-resistance* requirements for curtain wall spandrels shall comply with Section 705.8.5. Where Section 705.8.5 does not require a fire-resistance-rated spandrel wall, the requirements of Section 715.4 shall still apply to the intersection between the spandrel wall and the floor.

715.6 Fire-resistant joint systems in smoke barriers. *Fire-resistant joint systems* in *smoke barriers*, and joints at the intersection of a horizontal *smoke barrier* and an exterior curtain wall, shall be tested in accordance with the requirements of UL 2079 for air leakage. The *L rating* of the joint system shall not exceed 5 cfm per linear foot (0.00775 m^3/s m) of joint at 0.30 inch (7.47 Pa) of water for both the ambient temperature and elevated temperature tests.

INTERNATIONAL CODE COUNCIL®
Copyright © 2019 ICC & NYSDOS. ALL RIGHTS RESERVED. Accessed by Lauren Gualdino (lgualdino@briarcliffmanor.org), (-) Order Number #100880972 on May 08, 2020 07:05 AM (PDT) pursuant to License Agreement with ICC & NYSDOS. No further reproduction, no

100880972

SECTION 716
OPENING PROTECTIVES

716.1 General. Opening protectives required by other sections of this code shall comply with the provisions of this section and shall be installed in accordance with NFPA 80.

[NY] 716.1.1 Alternative methods for determining fire protection ratings. The application of any of the alternative methods *listed* in this section shall be based on the fire exposure and acceptance criteria specified in NFPA 252, NFPA 257, UL 9, UL 10B or UL 10C. The required *fire resistance* of an opening protective shall be permitted to be established by any of the following methods or procedures:

1. Designs documented in *approved* sources.
2. Calculations performed in an *approved* manner.
3. Engineering analysis based on a comparison of opening protective designs having *fire protection ratings* as determined by the test procedures set forth in NFPA 252, NFPA 257, UL 9, UL 10B or UL 10C.
4. Alternative protection methods as allowed by Section 104.3.

716.1.2 Glazing. Glazing used in *fire door assemblies* and fire window assemblies shall comply with this section in addition to the requirements of Sections 716.2 and 716.3, respectively.

716.1.2.1 Safety glazing. *Fire-protection-rated* glazing and fire-resistance-rated glazing installed in *fire door* assemblies and fire window assemblies shall comply with the safety glazing requirements of Chapter 24 where applicable.

716.1.2.2 Marking fire-rated glazing assemblies. *Fire-rated glazing* assemblies shall be marked in accordance with Tables 716.1(1), 716.1(2) and 716.1(3).

716.1.2.2.1 Fire-rated glazing identification. For *fire-rated glazing*, the *label* shall bear the identification required in Tables 716.1(1) and 716.1(2). "D" indicates that the glazing is permitted to be used in *fire door* assemblies and meets the fire protection requirements of NFPA 252, UL 10B or UL 10C. "H" indicates that the glazing meets the hose stream requirements of NFPA 252, UL 10B or UL 10C. "T" indicates that the glazing meets the temperature requirements of Section 716.2.2.3.1. The placeholder "XXX" represents the fire-rating period, in minutes.

716.1.2.2.2 Fire-protection-rated glazing identification. For *fire-protection-rated* glazing, the *label* shall bear the following identification required in Tables 716.1(1) and 716.1(3): "OH – XXX." "OH" indicates that the glazing meets both the fire protection and the hose-stream requirements of NFPA 257 or UL 9 and is permitted to be used in fire window openings. The placeholder "XXX" represents the fire-rating period, in minutes.

716.1.2.2.3 Fire-resistance-rated glazing identification. For fire-resistance-rated glazing, the label shall bear the identification required in Section 703.6 and Table 716.1.(1).

716.1.2.2.4 Fire-rated glazing that exceeds the code requirements. *Fire-rated glazing* assemblies marked as complying with hose stream requirements (H) shall be permitted in applications that do not require compliance with hose stream requirements. *Fire-rated glazing* assemblies marked as complying with temperature rise requirements (T) shall be permitted in applications that do not require compliance with temperature rise requirements. *Fire-rated glazing* assemblies marked with ratings (XXX) that exceed the ratings required by this code shall be permitted.

716.1.2.3 Fire-resistance-rated glazing. Fire-resistance-rated glazing tested as part of a fire-resistance-rated wall or floor/ceiling assembly in accordance with ASTM E119 or UL 263 and labeled in accordance with Section 703.6 shall not otherwise be required to comply with this section where used as part of a wall or floor/ceiling assembly.

716.1.2.3.1 Glazing in fire door and fire window assemblies. Fire-resistance-rated glazing shall be permitted in fire door and fire window assemblies where tested and installed in accordance with their listings and where in compliance with the requirements of this section.

TABLE 716.1(1)
MARKING FIRE-RATED GLAZING ASSEMBLIES

FIRE TEST STANDARD	MARKING	DEFINITION OF MARKING
ASTM E119 or UL 263	W	Meets wall assembly criteria.
ASTM E119 or UL 263	FC	Meets floor/ceiling criteria[a]
NFPA 257 or UL 9	OH	Meets fire window assembly criteria including the hose stream test.
NFPA 252 or UL 10B or UL 10C	D H T	Meets fire door assembly criteria. Meets fire door assembly hose stream test. Meets 450ºF temperature rise criteria for 30 minutes
—	XXX	The time in minutes of the fire resistance or fire protection rating of the glazing assembly.

For SI: ºC = [(ºF) - 32]/1.8.

a. See Section 2409.1

INTERNATIONAL CODE COUNCIL®
Copyright © 2019 ICC & NYSDOS. ALL RIGHTS RESERVED. Accessed by Lauren Gualdino (lgualdino@briarcliffmanor.org), (-) Order Number #100880972 on May 08, 2020 07:05 AM (PDT) pursuant to License Agreement with ICC & NYSDOS. No further reproduction, no

100880972

TABLE 716.1(2)
OPENING FIRE PROTECTION ASSEMBLIES, RATINGS AND MARKINGS

TYPE OF ASSEMBLY	REQUIRED WALL ASSEMBLY RATING (hours)	MINIMUM FIRE DOOR AND FIRE SHUTTER ASSEMBLY RATING (hours)	DOOR VISION PANEL SIZE[b]	FIRE-RATED GLAZING MARKING DOOR VISION PANEL[c, e]	MINIMUM SIDELIGHT/ TRANSOM ASSEMBLY RATING (hours)		FIRE-RATED GLAZING MARKING SIDELIGHT/TRANSOM PANEL	
					Fire protection	Fire resistance	Fire protection	Fire resistance
Fire walls and fire barriers having a required fire-resistance rating greater than 1 hour	4	3	See Note b	D-H-W-240	Not Permitted	4	Not Permitted	W-240
	3	3[a]	See Note b	D-H-W-180	Not Permitted	3	Not Permitted	W-180
	2	1 1/2	100 sq. in.	≤ 100 sq. in. = D-H-90 >100 sq. in.= D-H-W-90	Not Permitted	2	Not Permitted	W-120
	1 1/2	1 1/2	100 sq. in.	≤ 100 sq. in. = D-H-90 >100 sq. in.= D-H-W-90	Not Permitted	1 1/2	Not Permitted	W-90
Enclosures for shafts, interior exit stairways and interior exit ramps.	2	1 1/2	100 sq. in.[c]	≤ 100 sq. in. = D-H-90 > 100 sq. in.= D-H-T-W-90	Not Permitted	2	Not Permitted	W-120
Horizontal exits in fire walls[d]	4	3	100 sq. in.	≤ 100 sq. in. = D-H-180 > 100 sq. in.= D-H-W-240	Not Permitted	4	Not Permitted	W-240
	3	3[a]	100 sq. in.	≤ 100 sq. in. = D-H-180 > 100 sq. in.= D-H-W-180	Not Permitted	3	Not Permitted	W-180
Fire barriers having a required fire-resistance rating of 1 hour: Enclosures for shafts, exit access stairways, exit access ramps, interior exit stairways and interior exit ramps; and exit passageway walls	1	1	100 sq. in.	≤ 100 sq. in. = D-H-60 >100 sq. in.= D-H-T-W-60	Not Permitted	1	Not Permitted	W-60
					Fire protection			
Other fire barriers	1	3/4	Maximum size tested	D-H	3/4		D-H	
Fire partitions: Corridor walls	1	1/3[b]	Maximum size tested	D-20	3/4[b]		D-H-OH-45	
	0.5	1/3[b]	Maximum size tested	D-20	1/3		D-H-OH-20	
Other fire partitions	1	3/4	Maximum size tested	D-H-45	3/4		D-H-45	
	0.5	1/3	Maximum size tested	D-H-20	1/3		D-H-20	

(continued)

INTERNATIONAL CODE COUNCIL®
Copyright © 2019 ICC & NYSDOS. ALL RIGHTS RESERVED. Accessed by Lauren Gualdino (lgualdino@briarcliffmanor.org), (-) Order Number #100880972 on May 08, 2020 07:05 AM (PDT) pursuant to License Agreement with ICC & NYSDOS. No further reproduction, no

TABLE 716.1(2)—continued
OPENING FIRE PROTECTION ASSEMBLIES, RATINGS AND MARKINGS

TYPE OF ASSEMBLY	REQUIRED WALL ASSEMBLY RATING (hours)	MINIMUM FIRE DOOR AND FIRE SHUTTER ASSEMBLY RATING (hours)	DOOR VISION PANEL SIZE[b]	FIRE-RATED GLAZING MARKING DOOR VISION PANEL[c, e]	MINIMUM SIDELIGHT/ TRANSOM ASSEMBLY RATING (hours)		FIRE-RATED GLAZING MARKING SIDELIGHT/ TRANSOM PANEL	
					Fire protection	Fire resistance	Fire protection	Fire resistance
Exterior walls	3	1 1/2	100 sq. in.[b]	≤ 100 sq. in. = D-H-90 > 100 sq. in = D-H-W-90	Not Permitted	3	Not Permitted	W-180
	2	1 1/2	Maximum size tested	D-H 90 or D-H-W-90	1 1/2	2	D-H-OH-90	W-120
					Fire protection			
	1	3/4	Maximum size tested	D-H-45	3/4		D-H-45	
Smoke barriers					Fire protection			
	1	1/3	Maximum size tested	D-20	3/4		D-H-OH-45	

For SI: 1 square inch = 645.2 mm.

a. Two doors, each with a fire protection rating of 1 1/2 hours, installed on opposite sides of the same opening in a fire wall, shall be deemed equivalent in fire protection rating to one 3-hour fire door.

b. Fire-resistance-rated glazing tested to ASTM E119 in accordance with Section 716.1.2.3 shall be permitted, in the maximum size tested.

c. Under the column heading "Fire-rated glazing marking door vision panel," W refers to the fire-resistance rating of the glazing, not the frame.

d. See Section 716.2.5.1.2.1.

e. See Section 716.1.2.2.1 and Table 716.1(1) for additional permitted markings.

TABLE 716.1(3)
FIRE WINDOW ASSEMBLY FIRE PROTECTION RATINGS

TYPE OF WALL ASSEMBLY	REQUIRED WALL ASSEMBLY RATING (hours)	MINIMUM FIRE WINDOW ASSEMBLY RATING (hours)	FIRE-RATED GLAZING MARKING
Interior walls			
Fire walls	All	NP[a]	W-XXX[b]
Fire barriers	>1	NP[a]	W-XXX[b]
	1	NP[a]	W-XXX[b]
Atrium separations (Section 707.3.6), Incidental use areas (Section 707.3.7), Mixed occupancy separations (Section 707.3.9)	1	3/4	OH-45 or W-60
Fire partitions	1	3/4	OH-45 or W-60
	0.5	1/3	OH-20 or W-30
Smoke barriers	1	3/4	OH-45 or W-60
Exterior walls	>1	1 1/2	OH-90 or W-XXX[b]
	1	3/4	OH-45 or W-60
	0.5	1/3	OH-20 or W-30
Party wall	All	NP	Not Applicable

NP = Not Permitted.

a. Not permitted except fire-resistance-rated glazing assemblies tested to ASTM E119 or UL 263, as specified in Section 716.1.2.3.

b. XXX = The fire rating duration period in minutes, which shall be equal to the fire-resistance rating required for the wall assembly.

INTERNATIONAL CODE COUNCIL®

Copyright © 2019 ICC & NYSDOS. ALL RIGHTS RESERVED. Accessed by Lauren Gualdino (lgualdino@briarcliffmanor.org), (-) Order Number #100880972 on May 08, 2020 07:05 AM (PDT) pursuant to License Agreement with ICC & NYSDOS. No further reproduction, no

100880972

716.2 Fire door assemblies. *Fire door assemblies* required by other sections of this code shall comply with the provisions of this section. *Fire door* frames with transom lights, sidelights or both shall be permitted in accordance with Section 716.2.5.4.

716.2.1 Testing requirements. Approved *fire door* and fire shutter assemblies shall be constructed of any material or assembly of component materials that conforms to the test requirements of Sections 716.2.1.1 through 716.2.1.4 and the *fire protection rating* indicated in Table 716.1(2).

Exceptions:

1. Labeled protective assemblies that conform to the requirements of this section or UL 10A, UL 14B and UL 14C for tin-clad *fire door* assemblies.
2. Floor *fire door* assemblies in accordance with Section 712.1.13.1.

716.2.1.1 Side-hinged or pivoted swinging doors. *Fire door* assemblies with side-hinged and pivoted swinging doors shall be tested in accordance with NFPA 252 or UL 10C. For tests conducted in accordance with NFPA 252, the fire test shall be conducted using the positive pressure method specified in the standard.

716.2.1.2 Other types of assemblies. *Fire door* assemblies with other types of doors, including swinging elevator doors, horizontal sliding fire doors, rolling steel *fire doors*, fire shutters, bottom- and side-hinged chute intake doors, and top-hinged chute discharge doors, shall be tested in accordance with NFPA 252 or UL 10B. For tests conducted in accordance with NFPA 252, the neutral pressure plane in the furnace shall be maintained as nearly equal to the atmospheric pressure as possible at the top of the door, as specified in the standard.

716.2.1.3 Glazing in transoms lights and sidelights in corridors and smoke barriers. Glazing material in any other part of the door assembly, including transom lights and sidelights, shall be tested in accordance with NFPA 257 or UL 9, including the hose stream test, in accordance with Section 716.3.1.1.

716.2.1.4 Smoke and draft control. *Fire door* assemblies that serve as smoke and draft control assemblies shall be tested in accordance with UL 1784.

716.2.2 Performance requirements. *Fire door assemblies* shall be installed in the assemblies specified in Table 716.1(2) and shall comply with the *fire protection rating* specified.

716.2.2.1 Door assemblies in corridors and smoke barriers. *Fire door* assemblies required to have a minimum *fire protection rating* of 20 minutes where located in *corridor* walls or *smoke barrier* walls having a *fire-resistance rating* in accordance with Table 716.1(2) shall be tested in accordance with NFPA 252 or UL 10C without the hose stream test.

Exceptions:

1. Viewports that require a hole not larger than 1 inch (25 mm) in diameter through the door, have not less than a 0.25-inch-thick (6.4 mm) glass disc and the holder is of metal that will not melt out where subject to temperatures of 1,700°F (927°C).
2. *Corridor* door assemblies in occupancies of Group I-2 shall be in accordance with Section 407.3.1.
3. Unprotected openings shall be permitted for *corridors* in multitheater complexes where each motion picture auditorium has not fewer than one-half of its required *exit* or *exit access doorways* opening directly to the exterior or into an *exit* passageway.
4. Horizontal sliding doors in *smoke barriers* that comply with Sections 408.6 and 408.8.4 in occupancies in Group I-3.

716.2.2.1.1 Smoke and draft control. The air leakage rate of the door assembly shall not exceed 3.0 cubic feet per minute per square foot (0.01524 $m^3/s \times m^2$) of door opening at 0.10 inch (24.9 Pa) of water for both the ambient temperature and elevated temperature tests. Louvers shall be prohibited.

716.2.2.2 Door assemblies in other fire partitions. *Fire door* assemblies required to have a minimum *fire protection rating* of 20 minutes where located in other *fire partitions* having a *fire-resistance rating* of 0.5 hour in accordance with Table 716.1(2) shall be tested in accordance with NFPA 252, UL 10B or UL 10C with the hose stream test.

716.2.2.3 Doors in interior exit stairways and ramps and exit passageways. *Fire door* assemblies in interior exit stairways and ramps and exit passageways shall have a maximum transmitted temperature rise of not more than 450°F (250°C) above ambient at the end of 30 minutes of standard fire test exposure.

Exception: The maximum transmitted temperature rise is not required in buildings equipped throughout with an *automatic sprinkler system* installed in accordance with Section 903.3.1.1 or 903.3.1.2.

716.2.2.3.1 Glazing in doors. Fire-protection-rated glazing in excess of 100 square inches (0.065 m^2) is not permitted. Fire-resistance-rated glazing in excess of 100 square inches (0.065 m^2) shall be permitted in *fire doors*. Listed fire-resistance-rated glazing in a *fire door* shall have a maximum transmitted temperature rise in accordance with Section 716.2.2.3 when the *fire door* is tested in accordance with NFPA 252, UL 10B or UL 10C.

716.2.3 Fire doors. *Fire doors* installed within a *fire door assembly* shall meet the fire rating indicated in Table 716.1(2).

716.2.4 Fire door frames. *Fire door* frames installed as part of a *fire door assembly* shall meet the fire rating indicated in Table 716.1(2).

716.2.5 Glazing in fire door assemblies. *Fire-rated glazing* conforming to the opening protection requirements in Section 716.2.1 shall be permitted in *fire door* assemblies.

INTERNATIONAL CODE COUNCIL®
Copyright © 2019 ICC & NYSDOS. ALL RIGHTS RESERVED. Accessed by Lauren Gualdino (lgualdino@briarcliffmanor.org), (-) Order Number #100880972 on May 08, 2020 07:05 AM (PDT) pursuant to License Agreement with ICC & NYSDOS. No further reproduction, no

100880972

716.2.5.1 Size limitations. Fire-resistance-rated glazing shall comply with the size limitations in Section 716.2.5.1.1. Fire-protection-rated glazing shall comply with the size limitations of NFPA 80, and as provided in Section 716.2.5.1.2.

716.2.5.1.1 Fire-resistance-rated glazing in door assemblies in fire walls and fire barriers rated greater than 1 hour. Fire-resistance-rated glazing tested to ASTM E119 or UL 263 and NFPA 252, UL 10B or UL 10C shall be permitted in *fire door assemblies* located in *fire walls* and in *fire barriers* in accordance with Table 716.1(2) to the maximum size tested and in accordance with their listings.

716.2.5.1.2 Fire-protection-rated glazing in door assemblies in fire walls and fire barriers rated greater than 1 hour. Fire-protection-rated glazing shall be prohibited in *fire walls* and *fire barriers* except as provided in Sections 716.2.5.1.2.1 and 716.2.5.1.2.2.

716.2.5.1.2.1 Horizontal exits. Fire-protection-rated glazing shall be permitted as vision panels in *self-closing* swinging *fire door* assemblies serving as horizontal exits in *fire walls* where limited to 100 square inches (0.065 m^2).

716.2.5.1.2.2 Fire barriers. Fire-protection-rated glazing shall be permitted in *fire doors* having a $1^1/_2$-hour *fire protection rating* intended for installation in *fire barriers*, where limited to 100 square inches (0.065 m^2).

716.2.5.2 Elevator, stairway and ramp protectives. Approved fire-protection-rated glazing used in *fire door* assemblies in elevator, stairway and ramp enclosures shall be so located as to furnish clear vision of the passageway or approach to the elevator, stairway or ramp.

716.2.5.3 Glazing in door assemblies in corridors and smoke barriers. In a 20-minute *fire door assembly*, the glazing material in the door itself shall have a minimum fire-protection-rated glazing of 20 minutes and shall be exempt from the hose stream test.

716.2.5.4 Fire door frames with transom lights and sidelights. Fire-protection-rated glazing shall be permitted in door frames with transom lights, sidelights or both, where a $^3/_4$-hour *fire protection rating* or less is required and in 2-hour fire-resistance-rated exterior walls in accordance with Table 716.1(2). *Fire door* frames with transom lights, sidelights, or both, installed with fire-resistance-rated glazing tested as an assembly in accordance with ASTM E119 or UL 263 shall be permitted where a *fire protection rating* exceeding $^3/_4$ hour is required in accordance with Table 716.1(2).

716.2.6 Fire door hardware and closures. *Fire door* hardware and closures shall be installed on *fire door assemblies* in accordance with the requirements of this section.

716.2.6.1 Door closing. *Fire doors* shall be latching and self- or automatic-closing in accordance with this section.

Exceptions:

1. *Fire doors* located in common walls separating *sleeping units* in Group R-1 shall be permitted without automatic- or *self-closing* devices.
2. The elevator car doors and the associated hoistway enclosure doors at the floor level designated for recall in accordance with Section 3003.2 shall be permitted to remain open during Phase I emergency recall operation.

716.2.6.2 Latch required. Unless otherwise specifically permitted, *single side-hinged swinging fire doors* and both leaves of pairs of side-hinged swinging *fire doors* shall be provided with an active latch bolt that will secure the door when it is closed.

716.2.6.3 Chute intake door latching. Chute intake doors shall be positive latching, remaining latched and closed in the event of latch spring failure during a fire emergency.

716.2.6.4 Automatic-closing fire door assemblies. Automatic-closing *fire door* assemblies shall be *self-closing* in accordance with NFPA 80.

716.2.6.5 Delayed-action closers. Doors required to be *self-closing* and not required to be automatic closing shall be permitted to be equipped with delayed-action closers.

716.2.6.6 Smoke-activated doors. Automatic-closing doors installed in the following locations shall be permitted to have hold-open devices. Doors shall automatically close by the actuation of smoke detectors installed in accordance with Section 907.3 or by loss of power to the smoke detector or hold-open device. Doors that are automatic-closing by smoke detection shall not have more than a 10-second delay before the door starts to close after the smoke detector is actuated. Automatic-closing doors that protect openings installed in the following locations shall comply with this section:

1. In walls that separate incidental uses in accordance with Section 509.4.
2. In *fire walls* in accordance with Section 706.8.
3. In *fire barriers* in accordance with Section 707.6.
4. In *fire partitions* in accordance with Section 708.6.
5. In *smoke barriers* in accordance with Section 709.5.
6. In *smoke partitions* in accordance with Section 710.5.2.3.
7. In shaft enclosures in accordance with Section 713.7.

INTERNATIONAL CODE COUNCIL®
Copyright © 2019 ICC & NYSDOS. ALL RIGHTS RESERVED. Accessed by Lauren Gualdino (lgualdino@briarcliffmanor.org), (-) Order Number #100880972 on May 08, 2020 07:05 AM (PDT) pursuant to License Agreement with ICC & NYSDOS. No further reproduction, no

100880972

8. In waste and linen chutes, discharge openings and access and discharge rooms in accordance with Section 713.13. Loading doors installed in waste and linen chutes shall meet the requirements of Sections 716.2.6.1 and 716.2.6.3.

716.2.6.7 Doors in pedestrian ways. Vertical sliding or vertical rolling steel *fire doors* in openings through which pedestrians travel shall be heat activated or activated by smoke detectors with alarm verification.

716.2.7 Swinging fire shutters. Where fire shutters of the swinging type are installed in exterior openings, not less than one row in every three vertical rows shall be arranged to be readily opened from the outside, and shall be identified by distinguishing marks or letters not less than 6 inches (152 mm) high.

716.2.8 Rolling fire shutters. Where fire shutters of the rolling type are installed, such shutters shall include *approved* automatic-closing devices.

716.2.9 Labeled protective assemblies. *Fire door* assemblies shall be labeled by an *approved agency*. The *labels* shall comply with NFPA 80, and shall be permanently affixed to the door or frame.

716.2.9.1 Fire door labeling requirements. *Fire doors* shall be labeled showing the name of the manufacturer or other identification readily traceable back to the manufacturer, the name or trademark of the third-party inspection agency, the *fire protection rating* and, where required for *fire doors* in interior exit stairways and ramps and exit passageways by Section 716.2.2.3, the maximum transmitted temperature end point. Smoke and draft control doors complying with UL 1784 shall be labeled as such and shall comply with Section 716.2.9.3. Labels shall be approved and permanently affixed. The label shall be applied at the factory or location where fabrication and assembly are performed.

716.2.9.1.1 Light kits, louvers and components. Listed light kits and louvers and their required preparations shall be considered as part of the labeled door where such installations are done under the listing program of the third-party agency. *Fire doors* and *fire door assemblies* shall be permitted to consist of components, including glazing, vision light kits and hardware that are listed or classified and labeled for such use by different third-party agencies.

716.2.9.2 Oversized doors. Oversized *fire doors* shall bear an oversized *fire door label* by an *approved agency* or shall be provided with a certificate of inspection furnished by an *approved* testing agency. Where a certificate of inspection is furnished by an *approved* testing agency, the certificate shall state that the door conforms to the requirements of design, materials and construction, but has not been subjected to the fire test.

716.2.9.3 Smoke and draft control door labeling requirements. Smoke and draft control doors complying with UL 1784 shall be labeled in accordance with Section 716.2.9.1 and shall show the letter "S" on the fire-rating *label* of the door. This marking shall indicate that the door and frame assembly are in compliance where *listed* or labeled gasketing is installed.

716.2.9.4 Fire door frame labeling requirements. *Fire door* frames shall be labeled showing the names of the manufacturer and the third-party inspection agency.

716.2.9.5 Labeling. *Fire-rated glazing* shall bear a *label* or other identification showing the name of the manufacturer, the test standard and information required in Table 716.1(1) that shall be issued by an *approved agency* and shall be permanently identified on the glazing.

716.2.9.6 Fire door operator labeling requirements. *Fire door* operators for horizontal sliding doors shall be labeled and listed for use with the assembly.

716.2.10 Installation of door assemblies in corridors and smoke barriers. Installation of smoke doors shall be in accordance with NFPA 105.

716.3 Fire window assemblies. Fire window assemblies required by other sections of this code shall comply with the provisions of this section.

716.3.1 Testing requirements. Fire window assemblies shall be constructed of any material or assembly of component materials that conforms to the test requirements of Sections 716.3.1.1 and 716.3.1.2 and the *fire protection rating* indicated in Table 716.1(3).

716.3.1.1 Testing under positive pressure. NFPA 257 or UL 9 shall evaluate fire-protection-rated glazing under positive pressure. Within the first 10 minutes of a test, the pressure in the furnace shall be adjusted so not less than two-thirds of the test specimen is above the neutral pressure plane, and the neutral pressure plane shall be maintained at that height for the balance of the test.

716.3.1.2 Nonsymmetrical glazing systems. Nonsymmetrical fire-protection-rated glazing systems in *fire partitions*, *fire barriers* or in *exterior walls* with a *fire separation distance* of 10 feet (3048 mm) or less pursuant to Section 705 shall be tested with both faces exposed to the furnace, and the assigned *fire protection rating* shall be the shortest duration obtained from the two tests conducted in compliance with NFPA 257 or UL 9.

716.3.2 Performance requirements. Fire window assemblies shall be installed in the assemblies and comply with the *fire protection rating* specified in Table 716.1(3).

716.3.2.1 Interior fire window assemblies. Fire-protection-rated glazing used in *fire window assemblies* located in *fire partitions* and *fire barriers* shall be limited to use in assemblies with a maximum *fire-resistance rating* of 1 hour in accordance with this section.

716.3.2.1.1 Where $^{3}/_{4}$-hour-fire-protection window assemblies permitted. Fire-protection-rated glazing requiring 45-minute opening protection in accordance with Table 716.1(3) shall be limited to *fire partitions* designed in accordance with Section 708 and *fire barriers* utilized in the applications set

INTERNATIONAL CODE COUNCIL®
Copyright © 2019 ICC & NYSDOS. ALL RIGHTS RESERVED. Accessed by Lauren Gualdino (lgualdino@briarcliffmanor.org), (-) Order Number #100880972 on May 08, 2020 07:05 AM (PDT) pursuant to License Agreement with ICC & NYSDOS. No further reproduction, no

100880972

forth in Sections 707.3.6, 707.3.7 and 707.3.9 where the *fire-resistance rating* does not exceed 1 hour. Fire-resistance-rated glazing assemblies tested in accordance with ASTM E119 or UL 263 shall not be subject to the limitations of this section.

716.3.2.1.2 Area limitations. The total area of the glazing in fire-protection-rated window assemblies shall not exceed 25 percent of the area of a common wall with any room.

716.3.2.1.3 Where $^1/_3$-hour-fire-protection window assemblies permitted. Fire-protection-rated glazing shall be permitted in window assemblies tested to NFPA 257 or UL 9 in *fire partitions* requiring $^1/_3$-hour opening protection in accordance with Table 716.1(3).

716.3.3 Fire window frames. Fire window frames installed with a *fire window assembly* shall meet the fire-protection rating indicated in Table 716.1(3).

716.3.3.1 Window mullions. Metal mullions that exceed a nominal height of 12 feet (3658 mm) shall be protected with materials to afford the same *fire-resistance rating* as required for the wall construction in which the protective is located.

716.3.4 Fire-protection-rated glazing. Glazing in *fire window assemblies* shall be fire protection rated in accordance with this section and Table 716.1(3). Fire-protection-rated glazing in fire window assemblies shall be tested in accordance with and shall meet the acceptance criteria of NFPA 257 or UL 9. Openings in nonfire-resistance-rated *exterior wall* assemblies that require protection in accordance with Section 705.3, 705.8, 705.8.5 or 705.8.6 shall have a *fire protection rating* of not less than $^3/_4$ hour. Fire-protection-rated glazing in $^1/_2$-hour fire-resistance-rated partitions is permitted to have a 20-minute *fire protection rating.*

716.3.4.1 Glass and glazing. Glazing in *fire window assemblies* shall be fire-protection-rated glazing installed in accordance with and complying with the size limitations set forth in NFPA 80.

716.3.5 Labeled protective assemblies. Glazing in fire window assemblies shall be labeled by an approved agency. The labels shall comply with NFPA 80 and Section 716.3.5.2.

716.3.5.1 Fire window frames. Fire window frames shall be approved for the intended application.

716.3.5.2 Labeling requirements. Fire-protection-rated glazing shall bear a label or other identification showing the name of the manufacturer, the test standard and information required in Section 716.1.2.2.2 and Table 716.1(3) that shall be issued by an approved agency and permanently identified on the glazing.

716.3.6 Installation. Fire window assemblies shall be installed in accordance with the provisions of this section.

716.3.6.1 Closure. Fire-protection-rated glazing shall be in the fixed position or be automatic-closing and shall be installed in *labeled* frames.

SECTION 717
DUCTS AND AIR TRANSFER OPENINGS

717.1 General. The provisions of this section shall govern the protection of duct penetrations and air transfer openings in assemblies required to be protected and duct penetrations in nonfire-resistance-rated floor assemblies.

717.1.1 Ducts and air transfer openings. Ducts transitioning horizontally between shafts shall not require a shaft enclosure provided that the duct penetration into each associated shaft is protected with *dampers* complying with this section.

717.1.2 Ducts that penetrate fire-resistance-rated assemblies without dampers. Ducts that penetrate fire-resistance-rated walls and are not required by this section to have *fire dampers* shall comply with the requirements of Sections 714.3 through 714.4.3. Ducts that penetrate *horizontal assemblies* not required to be contained within a shaft and not required by this section to have *fire dampers* shall comply with the requirements of Sections 714.5 through 714.6.2.

717.1.2.1 Ducts that penetrate nonfire-resistance-rated assemblies. The space around a duct penetrating a nonfire-resistance-rated floor assembly shall comply with Section 717.6.3.

717.2 Installation. *Fire dampers, smoke dampers, combination fire/smoke dampers* and *ceiling radiation dampers* located within air distribution and smoke control systems shall be installed in accordance with the requirements of this section, the manufacturer's instructions and the *dampers'* listing.

717.2.1 Smoke control system. Where the installation of a *fire damper* will interfere with the operation of a required smoke control system in accordance with Section 909, *approved* alternative protection shall be utilized. Where mechanical systems including ducts and *dampers* utilized for normal building ventilation serve as part of the smoke control system, the expected performance of these systems in smoke control mode shall be addressed in the rational analysis required by Section 909.4.

717.2.2 Hazardous exhaust ducts. *Fire dampers* for hazardous exhaust duct systems shall comply with the *Mechanical Code of New York State*.

717.3 Damper testing, ratings and actuation. *Damper* testing, ratings and actuation shall be in accordance with Sections 717.3.1 through 717.3.3.

717.3.1 Damper testing. *Dampers* shall be listed and labeled in accordance with the standards in this section.

1. *Fire dampers* shall comply with the requirements of UL 555. Only *fire dampers* labeled for use in dynamic systems shall be installed in heating, ventilation and air-conditioning systems designed to operate with fans on during a fire.
2. *Smoke dampers* shall comply with the requirements of UL 555S.
3. *Combination fire/smoke dampers* shall comply with the requirements of both UL 555 and UL 555S.

INTERNATIONAL CODE COUNCIL®
Copyright © 2019 ICC & NYSDOS. ALL RIGHTS RESERVED. Accessed by Lauren Gualdino (lgualdino@briarcliffmanor.org), (-) Order Number #100880972 on May 08, 2020 07:05 AM (PDT) pursuant to License Agreement with ICC & NYSDOS. No further reproduction, no

100880972

4. *Ceiling radiation dampers* shall comply with the requirements of UL 555C or shall be tested as part of a fire-resistance-rated floor/ceiling or roof/ceiling assembly in accordance with ASTM E119 or UL 263. Only *ceiling radiation dampers* labeled for use in dynamic systems shall be installed in heating, ventilation and air-conditioning systems designed to operate with fans on during a fire.
5. *Corridor dampers* shall comply with requirements of both UL 555 and UL 555S. *Corridor dampers* shall demonstrate acceptable closure performance when subjected to 150 feet per minute (0.76 mps) velocity across the face of the damper during the UL 555 fire exposure test.

717.3.2 Damper rating. *Damper* ratings shall be in accordance with Sections 717.3.2.1 through 717.3.2.4.

717.3.2.1 Fire damper ratings. *Fire dampers* shall have the minimum *rating* specified in Table 717.3.2.1.

TABLE 717.3.2.1
FIRE DAMPER RATING

TYPE OF PENETRATION	MINIMUM DAMPER RATING (hours)
Less than 3-hour fire-resistance-rated assemblies	1.5
3-hour or greater fire-resistance-rated assemblies	3

717.3.2.2 Smoke damper ratings. *Smoke damper* leakage ratings shall be Class I or II. Elevated temperature ratings shall be not less than 250°F (121°C).

717.3.2.3 Combination fire/smoke damper ratings. *Combination fire/smoke dampers* shall have the minimum *rating* specified for *fire dampers* in Table 717.3.2.1 and shall have the minimum rating specified for *smoke dampers* in Section 717.3.2.2.

717.3.2.4 Corridor damper ratings. *Corridor dampers* shall have the following minimum ratings:

1. One hour *fire-resistance rating*.
2. Class I or II leakage rating as specified in Section 717.3.2.2.

717.3.3 Damper actuation. *Damper* actuation shall be in accordance with Sections 717.3.3.1 through 717.3.3.5 as applicable.

717.3.3.1 Fire damper actuation device. The *fire damper* actuation device shall meet one of the following requirements:

1. The operating temperature shall be approximately 50°F (10°C) above the normal temperature within the duct system, but not less than 160°F (71°C).
2. The operating temperature shall be not more than 350°F (177°C) where located in a smoke control system complying with Section 909.

717.3.3.2 Smoke damper actuation. The *smoke damper* shall close upon actuation of a *listed* smoke detector or detectors installed in accordance with Section 907.3 and one of the following methods, as applicable:

1. Where a *smoke damper* is installed within a duct, a smoke detector shall be installed inside the duct or outside the duct with sampling tubes protruding into the duct. The detector or tubes within the duct shall be within 5 feet (1524 mm) of the *damper*. Air outlets and inlets shall not be located between the detector or tubes and the *damper*. The detector shall be *listed* for the air velocity, temperature and humidity anticipated at the point where it is installed. Other than in mechanical smoke control systems, *dampers* shall be closed upon fan shutdown where local smoke detectors require a minimum velocity to operate.
2. Where a *smoke damper* is installed above *smoke barrier* doors in a *smoke barrier*, a spot-type detector shall be installed on either side of the *smoke barrier* door opening. The detector shall be listed for releasing service if used for direct interface with the *damper*.
3. Where a *smoke damper* is installed within an air transfer opening in a wall, a spot-type detector shall be installed within 5 feet (1524 mm) horizontally of the *damper*. The detector shall be listed for releasing service if used for direct interface with the *damper*.
4. Where a *smoke damper* is installed in a *corridor* wall or ceiling, the *damper* shall be permitted to be controlled by a smoke detection system installed in the *corridor*.
5. Where a smoke detection system is installed in all areas served by the duct in which the *damper* will be located, the *smoke dampers* shall be permitted to be controlled by the smoke detection system.

717.3.3.3 Combination fire/smoke damper actuation. *Combination fire/smoke damper* actuation shall be in accordance with Sections 717.3.3.1 and 717.3.3.2. *Combination fire/smoke dampers* installed in smoke control system shaft penetrations shall not be activated by local area smoke detection unless it is secondary to the smoke management system controls.

717.3.3.4 Ceiling radiation damper actuation. The operating temperature of a *ceiling radiation damper* actuation device shall be 50°F (27.8°C) above the normal temperature within the duct system, but not less than 160°F (71°C).

717.3.3.5 Corridor damper actuation. *Corridor damper* actuation shall be in accordance with Sections 717.3.3.1 and 717.3.3.2.

717.4 Access and identification. Fire and smoke *dampers* shall be provided with an *approved* means of access that is large enough to *permit* inspection and maintenance of the *damper* and its operating parts. The access shall not affect the integrity of fire-resistance-rated assemblies. The access openings shall not reduce the *fire-resistance rating* of the assem-

INTERNATIONAL CODE COUNCIL®
Copyright © 2019 ICC & NYSDOS. ALL RIGHTS RESERVED. Accessed by Lauren Gualdino (lgualdino@briarcliffmanor.org), (-) Order Number #100880972 on May 08, 2020 07:05 AM (PDT) pursuant to License Agreement with ICC & NYSDOS. No further reproduction, no

100880972

bly. Access points shall be permanently identified on the exterior by a *label* having letters not less than $^1/_2$ inch (12.7 mm) in height reading: FIRE/SMOKE DAMPER, SMOKE DAMPER or FIRE DAMPER. Access doors in ducts shall be tight fitting and suitable for the required duct construction.

717.5 Where required. *Fire, dampers, smoke dampers, combination fire/smoke dampers, ceiling radiation dampers* and *corridor dampers* shall be provided at the locations prescribed in Sections 717.5.1 through 717.5.7 and 717.6. Where an assembly is required to have both *fire dampers* and *smoke dampers*, *combination fire/smoke dampers* or a *fire damper* and a *smoke damper* shall be provided.

717.5.1 Fire walls. Ducts and air transfer openings permitted in *fire walls* in accordance with Section 706.11 shall be protected with *listed fire dampers* installed in accordance with their listing.

717.5.1.1 Horizontal exits. A *listed smoke damper* designed to resist the passage of smoke shall be provided at each point a duct or air transfer opening penetrates a *fire wall* that serves as a horizontal *exit*.

717.5.2 Fire barriers. Ducts and air transfer openings of *fire barriers* shall be protected with *listed fire dampers* installed in accordance with their listing. Ducts and air transfer openings shall not penetrate enclosures for *interior exit stairways* and *ramps* and *exit passageways*, except as permitted by Sections 1023.5 and 1024.6, respectively.

Exception: *Fire dampers* are not required at penetrations of *fire barriers* where any of the following apply:

1. Penetrations are tested in accordance with ASTM E119 or UL 263 as part of the fire-resistance-rated assembly.
2. Ducts are used as part of an *approved* smoke control system in accordance with Section 909 and where the use of a *fire damper* would interfere with the operation of a smoke control system.
3. Such walls are penetrated by ducted HVAC systems, have a required *fire-resistance rating* of 1 hour or less, are in areas of other than Group H and are in buildings equipped throughout with an *automatic sprinkler system* in accordance with Section 903.3.1.1 or 903.3.1.2. For the purposes of this exception, a ducted HVAC system shall be a duct system for conveying supply, return or exhaust air as part of the structure's HVAC system. Such a duct system shall be constructed of sheet steel not less than No. 26 gage thickness and shall be continuous from the air-handling appliance or equipment to the air outlet and inlet terminals.

717.5.2.1 Horizontal exits. A *listed smoke damper* designed to resist the passage of smoke shall be provided at each point a duct or air transfer opening penetrates a *fire barrier* that serves as a horizontal *exit*.

717.5.3 Shaft enclosures. Shaft enclosures that are permitted to be penetrated by ducts and air transfer openings shall be protected with *listed* fire and smoke *dampers* installed in accordance with their listing.

Exceptions:

1. *Fire dampers* are not required at penetrations of shafts where any of the following criteria are met:
   1.1. Steel exhaust subducts are extended not less than 22 inches (559 mm) vertically in exhaust shafts, provided that there is a continuous airflow upward to the outside.
   1.2. Penetrations are tested in accordance with ASTM E119 or UL 263 as part of the fire-resistance-rated assembly.
   1.3. Ducts are used as part of an *approved* smoke control system designed and installed in accordance with Section 909 and where the *fire damper* will interfere with the operation of the smoke control system.
   1.4. The penetrations are in parking garage exhaust or supply shafts that are separated from other building shafts by not less than 2-hour fire-resistance-rated construction.
2. In Group B and R occupancies equipped throughout with an *automatic sprinkler system* in accordance with Section 903.3.1.1, *smoke dampers* are not required at penetrations of shafts where all of the following criteria are met:
   2.1. Kitchen, clothes dryer, bathroom and toilet room exhaust openings are installed with steel exhaust subducts, having a minimum wall thickness of 0.0187-inch (0.4712 mm) (No. 26 gage).
   2.2. The subducts extend not less than 22 inches (559 mm) vertically.
   2.3. An exhaust fan is installed at the upper terminus of the shaft that is powered continuously in accordance with the provisions of Section 909.11, so as to maintain a continuous upward airflow to the outside.
3. *Smoke dampers* are not required at penetration of exhaust or supply shafts in parking garages that are separated from other building shafts by not less than 2-hour fire-resistance-rated construction.
4. *Smoke dampers* are not required at penetrations of shafts where ducts are used as part of an *approved* mechanical smoke control system designed in accordance with Section 909 and where the *smoke damper* will interfere with the operation of the smoke control system.

INTERNATIONAL CODE COUNCIL®
Copyright © 2019 ICC & NYSDOS. ALL RIGHTS RESERVED. Accessed by Lauren Gualdino (lgualdino@briarcliffmanor.org), (-) Order Number #100880972 on May 08, 2020 07:05 AM (PDT) pursuant to License Agreement with ICC & NYSDOS. No further reproduction, no

100880972

5. *Fire dampers* and *combination fire/smoke dampers* are not required in kitchen and clothes dryer exhaust systems where *dampers* are prohibited by the *Mechanical Code of New York State*.

717.5.4 Fire partitions. Ducts and air transfer openings that penetrate *fire partitions* shall be protected with *listed fire dampers* installed in accordance with their listing.

Exceptions: In occupancies other than Group H, *fire dampers* are not required where any of the following apply:

1. Corridor walls in buildings equipped throughout with an *automatic sprinkler system* in accordance with Section 903.3.1.1 or 903.3.1.2 and the duct is protected as a *through penetration* in accordance with Section 714.
2. Tenant partitions in *covered and open mall buildings* where the walls are not required by provisions elsewhere in the code to extend to the underside of the floor or roof sheathing, slab or deck above.
3. The duct system is constructed of *approved* materials in accordance with the *Mechanical Code of New York State* and the duct penetrating the wall complies with all of the following requirements:
   3.1. The duct shall not exceed 100 square inches (0.06 m^2).
   3.2. The duct shall be constructed of steel not less than 0.0217 inch (0.55 mm) in thickness.
   3.3. The duct shall not have openings that communicate the *corridor* with adjacent spaces or rooms.
   3.4. The duct shall be installed above a ceiling.
   3.5. The duct shall not terminate at a wall register in the fire-resistance-rated wall.
   3.6. A minimum 12-inch-long (305 mm) by 0.060-inch-thick (1.52 mm) steel sleeve shall be centered in each duct opening. The sleeve shall be secured to both sides of the wall and all four sides of the sleeve with minimum $1^1/_2$-inch by $1^1/_2$-inch by 0.060-inch (38 mm by 38 mm by 1.52 mm) steel retaining angles. The retaining angles shall be secured to the sleeve and the wall with No. 10 (M5) screws. The *annular space* between the steel sleeve and the wall opening shall be filled with *mineral wool* batting on all sides.
4. Such walls are penetrated by ducted HVAC systems, have a required *fire-resistance rating* of 1 hour or less, and are in buildings equipped throughout with an automatic sprinkler system in accordance with Section 903.3.1.1 or 903.3.1.2. For the purposes of this exception, a ducted HVAC system shall be a duct system for conveying supply, return or exhaust air as part of the structure's HVAC system. Such a duct system shall be constructed of sheet steel not less than No. 26 gage thickness and shall be continuous from the air-handling appliance or equipment to the air outlet and inlet terminals.

717.5.4.1 Corridors. Duct and air transfer openings that penetrate *corridors* shall be protected with *dampers* as follows:

1. A *corridor damper* shall be provided where corridor ceilings, constructed as required for the corridor walls as permitted in Section 708.4, Exception 3, are penetrated.
2. A *ceiling radiation damper* shall be provided where the ceiling membrane of a fire-resistance-rated floor-ceiling or roof-ceiling assembly, constructed as permitted in Section 708.4, Exception 2, is penetrated.
3. A listed *smoke damper* designed to resist the passage of smoke shall be provided at each point a duct or air transfer opening penetrates a corridor enclosure required to have smoke and draft control doors in accordance with Section 716.2.2.1.

Exceptions:

1. *Smoke dampers* are not required where the building is equipped throughout with an *approved* smoke control system in accordance with Section 909, and *smoke dampers* are not necessary for the operation and control of the system.
2. *Smoke dampers* are not required in *corridor* penetrations where the duct is constructed of steel not less than 0.019 inch (0.48 mm) in thickness and there are no openings serving the *corridor*.

717.5.5 Smoke barriers. A *listed smoke damper* designed to resist the passage of smoke shall be provided at each point a duct or air transfer opening penetrates a *smoke barrier*. *Smoke dampers* and *smoke damper* actuation methods shall comply with Section 717.3.3.2.

Exceptions:

1. *Smoke dampers* are not required where the openings in ducts are limited to a single *smoke compartment* and the ducts are constructed of steel.
2. *Smoke dampers* are not required in *smoke barriers* required by Section 407.5 for Group I-2, Condition 2—where the HVAC system is fully ducted in accordance with Section 603 of the *Mechanical Code of New York State* and where buildings are equipped throughout with an *automatic sprinkler system* in accordance with Section 903.3.1.1 and equipped with quick-response sprinklers in accordance with Section 903.3.2.

INTERNATIONAL CODE COUNCIL®
Copyright © 2019 ICC & NYSDOS. ALL RIGHTS RESERVED. Accessed by Lauren Gualdino (lgualdino@briarcliffmanor.org), (-) Order Number #100880972 on May 08, 2020 07:05 AM (PDT) pursuant to License Agreement with ICC & NYSDOS. No further reproduction, no

100880972

717.5.6 Exterior walls. Ducts and air transfer openings in fire-resistance-rated *exterior walls* required to have protected openings in accordance with Section 705.10 shall be protected with *listed fire dampers* installed in accordance with their listing.

717.5.7 Smoke partitions. A *listed smoke damper* designed to resist the passage of smoke shall be provided at each point that an air transfer opening penetrates a smoke partition. *Smoke dampers* and *smoke damper* actuation methods shall comply with Section 717.3.3.2.

Exception: Where the installation of a *smoke damper* will interfere with the operation of a required smoke control system in accordance with Section 909, *approved* alternative protection shall be utilized.

717.6 Horizontal assemblies. Penetrations by ducts and air transfer openings of a floor, floor/ceiling assembly or the ceiling membrane of a roof/ceiling assembly shall be protected by a shaft enclosure that complies with Section 713 or shall comply with Sections 717.6.1 through 717.6.3.

717.6.1 Through penetrations. In occupancies other than Groups I-2 and I-3, a duct constructed of *approved* materials in accordance with the *Mechanical Code of New York State* that penetrates a fire-resistance-rated floor/ceiling assembly that connects not more than two *stories* is permitted without shaft enclosure protection, provided that a *listed fire damper* is installed at the floor line or the duct is protected in accordance with Section 714.5. For air transfer openings, see Section 712.1.9.

Exception: A duct is permitted to penetrate three floors or less without a *fire damper* at each floor, provided that such duct meets all of the following requirements:

1. The duct shall be contained and located within the cavity of a wall and shall be constructed of steel having a minimum wall thickness of 0.0187 inches (0.4712 mm) (No. 26 gage).
2. The duct shall open into only one *dwelling or sleeping unit* and the duct system shall be continuous from the unit to the exterior of the building.
3. The duct shall not exceed 4-inch (102 mm) nominal diameter and the total area of such ducts shall not exceed 100 square inches (0.065 m^2) in any 100 square feet (9.3 m^2) of floor area.
4. The *annular space* around the duct is protected with materials that prevent the passage of flame and hot gases sufficient to ignite cotton waste where subjected to ASTM E119 or UL 263 time-temperature conditions under a minimum positive pressure differential of 0.01 inch (2.49 Pa) of water at the location of the penetration for the time period equivalent to the *fire-resistance rating* of the construction penetrated.
5. Grille openings located in a ceiling of a fire-resistance-rated floor/ceiling or roof/ceiling assembly shall be protected with a *listed ceiling radiation damper* installed in accordance with Section 717.6.2.1.

717.6.2 Membrane penetrations. Ducts and air transfer openings constructed of *approved* materials in accordance with the *Mechanical Code of New York State* that penetrate the ceiling membrane of a fire-resistance-rated floor/ceiling or roof/ceiling assembly shall be protected with one of the following:

1. A shaft enclosure in accordance with Section 713.
2. A *listed ceiling radiation damper* installed at the ceiling line where a duct penetrates the ceiling of a fire-resistance-rated floor/ceiling or roof/ceiling assembly.

   Exceptions:

   1. A fire-resistance-rated assembly tested in accordance with ASTM E119 or UL 263 showing that *ceiling radiation dampers* are not required in order to maintain the fire-resistance rating of the assembly.
   2. Where exhaust duct or outdoor air duct penetrations protected in accordance with Section 714.5.2 are located within the cavity of a wall and do not pass through another dwelling unit or tenant space.
   3. Where duct and air transfer openings are protected with a duct outlet penetration system tested as part of a fire-resistance-rated assembly in accordance with ASTM E119 or UL 263.

3. A *listed ceiling radiation damper* installed at the ceiling line where a diffuser with no duct attached penetrates the ceiling of a fire-resistance-rated floor/ceiling or roof/ceiling assembly.

   Exceptions:

   1. A fire-resistance-rated assembly tested in accordance with ASTM E119 or UL 263 showing that *ceiling radiation dampers* are not required in order to maintain the fire-resistance rating of the assembly.
   2. Where duct and air transfer openings are protected with a duct outlet penetration system tested as part of a fire-resistance-rated assembly in accordance with ASTM E119 or UL 263.

717.6.2.1 Ceiling radiation dampers testing and installation. *Ceiling radiation dampers* shall be tested in accordance with Section 717.3.1. *Ceiling radiation dampers* shall be installed in accordance with the details *listed* in the fire-resistance-rated assembly and the manufacturer's instructions and the listing.

717.6.3 Nonfire-resistance-rated floor assemblies. Duct systems constructed of *approved* materials in accordance with the *Mechanical Code of New York State* that penetrate nonfire-resistance-rated floor assemblies shall be protected by any of the following methods:

1. A shaft enclosure in accordance with Section 713.

INTERNATIONAL CODE COUNCIL®
Copyright © 2019 ICC & NYSDOS. ALL RIGHTS RESERVED. Accessed by Lauren Gualdino (lgualdino@briarcliffmanor.org), (-) Order Number #100880972 on May 08, 2020 07:05 AM (PDT) pursuant to License Agreement with ICC & NYSDOS. No further reproduction, no

100880972

2. The duct connects not more than two *stories*, and the *annular space* around the penetrating duct is protected with an *approved* noncombustible material that resists the free passage of flame and the products of combustion.
3. In floor assemblies composed of noncombustible materials, a shaft shall not be required where the duct connects not more than three stories, the *annular space* around the penetrating duct is protected with an approved noncombustible material that resists the free passage of flame and the products of combustion and a *fire damper* is installed at each floor line.

Exception: *Fire dampers* are not required in ducts within individual residential *dwelling units*.

717.7 Flexible ducts and air connectors. Flexible ducts and air connectors shall not pass through any fire-resistance-rated assembly. Flexible air connectors shall not pass through any wall, floor or ceiling.

SECTION 718
CONCEALED SPACES

718.1 General. *Fireblocking* and draftstopping shall be installed in combustible concealed locations in accordance with this section. *Fireblocking* shall comply with Section 718.2. Draftstopping in floor/ceiling spaces and *attic* spaces shall comply with Sections 718.3 and 718.4, respectively. The permitted use of combustible materials in concealed spaces of buildings of Type I or II construction shall be limited to the applications indicated in Section 718.5.

718.2 Fireblocking. In combustible construction, *fireblocking* shall be installed to cut off concealed draft openings (both vertical and horizontal) and shall form an effective barrier between floors, between a top *story* and a roof or *attic* space. *Fireblocking* shall be installed in the locations specified in Sections 718.2.2 through 718.2.7.

718.2.1 Fireblocking materials. *Fireblocking* shall consist of the following materials:

1. Two-inch (51 mm) nominal lumber.
2. Two thicknesses of 1-inch (25 mm) nominal lumber with broken lap joints.
3. One thickness of 0.719-inch (18.3 mm) wood structural panels with joints backed by 0.719-inch (18.3 mm) wood structural panels.
4. One thickness of 0.75-inch (19.1 mm) particleboard with joints backed by 0.75-inch (19 mm) particleboard.
5. One-half-inch (12.7 mm) gypsum board.
6. One-fourth-inch (6.4 mm) cement-based millboard.
7. Batts or blankets of *mineral wool*, *mineral fiber* or other *approved* materials installed in such a manner as to be securely retained in place.
8. Cellulose insulation installed as tested for the specific application.

718.2.1.1 Batts or blankets of mineral wool or mineral fiber. Batts or blankets of *mineral wool* or *mineral fiber* or other *approved* nonrigid materials shall be permitted for compliance with the 10-foot (3048 mm) horizontal *fireblocking* in walls constructed using parallel rows of studs or staggered studs.

718.2.1.2 Unfaced fiberglass. Unfaced fiberglass batt insulation used as *fireblocking* shall fill the entire cross section of the wall cavity to a minimum height of 16 inches (406 mm) measured vertically. Where piping, conduit or similar obstructions are encountered, the insulation shall be packed tightly around the obstruction.

718.2.1.3 Loose-fill insulation material. Loose-fill insulation material, insulating foam sealants and caulk materials shall not be used as a fireblock unless specifically tested in the form and manner intended for use to demonstrate its ability to remain in place and to retard the spread of fire and hot gases.

718.2.1.4 Fireblocking integrity. The integrity of fireblocks shall be maintained.

718.2.1.5 Double stud walls. Batts or blankets of mineral or glass fiber or other *approved* nonrigid materials shall be allowed as *fireblocking* in walls constructed using parallel rows of studs or staggered studs.

718.2.2 Concealed wall spaces. *Fireblocking* shall be provided in concealed spaces of stud walls and partitions, including furred spaces, and parallel rows of studs or staggered studs, as follows:

1. Vertically at the ceiling and floor levels.
2. Horizontally at intervals not exceeding 10 feet (3048 mm).

718.2.3 Connections between horizontal and vertical spaces. *Fireblocking* shall be provided at interconnections between concealed vertical stud wall or partition spaces and concealed horizontal spaces created by an assembly of floor joists or trusses, and between concealed vertical and horizontal spaces such as occur at soffits, drop ceilings, cove ceilings and similar locations.

718.2.4 Stairways. *Fireblocking* shall be provided in concealed spaces between *stair* stringers at the top and bottom of the run. Enclosed spaces under *stairways* shall comply with Section 1011.7.3.

718.2.5 Ceiling and floor openings. Where required by Section 712.1.8, Exception 1 of Section 714.5.1.2 or Section 714.6, *fireblocking* of the *annular space* around vents, pipes, ducts, chimneys and fireplaces at ceilings and floor levels shall be installed with a material specifically tested in the form and manner intended for use to demonstrate its ability to remain in place and resist the free passage of flame and the products of combustion.

718.2.5.1 Factory-built chimneys and fireplaces. Factory-built chimneys and fireplaces shall be fireblocked in accordance with UL 103 and UL 127.

INTERNATIONAL CODE COUNCIL®
Copyright © 2019 ICC & NYSDOS. ALL RIGHTS RESERVED. Accessed by Lauren Gualdino (lgualdino@briarcliffmanor.org), (-) Order Number #100880972 on May 08, 2020 07:05 AM (PDT) pursuant to License Agreement with ICC & NYSDOS. No further reproduction, no

100880972

718.2.6 Exterior wall coverings. *Fireblocking* shall be installed within concealed spaces of exterior wall coverings and other exterior architectural elements where permitted to be of combustible construction as specified in Section 1405 or where erected with combustible frames. *Fireblocking* shall be installed at maximum intervals of 20 feet (6096 mm) in either dimension so that there will be no concealed space exceeding 100 square feet (9.3 m^2) between *fireblocking*. Where wood furring strips are used, they shall be of approved wood of natural decay resistance or preservative-treated wood. If noncontinuous, such elements shall have closed ends, with not less than 4 inches (102 mm) of separation between sections.

Exceptions:

1. *Fireblocking* of cornices is not required in single-family *dwellings*. *Fireblocking* of cornices of a two-family *dwelling* is required only at the line of *dwelling unit* separation.
2. *Fireblocking* shall not be required where the exterior wall covering is installed on noncombustible framing and the face of the exterior wall covering exposed to the concealed space is covered by one of the following materials:
   2.1. Aluminum having a minimum thickness of 0.019 inch (0.5 mm).
   2.2. Corrosion-resistant steel having a base metal thickness not less than 0.016 inch (0.4 mm) at any point.
   2.3. Other *approved* noncombustible materials.
3. *Fireblocking* shall not be required where the exterior wall covering has been tested in accordance with, and complies with the acceptance criteria of, NFPA 285. The exterior wall covering shall be installed as tested in accordance with NFPA 285.

718.2.7 Concealed sleeper spaces. Where wood sleepers are used for laying wood flooring on masonry or concrete fire-resistance-rated floors, the space between the floor slab and the underside of the wood flooring shall be filled with an *approved* material to resist the free passage of flame and products of combustion or fireblocked in such a manner that open spaces under the flooring shall not exceed 100 square feet (9.3 m^2) in area and such space shall be filled solidly under permanent partitions so that communication under the flooring between adjoining rooms shall not occur.

Exceptions:

1. *Fireblocking* is not required for slab-on-grade floors in gymnasiums.
2. *Fireblocking* is required only at the juncture of each alternate lane and at the ends of each lane in a bowling facility.

718.3 Draftstopping in floors. Draftstopping shall be installed to subdivide floor/ceiling assemblies where required by Section 708.4.2. In other than Group R occupancies, draftstopping shall be installed to subdivide combustible floor/ceiling assemblies so that horizontal floor areas do not exceed 1,000 square feet (93 m^2).

Exception: Buildings equipped throughout with an automatic sprinkler system in accordance with Section 903.3.1.1.

718.3.1 Draftstopping materials. Draftstopping materials shall be not less than $^1/_2$-inch (12.7 mm) gypsum board, $^3/_8$-inch (9.5 mm) wood structural panel, $^3/_8$-inch (9.5 mm) particleboard, 1-inch (25-mm) nominal lumber, cement fiberboard, batts or blankets of *mineral wool* or glass fiber, or other *approved* materials adequately supported. The integrity of *draftstops* shall be maintained.

718.4 Draftstopping in attics. Draftstopping shall be installed to subdivide *attic* spaces where required by Section 708.4.2. In other than Group R, draftstopping shall be installed to subdivide combustible attic spaces and combustible concealed roof spaces such that any horizontal area does not exceed 3,000 square feet (279 m^2). Ventilation of concealed roof spaces shall be maintained in accordance with Section 1202.2.1. *

Exception: Buildings equipped throughout with an automatic sprinkler system in accordance with Section 903.3.1.1.

718.4.1 Draftstopping materials. Materials utilized for draftstopping of *attic* spaces shall comply with Section 718.3.1.

718.4.1.1 Openings. Openings in the partitions shall be protected by *self-closing* doors with automatic latches constructed as required for the partitions.

718.5 Combustible materials in concealed spaces in Type I or II construction. Combustible materials shall not be permitted in concealed spaces of buildings of Type I or II construction. *

Exceptions:

1. Combustible materials in accordance with Section 603.
2. Combustible materials exposed within plenums complying with Section 602 of the *Mechanical Code of New York State*.
3. Class A *interior finish* materials classified in accordance with Section 803.
4. Combustible piping within partitions or shaft enclosures installed in accordance with the provisions of this code.
5. Combustible piping within concealed ceiling spaces installed in accordance with the *Mechanical Code of New York State* and the *Plumbing Code of New York State*.
6. Combustible insulation and covering on pipe and tubing, installed in concealed spaces other than plenums, complying with Section 720.7.

INTERNATIONAL CODE COUNCIL®
Copyright © 2019 ICC & NYSDOS. ALL RIGHTS RESERVED. Accessed by Lauren Gualdino (lgualdino@briarcliffmanor.org), (-) Order Number #100880972 on May 08, 2020 07:05 AM (PDT) pursuant to License Agreement with ICC & NYSDOS. No further reproduction, no

100880972

SECTION 719
FIRE-RESISTANCE REQUIREMENTS FOR PLASTER

719.1 Thickness of plaster. The minimum thickness of gypsum plaster or Portland cement plaster used in a fire-resistance-rated system shall be determined by the prescribed fire tests. The plaster thickness shall be measured from the face of the lath where applied to gypsum lath or metal lath.

719.2 Plaster equivalents. For *fire-resistance* purposes, $^1/_2$ inch (12.7 mm) of unsanded gypsum plaster shall be deemed equivalent to $^3/_4$ inch (19.1 mm) of one-to-three gypsum sand plaster or 1 inch (25 mm) of Portland cement sand plaster.

719.3 Noncombustible furring. In buildings of Type I and II construction, plaster shall be applied directly on concrete or masonry or on *approved* noncombustible plastering base and furring.

719.4 Double reinforcement. Plaster protection more than 1 inch (25 mm) in thickness shall be reinforced with an additional layer of *approved* lath embedded not less than $^3/_4$ inch (19.1 mm) from the outer surface and fixed securely in place.

Exception: Solid plaster partitions or where otherwise determined by fire tests.

719.5 Plaster alternatives for concrete. In reinforced concrete construction, gypsum plaster or Portland cement plaster is permitted to be substituted for $^1/_2$ inch (12.7 mm) of the required poured concrete protection, except that a minimum thickness of $^3/_8$ inch (9.5 mm) of poured concrete shall be provided in reinforced concrete floors and 1 inch (25 mm) in reinforced concrete columns in addition to the plaster finish. The concrete base shall be prepared in accordance with Section 2510.7.

SECTION 720
THERMAL- AND SOUND-INSULATING MATERIALS

720.1 General. Insulating materials shall comply with the requirements of this section. Where a flame spread index or a smoke-developed index is specified in this section, such index shall be determined in accordance with ASTM E84 or UL 723. Any material that is subject to an increase in flame spread index or smoke-developed index beyond the limits herein established through the effects of age, moisture or other atmospheric conditions shall not be permitted. Insulating materials, when tested in accordance with the requirements of this section, shall include facings, when used, such as vapor retarders, vapor permeable membranes and similar coverings, and all layers of single and multilayer reflective foil insulation and similar materials.

Exceptions:

1. Fiberboard insulation shall comply with Chapter 23.
2. Foam plastic insulation shall comply with Chapter 26.
3. Duct and pipe insulation and duct and pipe coverings and linings in plenums shall comply with the *Mechanical Code of New York State*.
4. All layers of single and multilayer reflective plastic core insulation shall comply with Section 2614.

720.2 Concealed installation. Insulating materials, where concealed as installed in buildings of any type of construction, shall have a flame spread index of not more than 25 and a smoke-developed index of not more than 450.

Exception: Cellulosic fiber loose-fill insulation complying with the requirements of Section 720.6 shall not be required to meet a flame spread index requirement but shall be required to meet a smoke-developed index of not more than 450 when tested in accordance with CAN/ULC S102.2.

720.2.1 Facings. Where such materials are installed in concealed spaces in buildings of Type III, IV or V construction, the flame spread and smoke-developed limitations do not apply to facings, coverings, and layers of reflective foil insulation that are installed behind and in substantial contact with the unexposed surface of the ceiling, wall or floor finish.

Exception: All layers of single and multilayer reflective plastic core insulation shall comply with Section 2614.

720.3 Exposed installation. Insulating materials, where exposed as installed in buildings of any type of construction, shall have a flame spread index of not more than 25 and a smoke-developed index of not more than 450.

Exception: Cellulosic fiber loose-fill insulation complying with the requirements of Section 720.6 shall not be required to meet a flame spread index requirement but shall be required to meet a smoke-developed index of not more than 450 when tested in accordance with CAN/ULC S102.2.

720.3.1 Attic floors. Exposed insulation materials installed on *attic* floors shall have a critical radiant flux of not less than 0.12 watt per square centimeter when tested in accordance with ASTM E970.

720.4 Loose-fill insulation. Loose-fill insulation materials that cannot be mounted in the ASTM E84 or UL 723 apparatus without a screen or artificial supports shall comply with the flame spread and smoke-developed limits of Sections 720.2 and 720.3 when tested in accordance with CAN/ULC S102.2.

Exception: Cellulosic fiber loose-fill insulation shall not be required to meet a flame spread index requirement when tested in accordance with CAN/ULC S102.2, provided that such insulation has a smoke-developed index of not more than 450 and complies with the requirements of Section 720.6.

720.5 Roof insulation. The use of combustible roof insulation not complying with Sections 720.2 and 720.3 shall be permitted in any type of construction provided that insulation is covered with *approved* roof coverings directly applied thereto.

720.6 Cellulosic fiber loose-fill insulation and self-supported spray-applied cellulosic insulation. Cellulosic fiber loose-fill insulation and self-supported spray-applied cellulosic insulation shall comply with CPSC 16 CFR Parts 1209 and 1404. Each package of such insulating material shall be clearly labeled in accordance with CPSC 16 CFR Parts 1209 and 1404.

INTERNATIONAL CODE COUNCIL®
Copyright © 2019 ICC & NYSDOS. ALL RIGHTS RESERVED. Accessed by Lauren Gualdino (lgualdino@briarcliffmanor.org), (-) Order Number #100880972 on May 08, 2020 07:05 AM (PDT) pursuant to License Agreement with ICC & NYSDOS. No further reproduction, no

100880972

720.7 Insulation and covering on pipe and tubing. Insulation and covering on pipe and tubing shall have a flame spread index of not more than 25 and a smoke-developed index of not more than 450.

Exception: Insulation and covering on pipe and tubing installed in plenums shall comply with the *Mechanical Code of New York State.*

SECTION 721
PRESCRIPTIVE FIRE RESISTANCE

721.1 General. The provisions of this section contain prescriptive details of fire-resistance-rated building elements, components or assemblies. The materials of construction listed in Tables 721.1(1), 721.1(2) and 721.1(3) shall be assumed to have the *fire-resistance ratings* prescribed therein. Where materials that change the capacity for heat dissipation are incorporated into a fire-resistance-rated assembly, fire test results or other substantiating data shall be made available to the *building official* to show that the required *fire-resistance-rating* time period is not reduced.

721.1.1 Thickness of protective coverings. The thickness of fire-resistant materials required for protection of structural members shall be not less than set forth in Table 721.1(1), except as modified in this section. The figures shown shall be the net thickness of the protecting materials and shall not include any hollow space in back of the protection.

721.1.2 Unit masonry protection. Where required, metal ties shall be embedded in bed joints of unit masonry for protection of steel columns. Such ties shall be as set forth in Table 721.1(1) or be equivalent thereto.

721.1.3 Reinforcement for cast-in-place concrete column protection. Cast-in-place concrete protection for steel columns shall be reinforced at the edges of such members with wire ties of not less than 0.18 inch (4.6 mm) in diameter wound spirally around the columns on a pitch of not more than 8 inches (203 mm) or by equivalent reinforcement.

721.1.4 Plaster application. The finish coat is not required for plaster protective coatings where those coatings comply with the design mix and thickness requirements of Tables 721.1(1), 721.1(2) and 721.1(3).

721.1.5 Bonded prestressed concrete tendons. For members having a single tendon or more than one tendon installed with equal concrete cover measured from the nearest surface, the cover shall be not less than that set forth in Table 721.1(1). For members having multiple tendons installed with variable concrete cover, the average tendon cover shall be not less than that set forth in Table 721.1(1), provided that:

1. The clearance from each tendon to the nearest exposed surface is used to determine the average cover.
2. The clear cover for individual tendons shall not be less than one-half of that set forth in Table 721.1(1). A minimum cover of $^3/_4$ inch (19.1 mm) for slabs and 1 inch (25 mm) for beams is required for any aggregate concrete.
3. For the purpose of establishing a *fire-resistance rating*, tendons having a clear covering less than that set forth in Table 721.1(1) shall not contribute more than 50 percent of the required ultimate moment capacity for members less than 350 square inches (0.226 m^2) in cross-sectional area and 65 percent for larger members. For structural design purposes, however, tendons having a reduced cover are assumed to be fully effective.

SECTION 722
CALCULATED FIRE RESISTANCE

722.1 General. The provisions of this section contain procedures by which the *fire resistance* of specific materials or combinations of materials is established by calculations. These procedures apply only to the information contained in this section and shall not be otherwise used. The calculated *fire resistance* of concrete, concrete masonry and clay masonry assemblies shall be permitted in accordance with ACI 216.1/TMS 0216. The calculated *fire resistance* of steel assemblies shall be permitted in accordance with Chapter 5 of ASCE 29. The calculated *fire resistance* of exposed wood members and wood decking shall be permitted in accordance with Chapter 16 of ANSI/AWC *National Design Specification for Wood Construction (NDS)*.

722.2 Concrete assemblies. The provisions of this section contain procedures by which the *fire-resistance ratings* of concrete assemblies are established by calculations.

722.2.1 Concrete walls. Cast-in-place and precast concrete walls shall comply with Section 722.2.1.1. Multiwythe concrete walls shall comply with Section 722.2.1.2. Joints between precast panels shall comply with Section 722.2.1.3. Concrete walls with gypsum wallboard or plaster finish shall comply with Section 722.2.1.4.

722.2.1.1 Cast-in-place or precast walls. The minimum equivalent thicknesses of cast-in-place or precast concrete walls for *fire-resistance ratings* of 1 hour to 4 hours are shown in Table 722.2.1.1. For solid walls with flat vertical surfaces, the equivalent thickness is the same as the actual thickness. The values in Table 722.2.1.1 apply to plain, reinforced or prestressed concrete walls.

722.2.1.1.1 Hollow-core precast wall panels. For hollow-core precast concrete wall panels in which the cores are of constant cross section throughout the length, calculation of the equivalent thickness by dividing the net cross-sectional area (the gross cross section minus the area of the cores) of the panel by its width shall be permitted.

INTERNATIONAL CODE COUNCIL®
Copyright © 2019 ICC & NYSDOS. ALL RIGHTS RESERVED. Accessed by Lauren Gualdino (lgualdino@briarcliffmanor.org), (-) Order Number #100880972 on May 08, 2020 07:05 AM (PDT) pursuant to License Agreement with ICC & NYSDOS. No further reproduction, no

100880972

TABLE 721.1(1)
MINIMUM PROTECTION OF STRUCTURAL PARTS BASED ON TIME PERIODS FOR VARIOUS NONCOMBUSTIBLE INSULATING MATERIALS[m]

STRUCTURAL PARTS TO BE PROTECTED	ITEM NUMBER	INSULATING MATERIAL USED	MINIMUM THICKNESS OF INSULATING MATERIAL FOR THE FOLLOWING FIRE-RESISTANCE PERIODS (inches)			
			4 hours	3 hours	2 hours	1 hour
1. Steel columns and all of primary trusses (continued)	1-1.1	Carbonate, lightweight and sand-lightweight aggregate concrete, members 6" × 6" or greater (not including sandstone, granite and siliceous gravel).[a]	2 1/2	2	1 1/2	1
	1-1.2	Carbonate, lightweight and sand-lightweight aggregate concrete, members 8" × 8" or greater (not including sandstone, granite and siliceous gravel).[a]	2	1 1/2	1	1
	1-1.3	Carbonate, lightweight and sand-lightweight aggregate concrete, members 12" × 12" or greater (not including sandstone, granite and siliceous gravel).[a]	1 1/2	1	1	1
	1-1.4	Siliceous aggregate concrete and concrete excluded in Item 1-1.1, members 6" × 6" or greater.[a]	3	2	1 1/2	1
	1-1.5	Siliceous aggregate concrete and concrete excluded in Item 1-1.1, members 8" × 8" or greater.[a]	2 1/2	2	1	1
	1-1.6	Siliceous aggregate concrete and concrete excluded in Item 1-1.1, members 12" × 12" or greater.[a]	2	1	1	1
	1-2.1	Clay or shale brick with brick and mortar fill.[a]	3 3/4	—	—	2 1/4
	1-3.1	4" hollow clay tile in two 2" layers; 1/2" mortar between tile and column; 3/8" metal mesh 0.046" wire diameter in horizontal joints; tile fill.[a]	4	—	—	—
	1-3.2	2" hollow clay tile; 3/4" mortar between tile and column; 3/8" metal mesh 0.046" wire diameter in horizontal joints; limestone concrete fill[a]; plastered with 3/4" gypsum plaster.	3	—	—	—
	1-3.3	2" hollow clay tile with outside wire ties 0.08" diameter at each course of tile or 3/8" metal mesh 0.046" diameter wire in horizontal joints; limestone or trap-rock concrete fill[a] extending 1" outside column on all sides.	—	—	3	—
	1-3.4	2" hollow clay tile with outside wire ties 0.08" diameter at each course of tile with or without concrete fill; 3/4" mortar between tile and column.	—	—	—	2
	1-4.1	Cement plaster over metal lath wire tied to 3/4" cold-rolled vertical channels with 0.049" (No. 18 B.W. gage) wire ties spaced 3" to 6" on center. Plaster mixed 1:2 1/2 by volume, cement to sand.	—	—	2 1/2[b]	7/8
	1-5.1	Vermiculite concrete, 1:4 mix by volume over paperbacked wire fabric lath wrapped directly around column with additional 2" × 2" 0.065"/0.065" (No. 16/16 B.W. gage) wire fabric placed 3/4" from outer concrete surface. Wire fabric tied with 0.049" (No. 18 B.W. gage) wire spaced 6" on center for inner layer and 2" on center for outer layer.	2	—	—	—
	1-6.1	Perlite or vermiculite gypsum plaster over metal lath wrapped around column and furred 1 1/4" from column flanges. Sheets lapped at ends and tied at 6" intervals with 0.049" (No. 18 B.W. gage) tie wire. Plaster pushed through to flanges.	1 1/2	1	—	—
	1-6.2	Perlite or vermiculite gypsum plaster over self-furring metal lath wrapped directly around column, lapped 1" and tied at 6" intervals with 0.049" (No. 18 B.W. gage) wire.	1 3/4	1 3/8	1	—
	1-6.3	Perlite or vermiculite gypsum plaster on metal lath applied to 3/4" cold-rolled channels spaced 24" apart vertically and wrapped flatwise around column.	1 1/2	—	—	—
	1-6.4	Perlite or vermiculite gypsum plaster over two layers of 1/2" plain full-length gypsum lath applied tight to column flanges. Lath wrapped with 1" hexagonal mesh of No. 20 gage wire and tied with doubled 0.035" diameter (No. 18 B.W. gage) wire ties spaced 23" on center. For three-coat work, the plaster mix for the second coat shall not exceed 100 pounds of gypsum to 2 1/2 cubic feet of aggregate for the 3-hour system.	2 1/2	2	—	—

(continued)

INTERNATIONAL CODE COUNCIL®
Copyright © 2019 ICC & NYSDOS. ALL RIGHTS RESERVED. Accessed by Lauren Gualdino (lgualdino@briarcliffmanor.org), (-) Order Number #100880972 on May 08, 2020 07:05 AM (PDT) pursuant to License Agreement with ICC & NYSDOS. No further reproduction, no

100880972

TABLE 721.1(1)—continued
MINIMUM PROTECTION OF STRUCTURAL PARTS BASED ON TIME PERIODS FOR VARIOUS NONCOMBUSTIBLE INSULATING MATERIALS[m]

STRUCTURAL PARTS TO BE PROTECTED	ITEM NUMBER	INSULATING MATERIAL USED	MINIMUM THICKNESS OF INSULATING MATERIAL FOR THE FOLLOWING FIRE-RESISTANCE PERIODS (inches)			
			4 hours	3 hours	2 hours	1 hour
1. Steel columns and all of primary trusses	1-6.5	Perlite or vermiculite gypsum plaster over one layer of $^1/_2$" plain full-length gypsum lath applied tight to column flanges. Lath tied with doubled 0.049" (No. 18 B.W. gage) wire ties spaced 23" on center and scratch coat wrapped with 1" hexagonal mesh 0.035" (No. 20 B.W. gage) wire fabric. For three-coat work, the plaster mix for the second coat shall not exceed 100 pounds of gypsum to $2^1/_2$ cubic feet of aggregate.	—	2	—	—
	1-7.1	Multiple layers of $^1/_2$" gypsum wallboard[c] adhesively[d] secured to column flanges and successive layers. Wallboard applied without horizontal joints. Corner edges of each layer staggered. Wallboard layer below outer layer secured to column with doubled 0.049" (No. 18 B.W. gage) steel wire ties spaced 15" on center. Exposed corners taped and treated.	—	—	2	1
	1-7.2	Three layers of $^5/_8$" Type X gypsum wallboard.[c] First and second layer held in place by $^1/_8$" diameter by $1^3/_8$" long ring shank nails with $^5/_{16}$" diameter heads spaced 24" on center at corners. Middle layer also secured with metal straps at mid-height and 18" from each end, and by metal corner bead at each corner held by the metal straps. Third layer attached to corner bead with 1" long gypsum wallboard screws spaced 12" on center.	—	—	$1^7/_8$	—
	1-7.3	Three layers of $^5/_8$" Type X gypsum wallboard,[c] each layer screw attached to $1^5/_8$" steel studs 0.018" thick (No. 25 carbon sheet steel gage) at each corner of column. Middle layer also secured with 0.049" (No. 18 B.W. gage) double-strand steel wire ties, 24" on center. Screws are No. 6 by 1" spaced 24" on center for inner layer, No. 6 by $1^5/_8$" spaced 12" on center for middle layer and No. 8 by $2^1/_4$" spaced 12" on center for outer layer.	—	$1^7/_8$	—	—
	1-8.1	Wood-fibered gypsum plaster mixed 1:1 by weight gypsum-to-sand aggregate applied over metal lath. Lath lapped 1" and tied 6" on center at all end, edges and spacers with 0.049" (No. 18 B.W. gage) steel tie wires. Lath applied over $^1/_2$" spacers made of $^3/_4$" furring channel with 2" legs bent around each corner. Spacers located 1" from top and bottom of member and not greater than 40" on center and wire tied with a single strand of 0.049" (No. 18 B.W. gage) steel tie wires. Corner bead tied to the lath at 6" on center along each corner to provide plaster thickness.	—	—	$1^5/_8$	—
	1-9.1	Minimum W8x35 wide flange steel column (w/d ≥ 0.75) with each web cavity filled even with the flange tip with normal weight carbonate or siliceous aggregate concrete (3,000 psi minimum compressive strength with 145 pcf ± 3 pcf unit weight). Reinforce the concrete in each web cavity with a minimum No. 4 deformed reinforcing bar installed vertically and centered in the cavity, and secured to the column web with a minimum No. 2 horizontal deformed reinforcing bar welded to the web every 18" on center vertically. As an alternative to the No. 4 rebar, $^3/_4$" diameter by 3" long headed studs, spaced at 12" on center vertically, shall be welded on each side of the web midway between the column flanges.	—	—	—	See Note n
2. Webs or flanges of steel beams and girders (continued)	2-1.1	Carbonate, lightweight and sand-lightweight aggregate concrete (not including sandstone, granite and siliceous gravel) with 3" or finer metal mesh placed 1" from the finished surface anchored to the top flange and providing not less than 0.025 square inch of steel area per foot in each direction.	2	$1^1/_2$	1	1
	2-1.2	Siliceous aggregate concrete and concrete excluded in Item 2-1.1 with 3" or finer metal mesh placed 1" from the finished surface anchored to the top flange and providing not less than 0.025 square inch of steel area per foot in each direction.	$2^1/_2$	2	$1^1/_2$	1
	2-2.1	Cement plaster on metal lath attached to $^3/_4$" cold-rolled channels with 0.04" (No. 18 B.W. gage) wire ties spaced 3" to 6" on center. Plaster mixed 1:2 $^1/_2$ by volume, cement to sand.	—	—	$2^1/_2$[b]	$^7/_8$

(continued)

INTERNATIONAL CODE COUNCIL®
Copyright © 2019 ICC & NYSDOS. ALL RIGHTS RESERVED. Accessed by Lauren Gualdino (lgualdino@briarcliffmanor.org), (-) Order Number #100880972 on May 08, 2020 07:05 AM (PDT) pursuant to License Agreement with ICC & NYSDOS. No further reproduction, no

100880972

TABLE 721.1(1)—continued
MINIMUM PROTECTION OF STRUCTURAL PARTS BASED ON TIME PERIODS FOR VARIOUS NONCOMBUSTIBLE INSULATING MATERIALS[m]

STRUCTURAL PARTS TO BE PROTECTED	ITEM NUMBER	INSULATING MATERIAL USED	MINIMUM THICKNESS OF INSULATING MATERIAL FOR THE FOLLOWING FIRE-RESISTANCE PERIODS (inches)			
			4 hours	3 hours	2 hours	1 hour
2. Webs or flanges of steel beams and girders	2-3.1	Vermiculite gypsum plaster on a metal lath cage, wire tied to 0.165" diameter (No. 8 B.W. gage) steel wire hangers wrapped around beam and spaced 16" on center. Metal lath ties spaced approximately 5" on center at cage sides and bottom.	—	7/8	—	—
	2-4.1	Two layers of 5/8" Type X gypsum wallboard[c] are attached to U-shaped brackets spaced 24" on center. 0.018" thick (No. 25 carbon sheet steel gage) 1 5/8" deep by 1" galvanized steel runner channels are first installed parallel to and on each side of the top beam flange to provide a 1/2" clearance to the flange. The channel runners are attached to steel deck or concrete floor construction with approved fasteners spaced 12" on center. U-shaped brackets are formed from members identical to the channel runners. At the bent portion of the U-shaped bracket, the flanges of the channel are cut out so that 1 5/8" deep corner channels can be inserted without attachment parallel to each side of the lower flange. As an alternative, 0.021" thick (No. 24 carbon sheet steel gage) 1" × 2" runner and corner angles shall be used in lieu of channels, and the web cutouts in the U-shaped brackets shall not be required. Each angle is attached to the bracket with 1/2"-long No. 8 self-drilling screws. The vertical legs of the U-shaped bracket are attached to the runners with one 1/2" long No. 8 self-drilling screw. The completed steel framing provides a 2 1/8" and 1 1/2" space between the inner layer of wallboard and the sides and bottom of the steel beam, respectively. The inner layer of wallboard is attached to the top runners and bottom corner channels or corner angles with 1 1/4"-long No. 6 self-drilling screws spaced 16" on center. The outer layer of wallboard is applied with 1 3/4"-long No. 6 self-drilling screws spaced 8" on center. The bottom corners are reinforced with metal corner beads.	—	—	1 1/4	—
	2-4.2	Three layers of 5/8" Type X gypsum wallboard[c] attached to a steel suspension system as described immediately above utilizing the 0.018" thick (No. 25 carbon sheet steel gage) 1" × 2" lower corner angles. The framing is located so that a 2 1/8" and 2" space is provided between the inner layer of wallboard and the sides and bottom of the beam, respectively. The first two layers of wallboard are attached as described immediately above. A layer of 0.035" thick (No. 20 B.W. gage) 1" hexagonal galvanized wire mesh is applied under the soffit of the middle layer and up the sides approximately 2". The mesh is held in position with the No. 6 1 5/8"-long screws installed in the vertical leg of the bottom corner angles. The outer layer of wallboard is attached with No. 6 2 1/4"-long screws spaced 8" on center. One screw is installed at the mid-depth of the bracket in each layer. Bottom corners are finished as described above.	—	1 7/8	—	—
3. Bonded pretensioned reinforcement in prestressed concrete[e]	3-1.1	Carbonate, lightweight, sand-lightweight and siliceous[f] aggregate concrete Beams or girders	4[g]	3[g]	2 1/2	1 1/2
		Solid [h]		2	1 1/2	1

(continued)

INTERNATIONAL CODE COUNCIL®
Copyright © 2019 ICC & NYSDOS. ALL RIGHTS RESERVED. Accessed by Lauren Gualdino (lgualdino@briarcliffmanor.org), (-) Order Number #100880972 on May 08, 2020 07:05 AM (PDT) pursuant to License Agreement with ICC & NYSDOS. No further reproduction, no

100880972

TABLE 721.1(1)—continued
MINIMUM PROTECTION OF STRUCTURAL PARTS BASED ON TIME PERIODS FOR VARIOUS NONCOMBUSTIBLE INSULATING MATERIALS[m]

STRUCTURAL PARTS TO BE PROTECTED	ITEM NUMBER	INSULATING MATERIAL USED	MINIMUM THICKNESS OF INSULATING MATERIAL FOR THE FOLLOWING FIRE-RESISTANCE PERIODS (inches)			
			4 hours	3 hours	2 hours	1 hour
4. Bonded or unbonded post-tensioned tendons in pre-stressed concrete[e, i]	4-1.1	Carbonate, lightweight, sand-lightweight and siliceous[f] aggregate concrete Unrestrained members: Solid slabs[h] Beams and girders[j] 8" wide greater than 12" wide	 — 3	 2 4 1/2 2 1/2	 1 1/2 2 1/2 2	 — 1 3/4 1 1/2
	4-1.2	Carbonate, lightweight, sand-lightweight and siliceous aggregate Restrained members:[k] Solid slabs[h] Beams and girders[j] 8" wide greater than 12" wide	 1 1/4 2 1/2 2	 1 2 1 3/4	 3/4 1 3/4 1 1/2	 — — —
5. Reinforcing steel in reinforced concrete columns, beams girders and trusses	5-1.1	Carbonate, lightweight and sand-lightweight aggregate concrete, members 12" or larger, square or round. (Size limit does not apply to beams and girders monolithic with floors.) Siliceous aggregate concrete, members 12" or larger, square or round. (Size limit does not apply to beams and girders monolithic with floors.)	1 1/2 2	1 1/2 1 1/2	1 1/2 1 1/2	1 1/2 1 1/2
6. Reinforcing steel in reinforced concrete joists[l]	6-1.1 6-1.2	Carbonate, lightweight and sand-lightweight aggregate concrete Siliceous aggregate concrete	1 1/4 1 3/4	1 1/4 1 1/2	1 1	3/4 3/4
7. Reinforcing and tie rods in floor and roof slabs[l]	7-1.1 7-1.2	Carbonate, lightweight and sand-lightweight aggregate concrete Siliceous aggregate concrete	1 1 1/4	1 1	3/4 1	3/4 3/4

For SI: 1 inch = 25.4 mm, 1 square inch = 645.2 mm^2, 1 cubic foot = 0.0283 m^3, 1 pound per cubic foot = 16.02 kg/m^3.

a. Reentrant parts of protected members to be filled solidly.

b. Two layers of equal thickness with a 3/4-inch airspace between.

c. For all of the construction with gypsum wallboard described in Table 721.1(1), gypsum base for veneer plaster of the same size, thickness and core type shall be permitted to be substituted for gypsum wallboard, provided that attachment is identical to that specified for the wallboard and the joints on the face layer are reinforced, and the entire surface is covered with not less than 1/16-inch gypsum veneer plaster.

d. An approved adhesive qualified under ASTM E119 or UL 263.

e. Where lightweight or sand-lightweight concrete having an oven-dry weight of 110 pounds per cubic foot or less is used, the tabulated minimum cover shall be permitted to be reduced 25 percent, except that the reduced cover shall be not less than 3/4 inch in slabs or 1 1/2 inches in beams or girders.

f. For solid slabs of siliceous aggregate concrete, increase tendon cover 20 percent.

g. Adequate provisions against spalling shall be provided by U-shaped or hooped stirrups spaced not to exceed the depth of the member with a clear cover of 1 inch.

h. Prestressed slabs shall have a thickness not less than that required in Table 721.1(3) for the respective fire-resistance time period.

i. Fire coverage and end anchorages shall be as follows: Cover to the prestressing steel at the anchor shall be 1/2 inch greater than that required away from the anchor. Minimum cover to steel-bearing plate shall be 1 inch in beams and 3/4 inch in slabs.

j. For beam widths between 8 inches and 12 inches, cover thickness shall be permitted to be determined by interpolation.

k. Interior spans of continuous slabs, beams and girders shall be permitted to be considered restrained.

l. For use with concrete slabs having a comparable fire endurance where members are framed into the structure in such a manner as to provide equivalent performance to that of monolithic concrete construction.

m. Generic fire-resistance ratings (those not designated as PROPRIETARY* in the listing) in GA 600 shall be accepted as if herein listed.

n. Additional insulating material is not required on the exposed outside face of the column flange to achieve a 1-hour fire-resistance rating.

INTERNATIONAL CODE COUNCIL®
Copyright © 2019 ICC & NYSDOS. ALL RIGHTS RESERVED. Accessed by Lauren Gualdino (lgualdino@briarcliffmanor.org), (-) Order Number #100880972 on May 08, 2020 07:05 AM (PDT) pursuant to License Agreement with ICC & NYSDOS. No further reproduction, no

100880972

TABLE 721.1(2)
RATED FIRE-RESISTANCE PERIODS FOR VARIOUS WALLS AND PARTITIONS [a, o, p]

MATERIAL	ITEM NUMBER	CONSTRUCTION	MINIMUM FINISHED THICKNESS FACE-TO-FACE[b] (inches)			
			4 hours	3 hours	2 hours	1 hour
1. Brick of clay or shale	1-1.1	Solid brick of clay or shale[c].	6	4.9	3.8	2.7
	1-1.2	Hollow brick, not filled.	5.0	4.3	3.4	2.3
	1-1.3	Hollow brick unit wall, grout or filled with perlite vermiculite or expanded shale aggregate.	6.6	5.5	4.4	3.0
	1-2.1	4" nominal thick units not less than 75 percent solid backed with a hat-shaped metal furring channel $^3/_4$" thick formed from 0.021" sheet metal attached to the brick wall on 24" centers with approved fasteners, and $^1/_2$" Type X gypsum wallboard attached to the metal furring strips with 1"-long Type S screws spaced 8" on center.	—	—	5[d]	—
2. Combination of clay brick and load-bearing hollow clay tile	2-1.1	4" solid brick and 4" tile (not less than 40 percent solid).	—	8	—	—
	2-1.2	4" solid brick and 8" tile (not less than 40 percent solid).	12	—	—	—
3. Concrete masonry units	3-1.1[f, g]	Expanded slag or pumice.	4.7	4.0	3.2	2.1
	3-1.2[f, g]	Expanded clay, shale or slate.	5.1	4.4	3.6	2.6
	3-1.3[f]	Limestone, cinders or air-cooled slag.	5.9	5.0	4.0	2.7
	3-1.4[f, g]	Calcareous or siliceous gravel.	6.2	5.3	4.2	2.8
4. Solid concrete[h, i]	4-1.1	Siliceous aggregate concrete.	7.0	6.2	5.0	3.5
		Carbonate aggregate concrete.	6.6	5.7	4.6	3.2
		Sand-lightweight concrete.	5.4	4.6	3.8	2.7
		Lightweight concrete.	5.1	4.4	3.6	2.5
5. Glazed or unglazed facing tile, nonload-bearing	5-1.1	One 2" unit cored 15 percent maximum and one 4" unit cored 25 percent maximum with $^3/_4$" mortar-filled collar joint. Unit positions reversed in alternate courses.	—	$6^3/_8$	—	—
	5-1.2	One 2" unit cored 15 percent maximum and one 4" unit cored 40 percent maximum with $^3/_4$" mortar-filled collar joint. Unit positions side with $^3/_4$" gypsum plaster. Two wythes tied together every fourth course with No. 22 gage corrugated metal ties.	—	$6^3/_4$	—	—
	5-1.3	One unit with three cells in wall thickness, cored 29 percent maximum.	—	—	6	—
	5-1.4	One 2" unit cored 22 percent maximum and one 4" unit cored 41 percent maximum with $^1/_4$" mortar-filled collar joint. Two wythes tied together every third course with 0.030" (No. 22 galvanized sheet steel gage) corrugated metal ties.	—	—	6	—
	5-1.5	One 4" unit cored 25 percent maximum with $^3/_4$" gypsum plaster on one side.	—	—	$4^3/_4$	—
	5-1.6	One 4" unit with two cells in wall thickness, cored 22 percent maximum.	—	—	—	4
	5-1.7	One 4" unit cored 30 percent maximum with $^3/_4$" vermiculite gypsum plaster on one side.	—	—	$4^1/_2$	—
	5-1.8	One 4" unit cored 39 percent maximum with $^3/_4$" gypsum plaster on one side.	—	—	—	$4^1/_2$

(continued)

INTERNATIONAL CODE COUNCIL®
Copyright © 2019 ICC & NYSDOS. ALL RIGHTS RESERVED. Accessed by Lauren Gualdino (lgualdino@briarcliffmanor.org), (-) Order Number #100880972 on May 08, 2020 07:05 AM (PDT) pursuant to License Agreement with ICC & NYSDOS. No further reproduction, no

100880972

TABLE 721.1(2)—continued
RATED FIRE-RESISTANCE PERIODS FOR VARIOUS WALLS AND PARTITIONS [a, o, p]

MATERIAL	ITEM NUMBER	CONSTRUCTION	MINIMUM FINISHED THICKNESS FACE-TO-FACE[b] (inches)			
			4 hours	3 hours	2 hours	1 hour
6. Solid gypsum plaster	6-1.1	3/4" by 0.055" (No. 16 carbon sheet steel gage) vertical cold-rolled channels, 16" on center with 2.6-pound flat metal lath applied to one face and tied with 0.049" (No. 18 B.W. gage) wire at 6" spacing. Gypsum plaster each side mixed 1:2 by weight, gypsum to sand aggregate.	—	—	—	2[d]
	6-1.2	3/4" by 0.05" (No. 16 carbon sheet steel gage) cold-rolled channels 16" on center with metal lath applied to one face and tied with 0.049" (No. 18 B.W. gage) wire at 6" spacing. Perlite or vermiculite gypsum plaster each side. For three-coat work, the plaster mix for the second coat shall not exceed 100 pounds of gypsum to 2 1/2 cubic feet of aggregate for the 1-hour system.	—	—	2 1/2[d]	2[d]
	6-1.3	3/4" by 0.055" (No. 16 carbon sheet steel gage) vertical cold-rolled channels, 16" on center with 3/8" gypsum lath applied to one face and attached with sheet metal clips. Gypsum plaster each side mixed 1:2 by weight, gypsum to sand aggregate.	—	—	—	2[d]
	6-2.1	Studless with 1/2" full-length plain gypsum lath and gypsum plaster each side. Plaster mixed 1:1 for scratch coat and 1:2 for brown coat, by weight, gypsum to sand aggregate.	—	—	—	2[d]
	6-2.2	Studless with 1/2" full-length plain gypsum lath and perlite or vermiculite gypsum plaster each side.	—	—	2 1/2[d]	2[d]
	6-2.3	Studless partition with 3/8" rib metal lath installed vertically adjacent edges tied 6" on center with No. 18 gage wire ties, gypsum plaster each side mixed 1:2 by weight, gypsum to sand aggregate.	—	—	—	2[d]
7. Solid perlite and Portland cement	7-1.1	Perlite mixed in the ratio of 3 cubic feet to 100 pounds of Portland cement and machine applied to stud side of 1 1/2" mesh by 0.058-inch (No. 17 B.W. gage) paper-backed woven wire fabric lath wire-tied to 4"-deep steel trussed wire[j] studs 16" on center. Wire ties of 0.049" (No. 18 B.W. gage) galvanized steel wire 6" on center vertically.	—	—	3 1/8[d]	—
8. Solid neat wood fibered gypsum plaster	8-1.1	3/4" by 0.055-inch (No. 16 carbon sheet steel gage) cold-rolled channels, 12" on center with 2.5-pound flat metal lath applied to one face and tied with 0.049" (No. 18 B.W. gage) wire at 6" spacing. Neat gypsum plaster applied each side.	—	—	2[d]	—
9. Solid wallboard partition	9-1.1	One full-length layer 1/2" Type X gypsum wallboard[e] laminated to each side of 1" full-length V-edge gypsum coreboard with approved laminating compound. Vertical joints of face layer and coreboard staggered not less than 3".	—	—	2[d]	—
10. Hollow (studless) gypsum wallboard partition	10-1.1	One full-length layer of 5/8" Type X gypsum wallboard[e] attached to both sides of wood or metal top and bottom runners laminated to each side of 1"× 6" full-length gypsum coreboard ribs spaced 2" on center with approved laminating compound. Ribs centered at vertical joints of face plies and joints staggered 24" in opposing faces. Ribs may be recessed 6" from the top and bottom.	—	—	—	2 1/4[d]
	10-1.2	1" regular gypsum V-edge full-length backing board attached to both sides of wood or metal top and bottom runners with nails or 1 5/8" drywall screws at 24" on center. Minimum width of runners 1 5/8". Face layer of 1/2" regular full-length gypsum wallboard laminated to outer faces of backing board with approved laminating compound.	—	—	4 5/8[d]	—

(continued)

INTERNATIONAL CODE COUNCIL®
Copyright © 2019 ICC & NYSDOS. ALL RIGHTS RESERVED. Accessed by Lauren Gualdino (lgualdino@briarcliffmanor.org), (-) Order Number #100880972 on May 08, 2020 07:05 AM (PDT) pursuant to License Agreement with ICC & NYSDOS. No further reproduction, no

100880972

TABLE 721.1(2) —continued
RATED FIRE-RESISTANCE PERIODS FOR VARIOUS WALLS AND PARTITIONS [a, o, p]

MATERIAL	ITEM NUMBER	CONSTRUCTION	MINIMUM FINISHED THICKNESS FACE-TO-FACE[b] (inches)			
			4 hours	3 hours	2 hours	1 hour
11. Noncombustible studs-interior partition with plaster each side	11-1.1	$3^1/_4$" × 0.044" (No. 18 carbon sheet steel gage) steel studs spaced 24" on center. $^5/_8$" gypsum plaster on metal lath each side mixed 1:2 by weight, gypsum to sand aggregate.	—	—	—	$4^3/_4$[d]
	11-1.2	$3^3/_8$" × 0.055" (No. 16 carbon sheet steel gage) approved nailable[k] studs spaced 24" on center. $^5/_8$" neat gypsum wood-fibered plaster each side over $^3/_8$" rib metal lath nailed to studs with 6d common nails, 8" on center. Nails driven $1^1/_4$" and bent over.	—	—	$5^5/_8$	—
	11-1.3	4" × 0.044" (No. 18 carbon sheet steel gage) channel-shaped steel studs at 16" on center. On each side approved resilient clips pressed onto stud flange at 16" vertical spacing, $^1/_4$" pencil rods snapped into or wire tied onto outer loop of clips, metal lath wire-tied to pencil rods at 6" intervals, 1" perlite gypsum plaster, each side.	—	$7^5/_8$[d]	—	—
	11-1.4	$2^1/_2$" × 0.044" (No. 18 carbon sheet steel gage) steel studs spaced 16" on center. Wood fibered gypsum plaster mixed 1:1 by weight gypsum to sand aggregate applied on $^3/_4$-pound metal lath wire tied to studs, each side. $^3/_4$" plaster applied over each face, including finish coat.	—	—	$4^1/_4$[d]	—
12. Wood studs-interior partition with plaster each side	12-1.1[l, m]	2" × 4" wood studs 16" on center with $^5/_8$" gypsum plaster on metal lath. Lath attached by 4d common nails bent over or No. 14 gage by $1^1/_4$" by $^3/_4$" crown width staples spaced 6" on center. Plaster mixed 1:$1^1/_2$ for scratch coat and 1:3 for brown coat, by weight, gypsum to sand aggregate.	—	—	—	$5^1/_8$
	12-1.2[l]	2" × 4" wood studs 16" on center with metal lath and $^7/_8$" neat wood-fibered gypsum plaster each side. Lath attached by 6d common nails, 7" on center. Nails driven $1^1/_4$" and bent over.	—	—	$5^1/_2$[d]	—
	12-1.3[l]	2" × 4" wood studs 16" on center with $^3/_8$" perforated or plain gypsum lath and $^1/_2$" gypsum plaster each side. Lath nailed with $1^1/_8$" by No. 13 gage by $^{19}/_{64}$" head plasterboard blued nails, 4" on center. Plaster mixed 1:2 by weight, gypsum to sand aggregate.	—	—	—	$5^1/_4$
	12-1.4[l]	2" × 4" wood studs 16" on center with $^3/_8$" Type X gypsum lath and $^1/_2$" gypsum plaster each side. Lath nailed with $1^1/_8$" by No. 13 gage by $^{19}/_{64}$" head plasterboard blued nails, 5" on center. Plaster mixed 1:2 by weight, gypsum to sand aggregate.	—	—	—	$5^1/_4$
13. Noncombustible studs-interior partition with gypsum wallboard each side	13-1.1	0.018" (No. 25 carbon sheet steel gage) channel-shaped studs 24" on center with one full-length layer of $^5/_8$" Type X gypsum wallboard[e] applied vertically attached with 1"-long No. 6 drywall screws to each stud. Screws are 8" on center around the perimeter and 12" on center on the intermediate stud. Where applied horizontally, the Type X gypsum wallboard shall be attached to $3^5/_8$" studs and the horizontal joints shall be staggered with those on the opposite side. Screws for the horizontal application shall be 8" on center at vertical edges and 12" on center at intermediate studs.	—	—	—	$2^7/_8$[d]
	13-1.2	0.018" (No. 25 carbon sheet steel gage) channel-shaped studs 25" on center with two full-length layers of $^1/_2$" Type X gypsum wallboard[e] applied vertically each side. First layer attached with 1"-long, No. 6 drywall screws, 8" on center around the perimeter and 12" on center on the intermediate stud. Second layer applied with vertical joints offset one stud space from first layer using $1^5/_8$" long, No. 6 drywall screws spaced 9" on center along vertical joints, 12" on center at intermediate studs and 24" on center along top and bottom runners.	—	—	$3^5/_8$[d]	—
	13-1.3	0.055" (No. 16 carbon sheet steel gage) approved nailable metal studs[e] 24" on center with full-length $^5/_8$" Type X gypsum wallboard[e] applied vertically and nailed 7" on center with 6d cement-coated common nails. Approved metal fastener grips used with nails at vertical butt joints along studs.	—	—	—	$4^7/_8$

(continued)

INTERNATIONAL CODE COUNCIL®
Copyright © 2019 ICC & NYSDOS. ALL RIGHTS RESERVED. Accessed by Lauren Gualdino (lgualdino@briarcliffmanor.org), (-) Order Number #100880972 on May 08, 2020 07:05 AM (PDT) pursuant to License Agreement with ICC & NYSDOS. No further reproduction, no

100880972

TABLE 721.1(2)—continued
RATED FIRE-RESISTANCE PERIODS FOR VARIOUS WALLS AND PARTITIONS [a, o, p]

MATERIAL	ITEM NUMBER	CONSTRUCTION	MINIMUM FINISHED THICKNESS FACE-TO-FACE[b] (inches)			
			4 hours	3 hours	2 hours	1 hour
14. Wood studs-interior partition with gypsum wallboard each side	14-1.1[h, m]	2" × 4" wood studs 16" on center with two layers of $^3/_8$" regular gypsum wallboard[e] each side, 4d cooler[n] or wallboard[n] nails at 8" on center first layer, 5d cooler[n] or wallboard[n] nails at 8" on center second layer with laminating compound between layers, joints staggered. First layer applied full length vertically, second layer applied horizontally or vertically.	—	—	—	5
	14-1.2[l, m]	2" × 4" wood studs 16" on center with two layers $^1/_2$" regular gypsum wallboard[e] applied vertically or horizontally each side[k], joints staggered. Nail base layer with 5d cooler[n] or wallboard[n] nails at 8" on center face layer with 8d cooler[n] or wallboard[n] nails at 8" on center.	—	—	—	$5^1/_2$
	14-1.3[l, m]	2" × 4" wood studs 24" on center with $^5/_8$" Type X gypsum wallboard[e] applied vertically or horizontally nailed with 6d cooler[n] or wallboard[n] nails at 7" on center with end joints on nailing members. Stagger joints each side.	—	—	—	$4^3/_4$
	14-1.4[l]	2" × 4" fire-retardant-treated wood studs spaced 24" on center with one layer of $^5/_8$" Type X gypsum wallboard[e] applied with face paper grain (long dimension) parallel to studs. Wallboard attached with 6d cooler[n] or wallboard[n] nails at 7" on center.	—	—	—	$4^3/_4$[d]
	14-1.5[l, m]	2" × 4" wood studs 16" on center with two layers $^5/_8$" Type X gypsum wallboard[e] each side. Base layers applied vertically and nailed with 6d cooler[n] or wallboard[n] nails at 9" on center. Face layer applied vertically or horizontally and nailed with 8d cooler[n] or wallboard[n] nails at 7" on center. For nail-adhesive application, base layers are nailed 6" on center. Face layers applied with coating of approved wallboard adhesive and nailed 12" on center.	—	—	6	—
	14-1.6[l]	2" × 3" fire-retardant-treated wood studs spaced 24" on center with one layer of $^5/_8$" Type X gypsum wallboard[e] applied with face paper grain (long dimension) at right angles to studs. Wallboard attached with 6d cement-coated box nails spaced 7" on center.	—	—	—	$3^5/_8$[d]
15. Exterior or interior walls (continued)	15-1.1[l, m]	Exterior surface with $^3/_4$" drop siding over $^1/_2$" gypsum sheathing on 2" × 4" wood studs at 16" on center, interior surface treatment as required for 1-hour-rated exterior or interior 2" × 4" wood stud partitions. Gypsum sheathing nailed with $1^3/_4$" by No. 11 gage by $^7/_{16}$" head galvanized nails at 8" on center. Siding nailed with 7d galvanized smooth box nails.	—	—	—	Varies
	15-1.2[l, m]	2" × 4" wood studs 16" on center with metal lath and $^3/_4$" cement plaster on each side. Lath attached with 6d common nails 7" on center driven to 1" minimum penetration and bent over. Plaster mix 1:4 for scratch coat and 1:5 for brown coat, by volume, cement to sand.	—	—	—	$5^3/_8$
	15-1.3[l, m]	2" × 4" wood studs 16" on center with $^7/_8$" cement plaster (measured from the face of studs) on the exterior surface with interior surface treatment as required for interior wood stud partitions in this table. Plaster mix 1:4 for scratch coat and 1:5 for brown coat, by volume, cement to sand.	—	—	—	Varies
	15-1.4	$3^5/_8$" No. 16 gage noncombustible studs 16" on center with $^7/_8$" cement plaster (measured from the face of the studs) on the exterior surface with interior surface treatment as required for interior, nonbearing, noncombustible stud partitions in this table. Plaster mix 1:4 for scratch coat and 1:5 for brown coat, by volume, cement to sand.	—	—	—	Varies[d]

(continued)

INTERNATIONAL CODE COUNCIL®
Copyright © 2019 ICC & NYSDOS. ALL RIGHTS RESERVED. Accessed by Lauren Gualdino (lgualdino@briarcliffmanor.org), (-) Order Number #100880972 on May 08, 2020 07:05 AM (PDT) pursuant to License Agreement with ICC & NYSDOS. No further reproduction, no

100880972

TABLE 721.1(2)—continued
RATED FIRE-RESISTANCE PERIODS FOR VARIOUS WALLS AND PARTITIONS [a, o, p]

MATERIAL	ITEM NUMBER	CONSTRUCTION	MINIMUM FINISHED THICKNESS FACE-TO-FACE[b] (inches)			
			4 hours	3 hours	2 hours	1 hour
15. Exterior or interior walls (continued)	15-1.5[m]	$2^1/_4$" × $3^3/_4$" clay face brick with cored holes over $^1/_2$" gypsum sheathing on exterior surface of 2" × 4" wood studs at 16" on center and two layers $^5/_8$" Type X gypsum wallboard[c] on interior surface. Sheathing placed horizontally or vertically with vertical joints over studs nailed 6" on center with $1^3/_4$" × No. 11 gage by $^7/_{16}$" head galvanized nails. Inner layer of wallboard placed horizontally or vertically and nailed 8" on center with 6d cooler[n] or wallboard[n] nails. Outer layer of wallboard placed horizontally or vertically and nailed 8" on center with 8d cooler[n] or wallboard[n] nails. Joints staggered with vertical joints over studs. Outer layer joints taped and finished with compound. Nail heads covered with joint compound. 0.035 inch (No. 20 galvanized sheet gage) corrugated galvanized steel wall ties $^3/_4$" by $6^5/_8$" attached to each stud with two 8d cooler[n] or wallboard[n] nails every sixth course of bricks.	—	—	10	—
	15-1.6[l, m]	2" × 6" fire-retardant-treated wood studs 16" on center. Interior face has two layers of $^5/_8$" Type X gypsum with the base layer placed vertically and attached with 6d box nails 12" on center. The face layer is placed horizontally and attached with 8d box nails 8" on center at joints and 12" on center elsewhere. The exterior face has a base layer of $^5/_8$" Type X gypsum sheathing placed vertically with 6d box nails 8" on center at joints and 12" on center elsewhere. An approved building paper is next applied, followed by self-furred exterior lath attached with $2^1/_2$", No. 12 gage galvanized roofing nails with a $^3/_8$" diameter head and spaced 6" on center along each stud. Cement plaster consisting of a $^1/_2$" brown coat is then applied. The scratch coat is mixed in the proportion of 1:3 by weight, cement to sand with 10 pounds of hydrated lime and 3 pounds of approved additives or admixtures per sack of cement. The brown coat is mixed in the proportion of 1:4 by weight, cement to sand with the same amounts of hydrated lime and approved additives or admixtures used in the scratch coat.	—	—	$8^1/_4$	—
	15-1.7[l, m]	2" × 6" wood studs 16" on center. The exterior face has a layer of $^5/_8$" Type X gypsum sheathing placed vertically with 6d box nails 8" on center at joints and 12" on center elsewhere. An approved building paper is next applied, followed by 1" by No. 18 gage self-furred exterior lath attached with 8d by $2^1/_2$" long galvanized roofing nails spaced 6" on center along each stud. Cement plaster consisting of a $^1/_2$" scratch coat, a bonding agent and a $^1/_2$" brown coat and a finish coat is then applied. The scratch coat is mixed in the proportion of 1:3 by weight, cement to sand with 10 pounds of hydrated lime and 3 pounds of approved additives or admixtures per sack of cement. The brown coat is mixed in the proportion of 1:4 by weight, cement to sand with the same amounts of hydrated lime and approved additives or admixtures used in the scratch coat. The interior is covered with $^3/_8$" gypsum lath with 1" hexagonal mesh of 0.035 inch (No. 20 B.W. gage) woven wire lath furred out $^5/_{16}$" and 1" perlite or vermiculite gypsum plaster. Lath nailed with $1^1/_8$" by No. 13 gage by $^{19}/_{64}$" head plasterboard glued nails spaced 5" on center. Mesh attached by $1^3/_4$" by No. 12 gage by $^3/_8$" head nails with $^3/_8$" furrings, spaced 8" on center. The plaster mix shall not exceed 100 pounds of gypsum to $2^1/_2$ cubic feet of aggregate.	—	—	$8^3/_8$	—

(continued)

INTERNATIONAL CODE COUNCIL®
Copyright © 2019 ICC & NYSDOS. ALL RIGHTS RESERVED. Accessed by Lauren Gualdino (lgualdino@briarcliffmanor.org), (-) Order Number #100880972 on May 08, 2020 07:05 AM (PDT) pursuant to License Agreement with ICC & NYSDOS. No further reproduction, no

100880972

TABLE 721.1(2)—continued
RATED FIRE-RESISTANCE PERIODS FOR VARIOUS WALLS AND PARTITIONS [a, o, p]

MATERIAL	ITEM NUMBER	CONSTRUCTION	MINIMUM FINISHED THICKNESS FACE-TO-FACE[b] (inches)			
			4 hours	3 hours	2 hours	1 hour
15. Exterior or interior walls (continued)	15-1.8[l, m]	2" × 6" wood studs 16" on center. The exterior face has a layer of $^5/_8$" Type X gypsum sheathing placed vertically with 6d box nails 8" on center at joints and 12" on center elsewhere. An approved building paper is next applied, followed by $1^1/_2$" by No. 17 gage self-furred exterior lath attached with 8d by $2^1/_2$" long galvanized roofing nails spaced 6" on center along each stud. Cement plaster consisting of a $^1/_2$" scratch coat, and a $^1/_2$" brown coat is then applied. The plaster may be placed by machine. The scratch coat is mixed in the proportion of 1:4 by weight, plastic cement to sand. The brown coat is mixed in the proportion of 1:5 by weight, plastic cement to sand. The interior is covered with $^3/_8$" gypsum lath with 1" hexagonal mesh of No. 20 gage woven wire lath furred out $^5/_{16}$" and 1" perlite or vermiculite gypsum plaster. Lath nailed with $1^1/_8$" by No. 13 gage by $^{19}/_{64}$" head plasterboard glued nails spaced 5" on center. Mesh attached by $1^3/_4$" by No. 12 gage by $^3/_8$" head nails with $^3/_8$" furrings, spaced 8" on center. The plaster mix shall not exceed 100 pounds of gypsum to $2^1/_2$ cubic feet of aggregate.	—	—	$8^3/_8$	—
	15-1.9	4" No. 18 gage, nonload-bearing metal studs, 16" on center, with 1" Portland cement lime plaster (measured from the back side of the $^3/_4$-pound expanded metal lath) on the exterior surface. Interior surface to be covered with 1" of gypsum plaster on $^3/_4$-pound expanded metal lath proportioned by weight-1:2 for scratch coat, 1:3 for brown, gypsum to sand. Lath on one side of the partition fastened to $^1/_4$" diameter pencil rods supported by No. 20 gage metal clips, located 16" on center vertically, on each stud. 3" thick mineral fiber insulating batts friction fitted between the studs.	—	—	$6^1/_2$[d]	—
	15-1.10	Steel studs 0.060" thick, 4" deep or 6" at 16" or 24" centers, with $^1/_2$" Glass Fiber Reinforced Concrete (GFRC) on the exterior surface. GFRC is attached with flex anchors at 24" on center, with 5" leg welded to studs with two $^1/_2$"-long flare-bevel welds, and 4" foot attached to the GFRC skin with $^5/_8$" thick GFRC bonding pads that extend $2^1/_2$" beyond the flex anchor foot on both sides. Interior surface to have two layers of $^1/_2$" Type X gypsum wallboard.[e] The first layer of wallboard to be attached with 1"-long Type S buglehead screws spaced 24" on center and the second layer is attached with $1^5/_8$"-long Type S screws spaced at 12" on center. Cavity is to be filled with 5" of 4 pcf (nominal) mineral fiber batts. GFRC has $1^1/_2$" returns packed with mineral fiber and caulked on the exterior.	—	—	$6^1/_2$	—
	15-1.11	Steel studs 0.060" thick, 4" deep or 6" at 16" or 24" centers, respectively, with $^1/_2$" Glass Fiber Reinforced Concrete (GFRC) on the exterior surface. GFRC is attached with flex anchors at 24" on center, with 5" leg welded to studs with two $^1/_2$"-long flare-bevel welds, and 4" foot attached to the GFRC skin with $^5/_8$" -thick GFRC bonding pads that extend $2^1/_2$" beyond the flex anchor foot on both sides. Interior surface to have one layer of $^5/_8$" Type X gypsum wallboard[e], attached with $1^1/_4$"-long Type S buglehead screws spaced 12" on center. Cavity is to be filled with 5" of 4 pcf (nominal) mineral fiber batts. GFRC has $1^1/_2$" returns packed with mineral fiber and caulked on the exterior.	—	—	—	$6^1/_8$
	15-1.12[q]	2" × 6" wood studs at 16" with double top plates, single bottom plate; interior and exterior sides covered with $^5/_8$" Type X gypsum wallboard, 4′ wide, applied horizontally or vertically with vertical joints over studs, and fastened with $2^1/_4$" Type S drywall screws, spaced 12" on center. Cavity to be filled with $5^1/_2$" mineral wool insulation.	—	—	—	$6^3/_4$

(continued)

INTERNATIONAL CODE COUNCIL®
Copyright © 2019 ICC & NYSDOS. ALL RIGHTS RESERVED. Accessed by Lauren Gualdino (lgualdino@briarcliffmanor.org), (-) Order Number #100880972 on May 08, 2020 07:05 AM (PDT) pursuant to License Agreement with ICC & NYSDOS. No further reproduction, no

100880972

TABLE 721.1(2)—continued
RATED FIRE-RESISTANCE PERIODS FOR VARIOUS WALLS AND PARTITIONS [a, o, p]

MATERIAL	ITEM NUMBER	CONSTRUCTION	MINIMUM FINISHED THICKNESS FACE-TO-FACE[b] (inches)			
			4 hours	3 hours	2 hours	1 hour
15. Exterior or interior walls (continued)	15-1.13[q]	2" × 6" wood studs at 16" with double top plates, single bottom plate; interior and exterior sides covered with $^5/_8$" Type X gypsum wallboard, 4′ wide, applied vertically with all joints over framing or blocking and fastened with $2^1/_4$" Type S drywall screws, spaced 12" on center. R-19 mineral fiber insulation installed in stud cavity.	—	—	—	$6^3/_4$
	15-1.14[q]	2" × 6" wood studs at 16" with double top plates, single bottom plate; interior and exterior sides covered with $^5/_8$" Type X gypsum wallboard, 4′ wide, applied horizontally or vertically with vertical joints over studs, and fastened with $2^1/_4$" Type S drywall screws, spaced 7" on center.	—	—	—	$6^3/_4$
	15-1.15[q]	2" × 4" wood studs at 16" with double top plates, single bottom plate; interior and exterior sides covered with $^5/_8$" Type X gypsum wallboard and sheathing, respectively, 4′ wide, applied horizontally or vertically with vertical joints over studs, and fastened with $2^1/_4$" Type S drywall screws, spaced 12" on center. Cavity to be filled with $3^1/_2$" mineral wool insulation.	—	—	—	$4^3/_4$
	15-1.16[q]	2" x 6" wood studs at 24" centers with double top plates, single bottom plate; interior and exterior side covered with two layers of $^5/_8$" Type X gypsum wallboard, 4' wide, applied horizontally with vertical joints over studs. Base layer fastened with $2^1/_4$" Type S drywall screws, spaced 24" on center and face layer fastened with Type S drywall screws, spaced 8" on center, wallboard joints covered with paper tape and joint compound, fastener heads covered with joint compound. Cavity to be filled with $5^1/_2$" mineral wool insulation.	—	—	8	—
	15-2.1[d]	$3^5/_8$" No. 16 gage steel studs at 24" on center or 2" × 4" wood studs at 24" on center. Metal lath attached to the exterior side of studs with minimum 1" long No. 6 drywall screws at 6" on center and covered with minimum $^3/_4$" thick Portland cement plaster. Thin veneer brick units of clay or shale complying with ASTM C1088, Grade TBS or better, installed in running bond in accordance with Section 1405.10. Combined total thickness of the Portland cement plaster, mortar and thin veneer brick units shall be not less than $1^3/_4$". Interior side covered with one layer of $^5/_8$" thick Type X gypsum wallboard attached to studs with 1" long No. 6 drywall screws at 12" on center.	—	—	—	6
	15-2.2[d]	$3^5/_8$" No. 16 gage steel studs at 24" on center or 2" × 4" wood studs at 24" on center. Metal lath attached to the exterior side of studs with minimum 1" long No. 6 drywall screws at 6" on center and covered with minimum $^3/_4$" thick Portland cement plaster. Thin veneer brick units of clay or shale complying with ASTM C1088, Grade TBS or better, installed in running bond in accordance with Section 1405.10. Combined total thickness of the Portland cement plaster, mortar and thin veneer brick units shall be not less than 2". Interior side covered with two layers of $^5/_8$" thick Type X gypsum wallboard. Bottom layer attached to studs with 1" long No. 6 drywall screws at 24" on center. Top layer attached to studs with $1^5/_8$" long No. 6 drywall screws at 12" on center.	—	—	$6^7/_8$	—
	15-2.3[d]	$3^5/_8$" No. 16 gage steel studs at 16" on center or 2"× 4" wood studs at 16" on center. Where metal lath is used, attach to the exterior side of studs with minimum 1" long No. 6 drywall screws at 6" on center. Brick units of clay or shale not less than $2^5/_8$" thick complying with ASTM C216 installed in accordance with Section 1405.6 with a minimum 1" airspace. Interior side covered with one layer of $^5/_8$" thick Type X gypsum wallboard attached to studs with 1" long No. 6 drywall screws at 12" on center.	—	—	—	$7^7/_8$

(continued)

INTERNATIONAL CODE COUNCIL®
Copyright © 2019 ICC & NYSDOS. ALL RIGHTS RESERVED. Accessed by Lauren Gualdino (lgualdino@briarcliffmanor.org), (-) Order Number #100880972 on May 08, 2020 07:05 AM (PDT) pursuant to License Agreement with ICC & NYSDOS. No further reproduction, no

100880972

TABLE 721.1(2)—continued
RATED FIRE-RESISTANCE PERIODS FOR VARIOUS WALLS AND PARTITIONS [a, o, p]

MATERIAL	ITEM NUMBER	CONSTRUCTION	MINIMUM FINISHED THICKNESS FACE-TO-FACE[b] (inches)			
			4 hours	3 hours	2 hours	1 hour
15. Exterior or interior walls	15-2.4[d]	$3^5/_8$" No. 16 gage steel studs at 16" on center or 2" × 4" wood studs at 16" on center. Where metal lath is used, attach to the exterior side of studs with minimum 1" long No. 6 drywall screws at 6" on center. Brick units of clay or shale not less than $2^5/_8$" thick complying with ASTM C216 installed in accordance with Section 1405.6 with a minimum 1" airspace. Interior side covered with two layers of $^5/_8$" thick Type X gypsum wallboard. Bottom layer attached to studs with 1" long No. 6 drywall screws at 24" on center. Top layer attached to studs with $1^5/_8$" long No. 6 drywall screws at 12" on center.	—	—	$8^1/_2$	—
16. Exterior walls rated for fire resistance from the inside only in accordance with Section 705.5.	16-1.1[q]	2" × 4" wood studs at 16" centers with double top plates, single bottom plate; interior side covered with $^5/_8$" Type X gypsum wallboard, 4' wide, applied horizontally unblocked, and fastened with $2^1/_4$" Type S drywall screws, spaced 12" on center, wallboard joints covered with paper tape and joint compound, fastener heads covered with joint compound. Exterior covered with $^3/_8$" wood structural panels, applied vertically, horizontal joints blocked and fastened with 6d common nails (bright) — 12" on center in the field, and 6" on center panel edges. Cavity to be filled with $3^1/_2$" mineral wool insulation. Rating established for exposure from interior side only.	—	—	—	$4^1/_2$
	16-1.2[q]	2" × 6" wood studs at 16" centers with double top plates, single bottom plate; interior side covered with $^5/_8$" Type X gypsum wallboard, 4' wide, applied horizontally or vertically with vertical joints over studs and fastened with $2^1/_4$" Type S drywall screws, spaced 12" on center, wallboard joints covered with paper tape and joint compound, fastener heads covered with joint compound, exterior side covered with $^7/_{16}$" wood structural panels fastened with 6d common nails (bright) spaced 12" on center in the field and 6" on center along the panel edges. Cavity to be filled with $5^1/_2$" mineral wool insulation. Rating established from the gypsum-covered side only.	—	—	—	$6^9/_{16}$
	16-1.3[q]	2" × 6" wood studs at 16" centers with double top plates, single bottom plates; interior side covered with $^5/_8$" Type X gypsum wallboard, 4' wide, applied vertically with all joints over framing or blocking and fastened with $2^1/_4$" Type S drywall screws spaced 7" on center. Joints to be covered with tape and joint compound. Exterior covered with $^3/_8$" wood structural panels, applied vertically with edges over framing or blocking and fastened with 6d common nails (bright) at 12" on center in the field and 6" on center on panel edges. R-19 mineral fiber insulation installed in stud cavity. Rating established from the gypsum-covered side only.	—	—	—	$6^1/_2$

For SI: 1 inch = 25.4 mm, 1 square inch = 645.2 mm^2, 1 cubic foot = 0.0283 m^3.

a. Staples with equivalent holding power and penetration shall be permitted to be used as alternate fasteners to nails for attachment to wood framing.

b. Thickness shown for brick and clay tile is nominal thicknesses unless plastered, in which case thicknesses are net. Thickness shown for concrete masonry and clay masonry is equivalent thickness defined in Section 722.3.1 for concrete masonry and Section 722.4.1.1 for clay masonry. Where all cells are solid grouted or filled with silicone-treated perlite loose-fill insulation; vermiculite loose-fill insulation; or expanded clay, shale or slate lightweight aggregate, the equivalent thickness shall be the thickness of the block or brick using specified dimensions as defined in Chapter 21. Equivalent thickness shall include the thickness of applied plaster and lath or gypsum wallboard, where specified.

c. For units in which the net cross-sectional area of cored brick in any plane parallel to the surface containing the cores is not less than 75 percent of the gross cross-sectional area measured in the same plane.

d. Shall be used for nonbearing purposes only.

e. For all of the construction with gypsum wallboard described in this table, gypsum base for veneer plaster of the same size, thickness and core type shall be permitted to be substituted for gypsum wallboard, provided that attachment is identical to that specified for the wallboard, and the joints on the face layer are reinforced and the entire surface is covered with not less than $^1/_{16}$-inch gypsum veneer plaster.

f. The fire-resistance time period for concrete masonry units meeting the equivalent thicknesses required for a 2-hour fire-resistance rating in Item 3, and having a thickness of not less than $7^5/_8$ inches is 4 hours where cores that are not grouted are filled with silicone-treated perlite loose-fill insulation; vermiculite loose-fill insulation; or expanded clay, shale or slate lightweight aggregate, sand or slag having a maximum particle size of $^3/_8$ inch.

g. The fire-resistance rating of concrete masonry units composed of a combination of aggregate types or where plaster is applied directly to the concrete masonry shall be determined in accordance with ACI 216.1/TMS 0216. Lightweight aggregates shall have a maximum combined density of 65 pounds per cubic foot.

(continued)

INTERNATIONAL CODE COUNCIL®
Copyright © 2019 ICC & NYSDOS. ALL RIGHTS RESERVED. Accessed by Lauren Gualdino (lgualdino@briarcliffmanor.org), (-) Order Number #100880972 on May 08, 2020 07:05 AM (PDT) pursuant to License Agreement with ICC & NYSDOS. No further reproduction, no

100880972

TABLE 721.1(2)—continued
RATED FIRE-RESISTANCE PERIODS FOR VARIOUS WALLS AND PARTITIONS [a, o,]

h. See Note b. The equivalent thickness shall be permitted to include the thickness of cement plaster or 1.5 times the thickness of gypsum plaster applied in accordance with the requirements of Chapter 25.
i. Concrete walls shall be reinforced with horizontal and vertical temperature reinforcement as required by Chapter 19.
j. Studs are welded truss wire studs with 0.18 inch (No. 7 B.W. gage) flange wire and 0.18 inch (No. 7 B.W. gage) truss wires.
k. Nailable metal studs consist of two channel studs spot welded back to back with a crimped web forming a nailing groove.
l. Wood structural panels shall be permitted to be installed between the fire protection and the wood studs on either the interior or exterior side of the wood frame assemblies in this table, provided that the length of the fasteners used to attach the fire protection is increased by an amount not less than the thickness of the wood structural panel.
m. For studs with a slenderness ratio, l_e/d, greater than 33, the design stress shall be reduced to 78 percent of allowable F'_c. For studs with a slenderness ratio, l_e/d, not exceeding 33, the design stress shall be reduced to 78 percent of the adjusted stress F'_c calculated for studs having a slenderness ratio l_e/d of 33.
n. For properties of cooler or wallboard nails, see ASTM C514, ASTM C547 or ASTM F1667.
o. Generic fire-resistance ratings (those not designated as PROPRIETARY* in the listing) in the GA 600 shall be accepted as if herein listed.
p. NCMA TEK 5-8A shall be permitted for the design of fire walls.
q. The design stress of studs shall be equal to not more than 100 percent of the allowable F'_c calculated in accordance with Section 2306.

TABLE 721.1(3)
MINIMUM PROTECTION FOR FLOOR AND ROOF SYSTEMS[a, q]

FLOOR OR ROOF CONSTRUCTION	ITEM NUMBER	CEILING CONSTRUCTION	THICKNESS OF FLOOR OR ROOF SLAB (inches)				MINIMUM THICKNESS OF CEILING (inches)			
			4 hours	3 hours	2 hours	1 hour	4 hours	3 hours	2 hours	1 hour
1. Siliceous aggregate concrete	1-1.1	Slab (ceiling not required). Minimum cover over nonprestressed reinforcement shall be not less than $^3/_4$" [b].	7.0	6.2	5.0	3.5	—	—	—	—
2. Carbonate aggregate concrete	2-1.1		6.6	5.7	4.6	3.2	—	—	—	—
3. Sand-lightweight concrete	3-1.1		5.4	4.6	3.8	2.7	—	—	—	—
4. Lightweight concrete	4-1.1		5.1	4.4	3.6	2.5	—	—	—	—
5. Reinforced concrete	5-1.1	Slab with suspended ceiling of vermiculite gypsum plaster over metal lath attached to $^3/_4$" cold-rolled channels spaced 12" on center. Ceiling located 6" minimum below joists.	3	2	—	—	1	$^3/_4$	—	—
	5-2.1	$^3/_8$" Type X gypsum wallboard[c] attached to 0.018 inch (No. 25 carbon sheet steel gage) by $^7/_8$" deep by $2^5/_8$" hat-shaped galvanized steel channels with 1"-long No. 6 screws. The channels are spaced 24" on center, span 35" and are supported along their length at 35" intervals by 0.033" (No. 21 galvanized sheet gage) galvanized steel flat strap hangers having formed edges that engage the lips of the channel. The strap hangers are attached to the side of the concrete joists with $^5/_{32}$" by $1^1/_4$" long power-driven fasteners. The wallboard is installed with the long dimension perpendicular to the channels. End joints occur on channels and supplementary channels are installed parallel to the main channels, 12" each side, at end joint occurrences. The finished ceiling is located approximately 12" below the soffit of the floor slab.	—	—	$2^1/_2$	—	—	—	$^5/_8$	—

(continued)

INTERNATIONAL CODE COUNCIL®
Copyright © 2019 ICC & NYSDOS. ALL RIGHTS RESERVED. Accessed by Lauren Gualdino (lgualdino@briarcliffmanor.org), (-) Order Number #100880972 on May 08, 2020 07:05 AM (PDT) pursuant to License Agreement with ICC & NYSDOS. No further reproduction, no

100880972

TABLE 721.1(3)—continued
MINIMUM PROTECTION FOR FLOOR AND ROOF SYSTEMS[a, q]

FLOOR OR ROOF CONSTRUCTION	ITEM NUMBER	CEILING CONSTRUCTION	THICKNESS OF FLOOR OR ROOF SLAB (inches)				MINIMUM THICKNESS OF CEILING (inches)			
			4 hours	3 hours	2 hours	1 hour	4 hours	3 hours	2 hours	1 hour
6. Steel joists constructed with a poured reinforced concrete slab on metal lath forms or steel form units[d, e]	6-1.1	Gypsum plaster on metal lath attached to the bottom cord with single No. 16 gage or doubled No. 18 gage wire ties spaced 6" on center. Plaster mixed 1:2 for scratch coat, 1:3 for brown coat, by weight, gypsum-to-sand aggregate for 2-hour system. For 3-hour system plaster is neat.	—	—	$2^1/_2$	$2^1/_4$	—	—	$^3/_4$	$^5/_8$
	6-2.1	Vermiculite gypsum plaster on metal lath attached to the bottom chord with single No.16 gage or doubled 0.049-inch (No. 18 B.W. gage) wire ties 6" on center.	—	2	—	—	—	$^5/_8$	—	—
	6-3.1	Cement plaster over metal lath attached to the bottom chord of joists with single No. 16 gage or doubled 0.049" (No. 18 B.W. gage) wire ties spaced 6" on center. Plaster mixed 1:2 for scratch coat, 1:3 for brown coat for 1-hour system and 1:1 for scratch coat, 1:1 $^1/_2$ for brown coat for 2-hour system, by weight, cement to sand.	—	—	—	2	—	—	—	$^5/_8$[f]
	6-4.1	Ceiling of $^5/_8$" Type X wallboard[c] attached to $^7/_8$" deep by $2^5/_8$" by 0.021 inch (No. 25 carbon sheet steel gage) hat-shaped furring channels 12" on center with 1" long No. 6 wallboard screws at 8" on center. Channels wire tied to bottom chord of joists with doubled 0.049 inch (No. 18 B.W. gage) wire or suspended below joists on wire hangers.[g]	—	—	$2^1/_2$	—	—	—	$^5/_8$	—
	6-5.1	Wood-fibered gypsum plaster mixed 1:1 by weight gypsum to sand aggregate applied over metal lath. Lath tied 6" on center to $^3/_4$" channels spaced $13^1/_2$" on center. Channels secured to joists at each intersection with two strands of 0.049 inch (No. 18 B.W. gage) galvanized wire.	—	—	$2^1/_2$	—	—	—	$^3/_4$	—
7. Reinforced concrete slabs and joists with hollow clay tile fillers laid end to end in rows $2^1/_2$" or more apart; reinforcement placed between rows and concrete cast around and over tile.	7-1.1	$^5/_8$" gypsum plaster on bottom of floor or roof construction.	—	—	8[h]	—	—	—	$^5/_8$	—
	7-1.2	None	—	—	—	$5^1/_2$[i]	—	—	—	—
8. Steel joists constructed with a reinforced concrete slab on top poured on a $^1/_2$" deep steel deck.[e]	8-1.1	Vermiculite gypsum plaster on metal lath attached to $^3/_4$" cold-rolled channels with 0.049" (No. 18 B.W. gage) wire ties spaced 6" on center.	$2^1/_2$[j]	—	—	—	$^3/_4$	—	—	—

(continued)

INTERNATIONAL CODE COUNCIL®
Copyright © 2019 ICC & NYSDOS. ALL RIGHTS RESERVED. Accessed by Lauren Gualdino (lgualdino@briarcliffmanor.org), (-) Order Number #100880972 on May 08, 2020 07:05 AM (PDT) pursuant to License Agreement with ICC & NYSDOS. No further reproduction, no

100880972

TABLE 721.1(3)—continued
MINIMUM PROTECTION FOR FLOOR AND ROOF SYSTEMS[a, q]

FLOOR OR ROOF CONSTRUCTION	ITEM NUMBER	CEILING CONSTRUCTION	THICKNESS OF FLOOR OR ROOF SLAB (inches)				MINIMUM THICKNESS OF CEILING (inches)			
			4 hours	3 hours	2 hours	1 hour	4 hours	3 hours	2 hours	1 hour
9. 3" deep cellular steel deck with concrete slab on top. Slab thickness measured to top.	9-1.1	Suspended ceiling of vermiculite gypsum plaster base coat and vermiculite acoustical plaster on metal lath attached at 6" intervals to $^3/_4$" cold-rolled channels spaced 12" on center and secured to $1^1/_2$" cold-rolled channels spaced 36" on center with 0.065" (No. 16 B.W. gage) wire. $1^1/_2$" channels supported by No. 8 gage wire hangers at 36" on center. Beams within envelope and with a $2^1/_2$" airspace between beam soffit and lath have a 4-hour rating.	$2^1/_2$	—	—	—	$1^1/_8$[k]	—	—	—
10. $1^1/_2$"-deep steel roof deck on steel framing. Insulation board, 30 pcf density, composed of wood fibers with cement binders of thickness shown bonded to deck with unified asphalt adhesive. Covered with a Class A or B roof covering.	10-1.1	Ceiling of gypsum plaster on metal lath. Lath attached to $^3/_4$" furring channels with 0.049" (No. 18 B.W. gage) wire ties spaced 6" on center. $^3/_4$" channel saddle tied to 2" channels with doubled 0.065" (No. 16 B.W. gage) wire ties. 2" channels spaced 36" on center suspended 2" below steel framing and saddle-tied with 0.165" (No. 8 B.W. gage) wire. Plaster mixed 1:2 by weight, gypsum-to-sand aggregate.	—	—	$1^7/_8$	1	—	—	$^3/_4$[l]	$^3/_4$[l]
11. $1^1/_2$"-deep steel roof deck on steel-framing wood fiber insulation board, 17.5 pcf density on top applied over a 15-lb asphalt-saturated felt. Class A or B roof covering.	11-1.1	Ceiling of gypsum plaster on metal lath. Lath attached to $^3/_4$" furring channels with 0.049" (No. 18 B.W. gage) wire ties spaced 6" on center. $^3/_4$" channels saddle tied to 2" channels with doubled 0.065" (No. 16 B.W. gage) wire ties. 2" channels spaced 36" on center suspended 2" below steel framing and saddle tied with 0.165" (No. 8 B.W. gage) wire. Plaster mixed 1:2 for scratch coat and 1:3 for brown coat, by weight, gypsum-to-sand aggregate for 1-hour system. For 2-hour system, plaster mix is 1:2 by weight, gypsum-to-sand aggregate.	—	—	$1^1/_2$	1	—	—	$^7/_8$[g]	$^3/_4$[l]

(continued)

INTERNATIONAL CODE COUNCIL®
Copyright © 2019 ICC & NYSDOS. ALL RIGHTS RESERVED. Accessed by Lauren Gualdino (lgualdino@briarcliffmanor.org), (-) Order Number #100880972 on May 08, 2020 07:05 AM (PDT) pursuant to License Agreement with ICC & NYSDOS. No further reproduction, no

100880972

TABLE 721.1(3)—continued
MINIMUM PROTECTION FOR FLOOR AND ROOF SYSTEMS[a, q]

FLOOR OR ROOF CONSTRUCTION	ITEM NUMBER	CEILING CONSTRUCTION	THICKNESS OF FLOOR OR ROOF SLAB (inches)				MINIMUM THICKNESS OF CEILING (inches)			
			4 hours	3 hours	2 hours	1 hour	4 hours	3 hours	2 hours	1 hour
12. $1^1/_2$" deep steel roof deck on steel-framing insulation of rigid board consisting of expanded perlite and fibers impregnated with integral asphalt waterproofing; density 9 to 12 pcf secured to metal roof deck by $^1/_2$" wide ribbons of waterproof, cold-process liquid adhesive spaced 6" apart. Steel joist or light steel construction with metal roof deck, insulation, and Class A or B built-up roof covering.[e]	12-1.1	Gypsum-vermiculite plaster on metal lath wire tied at 6" intervals to $^3/_4$" furring channels spaced 12" on center and wire tied to 2" runner channels spaced 32" on center. Runners wire tied to bottom chord of steel joists.	—	—	1	—	—	—	$^7/_8$	—
13. Double wood floor over wood joists spaced 16" on center.[m, n]	13-1.1	Gypsum plaster over $^3/_8$" Type X gypsum lath. Lath initially applied with not less than four $1^1/_8$" by No. 13 gage by $^{19}/_{64}$" head plasterboard blued nails per bearing. Continuous stripping over lath along all joist lines. Stripping consists of 3" wide strips of metal lath attached by $1^1/_2$" by No. 11 gage by $^1/_2$" head roofing nails spaced 6" on center. Alternate stripping consists of 3" wide 0.049" diameter wire stripping weighing 1 pound per square yard and attached by No.16 gage by $1^1/_2$" by $^3/_4$" crown width staples, spaced 4" on center. Where alternate stripping is used, the lath nailing shall consist of two nails at each end and one nail at each intermediate bearing. Plaster mixed 1:2 by weight, gypsum-to-sand aggregate.	—	—	—	—	—	—	—	$^7/_8$
	13-1.2	Cement or gypsum plaster on metal lath. Lath fastened with $1^1/_2$" by No. 11 gage by $^7/_{16}$" head barbed shank roofing nails spaced 5" on center. Plaster mixed 1:2 for scratch coat and 1:3 for brown coat, by weight, cement to sand aggregate.	—	—	—	—	—	—	—	$^5/_8$
	13-1.3	Perlite or vermiculite gypsum plaster on metal lath secured to joists with $1^1/_2$" by No. 11 gage by $^7/_{16}$" head barbed shank roofing nails spaced 5" on center.	—	—	—	—	—	—	—	$^5/_8$
	13-1.4	$^1/_2$" Type X gypsum wallboard[c] nailed to joists with 5d cooler[o] or wallboard[o] nails at 6" on center. End joints of wallboard centered on joists.	—	—	—	—	—	—	—	$^1/_2$

(continued)

INTERNATIONAL CODE COUNCIL®
Copyright © 2019 ICC & NYSDOS. ALL RIGHTS RESERVED. Accessed by Lauren Gualdino (lgualdino@briarcliffmanor.org), (-) Order Number #100880972 on May 08, 2020 07:05 AM (PDT) pursuant to License Agreement with ICC & NYSDOS. No further reproduction, no

100880972

TABLE 721.1(3)—continued
MINIMUM PROTECTION FOR FLOOR AND ROOF SYSTEMS[a, q]

FLOOR OR ROOF CONSTRUCTION	ITEM NUMBER	CEILING CONSTRUCTION	THICKNESS OF FLOOR OR ROOF SLAB (inches)				MINIMUM THICKNESS OF CEILING (inches)			
			4 hours	3 hours	2 hours	1 hour	4 hours	3 hours	2 hours	1 hour
14. Plywood stressed skin panels consisting of $^{5}/_{8}$" -thick interior C-D (exterior glue) top stressed skin on 2" × 6" nominal (minimum) stringers. Adjacent panel edges joined with 8d common wire nails spaced 6" on center. Stringers spaced 12" maximum on center.	14-1.1	$^{1}/_{2}$" -thick wood fiberboard weighing 15 to 18 pounds per cubic foot installed with long dimension parallel to stringers or $^{3}/_{8}$" C-D (exterior glue) plywood glued and/or nailed to stringers. Nailing to be with 5d cooler[o] or wallboard[o] nails at 12" on center. Second layer of $^{1}/_{2}$" Type X gypsum wallboard[c] applied with long dimension perpendicular to joists and attached with 8d cooler[o] or wallboard[o] nails at 6" on center at end joints and 8" on center elsewhere. Wallboard joints staggered with respect to fiberboard joints.	—	—	—	—	—	—	—	1
15. Vermiculite concrete slab proportioned 1:4 (Portland cement to vermiculite aggregate) on a $1^{1}/_{2}$" -deep steel deck supported on individually protected steel framing. Maximum span of deck 6′-10" where deck is less than 0.019 inch (No. 26 carbon steel sheet gage) or greater. Slab reinforced with 4" × 8" 0.109/0.083" (No. $^{12}/_{14}$ B.W. gage) welded wire mesh.	15-1.1	None	—	—	—	3[j]	—	—	—	—
16. Perlite concrete slab proportioned 1:6 (Portland cement to perlite aggregate) on a $1^{1}/_{4}$" -deep steel deck supported on individually protected steel framing. Slab reinforced with 4" × 8" 0.109/0.083" (No. $^{12}/_{14}$ B.W. gage) welded wire mesh.	16-1.1	None	—	—	—	$3^{1}/_{2}$[j]	—	—	—	—

(continued)

INTERNATIONAL CODE COUNCIL®
Copyright © 2019 ICC & NYSDOS. ALL RIGHTS RESERVED. Accessed by Lauren Gualdino (lgualdino@briarcliffmanor.org), (-) Order Number #100880972 on May 08, 2020 07:05 AM (PDT) pursuant to License Agreement with ICC & NYSDOS. No further reproduction, no

100880972

TABLE 721.1(3)—continued
MINIMUM PROTECTION FOR FLOOR AND ROOF SYSTEMS[a, q]

FLOOR OR ROOF CONSTRUCTION	ITEM NUMBER	CEILING CONSTRUCTION	THICKNESS OF FLOOR OR ROOF SLAB (inches)				MINIMUM THICKNESS OF CEILING (inches)			
			4 hours	3 hours	2 hours	1 hour	4 hours	3 hours	2 hours	1 hour
17. Perlite concrete slab proportioned 1:6 (Portland cement to perlite aggregate) on a $^{9}/_{16}$"-deep steel deck supported by steel joists 4′ on center. Class A or B roof covering on top.	17-1.1	Perlite gypsum plaster on metal lath wire tied to $^{3}/_{4}$" furring channels attached with 0.065" (No. 16 B.W. gage) wire ties to lower chord of joists.	—	2[p]	2[p]	—	—	$^{7}/_{8}$	$^{3}/_{4}$	—
18. Perlite concrete slab proportioned 1:6 (Portland cement to perlite aggregate) on $1^{1}/_{4}$" -deep steel deck supported on individually protected steel framing. Maximum span of deck 6′-10" where deck is less than 0.019" (No. 26 carbon sheet steel gage) and 8′-0" where deck is 0.019" (No. 26 carbon sheet steel gage) or greater. Slab reinforced with 0.042" (No. 19 B.W. gage) hexagonal wire mesh. Class A or B roof covering on top.	18-1.1	None	—	$2^{1}/_{4}$[p]	$2^{1}/_{4}$[p]	—	—	—	—	—
19. Floor and beam construction consisting of 3" - deep cellular steel floor unit mounted on steel members with 1:4 (proportion of Portland cement to perlite aggregate) perlite-concrete floor slab on top.	19-1.1	Suspended envelope ceiling of perlite gypsum plaster on metal lath attached to $^{3}/_{4}$" cold-rolled channels, secured to $1^{1}/_{2}$" cold-rolled channels spaced 42" on center supported by 0.203 inch (No. 6 B.W. gage) wire 36" on center. Beams in envelope with 3" minimum airspace between beam soffit and lath have a 4-hour rating.	2[p]	—	—	—	1[l]	—	—	—

(continued)

INTERNATIONAL CODE COUNCIL®
Copyright © 2019 ICC & NYSDOS. ALL RIGHTS RESERVED. Accessed by Lauren Gualdino (lgualdino@briarcliffmanor.org), (-) Order Number #100880972 on May 08, 2020 07:05 AM (PDT) pursuant to License Agreement with ICC & NYSDOS. No further reproduction, no

100880972

TABLE 721.1(3)—continued
MINIMUM PROTECTION FOR FLOOR AND ROOF SYSTEMS[a, q]

FLOOR OR ROOF CONSTRUCTION	ITEM NUMBER	CEILING CONSTRUCTION	THICKNESS OF FLOOR OR ROOF SLAB (inches)				MINIMUM THICKNESS OF CEILING (inches)			
			4 hours	3 hours	2 hours	1 hour	4 hours	3 hours	2 hours	1 hour
20. Perlite concrete proportioned 1:6 (Portland cement to perlite aggregate) poured to $^1/_8$" thickness above top of corrugations of $1^5/_{16}$" -deep galvanized steel deck maximum span 8′-0" for 0.024" (No. 24 galvanized sheet gage) or 6′–0" for 0.019" (No. 26 galvanized sheet gage) with deck supported by individually protected steel framing. Approved polystyrene foam plastic insulation board having a flame spread not exceeding 75 (1" to 4" thickness) with vent holes that approximate 3 percent of the board surface area placed on top of perlite slurry. A 2′ by 4′ insulation board contains six $2^3/_4$" diameter holes. Board covered with $2^1/_4$" minimum perlite concrete slab. Slab reinforced with mesh consisting of 0.042" (No. 19 B.W. gage) galvanized steel wire twisted together to form 2" hexagons with straight 0.065" (No. 16 B.W. gage) galvanized steel wire woven into mesh and spaced 3". Alternate slab reinforcement shall be permitted to consist of 4" × 8", 0.109/0.238" (No. 12/4 B.W. gage), or 2" × 2", 0.083/0.083" (No. 14/14 B.W. gage) welded wire fabric. Class A or B roof covering on top.	20-1.1	None	—	—	Varies	—	—	—	—	—
21. Wood joists, wood I-joists, floor trusses and flat or pitched roof trusses spaced a maximum 24" o.c. with $^1/_2$" wood structural panels with exterior glue applied at right angles to top of joist or top chord of trusses with 8d nails. The wood structural panel thickness shall be not less than nominal $^1/_2$" nor less than required by Chapter 23.	21-1.1	Base layer $^5/_8$" Type X gypsum wallboard applied at right angles to joist or truss 24" o.c. with $1^1/_4$" Type S or Type W drywall screws 24" o.c. Face layer $^5/_8$" Type X gypsum wallboard or veneer base applied at right angles to joist or truss through base layer with $1^7/_8$" Type S or Type W drywall screws 12" o.c. at joints and intermediate joist or truss. Face layer Type G drywall screws placed 2" back on either side of face layer end joints, 12" o.c.	—	—	—	Varies	—	—	—	$1^1/_4$

(continued)

INTERNATIONAL CODE COUNCIL®
Copyright © 2019 ICC & NYSDOS. ALL RIGHTS RESERVED. Accessed by Lauren Gualdino (lgualdino@briarcliffmanor.org), (-) Order Number #100880972 on May 08, 2020 07:05 AM (PDT) pursuant to License Agreement with ICC & NYSDOS. No further reproduction, no

100880972

TABLE 721.1(3)—continued
MINIMUM PROTECTION FOR FLOOR AND ROOF SYSTEMS[a, q]

FLOOR OR ROOF CONSTRUCTION	ITEM NUMBER	CEILING CONSTRUCTION	THICKNESS OF FLOOR OR ROOF SLAB (inches)				MINIMUM THICKNESS OF CEILING (inches)			
			4 hours	3 hours	2 hours	1 hour	4 hours	3 hours	2 hours	1 hour
22. Steel joists, floor trusses and flat or pitched roof trusses spaced a maximum 24" o.c. with $^1/_2$" wood structural panels with exterior glue applied at right angles to top of joist or top chord of trusses with No. 8 screws. The wood structural panel thickness shall be not less than nominal $^1/_2$" nor less than required by Chapter 23.	22-1.1	Base layer $^5/_8$" Type X gypsum board applied at right angles to steel framing 24" on center with 1" Type S drywall screws spaced 24" on center. Face layer $^5/_8$" Type X gypsum board applied at right angles to steel framing attached through base layer with $1^5/_8$" Type S drywall screws 12" on center at end joints and intermediate joints and $1^1/_2$" Type G drywall screws 12 inches on center placed 2" back on either side of face layer end joints. Joints of the face layer are offset 24" from the joints of the base layer.	—	—	—	Varies	—	—	—	$1^1/_4$
23. Wood I-joist (minimum joist depth $9^1/_4$" with a minimum flange depth of $1^5/_{16}$" and a minimum flange cross-sectional area of 2.25 square inches) at 24" o.c. spacing with a minimum 1 × 4 ($^3/_4$" × 3.5" actual) ledger strip applied parallel to and covering the bottom of the bottom flange of each member, tacked in place. 2" mineral wool insulation, 3.5 pcf (nominal) installed adjacent to the bottom flange of the I-joist and supported by the 1 × 4 ledger strip.	23-1.1	$^1/_2$" deep single leg resilient channel 16" on center (channels doubled at wallboard end joints), placed perpendicular to the furring strip and joist and attached to each joist by $1^7/_8$" Type S drywall screws. $^5/_8$" Type C gypsum wallboard applied perpendicular to the channel with end joints staggered not less than 4′ and fastened with $1^1/_8$" Type S drywall screws spaced 7" on center. Wallboard joints to be taped and covered with joint compound.	—	—	—	Varies	—	—	—	$^5/_8$
24. Wood I-joist (minimum I-joist depth $9^1/_4$" with a minimum flange depth of $1^1/_2$" and a minimum flange cross-sectional area of 5.25 square inches; minimum web thickness of $^3/_8$") @ 24" o.c., $1^1/_2$" mineral wool insulation (2.5 pcf-nominal) resting on hat-shaped furring channels.	24-1.1	Minimum 0.026" thick hat-shaped channel 16" o.c. (channels doubled at wallboard end joints), placed perpendicular to the joist and attached to each joist by $1^1/_4$" Type S drywall screws. $^5/_8$" Type C gypsum wallboard applied perpendicular to the channel with end joints staggered and fastened with $1^1/_8$" Type S drywall screws spaced 12" o.c. in the field and 8" o.c. at the wallboard ends. Wallboard joints to be taped and covered with joint compound.	—	—	—	Varies	—	—	—	$^5/_8$
25. Wood I-joist (minimum I-joist depth $9^1/_4$" with a minimum flange depth of $1^1/_2$" and a minimum flange cross-sectional area of 5.25 square inches; minimum web thickness of $^7/_{16}$") @ 24" o.c., $1^1/_2$" mineral wool insulation (2.5 pcf-nominal) resting on resilient channels.	25-1.1	Minimum 0.019" thick resilient channel 16" o.c. (channels doubled at wallboard end joints), placed perpendicular to the joist and attached to each joist by $1^5/_8$" Type S drywall screws. $^5/_8$" Type C gypsum wallboard applied perpendicular to the channel with end joints staggered and fastened with 1" Type S drywall screws spaced 12" o.c. in the field and 8" o.c. at the wallboard ends. Wallboard joints to be taped and covered with joint compound.	—	—	—	Varies	—	—	—	$^5/_8$

(continued)

INTERNATIONAL CODE COUNCIL®
Copyright © 2019 ICC & NYSDOS. ALL RIGHTS RESERVED. Accessed by Lauren Gualdino (lgualdino@briarcliffmanor.org), (-) Order Number #100880972 on May 08, 2020 07:05 AM (PDT) pursuant to License Agreement with ICC & NYSDOS. No further reproduction, no

100880972

TABLE 721.1(3)—continued
MINIMUM PROTECTION FOR FLOOR AND ROOF SYSTEMS[a, q]

FLOOR OR ROOF CONSTRUCTION	ITEM NUMBER	CEILING CONSTRUCTION	THICKNESS OF FLOOR OR ROOF SLAB (inches)				MINIMUM THICKNESS OF CEILING (inches)			
			4 hours	3 hours	2 hours	1 hour	4 hours	3 hours	2 hours	1 hour
26. Wood I-joist (minimum I-joist depth $9^1/_4$" with a minimum flange thickness of $1^1/_2$" and a minimum flange cross-sectional area of 2.25 square inches; minimum web thickness of $^3/_8$") @ 24" o.c.	26-1.1	Two layers of $^1/_2$" Type X gypsum wallboard applied with the long dimension perpendicular to the I-joists with end joints staggered. The base layer is fastened with $1^5/_8$" Type S drywall screws spaced 12" o.c. and the face layer is fastened with 2" Type S drywall screws spaced 12" o.c. in the field and 8" o.c. on the edges. Face layer end joints shall not occur on the same I-joist as base layer end joints and edge joints shall be offset 24" from base layer joints. Face layer to also be attached to base layer with $1^1/_2$" Type G drywall screws spaced 8" o.c. placed 6" from face layer end joints. Face layer wallboard joints to be taped and covered with joint compound.	—	—	—	Varies	—	—	—	1
27. Wood I-joist (minimum I-joist depth $9^1/_2$" with a minimum flange depth of $1^5/_{16}$" and a minimum flange cross-sectional area of 1.95 square inches; minimum web thickness of $^3/_8$") @ 24" o.c.	27-1.1	Minimum 0.019" thick resilient channel 16" o.c. (channels doubled at wallboard end joints), placed perpendicular to the joist and attached to each joist by $1^1/_4$" Type S drywall screws. Two layers of $^1/_2$" Type X gypsum wallboard applied with the long dimension perpendicular to the resilient channels with end joints staggered. The base layer is fastened with $1^1/_4$" Type S drywall screws spaced 12" o.c. and the face layer is fastened with $1^5/_8$" Type S drywall screws spaced 12" o.c. Face layer end joints shall not occur on the same I-joist as base layer end joints and edge joints shall be offset 24" from base layer joints. Face layer to also be attached to base layer with $1^1/_2$" Type G drywall screws spaced 8" o.c. placed 6" from face layer end joints. Face layer wallboard joints to be taped and covered with joint compound.	—	—	—	Varies	—	—	—	1

(continued)

INTERNATIONAL CODE COUNCIL®
Copyright © 2019 ICC & NYSDOS. ALL RIGHTS RESERVED. Accessed by Lauren Gualdino (lgualdino@briarcliffmanor.org), (-) Order Number #100880972 on May 08, 2020 07:05 AM (PDT) pursuant to License Agreement with ICC & NYSDOS. No further reproduction, no

100880972

TABLE 721.1(3)—continued
MINIMUM PROTECTION FOR FLOOR AND ROOF SYSTEMS[a, q]

FLOOR OR ROOF CONSTRUCTION	ITEM NUMBER	CEILING CONSTRUCTION	THICKNESS OF FLOOR OR ROOF SLAB (inches)				MINIMUM THICKNESS OF CEILING (inches)			
			4 hours	3 hours	2 hours	1 hour	4 hours	3 hours	2 hours	1 hour
28. Wood I-joist (minimum I-joist depth $9^1/_4$" with a minimum flange depth of $1^1/_2$" and a minimum flange cross-sectional area of 2.25 square inches; minimum web thickness of $^3/_8$") @ 24" o.c. Unfaced fiberglass insulation or mineral wool insulation is installed between the I-joists supported on the upper surface of the flange by stay wires spaced 12" o.c.	28-1.1	Base layer of $^5/_8$" Type C gypsum wallboard attached directly to I-joists with $1^5/_8$" Type S drywall screws spaced 12" o.c. with ends staggered. Minimum 0.0179" thick hat-shaped $^7/_8$-inch furring channel 16" o.c. (channels doubled at wallboard end joints), placed perpendicular to the joist and attached to each joist by $1^5/_8$" Type S drywall screws after the base layer of gypsum wallboard has been applied. The middle and face layers of $^5/_8$" Type C gypsum wallboard applied perpendicular to the channel with end joints staggered. The middle layer is fastened with 1" Type S drywall screws spaced 12" o.c. The face layer is applied parallel to the middle layer but with the edge joints offset 24" from those of the middle layer and fastened with $1^5/_8$" Type S drywall screws 8" o.c. The joints shall be taped and covered with joint compound.	—	—	—	Varies	—	—	$2^3/_4$	—
29. Channel-shaped 18 gage steel joists (minimum depth 8") spaced a maximum 24" o.c. supporting tongue-and-groove wood structural panels (nominal minimum $^3/_4$" thick) applied perpendicular to framing members. Structural panels attached with $1^5/_8$" Type S-12 screws spaced 12" o.c.	29-1.1	Base layer $^5/_8$" Type X gypsum board applied perpendicular to bottom of framing members with $1^1/_8$" Type S-12 screws spaced 12" o.c. Second layer $^5/_8$" Type X gypsum board attached perpendicular to framing members with $1^5/_8$" Type S-12 screws spaced 12" o.c. Second layer joints offset 24" from base layer. Third layer $^5/_8$" Type X gypsum board attached perpendicular to framing members with $2^3/_8$" Type S-12 screws spaced 12" o.c. Third layer joints offset 12" from second layer joints. Hat-shaped $^7/_8$-inch rigid furring channels applied at right angles to framing members over third layer with two $2^3/_8$" Type S-12 screws at each framing member. Face layer $^5/_8$" Type X gypsum board applied at right angles to furring channels with $1^1/_8$" Type S screws spaced 12" o.c.	—	—	Varies	—	—	—	$3^3/_8$	—

(continued)

INTERNATIONAL CODE COUNCIL®
Copyright © 2019 ICC & NYSDOS. ALL RIGHTS RESERVED. Accessed by Lauren Gualdino (lgualdino@briarcliffmanor.org), (-) Order Number #100880972 on May 08, 2020 07:05 AM (PDT) pursuant to License Agreement with ICC & NYSDOS. No further reproduction, no

100880972

TABLE 721.1(3)—continued
MINIMUM PROTECTION FOR FLOOR AND ROOF SYSTEMS[a, q]

FLOOR OR ROOF CONSTRUCTION	ITEM NUMBER	CEILING CONSTRUCTION	THICKNESS OF FLOOR OR ROOF SLAB (inches)				MINIMUM THICKNESS OF CEILING (inches)			
			4 hours	3 hours	2 hours	1 hour	4 hours	3 hours	2 hours	1 hour
30. Wood I-joist (minimum I-joist depth $9^1/_2$" with a minimum flange depth of $1^1/_2$" and a minimum flange cross-sectional area of 2.25 square inches; minimum web thickness of $^3/_8$") @ 24" o.c. Fiberglass insulation placed between I-joists supported by the resilient channels.	30-1.1	Minimum 0.019" thick resilient channel 16" o.c. (channels doubled at wallboard end joints), placed perpendicular to the joists and attached to each joist by $1^1/_4$" Type S drywall screws. Two layers of $^1/_2$" Type X gypsum wallboard applied with the long dimension perpendicular to the resilient channels with end joints staggered. The base layer is fastened with $1^1/_4$" Type S drywall screws spaced 12" o.c. and the face layer is fastened with $1^5/_8$" Type S drywall screws spaced 12" o.c. Face layer end joints shall not occur on the same I-joist as base layer end joints and edge joints shall be offset 24" from base layer joints. Face layer to be attached to base layer with $1^1/_2$" Type G drywall screws spaced 8" o.c. placed 6" from face layer end joints. Face layer wallboard joints to be taped and covered with joint compound.	—	—	—	Varies	—	—	—	1

For SI: 1 inch = 25.4 mm, 1 foot = 304.8 mm, 1 pound = 0.454 kg, 1 cubic foot = 0.0283 m^3, 1 pound per square inch = 6.895 kPa, 1 pound per linear foot = 1.4882 kg/m.

a. Staples with equivalent holding power and penetration shall be permitted to be used as alternate fasteners to nails for attachment to wood framing.

b. Where the slab is in an unrestrained condition, minimum reinforcement cover shall be not less than $1^5/_8$ inches for 4 hours (siliceous aggregate only); $1^1/_4$ inches for 4 and 3 hours; 1 inch for 2 hours (siliceous aggregate only); and $^3/_4$ inch for all other restrained and unrestrained conditions.

c. For all of the construction with gypsum wallboard described in this table, gypsum base for veneer plaster of the same size, thickness and core type shall be permitted to be substituted for gypsum wallboard, provided that attachment is identical to that specified for the wallboard, and the joints on the face layer are reinforced and the entire surface is covered with not less than $^1/_{16}$-inch gypsum veneer plaster.

d. Slab thickness over steel joists measured at the joists for metal lath form and at the top of the form for steel form units.

e. (a) The maximum allowable stress level for H-Series joists shall not exceed 22,000 psi.
(b) The allowable stress for K-Series joists shall not exceed 26,000 psi, the nominal depth of such joist shall be not less than 10 inches and the nominal joist weight shall be not less than 5 pounds per linear foot.

f. Cement plaster with 15 pounds of hydrated lime and 3 pounds of approved additives or admixtures per bag of cement.

g. Gypsum wallboard ceilings attached to steel framing shall be permitted to be suspended with $1^1/_2$-inch cold-formed carrying channels spaced 48 inches on center, that are suspended with No. 8 SWG galvanized wire hangers spaced 48 inches on center. Cross-furring channels are tied to the carrying channels with No. 18 SWG galvanized wire hangers spaced 48 inches on center. Cross-furring channels are tied to the carrying channels with No. 18 SWG galvanized wire (double strand) and spaced as required for direct attachment to the framing. This alternative is applicable to those steel framing assemblies recognized under Note q.

h. Six-inch hollow clay tile with 2-inch concrete slab above.

i. Four-inch hollow clay tile with $1^1/_2$-inch concrete slab above.

j. Thickness measured to bottom of steel form units.

k. Five-eighths inch of vermiculite gypsum plaster plus $^1/_2$ inch of approved vermiculite acoustical plastic.

l. Furring channels spaced 12 inches on center.

m. Double wood floor shall be permitted to be either of the following:
(a) Subfloor of 1-inch nominal boarding, a layer of asbestos paper weighing not less than 14 pounds per 100 square feet and a layer of 1-inch nominal tongue-and-groove finished flooring.
(b) Subfloor of 1-inch nominal tongue-and-groove boarding or $^{15}/_{32}$-inch wood structural panels with exterior glue and a layer of 1-inch nominal tongue-and-groove finished flooring or $^{19}/_{32}$-inch wood structural panel finish flooring or a layer of Type I Grade M-1 particleboard not less than $^5/_8$-inch thick.

n. The ceiling shall be permitted to be omitted over unusable space, and flooring shall be permitted to be omitted where unusable space occurs above.

o. For properties of cooler or wallboard nails, see ASTM C514, ASTM C547 or ASTM F1667.

p. Thickness measured on top of steel deck unit.

q. Generic fire-resistance ratings (those not designated as PROPRIETARY* in the listing) in the GA 600 shall be accepted as if herein listed.

INTERNATIONAL CODE COUNCIL®
Copyright © 2019 ICC & NYSDOS. ALL RIGHTS RESERVED. Accessed by Lauren Gualdino (lgualdino@briarcliffmanor.org), (-) Order Number #100880972 on May 08, 2020 07:05 AM (PDT) pursuant to License Agreement with ICC & NYSDOS. No further reproduction, no

100880972

TABLE 722.2.1.1
MINIMUM EQUIVALENT THICKNESS OF CAST-IN-PLACE OR PRECAST CONCRETE WALLS, LOAD-BEARING OR NONLOAD-BEARING

CONCRETE TYPE	MINIMUM SLAB THICKNESS (inches) FOR FIRE-RESISTANCE RATING OF				
	1 hour	1 1/2 hours	2 hours	3 hours	4 hours
Siliceous	3.5	4.3	5.0	6.2	7.0
Carbonate	3.2	4.0	4.6	5.7	6.6
Sand-lightweight	2.7	3.3	3.8	4.6	5.4
Lightweight	2.5	3.1	3.6	4.4	5.1

For SI: 1 inch = 25.4 mm.

722.2.1.1.2 Core spaces filled. Where all of the core spaces of hollow-core wall panels are filled with loose-fill material, such as expanded shale, clay or slag, or vermiculite or perlite, the *fire-resistance rating* of the wall is the same as that of a solid wall of the same concrete type and of the same overall thickness.

722.2.1.1.3 Tapered cross sections. The thickness of panels with tapered cross sections shall be that determined at a distance $2t$ or 6 inches (152 mm), whichever is less, from the point of minimum thickness, where t is the minimum thickness.

722.2.1.1.4 Ribbed or undulating surfaces. The equivalent thickness of panels with ribbed or undulating surfaces shall be determined by one of the following expressions:

For $s \geq 4t$, the thickness to be used shall be t

For $s \leq 2t$, the thickness to be used shall be t_e

For $4t > s > 2t$, the thickness to be used shall be

$$t + \left(\frac{4t}{s} - 1\right)(t_e - t) \qquad \textbf{(Equation 7-3)}$$

where:

s = Spacing of ribs or undulations.

t = Minimum thickness.

t_e = Equivalent thickness of the panel calculated as the net cross-sectional area of the panel divided by the width, in which the maximum thickness used in the calculation shall not exceed $2t$.

722.2.1.2 Multiwythe walls. For walls that consist of two wythes of different types of concrete, the *fire-resistance ratings* shall be permitted to be determined from Figure 722.2.1.2.

722.2.1.2.1 Two or more wythes. The *fire-resistance rating* for wall panels consisting of two or more wythes shall be permitted to be determined by the formula:

$$R = (R_1^{0.59} + R_2^{0.59} + \ldots + R_n^{0.59})^{1.7} \qquad \textbf{(Equation 7-4)}$$

where:

R = The fire endurance of the assembly, minutes.

R_1, R_2, and R_n = The fire endurances of the individual wythes, minutes. Values of $R_n^{0.59}$ for use in Equation 7-4 are given in Table 722.2.1.2(1). Calculated *fire-resistance ratings* are shown in Table 722.2.1.2(2).

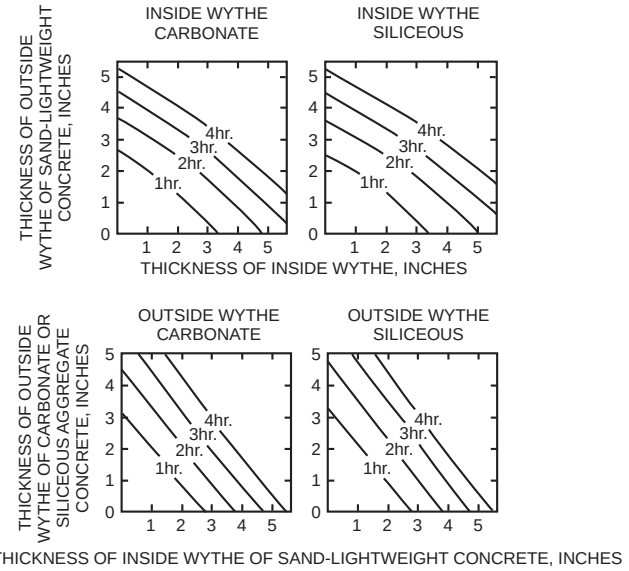

For SI: 1 inch = 25.4 mm.

FIGURE 722.2.1.2
FIRE-RESISTANCE RATINGS OF TWO-WYTHE CONCRETE WALLS

TABLE 722.2.1.2(1)
VALUES OF $R_n^{0.59}$ FOR USE IN EQUATION 7-4

TYPE OF MATERIAL	THICKNESS OF MATERIAL (inches)											
	1 1/2	2	2 1/2	3	3 1/2	4	4 1/2	5	5 1/2	6	6 1/2	7
Siliceous aggregate concrete	5.3	6.5	8.1	9.5	11.3	13.0	14.9	16.9	18.8	20.7	22.8	25.1
Carbonate aggregate concrete	5.5	7.1	8.9	10.4	12.0	14.0	16.2	18.1	20.3	21.9	24.7	27.2[c]
Sand-lightweight concrete	6.5	8.2	10.5	12.8	15.5	18.1	20.7	23.3	26.0[c]	Note c	Note c	Note c
Lightweight concrete	6.6	8.8	11.2	13.7	16.5	19.1	21.9	24.7	27.8[c]	Note c	Note c	Note c
Insulating concrete[a]	9.3	13.3	16.6	18.3	23.1	26.5[c]	Note c	Note c	Note c	Note c	Note c	Note c
Airspace[b]	—	—	—	—	—	—	—	—	—	—	—	—

For SI: 1 inch = 25.4 mm, 1 pound per cubic foot = 16.02 kg/m^3.

a. Dry unit weight of 35 pcf or less and consisting of cellular, perlite or vermiculite concrete.

b. The $R_n^{0.59}$ value for one 1/2" to 3 1/2" airspace is 3.3. The $R_n^{0.59}$ value for two 1/2" to 3 1/2" airspaces is 6.7.

c. The fire-resistance rating for this thickness exceeds 4 hours.

INTERNATIONAL CODE COUNCIL®
Copyright © 2019 ICC & NYSDOS. ALL RIGHTS RESERVED. Accessed by Lauren Gualdino (lgualdino@briarcliffmanor.org), (-) Order Number #100880972 on May 08, 2020 07:05 AM (PDT) pursuant to License Agreement with ICC & NYSDOS. No further reproduction, no

100880972

TABLE 722.2.1.2(2)
FIRE-RESISTANCE RATINGS BASED ON $R^{0.59}$

R^a, MINUTES	$R^{0.59}$
60	11.20
120	16.85
180	21.41
240	25.37

a. Based on Equation 7-4.

722.2.1.2.2 Foam plastic insulation. The *fire-resistance ratings* of precast concrete wall panels consisting of a layer of foam plastic insulation sandwiched between two wythes of concrete shall be permitted to be determined by use of Equation 7-4. Foam plastic insulation with a total thickness of less than 1 inch (25 mm) shall be disregarded. The R_n value for thickness of foam plastic insulation of 1 inch (25 mm) or greater, for use in the calculation, is 5 minutes; therefore $R_n^{0.59} = 2.5$.

722.2.1.3 Joints between precast wall panels. Joints between precast concrete wall panels that are not insulated as required by this section shall be considered as openings in walls. Uninsulated joints shall be included in determining the percentage of openings permitted by Table 705.8. Where openings are not permitted or are required by this code to be protected, the provisions of this section shall be used to determine the amount of joint insulation required. Insulated joints shall not be considered openings for purposes of determining compliance with the allowable percentage of openings in Table 705.8.

722.2.1.3.1 Ceramic fiber joint protection. Figure 722.2.1.3.1 shows thicknesses of *ceramic fiber blankets* to be used to insulate joints between precast concrete wall panels for various panel thicknesses and for joint widths of $^3/_8$ inch (9.5 mm) and 1 inch (25 mm) for *fire-resistance ratings* of 1 hour to 4 hours. For joint widths between $^3/_8$ inch (9.5 mm) and 1 inch (25 mm), the thickness of *ceramic fiber blanket* is allowed to be determined by direct interpolation. Other tested and labeled materials are acceptable in place of *ceramic fiber blankets*.

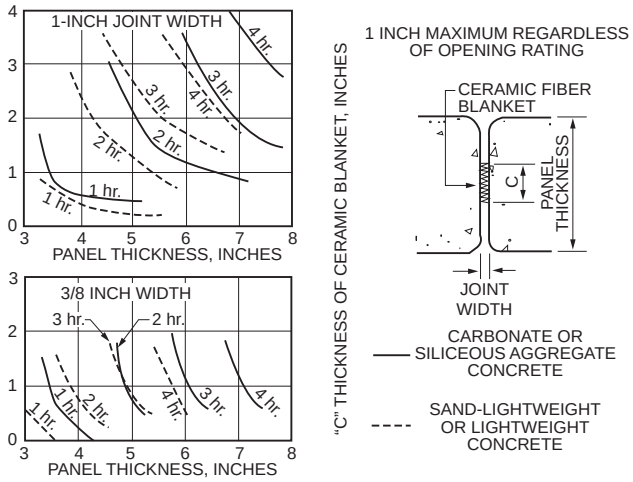

For SI: 1 inch = 25.4 mm.

FIGURE 722.2.1.3.1
CERAMIC FIBER JOINT PROTECTION

722.2.1.4 Walls with gypsum wallboard or plaster finishes. The *fire-resistance rating* of cast-in-place or precast concrete walls with finishes of gypsum wallboard or plaster applied to one or both sides shall be permitted to be calculated in accordance with the provisions of this section.

722.2.1.4.1 Nonfire-exposed side. Where the finish of gypsum wallboard or plaster is applied to the side of the wall not exposed to fire, the contribution of the finish to the total *fire-resistance rating* shall be determined as follows: The thickness of the finish shall first be corrected by multiplying the actual thickness of the finish by the applicable factor determined from Table 722.2.1.4(1) based on the type of aggregate in the concrete. The corrected thickness of finish shall then be added to the actual or equivalent thickness of concrete and *fire-resistance rating* of the concrete and finish determined from Tables 722.2.1.1 and 722.2.1.2(1) and Figure 722.2.1.2.

INTERNATIONAL CODE COUNCIL®
Copyright © 2019 ICC & NYSDOS. ALL RIGHTS RESERVED. Accessed by Lauren Gualdino (lgualdino@briarcliffmanor.org), (-) Order Number #100880972 on May 08, 2020 07:05 AM (PDT) pursuant to License Agreement with ICC & NYSDOS. No further reproduction, no

100880972

TABLE 722.2.1.4(1)
MULTIPLYING FACTOR FOR FINISHES ON NONFIRE-EXPOSED SIDE OF WALL

TYPE OF FINISH APPLIED TO CONCRETE OR CONCRETE MASONRY WALL	TYPE OF AGGREGATE USED IN CONCRETE OR CONCRETE MASONRY			
	Concrete: siliceous or carbonate Concrete Masonry: siliceous or carbonate; solid clay brick	Concrete: sand-lightweight Concrete Masonry: clay tile; hollow clay brick; concrete masonry units of expanded shale and < 20% sand	Concrete: lightweight Concrete Masonry: concrete masonry units of expanded shale, expanded clay, expanded slag, or pumice < 20% sand	Concrete Masonry: concrete masonry units of expanded slag, expanded clay, or pumice
Portland cement-sand plaster	1.00	0.75[a]	0.75[a]	0.50[a]
Gypsum-sand plaster	1.25	1.00	1.00	1.00
Gypsum-vermiculite or perlite plaster	1.75	1.50	1.25	1.25
Gypsum wallboard	3.00	2.25	2.25	2.25

For SI: 1 inch = 25.4 mm.

a. For Portland cement-sand plaster $^5/_8$ inch or less in thickness and applied directly to the concrete or concrete masonry on the nonfire-exposed side of the wall, the multiplying factor shall be 1.00.

722.2.1.4.2 Fire-exposed side. Where gypsum wallboard or plaster is applied to the fire-exposed side of the wall, the contribution of the finish to the total *fire-resistance rating* shall be determined as follows: The time assigned to the finish as established by Table 722.2.1.4(2) shall be added to the *fire-resistance rating* determined from Tables 722.2.1.1 and 722.2.1.2(1) and Figure 722.2.1.2 for the concrete alone, or to the rating determined in Section 722.2.1.4.1 for the concrete and finish on the nonfire-exposed side.

722.2.1.4.3 Nonsymmetrical assemblies. For a wall without finish on one side or having different types or thicknesses of finish on each side, the calculation procedures of Sections 722.2.1.4.1 and 722.2.1.4.2 shall be performed twice, assuming either side of the wall to be the fire-exposed side. The *fire-resistance rating* of the wall shall not exceed the lower of the two values.

Exception: For an *exterior wall* with a *fire separation distance* greater than 5 feet (1524 mm) the fire shall be assumed to occur on the interior side only.

722.2.1.4.4 Minimum concrete fire-resistance rating. Where finishes applied to one or both sides of a concrete wall contribute to the *fire-resistance rating*, the concrete alone shall provide not less than one-half of the total required *fire-resistance rating*. Additionally, the contribution to the *fire resistance* of the finish on the nonfire-exposed side of a *load-bearing wall* shall not exceed one-half the contribution of the concrete alone.

722.2.1.4.5 Concrete finishes. Finishes on concrete walls that are assumed to contribute to the total *fire-resistance rating* of the wall shall comply with the installation requirements of Section 722.3.2.5.

TABLE 722.2.1.4(2)
TIME ASSIGNED TO FINISH MATERIALS ON FIRE-EXPOSED SIDE OF WALL

FINISH DESCRIPTION	TIME (minutes)
Gypsum wallboard	
$^3/_8$ inch	10
$^1/_2$ inch	15
$^5/_8$ inch	20
2 layers of $^3/_8$ inch	25
1 layer of $^3/_8$ inch, 1 layer of $^1/_2$ inch	35
2 layers of $^1/_2$ inch	40
Type X gypsum wallboard	
$^1/_2$ inch	25
$^5/_8$ inch	40
Portland cement-sand plaster applied directly to concrete masonry	See Note a
Portland cement-sand plaster on metal lath	
$^3/_4$ inch	20
$^7/_8$ inch	25
1 inch	30
Gypsum sand plaster on $^3/_8$-inch gypsum lath	
$^1/_2$ inch	35
$^5/_8$ inch	40
$^3/_4$ inch	50
Gypsum sand plaster on metal lath	
$^3/_4$ inch	50
$^7/_8$ inch	60
1 inch	80

For SI: 1 inch = 25.4 mm.

a. The actual thickness of Portland cement-sand plaster, provided that it is $^5/_8$ inch or less in thickness, shall be permitted to be included in determining the equivalent thickness of the masonry for use in Table 722.3.2.

722.2.2 Concrete floor and roof slabs. Reinforced and prestressed floors and roofs shall comply with Section 722.2.2.1. Multicourse floors and roofs shall comply with Sections 722.2.2.2 and 722.2.2.3, respectively.

INTERNATIONAL CODE COUNCIL®
Copyright © 2019 ICC & NYSDOS. ALL RIGHTS RESERVED. Accessed by Lauren Gualdino (lgualdino@briarcliffmanor.org), (-) Order Number #100880972 on May 08, 2020 07:05 AM (PDT) pursuant to License Agreement with ICC & NYSDOS. No further reproduction, no

100880972

722.2.2.1 Reinforced and prestressed floors and roofs. The minimum thicknesses of reinforced and prestressed concrete floor or roof slabs for *fire-resistance ratings* of 1 hour to 4 hours are shown in Table 722.2.2.1.

Exception: Minimum thickness shall not be required for floors and ramps within parking garages constructed in accordance with Sections 406.5 and 406.6.

TABLE 722.2.2.1
MINIMUM SLAB THICKNESS (inches)

CONCRETE TYPE	FIRE-RESISTANCE RATING (hours)				
	1	1 1/2	2	3	4
Siliceous	3.5	4.3	5	6.2	7
Carbonate	3.2	4	4.6	5.7	6.6
Sand-lightweight	2.7	3.3	3.8	4.6	5.4
Lightweight	2.5	3.1	3.6	4.4	5.1

For SI: 1 inch = 25.4 mm.

722.2.2.1.1 Hollow-core prestressed slabs. For hollow-core prestressed concrete slabs in which the cores are of constant cross section throughout the length, the equivalent thickness shall be permitted to be obtained by dividing the net cross-sectional area of the slab including grout in the joints, by its width.

722.2.2.1.2 Slabs with sloping soffits. The thickness of slabs with sloping soffits (see Figure 722.2.2.1.2) shall be determined at a distance 2*t* or 6 inches (152 mm), whichever is less, from the point of minimum thickness, where *t* is the minimum thickness.

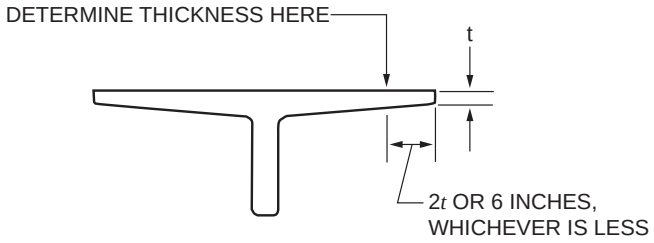

For SI: 1 inch = 25.4 mm.

FIGURE 722.2.2.1.2
DETERMINATION OF SLAB THICKNESS FOR SLOPING SOFFITS

722.2.2.1.3 Slabs with ribbed soffits. The thickness of slabs with ribbed or undulating soffits (see Figure 722.2.2.1.3) shall be determined by one of the following expressions, whichever is applicable:

For $s > 4t$, the thickness to be used shall be t

For $s \le 2t$, the thickness to be used shall be t_e

For $4t > s > 2t$, the thickness to be used shall be

$$t + \left(\frac{4t}{s} - 1\right)(t_e - t) \qquad \textbf{(Equation 7-5)}$$

where:

s = Spacing of ribs or undulations.

t = Minimum thickness.

t_e = Equivalent thickness of the slab calculated as the net area of the slab divided by the width, in which the maximum thickness used in the calculation shall not exceed 2t.

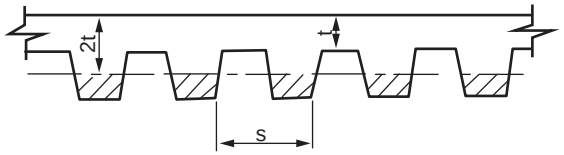

NEGLECT SHADED AREA IN CALCULATION OF EQUIVALENT THICKNESS

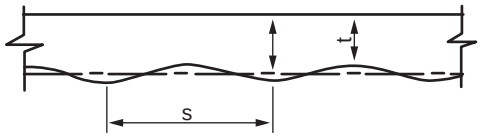

For SI: 1 inch = 25.4 mm.

FIGURE 722.2.2.1.3
SLABS WITH RIBBED OR UNDULATING SOFFITS

722.2.2.2 Multicourse floors. The *fire-resistance ratings* of floors that consist of a base slab of concrete with a topping (overlay) of a different type of concrete shall comply with Figure 722.2.2.2.

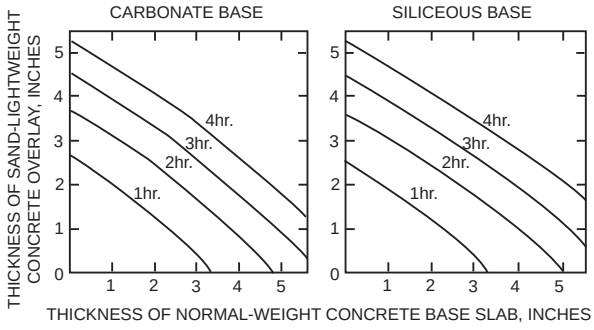

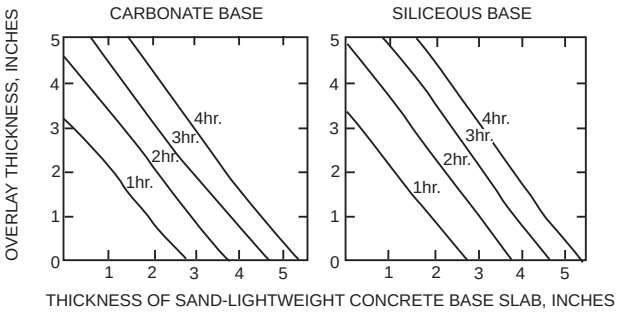

For SI: 1 inch = 25.4 mm.

FIGURE 722.2.2.2
FIRE-RESISTANCE RATINGS FOR TWO-COURSE CONCRETE FLOORS

722.2.2.3 Multicourse roofs. The *fire-resistance ratings* of roofs that consist of a base slab of concrete with a topping (overlay) of an insulating concrete or with an insulating board and built-up roofing shall comply with Figures 722.2.2.3(1) and 722.2.2.3(2).

INTERNATIONAL CODE COUNCIL®
Copyright © 2019 ICC & NYSDOS. ALL RIGHTS RESERVED. Accessed by Lauren Gualdino (lgualdino@briarcliffmanor.org), (-) Order Number #100880972 on May 08, 2020 07:05 AM (PDT) pursuant to License Agreement with ICC & NYSDOS. No further reproduction, no

100880972

722.2.2.3.1 Heat transfer. For the transfer of heat, three-ply built-up roofing contributes 10 minutes to the *fire-resistance rating*. The *fire-resistance rating* for concrete assemblies such as those shown in Figure 722.2.2.3(1) shall be increased by 10 minutes. This increase is not applicable to those shown in Figure 722.2.2.3(2).

722.2.2.4 Joints in precast slabs. Joints between adjacent precast concrete slabs need not be considered in calculating the slab thickness provided that a concrete topping not less than 1 inch (25 mm) thick is used. Where concrete topping is not used, joints must be grouted to a depth of not less than one-third the slab thickness at the joint, but not less than 1 inch (25 mm), or the joints must be made fire resistant by other *approved* methods.

722.2.3 Concrete cover over reinforcement. The minimum thickness of concrete cover over reinforcement in concrete slabs, reinforced beams and prestressed beams shall comply with this section.

722.2.3.1 Slab cover. The minimum thickness of concrete cover to the positive moment reinforcement shall comply with Table 722.2.3(1) for reinforced concrete and Table 722.2.3(2) for prestressed concrete. These tables are applicable for solid or hollow-core one-way or two-way slabs with flat undersurfaces. These tables are applicable to slabs that are either cast in place or precast. For precast prestressed concrete not covered elsewhere, the procedures contained in PCI MNL 124 shall be acceptable.

722.2.3.2 Reinforced beam cover. The minimum thickness of concrete cover to the positive moment reinforcement (bottom steel) for reinforced concrete beams is shown in Table 722.2.3(3) for *fire-resistance ratings* of 1 hour to 4 hours.

722.2.3.3 Prestressed beam cover. The minimum thickness of concrete cover to the positive moment prestressing tendons (bottom steel) for restrained and unrestrained prestressed concrete beams and stemmed units shall comply with the values shown in Tables 722.2.3(4) and 722.2.3(5) for *fire-resistance ratings* of 1 hour to 4 hours. Values in Table 722.2.3(4) apply to beams 8 inches (203 mm) or greater in width. Values in Table 722.2.3(5) apply to beams or stems of any width, provided that the cross-section area is not less than 40 square inches (25 806 mm^2). In case of differences between the values determined from Table 722.2.3(4) or 722.2.3(5), it is permitted to use the smaller value. The concrete cover shall be calculated in accordance with Section 722.2.3.3.1. The minimum

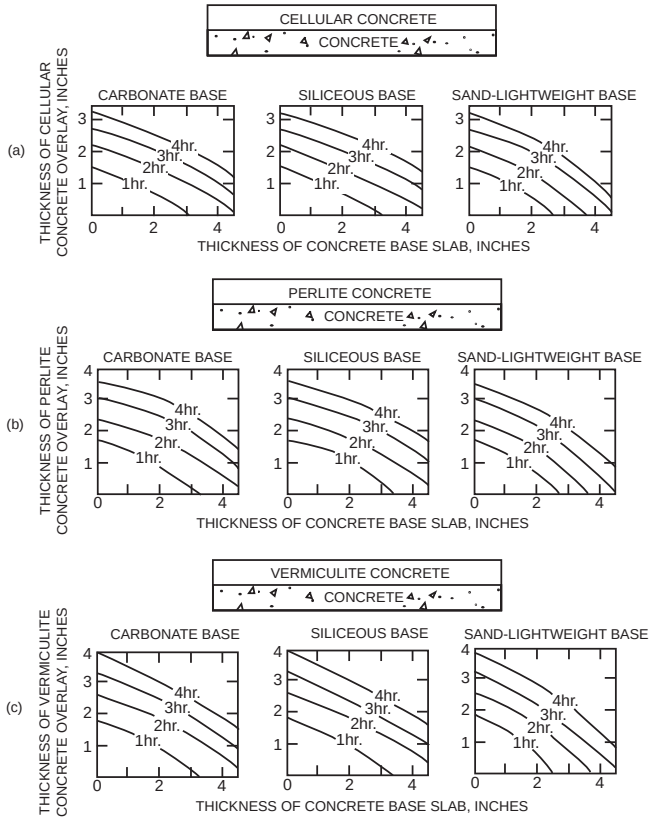

For SI: 1 inch = 25.4 mm.

FIGURE 722.2.2.3(1)
FIRE-RESISTANCE RATINGS FOR CONCRETE ROOF ASSEMBLIES

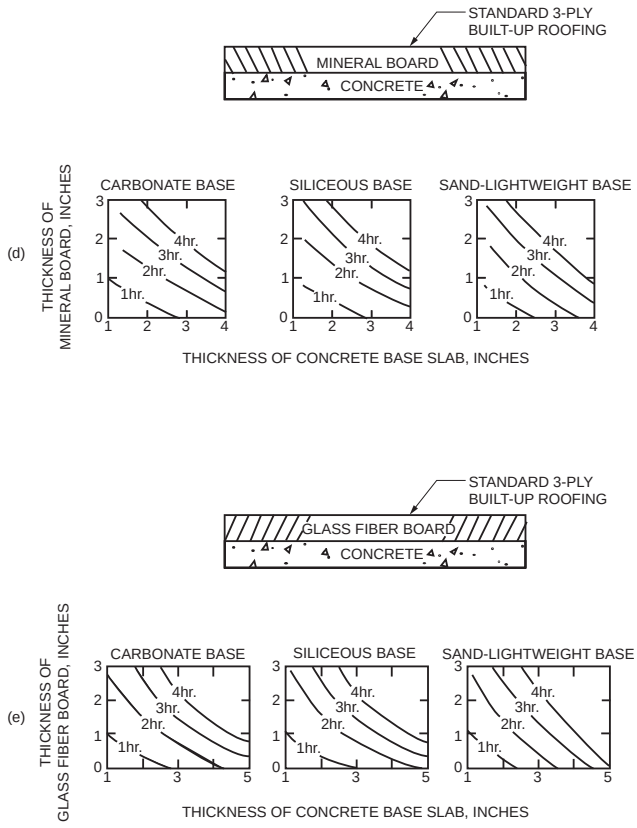

For SI: 1 inch = 25.4 mm.

FIGURE 722.2.2.3(2)
FIRE-RESISTANCE RATINGS FOR CONCRETE ROOF ASSEMBLIES

INTERNATIONAL CODE COUNCIL®
Copyright © 2019 ICC & NYSDOS. ALL RIGHTS RESERVED. Accessed by Lauren Gualdino (lgualdino@briarcliffmanor.org), (-) Order Number #100880972 on May 08, 2020 07:05 AM (PDT) pursuant to License Agreement with ICC & NYSDOS. No further reproduction, no

100880972

concrete cover for nonprestressed reinforcement in prestressed concrete beams shall comply with Section 722.2.3.2.

722.2.3.3.1 Calculating concrete cover. The concrete cover for an individual tendon is the minimum thickness of concrete between the surface of the tendon and the fire-exposed surface of the beam, except that for ungrouted ducts, the assumed cover thickness is the minimum thickness of concrete between the surface of the duct and the fire-exposed surface of the beam. For beams in which two or more tendons are used, the cover is assumed to be the average of the minimum cover of the individual tendons. For corner tendons (tendons equal distance from the bottom and side), the minimum cover used in the calculation shall be one-half the actual value. For stemmed members with two or more prestressing tendons located along the vertical centerline of the stem, the average cover shall be the distance from the bottom of the member to the centroid of the tendons. The actual cover for any individual tendon shall be not less than one-half the smaller value shown in Tables 722.2.3(4) and 722.2.3(5), or 1 inch (25 mm), whichever is greater.

722.2.4 Concrete columns. Concrete columns shall comply with this section.

722.2.4.1 Minimum size. The minimum overall dimensions of reinforced concrete columns for *fire-resistance ratings* of 1 hour to 4 hours for exposure to fire on all sides shall comply with this section.

TABLE 722.2.3(1)
COVER THICKNESS FOR REINFORCED CONCRETE FLOOR OR ROOF SLABS (inches)

CONCRETE AGGREGATE TYPE	FIRE-RESISTANCE RATING (hours)									
	Restrained					Unrestrained				
	1	1 1/2	2	3	4	1	1 1/2	2	3	4
Siliceous	3/4	3/4	3/4	3/4	3/4	3/4	3/4	1	1 1/4	1 5/8
Carbonate	3/4	3/4	3/4	3/4	3/4	3/4	3/4	3/4	1 1/4	1 1/4
Sand-lightweight or lightweight	3/4	3/4	3/4	3/4	3/4	3/4	3/4	3/4	1 1/4	1 1/4

For SI: 1 inch = 25.4 mm.

TABLE 722.2.3(2)
COVER THICKNESS FOR PRESTRESSED CONCRETE FLOOR OR ROOF SLABS (inches)

CONCRETE AGGREGATE TYPE	FIRE-RESISTANCE RATING (hours)									
	Restrained					Unrestrained				
	1	1 1/2	2	3	4	1	1 1/2	2	3	4
Siliceous	3/4	3/4	3/4	3/4	3/4	1 1/8	1 1/2	1 3/4	2 3/8	2 3/4
Carbonate	3/4	3/4	3/4	3/4	3/4	1	1 3/8	1 5/8	2 1/8	2 1/4
Sand-lightweight or lightweight	3/4	3/4	3/4	3/4	3/4	1	1 3/8	1 1/2	2	2 1/4

For SI: 1 inch = 25.4 mm.

TABLE 722.2.3(3)
MINIMUM COVER FOR MAIN REINFORCING BARS OF REINFORCED CONCRETE BEAMS[c]
(APPLICABLE TO ALL TYPES OF STRUCTURAL CONCRETE)

RESTRAINED OR UNRESTRAINED[a]	BEAM WIDTH[b] (inches)	FIRE-RESISTANCE RATING (hours)				
		1	1 1/2	2	3	4
Restrained	5	3/4	3/4	3/4	1[a]	1 1/4[a]
	7	3/4	3/4	3/4	3/4	3/4
	≥ 10	3/4	3/4	3/4	3/4	3/4
Unrestrained	5	3/4	1	1 1/4	—	—
	7	3/4	3/4	3/4	1 3/4	3
	≥ 10	3/4	3/4	3/4	1	1 3/4

For SI: 1 inch = 25.4 mm, 1 foot = 304.8 mm.

a. Tabulated values for restrained assemblies apply to beams spaced more than 4 feet on center. For restrained beams spaced 4 feet or less on center, minimum cover of 3/4 inch is adequate for ratings of 4 hours or less.

b. For beam widths between the tabulated values, the minimum cover thickness can be determined by direct interpolation.

c. The cover for an individual reinforcing bar is the minimum thickness of concrete between the surface of the bar and the fire-exposed surface of the beam. For beams in which several bars are used, the cover for corner bars used in the calculation shall be reduced to one-half of the actual value. The cover for an individual bar must be not less than one-half of the value given in Table 722.2.3(3) nor less than 3/4 inch.

INTERNATIONAL CODE COUNCIL®
Copyright © 2019 ICC & NYSDOS. ALL RIGHTS RESERVED. Accessed by Lauren Gualdino (lgualdino@briarcliffmanor.org), (-) Order Number #100880972 on May 08, 2020 07:05 AM (PDT) pursuant to License Agreement with ICC & NYSDOS. No further reproduction, no

100880972

TABLE 722.2.3(4)
MINIMUM COVER FOR PRESTRESSED CONCRETE BEAMS 8 INCHES OR GREATER IN WIDTH[b]

RESTRAINED OR UNRESTRAINED[a]	CONCRETE AGGREGATE TYPE	BEAM WIDTH (inches)	FIRE-RESISTANCE RATING (hours)				
			1	1 1/2	2	3	4
Restrained	Carbonate or siliceous	8	1 1/2	1 1/2	1 1/2	1 3/4 [a]	2 1/2 [a]
	Carbonate or siliceous	≥ 12	1 1/2	1 1/2	1 1/2	1 1/2	1 7/8 [a]
	Sand lightweight	8	1 1/2	1 1/2	1 1/2	1 1/2	2 [a]
	Sand lightweight	≥ 12	1 1/2	1 1/2	1 1/2	1 1/2	1 5/8 [a]
Unrestrained	Carbonate or siliceous	8	1 1/2	1 3/4	2 1/2	5[c]	—
	Carbonate or siliceous	≥ 12	1 1/2	1 1/2	1 7/8 [a]	2 1/2	3
	Sand lightweight	8	1 1/2	1 1/2	2	3 1/4	—
	Sand lightweight	≥ 12	1 1/2	1 1/2	1 5/8	2	2 1/2

For SI: 1 inch = 25.4 mm, 1 foot = 304.8 mm.

a. Tabulated values for restrained assemblies apply to beams spaced more than 4 feet on center. For restrained beams spaced 4 feet or less on center, minimum cover of 3/4 inch is adequate for 4-hour ratings or less.

b. For beam widths between 8 inches and 12 inches, minimum cover thickness can be determined by direct interpolation.

c. Not practical for 8-inch-wide beam but shown for purposes of interpolation.

TABLE 722.2.3(5)
MINIMUM COVER FOR PRESTRESSED CONCRETE BEAMS OF ALL WIDTHS

RESTRAINED OR UNRESTRAINED[a]	CONCRETE AGGREGATE TYPE	BEAM AREA[b] A (square inches)	FIRE-RESISTANCE RATING (hours)				
			1	1 1/2	2	3	4
Restrained	All	40 ≤ A ≤ 150	1 1/2	1 1/2	2	2 1/2	—
	Carbonate or siliceous	150 < A ≤ 300	1 1/2	1 1/2	1 1/2	1 3/4	2 1/2
		300 < A	1 1/2	1 1/2	1 1/2	1 1/2	2
	Sand lightweight	150 < A	1 1/2	1 1/2	1 1/2	1 1/2	2
Unrestrained	All	40 ≤ A ≤ 150	2	2 1/2	—	—	—
	Carbonate or siliceous	150 < A ≤ 300	1 1/2	1 3/4	2 1/2	—	—
		300 < A	1 1/2	1 1/2	2	3[c]	4[c]
	Sand lightweight	150 < A	1 1/2	1 1/2	2	3[c]	4[c]

For SI: 1 inch = 25.4 mm, 1 foot = 304.8 mm, 1 square inch = 645.2 mm^2.

a. Tabulated values for restrained assemblies apply to beams spaced more than 4 feet on center. For restrained beams spaced 4 feet or less on center, minimum cover of 3/4 inch is adequate for 4-hour ratings or less.

b. The cross-sectional area of a stem is permitted to include a portion of the area in the flange, provided that the width of the flange used in the calculation does not exceed three times the average width of the stem.

c. U-shaped or hooped stirrups spaced not to exceed the depth of the member and having a minimum cover of 1 inch shall be provided.

722.2.4.1.1 Concrete strength less than or equal to 12,000 psi. For columns made with concrete having a specified compressive strength, f'_c, of less than or equal to 12,000 psi (82.7 MPa), the minimum dimension shall comply with Table 722.2.4.

722.2.4.1.2 Concrete strength greater than 12,000 psi. For columns made with concrete having a specified compressive strength, f'_c, greater than 12,000 psi (82.7 MPa), for *fire-resistance ratings* of 1 hour to 4 hours the minimum dimension shall be 24 inches (610 mm).

TABLE 722.2.4
MINIMUM DIMENSION OF CONCRETE COLUMNS (inches)

TYPES OF CONCRETE	FIRE-RESISTANCE RATING (hours)				
	1	1 1/2	2[a]	3[a]	4[b]
Siliceous	8	9	10	12	14
Carbonate	8	9	10	11	12
Sand-lightweight	8	8 1/2	9	10 1/2	12

For SI: 1 inch = 25 mm.

a. The minimum dimension is permitted to be reduced to 8 inches for rectangular columns with two parallel sides not less than 36 inches in length.

b. The minimum dimension is permitted to be reduced to 10 inches for rectangular columns with two parallel sides not less than 36 inches in length.

722.2.4.2 Minimum cover for R/C columns. The minimum thickness of concrete cover to the main longitudinal reinforcement in columns, regardless of the type of aggregate used in the concrete and the specified compressive strength of concrete, f'_c, shall be not less

INTERNATIONAL CODE COUNCIL®
Copyright © 2019 ICC & NYSDOS. ALL RIGHTS RESERVED. Accessed by Lauren Gualdino (lgualdino@briarcliffmanor.org), (-) Order Number #100880972 on May 08, 2020 07:05 AM (PDT) pursuant to License Agreement with ICC & NYSDOS. No further reproduction, no

100880972

than 1 inch (25 mm) times the number of hours of required *fire resistance* or 2 inches (51 mm), whichever is less.

722.2.4.3 Tie and spiral reinforcement. For concrete columns made with concrete having a specified compressive strength, f'_c, greater than 12,000 psi (82.7 MPa), tie and spiral reinforcement shall comply with the following:

1. The free ends of rectangular ties shall terminate with a 135-degree (2.4 rad) standard tie hook.
2. The free ends of circular ties shall terminate with a 90-degree (1.6 rad) standard tie hook.
3. The free ends of spirals, including at lap splices, shall terminate with a 90-degree (1.6 rad) standard tie hook.

The hook extension at the free end of ties and spirals shall be the larger of six bar diameters and the extension required by Section 7.1.3 of ACI 318. Hooks shall project into the core of the column.

722.2.4.4 Columns built into walls. The minimum dimensions of Table 722.2.4 do not apply to a reinforced concrete column that is built into a concrete or masonry wall provided that all of the following are met:

1. The *fire-resistance rating* for the wall is equal to or greater than the required rating of the column.
2. The main longitudinal reinforcing in the column has cover not less than that required by Section 722.2.4.2.
3. Openings in the wall are protected in accordance with Section 716.

Where openings in the wall are not protected as required by Section 716, the minimum dimension of columns required to have a *fire-resistance rating* of 3 hours or less shall be 8 inches (203 mm), and 10 inches (254 mm) for columns required to have a *fire-resistance rating* of 4 hours, regardless of the type of aggregate used in the concrete.

722.2.4.5 Precast cover units for steel columns. See Section 722.5.1.4.

722.3 Concrete masonry. The provisions of this section contain procedures by which the *fire-resistance ratings* of concrete masonry are established by calculations.

722.3.1 Equivalent thickness. The equivalent thickness of concrete masonry construction shall be determined in accordance with the provisions of this section.

722.3.1.1 Concrete masonry unit plus finishes. The equivalent thickness of concrete masonry assemblies, T_{ea}, shall be computed as the sum of the equivalent thickness of the concrete masonry unit, T_e, as determined by Section 722.3.1.2, 722.3.1.3 or 722.3.1.4, plus the equivalent thickness of finishes, T_{ef}, determined in accordance with Section 722.3.2:

$$T_{ea} = T_e + T_{ef} \qquad \textbf{(Equation 7-6)}$$

722.3.1.2 Ungrouted or partially grouted construction. T_e shall be the value obtained for the concrete masonry unit determined in accordance with ASTM C140.

722.3.1.3 Solid grouted construction. The equivalent thickness, T_e, of solid grouted concrete masonry units is the actual thickness of the unit.

722.3.1.4 Airspaces and cells filled with loose-fill material. The equivalent thickness of completely filled hollow concrete masonry is the actual thickness of the unit where loose-fill materials are: sand, pea gravel, crushed stone, or slag that meet ASTM C33 requirements; pumice, scoria, expanded shale, expanded clay, expanded slate, expanded slag, expanded fly ash, or cinders that comply with ASTM C331; or perlite or vermiculite meeting the requirements of ASTM C549 and ASTM C516, respectively.

722.3.2 Concrete masonry walls. The *fire-resistance rating* of walls and partitions constructed of concrete masonry units shall be determined from Table 722.3.2. The rating shall be based on the equivalent thickness of the masonry and type of aggregate used.

TABLE 722.3.2
MINIMUM EQUIVALENT THICKNESS (inches) OF BEARING OR NONBEARING CONCRETE MASONRY WALLS[a, b, c, d]

TYPE OF AGGREGATE	FIRE-RESISTANCE RATING (hours)														
	1/2	3/4	1	1 1/4	1 1/2	1 3/4	2	2 1/4	2 1/2	2 3/4	3	3 1/4	3 1/2	3 3/4	4
Pumice or expanded slag	1.5	1.9	2.1	2.5	2.7	3.0	3.2	3.4	3.6	3.8	4.0	4.2	4.4	4.5	4.7
Expanded shale, clay or slate	1.8	2.2	2.6	2.9	3.3	3.4	3.6	3.8	4.0	4.2	4.4	4.6	4.8	4.9	5.1
Limestone, cinders or unexpanded slag	1.9	2.3	2.7	3.1	3.4	3.7	4.0	4.3	4.5	4.8	5.0	5.2	5.5	5.7	5.9
Calcareous or siliceous gravel	2.0	2.4	2.8	3.2	3.6	3.9	4.2	4.5	4.8	5.0	5.3	5.5	5.8	6.0	6.2

For SI: 1 inch = 25.4 mm.

a. Values between those shown in the table can be determined by direct interpolation.

b. Where combustible members are framed into the wall, the thickness of solid material between the end of each member and the opposite face of the wall, or between members set in from opposite sides, shall be not less than 93 percent of the thickness shown in the table.

c. Requirements of ASTM C55, ASTM C73, ASTM C90 or ASTM C744 shall apply.

d. Minimum required equivalent thickness corresponding to the hourly fire-resistance rating for units with a combination of aggregate shall be determined by linear interpolation based on the percent by volume of each aggregate used in manufacture.

INTERNATIONAL CODE COUNCIL®
Copyright © 2019 ICC & NYSDOS. ALL RIGHTS RESERVED. Accessed by Lauren Gualdino (lgualdino@briarcliffmanor.org), (-) Order Number #100880972 on May 08, 2020 07:05 AM (PDT) pursuant to License Agreement with ICC & NYSDOS. No further reproduction, no

100880972

722.3.2.1 Finish on nonfire-exposed side. Where plaster or gypsum wallboard is applied to the side of the wall not exposed to fire, the contribution of the finish to the total *fire-resistance rating* shall be determined as follows: The thickness of gypsum wallboard or plaster shall be corrected by multiplying the actual thickness of the finish by applicable factor determined from Table 722.2.1.4(1). This corrected thickness of finish shall be added to the equivalent thickness of masonry and the *fire-resistance rating* of the masonry and finish determined from Table 722.3.2.

722.3.2.2 Finish on fire-exposed side. Where plaster or gypsum wallboard is applied to the fire-exposed side of the wall, the contribution of the finish to the total *fire-resistance rating* shall be determined as follows: The time assigned to the finish as established by Table 722.2.1.4(2) shall be added to the *fire-resistance rating* determined in Section 722.3.2 for the masonry alone, or in Section 722.3.2.1 for the masonry and finish on the nonfire-exposed side.

722.3.2.3 Nonsymmetrical assemblies. For a wall without finish on one side or having different types or thicknesses of finish on each side, the calculation procedures of this section shall be performed twice, assuming either side of the wall to be the fire-exposed side. The *fire-resistance rating* of the wall shall not exceed the lower of the two values calculated.

Exception: For *exterior walls* with a *fire separation distance* greater than 5 feet (1524 mm), the fire shall be assumed to occur on the interior side only.

722.3.2.4 Minimum concrete masonry fire-resistance rating. Where the finish applied to a concrete masonry wall contributes to its *fire-resistance rating*, the masonry alone shall provide not less than one-half the total required *fire-resistance rating*.

722.3.2.5 Attachment of finishes. Installation of finishes shall be as follows:

1. Gypsum wallboard and gypsum lath applied to concrete masonry or concrete walls shall be secured to wood or steel furring members spaced not more than 16 inches (406 mm) on center (o.c.).
2. Gypsum wallboard shall be installed with the long dimension parallel to the furring members and shall have all joints finished.
3. Other aspects of the installation of finishes shall comply with the applicable provisions of Chapters 7 and 25.

722.3.3 Multiwythe masonry walls. The *fire-resistance rating* of wall assemblies constructed of multiple wythes of masonry materials shall be permitted to be based on the *fire-resistance rating* period of each wythe and the continuous airspace between each wythe in accordance with the following formula:

$$R_A = (R_1^{0.59} + R_2^{0.59} + ... + R_n^{0.59} + A_1 + A_2 + ... + A_n)^{1.7} \quad \textbf{(Equation 7-7)}$$

where:

R_A = *Fire-resistance rating* of the assembly (hours).

$R_1, R_2, ..., R_n$ = *Fire-resistance rating* of wythes for 1, 2, *n* (hours), respectively.

$A_1, A_2, ..., A_n$ = 0.30, factor for each continuous airspace for 1, 2, ...*n*, respectively, having a depth of $^1/_2$ inch (12.7 mm) or more between wythes.

722.3.4 Concrete masonry lintels. *Fire-resistance ratings* for concrete masonry lintels shall be determined based on the nominal thickness of the lintel and the minimum thickness of concrete masonry or concrete, or any combination thereof, covering the main reinforcing bars, as determined in accordance with Table 722.3.4, or by *approved* alternate methods.

TABLE 722.3.4
MINIMUM COVER OF LONGITUDINAL REINFORCEMENT IN FIRE-RESISTANCE-RATED REINFORCED CONCRETE MASONRY LINTELS (inches)

NOMINAL WIDTH OF LINTEL (inches)	FIRE-RESISTANCE RATING (hours)			
	1	2	3	4
6	$1^1/_2$	2	—	—
8	$1^1/_2$	$1^1/_2$	$1^3/_4$	3
10 or greater	$1^1/_2$	$1^1/_2$	$1^1/_2$	$1^3/_4$

For SI: 1 inch = 25.4 mm.

722.3.5 Concrete masonry columns. The *fire-resistance rating* of concrete masonry columns shall be determined based on the least plan dimension of the column in accordance with Table 722.3.5 or by *approved* alternate methods.

TABLE 722.3.5
MINIMUM DIMENSION OF CONCRETE MASONRY COLUMNS (inches)

FIRE-RESISTANCE RATING (hours)			
1	2	3	4
8 inches	10 inches	12 inches	14 inches

For SI: 1 inch = 25.4 mm.

722.4 Clay brick and tile masonry. The provisions of this section contain procedures by which the *fire-resistance ratings* of clay brick and tile masonry are established by calculations.

722.4.1 Masonry walls. The *fire-resistance rating* of masonry walls shall be based on the equivalent thickness as calculated in accordance with this section. The calcula-

INTERNATIONAL CODE COUNCIL®
Copyright © 2019 ICC & NYSDOS. ALL RIGHTS RESERVED. Accessed by Lauren Gualdino (lgualdino@briarcliffmanor.org), (-) Order Number #100880972 on May 08, 2020 07:05 AM (PDT) pursuant to License Agreement with ICC & NYSDOS. No further reproduction, no

100880972

tion shall take into account finishes applied to the wall and airspaces between wythes in multiwythe construction.

722.4.1.1 Equivalent thickness. The *fire-resistance ratings* of walls or partitions constructed of solid or hollow clay masonry units shall be determined from Table 722.4.1(1) or 722.4.1(2). The equivalent thickness of the clay masonry unit shall be determined by Equation 7-8 where using Table 722.4.1(1). The *fire-resistance rating* determined from Table 722.4.1(1) shall be permitted to be used in the calculated *fire-resistance rating* procedure in Section 722.4.2.

$$T_e = V_n/LH \qquad \textbf{(Equation 7-8)}$$

where:

T_e = The equivalent thickness of the clay masonry unit (inches).

V_n = The net volume of the clay masonry unit (inch^3).

L = The specified length of the clay masonry unit (inches).

H = The specified height of the clay masonry unit (inches).

722.4.1.1.1 Hollow clay units. The equivalent thickness, T_e, shall be the value obtained for hollow clay units as determined in accordance with Equation 7-8. The net volume, V_n, of the units shall be determined using the gross volume and percentage of void area determined in accordance with ASTM C67.

722.4.1.1.2 Solid grouted clay units. The equivalent thickness of solid grouted clay masonry units shall be taken as the actual thickness of the units.

722.4.1.1.3 Units with filled cores. The equivalent thickness of the hollow clay masonry units is the actual thickness of the unit where completely filled with loose-fill materials of: sand, pea gravel, crushed stone, or slag that meet ASTM C33 requirements; pumice, scoria, expanded shale, expanded clay, expanded slate, expanded slag, expanded fly ash, or cinders in compliance with ASTM C331; or perlite or vermiculite meeting the requirements of ASTM C549 and ASTM C516, respectively.

TABLE 722.4.1(1)
FIRE-RESISTANCE PERIODS OF CLAY MASONRY WALLS

MATERIAL TYPE	MINIMUM REQUIRED EQUIVALENT THICKNESS FOR FIRE RESISTANCE[a, b, c] (inches)			
	1 hour	2 hours	3 hours	4 hours
Solid brick of clay or shale[d]	2.7	3.8	4.9	6.0
Hollow brick or tile of clay or shale, unfilled	2.3	3.4	4.3	5.0
Hollow brick or tile of clay or shale, grouted or filled with materials specified in Section 722.4.1.1.3	3.0	4.4	5.5	6.6

For SI: 1 inch = 25.4 mm.

a. Equivalent thickness as determined from Section 722.4.1.1.

b. Calculated fire resistance between the hourly increments listed shall be determined by linear interpolation.

c. Where combustible members are framed in the wall, the thickness of solid material between the end of each member and the opposite face of the wall, or between members set in from opposite sides, shall be not less than 93 percent of the thickness shown.

d. For units in which the net cross-sectional area of cored brick in any plane parallel to the surface containing the cores is not less than 75 percent of the gross cross-sectional area measured in the same plane.

TABLE 722.4.1(2)
FIRE-RESISTANCE RATINGS FOR BEARING STEEL FRAME BRICK VENEER WALLS OR PARTITIONS

WALL OR PARTITION ASSEMBLY	PLASTER SIDE EXPOSED (hours)	BRICK FACED SIDE EXPOSED (hours)
Outside facing of steel studs: $^1/_2$" wood fiberboard sheathing next to studs, $^3/_4$" airspace formed with $^3/_4$" × $1^5/_8$" wood strips placed over the fiberboard and secured to the studs; metal or wire lath nailed to such strips, $3^3/_4$" brick veneer held in place by filling $^3/_4$" airspace between the brick and lath with mortar. Inside facing of studs: $^3/_4$" unsanded gypsum plaster on metal or wire lath attached to $^5/_{16}$" wood strips secured to edges of the studs.	1.5	4
Outside facing of steel studs: 1" insulation board sheathing attached to studs, 1" airspace, and $3^3/_4$" brick veneer attached to steel frame with metal ties every 5th course. Inside facing of studs: $^7/_8$" sanded gypsum plaster (1:2 mix) applied on metal or wire lath attached directly to the studs.	1.5	4
Same as previous assembly except use $^7/_8$" vermiculite-gypsum plaster or 1" sanded gypsum plaster (1:2 mix) applied to metal or wire.	2	4
Outside facing of steel studs: $^1/_2$" gypsum sheathing board, attached to studs, and $3^3/_4$" brick veneer attached to steel frame with metal ties every 5th course. Inside facing of studs: $^1/_2$" sanded gypsum plaster (1:2 mix) applied to $^1/_2$" perforated gypsum lath securely attached to studs and having strips of metal lath 3 inches wide applied to all horizontal joints of gypsum lath.	2	4

For SI: 1 inch = 25.4 mm.

INTERNATIONAL CODE COUNCIL®
Copyright © 2019 ICC & NYSDOS. ALL RIGHTS RESERVED. Accessed by Lauren Gualdino (lgualdino@briarcliffmanor.org), (-) Order Number #100880972 on May 08, 2020 07:05 AM (PDT) pursuant to License Agreement with ICC & NYSDOS. No further reproduction, no

100880972

722.4.1.2 Plaster finishes. Where plaster is applied to the wall, the total *fire-resistance rating* shall be determined by the formula:

$$R = (R_n^{0.59} + pl)^{1.7} \quad \textbf{(Equation 7-9)}$$

where:

R = The *fire-resistance rating* of the assembly (hours).

R_n = The *fire-resistance rating* of the individual wall (hours).

pl = Coefficient for thickness of plaster.

Values for $R_n^{0.59}$ for use in Equation 7-9 are given in Table 722.4.1(3). Coefficients for thickness of plaster shall be selected from Table 722.4.1(4) based on the actual thickness of plaster applied to the wall or partition and whether one or two sides of the wall are plastered.

TABLE 722.4.1(3)
VALUES OF $R_n^{0.59}$

R_n 0.59	R (hours)
1	1.0
2	1.50
3	1.91
4	2.27

TABLE 722.4.1(4)
COEFFICIENTS FOR PLASTER, pl [a]

THICKNESS OF PLASTER (inch)	ONE SIDE	TWO SIDES
$^1/_2$	0.3	0.6
$^5/_8$	0.37	0.75
$^3/_4$	0.45	0.90

For SI: 1 inch = 25.4 mm.

a. Values listed in the table are for 1:3 sanded gypsum plaster.

TABLE 722.4.1(5)
REINFORCED MASONRY LINTELS

NOMINAL LINTEL WIDTH (inches)	MINIMUM LONGITUDINAL REINFORCEMENT COVER FOR FIRE RESISTANCE (inches)			
	1 hour	2 hours	3 hours	4 hours
6	$1^1/_2$	2	NP	NP
8	$1^1/_2$	$1^1/_2$	$1^3/_4$	3
10 or more	$1^1/_2$	$1^1/_2$	$1^1/_2$	$1^3/_4$

For SI: 1 inch = 25.4 mm.

NP = Not Permitted.

TABLE 722.4.1(6)
REINFORCED CLAY MASONRY COLUMNS

COLUMN SIZE	FIRE-RESISTANCE RATING (hours)			
	1	2	3	4
Minimum column dimension (inches)	8	10	12	14

For SI: 1 inch = 25.4 mm.

722.4.1.3 Multiwythe walls with airspace. Where a continuous airspace separates multiple wythes of the wall or partition, the total *fire-resistance rating* shall be determined by the formula:

$$R = (R_1^{0.59} + R_2^{0.59} + ... + R_n^{0.59} + as)^{1.7} \quad \textbf{(Equation 7-10)}$$

where:

R = The *fire-resistance rating* of the assembly (hours).

R_1, R_2 and R_n = The *fire-resistance rating* of the individual wythes (hours).

as = Coefficient for continuous airspace.

Values for $R_n^{0.59}$ for use in Equation 7-10 are given in Table 722.4.1(3). The coefficient for each continuous airspace of $^1/_2$ inch to $3^1/_2$ inches (12.7 to 89 mm) separating two individual wythes shall be 0.3.

722.4.1.4 Nonsymmetrical assemblies. For a wall without finish on one side or having different types or thicknesses of finish on each side, the calculation procedures of this section shall be performed twice, assuming either side to be the fire-exposed side of the wall. The *fire resistance* of the wall shall not exceed the lower of the two values determined.

Exception: For *exterior walls* with a *fire separation distance* greater than 5 feet (1524 mm), the fire shall be assumed to occur on the interior side only.

722.4.2 Multiwythe walls. The *fire-resistance rating* for walls or partitions consisting of two or more dissimilar wythes shall be permitted to be determined by the formula:

$$R = (R_1^{0.59} + R_2^{0.59} + ... + R_n^{0.59})^{1.7} \quad \textbf{(Equation 7-11)}$$

where:

R = The *fire-resistance rating* of the assembly (hours).

R_1, R_2 and R_n = The *fire-resistance rating* of the individual wythes (hours).

Values for $R_n^{0.59}$ for use in Equation 7-11 are given in Table 722.4.1(3).

722.4.2.1 Multiwythe walls of different material. For walls that consist of two or more wythes of different materials (concrete or concrete masonry units) in combination with clay masonry units, the *fire-resistance rating* of the different materials shall be permitted to be determined from Table 722.2.1.1 for concrete; Table 722.3.2 for concrete masonry units or Table 722.4.1(1) or 722.4.1(2) for clay and tile masonry units.

722.4.3 Reinforced clay masonry lintels. *Fire-resistance ratings* for clay masonry lintels shall be determined based on the nominal width of the lintel and the minimum covering for the longitudinal reinforcement in accordance with Table 722.4.1(5).

722.4.4 Reinforced clay masonry columns. The *fire-resistance ratings* shall be determined based on the last plan dimension of the column in accordance with Table 722.4.1(6). The minimum cover for longitudinal reinforcement shall be 2 inches (51 mm).

INTERNATIONAL CODE COUNCIL®
Copyright © 2019 ICC & NYSDOS. ALL RIGHTS RESERVED. Accessed by Lauren Gualdino (lgualdino@briarcliffmanor.org), (-) Order Number #100880972 on May 08, 2020 07:05 AM (PDT) pursuant to License Agreement with ICC & NYSDOS. No further reproduction, no

100880972

722.5 Steel assemblies. The provisions of this section contain procedures by which the *fire-resistance ratings* of steel assemblies are established by calculations.

722.5.1 Structural steel columns. The *fire-resistance ratings* of structural steel columns shall be based on the size of the element and the type of protection provided in accordance with this section.

722.5.1.1 General. These procedures establish a basis for determining the *fire resistance* of column assemblies as a function of the thickness of fire-resistant material and, the weight, *W*, and heated perimeter, *D*, of structural steel columns. As used in these sections, *W* is the average weight of a structural steel column in pounds per linear foot. The heated perimeter, *D*, is the inside perimeter of the fire-resistant material in inches as illustrated in Figure 722.5.1(1).

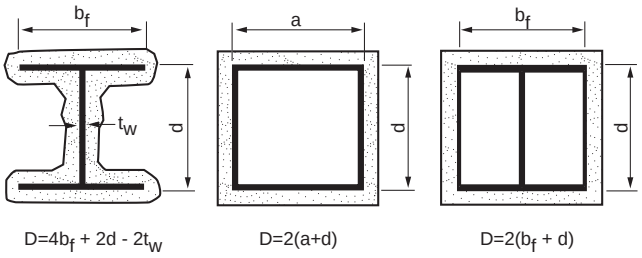

FIGURE 722.5.1(1)
DETERMINATION OF THE HEATED PERIMETER OF STRUCTURAL STEEL COLUMNS

722.5.1.1.1 Nonload-bearing protection. The application of these procedures shall be limited to column assemblies in which the fire-resistant material is not designed to carry any of the load acting on the column.

722.5.1.1.2 Embedments. In the absence of substantiating fire-endurance test results, ducts, conduit, piping, and similar mechanical, electrical, and plumbing installations shall not be embedded in any required fire-resistant materials.

722.5.1.1.3 Weight-to-perimeter ratio. Table 722.5.1(1) contains weight-to-heated-perimeter ratios (*W/D*) for both contour and box fire-resistant profiles, for the wide flange shapes most often used as columns. For different fire-resistant protection profiles or column cross sections, the weight-to-heated-perimeter ratios (*W/D*) shall be determined in accordance with the definitions given in this section.

722.5.1.2 Gypsum wallboard protection. The *fire resistance* of structural steel columns with weight-to-heated-perimeter ratios (*W/D*) less than or equal to 3.65 and that are protected with Type X gypsum wallboard shall be permitted to be determined from the following expression:

$$R = 130\left[\frac{h(W'/D)}{2}\right]^{0.75} \qquad \textbf{(Equation 7-12)}$$

where:

R = Fire resistance (minutes).

h = Total thickness of gypsum wallboard (inches).

D = Heated perimeter of the structural steel column (inches).

W' = Total weight of the structural steel column and gypsum wallboard protection (pounds per linear foot).

$W' = W + 50hD/144$.

722.5.1.2.1 Attachment. The gypsum board or gypsum panel products shall be supported as illustrated in either Figure 722.5.1(2) for *fire-resistance ratings* of 4 hours or less, or Figure 722.5.1(3) for *fire-resistance ratings* of 3 hours or less.

722.5.1.2.2 Gypsum wallboard equivalent to concrete. The determination of the *fire resistance* of structural steel columns from Figure 722.5.1(4) is permitted for various thicknesses of gypsum wall-

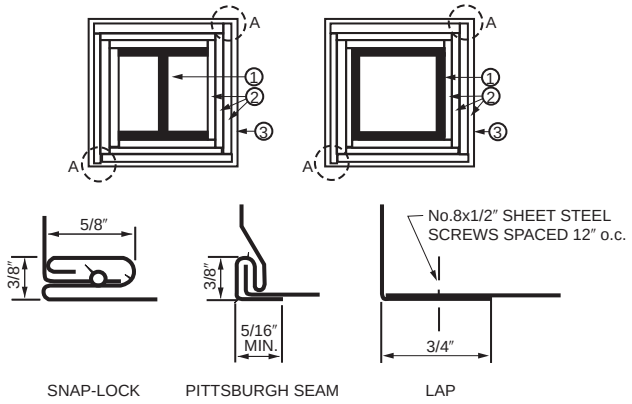

FIGURE 722.5.1(2)
GYPSUM-PROTECTED STRUCTURAL STEEL COLUMNS WITH SHEET STEEL COLUMN COVERS

For SI: 1 inch = 25.4 mm, 1 foot = 305 mm.

1. Structural steel column, either wide flange or tubular shapes.
2. Type X gypsum board or gypsum panel products in accordance with ASTM C1177, C1178, C1278, C1396 or C1658. The total thickness of gypsum board or gypsum panel products calculated as *h* in Section 722.5.1.2 shall be applied vertically to an individual column using one of the following methods:
   1. As a single layer without horizontal joints.
   2. As multiple layers with horizontal joints not permitted in any layer.
   3. As multiple layers with horizontal joints staggered not less than 12 inches vertically between layers and not less than 8 feet vertically in any single layer. The total required thickness of gypsum board or gypsum panel products shall be determined on the basis of the specified fire-resistance rating and the weight-to-heated-perimeter ratio (W/D) of the column. For fire-resistance ratings of 2 hours or less, one of the required layers of gypsum board or gypsum panel product may be applied to the exterior of the sheet steel column covers with 1-inch long Type S screws spaced 1 inch from the wallboard edge and 8 inches on center. For such installations, 0.0149-inch minimum thickness galvanized steel corner beads with $1^1/_2$-inch legs shall be attached to the wallboard with Type S screws spaced 12 inches on center.
3. For fire-resistance ratings of 3 hours or less, the column covers shall be fabricated from 0.0239-inch minimum thickness galvanized or stainless steel. For 4-hour fire-resistance ratings, the column covers shall be fabricated from 0.0239-inch minimum thickness stainless steel. The column covers shall be erected with the Snap Lock or Pittsburgh joint details.

   For fire-resistance ratings of 2 hours or less, column covers fabricated from 0.0269-inch minimum thickness galvanized or stainless steel shall be permitted to be erected with lap joints. The lap joints shall be permitted to be located anywhere around the perimeter of the column cover. The lap joints shall be secured with $^1/_2$-inch-long No. 8 sheet metal screws spaced 12 inches on center.

   The column covers shall be provided with a minimum expansion clearance of $^1/_8$ inch per linear foot between the ends of the cover and any restraining construction.

INTERNATIONAL CODE COUNCIL®
Copyright © 2019 ICC & NYSDOS. ALL RIGHTS RESERVED. Accessed by Lauren Gualdino (lgualdino@briarcliffmanor.org), (-) Order Number #100880972 on May 08, 2020 07:05 AM (PDT) pursuant to License Agreement with ICC & NYSDOS. No further reproduction, no

100880972

board as a function of the weight-to-heated-perimeter ratio (*W/D*) of the column. For structural steel columns with weight-to-heated-perimeter ratios (*W/D*) greater than 3.65, the thickness of gypsum wallboard required for specified *fire-resistance ratings* shall be the same as the thickness determined for a *W*14 × 233 wide flange shape.

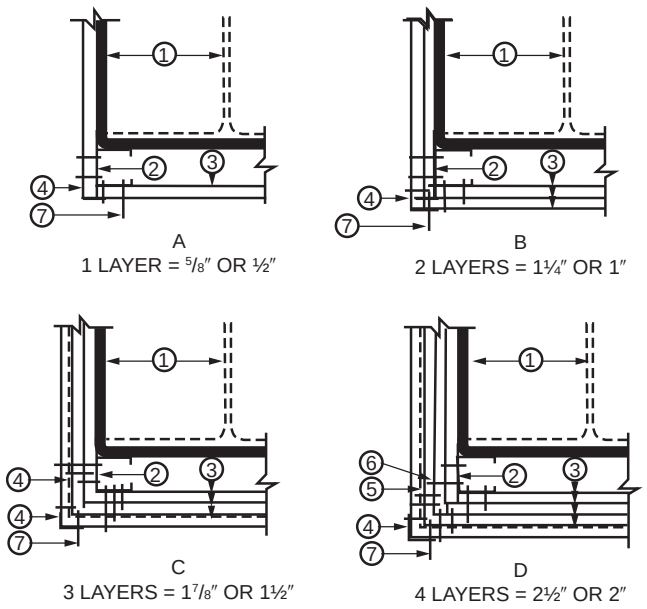

FIGURE 722.5.1(3)
GYPSUM-PROTECTED STRUCTURAL STEEL COLUMNS WITH STEEL STUD/SCREW ATTACHMENT SYSTEM

For SI: 1 inch = 25.4 mm, 1 foot = -305 mm.

1. Structural steel column, either wide flange or tubular shapes.
2. $1^{5}/_{8}$-inch deep studs fabricated from 0.0179-inch minimum thickness galvanized steel with $1^{5}/_{16}$ or $1^{7}/_{16}$-inch legs. The length of the steel studs shall be $^{1}/_{2}$ inch less than the height of the assembly.
3. Type X gypsum board or gypsum panel products in accordance with ASTM C177, C1178, C1278, C1396 or C1658. The total thickness of gypsum board or gypsum panel products calculated as *h* in Section 722.5.1.2 shall be applied vertically to an individual column using one of the following methods:
   1. As a single layer without horizontal joints.
   2. As multiple layers with horizontal joints not permitted in any layer.
   3. As multiple layers with horizontal joints staggered not less than 12 inches vertically between layers and not less than 8 feet vertically in any single layer. The total required thickness of gypsum board or gypsum panel products shall be determined on the basis of the specified fire-resistance rating and the weight-to-heated-perimeter ratio (W/D) of the column.
4. Galvanized 0.0149-inch minimum thickness steel corner beads with $1^{1}/_{2}$-inch legs attached to the gypsum board or gypsum panel products with 1-inch-long Type S screws spaced 12 inches on center.
5. No. 18 SWG steel tie wires spaced 24 inches on center.
6. Sheet metal angles with 2-inch legs fabricated from 0.0221-inch minimum thickness galvanized steel.
7. Type S screws, 1 inch long, shall be used for attaching the first layer of gypsum board or gypsum panel product to the steel studs and the third layer to the sheet metal angles at 24 inches on center. Type S screws $1^{3}/_{4}$ inches long shall be used for attaching the second layer of gypsum board or gypsum panel product to the steel studs and the fourth layer to the sheet metal angles at 12 inches on center. Type S screws $2^{1}/_{4}$ inches long shall be used for attaching the third layer of gypsum board or gypsum panel product to the steel studs at 12 inches on center.

722.5.1.3 Sprayed fire-resistant materials. The *fire resistance* of wide-flange structural steel columns protected with sprayed fire-resistant materials, as illustrated in Figure 722.5.1(5), shall be permitted to be determined from the following expression:

$$R = [C_1(W/D) + C_2]h \qquad \textbf{(Equation 7-13)}$$

where:

R = Fire resistance (minutes).

h = Thickness of sprayed fire-resistant material (inches).

D = Heated perimeter of the structural steel column (inches).

C_1 and C_2 = Material-dependent constants.

W = Weight of structural steel columns (pounds per linear foot).

The *fire resistance* of structural steel columns protected with intumescent or mastic fire-resistant coatings shall be determined on the basis of *fire-resistance* tests in accordance with Section 703.2.

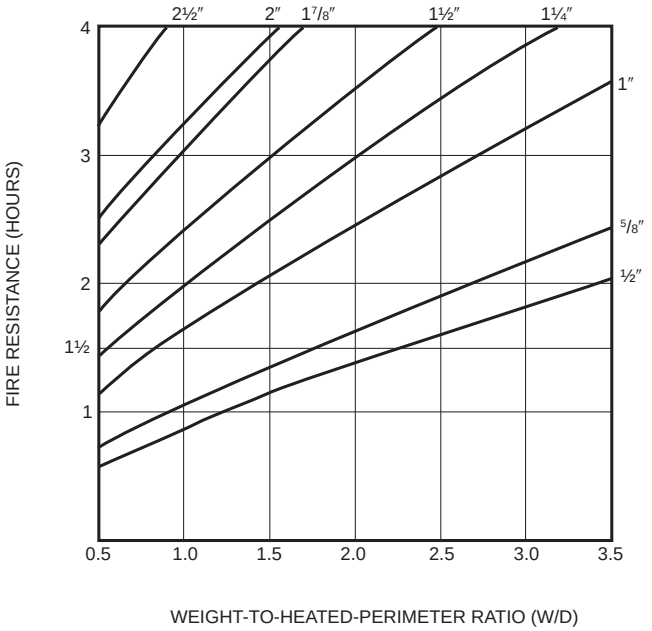

For SI: 1 inch = 25.4 mm, 1 pound per linear foot/inch = 0.059 kg/m/mm.

FIGURE 722.5.1(4)
FIRE RESISTANCE OF STRUCTURAL STEEL COLUMNS PROTECTED WITH VARIOUS THICKNESSES OF TYPE X GYPSUM WALLBOARD

a. The W/D ratios for typical wide flange columns are listed in Table 722.5.1(1). For other column shapes, the W/D ratios shall be determined in accordance with Section 722.5.1.1.

INTERNATIONAL CODE COUNCIL®
Copyright © 2019 ICC & NYSDOS. ALL RIGHTS RESERVED. Accessed by Lauren Gualdino (lgualdino@briarcliffmanor.org), (-) Order Number #100880972 on May 08, 2020 07:05 AM (PDT) pursuant to License Agreement with ICC & NYSDOS. No further reproduction, no

100880972

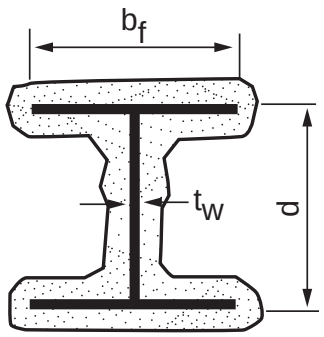

FIGURE 722.5.1(5)
WIDE FLANGE STRUCTURAL STEEL COLUMNS WITH SPRAYED FIRE-RESISTANT MATERIALS

722.5.1.3.1 Material-dependent constants. The material-dependent constants, C_1 and C_2, shall be determined for specific fire-resistant materials on the basis of standard fire endurance tests in accordance with Section 703.2. Unless evidence is submitted to the *building official* substantiating a broader application, this expression shall be limited to determining the *fire resistance* of structural steel columns with weight-to-heated-perimeter ratios (*W/D*) between the largest and smallest columns for which standard fire-resistance test results are available.

722.5.1.3.2 Identification. Sprayed fire-resistant materials shall be identified by density and thickness required for a given *fire-resistance rating*.

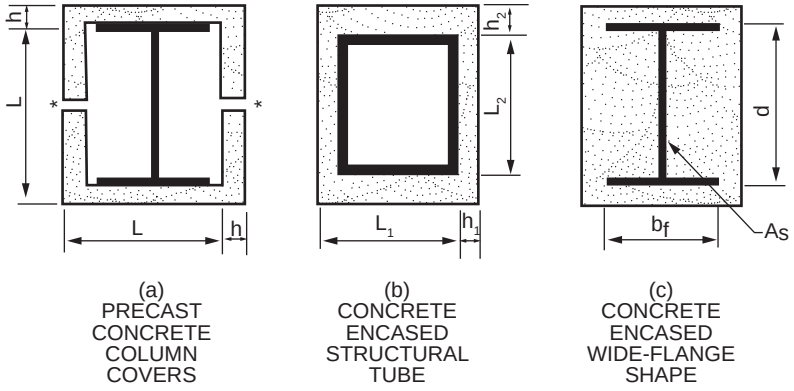

FIGURE 722.5.1(6)
CONCRETE PROTECTED STRUCTURAL STEEL COLUMNS[a, b]

a. Where the inside perimeter of the concrete protection is not square, L shall be taken as the average of L_1 and L_2. Where the thickness of concrete cover is not constant, h shall be taken as the average of h_1 and h_2.

b. Joints shall be protected with not less than a 1-inch thickness of ceramic fiber blanket but in no case less than one-half the thickness of the column cover (see Section 722.2.1.3).

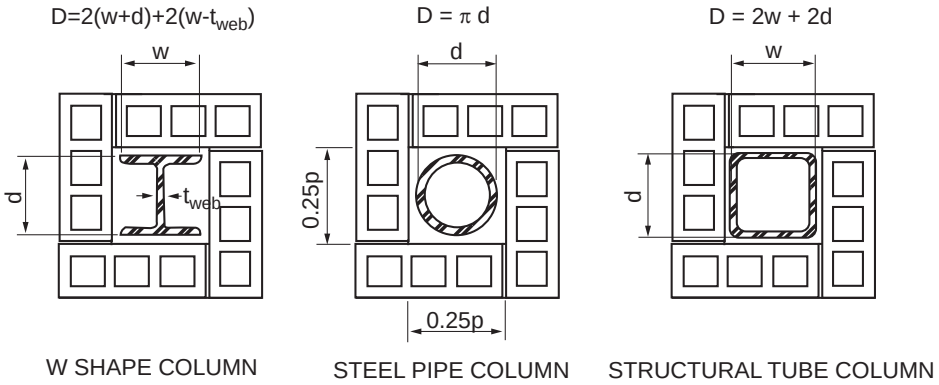

FIGURE 722.5.1(7)
CONCRETE OR CLAY MASONRY PROTECTED STRUCTURAL STEEL COLUMNS

For SI: 1 inch = 25.4 mm.

d = Depth of a wide flange column, outside diameter of pipe column, or outside dimension of structural tubing column (inches).

t_{web} = Thickness of web of wide flange column (inches).

w = Width of flange of wide flange column (inches).

INTERNATIONAL CODE COUNCIL®
Copyright © 2019 ICC & NYSDOS. ALL RIGHTS RESERVED. Accessed by Lauren Gualdino (lgualdino@briarcliffmanor.org), (-) Order Number #100880972 on May 08, 2020 07:05 AM (PDT) pursuant to License Agreement with ICC & NYSDOS. No further reproduction, no

100880972

722.5.1.4 Concrete-protected columns. The *fire resistance* of structural steel columns protected with concrete, as illustrated in Figure 722.5.1(6)(a) and (b), shall be permitted to be determined from the following expression:

$$R = R_o(1 + 0.03m) \quad \textbf{(Equation 7-14)}$$

where:

$$R_o = 10\,(W/D)^{0.7} + 17\,(h^{1.6}/k_c^{0.2}) \times [1 + 26\,\{H/p_c c_c h\,(L + h)\}^{0.8}]$$

As used in these expressions:

R = Fire endurance at equilibrium moisture conditions (minutes).

R_o = Fire endurance at zero moisture content (minutes).

m = Equilibrium moisture content of the concrete by volume (percent).

W = Average weight of the structural steel column (pounds per linear foot).

D = Heated perimeter of the structural steel column (inches).

h = Thickness of the concrete cover (inches).

k_c = Ambient temperature thermal conductivity of the concrete (Btu/hr ft °F).

H = Ambient temperature thermal capacity of the steel column = 0.11W (Btu/ ft °F).

p_c = Concrete density (pounds per cubic foot).

c_c = Ambient temperature specific heat of concrete (Btu/lb °F).

L = Interior dimension of one side of a square concrete box protection (inches).

722.5.1.4.1 Reentrant space filled. For wide-flange structural steel columns completely encased in concrete with all reentrant spaces filled [Figure 722.5.1(6)(c)], the thermal capacity of the concrete within the reentrant spaces shall be permitted to be added to the thermal capacity of the steel column, as follows:

$$H = 0.11\,W + (p_c c_c/144)\,(b_f d - A_s) \quad \textbf{(Equation 7-15)}$$

where:

b_f = Flange width of the structural steel column (inches).

d = Depth of the structural steel column (inches).

A_s = Cross-sectional area of the steel column (square inches).

722.5.1.4.2 Concrete properties unknown. If specific data on the properties of concrete are not available, the values given in Table 722.5.1(2) are permitted.

722.5.1.4.3 Minimum concrete cover. For structural steel column encased in concrete with all reentrant spaces filled, Figure 722.5.1(6)(c) and Tables 722.5.1(7) and 722.5.1(8) indicate the thickness of concrete cover required for various *fire-resistance ratings* for typical wide-flange sections. The thicknesses of concrete indicated in these tables apply to structural steel columns larger than those listed.

722.5.1.4.4 Minimum precast concrete cover. For structural steel columns protected with precast concrete column covers as shown in Figure 722.5.1(6)(a), Tables 722.5.1(9) and 722.5.1(10) indicate the thickness of the column covers required for various *fire-resistance ratings* for typical wide-flange shapes. The thicknesses of concrete given in these tables apply to structural steel columns larger than those listed.

722.5.1.4.5 Masonry protection. The *fire resistance* of structural steel columns protected with concrete masonry units or clay masonry units as illustrated in Figure 722.5.1(7) shall be permitted to be determined from the following expression:

$$R = 0.17\,(W/D)^{0.7} + [0.285\,(T_e^{1.6}/K^{0.2})]\,[1.0 + 42.7\,\{(A_s/d_m\,T_e)/(0.25p + T_e)\}^{0.8}] \quad \textbf{(Equation 7-16)}$$

where:

R = *Fire-resistance rating* of column assembly (hours).

W = Average weight of structural steel column (pounds per foot).

D = Heated perimeter of structural steel column (inches) [see Figure 722.5.1(7)].

T_e = Equivalent thickness of concrete or clay masonry unit (inches) (see Table 722.3.2, Note a or Section 722.4.1).

K = Thermal conductivity of concrete or clay masonry unit (Btu/hr · ft · °F) [see Table 722.5.1(3)].

A_s = Cross-sectional area of structural steel column (square inches).

d_m = Density of the concrete or clay masonry unit (pounds per cubic foot).

p = Inner perimeter of concrete or clay masonry protection (inches) [see Figure 722.5.1(7)].

722.5.1.4.6 Equivalent concrete masonry thickness. For structural steel columns protected with concrete masonry, Table 722.5.1(5) gives the equivalent thickness of concrete masonry required for various *fire-resistance ratings* for typical column shapes. For structural steel columns protected with clay masonry, Table 722.5.1(6) gives the equivalent thickness of concrete masonry required for various *fire-resistance ratings* for typical column shapes.

722.5.2 Structural steel beams and girders. The *fire-resistance ratings* of structural steel beams and girders shall be based on the size of the element and the type of protection provided in accordance with this section.

INTERNATIONAL CODE COUNCIL®
Copyright © 2019 ICC & NYSDOS. ALL RIGHTS RESERVED. Accessed by Lauren Gualdino (lgualdino@briarcliffmanor.org), (-) Order Number #100880972 on May 08, 2020 07:05 AM (PDT) pursuant to License Agreement with ICC & NYSDOS. No further reproduction, no

100880972

722.5.2.1 Determination of *fire resistance*. These procedures establish a basis for determining resistance of structural steel beams and girders that differ in size from that specified in *approved* fire-resistance-rated assemblies as a function of the thickness of fire-resistant material and the weight (W) and heated perimeter (D) of the beam or girder. As used in these sections, W is the average weight of a *structural steel element* in pounds per linear foot (plf). The heated perimeter, D, is the inside perimeter of the fire-resistant material in inches as illustrated in Figure 722.5.2.

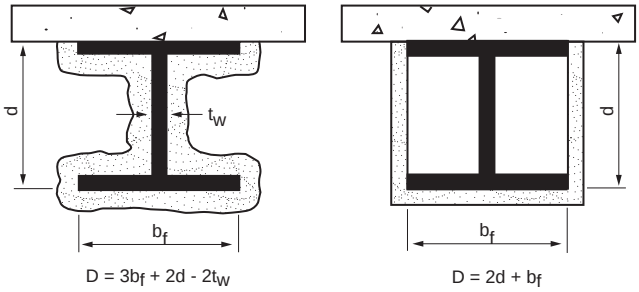

FIGURE 722.5.2
DETERMINATION OF THE HEATED PERIMETER OF STRUCTURAL STEEL BEAMS AND GIRDERS

722.5.2.1.1 Weight-to-heated perimeter. The weight-to-heated-perimeter ratios (W/D), for both contour and box fire-resistant protection profiles, for the wide flange shapes most often used as beams or girders are given in Table 722.5.1(4). For different shapes, the weight-to-heated-perimeter ratios (W/D) shall be determined in accordance with the definitions given in this section.

722.5.2.1.2 Beam and girder substitutions. Except as provided for in Section 722.5.2.2, structural steel beams in *approved* fire-resistance-rated assemblies shall be considered to be the minimum permissible size. Other beam or girder shapes shall be permitted to be substituted provided that the weight-to-heated-perimeter ratio (W/D) of the substitute beam is equal to or greater than that of the beam specified in the *approved* assembly.

722.5.2.2 Sprayed fire-resistant materials. The provisions in this section apply to structural steel beams and girders protected with sprayed fire-resistant materials. Larger or smaller beam and girder shapes shall be permitted to be substituted for beams specified in *approved* unrestrained or restrained fire-resistance-rated assemblies, provided that the thickness of the fire-resistant material is adjusted in accordance with the following expression:

$$h_2 = h_1 \left[(W_1 / D_1) + 0.60\right] / \left[(W_2 / D_2) + 0.60\right] \quad \textbf{(Equation 7-17)}$$

where:

h = Thickness of sprayed fire-resistant material in inches.

W = Weight of the structural steel beam or girder in pounds per linear foot.

D = Heated perimeter of the structural steel beam in inches.

Subscript 1 refers to the beam and fire-resistant material thickness in the *approved* assembly.

Subscript 2 refers to the substitute beam or girder and the required thickness of fire-resistant material.

The *fire resistance* of structural steel beams and girders protected with intumescent or mastic fire-resistant coatings shall be determined on the basis of fire-resistance tests in accordance with Section 703.2.

722.5.2.2.1 Minimum thickness. The use of Equation 7-17 is subject to the following conditions:

1. The weight-to-heated-perimeter ratio for the substitute beam or girder (W_2/D_2) shall be not less than 0.37.
2. The thickness of fire protection materials calculated for the substitute beam or girder (T_1) shall be not less than $^3/_8$ inch (9.5 mm).
3. The unrestrained or restrained beam rating shall be not less than 1 hour.
4. Where used to adjust the material thickness for a restrained beam, the use of this procedure is limited to structural steel sections classified as compact in accordance with AISC 360.

722.5.2.3 Structural steel trusses. The *fire resistance* of structural steel trusses protected with fire-resistant materials sprayed to each of the individual truss elements shall be permitted to be determined in accordance with this section. The thickness of the fire-resistant material shall be determined in accordance with Section 722.5.1.3. The weight-to-heated-perimeter ratio (W/D) of truss elements that can be simultaneously exposed to fire on all sides shall be determined on the same basis as columns, as specified in Section 722.5.1.1. The weight-to-heated-perimeter ratio (W/D) of truss elements that directly support floor or roof assembly shall be determined on the same basis as beams and girders, as specified in Section 722.5.2.1.

The *fire resistance* of structural steel trusses protected with intumescent or mastic fire-resistant coatings shall be determined on the basis of *fire-resistance* tests in accordance with Section 703.2.

722.6 Wood assemblies. The provisions of this section contain procedures by which the *fire-resistance ratings* of wood assemblies are established by calculations.

722.6.1 General. This section contains procedures for calculating the *fire-resistance ratings* of walls, floor/ceiling and roof/ceiling assemblies based in part on the standard method of testing referenced in Section 703.2.

722.6.1.1 Maximum fire-resistance rating. *Fire-resistance ratings* calculated for assemblies using the methods in Section 722.6 shall be limited to not more than 1 hour.

INTERNATIONAL CODE COUNCIL®
Copyright © 2019 ICC & NYSDOS. ALL RIGHTS RESERVED. Accessed by Lauren Gualdino (lgualdino@briarcliffmanor.org), (-) Order Number #100880972 on May 08, 2020 07:05 AM (PDT) pursuant to License Agreement with ICC & NYSDOS. No further reproduction, no

100880972

722.6.1.2 Dissimilar membranes. Where dissimilar membranes are used on a wall assembly that requires consideration of fire exposure from both sides, the calculation shall be made from the least fire-resistant (weaker) side.

722.6.2 Walls, floors and roofs. These procedures apply to both load-bearing and nonload-bearing assemblies.

722.6.2.1 Fire-resistance rating of wood frame assemblies. The *fire-resistance rating* of a wood frame assembly is equal to the sum of the time assigned to the membrane on the fire-exposed side, the time assigned to the framing members and the time assigned for additional contribution by other protective measures such as insulation. The membrane on the unexposed side shall not be included in determining the *fire resistance* of the assembly.

722.6.2.2 Time assigned to membranes. Table 722.6.2(1) indicates the time assigned to membranes on the fire-exposed side.

722.6.2.3 Exterior walls. For an exterior wall with a *fire separation distance* greater than 10 feet (3048 mm), the wall is assigned a rating dependent on the interior membrane and the framing as described in Tables 722.6.2(1) and 722.6.2(2). The membrane on the outside of the nonfire-exposed side of exterior walls with a *fire separation distance* greater than 10 feet (3048 mm) shall consist of sheathing, sheathing paper and siding as described in Table 722.6.2(3).

722.6.2.4 Floors and roofs. In the case of a floor or roof, the standard test provides only for testing for fire exposure from below. Except as noted in Section 703.3, Item 5, floor or roof assemblies of wood framing shall have an upper membrane consisting of a subfloor and finished floor conforming to Table 722.6.2(4) or any other membrane that has a contribution to *fire resistance* of not less than 15 minutes in Table 722.6.2(1).

722.6.2.5 Additional protection. Table 722.6.2(5) indicates the time increments to be added to the *fire resistance* where glass fiber, rockwool, slag *mineral wool* or cellulose insulation is incorporated in the assembly.

722.6.2.6 Fastening. Fastening of wood frame assemblies and the fastening of membranes to the wood framing members shall be done in accordance with Chapter 23.

INTERNATIONAL CODE COUNCIL®
Copyright © 2019 ICC & NYSDOS. ALL RIGHTS RESERVED. Accessed by Lauren Gualdino (lgualdino@briarcliffmanor.org), (-) Order Number #100880972 on May 08, 2020 07:05 AM (PDT) pursuant to License Agreement with ICC & NYSDOS. No further reproduction, no

100880972

TABLE 722.5.1(1)
W/D RATIOS FOR STEEL COLUMNS

STRUCTURAL SHAPE	CONTOUR PROFILE	BOX PROFILE	STRUCTURAL SHAPE	CONTOUR PROFILE	BOX PROFILE
W14 × 233	2.55	3.65	W10 × 112	1.81	2.57
× 211	2.32	3.35	× 100	1.64	2.33
× 193	2.14	3.09	× 88	1.45	2.08
× 176	1.96	2.85	× 77	1.28	1.85
× 159	1.78	2.60	× 68	1.15	1.66
× 145	1.64	2.39	× 60	1.01	1.48
× 132	1.56	2.25	× 54	0.922	1.34
× 120	1.42	2.06	× 49	0.84	1.23
× 109	1.29	1.88	× 45	0.888	1.24
× 99	1.18	1.72	× 39	0.78	1.09
× 90	1.08	1.58	× 33	0.661	0.93
× 82	1.23	1.68			
× 74	1.12	1.53	W8 × 67	1.37	1.94
× 68	1.04	1.41	× 58	1.20	1.71
× 61	0.928	1.28	× 48	1.00	1.44
× 53	0.915	1.21	× 40	0.849	1.23
× 48	0.835	1.10	× 35	0.749	1.08
× 43	0.752	0.99	× 31	0.665	0.97
			× 28	0.688	0.96
W12 × 190	2.50	3.51	× 24	0.591	0.83
× 170	2.26	3.20	× 21	0.577	0.77
× 152	2.04	2.90	× 18	0.499	0.67
× 136	1.86	2.63			
× 120	1.65	2.36	W6 ×25	0.696	1.00
× 106	1.47	2.11	× 20	0.563	0.82
× 96	1.34	1.93	× 16	0.584	0.78
× 87	1.22	1.76	× 15	0.431	0.63
× 79	1.11	1.61	× 12	0.448	0.60
× 72	1.02	1.48	× 9	0.338	0.46
× 65	0.925	1.35			
× 58	0.925	1.31	W5 ×19	0.644	0.93
× 53	0.855	1.20	× 16	0.55	0.80
× 50	0.909	1.23			
× 45	0.829	1.12	W4 ×13	0.556	0.79
× 40	0.734	1.00			

For SI: 1 pound per linear foot per inch = 0.059 kg/m/mm.

TABLE 722.5.1(2)
PROPERTIES OF CONCRETE

PROPERTY	NORMAL-WEIGHT CONCRETE	STRUCTURAL LIGHTWEIGHT CONCRETE
Thermal conductivity (k_c)	0.95 Btu/hr · ft · °F	0.35 Btu/hr · ft · °F
Specific heat (c_c)	0.20 Btu/lb °F	0.20 Btu/lb °F
Density (P_c)	145 lb/ft^3	110 lb/ft^3
Equilibrium (free) moisture content (m) by volume	4%	5%

For SI: 1 inch = 25.4 mm, 1 foot = 304.8 mm, 1 lb/ft^3 = 16.0185 kg/m^3, Btu/hr · ft · °F = 1.731 W/(m · K).

INTERNATIONAL CODE COUNCIL®
Copyright © 2019 ICC & NYSDOS. ALL RIGHTS RESERVED. Accessed by Lauren Gualdino (lgualdino@briarcliffmanor.org), (-) Order Number #100880972 on May 08, 2020 07:05 AM (PDT) pursuant to License Agreement with ICC & NYSDOS. No further reproduction, no

100880972

TABLE 722.5.1(3)
THERMAL CONDUCTIVITY OF CONCRETE OR CLAY MASONRY UNITS

DENSITY (d_m) OF UNITS (lb/ft^3)	THERMAL CONDUCTIVITY (K) OF UNITS (Btu/hr · ft · °F)
Concrete Masonry Units	
80	0.207
85	0.228
90	0.252
95	0.278
100	0.308
105	0.340
110	0.376
115	0.416
120	0.459
125	0.508
130	0.561
135	0.620
140	0.685
145	0.758
150	0.837
Clay Masonry Units	
120	1.25
130	2.25

For SI: 1 pound per cubic foot = 16.0185 kg/m^3, Btu/hr · ft · °F = 1.731 W/(m · K).

TABLE 722.5.1(4)
WEIGHT-TO-HEATED-PERIMETER RATIOS (W/D) FOR TYPICAL WIDE FLANGE BEAM AND GIRDER SHAPES

STRUCTURAL SHAPE	CONTOUR PROFILE	BOX PROFILE	STRUCTURAL SHAPE	CONTOUR PROFILE	BOX PROFILE
W36 × 300	2.50	3.33	W24 × 68	0.942	1.21
× 280	2.35	3.12	× 62	0.934	1.14
× 260	2.18	2.92	× 55	0.828	1.02
× 245	2.08	2.76			
× 230	1.95	2.61	W21 × 147	1.87	2.60
× 210	1.96	2.45	× 132	1.68	2.35
× 194	1.81	2.28	× 122	1.57	2.19
× 182	1.72	2.15	× 111	1.43	2.01
× 170	1.60	2.01	× 101	1.30	1.84
× 160	1.51	1.90	× 93	1.40	1.80
× 150	1.43	1.79	× 83	1.26	1.62
× 135	1.29	1.63	× 73	1.11	1.44
			× 68	1.04	1.35

(continued)

INTERNATIONAL CODE COUNCIL®
Copyright © 2019 ICC & NYSDOS. ALL RIGHTS RESERVED. Accessed by Lauren Gualdino (lgualdino@briarcliffmanor.org), (-) Order Number #100880972 on May 08, 2020 07:05 AM (PDT) pursuant to License Agreement with ICC & NYSDOS. No further reproduction, no

100880972

TABLE 722.5.1(4)—continued
WEIGHT-TO-HEATED-PERIMETER RATIOS (*W/D*) FOR TYPICAL WIDE FLANGE BEAM AND GIRDER SHAPES

STRUCTURAL SHAPE	CONTOUR PROFILE	BOX PROFILE	STRUCTURAL SHAPE	CONTOUR PROFILE	BOX PROFILE
W33 × 241	2.13	2.86	W21 × 62	0.952	1.23
× 221	1.97	2.64	× 57	0.952	1.17
× 201	1.79	2.42	× 50	0.838	1.04
× 152	1.53	1.94	× 44	0.746	0.92
× 141	1.43	1.80			
× 130	1.32	1.67	W18 × 119	1.72	2.42
× 118	1.21	1.53	× 106	1.55	2.18
			× 97	1.42	2.01
W30 × 211	2.01	2.74	× 86	1.27	1.80
× 191	1.85	2.50	× 76	1.13	1.60
× 173	1.66	2.28	× 71	1.22	1.59
× 132	1.47	1.85	× 65	1.13	1.47
× 124	1.39	1.75	× 60	1.04	1.36
× 116	1.30	1.65	× 55	0.963	1.26
× 108	1.21	1.54	× 50	0.88	1.15
× 99	1.12	1.42	× 46	0.878	1.09
			× 40	0.768	0.96
W27 × 178	1.87	2.55	× 35	0.672	0.85
× 161	1.70	2.33			
× 146	1.55	2.12	W16 × 100	1.59	2.25
× 114	1.39	1.76	× 89	1.43	2.03
× 102	1.24	1.59	× 77	1.25	1.78
× 94	1.15	1.47	× 67	1.09	1.56
× 84	1.03	1.33	× 57	1.09	1.43
			× 50	0.962	1.26
			× 45	0.870	1.15
W24 × 162	1.88	2.57	× 40	0.780	1.03
× 146	1.70	2.34	× 36	0.702	0.93
× 131	1.54	2.12	× 31	0.661	0.83
× 117	1.38	1.91	× 26	0.558	0.70
× 104	1.24	1.71			
× 94	1.28	1.63	W14 × 132	1.89	3.00
× 84	1.15	1.47	× 120	1.71	2.75
× 76	1.05	1.34	× 109	1.57	2.52
W14 × 99	1.43	2.31	W10 × 30	0.806	1.12
× 90	1.31	2.11	× 26	0.708	0.98
× 82	1.45	2.12	× 22	0.606	0.84
× 74	1.32	1.93	× 19	0.607	0.78
× 68	1.22	1.78	× 17	0.543	0.70
× 61	1.10	1.61	× 15	0.484	0.63
× 53	1.06	1.48	× 12	0.392	0.51
× 48	0.970	1.35			

(continued)

INTERNATIONAL CODE COUNCIL®
Copyright © 2019 ICC & NYSDOS. ALL RIGHTS RESERVED. Accessed by Lauren Gualdino (lgualdino@briarcliffmanor.org), (-) Order Number #100880972 on May 08, 2020 07:05 AM (PDT) pursuant to License Agreement with ICC & NYSDOS. No further reproduction, no

100880972

TABLE 722.5.1(4)—continued
WEIGHT-TO-HEATED-PERIMETER RATIOS (*W/D*) FOR TYPICAL WIDE FLANGE BEAM AND GIRDER SHAPES

STRUCTURAL SHAPE	CONTOUR PROFILE	BOX PROFILE	STRUCTURAL SHAPE	CONTOUR PROFILE	BOX PROFILE
W14 × 43	0.874	1.22	W8 × 67	1.65	2.55
× 38	0.809	1.09	× 58	1.44	2.26
× 34	0.725	0.98	× 48	1.21	1.91
× 30	0.644	0.87	× 40	1.03	1.63
× 26	0.628	0.79	× 35	0.907	1.44
× 22	0.534	0.68	× 31	0.803	1.29
			× 28	0.819	1.24
W12 × 87	1.47	2.34	× 24	0.704	1.07
× 79	1.34	2.14	× 21	0.675	0.96
× 72	1.23	1.97	× 18	0.583	0.84
× 65	1.11	1.79	× 15	0.551	0.74
× 58	1.10	1.69	× 13	0.483	0.65
× 53	1.02	1.55	× 10	0.375	0.51
× 50	1.06	1.54			
× 45	0.974	1.40	W6 × 25	0.839	1.33
× 40	0.860	1.25	× 20	0.678	1.09
× 35	0.810	1.11	× 16	0.684	0.96
× 30	0.699	0.96	× 15	0.521	0.83
× 26	0.612	0.84	× 12	0.526	0.75
× 22	0.623	0.77	× 9	0.398	0.57
× 19	0.540	0.67			
× 16	0.457	0.57	W5 × 19	0.776	1.24
× 14	0.405	0.50	× 16	0.664	1.07
W10 × 112	2.17	3.38	W4 × 13	0.670	1.05
× 100	1.97	3.07			
× 88	1.74	2.75			
× 77	1.54	2.45			
× 68	1.38	2.20			
× 60	1.22	1.97			
× 54	1.11	1.79			
× 49	1.01	1.64			
× 45	1.06	1.59			
× 39	0.94	1.40			
× 33	0.77	1.20			

For SI: 1 pound per linear foot per inch = 0.059 kg/m/mm.

INTERNATIONAL CODE COUNCIL®
Copyright © 2019 ICC & NYSDOS. ALL RIGHTS RESERVED. Accessed by Lauren Gualdino (lgualdino@briarcliffmanor.org), (-) Order Number #100880972 on May 08, 2020 07:05 AM (PDT) pursuant to License Agreement with ICC & NYSDOS. No further reproduction, no

100880972

TABLE 722.5.1(5)
FIRE RESISTANCE OF CONCRETE MASONRY PROTECTED STEEL COLUMNS

COLUMN SIZE	CONCRETE MASONRY DENSITY POUNDS PER CUBIC FOOT	MINIMUM REQUIRED EQUIVALENT THICKNESS FOR FIRE-RESISTANCE RATING OF CONCRETE MASONRY PROTECTION ASSEMBLY, T_e (inches)				COLUMN SIZE	CONCRETE MASONRY DENSITY POUNDS PER CUBIC FOOT	MINIMUM REQUIRED EQUIVALENT THICKNESS FOR FIRE-RESISTANCE RATING OF CONCRETE MASONRY PROTECTION ASSEMBLY, T_e (inches)			
		1 hour	2 hours	3 hours	4 hours			1 hour	2 hours	3 hours	4 hours
W14 × 82	80	0.74	1.61	2.36	3.04	W10 × 68	80	0.72	1.58	2.33	3.01
	100	0.89	1.85	2.67	3.40		100	0.87	1.83	2.65	3.38
	110	0.96	1.97	2.81	3.57		110	0.94	1.95	2.79	3.55
	120	1.03	2.08	2.95	3.73		120	1.01	2.06	2.94	3.72
W14 × 68	80	0.83	1.70	2.45	3.13	W10 × 54	80	0.88	1.76	2.53	3.21
	100	0.99	1.95	2.76	3.49		100	1.04	2.01	2.83	3.57
	110	1.06	2.06	2.91	3.66		110	1.11	2.12	2.98	3.73
	120	1.14	2.18	3.05	3.82		120	1.19	2.24	3.12	3.90
W14 × 53	80	0.91	1.81	2.58	3.27	W10 × 45	80	0.92	1.83	2.60	3.30
	100	1.07	2.05	2.88	3.62		100	1.08	2.07	2.90	3.64
	110	1.15	2.17	3.02	3.78		110	1.16	2.18	3.04	3.80
	120	1.22	2.28	3.16	3.94		120	1.23	2.29	3.18	3.96
W14 × 43	80	1.01	1.93	2.71	3.41	W10 × 33	80	1.06	2.00	2.79	3.49
	100	1.17	2.17	3.00	3.74		100	1.22	2.23	3.07	3.81
	110	1.25	2.28	3.14	3.90		110	1.30	2.34	3.20	3.96
	120	1.32	2.38	3.27	4.05		120	1.37	2.44	3.33	4.12
W12 × 72	80	0.81	1.66	2.41	3.09	W8 × 40	80	0.94	1.85	2.63	3.33
	100	0.91	1.88	2.70	3.43		100	1.10	2.10	2.93	3.67
	110	0.99	1.99	2.84	3.60		110	1.18	2.21	3.07	3.83
	120	1.06	2.10	2.98	3.76		120	1.25	2.32	3.20	3.99
W12 × 58	80	0.88	1.76	2.52	3.21	W8 × 31	80	1.06	2.00	2.78	3.49
	100	1.04	2.01	2.83	3.56		100	1.22	2.23	3.07	3.81
	110	1.11	2.12	2.97	3.73		110	1.29	2.33	3.20	3.97
	120	1.19	2.23	3.11	3.89		120	1.36	2.44	3.33	4.12
W12 × 50	80	0.91	1.81	2.58	3.27	W8 × 24	80	1.14	2.09	2.89	3.59
	100	1.07	2.05	2.88	3.62		100	1.29	2.31	3.16	3.90
	110	1.15	2.17	3.02	3.78		110	1.36	2.42	3.28	4.05
	120	1.22	2.28	3.16	3.94		120	1.43	2.52	3.41	4.20
W12 × 40	80	1.01	1.94	2.72	3.41	W8 × 18	80	1.22	2.20	3.01	3.72
	100	1.17	2.17	3.01	3.75		100	1.36	2.40	3.25	4.01
	110	1.25	2.28	3.14	3.90		110	1.42	2.50	3.37	4.14
	120	1.32	2.39	3.27	4.06		120	1.48	2.59	3.49	4.28
4 × 4 × $^1/_2$ wall thickness	80	0.93	1.90	2.71	3.43	4 double extra strong 0.674 wall thickness	80	0.80	1.75	2.56	3.28
	100	1.08	2.13	2.99	3.76		100	0.95	1.99	2.85	3.62
	110	1.16	2.24	3.13	3.91		110	1.02	2.10	2.99	3.78
	120	1.22	2.34	3.26	4.06		120	1.09	2.20	3.12	3.93
4 × 4 × $^3/_8$ wall thickness	80	1.05	2.03	2.84	3.57	4 extra strong 0.337 wall thickness	80	1.12	2.11	2.93	3.65
	100	1.20	2.25	3.11	3.88		100	1.26	2.32	3.19	3.95
	110	1.27	2.35	3.24	4.02		110	1.33	2.42	3.31	4.09
	120	1.34	2.45	3.37	4.17		120	1.40	2.52	3.43	4.23

(continued)

INTERNATIONAL CODE COUNCIL®
Copyright © 2019 ICC & NYSDOS. ALL RIGHTS RESERVED. Accessed by Lauren Gualdino (lgualdino@briarcliffmanor.org), (-) Order Number #100880972 on May 08, 2020 07:05 AM (PDT) pursuant to License Agreement with ICC & NYSDOS. No further reproduction, no

100880972

TABLE 722.5.1(5)—continued
FIRE RESISTANCE OF CONCRETE MASONRY PROTECTED STEEL COLUMNS

COLUMN SIZE	CONCRETE MASONRY DENSITY POUNDS PER CUBIC FOOT	MINIMUM REQUIRED EQUIVALENT THICKNESS FOR FIRE-RESISTANCE RATING OF CONCRETE MASONRY PROTECTION ASSEMBLY, T_e (inches)				COLUMN SIZE	CONCRETE MASONRY DENSITY POUNDS PER CUBIC FOOT	MINIMUM REQUIRED EQUIVALENT THICKNESS FOR FIRE-RESISTANCE RATING OF CONCRETE MASONRY PROTECTION ASSEMBLY, T_e (inches)			
		1 hour	2 hours	3 hours	4 hours			1 hour	2 hours	3 hours	4 hours
$4 \times 4 \times {}^{1}/_{4}$ wall thickness	80	1.21	2.20	3.01	3.73	4 standard 0.237 wall thickness	80	1.26	2.25	3.07	3.79
	100	1.35	2.40	3.26	4.02		100	1.40	2.45	3.31	4.07
	110	1.41	2.50	3.38	4.16		110	1.46	2.55	3.43	4.21
	120	1.48	2.59	3.50	4.30		120	1.53	2.64	3.54	4.34
$6 \times 6 \times {}^{1}/_{2}$ wall thickness	80	0.82	1.75	2.54	3.25	5 double extra strong 0.750 wall thickness	80	0.70	1.61	2.40	3.12
	100	0.98	1.99	2.84	3.59		100	0.85	1.86	2.71	3.47
	110	1.05	2.10	2.98	3.75		110	0.91	1.97	2.85	3.63
	120	1.12	2.21	3.11	3.91		120	0.98	2.02	2.99	3.79
$6 \times 6 \times {}^{3}/_{8}$ wall thickness	80	0.96	1.91	2.71	3.42	5 extra strong 0.375 wall thickness	80	1.04	2.01	2.83	3.54
	100	1.12	2.14	3.00	3.75		100	1.19	2.23	3.09	3.85
	110	1.19	2.25	3.13	3.90		110	1.26	2.34	3.22	4.00
	120	1.26	2.35	3.26	4.05		120	1.32	2.44	3.34	4.14
$6 \times 6 \times {}^{1}/_{4}$ wall thickness	80	1.14	2.11	2.92	3.63	5 standard 0.258 wall thickness	80	1.20	2.19	3.00	3.72
	100	1.29	2.32	3.18	3.93		100	1.34	2.39	3.25	4.00
	110	1.36	2.43	3.30	4.08		110	1.41	2.49	3.37	4.14
	120	1.42	2.52	3.43	4.22		120	1.47	2.58	3.49	4.28
$8 \times 8 \times {}^{1}/_{2}$ wall thickness	80	0.77	1.66	2.44	3.13	6 double extra strong 0.864 wall thickness	80	0.59	1.46	2.23	2.92
	100	0.92	1.91	2.75	3.49		100	0.73	1.71	2.54	3.29
	110	1.00	2.02	2.89	3.66		110	0.80	1.82	2.69	3.47
	120	1.07	2.14	3.03	3.82		120	0.86	1.93	2.83	3.63
$8 \times 8 \times {}^{3}/_{8}$ wall thickness	80	0.91	1.84	2.63	3.33	6 extra strong 0.432 wall thickness	80	0.94	1.90	2.70	3.42
	100	1.07	2.08	2.92	3.67		100	1.10	2.13	2.98	3.74
	110	1.14	2.19	3.06	3.83		110	1.17	2.23	3.11	3.89
	120	1.21	2.29	3.19	3.98		120	1.24	2.34	3.24	4.04
$8 \times 8 \times {}^{1}/_{4}$ wall thickness	80	1.10	2.06	2.86	3.57	6 standard 0.280 wall thickness	80	1.14	2.12	2.93	3.64
	100	1.25	2.28	3.13	3.87		100	1.29	2.33	3.19	3.94
	110	1.32	2.38	3.25	4.02		110	1.36	2.43	3.31	4.08
	120	1.39	2.48	3.38	4.17		120	1.42	2.53	3.43	4.22

For SI: 1 inch = 25.4 mm, 1 pound per cubic feet = 16.02 kg/m^3.

Note: Tabulated values assume 1-inch air gap between masonry and steel section.

INTERNATIONAL CODE COUNCIL®
Copyright © 2019 ICC & NYSDOS. ALL RIGHTS RESERVED. Accessed by Lauren Gualdino (lgualdino@briarcliffmanor.org), (-) Order Number #100880972 on May 08, 2020 07:05 AM (PDT) pursuant to License Agreement with ICC & NYSDOS. No further reproduction, no

100880972

TABLE 722.5.1(6)
FIRE RESISTANCE OF CLAY MASONRY PROTECTED STEEL COLUMNS

COLUMN SIZE	CLAY MASONRY DENSITY, POUNDS PER CUBIC FOOT	MINIMUM REQUIRED EQUIVALENT THICKNESS FOR FIRE-RESISTANCE RATING OF CLAY MASONRY PROTECTION ASSEMBLY, T_e (inches)				COLUMN SIZE	CLAY MASONRY DENSITY, POUNDS PER CUBIC FOOT	MINIMUM REQUIRED EQUIVALENT THICKNESS FOR FIRE-RESISTANCE RATING OF CLAY MASONRY PROTECTION ASSEMBLY, T_e (inches)			
		1 hour	2 hours	3 hours	4 hours			1 hour	2 hours	3 hours	4 hours
W14 × 82	120	1.23	2.42	3.41	4.29	W10 × 68	120	1.27	2.46	3.26	4.35
	130	1.40	2.70	3.78	4.74		130	1.44	2.75	3.83	4.80
W14 × 68	120	1.34	2.54	3.54	4.43	W10 × 54	120	1.40	2.61	3.62	4.51
	130	1.51	2.82	3.91	4.87		130	1.58	2.89	3.98	4.95
W14 × 53	120	1.43	2.65	3.65	4.54	W10 × 45	120	1.44	2.66	3.67	4.57
	130	1.61	2.93	4.02	4.98		130	1.62	2.95	4.04	5.01
W14 × 43	120	1.54	2.76	3.77	4.66	W10 × 33	120	1.59	2.82	3.84	4.73
	130	1.72	3.04	4.13	5.09		130	1.77	3.10	4.20	5.13
W12 × 72	120	1.32	2.52	3.51	4.40	W8 × 40	120	1.47	2.70	3.71	4.61
	130	1.50	2.80	3.88	4.84		130	1.65	2.98	4.08	5.04
W12 × 58	120	1.40	2.61	3.61	4.50	W8 × 31	120	1.59	2.82	3.84	4.73
	130	1.57	2.89	3.98	4.94		130	1.77	3.10	4.20	5.17
W12 × 50	120	1.43	2.65	3.66	4.55	W8 × 24	120	1.66	2.90	3.92	4.82
	130	1.61	2.93	4.02	4.99		130	1.84	3.18	4.28	5.25
W12 × 40	120	1.54	2.77	3.78	4.67	W8 × 18	120	1.75	3.00	4.01	4.91
	130	1.72	3.05	4.14	5.10		130	1.93	3.27	4.37	5.34
STEEL TUBING						**STEEL PIPE**					
NOMINAL TUBE SIZE (inches)	CLAY MASONRY DENSITY, POUNDS PER CUBIC FOOT	MINIMUM REQUIRED EQUIVALENT THICKNESS FOR FIRE-RESISTANCE RATING OF CLAY MASONRY PROTECTION ASSEMBLY, T_e (inches)				NOMINAL PIPE SIZE (inches)	CLAY MASONRY DENSITY, POUNDS PER CUBIC FOOT	MINIMUM REQUIRED EQUIVALENT THICKNESS FOR FIRE-RESISTANCE RATING OF CLAY MASONRY PROTECTION ASSEMBLY, T_e (inches)			
		1 hour	2 hours	3 hours	4 hours			1 hour	2 hours	3 hours	4 hours
4 × 4 × 1/2 wall thickness	120	1.44	2.72	3.76	4.68	4 double extra strong 0.674 wall thickness	120	1.26	2.55	3.60	4.52
	130	1.62	3.00	4.12	5.11		130	1.42	2.82	3.96	4.95
4 × 4 × 3/8 wall thickness	120	1.56	2.84	3.88	4.78	4 extra strong 0.337 wall thickness	120	1.60	2.89	3.92	4.83
	130	1.74	3.12	4.23	5.21		130	1.77	3.16	4.28	5.25
4 × 4 × 1/4 wall thickness	120	1.72	2.99	4.02	4.92	4 standard 0.237 wall thickness	120	1.74	3.02	4.05	4.95
	130	1.89	3.26	4.37	5.34		130	1.92	3.29	4.40	5.37
6 × 6 × 1/2 wall thickness	120	1.33	2.58	3.62	4.52	5 double extra strong 0.750 wall thickness	120	1.17	2.44	3.48	4.40
	130	1.50	2.86	3.98	4.96		130	1.33	2.72	3.84	4.83
6 × 6 × 3/8 wall thickness	120	1.48	2.74	3.76	4.67	5 extra strong 0.375 wall thickness	120	1.55	2.82	3.85	4.76
	130	1.65	3.01	4.13	5.10		130	1.72	3.09	4.21	5.18
6 × 6 × 1/4 wall thickness	120	1.66	2.91	3.94	4.84	5 standard 0.258 wall thickness	120	1.71	2.97	4.00	4.90
	130	1.83	3.19	4.30	5.27		130	1.88	3.24	4.35	5.32
8 × 8 × 1/2 wall thickness	120	1.27	2.50	3.52	4.42	6 double extra strong 0.864 wall thickness	120	1.04	2.28	3.32	4.23
	130	1.44	2.78	3.89	4.86		130	1.19	2.60	3.68	4.67
8 × 8 × 3/8 wall thickness	120	1.43	2.67	3.69	4.59	6 extra strong 0.432 wall thickness	120	1.45	2.71	3.75	4.65
	130	1.60	2.95	4.05	5.02		130	1.62	2.99	4.10	5.08
8 × 8 × 1/4 wall thickness	120	1.62	2.87	3.89	4.78	6 standard 0.280 wall thickness	120	1.65	2.91	3.94	4.84
	130	1.79	3.14	4.24	5.21		130	1.82	3.19	4.30	5.27

For SI: 1 inch = 25.4 mm, 1 pound per cubic foot = 16.02 kg/m^3.

INTERNATIONAL CODE COUNCIL®
Copyright © 2019 ICC & NYSDOS. ALL RIGHTS RESERVED. Accessed by Lauren Gualdino (lgualdino@briarcliffmanor.org), (-) Order Number #100880972 on May 08, 2020 07:05 AM (PDT) pursuant to License Agreement with ICC & NYSDOS. No further reproduction, no

100880972

TABLE 722.5.1(7)
MINIMUM COVER (inch) FOR STEEL COLUMNS ENCASED IN NORMAL-WEIGHT CONCRETE[a] [FIGURE 722.5.1(6)(c)]

STRUCTURAL SHAPE	FIRE-RESISTANCE RATING (hours)				
	1	1 1/2	2	3	4
W14 × 233	1	1	1	1 1/2	2
× 176					2 1/2
× 132				2	
× 90			1 1/2		
× 61					3
× 48		1 1/2		2 1/2	
× 43					
W12 × 152	1	1	1	2	2 1/2
× 96					
× 65		1 1/2	1 1/2		3
× 50				2 1/2	
× 40					
W10 × 88	1	1 1/2	1 1/2	2	3
× 49	1			2 1/2	
× 45					
× 39					3 1/2
× 33			2		
W8 × 67	1	1	1 1/2	2 1/2	3
× 58					
× 48		1 1/2	2	3	3 1/2
× 31					
× 21					
× 18					4
W6 × 25	1	1 1/2	2	3	3 1/2
× 20		2	2 1/2		4
× 16				3 1/2	
× 15	1 1/2				
× 9					

For SI: 1 inch = 25.4 mm.

a. The tabulated thicknesses are based on the assumed properties of normal-weight concrete given in Table 722.5.1(2).

TABLE 722.5.1(8)
MINIMUM COVER (inch) FOR STEEL COLUMNS ENCASED IN STRUCTURAL LIGHTWEIGHT CONCRETE[a] [FIGURE 722.5.1(6)(c)]

STRUCTURAL SHAPE	FIRE-RESISTANCE RATING (HOURS)				
	1	1 1/2	2	3	4
W14 × 233	1	1	1	1	1 1/2
× 193				1 1/2	
× 74					2
× 61					2 1/2
× 43			1 1/2	2	
W12 × 65	1	1	1	1 1/2	2
× 53				2	2 1/2
× 40			1 1/2		
W10 × 112	1	1	1	1 1/2	2
× 88					
× 60				2	2 1/2
× 33			1 1/2		
W8 × 35	1	1	1 1/2	2	2 1/2
× 28					3
× 24				2 1/2	
× 18		1 1/2			

For SI: 1 inch = 25.4 mm.

a. The tabulated thicknesses are based on the assumed properties of structural lightweight concrete given in Table 722.5.1(2).

INTERNATIONAL CODE COUNCIL®
Copyright © 2019 ICC & NYSDOS. ALL RIGHTS RESERVED. Accessed by Lauren Gualdino (lgualdino@briarcliffmanor.org), (-) Order Number #100880972 on May 08, 2020 07:05 AM (PDT) pursuant to License Agreement with ICC & NYSDOS. No further reproduction, no

100880972

TABLE 722.5.1(9)
MINIMUM COVER (inch) FOR STEEL COLUMNS IN NORMAL-WEIGHT PRECAST COVERS[a] [FIGURE 722.5.1(6)(a)]

STRUCTURAL SHAPE	FIRE-RESISTANCE RATING (hours)				
	1	1 1/2	2	3	4
W14 × 233	1 1/2	1 1/2	1 1/2	2 1/2	3
× 211					3 1/2
× 176			2		
× 145			2	3	
× 109		2	2 1/2		4
× 99				3 1/2	
× 61					4 1/2
× 43					
W12 × 190	1 1/2	1 1/2	1 1/2	2 1/2	3 1/2
× 152			2		4
× 120				3	
× 96		2	2 1/2	3 1/2	
× 87					4 1/2
× 58					
× 40					
W10 × 112	1 1/2	1 1/2	2	3	3 1/2
× 88					4
× 77		2	2 1/2	3 1/2	
× 54					4 1/2
× 33					
W8 × 67	1 1/2	1 1/2	2	3	4
× 58		2	2 1/2	3 1/2	
× 48					4 1/2
× 28		2 1/2	3		
× 21				4	
× 18					
W6 × 25	1 1/2	2	2 1/2	3 1/2	4 1/2
× 20		2 1/2	3	4	
× 16					
× 12	2				5
× 9					

For SI: 1 inch = 25.4 mm.

a. The tabulated thicknesses are based on the assumed properties of normal-weight concrete given in Table 722.5.1(2).

TABLE 722.5.1(10)
MINIMUM COVER (inch) FOR STEEL COLUMNS IN STRUCTURAL LIGHTWEIGHT PRECAST COVERS[a] [FIGURE 722.5.1(6)(a)]

STRUCTURAL SHAPE	FIRE-RESISTANCE RATING (hours)				
	1	1 1/2	2	3	4
W14 × 233	1 1/2	1 1/2	1 1/2	2	2 1/2
× 176					3
× 145				2 1/2	
× 132					
× 109			2		
× 99				3	3 1/2
× 68					
× 43					
W12 × 190	1 1/2	1 1/2	1 1/2	2	2 1/2
× 152					3
× 136				2 1/2	
× 106					3 1/2
× 96			2		
× 87				3	
× 65					
× 40					
W10 × 112	1 1/2	1 1/2	1 1/2	2	3
× 100				2 1/2	
× 88					
× 77			2		3 1/2
× 60				3	
× 39					
× 33		2			
W8 × 67	1 1/2	1 1/2	1 1/2	2 1/2	3
× 48			2	3	3 1/2
× 35					
× 28		2			
× 18			2 1/2		4
W6 × 25	1 1/2	2	2	3	3 1/2
× 15			2 1/2	3 1/2	4
× 9					

For SI: 1 inch = 25.4 mm.

a. The tabulated thicknesses are based on the assumed properties of structural lightweight concrete given in Table 722.5.1(2).

INTERNATIONAL CODE COUNCIL®
Copyright © 2019 ICC & NYSDOS. ALL RIGHTS RESERVED. Accessed by Lauren Gualdino (lgualdino@briarcliffmanor.org), (-) Order Number #100880972 on May 08, 2020 07:05 AM (PDT) pursuant to License Agreement with ICC & NYSDOS. No further reproduction, no

TABLE 722.6.2(1)
TIME ASSIGNED TO WALLBOARD MEMBRANES[a, b, c, d]

DESCRIPTION OF FINISH	TIME[e] (minutes)
$^3/_8$-inch wood structural panel bonded with exterior glue	5
$^{15}/_{32}$-inch wood structural panel bonded with exterior glue	10
$^{19}/_{32}$-inch wood structural panel bonded with exterior glue	15
$^3/_8$-inch gypsum wallboard	10
$^1/_2$-inch gypsum wallboard	15
$^5/_8$-inch gypsum wallboard	30
$^1/_2$-inch Type X gypsum wallboard	25
$^5/_8$-inch Type X gypsum wallboard	40
Double $^3/_8$-inch gypsum wallboard	25
$^1/_2$-inch + $^3/_8$-inch gypsum wallboard	35
Double $^1/_2$-inch gypsum wallboard	40

For SI: 1 inch = 25.4 mm.

a. These values apply only where membranes are installed on framing members that are spaced 16 inches o.c. or less.

b. Gypsum wallboard installed over framing or furring shall be installed so that all edges are supported, except $^5/_8$-inch Type X gypsum wallboard shall be permitted to be installed horizontally with the horizontal joints staggered 24 inches each side and unsupported but finished.

c. On wood frame floor/ceiling or roof/ceiling assemblies, gypsum board shall be installed with the long dimension perpendicular to framing members and shall have all joints finished.

d. The membrane on the unexposed side shall not be included in determining the fire resistance of the assembly. Where dissimilar membranes are used on a wall assembly, the calculation shall be made from the least fire-resistant (weaker) side.

e. The time assigned is not a finished rating.

TABLE 722.6.2(2)
TIME ASSIGNED FOR CONTRIBUTION OF WOOD FRAME [a, b, c]

DESCRIPTION	TIME ASSIGNED TO FRAME (minutes)
Wood studs 16 inches o.c.	20
Wood floor and roof joists 16 inches o.c.	10

For SI: 1 inch = 25.4 mm.

a. This table does not apply to studs or joists spaced more than 16 inches o.c.

b. All studs shall be nominal 2 × 4 and all joists shall have a nominal thickness of not less than 2 inches.

c. Allowable spans for joists shall be determined in accordance with Sections 2308.4.2.1, 2308.7.1 and 2308.7.2.

TABLE 722.6.2(3)
MEMBRANE[a] ON EXTERIOR FACE OF WOOD STUD WALLS

SHEATHING	PAPER	EXTERIOR FINISH
$^5/_8$-inch T & G lumber $^5/_{16}$-inch exterior glue wood structural panel $^1/_2$-inch gypsum wallboard $^5/_8$-inch gypsum wallboard $^1/_2$-inch fiberboard	Sheathing paper	Lumber siding Wood shingles and shakes $^1/_4$-inch fiber-cement lap, panel or shingle siding $^1/_4$-inch wood structural panels-exterior type $^1/_4$-inch hardboard Metal siding Stucco on metal lath Masonry veneer Vinyl siding
None	—	$^3/_8$-inch exterior-grade wood structural panels

For SI: 1 inch = 25.4 mm.

a. Any combination of sheathing, paper and exterior finish is permitted.

INTERNATIONAL CODE COUNCIL®
Copyright © 2019 ICC & NYSDOS. ALL RIGHTS RESERVED. Accessed by Lauren Gualdino (lgualdino@briarcliffmanor.org), (-) Order Number #100880972 on May 08, 2020 07:05 AM (PDT) pursuant to License Agreement with ICC & NYSDOS. No further reproduction, no

100880972

TABLE 722.6.2(4)
FLOORING OR ROOFING OVER WOOD FRAMING[a]

ASSEMBLY	STRUCTURAL MEMBERS	SUBFLOOR OR ROOF DECK	FINISHED FLOORING OR ROOFING
Floor	Wood	$^{15}/_{32}$-inch wood structural panels or $^{11}/_{16}$-inch T & G softwood	Hardwood or softwood flooring on building paper resilient flooring, parquet floor felted-synthetic fiber floor coverings, carpeting, or ceramic tile on $^{1}/_{4}$-inch-thick fiber-cement underlayment or $^{3}/_{8}$-inch-thick panel-type underlay Ceramic tile on $1^{1}/_{4}$-inch mortar bed
Roof	Wood	$^{15}/_{32}$-inch wood structural panels or $^{11}/_{16}$-inch T & G softwood	Finished roofing material with or without insulation

For SI: 1 inch = 25.4 mm.

a. This table applies only to wood joist construction. It is not applicable to wood truss construction.

TABLE 722.6.2(5)
TIME ASSIGNED FOR ADDITIONAL PROTECTION

DESCRIPTION OF ADDITIONAL PROTECTION	FIRE RESISTANCE (minutes)
Add to the *fire-resistance rating* of wood stud walls if the spaces between the studs are completely filled with glass fiber mineral wool batts weighing not less than 2 pounds per cubic foot (0.6 pound per square foot of wall surface) or rockwool or slag material wool batts weighing not less than 3.3 pounds per cubic foot (1 pound per square foot of wall surface), or cellulose insulation having a nominal density not less than 2.6 pounds per cubic foot.	15

For SI: 1 pound/cubic foot = 16.0185 kg/m^3.

INTERNATIONAL CODE COUNCIL®
Copyright © 2019 ICC & NYSDOS. ALL RIGHTS RESERVED. Accessed by Lauren Gualdino (lgualdino@briarcliffmanor.org), (-) Order Number #100880972 on May 08, 2020 07:05 AM (PDT) pursuant to License Agreement with ICC & NYSDOS. No further reproduction, no

100880972

INTERNATIONAL CODE COUNCIL®
Copyright © 2019 ICC & NYSDOS. ALL RIGHTS RESERVED. Accessed by Lauren Gualdino (lgualdino@briarcliffmanor.org), (-) Order Number #100880972 on May 08, 2020 07:05 AM (PDT) pursuant to License Agreement with ICC & NYSDOS. No further reproduction, no

100880972

CHAPTER 8

INTERIOR FINISHES

SECTION 801
SCOPE

801.1 Scope. The provisions of this chapter shall govern the use of materials used as *interior finishes*, *trim* and *decorative materials*.

SECTION 802
GENERAL

802.1 Interior wall and ceiling finish. The provisions of Section 803 shall limit the allowable fire performance and smoke development of *interior wall and ceiling finish* materials based on occupancy classification.

802.2 Interior floor finish. The provisions of Section 804 shall limit the allowable fire performance of *interior floor finish* materials based on occupancy classification.

[F] 802.3 Decorative materials and trim. *Decorative materials* and *trim* shall be restricted by combustibility, fire performance or flame propagation performance criteria in accordance with Section 806.

802.4 Applicability. For buildings in flood hazard areas as established in Section 1612.3, *interior finishes*, *trim* and *decorative materials* below the elevation required by Section 1612 shall be flood-damage-resistant materials.

802.5 Application. Combustible materials shall be permitted to be used as finish for walls, ceilings, floors and other interior surfaces of buildings.

802.6 Windows. Show windows in the exterior walls of the first *story* above grade plane shall be permitted to be of wood or of unprotected metal framing.

802.7 Foam plastics. Foam plastics shall not be used as *interior finish* except as provided in Section 803.4. Foam plastics shall not be used as interior *trim* except as provided in Section 806.5 or 2604.2. This section shall apply both to exposed foam plastics and to foam plastics used in conjunction with a textile or vinyl facing or cover.

➡

SECTION 803
WALL AND CEILING FINISHES

803.1 General. *Interior wall and ceiling finish* materials shall be classified for fire performance and smoke development in accordance with Section 803.1.1 or 803.1.2, except as shown in Sections 803.1.3 through 803.15. Materials tested in accordance with Section 803.1.1 shall not be required to be tested in accordance with Section 803.1.2.

803.1.1 Interior wall and ceiling finish materials tested in accordance with NFPA 286. *Interior wall and ceiling finish* materials shall be classified in accordance with NFPA 286 and comply with Section 803.1.1.1. Materials complying with Section 803.1.1.1 shall be considered to also comply with the requirements of Class A.

803.1.1.1 Acceptance criteria for NFPA 286. The *interior finish* shall comply with the following:

1. During the 40 kW exposure, flames shall not spread to the ceiling.
2. The flame shall not spread to the outer extremity of the sample on any wall or ceiling.
3. Flashover, as defined in NFPA 286, shall not occur.
4. The peak heat release rate throughout the test shall not exceed 800 kW.
5. The total smoke released throughout the test shall not exceed 1,000 m^2.

803.1.2 Interior wall and ceiling finish materials tested in accordance with ASTM E84 or UL 723. *Interior wall* and *ceiling finish* materials shall be classified in accordance with ASTM E84 or UL 723. Such *interior finish* materials shall be grouped in the following classes in accordance with their flame spread and *smoke-developed indices.*

Class A = *Flame spread index* 0–25; *smoke-developed index 0–450.*

Class B = *Flame spread index* 26–75; *smoke-developed index 0–450.*

Class C = *Flame spread index* 76–200; *smoke-developed index 0–450.*

Exception: Materials tested in accordance with Section 803.1.1 and as indicated in Sections 803.1.3 through 803.13.

803.1.3 Interior wall and ceiling finish materials with different requirements. The materials indicated in Sections 803.2 through 803.13 shall be tested as indicated in the corresponding sections.

803.2 Thickness exemption. Materials having a thickness less than 0.036 inch (0.9 mm) applied directly to the surface of walls or ceilings shall not be required to be tested.

803.3 Heavy timber exemption. Exposed portions of building elements complying with the requirements for buildings of heavy timber construction in Section 602.4 or Section 2304.11 shall not be subject to *interior finish* requirements except in interior exit stairways, interior exit ramps, and exit passageways.

803.4 Foam plastics. Foam plastics shall not be used as *interior finish* except as provided in Section 2603.9. This section shall apply both to exposed foam plastics and to foam plastics used in conjunction with a textile or vinyl facing or cover.

INTERNATIONAL CODE COUNCIL®
Copyright © 2019 ICC & NYSDOS. ALL RIGHTS RESERVED. Accessed by Lauren Gualdino (lgualdino@briarcliffmanor.org), (-) Order Number #100880972 on May 08, 2020 07:05 AM (PDT) pursuant to License Agreement with ICC & NYSDOS. No further reproduction, no

100880972

803.5 Textile wall coverings. Where used as interior wall finish materials, textile wall coverings, including materials having woven or nonwoven, napped, tufted, looped or similar surface and carpet and similar textile materials, shall be tested in the manner intended for use, using the product-mounting system, including adhesive, and shall comply with the requirements of one of the following: Section 803.1.1, 803.5.1 or 803.5.2.

803.5.1 Room corner test for textile wall coverings and expanded vinyl wall coverings. Textile wall coverings and *expanded vinyl wall coverings* shall meet the criteria of Section 803.5.1.1 when tested in the manner intended for use in accordance with the Method B protocol of NFPA 265 using the product-mounting system, including adhesive.

803.5.1.1 Acceptance criteria for NFPA 265. The *interior finish* shall comply with the following:

1. During the 40 kW exposure, flames shall not spread to the ceiling.
2. The flame shall not spread to the outer extremities of the samples on the 8-foot by 12-foot (203 by 305 mm) walls.
3. Flashover, as defined in NFPA 265, shall not occur.
4. The total smoke release throughout the test shall not exceed 1,000 m^2.

803.5.2 Acceptance criteria for textile and expanded vinyl wall or ceiling coverings tested to ASTM E84 or UL 723. Textile wall and ceiling coverings and expanded vinyl wall and ceiling coverings shall have a Class A *flame spread index* in accordance with ASTM E84 or UL 723 and be protected by an automatic sprinkler system installed in accordance with Section 903.3.1.1 or 903.3.1.2. Test specimen preparation and mounting shall be in accordance with ASTM E2404.

803.6 Textile ceiling coverings. Where used as interior ceiling finish materials, textile ceiling coverings, including materials having woven or nonwoven, napped, tufted, looped or similar surface and carpet and similar textile materials, shall be tested in the manner intended for use, using the product-mounting system, including adhesive, and shall comply with the requirements of Section 803.1.1 or 803.5.2.

803.7 Expanded vinyl wall coverings. Where used as interior wall finish materials, *expanded vinyl wall coverings* shall be tested in the manner intended for use, using the product-mounting system, including adhesive, and shall comply with the requirements of one of the following: Section 803.1.1, 803.5.1 or 803.5.2.

803.8 Expanded vinyl ceiling coverings. Where used as interior ceiling finish materials, expanded vinyl ceiling coverings shall be tested in the manner intended for use, using the product mounting system, including adhesive, and shall comply with the requirements of Section 803.1.1 or 803.5.2.

803.9 High-density polyethylene (HDPE) and polypropylene (PP). Where high-density polyethylene or polypropylene is used as an *interior finish,* it shall comply with Section 803.1.1.

803.10 Site-fabricated stretch systems. Where used as interior wall or interior ceiling finish materials, *site-fabricated stretch systems* containing all three components described in the definition in Chapter 2 shall be tested in the manner intended for use, and shall comply with the requirements of Section 803.1.1 or 803.1.2. If the materials are tested in accordance with ASTM E84 or UL 723, specimen preparation and mounting shall be in accordance with ASTM E2573.

803.11 Laminated products factory produced with a wood substrate. Laminated products factory produced with a wood substrate shall comply with one of the following:

1. The laminated product shall meet the criteria of Section 803.1.1.1 when tested in accordance with NFPA 286 using the product-mounting system, including adhesive, as described in Section 5.8 of NFPA 286.
2. The laminated product shall have a Class A, B, or C *flame spread index* and *smoke-developed index*, based on the requirements of Table 803.13, in accordance with ASTM E84 or UL 723. Test specimen preparation and mounting shall be in accordance with ASTM E2579.

803.12 Facings or wood veneers intended to be applied on site over a wood substrate. Facings or veneers intended to be applied on site over a wood substrate shall comply with one of the following:

1. The facing or veneer shall meet the criteria of Section 803.1.1.1 when tested in accordance with NFPA 286 using the product mounting system, including adhesive, as described in Section 5.9 of NFPA 286.
2. The facing or veneer shall have a Class A, B or C *flame spread index* and *smoke-developed index*, based on the requirements of Table 803.13, in accordance with ASTM E84 or UL 723. Test specimen preparation and mounting shall be in accordance with ASTM E2404.

803.13 Interior finish requirements based on occupancy. *Interior wall and ceiling finish* shall have a *flame spread index* not greater than that specified in Table 803.13 for the group and location designated. *Interior wall and ceiling finish* materials tested in accordance with NFPA 286 and meeting the acceptance criteria of Section 803.1.1.1, shall be permitted to be used where a Class A classification in accordance with ASTM E84 or UL 723 is required.

803.14 Stability. *Interior finish* materials regulated by this chapter shall be applied or otherwise fastened in such a manner that such materials will not readily become detached where subjected to room temperatures of 200°F (93°C) for not less than 30 minutes.

803.15 Application of interior finish materials to fire-resistance-rated or noncombustible building elements. Where *interior finish* materials are applied on walls, ceilings or structural elements required to have a *fire-resistance rating* or to be of noncombustible construction, these finish materials shall comply with the provisions of this section.

INTERNATIONAL CODE COUNCIL®
Copyright © 2019 ICC & NYSDOS. ALL RIGHTS RESERVED. Accessed by Lauren Gualdino (lgualdino@briarcliffmanor.org), (-) Order Number #100880972 on May 08, 2020 07:05 AM (PDT) pursuant to License Agreement with ICC & NYSDOS. No further reproduction, no

100880972

TABLE 803.13
INTERIOR WALL AND CEILING FINISH REQUIREMENTS BY OCCUPANCY[k]

GROUP	SPRINKLERED[l]			NONSPRINKLERED		
	Interior exit stairways and ramps and exit passageways[a, b]	Corridors and enclosure for exit access stairways and ramps	Rooms and enclosed spaces[c]	Interior exit stairways and ramps and exit passageways[a, b]	Corridors and enclosure for exit access stairways and ramps	Rooms and enclosed spaces[c]
A-1 & A-2	B	B	C	A	A[d]	B[e]
A-3[f], A-4, A-5	B	B	C	A	A[d]	C
B, E, M, R-1	B	C[m]	C	A	B	C
R-4	B	C	C	A	B	B
F	C	C	C	B	C	C
H	B	B	C[g]	A	A	B
I-1	B	C	C	A	B	B
I-2	B	B	B[h, i]	A	A	B
I-3	A	A[j]	C	A	A	B
I-4	B	B	B[h, i]	A	A	B
R-2	C	C	C	B	B	C
R-3	C	C	C	C	C	C
S	C	C	C	B	B	C
U	No restrictions			No restrictions		

For SI: 1 inch = 25.4 mm, 1 square foot = 0.0929 m^2.

a. Class C interior finish materials shall be permitted for wainscotting or paneling of not more than 1,000 square feet of applied surface area in the grade lobby where applied directly to a noncombustible base or over furring strips applied to a noncombustible base and fireblocked as required by Section 803.15.1.

b. In other than Group I-3 occupancies in buildings less than three stories above grade plane, Class B interior finish for nonsprinklered buildings and Class C interior finish for sprinklered buildings shall be permitted in interior exit stairways and ramps.

c. Requirements for rooms and enclosed spaces shall be based on spaces enclosed by partitions. Where a fire-resistance rating is required for structural elements, the enclosing partitions shall extend from the floor to the ceiling. Partitions that do not comply with this shall be considered to be enclosing spaces and the rooms or spaces on both sides shall be considered to be one room or space. In determining the applicable requirements for rooms and enclosed spaces, the specific occupancy thereof shall be the governing factor regardless of the group classification of the building or structure.

d. Lobby areas in Group A-1, A-2 and A-3 occupancies shall be not less than Class B materials.

e. Class C interior finish materials shall be permitted in places of assembly with an occupant load of 300 persons or less.

f. For places of religious worship, wood used for ornamental purposes, trusses, paneling or chancel furnishing shall be permitted.

g. Class B material is required where the building exceeds two stories.

h. Class C interior finish materials shall be permitted in administrative spaces.

i. Class C interior finish materials shall be permitted in rooms with a capacity of four persons or less.

j. Class B materials shall be permitted as wainscotting extending not more than 48 inches above the finished floor in corridors and exit access stairways and ramps.

k. Finish materials as provided for in other sections of this code.

l. Applies when protected by an automatic sprinkler system installed in accordance with Section 903.3.1.1 or 903.3.1.2.

m. Corridors in ambulatory care facilities shall be provided with Class A or B materials.

803.15.1 Direct attachment and furred construction. Where walls, ceilings or structural elements are required by any provision in this code to be of fire-resistance-rated or noncombustible construction, the *interior finish* material shall be applied directly against such construction or to furring strips not exceeding $1^3/_4$ inches (44 mm), applied directly against such surfaces.

803.15.1.1 Furred construction. If the *interior finish* material is applied to furring strips, the intervening spaces between such furring strips shall comply with one of the following:

1. Be filled with material that is inorganic or noncombustible.
2. Be filled with material that meets the requirements of a Class A material in accordance with Section 803.1.1 or 803.1.2.
3. Be fireblocked at not greater than 8 feet (2438 mm) in every direction in accordance with Section 718.

Exception: Compliance with Item 1, 2 or 3 is not required where the materials used to create the concealed space are noncombustible.

803.15.2 Set-out construction. Where walls and ceilings are required to be of fire-resistance-rated or noncombustible construction and walls are set out or ceilings are dropped distances greater than specified in Section

INTERNATIONAL CODE COUNCIL®
Copyright © 2019 ICC & NYSDOS. ALL RIGHTS RESERVED. Accessed by Lauren Gualdino (lgualdino@briarcliffmanor.org), (-) Order Number #100880972 on May 08, 2020 07:05 AM (PDT) pursuant to License Agreement with ICC & NYSDOS. No further reproduction, no

100880972

803.15.1, Class A finish materials, in accordance with Section 803.1.1 or 803.1.2, shall be used.

Exceptions:

1. Where *interior finish* materials are protected on both sides by an *automatic sprinkler system* in accordance with Section 903.3.1.1 or 903.3.1.2.
2. Where *interior finish* materials are attached to noncombustible backing or furring strips installed as specified in Section 803.15.1.1.
3. Where the combustible void is filled with a noncombustible material.

803.15.2.1 Hangers and assembly members. The hangers and assembly members of such dropped ceilings that are below the horizontal fire-resistance-rated floor or roof assemblies shall be of noncombustible materials. The construction of each set-out wall and horizontal fire-resistance-rated floor or roof assembly shall be of fire-resistance-rated construction as required elsewhere in this code.

Exception: In Type III and V construction, *fire-retardant-treated wood* shall be permitted for use as hangers and assembly members of dropped ceilings.

803.15.3 Heavy timber construction. Wall and ceiling finishes of all classes as permitted in this chapter that are installed directly against the wood decking or planking of heavy timber construction in Section 602.4.2 or 2304.11 or to wood furring strips applied directly to the wood decking or planking shall be fireblocked as specified in Section 803.15.1.1.

803.15.4 Materials. An interior wall or ceiling finish material that is not more than $^1/_4$ inch (6.4 mm) thick shall be applied directly onto the wall, ceiling or structural element without the use of furring strips and shall not be suspended away from the building element to which that finish material it is applied.

Exceptions:

1. Noncombustible *interior finish* materials.
2. Materials that meet the requirements of Class A materials in accordance with Section 803.1.1 or 803.1.2 where the qualifying tests were made with the material furred out from the noncombustible backing shall be permitted to be used with furring strips.
3. Materials that meet the requirements of Class A materials in accordance with Section 803.1.1 or 803.1.2 where the qualifying tests were made with the material suspended away from the noncombustible backing shall be permitted to be used suspended away from the building element.

SECTION 804
INTERIOR FLOOR FINISH

804.1 General. *Interior floor finish* and floor covering materials shall comply with Sections 804.2 through 804.4.2.

Exception: Floor finishes and coverings of a traditional type, such as wood, vinyl, linoleum or terrazzo, and resilient floor covering materials that are not comprised of fibers.

804.2 Classification. *Interior floor finish* and floor covering materials required by Section 804.4.2 to be of Class I or II materials shall be classified in accordance with ASTM E648 or NFPA 253. The classification referred to herein corresponds to the classifications determined by ASTM E648 or NFPA 253 as follows: Class I, 0.45 watts/cm^2 or greater; Class II, 0.22 watts/cm^2 or greater.

804.3 Testing and identification. *Interior floor finish* and floor covering materials shall be tested by an agency in accordance with ASTM E648 or NFPA 253 and identified by a hang tag or other suitable method so as to identify the manufacturer or supplier and style, and shall indicate the *interior floor finish* or floor covering classification in accordance with Section 804.2. Carpet-type floor coverings shall be tested as proposed for use, including underlayment. Test reports confirming the information provided in the manufacturer's product identification shall be furnished to the building official upon request.

804.4 Interior floor finish requirements. Interior floor covering materials shall comply with Sections 804.4.1 and 804.4.2 and *interior floor finish* materials shall comply with Section 804.4.2.

804.4.1 Test requirement. In all occupancies, interior floor covering materials shall comply with the requirements of the DOC FF-1 "pill test" (CPSC 16 CFR Part 1630) or with ASTM D2859.

804.4.2 Minimum critical radiant flux. In all occupancies, *interior floor finish* and floor covering materials in enclosures for stairways and ramps, exit passageways, corridors and rooms or spaces not separated from corridors by partitions extending from the floor to the underside of the ceiling shall withstand a minimum critical radiant flux. The minimum critical radiant flux shall be not less than Class I in Groups I-1, I-2 and I-3 and not less than Class II in Groups A, B, E, H, I-4, M, R-1, R-2 and S.

Exception: Where a building is equipped throughout with an automatic sprinkler system in accordance with Section 903.3.1.1 or 903.3.1.2, Class II materials are permitted in any area where Class I materials are required, and materials complying with DOC FF-1 "pill test" (CPSC 16 CFR Part 1630) or with ASTM D2859 are permitted in any area where Class II materials are required.

INTERNATIONAL CODE COUNCIL®
Copyright © 2019 ICC & NYSDOS. ALL RIGHTS RESERVED. Accessed by Lauren Gualdino (lgualdino@briarcliffmanor.org), (-) Order Number #100880972 on May 08, 2020 07:05 AM (PDT) pursuant to License Agreement with ICC & NYSDOS. No further reproduction, no

100880972

SECTION 805
COMBUSTIBLE MATERIALS IN TYPES I AND II CONSTRUCTION

805.1 Application. Combustible materials installed on or embedded in floors of buildings of Type I or II construction shall comply with Sections 805.1.1 through 805.1.3.

Exception: Stages and platforms constructed in accordance with Sections 410.2 and 410.3, respectively.

805.1.1 Subfloor construction. Floor sleepers, bucks and nailing blocks shall not be constructed of combustible materials, unless the space between the fire-resistance-rated floor assembly and the flooring is either solidly filled with noncombustible materials or fireblocked in accordance with Section 718, and provided that such open spaces shall not extend under or through permanent partitions or walls.

805.1.2 Wood finish flooring. Wood finish flooring is permitted to be attached directly to the embedded or fireblocked wood sleepers and shall be permitted where cemented directly to the top surface of fire-resistance-rated floor assemblies or directly to a wood subfloor attached to sleepers as provided for in Section 805.1.1.

805.1.3 Insulating boards. Combustible insulating boards not more than $^1/_2$ inch (12.7 mm) thick and covered with finish flooring are permitted where attached directly to a noncombustible floor assembly or to wood subflooring attached to sleepers as provided for in Section 805.1.1.

SECTION 806
DECORATIVE MATERIALS AND TRIM

[F] 806.1 General. The following requirements shall apply to all occupancies:

1. Furnishings or decorative materials of an explosive or highly flammable character shall not be used.
2. Fire-retardant coatings in existing buildings shall be maintained so as to retain the effectiveness of the treatment under service conditions encountered in actual use.
3. Furnishings or other objects shall not be placed to obstruct exits, access thereto, egress therefrom or visibility thereof.
4. The permissible amount of decorative vegetation and noncombustible decorative materials shall not be limited.

➡

[F] 806.2 Combustible decorative materials. In Groups A, B, E, I, M and R-1 and in dormitories in Group R-2, curtains, draperies, fabric hangings and similar combustible decorative materials suspended from walls or ceilings shall comply with Section 806.4 and shall not exceed 10 percent of the specific wall or ceiling area to which such materials are attached.

Fixed or movable walls and partitions, paneling, wall pads and crash pads applied structurally or for decoration, acoustical correction, surface insulation or other purposes shall be considered to be *interior finish,* shall comply with Section 803 and shall not be considered to be *decorative materials* or furnishings.

Exceptions:

1. In auditoriums in Group A, the permissible amount of curtains, draperies, fabric hangings and similar combustible decorative materials suspended from walls or ceilings shall not exceed 75 percent of the aggregate wall area where the building is equipped throughout with an *approved automatic sprinkler system* in accordance with Section 903.3.1.1, and where the material is installed in accordance with Section 803.15 of this code.
2. In Group R-2 dormitories, within sleeping units and dwelling units, the permissible amount of curtains, draperies, fabric hangings and similar decorative materials suspended from walls or ceiling shall not exceed 50 percent of the aggregate wall areas where the building is equipped throughout with an *approved automatic sprinkler system* installed in accordance with Section 903.3.1.
3. In Group B and M occupancies, the amount of combustible fabric partitions suspended from the ceiling and not supported by the floor shall comply with Section 806.4 and shall not be limited.
4. The 10-percent limit shall not apply to curtains, draperies, fabric hangings and similar combustible decorative materials used as window coverings.

806.3 Occupancy-based requirements. Occupancy-based requirements for combustible decorative materials, other than decorative vegetation, not complying with Section 806.4 shall comply with Sections 807.5.1 through 807.5.6 of the *Fire Code of New York State.*

[F] 806.4 Acceptance criteria and reports. Where required to exhibit improved fire performance, curtains, draperies, fabric hangings and similar combustible decorative materials suspended from walls or ceilings shall be tested by an *approved agency* and meet the flame propagation performance criteria of Test 1 or 2, as appropriate, of NFPA 701, or exhibit a maximum heat release rate of 100 kW when tested in accordance with NFPA 289, using the 20 kW ignition source. Reports of test results shall be prepared in accordance with the test method used and furnished to the *building official* upon request.

[F] 806.5 Foam plastic. Foam plastic used as *trim* in any occupancy shall comply with Section 2604.2.

[F] 806.6 Pyroxylin plastic. Imitation leather or other material consisting of or coated with a pyroxylin or similarly hazardous base shall not be used in Group A occupancies.

[F] 806.7 Interior trim. Material, other than foam plastic used as interior *trim*, shall have a minimum Class C flame spread and *smoke-developed index* when tested in accordance with ASTM E84 or UL 723, as described in Section 803.1.2. Combustible *trim*, excluding handrails and guardrails, shall not exceed 10 percent of the specific wall or ceiling area to which it is attached.

INTERNATIONAL CODE COUNCIL®
Copyright © 2019 ICC & NYSDOS. ALL RIGHTS RESERVED. Accessed by Lauren Gualdino (lgualdino@briarcliffmanor.org), (-) Order Number #100880972 on May 08, 2020 07:05 AM (PDT) pursuant to License Agreement with ICC & NYSDOS. No further reproduction, no

100880972

[F] 806.8 Interior floor-wall base. *Interior floor-wall base* that is 6 inches (152 mm) or less in height shall be tested in accordance with Section 804.2 and shall be not less than Class II. Where a Class I floor finish is required, the floor-wall base shall be Class I.

Exception: Interior *trim* materials that comply with Section 806.7.

SECTION 807
INSULATION

807.1 Insulation. Thermal and acoustical insulation shall comply with Section 720.

SECTION 808
ACOUSTICAL CEILING SYSTEMS

808.1 Acoustical ceiling systems. The quality, design, fabrication and erection of metal suspension systems for acoustical tile and lay-in panel ceilings in buildings or structures shall conform to generally accepted engineering practice, the provisions of this chapter and other applicable requirements of this code.

808.1.1 Materials and installation. Acoustical materials complying with the *interior finish* requirements of Section 803 shall be installed in accordance with the manufacturer's recommendations and applicable provisions for applying *interior finish*.

808.1.1.1 Suspended acoustical ceilings. Suspended acoustical ceiling systems shall be installed in accordance with the provisions of ASTM C635 and ASTM C636.

808.1.1.2 Fire-resistance-rated construction. Acoustical ceiling systems that are part of fire-resistance-rated construction shall be installed in the same manner used in the assembly tested and shall comply with the provisions of Chapter 7.

INTERNATIONAL CODE COUNCIL®
Copyright © 2019 ICC & NYSDOS. ALL RIGHTS RESERVED. Accessed by Lauren Gualdino (lgualdino@briarcliffmanor.org), (-) Order Number #100880972 on May 08, 2020 07:05 AM (PDT) pursuant to License Agreement with ICC & NYSDOS. No further reproduction, no

100880972

CHAPTER 9

FIRE PROTECTION AND LIFE SAFETY SYSTEMS

SECTION 901 GENERAL

901.1 Scope. The provisions of this chapter shall specify where fire protection and life safety systems are required and shall apply to the design, installation and operation of *fire protection systems*.

901.2 Fire protection systems. *Fire protection systems* shall be installed, repaired, operated and maintained in accordance with this code and the *Fire Code of New York State*.

Any *fire protection system* for which an exception or reduction to the provisions of this code has been granted shall be considered to be a required system.

Exception: Any *fire protection system* or portion thereof not required by this code shall be permitted to be installed for partial or complete protection provided that such system meets the requirements of this code.

901.3 Modifications. Persons shall not remove or modify any *fire protection system* installed or maintained under the provisions of this code or the *Fire Code of New York State* without approval by the *building official*.

901.4 Threads. Threads provided for fire department connections to sprinkler systems, standpipes, yard hydrants or any other fire hose connection shall be compatible with the connections used by the local fire department.

901.5 Acceptance tests. *Fire protection systems* shall be tested in accordance with the requirements of this code and the *Fire Code of New York State*. Where required, the tests shall be conducted in the presence of the *building official*. Tests required by this code, the *Fire Code of New York State* and the standards listed in this code shall be conducted at the expense of the owner or the owner's authorized agent. It shall be unlawful to occupy portions of a structure until the required *fire protection systems* within that portion of the structure have been tested and *approved*.

901.6 Supervisory service. Where required, *fire protection systems* shall be monitored by an approved supervising station in accordance with NFPA 72.

901.6.1 Automatic sprinkler systems. *Automatic sprinkler systems* shall be monitored by an *approved* supervising station.

Exceptions:

1. A supervising station is not required for *automatic sprinkler systems* protecting one- and two-family dwellings.
2. Limited area systems in accordance with Section 903.3.8.

[F] 901.6.2 Integrated testing. Where two or more fire protection or life safety systems are interconnected, the intended response of subordinate fire protection and life safety systems shall be verified when required testing of the initiating system is conducted. In addition, integrated testing shall be performed in accordance with Sections 901.6.2.1 and 901.6.2.2.

[F] 901.6.2.1 High-rise buildings. For high-rise buildings, integrated testing shall comply with NFPA 4, with an integrated test performed prior to issuance of the certificate of occupancy and at intervals not exceeding 10 years, unless otherwise specified by an integrated system test plan prepared in accordance with NFPA 4. If an equipment failure is detected during integrated testing, a repeat of the integrated test shall not be required, except as necessary to verify operation of fire protection or life safety functions that are initiated by equipment that was repaired or replaced.

[F] 901.6.2.2 Smoke control systems. Where a fire alarm system is integrated with a smoke control system as outlined in Section 909, integrated testing shall comply with NFPA 4, with an integrated test performed prior to issuance of the certificate of occupancy and at intervals not exceeding 10 years, unless otherwise specified by an integrated system test plan prepared in accordance with NFPA 4. If an equipment failure is detected during integrated testing, a repeat of the integrated test shall not be required, except as necessary to verify operation of fire protection or life safety functions that are initiated by equipment that was repaired or replaced.

901.6.3 Fire alarm systems. Fire alarm systems required by the provisions of Section 907.2 of this code and Sections 907.2 and 907.9 of the *Fire Code of New York State* shall be monitored by an *approved* supervising station in accordance with Section 907.6.6 of this code.

Exceptions:

1. Single- and multiple-station smoke alarms required by Section 907.2.10.
2. Smoke detectors in Group I-3 occupancies.
3. Supervisory service is not required for *automatic sprinkler systems* in one- and two-family dwellings.

901.6.4 Group H. Supervision and monitoring of emergency alarm, detection and automatic fire-extinguishing systems in Group H occupancies shall be in accordance with the *Fire Code of New York State*.

901.7 Fire areas. Where buildings, or portions thereof, are divided into *fire areas* so as not to exceed the limits established for requiring a *fire protection system* in accordance with this chapter, such *fire areas* shall be separated by *fire walls* constructed in accordance with Section 706, fire barriers constructed in accordance with Section 707, or *horizontal assemblies* constructed in accordance with Section 711, or a combination thereof having a fire-resistance rating of not less than that determined in accordance with Section 707.3.10.

INTERNATIONAL CODE COUNCIL®
Copyright © 2019 ICC & NYSDOS. ALL RIGHTS RESERVED. Accessed by Lauren Gualdino (lgualdino@briarcliffmanor.org), (-) Order Number #100880972 on May 08, 2020 07:05 AM (PDT) pursuant to License Agreement with ICC & NYSDOS. No further reproduction, no

100880972

SECTION 902
FIRE PUMP AND RISER ROOM SIZE

[F] 902.1 Pump and riser room size. Where provided, fire pump rooms and *automatic sprinkler system* riser rooms shall be designed with adequate space for all equipment necessary for the installation, as defined by the manufacturer, with sufficient working room around the stationary equipment. Clearances around equipment to elements of permanent construction, including other installed equipment and appliances, shall be sufficient to allow inspection, service, repair or replacement without removing such elements of permanent construction or disabling the function of a required fire-resistance-rated assembly. Fire pump and *automatic sprinkler system* riser rooms shall be provided with doors and unobstructed passageways large enough to allow removal of the largest piece of equipment.

[F] 902.1.1 Access. Automatic sprinkler system risers, fire pumps and controllers shall be provided with ready access. Where located in a fire pump room or automatic sprinkler system riser room, the door shall be permitted to be locked provided that the key is available at all times.

[F] 902.1.2 Marking on access doors. Access doors for automatic sprinkler system riser rooms and fire pump rooms shall be labeled with an approved sign. The lettering shall be in contrasting color to the background. Letters shall have a minimum height of 2 inches (51 mm) with a minimum stroke of $^3/_8$ inch (10 mm).

[F] 902.1.3 Environment. Automatic sprinkler system riser rooms and fire pump rooms shall be maintained at a temperature of not less than 40ºF (4ºC). Heating units shall be permanently installed.

[F] 902.1.4 Lighting. Permanently installed artificial illumination shall be provided in the automatic sprinkler system riser rooms and fire pump rooms.

SECTION 903
AUTOMATIC SPRINKLER SYSTEMS

[F] 903.1 General. *Automatic sprinkler systems* shall comply with this section.

[F] 903.1.1 Alternative protection. Alternative *automatic fire-extinguishing systems* complying with Section 904 shall be permitted instead of automatic sprinkler protection where recognized by the applicable standard and *approved* by the fire code official.

[F] 903.2 Where required. Approved *automatic sprinkler systems* in new buildings and structures shall be provided in the locations described in Sections 903.2.1 through 903.2.12.

Exception: Spaces or areas in telecommunications buildings used exclusively for telecommunications equipment, associated electrical power distribution equipment, batteries and standby engines, provided that those spaces or areas are equipped throughout with an *automatic smoke detection system* in accordance with Section 907.2 and are separated from the remainder of the building by not less than 1-hour *fire barriers* constructed in accordance with Section 707 or not less than 2-hour *horizontal assemblies* constructed in accordance with Section 711, or both.

[F] 903.2.1 Group A. An *automatic sprinkler system* shall be provided throughout buildings and portions thereof used as Group A occupancies as provided in this section.

[F] 903.2.1.1 Group A-1. An *automatic sprinkler system* shall be provided throughout stories containing Group A-1 occupancies and throughout all stories from the Group A-1 occupancy to and including the levels of exit discharge serving that occupancy where one of the following conditions exists:

1. The *fire area* exceeds 12,000 square feet (1115 m^2).
2. The *fire area* has an *occupant load* of 300 or more.
3. The *fire area* is located on a floor other than a *level of exit discharge* serving such occupancies.
4. The *fire area* contains a multitheater complex.

[F] 903.2.1.2 Group A-2. An *automatic sprinkler system* shall be provided throughout stories containing Group A-2 occupancies and throughout all stories from the Group A-2 occupancy to and including the levels of exit discharge serving that occupancy where one of the following conditions exists:

1. The *fire area* exceeds 5,000 square feet (464 m^2).
2. The *fire area* has an *occupant load* of 100 or more.
3. The *fire area* is located on a floor other than a *level of exit discharge* serving such occupancies.

[F] 903.2.1.3 Group A-3. An *automatic sprinkler system* shall be provided throughout stories containing Group A-3 occupancies and throughout all stories from the Group A-3 occupancy to and including the levels of exit discharge serving that occupancy where one of the following conditions exists:

1. The *fire area* exceeds 12,000 square feet (1115 m^2).
2. The *fire area* has an *occupant load* of 300 or more.
3. The *fire area* is located on a floor other than a *level of exit discharge* serving such occupancies.

[F] 903.2.1.4 Group A-4. An *automatic sprinkler system* shall be provided throughout stories containing Group A-4 occupancies and throughout all stories from the Group A-4 occupancy to and including the levels of exit discharge serving that occupancy where one of the following conditions exists:

1. The *fire area* exceeds 12,000 square feet (1115 m^2).
2. The *fire area* has an *occupant load* of 300 or more.
3. The *fire area* is located on a floor other than a *level of exit discharge* serving such occupancies.

INTERNATIONAL CODE COUNCIL®
Copyright © 2019 ICC & NYSDOS. ALL RIGHTS RESERVED. Accessed by Lauren Gualdino (lgualdino@briarcliffmanor.org), (-) Order Number #100880972 on May 08, 2020 07:05 AM (PDT) pursuant to License Agreement with ICC & NYSDOS. No further reproduction, no

100880972

[F] 903.2.1.5 Group A-5. An *automatic sprinkler system* shall be provided for all enclosed Group A-5 accessory use areas in excess of 1,000 square feet (93 m^2).

[F] 903.2.1.5.1 Spaces under grandstands or bleachers. Enclosed spaces under grandstands or *bleachers* shall be equipped with an *automatic sprinkler system* in accordance with Section 903.3.1.1 where either of the following exist:

1. The enclosed area is 1,000 square feet (93 m^2) or less and is not constructed in accordance with Section 1029.1.1.1.
2. The enclosed area exceeds 1,000 square feet (93 m^2).

[F] 903.2.1.6 Assembly occupancies on roofs. Where an occupied roof has an assembly occupancy with an *occupant load* exceeding 100 for Group A-2 and 300 for other Group A occupancies, all floors between the occupied roof and the *level of exit discharge* shall be equipped with an *automatic sprinkler system* in accordance with Section 903.3.1.1 or 903.3.1.2.

Exception: Open parking garages of Type I or Type II construction.

903.2.1.7 Multiple fire areas. An *automatic sprinkler system* shall be provided where multiple fire areas of Group A-1, A-2, A-3 or A-4 occupancies share exit or exit access components and the combined *occupant load* of theses fire areas is 300 or more.

[F] 903.2.2 Ambulatory care facilities. An *automatic sprinkler system* shall be installed throughout the entire floor containing an *ambulatory care facility* where either of the following conditions exist at any time:

1. Four or more care recipients are incapable of self-preservation.
2. One or more care recipients that are incapable of self-preservation are located at other than the level of exit discharge serving such a facility.

In buildings where ambulatory care is provided on levels other than the *level of exit discharge*, an *automatic sprinkler system* shall be installed throughout the entire floor as well as all floors below where such care is provided, and all floors between the level of ambulatory care and the nearest *level of exit discharge*, the level of exit discharge, and all floors below the level of *exit discharge*.

Exception: Floors classified as an open parking garage are not required to be sprinklered.

[F] 903.2.3 Group E. An *automatic sprinkler system* shall be provided for Group E occupancies as follows:

1. Throughout all Group E *fire areas* greater than 12,000 square feet (1115 m^2) in area.
2. The Group E fire area is located on a floor other than a level of exit discharge serving such occupancies.

   Exception: In buildings where every classroom has not fewer than one exterior exit door at ground level, an *automatic sprinkler system* is not required in any area below the lowest level of exit discharge serving that area.
3. The Group E fire area has an occupant load of 300 or more.

[F] 903.2.4 Group F-1. An *automatic sprinkler system* shall be provided throughout all buildings containing a Group F-1 occupancy where one of the following conditions exists:

1. A Group F-1 *fire area* exceeds 12,000 square feet (1115 m^2).
2. A Group F-1 *fire area* is located more than three stories above *grade plane*.
3. The combined area of all Group F-1 *fire areas* on all floors, including any mezzanines, exceeds 24,000 square feet (2230 m^2).
4. A Group F-1 occupancy used for the manufacture of upholstered furniture or mattresses exceeds 2,500 square feet (232 m^2).

[F] 903.2.4.1 Woodworking operations. An *automatic sprinkler system* shall be provided throughout all Group F-1 occupancy *fire areas* that contain woodworking operations in excess of 2,500 square feet (232 m^2) in area that generate finely divided combustible waste or use finely divided combustible materials.

[F] 903.2.5 Group H. *Automatic sprinkler systems* shall be provided in high-hazard occupancies as required in Sections 903.2.5.1 through 903.2.5.3.

[F] 903.2.5.1 General. An *automatic sprinkler system* shall be installed in Group H occupancies.

[F] 903.2.5.2 Group H-5 occupancies. An *automatic sprinkler system* shall be installed throughout buildings containing Group H-5 occupancies. The design of the sprinkler system shall be not less than that required by this code for the occupancy hazard classifications in accordance with Table 903.2.5.2.

Where the design area of the sprinkler system consists of a *corridor* protected by one row of sprinklers, the maximum number of sprinklers required to be calculated is 13.

[F] 903.2.5.3 Pyroxylin plastics. An *automatic sprinkler system* shall be provided in buildings, or portions thereof, where cellulose nitrate film or pyroxylin plastics are manufactured, stored or handled in quantities exceeding 100 pounds (45 kg).

[F] TABLE 903.2.5.2
GROUP H-5 SPRINKLER DESIGN CRITERIA

LOCATION	OCCUPANCY HAZARD CLASSIFICATION
Fabrication areas	Ordinary Hazard Group 2
Service corridors	Ordinary Hazard Group 2
Storage rooms without dispensing	Ordinary Hazard Group 2
Storage rooms with dispensing	Extra Hazard Group 2
Corridors	Ordinary Hazard Group 2

[F] 903.2.6 Group I. An *automatic sprinkler system* shall be provided throughout buildings with a Group I *fire area*.

Exceptions:

1. An *automatic sprinkler system* installed in accordance with Section 903.3.1.2 shall be permitted in Group I-1, Condition 1 facilities.
2. An *automatic sprinkler system* is not required where Group I-4 day care facilities are at the *level*

INTERNATIONAL CODE COUNCIL®
Copyright © 2019 ICC & NYSDOS. ALL RIGHTS RESERVED. Accessed by Lauren Gualdino (lgualdino@briarcliffmanor.org), (-) Order Number #100880972 on May 08, 2020 07:05 AM (PDT) pursuant to License Agreement with ICC & NYSDOS. No further reproduction, no

100880972

of exit discharge and where every room where care is provided has not fewer than one exterior exit door.

3. In buildings where Group I-4 day care is provided on levels other than the *level of exit discharge*, an *automatic sprinkler system* in accordance with Section 903.3.1.1 shall be installed on the entire floor where care is provided, all floors between the level of care and the *level of exit discharge*, and all floors below the *level of exit discharge* other than areas classified as an open parking garage.

[F] 903.2.7 Group M. An *automatic sprinkler system* shall be provided throughout buildings containing a Group M occupancy where one of the following conditions exists:

1. A Group M *fire area* exceeds 12,000 square feet (1115 m^2).
2. A Group M *fire area* is located more than three stories above *grade plane*.
3. The combined area of all Group M *fire areas* on all floors, including any mezzanines, exceeds 24,000 square feet (2230 m^2).
4. A Group M occupancy used for the display and sale of upholstered furniture or mattresses exceeds 5,000 square feet (464 m^2).

[F] 903.2.7.1 High-piled storage. An *automatic sprinkler system* shall be provided in accordance with the *Fire Code of New York State* in all buildings of Group M where storage of merchandise is in high-piled or rack storage arrays.

[F] 903.2.8 Group R. An *automatic sprinkler system* installed in accordance with Section 903.3 shall be provided throughout all buildings with a Group R *fire area*.

[F] 903.2.8.1 Group R-3. An *automatic sprinkler system* installed in accordance with Section 903.3.1.3 shall be permitted in Group R-3 occupancies.

[F] 903.2.8.2 Group R-4, Condition 1. An *automatic sprinkler system* installed in accordance with Section 903.3.1.3 shall be permitted in Group R-4, Condition 1 occupancies.

[F] 903.2.8.3 Group R-4, Condition 2. An *automatic sprinkler system* installed in accordance with Section 903.3.1.2 shall be permitted in Group R-4, Condition 2 occupancies.

➡

[F] 903.2.8.4 Care facilities. An a*utomatic sprinkler system* installed in accordance with Section 903.3.1.3 shall be permitted in care facilities with five or fewer individuals in a single-family dwelling.

[F] 903.2.9 Group S-1. An *automatic sprinkler system* shall be provided throughout all buildings containing a Group S-1 occupancy where one of the following conditions exists:

1. A Group S-1 *fire area* exceeds 12,000 square feet (1115 m^2).
2. A Group S-1 *fire area* is located more than three stories above *grade plane*.
3. The combined area of all Group S-1 *fire areas* on all floors, including any mezzanines, exceeds 24,000 square feet (2230 m^2).
4. A Group S-1 *fire area* used for the storage of commercial motor vehicles where the *fire area* exceeds 5,000 square feet (464 m^2).
5. A Group S-1 occupancy used for the storage of upholstered furniture or mattresses exceeds 2,500 square feet (232 m^2).

[F] 903.2.9.1 Repair garages. An *automatic sprinkler system* shall be provided throughout all buildings used as repair garages in accordance with Section 406, as shown:

1. Buildings having two or more *stories above grade plane*, including basements, with a *fire area* containing a repair garage exceeding 10,000 square feet (929 m^2).
2. Buildings not more than one *story above grade plane*, with a *fire area* containing a repair garage exceeding 12,000 square feet (1115 m^2).
3. Buildings with repair garages servicing vehicles parked in basements.
4. A Group S-1 *fire area* used for the repair of commercial motor vehicles where the *fire area* exceeds 5,000 square feet (464 m^2).

[F] 903.2.9.2 Bulk storage of tires. Buildings and structures where the area for the storage of tires exceeds 20,000 cubic feet (566 m^3) shall be equipped throughout with an *automatic sprinkler system* in accordance with Section 903.3.1.1.

[F] 903.2.10 Group S-2 enclosed parking garages. An *automatic sprinkler system* shall be provided throughout buildings classified as enclosed parking garages in accordance with Section 406.6 where either of the following conditions exists:

1. Where the *fire area* of the enclosed parking garage exceeds 12,000 square feet (1115 m^2).
2. Where the enclosed parking garage is located beneath other groups.

   Exception: Enclosed parking garages located beneath Group R-3 occupancies.

[F] 903.2.10.1 Commercial parking garages. An *automatic sprinkler system* shall be provided throughout buildings used for storage of commercial motor vehicles where the *fire area* exceeds 5,000 square feet (464 m^2).

[F] 903.2.11 Specific building areas and hazards. In all occupancies other than Group U, an *automatic sprinkler system* shall be installed for building design or hazards in the locations set forth in Sections 903.2.11.1 through 903.2.11.6.

INTERNATIONAL CODE COUNCIL®
Copyright © 2019 ICC & NYSDOS. ALL RIGHTS RESERVED. Accessed by Lauren Gualdino (lgualdino@briarcliffmanor.org), (-) Order Number #100880972 on May 08, 2020 07:05 AM (PDT) pursuant to License Agreement with ICC & NYSDOS. No further reproduction, no

100880972

[F] 903.2.11.1 Stories without openings. An *automatic sprinkler system* shall be installed throughout all *stories*, including basements, of all buildings where the floor area exceeds 1,500 square feet (139.4 m^2) and where the story does not comply with the following criteria for exterior wall openings:

1. Openings below grade that lead directly to ground level by an exterior *stairway* complying with Section 1011 or an outside ramp complying with Section 1012. Openings shall be located in each 50 linear feet (15 240 mm), or fraction thereof, of *exterior wall* in the *story* on not fewer than one side. The required openings shall be distributed such that the lineal distance between adjacent openings does not exceed 50 feet (15 240 mm).
2. Openings entirely above the adjoining ground level totaling not less than 20 square feet (1.86 m^2) in each 50 linear feet (15 240 mm), or fraction thereof, of *exterior wall* in the story on not fewer than one side. The required openings shall be distributed such that the lineal distance between adjacent openings does not exceed 50 feet (15 240 mm). The height of the bottom of the clear opening shall not exceed 44 inches (1118 mm) measured from the floor.

[F] 903.2.11.1.1 Opening dimensions and access. Openings shall have a minimum dimension of not less than 30 inches (762 mm). Access to such openings shall be provided for the fire department from the exterior and shall not be obstructed in a manner such that fire fighting or rescue cannot be accomplished from the exterior.

[F] 903.2.11.1.2 Openings on one side only. Where openings in a *story* are provided on only one side and the opposite wall of such *story* is more than 75 feet (22 860 mm) from such openings, the *story* shall be equipped throughout with an *approved automatic sprinkler system*, or openings shall be provided on not fewer than two sides of the *story*.

[F] 903.2.11.1.3 Basements. Where any portion of a *basement* is located more than 75 feet (22 860 mm) from openings required by Section 903.2.11.1, or where walls, partitions or other obstructions are installed that restrict the application of water from hose streams, the *basement* shall be equipped throughout with an *approved automatic sprinkler system*.

[F] 903.2.11.2 Rubbish and linen chutes. An *automatic sprinkler system* shall be installed at the top of rubbish and linen chutes and in their terminal rooms. Chutes shall have additional sprinkler heads installed at alternate floors and at the lowest intake. Where a rubbish chute extends through a building more than one floor below the lowest intake, the extension shall have sprinklers installed that are recessed from the drop area of the chute and protected from freezing in accordance with Section 903.3.1.1. Such sprinklers shall be installed at alternate floors, beginning with the second level below the last intake and ending with the floor above the discharge. *Access* to sprinklers in chutes shall be provided for servicing.

[F] 903.2.11.3 Buildings 55 feet or more in height. An *automatic sprinkler system* shall be installed throughout buildings that have one or more stories with an *occupant load* of 30 or more located 55 feet (16 764 mm) or more above the lowest level of fire department vehicle access, measured to the finished floor.

Exceptions:

1. Open parking structures.
2. Occupancies in Group F-2.

[F] 903.2.11.4 Ducts conveying hazardous exhausts. Where required by the *Mechanical Code of New York State*, automatic sprinklers shall be provided in ducts conveying hazardous exhaust or flammable or combustible materials.

Exception: Ducts where the largest cross-sectional diameter of the duct is less than 10 inches (254 mm).

[F] 903.2.11.5 Commercial cooking operations. An *automatic sprinkler system* shall be installed in commercial kitchen exhaust hood and duct systems where an *automatic sprinkler system* is used to comply with Section 904.

[F] 903.2.11.6 Other required suppression systems. In addition to the requirements of Section 903.2, the provisions indicated in Table 903.2.11.6 require the installation of a fire suppression system for certain buildings and areas.

[F] 903.2.12 During construction. *Automatic sprinkler systems* required during construction, *alteration* and demolition operations shall be provided in accordance with Chapter 33 of the *Fire Code of New York State*.

[F] 903.3 Installation requirements. *Automatic sprinkler systems* shall be designed and installed in accordance with Sections 903.3.1 through 903.3.8.

[F] 903.3.1 Standards. Sprinkler systems shall be designed and installed in accordance with Section 903.3.1.1 unless otherwise permitted by Sections 903.3.1.2 and 903.3.1.3 and other chapters of this code, as applicable.

[F] 903.3.1.1 NFPA 13 sprinkler systems. Where the provisions of this code require that a building or portion thereof be equipped throughout with an *automatic sprinkler system* in accordance with this section, sprinklers shall be installed throughout in accordance with NFPA 13 except as provided in Sections 903.3.1.1.1 and 903.3.1.1.2.

[F] 903.3.1.1.1 Exempt locations. Automatic sprinklers shall not be required in the following rooms or areas where such rooms or areas are protected with

INTERNATIONAL CODE COUNCIL®
Copyright © 2019 ICC & NYSDOS. ALL RIGHTS RESERVED. Accessed by Lauren Gualdino (lgualdino@briarcliffmanor.org), (-) Order Number #100880972 on May 08, 2020 07:05 AM (PDT) pursuant to License Agreement with ICC & NYSDOS. No further reproduction, no

100880972

[F] TABLE 903.2.11.6
ADDITIONAL REQUIRED SUPPRESSION SYSTEMS

SECTION	SUBJECT
402.5, 402.6.2	Covered and open mall buildings
403.3	High-rise buildings
404.3	Atriums
405.3	Underground structures
407.7	Group I-2
410.6	Stages
411.3	Special amusement buildings
412.2.4	Airport traffic control towers
412.3.6, 412.3.6.1, 412.5.6	Aircraft hangars
415.11.11	Group H-5 HPM exhaust ducts
416.5	Flammable finishes
417.4	Drying rooms
419.5	*Live/work units*
424.3	Children's play structures
428	Buildings containing laboratory suites
507	Unlimited area buildings
509.4	Incidental uses
1029.6.2.3	Smoke-protected assembly seating
FCNYS	Sprinkler system requirements as set forth in Section 903.2.11.6 of the *Fire Code of New York State*

an *approved* automatic fire detection system in accordance with Section 907.2 that will respond to visible or invisible particles of combustion. Sprinklers shall not be omitted from a room merely because it is damp, of fire-resistance-rated construction or contains electrical equipment.

1. A room where the application of water, or flame and water, constitutes a serious life or fire hazard.
2. A room or space where sprinklers are considered undesirable because of the nature of the contents, where *approved* by the fire code official.
3. Generator and transformer rooms separated from the remainder of the building by walls and floor/ceiling or roof/ceiling assemblies having a *fire-resistance rating* of not less than 2 hours.
4. Rooms or areas that are of noncombustible construction with wholly noncombustible contents.
5. Fire service access elevator machine rooms and machinery spaces.
6. Machine rooms, machinery spaces, control rooms and control spaces associated with occupant evacuation elevators designed in accordance with Section 3008.

[F] 903.3.1.1.2 Bathrooms. In Group R occupancies sprinklers shall not be required in bathrooms that do not exceed 55 square feet (5 m^2) in area and are located within individual *dwelling units* or *sleeping units*, provided that walls and ceilings, including the walls and ceilings behind a shower enclosure or tub, are of noncombustible or limited-combustible materials with a 15-minute thermal barrier rating.

[F] 903.3.1.2 NFPA 13R sprinkler systems. *Automatic sprinkler systems* in Group R occupancies up to and including four stories in height in buildings not exceeding 60 feet (18 288 mm) in height above grade plane shall be permitted to be installed throughout in accordance with NFPA 13R.

The number of stories of Group R occupancies constructed in accordance with Sections 510.2 and 510.4 shall be measured from the horizontal assembly creating separate buildings.

[F] 903.3.1.2.1 Balconies and decks. Sprinkler protection shall be provided for exterior balconies, decks and ground floor patios of *dwelling units* and *sleeping units* where either of the following conditions exists:

1. The building is of Type V construction, provided that there is a roof or deck above.
2. Exterior balconies, decks and ground floor patios of dwelling units and sleeping units are constructed in accordance with Section 705.2.3.1, Exception 3.

Sidewall sprinklers that are used to protect such areas shall be permitted to be located such that their deflectors are within 1 inch (25 mm) to 6 inches (152 mm) below the structural members and a maximum distance of 14 inches (356 mm) below the deck of the exterior balconies and decks that are constructed of open wood joist construction.

[F] 903.3.1.2.2 Open-ended corridors. Sprinkler protection shall be provided in *open-ended corridors* and associated *exterior stairways* and *ramps* as specified in Section 1027.6, Exception 3.

[F] 903.3.1.2.3 Attics. Attic protection shall be provided as follows:

1. Attics that are used or intended for living purposes or storage shall be protected by an *automatic sprinkler system*.
2. Where fuel-fired equipment is installed in an unsprinklered attic, not fewer than one quick-response intermediate temperature sprinkler shall be installed above the equipment.
3. Where located in a building of Type III, Type IV or Type V construction designed in accordance with Section 510.2 or 510.4, attics not required by Item 1 to have sprinklers shall comply with one of the following if the roof assembly is located more than 55 feet (16 764 mm) above the lowest level of required fire department vehicle access:

INTERNATIONAL CODE COUNCIL®
Copyright © 2019 ICC & NYSDOS. ALL RIGHTS RESERVED. Accessed by Lauren Gualdino (lgualdino@briarcliffmanor.org), (-) Order Number #100880972 on May 08, 2020 07:05 AM (PDT) pursuant to License Agreement with ICC & NYSDOS. No further reproduction, no

100880972

3.1. Provide *automatic sprinkler system* protection.

3.2. Construct the attic using noncombustible materials.

3.3. Construct the attic using fire-retardant-treated wood complying with Section 2303.2.

3.4. Fill the attic with noncombustible insulation.

The height of the roof assembly shall be determined by measuring the distance from the lowest required fire vehicle access road surface adjacent to the building to the eave of the highest pitched roof, the intersection of the highest roof to the exterior wall, or the top of the highest parapet, whichever yields the greatest distance. For the purpose of this measurement, required fire vehicle access roads shall include only those roads that are necessary for compliance with Section 503 of the *Fire Code of New York State*.

4. Group R-4, Condition 2 occupancy attics not required by Item 1 to have sprinklers shall comply with one of the following:

4.1. Provide *automatic sprinkler system* protection.

4.2. Provide a heat detection system throughout the attic that is arranged to activate the building fire alarm system.

4.3. Construct the attic using noncombustible materials.

4.4. Construct the attic using fire-retardant-treated wood complying with Section 2303.2.

4.5. Fill the attic with noncombustible insulation.

[F] 903.3.1.3 NFPA 13D sprinkler systems. *Automatic sprinkler systems* installed in one- and two-family *dwellings*; Group R-3; Group R-4, Condition 1; and *townhouses* shall be permitted to be installed throughout in accordance with NFPA 13D.

[F] 903.3.2 Quick-response and residential sprinklers. Where *automatic sprinkler systems* are required by this code, quick-response or residential automatic sprinklers shall be installed in all of the following areas in accordance with Section 903.3.1 and their listings:

1. Throughout all spaces within a smoke compartment containing care recipient *sleeping units* in Group I-2 in accordance with this code.
2. Throughout all spaces within a smoke compartment containing treatment rooms in ambulatory care facilities.
3. *Dwelling units* and *sleeping units* in Group I-1 and R occupancies.
4. Light-hazard occupancies as defined in NFPA 13.

[F] 903.3.3 Obstructed locations. Automatic sprinklers shall be installed with regard to obstructions that will delay activation or obstruct the water distribution pattern and shall be in accordance with the applicable *automatic sprinkler system* standard that is being used. Automatic sprinklers shall be installed in or under covered kiosks, displays, booths, concession stands, or equipment that exceeds 4 feet (1219 mm) in width. Not less than a 3-foot (914 mm) clearance shall be maintained between automatic sprinklers and the top of piles of combustible fibers.

Exception: Kitchen equipment under exhaust hoods protected with a fire-extinguishing system in accordance with Section 904.

[F] 903.3.4 Actuation. *Automatic sprinkler systems* shall be automatically actuated unless specifically provided for in this code.

[F] 903.3.5 Water supplies. Water supplies for *automatic sprinkler systems* shall comply with this section and the standards referenced in Section 903.3.1. The potable water supply shall be protected against backflow in accordance with the requirements of this section and the *Plumbing Code of New York State*. For connections to public waterworks systems, the water supply test used for design of fire protection systems shall be adjusted to account for seasonal and daily pressure fluctuations based on information from the water supply authority and as approved by the fire code official.

[F] 903.3.5.1 Domestic services. Where the domestic service provides the water supply for the *automatic sprinkler system*, the supply shall be in accordance with this section.

[F] 903.3.5.2 Residential combination services. A single combination water supply shall be allowed provided that the domestic demand is added to the sprinkler demand as required by NFPA 13R.

[F] 903.3.6 Hose threads. Fire hose threads and fittings used in connection with *automatic sprinkler systems* shall be as prescribed by the fire code official.

[F] 903.3.7 Fire department connections. Fire department connections for *automatic sprinkler systems* shall be installed in accordance with Section 912.

[F] 903.3.8 Limited area sprinkler systems. Limited area sprinkler systems shall be in accordance with the standards listed in Section 903.3.1 except as provided in Sections 903.3.8.1 through 903.3.8.5.

903.3.8.1 Number of sprinklers. Limited area sprinkler systems shall not exceed six sprinklers in any single *fire area*.

903.3.8.2 Occupancy hazard classification. Only areas classified by NFPA 13 as Light Hazard or Ordinary Hazard Group 1 shall be permitted to be protected by limited area sprinkler systems.

903.3.8.3 Piping arrangement. Where a limited area sprinkler system is installed in a building with an automatic wet standpipe system, sprinklers shall be supplied by the standpipe system. Where a limited area sprinkler system is installed in a building without an

INTERNATIONAL CODE COUNCIL®
Copyright © 2019 ICC & NYSDOS. ALL RIGHTS RESERVED. Accessed by Lauren Gualdino (lgualdino@briarcliffmanor.org), (-) Order Number #100880972 on May 08, 2020 07:05 AM (PDT) pursuant to License Agreement with ICC & NYSDOS. No further reproduction, no

100880972

automatic wet standpipe system, water shall be permitted to be supplied by the plumbing system provided that the plumbing system is capable of simultaneously supplying domestic and sprinkler demands.

903.3.8.4 Supervision. Control valves shall not be installed between the water supply and sprinklers unless the valves are of an *approved* indicating type that are supervised or secured in the open position.

903.3.8.5 Calculations. Hydraulic calculations in accordance with NFPA 13 shall be provided to demonstrate that the available water flow and pressure are adequate to supply all sprinklers installed in any single *fire area* with discharge densities corresponding to the hazard classification.

[F] 903.4 Sprinkler system supervision and alarms. Valves controlling the water supply for *automatic sprinkler systems*, pumps, tanks, water levels and temperatures, critical air pressures and waterflow switches on all sprinkler systems shall be electrically supervised by a *listed* fire alarm control unit.

Exceptions:

1. *Automatic sprinkler systems* protecting one- and two-family *dwellings*.
2. Limited area sprinkler systems in accordance with Section 903.3.8.
3. *Automatic sprinkler systems* installed in accordance with NFPA 13R where a common supply main is used to supply both domestic water and the *automatic sprinkler system*, and a separate shutoff valve for the *automatic sprinkler system* is not provided.
4. Jockey pump control valves that are sealed or locked in the open position.
5. Control valves to commercial kitchen hoods, paint spray booths or dip tanks that are sealed or locked in the open position.
6. Valves controlling the fuel supply to fire pump engines that are sealed or locked in the open position.
7. Trim valves to pressure switches in dry, preaction and deluge sprinkler systems that are sealed or locked in the open position.

[F] 903.4.1 Monitoring. Alarm, supervisory and trouble signals shall be distinctly different and shall be automatically transmitted to an *approved* supervising station or, where *approved* by the fire code official, shall sound an audible signal at a *constantly attended location*.

Exceptions:

1. Underground key or hub valves in roadway boxes provided by the municipality or public utility are not required to be monitored.
2. Backflow prevention device test valves located in limited area sprinkler system supply piping shall be locked in the open position. In occupancies required to be equipped with a fire alarm system, the backflow preventer valves shall be electrically supervised by a tamper switch installed in accordance with NFPA 72 and separately annunciated.

[F] 903.4.2 Alarms. An approved audible device, located on the exterior of the building in an approved location, shall be connected to each *automatic sprinkler system*. Such sprinkler waterflow alarm devices shall be activated by water flow equivalent to the flow of a single sprinkler of the smallest orifice size installed in the system. Where a fire alarm system is installed, actuation of the *automatic sprinkler system* shall actuate the building fire alarm system.

[F] 903.4.3 Floor control valves. *Approved* supervised indicating control valves shall be provided at the point of connection to the riser on each floor in high-rise buildings.

[F] 903.5 Testing and maintenance. Sprinkler systems shall be tested and maintained in accordance with the *Fire Code of New York State*.

SECTION 904
ALTERNATIVE AUTOMATIC FIRE-EXTINGUISHING SYSTEMS

[F] 904.1 General. Automatic fire-extinguishing systems, other than *automatic sprinkler systems*, shall be designed, installed, inspected, tested and maintained in accordance with the provisions of this section and the applicable referenced standards.

[F] 904.2 Where permitted. Automatic fire-extinguishing systems installed as an alternative to the required *automatic sprinkler systems* of Section 903 shall be *approved* by the fire code official.

[F] 904.2.1 Restriction on using automatic sprinkler system exceptions or reductions. Automatic fire-extinguishing systems shall not be considered alternatives for the purposes of exceptions or reductions allowed for *automatic sprinkler systems* or by other requirements of this code.

[F] 904.2.2 Commercial hood and duct systems. Each required commercial kitchen exhaust hood and duct system required by Section 607 of the *Fire Code of New York State* or Chapter 5 of the *Mechanical Code of New York State* to have a Type I hood shall be protected with an approved automatic fire-extinguishing system installed in accordance with this code.

[F] 904.3 Installation. Automatic fire-extinguishing systems shall be installed in accordance with this section.

[F] 904.3.1 Electrical wiring. Electrical wiring shall be in accordance with NFPA 70.

[F] 904.3.2 Actuation. Automatic fire-extinguishing systems shall be automatically actuated and provided with a manual means of actuation in accordance with Section 904.11.1. Where more than one hazard could be simultaneously involved in fire due to their proximity, all hazards shall be protected by a single system designed to protect all hazards that could become involved.

Exception: Multiple systems shall be permitted to be installed if they are designed to operate simultaneously.

INTERNATIONAL CODE COUNCIL®
Copyright © 2019 ICC & NYSDOS. ALL RIGHTS RESERVED. Accessed by Lauren Gualdino (lgualdino@briarcliffmanor.org), (-) Order Number #100880972 on May 08, 2020 07:05 AM (PDT) pursuant to License Agreement with ICC & NYSDOS. No further reproduction, no

100880972

[F] 904.3.3 System interlocking. Automatic equipment interlocks with fuel shutoffs, ventilation controls, door closers, window shutters, conveyor openings, smoke and heat vents and other features necessary for proper operation of the fire-extinguishing system shall be provided as required by the design and installation standard utilized for the hazard.

[F] 904.3.4 Alarms and warning signs. Where alarms are required to indicate the operation of automatic fire-extinguishing systems, distinctive audible and visible alarms and warning signs shall be provided to warn of pending agent discharge. Where exposure to automatic-extinguishing agents poses a hazard to persons and a delay is required to ensure the evacuation of occupants before agent discharge, a separate warning signal shall be provided to alert occupants once agent discharge has begun. Audible signals shall be in accordance with Section 907.5.2.

[F] 904.3.5 Monitoring. Where a building fire alarm system is installed, automatic fire-extinguishing systems shall be monitored by the building fire alarm system in accordance with NFPA 72.

[F] 904.4 Inspection and testing. Automatic fire-extinguishing systems shall be inspected and tested in accordance with the provisions of this section prior to acceptance.

[F] 904.4.1 Inspection. Prior to conducting final acceptance tests, all of the following items shall be inspected:

1. Hazard specification for consistency with design hazard.
2. Type, location and spacing of automatic- and manual-initiating devices.
3. Size, placement and position of nozzles or discharge orifices.
4. Location and identification of audible and visible alarm devices.
5. Identification of devices with proper designations.
6. Operating instructions.

[F] 904.4.2 Alarm testing. Notification appliances, connections to fire alarm systems and connections to *approved* supervising stations shall be tested in accordance with this section and Section 907 to verify proper operation.

[F] 904.4.2.1 Audible and visible signals. The audibility and visibility of notification appliances signaling agent discharge or system operation, where required, shall be verified.

[F] 904.4.3 Monitor testing. Connections to protected premises and supervising station fire alarm systems shall be tested to verify proper identification and retransmission of alarms from automatic fire-extinguishing systems.

[F] 904.5 Wet-chemical systems. Wet-chemical extinguishing systems shall be installed, maintained, periodically inspected and tested in accordance with NFPA 17A and their listing. Records of inspections and testing shall be maintained.

[F] 904.6 Dry-chemical systems. Dry-chemical extinguishing systems shall be installed, maintained, periodically inspected and tested in accordance with NFPA 17 and their listing. Records of inspections and testing shall be maintained.

[F] 904.7 Foam systems. Foam-extinguishing systems shall be installed, maintained, periodically inspected and tested in accordance with NFPA 11 and NFPA 16 and their listing. Records of inspections and testing shall be maintained.

[F] 904.8 Carbon dioxide systems. Carbon dioxide extinguishing systems shall be installed, maintained, periodically inspected and tested in accordance with NFPA 12 and their listing. Records of inspections and testing shall be maintained.

[F] 904.9 Halon systems. Halogenated extinguishing systems shall be installed, maintained, periodically inspected and tested in accordance with NFPA 12A and their listing. Records of inspections and testing shall be maintained.

[F] 904.10 Clean-agent systems. Clean-agent fire-extinguishing systems shall be installed, maintained, periodically inspected and tested in accordance with NFPA 2001 and their listing. Records of inspections and testing shall be maintained.

[F] 904.11 Automatic water mist systems. *Automatic water mist systems* shall be permitted in applications that are consistent with the applicable listing or approvals and shall comply with Sections 904.11.1 through 904.11.3.

[F] 904.11.1 Design and installation requirements. *Automatic water mist systems* shall be designed and installed in accordance with Sections 904.11.1.1 through 904.11.1.4.

[F] 904.11.1.1 General. *Automatic water mist systems* shall be designed and installed in accordance with NFPA 750 and the manufacturer's instructions.

[F] 904.11.1.2 Actuation. *Automatic water mist systems* shall be automatically actuated.

904.11.1.3 Water supply protection. Connections to a potable water supply shall be protected against backflow in accordance with the *Plumbing Code of New York State*.

[F] 904.11.1.4 Secondary water supply. Where a secondary water supply is required for an *automatic sprinkler system*, an *automatic water mist system* shall be provided with an *approved* secondary water supply.

[F] 904.11.2 Water mist system supervision and alarms. Supervision and alarms shall be provided as required for *automatic sprinkler systems* in accordance with Section 903.4.

[F] 904.11.2.1 Monitoring. Monitoring shall be provided as required for *automatic sprinkler systems* in accordance with Section 903.4.1.

[F] 904.11.2.2 Alarms. Alarms shall be provided as required for *automatic sprinkler systems* in accordance with Section 903.4.2.

INTERNATIONAL CODE COUNCIL®
Copyright © 2019 ICC & NYSDOS. ALL RIGHTS RESERVED. Accessed by Lauren Gualdino (lgualdino@briarcliffmanor.org), (-) Order Number #100880972 on May 08, 2020 07:05 AM (PDT) pursuant to License Agreement with ICC & NYSDOS. No further reproduction, no

100880972

[F] 904.11.2.3 Floor control valves. Floor control valves shall be provided as required for *automatic sprinkler systems* in accordance with Section 903.4.3.

[F] 904.11.3 Testing and maintenance. *Automatic water mist systems* shall be tested and maintained in accordance with the *Fire Code of New York State*.

[F] 904.12 Commercial cooking systems. The automatic fire-extinguishing system for commercial cooking systems shall be of a type recognized for protection of commercial cooking equipment and exhaust systems of the type and arrangement protected. Preengineered automatic dry- and wet-chemical extinguishing systems shall be tested in accordance with UL 300 and *listed* and *labeled* for the intended application. Other types of automatic fire-extinguishing systems shall be *listed* and *labeled* for specific use as protection for commercial cooking operations. The system shall be installed in accordance with this code, NFPA 96, its listing and the manufacturer's installation instructions. Automatic fire-extinguishing systems of the following types shall be installed in accordance with the referenced standard indicated, as follows:

1. Carbon dioxide extinguishing systems, NFPA 12.
2. *Automatic sprinkler systems*, NFPA 13.
3. Automatic water mist systems, NFPA 750.
4. Foam-water sprinkler system or foam-water spray systems, NFPA 16.
5. Dry-chemical extinguishing systems, NFPA 17.
6. Wet-chemical extinguishing systems, NFPA 17A.

Exception: Factory-built commercial cooking recirculating systems that are tested in accordance with UL 710B and *listed*, *labeled* and installed in accordance with Section 304.1 of the *Mechanical Code of New York State*.

[F] 904.12.1 Manual system operation. A manual actuation device shall be located at or near a *means of egress* from the cooking area not less than 10 feet (3048 mm) and not more than 20 feet (6096 mm) from the kitchen exhaust system. The manual actuation device shall be installed not more than 48 inches (1200 mm) or less than 42 inches (1067 mm) above the floor and shall clearly identify the hazard protected. The manual actuation shall require a maximum force of 40 pounds (178 N) and a maximum movement of 14 inches (356 mm) to actuate the fire suppression system.

Exception: *Automatic sprinkler systems* shall not be required to be equipped with manual actuation means.

[F] 904.12.2 System interconnection. The actuation of the fire suppression system shall automatically shut down the fuel or electrical power supply to the cooking equipment. The fuel and electrical supply reset shall be manual.

[F] 904.12.3 Carbon dioxide systems. Where carbon dioxide systems are used, there shall be a nozzle at the top of the ventilating duct. Additional nozzles that are symmetrically arranged to give uniform distribution shall be installed within vertical ducts exceeding 20 feet (6096 mm) and horizontal ducts exceeding 50 feet (15 240 mm). *Dampers* shall be installed at either the top or the bottom of the duct and shall be arranged to operate automatically upon activation of the fire-extinguishing system. Where the *damper* is installed at the top of the duct, the top nozzle shall be immediately below the *damper*. Automatic carbon dioxide fire-extinguishing systems shall be sufficiently sized to protect against all hazards venting through a common duct simultaneously.

[F] 904.12.3.1 Ventilation system. Commercial-type cooking equipment protected by an automatic carbon dioxide-extinguishing system shall be arranged to shut off the ventilation system upon activation.

[F] 904.12.4 Special provisions for automatic sprinkler systems. *Automatic sprinkler systems* protecting commercial-type cooking equipment shall be supplied from a separate, indicating-type control valve that is identified. Access to the control valve shall be provided.

[F] 904.12.4.1 Listed sprinklers. Sprinklers used for the protection of fryers shall be tested in accordance with UL 199E, *listed* for that application and installed in accordance with their listing.

[F] 904.13 Domestic cooking systems. Cooktops and ranges installed in the following occupancies shall be protected in accordance with Section 904.13.1:

1. In Group I-1 occupancies where domestic cooking facilities are installed in accordance with Section 420.8.
2. In Group I-2, Condition 1 occupancies where domestic cooking facilities are installed in accordance with Section 407.2.6.
3. In Group R-2 college dormitories where domestic cooking facilities are installed in accordance with Section 420.10.

[F] 904.13.1 Protection from fire. Cooktops and ranges shall be protected in accordance with Section 904.13.1.1 or 904.13.1.2.

[F] 904.13.1.1 Automatic fire-extinguishing system. The domestic recirculating or exterior vented cooking hood provided over the cooktop or range shall be equipped with an approved automatic fire-extinguishing system complying with the following:

1. The automatic fire-extinguishing system shall be of a type recognized for protection of domestic cooking equipment. Preengineered automatic fire-extinguishing systems shall be listed and labeled in accordance with UL 300A and installed in accordance with the manufacturer's instructions.
2. Manual actuation of the fire-extinguishing system shall be provided in accordance with Section 904.12.1.
3. Interconnection of the fuel and electric power supply shall be in accordance with Section 904.12.2.

[F] 904.13.1.2 Ignition prevention. Cooktops and ranges shall include burners that have been tested and listed to prevent ignition of cooking oil with burners turned on to their maximum heat settings and allowed to operate for 30 minutes.

INTERNATIONAL CODE COUNCIL®
Copyright © 2019 ICC & NYSDOS. ALL RIGHTS RESERVED. Accessed by Lauren Gualdino (lgualdino@briarcliffmanor.org), (-) Order Number #100880972 on May 08, 2020 07:05 AM (PDT) pursuant to License Agreement with ICC & NYSDOS. No further reproduction, no

100880972

[F] 904.14 Aerosol fire-extinguishing systems. Aerosol fire-extinguishing systems shall be installed, periodically inspected, tested and maintained in accordance with Sections 901 and 904.4, NFPA 2010, and in accordance with their listing.

Such devices and appurtenances shall be listed and installed in compliance with manufacturer's instructions.

SECTION 905
STANDPIPE SYSTEMS

[NY] 905.1 General. Standpipe systems shall be provided in new buildings and structures in accordance with Sections 905.2 through 905.11. In buildings used for high-piled combustible storage, fire protection shall be in accordance with Chapter 32 of the *Fire Code of New York State*.

[NY] 905.2 Installation and initial testing standard. Standpipe system installation and initial testing shall be performed in accordance with this section and NFPA 14. Flow testing of standpipes shall not be waived. Fire department connections for standpipe systems shall be in accordance with Section 912.

[F] 905.3 Required installations. Standpipe systems shall be installed where required by Sections 905.3.1 through 905.3.8. Standpipe systems are allowed to be combined with automatic sprinkler systems.

Exception: Standpipe systems are not required in Group R-3 occupancies.

[F] 905.3.1 Height. Class III standpipe systems shall be installed throughout buildings where any of the following conditions exist:

1. Four or more stories are above or below grade plane.
2. The floor level of the highest *story* is located more than 30 feet (9144 mm) above the lowest level of fire department vehicle access.
3. The floor level of the lowest *story* is located more than 30 feet (9144 mm) below the highest level of fire department vehicle access.

Exceptions:

1. Class I standpipes are allowed in buildings equipped throughout with an *automatic sprinkler system* in accordance with Section 903.3.1.1 or 903.3.1.2.
2. Class I standpipes are allowed in Group B and E occupancies.
3. Class I manual standpipes are allowed in *open parking garages* where the highest floor is located not more than 150 feet (45 720 mm) above the lowest level of fire department vehicle access.
4. Class I manual dry standpipes are allowed in *open parking garages* that are subject to freezing temperatures, provided that the hose connections are located as required for Class II standpipes in accordance with Section 905.5.
5. Class I standpipes are allowed in basements equipped throughout with an *automatic sprinkler system*.
6. Class I standpipes are allowed in buildings where occupant-use hose lines will not be utilized by trained personnel or the fire department.
7. In determining the lowest level of fire department vehicle access, it shall not be required to consider either of the following:
   7.1. Recessed loading docks for four vehicles or less.
   7.2. Conditions where topography makes access from the fire department vehicle to the building impractical or impossible.

[F] 905.3.2 Group A. Class I automatic wet standpipes shall be provided in nonsprinklered Group A buildings having an *occupant load* exceeding 1,000 persons.

Exceptions:

1. Open-air-seating spaces without enclosed spaces.
2. Class I automatic dry and semiautomatic dry standpipes or manual wet standpipes are allowed in buildings that are not high-rise buildings.

[F] 905.3.3 Covered and open mall buildings. Covered mall and open mall buildings shall be equipped throughout with a standpipe system where required by Section 905.3.1. Mall buildings not required to be equipped with a standpipe system by Section 905.3.1 shall be equipped with Class I hose connections connected to the *automatic sprinkler system* sized to deliver water at 250 gallons per minute (946.4 L/min) at the hydraulically most remote hose connection while concurrently supplying the automatic sprinkler system demand. The standpipe system shall be designed to not exceed a 50 pounds per square inch (psi) (345 kPa) residual pressure loss with a flow of 250 gallons per minute (946.4 L/min) from the fire department connection to the hydraulically most remote hose connection. Hose connections shall be provided at each of the following locations:

1. Within the mall at the entrance to each *exit* passageway or *corridor*.
2. At each floor-level landing within *interior exit stairways* opening directly on the mall.
3. At exterior public entrances to the mall of a covered mall building.
4. At public entrances at the perimeter line of an open mall building.
5. At other locations as necessary so that the distance to reach all portions of a tenant space does not exceed 200 feet (60 960 mm) from a hose connection.

[F] 905.3.4 Stages. Stages greater than 1,000 square feet (93 m^2) in area shall be equipped with a Class III wet standpipe system with $1^1/_2$-inch and $2^1/_2$-inch (38 mm and 64 mm) hose connections on each side of the stage.

Exception: Where the building or area is equipped throughout with an *automatic sprinkler system*, a $1^1/_2$-inch (38 mm) hose connection shall be installed in

INTERNATIONAL CODE COUNCIL®
Copyright © 2019 ICC & NYSDOS. ALL RIGHTS RESERVED. Accessed by Lauren Gualdino (lgualdino@briarcliffmanor.org), (-) Order Number #100880972 on May 08, 2020 07:05 AM (PDT) pursuant to License Agreement with ICC & NYSDOS. No further reproduction, no

100880972

accordance with NFPA 13 or in accordance with NFPA 14 for Class II or III standpipes.

[F] 905.3.4.1 Hose and cabinet. The $1^1/_2$-inch (38 mm) hose connections shall be equipped with sufficient lengths of $1^1/_2$-inch (38 mm) hose to provide fire protection for the stage area. Hose connections shall be equipped with an *approved* adjustable fog nozzle and be mounted in a cabinet or on a rack.

[F] 905.3.5 Underground buildings. Underground buildings shall be equipped throughout with a Class I automatic wet or manual wet standpipe system.

[F] 905.3.6 Helistops and heliports. Buildings with a rooftop *helistop* or *heliport* shall be equipped with a Class I or III standpipe system extended to the roof level on which the *helistop* or *heliport* is located in accordance with Section 2007.5 of the *Fire Code of New York State*.

[F] 905.3.7 Marinas and boatyards. Standpipes in marinas and boatyards shall comply with Chapter 36 of the *Fire Code of New York State*.

[F] 905.3.8 Rooftop gardens and landscaped roofs. Buildings or structures that have rooftop gardens or landscaped roofs and that are equipped with a standpipe system shall have the standpipe system extended to the roof level on which the rooftop garden or landscaped roof is located.

[F] 905.4 Location of Class I standpipe hose connections. Class I standpipe hose connections shall be provided in all of the following locations:

1. In every required *interior exit stairway*, a hose connection shall be provided for each story above and below grade plane. Hose connections shall be located at the main floor landing unless otherwise *approved* by the fire code official.

   Exception: A single hose connection shall be permitted to be installed in the open corridor or open breezeway between open stairs that are not greater than 75 feet (22 860 mm) apart.

2. On each side of the wall adjacent to the *exit* opening of a *horizontal exit*.

   Exception: Where floor areas adjacent to a *horizontal exit* are reachable from an *interior exit stairway* hose connection by a 30-foot (9144 mm) hose stream from a nozzle attached to 100 feet (30 480 mm) of hose, a hose connection shall not be required at the *horizontal exit*.

3. In every *exit* passageway, at the entrance from the *exit* passageway to other areas of a building.

   Exception: Where floor areas adjacent to an *exit* passageway are reachable from an *interior exit stairway* hose connection by a 30-foot (9144 mm) hose stream from a nozzle attached to 100 feet (30 480 mm) of hose, a hose connection shall not be required at the entrance from the *exit* passageway to other areas of the building.

4. In covered mall buildings, adjacent to each exterior public entrance to the mall and adjacent to each entrance from an exit passageway or exit corridor to the mall. In open mall buildings, adjacent to each public entrance to the mall at the perimeter line and adjacent to each entrance from an exit passageway or exit corridor to the mall.

5. Where the roof has a slope less than four units vertical in 12 units horizontal (33.3-percent slope), a hose connection shall be located to serve the roof or at the highest landing of an *interior exit stairway* with access to the roof provided in accordance with Section 1011.12.

6. Where the most remote portion of a nonsprinklered floor or *story* is more than 150 feet (45 720 mm) from a hose connection or the most remote portion of a sprinklered floor or *story* is more than 200 feet (60 960 mm) from a hose connection, the fire code official is authorized to require that additional hose connections be provided in *approved* locations.

[F] 905.4.1 Protection. Risers and laterals of Class I standpipe systems not located within an *interior exit stairway* shall be protected by a degree of *fire resistance* equal to that required for vertical enclosures in the building in which they are located.

Exception: In buildings equipped throughout with an *approved automatic sprinkler system*, laterals that are not located within an *interior exit stairway* are not required to be enclosed within fire-resistance-rated construction.

[F] 905.4.2 Interconnection. In buildings where more than one standpipe is provided, the standpipes shall be interconnected in accordance with NFPA 14.

[F] 905.5 Location of Class II standpipe hose connections. Class II standpipe hose connections located so that all portions of the building are within 30 feet (9144 mm) of a nozzle attached to 100 feet (30 480 mm) of hose. Class II standpipe hose connections shall be located where they will have *ready access*.

[F] 905.5.1 Groups A-1 and A-2. In Group A-1 and A-2 occupancies having *occupant loads* exceeding 1,000 persons, hose connections shall be located on each side of any stage, on each side of the rear of the auditorium, on each side of the balcony and on each tier of dressing rooms.

[F] 905.5.2 Protection. Fire-resistance-rated protection of risers and laterals of Class II standpipe systems is not required.

[F] 905.5.3 Class II system 1-inch hose. A minimum 1-inch (25 mm) hose shall be allowed to be used for hose stations in light-hazard occupancies where investigated and *listed* for this service and where *approved* by the fire code official.

[F] 905.6 Location of Class III standpipe hose connections. Class III standpipe systems shall have hose connections located as required for Class I standpipes in Section 905.4 and shall have Class II hose connections as required in Section 905.5.

[F] 905.6.1 Protection. Risers and laterals of Class III standpipe systems shall be protected as required for Class I systems in accordance with Section 905.4.1.

INTERNATIONAL CODE COUNCIL®
Copyright © 2019 ICC & NYSDOS. ALL RIGHTS RESERVED. Accessed by Lauren Gualdino (lgualdino@briarcliffmanor.org), (-) Order Number #100880972 on May 08, 2020 07:05 AM (PDT) pursuant to License Agreement with ICC & NYSDOS. No further reproduction, no

100880972

[F] 905.6.2 Interconnection. In buildings where more than one Class III standpipe is provided, the standpipes shall be interconnected in accordance with NFPA 14.

[F] 905.7 Cabinets. Cabinets containing fire-fighting equipment such as standpipes, fire hoses, fire extinguishers or fire department valves shall not be blocked from use or obscured from view.

[F] 905.7.1 Cabinet equipment identification. Cabinets shall be identified in an *approved* manner by a permanently attached sign with letters not less than 2 inches (51 mm) high in a color that contrasts with the background color, indicating the equipment contained therein.

Exceptions:

1. Doors not large enough to accommodate a written sign shall be marked with a permanently attached pictogram of the equipment contained therein.
2. Doors that have either an *approved* visual identification clear glass panel or a complete glass door panel are not required to be marked.

[F] 905.7.2 Locking cabinet doors. Cabinets shall be unlocked.

Exceptions:

1. Visual identification panels of glass or other *approved* transparent frangible material that is easily broken and allows access.
2. *Approved* locking arrangements.
3. Group I-3 occupancies.

[F] 905.8 Dry standpipes. Dry standpipes shall not be installed.

Exception: Where subject to freezing and in accordance with NFPA 14.

[F] 905.9 Valve supervision. Valves controlling water supplies shall be supervised in the open position so that a change in the normal position of the valve will generate a supervisory signal at the supervising station required by Section 903.4. Where a fire alarm system is provided, a signal shall be transmitted to the control unit.

Exceptions:

1. Valves to underground key or hub valves in roadway boxes provided by the municipality or public utility do not require supervision.
2. Valves locked in the normal position and inspected as provided in this code in buildings not equipped with a fire alarm system.

[F] 905.10 During construction. Standpipe systems required during construction and demolition operations shall be provided in accordance with Section 3311.

[F] 905.11 Locking standpipe outlet caps. The *fire code official* is authorized to require locking caps on the outlets on dry standpipes where the responding fire department carries key wrenches for the removal that are compatible with locking FDC connection caps.

SECTION 906
PORTABLE FIRE EXTINGUISHERS

[F] 906.1 Where required. Portable fire extinguishers shall be installed in all of the following locations:

1. In Group A, B, E, F, H, I, M, R-1, R-2, R-4 and S occupancies.

   Exceptions:

   1. In Group R-2 occupancies, portable fire extinguishers shall be required only in locations specified in Items 2 through 6 where each *dwelling unit* is provided with a portable fire extinguisher having a minimum rating of 1-A:10-B:C.
   2. In Group E occupancies, portable fire extinguishers shall be required only in locations specified in Items 2 through 6 where each classroom is provided with a portable fire extinguisher having a minimum rating of 2-A:20-B:C.
2. Within 30 feet (9144 mm) distance of travel from commercial cooking equipment and from domestic cooking equipment in Group I-1; I-2, Condition 1; and R-2 college dormitory occupancies.
3. In areas where flammable or *combustible liquids* are stored, used or dispensed.
4. On each floor of structures under construction, except Group R-3 occupancies, in accordance with Section 3315.1 of the *Fire Code of New York State*.
5. Where required by the *Fire Code of New York State* sections indicated in Table 906.1.
6. Special-hazard areas, including but not limited to laboratories, computer rooms and generator rooms, where required by the fire code official.

[F] 906.2 General requirements. Portable fire extinguishers shall be selected and installed in accordance with this section and NFPA 10.

Exceptions:

1. The distance of travel to reach an extinguisher shall not apply to the spectator seating portions of Group A-5 occupancies.
2. In Group I-3, portable fire extinguishers shall be permitted to be located at staff locations.

[F] 906.3 Size and distribution. The size and distribution of portable fire extinguishers shall be in accordance with Sections 906.3.1 through 906.3.4.

[F] 906.3.1 Class A fire hazards. The minimum sizes and distribution of portable fire extinguishers for occupancies that involve primarily Class A fire hazards shall comply with Table 906.3(1).

[F] 906.3.2 Class B fire hazards. Portable fire extinguishers for occupancies involving flammable or combustible liquids with depths less than or equal to 0.25-inch (6.4 mm) shall be selected and placed in accordance with Table 906.3(2).

INTERNATIONAL CODE COUNCIL®
Copyright © 2019 ICC & NYSDOS. ALL RIGHTS RESERVED. Accessed by Lauren Gualdino (lgualdino@briarcliffmanor.org), (-) Order Number #100880972 on May 08, 2020 07:05 AM (PDT) pursuant to License Agreement with ICC & NYSDOS. No further reproduction, no

100880972

[F] TABLE 906.1
ADDITIONAL REQUIRED PORTABLE FIRE EXTINGUISHERS IN THE FIRE CODE OF NEW YORK STATE

FCNYS SECTION	SUBJECT
303.5	Asphalt kettles
307.5	Open burning
308.1.3	Open flames—torches
309.4	Powered industrial trucks
2005.2	Aircraft towing vehicles
2005.3	Aircraft welding apparatus
2005.4	Aircraft fuel-servicing tank vehicles
2005.5	Aircraft hydrant fuel-servicing vehicles
2005.6	Aircraft fuel-dispensing stations
2007.7	Heliports and helistops
2108.4	Dry cleaning plants
2305.5	Motor fuel-dispensing facilities
2310.6.4	Marine motor fuel-dispensing facilities
2311.6	Repair garages
2404.4.1	Spray-finishing operations
2405.4.2	Dip-tank operations
2406.4.2	Powder-coating areas
2804.3	Lumberyards/woodworking facilities
2808.8	Recycling facilities
2809.5	Exterior lumber storage
2903.5	Organic-coating areas
3006.3	Industrial ovens
3104.12	Tents and membrane structures
3206.10	High-piled storage
3315.1	Buildings under construction or demolition
3317.3	Roofing operations
3408.2	Tire rebuilding/storage
3504.2.6	Welding and other hot work
3604.4	Marinas
3703.6	Combustible fibers
5703.2.1	Flammable and combustible liquids, general
5704.3.3.1	Indoor storage of flammable and combustible liquids
5704.3.7.5.2	Liquid storage rooms for flammable and combustible liquids
5705.4.9	Solvent distillation units
5706.2.7	Farms and construction sites—flammable and combustible liquids storage
5706.4.10.1	Bulk plants and terminals for flammable and combustible liquids
5706.5.4.5	Commercial, industrial, governmental or manufacturing establishments—fuel dispensing
5706.6.4	Tank vehicles for flammable and combustible liquids
5906.5.7	Flammable solids
6108.2	LP-gas

[F] TABLE 906.3(1)
FIRE EXTINGUISHERS FOR CLASS A FIRE HAZARDS

	LIGHT (Low) HAZARD OCCUPANCY	ORDINARY (Moderate) HAZARD OCCUPANCY	EXTRA (High) HAZARD OCCUPANCY
Minimum-rated single extinguisher	2-A[c]	2-A	4-A[a]
Maximum floor area per unit of A	3,000 square feet	1,500 square feet	1,000 square feet
Maximum floor area for extinguisher[b]	11,250 square feet	11,250 square feet	11,250 square feet
Maximum distance of travel to extinguisher	75 feet	75 feet	75 feet

For SI: 1 foot = 304.8 mm, 1 square foot = 0.0929m^2, 1 gallon = 3.785 L.

a. Two $2^1/_2$-gallon water-type extinguishers shall be deemed the equivalent of one 4-A rated extinguisher.

b. Annex E.3.3 of NFPA 10 provides more details concerning application of the maximum floor area criteria.

c. Two water-type extinguishers each with a 1-A rating shall be deemed the equivalent of one 2-A rated extinguisher for Light (Low) Hazard Occupancies.

[F] TABLE 906.3(2)
FIRE EXTINGUISHERS FOR FLAMMABLE OR COMBUSTIBLE LIQUIDS WITH DEPTHS LESS THAN OR EQUAL TO 0.25 INCH[a]

TYPE OF HAZARD	BASIC MINIMUM EXTINGUISHER RATING	MAXIMUM DISTANCE OF TRAVEL TO EXTINGUISHERS (feet)
Light (Low)	5-B 10-B	30 50
Ordinary (Moderate)	10-B 20-B	30 50
Extra (High)	40-B 80-B	30 50

For SI: 1 inch = 25.4 mm, 1 foot = 304.8 mm.

a. For requirements on water-soluble flammable liquids and alternative sizing criteria, see Section 5.5 of NFPA 10.

Portable fire extinguishers for occupancies involving flammable or combustible liquids with a depth of greater than 0.25-inch (6.4 mm) shall be selected and placed in accordance with NFPA 10.

[F] 906.3.3 Class C fire hazards. Portable fire extinguishers for Class C fire hazards shall be selected and placed on the basis of the anticipated Class A or B hazard.

[F] 906.3.4 Class D fire hazards. Portable fire extinguishers for occupancies involving combustible metals shall be selected and placed in accordance with NFPA 10.

[F] 906.4 Cooking equipment fires. Fire extinguishers provided for the protection of cooking equipment shall be of an *approved* type compatible with the automatic fire-extinguishing system agent. Cooking equipment involving solid fuels or vegetable or animal oils and fats shall be protected by a Class K-rated portable extinguisher in accordance with Sections 906.1, Item 2, 906.4.1 and 906.4.2 of the *Fire Code of New York State*, as applicable. **

[F] 906.5 Conspicuous location. Portable fire extinguishers shall be located in conspicuous locations where they will

INTERNATIONAL CODE COUNCIL®
Copyright © 2019 ICC & NYSDOS. ALL RIGHTS RESERVED. Accessed by Lauren Gualdino (lgualdino@briarcliffmanor.org), (-) Order Number #100880972 on May 08, 2020 07:05 AM (PDT) pursuant to License Agreement with ICC & NYSDOS. No further reproduction, no

100880972

have *ready access* and be immediately available for use. These locations shall be along normal paths of travel, unless the fire code official determines that the hazard posed indicates the need for placement away from normal paths of travel.

[F] 906.6 Unobstructed and unobscured. Portable fire extinguishers shall not be obstructed or obscured from view. In rooms or areas in which visual obstruction cannot be completely avoided, means shall be provided to indicate the locations of extinguishers.

[F] 906.7 Hangers and brackets. Hand-held portable fire extinguishers, not housed in cabinets, shall be installed on the hangers or brackets supplied. Hangers or brackets shall be securely anchored to the mounting surface in accordance with the manufacturer's installation instructions.

[F] 906.8 Cabinets. Cabinets used to house portable fire extinguishers shall not be locked.

Exceptions:

1. Where portable fire extinguishers subject to malicious use or damage are provided with a means of ready access.
2. In Group I-3 occupancies and in mental health areas in Group I-2 occupancies, access to portable fire extinguishers shall be permitted to be locked or to be located in staff locations provided that the staff has keys.

[F] 906.9 Extinguisher installation. The installation of portable fire extinguishers shall be in accordance with Sections 906.9.1 through 906.9.3.

[F] 906.9.1 Extinguishers weighing 40 pounds or less. Portable fire extinguishers having a gross weight not exceeding 40 pounds (18 kg) shall be installed so that their tops are not more than 5 feet (1524 mm) above the floor.

[F] 906.9.2 Extinguishers weighing more than 40 pounds. Hand-held portable fire extinguishers having a gross weight exceeding 40 pounds (18 kg) shall be installed so that their tops are not more than 3.5 feet (1067 mm) above the floor.

[F] 906.9.3 Floor clearance. The clearance between the floor and the bottom of installed hand-held portable fire extinguishers shall be not less than 4 inches (102 mm).

[F] 906.10 Wheeled units. Wheeled fire extinguishers shall be conspicuously located in a designated location.

SECTION 907
FIRE ALARM AND DETECTION SYSTEMS

[F] 907.1 General. This section covers the application, installation, performance and maintenance of fire alarm systems and their components.

[F] 907.1.1 Construction documents. *Construction documents* for fire alarm systems shall be of sufficient clarity to indicate the location, nature and extent of the work proposed and show in detail that it will conform to the provisions of this code, the *Fire Code of New York State* and relevant laws, ordinances, rules and regulations, as determined by the fire code official.

[F] 907.1.2 Fire alarm shop drawings. Shop drawings for fire alarm systems shall be prepared in accordance with NFPA 72 and submitted for review and approval prior to system installation.

[F] 907.1.3 Equipment. Systems and components shall be *listed* and *approved* for the purpose for which they are installed.

[F] 907.2 Where required—new buildings and structures. An *approved* fire alarm system installed in accordance with the provisions of this code and NFPA 72 shall be provided in new buildings and structures in accordance with Sections 907.2.1 through 907.2.23 and provide occupant notification in accordance with Section 907.5, unless other requirements are provided by another section of this code.

Not fewer than one manual fire alarm box shall be provided in an *approved* location to initiate a fire alarm signal for fire alarm systems employing automatic fire detectors or waterflow detection devices. Where other sections of this code allow elimination of fire alarm boxes due to sprinklers, a single fire alarm box shall be installed.

Exceptions:

1. The manual fire alarm box is not required for fire alarm systems dedicated to elevator recall control and supervisory service.
2. The manual fire alarm box is not required for Group R-2 occupancies unless required by the *fire code official* to provide a means for fire watch personnel to initiate an alarm during a sprinkler system impairment event. Where provided, the manual fire alarm box shall not be located in an area that is open to the public.

[F] 907.2.1 Group A. A manual fire alarm system that activates the occupant notification system in accordance with Section 907.5 shall be installed in Group A occupancies where the occupant load due to the assembly occupancy is 300 or more, or where the Group A occupant load is more than 100 persons above or below the *lowest level of exit discharge*. Group A occupancies not separated from one another in accordance with Section 707.3.10 shall be considered as a single occupancy for the purposes of applying this section. Portions of Group E occupancies occupied for assembly purposes shall be provided with a fire alarm system as required for the Group E occupancy.

Exception: Manual fire alarm boxes are not required where the building is equipped throughout with an *automatic sprinkler system* installed in accordance with Section 903.3.1.1 and the occupant notification appliances will activate throughout the notification zones upon sprinkler water flow.

[F] 907.2.1.1 System initiation in Group A occupancies with an occupant load of 1,000 or more. Activation of the fire alarm in Group A occupancies with an *occupant load* of 1,000 or more shall initiate a signal using an emergency voice/alarm communications system in accordance with Section 907.5.2.2.

Exception: Where *approved*, the prerecorded announcement is allowed to be manually deacti-

INTERNATIONAL CODE COUNCIL®
Copyright © 2019 ICC & NYSDOS. ALL RIGHTS RESERVED. Accessed by Lauren Gualdino (lgualdino@briarcliffmanor.org), (-) Order Number #100880972 on May 08, 2020 07:05 AM (PDT) pursuant to License Agreement with ICC & NYSDOS. No further reproduction, no

100880972

vated for a period of time, not to exceed 3 minutes, for the sole purpose of allowing a live voice announcement from an *approved*, *constantly attended location*.

[F] 907.2.1.2 Emergency voice/alarm communication captions. Stadiums, arenas and grandstands required to caption audible public announcements shall be in accordance with Section 907.5.2.2.4.

[NY] 907.2.1.3 Automatic smoke detection system. A smoke detection system that activates the occupant notification system in accordance with Section 907.5 shall be installed in Group A occupancies unless the fire area is protected with an automatic fire sprinkler system, that activates the occupant notification system, installed in accordance with Section 903.3.1.1.

[F] 907.2.2 Group B. A manual fire alarm system shall be installed in Group B occupancies where one of the following conditions exists:

1. The combined Group B *occupant load* of all floors is 500 or more.
2. The Group B *occupant load* is more than 100 persons above or below the lowest *level of exit discharge*.
3. The *fire area* contains an ambulatory care facility.

Exception: Manual fire alarm boxes are not required where the building is equipped throughout with an *automatic sprinkler system* installed in accordance with Section 903.3.1.1 and the occupant notification appliances will activate throughout the notification zones upon sprinkler water flow.

[F] 907.2.2.1 Ambulatory care facilities. *Fire areas* containing ambulatory care facilities shall be provided with an electronically supervised automatic smoke detection system installed within the ambulatory care facility and in public use areas outside of tenant spaces, including public *corridors* and elevator lobbies.

Exception: Buildings equipped throughout with an *automatic sprinkler system* in accordance with Section 903.3.1.1, provided that the occupant notification appliances will activate throughout the notification zones upon sprinkler waterflow.

[F] 907.2.3 Group E. A manual fire alarm system that initiates the occupant notification signal utilizing an emergency voice/alarm communication system meeting the requirements of Section 907.5.2.2 and installed in accordance with Section 907.6 shall be installed in Group E occupancies. Where *automatic sprinkler systems* or smoke detectors are installed, such systems or detectors shall be connected to the building fire alarm system.

Exceptions:

1. A manual fire alarm system is not required in Group E occupancies with an *occupant load* of 50 or less.
2. Emergency voice/alarm communication systems meeting the requirements of Section 907.5.2.2 and installed in accordance with Section 907.6 shall not be required in Group E occupancies with occupant loads of 100 or less, provided that activation of the manual fire alarm system initiates an *approved* occupant notification signal in accordance with Section 907.5.
3. Manual fire alarm boxes are not required in Group E occupancies where all of the following apply:
   3.1. Interior *corridors* are protected by smoke detectors.
   3.2. Auditoriums, cafeterias, gymnasiums and similar areas are protected by *heat detectors* or other *approved* detection devices.
   3.3. Shops and laboratories involving dusts or vapors are protected by *heat detectors* or other *approved* detection devices.
4. Manual fire alarm boxes shall not be required in Group E occupancies where all of the following apply:
   4.1. The building is equipped throughout with an *approved automatic sprinkler system* installed in accordance with Section 903.3.1.1.
   4.2. The emergency voice/alarm communication system will activate on sprinkler waterflow.
   4.3. Manual activation is provided from a normally occupied location.

[F] 907.2.4 Group F. A manual fire alarm system that activates the occupant notification system in accordance with Section 907.5 shall be installed in Group F occupancies where both of the following conditions exist:

1. The Group F occupancy is two or more *stories* in height.
2. The Group F occupancy has a combined *occupant load* of 500 or more above or below the lowest *level of exit discharge*.

Exception: Manual fire alarm boxes are not required where the building is equipped throughout with an *automatic sprinkler system* installed in accordance with Section 903.3.1.1 and the occupant notification appliances will activate throughout the notification zones upon sprinkler water flow.

[F] 907.2.5 Group H. A manual fire alarm system that activates the occupant notification system in accordance with Section 907.5 shall be installed in Group H-5 occupancies and in occupancies used for the manufacture of organic coatings. An automatic smoke detection system shall be installed for highly toxic gases, organic peroxides and oxidizers in accordance with Chapters 60, 62 and 63, respectively, of the *Fire Code of New York State*.

[F] 907.2.6 Group I. A manual fire alarm system that activates the occupant notification system in accordance with Section 907.5 shall be installed in Group I occupancies. An automatic smoke detection system that activates the occupant notification system in accordance with Section

INTERNATIONAL CODE COUNCIL®
Copyright © 2019 ICC & NYSDOS. ALL RIGHTS RESERVED. Accessed by Lauren Gualdino (lgualdino@briarcliffmanor.org), (-) Order Number #100880972 on May 08, 2020 07:05 AM (PDT) pursuant to License Agreement with ICC & NYSDOS. No further reproduction, no

100880972

907.5 shall be provided in accordance with Sections 907.2.6.1, 907.2.6.2 and 907.2.6.3.3.

Exceptions:

1. Manual fire alarm boxes in sleeping units of Group I-1 and I-2 occupancies shall not be required at *exits* if located at all care providers' control stations or other constantly attended staff locations, provided that such manual fire alarm boxes are visible and provided with *ready access*, and the distances of travel required in Section 907.4.2.1 are not exceeded.
2. Occupant notification systems are not required to be activated where private mode signaling installed in accordance with NFPA 72 is *approved* by the fire code official and staff evacuation responsibilities are included in the fire safety and evacuation plan required by Section 404 of the *Fire Code of New York State*.

[F] 907.2.6.1 Group I-1. In Group I-1 occupancies, an automatic smoke detection system shall be installed in *corridors*, waiting areas open to *corridors* and *habitable spaces* other than *sleeping units* and kitchens. The system shall be activated in accordance with Section 907.5.

Exceptions:

1. For Group I-1, Condition 1 occupancies, smoke detection in *habitable spaces* is not required where the facility is equipped throughout with an *automatic sprinkler system* installed in accordance with Section 903.3.1.1.
2. Smoke detection is not required for exterior balconies.

[F] 907.2.6.1.1 Smoke alarms. Single- and multiple-station smoke alarms shall be installed in accordance with Section 907.2.10.

[F] 907.2.6.2 Group I-2. An automatic smoke detection system shall be installed in *corridors* in Group I-2, Condition 1 facilities and spaces permitted to be open to the *corridors* by Section 407.2. The system shall be activated in accordance with Section 907.4. Group I-2, Condition 2 occupancies shall be equipped with an automatic smoke detection system as required in Section 407.

Exceptions:

1. Corridor smoke detection is not required in smoke compartments that contain sleeping units where such units are provided with smoke detectors that comply with UL 268. Such detectors shall provide a visual display on the corridor side of each sleeping unit and shall provide an audible and visual alarm at the care providers' station attending each unit.
2. Corridor smoke detection is not required in smoke compartments that contain sleeping units where sleeping unit doors are equipped with automatic door-closing devices with integral smoke detectors on the unit sides installed in accordance with their listing, provided that the integral detectors perform the required alerting function.

[F] 907.2.6.3 Group I-3 occupancies. Group I-3 occupancies shall be equipped with a manual fire alarm system and automatic smoke detection system installed for alerting staff.

[F] 907.2.6.3.1 System initiation. Actuation of an automatic fire-extinguishing system, *automatic sprinkler system*, a manual fire alarm box or a fire detector shall initiate an approved fire alarm signal that automatically notifies staff.

[F] 907.2.6.3.2 Manual fire alarm boxes. Manual fire alarm boxes are not required to be located in accordance with Section 907.4.2 where the fire alarm boxes are provided at staff-attended locations having direct supervision over areas where manual fire alarm boxes have been omitted.

[F] 907.2.6.3.2.1 Manual fire alarm boxes in detainee areas. Manual fire alarm boxes are allowed to be locked in areas occupied by detainees, provided that staff members are present within the subject area and have keys readily available to operate the manual fire alarm boxes.

[F] 907.2.6.3.3 Automatic smoke detection system. An automatic smoke detection system shall be installed throughout resident housing areas, including *sleeping units* and contiguous day rooms, group activity spaces and other common spaces normally open to residents.

Exceptions:

1. Other *approved* smoke detection arrangements providing equivalent protection, including, but not limited to, placing detectors in exhaust ducts from cells or behind protective guards *listed* for the purpose, are allowed where necessary to prevent damage or tampering.
2. *Sleeping units* in Use Conditions 2 and 3 as described in Section 308.
3. Smoke detectors are not required in *sleeping units* with four or fewer occupants in smoke compartments that are equipped throughout with an *automatic sprinkler system* installed in accordance with Section 903.3.1.1.

[F] 907.2.7 Group M. A manual fire alarm system that activates the occupant notification system in accordance with Section 907.5 shall be installed in Group M occupancies where one of the following conditions exists:

1. The combined Group M *occupant load* of all floors is 500 or more persons.

INTERNATIONAL CODE COUNCIL®
Copyright © 2019 ICC & NYSDOS. ALL RIGHTS RESERVED. Accessed by Lauren Gualdino (lgualdino@briarcliffmanor.org), (-) Order Number #100880972 on May 08, 2020 07:05 AM (PDT) pursuant to License Agreement with ICC & NYSDOS. No further reproduction, no

100880972

2. The Group M *occupant load* is more than 100 persons above or below the lowest *level of exit discharge*.

Exceptions:

1. A manual fire alarm system is not required in *covered or open mall buildings* complying with Section 402.
2. Manual fire alarm boxes are not required where the building is equipped throughout with an *automatic sprinkler system* installed in accordance with Section 903.3.1.1 and the occupant notification appliances will automatically activate throughout the notification zones upon sprinkler water flow.

[F] 907.2.7.1 Occupant notification. During times that the building is occupied, the initiation of a signal from a manual fire alarm box or from a waterflow switch shall not be required to activate the alarm notification appliances when an alarm signal is activated at a *constantly attended location* from which evacuation instructions shall be initiated over an emergency voice/alarm communication system installed in accordance with Section 907.5.2.2.

[F] 907.2.8 Group R-1. Fire alarm systems and smoke alarms shall be installed in Group R-1 occupancies as required in Sections 907.2.8.1 through 907.2.8.3.

[F] 907.2.8.1 Manual fire alarm system. A manual fire alarm system that activates the occupant notification system in accordance with Section 907.5 shall be installed in Group R- 1 occupancies.

Exceptions:

1. A manual fire alarm system is not required in buildings not more than two *stories* in height where all individual *sleeping units* and contiguous *attic* and crawl spaces to those units are separated from each other and public or common areas by not less than 1-hour *fire partitions* and each individual *sleeping unit* has an *exit* directly to a *public way*, *egress court* or *yard*.
2. Manual fire alarm boxes are not required throughout the building where all of the following conditions are met:
   2.1. The building is equipped throughout with an *automatic sprinkler system* installed in accordance with Section 903.3.1.1 or 903.3.1.2.
   2.2. The notification appliances will activate upon sprinkler water flow.
   2.3. Not fewer than one manual fire alarm box is installed at an *approved* location.

[F] 907.2.8.2 Automatic smoke detection system. An automatic smoke detection system that activates the occupant notification system in accordance with Section 907.5 shall be installed throughout all interior *corridors* serving *sleeping units*.

Exception: An automatic smoke detection system is not required in buildings that do not have interior *corridors* serving *sleeping units* and where each *sleeping unit* has a *means of egress* door opening directly to an *exit* or to an exterior *exit access* that leads directly to an *exit*.

[F] 907.2.8.3 Smoke alarms. Single- and multiple-station smoke alarms shall be installed in accordance with Section 907.2.10.

[F] 907.2.9 Group R-2. Fire alarm systems and smoke alarms shall be installed in Group R-2 occupancies as required in Sections 907.2.9.1 through 907.2.9.3.

[F] 907.2.9.1 Manual fire alarm system. A manual fire alarm system that activates the occupant notification system in accordance with Section 907.5 shall be installed in Group R-2 occupancies where any of the following conditions apply:

1. Any *dwelling unit* or *sleeping unit* is located three or more *stories* above the lowest *level of exit discharge*.
2. Any *dwelling unit* or *sleeping unit* is located more than one *story* below the highest *level of exit discharge* of *exits* serving the *dwelling unit* or *sleeping unit*.
3. The building contains more than 16 *dwelling units* or *sleeping units*.

Exceptions:

1. A fire alarm system is not required in buildings not more than two *stories* in height where all *dwelling units* or *sleeping units* and contiguous *attic* and crawl spaces are separated from each other and public or common areas by not less than 1-hour *fire partitions* and each *dwelling unit* or *sleeping unit* has an *exit* directly to a *public way*, *egress court* or *yard*.
2. Manual fire alarm boxes are not required where the building is equipped throughout with an *automatic sprinkler system* installed in accordance with Section 903.3.1.1 or 903.3.1.2 and the occupant notification appliances will automatically activate throughout the notification zones upon a sprinkler water flow.
3. A fire alarm system is not required in buildings that do not have interior *corridors* serving *dwelling units* and are protected by an *approved automatic sprinkler system* installed in accordance with Section 903.3.1.1 or 903.3.1.2, provided that *dwelling units* either have a *means of egress* door opening directly to an exterior *exit access* that leads directly to the *exits* or are served by open-ended *corridors* designed in accordance with Section 1027.6, Exception 3.

INTERNATIONAL CODE COUNCIL®
Copyright © 2019 ICC & NYSDOS. ALL RIGHTS RESERVED. Accessed by Lauren Gualdino (lgualdino@briarcliffmanor.org), (-) Order Number #100880972 on May 08, 2020 07:05 AM (PDT) pursuant to License Agreement with ICC & NYSDOS. No further reproduction, no

100880972

[F] 907.2.9.2 Smoke alarms. Single- and multiple-station smoke alarms shall be installed in accordance with Section 907.2.10.

[F] 907.2.9.3 Group R-2 college and university buildings. An automatic smoke detection system that activates the occupant notification system in accordance with Section 907.5 shall be installed in Group R-2 occupancies operated by a college or university for student or staff housing in all of the following locations:

1. Common spaces outside of *dwelling units* and *sleeping units*.
2. Laundry rooms, mechanical equipment rooms and storage rooms.
3. All interior corridors serving *sleeping units* or *dwelling units*.

   Exception: An automatic smoke detection system is not required in buildings that do not have interior *corridors* serving *sleeping units* or *dwelling units* and where each *sleeping unit* or *dwelling unit* either has a *means of egress* door opening directly to an exterior *exit access* that leads directly to an *exit* or a *means of egress* door opening directly to an *exit*.

Required smoke alarms in *dwelling units* and *sleeping units* in Group R-2 occupancies operated by a college or university for student or staff housing shall be interconnected with the fire alarm system in accordance with NFPA 72.

➡ **[F] 907.2.10 Single- and multiple-station smoke alarms.** *Listed* single- and multiple-station smoke alarms complying with UL 217 shall be installed in accordance with Sections 907.2.10.1 through 907.2.10.7 and NFPA 72.

[F] 907.2.10.1 Group R-1. Single- or multiple-station smoke alarms shall be installed in all of the following locations in Group R-1:

1. In sleeping areas.
2. In every room in the path of the *means of egress* from the sleeping area to the door leading from the *sleeping unit*.
3. In each *story* within the *sleeping unit*, including basements. For *sleeping units* with split levels and without an intervening door between the adjacent levels, a smoke alarm installed on the upper level shall suffice for the adjacent lower level provided that the lower level is less than one full *story* below the upper level.

[F] 907.2.10.2 Groups R-2, R-3, R-4 and I-1. Single- or multiple-station smoke alarms shall be installed and maintained in Groups R-2, R-3, R-4 and I-1 regardless of *occupant load* at all of the following locations:

1. On the ceiling or wall outside of each separate sleeping area in the immediate vicinity of bedrooms.
2. In each room used for sleeping purposes.
3. In each *story* within a *dwelling unit*, including basements but not including crawl spaces and uninhabitable *attics*. In *dwellings* or *dwelling units* with split levels and without an intervening door between the adjacent levels, a smoke alarm installed on the upper level shall suffice for the adjacent lower level provided that the lower level is less than one full *story* below the upper level.

[F] 907.2.10.3 Installation near cooking appliances. Smoke alarms shall not be installed in the following locations unless this would prevent placement of a smoke alarm in a location required by Section 907.2.10.1 or 907.2.10.2:

1. Ionization smoke alarms shall not be installed less than 20 feet (6096 mm) horizontally from a permanently installed cooking appliance.
2. Ionization smoke alarms with an alarm-silencing switch shall not be installed less than 10 feet (3048 mm) horizontally from a permanently installed cooking appliance.
3. Photoelectric smoke alarms shall not be installed less than 6 feet (1829 mm) horizontally from a permanently installed cooking appliance.

[F] 907.2.10.4 Installation near bathrooms. Smoke alarms shall be installed not less than 3 feet (914 mm) horizontally from the door or opening of a bathroom that contains a bathtub or shower unless this would prevent placement of a smoke alarm required by Section 907.2.10.1 or 907.2.10.2.

[F] 907.2.10.5 Interconnection. Where more than one smoke alarm is required to be installed within an individual *dwelling unit* or *sleeping unit* in Group R or I-1 occupancies, the smoke alarms shall be interconnected in such a manner that the activation of one alarm will activate all of the alarms in the individual unit. Physical interconnection of smoke alarms shall not be required where listed wireless alarms are installed and all alarms sound upon activation of one alarm. The alarm shall be clearly audible in all bedrooms over background noise levels with all intervening doors closed.

[F] 907.2.10.6 Power source. In new construction, required smoke alarms shall receive their primary power from the building wiring where such wiring is served from a commercial source and shall be equipped with a battery backup. Smoke alarms with integral strobes that are not equipped with battery backup shall be connected to an emergency electrical system in accordance with Section 2702. Smoke alarms shall emit a signal when the batteries are low. Wiring shall be permanent and without a disconnecting switch other than as required for overcurrent protection.

Exception: Smoke alarms are not required to be equipped with battery backup where they are connected to an emergency electrical system that complies with Section 2702.

INTERNATIONAL CODE COUNCIL®
Copyright © 2019 ICC & NYSDOS. ALL RIGHTS RESERVED. Accessed by Lauren Gualdino (lgualdino@briarcliffmanor.org), (-) Order Number #100880972 on May 08, 2020 07:05 AM (PDT) pursuant to License Agreement with ICC & NYSDOS. No further reproduction, no

100880972

[F] 907.2.10.7 Smoke detection system. Smoke detectors listed in accordance with UL 268 and provided as part of the building *fire alarm system* shall be an acceptable alternative to single- and multiple-station *smoke alarms* and shall comply with the following:

1. The *fire alarm system* shall comply with all applicable requirements in Section 907.
2. Activation of a smoke detector in a *dwelling unit* or *sleeping unit* shall initiate alarm notification in the *dwelling unit* or *sleeping unit* in accordance with Section 907.5.2.
3. Activation of a smoke detector in a *dwelling unit* or *sleeping unit* shall not activate alarm notification appliances outside of the *dwelling unit* or *sleeping unit*, provided that a supervisory signal is generated and monitored in accordance with Section 907.6.6.

[NY] 907.2.10.8 Portable smoke alarms in Group R-1 occupancies and Group R-3 lodging houses. In addition to but not in limitation of any other requirement of this code, portable smoke alarms of both audible and visual design shall be provided in all buildings of Group R-1 occupancies and Group R-3 lodging houses. The number of smoke alarms available shall be 3 percent of the number of sleeping units with a minimum of one operational smoke alarm per building. Proprietors shall post conspicuously a sign, with letters at least 3 inches (76 mm) in height, at the main desk or other similar station advising of the availability of such smoke alarms. Such smoke alarms shall be in conformity with NFPA 72.

Exception: Portable smoke alarms shall not be required where any of the following applies:

1. Where audible/visual smoke alarms are hard wired.
2. Where audible/visual smoke alarms are incorporated into a fire alarm system such that visual notification is activated by the system.

[F] 907.2.11 Special amusement buildings. An automatic smoke detection system shall be provided in *special amusement buildings* in accordance with Sections 907.2.11.1 through 907.2.11.3.

[F] 907.2.11.1 Alarm. Activation of any single smoke detector, the *automatic sprinkler system* or any other automatic fire detection device shall immediately activate an audible and visible alarm at the building at a constantly attended location from which emergency action can be initiated, including the capability of manual initiation of requirements in Section 907.2.11.2.

[F] 907.2.11.2 System response. The activation of two or more smoke detectors, a single smoke detector equipped with an alarm verification feature, the *automatic sprinkler system* or other *approved* fire detection device shall automatically do all of the following:

1. Cause illumination of the *means of egress* with light of not less than 1 footcandle (11 lux) at the walking surface level.
2. Stop any conflicting or confusing sounds and visual distractions.
3. Activate an *approved* directional *exit* marking that will become apparent in an emergency.
4. Activate a prerecorded message, audible throughout the *special amusement building*, instructing patrons to proceed to the nearest *exit*. Alarm signals used in conjunction with the prerecorded message shall produce a sound that is distinctive from other sounds used during normal operation.

[F] 907.2.11.3 Emergency voice/alarm communication system. An emergency voice/alarm communication system, which is allowed to serve as a public address system, shall be installed in accordance with Section 907.5.2.2 and be audible throughout the entire *special amusement building*.

[F] 907.2.12 High-rise buildings. High-rise buildings shall be provided with an automatic smoke detection system in accordance with Section 907.2.12.1, a fire department communication system in accordance with Section 907.2.12.2 and an emergency voice/alarm communication system in accordance with Section 907.5.2.2.

Exceptions:

1. Airport traffic control towers in accordance with Sections 412 and 907.2.21.
2. *Open parking garages* in accordance with Section 406.5.
3. Buildings with an occupancy in Group A-5 in accordance with Section 303.1.
4. Low-hazard special occupancies in accordance with Section 503.1.1.
5. Buildings with an occupancy in Group H-1, H-2 or H-3 in accordance with Section 415.
6. In Group I-1 and I-2 occupancies, the alarm shall sound at a *constantly attended location* and occupant notification shall be broadcast by the emergency voice/alarm communication system.

[F] 907.2.12.1 Automatic smoke detection. Automatic smoke detection in high-rise buildings shall be in accordance with Sections 907.2.12.1.1 and 907.2.12.1.2.

[F] 907.2.12.1.1 Area smoke detection. Area smoke detectors shall be provided in accordance with this section. Smoke detectors shall be connected to an automatic fire alarm system. The activation of any detector required by this section shall activate the emergency voice/alarm communication system in accordance with Section 907.5.2.2. In addition to smoke detectors required by Sections 907.2.1 through 907.2.9, smoke detectors shall be located as follows:

1. In each mechanical equipment, electrical, transformer, telephone equipment or similar room that is not provided with sprinkler protection.

INTERNATIONAL CODE COUNCIL®
Copyright © 2019 ICC & NYSDOS. ALL RIGHTS RESERVED. Accessed by Lauren Gualdino (lgualdino@briarcliffmanor.org), (-) Order Number #100880972 on May 08, 2020 07:05 AM (PDT) pursuant to License Agreement with ICC & NYSDOS. No further reproduction, no

100880972

2. In each elevator machine room, machinery space, control room and control space and in elevator lobbies.

[F] 907.2.12.1.2 Duct smoke detection. Duct smoke detectors complying with Section 907.3.1 shall be located as follows:

1. In the main return air and exhaust air plenum of each air-conditioning system having a capacity greater than 2,000 cubic feet per minute (cfm) (0.94 m^3/s). Such detectors shall be located in a serviceable area downstream of the last duct inlet.
2. At each connection to a vertical duct or riser serving two or more stories from a return air duct or plenum of an air-conditioning system. In Group R-1 and R-2 occupancies, a smoke detector is allowed to be used in each return air riser carrying not more than 5,000 cfm (2.4 m^3/s) and serving not more than 10 air-inlet openings.

[F] 907.2.12.2 Fire department communication system. Where a wired communication system is *approved* in lieu of an emergency responder radio coverage system in accordance with Section 510 of the *Fire Code of New York State*, the wired fire department communication system shall be designed and installed in accordance with NFPA 72 and shall operate between a fire command center complying with Section 911, elevators, elevator lobbies, emergency and standby power rooms, fire pump rooms, *areas of refuge* and inside *interior exit stairways*. The fire department communication device shall be provided at each floor level within the *interior exit stairway*.

[F] 907.2.12.3 Multiple-channel voice evacuation. In buildings with an occupied floor more than 120 feet (36 576 mm) above the lowest level of fire department vehicle access, voice evacuation systems for high-rise buildings shall be multiple-channel systems.

[F] 907.2.13 Atriums connecting more than two stories. A fire alarm system shall be installed in occupancies with an atrium that connects more than two *stories*, with smoke detection installed in locations required by a rational analysis in Section 909.4 and in accordance with the system operation requirements in Section 909.17. The system shall be activated in accordance with Section 907.5. Such occupancies in Group A, E or M shall be provided with an emergency voice/alarm communication system complying with the requirements of Section 907.5.2.2.

[F] 907.2.14 High-piled combustible storage areas. An automatic smoke detection system shall be installed throughout high-piled combustible storage areas where required by Section 3206.5 of the *Fire Code of New York State*.

[F] 907.2.15 Aerosol storage uses. Aerosol product rooms and general-purpose warehouses containing aerosol products shall be provided with an *approved* manual fire alarm system where required by the *Fire Code of New York State*.

[F] 907.2.16 Lumber, wood structural panel and veneer mills. Lumber, wood structural panel and veneer mills shall be provided with a manual fire alarm system.

[F] 907.2.17 Underground buildings with smoke control systems. Where a smoke control system is installed in an underground building in accordance with this code, automatic smoke detectors shall be provided in accordance with Section 907.2.17.1.

[F] 907.2.17.1 Smoke detectors. Not fewer than one smoke detector *listed* for the intended purpose shall be installed in all of the following areas:

1. Mechanical equipment, electrical, transformer, telephone equipment, elevator machine or similar rooms.
2. Elevator lobbies.
3. The main return and exhaust air plenum of each air-conditioning system serving more than one *story* and located in a serviceable area downstream of the last duct inlet.
4. Each connection to a vertical duct or riser serving two or more floors from return air ducts or plenums of heating, ventilating and air-conditioning systems, except that in Group R occupancies, a *listed* smoke detector is allowed to be used in each return air riser carrying not more than 5,000 cfm (2.4 m^3/s) and serving not more than 10 air-inlet openings.

[F] 907.2.17.2 Alarm required. Activation of the smoke control system shall activate an audible alarm at a *constantly attended location*.

[F] 907.2.18 Deep underground buildings. Where the lowest level of a structure is more than 60 feet (18 288 mm) below the finished floor of the lowest *level of exit discharge*, the structure shall be equipped throughout with a manual fire alarm system, including an emergency voice/alarm communication system installed in accordance with Section 907.5.2.2.

[F] 907.2.19 Covered and open mall buildings. Where the total floor area exceeds 50,000 square feet (4645 m^2) within either a covered mall building or within the perimeter line of an open mall building, an emergency voice/alarm communication system shall be provided. Access to emergency voice/alarm communication systems serving a mall, required or otherwise, shall be provided for the fire department. The system shall be provided in accordance with Section 907.5.2.2.

[F] 907.2.20 Residential aircraft hangars. Not fewer than one single-station smoke alarm shall be installed within a residential aircraft hangar as defined in Chapter 2 and shall be interconnected into the residential smoke alarm or other sounding device to provide an alarm that will be audible in all sleeping areas of the *dwelling*.

INTERNATIONAL CODE COUNCIL®
Copyright © 2019 ICC & NYSDOS. ALL RIGHTS RESERVED. Accessed by Lauren Gualdino (lgualdino@briarcliffmanor.org), (-) Order Number #100880972 on May 08, 2020 07:05 AM (PDT) pursuant to License Agreement with ICC & NYSDOS. No further reproduction, no

100880972

[F] 907.2.21 Airport traffic control towers. An automatic smoke detection system that activates the occupant notification system in accordance with Section 907.5 shall be provided in airport control towers in accordance with Sections 907.2.21.1 and 907.2.21.2.

Exception: Audible appliances shall not be installed within the control tower cab.

[F] 907.2.21.1 Airport traffic control towers with multiple exits and automatic sprinklers. Airport traffic control towers with multiple *exits* and equipped throughout with an *automatic sprinkler system* in accordance with Section 903.3.1.1 shall be provided with smoke detectors in all of the following locations:

1. Airport traffic control cab.
2. Electrical and mechanical equipment rooms.
3. Airport terminal radar and electronics rooms.
4. Outside each opening into *interior exit stairways*.
5. Along the single *means of egress* permitted from observation levels.
6. Outside each opening into the single *means of egress* permitted from observation levels.

[F] 907.2.21.2 Other airport traffic control towers. Airport traffic control towers with a single *exit* or where sprinklers are not installed throughout shall be provided with smoke detectors in all of the following locations:

1. Airport traffic control cab.
2. Electrical and mechanical equipment rooms.
3. Airport terminal radar and electronics rooms.
4. Office spaces incidental to the tower operation.
5. Lounges for employees, including sanitary facilities.
6. *Means of egress*.
7. Utility shafts where access to smoke detectors can be provided.

[NY] 907.2.22 Battery rooms. An automatic smoke detection system shall be installed in areas containing stationary *energy storage systems* as required in Section 1206 of the *Fire Code of New York State*.

[NY] 907.2.23 Capacitor energy storage systems. An automatic smoke detection system shall be installed in areas containing *capacitor energy storage systems* as required by Section 1206 of the *Fire Code of New York State*.

[F] 907.3 Fire safety functions. Automatic fire detectors utilized for the purpose of performing fire safety functions shall be connected to the building's fire alarm control unit where a fire alarm system is required by Section 907.2. Detectors shall, upon actuation, perform the intended function and activate the alarm notification appliances or activate a visible and audible supervisory signal at a *constantly attended location*. In buildings not equipped with a fire alarm system, the automatic fire detector shall be powered by normal electrical service and, upon actuation, perform the intended function. The detectors shall be located in accordance with NFPA 72.

[F] 907.3.1 Duct smoke detectors. Smoke detectors installed in ducts shall be *listed* for the air velocity, temperature and humidity present in the duct. Duct smoke detectors shall be connected to the building's fire alarm control unit where a fire alarm system is required by Section 907.2. Activation of a duct smoke detector shall initiate a visible and audible supervisory signal at a *constantly attended location* and shall perform the intended fire safety function in accordance with this code and the *Mechanical Code of New York State*. In facilities that are required to be monitored by a supervising station, duct smoke detectors shall report only as a supervisory signal and not as a fire alarm. They shall not be used as a substitute for required open area detection.

Exceptions:

1. The supervisory signal at a *constantly attended location* is not required where duct smoke detectors activate the building's alarm notification appliances.
2. In occupancies not required to be equipped with a fire alarm system, actuation of a smoke detector shall activate a visible and an audible signal in an *approved* location. Smoke detector trouble conditions shall activate a visible or audible signal in an *approved* location and shall be identified as air duct detector trouble.

[F] 907.3.2 Special locking systems. Where special locking systems are installed on *means of egress* doors in accordance with Sections 1010.1.9.7 or 1010.1.9.8, an automatic detection system shall be installed as required by that section.

[F] 907.3.3 Elevator emergency operation. Automatic fire detectors installed for elevator emergency operation shall be installed in accordance with the provisions of ASME A17.1/CSA B44 and NFPA 72.

[F] 907.3.4 Wiring. The wiring to the auxiliary devices and equipment used to accomplish the fire safety functions shall be monitored for integrity in accordance with NFPA 72.

[F] 907.4 Initiating devices. Where manual or automatic alarm initiation is required as part of a fire alarm system, the initiating devices shall be installed in accordance with Sections 907.4.1 through 907.4.3.1.

[F] 907.4.1 Protection of fire alarm control unit. In areas that are not continuously occupied, a single smoke detector shall be provided at the location of each fire alarm control unit, notification appliance circuit power extenders, and supervising station transmitting equipment.

Exception: Where ambient conditions prohibit installation of a smoke detector, a *heat detector* shall be permitted.

[F] 907.4.2 Manual fire alarm boxes. Where a manual fire alarm system is required by another section of this code, it shall be activated by fire alarm boxes installed in accordance with Sections 907.4.2.1 through 907.4.2.6.

[F] 907.4.2.1 Location. Manual fire alarm boxes shall be located not more than 5 feet (1524 mm) from the

INTERNATIONAL CODE COUNCIL®
Copyright © 2019 ICC & NYSDOS. ALL RIGHTS RESERVED. Accessed by Lauren Gualdino (lgualdino@briarcliffmanor.org), (-) Order Number #100880972 on May 08, 2020 07:05 AM (PDT) pursuant to License Agreement with ICC & NYSDOS. No further reproduction, no

100880972

entrance to each *exit*. In buildings not protected by an *automatic sprinkler system* in accordance with Section 903.3.1.1 or 903.3.1.2, additional manual fire alarm boxes shall be located so that the distance of travel to the nearest box does not exceed 200 feet (60 960 mm).

[F] 907.4.2.2 Height. The height of the manual fire alarm boxes shall be not less than 42 inches (1067 mm) and not more than 48 inches (1372 mm) measured vertically, from the floor level to the activating handle or lever of the box.

[F] 907.4.2.3 Color. Manual fire alarm boxes shall be red in color.

[NY] 907.4.2.4 Signs. Where fire alarm systems are not monitored by a supervising station in accordance with Section 907.6.6, an *approved* permanent sign shall be installed adjacent to each manual fire alarm box that reads: WHEN ALARM SOUNDS CALL FIRE DEPARTMENT.

Exception: Where the manufacturer has permanently provided this information on the manual fire alarm box.

[F] 907.4.2.5 Protective covers. The fire code official is authorized to require the installation of *listed* manual fire alarm box protective covers to prevent malicious false alarms or to provide the manual fire alarm box with protection from physical damage. The protective cover shall be transparent or red in color with a transparent face to permit visibility of the manual fire alarm box. Each cover shall include proper operating instructions. A protective cover that emits a local alarm signal shall not be installed unless *approved*. Protective covers shall not project more than that permitted by Section 1003.3.3.

[F] 907.4.2.6 Unobstructed and unobscured. Manual fire alarm boxes shall be provided with ready access, unobstructed, unobscured and visible at all times.

[F] 907.4.3 Automatic smoke detection. Where an automatic smoke detection system is required it shall utilize smoke detectors unless ambient conditions prohibit such an installation. In spaces where smoke detectors cannot be utilized due to ambient conditions, *approved* automatic *heat detectors* shall be permitted.

[F] 907.4.3.1 Automatic sprinkler system. For conditions other than specific fire safety functions noted in Section 907.3, in areas where ambient conditions prohibit the installation of smoke detectors, an *automatic sprinkler system* installed in such areas in accordance with Section 903.3.1.1 or 903.3.1.2 and that is connected to the fire alarm system shall be *approved* as automatic heat detection.

[F] 907.5 Occupant notification systems. A fire alarm system shall annunciate at the fire alarm control unit and shall initiate occupant notification upon activation, in accordance with Sections 907.5.1 through 907.5.2.3.3. Where a fire alarm system is required by another section of this code, it shall be activated by:

1. Automatic fire detectors.
2. *Automatic sprinkler system* waterflow devices.
3. Manual fire alarm boxes.
4. Automatic fire-extinguishing systems.

Exception: Where notification systems are allowed elsewhere in Section 907 to annunciate at a *constantly attended location*.

[F] 907.5.1 Presignal feature. A presignal feature shall not be installed unless *approved* by the fire code official. Where a presignal feature is provided, a signal shall be annunciated at a *constantly attended location approved* by the *fire code official* so that occupant notification can be activated in the event of fire or other emergency.

[F] 907.5.2 Alarm notification appliances. Alarm notification appliances shall be provided and shall be *listed* for their purpose.

[F] 907.5.2.1 Audible alarms. Audible alarm notification appliances shall be provided and emit a distinctive sound that is not to be used for any purpose other than that of a fire alarm.

Exceptions:

1. Audible alarm notification appliances are not required in critical care areas of Group I-2, Condition 2 occupancies that are in compliance with Section 907.2.6, Exception 2.
2. A visible alarm notification appliance installed in a nurses' control station or other continuously attended staff location in a Group I-2, Condition 2 suite shall be an acceptable alternative to the installation of audible alarm notification appliances throughout the suite in Group I-2, Condition 2 occupancies that are in compliance with Section 907.2.6, Exception 2.
3. Where provided, audible notification appliances located in each enclosed occupant evacuation elevator lobby in accordance with Section 3008.9.1 shall be connected to a separate notification zone for manual paging only.

[F] 907.5.2.1.1 Average sound pressure. The audible alarm notification appliances shall provide a sound pressure level of 15 decibels (dBA) above the average ambient sound level or 5 dBA above the maximum sound level having a duration of not less than 60 seconds, whichever is greater, in every occupiable space within the building.

[F] 907.5.2.1.2 Maximum sound pressure. The maximum sound pressure level for audible alarm notification appliances shall be 110 dBA at the minimum hearing distance from the audible appliance. Where the average ambient noise is greater than 95 dBA, visible alarm notification appliances shall be provided in accordance with NFPA 72 and audible alarm notification appliances shall not be required.

[F] 907.5.2.2 Emergency voice/alarm communication systems. Emergency voice/alarm communication systems required by this code shall be designed and installed in accordance with NFPA 72. The operation of any automatic fire detector, sprinkler waterflow device

INTERNATIONAL CODE COUNCIL®
Copyright © 2019 ICC & NYSDOS. ALL RIGHTS RESERVED. Accessed by Lauren Gualdino (lgualdino@briarcliffmanor.org), (-) Order Number #100880972 on May 08, 2020 07:05 AM (PDT) pursuant to License Agreement with ICC & NYSDOS. No further reproduction, no

100880972

or manual fire alarm box shall automatically sound an alert tone followed by voice instructions giving *approved* information and directions for a general or staged evacuation in accordance with the building's fire safety and evacuation plans required by Section 404 of the *Fire Code of New York State*. In high-rise buildings, the system shall operate on at least the alarming floor, the floor above and the floor below. Speakers shall be provided throughout the building by paging zones. At a minimum, paging zones shall be provided as follows:

1. Elevator groups.
2. *Interior exit stairways*.
3. Each floor.
4. *Areas of refuge* as defined in Chapter 2.

Exception: In Group I-1 and I-2 occupancies, the alarm shall sound in a constantly attended area and a general occupant notification shall be broadcast over the overhead page.

[F] 907.5.2.2.1 Manual override. A manual override for emergency voice communication shall be provided on a selective and all-call basis for all paging zones.

[F] 907.5.2.2.2 Live voice messages. The emergency voice/alarm communication system shall have the capability to broadcast live voice messages by paging zones on a selective and all-call basis.

[F] 907.5.2.2.3 Alternative uses. The emergency voice/alarm communication system shall be allowed to be used for other announcements, provided that the manual fire alarm use takes precedence over any other use.

[F] 907.5.2.2.4 Emergency voice/alarm communication captions. Where stadiums, arenas and grandstands have 15,000 fixed seats or more and provide audible public announcements, the emergency voice/alarm communication system shall provide prerecorded or real-time captions. Prerecorded or live emergency captions shall be from an *approved* location constantly attended by personnel trained to respond to an emergency.

[F] 907.5.2.2.5 Emergency power. Emergency voice/alarm communications systems shall be provided with emergency power in accordance with Section 2702. The system shall be capable of powering the required load for a duration of not less than 24 hours, as required in NFPA 72.

[F] 907.5.2.3 Visible alarms. Visible alarm notification appliances shall be provided in accordance with Sections 907.5.2.3.1 through 907.5.2.3.3.

Exceptions:

1. Visible alarm notification appliances are not required in *alterations*, except where an existing fire alarm system is upgraded or replaced, or a new fire alarm system is installed.
2. Visible alarm notification appliances shall not be required in *exits* as defined in Chapter 2.
3. Visible alarm notification appliances shall not be required in elevator cars.
4. Visual alarm notification appliances are not required in critical care areas of Group I-2, Condition 2 occupancies that are in compliance with Section 907.2.6, Exception 2.

[F] 907.5.2.3.1 Public use areas and common use areas. Visible alarm notification appliances shall be provided in *public use areas* and *common use areas*.

Exception: Where employee work areas have audible alarm coverage, the notification appliance circuits serving the employee work areas shall be initially designed with not less than 20-percent spare capacity to account for the potential of adding visible notification appliances in the future to accommodate hearing-impaired employee(s).

[F] 907.5.2.3.2 Groups I-1 and R-1. Habitable spaces in dwelling units and sleeping units in Group I-1 and R-1 occupancies in accordance with Table 907.5.2.3.2 shall be provided with visible alarm notification. Visible alarms shall be activated by the in-room smoke alarm and the building fire alarm system.

[F] TABLE 907.5.2.3.2
VISIBLE ALARMS

NUMBER OF SLEEP UNITS	SLEEPING ACCOMMODATIONS WITH VISIBLE ALARMS
6 to 25	2
26 to 50	4
51 to 75	7
76 to 100	9
101 to 150	12
151 to 200	14
201 to 300	17
301 to 400	20
401 to 500	22
501 to 1,000	5% of total
1,001 and over	50 plus 3 for each 100 over 1,000

[F] 907.5.2.3.3 Group R-2. In Group R-2 occupancies required by Section 907 to have a fire alarm system, each *story* that contains *dwelling units* and *sleeping units* shall be provided with the capability to support visible alarm notification appliances in accordance with Chapter 10 of ICC A117.1. Such capability shall accommodate wired or wireless equipment. The future capability shall include one of the following:

1. The interconnection of the building fire alarm system with the unit smoke alarms.
2. The replacement of audible appliances with combination audible/visible appliances.

INTERNATIONAL CODE COUNCIL®
Copyright © 2019 ICC & NYSDOS. ALL RIGHTS RESERVED. Accessed by Lauren Gualdino (lgualdino@briarcliffmanor.org), (-) Order Number #100880972 on May 08, 2020 07:05 AM (PDT) pursuant to License Agreement with ICC & NYSDOS. No further reproduction, no

100880972

3. The future extension of the existing wiring from the unit smoke alarm locations to required locations for visible appliances.

[F] 907.6 Installation and monitoring. A fire alarm system shall be installed and monitored in accordance with Sections 907.6.1 through 907.6.6.2 and NFPA 72.

[F] 907.6.1 Wiring. Wiring shall comply with the requirements of NFPA 70 and NFPA 72. Wireless protection systems utilizing radio-frequency transmitting devices shall comply with the special requirements for supervision of low-power wireless systems in NFPA 72.

[F] 907.6.2 Power supply. The primary and secondary power supply for the fire alarm system shall be provided in accordance with NFPA 72.

Exception: Back-up power for single-station and multiple-station smoke alarms as required in Section 907.2.10.6.

[F] 907.6.3 Initiating device identification. The fire alarm system shall identify the specific initiating device address, location, device type, floor level where applicable and status including indication of normal, alarm, trouble and supervisory status, as appropriate.

Exceptions:

1. Fire alarm systems in single-story buildings less than 22,500 square feet (2090 m^2) in area.
2. Fire alarm systems that only include manual fire alarm boxes, waterflow initiating devices and not more than 10 additional alarm-initiating devices.
3. Special initiating devices that do not support individual device identification.
4. Fire alarm systems or devices that are replacing existing equipment.

[F] 907.6.3.1 Annunciation. The initiating device status shall be annunciated at an *approved* on-site location.

[F] 907.6.4 Zones. Each floor shall be zoned separately and a zone shall not exceed 22,500 square feet (2090 m^2). The length of any zone shall not exceed 300 feet (91 440 mm) in any direction.

Exception: *Automatic sprinkler system* zones shall not exceed the area permitted by NFPA 13.

[F] 907.6.4.1 Zoning indicator panel. A zoning indicator panel and the associated controls shall be provided in an *approved* location. The visual zone indication shall lock in until the system is reset and shall not be canceled by the operation of an audible-alarm silencing switch.

[F] 907.6.4.2 High-rise buildings. In high-rise buildings, a separate zone by floor shall be provided for each of the following types of alarm-initiating devices where provided:

1. Smoke detectors.
2. Sprinkler waterflow devices.
3. Manual fire alarm boxes.
4. Other *approved* types of automatic fire detection devices or suppression systems.

[F] 907.6.5 Access. Access shall be provided to each fire alarm device and notification appliance for periodic inspection, maintenance and testing.

[F] 907.6.6 Monitoring. Fire alarm systems required by this chapter or by the *Fire Code of New York State* shall be monitored by an *approved* supervising station in accordance with NFPA 72.

Exception: Monitoring by a supervising station is not required for:

1. Single- and multiple-station smoke alarms required by Section 907.2.10.
2. Smoke detectors in Group I-3 occupancies.
3. *Automatic sprinkler systems* in one- and two-family dwellings.

[F] 907.6.6.1 Automatic telephone-dialing devices. Automatic telephone-dialing devices used to transmit an emergency alarm shall not be connected to any fire department telephone number unless *approved* by the fire chief.

[F] 907.6.6.2 Termination of monitoring service. Termination of fire alarm monitoring services shall be in accordance with Section 901.9 of the *Fire Code of New York State*.

[F] 907.7 Acceptance tests and completion. Upon completion of the installation, the fire alarm system and all fire alarm components shall be tested in accordance with NFPA 72.

[F] 907.7.1 Single- and multiple-station alarm devices. When the installation of the alarm devices is complete, each device and interconnecting wiring for multiple-station alarm devices shall be tested in accordance with the smoke alarm provisions of NFPA 72.

[F] 907.7.2 Record of completion. A record of completion in accordance with NFPA 72 verifying that the system has been installed and tested in accordance with the *approved* plans and specifications shall be provided.

[F] 907.7.3 Instructions. Operating, testing and maintenance instructions and record drawings ("as-builts") and equipment specifications shall be provided at an *approved* location.

[NY] 907.8 Inspection, testing and maintenance. The maintenance and testing schedules and procedures for fire alarm and fire detection systems shall be in accordance with Section 907.8 of the *Fire Code of New York State* and NFPA 72.

SECTION 908
EMERGENCY ALARM SYSTEMS

[F] 908.1 Group H occupancies. Emergency alarms for the detection and notification of an emergency condition in Group H occupancies shall be provided in accordance with Section 415.5.

INTERNATIONAL CODE COUNCIL®
Copyright © 2019 ICC & NYSDOS. ALL RIGHTS RESERVED. Accessed by Lauren Gualdino (lgualdino@briarcliffmanor.org), (-) Order Number #100880972 on May 08, 2020 07:05 AM (PDT) pursuant to License Agreement with ICC & NYSDOS. No further reproduction, no

100880972

[F] 908.2 Group H-5 occupancy. Emergency alarms for notification of an emergency condition in an HPM facility shall be provided as required in Section 415.11.3.5.

*

SECTION 909
SMOKE CONTROL SYSTEMS

[F] 909.1 Scope and purpose. This section applies to mechanical or passive smoke control systems where they are required by other provisions of this code. The purpose of this section is to establish minimum requirements for the design, installation and acceptance testing of smoke control systems that are intended to provide a tenable environment for the evacuation or relocation of occupants. These provisions are not intended for the preservation of contents, the timely restoration of operations or for assistance in fire suppression or overhaul activities. Smoke control systems regulated by this section serve a different purpose than the smoke- and heat-removal provisions found in Section 910. Mechanical smoke control systems shall not be considered exhaust systems under Chapter 5 of the *Mechanical Code of New York State*.

[F] 909.2 General design requirements. Buildings, structures or parts thereof required by this code to have a smoke control system or systems shall have such systems designed in accordance with the applicable requirements of Section 909 and the generally accepted and well-established principles of engineering relevant to the design. The *construction documents* shall include sufficient information and detail to adequately describe the elements of the design necessary for the proper implementation of the smoke control systems. These documents shall be accompanied by sufficient information and analysis to demonstrate compliance with these provisions.

[F] 909.3 Special inspection and test requirements. In addition to the ordinary inspection and test requirements that buildings, structures and parts thereof are required to undergo, smoke control systems subject to the provisions of Section 909 shall undergo *special inspections* and tests sufficient to verify the proper commissioning of the smoke control design in its final installed condition. The design submission accompanying the *construction documents* shall clearly detail procedures and methods to be used and the items subject to such inspections and tests. Such commissioning shall be in accordance with generally accepted engineering practice and, where possible, based on published standards for the particular testing involved. The special inspections and tests required by this section shall be conducted under the same terms in Section 1704.

[F] 909.4 Analysis. A rational analysis supporting the types of smoke control systems to be employed, their methods of operation, the systems supporting them and the methods of construction to be utilized shall accompany the submitted *construction documents* and shall include, but not be limited to, the items indicated in Sections 909.4.1 through 909.4.7.

[F] 909.4.1 Stack effect. The system shall be designed such that the maximum probable normal or reverse stack effect will not adversely interfere with the system's capabilities. In determining the maximum probable stack effect, altitude, elevation, weather history and interior temperatures shall be used.

[F] 909.4.2 Temperature effect of fire. Buoyancy and expansion caused by the design fire in accordance with Section 909.9 shall be analyzed. The system shall be designed such that these effects do not adversely interfere with the system's capabilities.

[F] 909.4.3 Wind effect. The design shall consider the adverse effects of wind. Such consideration shall be consistent with the wind-loading provisions of Chapter 16.

[F] 909.4.4 HVAC systems. The design shall consider the effects of the heating, ventilating and air-conditioning (HVAC) systems on both smoke and fire transport. The analysis shall include all permutations of systems status. The design shall consider the effects of the fire on the HVAC systems.

[F] 909.4.5 Climate. The design shall consider the effects of low temperatures on systems, property and occupants. Air inlets and exhausts shall be located so as to prevent snow or ice blockage.

[F] 909.4.6 Duration of operation. All portions of active or engineered smoke control systems shall be capable of continued operation after detection of the fire event for a period of not less than either 20 minutes or 1.5 times the calculated egress time, whichever is greater.

909.4.7 Smoke control system interaction. The design shall consider the interaction effects of the operation of multiple smoke control systems for all design scenarios.

[F] 909.5 Smoke barrier construction. *Smoke barriers* required for passive smoke control and a smoke control system using the pressurization method shall comply with Section 709. The maximum allowable leakage area shall be the aggregate area calculated using the following leakage area ratios:

1. Walls $A/A_w = 0.00100$
2. Interior *exit stairways* and *ramps* and *exit passageways*: $A/A_w = 0.00035$
3. Enclosed *exit access stairways* and *ramps* and all other shafts: $A/A_w = 0.00150$
4. Floors and roofs: $A/A_F = 0.00050$

where:

A = Total leakage area, square feet (m^2).

A_F = Unit floor or roof area of barrier, square feet (m^2).

A_w = Unit wall area of barrier, square feet (m^2).

The leakage area ratios shown do not include openings due to gaps around doors and operable windows. The total leakage area of the *smoke barrier* shall be determined in accordance with Section 909.5.1 and tested in accordance with Section 909.5.2.

[F] 909.5.1 Total leakage area. Total leakage area of the barrier is the product of the *smoke barrier* gross area multiplied by the allowable leakage area ratio, plus the area of other openings such as gaps around doors and operable windows.

INTERNATIONAL CODE COUNCIL®
Copyright © 2019 ICC & NYSDOS. ALL RIGHTS RESERVED. Accessed by Lauren Gualdino (lgualdino@briarcliffmanor.org), (-) Order Number #100880972 on May 08, 2020 07:05 AM (PDT) pursuant to License Agreement with ICC & NYSDOS. No further reproduction, no

100880972

[F] 909.5.2 Testing of leakage area. Compliance with the maximum total leakage area shall be determined by achieving the minimum air pressure difference across the barrier with the system in the smoke control mode for mechanical smoke control systems utilizing the pressurization method. Compliance with the maximum total leakage area of passive smoke control systems shall be verified through methods such as door fan testing or other methods, as *approved* by the fire code official.

[F] 909.5.3 Opening protection. Openings in *smoke barriers* shall be protected by automatic-closing devices actuated by the required controls for the mechanical smoke control system. Door openings shall be protected by *fire door assemblies* complying with Section 716.

Exceptions:

1. Passive smoke control systems with automatic-closing devices actuated by spot-type smoke detectors *listed* for releasing service installed in accordance with Section 907.3.
2. Fixed openings between smoke zones that are protected utilizing the airflow method.
3. In Group I-1, Condition 2; Group I-2; and ambulatory care facilities, where a pair of opposite-swinging doors are installed across a corridor in accordance with Section 909.5.3.1, the doors shall not be required to be protected in accordance with Section 716. The doors shall be close-fitting within operational tolerances and shall not have a center mullion or undercuts in excess of $^3/_4$ inch (19.1 mm), louvers or grilles. The doors shall have head and jamb stops and astragals or rabbets at meeting edges and, where permitted by the door manufacturer's listing, positive-latching devices are not required.
4. In Group I-2 and ambulatory care facilities, where such doors are special-purpose horizontal sliding, accordion or folding door assemblies installed in accordance with Section 1010.1.4.3 and are automatic closing by smoke detection in accordance with Section 716.2.6.5.
5. Group I-3.
6. Openings between smoke zones with clear ceiling heights of 14 feet (4267 mm) or greater and bank-down capacity of greater than 20 minutes as determined by the design fire size.

909.5.3.1 Group I-1, Condition 2; Group I-2; and ambulatory care facilities. In Group I-1, Condition 2; Group I-2; and *ambulatory care facilities*, where doors are installed across a *corridor*, the doors shall be automatic closing by smoke detection in accordance with Section 716.2.6.5 and shall have a vision panel with fire-protection-rated glazing materials in fire protection-rated frames, the area of which shall not exceed that tested.

[F] 909.5.3.2 Ducts and air transfer openings. Ducts and air transfer openings are required to be protected with a minimum Class II, 250°F (121°C) *smoke damper* complying with Section 717.

[F] 909.6 Pressurization method. The primary mechanical means of controlling smoke shall be by pressure differences across smoke barriers. Maintenance of a tenable environment is not required in the smoke control zone of fire origin.

[F] 909.6.1 Minimum pressure difference. The pressure difference across a *smoke barrier* used to separate smoke zones shall be not less than 0.05-inch water gage (0.0124 kPa) in fully sprinklered buildings.

In buildings permitted to be other than fully sprinklered, the smoke control system shall be designed to achieve pressure differences not less than two times the maximum calculated pressure difference produced by the design fire.

[F] 909.6.2 Maximum pressure difference. The maximum air pressure difference across a *smoke barrier* shall be determined by required door-opening or closing forces. The actual force required to open *exit* doors when the system is in the smoke control mode shall be in accordance with Section 1010.1.3. Opening and closing forces for other doors shall be determined by standard engineering methods for the resolution of forces and reactions. The calculated force to set a side-hinged, swinging door in motion shall be determined by:

$$F = F_{dc} + K(WA\Delta P)/2(W\text{-}d) \qquad \textbf{(Equation 9-1)}$$

where:

A = Door area, square feet (m^2).

d = Distance from door handle to latch edge of door, feet (m).

F = Total door opening force, pounds (N).

F_{dc} = Force required to overcome closing device, pounds (N).

K = Coefficient 5.2 (1.0).

W = Door width, feet (m).

ΔP = Design pressure difference, inches of water (Pa).

[F] 909.6.3 Pressurized stairways and elevator hoistways. Where stairways or elevator hoistways are pressurized, such pressurization systems shall comply with Section 909 as smoke control systems, in addition to the requirements of Sections 909.20 of this code and 909.21 of the *Fire Code of New York State*.

[F] 909.7 Airflow design method. Where *approved* by the fire code official, smoke migration through openings fixed in a permanently open position, which are located between smoke control zones by the use of the airflow method, shall be permitted. The design airflow shall be in accordance with this section. Airflow shall be directed to limit smoke migration from the fire zone. The geometry of openings shall be considered to prevent flow reversal from turbulent effects. Smoke control systems using the airflow method shall be designed in accordance with NFPA 92.

[F] 909.7.1 Prohibited conditions. This method shall not be employed where either the quantity of air or the velocity of the airflow will adversely affect other portions of the

INTERNATIONAL CODE COUNCIL®
Copyright © 2019 ICC & NYSDOS. ALL RIGHTS RESERVED. Accessed by Lauren Gualdino (lgualdino@briarcliffmanor.org), (-) Order Number #100880972 on May 08, 2020 07:05 AM (PDT) pursuant to License Agreement with ICC & NYSDOS. No further reproduction, no

100880972

smoke control system, unduly intensify the fire, disrupt plume dynamics or interfere with exiting. Airflow toward the fire shall not exceed 200 feet per minute (1.02 m/s). Where the calculated airflow exceeds this limit, the airflow method shall not be used.

[F] 909.8 Exhaust method. Where *approved* by the fire code official, mechanical smoke control for large enclosed volumes, such as in atriums or malls, shall be permitted to utilize the exhaust method. Smoke control systems using the exhaust method shall be designed in accordance with NFPA 92.

[F] 909.8.1 Smoke layer. The height of the lowest horizontal surface of the smoke layer interface shall be maintained not less than 6 feet (1829 mm) above a walking surface that forms a portion of a required egress system within the smoke zone.

[F] 909.9 Design fire. The design fire shall be based on a rational analysis performed by the *registered design professional* and *approved* by the fire code official. The design fire shall be based on the analysis in accordance with Section 909.4 and this section.

[F] 909.9.1 Factors considered. The engineering analysis shall include the characteristics of the fuel, fuel load, effects included by the fire and whether the fire is likely to be steady or unsteady.

[F] 909.9.2 Design fire fuel. Determination of the design fire shall include consideration of the type of fuel, fuel spacing and configuration.

[F] 909.9.3 Heat-release assumptions. The analysis shall make use of best available data from *approved* sources and shall not be based on excessively stringent limitations of combustible material.

[F] 909.9.4 Sprinkler effectiveness assumptions. A documented engineering analysis shall be provided for conditions that assume fire growth is halted at the time of sprinkler activation.

[F] 909.10 Equipment. Equipment including, but not limited to, fans, ducts, automatic *dampers* and balance *dampers*, shall be suitable for its intended use, suitable for the probable exposure temperatures that the rational analysis indicates and as *approved* by the fire code official.

[F] 909.10.1 Exhaust fans. Components of exhaust fans shall be rated and certified by the manufacturer for the probable temperature rise to which the components will be exposed. This temperature rise shall be computed by:

$$T_s = (Q_c/mc) + (T_a) \qquad \textbf{(Equation 9-2)}$$

where:

c = Specific heat of smoke at smoke layer temperature, Btu/lb°F (kJ/kg · K).

m = Exhaust rate, pounds per second (kg/s).

Q_c = Convective heat output of fire, Btu/s (kW).

T_a = Ambient temperature, °F (K).

T_s = Smoke temperature, °F (K).

Exception: Reduced T_s as calculated based on the assurance of adequate dilution air.

[F] 909.10.2 Ducts. Duct materials and joints shall be capable of withstanding the probable temperatures and pressures to which they are exposed as determined in accordance with Section 909.10.1. Ducts shall be constructed and supported in accordance with the *Mechanical Code of New York State*. Ducts shall be leak tested to 1.5 times the maximum design pressure in accordance with nationally accepted practices. Measured leakage shall not exceed 5 percent of design flow. Results of such testing shall be a part of the documentation procedure. Ducts shall be supported directly from fire-resistance-rated structural elements of the building by substantial, noncombustible supports.

Exception: Flexible connections, for the purpose of vibration isolation, complying with the *Mechanical Code of New York State* and that are constructed of *approved* fire-resistance-rated materials.

[F] 909.10.3 Equipment, inlets and outlets. Equipment shall be located so as to not expose uninvolved portions of the building to an additional fire hazard. Outside air inlets shall be located so as to minimize the potential for introducing smoke or flame into the building. Exhaust outlets shall be so located as to minimize reintroduction of smoke into the building and to limit exposure of the building or adjacent buildings to an additional fire hazard.

[F] 909.10.4 Automatic dampers. Automatic *dampers*, regardless of the purpose for which they are installed within the smoke control system, shall be *listed* and conform to the requirements of *approved*, recognized standards.

[F] 909.10.5 Fans. In addition to other requirements, belt-driven fans shall have 1.5 times the number of belts required for the design duty, with the minimum number of belts being two. Fans shall be selected for stable performance based on normal temperature and, where applicable, elevated temperature. Calculations and manufacturer's fan curves shall be part of the documentation procedures. Fans shall be supported and restrained by noncombustible devices in accordance with the requirements of Chapter 16.

Motors driving fans shall not be operated beyond their nameplate horsepower (kilowatts), as determined from measurement of actual current draw, and shall have a minimum service factor of 1.15.

[F] 909.11 Standby power. Smoke control systems shall be provided with standby power in accordance with Section 2702.

909.11.1 Equipment room. The standby power source and its transfer switches shall be in a room separate from the normal power transformers and switch gears and ventilated directly to and from the exterior. The room shall be enclosed with not less than 1-hour *fire barriers* constructed in accordance with Section 707 or *horizontal assemblies* constructed in accordance with Section 711, or both.

[F] 909.11.2 Power sources and power surges. Elements of the smoke control system relying on volatile memories or the like shall be supplied with uninterruptable power

INTERNATIONAL CODE COUNCIL®
Copyright © 2019 ICC & NYSDOS. ALL RIGHTS RESERVED. Accessed by Lauren Gualdino (lgualdino@briarcliffmanor.org), (-) Order Number #100880972 on May 08, 2020 07:05 AM (PDT) pursuant to License Agreement with ICC & NYSDOS. No further reproduction, no

100880972

sources of sufficient duration to span 15-minute primary power interruption. Elements of the smoke control system susceptible to power surges shall be suitably protected by conditioners, suppressors or other *approved* means.

[F] 909.12 Detection and control systems. Fire detection systems providing control input or output signals to mechanical smoke control systems or elements thereof shall comply with the requirements of Section 907. Such systems shall be equipped with a control unit complying with UL 864 and *listed* as smoke control equipment.

909.12.1 Verification. Control systems for mechanical smoke control systems shall include provisions for verification. Verification shall include positive confirmation of actuation, testing, manual override and the presence of power downstream of all disconnects. A preprogrammed weekly test sequence shall report abnormal conditions audibly, visually and by printed report. The preprogrammed weekly test shall operate all devices, equipment and components used for smoke control.

Exception: Where verification of individual components tested through the preprogrammed weekly testing sequence will interfere with, and produce unwanted effects to, normal building operation, such individual components are permitted to be bypassed from the preprogrammed weekly testing, where *approved* by the building official and in accordance with both of the following:

1. Where the operation of components is bypassed from the preprogrammed weekly test, presence of power downstream of all disconnects shall be verified weekly by a listed control unit.
2. Testing of all components bypassed from the preprogrammed weekly test shall be in accordance with Section 909.20.6 of the *Fire Code of New York State*.

[F] 909.12.2 Wiring. In addition to meeting requirements of NFPA 70, all wiring, regardless of voltage, shall be fully enclosed within continuous raceways.

[F] 909.12.3 Activation. Smoke control systems shall be activated in accordance with this section.

[F] 909.12.3.1 Pressurization, airflow or exhaust method. Mechanical smoke control systems using the pressurization, airflow or exhaust method shall have completely automatic control.

[F] 909.12.3.2 Passive method. Passive smoke control systems actuated by *approved* spot-type detectors *listed* for releasing service shall be permitted.

[F] 909.12.4 Automatic control. Where completely automatic control is required or used, the automatic-control sequences shall be initiated from an appropriately zoned *automatic sprinkler system* complying with Section 903.3.1.1, manual controls provided with *ready access* for the fire department and any smoke detectors required by engineering analysis.

[F] 909.13 Control air tubing. Control air tubing shall be of sufficient size to meet the required response times. Tubing shall be flushed clean and dry prior to final connections and shall be adequately supported and protected from damage. Tubing passing through concrete or masonry shall be sleeved and protected from abrasion and electrolytic action.

[F] 909.13.1 Materials. Control-air tubing shall be hard-drawn copper, Type L, ACR in accordance with ASTM B42, ASTM B43, ASTM B68, ASTM B88, ASTM B251 and ASTM B280. Fittings shall be wrought copper or brass, solder type in accordance with ASME B16.18 or ASME B16.22. Changes in direction shall be made with appropriate tool bends. Brass compression-type fittings shall be used at final connection to devices; other joints shall be brazed using a BCuP-5 brazing alloy with solidus above 1,100°F (593°C) and liquids below 1,500°F (816°C). Brazing flux shall be used on copper-to-brass joints only.

Exception: Nonmetallic tubing used within control panels and at the final connection to devices provided that all of the following conditions are met:

1. Tubing shall comply with the requirements of Section 602.2.1.3 of the *Mechanical Code of New York State*.
2. Tubing and connected devices shall be completely enclosed within a galvanized or paint-grade steel enclosure having a minimum thickness of 0.0296 inch (0.7534 mm) (No. 22 gage). Entry to the enclosure shall be by copper tubing with a protective grommet of neoprene or Teflon or by suitable brass compression to male barbed adapter.
3. Tubing shall be identified by appropriately documented coding.
4. Tubing shall be neatly tied and supported within the enclosure. Tubing bridging cabinets and doors or moveable devices shall be of sufficient length to avoid tension and excessive stress. Tubing shall be protected against abrasion. Tubing connected to devices on doors shall be fastened along hinges.

[F] 909.13.2 Isolation from other functions. Control tubing serving other than smoke control functions shall be isolated by automatic isolation valves or shall be an independent system.

[F] 909.13.3 Testing. Control air tubing shall be tested at three times the operating pressure for not less than 30 minutes without any noticeable loss in gauge pressure prior to final connection to devices.

[F] 909.14 Marking and identification. The detection and control systems shall be clearly marked at all junctions, accesses and terminations.

[F] 909.15 Control diagrams. Identical control diagrams showing all devices in the system and identifying their location and function shall be maintained current and kept on file with the fire code official, the fire department and in the fire command center in a format and manner *approved* by the *fire code official*.

[F] 909.16 Fire fighter's smoke control panel. A fire fighter's smoke control panel for fire department emergency

INTERNATIONAL CODE COUNCIL®
Copyright © 2019 ICC & NYSDOS. ALL RIGHTS RESERVED. Accessed by Lauren Gualdino (lgualdino@briarcliffmanor.org), (-) Order Number #100880972 on May 08, 2020 07:05 AM (PDT) pursuant to License Agreement with ICC & NYSDOS. No further reproduction, no

100880972

response purposes only shall be provided and shall include manual control or override of automatic control for mechanical smoke control systems. The panel shall be located in a fire command center complying with Section 911 in high-rise buildings or buildings with smoke-protected assembly seating. In all other buildings, the fire fighter's smoke control panel shall be installed in an *approved* location adjacent to the fire alarm control panel. The fire fighter's smoke control panel shall comply with Sections 909.16.1 through 909.16.3.

[F] 909.16.1 Smoke control systems. Fans within the building shall be shown on the fire fighter's control panel. A clear indication of the direction of airflow and the relationship of components shall be displayed. Status indicators shall be provided for all smoke control equipment, annunciated by fan and zone, and by pilot-lamp-type indicators as follows:

1. Fans, *dampers* and other operating equipment in their normal status—WHITE.
2. Fans, *dampers* and other operating equipment in their off or closed status—RED.
3. Fans, *dampers* and other operating equipment in their on or open status—GREEN.
4. Fans, *dampers* and other operating equipment in a fault status—YELLOW/AMBER.

[F] 909.16.2 Smoke control panel. The fire fighter's control panel shall provide control capability over the complete smoke control system equipment within the building as follows:

1. ON-AUTO-OFF control over each individual piece of operating smoke control equipment that can be controlled from other sources within the building. This includes *stairway* pressurization fans; smoke exhaust fans; supply, return and exhaust fans; elevator shaft fans and other operating equipment used or intended for smoke control purposes.
2. OPEN-AUTO-CLOSE control over individual *dampers* relating to smoke control and that are controlled from other sources within the building.
3. ON-OFF or OPEN-CLOSE control over smoke control and other critical equipment associated with a fire or smoke emergency and that can only be controlled from the fire fighter's control panel.

Exceptions:

1. Complex systems, where *approved*, where the controls and indicators are combined to control and indicate all elements of a single smoke zone as a unit.
2. Complex systems, where *approved*, where the control is accomplished by computer interface using *approved*, plain English commands.

[F] 909.16.3 Control action and priorities. The fire-fighter's control panel actions shall be as follows:

1. ON-OFF and OPEN-CLOSE control actions shall have the highest priority of any control point within the building. Once issued from the fire fighter's control panel, automatic or manual control from any other control point within the building shall not contradict the control action. Where automatic means are provided to interrupt normal, nonemergency equipment operation or produce a specific result to safeguard the building or equipment including, but not limited to, duct freezestats, duct smoke detectors, high-temperature cutouts, temperature-actuated linkage and similar devices, such means shall be capable of being overridden by the fire fighter's control panel. The last control action as indicated by each fire fighter's control panel switch position shall prevail. Control actions shall not require the smoke control system to assume more than one configuration at any one time.

   Exception: Power disconnects required by NFPA 70.

2. Only the AUTO position of each three-position fire-fighter's control panel switch shall allow automatic or manual control action from other control points within the building. The AUTO position shall be the NORMAL, nonemergency, building control position. Where a fire fighter's control panel is in the AUTO position, the actual status of the device (on, off, open, closed) shall continue to be indicated by the status indicator described in Section 909.16.1. Where directed by an automatic signal to assume an emergency condition, the NORMAL position shall become the emergency condition for that device or group of devices within the zone. Control actions shall not require the smoke control system to assume more than one configuration at any one time.

[F] 909.17 System response time. Smoke-control system activation shall be initiated immediately after receipt of an appropriate automatic or manual activation command. Smoke control systems shall activate individual components (such as *dampers* and fans) in the sequence necessary to prevent physical damage to the fans, *dampers*, ducts and other equipment. For purposes of smoke control, the fire fighter's control panel response time shall be the same for automatic or manual smoke control action initiated from any other building control point. The total response time, including that necessary for detection, shutdown of operating equipment and smoke control system startup, shall allow for full operational mode to be achieved before the conditions in the space exceed the design smoke condition. The system response time for each component and their sequential relationships shall be detailed in the required rational analysis and verification of their installed condition reported in the required final report.

[F] 909.18 Acceptance testing. Devices, equipment, components and sequences shall be individually tested. These tests, in addition to those required by other provisions of this code, shall consist of determination of function, sequence and, where applicable, capacity of their installed condition.

[F] 909.18.1 Detection devices. Smoke or fire detectors that are a part of a smoke control system shall be tested in accordance with Chapter 9 in their installed condition. Where applicable, this testing shall include verification of airflow in both minimum and maximum conditions.

INTERNATIONAL CODE COUNCIL®
Copyright © 2019 ICC & NYSDOS. ALL RIGHTS RESERVED. Accessed by Lauren Gualdino (lgualdino@briarcliffmanor.org), (-) Order Number #100880972 on May 08, 2020 07:05 AM (PDT) pursuant to License Agreement with ICC & NYSDOS. No further reproduction, no

100880972

[F] 909.18.2 Ducts. Ducts that are part of a smoke control system shall be traversed using generally accepted practices to determine actual air quantities.

[F] 909.18.3 Dampers. *Dampers* shall be tested for function in their installed condition.

[F] 909.18.4 Inlets and outlets. Inlets and outlets shall be read using generally accepted practices to determine air quantities.

[F] 909.18.5 Fans. Fans shall be examined for correct rotation. Measurements of voltage, amperage, revolutions per minute (rpm) and belt tension shall be made.

[F] 909.18.6 Smoke barriers. Measurements using inclined manometers or other *approved* calibrated measuring devices shall be made of the pressure differences across *smoke barriers*. Such measurements shall be conducted for each possible smoke control condition.

[F] 909.18.7 Controls. Each smoke zone equipped with an automatic-initiation device shall be put into operation by the actuation of one such device. Each additional device within the zone shall be verified to cause the same sequence without requiring the operation of fan motors in order to prevent damage. Control sequences shall be verified throughout the system, including verification of override from the fire fighter's control panel and simulation of standby power conditions.

[F] 909.18.8 Testing for smoke control. Smoke control systems shall be tested by a special inspector in accordance with Section 1705.18.

[F] 909.18.8.1 Scope of testing. Testing shall be conducted in accordance with the following:

1. During erection of ductwork and prior to concealment for the purposes of leakage testing and recording of device location.
2. Prior to occupancy and after sufficient completion for the purposes of pressure-difference testing, flow measurements, and detection and control verification.

[F] 909.18.8.2 Qualifications. *Approved* agencies for smoke control testing shall have expertise in fire protection engineering, mechanical engineering and certification as air balancers.

[F] 909.18.8.3 Reports. A complete report of testing shall be prepared by the *approved* agency. The report shall include identification of all devices by manufacturer, nameplate data, design values, measured values and identification tag or *mark*. The report shall be reviewed by the responsible *registered design professional* and, when satisfied that the design intent has been achieved, the responsible *registered design professional* shall sign, seal and date the report.

[F] 909.18.8.3.1 Report filing. A copy of the final report shall be filed with the fire code official and an identical copy shall be maintained in an *approved* location at the building.

[F] 909.18.9 Identification and documentation. Charts, drawings and other documents identifying and locating each component of the smoke control system, and describing its proper function and maintenance requirements, shall be maintained on file at the building as an attachment to the report required by Section 909.18.8.3. Devices shall have an *approved* identifying tag or *mark* on them consistent with the other required documentation and shall be dated indicating the last time they were successfully tested and by whom.

[F] 909.19 System acceptance. Buildings, or portions thereof, required by this code to comply with this section shall not be issued a certificate of occupancy until such time that the fire code official determines that the provisions of this section have been fully complied with and that the fire department has received satisfactory instruction on the operation, both automatic and manual, of the system and a written maintenance program complying with the requirements of Section 909.20.1 of the *Fire Code of New York State* has been submitted and approved by the fire code official.

Exception: In buildings of phased construction, a temporary certificate of occupancy, as *approved* by the fire code official, shall be allowed provided that those portions of the building to be occupied meet the requirements of this section and that the remainder does not pose a significant hazard to the safety of the proposed occupants or adjacent buildings.

909.20 Smokeproof enclosures. Where required by Section 1023.11, a smokeproof enclosure shall be constructed in accordance with this section. A smokeproof enclosure shall consist of an *interior exit stairway* or *ramp* that is enclosed in accordance with the applicable provisions of Section 1023 and an open exterior balcony or ventilated vestibule meeting the requirements of this section. Where access to the roof is required by the *Fire Code of New York State*, such access shall be from the smokeproof enclosure where a smokeproof enclosure is required.

909.20.1 Access. Access to the *stairway* or *ramp* shall be by way of a vestibule or an open exterior balcony. The minimum dimension of the vestibule shall be not less than the required width of the *corridor* leading to the vestibule but shall not have a width of less than 44 inches (1118 mm) and shall not have a length of less than 72 inches (1829 mm) in the direction of egress travel.

909.20.2 Construction. The smokeproof enclosure shall be separated from the remainder of the building by not less than 2-hour *fire barriers* constructed in accordance with Section 707 or *horizontal assemblies* constructed in accordance with Section 711, or both. Openings are not permitted other than the required *means of egress* doors. The vestibule shall be separated from the *stairway* or *ramp* by not less than 2-hour *fire barriers* constructed in accordance with Section 707 or *horizontal assemblies* constructed in accordance with Section 711, or both. The open exterior balcony shall be constructed in accordance with the *fire-resistance rating* requirements for floor assemblies.

909.20.2.1 Door closers. Doors in a smokeproof enclosure shall be self- or automatic closing by actuation of a smoke detector in accordance with Section 716.2.6.6 and shall be installed at the floor-side entrance to the smokeproof enclosure. The actuation of the smoke

INTERNATIONAL CODE COUNCIL®
Copyright © 2019 ICC & NYSDOS. ALL RIGHTS RESERVED. Accessed by Lauren Gualdino (lgualdino@briarcliffmanor.org), (-) Order Number #100880972 on May 08, 2020 07:05 AM (PDT) pursuant to License Agreement with ICC & NYSDOS. No further reproduction, no

100880972

detector on any door shall activate the closing devices on all doors in the smokeproof enclosure at all levels. Smoke detectors shall be installed in accordance with Section 907.3.

909.20.3 Natural ventilation alternative. The provisions of Sections 909.20.3.1 through 909.20.3.3 shall apply to ventilation of smokeproof enclosures by natural means.

909.20.3.1 Balcony doors. Where access to the *stairway* or *ramp* is by way of an open exterior balcony, the door assembly into the enclosure shall be a *fire door assembly* in accordance with Section 716.

909.20.3.2 Vestibule doors. Where access to the *stairway* or *ramp* is by way of a vestibule, the door assembly into the vestibule shall be a *fire door assembly* complying with Section 716. The door assembly from the vestibule to the *stairway* shall have not less than a 20-minute *fire protection rating* complying with Section 716.

909.20.3.3 Vestibule ventilation. Each vestibule shall have a minimum net area of 16 square feet (1.5 m^2) of opening in a wall facing an outer *court*, *yard* or *public way* that is not less than 20 feet (6096 mm) in width.

909.20.4 Mechanical ventilation alternative. The provisions of Sections 909.20.4.1 through 909.20.4.4 shall apply to ventilation of smokeproof enclosures by mechanical means.

909.20.4.1 Vestibule doors. The door assembly from the building into the vestibule shall be a *fire door assembly* complying with Section 716.2.2.1. The door assembly from the vestibule to the *stairway* or *ramp* shall not have less than a 20-minute *fire protection rating* and shall meet the requirements for a smoke door assembly in accordance with Section 716.2.2.1. The door shall be installed in accordance with NFPA 105.

909.20.4.2 Vestibule ventilation. The vestibule shall be supplied with not less than one air change per minute and the exhaust shall be not less than 150 percent of supply. Supply air shall enter and exhaust air shall discharge from the vestibule through separate, tightly constructed ducts used only for that purpose. Supply air shall enter the vestibule within 6 inches (152 mm) of the floor level. The top of the exhaust register shall be located at the top of the smoke trap but not more than 6 inches (152 mm) down from the top of the trap, and shall be entirely within the smoke trap area. Doors in the open position shall not obstruct duct openings. Duct openings with controlling *dampers* are permitted where necessary to meet the design requirements, but *dampers* are not otherwise required.

909.20.4.2.1 Engineered ventilation system. Where a specially engineered system is used, the system shall exhaust a quantity of air equal to not less than 90 air changes per hour from any vestibule in the emergency operation mode and shall be sized to handle three vestibules simultaneously. Smoke detectors shall be located at the floor-side entrance to each vestibule and shall activate the system for the affected vestibule. Smoke detectors shall be installed in accordance with Section 907.3.

909.20.4.3 Smoke trap. The vestibule ceiling shall be not less than 20 inches (508 mm) higher than the door opening into the vestibule to serve as a smoke and heat trap and to provide an upward-moving air column. The height shall not be decreased unless *approved* and justified by design and test.

909.20.4.4 Stairway or ramp shaft air movement system. The *stairway* or *ramp* shaft shall be provided with a dampered relief opening and supplied with sufficient air to maintain a minimum positive pressure of 0.10 inch of water (25 Pa) in the shaft relative to the vestibule with all doors closed.

909.20.5 Stairway and ramp pressurization alternative. Where the building is equipped throughout with an *automatic sprinkler system* in accordance with Section 903.3.1.1, the vestibule is not required, provided that each interior *exit stairway* or *ramp* is pressurized to not less than 0.10 inch of water (25 Pa) and not more than 0.35 inches of water (87 Pa) in the shaft relative to the building measured with all *interior exit stairway* and *ramp* doors closed under maximum anticipated conditions of stack effect and wind effect.

909.20.6 Ventilating equipment. The activation of ventilating equipment required by the alternatives in Sections 909.20.4 and 909.20.5 shall be by smoke detectors installed at each floor level at an *approved* location at the entrance to the smokeproof enclosure. When the closing device for the *stairway* and *ramp* shaft and vestibule doors is activated by smoke detection or power failure, the mechanical equipment shall activate and operate at the required performance levels. Smoke detectors shall be installed in accordance with Section 907.3.

909.20.6.1 Ventilation systems. Smokeproof enclosure ventilation systems shall be independent of other building ventilation systems. The equipment, control wiring, power wiring and ductwork shall comply with one of the following:

1. Equipment, control wiring, power wiring and ductwork shall be located exterior to the building and directly connected to the smokeproof enclosure or connected to the smokeproof enclosure by ductwork enclosed by not less than 2-hour *fire barriers* constructed in accordance with Section 707 or *horizontal assemblies* constructed in accordance with Section 711, or both.
2. Equipment, control wiring, power wiring and ductwork shall be located within the smokeproof enclosure with intake or exhaust directly from and to the outside or through ductwork enclosed by not less than 2-hour *fire barriers* constructed in accordance with Section 707 or *horizontal assemblies* constructed in accordance with Section 711, or both.
3. Equipment, control wiring, power wiring and ductwork shall be located within the building if separated from the remainder of the building,

INTERNATIONAL CODE COUNCIL®
Copyright © 2019 ICC & NYSDOS. ALL RIGHTS RESERVED. Accessed by Lauren Gualdino (lgualdino@briarcliffmanor.org), (-) Order Number #100880972 on May 08, 2020 07:05 AM (PDT) pursuant to License Agreement with ICC & NYSDOS. No further reproduction, no

100880972

including other mechanical equipment, by not less than 2-hour *fire barriers* constructed in accordance with Section 707 or *horizontal assemblies* constructed in accordance with Section 711, or both.

Exceptions:

1. Control wiring and power wiring located outside of a 2-hour fire barrier construction shall be protected using any one of the following methods:
    1.1. Cables used for survivability of required critical circuits shall be listed in accordance with UL 2196 and shall have a fire-resistance rating of not less than 2 hours.
    1.2. Where encased with not less than 2 inches (51 mm) of concrete.
    1.3. Electrical circuit protective systems shall have a fire-resistance rating of not less than 2 hours. Electrical circuit protective systems shall be installed in accordance with their listing requirements.

909.20.6.2 Standby power. Mechanical vestibule and *stairway* and *ramp* shaft ventilation systems and automatic fire detection systems shall be provided with standby power in accordance with Section 2702.

909.20.6.3 Acceptance and testing. Before the mechanical equipment is *approved*, the system shall be tested in the presence of the *building official* to confirm that the system is operating in compliance with these requirements.

909.21 Elevator hoistway pressurization alternative. Where elevator hoistway pressurization is provided in lieu of required enclosed elevator lobbies, the pressurization system shall comply with Sections 909.21.1 through 909.21.11.

909.21.1 Pressurization requirements. Elevator hoistways shall be pressurized to maintain a minimum positive pressure of 0.10 inch of water (25 Pa) and a maximum positive pressure of 0.25 inch of water (67 Pa) with respect to adjacent occupied space on all floors. This pressure shall be measured at the midpoint of each hoistway door, with all elevator cars at the floor of recall and all hoistway doors on the floor of recall open and all other hoistway doors closed. The pressure differentials shall be measured between the hoistway and the adjacent elevator landing. The opening and closing of hoistway doors at each level must be demonstrated during this test. The supply air intake shall be from an outside, uncontaminated source located a minimum distance of 20 feet (6096 mm) from any air exhaust system or outlet.

Exceptions:

1. On floors containing only Group R occupancies, the pressure differential is permitted to be measured between the hoistway and a *dwelling unit* or *sleeping unit*.
2. Where an elevator opens into a lobby enclosed in accordance with Section 3007.6 or 3008.6, the pressure differential is permitted to be measured between the hoistway and the space immediately outside the door(s) from the floor to the enclosed lobby.
3. The pressure differential is permitted to be measured relative to the outdoor atmosphere on floors other than the following:
    3.1. The fire floor.
    3.2. The two floors immediately below the fire floor.
    3.3. The floor immediately above the fire floor.
4. The minimum positive pressure of 0.10 inch of water (25 Pa) and a maximum positive pressure of 0.25 inch of water (67 Pa) with respect to occupied floors are not required at the floor of recall with the doors open.

909.21.1.1 Use of ventilation systems. Ventilation systems, other than hoistway supply air systems, are permitted to be used to exhaust air from adjacent spaces on the fire floor, two floors immediately below and one floor immediately above the fire floor to the building's exterior where necessary to maintain positive pressure relationships as required in Section 909.21.1 during operation of the elevator shaft pressurization system.

909.21.2 Rational analysis. A rational analysis complying with Section 909.4 shall be submitted with the *construction documents*.

909.21.3 Ducts for system. Any duct system that is part of the pressurization system shall be protected with the same *fire-resistance rating* as required for the elevator shaft enclosure.

909.21.4 Fan system. The fan system provided for the pressurization system shall be as required by Sections 909.21.4.1 through 909.21.4.4.

909.21.4.1 Fire resistance. Where located within the building, the fan system that provides the pressurization shall be protected with the same *fire-resistance rating* required for the elevator shaft enclosure.

909.21.4.2 Smoke detection. The fan system shall be equipped with a smoke detector that will automatically shut down the fan system when smoke is detected within the system.

909.21.4.3 Separate systems. A separate fan system shall be used for each elevator hoistway.

909.21.4.4 Fan capacity. The supply fan shall be either adjustable with a capacity of not less than 1,000 cfm (0.4719 m^3/s) per door, or that specified by a *registered design professional* to meet the requirements of a designed pressurization system.

909.21.5 Standby power. The pressurization system shall be provided with standby power in accordance with Section 2702.

INTERNATIONAL CODE COUNCIL®
Copyright © 2019 ICC & NYSDOS. ALL RIGHTS RESERVED. Accessed by Lauren Gualdino (lgualdino@briarcliffmanor.org), (-) Order Number #100880972 on May 08, 2020 07:05 AM (PDT) pursuant to License Agreement with ICC & NYSDOS. No further reproduction, no

100880972

909.21.6 Activation of pressurization system. The elevator pressurization system shall be activated upon activation of either the building fire alarm system or the elevator lobby smoke detectors. Where both a building fire alarm system and elevator lobby smoke detectors are present, each shall be independently capable of activating the pressurization system.

909.21.7 Testing. Testing for performance shall be required in accordance with Section 909.18.8. System acceptance shall be in accordance with Section 909.19.

909.21.8 Marking and identification. Detection and control systems shall be marked in accordance with Section 909.14.

909.21.9 Control diagrams. Control diagrams shall be provided in accordance with Section 909.15.

909.21.10 Control panel. A control panel complying with Section 909.16 shall be provided.

909.21.11 System response time. Hoistway pressurization systems shall comply with the requirements for smoke control system response time in Section 909.17.

SECTION 910
SMOKE AND HEAT REMOVAL

[F] 910.1 General. Where required by this code, smoke and heat vents or mechanical smoke removal systems shall conform to the requirements of this section.

[F] 910.2 Where required. Smoke and heat vents or a mechanical smoke removal system shall be installed as required by Sections 910.2.1 and 910.2.2.

Exceptions:

1. Frozen food warehouses used solely for storage of Class I and II commodities where protected by an *approved automatic sprinkler system*.
2. Smoke and heat removal shall not be required in areas of buildings equipped with early suppression fast-response (ESFR) sprinklers.
3. Smoke and heat removal shall not be required in areas of buildings equipped with control mode special application sprinklers with a response time index of 50 $(m \cdot s)^{1/2}$ or less that are listed to control a fire in stored commodities with 12 or fewer sprinklers.

910.2.1 Group F-1 or S-1. Smoke and heat vents installed in accordance with Section 910.3 or a mechanical smoke removal system installed in accordance with Section 910.4 shall be installed in buildings and portions thereof used as a Group F-1 or S-1 occupancy having more than 50,000 square feet (4645 m^2) of undivided area. In occupied portions of a building equipped throughout with an *automatic sprinkler system* in accordance with Section 903.3.1.1 where the upper surface of the story is not a roof assembly, a mechanical smoke removal system in accordance with Section 910.4 shall be installed.

Exception: Group S-1 aircraft repair hangars.

[F] 910.2.2 High-piled combustible storage. Smoke and heat removal required by Table 3206.2 of the *Fire Code of New York State* for buildings and portions thereof containing high-piled combustible storage shall be installed in accordance with Section 910.3 in unsprinklered buildings. In buildings and portions thereof containing high-piled combustible storage equipped throughout with an *automatic sprinkler system* in accordance with Section 903.3.1.1, a smoke and heat removal system shall be installed in accordance with Section 910.3 or 910.4. In occupied portions of a building equipped throughout with an *automatic sprinkler system* in accordance with Section 903.3.1.1, where the upper surface of the story is not a roof assembly, a mechanical smoke removal system in accordance with Section 910.4 shall be installed.

[F] 910.3 Smoke and heat vents. The design and installation of smoke and heat vents shall be in accordance with Sections 910.3.1 through 910.3.3.

[F] 910.3.1 Listing and labeling. Smoke and heat vents shall be *listed* and labeled to indicate compliance with UL 793 or FM 4430.

[F] 910.3.2 Smoke and heat vent locations. Smoke and heat vents shall be located 20 feet (6096 mm) or more from adjacent *lot lines* and *fire walls* and 10 feet (3048 mm) or more from *fire barriers*. Vents shall be uniformly located within the roof in the areas of the building where the vents are required to be installed by Section 910.2 with consideration given to roof pitch, sprinkler location and structural members.

910.3.3 Smoke and heat vents area. The required aggregate area of smoke and heat vents shall be calculated as follows:

For buildings equipped throughout with an *automatic sprinkler system* in accordance with Section 903.3.1.1:

$$A_{VR} = V/9000 \qquad \textbf{(Equation 9-3)}$$

where:

A_{VR} = The required aggregate vent area (ft^2).

V = Volume (ft^3) of the area that requires smoke removal.

For unsprinklered buildings:

$$A_{VR} = A_{FA}/50 \qquad \textbf{(Equation 9-4)}$$

where:

A_{VR} = The required aggregate vent area (ft^2).

A_{FA} = The area of the floor in the area that requires smoke removal.

[F] 910.4 Mechanical smoke removal systems. Mechanical smoke removal systems shall be designed and installed in accordance with Sections 910.4.1 through 910.4.7.

910.4.1 Automatic sprinklers required. The building shall be equipped throughout with an *approved automatic sprinkler system* in accordance with Section 903.3.1.1.

910.4.2 Exhaust fan construction. Exhaust fans that are part of a mechanical smoke removal system shall be rated for operation at 221°F (105°C). Exhaust fan motors shall be located outside of the exhaust fan air stream.

910.4.3 System design criteria. The mechanical smoke removal system shall be sized to exhaust the building at a

INTERNATIONAL CODE COUNCIL®
Copyright © 2019 ICC & NYSDOS. ALL RIGHTS RESERVED. Accessed by Lauren Gualdino (lgualdino@briarcliffmanor.org), (-) Order Number #100880972 on May 08, 2020 07:05 AM (PDT) pursuant to License Agreement with ICC & NYSDOS. No further reproduction, no

100880972

minimum rate of two air changes per hour based on the volume of the building or portion thereof without contents. The capacity of each exhaust fan shall not exceed 30,000 cubic feet per minute (14.2 m^3/s).

910.4.3.1 Makeup air. Makeup air openings shall be provided within 6 feet (1829 mm) of the floor level. Operation of makeup air openings shall be manual or automatic. The minimum gross area of makeup air inlets shall be 8 square feet per 1,000 cubic feet per minute (0.74 m^2 per 0.4719 m^3/s) of smoke exhaust.

910.4.4 Activation. The mechanical smoke removal system shall be activated by manual controls only.

910.4.5 Manual control location. Manual controls shall be located where they are able to be accessed by the fire service from an exterior door of the building and separated from the remainder of the building by not less than 1-hour *fire barriers* constructed in accordance with Section 707 or *horizontal assemblies* constructed in accordance with Section 711, or both.

[F] 910.4.6 Control wiring. Wiring for operation and control of mechanical smoke removal systems shall be connected ahead of the main disconnect in accordance with Section 701.12E of NFPA 70 and be protected against interior fire exposure to temperatures in excess of 1,000°F (538°C) for a period of not less than 15 minutes.

[F] 910.4.7 Controls. Where building air-handling and mechanical smoke removal systems are combined or where independent building air-handling systems are provided, fans shall automatically shut down in accordance with the *Mechanical Code of New York State*. The manual controls provided for the smoke removal system shall have the capability to override the automatic shutdown of fans that are part of the smoke removal system.

910.5 Maintenance. Smoke and heat vents and mechanical smoke removal systems shall be maintained in accordance with the *Fire Code of New York State*.

SECTION 911
FIRE COMMAND CENTER

[F] 911.1 General. Where required by other sections of this code and in buildings classified as high-rise buildings by this code, a fire command center for fire department operations shall be provided and shall comply with Sections 911.1.1 through 911.1.6.

[F] 911.1.1 Location and access. The location and accessibility of the fire command center shall be *approved* by the *fire code official*.

[F] 911.1.2 Separation. The fire command center shall be separated from the remainder of the building by not less than a 1-hour *fire barrier* constructed in accordance with Section 707 or *horizontal assembly* constructed in accordance with Section 711, or both.

911.1.3 Size. The *fire command center* shall be not less than 0.015 percent of the total building area of the facility served or 200 square feet (19 m^2) in area, whichever is greater, with a minimum dimension of 0.7 times the square root of the room area or 10 feet (3048 mm), whichever is greater.

[F] 911.1.4 Layout approval. A layout of the fire command center and all features required by this section to be contained therein shall be submitted for approval prior to installation.

[F] 911.1.5 Storage. Storage unrelated to operation of the fire command center shall be prohibited.

[F] 911.1.6 Required features. The fire command center shall comply with NFPA 72 and shall contain all of the following features:

1. The emergency voice/alarm communication system control unit.
2. The fire department communications system.
3. Fire detection and alarm system annunciator.
4. Annunciator unit visually indicating the location of the elevators and whether they are operational.
5. Status indicators and controls for air distribution systems.
6. The fire fighter's control panel required by Section 909.16 for smoke control systems installed in the building.
7. Controls for unlocking *interior exit stairway* doors simultaneously.
8. Sprinkler valve and waterflow detector display panels.
9. Emergency and standby power status indicators.
10. A telephone for fire department use with controlled access to the public telephone system.
11. Fire pump status indicators.
12. Schematic building plans indicating the typical floor plan and detailing the building core, *means of egress*, fire protection systems, fire fighter air replenishment system, fire-fighting equipment and fire department access and the location of *fire walls, fire barriers, fire partitions, smoke barriers* and smoke partitions.
13. An *approved* Building Information Card that contains, but is not limited to, the following information:
    - 13.1. General building information that includes: property name, address, the number of floors in the building above and below grade, use and occupancy classification (for mixed uses, identify the different types of occupancies on each floor), and the estimated building population during the day, night and weekend.
    - 13.2. Building emergency contact information that includes: a list of the building's emergency contacts including but not limited to building manager and building engineer and their respective work phone

INTERNATIONAL CODE COUNCIL®
Copyright © 2019 ICC & NYSDOS. ALL RIGHTS RESERVED. Accessed by Lauren Gualdino (lgualdino@briarcliffmanor.org), (-) Order Number #100880972 on May 08, 2020 07:05 AM (PDT) pursuant to License Agreement with ICC & NYSDOS. No further reproduction, no

100880972

number, cell phone number, e-mail address.

13.3. Building construction information that includes: the type of building construction including but not limited to floors, walls, columns, and roof assembly.

13.4. *Exit access* and *exit stairway* information that includes: number of *exit access* and *exit stairways* in the building, each *exit access* and *exit stairway* designation and floors served, location where each *exit access* and *exit stairway* discharges, *interior exit stairways* that are pressurized, *exit* stairways provided with emergency lighting, each *exit stairway* that allows reentry, *exit stairways* providing roof access; elevator information that includes: number of elevator banks, elevator bank designation, elevator car numbers and respective floors that they serve; location of elevator machine rooms, control rooms and control spaces; location of sky lobby, location of freight elevator banks.

13.5. Building services and system information that includes: location of mechanical rooms, location of building management system, location and capacity of all fuel oil tanks, location of emergency generator, location of natural gas service.

13.6. Fire protection system information that includes: location of standpipes, location of fire pump room, location of fire department connections, floors protected by automatic sprinklers, location of different types of *automatic sprinkler systems* installed including, but not limited to, dry, wet and pre-action.

13.7 Hazardous material information that includes: location of hazardous material, quantity of hazardous material.

14. Work table.

15. Generator supervision devices, manual start and transfer features.

16. Public address system, where specifically required by other sections of this code.

17. Elevator fire recall switch in accordance with ASME A17.1/BSA 44.

18. Elevator emergency or standby power selector switch(es), where emergency or standby power is provided.

SECTION 912
FIRE DEPARTMENT CONNECTIONS

[F] 912.1 Installation. Fire department connections shall be installed in accordance with the NFPA standard applicable to the system design and shall comply with Sections 912.2 through 912.6.

[F] 912.2 Location. With respect to hydrants, driveways, buildings and landscaping, fire department connections shall be so located that fire apparatus and hose connected to supply the system will not obstruct access to the buildings for other fire apparatus. The location of fire department connections shall be *approved* by the *fire code official*.

[F] 912.2.1 Visible location. Fire department connections shall be located on the street side of buildings or facing approved fire apparatus access roads, fully visible and recognizable from the street, fire apparatus access road or nearest point of fire department vehicle access or as otherwise *approved* by the *fire code official*.

[F] 912.2.2 Existing buildings. On existing buildings, wherever the fire department connection is not visible to approaching fire apparatus, the fire department connection shall be indicated by an *approved* sign mounted on the street front or on the side of the building. Such sign shall have the letters "FDC" not less than 6 inches (152 mm) high and words in letters not less than 2 inches (51 mm) high or an arrow to indicate the location. Such signs shall be subject to the approval of the *fire code official*.

[F] 912.3 Fire hose threads. Fire hose threads used in connection with standpipe systems shall be *approved* and shall be compatible with fire department hose threads.

[F] 912.4 Access. Immediate access to fire department connections shall be maintained at all times and without obstruction by fences, bushes, trees, walls or any other fixed or moveable object. Access to fire department connections shall be *approved* by the *fire code official*.

Exception: Fences, where provided with an access gate equipped with a sign complying with the legend requirements of this section and a means of emergency operation. The gate and the means of emergency operation shall be *approved* by the *fire code official* and maintained operational at all times.

[F] 912.4.1 Locking fire department connection caps. The fire code official is authorized to require locking caps on fire department connections for water-based *fire protection systems* where the responding fire department carries appropriate key wrenches for removal.

[F] 912.4.2 Clear space around connections. A working space of not less than 36 inches (762 mm) in width, 36 inches (914 mm) in depth and 78 inches (1981 mm) in height shall be provided and maintained in front of and to the sides of wall-mounted fire department connections and around the circumference of free-standing fire department connections, except as otherwise required or *approved* by the *fire code official*.

[F] 912.4.3 Physical protection. Where fire department connections are subject to impact by a motor vehicle, vehicle impact protection shall be provided in accordance with Section 312 of the *Fire Code of New York State.*

[F] 912.5 Signs. A metal sign with raised letters not less than 1 inch (25 mm) in size shall be mounted on all fire department connections serving automatic sprinklers, standpipes or

INTERNATIONAL CODE COUNCIL®
Copyright © 2019 ICC & NYSDOS. ALL RIGHTS RESERVED. Accessed by Lauren Gualdino (lgualdino@briarcliffmanor.org), (-) Order Number #100880972 on May 08, 2020 07:05 AM (PDT) pursuant to License Agreement with ICC & NYSDOS. No further reproduction, no

100880972

fire pump connections. Such signs shall read: AUTOMATIC SPRINKLERS or STANDPIPES or TEST CONNECTION or a combination thereof as applicable. Where the fire department connection does not serve the entire building, a sign shall be provided indicating the portions of the building served.

[P] 912.6 Backflow protection. The potable water supply to automatic sprinkler and standpipe systems shall be protected against backflow as required by the *Plumbing Code of New York State*.

SECTION 913
FIRE PUMPS

[F] 913.1 General. Where provided, fire pumps shall be installed in accordance with this section and NFPA 20.

[F] 913.2 Protection against interruption of service. The fire pump, driver and controller shall be protected in accordance with NFPA 20 against possible interruption of service through damage caused by explosion, fire, flood, earthquake, rodents, insects, windstorm, freezing, vandalism and other adverse conditions.

913.2.1 Protection of fire pump rooms. Fire pumps shall be located in rooms that are separated from all other areas of the building by 2-hour *fire barriers* constructed in accordance with Section 707 or 2-hour *horizontal assemblies* constructed in accordance with Section 711, or both.

Exceptions:

1. In other than high-rise buildings, separation by 1-hour *fire barriers* constructed in accordance with Section 707 or 1-hour *horizontal assemblies* constructed in accordance with Section 711, or both, shall be permitted in buildings equipped throughout with an *automatic sprinkler system* in accordance with Section 903.3.1.1 or 903.3.1.2.
2. Separation is not required for fire pumps physically separated in accordance with NFPA 20.

[F] 913.2.2 Circuits supplying fire pumps. Cables used for survivability of circuits supplying fire pumps shall be protected using one of the following methods:

1. Cables used for survivability of required critical circuits shall be *listed* in accordance with UL 2196 and shall have a f*ire-resistance rating* of not less than 1 hour.
2. Electrical circuit protective systems shall have a *fire-resistance rating* of not less than 1 hour. Electrical circuit protective systems shall be installed in accordance with their listing requirements.
3. Construction having a *fire-resistance rating* of not less than 1 hour.

[F] 913.3 Temperature of pump room. Suitable means shall be provided for maintaining the temperature of a pump room or pump house, where required, above 40°F (5°C).

[F] 913.3.1 Engine manufacturer's recommendation. Temperature of the pump room, pump house or area where engines are installed shall never be less than the minimum recommended by the engine manufacturer. The engine manufacturer's recommendations for oil heaters shall be followed.

[F] 913.4 Valve supervision. Where provided, the fire pump suction, discharge and bypass valves, and isolation valves on the backflow prevention device or assembly shall be supervised open by one of the following methods:

1. Central-station, proprietary or remote-station signaling service.
2. Local signaling service that will cause the sounding of an audible signal at a *constantly attended location*.
3. Locking valves open.
4. Sealing of valves and *approved* weekly recorded inspection where valves are located within fenced enclosures under the control of the owner.

[F] 913.4.1 Test outlet valve supervision. Fire pump test outlet valves shall be supervised in the closed position.

[F] 913.5 Acceptance test. Acceptance testing shall be done in accordance with the requirements of NFPA 20.

SECTION 914
EMERGENCY RESPONDER SAFETY FEATURES

[F] 914.1 Shaftway markings. Vertical shafts shall be identified as required by Sections 914.1.1 and 914.1.2.

[F] 914.1.1 Exterior access to shaftways. Outside openings accessible to the fire department and that open directly on a hoistway or shaftway communicating between two or more floors in a building shall be plainly marked with the word "SHAFTWAY" in red letters not less than 6 inches (152 mm) high on a white background. Such warning signs shall be placed so as to be readily discernible from the outside of the building.

[F] 914.1.2 Interior access to shaftways. Door or window openings to a hoistway or shaftway from the interior of the building shall be plainly marked with the word "SHAFTWAY" in red letters not less than 6 inches (152 mm) high on a white background. Such warning signs shall be placed so as to be readily discernible.

Exception: Markings shall not be required on shaftway openings that are readily discernible as openings onto a shaftway by the construction or arrangement.

[F] 914.2 Equipment room identification. Fire protection equipment shall be identified in an *approved* manner. Rooms containing controls for air-conditioning systems, sprinkler risers and valves or other fire detection, suppression or control elements shall be identified for the use of the fire department. *Approved* signs required to identify fire protection equipment and equipment location shall be constructed of durable materials, permanently installed and readily visible.

SECTION 915
CARBON MONOXIDE DETECTION

[NY] 915.1 General. Carbon monoxide alarms and carbon monoxide detection shall be installed in new and existing buildings in accordance with Section 915 of the *Fire Code of New York State*.

INTERNATIONAL CODE COUNCIL®
Copyright © 2019 ICC & NYSDOS. ALL RIGHTS RESERVED. Accessed by Lauren Gualdino (lgualdino@briarcliffmanor.org), (-) Order Number #100880972 on May 08, 2020 07:05 AM (PDT) pursuant to License Agreement with ICC & NYSDOS. No further reproduction, no

100880972

SECTION 916
GAS DETECTION SYSTEMS

**

[F] 916.1 Gas detection systems. Gas detection systems required by this code shall comply with Sections 916.2 through 916.11.

[NY] 916.2 Permits. Permits shall be required as set forth in Section 105 of the *Fire Code of New York State*.

[F] 916.2.1 Construction documents. Documentation of the gas detection system design and equipment to be used that demonstrates compliance with the requirements of this code and the *Fire Code of New York State* shall be provided with the application for permit.

[F] 916.3 Equipment. Gas detection system equipment shall be designed for use with the gases being detected and shall be installed in accordance with manufacturer's instructions.

[F] 916.4 Power connections. Gas detection systems shall be permanently connected to the building electrical power supply or shall be permitted to be cord connected to an unswitched receptacle using an *approved* restraining means that secures the plug to the receptacle.

[F] 916.5 Emergency and standby power. Standby or emergency power shall be provided or the gas detection system shall initiate a trouble signal at an *approved* location if the power supply is interrupted.

[F] 916.6 Sensor locations. Sensors shall be installed in approved locations where leaking gases are expected to accumulate.

[F] 916.7 Gas sampling. Gas sampling shall be performed continuously. Sample analysis shall be processed immediately after sampling, except as follows:

1. For HPM gases, sample analysis shall be performed at intervals not exceeding 30 minutes.
2. For toxic gases, that are not HPM, sample analysis shall be performed at intervals not exceeding 5 minutes in accordance with Section 6004.2.2.7 of the *Fire Code of New York State*.
3. Where a less frequent or delayed sampling interval is *approved*.

[F] 916.8 System activation. A gas detection alarm shall be initiated where any sensor detects a concentration of gas exceeding the following thresholds:

1. For flammable gases, a gas concentration exceeding 25 percent of the lower flammability limit (LFL).
2. For nonflammable gases, a gas concentration exceeding one-half of the IDLH, unless a different threshold is specified by the section of this code requiring a gas detection system.

Upon activation of a gas detection alarm, alarm signals or other required responses shall be as specified by the section of this code requiring a gas detection system. Audible and visible alarm signals associated with a gas detection alarm shall be distinct from fire alarm and carbon monoxide alarm signals.

[F] 916.9 Signage. Signs shall be provided adjacent to gas detection system alarm signaling devices that advise occupants of the nature of the signals and actions to take in response to the signal.

[F] 916.10 Fire alarm system connections. Gas sensors and gas detection systems shall not be connected to fire alarm systems unless approved and connected in accordance with the fire alarm equipment manufacturer's instructions.

[F] 916.11 Inspection, testing and sensor calibration. Gas detection systems and sensors shall be inspected, tested and calibrated in accordance with the *Fire Code of New York State*.

SECTION 917
MASS NOTIFICATION SYSTEMS

[F] 917.1 College and university campuses. Prior to construction of a new building requiring a fire alarm system on a multiple-building college or university campus having a cumulative building occupant load of 1,000 or more, a mass notification risk analysis shall be conducted in accordance with NFPA 72. Where the risk analysis determines a need for mass notification, an *approved* mass notification system shall be provided in accordance with the findings of the risk analysis.

SECTION 918
EMERGENCY RESPONDER RADIO COVERAGE

[F] 918.1 General. Emergency responder radio coverage shall be provided in all new buildings in accordance with Section 510 of the *Fire Code of New York State*.

INTERNATIONAL CODE COUNCIL®
Copyright © 2019 ICC & NYSDOS. ALL RIGHTS RESERVED. Accessed by Lauren Gualdino (lgualdino@briarcliffmanor.org), (-) Order Number #100880972 on May 08, 2020 07:05 AM (PDT) pursuant to License Agreement with ICC & NYSDOS. No further reproduction, no

100880972

CHAPTER 10

MEANS OF EGRESS

SECTION 1001
ADMINISTRATION

1001.1 General. Buildings or portions thereof shall be provided with a *means of egress* system as required by this chapter. The provisions of this chapter shall control the design, construction and arrangement of *means of egress* components required to provide an *approved means of egress* from structures and portions thereof.

1001.2 Minimum requirements. It shall be unlawful to alter a building or structure in a manner that will reduce the number of *exits* or the minimum width or required capacity of the *means of egress* to less than required by this code.

[F] SECTION 1002
MAINTENANCE AND PLANS

[F] 1002.1 Maintenance. *Means of egress* shall be maintained in accordance with the *Fire Code of New York State*.

[F] 1002.2 Fire safety and evacuation plans. Fire safety and evacuation plans shall be provided for all occupancies and buildings where required by the *Fire Code of New York State*. Such fire safety and evacuation plans shall comply with the applicable provisions of Sections 401.2 and 404 of the *Fire Code of New York State*.

SECTION 1003
GENERAL MEANS OF EGRESS

1003.1 Applicability. The general requirements specified in Sections 1003 through 1015 shall apply to all three elements of the *means of egress* system, in addition to those specific requirements for the *exit access*, the *exit* and the *exit discharge* detailed elsewhere in this chapter.

1003.2 Ceiling height. The *means of egress* shall have a ceiling height of not less than 7 feet 6 inches (2286 mm) above the finished floor.

Exceptions:

1. Sloped ceilings in accordance with Section 1207.2.
2. Ceilings of *dwelling units* and *sleeping units* within residential occupancies in accordance with Section 1207.2.
3. Allowable projections in accordance with Section 1003.3.
4. *Stair* headroom in accordance with Section 1011.3.
5. Door height in accordance with Section 1010.1.1.
6. *Ramp* headroom in accordance with Section 1012.5.2.
7. The clear height of floor levels in vehicular and pedestrian traffic areas of public and private parking garages in accordance with Section 406.2.2.
8. Areas above and below *mezzanine* floors in accordance with Section 505.2.

1003.3 Protruding objects. Protruding objects on *circulation paths* shall comply with the requirements of Sections 1003.3.1 through 1003.3.4.

1003.3.1 Headroom. Protruding objects are permitted to extend below the minimum ceiling height required by Section 1003.2 where a minimum headroom of 80 inches (2032 mm) is provided over any circulation paths, including walks, *corridors*, *aisles* and passageways. Not more than 50 percent of the ceiling area of a *means of egress* shall be reduced in height by protruding objects.

Exception: Door closers and stops shall not reduce headroom to less than 78 inches (1981 mm).

A barrier shall be provided where the vertical clearance above a circulation path is less than 80 inches (2032 mm) high above the finished floor. The leading edge of such a barrier shall be located 27 inches (686 mm) maximum above the finished floor.

1003.3.2 Post-mounted objects. A free-standing object mounted on a post or pylon shall not overhang that post or pylon more than 4 inches (102 mm) where the lowest point of the leading edge is more than 27 inches (686 mm) and less than 80 inches (2032 mm) above the finished floor. Where a sign or other obstruction is mounted between posts or pylons and the clear distance between the posts or pylons is greater than 12 inches (305 mm), the lowest edge of such sign or obstruction shall be 27 inches (686 mm) maximum or 80 inches (2032 mm) minimum above the finished floor or ground.

Exception: These requirements shall not apply to sloping portions of *handrails* between the top and bottom riser of *stairs* and above the *ramp* run.

1003.3.3 Horizontal projections. Objects with leading edges more than 27 inches (685 mm) and not more than 80 inches (2030 mm) above the finished floor shall not project horizontally more than 4 inches (102 mm) into the *circulation path*.

Exception: *Handrails* are permitted to protrude $4^1/_2$ inches (114 mm) from the wall or *guard*.

1003.3.4 Clear width. Protruding objects shall not reduce the minimum clear width of *accessible routes*.

1003.4 Slip-resistant surface. Circulation paths of the *means of egress* shall have a slip-resistant surface and be securely attached.

1003.5 Elevation change. Where changes in elevation of less than 12 inches (305 mm) exist in the *means of egress*, sloped surfaces shall be used. Where the slope is greater than one unit vertical in 20 units horizontal (5-percent slope), *ramps* complying with Section 1012 shall be used. Where the difference in elevation is 6 inches (152 mm) or less, the *ramp* shall

INTERNATIONAL CODE COUNCIL®
Copyright © 2019 ICC & NYSDOS. ALL RIGHTS RESERVED. Accessed by Lauren Gualdino (lgualdino@briarcliffmanor.org), (-) Order Number #100880972 on May 08, 2020 07:05 AM (PDT) pursuant to License Agreement with ICC & NYSDOS. No further reproduction, no

100880972

be equipped with either *handrails* or floor finish materials that contrast with adjacent floor finish materials.

Exceptions:

1. A single step with a maximum riser height of 7 inches (178 mm) is permitted for buildings with occupancies in Groups F, H, R-2, R-3, S and U at exterior doors not required to be *accessible* by Chapter 11.
2. A *stair* with a single riser or with two risers and a tread is permitted at locations not required to be *accessible* by Chapter 11 where the risers and treads comply with Section 1011.5, the minimum depth of the tread is 13 inches (330 mm) and not less than one *handrail* complying with Section 1014 is provided within 30 inches (762 mm) of the centerline of the normal path of egress travel on the *stair*.
3. A step is permitted in *aisles* serving seating that has a difference in elevation less than 12 inches (305 mm) at locations not required to be *accessible* by Chapter 11, provided that the risers and treads comply with Section 1029.14 and the *aisle* is provided with a *handrail* complying with Section 1029.16.

Throughout a story in a Group I-2 occupancy, any change in elevation in portions of the *means of egress* that serve nonambulatory persons shall be by means of a *ramp* or sloped walkway.

1003.6 Means of egress continuity. The path of egress travel along a *means of egress* shall not be interrupted by a building element other than a *means of egress* component as specified in this chapter. Obstructions shall not be placed in the minimum width or required capacity of a *means of egress* component except projections permitted by this chapter. The minimum width or required capacity of a *means of egress* system shall not be diminished along the path of egress travel.

1003.7 Elevators, escalators and moving walks. Elevators, escalators and moving walks shall not be used as a component of a required *means of egress* from any other part of the building.

Exception: Elevators used as an accessible *means of egress* in accordance with Section 1009.4.

SECTION 1004
OCCUPANT LOAD

1004.1 Design occupant load. In determining *means of egress* requirements, the number of occupants for whom *means of egress* facilities are provided shall be determined in accordance with this section.

1004.2 Cumulative occupant loads. Where the path of egress travel includes intervening rooms, areas or spaces, cumulative *occupant loads* shall be determined in accordance with this section.

1004.2.1 Intervening spaces or accessory areas. Where occupants egress from one or more rooms, areas or spaces through others, the design *occupant load* shall be the combined *occupant load* of interconnected accessory or intervening spaces. Design of egress path capacity shall be based on the cumulative portion of *occupant loads* of all rooms, areas or spaces to that point along the path of egress travel.

1004.2.2 Adjacent levels for mezzanines. That portion of the *occupant load* of a *mezzanine* with required egress through a room, area or space on an adjacent level shall be added to the *occupant load* of that room, area or space.

1004.2.3 Adjacent stories. Other than for the egress components designed for convergence in accordance with Section 1005.6, the *occupant load* from separate stories shall not be added.

1004.3 Multiple function occupant load. Where an area under consideration contains multiple functions having different occupant load factors, the design *occupant load* for such area shall be based on the floor area of each function calculated independently.

1004.4 Multiple occupancies. Where a building contains two or more occupancies, the *means of egress* requirements shall apply to each portion of the building based on the occupancy of that space. Where two or more occupancies utilize portions of the same *means of egress* system, those egress components shall meet the more stringent requirements of all occupancies that are served.

1004.5 Areas without fixed seating. The number of occupants shall be computed at the rate of one occupant per unit of area as prescribed in Table 1004.5. For areas without *fixed seating*, the occupant load shall be not less than that number determined by dividing the floor area under consideration by the *occupant load* factor assigned to the function of the space as set forth in Table 1004.5. Where an intended function is not listed in Table 1004.5, the *building official* shall establish a function based on a listed function that most nearly resembles the intended function.

Exception: Where *approved* by the *building official*, the actual number of occupants for whom each occupied space, floor or building is designed, although less than those determined by calculation, shall be permitted to be used in the determination of the design *occupant load*.

1004.5.1 Increased occupant load. The *occupant load* permitted in any building, or portion thereof, is permitted to be increased from that number established for the occupancies in Table 1004.5, provided that all other requirements of the code are met based on such modified number and the *occupant load* does not exceed one occupant per 7 square feet (0.65 m^2) of occupiable floor space. Where required by the *building official*, an *approved aisle*, seating or fixed equipment diagram substantiating any increase in *occupant load* shall be submitted. Where required by the *building official*, such diagram shall be posted.

1004.6 Fixed seating. For areas having *fixed seats* and *aisles*, the *occupant load* shall be determined by the number of *fixed seats* installed therein. The *occupant load* for areas in which *fixed seating* is not installed, such as waiting spaces, shall be determined in accordance with Section 1004.5 and added to the number of *fixed seats*.

The *occupant load* of *wheelchair spaces* and the associated companion seat shall be based on one occupant for each

INTERNATIONAL CODE COUNCIL®
Copyright © 2019 ICC & NYSDOS. ALL RIGHTS RESERVED. Accessed by Lauren Gualdino (lgualdino@briarcliffmanor.org), (-) Order Number #100880972 on May 08, 2020 07:05 AM (PDT) pursuant to License Agreement with ICC & NYSDOS. No further reproduction, no

100880972

wheelchair space and one occupant for the associated companion seat provided in accordance with Section 1108.2.3.

For areas having *fixed seating* without dividing arms, the *occupant load* shall be not less than the number of seats based on one person for each 18 inches (457 mm) of seating length.

The *occupant load* of seating booths shall be based on one person for each 24 inches (610 mm) of booth seat length measured at the backrest of the seating booth.

1004.7 Outdoor areas. *Yards*, patios, occupied roofs, *courts* and similar outdoor areas accessible to and usable by the building occupants shall be provided with *means of egress* as required by this chapter. The *occupant load* of such outdoor areas shall be assigned by the *building official* in accordance with the anticipated use. Where outdoor areas are to be used by persons in addition to the occupants of the building, and the path of egress travel from the outdoor areas passes through the building, *means of egress* requirements for the building shall be based on the sum of the *occupant loads* of the building plus the outdoor areas.

Exceptions:

1. Outdoor areas used exclusively for service of the building need only have one *means of egress*.
2. Both outdoor areas associated with Group R-3 and individual dwelling units of Group R-2.

1004.8 Concentrated business use areas. The occupant load factor for concentrated business use shall be applied to telephone call centers, trading floors, electronic data processing centers and similar business use areas with a higher density of occupants than would normally be expected in a typical business occupancy environment. Where approved by the *building official*, the occupant load for concentrated business use areas shall be the actual *occupant load*, but not less than one occupant per 50 square feet (4.65 m^2) of gross occupiable floor space.

1004.9 Posting of occupant load. Every room or space that is an assembly occupancy shall have the *occupant load* of the room or space posted in a conspicuous place, near the main *exit* or *exit access doorway* from the room or space, for the intended configurations. Posted signs shall be of an approved legible permanent design and shall be maintained by the owner or the owner's authorized agent.

SECTION 1005
MEANS OF EGRESS SIZING

1005.1 General. All portions of the *means of egress* system shall be sized in accordance with this section.

Exception: *Aisles* and *aisle accessways* in rooms or spaces used for assembly purposes complying with Section 1029.

1005.2 Minimum width based on component. The minimum width, in inches (mm), of any *means of egress* components shall be not less than that specified for such component, elsewhere in this code.

1005.3 Required capacity based on occupant load. The required capacity, in inches (mm), of the *means of egress* for any room, area, space or story shall be not less than that determined in accordance with Sections 1005.3.1 and 1005.3.2.

TABLE 1004.5
MAXIMUM FLOOR AREA ALLOWANCES PER OCCUPANT

FUNCTION OF SPACE	OCCUPANT LOAD FACTOR[a]
Accessory storage areas, mechanical equipment room	300 gross
Agricultural building	300 gross
Aircraft hangars	500 gross
Airport terminal	
Baggage claim	20 gross
Baggage handling	300 gross
Concourse	100 gross
Waiting areas	15 gross
Assembly	
Gaming floors (keno, slots, etc.)	11 gross
Exhibit gallery and museum	30 net
Assembly with fixed seats	See Section 1004.6
Assembly without fixed seats	
Concentrated (chairs only—not fixed)	7 net
Standing space	5 net
Unconcentrated (tables and chairs)	15 net
Bowling centers, allow 5 persons for each lane including 15 feet of runway, and for additional areas	7 net
Business areas	150 gross
Concentrated business use areas	See Section 1004.8
Courtrooms—other than fixed seating areas	40 net
Day care	35 net
Dormitories	50 gross
Educational	
Classroom area	20 net
Shops and other vocational room areas	50 net
Exercise rooms	50 gross
Group H-5 fabrication and manufacturing areas	200 gross
Industrial areas	100 gross
Institutional areas	
Inpatient treatment areas	240 gross
Outpatient areas	100 gross
Sleeping areas	120 gross
Kitchens, commercial	200 gross
Library	
Reading rooms	50 net
Stack area	100 gross
Locker rooms	50 gross
Mall buildings—covered and open	See Section 402.8.2
Mercantile	60 gross
Storage, stock, shipping areas	300 gross
Parking garages	200 gross
Residential	200 gross
Skating rinks, swimming pools	
Rink and pool	50 gross
Decks	15 gross
Stages and platforms	15 net
Warehouses	500 gross

For SI: 1 foot = 304.8 mm, 1 square foot = 0.0929 m^2.

a. Floor area in square feet per occupant.

INTERNATIONAL CODE COUNCIL®
Copyright © 2019 ICC & NYSDOS. ALL RIGHTS RESERVED. Accessed by Lauren Gualdino (lgualdino@briarcliffmanor.org), (-) Order Number #100880972 on May 08, 2020 07:05 AM (PDT) pursuant to License Agreement with ICC & NYSDOS. No further reproduction, no

100880972

1005.3.1 Stairways. The capacity, in inches, of *means of egress stairways* shall be calculated by multiplying the *occupant load* served by such *stairways* by a means of egress capacity factor of 0.3 inch (7.6 mm) per occupant. Where *stairways* serve more than one story, only the occupant load of each story considered individually shall be used in calculating the required capacity of the *stairways* serving that story.

Exceptions:

1. For other than Group H and I-2 occupancies, the capacity, in inches, of *means of egress stairways* shall be calculated by multiplying the *occupant load* served by such *stairways* by a means of egress capacity factor of 0.2 inch (5.1 mm) per occupant in buildings equipped throughout with an automatic sprinkler system installed in accordance with Section 903.3.1.1 or 903.3.1.2 and an *emergency voice/alarm communication* system in accordance with Section 907.5.2.2.
2. Facilities with *smoke-protected assembly seating* shall be permitted to use the capacity factors in Table 1029.6.2 indicated for stepped aisles for *exit access* or *exit stairways* where the entire path for *means of egress* from the seating to the *exit discharge* is provided with a smoke control system complying with Section 909.
3. Facilities with *open-air assembly seating* shall be permitted to the capacity factors in Section 1029.6.3 indicated for stepped aisles for *exit access* or *exit stairways* where the entire path for *means of egress* from the seating to the *exit discharge* is open to the outdoors.

1005.3.2 Other egress components. The capacity, in inches, of *means of egress* components other than *stairways* shall be calculated by multiplying the *occupant load* served by such component by a means of egress capacity factor of 0.2 inch (5.1 mm) per occupant.

Exceptions:

1. For other than Group H and I-2 occupancies, the capacity, in inches, of *means of egress* components other than *stairways* shall be calculated by multiplying the *occupant load* served by such component by a means of egress capacity factor of 0.15 inch (3.8 mm) per occupant in buildings equipped throughout with an automatic sprinkler system installed in accordance with Section 903.3.1.1 or 903.3.1.2 and an *emergency voice/alarm communication* system in accordance with Section 907.5.2.2.
2. Facilities with *smoke-protected assembly seating* shall be permitted to use the capacity factors in Table 1029.6.2 indicated for level or ramped *aisles* for *means of egress* components other than *stairways* where the entire path for *means of egress* from the seating to the *exit discharge* is provided with a smoke control system complying with Section 909.
3. Facilities with *open-air assembly seating* shall be permitted to the capacity factors in Section 1029.6.3 indicated for level or ramped *aisles* for *means of egress* components other than *stairways* where the entire path for *means of egress* from the seating to the *exit discharge* is open to the outdoors.

1005.4 Continuity. The minimum width or required capacity of the *means of egress* required from any story of a building shall not be reduced along the path of egress travel until arrival at the public way.

1005.5 Distribution of minimum width and required capacity. Where more than one *exit*, or access to more than one *exit*, is required, the *means of egress* shall be configured such that the loss of any one *exit*, or access to one *exit*, shall not reduce the available capacity or width to less than 50 percent of the required capacity or width.

1005.6 Egress convergence. Where the *means of egress* from stories above and below converge at an intermediate level, the capacity of the *means of egress* from the point of convergence shall be not less than the largest minimum width or the sum of the required capacities for the *stairways* or *ramps* serving the two adjacent stories, whichever is larger.

1005.7 Encroachment. Encroachments into the required *means of egress* width shall be in accordance with the provisions of this section.

1005.7.1 Doors. Doors, when fully opened, shall not reduce the required width by more than 7 inches (178 mm). Doors in any position shall not reduce the required width by more than one-half.

Exceptions:

1. Surface-mounted latch release hardware shall be exempt from inclusion in the 7-inch maximum (178 mm) encroachment where both of the following conditions exist:
   1.1. The hardware is mounted to the side of the door facing away from the adjacent wall where the door is in the open position.
   1.2. The hardware is mounted not less than 34 inches (865 mm) nor more than 48 inches (1219 mm) above the finished floor.
2. The restrictions on door swing shall not apply to doors within individual *dwelling units* and *sleeping units* of Group R-2 occupancies and *dwelling units* of Group R-3 occupancies.

1005.7.2 Other projections. *Handrail* projections shall be in accordance with the provisions of Section 1014.8. Other nonstructural projections such as trim and similar decorative features shall be permitted to project into the required width not more than $1^1/_2$ inches (38 mm) on each side.

Exception: Projections are permitted in corridors within Group I-2 Condition 1 in accordance with Section 407.4.3.

1005.7.3 Protruding objects. Protruding objects shall comply with the applicable requirements of Section 1003.3.

INTERNATIONAL CODE COUNCIL®
Copyright © 2019 ICC & NYSDOS. ALL RIGHTS RESERVED. Accessed by Lauren Gualdino (lgualdino@briarcliffmanor.org), (-) Order Number #100880972 on May 08, 2020 07:05 AM (PDT) pursuant to License Agreement with ICC & NYSDOS. No further reproduction, no

100880972

SECTION 1006
NUMBER OF EXITS AND EXIT ACCESS DOORWAYS

1006.1 General. The number of *exits* or *exit access doorways* required within the *means of egress* system shall comply with the provisions of Section 1006.2 for spaces, including *mezzanines*, and Section 1006.3 for *stories* or occupied roofs.

1006.2 Egress from spaces. Rooms, areas or spaces, including *mezzanines*, within a *story* or *basement* shall be provided with the number of *exits* or access to *exits* in accordance with this section.

1006.2.1 Egress based on occupant load and common path of egress travel distance. Two *exits* or *exit access doorways* from any space shall be provided where the design *occupant load* or the *common path of egress travel* distance exceeds the values listed in Table 1006.2.1. The cumulative *occupant load* from adjacent rooms, areas or spaces shall be determined in accordance with Section 1004.2.

Exceptions:

1. The number of *exits* from foyers, lobbies, vestibules or similar spaces need not be based on cumulative *occupant loads* for areas discharging through such spaces, but the capacity of the *exits* from such spaces shall be based on applicable cumulative *occupant loads*.
2. *Care suites* in Group I-2 occupancies complying with Section 407.4.

1006.2.1.1 Three or more exits or exit access doorways. Three *exits* or *exit access doorways* shall be provided from any space with an occupant load of 501 to 1,000. Four *exits* or *exit access doorways* shall be provided from any space with an occupant load greater than 1,000.

1006.2.2 Egress based on use. The numbers of *exits* or access to *exits* shall be provided in the uses described in Sections 1006.2.2.1 through 1006.2.2.6.

1006.2.2.1 Boiler, incinerator and furnace rooms. Two *exit access doorways* are required in boiler, incinerator and furnace rooms where the area is over 500 square feet (46 m^2) and any fuel-fired equipment exceeds 400,000 British thermal units (Btu) (422 000 KJ) input capacity. Where two *exit access doorways* are required, one is permitted to be a fixed ladder or an *alternating tread device*. *Exit access doorways* shall be separated by a horizontal distance equal to one-half the length of the maximum overall diagonal dimension of the room.

TABLE 1006.2.1
SPACES WITH ONE EXIT OR EXIT ACCESS DOORWAY

OCCUPANCY	MAXIMUM OCCUPANT LOAD OF SPACE	MAXIMUM COMMON PATH OF EGRESS TRAVEL DISTANCE (feet)		
		Without Sprinkler System (feet)		With Sprinkler System (feet)
		Occupant Load		
		OL ≤ 30	OL > 30	
A[c], E, M	49	75	75	75[a]
B	49	100	75	100[a]
F	49	75	75	100[a]
H-1, H-2, H-3	3	NP	NP	25[b]
H-4, H-5	10	NP	NP	75[b]
I-1, I-2[d], I-4	10	NP	NP	75[a]
I-3	10	NP	NP	100[a]
R-1	10	NP	NP	75[a]
R-2	20	NP	NP	125[a]
R-3[e]	20	NP	NP	125[a, g]
R-4[e]	20	NP	NP	125[a, g]
S[f]	29	100	75	100[a]
U	49	100	75	75[a]

For SI: 1 foot = 304.8 mm.

NP = Not Permitted.

a. Buildings equipped throughout with an automatic sprinkler system in accordance with Section 903.3.1.1 or 903.3.1.2. See Section 903 for occupancies where automatic sprinkler systems are permitted in accordance with Section 903.3.1.2.

b. Group H occupancies equipped throughout with an automatic sprinkler system in accordance with Section 903.2.5.

c. For a room or space used for assembly purposes having fixed seating, see Section 1029.8.

d. For the travel distance limitations in Group I-2, see Section 407.4.

e. The common path of egress travel distance shall only apply in a Group R-3 occupancy located in a mixed occupancy building.

f. The length of common path of egress travel distance in a Group S-2 open parking garage shall be not more than 100 feet.

g. For the travel distance limitations in Groups R-3 and R-4 equipped throughout with an automatic sprinkler system in accordance with Section 903.3.1.3, see Section 1006.2.2.6.

INTERNATIONAL CODE COUNCIL®
Copyright © 2019 ICC & NYSDOS. ALL RIGHTS RESERVED. Accessed by Lauren Gualdino (lgualdino@briarcliffmanor.org), (-) Order Number #100880972 on May 08, 2020 07:05 AM (PDT) pursuant to License Agreement with ICC & NYSDOS. No further reproduction, no

100880972

1006.2.2.2 Refrigeration machinery rooms. Machinery rooms larger than 1,000 square feet (93 m^2) shall have not less than two *exits* or *exit access doorways*. Where two *exit access doorways* are required, one such doorway is permitted to be served by a fixed ladder or an *alternating tread device*. *Exit access doorways* shall be separated by a horizontal distance equal to one-half the maximum horizontal dimension of the room.

All portions of machinery rooms shall be within 150 feet (45 720 mm) of an *exit* or *exit access doorway*. An increase in *exit access* travel distance is permitted in accordance with Section 1017.1.

Exit and *exit access doorways* shall swing in the direction of egress travel, regardless of the *occupant load* served. *Exit* and *exit access doorways* shall be tight fitting and self-closing.

1006.2.2.3 Refrigerated rooms or spaces. Rooms or spaces having a floor area larger than 1,000 square feet (93 m^2), containing a refrigerant evaporator and maintained at a temperature below 68°F (20°C), shall have access to not less than two *exits* or *exit access doorways*.

Exit access travel distance shall be determined as specified in Section 1017.1, but all portions of a refrigerated room or space shall be within 150 feet (45 720 mm) of an *exit* or *exit access doorway* where such rooms are not protected by an approved *automatic sprinkler system*. Egress is allowed through adjoining refrigerated rooms or spaces.

Exception: Where using refrigerants in quantities limited to the amounts based on the volume set forth in the *Mechanical Code of New York State*.

1006.2.2.4 Group I-4 means of egress. Group I-4 facilities, rooms or spaces where care is provided for more than 10 children that are $2^1/_2$ years of age or less, shall have access to not less than two *exits* or *exit access doorways*.

1006.2.2.5 Vehicular ramps. Vehicular ramps shall not be considered as an *exit access ramp* unless pedestrian facilities are provided.

1006.2.2.6 Groups R-3 and R-4. Where Group R-3 occupancies are permitted by Section 903.2.8 to be protected by an *automatic sprinkler system* installed in accordance with Section 903.3.1.3, the *exit access* travel distance for Group R-3 shall be not more than 125 feet (38 100 mm). Where Group R-4 occupancies are permitted by Section 903.2.8 to be protected by an *automatic sprinkler system* installed in accordance with Section 903.3.1.3, the *exit access* travel distance for Group R-4 shall be not more than 75 feet (22 860 mm).

1006.3 Egress from stories or occupied roofs. The *means of egress* system serving any *story* or occupied roof shall be provided with the number of separate and distinct *exits* or access to *exits* based on the aggregate *occupant load* served in accordance with this section. Where *stairways* serve more than one *story*, only the occupant load of each *story* considered individually shall be used in calculating the required number of *exits* or access to *exits* serving that *story*.

1006.3.1 Adjacent story. The path of egress travel to an *exit* shall not pass through more than one adjacent *story*.

Exception: The path of egress travel to an *exit* shall be permitted to pass through more than one adjacent *story* in any of the following:

1. In Group R-1, R-2 or R-3 occupancies, exit access stairways and ramps connecting four stories or less serving and contained within an individual dwelling unit, sleeping unit or live/work unit.
2. Exit access stairways serving and contained within a Group R-3 congregate residence or a Group R-4 facility.
3. Exit access stairways and ramps in open parking garages that serve only the parking garage.
4. Exit access stairways and ramps serving open-air assembly seating complying with the exit access travel distance requirements of Section 1029.7.
5. Exit access stairways and ramps between the balcony, gallery or press box and the main assembly floor in occupancies such as theaters, places of religious worship, auditoriums and sports facilities.

1006.3.2 Egress based on occupant load. Each *story* and occupied roof shall have the minimum number of separate and distinct *exits*, or access to *exits*, as specified in Table 1006.3.2. A single *exit* or access to a single *exit* shall be permitted in accordance with Section 1006.3.3. The required number of *exits*, or *exit access stairways* or *ramps* providing access to *exits*, from any *story* or occupied roof shall be maintained until arrival at the *exit discharge* or a *public way*.

TABLE 1006.3.2
MINIMUM NUMBER OF EXITS OR ACCESS TO EXITS PER STORY

OCCUPANT LOAD PER STORY	MINIMUM NUMBER OF EXITS OR ACCESS TO EXITS FROM STORY
1-500	2
501-1,000	3
More than 1,000	4

1006.3.3 Single exits. A single *exit* or access to a single *exit* shall be permitted from any *story* or occupied roof where one of the following conditions exists:

1. The *occupant load*, number of *dwelling units* and common path of egress travel distance do not exceed the values in Table 1006.3.3(1) or 1006.3.3(2).
2. Rooms, areas and spaces complying with Section 1006.2.1 with *exits* that discharge directly to the exterior at the *level of exit discharge*, are permitted to have one *exit* or access to a single *exit*.
3. Parking garages where vehicles are mechanically parked shall be permitted to have one *exit* or access to a single *exit*.
4. Group R-3 and R-4 occupancies shall be permitted to have one *exit* or access to a single *exit*.

INTERNATIONAL CODE COUNCIL®
Copyright © 2019 ICC & NYSDOS. ALL RIGHTS RESERVED. Accessed by Lauren Gualdino (lgualdino@briarcliffmanor.org), (-) Order Number #100880972 on May 08, 2020 07:05 AM (PDT) pursuant to License Agreement with ICC & NYSDOS. No further reproduction, no

100880972

5. Individual single-story or multistory *dwelling units* shall be permitted to have a single exit or access to a single *exit* from the *dwelling unit* provided that both of the following criteria are met:
   5.1. The *dwelling unit* complies with Section 1006.2.1 as a space with one *means of egress.*
   5.2. Either the *exit* from the *dwelling unit* discharges directly to the exterior at the *level of exit discharge*, or the *exit access* outside the dwelling unit's entrance door provides access to not less than two approved independent *exits*.

1006.3.3.1 Mixed occupancies. Where one *exit*, or *exit access stairway* or *ramp* providing access to *exits* at other *stories*, is permitted to serve individual *stories*, mixed occupancies shall be permitted to be served by single *exits* provided each individual occupancy complies with the applicable requirements of Table 1006.3.3(1) or 1006.3.3(2) for that occupancy. Where applicable, cumulative *occupant loads* from adjacent occupancies shall be considered to be in accordance with the provisions of Section 1004.1. In each *story* of a mixed occupancy building, the maximum number of occupants served by a single *exit* shall be such that the sum of the ratios of the calculated number of occupants of the space divided by the allowable number of occupants indicated in Table 1006.3.3(2) for each occupancy does not exceed one. Where *dwelling units* are located on a story with other occupancies, the actual number of *dwelling units* divided by four plus the ratio from the other occupancy does not exceed one.

SECTION 1007
EXIT AND EXIT ACCESS DOORWAY CONFIGURATION

1007.1 General. *Exits*, *exit access doorways*, and *exit access stairways* and *ramps* serving spaces, including individual building *stories*, shall be separated in accordance with the provisions of this section.

1007.1.1 Two exits or exit access doorways. Where two *exits*, *exit access doorways*, *exit access stairways* or *ramps*, or any combination thereof, are required from any portion of the *exit access*, they shall be placed a distance apart equal to not less than one-half of the length of the maximum overall diagonal dimension of the building or area to be served measured in a straight line between them.

TABLE 1006.3.3(1)
STORIES WITH ONE EXIT OR ACCESS TO ONE EXIT FOR R-2 OCCUPANCIES

STORY	OCCUPANCY	MAXIMUM NUMBER OF DWELLING UNITS	MAXIMUM COMMON PATH OF EGRESS TRAVEL DISTANCE
Basement, first, second or third story above grade plane	R-2[a, b]	4 dwelling units	125 feet
Fourth story above grade plane and higher	NP	NA	NA

For SI: 1 foot = 3048 mm.
NP = Not Permitted.
NA = Not Applicable.
a. Buildings classified as Group R-2 equipped throughout with an automatic sprinkler system in accordance with Section 903.3.1.1 or 903.3.1.2 and provided with emergency escape and rescue openings in accordance with Section 1030.
b. This table is used for R-2 occupancies consisting of dwelling units. For R-2 occupancies consisting of sleeping units, use Table 1006.3.3(2).

TABLE 1006.3.3(2)
STORIES WITH ONE EXIT OR ACCESS TO ONE EXIT FOR OTHER OCCUPANCIES

STORY	OCCUPANCY	MAXIMUM OCCUPANT LOAD PER STORY	MAXIMUM COMMON PATH OF EGRESS TRAVEL DISTANCE (feet)
First story above or below grade plane	A, B[b], E F[b], M, U	49	75
	H-2, H-3	3	25
	H-4, H-5, I, R-1, R-2[a, c]	10	75
	S[b, d]	29	75
Second story above grade plane	B, F, M, S[d]	29	75
Third story above grade plane and higher	NP	NA	NA

For SI: 1 foot = 304.8 mm.
NP = Not Permitted.
NA = Not Applicable.
a. Buildings classified as Group R-2 equipped throughout with an automatic sprinkler system in accordance with Section 903.3.1.1 or 903.3.1.2 and provided with emergency escape and rescue openings in accordance with Section 1030.
b. Group B, F and S occupancies in buildings equipped throughout with an automatic sprinkler system in accordance with Section 903.3.1.1 shall have a maximum exit access travel distance of 100 feet.
c. This table is used for R-2 occupancies consisting of sleeping units. For R-2 occupancies consisting of dwelling units, use Table 1006.3.3(1).
d. The length of exit access travel distance in a Group S-2 open parking garage shall be not more than 100 feet.

INTERNATIONAL CODE COUNCIL®
Copyright © 2019 ICC & NYSDOS. ALL RIGHTS RESERVED. Accessed by Lauren Gualdino (lgualdino@briarcliffmanor.org), (-) Order Number #100880972 on May 08, 2020 07:05 AM (PDT) pursuant to License Agreement with ICC & NYSDOS. No further reproduction, no

100880972

Interlocking or *scissor stairways* shall be counted as one *exit stairway*.

Exceptions:

1. Where interior *exit stairways* or *ramps* are interconnected by a 1-hour fire-resistance-rated corridor conforming to the requirements of Section 1020, the required exit separation shall be measured along the shortest direct line of travel within the corridor.
2. Where a building is equipped throughout with an *automatic sprinkler system* in accordance with Section 903.3.1.1 or 903.3.1.2, the separation distance shall be not less than one-third of the length of the maximum overall diagonal dimension of the area served.

1007.1.1.1 Measurement point. The separation distance required in Section 1007.1.1 shall be measured in accordance with the following:

1. The separation distance to *exit* or *exit access doorways* shall be measured to any point along the width of the doorway.
2. The separation distance to *exit access stairways* shall be measured to the closest riser.
3. The separation distance to *exit access ramps* shall be measured to the start of the ramp run.

1007.1.2 Three or more exits or exit access doorways. Where access to three or more *exits* is required, not less than two *exit* or *exit access doorways* shall be arranged in accordance with the provisions of Section 1007.1.1. Additional required *exit* or *exit access doorways* shall be arranged a reasonable distance apart so that if one becomes blocked, the others will be available.

1007.1.3 Remoteness of exit access stairways or ramps. Where two *exit access stairways* or *ramps* provide the required *means of egress* to *exits* at another *story*, the required separation distance shall be maintained for all portions of such *exit access stairways* or *ramps*.

1007.1.3.1 Three or more exit access stairways or ramps. Where more than two *exit access stairways* or *ramps* provide the required *means of egress*, not less than two shall be arranged in accordance with Section 1007.1.3.

SECTION 1008
MEANS OF EGRESS ILLUMINATION

1008.1 Means of egress illumination. Illumination shall be provided in the *means of egress* in accordance with Section 1008.2. Under emergency power, means of egress illumination shall comply with Section 1008.3.

1008.2 Illumination required. The *means of egress* serving a room or space shall be illuminated at all times that the room or space is occupied.

Exceptions:

1. Occupancies in Group U.
2. *Aisle accessways* in Group A.
3. *Dwelling units* and *sleeping units* in Groups R-1, R-2 and R-3.
4. *Sleeping units* of Group I occupancies.

1008.2.1 Illumination level under normal power. The *means of egress* illumination level shall be not less than 1 footcandle (11 lux) at the walking surface.

Exception: For auditoriums, theaters, concert or opera halls and similar assembly occupancies, the illumination at the walking surface is permitted to be reduced during performances by one of the following methods provided that the required illumination is automatically restored upon activation of a premises' fire alarm system:

1. Externally illuminated walking surfaces shall be permitted to be illuminated to not less than 0.2 footcandle (2.15 lux).
2. Steps, landings and the sides of ramps shall be permitted to be marked with self-luminous materials in accordance with Sections 1025.2.1, 1025.2.2 and 1025.2.4 by systems *listed* in accordance with UL 1994.

1008.2.2 Group I-2. In Group I-2 occupancies where two or more exits are required, on the exterior landings required by Section 1010.1.6, means of egress illumination levels for the exit discharge shall be provided such that failure of a single lamp in a luminaire shall not reduce the illumination level on that landing to less than 1 footcandle (11 lux).

1008.2.3 Exit discharge. Illumination shall be provided along the path of travel for the *exit discharge* from each *exit* to the *public way*.

Exception: Illumination shall not be required where the path of the *exit discharge* meets both of the following requirements:

1. The path of exit discharge is illuminated from the exit to a safe dispersal area complying with Section 1028.5.
2. A dispersal area shall be illuminated to a level not less than 1 footcandle (11 lux) at the walking surface.

1008.3 Emergency power for illumination. The power supply for means of egress illumination shall normally be provided by the premises' electrical supply.

1008.3.1 General. In the event of power supply failure in rooms and spaces that require two or more means of egress, an emergency electrical system shall automatically illuminate all of the following areas:

1. *Aisles*.
2. *Corridors*.
3. *Exit access stairways* and *ramps*.

1008.3.2 Buildings. In the event of power supply failure in buildings that require two or more *means of egress*, an emergency electrical system shall automatically illuminate all of the following areas:

1. *Interior exit access stairways* and *ramps*.
2. *Interior* and *exterior exit stairways* and *ramps*.

INTERNATIONAL CODE COUNCIL®
Copyright © 2019 ICC & NYSDOS. ALL RIGHTS RESERVED. Accessed by Lauren Gualdino (lgualdino@briarcliffmanor.org), (-) Order Number #100880972 on May 08, 2020 07:05 AM (PDT) pursuant to License Agreement with ICC & NYSDOS. No further reproduction, no

100880972

3. *Exit passageways.*
4. Vestibules and areas on the level of discharge used for *exit discharge* in accordance with Section 1028.1.
5. Exterior landings as required by Section 1010.1.6 for *exit doorways* that lead directly to the e*xit discharge*.

1008.3.3 Rooms and spaces. In the event of power supply failure, an emergency electrical system shall automatically illuminate all of the following areas:

1. Electrical equipment rooms.
2. Fire command centers.
3. Fire pump rooms.
4. Generator rooms.
5. Public restrooms with an area greater than 300 square feet (27.87 m^2).

1008.3.4 Duration. The emergency power system shall provide power for a duration of not less than 90 minutes and shall consist of storage batteries, unit equipment or an on-site generator. The installation of the emergency power system shall be in accordance with Section 2702.

1008.3.5 Illumination level under emergency power. Emergency lighting facilities shall be arranged to provide initial illumination that is not less than an average of 1 footcandle (11 lux) and a minimum at any point of 0.1 footcandle (1 lux) measured along the path of egress at floor level. Illumination levels shall be permitted to decline to 0.6 footcandle (6 lux) average and a minimum at any point of 0.06 footcandle (0.6 lux) at the end of the emergency lighting time duration. A maximum-to-minimum illumination uniformity ratio of 40 to 1 shall not be exceeded. In Group I-2 occupancies, failure of a single lamp in a luminaire shall not reduce the illumination level to less than 0.2 footcandle (2.2 lux).

SECTION 1009
ACCESSIBLE MEANS OF EGRESS

1009.1 Accessible means of egress required. *Accessible means of egress* shall comply with this section. *Accessible* spaces shall be provided with not less than one *accessible means of egress*. Where more than one *means of egress* is required by Section 1006.2 or 1006.3 from any *accessible* space, each *accessible* portion of the space shall be served by not less than two *accessible means of egress*.

Exceptions:

1. One *accessible means of egress* is required from an *accessible mezzanine* level in accordance with Section 1009.3, 1009.4 or 1009.5.
2. In assembly areas with ramped *aisles* or stepped *aisles*, one *accessible means of egress* is permitted where the *common path of egress travel* is *accessible* and meets the requirements in Section 1029.8.

1009.2 Continuity and components. Each required *accessible means of egress* shall be continuous to a *public way* and shall consist of one or more of the following components:

1. *Accessible routes* complying with Section 1104.
2. *Interior exit stairways* complying with Sections 1009.3 and 1023.
3. *Exit access stairways* complying with Sections 1009.3 and 1019.3 or 1019.4.
4. *Exterior exit stairways* complying with Sections 1009.3 and 1027 and serving levels other than the *level of exit discharge*.
5. Elevators complying with Section 1009.4.
6. Platform lifts complying with Section 1009.5.
7. *Horizontal exits* complying with Section 1026.
8. *Ramps* complying with Section 1012.
9. *Areas of refuge* complying with Section 1009.6.
10. Exterior areas for assisted rescue complying with Section 1009.7 serving exits at the *level of exit discharge*.

1009.2.1 Elevators required. In buildings where a required *accessible* floor is four or more *stories* above or below a *level of exit discharge*, not less than one required *accessible means of egress* shall be an elevator complying with Section 1009.4.

Exceptions:

1. In buildings equipped throughout with an *automatic sprinkler system* installed in accordance with Section 903.3.1.1 or 903.3.1.2, the elevator shall not be required on floors provided with a *horizontal exit* and located at or above the *levels of exit discharge*.
2. In buildings equipped throughout with an *automatic sprinkler system* installed in accordance with Section 903.3.1.1 or 903.3.1.2, the elevator shall not be required on floors provided with a *ramp* conforming to the provisions of Section 1012.

1009.3 Stairways. In order to be considered part of an *accessible means of egress*, a *stairway* between *stories* shall comply with Sections 1009.3.1 through 1009.3.3.

1009.3.1 Exit access stairways. *Exit access stairways* that connect levels in the same *story* are not permitted as part of an *accessible means of egress.*

Exception: *Exit access stairways* providing *means of egress* from *mezzanines* are permitted as part of an *accessible means of egress*.

1009.3.2 Stairway width. *Stairways* shall have a clear width of 48 inches (1219 mm) minimum between *handrails.*

Exceptions:

1. The clear width of 48 inches (1219 mm) between *handrails* is not required in buildings equipped throughout with an *automatic sprinkler* system

INTERNATIONAL CODE COUNCIL®
Copyright © 2019 ICC & NYSDOS. ALL RIGHTS RESERVED. Accessed by Lauren Gualdino (lgualdino@briarcliffmanor.org), (-) Order Number #100880972 on May 08, 2020 07:05 AM (PDT) pursuant to License Agreement with ICC & NYSDOS. No further reproduction, no

100880972

installed in accordance with Section 903.3.1.1 or 903.3.1.2.

2. The clear width of 48 inches (1219 mm) between *handrails* is not required for *stairways* accessed from a refuge area in conjunction with a *horizontal exit*.

1009.3.3 Area of refuge. *Stairways* shall either incorporate an *area of refuge* within an enlarged floor-level landing or shall be accessed from an *area of refuge* complying with Section 1009.6.

Exceptions:

1. *Areas of refuge* are not required at *exit access stairways* where two-way communication is provided at the elevator landing in accordance with Section 1009.8.
2. *Areas of refuge* are not required at *stairways* in buildings equipped throughout with an *automatic sprinkler system* installed in accordance with Section 903.3.1.1 or 903.3.1.2.
3. *Areas of refuge* are not required at *stairways* serving *open parking garages*.
4. *Areas of refuge* are not required for *smoke-protected* or *open-air assembly seating* areas complying with Sections 1029.6.2 and 1029.6.3.
5. *Areas of refuge* are not required at *stairways* in Group R-2 occupancies.
6. *Areas of refuge* are not required for *stairways* accessed from a refuge area in conjunction with a *horizontal exit*.

1009.4 Elevators. In order to be considered part of an *accessible means of egress*, an elevator shall comply with Sections 1009.4.1 and 1009.4.2.

1009.4.1 Standby power. The elevator shall meet the emergency operation and signaling device requirements of Section 2.27 of ASME A17.1/CSA B44. Standby power shall be provided in accordance with Chapter 27 and Section 3003.

1009.4.2 Area of refuge. The elevator shall be accessed from an *area of refuge* complying with Section 1009.6.

Exceptions:

1. *Areas of refuge* are not required at the elevator in *open parking garages*.
2. *Areas of refuge* are not required in buildings and facilities equipped throughout with an *automatic sprinkler system* installed in accordance with Section 903.3.1.1 or 903.3.1.2.
3. *Areas of refuge* are not required at elevators not required to be located in a shaft in accordance with Section 712.
4. *Areas of refuge* are not required at elevators serving *smoke-protected* or *open-air assembly seating* areas complying with Sections 1029.6.2 and 1029.6.3.
5. *Areas of refuge* are not required for elevators accessed from a refuge area in conjunction with a *horizontal exit*.

1009.5 Platform lifts. Platform lifts shall be permitted to serve as part of an *accessible means of egress* where allowed as part of a required *accessible route* in Section 1109.8 except for Item 10. Standby power for the platform lift shall be provided in accordance with Chapter 27.

1009.6 Areas of refuge. Every required *area of refuge* shall be accessible from the space it serves by an *accessible means of egress*.

1009.6.1 Travel distance. The maximum travel distance from any *accessible* space to an *area of refuge* shall not exceed the *exit access* travel distance permitted for the occupancy in accordance with Section 1017.1.

1009.6.2 Stairway or elevator access. Every required *area of refuge* shall have direct access to a *stairway* complying with Sections 1009.3 and 1023 or an elevator complying with Section 1009.4.

1009.6.3 Size. Each *area of refuge* shall be sized to accommodate one *wheelchair space* of 30 inches by 48 inches (762 mm by 1219 mm) for each 200 occupants or portion thereof, based on the *occupant load* of the *area of refuge* and areas served by the *area of refuge*. Such *wheelchair spaces* shall not reduce the *means of egress* minimum width or required capacity. Access to any of the required *wheelchair spaces* in an *area of refuge* shall not be obstructed by more than one adjoining *wheelchair space*.

1009.6.4 Separation. Each *area of refuge* shall be separated from the remainder of the story by a *smoke barrier* complying with Section 709 or a *horizontal* exit complying with Section 1026. Each *area of refuge* shall be designed to minimize the intrusion of smoke.

Exceptions:

1. *Areas of refuge* located within an enclosure for *interior exit stairways* complying with Section 1023.
2. *Areas of refuge* in outdoor facilities where *exit access* is essentially open to the outside.

1009.6.5 Two-way communication. *Areas of refuge* shall be provided with a two-way communication system complying with Sections 1009.8.1 and 1009.8.2.

1009.7 Exterior areas for assisted rescue. Exterior areas for assisted rescue shall be accessed by an *accessible route* from the area served.

Where the *exit discharge* does not include an *accessible route* from an *exit* located on the *level of exit discharge* to a *public way*, an exterior area of assisted rescue shall be provided on the exterior landing in accordance with Sections 1009.7.1 through 1009.7.4.

1009.7.1 Size. Each exterior area for assisted rescue shall be sized to accommodate *wheelchair spaces* in accordance with Section 1009.6.3.

1009.7.2 Separation. Exterior walls separating the exterior area of assisted rescue from the interior of the building shall have a minimum *fire-resistance rating* of 1 hour,

INTERNATIONAL CODE COUNCIL®
Copyright © 2019 ICC & NYSDOS. ALL RIGHTS RESERVED. Accessed by Lauren Gualdino (lgualdino@briarcliffmanor.org), (-) Order Number #100880972 on May 08, 2020 07:05 AM (PDT) pursuant to License Agreement with ICC & NYSDOS. No further reproduction, no

100880972

rated for exposure to fire from the inside. The fire-resistance-rated exterior wall construction shall extend horizontally not less than 10 feet (3048 mm) beyond the landing on either side of the landing or equivalent fire-resistance-rated construction is permitted to extend out perpendicular to the exterior wall not less than 4 feet (1220 mm) on the side of the landing. The *fire-resistance-rated* construction shall extend vertically from the ground to a point not less than 10 feet (3048 mm) above the floor level of the area for assisted rescue or to the roof line, whichever is lower. Openings within such *fire-resistance-rated* exterior walls shall be protected in accordance with Section 716.

Exception: The *fire-resistance rating* and opening protectives are not required in the exterior wall where the building is equipped throughout with an *automatic sprinkler system* installed in accordance with Section 903.3.1.1 or 903.3.1.2.

1009.7.3 Openness. The exterior area for assisted rescue shall be open to the outside air. The sides other than the separation walls shall be not less than 50 percent open, and the open area shall be distributed so as to minimize the accumulation of smoke or toxic gases.

1009.7.4 Stairways. *Stairways* that are part of the *means of egress* for the exterior area for assisted rescue shall provide a minimum clear width of 48 inches (1220 mm) between *handrails*.

Exception: The minimum clear width of 48 inches (1220 mm) between *handrails* is not required at *stairways* serving buildings equipped throughout with an *automatic sprinkler system* installed in accordance with Section 903.3.1.1 or 903.3.1.2.

1009.8 Two-way communication. A two-way communication system complying with Sections 1009.8.1 and 1009.8.2 shall be provided at the landing serving each elevator or bank of elevators on each accessible floor that is one or more stories above or below the *level of exit discharge*.

Exceptions:

1. Two-way communication systems are not required at the landing serving each elevator or bank of elevators where the two-way communication system is provided within *areas of refuge* in accordance with Section 1009.6.5.
2. Two-way communication systems are not required on floors provided with *ramps* conforming to the provisions of Section 1012.
3. Two-way communication systems are not required at the landings serving only service elevators that are not designated as part of the *accessible means of egress* or serve as part of the required *accessible route* into a facility.
4. Two-way communication systems are not required at the landings serving only freight elevators.
5. Two-way communication systems are not required at the landing serving a private residence elevator.
6. Two-way communication systems are not required in Group I-2 or I-3 facilities.

1009.8.1 System requirements. Two-way communication systems shall provide communication between each required location and the *fire command center* or a central control point location *approved* by the fire department. Where the central control point is not a *constantly attended location*, a two-way communication system shall have a timed automatic telephone dial-out capability to a monitoring location or 9-1-1. The two-way communication system shall include both audible and visible signals.

1009.8.2 Directions. Directions for the use of the two-way communication system, instructions for summoning assistance via the two-way communication system and written identification of the location shall be posted adjacent to the two-way communication system. Signage shall comply with the ICC A117.1 requirements for visual characters.

1009.9 Signage. Signage indicating special accessibility provisions shall be provided as shown:

1. Each door providing access to an *area of refuge* from an adjacent floor area shall be identified by a sign stating: AREA OF REFUGE.
2. Each door providing access to an exterior area for assisted rescue shall be identified by a sign stating: EXTERIOR AREA FOR ASSISTED RESCUE.

Signage shall comply with the *ICC A117.1* requirements for visual characters and include the International Symbol of Accessibility. Where exit sign illumination is required by Section 1013.3, the signs shall be illuminated. Additionally, visual characters, raised character and braille signage complying with ICC A117.1 shall be located at each door to an *area of refuge* and exterior area for assisted rescue in accordance with Section 1013.4.

1009.10 Directional signage. Directional signage indicating the location of all other *means of egress* and which of those are *accessible means of egress* shall be provided at the following:

1. At *exits* serving a required *accessible* space but not providing an approved *accessible means of egress*.
2. At elevator landings.
3. Within *areas of refuge*.

1009.11 Instructions. In *areas of refuge* and exterior areas for assisted rescue, instructions on the use of the area under emergency conditions shall be posted. Signage shall comply with the ICC A117.1 requirements for visual characters. The instructions shall include all of the following:

1. Persons able to use the *exit stairway* do so as soon as possible, unless they are assisting others.
2. Information on planned availability of assistance in the use of *stairs* or supervised operation of elevators and how to summon such assistance.
3. Directions for use of the two-way communication system where provided.

INTERNATIONAL CODE COUNCIL®
Copyright © 2019 ICC & NYSDOS. ALL RIGHTS RESERVED. Accessed by Lauren Gualdino (lgualdino@briarcliffmanor.org), (-) Order Number #100880972 on May 08, 2020 07:05 AM (PDT) pursuant to License Agreement with ICC & NYSDOS. No further reproduction, no

100880972

SECTION 1010
DOORS, GATES AND TURNSTILES

1010.1 Doors. *Means of egress* doors shall meet the requirements of this section. Doors serving a *means of egress* system shall meet the requirements of this section and Section 1022.2. Doors provided for egress purposes in numbers greater than required by this code shall meet the requirements of this section.

Means of egress doors shall be readily distinguishable from the adjacent construction and finishes such that the doors are easily recognizable as doors. Mirrors or similar reflecting materials shall not be used on *means of egress* doors. *Means of egress* doors shall not be concealed by curtains, drapes, decorations or similar materials.

1010.1.1 Size of doors. The required capacity of each door opening shall be sufficient for the *occupant load* thereof and shall provide a minimum clear opening width of 32 inches (813 mm). The clear opening width of doorways with swinging doors shall be measured between the face of the door and the stop, with the door open 90 degrees (1.57 rad). Where this section requires a minimum clear opening width of 32 inches (813 mm) and a door opening includes two door leaves without a mullion, one leaf shall provide a minimum clear opening width of 32 inches (813 mm). In Group I-2, doors serving as *means of egress* doors where used for the movement of beds shall provide a minimum clear opening width of $41^1/_2$ inches (1054 mm). The maximum width of a swinging door leaf shall be 48 inches (1219 mm) nominal. The minimum clear opening height of doors shall be not less than 80 inches (2032 mm).

Exceptions:

1. In Group R-2 and R-3 *dwelling* and *sleeping units* that are not required to be an Accessible unit, Type A unit or Type B unit, the minimum and maximum width shall not apply to door openings that are not part of the required *means of egress.*
2. In Group I-3, door openings to resident *sleeping units* that are not required to be an Accessible unit shall have a minimum clear opening width of 28 inches (711 mm).
3. Door openings to storage closets less than 10 square feet (0.93 m^2) in area shall not be limited by the minimum clear opening width.
4. The width of door leaves in revolving doors that comply with Section 1010.1.4.1 shall not be limited.
5. The maximum width of door leaves in *power-operated doors* that comply with Section 1010.1.4.2 shall not be limited.
6. Door openings within a *dwelling unit* or *sleeping unit* shall have a minimum clear opening height of 78 inches (1981 mm).
7. In *dwelling* and *sleeping units* that are not required to be Accessible, Type A or Type B units, exterior door openings other than the required *exit* door shall have a minimum clear opening height of 76 inches (1930 mm).
8. In Groups I-1, R-2, R-3 and R-4, in *dwelling* and *sleeping units* that are not required to be Accessible, Type A or Type B units, the minimum clear opening widths shall not apply to interior egress doors.
9. Door openings required to be *accessible* within Type B units intended for user passage shall have a minimum clear opening width of 31.75 inches (806 mm).
10. Doors to walk-in freezers and coolers less than 1,000 square feet (93 m^2) in area shall have a maximum width of 60 inches (1524 mm) nominal.
11. The minimum clear opening width shall not apply to doors for nonaccessible shower or sauna compartments.
12. The minimum clear opening width shall not apply to the doors for nonaccessible toilet stalls.

1010.1.1.1 Projections into clear width. There shall not be projections into the required clear opening width lower than 34 inches (864 mm) above the floor or ground. Projections into the clear opening width between 34 inches (864 mm) and 80 inches (2032 mm) above the floor or ground shall not exceed 4 inches (102 mm).

Exception: Door closers and door stops shall be permitted to be 78 inches (1980 mm) minimum above the floor.

1010.1.2 Door swing. Egress doors shall be of the pivoted or side-hinged swinging type.

Exceptions:

1. Private garages, office areas, factory and storage areas with an *occupant load* of 10 or less.
2. Group I-3 occupancies used as a place of detention.
3. Critical or intensive care patient rooms within suites of health care facilities.
4. Doors within or serving a single *dwelling unit* in Groups R-2 and R-3.
5. In other than Group H occupancies, revolving doors complying with Section 1010.1.4.1.
6. In other than Group H occupancies, special purpose horizontal sliding, accordion or folding door assemblies complying with Section 1010.1.4.3.
7. Power-operated doors in accordance with Section 1010.1.4.2.
8. Doors serving a bathroom within an individual *sleeping unit* in Group R-1.

INTERNATIONAL CODE COUNCIL®
Copyright © 2019 ICC & NYSDOS. ALL RIGHTS RESERVED. Accessed by Lauren Gualdino (lgualdino@briarcliffmanor.org), (-) Order Number #100880972 on May 08, 2020 07:05 AM (PDT) pursuant to License Agreement with ICC & NYSDOS. No further reproduction, no

100880972

9. In other than Group H occupancies, manually operated horizontal sliding doors are permitted in a *means of egress* from spaces with an *occupant load* of 10 or less.

1010.1.2.1 Direction of swing. Pivot or side-hinged swinging doors shall swing in the direction of egress travel where serving a room or area containing an occupant load of 50 or more persons or a Group H occupancy.

1010.1.3 Door opening force. The force for pushing or pulling open interior swinging egress doors, other than fire doors, shall not exceed 5 pounds (22 N). These forces do not apply to the force required to retract latch bolts or disengage other devices that hold the door in a closed position. For other swinging doors, as well as sliding and folding doors, the door latch shall release when subjected to a 15-pound (67 N) force. The door shall be set in motion when subjected to a 30-pound (133 N) force. The door shall swing to a full-open position when subjected to a 15-pound (67 N) force.

1010.1.3.1 Location of applied forces. Forces shall be applied to the latch side of the door.

1010.1.4 Special doors. Special doors and security grilles shall comply with the requirements of Sections 1010.1.4.1 through 1010.1.4.5.

1010.1.4.1 Revolving doors. Revolving doors shall comply with the following:

1. Revolving doors shall comply with BHMA A156.27 and shall be installed in accordance with the manufacturer's instructions.
2. Each revolving door shall be capable of *breakout* in accordance with BHMA A156.27 and shall provide an aggregate width of not less than 36 inches (914 mm).
3. A revolving door shall not be located within 10 feet (3048 mm) of the foot or top of *stairways* or escalators. A dispersal area shall be provided between the *stairways* or escalators and the revolving doors.
4. The revolutions per minute (rpm) for a revolving door shall not exceed the maximum rpm as specified in BHMA A156.27. Manual revolving doors shall comply with Table 1010.1.4.1(1). Automatic or power-operated revolving doors shall comply with Table 1010.1.4.1(2).
5. An emergency stop switch shall be provided near each entry point of power or automatic operated revolving doors within 48 inches (1220 mm) of the door and between 24 inches (610 mm) and 48 inches (1220 mm) above the floor. The activation area of the emergency stop switch button shall be not less than 1 inch (25 mm) in diameter and shall be red.
6. Each revolving door shall have a side-hinged swinging door that complies with Section 1010.1 in the same wall and within 10 feet (3048 mm) of the revolving door.
7. Revolving doors shall not be part of an *accessible route* required by Section 1009 and Chapter 11.

TABLE 1010.1.4.1(1)
MAXIMUM DOOR SPEED MANUAL REVOLVING DOORS

REVOLVING DOOR MAXIMUM NOMINAL DIAMETER (FT-IN)	MAXIMUM ALLOWABLE REVOLVING DOOR SPEED (RPM)
6-0	12
7-0	11
8-0	10
9-0	9
10-0	8

For SI: 1 inch = 25.4 mm, 1 foot = 304.8 mm.

TABLE 1010.1.4.1(2)
MAXIMUM DOOR SPEED AUTOMATIC OR POWER-OPERATED REVOLVING DOORS

REVOLVING DOOR MAXIMUM NOMINAL DIAMETER (FT-IN)	MAXIMUM ALLOWABLE REVOLVING DOOR SPEED (RPM)
8-0	7.2
9-0	6.4
10-0	5.7
11-0	5.2
12-0	4.8
12-6	4.6
14-0	4.1
16-0	3.6
17-0	3.4
18-0	3.2
20-0	2.9
24-0	2.4

For SI: 1 inch = 25.4 mm, 1 foot = 304.8 mm.

1010.1.4.1.1 Egress component. A revolving door used as a component of a *means of egress* shall comply with Section 1010.1.4.1 and the following three conditions:

1. Revolving doors shall not be given credit for more than 50 percent of the minimum width or required capacity.
2. Each revolving door shall be credited with a capacity based on not more than a 50-person *occupant load*.
3. Each revolving door shall provide for egress in accordance with BHMA A156.27 with a *breakout* force of not more than 130 pounds (578 N).

INTERNATIONAL CODE COUNCIL®
Copyright © 2019 ICC & NYSDOS. ALL RIGHTS RESERVED. Accessed by Lauren Gualdino (lgualdino@briarcliffmanor.org), (-) Order Number #100880972 on May 08, 2020 07:05 AM (PDT) pursuant to License Agreement with ICC & NYSDOS. No further reproduction, no

100880972

1010.1.4.1.2 Other than egress component. A revolving door used as other than a component of a *means of egress* shall comply with Section 1010.1.4.1. The *breakout* force of a revolving door not used as a component of a *means of egress* shall not be more than 180 pounds (801 N).

Exception: A *breakout* force in excess of 180 pounds (801 N) is permitted if the breakout force is reduced to not more than 130 pounds (578 N) when not less than one of the following conditions is satisfied:

1. There is a power failure or power is removed to the device holding the door wings in position.
2. There is an actuation of the *automatic sprinkler system* where such system is provided.
3. There is an actuation of a smoke detection system that is installed in accordance with Section 907 to provide coverage in areas within the building that are within 75 feet (22 860 mm) of the revolving doors.
4. There is an actuation of a manual control switch, in an approved location and clearly identified, that reduces the *breakout* force to not more than 130 pounds (578 N).

1010.1.4.2 Power-operated doors. Where *means of egress* doors are operated or assisted by power, the design shall be such that in the event of power failure, the door is capable of being opened manually to permit *means of egress* travel or closed where necessary to safeguard *means of egress*. The forces required to open these doors manually shall not exceed those specified in Section 1010.1.3, except that the force to set the door in motion shall not exceed 50 pounds (220 N). The door shall be capable of opening from any position to the full width of the opening in which such door is installed when a force is applied to the door on the side from which egress is made. Power-operated swinging doors, power-operated sliding doors and power-operated folding doors shall comply with BHMA A156.10. Power-assisted swinging doors and low-energy power-operated swinging doors shall comply with BHMA A156.19. Low-energy *power-operated* sliding *doors* and low-energy *power-operated* folding *doors* shall comply with BHMA A156.38.

Exceptions:

1. Occupancies in Group I-3.
2. Special purpose horizontal sliding, accordion or folding doors complying with Section 1010.1.4.3.
3. For a biparting door in the emergency breakout mode, a door leaf located within a multiple-leaf opening shall be exempt from the minimum 32-inch (813 mm) single-leaf requirement of Section 1010.1.1, provided that a minimum 32-inch (813 mm) clear opening is provided when the two biparting leaves meeting in the center are broken out.

1010.1.4.3 Special purpose horizontal sliding, accordion or folding doors. In other than Group H occupancies, special purpose horizontal sliding, accordion or folding door assemblies permitted to be a component of a *means of egress* in accordance with Exception 6 to Section 1010.1.2 shall comply with all of the following criteria:

1. The doors shall be power operated and shall be capable of being operated manually in the event of power failure.
2. The doors shall be openable by a simple method from both sides without special knowledge or effort.
3. The force required to operate the door shall not exceed 30 pounds (133 N) to set the door in motion and 15 pounds (67 N) to close the door or open it to the minimum required width.
4. The door shall be openable with a force not to exceed 15 pounds (67 N) when a force of 250 pounds (1100 N) is applied perpendicular to the door adjacent to the operating device.
5. The door assembly shall comply with the applicable *fire protection rating* and, where rated, shall be self-closing or automatic closing by smoke detection in accordance with Section 716.2.6.6, shall be installed in accordance with NFPA 80 and shall comply with Section 716.
6. The door assembly shall have an integrated standby power supply.
7. The door assembly power supply shall be electrically supervised.
8. The door shall open to the minimum required width within 10 seconds after activation of the operating device.

1010.1.4.4 Locking arrangements in educational occupancies. In Group E and Group B educational occupancies, egress doors from classrooms, offices and other occupied rooms shall be permitted to be provided with locking arrangements designed to keep intruders from entering the room where all of the following conditions are met:

1. The door shall be capable of being unlocked from outside the room with a key or other approved means.
2. The door shall be openable from within the room in accordance with Section 1010.1.9.
3. Modifications shall not be made to listed *panic hardware*, fire door hardware or door closers.

1010.1.4.4.1 Remote operation of locks. Remote operation of locks complying with Section 1010.1.4.4 shall be permitted.

INTERNATIONAL CODE COUNCIL®
Copyright © 2019 ICC & NYSDOS. ALL RIGHTS RESERVED. Accessed by Lauren Gualdino (lgualdino@briarcliffmanor.org), (-) Order Number #100880972 on May 08, 2020 07:05 AM (PDT) pursuant to License Agreement with ICC & NYSDOS. No further reproduction, no

100880972

1010.1.4.5 Security grilles. In Groups B, F, M and S, horizontal sliding or vertical security grilles are permitted at the main *exit* and shall be openable from the inside without the use of a key or special knowledge or effort during periods that the space is occupied. The grilles shall remain secured in the full-open position during the period of occupancy by the general public. Where two or more *means of egress* are required, not more than one-half of the *exits* or *exit access doorways* shall be equipped with horizontal sliding or vertical security grilles.

1010.1.5 Floor elevation. There shall be a floor or landing on each side of a door. Such floor or landing shall be at the same elevation on each side of the door. Landings shall be level except for exterior landings, which are permitted to have a slope not to exceed 0.25 unit vertical in 12 units horizontal (2-percent slope).

Exceptions:

1. Doors serving individual *dwelling units* in Groups R-2 and R-3 where the following apply:
   1.1. A door is permitted to open at the top step of an interior *flight* of *stairs*, provided that the door does not swing over the top step.
   1.2. Screen doors and storm doors are permitted to swing over *stairs* or landings.
2. Exterior doors as provided for in Section 1003.5, Exception 1, and Section 1022.2, which are not on an *accessible route*.
3. In Group R-3 occupancies not required to be *Accessible units*, *Type A units* or *Type B units*, the landing at an exterior doorway shall be not more than $7^3/_4$ inches (197 mm) below the top of the threshold, provided the door, other than an exterior storm or screen door, does not swing over the landing.
4. Variations in elevation due to differences in finish materials, but not more than $^1/_2$ inch (12.7 mm).
5. Exterior decks, patios or balconies that are part of *Type B dwelling units*, have impervious surfaces and that are not more than 4 inches (102 mm) below the finished floor level of the adjacent interior space of the dwelling unit.
6. Doors serving equipment spaces not required to be *accessible* in accordance with Section 1103.2.9 and serving an occupant load of five or less shall be permitted to have a landing on one side to be not more than 7 inches (178 mm) above or below the landing on the egress side of the door.

1010.1.6 Landings at doors. Landings shall have a width not less than the width of the *stairway* or the door, whichever is greater. Doors in the fully open position shall not reduce a required dimension by more than 7 inches (178 mm). Where a landing serves an *occupant load* of 50 or more, doors in any position shall not reduce the landing to less than one-half its required width. Landings shall have a length measured in the direction of travel of not less than 44 inches (1118 mm).

Exception: Landing length in the direction of travel in Groups R-3 and U and within individual units of Group R-2 need not exceed 36 inches (914 mm).

1010.1.7 Thresholds. Thresholds at doorways shall not exceed $^3/_4$ inch (19.1 mm) in height above the finished floor or landing for sliding doors serving *dwelling units* or $^1/_2$ inch (12.7 mm) above the finished floor or landing for other doors. Raised thresholds and floor level changes greater than $^1/_4$ inch (6.4 mm) at doorways shall be beveled with a slope not greater than one unit vertical in two units horizontal (50-percent slope).

Exceptions:

1. In occupancy Group R-2 or R-3, threshold heights for sliding and side-hinged exterior doors shall be permitted to be up to $7^3/_4$ inches (197 mm) in height if all of the following apply:
   1.1. The door is not part of the required *means of egress*.
   1.2. The door is not part of an *accessible route* as required by Chapter 11.
   1.3. The door is not part of an *Accessible unit*, *Type A unit* or *Type B unit*.
2. In *Type B units*, where Exception 5 to Section 1010.1.5 permits a 4-inch (102 mm) elevation change at the door, the threshold height on the exterior side of the door shall not exceed $4^3/_4$ inches (120 mm) in height above the exterior deck, patio or balcony for sliding doors or $4^1/_2$ inches (114 mm) above the exterior deck, patio or balcony for other doors.

1010.1.8 Door arrangement. Space between two doors in a series shall be 48 inches (1219 mm) minimum plus the width of a door swinging into the space. Doors in a series shall swing either in the same direction or away from the space between the doors.

Exceptions:

1. The minimum distance between horizontal sliding power-operated doors in a series shall be 48 inches (1219 mm).
2. Storm and screen doors serving individual *dwelling units* in Groups R-2 and R-3 need not be spaced 48 inches (1219 mm) from the other door.
3. Doors within individual *dwelling units* in Groups R-2 and R-3 other than within *Type A dwelling units*.

1010.1.9 Door operations. Except as specifically permitted by this section, egress doors shall be readily openable from the egress side without the use of a key or special knowledge or effort.

1010.1.9.1 Hardware. Door handles, pulls, latches, locks and other operating devices on doors required to be *accessible* by Chapter 11 shall not require tight grasping, tight pinching or twisting of the wrist to operate.

INTERNATIONAL CODE COUNCIL®
Copyright © 2019 ICC & NYSDOS. ALL RIGHTS RESERVED. Accessed by Lauren Gualdino (lgualdino@briarcliffmanor.org), (-) Order Number #100880972 on May 08, 2020 07:05 AM (PDT) pursuant to License Agreement with ICC & NYSDOS. No further reproduction, no

100880972

1010.1.9.2 Hardware height. Door handles, pulls, latches, locks and other operating devices shall be installed 34 inches (864 mm) minimum and 48 inches (1219 mm) maximum above the finished floor. Locks used only for security purposes and not used for normal operation are permitted at any height.

Exception: Access doors or gates in barrier walls and fences protecting pools, spas and hot tubs shall be permitted to have operable parts of the latch release on self-latching devices at 54 inches (1370 mm) maximum above the finished floor or ground, provided that the self-latching devices are not also self-locking devices operated by means of a key, electronic opener or integral combination lock.

1010.1.9.3 Monitored or recorded egress. Where electrical systems that monitor or record egress activity are incorporated, the locking system shall comply with Section 1010.1.9.7, 1010.1.9.8, 1010.1.9.9, 1010.1.9.10 or 1010.1.9.11 or shall be readily openable from the egress side without the use of a key or special knowledge or effort.

1010.1.9.4 Locks and latches. Locks and latches shall be permitted to prevent operation of doors where any of the following exist:

1. Places of detention or restraint.
2. In buildings in occupancy Group A having an *occupant load* of 300 or less, Groups B, F, M and S, and in *places of religious worship*, the main door or doors are permitted to be equipped with key-operated locking devices from the egress side provided:
   2.1. The locking device is readily distinguishable as locked.
   2.2. A readily visible durable sign is posted on the egress side on or adjacent to the door stating: THIS DOOR TO REMAIN UNLOCKED WHEN THIS SPACE IS OCCUPIED. The sign shall be in letters 1 inch (25 mm) high on a contrasting background.
   2.3. The use of the key-operated locking device is revocable by the *building official* for due cause.
3. Where egress doors are used in pairs, *approved* automatic flush bolts shall be permitted to be used, provided that the door leaf having the automatic flush bolts does not have a doorknob or surface-mounted hardware.
4. Doors from individual *dwelling* or *sleeping units* of Group R occupancies having an *occupant load* of 10 or less are permitted to be equipped with a night latch, dead bolt or security chain, provided such devices are openable from the inside without the use of a key or tool.
5. *Fire doors* after the minimum elevated temperature has disabled the unlatching mechanism in accordance with *listed fire door* test procedures.
6. Doors serving roofs not intended to be occupied shall be permitted to be locked preventing entry to the building from the roof.

1010.1.9.5 Bolt locks. Manually operated flush bolts or surface bolts are not permitted.

Exceptions:

1. On doors not required for egress in individual *dwelling units* or *sleeping units*.
2. Where a pair of doors serves a storage or equipment room, manually operated edge- or surface-mounted bolts are permitted on the inactive leaf.
3. Where a pair of doors serves an *occupant load* of less than 50 persons in a Group B, F or S occupancy, manually operated edge- or surface-mounted bolts are permitted on the inactive leaf. The inactive leaf shall not contain doorknobs, panic bars or similar operating hardware.
4. Where a pair of doors serves a Group B, F or S occupancy, manually operated edge- or surface-mounted bolts are permitted on the inactive leaf provided that such inactive leaf is not needed to meet egress capacity requirements and the building is equipped throughout with an *automatic sprinkler system* in accordance with Section 903.3.1.1. The inactive leaf shall not contain doorknobs, panic bars or similar operating hardware.
5. Where a pair of doors serves patient care rooms in Group I-2 occupancies, self-latching edge- or surface-mounted bolts are permitted on the inactive leaf provided that the inactive leaf is not needed to meet egress capacity requirements and the inactive leaf shall not contain doorknobs, panic bars or similar operating hardware.

1010.1.9.6 Unlatching. The unlatching of any door or leaf shall not require more than one operation.

Exceptions:

1. Places of detention or restraint.
2. Where manually operated bolt locks are permitted by Section 1010.1.9.5.
3. Doors with automatic flush bolts as permitted by Section 1010.1.9.4, Item 3.
4. Doors from individual *dwelling units* and *sleeping units* of Group R occupancies as permitted by Section 1010.1.9.4, Item 4.

INTERNATIONAL CODE COUNCIL®
Copyright © 2019 ICC & NYSDOS. ALL RIGHTS RESERVED. Accessed by Lauren Gualdino (lgualdino@briarcliffmanor.org), (-) Order Number #100880972 on May 08, 2020 07:05 AM (PDT) pursuant to License Agreement with ICC & NYSDOS. No further reproduction, no

100880972

1010.1.9.6.1 Closet doors. Closet doors that latch in the closed position shall be openable from inside the closet.

1010.1.9.7 Controlled egress doors in Groups I-1 and I-2. Electric locking systems, including electromechanical locking systems and electromagnetic locking systems, shall be permitted to be locked in the means of egress in Group I-1 or I-2 occupancies where the clinical needs of persons receiving care require their containment. Controlled egress doors shall be permitted in such occupancies where the building is equipped throughout with an *automatic sprinkler system* in accordance with Section 903.3.1.1 or an *approved automatic smoke* or *heat detection system* installed in accordance with Section 907, provided that the doors are installed and operate in accordance with all of the following:

1. The door locks shall unlock on actuation of the *automatic sprinkler system* or *automatic fire detection system*.
2. The door locks shall unlock on loss of power controlling the lock or lock mechanism.
3. The door locking system shall be installed to have the capability of being unlocked by a switch located at the *fire command center*, a nursing station or other approved location. The switch shall directly break power to the lock.
4. A building occupant shall not be required to pass through more than one door equipped with a controlled egress locking system before entering an exit.
5. The procedures for unlocking the doors shall be described and approved as part of the emergency planning and preparedness required by Chapter 4 of the *Fire Code of New York State*.
6. All clinical staff shall have the keys, codes or other means necessary to operate the locking systems.
7. Emergency lighting shall be provided at the door.
8. The door locking system units shall be *listed* in accordance with UL 294.

Exceptions:

1. Items 1 through 4 shall not apply to doors to areas occupied by persons who, because of clinical needs, require restraint or containment as part of the function of a psychiatric treatment area.
2. Items 1 through 4 shall not apply to doors to areas where a *listed* egress control system is utilized to reduce the risk of child abduction from nursery and obstetric areas of a Group I-2 hospital.

1010.1.9.8 Delayed egress. Delayed egress locking systems shall be permitted to be installed on doors serving the following occupancies in buildings that are equipped throughout with an *automatic sprinkler system* in accordance with Section 903.3.1.1 or an *approved automatic smoke* or *heat detection system* installed in accordance with Section 907.

1. Group B, F, I, M, R, S and U occupancies.
2. Group E classrooms with an occupant load of less than 50.

Exception: Delayed egress locking systems shall be permitted to be installed on *exit* or *exit access* doors, other than the main *exit* or *exit access* door, serving a courtroom in buildings equipped throughout with an *automatic sprinkler system* in accordance with Section 903.3.1.1.

1010.1.9.8.1 Delayed egress locking system. The delayed egress locking system shall be installed and operated in accordance with all of the following:

1. The delay electronics of the delayed egress locking system shall deactivate upon actuation of the *automatic sprinkler system* or *automatic fire detection system*, allowing immediate free egress.
2. The delay electronics of the delayed egress locking system shall deactivate upon loss of power controlling the lock or lock mechanism, allowing immediate free egress.
3. The delayed egress locking system shall have the capability of being deactivated at the *fire command center* and other *approved* locations.
4. An attempt to egress shall initiate an irreversible process that shall allow such egress in not more than 15 seconds when a physical effort to exit is applied to the egress side door hardware for not more than 3 seconds. Initiation of the irreversible process shall activate an audible signal in the vicinity of the door. Once the delay electronics have been deactivated, rearming the delay electronics shall be by manual means only.

   Exception: Where approved, a delay of not more than 30 seconds is permitted on a delayed egress door.
5. The egress path from any point shall not pass through more than one delayed egress locking system.

   Exceptions:

   1. In Group I-2 or I-3 occupancies, the egress path from any point in the building shall pass through not more than two delayed egress locking systems provided that the combined delay does not exceed 30 seconds.
   2. In Group I-1 or I-4 occupancies, the egress path from any point in the building shall pass through not more than two delayed egress locking

INTERNATIONAL CODE COUNCIL®
Copyright © 2019 ICC & NYSDOS. ALL RIGHTS RESERVED. Accessed by Lauren Gualdino (lgualdino@briarcliffmanor.org), (-) Order Number #100880972 on May 08, 2020 07:05 AM (PDT) pursuant to License Agreement with ICC & NYSDOS. No further reproduction, no

100880972

systems provided the combined delay does not exceed 30 seconds and the building is equipped throughout with an *automatic sprinkler system* in accordance with Section 903.3.1.1.

6. A sign shall be provided on the door and shall be located above and within 12 inches (305 mm) of the door exit hardware:
   6.1. For doors that swing in the direction of egress, the sign shall read: PUSH UNTIL ALARM SOUNDS. DOOR CAN BE OPENED IN 15 [30] SECONDS.
   6.2. For doors that swing in the opposite direction of egress, the sign shall read: PULL UNTIL ALARM SOUNDS. DOOR CAN BE OPENED IN 15 [30] SECONDS.
   6.3. The sign shall comply with the visual character requirements in ICC A117.1.

   Exception: Where approved, in Group I occupancies, the installation of a sign is not required where care recipients who because of clinical needs require restraint or containment as part of the function of the treatment area.
7. Emergency lighting shall be provided on the egress side of the door.
8. The delayed egress locking system units shall be *listed* in accordance with UL 294.

1010.1.9.9 Sensor release of electrically locked egress doors. Sensor release of electric locking systems shall be permitted on doors located in the *means of egress* in any occupancy except Group H where installed and operated in accordance with all of the following criteria:

1. The sensor shall be installed on the egress side, arranged to detect an occupant approaching the doors, and shall cause the electric locking system to unlock.
2. The electric locks shall be arranged to unlock by a signal from or loss of power to the sensor.
3. Loss of power to the lock or locking system shall automatically unlock the electric locks.
4. The doors shall be arranged to unlock from a manual unlocking device located 40 inches to 48 inches (1016 mm to 1219 mm) vertically above the floor and within 5 feet (1524 mm) of the secured doors. Ready access shall be provided to the manual unlocking device and the device shall be clearly identified by a sign that reads "PUSH TO EXIT." When operated, the manual unlocking device shall result in direct interruption of power to the electric lock—independent of other electronics—and the electric lock shall remain unlocked for not less than 30 seconds.
5. Activation of the building *fire alarm system*, where provided, shall automatically unlock the electric lock, and the electric lock shall remain unlocked until the fire alarm system has been reset.
6. Activation of the building *automatic sprinkler system* or *fire detection system*, where provided, shall automatically unlock the electric lock. The electric lock shall remain unlocked until the *fire alarm system* has been reset.
7. The door locking system units shall be *listed* in accordance with UL 294.

1010.1.9.10 Door hardware release of electrically locked egress doors. Door hardware release of electric locking systems shall be permitted on doors in the *means of egress* in any occupancy except Group H where installed and operated in accordance with all of the following:

1. The door hardware that is affixed to the door leaf has an obvious method of operation that is readily operated under all lighting conditions.
2. The door hardware is capable of being operated with one hand and shall comply with Section 1010.1.9.6.
3. Operation of the door hardware directly interrupts the power to the electric lock and unlocks the door immediately.
4. Loss of power to the electric locking system automatically unlocks the door.
5. Where *panic* or *fire exit hardware* is required by Section 1010.1.10, operation of the *panic* or *fire exit hardware* also releases the electric lock.
6. The locking system units shall be *listed* in accordance with UL 294.

1010.1.9.11 Locking arrangements in buildings within correctional facilities. In *buildings* within correctional and detention facilities, doors in *means of egress* serving rooms or spaces occupied by persons whose movements are controlled for security reasons shall be permitted to be locked where equipped with egress control devices that shall unlock manually and by not less than one of the following means:

1. Activation of an *automatic sprinkler system* installed in accordance with Section 903.3.1.1.
2. Activation of an *approved manual fire alarm box*.
3. A signal from a *constantly attended location*.

1010.1.9.12 Stairway doors. Interior *stairway means of egress* doors shall be openable from both sides without the use of a key or special knowledge or effort.

Exceptions:

1. *Stairway* discharge doors shall be openable from the egress side and shall only be locked from the opposite side.
2. This section shall not apply to doors arranged in accordance with Section 403.5.3.

INTERNATIONAL CODE COUNCIL®
Copyright © 2019 ICC & NYSDOS. ALL RIGHTS RESERVED. Accessed by Lauren Gualdino (lgualdino@briarcliffmanor.org), (-) Order Number #100880972 on May 08, 2020 07:05 AM (PDT) pursuant to License Agreement with ICC & NYSDOS. No further reproduction, no

100880972

3. S*tairway* exit doors are permitted to be locked from the side opposite the egress side, provided that they are openable from the egress side and capable of being unlocked simultaneously without unlatching upon a signal from the *fire command center*, if present, or a signal by emergency personnel from a single location inside the main entrance to the building.
4. *Stairway exit* doors shall be openable from the egress side and shall only be locked from the opposite side in Group B, F, M and S occupancies where the only interior access to the tenant space is from a single *exit stairway* where permitted in Section 1006.3.3.
5. *Stairway exit* doors shall be openable from the egress side and shall only be locked from the opposite side in Group R-2 occupancies where the only interior access to the *dwelling unit* is from a single *exit stairway* where permitted in Section 1006.3.3.

1010.1.10 Panic and fire exit hardware. Swinging doors serving a Group H occupancy and swinging doors serving rooms or spaces with an *occupant load* of 50 or more in a Group A or E occupancy shall not be provided with a latch or lock other than *panic hardware* or *fire exit hardware*.

Exceptions:

1. A main *exit* of a Group A occupancy shall be permitted to have locking devices in accordance with Section 1010.1.9.4, Item 2.
2. Doors provided with *panic hardware* or *fire exit hardware* and serving a Group A or E occupancy shall be permitted to be electrically locked in accordance with Section 1010.1.9.9 or 1010.1.9.10.

Electrical rooms with equipment rated 1,200 amperes or more and over 6 feet (1829 mm) wide, and that contain overcurrent devices, switching devices or control devices with *exit* or *exit access doors*, shall be equipped with *panic hardware* or *fire exit hardware*. The doors shall swing in the direction of egress travel.

1010.1.10.1 Installation. Where *panic* or *fire exit hardware* is installed, it shall comply with the following:

1. *Panic hardware* shall be *listed* in accordance with UL 305.
2. *Fire exit hardware* shall be *listed* in accordance with UL 10C and UL 305.
3. The actuating portion of the releasing device shall extend not less than one-half of the door leaf width.
4. The maximum unlatching force shall not exceed 15 pounds (67 N).

1010.1.10.2 Balanced doors. If *balanced doors* are used and *panic hardware* is required, the *panic hardware* shall be the push-pad type and the pad shall not extend more than one-half the width of the door measured from the latch side.

1010.2 Gates. Gates serving the *means of egress* system shall comply with the requirements of this section. Gates used as a component in a *means of egress* shall conform to the applicable requirements for doors.

Exception: Horizontal sliding or swinging gates exceeding the 4-foot (1219 mm) maximum leaf width limitation are permitted in fences and walls surrounding a stadium.

1010.2.1 Stadiums. *Panic hardware* is not required on gates surrounding stadiums where such gates are under constant immediate supervision while the public is present, and where safe dispersal areas based on 3 square feet (0.28 m^2) per occupant are located between the fence and enclosed space. Such required safe dispersal areas shall not be located less than 50 feet (15 240 mm) from the enclosed space. See Section 1028.5 for *means of egress* from safe dispersal areas.

1010.3 Turnstiles and similar devices. Turnstiles or similar devices that restrict travel to one direction shall not be placed so as to obstruct any required *means of egress*, except where permitted in accordance with Sections 1010.3.1, 1010.3.2 and 1010.3.3.

1010.3.1 Capacity. Each turnstile or similar device shall be credited with a capacity based on not more than a 50-person *occupant load* where all of the following provisions are met:

1. Each device shall turn free in the direction of egress travel when primary power is lost and on the manual release by an employee in the area.
2. Such devices are not given credit for more than 50 percent of the required egress capacity or width.
3. Each device is not more than 39 inches (991 mm) high.
4. Each device has not less than $16^1/_2$ inches (419 mm) clear width at and below a height of 39 inches (991 mm) and not less than 22 inches (559 mm) clear width at heights above 39 inches (991 mm).

1010.3.1.1 Clear width. Where located as part of an *accessible route*, turnstiles shall have not less than 36 inches (914 mm) clear width at and below a height of 34 inches (864 mm), not less than 32 inches (813 mm) clear width between 34 inches (864 mm) and 80 inches (2032 mm) and shall consist of a mechanism other than a revolving device.

1010.3.2 Security access turnstiles. Security access turnstiles that inhibit travel in the direction of egress utilizing a physical barrier shall be permitted to be considered as a component of the *means of egress*, provided that all of the following criteria are met:

1. The *building* is protected throughout by an *automatic sprinkler system* in accordance with Section 903.3.1.1.
2. Each security access turnstile lane configuration has a minimum clear passage width of 22 inches (559 mm).

INTERNATIONAL CODE COUNCIL®
Copyright © 2019 ICC & NYSDOS. ALL RIGHTS RESERVED. Accessed by Lauren Gualdino (lgualdino@briarcliffmanor.org), (-) Order Number #100880972 on May 08, 2020 07:05 AM (PDT) pursuant to License Agreement with ICC & NYSDOS. No further reproduction, no

100880972

3. Any security access turnstile lane configuration providing a clear passage width of less than 32 inches (810 mm) shall be credited with a maximum egress capacity of 50 persons.
4. Any security access turnstile lane configuration providing a clear passage width of 32 inches (810 mm) or more shall be credited with a maximum egress capacity as calculated in accordance with Section 1005.
5. Each secured physical barrier shall automatically retract or swing to an unobstructed open position in the direction of egress, under each of the following conditions:
    5.1. Upon loss of power to the turnstile or any part of the access control system that secures the physical barrier.
    5.2. Upon actuation of a clearly identified manual release device with ready access that results in direct interruption of power to each secured physical barrier, after which such barriers remain in the open position for not less than 30 seconds. The manual release device shall be positioned at one of the following locations:
        5.2.1. On the egress side of each security access turnstile lane.
        5.2.2. At an *approved* location where it can be actuated by an employee assigned to the area at all times that the building is occupied.
    5.3. Upon actuation of the building *fire alarm system*, if provided, after which the physical barrier remains in the open position until the fire alarm system is manually reset.

        Exception: Actuation of a manual fire alarm box.
    5.4. Upon actuation of the building *automatic sprinkler* or *fire detection system*, after which the physical barrier remains in the open position until the *fire alarm system* is manually reset.

1010.3.3 High turnstile. Turnstiles more than 39 inches (991 mm) high shall meet the requirements for revolving doors or the requirements of Section 1010.3.2 for security access turnstiles.

1010.3.4 Additional door. Where serving an *occupant load* greater than 300, each turnstile that is not portable shall have a side-hinged swinging door that conforms to Section 1010.1 within 50 feet (15 240 mm).

Exception: A side-hinged swinging door is not required at security access turnstiles that comply with Section 1010.3.2.

SECTION 1011
STAIRWAYS

1011.1 General. *Stairways* serving occupied portions of a building shall comply with the requirements of Sections 1011.2 through 1011.13. *Alternating tread devices* shall comply with Section 1011.14. Ship's ladders shall comply with Section 1011.15. Ladders shall comply with Section 1011.16.

Exception: Within rooms or spaces used for assembly purposes, stepped aisles shall comply with Section 1029.

1011.2 Width and capacity. The required capacity of *stairways* shall be determined as specified in Section 1005.1, but the minimum width shall be not less than 44 inches (1118 mm). See Section 1009.3 for accessible *means of egress stairways*.

Exceptions:

1. *Stairways* serving an *occupant load* of less than 50 shall have a width of not less than 36 inches (914 mm).
2. *Spiral stairways* as provided for in Section 1011.10.
3. Where an incline platform lift or stairway chairlift is installed on *stairways* serving occupancies in Group R-3, or within *dwelling units* in occupancies in Group R-2, a clear passage width not less than 20 inches (508 mm) shall be provided. Where the seat and platform can be folded when not in use, the distance shall be measured from the folded position.

1011.3 Headroom. *Stairways* shall have a headroom clearance of not less than 80 inches (2032 mm) measured vertically from a line connecting the edge of the *nosings*. Such headroom shall be continuous above the *stairway* to the point where the line intersects the landing below, one tread depth beyond the bottom riser. The minimum clearance shall be maintained the full width of the *stairway* and landing.

Exceptions:

1. *Spiral stairways* complying with Section 1011.10 are permitted a 78-inch (1981 mm) headroom clearance.
2. In Group R-3 occupancies; within *dwelling units* in Group R-2 occupancies; and in Group U occupancies that are accessory to a Group R-3 occupancy or accessory to individual *dwelling units* in Group R-2 occupancies; where the *nosings* of treads at the side of a *flight* extend under the edge of a floor opening through which the *stair* passes, the floor opening shall be allowed to project horizontally into the required headroom not more than $4^3/_4$ inches (121 mm).

1011.4 Walkline. The walkline across *winder* treads shall be concentric to the direction of travel through the turn and located 12 inches (305 mm) from the side where the *winders* are narrower. The 12-inch (305 mm) dimension shall be measured from the widest point of the clear *stair* width at the walking surface of the *winder*. Where *winders* are adjacent within the *flight*, the point of the widest clear *stair* width of the adjacent *winders* shall be used.

INTERNATIONAL CODE COUNCIL®
Copyright © 2019 ICC & NYSDOS. ALL RIGHTS RESERVED. Accessed by Lauren Gualdino (lgualdino@briarcliffmanor.org), (-) Order Number #100880972 on May 08, 2020 07:05 AM (PDT) pursuant to License Agreement with ICC & NYSDOS. No further reproduction, no

100880972

1011.5 Stair treads and risers. *Stair* treads and risers shall comply with Sections 1011.5.1 through 1011.5.5.3.

1011.5.1 Dimension reference surfaces. For the purpose of this section, all dimensions are exclusive of carpets, rugs or runners.

1011.5.2 Riser height and tread depth. *Stair* riser heights shall be 7 inches (178 mm) maximum and 4 inches (102 mm) minimum. The riser height shall be measured vertically between the *nosings* of adjacent treads. Rectangular tread depths shall be 11 inches (279 mm) minimum measured horizontally between the vertical planes of the foremost projection of adjacent treads and at a right angle to the tread's *nosing*. *Winder* treads shall have a minimum tread depth of 11 inches (279 mm) between the vertical planes of the foremost projection of adjacent treads at the intersections with the walkline and a minimum tread depth of 10 inches (254 mm) within the clear width of the *stair*.

Exceptions:

1. *Spiral stairways* in accordance with Section 1011.10.
2. *Stairways* connecting stepped *aisles* to cross *aisles* or concourses shall be permitted to use the riser/tread dimension in Section 1029.14.2.
3. In Group R-3 occupancies; within *dwelling units* in Group R-2 occupancies; and in Group U occupancies that are accessory to a Group R-3 occupancy or accessory to individual *dwelling units* in Group R-2 occupancies; the maximum riser height shall be $7^3/_4$ inches (197 mm); the minimum tread depth shall be 10 inches (254 mm); the minimum *winder* tread depth at the walkline shall be 10 inches (254 mm); and the minimum *winder* tread depth shall be 6 inches (152 mm). A *nosing* projection not less than $^3/_4$ inch (19.1 mm) but not more than $1^1/_4$ inches (32 mm) shall be provided on *stairways* with solid risers where the tread depth is less than 11 inches (279 mm).
4. See Section 503.1 of the *Existing Building Code of New York State* for the replacement of existing *stairways*.
5. In Group I-3 facilities, *stairways* providing access to guard towers, observation stations and control rooms, not more than 250 square feet (23 m^2) in area, shall be permitted to have a maximum riser height of 8 inches (203 mm) and a minimum tread depth of 9 inches (229 mm).

1011.5.3 Winder treads. *Winder* treads are not permitted in *means of egress stairways* except within a *dwelling unit*.

Exceptions:

1. Curved *stairways* in accordance with Section 1011.9.
2. *Spiral stairways* in accordance with Section 1011.10.

1011.5.4 Dimensional uniformity. *Stair* treads and risers shall be of uniform size and shape. The tolerance between the largest and smallest riser height or between the largest and smallest tread depth shall not exceed $^3/_8$ inch (9.5 mm) in any *flight* of *stairs*. The greatest *winder* tread depth at the walkline within any *flight* of *stairs* shall not exceed the smallest by more than $^3/_8$ inch (9.5 mm).

Exceptions:

1. *Stairways* connecting stepped *aisles* to cross *aisles* or concourses shall be permitted to comply with the dimensional nonuniformity in Section 1029.14.2.
2. Consistently shaped *winders*, complying with Section 1011.5, differing from rectangular treads in the same *flight* of *stairs*.
3. Nonuniform riser dimension complying with Section 1011.5.4.1.

1011.5.4.1 Nonuniform height risers. Where the bottom or top riser adjoins a sloping *public way*, walkway or driveway having an established grade and serving as a landing, the bottom or top riser is permitted to be reduced along the slope to less than 4 inches (102 mm) in height, with the variation in height of the bottom or top riser not to exceed one unit vertical in 12 units horizontal (8-percent slope) of *stair* width. The *nosings* or leading edges of treads at such nonuniform height risers shall have a distinctive marking stripe, different from any other *nosing* marking provided on the *stair flight*. The distinctive marking stripe shall be visible in descent of the *stair* and shall have a slip-resistant surface. Marking stripes shall have a width of not less than 1 inch (25 mm) but not more than 2 inches (51 mm).

1011.5.5 Nosing and riser profile. *Nosings* shall have a curvature or bevel of not less than $^1/_{16}$ inch (1.6 mm) but not more than $^9/_{16}$ inch (14.3 mm) from the foremost projection of the tread. Risers shall be solid and vertical or sloped under the tread above from the underside of the *nosing* above at an angle not more than 30 degrees (0.52 rad) from the vertical.

1011.5.5.1 Nosing projection size. The leading edge (*nosings*) of treads shall project not more than $1^1/_4$ inches (32 mm) beyond the tread below.

1011.5.5.2 Nosing projection uniformity. *Nosing* projections of the leading edges shall be of uniform size, including the projections of the *nosing's* leading edge of the floor at the top of a *flight*.

1011.5.5.3 Solid risers. Risers shall be solid.

Exceptions:

1. Solid risers are not required for *stairways* that are not required to comply with Section 1009.3, provided that the opening between treads does not permit the passage of a sphere with a diameter of 4 inches (102 mm).
2. Solid risers are not required for occupancies in Group I-3 or in Group F, H and S occupancies other than areas accessible to the public. The size of the opening in the riser is not restricted.
3. Solid risers are not required for *spiral stairways* constructed in accordance with Section 1011.10.

INTERNATIONAL CODE COUNCIL®
Copyright © 2019 ICC & NYSDOS. ALL RIGHTS RESERVED. Accessed by Lauren Gualdino (lgualdino@briarcliffmanor.org), (-) Order Number #100880972 on May 08, 2020 07:05 AM (PDT) pursuant to License Agreement with ICC & NYSDOS. No further reproduction, no

100880972

1011.6 Stairway landings. There shall be a floor or landing at the top and bottom of each *stairway*. The width of landings, measured perpendicularly to the direction of travel, shall be not less than the width of *stairways* served. Every landing shall have a minimum depth, measured parallel to the direction of travel, equal to the width of the *stairway* or 48 inches (1219 mm), whichever is less. Doors opening onto a landing shall not reduce the landing to less than one-half the required width. When fully open, the door shall not project more than 7 inches (178 mm) into a landing. Where *wheelchair spaces* are required on the *stairway* landing in accordance with Section 1009.6.3, the *wheelchair space* shall not be located in the required width of the landing and doors shall not swing over the *wheelchair spaces*.

Exception: Where *stairways* connect stepped *aisles* to cross *aisles* or concourses, *stairway* landings are not required at the transition between *stairways* and stepped *aisles* constructed in accordance with Section 1029.

1011.7 Stairway construction. *Stairways* shall be built of materials consistent with the types permitted for the type of construction of the building, except that wood *handrails* shall be permitted for all types of construction.

1011.7.1 Stairway walking surface. The walking surface of treads and landings of a *stairway* shall not be sloped steeper than one unit vertical in 48 units horizontal (2-percent slope) in any direction. *Stairway* treads and landings shall have a solid surface. Finish floor surfaces shall be securely attached.

Exceptions:

1. Openings in *stair* walking surfaces shall be a size that does not permit the passage of $^1/_2$-inch-diameter (12.7 mm) sphere. Elongated openings shall be placed so that the long dimension is perpendicular to the direction of travel.
2. In Group F, H and S occupancies, other than areas of parking structures accessible to the public, openings in treads and landings shall not be prohibited provided that a sphere with a diameter of $1^1/_8$ inches (29 mm) cannot pass through the opening.

1011.7.2 Outdoor conditions. Outdoor *stairways* and outdoor approaches to *stairways* shall be designed so that water will not accumulate on walking surfaces.

1011.7.3 Enclosures under interior stairways. The walls and soffits within enclosed usable spaces under enclosed and unenclosed stairways shall be protected by 1-hour fire-resistance-rated construction or the fire-resistance rating of the stairway enclosure, whichever is greater. Access to the enclosed space shall not be directly from within the stairway enclosure.

Exception: Spaces under *stairways* serving and contained within a single residential dwelling unit in Group R-2 or R-3 shall be permitted to be protected on the enclosed side with $^1/_2$-inch (12.7 mm) gypsum board.

1011.7.4 Enclosures under exterior stairways. There shall not be enclosed usable space under *exterior exit stairways* unless the space is completely enclosed in 1-hour fire-resistance-rated construction. The open space under *exterior stairways* shall not be used for any purpose.

1011.8 Vertical rise. A flight of stairs shall not have a vertical rise greater than 12 feet (3658 mm) between floor levels or landings.

Exception: Spiral stairways used as a means of egress from technical production areas.

1011.9 Curved stairways. Curved stairways with winder treads shall have treads and risers in accordance with Section 1011.5 and the smallest radius shall be not less than twice the minimum width or required capacity of the stairway.

Exception: The radius restriction shall not apply to curved stairways in Group R-3 and within individual dwelling units in Group R-2.

1011.10 Spiral stairways. *Spiral stairways* are permitted to be used as a component in the *means of egress* only within *dwelling units* or from a space not more than 250 square feet (23 m^2) in area and serving not more than five occupants, or from *technical production areas* in accordance with Section 410.5.

A *spiral stairway* shall have a $6^3/_4$-inch (171 mm) minimum clear tread depth at a point 12 inches (305 mm) from the narrow edge. The risers shall be sufficient to provide a headroom of 78 inches (1981 mm) minimum, but riser height shall not be more than $9^1/_2$ inches (241 mm). The minimum *stairway* clear width at and below the *handrail* shall be 26 inches (660 mm).

1011.11 Handrails. *Flights of stairways* shall have *handrails* on each side and shall comply with Section 1014. Where glass is used to provide the *handrail*, the *handrail* shall comply with Section 2407.

Exceptions:

1. *Flights of stairways* within dwelling units and *flights of spiral stairways* are permitted to have a *handrail* on one side only.
2. Decks, patios and walkways that have a single change in elevation where the landing depth on each side of the change of elevation is greater than what is required for a landing do not require *handrails*.
3. In Group R-3 occupancies, a change in elevation consisting of a single riser at an entrance or egress door does not require *handrails*.
4. Changes in room elevations of three or fewer risers within dwelling units and sleeping units in Group R-2 and R-3 do not require *handrails*.

1011.12 Stairway to roof. In buildings four or more stories above *grade plane*, one *stairway* shall extend to the roof surface unless the roof has a slope steeper than four units vertical in 12 units horizontal (33-percent slope).

Exception: Other than where required by Section 1011.12.1, in buildings without an occupied roof access to the roof from the top story shall be permitted to be by an *alternating tread device*, a ship's ladder or a permanent ladder.

INTERNATIONAL CODE COUNCIL®
Copyright © 2019 ICC & NYSDOS. ALL RIGHTS RESERVED. Accessed by Lauren Gualdino (lgualdino@briarcliffmanor.org), (-) Order Number #100880972 on May 08, 2020 07:05 AM (PDT) pursuant to License Agreement with ICC & NYSDOS. No further reproduction, no

100880972

1011.12.1 Stairway to elevator equipment. Roofs and penthouses containing elevator equipment that must be accessed for maintenance are required to be accessed by a stairway.

1011.12.2 Roof access. Where a stairway is provided to a roof, access to the roof shall be provided through a penthouse complying with Section 1510.2.

Exception: In buildings without an occupied roof, access to the roof shall be permitted to be a roof hatch or trap door not less than 16 square feet (1.5 m^2) in area and having a minimum dimension of 2 feet (610 mm).

1011.13 Guards. Guards shall be provided along stairways and landings where required by Section 1015 and shall be constructed in accordance with Section 1015. Where the roof hatch opening providing the required access is located within 10 feet (3049 mm) of the roof edge, such roof access or roof edge shall be protected by guards installed in accordance with Section 1015.

1011.14 Alternating tread devices. *Alternating tread devices* are limited to an element of a *means of egress* in buildings of Groups F, H and S from a mezzanine not more than 250 square feet (23 m^2) in area and that serves not more than five occupants; in buildings of Group I-3 from a guard tower, observation station or control room not more than 250 square feet (23 m^2) in area and for access to unoccupied roofs. *Alternating tread devices* used as a means of egress shall not have a rise greater than 20 feet (6096 mm) between floor levels or landings.

1011.14.1 Handrails of alternating tread devices. Handrails shall be provided on both sides of alternating tread devices and shall comply with Section 1014.

1011.14.2 Treads of alternating tread devices. *Alternating tread devices* shall have a minimum tread depth of 5 inches (127 mm), a minimum projected tread depth of $8^1/_2$ inches (216 mm), a minimum tread width of 7 inches (178 mm) and a maximum riser height of $9^1/_2$ inches (241 mm). The tread depth shall be measured horizontally between the vertical planes of the foremost projections of adjacent treads. The riser height shall be measured vertically between the leading edges of adjacent treads. The riser height and tread depth provided shall result in an angle of ascent from the horizontal of between 50 and 70 degrees (0.87 and 1.22 rad). The initial tread of the device shall begin at the same elevation as the platform, landing or floor surface.

Exception: *Alternating tread devices* used as an element of a *means of egress* in buildings from a mezzanine area not more than 250 square feet (23 m^2) in area that serves not more than five occupants shall have a minimum tread depth of 3 inches (76 mm) with a minimum projected tread depth of $10^1/_2$ inches (267 mm). The rise to the next alternating tread surface shall not exceed 8 inches (203 mm).

1011.15 Ship's ladders. Ship's ladders are permitted to be used in Group I-3 as a component of a *means of egress* to and from control rooms or elevated facility observation stations not more than 250 square feet (23 m^2) with not more than three occupants and for access to unoccupied roofs. The minimum clear width at and below the *handrails* shall be 20 inches (508 mm).

1011.15.1 Handrails of ship's ladders. *Handrails* shall be provided on both sides of ship's ladders.

1011.15.2 Treads of ship's ladders. Ship's ladders shall have a minimum tread depth of 5 inches (127 mm). The tread shall be projected such that the total of the tread depth plus the *nosing* projection is not less than $8^1/_2$ inches (216 mm). The maximum riser height shall be $9^1/_2$ inches (241 mm).

1011.16 Ladders. Permanent ladders shall not serve as a part of the *means of egress* from occupied spaces within a building. Permanent ladders shall be constructed in accordance with Section 306.5 of the *Mechanical Code of New York State.* Permanent ladders shall be permitted to provide access to the following areas:

1. Spaces frequented only by personnel for maintenance, repair or monitoring of equipment.
2. Nonoccupiable spaces accessed only by catwalks, crawl spaces, freight elevators or very narrow passageways.
3. Raised areas used primarily for purposes of security, life safety or fire safety including, but not limited to, observation galleries, prison guard towers, fire towers or lifeguard stands.
4. Elevated levels in Group U not open to the general public.
5. Nonoccupied roofs that are not required to have *stairway* access in accordance with Section 1011.12.1.
6. Where permitted to access equipment and appliances in accordance with Section 306.5 of the *Mechanical Code of New York State*.

SECTION 1012
RAMPS

1012.1 Scope. The provisions of this section shall apply to ramps used as a component of a *means of egress.*

Exceptions:

1. Ramped *aisles* within assembly rooms or spaces shall comply with the provisions in Section 1029.
2. Curb ramps shall comply with ICC A117.1.
3. Vehicle ramps in parking garages for pedestrian *exit access* shall not be required to comply with Sections 1012.3 through 1012.10 where they are not an *accessible route* serving *accessible* parking spaces, other required *accessible* elements or part of an accessible *means of egress*.

1012.2 Slope. *Ramps* used as part of a *means of egress* shall have a running slope not steeper than one unit vertical in 12 units horizontal (8-percent slope). The slope of other pedestrian *ramps* shall not be steeper than one unit vertical in eight units horizontal (12.5-percent slope).

INTERNATIONAL CODE COUNCIL®
Copyright © 2019 ICC & NYSDOS. ALL RIGHTS RESERVED. Accessed by Lauren Gualdino (lgualdino@briarcliffmanor.org), (-) Order Number #100880972 on May 08, 2020 07:05 AM (PDT) pursuant to License Agreement with ICC & NYSDOS. No further reproduction, no

100880972

1012.3 Cross slope. The slope measured perpendicular to the direction of travel of a *ramp* shall not be steeper than one unit vertical in 48 units horizontal (2-percent slope).

1012.4 Vertical rise. The rise for any *ramp* run shall be 30 inches (762 mm) maximum.

1012.5 Minimum dimensions. The minimum dimensions of *means of egress ramps* shall comply with Sections 1012.5.1 through 1012.5.3.

1012.5.1 Width and capacity. The minimum width and required capacity of a *means of egress ramp* shall be not less than that required for *corridors* by Section 1020.2. The clear width of a *ramp* between *handrails*, if provided, or other permissible projections shall be 36 inches (914 mm) minimum.

1012.5.2 Headroom. The minimum headroom in all parts of the *means of egress ramp* shall be not less than 80 inches (2032 mm) above the finished floor of the ramp run and any intermediate landings. The minimum clearance shall be maintained for the full width of the *ramp* and landing.

1012.5.3 Restrictions. *Means of egress ramps* shall not reduce in width in the direction of egress travel. Projections into the required *ramp* and landing width are prohibited. Doors opening onto a landing shall not reduce the clear width to less than 42 inches (1067 mm).

1012.6 Landings. *Ramps* shall have landings at the bottom and top of each *ramp*, points of turning, entrance, exits and at doors. Landings shall comply with Sections 1012.6.1 through 1012.6.5.

1012.6.1 Slope. Landings shall have a slope not steeper than one unit vertical in 48 units horizontal (2-percent slope) in any direction. Changes in level are not permitted.

1012.6.2 Width. The landing width shall be not less than the width of the widest *ramp* run adjoining the landing.

1012.6.3 Length. The landing length shall be 60 inches (1525 mm) minimum.

Exceptions:

1. In Group R-2 and R-3 individual *dwelling* and *sleeping units* that are not required to be *Accessible units*, *Type A units* or *Type B units* in accordance with Section 1107, landings are permitted to be 36 inches (914 mm) minimum.
2. Where the *ramp* is not a part of an *accessible route*, the length of the landing shall not be required to be more than 48 inches (1220 mm) in the direction of travel.

1012.6.4 Change in direction. Where changes in direction of travel occur at landings provided between *ramp* runs, the landing shall be 60 inches by 60 inches (1524 mm by 1524 mm) minimum.

Exception: In Group R-2 and R-3 individual *dwelling* or *sleeping units* that are not required to be *Accessible units*, *Type A units* or *Type B units* in accordance with Section 1107, landings are permitted to be 36 inches by 36 inches (914 mm by 914 mm) minimum.

1012.6.5 Doorways. Where doorways are located adjacent to a *ramp* landing, maneuvering clearances required by *ICC A117.1* are permitted to overlap the required landing area.

1012.7 Ramp construction. *Ramps* shall be built of materials consistent with the types permitted for the type of construction of the building, except that wood *handrails* shall be permitted for all types of construction.

1012.7.1 Ramp surface. The surface of *ramps* shall be of slip-resistant materials that are securely attached.

1012.7.2 Outdoor conditions. Outdoor *ramps* and outdoor approaches to *ramps* shall be designed so that water will not accumulate on walking surfaces.

1012.8 Handrails. *Ramps* with a rise greater than 6 inches (152 mm) shall have *handrails* on both sides. *Handrails* shall comply with Section 1014.

1012.9 Guards. *Guards* shall be provided where required by Section 1015 and shall be constructed in accordance with Section 1015.

1012.10 Edge protection. Edge protection complying with Section 1012.10.1 or 1012.10.2 shall be provided on each side of *ramp* runs and at each side of *ramp* landings.

Exceptions:

1. Edge protection is not required on *ramps* that are not required to have *handrails*, provided they have flared sides that comply with the *ICC A117.1* curb ramp provisions.
2. Edge protection is not required on the sides of *ramp* landings serving an adjoining *ramp* run or *stairway*.
3. Edge protection is not required on the sides of *ramp* landings having a vertical dropoff of not more than $^1/_2$ inch (12.7 mm) within 10 inches (254 mm) horizontally of the required landing area.

1012.10.1 Curb, rail, wall or barrier. A curb, rail, wall or barrier shall be provided to serve as edge protection. A curb shall be not less than 4 inches (102 mm) in height. Barriers shall be constructed so that the barrier prevents the passage of a 4-inch-diameter (102 mm) sphere, where any portion of the sphere is within 4 inches (102 mm) of the floor or ground surface.

1012.10.2 Extended floor or ground surface. The floor or ground surface of the *ramp* run or landing shall extend 12 inches (305 mm) minimum beyond the inside face of a *handrail* complying with Section 1014.

SECTION 1013
EXIT SIGNS

1013.1 Where required. *Exits* and *exit access* doors shall be marked by an *approved* exit sign readily visible from any direction of egress travel. The path of egress travel to *exits* and within *exits* shall be marked by readily visible exit signs to clearly indicate the direction of egress travel in cases where the *exit* or the path of egress travel is not immediately visible to the occupants. Intervening *means of egress* doors within *exits* shall be marked by exit signs. Exit sign placement shall be such that any point in an *exit access corridor* or

INTERNATIONAL CODE COUNCIL®
Copyright © 2019 ICC & NYSDOS. ALL RIGHTS RESERVED. Accessed by Lauren Gualdino (lgualdino@briarcliffmanor.org), (-) Order Number #100880972 on May 08, 2020 07:05 AM (PDT) pursuant to License Agreement with ICC & NYSDOS. No further reproduction, no

100880972

exit passageway is within 100 feet (30 480 mm) or the *listed* viewing distance of the sign, whichever is less, from the nearest visible exit sign.

Exceptions:

1. Exit signs are not required in rooms or areas that require only one *exit* or *exit access*.
2. Main exterior *exit* doors or gates that are obviously and clearly identifiable as *exits* need not have exit signs where *approved* by the *building official*.
3. Exit signs are not required in occupancies in Group U and individual *sleeping units* or *dwelling units* in Group R-1, R-2 or R-3.
4. Exit signs are not required in dayrooms, sleeping rooms or dormitories in occupancies in Group I-3.
5. In occupancies in Groups A-4 and A-5, exit signs are not required on the seating side of vomitories or openings into seating areas where exit signs are provided in the concourse that are readily apparent from the vomitories. Egress lighting is provided to identify each vomitory or opening within the seating area in an emergency.

1013.2 Low-level exit signs in Group R-1. Where exit signs are required in Group R-1 occupancies by Section 1013.1, additional low-level exit signs shall be provided in all areas serving guest rooms in Group R-1 occupancies and shall comply with Section 1013.5.

The bottom of the sign shall be not less than 10 inches (254 mm) nor more than 18 inches (455 mm) above the floor level. The sign shall be flush mounted to the door or wall. Where mounted on the wall, the edge of the sign shall be within 4 inches (102 mm) of the door frame on the latch side.

1013.3 Illumination. Exit signs shall be internally or externally illuminated.

Exception: Tactile signs required by Section 1013.4 need not be provided with illumination.

1013.4 Raised character and braille exit signs. A sign stating EXIT in visual characters, raised characters and braille and complying with *ICC A117.1* shall be provided adjacent to each door to an *area of refuge*, providing direct access to a stairway, an exterior area for assisted rescue, an *exit stairway* or *ramp*, an *exit passageway* and the *exit discharge*.

1013.5 Internally illuminated exit signs. Electrically powered, *self-luminous* and *photoluminescent* exit signs shall be *listed* and *labeled* in accordance with UL 924 and shall be installed in accordance with the manufacturer's instructions and Chapter 27. Exit signs shall be illuminated at all times.

1013.6 Externally illuminated exit signs. Externally illuminated exit signs shall comply with Sections 1013.6.1 through 1013.6.3.

1013.6.1 Graphics. Every exit sign and directional exit sign shall have plainly legible letters not less than 6 inches (152 mm) high with the principal strokes of the letters not less than $^3/_4$ inch (19.1 mm) wide. The word "EXIT" shall have letters having a width not less than 2 inches (51 mm) wide, except the letter "I," and the minimum spacing between letters shall be not less than $^3/_8$ inch (9.5 mm). Signs larger than the minimum established in this section shall have letter widths, strokes and spacing in proportion to their height.

The word "EXIT" shall be in high contrast with the background and shall be clearly discernible when the means of exit sign illumination is or is not energized. If a chevron directional indicator is provided as part of the exit sign, the construction shall be such that the direction of the chevron directional indicator cannot be readily changed.

1013.6.2 Exit sign illumination. The face of an exit sign illuminated from an external source shall have an intensity of not less than 5 footcandles (54 lux).

1013.6.3 Power source. Exit signs shall be illuminated at all times. To ensure continued illumination for a duration of not less than 90 minutes in case of primary power loss, the sign illumination means shall be connected to an emergency power system provided from storage batteries, unit equipment or an on-site generator. The installation of the emergency power system shall be in accordance with Chapter 27. Group I-2, Condition 2 exit sign illumination shall not be provided by unit equipment batteries only.

Exception: *Approved* exit sign illumination types that provide continuous illumination independent of external power sources for a duration of not less than 90 minutes, in case of primary power loss, are not required to be connected to an emergency electrical system.

SECTION 1014
HANDRAILS

1014.1 Where required. *Handrails* serving *flights of stairways*, *ramps*, stepped *aisles* and ramped *aisles* shall be adequate in strength and attachment in accordance with Section 1607.8. *Handrails* required for *flights of stairways* by Section 1011.11 shall comply with Sections 1014.2 through 1014.9. *Handrails* required for *ramps* by Section 1012.8 shall comply with Sections 1014.2 through 1014.8. *Handrails* for stepped *aisles* and ramped *aisles* required by Section 1029.16 shall comply with Sections 1014.2 through 1014.8.

1014.2 Height. *Handrail* height, measured above *stair* tread *nosings*, or finish surface of *ramp* slope, shall be uniform, not less than 34 inches (864 mm) and not more than 38 inches (965 mm). *Handrail* height of *alternating tread devices* and ship's ladders, measured above tread *nosings*, shall be uniform, not less than 30 inches (762 mm) and not more than 34 inches (864 mm).

Exceptions:

1. Where handrail fittings or bendings are used to provide continuous transition between *flights*, the fittings or bendings shall be permitted to exceed the maximum height.
2. In Group R-3 occupancies; within *dwelling units* in Group R-2 occupancies; and in Group U occupancies that are associated with a Group R-3 occupancy or associated with individual *dwelling units* in Group R-2 occupancies; where handrail fittings or bendings are used to provide continuous transition between *flights*, transition at *winder* treads, transition from *handrail* to

INTERNATIONAL CODE COUNCIL®
Copyright © 2019 ICC & NYSDOS. ALL RIGHTS RESERVED. Accessed by Lauren Gualdino (lgualdino@briarcliffmanor.org), (-) Order Number #100880972 on May 08, 2020 07:05 AM (PDT) pursuant to License Agreement with ICC & NYSDOS. No further reproduction, no

100880972

guard, or where used at the start of a *flight*, the *handrail* height at the fittings or bendings shall be permitted to exceed the maximum height.

3. *Handrails* on top of a guard where permitted along stepped aisles and ramped aisles in accordance with Section 1029.16.

1014.3 Handrail graspability. Required *handrails* shall comply with Section 1014.3.1 or shall provide equivalent graspability.

Exception: In Group R-3 occupancies; within *dwelling units* in Group R-2 occupancies; and in Group U occupancies that are accessory to a Group R-3 occupancy or accessory to individual *dwelling units* in Group R-2 occupancies; *handrails* shall be Type I in accordance with Section 1014.3.1, Type II in accordance with Section 1014.3.2 or shall provide equivalent graspability.

1014.3.1 Type I. *Handrails* with a circular cross section shall have an outside diameter of not less than $1^1/_4$ inches (32 mm) and not greater than 2 inches (51 mm). Where the *handrail* is not circular, it shall have a perimeter dimension of not less than 4 inches (102 mm) and not greater than $6^1/_4$ inches (160 mm) with a maximum cross-sectional dimension of $2^1/_4$ inches (57 mm) and minimum cross-sectional dimension of 1 inch (25 mm). Edges shall have a minimum radius of 0.01 inch (0.25 mm).

1014.3.2 Type II. *Handrails* with a perimeter greater than $6^1/_4$ inches (160 mm) shall provide a graspable finger recess area on both sides of the profile. The finger recess shall begin within a distance of $^3/_4$ inch (19 mm) measured vertically from the tallest portion of the profile and achieve a depth of not less than $^5/_{16}$ inch (8 mm) within $^7/_8$ inch (22 mm) below the widest portion of the profile. This required depth shall continue for not less than $^3/_8$ inch (10 mm) to a level that is not less than $1^3/_4$ inches (45 mm) below the tallest portion of the profile. The width of the *handrail* above the recess shall be not less than $1^1/_4$ inches (32 mm) to not greater than $2^3/_4$ inches (70 mm). Edges shall have a minimum radius of 0.01 inch (0.25 mm).

1014.4 Continuity. Handrail gripping surfaces shall be continuous, without interruption by newel posts or other obstructions.

Exceptions:

1. *Handrails* within *dwelling units* are permitted to be interrupted by a newel post at a turn or landing.
2. Within a *dwelling unit*, the use of a volute, turnout, starting easing or starting newel is allowed over the lowest tread.
3. Handrail brackets or balusters attached to the bottom surface of the *handrail* that do not project horizontally beyond the sides of the *handrail* within $1^1/_2$ inches (38 mm) of the bottom of the *handrail* shall not be considered obstructions. For each $^1/_2$ inch (12.7 mm) of additional handrail perimeter dimension above 4 inches (102 mm), the vertical clearance dimension of $1^1/_2$ inches (38 mm) shall be permitted to be reduced by $^1/_8$ inch (3.2 mm).
4. Where *handrails* are provided along walking surfaces with slopes not steeper than 1:20, the bottoms of the handrail gripping surfaces shall be permitted to be obstructed along their entire length where they are integral to crash rails or bumper guards.
5. *Handrails* serving stepped *aisles* or ramped *aisles* are permitted to be discontinuous in accordance with Section 1029.16.1.

1014.5 Fittings. *Handrails* shall not rotate within their fittings.

1014.6 Handrail extensions. *Handrails* shall return to a wall, *guard* or the walking surface or shall be continuous to the handrail of an adjacent *flight* of *stairs* or *ramp* run. Where *handrails* are not continuous between *flights*, the *handrails* shall extend horizontally not less than 12 inches (305 mm) beyond the top riser and continue to slope for the depth of one tread beyond the bottom riser. At *ramps* where *handrails* are not continuous between runs, the *handrails* shall extend horizontally above the landing 12 inches (305 mm) minimum beyond the top and bottom of *ramp* runs. The extensions of *handrails* shall be in the same direction of the *flights* of *stairs* at *stairways* and the *ramp* runs at *ramps*.

Exceptions:

1. *Handrails* within a *dwelling unit* that is not required to be *accessible* need extend only from the top riser to the bottom riser.
2. *Handrails* serving aisles in rooms or spaces used for assembly purposes are permitted to comply with the handrail extensions in accordance with Section 1029.16.
3. *Handrails* for *alternating tread devices* and ship's ladders are permitted to terminate at a location vertically above the top and bottom risers. *Handrails* for *alternating tread devices* are not required to be continuous between *flights* or to extend beyond the top or bottom risers.

1014.7 Clearance. Clear space between a handrail and a wall or other surface shall be not less than $1^1/_2$ inches (38 mm). A handrail and a wall or other surface adjacent to the *handrail* shall be free of any sharp or abrasive elements.

1014.8 Projections. On *ramps* and on ramped *aisles* that are part of an *accessible route*, the clear width between *handrails* shall be 36 inches (914 mm) minimum. Projections into the required width of *aisles*, *stairways* and *ramps* at each side shall not exceed $4^1/_2$ inches (114 mm) at or below the handrail height. Projections into the required width shall not be limited above the minimum headroom height required in Section 1011.3. Projections due to intermediate *handrails* shall not constitute a reduction in the egress width. Where a pair of intermediate *handrails* are provided within the *stairway* width without a walking surface between the pair of intermediate *handrails* and the distance between the pair of intermediate *handrails* is greater than 6 inches (152 mm), the available egress width shall be reduced by the distance between the closest edges of each such intermediate pair of *handrails* that is greater than 6 inches (152 mm).

INTERNATIONAL CODE COUNCIL®
Copyright © 2019 ICC & NYSDOS. ALL RIGHTS RESERVED. Accessed by Lauren Gualdino (lgualdino@briarcliffmanor.org), (-) Order Number #100880972 on May 08, 2020 07:05 AM (PDT) pursuant to License Agreement with ICC & NYSDOS. No further reproduction, no

100880972

1014.9 Intermediate handrails. *Stairways* shall have intermediate *handrails* located in such a manner that all portions of the *stairway* minimum width or required capacity are within 30 inches (762 mm) of a handrail. On monumental *stairs*, *handrails* shall be located along the most direct path of egress travel.

SECTION 1015
GUARDS

1015.1 General. *Guards* shall comply with the provisions of Sections 1015.2 through 1015.7. Operable windows with sills located more than 72 inches (1829 mm) above finished grade or other surface below shall comply with Section 1015.8.

1015.2 Where required. *Guards* shall be located along open-sided walking surfaces, including *mezzanines*, *equipment platforms*, *aisles*, *stairs*, *ramps* and landings that are located more than 30 inches (762 mm) measured vertically to the floor or grade below at any point within 36 inches (914 mm) horizontally to the edge of the open side. *Guards* shall be adequate in strength and attachment in accordance with Section 1607.8.

Exception: *Guards* are not required for the following locations:

1. On the loading side of loading docks or piers.
2. On the audience side of *stages* and raised *platforms*, including *stairs* leading up to the *stage* and raised *platforms*.
3. On raised *stage* and *platform* floor areas, such as runways, *ramps* and side *stages* used for entertainment or presentations.
4. At vertical openings in the performance area of *stages* and *platforms*.
5. At elevated walking surfaces appurtenant to *stages* and *platforms* for access to and utilization of special lighting or equipment.
6. Along vehicle service pits not accessible to the public.
7. In assembly seating areas at cross aisles in accordance with Section 1029.17.2.

1015.2.1 Glazing. Where glass is used to provide a *guard* or as a portion of the *guard* system, the *guard* shall comply with Section 2407. Where the glazing provided does not meet the strength and attachment requirements of Section 1607.8, complying *guards* shall be located along glazed sides of open-sided walking surfaces.

1015.3 Height. Required *guards* shall be not less than 42 inches (1067 mm) high, measured vertically as follows:

1. From the adjacent walking surfaces.
2. On *stairways* and stepped *aisles*, from the line connecting the leading edges of the tread *nosings*.
3. On *ramps* and ramped *aisles*, from the *ramp* surface at the *guard*.

Exceptions:

1. For occupancies in Group R-3 not more than three stories above grade in height and within individual *dwelling units* in occupancies in Group R-2 not more than three stories above grade in height with separate *means of egress*, required *guards* shall be not less than 36 inches (914 mm) in height measured vertically above the adjacent walking surfaces.
2. For occupancies in Group R-3, and within individual *dwelling units* in occupancies in Group R-2, *guards* on the open sides of *stairs* shall have a height not less than 34 inches (864 mm) measured vertically from a line connecting the leading edges of the treads.
3. For occupancies in Group R-3, and within individual *dwelling units* in occupancies in Group R-2, where the top of the *guard* serves as a *handrail* on the open sides of *stairs*, the top of the *guard* shall be not less than 34 inches (864 mm) and not more than 38 inches (965 mm) measured vertically from a line connecting the leading edges of the treads.
4. The *guard* height in assembly seating areas shall comply with Section 1029.17 as applicable.
5. Along *alternating tread devices* and ship's ladders, *guards* where the top rail serves as a *handrail* shall have height not less than 30 inches (762 mm) and not more than 34 inches (864 mm), measured vertically from the leading edge of the device tread *nosing*.
6. In Group F occupancies where *exit access stairways* serve fewer than three stories and such *stairways* are not open to the public, and where the top of the *guard* also serves as a *handrail*, the top of the *guard* shall be not less than 34 inches (864 mm) and not more than 38 inches (965 mm) measured vertically from a line connecting the leading edges of the treads.

1015.4 Opening limitations. Required *guards* shall not have openings that allow passage of a sphere 4 inches (102 mm) in diameter from the walking surface to the required *guard* height.

Exceptions:

1. From a height of 36 inches (914 mm) to 42 inches (1067 mm), *guards* shall not have openings that allow passage of a sphere $4^3/_8$ inches (111 mm) in diameter.
2. The triangular openings at the open sides of a *stair*, formed by the riser, tread and bottom rail shall not allow passage of a sphere 6 inches (152 mm) in diameter.
3. At elevated walking surfaces for access to and use of electrical, mechanical or plumbing systems or equipment, *guards* shall not have openings that allow passage of a sphere 21 inches (533 mm) in diameter.
4. In areas that are not open to the public within occupancies in Group I-3, F, H or S, and for *alternating tread devices* and ship's ladders, *guards* shall not have openings that allow passage of a sphere 21 inches (533 mm) in diameter.
5. In assembly seating areas, *guards* required at the end of aisles in accordance with Section 1029.17.4 shall not have openings that allow passage of a sphere 4 inches (102 mm) in diameter up to a height of 26

INTERNATIONAL CODE COUNCIL®
Copyright © 2019 ICC & NYSDOS. ALL RIGHTS RESERVED. Accessed by Lauren Gualdino (lgualdino@briarcliffmanor.org), (-) Order Number #100880972 on May 08, 2020 07:05 AM (PDT) pursuant to License Agreement with ICC & NYSDOS. No further reproduction, no

100880972

inches (660 mm). From a height of 26 inches (660 mm) to 42 inches (1067 mm) above the adjacent walking surfaces, *guards* shall not have openings that allow passage of a sphere 8 inches (203 mm) in diameter.

6. Within individual *dwelling units* and *sleeping units* in Group R-2 and R-3 occupancies, *guards* on the open sides of *stairs* shall not have openings that allow passage of a sphere $4^3/_8$ (111 mm) inches in diameter.

1015.5 Screen porches. Porches and decks that are enclosed with insect screening shall be provided with *guards* where the walking surface is located more than 30 inches (762 mm) above the floor or grade below.

1015.6 Mechanical equipment, systems and devices. *Guards* shall be provided where various components that require service are located within 10 feet (3048 mm) of a roof edge or open side of a walking surface and such edge or open side is located more than 30 inches (762 mm) above the floor, roof or grade below. The *guard* shall extend not less than 30 inches (762 mm) beyond each end of such components. The *guard* shall be constructed so as to prevent the passage of a sphere 21 inches (533 mm) in diameter.

Exception: *Guards* are not required where personal fall arrest anchorage connector devices that comply with ANSI/ASSE Z 359.1 are installed.

1015.7 Roof access. *Guards* shall be provided where the roof hatch opening is located within 10 feet (3048 mm) of a roof edge or open side of a walking surface and such edge or open side is located more than 30 inches (762 mm) above the floor, roof or grade below. The *guard* shall be constructed so as to prevent the passage of a sphere 21 inches (533 mm) in diameter.

Exception: *Guards* are not required where personal fall arrest anchorage connector devices that comply with ANSI/ASSE Z 359.1 are installed.

1015.8 Window openings. Windows in Group R-2 and R-3 buildings including *dwelling units*, where the top of the sill of an operable window opening is located less than 36 inches above the finished floor and more than 72 inches (1829 mm) above the finished grade or other surface below on the exterior of the building, shall comply with one of the following:

1. Operable windows where the top of the sill of the opening is located more than 75 feet (22 860 mm) above the finished grade or other surface below and that are provided with window fall prevention devices that comply with ASTM F2006.
2. Operable windows where the openings will not allow a 4-inch-diameter (102 mm) sphere to pass through the opening when the window is in its largest opened position.
3. Operable windows where the openings are provided with window fall prevention devices that comply with ASTM F2090.
4. Operable windows that are provided with window opening control devices that comply with Section 1015.8.1.

1015.8.1 Window opening control devices. Window opening control devices shall comply with ASTM F2090. The window opening control device, after operation to release the control device allowing the window to fully open, shall not reduce the minimum net clear opening area of the window unit to less than the area required by Section 1030.2.

SECTION 1016
EXIT ACCESS

1016.1 General. The *exit access* shall comply with the applicable provisions of Sections 1003 through 1015. *Exit access* arrangement shall comply with Sections 1016 through 1021.

1016.2 Egress through intervening spaces. Egress through intervening spaces shall comply with this section.

1. *Exit access* through an enclosed elevator lobby is permitted. Access to not less than one of the required *exits* shall be provided without travel through the enclosed elevator lobbies required by Section 3006. Where the path of exit access travel passes through an enclosed elevator lobby, the level of protection required for the enclosed elevator lobby is not required to be extended to the *exit* unless direct access to an *exit* is required by other sections of this code.
2. Egress from a room or space shall not pass through adjoining or intervening rooms or areas, except where such adjoining rooms or areas and the area served are accessory to one or the other, are not a Group H occupancy and provide a discernible path of egress travel to an *exit*.

   Exception: *Means of egress* are not prohibited through adjoining or intervening rooms or spaces in a Group H, S or F occupancy where the adjoining or intervening rooms or spaces are the same or a lesser hazard occupancy group.
3. An *exit access* shall not pass through a room that can be locked to prevent egress.
4. *Means of egress* from *dwelling units* or sleeping areas shall not lead through other sleeping areas, toilet rooms or bathrooms.
5. Egress shall not pass through kitchens, storage rooms, closets or spaces used for similar purposes.

   Exceptions:

   1. *Means of egress* are not prohibited through a kitchen area serving adjoining rooms constituting part of the same *dwelling unit* or *sleeping unit.*
   2. *Means of egress* are not prohibited through stockrooms in Group M occupancies where all of the following are met:

      2.1. The stock is of the same hazard classification as that found in the main retail area.

      2.2. Not more than 50 percent of the *exit access* is through the stockroom.

INTERNATIONAL CODE COUNCIL®
Copyright © 2019 ICC & NYSDOS. ALL RIGHTS RESERVED. Accessed by Lauren Gualdino (lgualdino@briarcliffmanor.org), (-) Order Number #100880972 on May 08, 2020 07:05 AM (PDT) pursuant to License Agreement with ICC & NYSDOS. No further reproduction, no

100880972

2.3. The stockroom is not subject to locking from the egress side.

2.4. There is a demarcated, minimum 44-inch-wide (1118 mm) *aisle* defined by full- or partial-height fixed walls or similar construction that will maintain the required width and lead directly from the retail area to the *exit* without obstructions.

1016.2.1 Multiple tenants. Where more than one tenant occupies any one floor of a building or structure, each tenant space, *dwelling unit* and *sleeping unit* shall be provided with access to the required *exits* without passing through adjacent tenant spaces, *dwelling units* and *sleeping units*.

Exception: The *means of egress* from a smaller tenant space shall not be prohibited from passing through a larger adjoining tenant space where such rooms or spaces of the smaller tenant occupy less than 10 percent of the area of the larger tenant space through which they pass; are the same or similar occupancy group; a discernible path of egress travel to an *exit* is provided; and the *means of egress* into the adjoining space is not subject to locking from the egress side. A required *means of egress* serving the larger tenant space shall not pass through the smaller tenant space or spaces.

SECTION 1017
EXIT ACCESS TRAVEL DISTANCE

1017.1 General. Travel distance within the *exit access* portion of the *means of egress* system shall be in accordance with this section.

1017.2 Limitations. *Exit access* travel distance shall not exceed the values given in Table 1017.2.

1017.2.1 Exterior egress balcony increase. *Exit access* travel distances specified in Table 1017.2 shall be increased up to an additional 100 feet (30 480 mm) provided that the last portion of the *exit access* leading to the *exit* occurs on an exterior egress balcony constructed in accordance with Section 1021. The length of such balcony shall be not less than the amount of the increase taken.

1017.2.2 Groups F-1 and S-1 increase. The maximum *exit access* travel distance shall be 400 feet (122 m) in Group F-1 or S-1 occupancies where all of the following conditions are met:

1. The portion of the building classified as Group F-1 or S-1 is limited to one story in height.
2. The minimum height from the finished floor to the bottom of the ceiling or roof slab or deck is 24 feet (7315 mm).
3. The building is equipped throughout with an *automatic sprinkler system* in accordance with Section 903.3.1.1.

1017.3 Measurement. *Exit access* travel distance shall be measured from the most remote point of each room, area or space along the natural and unobstructed path of horizontal and vertical egress travel to the entrance to an *exit*.

Exception: In *open parking garages*, *exit access* travel distance is permitted to be measured to the closest riser of an *exit access stairway* or the closest slope of an *exit access ramp*.

1017.3.1 Exit access stairways and ramps. Travel distance on *exit access stairways* or *ramps* shall be included in the *exit access* travel distance measurement. The measurement along *stairways* shall be made on a plane parallel and tangent to the *stair* tread *nosings* in the center of the *stair* and landings. The measurement along *ramps* shall be made on the walking surface in the center of the *ramp* and landings.

TABLE 1017.2
EXIT ACCESS TRAVEL DISTANCE[a]

OCCUPANCY	WITHOUT SPRINKLER SYSTEM (feet)	WITH SPRINKLER SYSTEM (feet)
A, E, F-1, M, R, S-1	200[c]	250[b]
I-1	Not Permitted	250[b]
B	200	300[c]
F-2, S-2, U	300	400[c]
H-1	Not Permitted	75[d]
H-2	Not Permitted	100[d]
H-3	Not Permitted	150[d]
H-4	Not Permitted	175[d]
H-5	Not Permitted	200[c]
I-2, I-3	Not Permitted	200[c]
I-4	150	200[c]

For SI: 1 foot = 304.8 mm.

a. See the following sections for modifications to exit access travel distance requirements:
Section 402.8: For the distance limitation in malls.
Section 404.9: For the distance limitation through an atrium space.
Section 407.4: For the distance limitation in Group I-2.
Sections 408.6.1 and 408.8.1: For the distance limitations in Group I-3.
Section 411.3: For the distance limitation in special amusement buildings.
Section 412.6: For the distance limitations in aircraft manufacturing facilities.
Section 1006.2.2.2: For the distance limitation in refrigeration machinery rooms.
Section 1006.2.2.3: For the distance limitation in refrigerated rooms and spaces.
Section 1006.3.3: For buildings with one exit.
Section 1017.2.2: For increased distance limitation in Groups F-1 and S-1.
Section 1029.7: For increased limitation in assembly seating.
Section 3103.4: For temporary structures.
Section 3104.9: For pedestrian walkways.

b. Buildings equipped throughout with an automatic sprinkler system in accordance with Section 903.3.1.1 or 903.3.1.2. See Section 903 for occupancies where automatic sprinkler systems are permitted in accordance with Section 903.3.1.2.

c. Buildings equipped throughout with an automatic sprinkler system in accordance with Section 903.3.1.1.

d. Group H occupancies equipped throughout with an automatic sprinkler system in accordance with Section 903.2.5.1.

e. Group R-3 and R-4 buildings equipped throughout with an automatic sprinkler system in accordance with Section 903.3.1.3. See Section 903.2.8 for occupancies where automatic sprinkler systems are permitted in accordance with Section 903.3.1.3.

INTERNATIONAL CODE COUNCIL®
Copyright © 2019 ICC & NYSDOS. ALL RIGHTS RESERVED. Accessed by Lauren Gualdino (lgualdino@briarcliffmanor.org), (-) Order Number #100880972 on May 08, 2020 07:05 AM (PDT) pursuant to License Agreement with ICC & NYSDOS. No further reproduction, no

100880972

SECTION 1018
AISLES

1018.1 General. *Aisles* and *aisle accessways* serving as a portion of the *exit access* in the *means of egress* system shall comply with the requirements of this section. *Aisles* or *aisle accessways* shall be provided from all occupied portions of the *exit access* that contain seats, tables, furnishings, displays and similar fixtures or equipment. The minimum width or required capacity of *aisles* shall be unobstructed.

Exception: Encroachments complying with Section 1005.7.

1018.2 Aisles in assembly spaces. *Aisles and aisle accessways* serving a room or space used for assembly purposes shall comply with Section 1029.

1018.3 Aisles in Groups B and M. In Group B and M occupancies, the minimum clear aisle width shall be determined by Section 1005.1 for the *occupant load* served, but shall be not less than that required for corridors by Section 1020.2.

Exception: Nonpublic *aisles* serving less than 50 people and not required to be *accessible* by Chapter 11 need not exceed 28 inches (711 mm) in width.

1018.4 Aisle accessways in Group M. An *aisle accessway* shall be provided on not less than one side of each element within the *merchandise pad*. The minimum clear width for an *aisle accessway* not required to be *accessible* shall be 30 inches (762 mm). The required clear width of the *aisle accessway* shall be measured perpendicular to the elements and merchandise within the *merchandise pad*. The 30-inch (762 mm) minimum clear width shall be maintained to provide a path to an adjacent *aisle* or *aisle accessway*. The *common path of egress travel* shall not exceed 30 feet (9144 mm) from any point in the *merchandise pad*.

Exception: For areas serving not more than 50 occupants, the *common path of egress travel* shall not exceed 75 feet (22 860 mm).

1018.5 Aisles in other than assembly spaces and Groups B and M. In other than rooms or spaces used for assembly purposes and Group B and M occupancies, the minimum clear *aisle* capacity shall be determined by Section 1005.1 for the occupant load served, but the width shall be not less than that required for corridors by Section 1020.2.

Exception: Nonpublic *aisles* serving less than 50 people and not required to be *accessible* by Chapter 11 need not exceed 28 inches (711 mm) in width.

SECTION 1019
EXIT ACCESS STAIRWAYS AND RAMPS

1019.1 General. *Exit access stairways* and *ramps* serving as an *exit access* component in a *means of egress* system shall comply with the requirements of this section. The number of stories connected by *exit access stairways* and *ramps* shall include *basements*, but not *mezzanines*.

1019.2 All occupancies. *Exit access stairways* and *ramps* that serve floor levels within a single story are not required to be enclosed.

1019.3 Occupancies other than Groups I-2 and I-3. In other than Group I-2 and I-3 occupancies, floor openings containing *exit access stairways* or *ramps* that do not comply with one of the conditions listed in this section shall be enclosed with a shaft enclosure constructed in accordance with Section 713.

1. *Exit access stairways* and *ramps* that serve or atmospherically communicate between only two stories. Such interconnected stories shall not be open to other stories.
2. In Group R-1, R-2 or R-3 occupancies, *exit access stairways* and *ramps* connecting four stories or less serving and contained within an individual *dwelling unit* or *sleeping unit* or *live/work unit.*
3. *Exit access stairways* serving and contained within a Group R-3 congregate residence or a Group R-4 facility are not required to be enclosed.
4. *Exit access stairways* and *ramps* in buildings equipped throughout with an *automatic sprinkler system* in accordance with Section 903.3.1.1, where the area of the vertical opening between stories does not exceed twice the horizontal projected area of the *stairway* or *ramp* and the opening is protected by a draft curtain and closely spaced sprinklers in accordance with NFPA 13. In other than Group B and M occupancies, this provision is limited to openings that do not connect more than four stories.
5. *Exit access stairways* and *ramps* within an *atrium* complying with the provisions of Section 404.
6. *Exit access stairways* and *ramps* in *open parking garages* that serve only the parking garage.
7. *Exit access stairways* and *ramps* serving *smoke-protected* or *open-air assembly seating* complying with the *exit access* travel distance requirements of Section 1029.7.
8. *Exit access stairways* and *ramps* between the balcony, gallery or press box and the main assembly floor in occupancies such as theaters, *places of religious worship*, auditoriums and sports facilities.

1019.4 Group I-2 and I-3 occupancies. In Group I-2 and I-3 occupancies, floor openings between stories containing *exit access stairways* or *ramps* are required to be enclosed with a shaft enclosure constructed in accordance with Section 713.

Exception: In Group I-3 occupancies, *exit access stairways* or *ramps* constructed in accordance with Section 408 are not required to be enclosed.

SECTION 1020
CORRIDORS

1020.1 Construction. *Corridors* shall be fire-resistance rated in accordance with Table 1020.1. The *corridor* walls required to be fire-resistance rated shall comply with Section 708 for *fire partitions*.

Exceptions:

1. A *fire-resistance rating* is not required for *corridors* in an occupancy in Group E where each room that is

INTERNATIONAL CODE COUNCIL®
Copyright © 2019 ICC & NYSDOS. ALL RIGHTS RESERVED. Accessed by Lauren Gualdino (lgualdino@briarcliffmanor.org), (-) Order Number #100880972 on May 08, 2020 07:05 AM (PDT) pursuant to License Agreement with ICC & NYSDOS. No further reproduction, no

100880972

used for instruction has not less than one door opening directly to the exterior and rooms for assembly purposes have not less than one-half of the required *means of egress* doors opening directly to the exterior. Exterior doors specified in this exception are required to be at ground level.

2. A *fire-resistance rating* is not required for *corridors* contained within a *dwelling unit* or *sleeping unit* in an occupancy in Groups I-1 and R.
3. A *fire-resistance rating* is not required for *corridors* in *open parking garages*.
4. A *fire-resistance rating* is not required for *corridors* in an occupancy in Group B that is a space requiring only a single *means of egress* complying with Section 1006.2.
5. *Corridors* adjacent to the *exterior walls* of buildings shall be permitted to have unprotected openings on unrated *exterior walls* where unrated walls are permitted by Table 602 and unprotected openings are permitted by Table 705.8.

1020.1.1 Hoistway opening protection. Elevator hoistway openings shall be protected in accordance with Section 3006.2.1.

TABLE 1020.1
CORRIDOR FIRE-RESISTANCE RATING

OCCUPANCY	OCCUPANT LOAD SERVED BY CORRIDOR	REQUIRED FIRE-RESISTANCE RATING (hours)	
		Without sprinkler system	With sprinkler system[c]
H-1, H-2, H-3	All	Not Permitted	1
H-4, H-5	Greater than 30	Not Permitted	1
A, B, E, F, M, S, U	Greater than 30	1	0
R	Greater than 10	Not Permitted	0.5[c]/1[d]
I-2[a]	All	Not Permitted	0
I-1, I-3	All	Not Permitted	1[b]
I-4	All	1	0

a. For requirements for occupancies in Group I-2, see Sections 407.2 and 407.3.

b. For a reduction in the fire-resistance rating for occupancies in Group I-3, see Section 408.8.

c. Buildings equipped throughout with an automatic sprinkler system in accordance with Section 903.3.1.1 or 903.3.1.2 where allowed.

d. Group R-3 and R-4 buildings equipped throughout with an automatic sprinkler system in accordance with Section 903.3.1.3. See Section 903.2.8 for occupancies where automatic sprinkler systems are permitted in accordance with Section 903.3.1.3.

1020.2 Width and capacity. The required capacity of *corridors* shall be determined as specified in Section 1005.1, but the minimum width shall be not less than that specified in Table 1020.2.

Exception: In Group I-2 occupancies, *corridors* are not required to have a clear width of 96 inches (2438 mm) in areas where there will not be stretcher or bed movement for access to care or as part of the defend-in-place strategy.

TABLE 1020.2
MINIMUM CORRIDOR WIDTH

OCCUPANCY	MINIMUM WIDTH (inches)
Any facility not listed in this table	44
Access to and utilization of mechanical, plumbing or electrical systems or equipment	24
With an occupant load of less than 50	36
Within a *dwelling unit*	36
In Group E with a *corridor* having an occupant load of 100 or more	72
In *corridors* and areas serving stretcher traffic in *ambulatory care facilities*	72
Group I-2 in areas where required for bed movement	96

For SI: 1 inch = 25.4 mm.

1020.3 Obstruction. The minimum width or required capacity of *corridors* shall be unobstructed.

Exception: Encroachments complying with Section 1005.7.

1020.4 Dead ends. Where more than one *exit* or *exit access doorway* is required, the *exit access* shall be arranged such that dead-end *corridors* do not exceed 20 feet (6096 mm) in length.

Exceptions:

1. In in Group I-3, Condition 2, 3 or 4, occupancies, the dead end in a *corridor* shall not exceed 50 feet (15 240 mm).
2. In occupancies in Groups B, E, F, I-1, M, R-1, R-2, S and U, where the building is equipped throughout with an *automatic sprinkler system* in accordance with Section 903.3.1.1, the length of the dead-end *corridors* shall not exceed 50 feet (15 240 mm).
3. A dead-end *corridor* shall not be limited in length where the length of the dead-end *corridor* is less than 2.5 times the least width of the dead-end *corridor*.

1020.5 Air movement in corridors. *Corridors* shall not serve as supply, return, exhaust, relief or ventilation air ducts.

Exceptions:

1. Use of a *corridor* as a source of makeup air for exhaust systems in rooms that open directly onto such *corridors*, including toilet rooms, bathrooms, dressing rooms, smoking lounges and janitor closets, shall be permitted, provided that each such *corridor* is directly supplied with outdoor air at a rate greater than the rate of makeup air taken from the *corridor*.
2. Where located within a *dwelling unit*, the use of *corridors* for conveying return air shall not be prohibited.
3. Where located within tenant spaces of 1,000 square feet (93 m^2) or less in area, utilization of *corridors* for conveying return air is permitted.

INTERNATIONAL CODE COUNCIL®
Copyright © 2019 ICC & NYSDOS. ALL RIGHTS RESERVED. Accessed by Lauren Gualdino (lgualdino@briarcliffmanor.org), (-) Order Number #100880972 on May 08, 2020 07:05 AM (PDT) pursuant to License Agreement with ICC & NYSDOS. No further reproduction, no

100880972

4. Incidental air movement from pressurized rooms within health care facilities, provided that the *corridor* is not the primary source of supply or return to the room.

1020.5.1 Corridor ceiling. Use of the space between the *corridor* ceiling and the floor or roof structure above as a return air plenum is permitted for one or more of the following conditions:

1. The *corridor* is not required to be of *fire-resistance-rated* construction.
2. The *corridor* is separated from the plenum by *fire-resistance-rated* construction.
3. The air-handling system serving the *corridor* is shut down upon activation of the air-handling unit *smoke detectors* required by the *Mechanical Code of New York State*.
4. The air-handling system serving the *corridor* is shut down upon detection of sprinkler water flow where the building is equipped throughout with an *automatic sprinkler system*.
5. The space between the *corridor* ceiling and the floor or roof structure above the *corridor* is used as a component of an approved engineered smoke control system.

1020.6 Corridor continuity. *Fire-resistance-rated corridors* shall be continuous from the point of entry to an *exit*, and shall not be interrupted by intervening rooms. Where the path of egress travel within a *fire-resistance-rated corridor* to the exit includes travel along unenclosed *exit access stairways* or *ramps*, the *fire-resistance rating* shall be continuous for the length of the *stairway* or *ramp* and for the length of the connecting *corridor* on the adjacent floor leading to the *exit*.

Exceptions:

1. Foyers, lobbies or reception rooms constructed as required for *corridors* shall not be construed as intervening rooms.
2. Enclosed elevator lobbies as permitted by Item 1 of Section 1016.2 shall not be construed as intervening rooms.

SECTION 1021
EGRESS BALCONIES

1021.1 General. Balconies used for egress purposes shall conform to the same requirements as *corridors* for minimum width, required capacity, headroom, dead ends and projections.

1021.2 Wall separation. Exterior egress balconies shall be separated from the interior of the building by walls and opening protectives as required for *corridors*.

Exception: Separation is not required where the exterior egress balcony is served by not less than two *stairways* and a dead-end travel condition does not require travel past an unprotected opening to reach a *stairway*.

1021.3 Openness. The long side of an egress balcony shall be not less than 50 percent open, and the open area above the *guards* shall be so distributed as to minimize the accumulation of smoke or toxic gases.

1021.4 Location. Exterior egress balconies shall have a minimum *fire separation distance* of 10 feet (3048 mm) measured at right angles from the exterior edge of the egress balcony to the following:

1. Adjacent *lot lines*.
2. Other portions of the building.
3. Other buildings on the same lot unless the adjacent building *exterior walls* and openings are protected in accordance with Section 705 based on *fire separation distance*.

For the purposes of this section, other portions of the building shall be treated as separate buildings.

SECTION 1022
EXITS

1022.1 General. *Exits* shall comply with Sections 1022 through 1027 and the applicable requirements of Sections 1003 through 1015. An *exit* shall not be used for any purpose that interferes with its function as a *means of egress*. Once a given level of *exit* protection is achieved, such level of protection shall not be reduced until arrival at the *exit discharge*. *Exits* shall be continuous from the point of entry into the *exit* to the *exit discharge*.

1022.2 Exterior exit doors. Buildings or structures used for human occupancy shall have not less than one exterior door that meets the requirements of Section 1010.1.1.

1022.2.1 Detailed requirements. Exterior *exit* doors shall comply with the applicable requirements of Section 1010.1.

1022.2.2 Arrangement. Exterior *exit* doors shall lead directly to the *exit discharge* or the *public way*.

SECTION 1023
INTERIOR EXIT STAIRWAYS AND RAMPS

1023.1 General. *Interior exit stairways* and *ramps* serving as an *exit* component in a *means of egress* system shall comply with the requirements of this section. *Interior exit stairways* and *ramps* shall be enclosed and lead directly to the exterior of the building or shall be extended to the exterior of the building with an *exit passageway* conforming to the requirements of Section 1024, except as permitted in Section 1028.1. An *interior exit stairway* or *ramp* shall not be used for any purpose other than as a *means of egress* and a circulation path.

1023.2 Construction. Enclosures for *interior exit stairways* and *ramps* shall be constructed as *fire barriers* in accordance with Section 707 or *horizontal assemblies* constructed in accordance with Section 711, or both. *Interior exit stairway* and *ramp* enclosures shall have a *fire-resistance rating* of not less than 2 hours where connecting four stories or more and not less than 1 hour where connecting less than four stories.

INTERNATIONAL CODE COUNCIL®
Copyright © 2019 ICC & NYSDOS. ALL RIGHTS RESERVED. Accessed by Lauren Gualdino (lgualdino@briarcliffmanor.org), (-) Order Number #100880972 on May 08, 2020 07:05 AM (PDT) pursuant to License Agreement with ICC & NYSDOS. No further reproduction, no

100880972

The number of stories connected by the *interior exit stairways* or *ramps* shall include any *basements*, but not any *mezzanines*. *Interior exit stairways* and *ramps* shall have a *fire-resistance rating* not less than the floor assembly penetrated, but need not exceed 2 hours.

Exceptions:

1. *Interior exit stairways* and *ramps* in Group I-3 occupancies in accordance with the provisions of Section 408.3.8.
2. *Interior exit stairways* within an *atrium* enclosed in accordance with Section 404.6.

1023.3 Termination. *Interior exit stairways* and *ramps* shall terminate at an *exit discharge* or a *public way*.

Exception: A combination of *interior exit stairways*, *interior exit ramps* and *exit passageways*, constructed in accordance with Sections 1023.2, 1023.3.1 and 1024, respectively, and forming a continuous protected enclosure, shall be permitted to extend an *interior exit stairway* or *ramp* to the *exit discharge* or a *public way*.

1023.3.1 Extension. Where *interior exit stairways* and *ramps* are extended to an *exit discharge* or a *public way* by an *exit passageway*, the *interior exit stairway* and *ramp* shall be separated from the *exit passageway* by a *fire barrier* constructed in accordance with Section 707 or a *horizontal assembly* constructed in accordance with Section 711, or both. The *fire-resistance rating* shall be not less than that required for the *interior exit stairway* and *ramp*. A *fire door* assembly complying with Section 716 shall be installed in the *fire barrier* to provide a *means of egress* from the *interior exit stairway* and *ramp* to the *exit passageway*. Openings in the *fire barrier* other than the *fire door* assembly are prohibited. Penetrations of the *fire barrier* are prohibited.

Exceptions:

1. Penetrations of the *fire barrier* in accordance with Section 1023.5 shall be permitted.
2. Separation between an *interior exit stairway* or *ramp* and the *exit passageway* extension shall not be required where there are no openings into the *exit passageway* extension.
3. Separation between an *interior exit stairway* or *ramp* and the *exit passageway* extension shall not be required where the *interior exit stairway* and the *exit passageway* extension are pressurized in accordance with Section 909.20.5.

1023.4 Openings. *Interior exit stairway* and *ramp* opening protectives shall be in accordance with the requirements of Section 716.

Openings in *interior exit stairways* and *ramps* other than unprotected exterior openings shall be limited to those required for *exit access* to the enclosure from normally occupied spaces and for egress from the enclosure.

Elevators shall not open into *interior exit stairways* and *ramps*.

1023.5 Penetrations. Penetrations into or through *interior exit stairways* and *ramps* are prohibited except for the following:

1. Equipment and ductwork necessary for independent ventilation or pressurization.
2. *Fire protection systems*.
3. Security systems.
4. Two-way communication systems.
5. Electrical raceway for fire department communication systems.
6. Electrical raceway serving the interior *exit stairway* and *ramp* and terminating at a steel box not exceeding 16 square inches (0.010 m^2).

Such penetrations shall be protected in accordance with Section 714. There shall not be penetrations or communication openings, whether protected or not, between adjacent *interior exit stairways* and *ramps*.

Exception: Membrane penetrations shall be permitted on the outside of the *interior exit stairway* and *ramp*. Such penetrations shall be protected in accordance with Section 714.4.2.

1023.6 Ventilation. Equipment and ductwork for *interior exit stairway* and *ramp* ventilation as permitted by Section 1023.5 shall comply with one of the following items:

1. Such equipment and ductwork shall be located exterior to the building and shall be directly connected to the *interior exit stairway* and *ramp* by ductwork enclosed in construction as required for shafts.
2. Where such equipment and ductwork is located within the *interior exit stairway* and *ramp*, the intake air shall be taken directly from the outdoors and the exhaust air shall be discharged directly to the outdoors, or such air shall be conveyed through ducts enclosed in construction as required for shafts.
3. Where located within the building, such equipment and ductwork shall be separated from the remainder of the building, including other mechanical equipment, with construction as required for shafts.

In each case, openings into the *fire-resistance-rated* construction shall be limited to those needed for maintenance and operation and shall be protected by opening protectives in accordance with Section 716 for shaft enclosures.

The *interior exit stairway* and *ramp* ventilation systems shall be independent of other building ventilation systems.

1023.7 Interior exit stairway and ramp exterior walls. *Exterior walls* of the *interior exit stairway* or *ramp* shall comply with the requirements of Section 705 for *exterior walls*. Where nonrated walls or unprotected openings enclose the exterior of the *stairway* or *ramps* and the walls or openings are exposed by other parts of the building at an angle of less than 180 degrees (3.14 rad), the building *exterior walls* within 10 feet (3048 mm) horizontally of a nonrated wall or unprotected opening shall have a *fire-resistance rating* of not less than 1 hour. Openings within such *exterior* walls shall be protected by opening protectives having a *fire protection rating* of not less than $^3/_4$ hour. This construction shall extend

INTERNATIONAL CODE COUNCIL®
Copyright © 2019 ICC & NYSDOS. ALL RIGHTS RESERVED. Accessed by Lauren Gualdino (lgualdino@briarcliffmanor.org), (-) Order Number #100880972 on May 08, 2020 07:05 AM (PDT) pursuant to License Agreement with ICC & NYSDOS. No further reproduction, no

100880972

vertically from the ground to a point 10 feet (3048 mm) above the topmost landing of the *stairway* or *ramp*, or to the roof line, whichever is lower.

1023.8 Discharge identification. An *interior exit stairway* and *ramp* shall not continue below its *level of exit discharge* unless an *approved* barrier is provided at the *level of exit discharge* to prevent persons from unintentionally continuing into levels below. Directional exit signs shall be provided as specified in Section 1013.

1023.9 Stairway identification signs. A sign shall be provided at each floor landing in an *interior exit stairway* and *ramp* connecting more than three stories designating the floor level, the terminus of the top and bottom of the *interior exit stairway* and *ramp* and the identification of the *stairway* or *ramp*. The signage shall state the story of and direction to the *exit discharge*, and the availability of roof access from the *interior exit stairway* and *ramp* for the fire department. The sign shall be located 5 feet (1524 mm) above the floor landing in a position that is readily visible when the doors are in the open and closed positions. In addition to the *stairway* identification sign, a floor-level sign in visual characters, raised characters and braille complying with *ICC A117.1* shall be located at each floor-level landing adjacent to the door leading from the *interior exit stairway* and *ramp* into the *corridor* to identify the floor level.

1023.9.1 Signage requirements. *Stairway* identification signs shall comply with all of the following requirements:

1. The signs shall be a minimum size of 18 inches (457 mm) by 12 inches (305 mm).
2. The letters designating the identification of the *interior exit stairway* and *ramp* shall be not less than $1^1/_2$ inches (38 mm) in height.
3. The number designating the floor level shall be not less than 5 inches (127 mm) in height and located in the center of the sign.
4. Other lettering and numbers shall be not less than 1 inch (25 mm) in height.
5. Characters and their background shall have a nonglare finish. Characters shall contrast with their background, with either light characters on a dark background or dark characters on a light background.
6. Where signs required by Section 1023.9 are installed in the *interior exit stairways* and *ramps* of buildings subject to Section 1025, the signs shall be made of the same materials as required by Section 1025.4.

1023.10 Elevator lobby identification signs. At landings in *interior exit stairways* where two or more doors lead to the floor level, any door with direct access to an enclosed elevator lobby shall be identified by signage located on the door or directly adjacent to the door stating "Elevator Lobby." Signage shall be in accordance with Section 1023.9.1, Items 4, 5 and 6.

1023.11 Smokeproof enclosures. Where required by Section 403.5.4, 405.7.2 or 412.2.2.1, *interior exit stairways* and *ramps* shall be *smokeproof enclosures* in accordance with Section 909.20.

1023.11.1 Termination and extension. A *smokeproof enclosure* shall terminate at an *exit discharge* or a *public way*. The *smokeproof enclosure* shall be permitted to be extended by an *exit passageway* in accordance with Section 1023.3. The *exit passageway* shall be without openings other than the *fire door assembly* required by Section 1023.3.1 and those necessary for egress from the *exit passageway*. The *exit passageway* shall be separated from the remainder of the building by 2-hour *fire barriers* constructed in accordance with Section 707 or *horizontal assemblies* constructed in accordance with Section 711, or both.

Exceptions:

1. Openings in the *exit passageway* serving a *smokeproof enclosure* are permitted where the *exit passageway* is protected and pressurized in the same manner as the *smokeproof enclosure*, and openings are protected as required for access from other floors.
2. The *fire barrier* separating the *smokeproof enclosure* from the *exit passageway* is not required, provided that the *exit passageway* is protected and pressurized in the same manner as the *smokeproof enclosure*.
3. A *smokeproof enclosure* shall be permitted to egress through areas on the *level of exit discharge* or vestibules as permitted by Section 1028.

1023.11.2 Enclosure access. Access to the *stairway* or *ramp* within a *smokeproof enclosure* shall be by way of a vestibule or an open exterior balcony.

Exception: Access is not required by way of a vestibule or exterior balcony for *stairways* and *ramps* using the pressurization alternative complying with Section 909.20.5.

1023.12 Standpipes. Standpipes and standpipe hose connections shall be provided where required by Sections 905.3 and 905.4.

SECTION 1024
EXIT PASSAGEWAYS

1024.1 Exit passageways. *Exit passageways* serving as an exit component in a *means of egress* system shall comply with the requirements of this section. An *exit passageway* shall not be used for any purpose other than as a *means of egress* and a *circulation path*.

1024.2 Width and capacity. The required capacity of *exit passageways* shall be determined as specified in Section 1005.1 but the minimum width shall be not less than 44 inches (1118 mm), except that *exit passageways* serving an occupant load of less than 50 shall be not less than 36 inches (914 mm) in width. The minimum width or required capacity of *exit passageways* shall be unobstructed.

Exception: Encroachments complying with Section 1005.7.

1024.3 Construction. *Exit passageway* enclosures shall have walls, floors and ceilings of not less than a 1-hour *fire-resis-*

INTERNATIONAL CODE COUNCIL®
Copyright © 2019 ICC & NYSDOS. ALL RIGHTS RESERVED. Accessed by Lauren Gualdino (lgualdino@briarcliffmanor.org), (-) Order Number #100880972 on May 08, 2020 07:05 AM (PDT) pursuant to License Agreement with ICC & NYSDOS. No further reproduction, no

100880972

tance rating, and not less than that required for any connecting *interior exit stairway* or *ramp*. *Exit passageways* shall be constructed as *fire barriers* in accordance with Section 707 or *horizontal assemblies* constructed in accordance with Section 711, or both.

1024.4 Termination. *Exit passageways* on the *level of exit discharge* shall terminate at an *exit discharge*. *Exit passageways* on other levels shall terminate at an *exit*.

1024.5 Openings. *Exit passageway* opening protectives shall be in accordance with the requirements of Section 716.

Except as permitted in Section 402.8.7, openings in *exit passageways* other than unprotected exterior openings shall be limited to those necessary for *exit access* to the *exit passageway* from normally occupied spaces and for egress from the *exit passageway*.

Where an *interior exit stairway* or *ramp* is extended to an *exit discharge* or a *public way* by an *exit passageway*, the *exit passageway* shall comply with Section 1023.3.1.

Elevators shall not open into an *exit passageway*.

1024.6 Penetrations. Penetrations into or through an *exit passageway* are prohibited except for the following:

1. Equipment and ductwork necessary for independent pressurization.
2. Fire protection systems.
3. Security systems.
4. Two-way communication systems.
5. Electrical raceway for fire department communication.
6. Electrical raceway serving the *exit passageway* and terminating at a steel box not exceeding 16 square inches (0.010 m^2).

Such penetrations shall be protected in accordance with Section 714. There shall not be penetrations or communicating openings, whether protected or not, between adjacent *exit passageways*.

Exception: Membrane penetrations shall be permitted on the outside of the *exit passageway*. Such penetrations shall be protected in accordance with Section 714.4.2.

1024.7 Ventilation. Equipment and ductwork for *exit passageway* ventilation as permitted by Section 1024.6 shall comply with one of the following:

1. The equipment and ductwork shall be located exterior to the building and shall be directly connected to the *exit passageway* by ductwork enclosed in construction as required for shafts.
2. Where the equipment and ductwork is located within the *exit passageway*, the intake air shall be taken directly from the outdoors and the exhaust air shall be discharged directly to the outdoors, or the air shall be conveyed through ducts enclosed in construction as required for shafts.
3. Where located within the building, the equipment and ductwork shall be separated from the remainder of the building, including other mechanical equipment, with construction as required for shafts.

In each case, openings into the fire-resistance-rated construction shall be limited to those needed for maintenance and operation and shall be protected by opening protectives in accordance with Section 716 for shaft enclosures.

Exit passageway ventilation systems shall be independent of other building ventilation systems.

1024.8 Standpipes. Standpipes and standpipe hose connections shall be provided where required by Sections 905.3 and 905.4.

SECTION 1025
LUMINOUS EGRESS PATH MARKINGS

1025.1 General. *Approved* luminous egress path markings delineating the exit path shall be provided in *high-rise buildings* of Group A, B, E, I-1, M or R-1 occupancies in accordance with this section.

Exception: Luminous egress path markings shall not be required on the *level of exit discharge* in lobbies that serve as part of the exit path in accordance with Section 1028.1, Exception 1.

1025.2 Markings within exit components. Egress path markings shall be provided in *interior exit stairways*, *interior exit ramps* and *exit passageways*, in accordance with Sections 1025.2.1 through 1025.2.6.

1025.2.1 Steps. A solid and continuous stripe shall be applied to the horizontal leading edge of each step and shall extend for the full length of the step. Outlining stripes shall have a minimum horizontal width of 1 inch (25 mm) and a maximum width of 2 inches (51 mm). The leading edge of the stripe shall be placed not more than $^1/_2$ inch (12.7 mm) from the leading edge of the step and the stripe shall not overlap the leading edge of the step by not more than $^1/_2$ inch (12.7 mm) down the vertical face of the step.

Exception: The minimum width of 1 inch (25 mm) shall not apply to outlining stripes *listed* in accordance with UL 1994.

1025.2.2 Landings. The leading edge of landings shall be marked with a stripe consistent with the dimensional requirements for steps.

1025.2.3 Handrails. *Handrails* and handrail extensions shall be marked with a solid and continuous stripe having a minimum width of 1 inch (25 mm). The stripe shall be placed on the top surface of the *handrail* for the entire length of the *handrail*, including extensions and newel post caps. Where *handrails* or handrail extensions bend or turn corners, the stripe shall not have a gap of more than 4 inches (102 mm).

Exception: The minimum width of 1 inch (25 mm) shall not apply to outlining stripes *listed* in accordance with UL 1994.

1025.2.4 Perimeter demarcation lines. Stair landings and other floor areas within *interior exit stairways*, *interior exit ramps* and *exit passageways*, with the exception of the sides of steps, shall be provided with solid and continuous demarcation lines on the floor or on the walls or a

INTERNATIONAL CODE COUNCIL®
Copyright © 2019 ICC & NYSDOS. ALL RIGHTS RESERVED. Accessed by Lauren Gualdino (lgualdino@briarcliffmanor.org), (-) Order Number #100880972 on May 08, 2020 07:05 AM (PDT) pursuant to License Agreement with ICC & NYSDOS. No further reproduction, no

100880972

combination of both. The stripes shall be 1 to 2 inches (25 mm to 51 mm) wide with interruptions not exceeding 4 inches (102 mm).

Exception: The minimum width of 1 inch (25 mm) shall not apply to outlining stripes *listed* in accordance with UL 1994.

1025.2.4.1 Floor-mounted demarcation lines. Perimeter demarcation lines shall be placed within 4 inches (102 mm) of the wall and shall extend to within 2 inches (51 mm) of the markings on the leading edge of landings. The demarcation lines shall continue across the floor in front of all doors.

Exception: Demarcation lines shall not extend in front of *exit discharge* doors that lead out of an *exit* and through which occupants must travel to complete the exit path.

1025.2.4.2 Wall-mounted demarcation lines. Perimeter demarcation lines shall be placed on the wall with the bottom edge of the stripe not more than 4 inches (102 mm) above the finished floor. At the top or bottom of the *stairs*, demarcation lines shall drop vertically to the floor within 2 inches (51 mm) of the step or landing edge. Demarcation lines on walls shall transition vertically to the floor and then extend across the floor where a line on the floor is the only practical method of outlining the path. Where the wall line is broken by a door, demarcation lines on walls shall continue across the face of the door or transition to the floor and extend across the floor in front of such door.

Exception: Demarcation lines shall not extend in front of *exit discharge* doors that lead out of an *exit* and through which occupants must travel to complete the exit path.

1025.2.4.3 Transition. Where a wall-mounted demarcation line transitions to a floor-mounted demarcation line, or vice versa, the wall-mounted demarcation line shall drop vertically to the floor to meet a complimentary extension of the floor-mounted demarcation line, thus forming a continuous marking.

1025.2.5 Obstacles. Obstacles at or below 6 feet 6 inches (1981 mm) in height and projecting more than 4 inches (102 mm) into the egress path shall be outlined with markings not less than 1 inch (25 mm) in width comprised of a pattern of alternating equal bands, of luminous material and black, with the alternating bands not more than 2 inches (51 mm) thick and angled at 45 degrees (0.79 rad). Obstacles shall include, but are not limited to, standpipes, hose cabinets, wall projections and restricted height areas. However, such markings shall not conceal any required information or indicators including but not limited to instructions to occupants for the use of standpipes.

Exception: The minimum width of 1 inch (25 mm) shall not apply to markings *listed* in accordance with UL 1994.

1025.2.6 Doors within the exit path. Doors through which occupants must pass in order to complete the exit path shall be provided with markings complying with Sections 1025.2.6.1 through 1025.2.6.3.

1025.2.6.1 Emergency exit symbol. The doors shall be identified by a low-location luminous emergency exit symbol complying with NFPA 170. The exit symbol shall be not less than 4 inches (102 mm) in height and shall be mounted on the door, centered horizontally, with the top of the symbol not higher than 18 inches (457 mm) above the finished floor.

1025.2.6.2 Door hardware markings. Door hardware shall be marked with not less than 16 square inches (406 mm^2) of luminous material. This marking shall be located behind, immediately adjacent to, or on the door handle or escutcheon. Where a panic bar is installed, such material shall be not less than 1 inch (25 mm) wide for the entire length of the actuating bar or touchpad.

1025.2.6.3 Door frame markings. The top and sides of the door frame shall be marked with a solid and continuous 1-inch- to 2-inch-wide (25 mm to 51 mm) stripe. Where the door molding does not provide sufficient flat surface on which to locate the stripe, the stripe shall be permitted to be located on the wall surrounding the frame.

1025.3 Uniformity. Placement and dimensions of markings shall be consistent and uniform throughout the same enclosure.

1025.4 Self-luminous and photoluminescent. Luminous egress path markings shall be permitted to be made of any material, including paint, provided that an electrical charge is not required to maintain the required luminance. Such materials shall include, but not be limited to, *self-luminous* materials and *photoluminescent* materials. Materials shall comply with either of the following standards:

1. UL 1994.
2. ASTM E2072, except that the charging source shall be 1 footcandle (11 lux) of fluorescent illumination for 60 minutes, and the minimum luminance shall be 30 millicandelas per square meter at 10 minutes and 5 millicandelas per square meter after 90 minutes.

1025.5 Illumination. Where *photoluminescent* exit path markings are installed, they shall be provided with not less than 1 footcandle (11 lux) of illumination for not less than 60 minutes prior to periods when the building is occupied and continuously during occupancy.

SECTION 1026
HORIZONTAL EXITS

1026.1 Horizontal exits. *Horizontal exits* serving as an *exit* in a *means of egress* system shall comply with the requirements of this section. A *horizontal exit* shall not serve as the only *exit* from a portion of a building, and where two or more *exits* are required, not more than one-half of the total number of *exits* or total *exit* minimum width or required capacity shall be *horizontal exits*.

Exceptions:

1. *Horizontal exits* are permitted to comprise two-thirds of the required *exits* from any building or floor area for occupancies in Group I-2.

INTERNATIONAL CODE COUNCIL®
Copyright © 2019 ICC & NYSDOS. ALL RIGHTS RESERVED. Accessed by Lauren Gualdino (lgualdino@briarcliffmanor.org), (-) Order Number #100880972 on May 08, 2020 07:05 AM (PDT) pursuant to License Agreement with ICC & NYSDOS. No further reproduction, no

100880972

2. *Horizontal exits* are permitted to comprise 100 percent of the *exits* required for occupancies in Group I-3. Not less than 6 square feet (0.6 m^2) of accessible space per occupant shall be provided on each side of the *horizontal exit* for the total number of people in adjoining compartments.

1026.2 Separation. The separation between buildings or refuge areas connected by a *horizontal exit* shall be provided by a *fire wall* complying with Section 706; or by a *fire barrier* complying with Section 707 or a *horizontal assembly* complying with Section 711, or both. The minimum *fire-resistance rating* of the separation shall be 2 hours. Opening protectives in *horizontal exits* shall also comply with Section 716. Duct and air transfer openings in a *fire wall* or *fire barrier* that serves as a *horizontal exit* shall also comply with Section 717. The *horizontal exit* separation shall extend vertically through all levels of the building unless floor assemblies have a *fire-resistance rating* of not less than 2 hours and do not have unprotected openings.

Exception: A *fire-resistance rating* is not required at *horizontal exits* between a building area and an above-grade *pedestrian walkway* constructed in accordance with Section 3104, provided that the distance between connected buildings is more than 20 feet (6096 mm).

Horizontal exits constructed as *fire barriers* shall be continuous from *exterior wall* to *exterior wall* so as to divide completely the floor served by the *horizontal exit*.

1026.3 Opening protectives. *Fire doors* in *horizontal exits* shall be self-closing or automatic-closing when activated by a *smoke detector* in accordance with Section 716.2.6.6. Doors, where located in a cross-corridor condition, shall be automatic-closing by activation of a *smoke detector* installed in accordance with Section 716.2.6.6.

1026.4 Refuge area. The refuge area of a *horizontal exit* shall be a space occupied by the same tenant or a public area and each such refuge area shall be adequate to accommodate the original *occupant load* of the refuge area plus the *occupant load* anticipated from the adjoining compartment. The anticipated *occupant load* from the adjoining compartment shall be based on the capacity of the *horizontal exit doors* entering the refuge area or the total *occupant load* of the adjoining compartment, whichever is less.

1026.4.1 Capacity. The capacity of the refuge area shall be computed based on a *net floor area* allowance of 3 square feet (0.2787 m^2) for each occupant to be accommodated therein. Where the *horizontal exit* also forms a *smoke compartment*, the capacity of the refuge area for Group I-1, I-2 and I-3 occupancies and Group B *ambulatory care facilities* shall comply with Sections 407.5.3, 408.6.2, 420.6.1 and 422.3.2 as applicable.

1026.4.2 Number of exits. The refuge area into which a *horizontal exit* leads shall be provided with *exits* adequate to meet the occupant requirements of this chapter, but not including the added *occupant load* imposed by persons entering the refuge area through *horizontal exits* from other areas. Not less than one refuge area exit shall lead directly to the exterior or to an *interior exit stairway* or *ramp*.

Exception: The adjoining compartment shall not be required to have a *stairway* or door leading directly outside, provided that the refuge area into which a *horizontal exit* leads has *stairways* or doors leading directly outside and are so arranged that egress shall not require the occupants to return through the compartment from which egress originates.

1026.5 Standpipes. Standpipes and standpipe hose connections shall be provided where required by Sections 905.3 and 905.4.

SECTION 1027
EXTERIOR EXIT STAIRWAYS AND RAMPS

1027.1 Exterior exit stairways and ramps. *Exterior exit stairways* and *ramps* serving as an element of a required *means of egress* shall comply with this section.

1027.2 Use in a means of egress. *Exterior exit stairways* shall not be used as an element of a required *means of egress* for Group I-2 occupancies. For occupancies in other than Group I-2, *exterior exit stairways* and *ramps* shall be permitted as an element of a required *means of egress* for buildings not exceeding six stories above *grade plane* or that are not *high-rise buildings*.

1027.3 Open side. *Exterior exit stairways* and *ramps* serving as an element of a required *means of egress* shall be open on not less than one side, except for required structural columns, beams, *handrails* and *guards*. An open side shall have not less than 35 square feet (3.3 m^2) of aggregate open area adjacent to each floor level and the level of each intermediate landing. The required open area shall be located not less than 42 inches (1067 mm) above the adjacent floor or landing level.

1027.4 Side yards. The open areas adjoining *exterior exit stairways* or *ramps* shall be either *yards*, *courts* or *public ways*; the remaining sides are permitted to be enclosed by the *exterior walls* of the building.

1027.5 Location. *Exterior exit stairways* and *ramps* shall have a minimum fire separation distance of 10 feet (3048 mm) measured at right angles from the exterior edge of the *stairway* or *ramps*, including landings, to:

1. Adjacent *lot lines*.
2. Other portions of the building.
3. Other buildings on the same lot unless the adjacent building *exterior walls* and openings are protected in accordance with Section 705 based on *fire separation distance*.

For the purposes of this section, other portions of the building shall be treated as separate buildings.

Exception: *Exterior exit stairways* and *ramps* serving individual *dwelling units* of Group R-3 shall have a minimum *fire separation distance* of 5 feet (1525 mm).

INTERNATIONAL CODE COUNCIL®
Copyright © 2019 ICC & NYSDOS. ALL RIGHTS RESERVED. Accessed by Lauren Gualdino (lgualdino@briarcliffmanor.org), (-) Order Number #100880972 on May 08, 2020 07:05 AM (PDT) pursuant to License Agreement with ICC & NYSDOS. No further reproduction, no

100880972

1027.6 Exterior exit stairway and ramp protection. *Exterior exit stairways* and *ramps* shall be separated from the interior of the building as required in Section 1023.2. Openings shall be limited to those necessary for egress from normally occupied spaces. Where a vertical plane projecting from the edge of an *exterior exit stairway* or *ramp* and landings is exposed by other parts of the building at an angle of less than 180 degrees (3.14 rad), the exterior wall shall be rated in accordance with Section 1023.7.

Exceptions:

1. Separation from the interior of the building is not required for occupancies, other than those in Group R-1 or R-2, in buildings that are not more than two stories above *grade plane* where a *level of exit discharge* serving such occupancies is the first story above *grade plane*.
2. Separation from the interior of the building is not required where the *exterior exit stairway* or *ramp* is served by an *exterior exit ramp* or balcony that connects two remote *exterior exit stairways* or other *approved exits* with a perimeter that is not less than 50 percent open. To be considered open, the opening shall be not less than 50 percent of the height of the enclosing wall, with the top of the openings not less than 7 feet (2134 mm) above the top of the balcony.
3. Separation from the open-ended *corridor* of the building is not required for *exterior exit stairways* or *ramps*, provided that Items 3.1 through 3.5 are met:
   - 3.1. The building, including open-ended *corridors*, and *stairways* and *ramps*, shall be equipped throughout with an *automatic sprinkler system* in accordance with Section 903.3.1.1 or 903.3.1.2.
   - 3.2. The open-ended *corridors* comply with Section 1020.
   - 3.3. The open-ended *corridors* are connected on each end to an *exterior exit stairway* or *ramp* complying with Section 1027.
   - 3.4. The *exterior walls* and openings adjacent to the *exterior exit stairway* or *ramp* comply with Section 1023.7.
   - 3.5. At any location in an open-ended *corridor* where a change of direction exceeding 45 degrees (0.79 rad) occurs, a clear opening of not less than 35 square feet (3.3 m^2) or an *exterior stairway* or *ramp* shall be provided. Where clear openings are provided, they shall be located so as to minimize the accumulation of smoke or toxic gases.
4. In Group R-3 occupancies not more than four stories in height, *exterior exit stairways* and *ramps* serving individual *dwelling units* are not required to be separated from the interior of the building where the *exterior exit stairway* or *ramp* discharges directly to grade.

SECTION 1028
EXIT DISCHARGE

1028.1 General. *Exits* shall discharge directly to the exterior of the building. The *exit discharge* shall be at grade or shall provide a direct path of egress travel to grade. The *exit discharge* shall not reenter a building. The combined use of Exceptions 1 and 2 shall not exceed 50 percent of the number and minimum width or required capacity of the required exits.

Exceptions:

1. Not more than 50 percent of the number and minimum width or required capacity of *interior exit stairways* and *ramps* is permitted to egress through areas on the level of discharge provided that all of the following conditions are met:
   - 1.1. Discharge of *interior exit stairways* and *ramps* shall be provided with a free and unobstructed path of travel to an exterior *exit* door and such *exit* is readily visible and identifiable from the point of termination of the enclosure.
   - 1.2. The entire area of the *level of exit discharge* is separated from areas below by construction conforming to the *fire-resistance rating* for the enclosure.
   - 1.3. The egress path from the *interior exit stairway* and *ramp* on the *level of exit discharge* is protected throughout by an *approved automatic sprinkler system*. Portions of the *level of exit discharge* with access to the egress path shall be either equipped throughout with an *automatic sprinkler system* installed in accordance with Section 903.3.1.1 or 903.3.1.2, or separated from the egress path in accordance with the requirements for the enclosure of *interior exit stairways* or *ramps*.
   - 1.4. Where a required *interior exit stairway* or *ramp* and an *exit access stairway* or *ramp* serve the same floor level and terminate at the same *level of exit discharge*, the termination of the *exit access stairway* or *ramp* and the *exit discharge* door of the *interior exit stairway* or *ramp* shall be separated by a distance of not less than 30 feet (9144 mm) or not less than one-fourth the length of the maximum overall diagonal dimension of the building, whichever is less. The distance shall be measured in a straight line between the *exit discharge* door from the *interior exit stairway* or *ramp* and the last tread of the *exit access stairway* or termination of slope of the *exit access ramp*.
2. Not more than 50 percent of the number and minimum width or required capacity of the *interior exit stairways* and *ramps* is permitted to egress through a vestibule provided that all of the following conditions are met:
   - 2.1. The entire area of the vestibule is separated from areas below by construction conform-

INTERNATIONAL CODE COUNCIL®
Copyright © 2019 ICC & NYSDOS. ALL RIGHTS RESERVED. Accessed by Lauren Gualdino (lgualdino@briarcliffmanor.org), (-) Order Number #100880972 on May 08, 2020 07:05 AM (PDT) pursuant to License Agreement with ICC & NYSDOS. No further reproduction, no

100880972

ing to the *fire-resistance rating* of the *interior exit stairway* or *ramp enclosure*.

2.2. The depth from the exterior of the building is not greater than 10 feet (3048 mm) and the length is not greater than 30 feet (9144 mm).

2.3. The area is separated from the remainder of the *level of exit discharge* by a *fire partition* constructed in accordance with Section 708.

Exception: The maximum transmitted temperature rise is not required.

2.4. The area is used only for *means of egress* and *exits* directly to the outside.

3. *Horizontal exits* complying with Section 1026 shall not be required to discharge directly to the exterior of the building.

1028.2 Exit discharge width or capacity. The minimum width or required capacity of the *exit discharge* shall be not less than the minimum width or required capacity of the *exits* being served.

1028.3 Exit discharge components. *Exit discharge* components shall be sufficiently open to the exterior so as to minimize the accumulation of smoke and toxic gases.

1028.4 Egress courts. *Egress courts* serving as a portion of the *exit discharge* in the *means of egress* system shall comply with the requirements of Sections 1028.4.1 and 1028.4.2.

1028.4.1 Width or capacity. The required capacity of *egress courts* shall be determined as specified in Section 1005.1, but the minimum width shall be not less than 44 inches (1118 mm), except as specified herein. *Egress courts* serving Group R-3 and U occupancies shall be not less than 36 inches (914 mm) in width. The required capacity and width of *egress courts* shall be unobstructed to a height of 7 feet (2134 mm).

The width of the *egress court* shall be not less than the required capacity.

Exception: Encroachments complying with Section 1005.7.

1028.4.2 Construction and openings. Where an *egress court* serving a building or portion thereof is less than 10 feet (3048 mm) in width, the *egress court* walls shall have not less than 1-hour *fire-resistance-rated* construction for a distance of 10 feet (3048 mm) above the floor of the *egress court*. Openings within such walls shall be protected by opening protectives having a fire protection rating of not less than $^3/_4$ hour.

Exceptions:

1. *Egress courts* serving an *occupant load* of less than 10.
2. *Egress courts* serving Group R-3.

1028.5 Access to a public way. The *exit discharge* shall provide a direct and unobstructed access to a *public way*.

Exception: Where access to a *public way* cannot be provided, a safe dispersal area shall be provided where all of the following are met:

1. The area shall be of a size to accommodate not less than 5 square feet (0.46 m^2) for each person.
2. The area shall be located on the same lot not less than 50 feet (15 240 mm) away from the building requiring egress.
3. The area shall be permanently maintained and identified as a safe dispersal area.
4. The area shall be provided with a safe and unobstructed path of travel from the building.

SECTION 1029
ASSEMBLY

1029.1 General. A room or space used for assembly purposes that contains seats, tables, displays, equipment or other material shall comply with this section.

1029.1.1 Bleachers. *Bleachers*, *grandstands* and *folding and telescopic seating*, that are not building elements, shall comply with ICC 300.

1029.1.1.1 Spaces under grandstands and bleachers. Spaces under *grandstands* or *bleachers* shall be separated by *fire barriers* complying with Section 707 and *horizontal assemblies* complying with Section 711 with not less than 1-hour *fire-resistance-rated* construction.

Exceptions:

1. Ticket booths less than 100 square feet (9.29 m^2) in area.
2. Toilet rooms.
3. Other accessory use areas 1,000 square feet (92.9 m^2) or less in area and equipped with an *automatic sprinkler system* in accordance with Section 903.3.1.1.

1029.2 Assembly main exit. A building, room or space used for assembly purposes that has an *occupant load* of greater than 300 and is provided with a main *exit*, that main *exit* shall be of sufficient capacity to accommodate not less than one-half of the *occupant load*, but such capacity shall be not less than the total required capacity of all *means of egress* leading to the *exit*. Where the building is classified as a Group A occupancy, the main *exit* shall front on not less than one street or an unoccupied space of not less than 10 feet (3048 mm) in width that adjoins a street or *public way*. In a building, room or space used for assembly purposes where there is not a well-defined main *exit* or where multiple main *exits* are provided, *exits* shall be permitted to be distributed around the perimeter of the building provided that the total capacity of egress is not less than 100 percent of the required capacity.

1029.3 Assembly other exits. In addition to having access to a main *exit*, each level in a building used for assembly purposes having an *occupant load* greater than 300 and provided with a main *exit*, shall be provided with additional *means of egress* that shall provide an egress capacity for not less than one-half of the total *occupant load* served by that level and shall comply with Section 1007.1. In a building used for assembly purposes where there is not a well-defined main *exit* or where multiple main *exits* are provided, *exits* for each level shall be permitted to be distributed around the perimeter of the building, provided that the total width of egress is not less than 100 percent of the required width.

INTERNATIONAL CODE COUNCIL®
Copyright © 2019 ICC & NYSDOS. ALL RIGHTS RESERVED. Accessed by Lauren Gualdino (lgualdino@briarcliffmanor.org), (-) Order Number #100880972 on May 08, 2020 07:05 AM (PDT) pursuant to License Agreement with ICC & NYSDOS. No further reproduction, no

100880972

1029.4 Foyers and lobbies. In Group A-1 occupancies, where persons are admitted to the building at times when seats are not available, such persons shall be allowed to wait in a lobby or similar space, provided that such lobby or similar space shall not encroach on the minimum width or required capacity of the *means of egress*. Such foyer, if not directly connected to a public street by all the main entrances or *exits*, shall have a straight and unobstructed *corridor* or path of travel to every such main entrance or *exit*.

1029.5 Interior balcony and gallery means of egress. For balconies, galleries or press boxes having a seating capacity of 50 or more located in a building, room or space used for assembly purposes, not less than two *means of egress* shall be provided, with one from each side of every balcony, gallery or press box.

1029.6 Capacity of aisle for assembly. The required capacity of *aisles* shall be not less than that determined in accordance with Section 1029.6.1 where *smoke-protected assembly seating* is not provided, Section 1029.6.2 where *smoke-protected assembly seating* is provided and Section 1029.6.3 where *open-air assembly seating* is provided.

1029.6.1 Without smoke protection. The required capacity in inches (mm) of the *aisles* for assembly seating without smoke protection shall be not less than the *occupant load* served by the egress element in accordance with all of the following, as applicable:

1. Not less than 0.3 inch (7.6 mm) of *aisle* capacity for each occupant served shall be provided on stepped *aisles* having riser heights 7 inches (178 mm) or less and tread depths 11 inches (279 mm) or greater, measured horizontally between tread *nosings*.
2. Not less than 0.005 inch (0.127 mm) of additional *aisle* capacity for each occupant shall be provided for each 0.10 inch (2.5 mm) of riser height above 7 inches (178 mm).
3. Where egress requires stepped *aisle* descent, not less than 0.075 inch (1.9 mm) of additional *aisle* capacity for each occupant shall be provided on those portions of *aisle* capacity that do not have a *handrail* within a horizontal distance of 30 inches (762 mm).
4. Ramped *aisles*, where slopes are steeper than one unit vertical in 12 units horizontal (8-percent slope), shall have not less than 0.22 inch (5.6 mm) of clear *aisle* capacity for each occupant served. Level or ramped *aisles*, where slopes are not steeper than one unit vertical in 12 units horizontal (8-percent slope), shall have not less than 0.20 inch (5.1 mm) of clear *aisle* capacity for each occupant served.

1029.6.2 Smoke-protected assembly seating. The required capacity in inches (mm) of the aisle for *smoke-protected assembly seating* shall be not less than the occupant load served by the egress element multiplied by the appropriate factor in Table 1029.6.2. The total number of seats specified shall be those within the space exposed to the same smoke-protected environment. Interpolation is permitted between the specific values shown. A life safety evaluation, complying with NFPA 101, shall be done for a facility utilizing the reduced width requirements of Table 1029.6.2 for *smoke-protected assembly seating*.

Exception: For *open-air assembly seating* with an *occupant load* not greater than 18,000, the required capacity in inches (mm) shall be determined using the factors in Section 1029.6.3.

1029.6.2.1 Smoke control. *Aisles* and *aisle accessways* serving a *smoke-protected assembly seating* area shall be provided with a smoke control system complying with Section 909 or natural ventilation designed to maintain the smoke level not less than 6 feet (1829 mm) above the floor of the *means of egress*.

1029.6.2.2 Roof height. A *smoke-protected assembly seating* area with a roof shall have the lowest portion of the roof deck not less than 15 feet (4572 mm) above the highest *aisle* or *aisle accessway*.

Exception: A roof canopy in an outdoor stadium shall be permitted to be less than 15 feet (4572 mm) above the highest *aisle* or *aisle accessway* provided that there are no objects less than 80 inches (2032 mm) above the highest *aisle* or *aisle accessway*.

1029.6.2.3 Automatic sprinklers. Enclosed areas with walls and ceilings in buildings or structures containing *smoke-protected assembly seating* shall be protected with an *approved automatic sprinkler system* in accordance with Section 903.3.1.1.

Exceptions:

1. The floor area used for contests, performances or entertainment provided that the roof construction is more than 50 feet (15 240 mm) above the floor level and the use is restricted to low fire hazard uses.

TABLE 1029.6.2
CAPACITY FOR AISLES FOR SMOKE-PROTECTED ASSEMBLY

TOTAL NUMBER OF SEATS IN THE SMOKE-PROTECTED ASSEMBLY SEATING	INCHES OF CAPACITY PER SEAT SERVED			
	Stepped aisles with handrails within 30 inches	Stepped aisles without handrails within 30 inches	Level aisles or ramped aisles not steeper than 1 in 10 in slope	Ramped aisles steeper than 1 in 10 in slope
Equal to or less than 5,000	0.200	0.250	0.150	0.165
10,000	0.130	0.163	0.100	0.110
15,000	0.096	0.120	0.070	0.077
20,000	0.076	0.095	0.056	0.062
Equal to or greater than 25,000	0.060	0.075	0.044	0.048

For SI: 1 inch = 25.4 mm.

INTERNATIONAL CODE COUNCIL®
Copyright © 2019 ICC & NYSDOS. ALL RIGHTS RESERVED. Accessed by Lauren Gualdino (lgualdino@briarcliffmanor.org), (-) Order Number #100880972 on May 08, 2020 07:05 AM (PDT) pursuant to License Agreement with ICC & NYSDOS. No further reproduction, no

100880972

2. Press boxes and storage facilities less than 1,000 square feet (93 m^2) in area.
3. Outdoor seating facilities where seating and the *means of egress* in the seating area are essentially open to the outside.

1029.6.3 Open-air assembly seating. In *open-air assembly seating,* the required capacity in inches (mm) of *aisles* shall be not less than the total *occupant load* served by the egress element multiplied by 0.08 (2.0 mm) where egress is by stepped *aisle* and multiplied by 0.06 (1.52 mm) where egress is by level *aisles* and ramped *aisles*.

Exception: The required capacity in inches (mm) of *aisles* shall be permitted to comply with Section 1029.6.2 for the number of seats in the *open-air assembly seating* where Section 1029.6.2 permits less capacity.

1029.7 Travel distance. The *exit access* travel distance shall comply with Section 1017. Where *aisles* are provided for seating, the distance shall be measured along the *aisles* and *aisle accessways* without travel over or on the seats.

Exceptions:

1. In facilities with *smoke-protected assembly seating,* the total *exit access* travel distance shall be not greater than 400 feet (122 m). That portion of the total permitted *exit access* travel distance from each seat to the nearest entrance to a vomitory or concourse shall not exceed 200 feet (60 960 mm). The portion of the total permitted *exit access* travel distance from the entrance to the vomitory or concourse to one of the following shall not exceed 200 feet (60 960 mm):
   1.1. The closest riser of an *exit access stairway*.
   1.2. The closest slope of an *exit access ramp*.
   1.3. An *exit.*
2. In facilities with *open-air assembly seating* of Type III, IV or V construction, the total *exit access* travel distance to one of the following shall not exceed 400 feet (122 m):
   2.1. The closest riser of an *exit access stairway*.
   2.2. The closest slope of an *exit access ramp*.
   2.3. An *exit*.
3. In facilities with *open-air assembly seating* of Type I or II construction, the total *exit access* travel distance shall not be limited.

1029.8 Common path of egress travel. The *common path of egress travel* shall not exceed 30 feet (9144 mm) from any seat to a point where an occupant has a choice of two paths of egress travel to two *exits.*

Exceptions:

1. For areas serving less than 50 occupants, the *common path of egress travel* shall not exceed 75 feet (22 860 mm).
2. For *smoke-protected* or *open-air assembly seating*, the *common path of egress travel* shall not exceed 50 feet (15 240 mm).

1029.8.1 Path through adjacent row. Where one of the two paths of travel is across the *aisle* through a row of seats to another *aisle*, there shall be not more than 24 seats between the two *aisles*, and the minimum clear width between rows for the row between the two *aisles* shall be 12 inches (305 mm) plus 0.6 inch (15.2 mm) for each additional seat above seven in the row between *aisles*.

Exception: For *smoke-protected* or *open-air assembly seating* there shall be not more than 40 seats between the two *aisles* and the minimum clear width shall be 12 inches (305 mm) plus 0.3 inch (7.6 mm) for each additional seat.

1029.9 Assembly aisles are required. Every occupied portion of any building, room or space used for assembly purposes that contains seats, tables, displays, similar fixtures or equipment shall be provided with *aisles* leading to *exits* or *exit access doorways* in accordance with this section.

1029.9.1 Minimum aisle width. The minimum clear width for *aisles* shall comply with one of the following:

1. Forty-eight inches (1219 mm) for stepped *aisles* having seating on both sides.

   Exception: Thirty-six inches (914 mm) where the stepped *aisles* serve less than 50 seats.
2. Thirty-six inches (914 mm) for stepped *aisles* having seating on only one side.

   Exception: Twenty-three inches (584 mm) between a stepped *aisle handrail* and seating where a stepped *aisle* does not serve more than five rows on one side.
3. Twenty-three inches (584 mm) between a stepped *aisle handrail* or *guard* and seating where the stepped *aisle* is subdivided by a mid-aisle *handrail*.
4. Forty-two inches (1067 mm) for level or ramped *aisles* having seating on both sides.

   Exceptions:

   1. Thirty-six inches (914 mm) where the *aisle* serves less than 50 seats.
   2. Thirty inches (762 mm) where the *aisle* serves less than 15 seats and does not serve as part of an *accessible route.*
5. Thirty-six inches (914 mm) for level or ramped *aisles* having seating on only one side.

   Exception: Thirty inches (762 mm) where the *aisle* serves fewer than 15 seats and does not serve as part of an *accessible route*.

1029.9.2 Aisle catchment area. The *aisle* shall provide sufficient capacity for the number of persons accommodated by the catchment area served by the *aisle*. The catchment area served by an *aisle* is that portion of the total space served by that section of the *aisle*. In establishing catchment areas, the assumption shall be made that there is a balanced use of all *means of egress*, with the number of persons in proportion to egress capacity.

1029.9.3 Converging aisles. Where *aisles* converge to form a single path of egress travel, the required capacity of

INTERNATIONAL CODE COUNCIL®
Copyright © 2019 ICC & NYSDOS. ALL RIGHTS RESERVED. Accessed by Lauren Gualdino (lgualdino@briarcliffmanor.org), (-) Order Number #100880972 on May 08, 2020 07:05 AM (PDT) pursuant to License Agreement with ICC & NYSDOS. No further reproduction, no

100880972

that path shall be not less than the combined required capacity of the converging aisles.

1029.9.4 Uniform width and capacity. Those portions of *aisles*, where egress is possible in either of two directions, shall be uniform in minimum width or required capacity.

1029.9.5 Dead-end aisles. Each end of an *aisle* shall be continuous to a cross *aisle*, foyer, doorway, vomitory, concourse or *stairway* in accordance with Section 1029.9.7 having access to an *exit*.

Exceptions:

1. Dead-end *aisles* shall be not greater than 20 feet (6096 mm) in length.
2. Dead-end *aisles* longer than 16 rows are permitted where seats beyond the 16th row dead-end *aisle* are not more than 24 seats from another *aisle*, measured along a row of seats having a minimum clear width of 12 inches (305 mm) plus 0.6 inch (15.2 mm) for each additional seat above seven in the row where seats have backrests or beyond 10 where seats are without backrests in the row.
3. For *smoke-protected* or *open-air assembly seating*, the dead-end *aisle* length of vertical *aisles* shall not exceed a distance of 21 rows.
4. For *smoke-protected* or *open-air assembly seating*, a longer dead-end *aisle* is permitted where seats beyond the 21-row dead-end *aisle* are not more than 40 seats from another *aisle*, measured along a row of seats having an *aisle* accessway with a minimum clear width of 12 inches (305 mm) plus 0.3 inch (7.6 mm) for each additional seat above seven in the row where seats have backrests or beyond 10 where seats are without backrests in the row.

1029.9.6 Aisle measurement. The clear width for *aisles* shall be measured to walls, edges of seating and tread edges except for permitted projections.

Exception: The clear width of *aisles* adjacent to seating at tables shall be permitted to be measured in accordance with Section 1029.13.1.

1029.9.6.1 Assembly aisle obstructions. There shall not be obstructions in the minimum width or required capacity of *aisles*.

Exception: *Handrails* are permitted to project into the required width of stepped *aisles* and ramped *aisles* in accordance with Section 1014.8.

1029.9.7 Stairways connecting to stepped aisles. A *stairway* that connects a stepped *aisle* to a cross *aisle* or concourse shall be permitted to comply with the assembly *aisle* walking surface requirements of Section 1029.14. Transitions between *stairways* and stepped *aisles* shall comply with Section 1029.10.

1029.9.8 Stairways connecting to vomitories. A *stairway* that connects a vomitory to a cross aisle or concourse shall be permitted to comply with the assembly *aisle* walking surface requirements of Section 1029.14. Transitions between *stairways* and stepped *aisles* shall comply with Section 1029.10.

1029.10 Transitions. Transitions between *stairways* and stepped *aisles* shall comply with either Section 1029.10.1 or 1029.10.2.

1029.10.1 Transitions to stairways that maintain stepped aisle riser and tread dimensions. Stepped *aisles*, transitions and *stairways* that maintain the stepped aisle riser and tread dimensions shall comply with Section 1029.14 as one *exit access* component.

1029.10.2 Transitions to stairways that do not maintain stepped aisle riser and tread dimensions. Transitions between *stairways* and stepped *aisles* having different riser and tread dimensions shall comply with Sections 1029.10.2.1 through 1029.10.3.

1029.10.2.1 Stairways and stepped aisles in a straight run. Where *stairways* and stepped *aisles* are in a straight run, transitions shall have one of the following:

1. A depth of not less than 22 inches (559 mm) where the treads on the descending side of the transition have greater depth.
2. A depth of not less than 30 inches (762 mm) where the treads on the descending side of the transition have lesser depth.

1029.10.2.2 Stairways that change direction from stepped aisles. Transitions where the *stairway* changes direction from the stepped *aisle* shall have a minimum depth of 11 inches (280 mm) or the stepped *aisle* tread depth, whichever is greater, between the stepped *aisle* and *stairway*.

1029.10.3 Transition marking. A distinctive marking stripe shall be provided at each *nosing* or leading edge adjacent to the transition. Such stripe shall be not less than 1 inch (25 mm), and not more than 2 inches (51 mm), wide. The edge marking stripe shall be distinctively different from the stepped *aisle* contrasting marking stripe.

1029.11 Stepped aisles at vomitories. Stepped *aisles* that change direction at vomitories shall comply with Section 1029.11.1 Transitions between a stepped *aisle* above a vomitory and a stepped *aisle* to the side of a vomitory shall comply with Section 1029.11.2.

1029.11.1 Stepped aisles that change direction at vomitories. Stepped *aisle* treads where the stepped *aisle* changes direction at a vomitory shall have a depth of not less than 11 inches (280 mm) or the stepped *aisle* tread depth, whichever is greater. The height of a stepped *aisle* tread above a transition at a vomitory shall comply with Section 1029.14.2.2.

1029.11.2 Stepped aisle transitions at the top of vomitories. Transitions between the stepped *aisle* above a vomitory and stepped *aisles* to the side of a vomitory shall have a depth of not less than 11 inches (280 mm) or the stepped *aisle* tread depth, whichever is greater.

INTERNATIONAL CODE COUNCIL®
Copyright © 2019 ICC & NYSDOS. ALL RIGHTS RESERVED. Accessed by Lauren Gualdino (lgualdino@briarcliffmanor.org), (-) Order Number #100880972 on May 08, 2020 07:05 AM (PDT) pursuant to License Agreement with ICC & NYSDOS. No further reproduction, no

100880972

1029.12 Construction. *Aisles*, stepped *aisles* and ramped *aisles* shall be built of materials consistent with the types permitted for the type of construction of the building.

Exception: Wood *handrails* shall be permitted for all types of construction.

1029.12.1 Walking surface. The surface of *aisles*, stepped *aisles* and ramped *aisles* shall be of slip-resistant materials that are securely attached. The surface for stepped *aisles* shall comply with Section 1011.7.1.

1029.12.2 Outdoor conditions. Outdoor *aisles*, stepped *aisles* and ramped *aisles* and outdoor approaches to *aisles*, stepped *aisles* and ramped *aisles* shall be designed so that water will not accumulate on the walking surface.

1029.13 Aisle accessways. *Aisle accessways* for seating at tables shall comply with Section 1029.13.1. *Aisle accessways* for seating in rows shall comply with Section 1029.13.2.

1029.13.1 Seating at tables. Where seating is located at a table or counter and is adjacent to an *aisle* or *aisle accessway*, the measurement of required clear width of the *aisle* or *aisle accessway* shall be made to a line 19 inches (483 mm) away from and parallel to the edge of the table or counter. The 19-inch (483 mm) distance shall be measured perpendicular to the side of the table or counter. In the case of other side boundaries for *aisles* or *aisle accessways*, the clear width shall be measured to walls, edges of seating and tread edges.

Exception: Where tables or counters are served by *fixed seats*, the width of the *aisle* or *aisle accessway* shall be measured from the back of the seat.

1029.13.1.1 Aisle accessway capacity and width for seating at tables. *Aisle accessways* serving arrangements of seating at tables or counters shall comply with the capacity requirements of Section 1005.1 but shall not have less than 12 inches (305 mm) of width plus $^1/_2$ inch (12.7 mm) of width for each additional 1 foot (305 mm), or fraction thereof, beyond 12 feet (3658 mm) of *aisle accessway* length measured from the center of the seat farthest from an *aisle*.

Exception: Portions of an *aisle accessway* having a length not exceeding 6 feet (1829 mm) and used by a total of not more than four persons.

1029.13.1.2 Seating at table aisle accessway length. The length of travel along the *aisle accessway* shall not exceed 30 feet (9144 mm) from any seat to the point where a person has a choice of two or more paths of egress travel to separate *exits*.

1029.13.2 Clear width of aisle accessways serving seating in rows. Where seating rows have 14 or fewer seats, the minimum clear *aisle accessway* width shall be not less than 12 inches (305 mm) measured as the clear horizontal distance from the back of the row ahead and the nearest projection of the row behind. Where chairs have automatic or self-rising seats, the measurement shall be made with seats in the raised position. Where any chair in the row does not have an automatic or self-rising seat, the measurements shall be made with the seat in the down position. For seats with folding tablet arms, row spacing shall be determined with the tablet arm in the used position.

Exception: For seats with folding tablet arms, row spacing is permitted to be determined with the tablet arm in the stored position where the tablet arm when raised manually to vertical position in one motion automatically returns to the stored position by force of gravity.

1029.13.2.1 Dual access. For rows of seating served by *aisles* or doorways at both ends, there shall be not more than 100 seats per row. The minimum clear width of 12 inches (305 mm) between rows shall be increased by 0.3 inch (7.6 mm) for every additional seat beyond 14 seats where seats have backrests or beyond 21 where seats are without backrests. The minimum clear width is not required to exceed 22 inches (559 mm).

Exception: For s*moke-protected* or *open-air assembly seating*, the row length limits for a 12-inch-wide (305 mm) *aisle accessway*, beyond which the *aisle accessway* minimum clear width shall be increased, are in Table 1029.13.2.1.

1029.13.2.2 Single access. For rows of seating served by an *aisle* or doorway at only one end of the row, the minimum clear width of 12 inches (305 mm) between rows shall be increased by 0.6 inch (15.2 mm) for every

TABLE 1029.13.2.1
SMOKE-PROTECTED OR OPEN-AIR ASSEMBLY AISLE ACCESSWAYS

TOTAL NUMBER OF SEATS IN THE SMOKE-PROTECTED OR OPEN-AIR ASSEMBLY SEATING	MAXIMUM NUMBER OF SEATS PER ROW PERMITTED TO HAVE A MINIMUM 12-INCH CLEAR WIDTH AISLE ACCESSWAY			
	Aisle or doorway at both ends of row		Aisle or doorway at one end of row only	
	Seats with backrests	Seats without backrests	Seats with backrests	Seats without backrests
Less than 4,000	14	21	7	10
4,000	15	22	7	10
7,000	16	23	8	11
10,000	17	24	8	11
13,000	18	25	9	12
16,000	19	26	9	12
19,000	20	27	10	13
22,000 and greater	21	28	11	14

For SI: 1 inch = 25.4 mm.

INTERNATIONAL CODE COUNCIL®
Copyright © 2019 ICC & NYSDOS. ALL RIGHTS RESERVED. Accessed by Lauren Gualdino (lgualdino@briarcliffmanor.org), (-) Order Number #100880972 on May 08, 2020 07:05 AM (PDT) pursuant to License Agreement with ICC & NYSDOS. No further reproduction, no

100880972

additional seat beyond seven seats where seats have backrests or beyond 10 where seats are without backrests. The minimum clear width is not required to exceed 22 inches (559 mm).

Exception: For *smoke-protected* or *open-air assembly seating*, the row length limits for a 12-inch-wide (305 mm) *aisle accessway*, beyond which the *aisle accessway* minimum clear width shall be increased, are in Table 1029.13.2.1.

1029.14 Assembly aisle walking surfaces. Ramped *aisles* shall comply with Sections 1029.14.1 through 1029.14.1.3. Stepped *aisles* shall comply with Sections 1029.14.2 through 1029.14.2.4.

1029.14.1 Ramped aisles. *Aisles* that are sloped more than one unit vertical in 20 units horizontal (5-percent slope) shall be considered to be a ramped *aisle*. Ramped *aisles* that serve as part of an *accessible route* in accordance with Sections 1009 and 1108.2 shall have a maximum slope of one unit vertical in 12 units horizontal (8-percent slope). The slope of other ramped *aisles* shall not exceed one unit vertical in 8 units horizontal (12.5-percent slope).

1029.14.1.1 Cross slope. The slope measured perpendicular to the direction of travel of a ramped *aisle* shall not be steeper than one unit vertical in 48 units horizontal (2-percent slope).

1029.14.1.2 Landings. Ramped *aisles* shall have landings in accordance with Sections 1012.6 through 1012.6.5. Landings for ramped *aisles* shall be permitted to overlap required *aisles* or cross *aisles*.

1029.14.1.3 Edge protection. Ramped *aisles* shall have edge protection in accordance with Sections 1012.10 and 1012.10.1.

Exception: In assembly spaces with *fixed seating*, edge protection is not required on the sides of ramped *aisles* where the ramped *aisles* provide access to the adjacent seating and *aisle accessways*.

1029.14.2 Stepped aisles. *Aisles* with a slope exceeding one unit vertical in eight units horizontal (12.5-percent slope) shall consist of a series of risers and treads that extends across the full width of *aisles* and complies with Sections 1029.14.2.1 through 1029.14.2.4.

1029.14.2.1 Treads. Tread depths shall be not less than 11 inches (279 mm) and shall have dimensional uniformity.

Exception: The tolerance between adjacent treads shall not exceed $^{3}/_{16}$ inch (4.8 mm).

1029.14.2.2 Risers. Where the gradient of stepped *aisles* is to be the same as the gradient of adjoining seating areas, the riser height shall be not less than 4 inches (102 mm) nor more than 8 inches (203 mm) and shall be uniform within each *flight*.

Exceptions:

1. Riser height nonuniformity shall be limited to the extent necessitated by changes in the gradient of the adjoining seating area to maintain adequate sightlines. Where nonuniformities exceed $^{3}/_{16}$ inch (4.8 mm) between adjacent risers, the exact location of such nonuniformities shall be indicated with a distinctive marking stripe on each tread at the *nosing* or leading edge adjacent to the nonuniform risers. Such stripe shall be not less than 1 inch (25 mm), and not more than 2 inches (51 mm), wide. The edge marking stripe shall be distinctively different from the contrasting marking stripe.
2. Riser heights not exceeding 9 inches (229 mm) shall be permitted where they are necessitated by the slope of the adjacent seating areas to maintain sightlines.

1029.14.2.2.1 Construction tolerances. The tolerance between adjacent risers on a stepped *aisle* that were designed to be equal height shall not exceed $^{3}/_{16}$ inch (4.8 mm). Where the stepped *aisle* is designed in accordance with Exception 1 of Section 1029.14.2.2, the stepped *aisle* shall be constructed so that each riser of unequal height, determined in the direction of descent, is not more than $^{3}/_{8}$ inch (9.5 mm) in height different from adjacent risers where stepped *aisle* treads are less than 22 inches (560 mm) in depth and $^{3}/_{4}$ inch (19.1 mm) in height different from adjacent risers where stepped *aisle* treads are 22 inches (560 mm) or greater in depth.

1029.14.2.3 Tread contrasting marking stripe. A contrasting marking stripe shall be provided on each tread at the *nosing* or leading edge such that the location of each tread is readily apparent when viewed in descent. Such stripe shall be not less than 1 inch (25 mm) and not more than 2 inches (51 mm) wide.

Exception: The contrasting marking stripe is permitted to be omitted where tread surfaces are such that the location of each tread is readily apparent when viewed in descent.

1029.14.2.4 Nosing and profile. *Nosing* and riser profile shall comply with Sections 1011.5.5 through 1011.5.5.3.

1029.15 Seat stability. In a building, room or space used for assembly purposes, the seats shall be securely fastened to the floor.

Exceptions:

1. In a building, room or space used for assembly purposes or portions thereof without ramped or tiered floors for seating and with 200 or fewer seats, the seats shall not be required to be fastened to the floor.
2. In a building, room or space used for assembly purposes or portions thereof with seating at tables and without ramped or tiered floors for seating, the seats shall not be required to be fastened to the floor.
3. In a building, room or space used for assembly purposes or portions thereof without ramped or tiered floors for seating and with greater than 200 seats, the seats shall be fastened together in groups of not less than three or the seats shall be securely fastened to the floor.

INTERNATIONAL CODE COUNCIL®
Copyright © 2019 ICC & NYSDOS. ALL RIGHTS RESERVED. Accessed by Lauren Gualdino (lgualdino@briarcliffmanor.org), (-) Order Number #100880972 on May 08, 2020 07:05 AM (PDT) pursuant to License Agreement with ICC & NYSDOS. No further reproduction, no

100880972

4. In a building, room or space used for assembly purposes where flexibility of the seating arrangement is an integral part of the design and function of the space and seating is on tiered levels, not more than 200 seats shall not be required to be fastened to the floor. Plans showing seating, tiers and *aisles* shall be submitted for approval.
5. Groups of seats within a building, room or space used for assembly purposes separated from other seating by railings, *guards*, partial height walls or similar barriers with level floors and having not more than 14 seats per group shall not be required to be fastened to the floor.
6. Seats intended for musicians or other performers and separated by railings, *guards*, partial height walls or similar barriers shall not be required to be fastened to the floor.

1029.16 Handrails. Ramped *aisles* having a slope exceeding one unit vertical in 15 units horizontal (6.7-percent slope) and stepped *aisles* shall be provided with *handrails* in compliance with Section 1014 located either at one or both sides of the *aisle* or within the *aisle* width.

Exceptions:

1. *Handrails* are not required for ramped *aisles* with seating on both sides.
2. *Handrails* are not required where, at the side of the *aisle*, there is a *guard* with a top surface that complies with the graspability requirements of *handrails* in accordance with Section 1014.3.
3. *Handrail* extensions are not required at the top and bottom of stepped *aisles* and ramped *aisles* to permit crossovers within the *aisles*.

1029.16.1 Discontinuous handrails. Where there is seating on both sides of the *aisle*, the mid-aisle *handrails* shall be discontinuous with gaps or breaks at intervals not exceeding five rows to facilitate access to seating and to permit crossing from one side of the *aisle* to the other. These gaps or breaks shall have a clear width of not less than 22 inches (559 mm) and not greater than 36 inches (914 mm), measured horizontally, and the mid-aisle *handrail* shall have rounded terminations or bends.

1029.16.2 Handrail termination. *Handrails* located on the side of stepped *aisles* shall return to a wall, *guard* or the walking surface or shall be continuous to the *handrail* of an adjacent stepped *aisle flight*.

1029.16.3 Mid-aisle termination. Mid-aisle *handrails* shall not extend beyond the lowest riser and shall terminate within 18 inches (381 mm), measured horizontally, from the lowest riser. *Handrail* extensions are not required.

Exception: Mid-aisle *handrails* shall be permitted to extend beyond the lowest riser where the *handrail* extensions do not obstruct the width of the cross *aisle*.

1029.16.4 Rails. Where mid-aisle *handrails* are provided in stepped *aisles*, there shall be an additional rail located approximately 12 inches (305 mm) below the *handrail*. The rail shall be adequate in strength and attachment in accordance with Section 1607.8.1.2.

1029.17 Assembly guards. *Guards* adjacent to seating in a building, room or space used for assembly purposes shall be provided where required by Section 1015 and shall be constructed in accordance with Section 1015 except where provided in accordance with Sections 1029.17.1 through 1029.17.4. At *bleachers*, *grandstands* and *folding and telescopic seating*, *guards* must be provided where required by ICC 300 and Section 1029.17.1.

1029.17.1 Perimeter guards. Perimeter *guards* shall be provided where the footboards or walking surface of seating facilities are more than 30 inches (762 mm) above the floor or grade below. Where the seatboards are adjacent to the perimeter, *guard* height shall be 42 inches (1067 mm) high minimum, measured from the seatboard. Where the seats are self-rising, *guard* height shall be 42 inches (1067 mm) high minimum, measured from the floor surface. Where there is an *aisle* between the seating and the perimeter, the *guard* height shall be measured in accordance with Section 1015.3.

Exceptions:

1. *Guards* that impact sightlines shall be permitted to comply with Section 1029.17.3.
2. *Bleachers*, *grandstands* and *folding and telescopic seating* shall not be required to have perimeter *guards* where the seating is located adjacent to a wall and the space between the wall and the seating is less than 4 inches (102 mm).

1029.17.2 Cross aisles. Cross *aisles* located more than 30 inches (762 mm) above the floor or grade below shall have *guards* in accordance with Section 1015.

Where an elevation change of 30 inches (762 mm) or less occurs between a cross *aisle* and the adjacent floor or grade below, *guards* not less than 26 inches (660 mm) above the *aisle* floor shall be provided.

Exception: Where the backs of seats on the front of the cross *aisle* project 24 inches (610 mm) or more above the adjacent floor of the *aisle*, a *guard* need not be provided.

1029.17.3 Sightline-constrained guard heights. Unless subject to the requirements of Section 1029.17.4, a fascia or railing system in accordance with the *guard* requirements of Section 1015 and having a minimum height of 26 inches (660 mm) shall be provided where the floor or footboard elevation is more than 30 inches (762 mm) above the floor or grade below and the fascia or railing would otherwise interfere with the sightlines of immediately adjacent seating.

1029.17.4 Guards at the end of aisles. A fascia or railing system complying with the *guard* requirements of Section 1015 shall be provided for the full width of the *aisle* where the foot of the *aisle* is more than 30 inches (762 mm) above the floor or grade below. The fascia or railing shall be not less than 36 inches (914 mm) high and shall provide not less than 42 inches (1067 mm) measured diagonally between the top of the rail and the *nosing* of the nearest tread.

INTERNATIONAL CODE COUNCIL®
Copyright © 2019 ICC & NYSDOS. ALL RIGHTS RESERVED. Accessed by Lauren Gualdino (lgualdino@briarcliffmanor.org), (-) Order Number #100880972 on May 08, 2020 07:05 AM (PDT) pursuant to License Agreement with ICC & NYSDOS. No further reproduction, no

100880972

SECTION 1030
EMERGENCY ESCAPE AND RESCUE

1030.1 General. In addition to the *means of egress* required by this chapter, *emergency escape and rescue openings* shall be provided in the following occupancies:

1. Group R-2 occupancies located in stories with only one *exit* or *access to* only one *exit* as permitted by Tables 1006.3.3(1) and 1006.3.3(2).
2. Group R-3 and R-4 occupancies.

Basements and sleeping rooms below the fourth story above *grade plane* shall have not fewer than one exterior *emergency escape and rescue opening* in accordance with this section. Where *basements* contain one or more sleeping rooms, *emergency escape and rescue openings* shall be required in each sleeping room, but shall not be required in adjoining areas of the *basement*. Such openings shall open directly into a *public way* or to a *yard* or *court* that opens to a *public way*.

Exceptions:

1. *Basements* with a ceiling height of less than 80 inches (2032 mm) shall not be required to have *emergency escape and rescue openings*.
2. *Emergency escape and rescue openings* are not required from *basements* or sleeping rooms that have an *exit* door or *exit access* door that opens directly into a *public way* or to a *yard*, *court* or exterior exit balcony that opens to a *public way*.
3. *Basements* without *habitable spaces* and having not more than 200 square feet (18.6 m^2) in floor area shall not be required to have *emergency escape and rescue openings*.
4. Within individual *dwelling* and *sleeping units* in Groups R-2 and R-3, where the building is equipped throughout with an *automatic sprinkler system* installed in accordance with Section 903.3.1.1, 903.3.1.2 or 903.3.1.3, *sleeping rooms* in basements shall not be required to have *emergency escape and rescue openings* provided that the basement has one of the following:
   - 4.1. One *means of egress* and one *emergency escape and rescue opening*.
   - 4.2. Two *means of egress*.

1030.1.1 Operational constraints and opening control devices. *Emergency escape and rescue openings* shall be operational from inside the room without the use of keys or tools. Window-opening control devices complying with ASTM F2090 shall be permitted for use on windows serving as a required *emergency escape and rescue opening*.

1030.2 Minimum size. *Emergency escape and rescue openings* shall have a minimum net clear opening of 5.7 square feet (0.53 m^2).

Exception: The minimum net clear opening for *grade-floor emergency escape and rescue openings* shall be 5 square feet (0.46 m^2).

1030.2.1 Minimum dimensions. The minimum net clear opening height dimension shall be 24 inches (610 mm). The minimum net clear opening width dimension shall be 20 inches (508 mm). The net clear opening dimensions shall be the result of normal operation of the opening.

1030.3 Maximum height from floor. *Emergency escape and rescue openings* shall have the bottom of the clear opening not greater than 44 inches (1118 mm) measured from the floor.

1030.4 Window wells. An *emergency escape and rescue opening* with a finished sill height below the adjacent ground level shall be provided with a window well in accordance with Sections 1030.4.1 and 1030.4.2.

1030.4.1 Minimum size. The minimum horizontal area of the window well shall be 9 square feet (0.84 m^2), with a minimum dimension of 36 inches (914 mm). The area of the window well shall allow the *emergency escape and rescue opening* to be fully opened.

1030.4.2 Ladders or steps. Window wells with a vertical depth of more than 44 inches (1118 mm) shall be equipped with an *approved* permanently affixed ladder or steps. Ladders or rungs shall have an inside width of not less than 12 inches (305 mm), shall project not less than 3 inches (76 mm) from the wall and shall be spaced not more than 18 inches (457 mm) on center (o.c.) vertically for the full height of the window well. The ladder or steps shall not encroach into the required dimensions of the window well by more than 6 inches (152 mm). The ladder or steps shall not be obstructed by the *emergency escape and rescue opening*. Ladders or steps required by this section are exempt from the *stairway* requirements of Section 1011.

1030.5 Bars, grilles, covers and screens. Bars, grilles, covers, screens or similar devices are permitted to be placed over *emergency escape and rescue openings*, bulkhead enclosures or window wells that serve such openings, provided that the minimum net clear opening size complies with Sections 1030.1.1 through 1030.4.2 and such devices shall be releasable or removable from the inside without the use of a key, tool or force greater than that which is required for normal operation of the *emergency escape and rescue opening*. Where such bars, grilles, covers, screens or similar devices are installed in existing buildings, they shall not reduce the net clear opening of the *emergency escape and rescue opening* and *smoke alarms* shall be installed in accordance with Section 907.2.10 regardless of the valuation of the *alteration*.

INTERNATIONAL CODE COUNCIL®
Copyright © 2019 ICC & NYSDOS. ALL RIGHTS RESERVED. Accessed by Lauren Gualdino (lgualdino@briarcliffmanor.org), (-) Order Number #100880972 on May 08, 2020 07:05 AM (PDT) pursuant to License Agreement with ICC & NYSDOS. No further reproduction, no

100880972

CHAPTER 11

ACCESSIBILITY

SECTION 1101
GENERAL

1101.1 Scope. The provisions of this chapter shall control the design and construction of facilities for accessibility for individuals with disabilities.

SECTION 1102
COMPLIANCE

1102.1 Design. Buildings and facilities shall be designed and constructed to be *accessible* in accordance with this code and ICC A117.1.

SECTION 1103
SCOPING REQUIREMENTS

1103.1 Where required. *Sites*, buildings, *structures*, *facilities*, elements and spaces, temporary or permanent, shall be *accessible* to individuals with disabilities.

1103.2 General exceptions. *Sites*, buildings, *structures*, *facilities*, elements and spaces shall be exempt from this chapter to the extent specified in this section.

1103.2.1 Specific requirements. *Accessibility* is not required in buildings and *facilities*, or portions thereof, to the extent permitted by Sections 1104 through 1111.

1103.2.2 Employee work areas. Spaces and elements within *employee work areas* shall only be required to comply with Sections 907.5.2.3.1, 1009 and 1104.3.1 and shall be designed and constructed so that individuals with disabilities can approach, enter and exit the work area. Work areas, or portions of work areas, other than raised courtroom stations in accordance with Section 1108.4.1.4, that are less than 300 square feet (30 m^2) in area and located 7 inches (178 mm) or more above or below the ground or finished floor where the change in elevation is essential to the function of the space shall be exempt from all requirements.

1103.2.3 Detached dwellings. Detached one- and two-family *dwellings*, their accessory structures and their associated *sites* and *facilities* are not required to comply with this chapter.

1103.2.4 Utility buildings. Group U occupancies are not required to comply with this chapter other than the following:

1. In agricultural buildings, access is required to paved work areas and areas open to the general public.
2. Private garages or carports that contain required *accessible* parking.

1103.2.5 Construction sites. Structures, *sites* and equipment directly associated with the actual processes of construction including, but not limited to, scaffolding, bridging, materials hoists, materials storage or construction trailers are not required to comply with this chapter.

1103.2.6 Raised areas. Raised areas used primarily for purposes of security, life safety or fire safety including, but not limited to, observation galleries, prison guard towers, fire towers or lifeguard stands are not required to comply with this chapter.

1103.2.7 Limited access spaces. Spaces accessed only by ladders, catwalks, crawl spaces, freight elevators or very narrow passageways are not required to comply with this chapter.

1103.2.8 Areas in places of religious worship. Raised or lowered areas, or portions of areas, in *places of religious worship* that are less than 300 square feet (30 m^2) in area and located 7 inches (178 mm) or more above or below the finished floor and used primarily for the performance of religious ceremonies are not required to comply with this chapter.

1103.2.9 Equipment spaces. Spaces frequented only by service personnel for maintenance, repair or occasional monitoring of equipment are not required to comply with this chapter.

1103.2.10 Highway tollbooths. Highway tollbooths where the access is provided only by bridges above the vehicular traffic or underground tunnels are not required to comply with this chapter.

1103.2.11 Residential Group R-1. Buildings of Group R-1 containing not more than five *sleeping units* for rent or hire that are also occupied as the residence of the proprietor are not required to comply with this chapter.

1103.2.12 Day care facilities. Where a day care facility is part of a *dwelling unit*, only the portion of the structure utilized for the day care facility is required to comply with this chapter.

1103.2.13 Detention and correctional facilities. In detention and correctional facilities, *common use* areas that are used only by inmates or detainees and security personnel, and that do not serve holding cells or housing cells required to be *Accessible units*, are not required to comply with this chapter.

1103.2.14 Walk-in coolers and freezers. Walk-in cooler and freezer equipment accessed only from employee work areas is not required to comply with this chapter.

INTERNATIONAL CODE COUNCIL®
Copyright © 2019 ICC & NYSDOS. ALL RIGHTS RESERVED. Accessed by Lauren Gualdino (lgualdino@briarcliffmanor.org), (-) Order Number #100880972 on May 08, 2020 07:05 AM (PDT) pursuant to License Agreement with ICC & NYSDOS. No further reproduction, no

100880972

SECTION 1104
ACCESSIBLE ROUTE

1104.1 Site arrival points. At least one *accessible route* within the *site* shall be provided from public transportation stops, *accessible* parking, *accessible* passenger loading zones, and public streets or sidewalks to the *accessible* building entrance served.

Exception: Other than in buildings or *facilities* containing or serving *Type B units*, an *accessible route* shall not be required between *site* arrival points and the building or *facility* entrance if the only means of access between them is a vehicular way not providing for pedestrian access.

1104.2 Within a site. At least one *accessible route* shall connect *accessible* buildings, *accessible* facilities, *accessible* elements and *accessible* spaces that are on the same *site*.

Exceptions:

1. An *accessible route* is not required between *accessible* buildings, *accessible* facilities, *accessible* elements and *accessible* spaces that have, as the only means of access between them, a vehicular way not providing for pedestrian access.
2. An *accessible route* to recreational facilities shall only be required to the extent specified in Section 1110.

1104.3 Connected spaces. Where a building or portion of a building is required to be *accessible*, at least one *accessible route* shall be provided to each portion of the building, to *accessible* building entrances connecting *accessible* pedestrian walkways and to the *public way*.

Exceptions:

1. *Stories* and *mezzanines* exempted by Section 1104.4.
2. In a building, room or space used for assembly purposes with *fixed seating*, an *accessible route* shall not be required to serve levels where *wheelchair spaces* are not provided.
3. Vertical access to elevated employee work stations within a courtroom complying with Section 1108.4.1.4.
4. An *accessible route* to recreational facilities shall only be required to the extent specified in Section 1110.

1104.3.1 Employee work areas. *Common use circulation paths* within *employee work areas* shall be *accessible routes*.

Exceptions:

1. *Common use circulation paths*, located within *employee work areas* that are less than 1,000 square feet (93 m^2) in size and defined by permanently installed partitions, counters, casework or furnishings, shall not be required to be *accessible routes*.
2. *Common use circulation paths*, located within *employee work areas*, that are an integral component of equipment, shall not be required to be *accessible routes*.
3. *Common use circulation paths*, located within exterior *employee work areas* that are fully exposed to the weather, shall not be required to be *accessible routes*.

1104.3.2 Press boxes. Press boxes in a building, room or space used for assembly purposes shall be on an *accessible route*.

Exceptions:

1. An *accessible route* shall not be required to press boxes in *bleachers* that have a single point of entry from the *bleachers*, provided that the aggregate area of all press boxes for each playing field is not more than 500 square feet (46 m^2).
2. An *accessible route* shall not be required to free-standing press boxes that are more than 12 feet (3660 mm) above grade provided that the aggregate area of all press boxes for each playing field is not more than 500 square feet (46 m^2).

1104.4 Multistory buildings and facilities. At least one *accessible route* shall connect each *accessible story*, *mezzanine* and occupied roofs in multilevel buildings and *facilities*.

Exceptions:

1. An *accessible route* is not required to *stories*, *mezzanines* and occupied roofs that have an aggregate area of not more than 3,000 square feet (278.7 m^2) and are located above and below *accessible* levels. This exception shall not apply to:
   1.1. Multiple tenant facilities of Group M occupancies containing five or more tenant spaces used for the sales or rental of goods and where at least one such tenant space is located on a floor level above or below the *accessible* levels.
   1.2. *Stories* or *mezzanines* containing offices of health care providers (Group B or I).
   1.3. Passenger transportation facilities and airports (Group A-3 or B).
   1.4. Government buildings.
2. *Stories*, *mezzanines* or occupied roofs that do not contain *accessible* elements or other spaces as determined by Section 1107 or 1108 are not required to be served by an *accessible route* from an *accessible* level.
3. In air traffic control towers, an *accessible route* is not required to serve the cab and the floor immediately below the cab.
4. Where a two-story building or facility has one *story* or *mezzanine* with an *occupant load* of five or fewer persons that does not contain *public use* space, that *story* or *mezzanine* shall not be required to be connected by an *accessible route* to the *story* above or below.

INTERNATIONAL CODE COUNCIL®
Copyright © 2019 ICC & NYSDOS. ALL RIGHTS RESERVED. Accessed by Lauren Gualdino (lgualdino@briarcliffmanor.org), (-) Order Number #100880972 on May 08, 2020 07:05 AM (PDT) pursuant to License Agreement with ICC & NYSDOS. No further reproduction, no

100880972

1104.5 Location. *Accessible routes* shall coincide with or be located in the same area as a general *circulation path*. Where the *circulation path* is interior, the *accessible route* shall be interior. Where only one *accessible route* is provided, the *accessible route* shall not pass through kitchens, storage rooms, restrooms, closets or similar spaces.

Exceptions:

1. *Accessible routes* from parking garages contained within and serving *Type B units* are not required to be interior.
2. A single *accessible route* is permitted to pass through a kitchen or storage room in an *Accessible unit*, *Type A unit* or *Type B unit*.

1104.6 Security barriers. Security barriers including, but not limited to, security bollards and security check points shall not obstruct a required *accessible route* or accessible *means of egress*.

Exception: Where security barriers incorporate elements that cannot comply with these requirements, such as certain metal detectors, fluoroscopes or other similar devices, the *accessible route* shall be permitted to be provided adjacent to security screening devices. The *accessible route* shall permit persons with disabilities passing around security barriers to maintain visual contact with their personal items to the same extent provided others passing through the security barrier.

SECTION 1105
ACCESSIBLE ENTRANCES

1105.1 Public entrances. In addition to *accessible* entrances required by Sections 1105.1.1 through 1105.1.7, at least 60 percent of all *public entrances* shall be *accessible*.

Exceptions:

1. An *accessible* entrance is not required to areas not required to be *accessible*.
2. Loading and *service entrances* that are not the only entrance to a tenant space.

1105.1.1 Parking garage entrances. Where provided, direct access for pedestrians from parking structures to buildings or facility entrances shall be *accessible*.

1105.1.2 Entrances from tunnels or elevated walkways. Where direct access is provided for pedestrians from a pedestrian tunnel or elevated walkway to a building or facility, at least one entrance to the building or facility from each tunnel or walkway shall be *accessible*.

1105.1.3 Restricted entrances. Where *restricted entrances* are provided to a building or facility, at least one *restricted entrance* to the building or facility shall be *accessible*.

1105.1.4 Entrances for inmates or detainees. Where entrances used only by inmates or detainees and security personnel are provided at judicial facilities, detention facilities or correctional facilities, at least one such entrance shall be *accessible*.

1105.1.5 Service entrances. If a *service entrance* is the only entrance to a building or a tenant space in a facility, that entrance shall be *accessible*.

1105.1.6 Tenant spaces. At least one *accessible* entrance shall be provided to each tenant in a facility.

Exception: An *accessible* entrance is not required to self-service storage facilities that are not required to be *accessible*.

1105.1.7 Dwelling units and sleeping units. At least one *accessible* entrance shall be provided to each *dwelling unit* and *sleeping unit* in a facility.

Exception: An *accessible* entrance is not required to *dwelling units* and *sleeping units* that are not required to be *Accessible units*, *Type A units* or *Type B units*.

SECTION 1106
PARKING AND PASSENGER LOADING FACILITIES

1106.1 Required. Where parking is provided, *accessible* parking spaces shall be provided in compliance with Table 1106.1, except as required by Sections 1106.2 through 1106.4. Where more than one parking facility is provided on a *site*, the number of parking spaces required to be *accessible* shall be calculated separately for each parking facility.

Exception: This section does not apply to parking spaces used exclusively for buses, trucks, other delivery vehicles, law enforcement vehicles or vehicular impound and motor pools where lots accessed by the public are provided with an *accessible* passenger loading zone.

TABLE 1106.1
ACCESSIBLE PARKING SPACES

TOTAL PARKING SPACES PROVIDED IN PARKING FACILITIES	REQUIRED MINIMUM NUMBER OF ACCESSIBLE SPACES
1 to 25	1
26 to 50	2
51 to 75	3
76 to 100	4
101 to 150	5
151 to 200	6
201 to 300	7
301 to 400	8
401 to 500	9
501 to 1,000	2% of total
1,001 and over	20, plus one for each 100, or fraction thereof, over 1,000

[NY] 1106.1.1 Access aisles. Accessible parking spaces shall be in conformance with ICC A117.1 except that spaces shall be provided with access aisles at least 8 feet (2440 mm) in width. Each *access aisle* shall be provided with a sign, in accordance with Section 1111.5.

INTERNATIONAL CODE COUNCIL®
Copyright © 2019 ICC & NYSDOS. ALL RIGHTS RESERVED. Accessed by Lauren Gualdino (lgualdino@briarcliffmanor.org), (-) Order Number #100880972 on May 08, 2020 07:05 AM (PDT) pursuant to License Agreement with ICC & NYSDOS. No further reproduction, no

100880972

1106.2 Groups I-1, R-1, R-2, R-3 and R-4. *Accessible* parking spaces shall be provided in Group I-1, R-1, R-2, R-3 and R-4 occupancies in accordance with Items 1 through 4 as applicable.

1. In Group R-2, R-3 and R-4 occupancies that are required to have *Accessible*, *Type A* or *Type B dwelling units* or *sleeping units*, at least 2 percent, but not less than one, of each type of parking space provided shall be *accessible*.
2. In Group I-1 and R-1 occupancies, *accessible* parking shall be provided in accordance with Table 1106.1.
3. Where at least one parking space is provided for each *dwelling unit* or *sleeping unit*, at least one *accessible* parking space shall be provided for each *Accessible* and *Type A unit*.
4. Where parking is provided within or beneath a building, *accessible* parking spaces shall be provided within or beneath the building.

1106.3 Hospital outpatient facilities. At least 10 percent, but not less than one, of care recipient and visitor parking spaces provided to serve hospital outpatient facilities shall be *accessible*.

1106.4 Rehabilitation facilities and outpatient physical therapy facilities. At least 20 percent, but not less than one, of the portion of care recipient and visitor parking spaces serving rehabilitation facilities specializing in treating conditions that affect mobility and outpatient physical therapy facilities shall be *accessible*.

1106.5 Van spaces. For every six or fraction of six *accessible* parking spaces, at least one shall be a van-accessible parking space.

Exception: In Group U *private garages* that serve Group R-2 and R-3 occupancies, van-accessible spaces shall be permitted to have vehicular routes, entrances, parking spaces and access aisles with a minimum vertical clearance of 7 feet (2134 mm).

1106.6 Location. *Accessible* parking spaces shall be located on the shortest *accessible route* of travel from adjacent parking to an *accessible* building entrance. In parking facilities that do not serve a particular building, *accessible* parking spaces shall be located on the shortest route to an *accessible* pedestrian entrance to the parking facility. Where buildings have multiple *accessible* entrances with adjacent parking, *accessible* parking spaces shall be dispersed and located near the *accessible* entrances.

Exceptions:

1. In multilevel parking structures, van-accessible parking spaces are permitted on one level.
2. *Accessible* parking spaces shall be permitted to be located in different parking facilities if substantially equivalent or greater accessibility is provided in terms of distance from an *accessible* entrance or entrances, parking fee and user convenience.

1106.7 Passenger loading zones. Passenger loading zones shall be *accessible*.

1106.7.1 Continuous loading zones. Where passenger loading zones are provided, one passenger loading zone in every continuous 100 linear feet (30.4 m) maximum of loading zone space shall be *accessible*.

1106.7.2 Medical facilities. A passenger loading zone shall be provided at an *accessible* entrance to licensed medical and long-term care facilities where people receive physical or medical treatment or care and where the period of stay exceeds 24 hours.

1106.7.3 Valet parking. A passenger loading zone shall be provided at valet parking services.

1106.7.4 Mechanical access parking garages. Mechanical access parking garages shall provide at least one passenger loading zone at vehicle drop-off and vehicle pick-up areas.

SECTION 1107
DWELLING UNITS AND SLEEPING UNITS

1107.1 General. In addition to the other requirements of this chapter, occupancies having *dwelling units* or *sleeping units* shall be provided with *accessible* features in accordance with this section.

1107.2 Design. *Dwelling units* and *sleeping units* that are required to be *Accessible units*, *Type A units* and *Type B units* shall comply with the applicable portions of Chapter 10 of ICC A117.1. Units required to be *Type A units* are permitted to be designed and constructed as *Accessible units*. Units required to be *Type B units* are permitted to be designed and constructed as *Accessible units* or as *Type A units*.

[NY] 1107.2.1 Type B unit doors. Clear width and maneuvering clearances required by Sections 404.2.2 and 404.2.3 of ICC A117.1 shall be provided at the primary entrance door to the *dwelling unit* or *sleeping unit* and at all other doors within the *dwelling unit* or *sleeping unit* meant for human passage.

Exception: Maneuvering clearances shall not be required at doors of a room containing only a lavatory and a water closet, provided the room does not contain the only lavatory or water closet on the *accessible* level of the unit.

[NY] 1107.2.2 Type B unit toilet and bathing facilities. At least one toilet and bathing facility in the *dwelling unit* or *sleeping unit* shall be constructed in accordance with the toilet and bathing facilities requirements of Section 1003.11 of ICC A117.1 (Type A Unit Toilet and Bathing Facilities).

1107.3 Accessible spaces. Rooms and spaces available to the general public or available for use by residents and serving *Accessible units*, *Type A units* or *Type B units* shall be *accessible*. *Accessible* spaces shall include toilet and bathing rooms, kitchen, living and dining areas and any exterior spaces, including patios, terraces and balconies.

Exceptions:

1. *Stories* and *mezzanines* exempted by Section 1107.4.
2. Recreational facilities in accordance with Section 1110.2.
3. Exterior decks, patios or balconies that are part of *Type B units* and have impervious surfaces, and that are not more than 4 inches (102 mm) below the finished floor level of the adjacent interior space of the unit.

INTERNATIONAL CODE COUNCIL®
Copyright © 2019 ICC & NYSDOS. ALL RIGHTS RESERVED. Accessed by Lauren Gualdino (lgualdino@briarcliffmanor.org), (-) Order Number #100880972 on May 08, 2020 07:05 AM (PDT) pursuant to License Agreement with ICC & NYSDOS. No further reproduction, no

100880972

1107.4 Accessible route. Not fewer than one *accessible route* shall connect *accessible* building or facility entrances with the primary entrance of each *Accessible unit*, *Type A unit* and *Type B unit* within the building or facility and with those exterior and interior spaces and facilities that serve the units.

Exceptions:

1. If due to circumstances outside the control of the owner, either the slope of the finished ground level between *accessible* facilities and buildings exceeds one unit vertical in 12 units horizontal (1:12), or where physical barriers or legal restrictions prevent the installation of an *accessible route*, a vehicular route with parking that complies with Section 1106 at each *public* or *common use* facility or building is permitted in place of the *accessible route*.
2. In Group I-3 facilities, an *accessible route* is not required to connect *stories* or *mezzanines* where *Accessible units*, all *common use* areas serving *Accessible units* and all *public use* areas are on an *accessible* route.
3. In Group R-2 facilities with *Type A units* complying with Section 1107.6.2.2.1, an *accessible route* is not required to connect *stories* or *mezzanines* where *Type A units*, all *common use* areas serving *Type A units* and all public use areas are on an *accessible route*.
4. In other than Group R-2 dormitory housing provided by places of education, in Group R-2 facilities with *Accessible units* complying with Section 1107.6.2.3.1, an *accessible route* is not required to connect *stories* or *mezzanines* where *Accessible units*, all *common use* areas serving *Accessible units* and all *public use* areas are on an *accessible* route.
5. In Group R-1, an *accessible route* is not required to connect *stories* or *mezzanines* within individual units, provided the *accessible* level meets the provisions for *Accessible units* and sleeping accommodations for two persons minimum and a toilet facility are provided on that level.
6. In congregate residences in Groups R-3 and R-4, an *accessible route* is not required to connect *stories* or *mezzanines* where *Accessible units* or *Type B units*, all *common use* areas serving *Accessible units* and *Type B units* and all *public use* areas serving *Accessible units* and *Type B units* are on an *accessible route*.
7. An *accessible route* between *stories* is not required where *Type B units* are exempted by Section 1107.7.

1107.5 Group I. *Accessible units* and *Type B units* shall be provided in Group I occupancies in accordance with Sections 1107.5.1 through 1107.5.5.

1107.5.1 Group I-1. *Accessible units* and *Type B units* shall be provided in Group I-1 occupancies in accordance with Sections 1107.5.1.1 and 1107.5.1.2.

1107.5.1.1 Accessible units. In Group I-1, Condition 1, at least 4 percent, but not less than one, of the *dwelling units* and *sleeping units* shall be *Accessible units*. In Group I-1, Condition 2, at least 10 percent, but not less than one, of the *dwelling units* and *sleeping units* shall be *Accessible units*.

1107.5.1.2 Type B units. In structures with four or more *dwelling units* or *sleeping units intended to be occupied as a residence*, every *dwelling unit* and *sleeping unit intended to be occupied as a residence* shall be a *Type B unit*.

Exception: The number of *Type B units* is permitted to be reduced in accordance with Section 1107.7.

1107.5.2 Group I-2 nursing homes. *Accessible units* and *Type B units* shall be provided in nursing homes of Group I-2 occupancies in accordance with Sections 1107.5.2.1 and 1107.5.2.2.

1107.5.2.1 Accessible units. At least 50 percent but not less than one of each type of the *dwelling units* and *sleeping units* shall be *Accessible units*.

1107.5.2.2 Type B units. In structures with four or more *dwelling units* or *sleeping units intended to be occupied as a residence*, every *dwelling unit* and *sleeping unit intended to be occupied as a residence* shall be a *Type B unit*.

Exception: The number of *Type B units* is permitted to be reduced in accordance with Section 1107.7.

1107.5.3 Group I-2 hospitals. *Accessible units* and *Type B units* shall be provided in general-purpose hospitals, psychiatric facilities and detoxification facilities of Group I-2 occupancies in accordance with Sections 1107.5.3.1 and 1107.5.3.2.

1107.5.3.1 Accessible units. At least 10 percent, but not less than one, of the *dwelling units* and *sleeping units* shall be *Accessible units*.

Exception: Entry doors to *Accessible dwelling units* or *sleeping units* shall not be required to provide the maneuvering clearance beyond the latch side of the door.

1107.5.3.2 Type B units. In structures with four or more *dwelling units* or *sleeping units intended to be occupied as a residence*, every *dwelling unit* and *sleeping unit intended to be occupied as a residence* shall be a *Type B unit*.

Exception: The number of *Type B units* is permitted to be reduced in accordance with Section 1107.7.

1107.5.4 Group I-2 rehabilitation facilities. In hospitals and rehabilitation facilities of Group I-2 occupancies that specialize in treating conditions that affect mobility, or units within either that specialize in treating conditions that affect mobility, 100 percent of the *dwelling units* and *sleeping units* shall be *Accessible units*.

1107.5.5 Group I-3. *Accessible units* shall be provided in Group I-3 occupancies in accordance with Sections 1107.5.5.1 through 1107.5.5.3.

1107.5.5.1 Group I-3 sleeping units. In Group I-3 occupancies, at least 3 percent of the total number of *sleeping units* in the facility, but not less than one unit in each classification level, shall be *Accessible units*.

INTERNATIONAL CODE COUNCIL®
Copyright © 2019 ICC & NYSDOS. ALL RIGHTS RESERVED. Accessed by Lauren Gualdino (lgualdino@briarcliffmanor.org), (-) Order Number #100880972 on May 08, 2020 07:05 AM (PDT) pursuant to License Agreement with ICC & NYSDOS. No further reproduction, no

100880972

1107.5.5.2 Special holding cells and special housing cells or rooms. In addition to the *Accessible units* required by Section 1107.5.5.1, where special holding cells or special housing cells or rooms are provided, at least one serving each purpose shall be an *Accessible unit*. Cells or rooms subject to this requirement include, but are not limited to, those used for purposes of orientation, protective custody, administrative or disciplinary detention or segregation, detoxification and medical isolation.

Exception: Cells or rooms specially designed without protrusions and that are used solely for purposes of suicide prevention shall not be required to include grab bars.

1107.5.5.3 Medical care facilities. Patient *sleeping units* or cells required to be *Accessible units* in medical care facilities shall be provided in addition to any medical isolation cells required to comply with Section 1107.5.5.2.

1107.6 Group R. *Accessible units*, *Type A units* and *Type B units* shall be provided in Group R occupancies in accordance with Sections 1107.6.1 through 1107.6.4.

1107.6.1 Group R-1. *Accessible units* and *Type B units* shall be provided in Group R-1 occupancies in accordance with Sections 1107.6.1.1 and 1107.6.1.2.

1107.6.1.1 Accessible units. *Accessible dwelling units* and *sleeping units* shall be provided in accordance with Table 1107.6.1.1. On a multiple-building site, where structures contain more than 50 *dwelling units* or *sleeping units*, the number of *Accessible units* shall be determined per structure. On a multiple-building site, where structures contain 50 or fewer *dwelling units* or *sleeping units*, all *dwelling units* and *sleeping units* on a *site* shall be considered to determine the total number of *Accessible units*. *Accessible units* shall be dispersed among the various classes of units.

1107.6.1.2 Type B units. In structures with four or more *dwelling units* or *sleeping units intended to be occupied as a residence*, every *dwelling unit* and *sleeping unit intended to be occupied as a residence* shall be a *Type B unit*.

Exception: The number of *Type B units* is permitted to be reduced in accordance with Section 1107.7.

1107.6.2 Group R-2. *Accessible units*, *Type A units* and *Type B units* shall be provided in Group R-2 occupancies in accordance with Sections 1107.6.2.1 through 1107.6.2.3.

1107.6.2.1 Live/work units. In *live/work units* constructed in accordance with Section 419, the nonresidential portion is required to be *accessible*. In a structure where there are four or more *live/work units intended to be occupied as a residence*, the residential portion of the *live/work unit* shall be a *Type B unit*.

Exception: The number of *Type B units* is permitted to be reduced in accordance with Section 1107.7.

1107.6.2.2 Apartment houses, monasteries and convents. *Type A units* and *Type B units* shall be provided in apartment houses, monasteries and convents in accordance with Sections 1107.6.2.2.1 and 1107.6.2.2.2. Bedrooms in monasteries and convents shall be counted as units for the purpose of determining the number of units. Where the bedrooms are grouped in *sleeping units*, only one bedroom in each *sleeping unit* shall count toward the number of required Type A units.

[NY] 1107.6.2.2.1 Reserved.

1107.6.2.2.2 Type B units. Where there are four or more *dwelling units* or *sleeping units intended to be occupied as a residence* in a single structure, every *dwelling unit* and *sleeping unit intended to be occupied as a residence* shall be a *Type B unit*.

Exception: The number of *Type B units* is permitted to be reduced in accordance with Section 1107.7.

TABLE 1107.6.1.1
ACCESSIBLE DWELLING UNITS AND SLEEPING UNITS

TOTAL NUMBER OF UNITS PROVIDED	MINIMUM REQUIRED NUMBER OF ACCESSIBLE UNITS WITHOUT ROLL-IN SHOWERS	MINIMUM REQUIRED NUMBER OF ACCESSIBLE UNITS WITH ROLL-IN SHOWERS	TOTAL NUMBER OF REQUIRED ACCESSIBLE UNITS
1 to 25	1	0	1
26 to 50	2	0	2
51 to 75	3	1	4
76 to 100	4	1	5
101 to 150	5	2	7
151 to 200	6	2	8
201 to 300	7	3	10
301 to 400	8	4	12
401 to 500	9	4	13
501 to 1,000	2% of total	1% of total	3% of total
Over 1,000	20, plus 1 for each 100, or fraction thereof, over 1,000	10 plus 1 for each 100, or fraction thereof, over 1,000	30 plus 2 for each 100, or fraction thereof, over 1,000

INTERNATIONAL CODE COUNCIL®
Copyright © 2019 ICC & NYSDOS. ALL RIGHTS RESERVED. Accessed by Lauren Gualdino (lgualdino@briarcliffmanor.org), (-) Order Number #100880972 on May 08, 2020 07:05 AM (PDT) pursuant to License Agreement with ICC & NYSDOS. No further reproduction, no

100880972

1107.6.2.3 Group R-2 other than live/work units, apartment houses, monasteries and convents. In Group R-2 occupancies, other than *live/work units*, apartment houses, monasteries and convents falling within the scope of Sections 1107.6.2.1 and 1107.6.2.2, *Accessible units* and *Type B units* shall be provided in accordance with Sections 1107.6.2.3.1 and 1107.6.2.3.2. Bedrooms within congregate living facilities, dormitories, sororities, fraternities and boarding houses shall be counted as *sleeping units* for the purpose of determining the number of units. Where the *bedrooms* are grouped into *dwelling* or *sleeping units*, only one *bedroom* in each *dwelling* or *sleeping unit* shall be permitted to count toward the number of required *Accessible units*.

1107.6.2.3.1 Accessible units. *Accessible dwelling units* and *sleeping units* shall be provided in accordance with Table 1107.6.1.1.

1107.6.2.3.2 Type B units. Where there are four or more *dwelling units* or *sleeping units intended to be occupied as a residence* in a single structure, every *dwelling unit* and every *sleeping unit intended to be occupied as a residence* shall be a *Type B unit*.

Exception: The number of *Type B units* is permitted to be reduced in accordance with Section 1107.7.

1107.6.3 Group R-3. In Group R-3 occupancies where there are four or more *dwelling units* or *sleeping units intended to be occupied as a residence* in a single structure, every *dwelling unit* and *sleeping unit intended to be occupied as a residence* shall be a *Type B unit*. Bedrooms within congregate living facilities, dormitories, sororities, fraternities, and boarding houses shall be counted as *sleeping units* for the purpose of determining the number of units.

Exception: The number of *Type B units* is permitted to be reduced in accordance with Section 1107.7.

[NY] 1107.6.4 Group R-4. *Accessible units* and *Type B units* shall be provided in Group R-4 occupancies in accordance with Sections 1107.6.4.1 and 1107.6.4.2.

1107.6.4.1 Accessible units. In Group R-4, Condition 1, at least one of the *sleeping units* shall be an *Accessible unit*. In Group R-4, Condition 2, at least two of the *sleeping units* shall be an *Accessible unit*.

1107.6.4.2 Type B units. In structures with four or more *sleeping units intended to be occupied as a residence*, every *sleeping unit intended to be occupied as a residence* shall be a *Type B unit*.

Exception: The number of *Type B units* is permitted to be reduced in accordance with Section 1107.7.

1107.7 General exceptions. Where specifically permitted by Section 1107.5 or 1107.6, the required number of *Type A units* and *Type B units* is permitted to be reduced in accordance with Sections 1107.7.1 through 1107.7.5.

1107.7.1 Structures without elevator service. Where elevator service is not provided in a structure, only the *dwelling units* and *sleeping units* that are located on stories indicated in Sections 1107.7.1.1 and 1107.7.1.2 are required to be *Type A units* and *Type B units*, respectively. The number of *Type A units* shall be determined in accordance with Section 1107.6.2.2.1.

1107.7.1.1 One story with Type B units required. At least one *story* containing *dwelling units* or *sleeping units intended to be occupied as a residence* shall be provided with an *accessible* entrance from the exterior of the structure and all units *intended to be occupied as a residence* on that *story* shall be *Type B units*.

1107.7.1.2 Additional stories with Type B units. Where stories have entrances not included in determining compliance with Section 1107.7.1.1, and such entrances are proximate to arrival points intended to serve units on that *story*, as indicated in Items 1 and 2, all *dwelling units* and *sleeping units intended to be occupied as a residence* served by that entrance on that *story* shall be *Type B units*.

1. Where the slopes of the undisturbed *site* measured between the planned entrance and all vehicular or pedestrian arrival points within 50 feet (15 240 mm) of the planned entrance are 10 percent or less.
2. Where the slopes of the planned finished grade measured between the entrance and all vehicular or pedestrian arrival points within 50 feet (15 240 mm) of the planned entrance are 10 percent or less.

Where arrival points are not within 50 feet (15 240 mm) of the entrance, the closest arrival point shall be used to determine access unless that arrival point serves the *story* required by Section 1107.7.1.1.

1107.7.2 Multistory units. A *multistory dwelling unit* or *sleeping unit* that is not provided with elevator service is not required to be a *Type B unit*. Where a *multistory unit* is provided with external elevator service to only one floor, the floor provided with elevator service shall be the primary entry to the unit, shall comply with the requirements for a *Type B unit* and, where provided within the unit, a living area, a kitchen and a toilet facility shall be provided on that floor.

1107.7.3 Elevator service to the lowest story with units. Where elevator service in the building provides an *accessible route* only to the lowest *story* containing *dwelling units* or *sleeping units intended to be occupied as a residence*, only the units on that *story* that are *intended to be occupied as a residence* are required to be *Type B units*.

1107.7.4 Site impracticality. On a *site* with multiple nonelevator buildings, the number of units required by Section 1107.7.1 to be *Type B units* is permitted to be reduced to a percentage that is equal to the percentage of the entire *site* having grades, prior to development, that are less than 10 percent, provided that all of the following conditions are met:

1. Not less than 20 percent of the units required by Section 1107.7.1 on the *site* are *Type B units*.

INTERNATIONAL CODE COUNCIL®
Copyright © 2019 ICC & NYSDOS. ALL RIGHTS RESERVED. Accessed by Lauren Gualdino (lgualdino@briarcliffmanor.org), (-) Order Number #100880972 on May 08, 2020 07:05 AM (PDT) pursuant to License Agreement with ICC & NYSDOS. No further reproduction, no

100880972

2. Units required by Section 1107.7.1, where the slope between the building entrance serving the units on that *story* and a pedestrian or vehicular arrival point is not greater than 8.33 percent, are *Type B units*.
3. Units required by Section 1107.7.1, where an elevated walkway is planned between a building entrance serving the units on that *story* and a pedestrian or vehicular arrival point and the slope between them is 10 percent or less, are *Type B units*.
4. Units served by an elevator in accordance with Section 1107.7.3 are *Type B units*.

1107.7.5 Design flood elevation. The required number of *Type A units* and *Type B units* shall not apply to a *site* where the required elevation of the lowest floor or the lowest horizontal structural building members of nonelevator buildings are at or above the *design flood elevation* resulting in all of the following:

1. A difference in elevation between the minimum required floor elevation at the primary entrances and vehicular and pedestrian arrival points within 50 feet (15 240 mm) exceeding 30 inches (762 mm).
2. A slope exceeding 10 percent between the minimum required floor elevation at the primary entrances and vehicular and pedestrian arrival points within 50 feet (15 240 mm).

Where such arrival points are not within 50 feet (15 240 mm) of the primary entrances, the closest arrival points shall be used.

SECTION 1108
SPECIAL OCCUPANCIES

1108.1 General. In addition to the other requirements of this chapter, the requirements of Sections 1108.2 through 1108.4 shall apply to specific occupancies.

1108.2 Assembly area seating. A building, room or space used for assembly purposes with *fixed seating* shall comply with Sections 1108.2.1 through 1108.2.5. Lawn seating shall comply with Section 1108.2.6. Assistive listening systems shall comply with Section 1108.2.7. Performance areas viewed from assembly seating areas shall comply with Section 1108.2.8. Dining areas shall comply with Section 1108.2.9.

1108.2.1 Services. If a service or facility is provided in an area that is not *accessible*, the same service or facility shall be provided on an *accessible* level and shall be *accessible*.

1108.2.2 Wheelchair spaces. In rooms and spaces used for assembly purposes with *fixed seating*, *accessible wheelchair spaces* shall be provided in accordance with Sections 1108.2.2.1 through 1108.2.2.3.

1108.2.2.1 General seating. *Wheelchair spaces* shall be provided in accordance with Table 1108.2.2.1.

1108.2.2.2 Luxury boxes, club boxes and suites. In each luxury box, club box and suite within arenas, stadiums and *grandstands*, *wheelchair spaces* shall be provided in accordance with Table 1108.2.2.1.

1108.2.2.3 Other boxes. In boxes other than those required to comply with Section 1108.2.2.2, the total number of *wheelchair spaces* provided shall be determined in accordance with Table 1108.2.2.1. *Wheelchair spaces* shall be located in not less than 20 percent of all boxes provided.

TABLE 1108.2.2.1
ACCESSIBLE WHEELCHAIR SPACES

CAPACITY OF SEATING IN ASSEMBLY AREAS	MINIMUM REQUIRED NUMBER OF WHEELCHAIR SPACES
4 to 25	1
26 to 50	2
51 to 100	4
101 to 300	5
301 to 500	6
501 to 5,000	6, plus 1 for each 150, or fraction thereof, between 501 through 5,000
5,001 and over	36 plus 1 for each 200, or fraction thereof, over 5,000

1108.2.3 Companion seats. At least one companion seat shall be provided for each *wheelchair space* required by Sections 1108.2.2.1 through 1108.2.2.3.

1108.2.4 Dispersion of wheelchair spaces in multilevel assembly seating areas. In *multilevel assembly seating* areas, *wheelchair spaces* shall be provided on the main floor level and on one of each two additional floor or *mezzanine* levels. *Wheelchair spaces* shall be provided in each luxury box, club box and suite within assembly facilities.

Exceptions:

1. In *multilevel assembly seating* areas utilized for worship services where the second floor or *mezzanine* level contains 25 percent or less of the total seating capacity, *wheelchair spaces* shall be permitted to all be located on the main level.
2. In *multilevel assembly seating* areas where the second floor or *mezzanine* level provides 25 percent or less of the total seating capacity and 300 or fewer seats, all *wheelchair spaces* shall be permitted to be located on the main level.
3. *Wheelchair spaces* in team or player seating serving areas of sport activity are not required to be dispersed.

1108.2.5 Designated aisle seats. At least 5 percent, but not less than one, of the total number of aisle seats provided shall be designated aisle seats and shall be the aisle seats located closest to *accessible routes*.

Exception: Designated aisle seats are not required in team or player seating serving *areas of sport activity*.

1108.2.6 Lawn seating. Lawn seating areas and exterior overflow seating areas, where fixed seats are not provided, shall connect to an *accessible route*.

INTERNATIONAL CODE COUNCIL®
Copyright © 2019 ICC & NYSDOS. ALL RIGHTS RESERVED. Accessed by Lauren Gualdino (lgualdino@briarcliffmanor.org), (-) Order Number #100880972 on May 08, 2020 07:05 AM (PDT) pursuant to License Agreement with ICC & NYSDOS. No further reproduction, no

100880972

[NY] 1108.2.7 Assistive listening systems. Each building, room or space used for assembly purposes where audible communications are integral to the use of the space shall have an assistive listening system. The assistive listening system shall comply with Appendix O, Assistive Listening Systems Performance Standards.

Exception: Other than in courtrooms, an assistive listening system is not required where there is no audio amplification system.

1108.2.7.1 Receivers. The number and type of receivers shall be provided for assistive listening systems in accordance with Table 1108.2.7.1.

Exceptions:

1. Where a building contains more than one room or space used for assembly purposes, the total number of required receivers shall be permitted to be calculated based on the total number of seats in the building, provided that all receivers are usable with all systems and if the rooms or spaces used for assembly purposes required to provide assistive listening are under one management.
2. Where all seats in a building, room or space used for assembly purposes are served by an induction loop assistive listening system, the minimum number of receivers required by Table 1108.2.7.1 to be hearing-aid compatible shall not be required.

1108.2.7.2 Ticket windows. Where ticket windows are provided in stadiums and arenas, at least one window at each location shall have an assistive listening system.

1108.2.7.3 Public address systems. Where stadiums, arenas and *grandstands* have 15,000 fixed seats or more and provide audible public announcements, they shall also provide prerecorded or real-time captions of those audible public announcements.

1108.2.8 Performance areas. An *accessible route* shall directly connect the performance area to the assembly seating area where a *circulation path* directly connects a performance area to an assembly seating area. An *accessible route* shall be provided from performance areas to ancillary areas or facilities used by performers.

1108.2.9 Dining and drinking areas. In dining and drinking areas, all interior and exterior floor areas shall be *accessible* and be on an *accessible route*.

Exceptions:

1. An *accessible route* between *accessible* levels and stories above or below is not required where permitted by Section 1104.4, Exception 1.
2. An *accessible route* to dining and drinking areas in a *mezzanine* is not required, provided that the *mezzanine* contains less than 25 percent of the total combined area for dining and drinking and the same services, and decor are provided in the *accessible* area.
3. In sports facilities, tiered dining areas providing seating required to be *accessible* shall be required to have *accessible routes* serving at least 25 percent of the dining area, provided that *accessible routes* serve *accessible* seating and where each tier is provided with the same services.
4. Employee-only work areas shall comply with Sections 1103.2.2 and 1104.3.1.

1108.2.9.1 Dining surfaces. Where dining surfaces for the consumption of food or drink are provided, at least 5 percent, but not less than one, of the dining surfaces for the seating and standing spaces shall be *accessible* and be distributed throughout the facility and located on a level accessed by an *accessible route*.

1108.3 Self-service storage facilities. *Self-service storage facilities* shall provide *accessible* individual self-storage spaces in accordance with Table 1108.3.

TABLE 1108.3
ACCESSIBLE SELF-SERVICE STORAGE FACILITIES

TOTAL SPACES IN FACILITY	MINIMUM NUMBER OF REQUIRED ACCESSIBLE SPACES
1 to 200	5%, but not less than 1
Over 200	10, plus 2% of total number of units over 200

1108.3.1 Dispersion. *Accessible* individual self-service storage spaces shall be dispersed throughout the various classes of spaces provided. Where more classes of spaces are provided than the number of required *accessible* spaces, the number of *accessible* spaces shall not be required to exceed that required by Table 1108.3. *Accessible* spaces are permitted to be dispersed in a single building of a multiple-building facility.

TABLE 1108.2.7.1
RECEIVERS FOR ASSISTIVE LISTENING SYSTEMS

CAPACITY OF SEATING IN ASSEMBLY AREAS	MINIMUM REQUIRED NUMBER OF RECEIVERS	MINIMUM NUMBER OF RECEIVERS TO BE HEARING-AID COMPATIBLE
50 or less	2	2
51 to 200	2, plus 1 per 25 seats over 50 seats*	2
201 to 500	2, plus 1 per 25 seats over 50 seats*	1 per 4 receivers*
501 to 1,000	20, plus 1 per 33 seats over 500 seats*	1 per 4 receivers*
1,001 to 2,000	35, plus 1 per 50 seats over 1,000 seats*	1 per 4 receivers*
Over 2,000	55, plus 1 per 100 seats over 2,000 seats*	1 per 4 receivers*

Note: * = or fraction thereof

INTERNATIONAL CODE COUNCIL®
Copyright © 2019 ICC & NYSDOS. ALL RIGHTS RESERVED. Accessed by Lauren Gualdino (lgualdino@briarcliffmanor.org), (-) Order Number #100880972 on May 08, 2020 07:05 AM (PDT) pursuant to License Agreement with ICC & NYSDOS. No further reproduction, no

100880972

1108.4 Judicial facilities. Judicial facilities shall comply with Sections 1108.4.1 and 1108.4.2.

1108.4.1 Courtrooms. Each courtroom shall be *accessible* and comply with Sections 1108.4.1.1 through 1108.4.1.5.

1108.4.1.1 Jury box. A *wheelchair space* shall be provided within the jury box.

Exception: Adjacent companion seating is not required.

1108.4.1.2 Gallery seating. *Wheelchair spaces* shall be provided in accordance with Table 1108.2.2.1. Designated aisle seats shall be provided in accordance with Section 1108.2.5.

1108.4.1.3 Assistive listening systems. An assistive listening system must be provided. Receivers shall be provided for the assistive listening system in accordance with Section 1108.2.7.1.

1108.4.1.4 Employee work stations. The judge's bench, clerk's station, bailiff's station, deputy clerk's station and court reporter's station shall be located on an accessible route. The vertical access to elevated employee work stations within a courtroom is not required at the time of initial construction, provided a *ramp*, lift or elevator can be installed without requiring reconfiguration or extension of the courtroom or extension of the electrical system.

1108.4.1.5 Other work stations. The litigant's and counsel stations, including the lectern, shall be *accessible*.

1108.4.2 Holding cells. Central holding cells and court-floor holding cells shall comply with Sections 1108.4.2.1 and 1108.4.2.2.

1108.4.2.1 Central holding cells. Where separate central holding cells are provided for adult males, juvenile males, adult females or juvenile females, one of each type shall be *accessible*. Where central holding cells are provided and are not separated by age or sex, at least one *accessible* cell shall be provided.

1108.4.2.2 Court-floor holding cells. Where separate court-floor holding cells are provided for adult males, juvenile males, adult females or juvenile females, each courtroom shall be served by one *accessible* cell of each type. Where court-floor holding cells are provided and are not separated by age or sex, courtrooms shall be served by at least one *accessible* cell. *Accessible* cells shall be permitted to serve more than one courtroom.

SECTION 1109
OTHER FEATURES AND FACILITIES

1109.1 General. *Accessible* building features and facilities shall be provided in accordance with Sections 1109.2 through 1109.15.

Exception: *Accessible units*, *Type A units* and *Type B units* shall comply with Chapter 10 of ICC A117.1.

1109.2 Toilet and bathing facilities. Each toilet room and bathing room shall be *accessible*. Where a floor level is not required to be connected by an *accessible route*, the only toilet rooms or bathing rooms provided within the facility shall not be located on the inaccessible floor. Except as provided for in Sections 1109.2.2 and 1109.2.3, at least one of each type of fixture, element, control or dispenser in each accessible toilet room and bathing room shall be *accessible*.

Exceptions:

1. Toilet rooms or bathing rooms accessed only through a private office, not for *common* or *public use* and intended for use by a single occupant, shall be permitted to comply with the specific exceptions in ICC A117.1.
2. This section is not applicable to toilet and bathing rooms that serve *dwelling units* or *sleeping units* that are not required to be *accessible* by Section 1107.
3. Where multiple single-user toilet rooms or bathing rooms are clustered at a single location, at least 50 percent but not less than one room for each use at each cluster shall be *accessible*.
4. Where no more than one urinal is provided in a toilet room or bathing room, the urinal is not required to be *accessible*.
5. Toilet rooms or bathing rooms that are part of critical care or intensive care patient sleeping rooms serving *Accessible units* are not required to be *accessible*.
6. Toilet rooms or bathing rooms designed for bariatrics patients are not required to comply with the toilet room and bathing room requirement in ICC A117.1. The *sleeping units* served by bariatrics toilet or bathing rooms shall not count toward the required number of *Accessible sleeping units.*
7. Where toilet facilities are primarily for children's use, required *accessible* water closets, toilet compartments and lavatories shall be permitted to comply with children's provision of ICC A117.1.

1109.2.1 Family or assisted-use toilet and bathing rooms. In assembly and mercantile occupancies, an *accessible* family or assisted-use toilet room shall be provided where an aggregate of six or more male and female water closets is required. In buildings of mixed occupancy, only those water closets required for the assembly or mercantile occupancy shall be used to determine the family or assisted-use toilet room requirement. In recreational facilities where separate-sex bathing rooms are provided, an *accessible* family or assisted-use bathing room shall be provided. Fixtures located within family or assisted-use toilet and bathing rooms shall be included in determining the number of fixtures provided in an occupancy.

Exception: Where each separate-sex bathing room has only one shower or bathtub fixture, a family or assisted-use bathing room is not required.

1109.2.1.1 Standard. Family or assisted-use toilet and bathing rooms shall comply with Sections 1109.2.1.2 through 1109.2.1.7.

1109.2.1.2 Family or assisted-use toilet rooms. Family or assisted-use toilet rooms shall include only one water closet and only one lavatory. A family or

INTERNATIONAL CODE COUNCIL®
Copyright © 2019 ICC & NYSDOS. ALL RIGHTS RESERVED. Accessed by Lauren Gualdino (lgualdino@briarcliffmanor.org), (-) Order Number #100880972 on May 08, 2020 07:05 AM (PDT) pursuant to License Agreement with ICC & NYSDOS. No further reproduction, no

100880972

assisted-use bathing room in accordance with Section 1109.2.1.3 shall be considered to be a family or assisted-use toilet room.

Exception: The following additional fixtures shall be permitted in a family or assisted-use toilet room:

1. A urinal.
2. A child-height water closet.
3. A child-height lavatory.

1109.2.1.3 Family or assisted-use bathing rooms. Family or assisted-use bathing rooms shall include only one shower or bathtub fixture. Family or assisted-use bathing rooms shall also include one water closet and one lavatory. Where storage facilities are provided for separate-sex bathing rooms, *accessible* storage facilities shall be provided for family or assisted-use bathing rooms.

1109.2.1.4 Location. Family or assisted-use toilet and bathing rooms shall be located on an *accessible route*. Family or assisted-use toilet rooms shall be located not more than one *story* above or below separate-sex toilet rooms. The *accessible route* from any separate-sex toilet room to a family or assisted-use toilet room shall not exceed 500 feet (152 m).

1109.2.1.5 Prohibited location. In passenger transportation facilities and airports, the *accessible route* from separate-sex toilet rooms to a family or assisted-use toilet room shall not pass through security checkpoints.

1109.2.1.6 Clear floor space. Where doors swing into a family or assisted-use toilet or bathing room, a clear floor space not less than 30 inches by 48 inches (762 mm by 1219 mm) shall be provided, within the room, beyond the area of the door swing.

1109.2.1.7 Privacy. Doors to family or assisted-use toilet and bathing rooms shall be securable from within the room.

1109.2.2 Water closet compartment. Where water closet compartments are provided in a toilet room or bathing room, at least 5 percent of the total number of compartments shall be wheelchair *accessible*. Where the combined total water closet compartments and urinals provided in a toilet room or bathing room is six or more, at least 5 percent of the total number of compartments shall be ambulatory *accessible*, provided in addition to the wheelchair-*accessible* compartment.

1109.2.3 Lavatories. Where lavatories are provided, at least 5 percent, but not less than one, shall be *accessible*. Where an *accessible* lavatory is located within the *accessible* water closet compartment at least one additional *accessible* lavatory shall be provided in the multicompartment toilet room outside the water closet compartment. Where the total lavatories provided in a toilet room or bathing facility is six or more, at least one lavatory with enhanced reach ranges shall be provided.

1109.3 Sinks. Where sinks are provided, at least 5 percent but not less than one provided in *accessible* spaces shall be *accessible*.

Exception: Mop or service sinks are not required to be *accessible*.

1109.4 Kitchens and kitchenettes. Where kitchens and kitchenettes are provided in *accessible* spaces or rooms, they shall be *accessible*.

1109.5 Drinking fountains. Where drinking fountains are provided on an exterior site, on a floor or within a secured area, the drinking fountains shall be provided in accordance with Sections 1109.5.1 and 1109.5.2.

1109.5.1 Minimum number. Not fewer than two drinking fountains shall be provided. One drinking fountain shall comply with the requirements for people who use a wheelchair and one drinking fountain shall comply with the requirements for standing persons.

Exceptions:

1. A single drinking fountain with two separate spouts that complies with the requirements for people who use a wheelchair and standing persons shall be permitted to be substituted for two separate drinking fountains.
2. Where drinking fountains are primarily for children's use, drinking fountains for people using wheelchairs shall be permitted to comply with the children's provisions in ICC A117.1 and drinking fountains for standing children shall be permitted to provide the spout at 30 inches (762 mm) minimum above the floor.

1109.5.2 More than the minimum number. Where more than the minimum number of drinking fountains specified in Section 1109.5.1 is provided, 50 percent of the total number of drinking fountains provided shall comply with the requirements for persons who use a wheelchair and 50 percent of the total number of drinking fountains provided shall comply with the requirements for standing persons.

Exceptions:

1. Where 50 percent of the drinking fountains yields a fraction, 50 percent shall be permitted to be rounded up or down, provided that the total number of drinking fountains complying with this section equals 100 percent of the drinking fountains.
2. Where drinking fountains are primarily for children's use, drinking fountains for people using wheelchairs shall be permitted to comply with the children's provisions in ICC A117.1 and drinking fountains for standing children shall be permitted to provide the spout at 30 inches (762 mm) minimum above the floor.

1109.6 Saunas and steam rooms. Where provided, saunas and steam rooms shall be *accessible*.

Exception: Where saunas or steam rooms are clustered at a single location, at least 5 percent of the saunas and steam rooms, but not less than one, of each type in each cluster shall be *accessible*.

INTERNATIONAL CODE COUNCIL®
Copyright © 2019 ICC & NYSDOS. ALL RIGHTS RESERVED. Accessed by Lauren Gualdino (lgualdino@briarcliffmanor.org), (-) Order Number #100880972 on May 08, 2020 07:05 AM (PDT) pursuant to License Agreement with ICC & NYSDOS. No further reproduction, no

100880972

1109.7 Elevators. Passenger elevators on an *accessible route* shall be *accessible* and comply with Chapter 30.

1109.8 Lifts. Platform (wheelchair) lifts are permitted to be a part of a required *accessible route* in new construction where indicated in Items 1 through 10. Platform (wheelchair) lifts shall be installed in accordance with ASME A18.1.

1. An *accessible route* to a performing area and speaker platforms.
2. An *accessible route* to *wheelchair spaces* required to comply with the *wheelchair space* dispersion requirements of Sections 1108.2.2 through 1108.2.6.
3. An *accessible route* to spaces that are not open to the general public with an *occupant load* of not more than five.
4. An *accessible route* within an individual *dwelling unit* or *sleeping unit* required to be an *Accessible unit*, *Type A unit* or *Type B unit*.
5. An *accessible route* to jury boxes and witness stands; raised courtroom stations including judges' benches, clerks' stations, bailiffs' stations, deputy clerks' stations and court reporters' stations; and to depressed areas such as the well of the court.
6. An *accessible route* to load and unload areas serving amusement rides.
7. An *accessible route* to play components or soft contained play structures.
8. An *accessible route* to team or player seating areas serving *areas of sport activity*.
9. An *accessible route* instead of gangways serving recreational boating facilities and fishing piers and platforms.
10. An *accessible route* where existing exterior *site* constraints make use of a *ramp* or elevator infeasible.

1109.9 Storage. Where fixed or built-in storage elements such as cabinets, coat hooks, shelves, medicine cabinets, lockers, closets and drawers are provided in required *accessible* spaces, at least 5 percent, but not less than one of each type shall be *accessible*.

1109.9.1 Equity. *Accessible* facilities and spaces shall be provided with the same storage elements as provided in the similar nonaccessible facilities and spaces.

1109.9.2 Shelving and display units. Self-service shelves and display units shall be located on an *accessible route*. Such shelving and display units shall not be required to comply with reach-range provisions.

1109.10 Detectable warnings. Passenger transit platform edges bordering a drop-off and not protected by platform screens or *guards* shall have a *detectable warning*.

Exception: *Detectable warnings* are not required at bus stops.

1109.11 Seating at tables, counters and work surfaces. Where seating or standing space at fixed or built-in tables, counters or work surfaces is provided in *accessible* spaces, at least 5 percent of the seating and standing spaces, but not less than one, shall be *accessible*.

Exception: Check-writing surfaces at check-out aisles not required to comply with Section 1109.12.2 are not required to be *accessible*.

1109.11.1 Dispersion. *Accessible* fixed or built-in seating at tables, counters or work surfaces shall be distributed throughout the space or facility containing such elements and located on a level accessed by an *accessible route*.

1109.11.2 Visiting areas. Visiting areas in judicial facilities and Group I-3 shall comply with Sections 1109.11.2.1 and 1109.11.2.2.

1109.11.2.1 Cubicles and counters. At least 5 percent, but not less than one of the cubicles, shall be *accessible* on both the visitor and detainee sides. Where counters are provided, at least one shall be *accessible* on both the visitor and detainee sides.

Exception: This requirement shall not apply to the detainee side of cubicles or counters at noncontact visiting areas not serving *Accessible unit* holding cells.

1109.11.2.2 Partitions. Where solid partitions or security glazing separate visitors from detainees, at least one of each type of cubicle or counter partition shall be *accessible*.

1109.12 Service facilities. Service facilities shall provide for *accessible* features in accordance with Sections 1109.12.1 through 1109.12.5.

1109.12.1 Dressing, fitting and locker rooms. Where dressing rooms, fitting rooms or locker rooms are provided, at least 5 percent, but not less than one, of each type of use in each cluster provided shall be *accessible*.

1109.12.2 Check-out aisles. Where check-out aisles are provided, *accessible* check-out aisles shall be provided in accordance with Table 1109.12.2. Where check-out aisles serve different functions, accessible check-out aisles shall be provided in accordance with Table 1109.12.2 for each function. Where check-out aisles are dispersed throughout the building or facility, *accessible* check-out aisles shall also be dispersed. Traffic control devices, security devices and turnstiles located in *accessible* check-out aisles or lanes shall be *accessible*.

Exception: Where the public use area is under 5,000 square feet (465 m^2) not more than one *accessible* check-out aisle shall be required.

TABLE 1109.12.2
ACCESSIBLE CHECK-OUT AISLES

TOTAL CHECK-OUT AISLES OF EACH FUNCTION	MINIMUM NUMBER OF ACCESSIBLE CHECK-OUT AISLES OF EACH FUNCTION
1 to 4	1
5 to 8	2
9 to 15	3
Over 15	3, plus 20% of additional aisles

INTERNATIONAL CODE COUNCIL®
Copyright © 2019 ICC & NYSDOS. ALL RIGHTS RESERVED. Accessed by Lauren Gualdino (lgualdino@briarcliffmanor.org), (-) Order Number #100880972 on May 08, 2020 07:05 AM (PDT) pursuant to License Agreement with ICC & NYSDOS. No further reproduction, no

100880972

1109.12.3 Point of sale and service counters. Where counters are provided for sales or distribution of goods or services, at least one of each type provided shall be *accessible*. Where such counters are dispersed throughout the building or facility, *accessible* counters shall also be dispersed.

1109.12.4 Food service lines. Food service lines shall be *accessible*. Where self-service shelves are provided, at least 50 percent, but not less than one, of each type provided shall be *accessible*.

1109.12.5 Queue and waiting lines. Queue and waiting lines servicing *accessible* counters or check-out aisles shall be *accessible*.

1109.13 Controls, operating mechanisms and hardware. Controls, operating mechanisms and hardware intended for operation by the occupant, including switches that control lighting and ventilation and electrical convenience outlets, in *accessible* spaces, along *accessible routes* or as parts of *accessible* elements shall be *accessible*.

Exceptions:

1. Operable parts that are intended for use only by service or maintenance personnel shall not be required to be *accessible*.
2. Electrical or communication receptacles serving a dedicated use shall not be required to be *accessible*.
3. Where two or more outlets are provided in a kitchen above a length of counter top that is uninterrupted by a sink or appliance, one outlet shall not be required to be *accessible*.
4. Floor electrical receptacles shall not be required to be *accessible*.
5. HVAC diffusers shall not be required to be *accessible*.
6. Except for light switches, where redundant controls are provided for a single element, one control in each space shall not be required to be *accessible*.
7. Access doors or gates in barrier walls and fences protecting pools, spas and hot tubs shall be permitted to comply with Section 1010.1.9.2.

1109.14 Fuel-dispensing systems. Fuel-dispensing systems shall be *accessible*.

1109.15 Gaming machines and gaming tables. At least two percent of the total, but not fewer than one, of each gaming machine type and gaming table type shall be *accessible.* Where multiple gaming areas occur, accessible gaming machines and gaming tables shall be distributed throughout.

SECTION 1110
RECREATIONAL FACILITIES

1110.1 General. Recreational facilities shall be provided with *accessible* features in accordance with Sections 1110.2 through 1110.4.

1110.2 Facilities serving Group R-2, R-3 and R-4 occupancies. Recreational facilities that serve Group R-2, R-3 and Group R-4 occupancies shall comply with Sections 1110.2.1 through 1110.2.3, as applicable.

1110.2.1 Facilities serving Accessible units. In Group R-2 and R-4 occupancies where recreational facilities serve *Accessible units*, every recreational facility of each type serving *Accessible units* shall be *accessible*.

1110.2.2 Facilities serving Type A and Type B units in a single building. In Group R-2, R-3 and R-4 occupancies where recreational facilities serve a single building containing *Type A units* or *Type B units*, 25 percent, but not less than one, of each type of recreational facility shall be *accessible*. Every recreational facility of each type on a site shall be considered to determine the total number of each type that is required to be *accessible*.

1110.2.3 Facilities serving Type A and Type B units in multiple buildings. In Group R-2, R-3 and R-4 occupancies on a single site where multiple buildings containing *Type A units* or *Type B units* are served by recreational facilities, 25 percent, but not less than one, of each type of recreational facility serving each building shall be *accessible*. The total number of each type of recreational facility that is required to be *accessible* shall be determined by considering every recreational facility of each type serving each building on the site.

1110.3 Other occupancies. Recreational facilities not falling within the purview of Section 1110.2 shall be *accessible*.

1110.4 Recreational facilities. Recreational facilities shall be *accessible* and shall be on an *accessible route* to the extent specified in this section.

1110.4.1 Area of sport activity. Each *area of sport activity* shall be on an *accessible route* and shall not be required to be *accessible* except as provided for in Sections 1110.4.2 through 1110.4.15.

1110.4.2 Team or player seating. At least one wheelchair space shall be provided in team or player seating areas serving *areas of sport activity*.

Exception: Wheelchair spaces shall not be required in team or player seating areas serving bowling lanes that are not required to be *accessible* in accordance with Section 1110.4.3.

1110.4.3 Bowling lanes. An *accessible* route shall be provided to at least 5 percent, but not less than one, of each type of bowling lane.

1110.4.4 Court sports. In court sports, at least one *accessible* route shall directly connect both sides of the court.

1110.4.5 Raised boxing or wrestling rings. Raised boxing or wrestling rings are not required to be *accessible* or to be on an *accessible* route.

1110.4.6 Raised refereeing, judging and scoring areas. Raised structures used solely for refereeing, judging or scoring a sport are not required to be *accessible* or to be on an *accessible route*.

1110.4.7 Animal containment areas. Animal containment areas that are not within public-use areas are not required to be *accessible* or to be on an *accessible route*.

INTERNATIONAL CODE COUNCIL®
Copyright © 2019 ICC & NYSDOS. ALL RIGHTS RESERVED. Accessed by Lauren Gualdino (lgualdino@briarcliffmanor.org), (-) Order Number #100880972 on May 08, 2020 07:05 AM (PDT) pursuant to License Agreement with ICC & NYSDOS. No further reproduction, no

100880972

1110.4.8 Amusement rides. Amusement rides that move persons through a fixed course within a defined area shall comply with Sections 1110.4.8.1 through 1110.4.8.3.

Exception: Mobile or portable amusement rides shall not be required to be *accessible*.

1110.4.8.1 Load and unload areas. Load and unload areas serving amusement rides shall be *accessible* and be on an *accessible route*. Where load and unload areas have more than one loading or unloading position, at least one loading and unloading position shall be on an *accessible route*.

1110.4.8.2 Wheelchair spaces, ride seats designed for transfer and transfer devices. Where amusement rides are in the load and unload position, the following shall be on an *accessible route*.

1. The position serving a wheelchair space.
2. Amusement ride seats designed for transfer.
3. Transfer devices.

1110.4.8.3 Minimum number. Amusement rides shall provide at least one wheelchair space, amusement ride seat designed for transfer or transfer device.

Exceptions:

1. Amusement rides that are controlled or operated by the rider are not required to comply with this section.
2. Amusement rides designed primarily for children, where children are assisted on and off the ride by an adult, are not required to comply with this section.
3. Amusement rides that do not provide seats that are built-in or mechanically fastened shall not be required to comply with this section.

1110.4.9 Recreational boating facilities. Boat slips required to be *accessible* by Sections 1110.4.9.1 and 1110.4.9.2 and boarding piers at boat launch ramps required to be *accessible* by Section 1110.4.9.3 shall be on an *accessible route*.

1110.4.9.1 Boat slips. *Accessible* boat slips shall be provided in accordance with Table 1110.4.9.1. All units on the site shall be combined to determine the number of *accessible* boat slips required. Where the number of boat slips is not identified, each 40 feet (12 m) of boat slip edge provided along the perimeter of the pier shall be counted as one boat slip for the purpose of this section.

Exception: Boat slips not designed for embarking or disembarking are not required to be *accessible* or be on an *accessible route*.

1110.4.9.2 Dispersion. *Accessible* boat slips shall be dispersed throughout the various types of boat slips provided. Where the minimum number of *accessible* boat slips has been met, further dispersion shall not be required.

1110.4.9.3 Boarding piers at boat launch ramps. Where boarding piers are provided at boat launch ramps, at least 5 percent, but not less than one, of the boarding piers shall be *accessible*.

1110.4.10 Exercise machines and equipment. At least one of each type of exercise machine and equipment shall be on an *accessible route*.

1110.4.11 Fishing piers and platforms. Fishing piers and platforms shall be *accessible* and be on an *accessible route*.

1110.4.12 Miniature golf facilities. Miniature golf facilities shall comply with Sections 1110.4.12.1 through 1110.4.12.3.

1110.4.12.1 Minimum number. At least 50 percent of holes on miniature golf courses shall be *accessible*.

1110.4.12.2 Miniature golf course configuration. Miniature golf courses shall be configured so that the *accessible* holes are consecutive. Miniature golf

TABLE 1110.4.9.1
BOAT SLIPS

TOTAL NUMBER OF BOAT SLIPS PROVIDED	MINIMUM NUMBER OF REQUIRED ACCESSIBLE BOAT SLIPS
1 to 25	1
26 to 50	2
51 to 100	3
101 to 150	4
151 to 300	5
301 to 400	6
401 to 500	7
501 to 600	8
601 to 700	9
701 to 800	10
801 to 900	11
901 to 1000	12
1001 and over	12, plus 1 for every 100, or fraction thereof, over 1,000

INTERNATIONAL CODE COUNCIL®
Copyright © 2019 ICC & NYSDOS. ALL RIGHTS RESERVED. Accessed by Lauren Gualdino (lgualdino@briarcliffmanor.org), (-) Order Number #100880972 on May 08, 2020 07:05 AM (PDT) pursuant to License Agreement with ICC & NYSDOS. No further reproduction, no

100880972

courses shall provide an *accessible route* from the last *accessible* hole to the course entrance or exit without requiring travel through any other holes on the course.

Exception: One break in the sequence of consecutive holes shall be permitted provided that the last hole on the miniature golf course is the last hole in the sequence.

1110.4.12.3 Accessible route. Holes required to comply with Section 1110.4.12.1, including the start of play, shall be on an *accessible route*.

1110.4.13 Play areas. Play areas containing play components designed and constructed for children shall be located on an *accessible route*.

1110.4.14 Swimming pools, wading pools, hot tubs and spas. Swimming pools, wading pools, hot tubs and spas shall be *accessible* and be on an *accessible route*.

Exceptions:

1. Catch pools or a designated section of a pool used as a terminus for a water slide flume shall not be required to provide an *accessible* means of entry, provided that a portion of the catch pool edge is on an *accessible route*.
2. Where spas or hot tubs are provided in a cluster, at least 5 percent, but not less than one spa or hot tub in each cluster, shall be *accessible* and be on an *accessible route*.
3. Swimming pools, wading pools, spas and hot tubs that are required to be *accessible* by Sections 1110.2.2 and 1110.2.3 are not required to provide *accessible* means of entry into the water.

1110.4.14.1 Raised diving boards and diving platforms. Raised diving boards and diving platforms are not required to be *accessible* or to be on an *accessible route*.

1110.4.14.2 Water slides. Water slides are not required to be *accessible* or to be on an *accessible route*.

1110.4.15 Shooting facilities with firing positions. Where shooting facilities with firing positions are designed and constructed at a site, at least 5 percent, but not less than one, of each type of firing position shall be *accessible* and be on an *accessible route*.

SECTION 1111
SIGNAGE

1111.1 Signs. Required *accessible* elements shall be identified by the International Symbol of Accessibility at the following locations.

1. *Accessible* parking spaces required by Section 1106.1.

   Exception: Where the total number of parking spaces provided is four or less, identification of *accessible* parking spaces is not required.

2. *Accessible* parking spaces required by Section 1106.2.

   Exception: In Group I-1, R-2, R-3 and R-4 facilities, where parking spaces are assigned to specific *dwelling units* or *sleeping units*, identification of *accessible* parking spaces is not required.

3. *Accessible* passenger loading zones.
4. *Accessible* rooms where multiple single-user toilet or bathing rooms are clustered at a single location.
5. *Accessible* entrances where not all entrances are *accessible*.
6. *Accessible* check-out aisles where not all aisles are *accessible*. The sign, where provided, shall be above the check-out aisle in the same location as the check-out aisle number or type of check-out identification.
7. Family or assisted-use toilet and bathing rooms.
8. *Accessible* dressing, fitting and locker rooms where not all such rooms are *accessible*.
9. *Accessible* areas of refuge in accordance with Section 1009.9.
10. Exterior areas for assisted rescue in accordance with Section 1009.9.
11. In recreational facilities, lockers that are required to be *accessible* in accordance with Section 1109.9.

1111.2 Directional signage. Directional signage indicating the route to the nearest like *accessible* element shall be provided at the following locations. These directional signs shall include the International Symbol of Accessibility and sign characters shall meet the visual character requirements in accordance with ICC A117.1.

1. Inaccessible building entrances.
2. Inaccessible public toilets and bathing facilities.
3. Elevators not serving an *accessible route*.
4. At each separate-sex toilet and bathing room indicating the location of the nearest family/assisted use toilet or bathing room where provided in accordance with Section 1109.2.1.
5. At *exits* and *exit stairways* serving a required *accessible* space, but not providing an *approved* accessible *means of egress*, signage shall be provided in accordance with Section 1009.10.
6. Where drinking fountains for persons using wheelchairs and drinking fountains for standing persons are not located adjacent to each other, directional signage shall be provided indicating the location of the other drinking fountains.

1111.3 Other signs. Signage indicating special accessibility provisions shall be provided as shown.

1. Each assembly area required to comply with Section 1108.2.7 shall provide a sign notifying patrons of the

INTERNATIONAL CODE COUNCIL®
Copyright © 2019 ICC & NYSDOS. ALL RIGHTS RESERVED. Accessed by Lauren Gualdino (lgualdino@briarcliffmanor.org), (-) Order Number #100880972 on May 08, 2020 07:05 AM (PDT) pursuant to License Agreement with ICC & NYSDOS. No further reproduction, no

100880972

availability of assistive listening systems. The sign shall comply with ICC A117.1 requirements for visual characters and include the International Symbol of Access for Hearing Loss.

Exception: Where ticket offices or windows are provided, signs are not required at each assembly area provided that signs are displayed at each ticket office or window informing patrons of the availability of assistive listening systems.

2. At each door to an *area of refuge* providing direct access to a *stairway*, exterior area for assisted rescue, exit *stairway*, *exit passageway* or *exit discharge*, signage shall be provided in accordance with Section 1013.4.
3. At *areas of refuge*, signage shall be provided in accordance with Section 1009.11.
4. At exterior areas for assisted rescue, signage shall be provided in accordance with Section 1009.11.
5. At two-way communication systems, signage shall be provided in accordance with Section 1009.8.2.
6. In *interior exit stairways* and *ramps*, floor level signage shall be provided in accordance with Section 1023.9.
7. Signs identifying the type of access provided on amusement rides required to be *accessible* by Section 1110.4.8 shall be provided at entries to queues and waiting lines. In addition, where *accessible* unload areas also serve as *accessible* load areas, signs indicating the location of the *accessible* load and unload areas shall be provided at entries to queues and waiting lines. These directional sign characters shall meet the visual character requirements in accordance with ICC A117.1.

1111.4 Variable message signs. Where provided in the locations in Sections 1111.4.1 and 1111.4.2, variable message signs shall comply with the variable message sign requirements of ICC A117.1.

1111.4.1 Transportation facilities. Where provided in transportation facilities, variable message signs conveying transportation-related information shall comply with Section 1111.4.

1111.4.2 Emergency shelters. Where provided in buildings that are designated as emergency shelters, variable message signs conveying emergency-related information shall comply with Section 1111.4.

Exception: Where equivalent information is provided in an audible manner, variable message signs are not required to comply with ICC A117.1.

[NY] 1111.5 Access aisle signs. Each *access aisle* shall be provided with signage reading "NO PARKING ANYTIME." Signs shall be permanently installed in accordance with ICC A117.1 and shall not interfere with an *accessible* route from an *access aisle*.

INTERNATIONAL CODE COUNCIL®
Copyright © 2019 ICC & NYSDOS. ALL RIGHTS RESERVED. Accessed by Lauren Gualdino (lgualdino@briarcliffmanor.org), (-) Order Number #100880972 on May 08, 2020 07:05 AM (PDT) pursuant to License Agreement with ICC & NYSDOS. No further reproduction, no

100880972

CHAPTER 12

INTERIOR ENVIRONMENT

SECTION 1201 GENERAL

1201.1 Scope. The provisions of this chapter shall govern ventilation, temperature control, lighting, *yards* and *courts*, sound transmission, room dimensions, surrounding materials and rodentproofing associated with the interior spaces of buildings.

SECTION 1202 VENTILATION

1202.1 General. Buildings shall be provided with natural ventilation in accordance with Section 1202.5, or mechanical ventilation in accordance with the *Mechanical Code of New York State*.

Where the air infiltration rate in a *dwelling unit* is less than 5 air changes per hour where tested with a blower door at a pressure 0.2 inch w.c. (50 Pa) in accordance with Section R402.4.1.2 of the *Energy Conservation Code of New York State—Residential Provision*s, the *dwelling unit* shall be ventilated by mechanical means in accordance with Section 403 of the *Mechanical Code of New York State*. *Ambulatory care facilities* and Group I-2 occupancies shall be ventilated by mechanical means in accordance with Section 407 of the *Mechanical Code of New York State*.

1202.2 Roof ventilation. Roof assemblies shall be ventilated in accordance with this section or shall comply with Section 1202.3.

1202.2.1 Ventilated attics and rafter spaces. Enclosed *attics* and enclosed rafter spaces formed where ceilings are applied directly to the underside of roof framing members shall have cross ventilation for each separate space by ventilation openings protected against the entrance of rain and snow. Blocking and bridging shall be arranged so as not to interfere with the movement of air. An airspace of not less than 1 inch (25 mm) shall be provided between the insulation and the roof sheathing. The net free ventilating area shall be not less than $^1/_{150}$ of the area of the space ventilated. Ventilators shall be installed in accordance with manufacturer's installation instructions.

Exception: The net free cross-ventilation area shall be permitted to be reduced to $^1/_{300}$ provided both of the following conditions are met:

1. In Climate Zones 6, 7 and 8, a Class I or II vapor retarder is installed on the warm-in-winter side of the ceiling.
2. At least 40 percent and not more than 50 percent of the required venting area is provided by ventilators located in the upper portion of the *attic* or rafter space. Upper ventilators shall be located not more than 3 feet (914 mm) below the ridge or highest point of the space, measured vertically, with the balance of the *ventilation* provided by eave or cornice vents. Where the location of wall or roof framing members conflicts with the installation of upper ventilators, installation more than 3 feet (914 mm) below the ridge or highest point of the space shall be permitted.

1202.2.2 Openings into attic. Exterior openings into the *attic* space of any building intended for human occupancy shall be protected to prevent the entry of birds, squirrels, rodents, snakes and other similar creatures. Openings for ventilation having a least dimension of not less than $^1/_{16}$ inch (1.6 mm) and not more than $^1/_4$ inch (6.4 mm) shall be permitted. Openings for ventilation having a least dimension larger than $^1/_4$ inch (6.4 mm) shall be provided with corrosion-resistant wire cloth screening, hardware cloth, perforated vinyl or similar material with openings having a least dimension of not less than $^1/_{16}$ inch (1.6 mm) and not more than $^1/_4$ inch (6.4 mm). Where combustion air is obtained from an *attic* area, it shall be in accordance with Chapter 7 of the *Mechanical Code of New York State*.

1202.3 Unvented attic and unvented enclosed rafter assemblies. Unvented *attics* and unvented enclosed roof framing assemblies created by ceilings applied directly to the underside of the roof framing members/rafters and the structural roof sheathing at the top of the roof framing members shall be permitted where all of the following conditions are met:

1. The unvented *attic* space is completely within the *building thermal envelope*.
2. No interior Class I vapor retarders are installed on the ceiling side (*attic* floor) of the unvented *attic* assembly or on the ceiling side of the unvented enclosed roof framing assembly.
3. Where wood shingles or shakes are used, not less than a $^1/_4$-inch (6.4 mm) vented airspace separates the shingles or shakes and the roofing underlayment above the structural sheathing.
4. In Climate Zones 5, 6, 7 and 8, any air-impermeable insulation shall be a Class II vapor retarder or shall have a Class II vapor retarder coating or covering in direct contact with the underside of the insulation.
5. Insulation shall be located in accordance with the following:
   - 5.1. Item 5.1.1, 5.1.2, 5.1.3 or 5.1.4 shall be met, depending on the air permeability of the insulation directly under the structural roof sheathing.
     - 5.1.1. Where only air-impermeable insulation is provided, it shall be applied in direct contact with the underside of the structural roof sheathing.
     - 5.1.2. Where air-permeable insulation is provided inside the building thermal envelope, it shall be installed in accor-

INTERNATIONAL CODE COUNCIL®
Copyright © 2019 ICC & NYSDOS. ALL RIGHTS RESERVED. Accessed by Lauren Gualdino (lgualdino@briarcliffmanor.org), (-) Order Number #100880972 on May 08, 2020 07:05 AM (PDT) pursuant to License Agreement with ICC & NYSDOS. No further reproduction, no

100880972

dance with Item 5.1.1. In addition to the air-permeable insulation installed directly below the structural sheathing, rigid board or sheet insulation shall be installed directly above the structural roof sheathing in accordance with the *R*-values in Table 1202.3 for condensation control.

5.1.3. Where both air-impermeable and air-permeable insulation are provided, the *air-impermeable insulation* shall be applied in direct contact with the underside of the structural roof sheathing in accordance with Item 5.1.1 and shall be in accordance with the *R*-values in Table 1202.3 for condensation control. The *air-permeable insulation* shall be installed directly under the *air-impermeable insulation*.

5.1.4. Alternatively, sufficient rigid board or sheet insulation shall be installed directly above the structural roof sheathing to maintain the monthly average temperature of the underside of the structural roof sheathing above 45°F (7°C). For calculation purposes, an interior air temperature of 68°F (20°C) is assumed and the exterior air temperature is assumed to be the monthly average outside air temperature of the three coldest months.

5.2. Where preformed insulation board is used as the *air-impermeable insulation* layer, it shall be sealed at the perimeter of each individual sheet interior surface to form a continuous layer.

Exceptions:

1. Section 1202.3 does not apply to special use structures or enclosures such as swimming pool enclosures, data processing centers, hospitals or art galleries.
2. Section 1202.3 does not apply to enclosures in Climate Zones 5 through 8 that are humidified beyond 35 percent during the three coldest months.

1202.4 Under-floor ventilation. The space between the bottom of the floor joists and the earth under any building except spaces occupied by basements or cellars shall be provided with ventilation in accordance with Section 1202.4.1, 1202.4.2 or 1202.4.3.

1202.4.1 Ventilation openings. Ventilation openings through foundation walls shall be provided. The openings shall be placed so as to provide cross ventilation of the under-floor space. The net area of ventilation openings shall be in accordance with Section 1202.4.1.1 or 1202.4.1.2. Ventilation openings shall be covered for their height and width with any of the following materials, provided that the least dimension of the covering shall be not greater than $^1/_4$ inch (6.4 mm):

1. Perforated sheet metal plates not less than 0.070 inch (1.8 mm) thick.
2. Expanded sheet metal plates not less than 0.047 inch (1.2 mm) thick.
3. Cast-iron grilles or gratings.
4. Extruded load-bearing vents.
5. Hardware cloth of 0.035-inch (0.89 mm) wire or heavier.
6. Corrosion-resistant wire mesh, with the least dimension not greater than $^1/_8$ inch (3.2 mm).
7. Operable louvres, where ventilation is provided in accordance with Section 1202.4.1.2.

1202.4.1.1 Ventilation area for crawl spaces with open earth floors. The net area of ventilation openings for crawl spaces with uncovered earth floors shall be not less than 1 square foot for each 150 square feet (0.67 m^2 for each 100 m^2) of crawl space area.

1202.4.1.2 Ventilation area for crawl spaces with covered floors. The net area of ventilation openings for crawl spaces with the ground surface covered with a Class I vapor retarder shall be not less than 1 square foot for each 1,500 square feet (0.67 m^2 for each 1000 m^2) of crawl space area.

1202.4.2 Ventilation in cold climates. In extremely cold climates, where a ventilation opening will cause a detrimental loss of energy, ventilation openings to the interior of the structure shall be provided.

TABLE 1202.3
INSULATION FOR CONDENSATION CONTROL

CLIMATE ZONE	MINIMUM *R*-VALUE OF AIR-IMPERMEABLE INSULATION[a]
2B and 3B tile roof only	0 (none required)
1, 2A, 2B, 3A, 3B, 3C	R-5
4C	R-10
4A, 4B	R-15
5	R-20
6	R-25
7	R-30
8	R-35

a. Contributes to, but does not supersede, thermal resistance requirements for attic and roof assemblies in Section C402.2.1 of the *Energy Conservation Code of New York State*.

INTERNATIONAL CODE COUNCIL®
Copyright © 2019 ICC & NYSDOS. ALL RIGHTS RESERVED. Accessed by Lauren Gualdino (lgualdino@briarcliffmanor.org), (-) Order Number #100880972 on May 08, 2020 07:05 AM (PDT) pursuant to License Agreement with ICC & NYSDOS. No further reproduction, no

100880972

1202.4.3 Mechanical ventilation. Mechanical ventilation shall be provided to crawl spaces where the ground surface is covered with a Class I vapor retarder. Ventilation shall be in accordance with Section 1202.4.3.1 or 1202.4.3.2.

1202.4.3.1 Continuous mechanical ventilation. Continuously operated mechanical ventilation shall be provided at a rate of 1.0 cubic foot per minute (cfm) for each 50 square feet (1.02 L/s for each 10 m^2) of crawl space ground surface area and the ground surface shall be covered with a Class I vapor retarder.

1202.4.3.2 Conditioned space. The crawl space shall be conditioned in accordance with the *Mechanical Code of New York State* and the walls of the crawl space shall be insulated in accordance with the *Energy Conservation Code of New York State*.

1202.4.4 Flood hazard areas. For buildings in flood hazard areas as established in Section 1612.3, the openings for under-floor ventilation shall be deemed as meeting the flood opening requirements of ASCE 24 provided that the ventilation openings are designed and installed in accordance with ASCE 24.

1202.5 Natural ventilation. Natural *ventilation* of an occupied space shall be through windows, doors, louvers or other openings to the outdoors. The operating mechanism for such openings shall be provided with ready access so that the openings are readily controllable by the building occupants.

1202.5.1 Ventilation area required. The openable area of the openings to the outdoors shall be not less than 4 percent of the floor area being ventilated.

1202.5.1.1 Adjoining spaces. Where rooms and spaces without openings to the outdoors are ventilated through an adjoining room, the opening to the adjoining room shall be unobstructed and shall have an area of not less than 8 percent of the floor area of the interior room or space, but not less than 25 square feet (2.3 m^2). The openable area of the openings to the outdoors shall be based on the total floor area being ventilated.

Exception: Exterior openings required for *ventilation* shall be allowed to open into a sunroom with *thermal isolation* or a patio cover provided that the openable area between the sunroom addition or patio cover and the interior room shall have an area of not less than 8 percent of the floor area of the interior room or space, but not less than 20 square feet (1.86 m^2). The openable area of the openings to the outdoors shall be based on the total floor area being ventilated.

1202.5.1.2 Openings below grade. Where openings below grade provide required natural *ventilation*, the outside horizontal clear space measured perpendicular to the opening shall be one and one-half times the depth of the opening. The depth of the opening shall be measured from the average adjoining ground level to the bottom of the opening.

1202.5.2 Contaminants exhausted. Contaminant sources in naturally ventilated spaces shall be removed in accordance with the *Mechanical Code of New York State* and the *Fire Code of New York State*.

1202.5.2.1 Bathrooms. Rooms containing bathtubs, showers, spas and similar bathing fixtures shall be mechanically ventilated in accordance with the *Mechanical Code of New York State*.

1202.5.3 Openings on yards or courts. Where natural *ventilation* is to be provided by openings onto *yards* or *courts*, such *yards* or *courts* shall comply with Section 1205.

1202.6 Other ventilation and exhaust systems. *Ventilation* and exhaust systems for occupancies and operations involving flammable or combustible hazards or other contaminant sources as covered in the *Mechanical Code of New York State* or the *Fire Code of New York State* shall be provided as required by both codes.

SECTION 1203
TEMPERATURE CONTROL

1203.1 Equipment and systems. Interior spaces intended for human occupancy shall be provided with active or passive space heating systems capable of maintaining an indoor temperature of not less than 68°F (20°C) at a point 3 feet (914 mm) above the floor on the design heating day.

Exceptions: Space heating systems are not required for:

1. Interior spaces where the primary purpose of the space is not associated with human comfort.
2. Group F, H, S or U occupancies.

SECTION 1204
LIGHTING

1204.1 General. Every space intended for human occupancy shall be provided with natural light by means of exterior glazed openings in accordance with Section 1204.2 or shall be provided with artificial light in accordance with Section 1204.3. Exterior glazed openings shall open directly onto a *public way* or onto a *yard* or *court* in accordance with Section 1205.

1204.2 Natural light. The minimum net glazed area shall be not less than 8 percent of the floor area of the room served.

1204.2.1 Adjoining spaces. For the purpose of natural lighting, any room is permitted to be considered as a portion of an adjoining room where one-half of the area of the common wall is open and unobstructed and provides an opening of not less than one-tenth of the floor area of the interior room or 25 square feet (2.32 m^2), whichever is greater.

Exception: Openings required for natural light shall be permitted to open into a sunroom with *thermal isolation* or a patio cover where the common wall provides a glazed area of not less than one-tenth of the floor area of the interior room or 20 square feet (1.86 m^2), whichever is greater.

INTERNATIONAL CODE COUNCIL®
Copyright © 2019 ICC & NYSDOS. ALL RIGHTS RESERVED. Accessed by Lauren Gualdino (lgualdino@briarcliffmanor.org), (-) Order Number #100880972 on May 08, 2020 07:05 AM (PDT) pursuant to License Agreement with ICC & NYSDOS. No further reproduction, no

100880972

1204.2.2 Exterior openings. Exterior openings required by Section 1204.2 for natural light shall open directly onto a *public way*, *yard* or *court*, as set forth in Section 1205.

Exceptions:

1. Required exterior openings are permitted to open into a roofed porch where the porch meets all of the following criteria:
   1.1. Abuts a *public way*, *yard* or *court*.
   1.2. Has a ceiling height of not less than 7 feet (2134 mm).
   1.3. Has a longer side at least 65 percent open and unobstructed.
2. Skylights are not required to open directly onto a *public way*, *yard* or *court*.

1204.3 Artificial light. Artificial light shall be provided that is adequate to provide an average illumination of 10 footcandles (107 lux) over the area of the room at a height of 30 inches (762 mm) above the floor level.

1204.4 Stairway illumination. *Stairways* within *dwelling units* and *exterior stairways* serving a *dwelling unit* shall have an illumination level on tread runs of not less than 1 footcandle (11 lux). *Stairways* in other occupancies shall be governed by Chapter 10.

1204.4.1 Controls. The control for activation of the required *stairway* lighting shall be in accordance with NFPA 70.

1204.5 Emergency egress lighting. The *means of egress* shall be illuminated in accordance with Section 1008.1.

SECTION 1205
YARDS OR COURTS

1205.1 General. This section shall apply to *yards* and *courts* adjacent to exterior openings that provide natural light or ventilation. Such *yards* and *courts* shall be on the same *lot* as the building.

1205.2 Yards. *Yards* shall be not less than 3 feet (914 mm) in width for buildings two *stories* or less above *grade plane*. For buildings more than two *stories above grade plane*, the minimum width of the *yard* shall be increased at the rate of 1 foot (305 mm) for each additional *story*. For buildings exceeding 14 *stories above grade plane*, the required width of the *yard* shall be computed on the basis of 14 *stories above grade plane*.

1205.3 Courts. *Courts* shall be not less than 3 feet (914 mm) in width. *Courts* having windows opening on opposite sides shall be not less than 6 feet (1829 mm) in width. *Courts* shall be not less than 10 feet (3048 mm) in length unless bounded on one end by a *public way* or *yard*. For buildings more than two *stories above grade plane*, the *court* shall be increased 1 foot (305 mm) in width and 2 feet (610 mm) in length for each additional *story*. For buildings exceeding 14 *stories above grade plane*, the required dimensions shall be computed on the basis of 14 *stories above grade plane*.

1205.3.1 Court access. Access shall be provided to the bottom of *courts* for cleaning purposes.

1205.3.2 Air intake. *Courts* more than two *stories* in height shall be provided with a horizontal air intake at the bottom not less than 10 square feet (0.93 m^2) in area and leading to the exterior of the building unless abutting a *yard* or *public way*.

1205.3.3 Court drainage. The bottom of every *court* shall be properly graded and drained to a public sewer or other *approved* disposal system complying with the *Plumbing Code of New York State*.

SECTION 1206
SOUND TRANSMISSION

1206.1 Scope. This section shall apply to common interior walls, partitions and floor/ceiling assemblies between adjacent *dwelling units* and *sleeping units* or between *dwelling units* and *sleeping units* and adjacent public areas such as halls, *corridors*, *stairways* or *service areas*.

1206.2 Airborne sound. Walls, partitions and floor-ceiling assemblies separating *dwelling units* and *sleeping units* from each other or from public or service areas shall have a sound transmission class of not less than 50, or not less than 45 if field tested, for airborne noise where tested in accordance with ASTM E90. Alternatively, the sound transmission class of walls, partitions and floor-ceiling assemblies shall be established by engineering analysis based on a comparison of walls, partitions and floor-ceiling assemblies having sound transmission class ratings as determined by the test procedures set forth in ASTM E90. Penetrations or openings in construction assemblies for piping; electrical devices; recessed cabinets; bathtubs; soffits; or heating, ventilating or exhaust ducts shall be sealed, lined, insulated or otherwise treated to maintain the required ratings. This requirement shall not apply to entrance doors; however, such doors shall be tight fitting to the frame and sill.

1206.2.1 Masonry. The sound transmission class of concrete masonry and clay masonry assemblies shall be calculated in accordance with TMS 0302 or determined through testing in accordance with ASTM E90.

1206.3 Structure-borne sound. Floor-ceiling assemblies between *dwelling units* and *sleeping units* or between a *dwelling unit* or *sleeping unit* and a public or service area within the structure shall have an impact insulation class rating of not less than 50, or not less than 45 if field tested, where tested in accordance with ASTM E492. Alternatively, the impact insulation class of floor-ceiling assemblies shall be established by engineering analysis based on a comparison of floor-ceiling assemblies having impact insulation class ratings as determined by the test procedures in ASTM E492.

SECTION 1207
INTERIOR SPACE DIMENSIONS

1207.1 Minimum room widths. *Habitable spaces*, other than a kitchen, shall be not less than 7 feet (2134 mm) in any plan dimension. Kitchens shall have a clear passageway of not less than 3 feet (914 mm) between counter fronts and appliances or counter fronts and walls.

INTERNATIONAL CODE COUNCIL®
Copyright © 2019 ICC & NYSDOS. ALL RIGHTS RESERVED. Accessed by Lauren Gualdino (lgualdino@briarcliffmanor.org), (-) Order Number #100880972 on May 08, 2020 07:05 AM (PDT) pursuant to License Agreement with ICC & NYSDOS. No further reproduction, no

100880972

1207.2 Minimum ceiling heights. Occupiable spaces, *habitable spaces* and *corridors* shall have a ceiling height of not less than 7 feet 6 inches (2286 mm) above the finished floor. Bathrooms, toilet rooms, kitchens, storage rooms and laundry rooms shall have a ceiling height of not less than 7 feet (2134 mm) above the finished floor.

Exceptions:

1. In one- and two-family *dwellings*, beams or girders spaced not less than 4 feet (1219 mm) on center shall be permitted to project not more than 6 inches (152 mm) below the required ceiling height.
2. If any room in a building has a sloped ceiling, the prescribed ceiling height for the room is required in one-half the area thereof. Any portion of the room measuring less than 5 feet (1524 mm) from the finished floor to the ceiling shall not be included in any computation of the minimum area thereof.
3. The height of *mezzanines* and spaces below *mezzanines* shall be in accordance with Section 505.2.
4. Corridors contained within a *dwelling unit* or *sleeping unit* in a Group R occupancy shall have a ceiling height of not less than 7 feet (2134 mm) above the finished floor.

1207.2.1 Furred ceiling. Any room with a furred ceiling shall be required to have the minimum ceiling height in two-thirds of the area thereof, but in no case shall the height of the furred ceiling be less than 7 feet (2134 mm).

1207.3 Room area. Every *dwelling unit* shall have not less than one room that shall have not less than 120 square feet (11.2 m^2) of *net floor area*. Other habitable rooms shall have a *net floor area* of not less than 70 square feet (6.5 m^2).

Exception: Kitchens are not required to be of a minimum floor area.

1207.4 Efficiency dwelling units. An efficiency living unit shall conform to the requirements of the code except as modified herein:

1. The unit shall have a living room of not less than 220 square feet (20.4 m^2) of floor area. An additional 100 square feet (9.3 m^2) of floor area shall be provided for each occupant of such unit in excess of two.
2. The unit shall be provided with a separate closet.
3. The unit shall be provided with a kitchen sink, cooking appliance and refrigeration facilities, each having a clear working space of not less than 30 inches (762 mm) in front. Light and *ventilation* conforming to this code shall be provided.
4. The unit shall be provided with a separate bathroom containing a water closet, lavatory and bathtub or shower.

SECTION 1208
ACCESS TO UNOCCUPIED SPACES

1208.1 Crawl spaces. Crawl spaces shall be provided with not less than one access opening that shall be not less than 18 inches by 24 inches (457 mm by 610 mm).

1208.2 Attic spaces. An opening not less than 20 inches by 30 inches (559 mm by 762 mm) shall be provided to any *attic* area having a clear height of over 30 inches (762 mm). Clear headroom of not less than 30 inches (762 mm) shall be provided in the *attic* space at or above the access opening.

1208.3 Mechanical appliances. Access to mechanical appliances installed in under-floor areas, in *attic* spaces and on roofs or elevated structures shall be in accordance with the *Mechanical Code of New York State*.

SECTION 1209
TOILET AND BATHROOM REQUIREMENTS

[P] 1209.1 Required fixtures. The number and type of plumbing fixtures provided in any occupancy shall comply with Chapter 29.

1209.2 Finish materials. Walls, floors and partitions in toilet and bathrooms shall comply with Sections 1209.2.1 through 1209.2.4.

1209.2.1 Floors and wall bases. In other than *dwelling units*, toilet, bathing and shower room floor finish materials shall have a smooth, hard, nonabsorbent surface. The intersections of such floors with walls shall have a smooth, hard, nonabsorbent vertical base that extends upward onto the walls not less than 4 inches (102 mm).

1209.2.2 Walls and partitions. Walls and partitions within 2 feet (610 mm) of service sinks, urinals and water closets shall have a smooth, hard, nonabsorbent surface, to a height of not less than 4 feet (1219 mm) above the floor, and except for structural elements, the materials used in such walls shall be of a type that is not adversely affected by moisture.

Exception: This section does not apply to the following buildings and spaces:

1. Dwelling units and sleeping units.
2. Toilet rooms that are not accessible to the public and that have not more than one water closet.

Accessories such as grab bars, towel bars, paper dispensers and soap dishes, provided on or within walls, shall be installed and sealed to protect structural elements from moisture.

1209.2.3 Showers. Shower compartments and walls above bathtubs with installed shower heads shall be finished with a smooth, nonabsorbent surface to a height not less than 72 inches (1829 mm) above the drain inlet.

INTERNATIONAL CODE COUNCIL®
Copyright © 2019 ICC & NYSDOS. ALL RIGHTS RESERVED. Accessed by Lauren Gualdino (lgualdino@briarcliffmanor.org), (-) Order Number #100880972 on May 08, 2020 07:05 AM (PDT) pursuant to License Agreement with ICC & NYSDOS. No further reproduction, no

100880972

1209.2.4 Waterproof joints. Built-in tubs with showers shall have waterproof joints between the tub and adjacent wall.

[P] 1209.3 Privacy. Privacy at water closets and urinals shall be provided in accordance with Sections 1209.3.1 and 1209.3.2.

[P] 1209.3.1 Water closet compartment. Each water closet utilized by the public or employees shall occupy a separate compartment with walls or partitions and a door enclosing the fixtures to ensure privacy.

Exceptions:

1. Water closet compartments shall not be required in a single-occupant toilet room with a lockable door.
2. Toilet rooms located in child day care facilities and containing two or more water closets shall be permitted to have one water closet without an enclosing compartment.
3. This provision is not applicable to toilet areas located within Group I-3 occupancy housing areas.

[P] 1209.3.2 Urinal partitions. Each urinal utilized by the public or employees shall occupy a separate area with walls or partitions to provide privacy. The walls or partitions shall begin at a height not more than 12 inches (305 mm) from and extend not less than 60 inches (1524 mm) above the finished floor surface. The walls or partitions shall extend from the wall surface at each side of the urinal not less than 18 inches (457 mm) or to a point not less than 6 inches (152 mm) beyond the outermost front lip of the urinal measured from the finished backwall surface, whichever is greater.

Exceptions:

1. Urinal partitions shall not be required in a single-occupant or family or assisted-use toilet room with a lockable door.
2. Toilet rooms located in child day care facilities and containing two or more urinals shall be permitted to have one urinal without partitions.

INTERNATIONAL CODE COUNCIL®
Copyright © 2019 ICC & NYSDOS. ALL RIGHTS RESERVED. Accessed by Lauren Gualdino (lgualdino@briarcliffmanor.org), (-) Order Number #100880972 on May 08, 2020 07:05 AM (PDT) pursuant to License Agreement with ICC & NYSDOS. No further reproduction, no

100880972

CHAPTER 13

ENERGY EFFICIENCY

SECTION 1301
GENERAL

[E] 1301.1 Scope. This chapter governs the design and construction of buildings for energy efficiency.

1301.1.1 Criteria. Buildings shall be designed and constructed in accordance with the *Energy Conservation Construction Code of New York State*.

INTERNATIONAL CODE COUNCIL®
Copyright © 2019 ICC & NYSDOS. ALL RIGHTS RESERVED. Accessed by Lauren Gualdino (lgualdino@briarcliffmanor.org), (-) Order Number #100880972 on May 08, 2020 07:05 AM (PDT) pursuant to License Agreement with ICC & NYSDOS. No further reproduction, no

100880972

INTERNATIONAL CODE COUNCIL®
Copyright © 2019 ICC & NYSDOS. ALL RIGHTS RESERVED. Accessed by Lauren Gualdino (lgualdino@briarcliffmanor.org), (-) Order Number #100880972 on May 08, 2020 07:05 AM (PDT) pursuant to License Agreement with ICC & NYSDOS. No further reproduction, no

100880972

CHAPTER 14

EXTERIOR WALLS

SECTION 1401
GENERAL

1401.1 Scope. The provisions of this chapter shall establish the minimum requirements for *exterior walls*; *exterior wall coverings*; *exterior wall* openings; exterior windows and doors; and architectural *trim*.

SECTION 1402
PERFORMANCE REQUIREMENTS

1402.1 General. The provisions of this section shall apply to *exterior walls*, wall coverings and components thereof.

1402.2 Weather protection. *Exterior walls* shall provide the building with a weather-resistant *exterior wall envelope*. The *exterior wall envelope* shall include flashing, as described in Section 1404.4. The *exterior wall envelope* shall be designed and constructed in such a manner as to prevent the accumulation of water within the wall assembly by providing a *water-resistive barrier* behind the exterior veneer, as described in Section 1403.2, and a means for draining water that enters the assembly to the exterior. Protection against condensation in the *exterior wall* assembly shall be provided in accordance with Section 1404.3.

Exceptions:

1. A weather-resistant *exterior wall envelope* shall not be required over concrete or masonry walls designed in accordance with Chapters 19 and 21, respectively.
2. Compliance with the requirements for a means of drainage, and the requirements of Sections 1403.2 and 1404.4, shall not be required for an *exterior wall envelope* that has been demonstrated through testing to resist wind-driven rain, including joints, penetrations and intersections with dissimilar materials, in accordance with ASTM E331 under the following conditions:
   2.1. *Exterior wall envelope* test assemblies shall include not fewer than one opening, one control joint, one wall/eave interface and one wall sill. Tested openings and penetrations shall be representative of the intended end-use configuration.
   2.2. *Exterior wall envelope* test assemblies shall be not less than 4 feet by 8 feet (1219 mm by 2438 mm) in size.
   2.3. *Exterior wall envelope* assemblies shall be tested at a minimum differential pressure of 6.24 pounds per square foot (psf) (0.297 kN/m^2).
   2.4. *Exterior wall envelope* assemblies shall be subjected to a minimum test exposure duration of 2 hours.

   The *exterior wall envelope* design shall be considered to resist wind-driven rain where the results of testing indicate that water did not penetrate control joints in the *exterior wall envelope*, joints at the perimeter of openings or intersections of terminations with dissimilar materials.
3. *Exterior insulation and finish systems* (EIFS) complying with Section 1407.4.1.

[BS] 1402.3 Structural. *Exterior walls*, and the associated openings, shall be designed and constructed to resist safely the superimposed loads required by Chapter 16.

1402.4 Fire resistance. *Exterior walls* shall be fire-resistance rated as required by other sections of this code with opening protection as required by Chapter 7.

1402.5 Vertical and lateral flame propagation. *Exterior walls* on buildings of Type I, II, III or IV construction that are greater than 40 feet (12 192 mm) in height above grade plane and contain a combustible *water-resistive barrier* shall be tested in accordance with and comply with the acceptance criteria of NFPA 285. For the purposes of this section, *fenestration* products, flashing of *fenestration* products and *water-resistive-barrier* flashing and accessories at other locations, including through wall flashings, shall not be considered part of the *water-resistive barrier*.

Exceptions:

1. Walls in which the *water-resistive barrier* is the only combustible component and the *exterior wall* has a wall covering of brick, concrete, stone, terra cotta, stucco or steel with minimum thicknesses in accordance with Table 1404.2.
2. Walls in which the *water-resistive barrier* is the only combustible component and the *water-resistive barrier* has a peak heat release rate of less than 150 kW/m^2, a total heat release of less than 20 MJ/m^2 and an effective heat of combustion of less than 18 MJ/kg as determined in accordance with ASTM E1354 and has a flame spread index of 25 or less and a smoke-developed index of 450 or less as determined in accordance with ASTM E84 or UL 723. The ASTM E1354 test shall be conducted on specimens at the thickness intended for use, in the horizontal orientation and at an incident radiant heat flux of 50 kW/m^2.

[BS] 1402.6 Flood resistance. For buildings in flood hazard areas as established in Section 1612.3, *exterior walls* extending below the elevation required by Section 1612 shall be constructed with flood-damage-resistant materials.

[BS] 1402.7 Flood resistance for coastal high-hazard areas and coastal A zones. For buildings in coastal high-hazard areas and coastal A zones as established in Section 1612.3, electrical, mechanical and plumbing system components shall

INTERNATIONAL CODE COUNCIL®
Copyright © 2019 ICC & NYSDOS. ALL RIGHTS RESERVED. Accessed by Lauren Gualdino (lgualdino@briarcliffmanor.org), (-) Order Number #100880972 on May 08, 2020 07:05 AM (PDT) pursuant to License Agreement with ICC & NYSDOS. No further reproduction, no

100880972

not be mounted on or penetrate through *exterior walls* that are designed to break away under flood loads.

SECTION 1403
MATERIALS

1403.1 General. Materials used for the construction of *exterior walls* shall comply with the provisions of this section. Materials not prescribed herein shall be permitted, provided that any such alternative has been *approved*.

1403.2 Water-resistive barrier. Not fewer than one layer of No.15 asphalt felt, complying with ASTM D226 for Type 1 felt or other *approved* materials, shall be attached to the studs or sheathing, with flashing as described in Section 1404.4, in such a manner as to provide a continuous *water-resistive barrier* behind the *exterior wall* veneer.

[BS] 1403.3 Wood. *Exterior walls* of wood construction shall be designed and constructed in accordance with Chapter 23.

[BS] 1403.3.1 Basic hardboard. Basic hardboard shall conform to the requirements of ANSI A135.4.

[BS] 1403.3.2 Hardboard siding. Hardboard siding shall conform to the requirements of ANSI A135.6 and, where used structurally, shall be so identified by the *label* of an *approved* agency.

[BS] 1403.4 Masonry. *Exterior walls* of masonry construction shall be designed and constructed in accordance with this section and Chapter 21. Masonry units, mortar and metal accessories used in anchored and adhered veneer shall meet the physical requirements of Chapter 21. The backing of anchored and adhered veneer shall be of concrete, masonry, steel framing or wood framing. Continuous insulation meeting the applicable requirements of this code shall be permitted between the backing and the masonry veneer.

[BS] 1403.5 Metal. *Exterior walls* constructed of cold-formed steel, structural steel or aluminum shall be designed in accordance with Chapters 22 and 20, respectively.

[BS] 1403.5.1 Aluminum siding. Aluminum siding shall conform to the requirements of AAMA 1402.

[BS] 1403.5.2 Cold-rolled copper. Copper shall conform to the requirements of ASTM B370.

[BS] 1403.5.3 Lead-coated copper. Lead-coated copper shall conform to the requirements of ASTM B101.

[BS] 1403.6 Concrete. *Exterior walls* of concrete construction shall be designed and constructed in accordance with Chapter 19.

[BS] 1403.7 Glass-unit masonry. *Exterior walls* of glass-unit masonry shall be designed and constructed in accordance with Chapter 21.

1403.8 Plastics. Plastic panel, apron or spandrel walls as defined in this code shall not be limited in thickness, provided that such plastics and their assemblies conform to the requirements of Chapter 26 and are constructed of *approved* weather-resistant materials of adequate strength to resist the wind loads for cladding specified in Chapter 16.

1403.9 Vinyl siding. Vinyl siding shall be certified and labeled as conforming to the requirements of ASTM D3679 by an *approved* quality control agency.

1403.10 Fiber-cement siding. *Fiber-cement siding* shall conform to the requirements of ASTM C1186, Type A (or ISO 8336, Category A), and shall be so identified on labeling listing an *approved* quality control agency.

1403.11 Exterior insulation and finish systems. *Exterior insulation and finish systems* (EIFS) and *exterior insulation and finish systems (EIFS) with drainage* shall comply with Section 1407.

1403.12 Polypropylene siding. *Polypropylene siding* shall be certified and labeled as conforming to the requirements of ASTM D7254 and those of Section 1403.12.1 or 1403.12.2 by an approved quality control agency. *Polypropylene siding* shall be installed in accordance with the requirements of Section 1404.18 and in accordance with the manufacturer's instructions. *Polypropylene siding* shall be secured to the building so as to provide weather protection for the *exterior walls* of the building.

1403.12.1 Flame spread index. The certification of the flame spread index shall be accompanied by a test report stating that all portions of the test specimen ahead of the flame front remained in position during the test in accordance with ASTM E84 or UL 723.

1403.12.2 Fire separation distance. The fire separation distance between a building with *polypropylene siding* and the adjacent building shall be not less than 10 feet (3048 mm).

1403.13 Foam plastic insulation. Foam plastic insulation used in *exterior wall covering* assemblies shall comply with Chapter 26.

SECTION 1404
INSTALLATION OF WALL COVERINGS

1404.1 General. *Exterior wall coverings* shall be designed and constructed in accordance with the applicable provisions of this section.

1404.2 Weather protection. *Exterior walls* shall provide weather protection for the building. The materials of the minimum nominal thickness specified in Table 1404.2 shall be acceptable as *approved* weather coverings.

1404.3 Vapor retarders. Vapor retarders as described in Section 1404.3.3 shall be provided in accordance with Sections 1404.3.1 and 1404.3.2, or an approved design using accepted engineering practice for hydrothermal analysis.

1404.3.1 Class I and II vapor retarders. Class I and II vapor retarders shall not be provided on the interior side of frame walls in Zones 1 and 2. Class I vapor retarders shall not be provided on the interior side of frame walls in Zones 3 and 4 other than Marine 4. Class I or II vapor retarders shall be provided on the interior side of frame walls in Zones 5, 6, 7, 8 and Marine 4. The appropriate zone shall be selected in accordance with Chapter 3 [CE] of the *Energy Conservation Construction Code of New York State—Commercial Provisions*.

Exceptions:

1. Basement walls.
2. Below-grade portion of any wall.

INTERNATIONAL CODE COUNCIL®
Copyright © 2019 ICC & NYSDOS. ALL RIGHTS RESERVED. Accessed by Lauren Gualdino (lgualdino@briarcliffmanor.org), (-) Order Number #100880972 on May 08, 2020 07:05 AM (PDT) pursuant to License Agreement with ICC & NYSDOS. No further reproduction, no

100880972

TABLE 1404.2
MINIMUM THICKNESS OF WEATHER COVERINGS

COVERING TYPE	MINIMUM THICKNESS (inches)
Adhered masonry veneer	
Architectural cast stone	0.75
Other	0.25
Aluminum siding	0.019
Anchored masonry veneer	
Stone (natural)	2.0
Architectural cast stone	1.25
Other	2.0
Asbestos-cement boards	0.125
Asbestos shingles	0.156
Cold-rolled copper[d]	0.0216 nominal
Copper shingles[d]	0.0162 nominal
Exterior plywood (with sheathing)	0.313
Exterior plywood (without sheathing)	See Section 2304.6
Fiber cement lap siding	0.25[c]
Fiber cement panel siding	0.25[c]
Fiberboard siding	0.5
Glass-fiber reinforced concrete panels	0.375
Hardboard siding[c]	0.25
High-yield copper[d]	0.0162 nominal
Lead-coated copper[d]	0.0216 nominal
Lead-coated high-yield copper	0.0162 nominal
Marble slabs	1
Particleboard (with sheathing)	See Section 2304.6
Particleboard (without sheathing)	See Section 2304.6
Porcelain tile	0.25
Steel (approved corrosion resistant)	0.0149
Structural glass	0.344
Stucco or exterior cement plaster	
Three-coat work over:	
Metal plaster base	0.875[b]
Unit masonry	0.625[b]
Cast-in-place or precast concrete	0.625[b]
Two-coat work over:	
Unit masonry	0.5[b]
Cast-in-place or precast concrete	0.375[b]
Terra cotta (anchored)	1
Terra cotta (adhered)	0.25
Vinyl siding	0.035
Wood shingles	0.375
Wood siding (without sheathing)[a]	0.5

For SI: 1 inch = 25.4 mm, 1 ounce = 28.35 g, 1 square foot = 0.093 m^2.

a. Wood siding of thicknesses less than 0.5 inch shall be placed over sheathing that conforms to Section 2304.6.

b. Exclusive of texture.

c. As measured at the bottom of decorative grooves.

d. 16 ounces per square foot for cold-rolled copper and lead-coated copper, 12 ounces per square foot for copper shingles, high-yield copper and lead-coated high-yield copper.

3. Construction where moisture or its freezing will not damage the materials.
4. Conditions where Class III vapor retarders are required in Section 1404.3.2.

1404.3.2 Class III vapor retarders. Class III vapor retarders shall be permitted where any one of the conditions in Table 1404.3.2 is met. Only Class III vapor retarders shall be used on the interior side of frame walls where foam plastic insulating sheathing with a perm rating of less than 1 is applied in accordance with Table 1404.3.2 on the exterior side of the frame wall.

TABLE 1404.3.2
CLASS III VAPOR RETARDERS

ZONE	CLASS III VAPOR RETARDERS PERMITTED FOR:[a]
Marine 4	Vented cladding over wood structural panels Vented cladding over fiberboard Vented cladding over gypsum Continuous insulation with *R*-value ≥ R2.5 over 2 × 4 wall Continuous insulation with *R*-value ≥ R3.75 over 2 × 6 wall
5	Vented cladding over wood structural panels Vented cladding over fiberboard Vented cladding over gypsum Continuous insulation with *R*-value ≥ R5 over 2 × 4 wall Continuous insulation with *R*-value ≥ R7.5 over 2 × 6 wall
6	Vented cladding over fiberboard Vented cladding over gypsum Continuous insulation with *R*-value ≥ R7.5 over 2 × 4 wall Continuous insulation with *R*-value ≥ R11.25 over 2 × 6 wall
7 and 8	Continuous insulation with *R*-value ≥ R10 over 2 × 4 wall Continuous insulation with *R*-value ≥ R15 over 2 × 6 wall

a. Spray foam with a maximum permanence of 1.5 perms at the installed thickness applied to the interior cavity side of wood structural panels, fiberboard, insulating sheathing or gypsum is deemed to meet the continuous insulation requirement where the spray foam *R*-value meets or exceeds the specified insulating sheathing *R*-value.

1404.3.3 Material vapor retarder class. The *vapor retarder class* shall be based on the manufacturer's certified testing or a tested assembly.

The following shall be deemed to meet the class specified:

Class I: Sheet polyethylene, nonperforated aluminum foil with a perm rating of less than or equal to 0.1.

Class II: Kraft-faced fiberglass batts or paint with a perm rating greater than 0.1 and less than or equal to 1.0.

Class III: Latex or enamel paint with a perm rating of greater than 1.0 and less than or equal to 10.0.

INTERNATIONAL CODE COUNCIL®
Copyright © 2019 ICC & NYSDOS. ALL RIGHTS RESERVED. Accessed by Lauren Gualdino (lgualdino@briarcliffmanor.org), (-) Order Number #100880972 on May 08, 2020 07:05 AM (PDT) pursuant to License Agreement with ICC & NYSDOS. No further reproduction, no

100880972

1404.3.4 Minimum clear airspaces and vented openings for vented cladding. For the purposes of this section, vented cladding shall include the following minimum clear airspaces:

1. Vinyl, polypropylene or horizontal aluminum siding applied over a weather-resistive barrier as specified in this chapter.
2. Brick veneer with a clear airspace as specified in this code.
3. Other *approved* vented claddings.

1404.4 Flashing. Flashing shall be installed in such a manner so as to prevent moisture from entering the wall or to redirect that moisture to the exterior. Flashing shall be installed at the perimeters of exterior door and window assemblies, penetrations and terminations of *exterior wall* assemblies, *exterior wall* intersections with roofs, chimneys, porches, decks, balconies and similar projections and at built-in gutters and similar locations where moisture could enter the wall. Flashing with projecting flanges shall be installed on both sides and the ends of copings, under sills and continuously above projecting *trim*. Where self-adhered membranes are used as flashings of *fenestration* in wall assemblies, those self-adhered flashings shall comply with AAMA 711. Where fluid applied membranes are used as flashing for *exterior wall* openings, those fluid applied membrane flashings shall comply with AAMA 714.

1404.4.1 Exterior wall pockets. In *exterior walls* of buildings or structures, wall pockets or crevices in which moisture can accumulate shall be avoided or protected with caps or drips, or other *approved* means shall be provided to prevent water damage.

1404.4.2 Masonry. Flashing and weep holes in anchored veneer designed in accordance with Section 1404.6 shall be located not more than 10 inches (245 mm) above finished ground level above the foundation wall or slab. At other points of support including structural floors, shelf angles and lintels, flashing and weep holes shall be located in the first course of masonry above the support.

1404.5 Wood veneers. Wood veneers on *exterior walls* of buildings of Type I, II, III and IV construction shall be not less than 1 inch (25 mm) nominal thickness, 0.438-inch (11.1 mm) exterior hardboard siding or 0.375-inch (9.5 mm) exterior-type wood structural panels or particleboard and shall conform to the following:

1. The veneer shall not exceed 40 feet (12 190 mm) in height above grade. Where fire-retardant-treated wood is used, the height shall not exceed 60 feet (18 290 mm) in height above grade.
2. The veneer is attached to or furred from a noncombustible backing that is fire-resistance rated as required by other provisions of this code.
3. Where open or spaced wood veneers (without concealed spaces) are used, they shall not project more than 24 inches (610 mm) from the building wall.

[BS] 1404.6 Anchored masonry veneer. *Anchored masonry veneer* shall comply with the provisions of Sections 1404.6 through 1404.9 and Sections 12.1 and 12.2 of TMS 402.

[BS] 1404.6.1 Tolerances. *Anchored masonry veneers* in accordance with Chapter 14 are not required to meet the tolerances in Article 3.3 F1 of TMS 602.

[BS] 1404.6.2 Seismic requirements. Anchored masonry veneer located in Seismic Design Category C, D, E or F shall conform to the requirements of Section 12.2.2.11 of TMS 402.

[BS] 1404.7 Stone veneer. Anchored stone veneer units not exceeding 10 inches (254 mm) in thickness shall be anchored directly to masonry, concrete or to stud construction by one of the following methods:

1. With concrete or masonry backing, anchor ties shall be not less than 0.1055-inch (2.68 mm) corrosion-resistant wire, or *approved* equal, formed beyond the base of the backing. The legs of the loops shall be not less than 6 inches (152 mm) in length bent at right angles and laid in the mortar joint, and spaced so that the eyes or loops are 12 inches (305 mm) maximum on center in both directions. There shall be provided not less than a 0.1055-inch (2.68 mm) corrosion-resistant wire tie, or *approved* equal, threaded through the exposed loops for every 2 square feet (0.2 m^2) of stone veneer. This tie shall be a loop having legs not less than 15 inches (381 mm) in length bent so that the tie will lie in the stone veneer mortar joint. The last 2 inches (51 mm) of each wire leg shall have a right-angle bend. One-inch (25 mm) minimum thickness of cement grout shall be placed between the backing and the stone veneer.
2. With wood stud backing, a 2-inch by 2-inch (51 by 51 mm) 0.0625-inch (1.59 mm) zinc-coated or nonmetallic coated wire mesh with two layers of *water-resistive barrier* in accordance with Section 1403.2 shall be applied directly to wood studs spaced not more than 16 inches (406 mm) on center. On studs, the mesh shall be attached with 2-inch-long (51 mm) corrosion-resistant steel wire furring nails at 4 inches (102 mm) on center providing a minimum 1.125-inch (29 mm) penetration into each stud and with 8d annular threaded nails at 8 inches (203 mm) on center. into top and bottom plates or with equivalent wire ties. There shall be not less than a 0.1055-inch (2.68 mm) zinc-coated or nonmetallic coated wire, or approved equal, attached to the stud with not smaller than an 8d (0.120 in. diameter) annular threaded nail for every 2 square feet (0.2 m^2) of stone veneer. This tie shall be a loop having legs not less than 15 inches (381 mm) in length, so bent that the tie will lie in the stone veneer mortar joint. The last 2 inches (51 mm) of each wire leg shall have a right-angle bend. One-inch (25 mm) minimum thickness of cement grout shall be placed between the backing and the stone veneer.
3. With cold-formed steel stud backing, a 2-inch by 2-inch (51 by 51 mm) 0.0625-inch (1.59 mm) zinc-coated or nonmetallic coated wire mesh with two layers of water-resistive barrier in accordance with Section 1403.2 shall be applied directly to steel studs spaced a not more than 16 inches (406 mm) on center. The mesh shall be attached with corrosion-resistant #8 self-drilling, tap-

INTERNATIONAL CODE COUNCIL®
Copyright © 2019 ICC & NYSDOS. ALL RIGHTS RESERVED. Accessed by Lauren Gualdino (lgualdino@briarcliffmanor.org), (-) Order Number #100880972 on May 08, 2020 07:05 AM (PDT) pursuant to License Agreement with ICC & NYSDOS. No further reproduction, no

100880972

ping screws at 4 inches (102 mm) on center, and at 8 inches (203 mm) on center into top and bottom tracks or with equivalent wire ties. Screws shall extend through the steel connection not fewer than three exposed threads. There shall be not less than a 0.1055-inch (2.68 mm) corrosion-resistant wire, or approved equal, attached to the stud with not smaller than a #8 self-drilling, tapping screw extending through the steel framing not fewer than three exposed threads for every 2 square feet (0.2 m^2) of stone veneer. This tie shall be a loop having legs not less than 15 inches (381 mm) in length, so bent that the tie will lie in the stone veneer mortar joint. The last 2 inches (51 mm) of each wire leg shall have a right-angle bend. One-inch (25 mm) minimum thickness of cement grout shall be placed between the backing and the stone veneer. The cold-formed steel framing members shall have a minimum bare steel thickness of 0.0428 inches (1.087 mm).

[BS] 1404.8 Slab-type veneer. Anchored slab-type veneer units not exceeding 2 inches (51 mm) in thickness shall be anchored directly to masonry, concrete or light-frame construction. For veneer units of marble, travertine, granite or other stone units of slab form, ties of corrosion-resistant dowels in drilled holes shall be located in the middle third of the edge of the units, spaced not more than 24 inches (610 mm) apart around the periphery of each unit with not less than four ties per veneer unit. Units shall not exceed 20 square feet (1.9 m^2) in area. If the dowels are not tight fitting, the holes shall be drilled not more than 0.063 inch (1.6 mm) larger in diameter than the dowel, with the hole countersunk to a diameter and depth equal to twice the diameter of the dowel in order to provide a tight-fitting key of cement mortar at the dowel locations where the mortar in the joint has set. Veneer ties shall be corrosion-resistant metal capable of resisting, in tension or compression, a force equal to two times the weight of the attached veneer. If made of sheet metal, veneer ties shall be not smaller in area than 0.0336 by 1 inch (0.853 by 25 mm) or, if made of wire, not smaller in diameter than 0.1483-inch (3.76 mm) wire.

[BS] 1404.9 Terra cotta. Anchored terra cotta or ceramic units not less than $1^5/_8$ inches (41 mm) thick shall be anchored directly to masonry, concrete or stud construction. Tied terra cotta or ceramic veneer units shall be not less than $1^5/_8$ inches (41 mm) thick with projecting dovetail webs on the back surface spaced approximately 8 inches (203 mm) on center. The facing shall be tied to the backing wall with corrosion-resistant metal anchors of not less than No. 8 gage wire installed at the top of each piece in horizontal bed joints not less than 12 inches (305 mm) nor more than 18 inches (457 mm) on center; these anchors shall be secured to $^1/_4$-inch (6.4 mm) corrosion-resistant pencil rods that pass through the vertical aligned loop anchors in the backing wall. The veneer ties shall have sufficient strength to support the full weight of the veneer in tension. The facing shall be set with not less than a 2-inch (51 mm) space from the backing wall and the space shall be filled solidly with Portland cement grout and pea gravel. Immediately prior to setting, the backing wall and the facing shall be drenched with clean water and shall be distinctly damp when the grout is poured.

[BS] 1404.10 Adhered masonry veneer. *Adhered masonry veneer* shall comply with the applicable requirements in this section and Sections 12.1 and 12.3 of TMS 402.

[BS] 1404.10.1 Exterior adhered masonry veneer. Exterior *adhered masonry veneer* shall be installed in accordance with Section 1404.10 and the manufacturer's instructions.

[BS] 1404.10.1.1 Water-resistive barriers. Water-resistive barriers shall be installed as required in Section 2510.6.

[BS] 1404.10.1.2 Flashing. Flashing shall comply with the applicable requirements of Section 1404.4 and the following.

[BS] 1404.10.1.2.1 Flashing at foundation. A corrosion-resistant screed or flashing of a minimum 0.019-inch (0.48 mm) or 26 gage galvanized or plastic with a minimum vertical attachment flange of $3^1/_2$ inches (89 mm) shall be installed to extend not less than 1 inch (25 mm) below the foundation plate line on exterior stud walls in accordance with Section 1404.4. The *water-resistive barrier* shall lap over the exterior of the attachment flange of the screed or flashing.

[BS] 1404.10.1.3 Clearances. On exterior stud walls, *adhered masonry veneer* shall be installed not less than 4 inches (102 mm) above the earth, or not less than 2 inches (51 mm) above paved areas, or not less than $^1/_2$ inch (12.7 mm) above exterior walking surfaces that are supported by the same foundation that supports the *exterior wall.*

[BS] 1404.10.1.4 Adhered masonry veneer installed with lath and mortar. Exterior *adhered masonry veneer* installed with lath and mortar shall comply with the following.

[BS] 1404.10.1.4.1 Lathing. Lathing shall comply with the requirements of Section 2510.

[BS] 1404.10.1.4.2 Scratch coat. A nominal $^1/_2$-inch-thick (12.7 mm) layer of mortar complying with the material requirements of Sections 2103 and 2512.2 shall be applied, encapsulating the lathing. The surface of this mortar shall be scored horizontally, resulting in a scratch coat.

[BS] 1404.10.1.4.3 Adhering veneer. The masonry veneer units shall be adhered to the mortar scratch coat with a nominal $^1/_2$-inch-thick (12.7 mm) setting bed of mortar complying with Sections 2103 and 2512.2 applied to create a full setting bed for the back of the masonry veneer units. The masonry veneer units shall be worked into the setting bed resulting in a nominal $^3/_8$-inch (9.5 mm) setting bed after the masonry veneer units are applied.

[BS] 1404.10.1.5 Adhered masonry veneer applied directly to masonry and concrete. *Adhered masonry veneer* applied directly to masonry or concrete shall comply with the applicable requirements of Section

INTERNATIONAL CODE COUNCIL®
Copyright © 2019 ICC & NYSDOS. ALL RIGHTS RESERVED. Accessed by Lauren Gualdino (lgualdino@briarcliffmanor.org), (-) Order Number #100880972 on May 08, 2020 07:05 AM (PDT) pursuant to License Agreement with ICC & NYSDOS. No further reproduction, no

100880972

1404.10 and with the requirements of Section 1404.10.1.4 or 2510.7.

[BS] 1404.10.1.6 Cold weather construction. Cold weather construction of *adhered masonry veneer* shall comply with the requirements of Sections 2104 and 2512.4.

[BS] 1404.10.1.7 Hot weather construction. Hot weather construction of *adhered masonry veneer* shall comply with the requirements of Section 2104.

[BS] 1404.10.2 Exterior adhered masonry veneers—porcelain tile. Adhered units shall not exceed $^5/_8$ inch (15.8 mm) thickness and 24 inches (610 mm) in any face dimension nor more than 3 square feet (0.28 m^2) in total face area and shall not weigh more than 9 pounds psf (0.43 kN/m^2). *Porcelain tile* shall be adhered to an approved backing system.

[BS] 1404.10.3 Interior adhered masonry veneers. Interior *adhered masonry veneers* shall have a maximum weight of 20 psf (0.958 kg/m^2) and shall be installed in accordance with Section 1404.10. Where the interior *adhered masonry veneer* is supported by wood construction, the supporting members shall be designed to limit deflection to $^1/_{600}$ of the span of the supporting members.

[BS] 1404.11 Metal veneers. Veneers of metal shall be fabricated from *approved* corrosion-resistant materials or shall be protected front and back with porcelain enamel, or otherwise be treated to render the metal resistant to corrosion. Such veneers shall be not less than 0.0149-inch (0.378 mm) nominal thickness sheet steel mounted on wood or metal furring strips or approved sheathing on light-frame construction.

[BS] 1404.11.1 Attachment. Exterior metal veneer shall be securely attached to the supporting masonry or framing members with corrosion-resistant fastenings, metal ties or by other *approved* devices or methods. The spacing of the fastenings or ties shall not exceed 24 inches (610 mm) either vertically or horizontally, but where units exceed 4 square feet (0.4 m^2) in area there shall be not less than four attachments per unit. The metal attachments shall have a cross-sectional area not less than provided by W 1.7 wire. Such attachments and their supports shall be designed and constructed to resist the wind loads as specified in Section 1609 for components and cladding.

1404.11.2 Weather protection. Metal supports for exterior metal veneer shall be protected by painting, galvanizing or by other equivalent coating or treatment. Wood studs, furring strips or other wood supports for exterior metal veneer shall be *approved* pressure-treated wood or protected as required in Section 1402.2. Joints and edges exposed to the weather shall be caulked with *approved* durable waterproofing material or by other *approved* means to prevent penetration of moisture.

1404.11.3 Backup. Masonry backup shall not be required for metal veneer unless required by the fire-resistance requirements of this code.

1404.11.4 Grounding. Grounding of metal veneers on buildings shall comply with the requirements of Chapter 27 of this code.

[BS] 1404.12 Glass veneer. The area of a single section of thin exterior structural glass veneer shall not exceed 10 square feet (0.93 m^2) where that section is not more than 15 feet (4572 mm) above the level of the sidewalk or grade level directly below, and shall not exceed 6 square feet (0.56 m^2) where it is more than 15 feet (4572 mm) above that level.

[BS] 1404.12.1 Length and height. The length or height of any section of thin exterior structural glass veneer shall not exceed 48 inches (1219 mm).

[BS] 1404.12.2 Thickness. The thickness of thin exterior structural glass veneer shall be not less than 0.344 inch (8.7 mm).

[BS] 1404.12.3 Application. Thin exterior structural glass veneer shall be set only after backing is thoroughly dry and after application of an *approved* bond coat uniformly over the entire surface of the backing so as to effectively seal the surface. Glass shall be set in place with an *approved* mastic cement in sufficient quantity so that not less than 50 percent of the area of each glass unit is directly bonded to the backing by mastic not less than $^1/_4$ inch (6.4 mm) thick and not more than $^5/_8$ inch (15.9 mm) thick. The bond coat and mastic shall be evaluated for compatibility and shall bond firmly together.

[BS] 1404.12.4 Installation at sidewalk level. Where glass extends to a sidewalk surface, each section shall rest in an *approved* metal molding, and be set not less than $^1/_4$ inch (6.4 mm) above the highest point of the sidewalk. The space between the molding and the sidewalk shall be thoroughly caulked and made watertight.

[BS] 1404.12.4.1 Installation above sidewalk level. Where thin exterior structural glass veneer is installed above the level of the top of a bulkhead facing, or at a level more than 36 inches (914 mm) above the sidewalk level, the mastic cement binding shall be supplemented with *approved* nonferrous metal shelf angles located in the horizontal joints in every course. Such shelf angles shall be not less than 0.0478-inch (1.2 mm) thick and not less than 2 inches (51 mm) long and shall be spaced at *approved* intervals, with not less than two angles for each glass unit. Shelf angles shall be secured to the wall or backing with expansion bolts, toggle bolts or by other *approved* methods.

[BS] 1404.12.5 Joints. Unless otherwise specifically *approved* by the *building official*, abutting edges of thin exterior structural glass veneer shall be ground square. Mitered joints shall not be used except where specifically *approved* for wide angles. Joints shall be uniformly buttered with an *approved* jointing compound and horizontal joints shall be held to not less than 0.063 inch (1.6 mm) by an *approved* nonrigid substance or device. Where thin exterior structural glass veneer abuts nonresilient material at sides or top, expansion joints not less than $^1/_4$ inch (6.4 mm) wide shall be provided.

[BS] 1404.12.6 Mechanical fastenings. Thin exterior structural glass veneer installed above the level of the heads of show windows and veneer installed more than 12 feet (3658 mm) above sidewalk level shall, in addition to the mastic cement and shelf angles, be held in place by the

INTERNATIONAL CODE COUNCIL®
Copyright © 2019 ICC & NYSDOS. ALL RIGHTS RESERVED. Accessed by Lauren Gualdino (lgualdino@briarcliffmanor.org), (-) Order Number #100880972 on May 08, 2020 07:05 AM (PDT) pursuant to License Agreement with ICC & NYSDOS. No further reproduction, no

100880972

use of fastenings at each vertical or horizontal edge, or at the four corners of each glass unit. Fastenings shall be secured to the wall or backing with expansion bolts, toggle bolts or by other methods. Fastenings shall be so designed as to hold the glass veneer in a vertical plane independent of the mastic cement. Shelf angles providing both support and fastenings shall be permitted.

[BS] 1404.12.7 Flashing. Exposed edges of thin exterior structural glass veneer shall be flashed with overlapping corrosion-resistant metal flashing and caulked with a waterproof compound in a manner to effectively prevent the entrance of moisture between the glass veneer and the backing.

1404.13 Exterior windows and doors. Windows and doors installed in *exterior walls* shall conform to the testing and performance requirements of Section 1709.5.

1404.13.1 Installation. Windows and doors shall be installed in accordance with *approved* manufacturer's instructions. Fastener size and spacing shall be provided in such instructions and shall be calculated based on maximum loads and spacing used in the tests.

[BS] 1404.14 Vinyl siding. Vinyl siding conforming to the requirements of this section and complying with ASTM D3679 shall be permitted on *exterior walls* of buildings located in areas where V_{asd} as determined in accordance with Section 1609.3.1 does not exceed 100 miles per hour (45 m/s) and the *building height* is less than or equal to 40 feet (12 192 mm) in Exposure C. Where construction is located in areas where V_{asd} as determined in accordance with Section 1609.3.1 exceeds 100 miles per hour (45 m/s), or building heights are in excess of 40 feet (12 192 mm), tests or calculations indicating compliance with Chapter 16 shall be submitted. Vinyl siding shall be secured to the building so as to provide weather protection for the *exterior walls* of the building.

[BS] 1404.14.1 Application. The siding shall be applied over sheathing or materials listed in Section 2304.6. Siding shall be applied to conform to the *water-resistive barrier* requirements in Section 1402. Siding and accessories shall be installed in accordance with *approved* manufacturer's instructions. Unless otherwise specified in the *approved* manufacturer's instructions, nails used to fasten the siding and accessories shall have a minimum 0.313-inch (7.9 mm) head diameter and $^1/_8$-inch (3.18 mm) shank diameter. The nails shall be corrosion resistant and shall be long enough to penetrate the studs or nailing strip not less than $^3/_4$ inch (19 mm). For cold-formed steel light-frame construction, corrosion-resistant fasteners shall be used. Screw fasteners shall penetrate the cold-formed steel framing not fewer than three exposed threads. Other fasteners shall be installed in accordance with the approved construction documents and manufacturer's instructions. Where the siding is installed horizontally, the fastener spacing shall not exceed 16 inches (406 mm) horizontally and 12 inches (305 mm) vertically. Where the siding is installed vertically, the fastener spacing shall not exceed 12 inches (305 mm) horizontally and 12 inches (305 mm) vertically.

[BS] 1404.15 Cement plaster. Cement plaster applied to *exterior walls* shall conform to the requirements specified in Chapter 25.

[BS] 1404.16 Fiber-cement siding. *Fiber-cement siding* complying with Section 1403.10 shall be permitted on *exterior walls* of Type I, II, III, IV and V construction for wind pressure resistance or wind speed exposures as indicated by the manufacturer's listing and *label* and *approved* installation instructions. Where specified, the siding shall be installed over sheathing or materials *listed* in Section 2304.6 and shall be installed to conform to the *water-resistive barrier* requirements in Section 1402. Siding and accessories shall be installed in accordance with *approved* manufacturer's instructions. Unless otherwise specified in the *approved* manufacturer's instructions, nails used to fasten the siding to wood studs shall be corrosion-resistant round head smooth shank and shall be long enough to penetrate the studs not less than 1 inch (25 mm). For cold-formed steel light-frame construction, corrosion-resistant fasteners shall be used. Screw fasteners shall penetrate the cold-formed steel framing not fewer than three exposed full threads. Other fasteners shall be installed in accordance with the approved construction documents and manufacturer's instructions.

[BS] 1404.16.1 Panel siding. Fiber-cement panels shall comply with the requirements of ASTM C1186, Type A, minimum Grade II (or ISO 8336, Category A, minimum Class 2). Panels shall be installed with the long dimension either parallel or perpendicular to framing. Vertical and horizontal joints shall occur over framing members and shall be protected with caulking, with battens or flashing, or be vertical or horizontal shiplap or otherwise designed to comply with Section 1402.2. Panel siding shall be installed with fasteners in accordance with the *approved* manufacturer's instructions.

[BS] 1404.16.2 Lap siding. Fiber-cement lap siding having a maximum width of 12 inches (305 mm) shall comply with the requirements of ASTM C1186, Type A, minimum Grade II (or ISO 8336, Category A, minimum Class 2). Lap siding shall be lapped not less than $1^1/_4$ inches (32 mm) and lap siding not having tongue-and-groove end joints shall have the ends protected with caulking, covered with an H-section joint cover, located over a strip of flashing or shall be otherwise designed to comply with Section 1402.2. Lap siding courses shall be installed with the fastener heads exposed or concealed in accordance with the *approved* manufacturer's instructions.

[BS] 1404.17 Fastening. Weather boarding and wall coverings shall be securely fastened with aluminum, copper, zinc, zinc-coated or other *approved* corrosion-resistant fasteners in accordance with the nailing schedule in Table 2304.10.1 or the *approved* manufacturer's instructions. Shingles and other weather coverings shall be attached with appropriate standard-shingle nails to furring strips securely nailed to studs, or with *approved* mechanically bonding nails, except where sheathing is of wood not less than 1-inch (25 mm) nominal thickness or of wood structural panels as specified in Table 2308.6.3(3).

[BS] 1404.18 Polypropylene siding. *Polypropylene siding* conforming to the requirements of this section and complying with Section 1403.12 shall be limited to *exterior walls* located in areas where the wind speed specified in Chapter 16 does not exceed 100 miles per hour (45 m/s) and the building height is less than or equal to 40 feet (12 192 mm) in Expo-

INTERNATIONAL CODE COUNCIL®
Copyright © 2019 ICC & NYSDOS. ALL RIGHTS RESERVED. Accessed by Lauren Gualdino (lgualdino@briarcliffmanor.org), (-) Order Number #100880972 on May 08, 2020 07:05 AM (PDT) pursuant to License Agreement with ICC & NYSDOS. No further reproduction, no

100880972

sure C. Where construction is located in areas where the basic wind speed exceeds 100 miles per hour (45 m/s), or building heights are in excess of 40 feet (12 192 mm), tests or calculations indicating compliance with Chapter 16 shall be submitted. *Polypropylene siding* shall be installed in accordance with the manufacturer's instructions. *Polypropylene siding* shall be secured to the building so as to provide weather protection for the *exterior walls* of the building.

SECTION 1405
COMBUSTIBLE MATERIALS ON THE EXTERIOR SIDE OF EXTERIOR WALLS

➡ **1405.1 Combustible exterior wall coverings.** Combustible *exterior wall coverings* shall comply with this section.

Exception: Plastics complying with Chapter 26.

1405.1.1 Types I, II, III and IV construction. On buildings of Types I, II, III and IV construction, *exterior wall coverings* shall be permitted to be constructed of combustible materials, complying with the following limitations:

1. Combustible *exterior wall coverings* shall not exceed 10 percent of an *exterior wall* surface area where the fire separation distance is 5 feet (1524 mm) or less.
2. Combustible *exterior wall coverings* shall be limited to 40 feet (12 192 mm) in height above grade plane.
3. Combustible *exterior wall coverings* constructed of fire-retardant-treated wood complying with Section 2303.2 for exterior installation shall not be limited in wall surface area where the fire separation distance is 5 feet (1524 mm) or less and shall be permitted up to 60 feet (18 288 mm) in height above grade plane regardless of the fire separation distance.
4. Wood veneers shall comply with Section 1404.5.

1405.1.1.1 Ignition resistance. Where permitted by Section 1405.1.1, combustible *exterior wall coverings* shall be tested in accordance with NFPA 268.

Exceptions:

1. Wood or wood-based products.
2. Other combustible materials covered with an exterior weather covering, other than vinyl sidings, included in and complying with the thickness requirements of Table 1404.2.
3. Aluminum having a minimum thickness of 0.019 inch (0.48 mm).

1405.1.1.1.1 Fire separation 5 feet or less. Where installed on *exterior walls* having a fire separation distance of 5 feet (1524 mm) or less, combustible *exterior wall coverings* shall not exhibit sustained flaming as defined in NFPA 268.

1405.1.1.1.2 Fire separation greater than 5 feet. For fire separation distances greater than 5 feet (1524 mm), any *exterior wall covering* shall be permitted that has been exposed to a reduced level of incident radiant heat flux in accordance with the NFPA 268 test method without exhibiting sustained flaming. The minimum fire separation distance required for the *exterior wall covering* shall be determined from Table 1405.1.1.1.2 based on the maximum tolerable level of incident radiant heat flux that does not cause sustained flaming of the *exterior wall covering.*

TABLE 1405.1.1.1.2
MINIMUM FIRE SEPARATION FOR COMBUSTIBLE EXTERIOR WALL COVERINGS

FIRE SEPARATION DISTANCE (feet)	TOLERABLE LEVEL INCIDENT RADIANT HEAT ENERGY (kW/m^2)	FIRE SEPARATION DISTANCE (feet)	TOLERABLE LEVEL INCIDENT RADIANT HEAT ENERGY (kW/m^2)
5	12.5	16	5.9
6	11.8	17	5.5
7	11.0	18	5.2
8	10.3	19	4.9
9	9.6	20	4.6
10	8.9	21	4.4
11	8.3	22	4.1
12	7.7	23	3.9
13	7.2	24	3.7
14	6.7	25	3.5
15	6.3	—	

For SI: 1 foot = 304.8 mm, 1 $Btu/H^2 \cdot °F = 0.0057\ kW/m^2 \cdot K$.

1405.1.2 Location. Combustible *exterior wall coverings* located along the top of *exterior walls* shall be completely backed up by the *exterior wall* and shall not extend over or above the top of the *exterior wall.*

1405.1.3 Fireblocking. Where the combustible *exterior wall covering* is furred out from the *exterior wall* and forms a solid surface, the distance between the back of the *exterior wall covering* and the *exterior wall* shall not exceed $1^5/_8$ inches (41 mm). The concealed space thereby created shall be fireblocked in accordance with Section 718.

Exception: The distance between the back of the *exterior wall covering* and the *exterior wall* shall be permitted to exceed $1^5/_8$ inches (41 mm) where the concealed space is not required to be fireblocked by Section 718.

*

SECTION 1406
METAL COMPOSITE MATERIALS (MCM)

1406.1 General. The provisions of this section shall govern the materials, construction and quality of *metal composite materials (MCM)* for use as *exterior wall coverings* in addition to other applicable requirements of Chapters 14 and 16.

1406.2 Exterior wall finish. MCM used as *exterior wall* finish or as elements of balconies and similar projections and bay and oriel windows to provide cladding or weather resistance shall comply with Sections 1406.4 through 1406.14.

INTERNATIONAL CODE COUNCIL®
Copyright © 2019 ICC & NYSDOS. ALL RIGHTS RESERVED. Accessed by Lauren Gualdino (lgualdino@briarcliffmanor.org), (-) Order Number #100880972 on May 08, 2020 07:05 AM (PDT) pursuant to License Agreement with ICC & NYSDOS. No further reproduction, no

100880972

1406.3 Architectural trim and embellishments. MCM used as architectural *trim* or embellishments shall comply with Sections 1406.7 through 1406.14.

1406.4 Structural design. MCM systems shall be designed and constructed to resist wind loads as required by Chapter 16 for components and cladding.

1406.5 Approval. Results of *approved* tests or an engineering analysis shall be submitted to the *building official* to verify compliance with the requirements of Chapter 16 for wind loads.

1406.6 Weather resistance. MCM systems shall comply with Section 1402 and shall be designed and constructed to resist wind and rain in accordance with this section and the manufacturer's installation instructions.

1406.7 Durability. MCM systems shall be constructed of *approved* materials that maintain the performance characteristics required in Section 1406 for the duration of use.

1406.8 Fire-resistance rating. Where MCM systems are used on *exterior walls* required to have a *fire-resistance rating* in accordance with Section 705, evidence shall be submitted to the *building official* that the required *fire-resistance rating* is maintained.

Exception: MCM systems not containing foam plastic insulation, which are installed on the outer surface of a fire-resistance-rated *exterior wall* in a manner such that the attachments do not penetrate through the entire *exterior wall* assembly, shall not be required to comply with this section.

1406.9 Surface-burning characteristics. Unless otherwise specified, MCM shall have a *flame spread index* of 75 or less and a smoke-developed index of 450 or less when tested in the maximum thickness intended for use in accordance with ASTM E84 or UL 723.

1406.10 Type I, II, III and IV construction. Where installed on buildings of Type I, II, III and IV construction, MCM systems shall comply with Sections 1406.10.1 through 1406.10.4, or Section 1406.11.

1406.10.1 Surface-burning characteristics. MCM shall have a *flame spread index* of not more than 25 and a smoke-developed index of not more than 450 when tested as an assembly in the maximum thickness intended for use in accordance with ASTM E84 or UL 723.

1406.10.2 Thermal barriers. MCM shall be separated from the interior of a building by an approved thermal barrier consisting of $^1/_2$ -inch (12.7 mm) gypsum wallboard or a material that is tested in accordance with and meets the acceptance criteria of both the Temperature Transmission Fire Test and the Integrity Fire Test of NFPA 275.

1406.10.3 Thermal barrier not required. The thermal barrier specified for MCM in Section 1406.10.2 is not required where:

1. The MCM system is specifically approved based on tests conducted in accordance with NFPA 286 and with the acceptance criteria of Section 803.1.1.1, UL 1040 or UL 1715. Such testing shall be performed with the MCM in the maximum thickness intended for use. The MCM system shall include seams, joints and other typical details used in the installation and shall be tested in the manner intended for use.
2. The MCM is used as elements of balconies and similar projections, architectural *trim* or embellishments.

1406.10.4 Full-scale tests. The MCM system shall be tested in accordance with, and comply with, the acceptance criteria of NFPA 285. Such testing shall be performed on the MCM system with the MCM in the maximum thickness intended for use.

1406.11 Alternate conditions. MCM and MCM systems shall not be required to comply with Sections 1406.10.1 through 1406.10.4 provided that such systems comply with Section 1406.11.1, 1406.11.2, 1406.11.3 or 1406.11.4.

1406.11.1 Installations up to 40 feet in height. MCM shall not be installed more than 40 feet (12 190 mm) in height above grade where installed in accordance with Sections 1406.11.1.1 and 1406.11.1.2.

1406.11.1.1 Fire separation distance of 5 feet or less. Where the *fire separation distance* is 5 feet (1524 mm) or less, the area of MCM shall not exceed 10 percent of the *exterior wall* surface.

1406.11.1.2 Fire separation distance greater than 5 feet. Where the *fire separation distance* is greater than 5 feet (1524 mm), the area of *exterior wall* surface coverage using MCM shall not be limited.

1406.11.2 Installations up to 50 feet in height. MCM shall not be installed more than 50 feet (15 240 mm) in height above grade where installed in accordance with Sections 1406.11.2.1 and 1406.11.2.2.

1406.11.2.1 Self-ignition temperature. MCM shall have a self-ignition temperature of 650°F (343°C) or greater when tested in accordance with ASTM D1929.

1406.11.2.2 Limitations. Sections of MCM shall not exceed 300 square feet (27.9 m^2) in area and shall be separated by not less than 4 feet (1219 mm) vertically.

1406.11.3 Installations up to 75 feet in height (Option 1). MCM shall not be installed more than 75 feet (22 860 mm) in height above grade plane where installed in accordance with Sections 1406.11.3.1 through 1406.11.3.5.

Exception: Buildings equipped throughout with an automatic sprinkler system in accordance with Section 903.3.1.1 shall be exempt from the height limitation.

1406.11.3.1 Prohibited occupancies. MCM shall not be permitted on buildings classified as Group A-1, A-2, H, I-2 or I-3 occupancies.

1406.11.3.2 Nonfire-resistance-rated exterior walls. MCM shall not be permitted on *exterior walls* required to have a *fire-resistance rating* by other provisions of this code.

1406.11.3.3 Specifications. MCM shall be required to comply with all of the following:

1. MCM shall have a self-ignition temperature of 650°F (343°C) or greater when tested in accordance with ASTM D1929.

INTERNATIONAL CODE COUNCIL®
Copyright © 2019 ICC & NYSDOS. ALL RIGHTS RESERVED. Accessed by Lauren Gualdino (lgualdino@briarcliffmanor.org), (-) Order Number #100880972 on May 08, 2020 07:05 AM (PDT) pursuant to License Agreement with ICC & NYSDOS. No further reproduction, no

100880972

2. MCM shall conform to one of the following combustibility classifications when tested in accordance with ASTM D635:

   Class CC1: Materials that have a burning extent of 1 inch (25 mm) or less when tested at a nominal thickness of 0.060 inch (1.5 mm) or in the thickness intended for use.

   Class CC2: Materials that have a burning rate of $2^1/_2$ inches per minute (1.06 mm/s) or less when tested at a nominal thickness of 0.060 inch (1.5 mm) or in the thickness intended for use.

1406.11.3.4 Area limitation and separation. The maximum area of a single MCM panel and the minimum vertical and horizontal separation requirements for MCM panels shall be as provided for in Table 1406.11.3.4. The maximum percentage of *exterior wall* area of any story covered with MCM panels shall not exceed that indicated in Table 1406.11.3.4 or the percentage of unprotected openings permitted by Section 705.8, whichever is smaller.

Exception: In buildings provided with flame barriers complying with Section 705.8.5 and extending 30 inches (760 mm) beyond the *exterior wall* in the plane of the floor, a vertical separation shall not be required at the floor other than that provided by the vertical thickness of the flame barrier.

1406.11.3.5 Automatic sprinkler system increases. Where the building is equipped throughout with an automatic sprinkler system in accordance with Section 903.3.1.1, the maximum percentage area of *exterior wall* of any story covered with MCM panels and the maximum square footage of a single area of MCM panels in Table 1406.11.3.4 shall be increased 100 percent. The area of MCM panels shall not exceed 50 percent of the *exterior wall* area of any story or the area permitted by Section 705.8 for unprotected openings, whichever is smaller.

1406.11.4 Installations up to 75 feet in height (Option 2). MCM shall not be installed more than 75 feet (22 860 mm) in height above grade plane where installed in accordance with Sections 1406.11.4.1 through 1406.11.4.4.

Exception: Buildings equipped throughout with an automatic sprinkler system in accordance with Section 903.3.1.1 shall be exempt from the height limitation.

1406.11.4.1 Minimum fire separation distance. MCM shall not be installed on any wall with a fire separation distance less than 30 feet (9 144 mm).

Exception: Where the building is equipped throughout with an *automatic sprinkler system* in accordance with Section 903.3.1.1, the fire separation distance shall be permitted to be reduced to not less than 20 feet (6096 mm).

1406.11.4.2 Specifications. MCM shall be required to comply with all of the following:

1. MCM shall have a self-ignition temperature of 650°F (343°C) or greater when tested in accordance with ASTM D1929.
2. MCM shall conform to one of the following combustibility classifications when tested in accordance with ASTM D635:

   Class CC1: Materials that have a burning extent of 1 inch (25 mm) or less when tested at a nominal thickness of 0.060 inch (1.5 mm), or in the thickness intended for use.

   Class CC2: Materials that have a burning rate of $2^1/_2$ inches per minute (1.06 mm/s) or less when tested at a nominal thickness of 0.060 inch (1.5 mm), or in the thickness intended for use.

1406.11.4.3 Area and size limitations. The aggregate area of MCM panels shall not exceed 25 percent of the area of any *exterior wall* face of the story on which those panels are installed. The area of a single MCM panel installed above the first story above grade plane shall not exceed 16 square feet (1.5 m^2) and the vertical dimension of a single MCM panel shall not exceed 4 feet (1219 mm).

Exception: Where the building is equipped throughout with an *automatic sprinkler system* in accor-

TABLE 1406.11.3.4
AREA LIMITATION AND SEPARATION REQUIREMENTS FOR MCM PANELS

FIRE SEPARATION DISTANCE (feet)	COMBUSTIBILITY CLASS OF MCM	MAXIMUM PERCENTAGE AREA OF EXTERIOR WALL COVERED WITH MCM PANELS	MAXIMUM SINGLE AREA OF MCM PANELS (square feet)	MINIMUM SEPARATION OF MCM PANELS (feet)	
				Vertical	Horizontal
Less than 6	—	Not Permitted	Not Permitted	—	—
6 or more but less than 11	CC1	10	50	8	4
	CC2	Not Permitted	Not Permitted	—	—
11 or more but less than or equal to 30	CC1	25	90	6	4
	CC2	15	70	8	4
More than 30	CC1	50	Not Limited	3[a]	0
	CC2	50	100	6[a]	3

For SI: 1 foot = 304.8 mm, 1 square foot = 0.0929 m^2.

a. For reductions in the minimum vertical separation, see Section 1406.11.3.4.

INTERNATIONAL CODE COUNCIL®
Copyright © 2019 ICC & NYSDOS. ALL RIGHTS RESERVED. Accessed by Lauren Gualdino (lgualdino@briarcliffmanor.org), (-) Order Number #100880972 on May 08, 2020 07:05 AM (PDT) pursuant to License Agreement with ICC & NYSDOS. No further reproduction, no

100880972

dance with Section 903.3.1.1, the maximum aggregate area of MCM panels shall be increased to 50 percent of the *exterior wall* face of the story on which those panels are installed and there shall not be a limit on the maximum dimension or area of a single MCM panel.

1406.11.4.4 Vertical separations. Flame barriers complying with Section 705.8 and extending 30 inches (762 mm) beyond the *exterior wall* or a vertical separation of not less than 4 feet (1219 mm) in height shall be provided to separate MCM panels located on the *exterior walls* at one-story intervals.

Exception: Buildings equipped throughout with an *automatic sprinkler system* in accordance with Section 903.3.1.1.

1406.12 Type V construction. MCM shall be permitted to be installed on buildings of Type V construction.

1406.13 Foam plastic insulation. MCM systems containing foam plastic insulation shall also comply with the requirements of Section 2603.

1406.14 Labeling. MCM shall be labeled in accordance with Section 1703.5.

SECTION 1407
EXTERIOR INSULATION AND FINISH SYSTEMS (EIFS)

1407.1 General. The provisions of this section shall govern the materials, construction and quality of *exterior insulation and finish systems* (EIFS) for use as *exterior wall coverings* in addition to other applicable requirements of Chapters 7, 14, 16, 17 and 26.

1407.2 Performance characteristics. EIFS shall be constructed such that it meets the performance characteristics required in ASTM E2568.

[BS] 1407.3 Structural design. The underlying structural framing and substrate shall be designed and constructed to resist loads as required by Chapter 16.

1407.4 Weather resistance. EIFS shall comply with Section 1402 and shall be designed and constructed to resist wind and rain in accordance with this section and the manufacturer's application instructions.

1407.4.1 EIFS with drainage. EIFS with drainage shall have an average minimum drainage efficiency of 90 percent when tested in accordance the requirements of ASTM E2273 and is required on framed walls of Type V construction, Group R1, R2, R3 and R4 occupancies.

1407.4.1.1 Water-resistive barrier. For EIFS with drainage, the *water-resistive barrier* shall comply with Section 1403.2 or ASTM E2570.

1407.5 Installation. Installation of the EIFS and EIFS with drainage shall be in accordance with the EIFS manufacturer's instructions.

1407.6 Special inspections. EIFS installations shall comply with the provisions of Sections 1704.2 and 1705.16.

SECTION 1408
HIGH-PRESSURE DECORATIVE EXTERIOR-GRADE COMPACT LAMINATES (HPL)

1408.1 General. The provisions of this section shall govern the materials, construction and quality of High-Pressure Decorative *Exterior-Grade Compact Laminates (HPL)* for use as *exterior wall coverings* in addition to other applicable requirements of Chapters 14 and 16.

1408.2 Exterior wall finish. HPL used as *exterior wall covering* or as elements of balconies and similar projections and bay and oriel windows to provide cladding or weather resistance shall comply with Sections 1408.4 through 1408.14.

1408.3 Architectural trim and embellishments. HPL used as architectural trim or embellishments shall comply with Sections 1408.7 through 1408.14.

[BS] 1408.4 Structural design. HPL systems shall be designed and constructed to resist wind loads as required by Chapter 16 for components and cladding.

1408.5 Approval. Results of approved tests or an engineering analysis shall be submitted to the building official to verify compliance with the requirements of Chapter 16 for wind loads.

1408.6 Weather resistance. HPL systems shall comply with Section 1402 and shall be designed and constructed to resist wind and rain in accordance with this section and the manufacturer's instructions.

1408.7 Durability. HPL systems shall be constructed of approved materials that maintain the performance characteristics required in Section 1408 for the duration of use.

1408.8 Fire-resistance rating. Where HPL systems are used on *exterior walls* required to have a *fire-resistance rating* in accordance with Section 705, evidence shall be submitted to the building official that the required *fire-resistance rating* is maintained.

Exception: HPL systems not containing foam plastic insulation, which are installed on the outer surface of a fire-resistance-rated *exterior wall* in a manner such that the attachments do not penetrate through the entire *exterior wall* assembly, shall not be required to comply with this section.

1408.9 Surface-burning characteristics. Unless otherwise specified, HPL shall have a flame spread index of 75 or less and a smoke-developed index of 450 or less when tested in the minimum and maximum thicknesses intended for use in accordance with ASTM E84 or UL 723.

1408.10 Type I, II, III and IV construction. Where installed on buildings of Type I, II, III and IV construction, HPL systems shall comply with Sections 1408.10.1 through 1408.10.4, or Section 1408.11.

1408.10.1 Surface-burning characteristics. HPL shall have a flame spread index of not more than 25 and a smoke-developed index of not more than 450 when tested in the minimum and maximum thicknesses intended for use in accordance with ASTM E84 or UL 723.

1408.10.2 Thermal barriers. HPL shall be separated from the interior of a building by an approved thermal barrier consisting of $^1/_2$-inch (12.7 mm) gypsum wallboard or

INTERNATIONAL CODE COUNCIL®
Copyright © 2019 ICC & NYSDOS. ALL RIGHTS RESERVED. Accessed by Lauren Gualdino (lgualdino@briarcliffmanor.org), (-) Order Number #100880972 on May 08, 2020 07:05 AM (PDT) pursuant to License Agreement with ICC & NYSDOS. No further reproduction, no

100880972

a material that is tested in accordance with and meets the acceptance criteria of both the Temperature Transmission Fire Test and the Integrity Fire Test of NFPA 275.

1408.10.3 Thermal barrier not required. The thermal barrier specified for HPL in Section 1408.10.2 is not required where:

1. The HPL system is specifically approved based on tests conducted in accordance with UL 1040 or UL 1715. Such testing shall be performed with the HPL in the minimum and maximum thicknesses intended for use. The HPL system shall include seams, joints and other typical details used in the installation and shall be tested in the manner intended for use.
2. The HPL is used as elements of balconies and similar projections, architectural *trim* or embellishments.

1408.10.4 Full-scale tests. The HPL system shall be tested in accordance with, and comply with, the acceptance criteria of NFPA 285. Such testing shall be performed on the HPL system with the HPL in the minimum and maximum thicknesses intended for use.

1408.11 Alternate conditions. HPL and HPL systems shall not be required to comply with Sections 1408.10.1 through 1408.10.4 provided that such systems comply with Section 1408.11.1 or 1408.11.2.

1408.11.1 Installations up to 40 feet in height. HPL shall not be installed more than 40 feet (12 190 mm) in height above grade plane where installed in accordance with Sections 1408.11.1.1 and 1408.11.1.2.

1408.11.1.1 Fire separation distance of 5 feet or less. Where the fire separation distance is 5 feet (1524 mm) or less, the area of HPL shall not exceed 10 percent of the *exterior wall* surface.

1408.11.1.2 Fire separation distance greater than 5 feet. Where the fire separation distance is greater than 5 feet (1524 mm), the area of *exterior wall* surface coverage using HPL shall not be limited.

1408.11.2 Installations up to 50 feet in height. HPL shall not be installed more than 50 feet (15 240 mm) in height above grade plane where installed in accordance with Sections 1408.11.2.1 and 1408.11.2.2.

1408.11.2.1 Self-ignition temperature. HPL shall have a self-ignition temperature of 650°F (343°C) or greater when tested in accordance with ASTM D1929.

1408.11.2.2 Limitations. Sections of HPL shall not exceed 300 square feet (27.9 m^2) in area and shall be separated by a minimum 4 feet (1219 mm) vertically.

1408.12 Type V construction. HPL shall be permitted to be installed on buildings of Type V construction.

1408.13 Foam plastic insulation. HPL systems containing foam plastic insulation shall comply with the requirements of Section 2603.

1408.14 Labeling. HPL shall be labeled in accordance with Section 1703.5.

SECTION 1409
PLASTIC COMPOSITE DECKING

1409.1 Plastic composite decking. Exterior deck boards, stair treads, handrails and guards constructed of plastic composites, including plastic lumber, shall comply with Section 2612.

INTERNATIONAL CODE COUNCIL®
Copyright © 2019 ICC & NYSDOS. ALL RIGHTS RESERVED. Accessed by Lauren Gualdino (lgualdino@briarcliffmanor.org), (-) Order Number #100880972 on May 08, 2020 07:05 AM (PDT) pursuant to License Agreement with ICC & NYSDOS. No further reproduction, no

100880972

CHAPTER 15

ROOF ASSEMBLIES AND ROOFTOP STRUCTURES

SECTION 1501
GENERAL

1501.1 Scope. The provisions of this chapter shall govern the design, materials, construction and quality of roof assemblies, and rooftop structures.

SECTION 1502
ROOF DRAINAGE

[P] 1502.1 General. Design and installation of roof drainage systems shall comply with Section 1502 of this code and Sections 1106 and 1108, as applicable, of the *Plumbing Code of New York State.*

[P] 1502.2 Secondary (emergency overflow) drains or scuppers. Where roof drains are required, secondary (emergency overflow) roof drains or scuppers shall be provided where the roof perimeter construction extends above the roof in such a manner that water will be entrapped if the primary drains allow buildup for any reason. The installation and sizing of secondary emergency overflow drains, leaders and conductors shall comply with Sections 1106 and 1108, as applicable, of the *Plumbing Code of New York State.*

1502.3 Scuppers. Where scuppers are used for secondary (emergency overflow) roof drainage, the quantity, size, location and inlet elevation of the scuppers shall be sized to prevent the depth of ponding water from exceeding that for which the roof was designed as determined by Section 1611.1. Scuppers shall not have an opening dimension of less than 4 inches (102 mm). The flow through the primary system shall not be considered when locating and sizing scuppers.

1502.4 Gutters. Gutters and leaders placed on the outside of buildings, other than Group R-3, private garages and buildings of Type V construction, shall be of noncombustible material or not less than Schedule 40 plastic pipe.

SECTION 1503
WEATHER PROTECTION

1503.1 General. Roof decks shall be covered with *approved* roof coverings secured to the building or structure in accordance with the provisions of this chapter. Roof coverings shall be designed in accordance with this code, and installed in accordance with this code and the manufacturer's *approved* instructions.

1503.2 Flashing. Flashing shall be installed in such a manner so as to prevent water from entering the wall and roof through joints in copings, through moisture-permeable materials and at intersections with parapet walls and other penetrations through the roof plane.

1503.2.1 Locations. Flashing shall be installed at wall and roof intersections, at gutters, wherever there is a change in roof slope or direction and around roof openings. Where flashing is of metal, the metal shall be corrosion resistant with a thickness of not less than 0.019 inch (0.483 mm) (No. 26 galvanized sheet).

1503.3 Coping. Parapet walls shall be properly coped with noncombustible, weatherproof materials of a width not less than the thickness of the parapet wall.

1503.4 Attic and rafter ventilation. Intake and exhaust vents shall be provided in accordance with Section 1202.2 and the vent product manufacturer's installation instructions.

1503.5 Crickets and saddles. A cricket or saddle shall be installed on the ridge side of any chimney or penetration greater than 30 inches (762 mm) wide as measured perpendicular to the slope. Cricket or saddle coverings shall be sheet metal or of the same material as the roof covering.

Exception: Unit skylights installed in accordance with Section 2405.5 and flashed in accordance with the manufacturer's instructions shall be permitted to be installed without a cricket or saddle.

SECTION 1504
PERFORMANCE REQUIREMENTS

1504.1 Wind resistance of roofs. Roof decks and roof coverings shall be designed for wind loads in accordance with Chapter 16 and Sections 1504.2, 1504.3 and 1504.4.

1504.1.1 Wind resistance of asphalt shingles. Asphalt shingles shall be tested in accordance with ASTM D7158. Asphalt shingles shall meet the classification requirements of Table 1504.1.1 for the appropriate maximum basic wind speed. Asphalt shingle packaging shall bear a label to indicate compliance with ASTM D7158 and the required classification in Table 1504.1.1.

Exception: Asphalt shingles not included in the scope of ASTM D7158 shall be tested and labeled in accordance with ASTM D3161. Asphalt shingle packaging shall bear a label to indicate compliance with ASTM D3161 and the required classification in Table 1504.1.1.

1504.2 Wind resistance of clay and concrete tile. Wind loads on clay and concrete tile roof coverings shall be in accordance with Section 1609.5.

1504.2.1 Testing. Testing of concrete and clay roof tiles shall be in accordance with Sections 1504.2.1.1 and 1504.2.1.2.

1504.2.1.1 Overturning resistance. Concrete and clay roof tiles shall be tested to determine their resistance to overturning due to wind in accordance with Chapter 15 and either SBCCI SSTD 11 or ASTM C1568.

INTERNATIONAL CODE COUNCIL®
Copyright © 2019 ICC & NYSDOS. ALL RIGHTS RESERVED. Accessed by Lauren Gualdino (lgualdino@briarcliffmanor.org), (-) Order Number #100880972 on May 08, 2020 07:05 AM (PDT) pursuant to License Agreement with ICC & NYSDOS. No further reproduction, no

100880972

1504.2.1.2 Wind tunnel testing. Where concrete and clay roof tiles do not satisfy the limitations in Chapter 16 for rigid tile, a wind tunnel test shall be used to determine the wind characteristics of the concrete or clay tile roof covering in accordance with SBCCI SSTD 11 and Chapter 15.

1504.3 Wind resistance of nonballasted roofs. Roof coverings installed on roofs in accordance with Section 1507 that are mechanically attached or adhered to the roof deck shall be designed to resist the design wind load pressures for components and cladding in accordance with Section 1609.5.2. The wind load on the roof covering shall be permitted to be determined using allowable stress design.

1504.3.1 Other roof systems. Built-up, modified bitumen, fully adhered or mechanically attached single-ply roof systems, metal panel roof systems applied to a solid or closely fitted deck and other types of membrane roof coverings shall be tested in accordance with FM 4474, UL 580 or UL 1897.

1504.3.2 Structural metal panel roof systems. Where the metal roof panel functions as the roof deck and roof covering and it provides both weather protection and support for loads, the structural metal panel roof system shall comply with this section. Structural standing-seam metal panel roof systems shall be tested in accordance with ASTM E1592 or FM 4474. Structural through-fastened metal panel roof systems shall be tested in accordance with ASTM E1592, FM 4474 or UL 580.

Exceptions:

1. Metal roofs constructed of cold-formed steel shall be permitted to be designed and tested in accordance with the applicable referenced structural design standard in Section 2210.1.
2. Metal roofs constructed of aluminum shall be permitted to be designed and tested in accordance with the applicable referenced structural design standard in Section 2002.1.

1504.3.3 Metal roof shingles. Metal roof shingles applied to a solid or closely fitted deck shall be tested in accordance with ASTM D3161, FM 4474, UL 580 or UL 1897. Metal roof shingles tested in accordance with ASTM D3161 shall meet the classification requirements of Table 1504.1.1 for the appropriate maximum basic wind speed and the metal shingle packaging shall bear a label to indicate compliance with ASTM D3161 and the required classification in Table 1504.1.1.

1504.4 Ballasted low-slope roof systems. Ballasted low-slope (roof slope < 2:12) single-ply roof system coverings installed in accordance with Sections 1507.12 and 1507.13 shall be designed in accordance with Section 1504.8 and ANSI/SPRI RP-4.

1504.5 Edge securement for low-slope roofs. Low-slope built-up, modified bitumen and single-ply roof system metal edge securement, except gutters, shall be designed and installed for wind loads in accordance with Chapter 16 and tested for resistance in accordance with Test Methods RE-1, RE-2 and RE-3 of ANSI/SPRI ES-1, except basic design wind speed, *V*, shall be determined from Figures 1609.3(1) through 1609.3(8) as applicable.

1504.6 Physical properties. Roof coverings installed on low-slope roofs (roof slope < 2:12) in accordance with Section 1507 shall demonstrate physical integrity over the working life of the roof based on 2,000 hours of exposure to accelerated weathering tests conducted in accordance with ASTM G152, ASTM G154 or ASTM G155. Those roof coverings that are subject to cyclical flexural response due to wind loads shall not demonstrate any significant loss of tensile strength for unreinforced membranes or breaking strength for reinforced membranes when tested as herein required.

1504.7 Impact resistance. Roof coverings installed on low-slope roofs (roof slope < 2:12) in accordance with Section 1507 shall resist impact damage based on the results of tests conducted in accordance with ASTM D3746, ASTM D4272 or the "Resistance to Foot Traffic Test" in Section 4.6 of FM 4470.

1504.8 Surfacing and ballast materials in hurricane-prone regions. For a building located in a hurricane-prone region as defined in Section 202, or on any other building with a mean roof height exceeding that permitted by Table 1504.8 based on the exposure category and basic wind

TABLE 1504.1.1
CLASSIFICATION OF STEEP SLOPE ROOF SHINGLES TESTED IN ACCORDANCE WITH ASTM D3161 OR D7158

MAXIMUM BASIC WIND SPEED, *V*, FROM FIGURES 1609.3(1)-(8) OR ASCE 7 (mph)	MAXIMUM ALLOWABLE STRESS DESIGN WIND SPEED, V_{asd}, FROM TABLE 1609.3.1 (mph)	ASTM D7158[a] CLASSIFICATION	ASTM D3161 CLASSIFICATION
110	85	D, G or H	A, D or F
116	90	D, G or H	A, D or F
129	100	G or H	A, D or F
142	110	G or H	F
155	120	G or H	F
168	130	H	F
181	140	H	F
194	150	H	F

For SI: 1 foot = 304.8 mm; 1 mph = 0.447 m/s.

a. The standard calculations contained in ASTM D7158 assume Exposure Category B or C and building height of 60 feet or less. Additional calculations are required for conditions outside of these assumptions.

INTERNATIONAL CODE COUNCIL®
Copyright © 2019 ICC & NYSDOS. ALL RIGHTS RESERVED. Accessed by Lauren Gualdino (lgualdino@briarcliffmanor.org), (-) Order Number #100880972 on May 08, 2020 07:05 AM (PDT) pursuant to License Agreement with ICC & NYSDOS. No further reproduction, no

100880972

speed at the site, the following materials shall not be used on the roof:

1. Aggregate used as surfacing for roof coverings.
2. Aggregate, gravel or stone used as ballast.

TABLE 1504.8
MAXIMUM ALLOWABLE MEAN ROOF HEIGHT PERMITTED FOR BUILDINGS WITH AGGREGATE ON THE ROOF IN AREAS OUTSIDE A HURRICANE-PRONE REGION

NOMINAL DESIGN WIND SPEED, V_{asd} (mph)[b, d]	MAXIMUM MEAN ROOF HEIGHT (ft)[a, c]		
	Exposure category		
	B	C	D
85	170	60	30
90	110	35	15
95	75	20	NP
100	55	15	NP
105	40	NP	NP
110	30	NP	NP
115	20	NP	NP
120	15	NP	NP
Greater than 120	NP	NP	NP

For SI: 1 foot = 304.8 mm; 1 mile per hour = 0.447 m/s.

a. Mean roof height as defined in ASCE 7.

b. For intermediate values of V_{asd}, the height associated with the next higher value of V_{asd} shall be used, or direct interpolation is permitted.

c. NP = gravel and stone not permitted for any roof height.

d. V_{asd} shall be determined in accordance with Section 1609.3.1.

SECTION 1505
FIRE CLASSIFICATION

[BF] 1505.1 General. Roof assemblies shall be divided into the classes defined in this section. Class A, B and C roof assemblies and roof coverings required to be listed by this section shall be tested in accordance with ASTM E108 or UL 790. In addition, *fire-retardant-treated wood* roof coverings shall be tested in accordance with ASTM D2898. The minimum roof coverings installed on buildings shall comply with Table 1505.1 based on the type of construction of the building.

Exception: Skylights and sloped glazing that comply with Chapter 24 or Section 2610.

[BF] 1505.2 Class A roof assemblies. Class A roof assemblies are those that are effective against severe fire test exposure. Class A roof assemblies and roof coverings shall be *listed* and identified as Class A by an *approved* testing agency. Class A roof assemblies shall be permitted for use in buildings or structures of all types of construction.

Exceptions:

1. Class A roof assemblies include those with coverings of brick, masonry or an exposed concrete roof deck.
2. Class A roof assemblies also include ferrous or copper shingles or sheets, metal sheets and shingles, clay or concrete roof tile or slate installed on noncombustible decks or ferrous, copper or metal sheets installed without a roof deck on noncombustible framing.
3. Class A roof assemblies include minimum 16 ounce per square foot (0.0416 kg/m^2) copper sheets installed over combustible decks.
4. Class A roof assemblies include slate installed over ASTM D226, Type II underlayment over combustible decks.

TABLE 1505.1[b]
MINIMUM ROOF COVERING CLASSIFICATION FOR TYPES OF CONSTRUCTION

IA	IB	IIA	IIB	IIIA	IIIB	IV	VA	VB
B	B	B	C[b]	B	C[b]	B	B	C[b]

For SI: 1 foot = 304.8 mm, 1 square foot = 0.0929 m^2.

a. [NY] Reserved.

b. Nonclassified roof coverings shall be permitted on buildings of Group R-3 and Group U occupancies, where there is a minimum fire-separation distance of 6 feet measured from the leading edge of the roof.

c. Buildings that are not more than two stories above grade plane and having not more than 6,000 square feet of projected roof area and where there is a minimum 10-foot fire-separation distance from the leading edge of the roof to a lot line on all sides of the building, except for street fronts or public ways, shall be permitted to have roofs of No. 1 cedar or redwood shakes and No. 1 shingles constructed in accordance with Section 1505.7.

[BF] 1505.3 Class B roof assemblies. Class B roof assemblies are those that are effective against moderate fire-test exposure. Class B roof assemblies and roof coverings shall be *listed* and identified as Class B by an *approved* testing agency.

[BF] 1505.4 Class C roof assemblies. Class C roof assemblies are those that are effective against light fire-test exposure. Class C roof assemblies and roof coverings shall be *listed* and identified as Class C by an *approved* testing agency.

[BF] 1505.5 Nonclassified roofing. Nonclassified roofing is *approved* material that is not *listed* as a Class A, B or C roof covering.

[BF] 1505.6 Fire-retardant-treated wood shingles and shakes. *Fire-retardant-treated wood* shakes and shingles shall be treated by impregnation with chemicals by the full-cell vacuum-pressure process, in accordance with AWPA C1. Each bundle shall be marked to identify the manufactured unit and the manufacturer, and shall be *labeled* to identify the classification of the material in accordance with the testing required in Section 1505.1, the treating company and the quality control agency.

[BF] 1505.7 Special purpose roofs. Special purpose wood shingle or wood shake roofing shall conform to the grading and application requirements of Section 1507.8 or 1507.9. In addition, an underlayment of $^5/_8$-inch (15.9 mm) Type X water-resistant gypsum backing board or gypsum sheathing shall be placed under minimum nominal $^1/_2$-inch-thick (12.7 mm) wood structural panel solid sheathing or 1-inch (25 mm) nominal spaced sheathing.

INTERNATIONAL CODE COUNCIL®
Copyright © 2019 ICC & NYSDOS. ALL RIGHTS RESERVED. Accessed by Lauren Gualdino (lgualdino@briarcliffmanor.org), (-) Order Number #100880972 on May 08, 2020 07:05 AM (PDT) pursuant to License Agreement with ICC & NYSDOS. No further reproduction, no

100880972

[BF] 1505.8 Building-integrated photovoltaic products. *Building-integrated photovoltaic products* installed as the roof covering shall be tested, *listed* and *labeled* for fire classification in accordance with Section 1505.1.

[BF] 1505.9 Rooftop mounted photovoltaic panel systems. Rooftop rack-mounted *photovoltaic panel systems* shall be tested, *listed* and identified with a fire classification in accordance with UL 1703 and UL 2703. The fire classification shall comply with Table 1505.1 based on the type of construction of the building.

[BF] 1505.10 Roof gardens and landscaped roofs. Roof gardens and landscaped roofs shall comply with Section 1505.1 and 1507.16 and shall be installed in accordance with ANSI/SPRI VF-1.

SECTION 1506
MATERIALS

1506.1 Scope. The requirements set forth in this section shall apply to the application of roof-covering materials specified herein. Roof coverings shall be applied in accordance with this chapter and the manufacturer's installation instructions. Installation of roof coverings shall comply with the applicable provisions of Section 1507.

1506.2 Material specifications and physical characteristics. Roof-covering materials shall conform to the applicable standards listed in this chapter.

1506.3 Product identification. Roof-covering materials shall be delivered in packages bearing the manufacturer's identifying marks and *approved* testing agency labels required in accordance with Section 1505. Bulk shipments of materials shall be accompanied with the same information issued in the form of a certificate or on a bill of lading by the manufacturer.

SECTION 1507
REQUIREMENTS FOR ROOF COVERINGS

1507.1 Scope. Roof coverings shall be applied in accordance with the applicable provisions of this section and the manufacturer's installation instructions.

1507.1.1 Underlayment. Underlayment for asphalt shingles, clay and concrete tile, metal roof shingles, mineral-surfaced roll roofing, slate and slate-type shingles, wood shingles, wood shakes, metal roof panels and photovoltaic shingles shall conform to the applicable standards listed in this chapter. Underlayment materials required to comply with ASTM D226, D1970, D4869 and D6757 shall bear a label indicating compliance with the standard designation and, if applicable, type classification indicated in Table 1507.1.1(1). Underlayment shall be applied in accordance with Table 1507.1.1(2). Underlayment shall be attached in accordance with Table 1507.1.1(3).

Exceptions:

1. As an alternative, self-adhering polymer modified bitumen underlayment complying with ASTM D1970 and installed in accordance with the manufacturer's installation instructions for the deck material, roof ventilation configuration and climate exposure for the roof covering to be installed shall be permitted.

TABLE 1507.1.1(1)
UNDERLAYMENT TYPES

ROOF COVERING	SECTION	MAXIMUM BASIC DESIGN WIND SPEED, V< 140 MPH	MAXIMUM BASIC DESIGN WIND SPEED, V ≥ 140 MPH
Asphalt shingles	1507.2	ASTM D226 Type I or II ASTM D4869 Type I, II, III or IV ASTM D6757	ASTM D226 Type II ASTM D4869 Type IV ASTM D6757
Clay and concrete tiles	1507.3	ASTM D226 Type II ASTM D2626 Type I ASTM D6380 Class M mineral surfaced roll roofing	ASTM D226 Type II ASTM D2626 Type I ASTM D6380 Class M mineral surfaced roll roofing
Metal panels	1507.4	Manufacturer's instructions	ASTM D226 Type II ASTM D4869 Type IV
Metal roof shingles	1507.5	ASTM D226 Type I or II ASTM D4869 Type I, II, III or IV	ASTM D226 Type II ASTM D4869 Type IV
Mineral-surfaced roll roofing	1507.6	ASTM D226 Type I or II ASTM D4869 Type I, II, III or IV	ASTM D226 Type II ASTM D4869 Type IV
Slate shingles	1507.7	ASTM D226 Type II ASTM D4869 Type III or IV	ASTM D226 Type II ASTM D4869 Type IV
Wood shingles	1507.8	ASTM D226 Type I or II ASTM D4869 Type I, II, III or IV	ASTM D226 Type II ASTM D4869 Type IV
Wood shakes	1507.9	ASTM D226 Type I or II ASTM D4869 Type I, II, III or IV	ASTM D226 Type II ASTM D4869 Type IV
Photovoltaic shingles	1507.17	ASTM D226 Type I or II ASTM D4869 Type I, II, III or IV ASTM D6757	ASTM D226 Type II ASTM D4869 Type IV ASTM D6757

INTERNATIONAL CODE COUNCIL®
Copyright © 2019 ICC & NYSDOS. ALL RIGHTS RESERVED. Accessed by Lauren Gualdino (lgualdino@briarcliffmanor.org), (-) Order Number #100880972 on May 08, 2020 07:05 AM (PDT) pursuant to License Agreement with ICC & NYSDOS. No further reproduction, no

100880972

TABLE 1507.1.1(2)
UNDERLAYMENT APPLICATION

ROOF COVERING	SECTION	MAXIMUM BASIC DESIGN WIND SPEED, V < 140 MPH	MAXIMUM BASIC DESIGN WIND SPEED, $V \geq$ 140 MPH
Asphalt shingles	1507.2	For roof slopes from two units vertical in 12 units horizontal (2:12), up to four units vertical in 12 units horizontal (4:12), underlayment shall be two layers applied as follows: Apply a 19-inch strip of underlayment felt parallel to and starting at the eaves. Starting at the eave, apply 36-inch-wide sheets of underlayment, overlapping successive sheets 19 inches. End laps shall be 4 inches and shall be offset by 6 feet. Distortions in the underlayment shall not interfere with the ability of the shingles to seal. For roof slopes of four units vertical in 12 units horizontal (4:12) or greater, underlayment shall be one layer applied as follows: Underlayment shall be applied shingle fashion, parallel to and starting from the eave and lapped 2 inches, Distortions in the underlayment shall not interfere with the ability of the shingles to seal. End laps shall be 4 inches and shall be offset by 6 feet.	Same as Maximum Basic Design Wind Speed, V < 140 mph except all laps shall be not less than 4 inches
Clay and concrete tile	1507.3	For roof slopes from two and one-half units vertical in 12 units horizontal ($2^1/_2$:12), up to four units vertical in 12 units horizontal (4:12), underlayment shall be not fewer than two layers applied as follows: Starting at the eave, a 19-inch strip of underlayment shall be applied parallel with the eave. Starting at the eave, a 36-inch-wide strip of underlayment felt shall be applied, overlapping successive sheets 19 inches. End laps shall be 4 inches and shall be offset by 6 feet. For roof slopes of four units vertical in 12 units horizontal (4:12) or greater, underlayment shall be one layer applied as follows: Underlayment shall be applied shingle fashion, parallel to and starting from the eave and lapped 2 inches. End laps shall be 4 inches and shall be offset by 6 feet.	Same as Maximum Basic Design Wind Speed, V < 140 mph except all laps shall be not less than 4 inches
Metal roof panels	1507.4	Apply in accordance with the manufacturer's installation instructions	For roof slopes from two units vertical in 12 units horizontal (2:12), up to four units vertical in 12 units horizontal (4:12), underlayment shall be two layers applied as follows: Apply a 19-inch strip of underlayment felt parallel to and starting at the eaves. Starting at the eave, apply 36-inch-wide sheets of underlayment, overlapping successive sheets 19 inches. End laps shall be 4 inches and shall be offset by 6 feet. For roof slopes of four units vertical in 12 units horizontal (4:12) or greater, underlayment shall be one layer applied as follows: Underlayment shall be applied shingle fashion, parallel to and starting from the eave and lapped 4 inches. End laps shall be 4 inches and shall be offset by 6 feet.
Metal roof shingles	1507.5		
Mineral-surfaced roll roofing	1507.6		
Slate shingles	1507.7		
Wood shakes	1507.8		
Wood shingles	1507.9		
Photovoltaic shingles	1507.17	For roof slopes from three units vertical in 12 units horizontal (3:12), up to four units vertical in 12 units horizontal (4:12), underlayment shall be two layers applied as follows: Apply a 19-inch strip of underlayment felt parallel to and starting at the eaves. Starting at the eave, apply 36-inch-wide sheets of underlayment, overlapping successive sheets 19 inches. End laps shall be 4 inches and shall be offset by 6 feet. Distortions in the underlayment shall not interfere with the ability of the shingles to seal. For roof slopes of four units vertical in 12 units horizontal (4:12) or greater, underlayment shall be one layer applied as follows: Underlayment shall be applied shingle fashion, parallel to and starting from the eave and lapped 2 inches. Distortions in the underlayment shall not interfere with the ability of the shingles to seal. End laps shall be 4 inches and shall be offset by 6 feet.	Same as Maximum Basic Design Wind Speed, V < 140 mph except all laps shall be not less than 4 inches

For SI: 1 inch = 25.4 mm, 1 foot = 304.8 mm; 1 mile per hour = 0.447 m/s.

INTERNATIONAL CODE COUNCIL®
Copyright © 2019 ICC & NYSDOS. ALL RIGHTS RESERVED. Accessed by Lauren Gualdino (lgualdino@briarcliffmanor.org), (-) Order Number #100880972 on May 08, 2020 07:05 AM (PDT) pursuant to License Agreement with ICC & NYSDOS. No further reproduction, no

100880972

TABLE 1507.1.1(3)
UNDERLAYMENT ATTACHMENT

ROOF COVERING	SECTION	MAXIMUM BASIC DESIGN WIND SPEED, V < 140 MPH	MAXIMUM BASIC DESIGN WIND SPEED, $V \geq 140$ MPH
Asphalt shingles	1507.2	Fastened sufficiently to hold in place	The underlayment shall be attached with corrosion-resistant fasteners in a grid pattern of 12 inches between side laps with a 6-inch spacing at side and end laps. Underlayment shall be attached using metal or plastic cap nails or cap staples with a nominal cap diameter of not less than 1 inch. Metal caps shall have a thickness of not less than 32-gage (0.0134 inch) sheet metal. Power-driven metal caps shall have a minimum thickness of 0.010 inch. Minimum thickness of the outside edge of plastic caps shall be 0.035 inch. The cap nail shank shall be not less than 0.083 inch for ring shank cap nails and 0.091 inch for smooth shank cap nails. Staples shall be not less than 21 gage (0.032 inch). The cap nail shank and cap staple legs shall have a length sufficient to penetrate through the roof sheathing or not less than $^3/_4$ inch into the roof sheathing.
Clay and concrete tile	1507.3		
Photovoltaic shingles	1507.17		
Metal roof panels	1507.4	Manufacturer's installation instructions	The underlayment shall be attached with corrosion-resistant fasteners in a grid pattern of 12 inches between side laps with a 6-inch spacing at side and end laps. Underlayment shall be attached using metal or plastic cap nails or cap staples with a nominal cap diameter of not less than 1 inch. Metal caps shall have a thickness of not less than 32-gage sheet metal. Power-driven metal caps shall have a minimum thickness of 0.010 inch. Minimum thickness of the outside edge of plastic caps shall be 0.035 inch. The cap nail shank shall be not less than 0.083 inch for ring shank cap nails and 0.091 inch for smooth shank cap nails. Staples shall be not less than 21 gage. The cap nail shank and cap staple legs shall have a length sufficient to penetrate through the roof sheathing or not less than $^3/_4$ inch into the roof sheathing.
Metal roof shingles	1507.5		
Mineral-surfaced roll roofing	1507.6		
Slate shingles	1507.7		
Wood shingles	1507.8		
Wood shakes	1507.9		

For SI: 1 inch = 25.4 mm; 1 mile per hour = 0.447 m/s.

2. As an alternative, a minimum 4-inch-wide (102 mm) strip of self-adhering polymer modified bitumen membrane complying with ASTM D1970 and installed in accordance with the manufacturer's installation instructions for the deck material shall be applied over all joints in the roof decking. An approved underlayment for the applicable roof covering for design wind speeds less than 120 mph (54 m/s) shall be applied over the 4-inch-wide (102 mm) membrane strips.
3. As an alternative, two layers of underlayment complying with ASTM D226 Type II or ASTM D4869 Type IV shall be permitted to be installed as follows: Apply a 19-inch (483 mm) strip of underlayment parallel with the eave. Starting at the eave, apply 36-inch-wide (914 mm) strips of underlayment felt, overlapping successive sheets 19 inches (483 mm). The underlayment shall be attached with corrosion-resistant fasteners in a grid pattern of 12 inches (305 mm) between side laps with a 6-inch (152 mm) spacing at side and end laps. End laps shall be 4 inches (102 mm) and shall be offset by 6 feet (1829 mm). Underlayment shall be attached using metal or plastic cap nails with a nominal cap diameter of not less than 1 inch (25.4 mm). Metal caps shall have a thickness of not less than 32-gage sheet metal. Power-driven metal caps shall have a thickness of not less than 0.010 inch (mm). Thickness of the outside edge of plastic caps shall be not less than 0.035 inch (mm). The cap nail shank shall be not less than 0.083 inch for ring shank cap nails and 0.091 inch (mm) for smooth shank cap nails. The cap nail shank shall have a length sufficient to penetrate through the roof sheathing or not less than $^3/_4$ inch (19.1 mm) into the roof sheathing.
4. Structural metal panels that do not require a substrate or underlayment.

1507.1.2 Ice barriers. In areas where there has been a history of ice forming along the eaves causing a backup of water, an ice barrier shall be installed for asphalt shingles, metal roof shingles, mineral-surfaced roll roofing, slate and slate-type shingles, wood shingles, and wood shakes. The ice barrier shall consist of not less than two layers of underlayment cemented together, or a self-adhering polymer modified bitumen sheet shall be used in place of normal underlayment and extend from the lowest edges of all roof surfaces to a point not less than 24 inches (610 mm) inside the exterior wall line of the building.

Exception: Detached accessory structures that do not contain conditioned floor area.

1507.2 Asphalt shingles. The installation of asphalt shingles shall comply with the provisions of this section.

1507.2.1 Deck requirements. Asphalt shingles shall be fastened to solidly sheathed decks.

1507.2.2 Slope. Asphalt shingles shall only be used on roof slopes of two units vertical in 12 units horizontal (17-percent slope) or greater. For roof slopes from two units vertical in 12 units horizontal (17-percent slope) up to four

INTERNATIONAL CODE COUNCIL®
Copyright © 2019 ICC & NYSDOS. ALL RIGHTS RESERVED. Accessed by Lauren Gualdino (lgualdino@briarcliffmanor.org), (-) Order Number #100880972 on May 08, 2020 07:05 AM (PDT) pursuant to License Agreement with ICC & NYSDOS. No further reproduction, no

100880972

units vertical in 12 units horizontal (33-percent slope), double underlayment application is required in accordance with Section 1507.2.8.

1507.2.3 Underlayment. Underlayment shall comply with Section 1507.1.1.

1507.2.4 Asphalt shingles. Asphalt shingles shall comply with ASTM D3462.

1507.2.5 Fasteners. Fasteners for asphalt shingles shall be galvanized, stainless steel, aluminum or copper roofing nails, minimum 12-gage [0.105 inch (2.67 mm)] shank with a minimum $^3/_8$-inch-diameter (9.5 mm) head, of a length to penetrate through the roofing materials and not less than $^3/_4$ inch (19.1 mm) into the roof sheathing. Where the roof sheathing is less than $^3/_4$ inch (19.1 mm) thick, the nails shall penetrate through the sheathing. Fasteners shall comply with ASTM F1667.

1507.2.6 Attachment. Asphalt shingles shall have the minimum number of fasteners required by the manufacturer, but not less than four fasteners per strip shingle or two fasteners per individual shingle. Where the roof slope exceeds 21 units vertical in 12 units horizontal (21:12), shingles shall be installed as required by the manufacturer.

1507.2.7 Ice barrier. Where required, ice barriers shall comply with Section 1507.1.2.

1507.2.8 Flashings. Flashing for asphalt shingles shall comply with this section. Flashing shall be applied in accordance with this section and the asphalt shingle manufacturer's printed instructions.

1507.2.8.1 Base and cap flashing. Base and cap flashing shall be installed in accordance with the manufacturer's instructions. Base flashing shall be of either corrosion-resistant metal of minimum nominal 0.019-inch (0.483 mm) thickness or mineral-surfaced roll roofing weighing not less than 77 pounds per 100 square feet (3.76 kg/m^2). Cap flashing shall be corrosion-resistant metal of minimum nominal 0.019-inch (0.483 mm) thickness.

1507.2.8.2 Valleys. Valley linings shall be installed in accordance with the manufacturer's instructions before applying shingles. Valley linings of the following types shall be permitted:

1. For open valleys (valley lining exposed) lined with metal, the valley lining shall be not less than 24 inches (610 mm) wide and of any of the corrosion-resistant metals in Table 1507.2.8.2.
2. For open valleys, valley lining of two plies of mineral-surfaced roll roofing complying with ASTM D3909 or ASTM D6380 shall be permitted. The bottom layer shall be 18 inches (457 mm) and the top layer not less than 36 inches (914 mm) wide.
3. For closed valleys (valleys covered with shingles), valley lining of one ply of smooth roll roofing complying with ASTM D6380, and not less than 36 inches (914 mm) wide or types as described in Item 1 or 2 above shall be permitted. Self-adhering polymer modified bitumen underlayment bearing a label indicating compliance with ASTM D1970 shall be permitted in lieu of the lining material.

1507.2.8.3 Drip edge. A drip edge shall be provided at eaves and rake edges of shingle roofs. Adjacent segments of the drip edge shall be lapped not less than 2 inches (51 mm). The vertical leg of drip edges shall be not less than $1^1/_2$ inches (38 mm) in width and shall extend not less than $^1/_4$ inch (6.4 mm) below sheathing. The drip edge shall extend back on the roof not less than 2 inches (51 mm). Underlayment shall be installed over drip edges along eaves. Drip edges shall be installed over underlayment along rake edges. Drip edges shall be mechanically fastened at intervals not greater than 12 inches (305 mm) on center.

1507.3 Clay and concrete tile. The installation of clay and concrete tile shall comply with the provisions of this section.

1507.3.1 Deck requirements. Concrete and clay tile shall be installed only over solid sheathing or spaced structural sheathing boards.

1507.3.2 Deck slope. Clay and concrete roof tile shall be installed on roof slopes of $2^1/_2$ units vertical in 12 units horizontal (21-percent slope) or greater. For roof slopes

TABLE 1507.2.8.2
VALLEY LINING MATERIAL

MATERIAL	MINIMUM THICKNESS	GAGE	WEIGHT
Aluminum	0.024 in.	—	—
Cold-rolled copper	0.0216 in.	—	ASTM B370, 16 oz. per square ft.
Copper	—	—	16 oz
Galvanized steel	0.0179 in.	26 (zinc-coated G90)	—
High-yield copper	0.0162 in.	—	ASTM B370, 12 oz. per square ft.
Lead	—	—	2.5 pounds
Lead-coated copper	0.0216 in.	—	ASTM B101, 16 oz. per square ft.
Lead-coated high-yield copper	0.0162 in.	—	ASTM B101, 12 oz. per square ft.
Painted terne	—	—	20 pounds
Stainless steel	—	28	—
Zinc alloy	0.027 in.	—	—

For SI: 1 inch = 25.4 mm, 1 pound = 0.454 kg, 1 ounce = 28.35 g, 1 square foot = 0.0929 m^2.

INTERNATIONAL CODE COUNCIL®
Copyright © 2019 ICC & NYSDOS. ALL RIGHTS RESERVED. Accessed by Lauren Gualdino (lgualdino@briarcliffmanor.org), (-) Order Number #100880972 on May 08, 2020 07:05 AM (PDT) pursuant to License Agreement with ICC & NYSDOS. No further reproduction, no

100880972

from $2^1/_2$ units vertical in 12 units horizontal (21-percent slope) to four units vertical in 12 units horizontal (33-percent slope), double underlayment application is required in accordance with Section 1507.3.3.

1507.3.3 Underlayment. Unless otherwise noted, required underlayment shall conform to: ASTM D226, Type II; ASTM D2626 or ASTM D6380, Class M mineral-surfaced roll roofing.

1507.3.4 Clay tile. Clay roof tile shall comply with ASTM C1167.

1507.3.5 Concrete tile. Concrete roof tile shall comply with ASTM C1492.

1507.3.6 Fasteners. Tile fasteners shall be corrosion resistant and not less than 11-gage, $^5/_{16}$-inch (8.0 mm) head, and of sufficient length to penetrate the deck not less than $^3/_4$ inch (19.1 mm) or through the thickness of the deck, whichever is less. Attaching wire for clay or concrete tile shall not be smaller than 0.083 inch (2.1 mm). Perimeter fastening areas include three tile courses but not less than 36 inches (914 mm) from either side of hips or ridges and edges of eaves and gable rakes.

1507.3.7 Attachment. Clay and concrete roof tiles shall be fastened in accordance with Table 1507.3.7.

1507.3.8 Application. Tile shall be applied according to the manufacturer's installation instructions, based on the following:

1. Climatic conditions.
2. Roof slope.
3. Underlayment system.
4. Type of tile being installed.

1507.3.9 Flashing. At the juncture of the roof vertical surfaces, flashing and counterflashing shall be provided in accordance with the manufacturer's installation instructions, and where of metal, shall be not less than 0.019-inch (0.48 mm) (No. 26 galvanized sheet gage) corrosion-resistant metal. The valley flashing shall extend not less than 11 inches (279 mm) from the centerline each way and have a splash diverter rib not less than 1 inch (25 mm) high at the flow line formed as part of the flashing. Sections of flashing shall have an end lap of not less than 4 inches (102 mm). For roof slopes of three units vertical in 12 units horizontal (25-percent slope) and over, the valley flashing shall have a 36-inch-wide (914 mm) underlayment of either one layer of Type I underlayment running the full length of the valley, or a self-adhering polymer-modified bitumen sheet bearing a label indicating compliance with ASTM D1970, in addition to other required underlayment. In areas where the average daily temperature in January is 25°F (-4°C) or less or where there is a possibility of ice forming along the eaves causing a backup of water, the metal valley flashing underlayment shall be solid cemented to the roofing underlayment for slopes under seven units vertical in 12 units horizontal (58-percent slope) or self-adhering polymer-modified bitumen sheet shall be installed.

1507.4 Metal roof panels. The installation of metal roof panels shall comply with the provisions of this section.

1507.4.1 Deck requirements. Metal roof panel roof coverings shall be applied to a solid or closely fitted deck, except where the roof covering is specifically designed to be applied to spaced supports.

1507.4.2 Deck slope. Minimum slopes for metal roof panels shall comply with the following:

1. The minimum slope for lapped, nonsoldered seam metal roof panels without applied lap sealant shall be three units vertical in 12 units horizontal (25-percent slope).
2. The minimum slope for lapped, nonsoldered seam metal roof panels with applied lap sealant shall be one-half unit vertical in 12 units horizontal (4-percent slope). Lap sealants shall be applied in accordance with the approved manufacturer's installation instructions.
3. The minimum slope for standing-seam metal roof panel systems shall be one-quarter unit vertical in 12 units horizontal (2-percent slope).

1507.4.3 Material standards. Metal-sheet roof covering systems that incorporate supporting structural members shall be designed in accordance with Chapter 22. Metal-sheet roof coverings installed over structural decking shall comply with Table 1507.4.3(1). The materials used for metal-sheet roof coverings shall be naturally corrosion resistant or provided with corrosion resistance in accordance with the standards and minimum thicknesses shown in Table 1507.4.3(2).

1507.4.4 Attachment. Metal roof panels shall be secured to the supports in accordance with the approved manufacturer's fasteners. In the absence of manufacturer recommendations, the following fasteners shall be used:

1. Galvanized fasteners shall be used for steel roofs.
2. Copper, brass, bronze, copper alloy or 300 series stainless-steel fasteners shall be used for copper roofs.
3. Stainless-steel fasteners are acceptable for all types of metal roofs.
4. Aluminum fasteners are acceptable for aluminum roofs attached to aluminum supports.

1507.4.5 Underlayment and high wind. Underlayment shall comply with Section 1507.1.1.

1507.5 Metal roof shingles. The installation of metal roof shingles shall comply with the provisions of this section.

1507.5.1 Deck requirements. Metal roof shingles shall be applied to a solid or closely fitted deck, except where the roof covering is specifically designed to be applied to spaced sheathing.

1507.5.2 Deck slope. Metal roof shingles shall not be installed on roof slopes below three units vertical in 12 units horizontal (25-percent slope).

1507.5.3 Underlayment. Underlayment shall comply with Section 1507.1.1.

1507.5.4 Ice barrier. Where required, ice barriers shall comply with Section 1507.1.2.

INTERNATIONAL CODE COUNCIL®
Copyright © 2019 ICC & NYSDOS. ALL RIGHTS RESERVED. Accessed by Lauren Gualdino (lgualdino@briarcliffmanor.org), (-) Order Number #100880972 on May 08, 2020 07:05 AM (PDT) pursuant to License Agreement with ICC & NYSDOS. No further reproduction, no

100880972

TABLE 1507.3.7
CLAY AND CONCRETE TILE ATTACHMENT[a, b, c]

GENERAL - CLAY OR CONCRETE ROOF TILE			
Maximum Allowable Stress Design Wind Speed, V_{asd} [f] (mph)	**Mean roof height (feet)**	**Roof slope < 3:12**	**Roof slope 3:12 and over**
85	0-60	One fastener per tile. Flat tile without vertical laps, two fasteners per tile.	Two fasteners per tile. Only one fastener on slopes of 7:12 and less for tiles with installed weight exceeding 7.5 lbs./sq. ft. having a width not more than 16 inches.
100	0-40		
100	> 40-60	The head of all tiles shall be nailed. The nose of all eave tiles shall be fastened with approved clips. Rake tiles shall be nailed with two nails. The nose of all ridge, hip and rake tiles shall be set in a bead of roofer's mastic.	
110	0-60	The fastening system shall resist the wind forces in Section 1609.5.3.	
120	0-60	The fastening system shall resist the wind forces in Section 1609.5.3.	
130	0-60	The fastening system shall resist the wind forces in Section 1609.5.3.	
All	> 60	The fastening system shall resist the wind forces in Section 1609.5.3.	

INTERLOCKING CLAY OR CONCRETE ROOF TILE WITH PROJECTING ANCHOR LUGS[d, e] (Installations on spaced/solid sheathing with battens or spaced sheathing)				
Maximum Allowable Stress Design Wind Speed, V_{asd} [f] (mph)	**Mean roof height (feet)**	**Roof slope < 5:12**	**Roof slope 5:12 < 12:12**	**Roof slope 12:12 and over**
85	0-60	Fasteners are not required. Tiles with installed weight less than 9 lbs./sq. ft. require not fewer than one fastener per tile.	One fastener per tile every other row. Perimeter tiles require one fastener. Tiles with installed weight less than 9 lbs./sq. ft. require not fewer than one fastener per tile.	One fastener required for every tile. Tiles with installed weight less than 9 lbs./sq. ft. require not fewer than one fastener per tile.
100	0-40			
100	> 40-60	The head of all tiles shall be nailed. The nose of all eave tiles shall be fastened with approved clips. Rake tiles shall be nailed with two nails. The nose of all ridge, hip and rake tiles shall be set in a bead of roofer's mastic.		
110	0-60	The fastening system shall resist the wind forces in Section 1609.5.3.		
120	0-60	The fastening system shall resist the wind forces in Section 1609.5.3.		
130	0-60	The fastening system shall resist the wind forces in Section 1609.5.3.		
All	> 60	The fastening system shall resist the wind forces in Section 1609.5.3.		

INTERLOCKING CLAY OR CONCRETE ROOF TILE WITH PROJECTING ANCHOR LUGS (Installations on solid sheathing without battens)		
Maximum Allowable Stress Wind Speed, V_{asd} [f] (mph)	**Mean roof height (feet)**	**All roof slopes**
85	0-60	One fastener per tile.
100	0-40	One fastener per tile.
100	> 40-60	The head of all tiles shall be nailed. The nose of all eave tiles shall be fastened with approved clips. Rake tiles shall be nailed with two nails. The nose of all ridge, hip and rake tiles shall be set in a bead of roofer's mastic.
110	0-60	The fastening system shall resist the wind forces in Section 1609.5.3.
120	0-60	The fastening system shall resist the wind forces in Section 1609.5.3.
130	0-60	The fastening system shall resist the wind forces in Section 1609.5.3.
All	> 60	The fastening system shall resist the wind forces in Section 1609.5.3.

For SI: 1 inch = 25.4 mm, 1 foot = 304.8 mm, 1 mile per hour = 0.447 m/s, 1 pound per square foot = 4.882 kg/m^2.

a. Minimum fastener size. Corrosion-resistant nails not less than No. 11 gage with $^5/_{16}$-inch head. Fasteners shall be long enough to penetrate into the sheathing $^3/_4$ inch or through the thickness of the sheathing, whichever is less. Attaching wire for clay and concrete tile shall not be smaller than 0.083 inch.

b. Snow areas. Not fewer than two fasteners per tile are required or battens and one fastener.

c. Roof slopes greater than 24:12. The nose of all tiles shall be securely fastened.

d. Horizontal battens. Battens shall be not less than 1 inch by 2 inch nominal. Provisions shall be made for drainage by a riser of not less than $^1/_8$ inch at each nail or by 4-foot-long battens with not less than a $^1/_2$-inch separation between battens. Horizontal battens are required for slopes over 7:12.

e. Perimeter fastening areas include three tile courses but not less than 36 inches from either side of hips or ridges and edges of eaves and gable rakes.

f. V_{asd} shall be determined in accordance with Section 1609.3.1.

INTERNATIONAL CODE COUNCIL®
Copyright © 2019 ICC & NYSDOS. ALL RIGHTS RESERVED. Accessed by Lauren Gualdino (lgualdino@briarcliffmanor.org), (-) Order Number #100880972 on May 08, 2020 07:05 AM (PDT) pursuant to License Agreement with ICC & NYSDOS. No further reproduction, no

100880972

TABLE 1507.4.3(1)
METAL ROOF COVERINGS

ROOF COVERING TYPE	STANDARD APPLICATION RATE/THICKNESS
Aluminum	ASTM B209, 0.024 inch minimum thickness for roll-formed panels and 0.019 inch minimum thickness for press-formed shingles.
Aluminum-zinc alloy coated steel	ASTM A792 AZ 50
Cold-rolled copper	ASTM B370 minimum 16 oz./sq. ft. and 12 oz./sq. ft. high yield copper for metal-sheet roof covering systems: 12 oz./sq. ft. for preformed metal shingle systems.
Copper	16 oz./sq. ft. for metal-sheet roof-covering systems; 12 oz./sq. ft. for preformed metal shingle systems.
Galvanized steel	ASTM A653 G-90 zinc-coated.[a]
Hard lead	2 lbs./sq. ft.
Lead-coated copper	ASTM B101
Prepainted steel	ASTM A755
Soft lead	3 lbs./sq. ft.
Stainless steel	ASTM A240, 300 Series Alloys
Steel	ASTM A924
Terne and terne-coated stainless	Terne coating of 40 lbs. per double base box, field painted where applicable in accordance with manufacturer's installation instructions.
Zinc	0.027 inch minimum thickness; 99.995% electrolytic high grade zinc with alloy additives of copper (0.08% - 0.20%), titanium (0.07% - 0.12%) and aluminum (0.015%).

For SI: 1 ounce per square foot = 0.305 kg/m^2,
1 pound per square foot = 4.882 kg/m^2,
1 inch = 25.4 mm, 1 pound = 0.454 kg.

a. For Group U buildings, the minimum coating thickness for ASTM A653 galvanized steel roofing shall be G-60.

TABLE 1507.4.3(2)
MINIMUM CORROSION RESISTANCE

55% Aluminum-zinc alloy coated steel	ASTM A792 AZ 50
5% Aluminum alloy-coated steel	ASTM A875 GF60
Aluminum-coated steel	ASTM A463 T2 65
Galvanized steel	ASTM A653 G-90
Prepainted steel	ASTM A755[a]

a. Paint systems in accordance with ASTM A755 shall be applied over steel products with corrosion-resistant coatings complying with ASTM A463, ASTM A653, ASTM A792 or ASTM A875.

1507.5.5 Material standards. Metal roof shingle roof coverings shall comply with Table 1507.4.3(1). The materials used for metal-roof shingle roof coverings shall be naturally corrosion resistant or provided with corrosion resistance in accordance with the standards and minimum thicknesses specified in the standards listed in Table 1507.4.3(2).

1507.5.6 Attachment. Metal roof shingles shall be secured to the roof in accordance with the *approved* manufacturer's installation instructions.

1507.5.7 Flashing. Roof valley flashing shall be of corrosion-resistant metal of the same material as the roof covering or shall comply with the standards in Table 1507.4.3(1). The valley flashing shall extend not less than 8 inches (203 mm) from the centerline each way and shall have a splash diverter rib not less than $^3/_4$ inch (19.1 mm) high at the flow line formed as part of the flashing. Sections of flashing shall have an end lap of not less than 4 inches (102 mm). In areas where the average daily temperature in January is 25°F (-4°C) or less or where there is a possibility of ice forming along the eaves causing a backup of water, the metal valley flashing shall have a 36-inch-wide (914 mm) underlayment directly under it consisting of either one layer of underlayment running the full length of the valley or a self-adhering polymer-modified bitumen sheet bearing a label indicating compliance with ASTM D1970, in addition to underlayment required for metal roof shingles. The metal valley flashing underlayment shall be solidly cemented to the roofing underlayment for roof slopes under seven units vertical in 12 units horizontal (58-percent slope) or self-adhering polymer-modified bitumen sheet shall be installed.

1507.6 Mineral-surfaced roll roofing. The installation of mineral-surfaced roll roofing shall comply with this section.

1507.6.1 Deck requirements. Mineral-surfaced roll roofing shall be fastened to solidly sheathed roofs.

1507.6.2 Deck slope. Mineral-surfaced roll roofing shall not be applied on roof slopes below one unit vertical in 12 units horizontal (8-percent slope).

1507.6.3 Underlayment. Underlayment shall comply with Section 1507.1.1.

1507.6.4 Ice barrier. Where required, ice barriers shall comply with Section 1507.1.2.

1507.6.5 Material standards. Mineral-surfaced roll roofing shall conform to ASTM D3909 or ASTM D6380.

1507.7 Slate shingles. The installation of slate shingles shall comply with the provisions of this section.

1507.7.1 Deck requirements. Slate shingles shall be fastened to solidly sheathed roofs.

1507.7.2 Deck slope. Slate shingles shall only be used on slopes of four units vertical in 12 units horizontal (4:12) or greater.

1507.7.3 Underlayment. Underlayment shall comply with Section 1507.1.1.

1507.7.4 Ice barrier. Where required, ice barriers shall comply with Section 1507.1.2.

1507.7.5 Material standards. Slate shingles shall comply with ASTM C406.

1507.7.6 Application. Minimum headlap for slate shingles shall be in accordance with Table 1507.7.6. Slate shingles shall be secured to the roof with two fasteners per slate.

INTERNATIONAL CODE COUNCIL®
Copyright © 2019 ICC & NYSDOS. ALL RIGHTS RESERVED. Accessed by Lauren Gualdino (lgualdino@briarcliffmanor.org), (-) Order Number #100880972 on May 08, 2020 07:05 AM (PDT) pursuant to License Agreement with ICC & NYSDOS. No further reproduction, no

100880972

TABLE 1507.7.6
SLATE SHINGLE HEADLAP

SLOPE	HEADLAP (inches)
4:12 < slope < 8:12	4
8:12 < slope < 20:12	3
slope ≥ 20:12	2

For SI: 1 inch = 25.4 mm.

1507.7.7 Flashing. Flashing and counterflashing shall be made with sheet metal. Valley flashing shall be not less than 15 inches (381 mm) wide. Valley and flashing metal shall be a minimum uncoated thickness of 0.0179-inch (0.455 mm) zinc-coated G90. Chimneys, stucco or brick walls shall have not fewer than two plies of felt for a cap flashing consisting of a 4-inch-wide (102 mm) strip of felt set in plastic cement and extending 1 inch (25 mm) above the first felt and a top coating of plastic cement. The felt shall extend over the base flashing 2 inches (51 mm).

1507.8 Wood shingles. The installation of wood shingles shall comply with the provisions of this section and Table 1507.8.

1507.8.1 Deck requirements. Wood shingles shall be installed on solid or spaced sheathing. Where spaced sheathing is used, sheathing boards shall be not less than 1-inch by 4-inch (25 mm by 102 mm) nominal dimensions and shall be spaced on centers equal to the weather exposure to coincide with the placement of fasteners.

1507.8.1.1 Solid sheathing required. Solid sheathing is required in areas where the average daily temperature in January is 25°F (-4°C) or less or where there is a possibility of ice forming along the eaves causing a backup of water.

1507.8.2 Deck slope. Wood shingles shall be installed on slopes of not less than three units vertical in 12 units horizontal (25-percent slope).

TABLE 1507.8
WOOD SHINGLE AND SHAKE INSTALLATION

ROOF ITEM	WOOD SHINGLES	WOOD SHAKES
1. Roof slope	Wood shingles shall be installed on slopes of not less than three units vertical in 12 units horizontal (3:12).	Wood shakes shall be installed on slopes of not less than four units vertical in 12 units horizontal (4:12).
2. Deck requirement		
Temperate climate	Shingles shall be applied to roofs with solid or spaced sheathing. Where spaced sheathing is used, sheathing boards shall be not less than 1" × 4" nominal dimensions and shall be spaced on centers equal to the weather exposure to coincide with the placement of fasteners.	Shakes shall be applied to roofs with solid or spaced sheathing. Where spaced sheathing is used, sheathing boards shall be not less than 1" × 4" nominal dimensions and shall be spaced on centers equal to the weather exposure to coincide with the placement of fasteners. Where 1" × 4" spaced sheathing is installed at 10 inches, boards must be installed between the sheathing boards.
In areas where the average daily temperature in January is 25°F or less or where there is a possibility of ice forming along the eaves causing a backup of water.	Solid sheathing is required.	Solid sheathing is required.
3. Interlayment	No requirements.	Interlayment shall comply with ASTM D226, Type 1.
4. Underlayment		
Temperate climate	Underlayment shall comply with Section 1507.1.1.	Underlayment shall comply with Section 1507.1.1.
5. Application		
Attachment	Fasteners for wood shingles shall be hot-dipped galvanized or Type 304 (Type 316 for coastal areas) stainless steel with a minimum penetration of 0.75 inch into the sheathing. For sheathing less than 0.5 inch thick, the fasteners shall extend through the sheathing.	Fasteners for wood shakes shall be hot-dipped galvanized or Type 304 (Type 316 for coastal areas) with a minimum penetration of 0.75 inch into the sheathing. For sheathing less than 0.5 inch thick, the fasteners shall extend through the sheathing.
No. of fasteners	Two per shingle.	Two per shake.
Exposure	Weather exposures shall not exceed those set forth in Table 1507.8.7.	Weather exposures shall not exceed those set forth in Table 1507.9.8.
Method	Shingles shall be laid with a side lap of not less than 1.5 inches between joints in courses, and no two joints in any three adjacent courses shall be in direct alignment. Spacing between shingles shall be 0.25 to 0.375 inch.	Shakes shall be laid with a side lap of not less than 1.5 inches between joints in adjacent courses. Spacing between shakes shall not be less than 0.375 inch or more than 0.625 inch for shakes and taper sawn shakes of naturally durable wood and shall be 0.25 to 0.375 inch for preservative-treated taper sawn shakes.
Flashing	In accordance with Section 1507.8.8.	In accordance with Section 1507.9.9.

For SI: 1 inch = 25.4 mm, °C = [(°F) - 32]/1.8.

INTERNATIONAL CODE COUNCIL®
Copyright © 2019 ICC & NYSDOS. ALL RIGHTS RESERVED. Accessed by Lauren Gualdino (lgualdino@briarcliffmanor.org), (-) Order Number #100880972 on May 08, 2020 07:05 AM (PDT) pursuant to License Agreement with ICC & NYSDOS. No further reproduction, no

100880972

1507.8.3 Underlayment. Underlayment shall comply with Section 1507.1.1.

1507.8.4 Ice barrier. Where required, ice barriers shall comply with Section 1507.1.2.

1507.8.5 Material standards. Wood shingles shall be of naturally durable wood and comply with the requirements of Table 1507.8.5.

TABLE 1507.8.5
WOOD SHINGLE MATERIAL REQUIREMENTS

MATERIAL	APPLICABLE MINIMUM GRADES	GRADING RULES
Wood shingles of naturally durable wood	1, 2 or 3	CSSB

CSSB = Cedar Shake and Shingle Bureau.

1507.8.6 Attachment. Fasteners for wood shingles shall be corrosion resistant with a minimum penetration of $^3/_4$ inch (19.1 mm) into the sheathing. For sheathing less than $^1/_2$ inch (12.7 mm) in thickness, the fasteners shall extend through the sheathing. Each shingle shall be attached with not fewer than two fasteners.

1507.8.7 Application. Wood shingles shall be laid with a side lap not less than $1^1/_2$ inches (38 mm) between joints in adjacent courses, and not be in direct alignment in alternate courses. Spacing between shingles shall be $^1/_4$ to $^3/_8$ inch (6.4 to 9.5 mm). Weather exposure for wood shingles shall not exceed that set in Table 1507.8.7.

TABLE 1507.8.7
WOOD SHINGLE WEATHER EXPOSURE AND ROOF SLOPE

ROOFING MATERIAL	LENGTH (inches)	GRADE	EXPOSURE (inches)	
			3:12 pitch to < 4:12	4:12 pitch or steeper
Shingles of naturally durable wood	16	No. 1	3.75	5
		No. 2	3.5	4
		No. 3	3	3.5
	18	No. 1	4.25	5.5
		No. 2	4	4.5
		No. 3	3.5	4
	24	No. 1	5.75	7.5
		No. 2	5.5	6.5
		No. 3	5	5.5

For SI: 1 inch = 25.4 mm.

1507.8.8 Flashing. At the juncture of the roof and vertical surfaces, flashing and counterflashing shall be provided in accordance with the manufacturer's installation instructions, and where of metal, shall be not less than 0.019-inch (0.48 mm) (No. 26 galvanized sheet gage) corrosion-resistant metal. The valley flashing shall extend not less than 11 inches (279 mm) from the centerline each way and have a splash diverter rib not less than 1 inch (25 mm) high at the flow line formed as part of the flashing. Sections of flashing shall have an end lap of not less than 4 inches (102 mm). For roof slopes of three units vertical in 12 units horizontal (25-percent slope) and over, the valley flashing shall have a 36-inch-wide (914 mm) underlayment of either one layer of Type I underlayment running the full length of the valley or a self-adhering polymer-modified bitumen sheet bearing a label indicating compliance with ASTM D1970, in addition to other required underlayment. In areas where the average daily temperature in January is 25°F (-4°C) or less or where there is a possibility of ice forming along the eaves causing a backup of water, the metal valley flashing underlayment shall be solidly cemented to the roofing underlayment for slopes under seven units vertical in 12 units horizontal (58-percent slope) or self-adhering polymer-modified bitumen sheet shall be installed.

1507.8.9 Label required. Each bundle of shingles shall be identified by a label of an approved grading or inspection bureau or agency.

1507.9 Wood shakes. The installation of wood shakes shall comply with the provisions of this section and Table 1507.8.

1507.9.1 Deck requirements. Wood shakes shall only be used on solid or spaced sheathing. Where spaced sheathing is used, sheathing boards shall be not less than 1-inch by 4-inch (25 mm by 102 mm) nominal dimensions and shall be spaced on centers equal to the weather exposure to coincide with the placement of fasteners. Where 1-inch by 4-inch (25 mm by 102 mm) spaced sheathing is installed at 10 inches (254 mm) on center, additional 1-inch by 4-inch (25 mm by 102 mm) boards shall be installed between the sheathing boards.

1507.9.1.1 Solid sheathing required. Solid sheathing is required in areas where the average daily temperature in January is 25°F (-4°C) or less or where there is a possibility of ice forming along the eaves causing a backup of water.

1507.9.2 Deck slope. Wood shakes shall only be used on slopes of not less than four units vertical in 12 units horizontal (33-percent slope).

1507.9.3 Underlayment. Underlayment shall comply with Section 1507.1.1.

1507.9.4 Ice barrier. Where required, ice barriers shall comply with Section 1507.1.2.

1507.9.5 Interlayment. Interlayment shall comply with ASTM D226, Type I.

1507.9.6 Material standards. Wood shakes shall comply with the requirements of Table 1507.9.6.

INTERNATIONAL CODE COUNCIL®
Copyright © 2019 ICC & NYSDOS. ALL RIGHTS RESERVED. Accessed by Lauren Gualdino (lgualdino@briarcliffmanor.org), (-) Order Number #100880972 on May 08, 2020 07:05 AM (PDT) pursuant to License Agreement with ICC & NYSDOS. No further reproduction, no

100880972

TABLE 1507.9.6
WOOD SHAKE MATERIAL REQUIREMENTS

MATERIAL	MINIMUM GRADES	APPLICABLE GRADING RULES
Wood shakes of naturally durable wood	1	CSSB
Taper sawn shakes of naturally durable wood	1 or 2	CSSB
Preservative-treated shakes and shingles of naturally durable wood	1	CSSB
Fire-retardant-treated shakes and shingles of naturally durable wood	1	CSSB
Preservative-treated taper sawn shakes of Southern pine treated in accordance with AWPA U1 (Commodity Specification A, Special Requirement 4.6	1 or 2	TFS

CSSB = Cedar Shake and Shingle Bureau.
TFS = Forest Products Laboratory of the Texas Forest Services.

1507.9.7 Attachment. Fasteners for wood shakes shall be corrosion resistant with a minimum penetration of $^3/_4$ inch (19.1 mm) into the sheathing. For sheathing less than $^1/_2$ inch (12.7 mm) in thickness, the fasteners shall extend through the sheathing. Each shake shall be attached with not fewer than two fasteners.

1507.9.8 Application. Wood shakes shall be laid with a side lap not less than $1^1/_2$ inches (38 mm) between joints in adjacent courses. Spacing between shakes in the same course shall be $^3/_8$ to $^5/_8$ inch (9.5 to 15.9 mm) for shakes and taper sawn shakes of naturally durable wood and shall be $^1/_4$ to $^3/_8$ inch (6.4 to 9.5 mm) for preservative taper sawn shakes. Weather exposure for wood shakes shall not exceed those set in Table 1507.9.8.

1507.9.9 Flashing. At the juncture of the roof and vertical surfaces, flashing and counterflashing shall be provided in accordance with the manufacturer's installation instructions, and where of metal, shall be not less than 0.019-inch (0.48 mm) (No. 26 galvanized sheet gage) corrosion-resistant metal. The valley flashing shall extend not less than 11 inches (279 mm) from the centerline each way and have a splash diverter rib not less than 1 inch (25 mm) high at the flow line formed as part of the flashing. Sections of flashing shall have an end lap of not less than 4 inches (102 mm). For roof slopes of three units vertical in 12 units horizontal (25-percent slope) and over, the valley flashing shall have a 36-inch-wide (914 mm) underlayment of either one layer of Type I underlayment running the full length of the valley or a self-adhering polymer-modified bitumen sheet bearing a label indicating compliance with ASTM D1970, in addition to other required underlayment. In areas where the average daily temperature in January is 25°F (-4°C) or less or where there is a possibility of ice forming along the eaves causing a backup of water, the metal valley flashing underlayment shall be solidly cemented to the roofing underlayment for slopes under seven units vertical in 12 units horizontal (58-percent slope) or self-adhering polymer-modified bitumen sheet shall be installed.

1507.9.10 Label required. Each bundle of shakes shall be identified by a label of an approved grading or inspection bureau or agency.

1507.10 Built-up roofs. The installation of built-up roofs shall comply with the provisions of this section.

1507.10.1 Slope. Built-up roofs shall have a design slope of not less than one-fourth unit vertical in 12 units horizontal (2-percent slope) for drainage, except for coal-tar built-up roofs that shall have a design slope of not less than one-eighth unit vertical in 12 units horizontal (1-percent slope).

1507.10.2 Material standards. Built-up roof covering materials shall comply with the standards in Table 1507.10.2 or UL 55A.

1507.11 Modified bitumen roofing. The installation of modified bitumen roofing shall comply with the provisions of this section.

1507.11.1 Slope. Modified bitumen roofing shall have a design slope of not less than one-fourth unit vertical in 12 units horizontal (2-percent slope) for drainage.

TABLE 1507.9.8
WOOD SHAKE WEATHER EXPOSURE AND ROOF SLOPE

ROOFING MATERIAL	LENGTH (inches)	GRADE	EXPOSURE (inches) 4:12 PITCH OR STEEPER
Shakes of naturally durable wood	18	No. 1	7.5
	24	No. 1	10[a]
Preservative-treated taper sawn shakes of Southern yellow pine	18	No. 1	7.5
	24	No. 1	10
	18	No. 2	5.5
	24	No. 2	7.5
Taper sawn shakes of naturally durable wood	18	No. 1	7.5
	24	No. 1	10
	18	No. 2	5.5
	24	No. 2	7.5

For SI: 1 inch = 25.4 mm.
a. For 24-inch by 0.375-inch handsplit shakes, the maximum exposure is 7.5 inches.

INTERNATIONAL CODE COUNCIL®
Copyright © 2019 ICC & NYSDOS. ALL RIGHTS RESERVED. Accessed by Lauren Gualdino (lgualdino@briarcliffmanor.org), (-) Order Number #100880972 on May 08, 2020 07:05 AM (PDT) pursuant to License Agreement with ICC & NYSDOS. No further reproduction, no

100880972

1507.11.2 Material standards. Modified bitumen roofing materials shall comply with ASTM D6162, ASTM D6163, ASTM D6164, ASTM D6222, ASTM D6223, ASTM D6298 or ASTM D6509.

1507.11.2.1 Base sheet. A base sheet that complies with the requirements of Section 1507.11.2, ASTM D1970 or ASTM D4601 shall be permitted to be used with a modified bitumen cap sheet.

TABLE 1507.10.2
BUILT-UP ROOFING MATERIAL STANDARDS

MATERIAL STANDARD	STANDARD
Acrylic coatings used in roofing	ASTM D6083
Aggregate surfacing	ASTM D1863
Asphalt adhesive used in roofing	ASTM D3747
Asphalt cements used in roofing	ASTM D2822; D3019; D4586
Asphalt-coated glass fiber base sheet	ASTM D4601
Asphalt coatings used in roofing	ASTM D1227; D2823; D2824; D4479
Asphalt glass felt	ASTM D2178
Asphalt primer used in roofing	ASTM D41
Asphalt-saturated and asphalt-coated organic felt base sheet	ASTM D2626
Asphalt-saturated organic felt (perforated)	ASTM D226
Asphalt used in roofing	ASTM D312
Coal-tar cements used in roofing	ASTM D4022; D5643
Coal-tar saturated organic felt	ASTM D227
Coal-tar pitch used in roofing	ASTM D450; Type I or II
Coal-tar primer used in roofing, dampproofing and waterproofing	ASTM D43
Glass mat, coal tar	ASTM D4990
Glass mat, venting type	ASTM D4897
Mineral-surfaced inorganic cap sheet	ASTM D3909
Thermoplastic fabrics used in roofing	ASTM D5665, D5726

1507.12 Thermoset single-ply roofing. The installation of thermoset single-ply roofing shall comply with the provisions of this section.

1507.12.1 Slope. Thermoset single-ply membrane roofs shall have a design slope of not less than one-fourth unit vertical in 12 units horizontal (2-percent slope) for drainage.

1507.12.2 Material standards. Thermoset single-ply roof coverings shall comply with ASTM D4637 or ASTM D5019.

1507.12.3 Ballasted thermoset low-slope roofs. Ballasted thermoset low-slope roofs (roof slope < 2:12) shall be installed in accordance with this section and Section 1504.4. Stone used as ballast shall comply with ASTM D448 or ASTM D7655.

1507.13 Thermoplastic single-ply roofing. The installation of thermoplastic single-ply roofing shall comply with the provisions of this section.

1507.13.1 Slope. Thermoplastic single-ply membrane roofs shall have a design slope of not less than one-fourth unit vertical in 12 units horizontal (2-percent slope).

1507.13.2 Material standards. Thermoplastic single-ply roof coverings shall comply with ASTM D4434, ASTM D6754 or ASTM D6878.

1507.13.3 Ballasted thermoplastic low-slope roofs. Ballasted thermoplastic low-slope roofs (roof slope < 2:12) shall be installed in accordance with this section and Section 1504.4. Stone used as ballast shall comply with ASTM D448 or ASTM D7655.

1507.14 Sprayed polyurethane foam roofing. The installation of sprayed polyurethane foam roofing shall comply with the provisions of this section.

1507.14.1 Slope. Sprayed polyurethane foam roofs shall have a design slope of not less than one-fourth unit vertical in 12 units horizontal (2-percent slope) for drainage.

1507.14.2 Material standards. Spray-applied polyurethane foam insulation shall comply with ASTM C1029 Type III or IV or ASTM D7425.

1507.14.3 Application. Foamed-in-place roof insulation shall be installed in accordance with the manufacturer's instructions. A liquid-applied protective coating that complies with Table 1507.14.3 shall be applied not less than 2 hours nor more than 72 hours following the application of the foam.

TABLE 1507.14.3
PROTECTIVE COATING MATERIAL STANDARDS

MATERIAL	STANDARD
Acrylic coating	ASTM D6083
Silicone coating	ASTM D6694
Moisture-cured polyurethane coating	ASTM D6947

1507.14.4 Foam plastics. Foam plastic materials and installation shall comply with Chapter 26.

1507.15 Liquid-applied roofing. The installation of liquid-applied roofing shall comply with the provisions of this section.

1507.15.1 Slope. Liquid-applied roofing shall have a design slope of not less than one-fourth unit vertical in 12 units horizontal (2-percent slope).

1507.15.2 Material standards. Liquid-applied roofing shall comply with ASTM C836, ASTM C957, ASTM D1227 or ASTM D3468, ASTM D6083, ASTM D6694 or ASTM D6947.

1507.16 Vegetative roofs, roof gardens and landscaped roofs. *Vegetative roofs*, roof gardens and landscaped roofs shall comply with the requirements of this chapter, Section 1607.13.3 and the *Fire Code of New York State*.

[BF] 1507.16.1 Structural fire resistance. The structural frame and roof construction supporting the load imposed on the roof by the *vegetative roof*, roof gardens or land-

INTERNATIONAL CODE COUNCIL®
Copyright © 2019 ICC & NYSDOS. ALL RIGHTS RESERVED. Accessed by Lauren Gualdino (lgualdino@briarcliffmanor.org), (-) Order Number #100880972 on May 08, 2020 07:05 AM (PDT) pursuant to License Agreement with ICC & NYSDOS. No further reproduction, no

100880972

scaped roofs shall comply with the requirements of Table 601.

1507.17 Photovoltaic shingles. The installation of *photovoltaic shingles* shall comply with the provisions of this section.

1507.17.1 Deck requirements. *Photovoltaic shingles* shall be applied to a solid or closely fitted deck, except where the shingles are specifically designed to be applied over spaced sheathing.

1507.17.2 Deck slope. *Photovoltaic shingles* shall be installed on roof slopes of not less than two units vertical in 12 units horizontal (2:12).

1507.17.3 Underlayment. Underlayment shall comply with Section 1507.1.1.

1507.17.4 Ice barrier. Where required, ice barriers shall comply with Section 1507.1.2.

1507.17.5 Fasteners. Fasteners for *photovoltaic shingles* shall be galvanized, stainless steel, aluminum or copper roofing nails, minimum 12-gage [0.105 inch (2.67 mm)] shank with a minimum $^3/_8$-inch-diameter (9.5 mm) head, of a length to penetrate through the roofing materials and not less than $^3/_4$ inch (19.1 mm) into the roof sheathing. Where the roof sheathing is less than $^3/_4$ inch (19.1 mm) thick, the nails shall penetrate through the sheathing. Fasteners shall comply with ASTM F1667.

1507.17.6 Material standards. *Photovoltaic shingles* shall be *listed* and labeled in accordance with UL 1703.

1507.17.7 Attachment. *Photovoltaic shingles* shall be attached in accordance with the manufacturer's installation instructions.

1507.17.8 Wind resistance. *Photovoltaic shingles* shall be tested in accordance with procedures and acceptance criteria in ASTM D3161. *Photovoltaic shingles* shall comply with the classification requirements of Table 1504.1.1 for the appropriate maximum nominal design wind speed. *Photovoltaic shingle* packaging shall bear a *label* to indicate compliance with the procedures in ASTM D3161 and the required classification from Table 1504.1.1.

1507.18 Building-integrated photovoltaic roof panels. The installation of building-integrated photovoltaic (BIPV) roof panels shall comply with the provisions of this section.

1507.18.1 Deck requirements. BIPV roof panels shall be applied to a solid or closely fitted deck, except where the roof covering is specifically designed to be applied over spaced sheathing.

1507.18.2 Deck slope. BIPV roof panels shall be used only on roof slopes of two units vertical in 12 units horizontal (2:12) or greater.

1507.18.3 Underlayment. Underlayment shall comply with ASTM D226, ASTM D4869 or ASTM D6757.

1507.18.4 Underlayment application. Underlayment shall be applied shingle fashion, parallel to and starting from the eave, lapped 2 inches (51 mm) and fastened sufficiently to hold in place.

1507.18.4.1 High-wind attachment. Underlayment applied in areas subject to high winds [V_{asd} greater than 110 mph (49 m/s) as determined in accordance with Section 1609.3.1] shall be applied in accordance with the manufacturer's instructions. Fasteners shall be applied along the overlap at not more than 36 inches (914 mm) on center. Underlayment installed where V_{asd} is not less than 120 mph (54 m/s) shall comply with ASTM D226, Type III, ASTM D4869, Type IV or ASTM D6757. The underlayment shall be attached in a grid pattern of 12 inches (305 mm) between side laps with a 6-inch (152 mm) spacing at the side laps. The underlayment shall be applied in accordance with Section 1507.1.1 except all laps shall be not less than 4 inches (102 mm). Underlayment shall be attached using cap nails or cap staples. Caps shall be metal or plastic with a nominal head diameter of not less than 1 inch (25.4 mm). Metal caps shall have a thickness of not less than 0.010 inch (0.25 mm). Power-driven metal caps shall have a thickness of not less than 0.010 inch (0.25 mm). Thickness of the outside edge of plastic caps shall be not less than 0.035 inch (0.89 mm). The cap nail shank shall be not less than 0.083 inch (2.11 mm) for ring shank cap nails and 0.091 inch (2.31 mm) for smooth shank cap nails. Staple gage shall be not less than 21 gage [0.0.2 inch (0.81 mm)]. Cap nail shank and cap staple legs shall have a length sufficient to penetrate through-the-roof sheathing or not less than $^3/_4$ inch (19.1 mm) into the roof sheathing.

Exception: As an alternative, adhered underlayment complying with ASTM D1970 shall be permitted.

1507.18.4.2 Ice barrier. In areas where there has been a history of ice forming along the eaves causing a back-up of water, an ice barrier consisting of not fewer than two layers of underlayment cemented together or of a self-adhering polymer modified bitumen sheet shall be used instead of normal underlayment and extend from the lowest edges of all roof surfaces to a point not less than 24 inches (610 mm) inside the exterior wall line of the building.

Exception: Detached accessory structures that do not contain conditioned floor area.

1507.18.5 Material standards. BIPV roof panels shall be listed and labeled in accordance with UL 1703.

1507.18.6 Attachment. BIPV roof panels shall be attached in accordance with the manufacturer's installation instructions.

1507.18.7 Wind resistance. BIPV roof panels shall be tested in accordance with UL 1897. BIPV roof panel packaging shall bear a label to indicate compliance with UL 1897.

SECTION 1508
ROOF INSULATION

[BF] 1508.1 General. The use of above-deck thermal insulation shall be permitted provided that such insulation is cov-

INTERNATIONAL CODE COUNCIL®
Copyright © 2019 ICC & NYSDOS. ALL RIGHTS RESERVED. Accessed by Lauren Gualdino (lgualdino@briarcliffmanor.org), (-) Order Number #100880972 on May 08, 2020 07:05 AM (PDT) pursuant to License Agreement with ICC & NYSDOS. No further reproduction, no

100880972

ered with an approved roof covering and passes the tests of NFPA 276 or UL 1256 when tested as an assembly.

Exceptions:

1. Foam plastic roof insulation shall conform to the material and installation requirements of Chapter 26.
2. Where a concrete roof deck is used and the above-deck thermal insulation is covered with an approved roof covering.

[BF] 1508.2 Material standards. Above-deck thermal insulation board shall comply with the standards in Table 1508.2.

[BF] TABLE 1508.2
MATERIAL STANDARDS FOR ROOF INSULATION

Cellular glass board	ASTM C552
Composite boards	ASTM C1289, Type III, IV, V or VII
Expanded polystyrene	ASTM C578
Extruded polystyrene	ASTM C578
Fiber-reinforced gypsum board	ASTM C1278
Glass-faced gypsum board	ASTM C1177
High-density polyisocyanurate board	ASTM C1289, Type II, Class 4
Mineral fiber insulation board	ASTM C726
Perlite board	ASTM C728
Polyisocyanurate board	ASTM C1289, Type I or II
Wood fiberboard	ASTM C208, Type II

SECTION 1509
RADIANT BARRIERS INSTALLED ABOVE DECK

[BF] 1509.1 General. A *radiant barrier* installed above a deck shall comply with Sections 1509.2 through 1509.4.

[BF] 1509.2 Fire testing. *Radiant barriers* shall be permitted for use above decks where the *radiant barrier* is covered with an approved roof covering and the system consisting of the *radiant barrier* and the roof covering complies with the requirements of either FM 4450 or UL 1256.

[BF] 1509.3 Installation. The low emittance surface of the *radiant barrier* shall face the continuous airspace between the *radiant barrier* and the roof covering.

[BF] 1509.4 Material standards. A *radiant barrier* installed above a deck shall comply with ASTM C1313/1313M.

SECTION 1510
ROOFTOP STRUCTURES

[BG] 1510.1 General. The provisions of this section shall govern the construction of rooftop structures.

1510.1.1 Area limitation. The aggregate area of penthouses and other enclosed rooftop structures shall not exceed one-third the area of the supporting roof deck. Such penthouses and other enclosed rooftop structures shall not be required to be included in determining the building area or number of stories as regulated by Section 503.1. The area of such penthouses shall not be included in determining the fire area specified in Section 901.7.

[BG] 1510.2 Penthouses. Penthouses in compliance with Sections 1510.2.1 through 1510.2.4 shall be considered as a portion of the story directly below the roof deck on which such penthouses are located. Other penthouses shall be considered as an additional story of the building.

[BG] 1510.2.1 Height above roof deck. Penthouses constructed on buildings of other than Type I construction shall not exceed 18 feet (5486 mm) in height above the roof deck as measured to the average height of the roof of the penthouse. Penthouses located on the roof of buildings of Type I construction shall not be limited in height.

Exception: Where used to enclose tanks or elevators that travel to the roof level, penthouses shall be permitted to have a maximum height of 28 feet (8534 mm) above the roof deck.

[BG] 1510.2.2 Use limitations. Penthouses shall not be used for purposes other than the shelter of mechanical or electrical equipment, tanks, elevators and related machinery, or vertical shaft openings in the roof assembly.

[BG] 1510.2.3 Weather protection. Provisions such as louvers, louver blades or flashing shall be made to protect the mechanical and electrical equipment and the building interior from the elements.

[BG] 1510.2.4 Type of construction. Penthouses shall be constructed with walls, floors and roofs as required for the type of construction of the building on which such penthouses are built.

Exceptions:

1. On buildings of Type I construction, the exterior walls and roofs of penthouses with a *fire separation distance* greater than 5 feet (1524 mm) and less than 20 feet (6096 mm) shall be permitted to have not less than a 1-hour fire-resistance rating. The exterior walls and roofs of penthouses with a fire separation distance of 20 feet (6096 mm) or greater shall not be required to have a fire-resistance rating.
2. On buildings of Type I construction two stories or less in height above grade plane or of Type II construction, the exterior walls and roofs of penthouses with a *fire separation distance* greater than 5 feet (1524 mm) and less than 20 feet (6096 mm) shall be permitted to have not less than a 1-hour fire-resistance rating or a lesser fire-resistance rating as required by Table 602 and be constructed of fire-retardant-treated wood. The exterior walls and roofs of penthouses with a *fire separation distance* of 20 feet (6096 mm) or greater shall be permitted to be constructed of fire-retardant-treated wood and shall not be required to have a fire-resistance rating. Interior framing and walls shall be permitted to be constructed of fire-retardant-treated wood.
3. On buildings of Type III, IV or V construction, the exterior walls of penthouses with a fire sepa-

INTERNATIONAL CODE COUNCIL®
Copyright © 2019 ICC & NYSDOS. ALL RIGHTS RESERVED. Accessed by Lauren Gualdino (lgualdino@briarcliffmanor.org), (-) Order Number #100880972 on May 08, 2020 07:05 AM (PDT) pursuant to License Agreement with ICC & NYSDOS. No further reproduction, no

100880972

ration distance greater than 5 feet (1524 mm) and less than 20 feet (6096 mm) shall be permitted to have not less than a 1-hour fire-resistance rating or a lesser fire-resistance rating as required by Table 602. On buildings of Type III, IV or VA construction, the exterior walls of penthouses with a fire separation distance of 20 feet (6096 mm) or greater shall be permitted to be of heavy timber construction complying with Sections 602.4 and 2304.11 or noncombustible construction or fire-retardant-treated wood and shall not be required to have a fire-resistance rating.

[BG] 1510.3 Tanks. Tanks having a capacity of more than 500 gallons (1893 L) located on the roof deck of a building shall be supported on masonry, reinforced concrete, steel or heavy timber construction complying with Section 2304.11 provided that, where such supports are located in the building above the lowest *story*, the support shall be fire-resistance rated as required for Type IA construction.

[BG] 1510.3.1 Valve and drain. In the bottom or on the side near the bottom of the tank, a pipe or outlet, fitted with a suitable quick-opening valve for discharging the contents into a drain in an emergency shall be provided.

[BG] 1510.3.2 Location. Tanks shall not be placed over or near a stairway or an elevator shaft, unless there is a solid roof or floor underneath the tank.

[BG] 1510.3.3 Tank cover. Unenclosed roof tanks shall have covers sloping toward the perimeter of the tanks.

[BG] 1510.4 Cooling towers. Cooling towers located on the roof deck of a building and greater than 250 square feet (23.2 m^2) in base area or greater than 15 feet (4572 mm) in height above the roof deck, as measured to the highest point on the cooling tower, where the roof is greater than 50 feet (15 240 mm) in height above grade plane shall be constructed of noncombustible materials. The base area of cooling towers shall not exceed one-third the area of the supporting roof deck.

Exception: Drip boards and the enclosing construction shall be permitted to be of wood not less than 1 inch (25 mm) nominal thickness, provided that the wood is covered on the exterior of the tower with noncombustible material.

[BG] 1510.5 Towers, spires, domes and cupolas. Towers, spires, domes and cupolas shall be of a type of construction having fire-resistance ratings not less than required for the building on top of which such tower, spire, dome or cupola is built. Towers, spires, domes and cupolas greater than 85 feet (25 908 mm) in height above grade plane as measured to the highest point on such structures, and either greater than 200 square feet (18.6 m^2) in horizontal area or used for any purpose other than a belfry or an architectural embellishment, shall be constructed of and supported on Type I or II construction.

[BG] 1510.5.1 Noncombustible construction required. Towers, spires, domes and cupolas greater than 60 feet (18 288 mm) in height above the highest point at which such structure contacts the roof as measured to the highest point on such structure, or that exceeds 200 square feet (18.6 m^2) in area at any horizontal section, or which is intended to be used for any purpose other than a belfry or architectural embellishment, or is located on the top of a building greater than 50 feet (15 240 mm) in building height shall be constructed of and supported by noncombustible materials and shall be separated from the building below by construction having a fire-resistance rating of not less than 1.5 hours with openings protected in accordance with Section 711. Such structures located on the top of a building greater than 50 feet (15 240 mm) in building height shall be supported by noncombustible construction.

[BG] 1510.5.2 Towers and spires. Enclosed towers and spires shall have exterior walls constructed as required for the building on top of which such towers and spires are built. The roof covering of spires shall be not less than the same class of roof covering required for the building on top of which the spire is located.

[BG] 1510.6 Mechanical equipment screens. *Mechanical equipment screens* shall be constructed of the materials specified for the exterior walls in accordance with the type of construction of the building. Where the fire separation distance is greater than 5 feet (1524 mm), *mechanical equipment screens* shall not be required to comply with the fire-resistance rating requirements.

[BG] 1510.6.1 Height limitations. *Mechanical equipment screens* shall not exceed 18 feet (5486 mm) in height above the roof deck, as measured to the highest point on the mechanical equipment screen.

Exception: Where located on buildings of Type IA construction, the height of *mechanical equipment screens* shall not be limited.

[BG] 1510.6.2 Type I, II, III or IV construction. Regardless of the requirements in Section 1510.6, *mechanical equipment screens* that are located on the roof decks of buildings of Type I, II, III or IV construction shall be permitted to be constructed of combustible materials in accordance with any one of the following limitations:

1. The fire separation distance shall be not less than 20 feet (6096 mm) and the height of the *mechanical equipment screen* above the roof deck shall not exceed 4 feet (1219 mm) as measured to the highest point on the *mechanical equipment screen*.
2. The fire separation distance shall be not less than 20 feet (6096 mm) and the *mechanical equipment screen* shall be constructed of fire-retardant-treated wood complying with Section 2303.2 for exterior installation.
3. Where exterior wall covering panels are used, the panels shall have a flame spread index of 25 or less when tested in the minimum and maximum thicknesses intended for use, with each face tested independently in accordance with ASTM E84 or UL 723. The panels shall be tested in the minimum and maximum thicknesses intended for use in accordance with, and shall comply with the acceptance criteria of, NFPA 285 and shall be installed as tested. Where the panels are tested as part of an exterior wall assembly in accordance with NFPA 285, the panels shall be installed on the face of the

INTERNATIONAL CODE COUNCIL®
Copyright © 2019 ICC & NYSDOS. ALL RIGHTS RESERVED. Accessed by Lauren Gualdino (lgualdino@briarcliffmanor.org), (-) Order Number #100880972 on May 08, 2020 07:05 AM (PDT) pursuant to License Agreement with ICC & NYSDOS. No further reproduction, no

100880972

mechanical equipment screen supporting structure in the same manner as they were installed on the tested exterior wall assembly.

[BG] 1510.6.3 Type V construction. The height of mechanical equipment screens located on the roof decks of buildings of Type V construction, as measured from grade plane to the highest point on the mechanical equipment screen, shall be permitted to exceed the maximum building height allowed for the building by other provisions of this code where complying with any one of the following limitations, provided that the fire separation distance is greater than 5 feet (1524 mm):

1. Where the fire separation distance is not less than 20 feet (6096 mm), the height above grade plane of the mechanical equipment screen shall not exceed 4 feet (1219 mm) more than the maximum building height allowed.
2. The *mechanical equipment screen* shall be constructed of noncombustible materials.
3. The *mechanical equipment screen* shall be constructed of fire-retardant-treated wood complying with Section 2303.2 for exterior installation.
4. Where the fire separation distance is not less than 20 feet (6096 mm), the *mechanical equipment screen* shall be constructed of materials having a flame spread index of 25 or less when tested in the minimum and maximum thicknesses intended for use with each face tested independently in accordance with ASTM E84 or UL 723.

[BG] 1510.7 Photovoltaic panels and modules. Rooftop-mounted *photovoltaic panels* and *modules* shall be designed in accordance with this section.

➡ **[BG] 1510.7.1 Fire classification.** Rooftop-mounted *photovoltaic panels* and *modules* shall have the fire classification in accordance with Section 1505.9.

➡ **[BG] 1510.7.2 Photovoltaic panels and modules.** Rooftop-mounted *photovoltaic panels* and *modules* shall be *listed* and labeled in accordance with UL 1703 and shall be installed in accordance with the manufacturer's instructions.

[BG] 1510.8 Other rooftop structures. Rooftop structures not regulated by Sections 1510.2 through 1510.7 shall comply with Sections 1510.8.1 through 1510.8.5, as applicable.

[BG] 1510.8.1 Aerial supports. Aerial supports shall be constructed of noncombustible materials.

Exception: Aerial supports not greater than 12 feet (3658 mm) in height as measured from the roof deck to the highest point on the aerial supports shall be permitted to be constructed of combustible materials.

[BG] 1510.8.2 Bulkheads. Bulkheads used for the shelter of mechanical or electrical equipment or vertical shaft openings in the roof assembly shall comply with Section 1510.2 as penthouses. Bulkheads used for any other purpose shall be considered as an additional story of the building.

[BG] 1510.8.3 Dormers. Dormers shall be of the same type of construction as required for the roof in which such dormers are located or the exterior walls of the building.

[BG] 1510.8.4 Fences. Fences and similar structures shall comply with Section 1510.6 as *mechanical equipment screens*.

[BG] 1510.8.5 Flagpoles. Flagpoles and similar structures shall not be required to be constructed of noncombustible materials and shall not be limited in height or number.

[BG] 1510.9 Structural fire resistance. The structural frame and roof construction supporting loads imposed upon the roof by any rooftop structure shall comply with the requirements of Table 601. The fire-resistance reduction permitted by Table 601, Note a, shall not apply to roofs containing rooftop structures.

SECTION 1511
REROOFING

1511.1 General. Materials and methods of application used for recovering or replacing an existing roof covering shall comply with the requirements of Chapter 15.

Exceptions:

1. *Roof replacement* or *roof recover* of existing low-slope roof coverings shall not be required to meet the minimum design slope requirement of one-quarter unit vertical in 12 units horizontal (2-percent slope) in Section 1507 for roofs that provide positive roof drainage.
2. Recovering or replacing an existing roof covering shall not be required to meet the requirement for secondary (emergency overflow) drains or scuppers in Section 1502.2 for roofs that provide for positive roof drainage. For the purposes of this exception, existing secondary drainage or scupper systems required in accordance with this code shall not be removed unless they are replaced by secondary drains or scuppers designed and installed in accordance with Section 1502.2.

1511.2 Structural and construction loads. Structural roof components shall be capable of supporting the roof-covering system and the material and equipment loads that will be encountered during installation of the system.

1511.3 Roof replacement. *Roof replacement* shall include the removal of all existing layers of roof coverings down to the roof deck.

Exception: Where the existing roof assembly includes an ice barrier membrane that is adhered to the roof deck, the existing ice barrier membrane shall be permitted to remain in place and covered with an additional layer of ice barrier membrane in accordance with Section 1507.

1511.3.1 Roof recover. The installation of a new roof covering over an existing roof covering shall be permitted where any of the following conditions occur:

1. Where the new roof covering is installed in accordance with the roof covering manufacturer's approved instructions.

INTERNATIONAL CODE COUNCIL®
Copyright © 2019 ICC & NYSDOS. ALL RIGHTS RESERVED. Accessed by Lauren Gualdino (lgualdino@briarcliffmanor.org), (-) Order Number #100880972 on May 08, 2020 07:05 AM (PDT) pursuant to License Agreement with ICC & NYSDOS. No further reproduction, no

100880972

2. Complete and separate roofing systems, such as standing-seam metal roof panel systems, that are designed to transmit the roof loads directly to the building's structural system and that do not rely on existing roofs and roof coverings for support, shall not require the removal of existing roof coverings.
3. Metal panel, metal shingle and concrete and clay tile roof coverings shall be permitted to be installed over existing wood shake roofs when applied in accordance with Section 1511.4.
4. The application of a new protective roof coating over an existing protective roof coating, metal roof panel, built-up roof, spray polyurethane foam roofing system, metal roof shingles, mineral-surfaced roll roofing, modified bitumen roofing or thermoset and thermoplastic single-ply roofing shall be permitted without tear off of existing roof coverings.

1511.3.1.1 Exceptions. A *roof recover* shall not be permitted where any of the following conditions occur:

1. Where the existing roof or roof covering is water soaked or has deteriorated to the point that the existing roof or roof covering is not adequate as a base for additional roofing.
2. Where the existing roof covering is slate, clay, cement or asbestos-cement tile.
3. Where the existing roof has two or more applications of any type of roof covering.

1511.4 Roof recovering. Where the application of a new roof covering over wood shingle or shake roofs creates a combustible concealed space, the entire existing surface shall be covered with gypsum board, mineral fiber, glass fiber or other *approved* materials securely fastened in place.

1511.5 Reinstallation of materials. Existing slate, clay or cement tile shall be permitted for reinstallation, except that damaged, cracked or broken slate or tile shall not be reinstalled. Existing vent flashing, metal edgings, drain outlets, collars and metal counterflashings shall not be reinstalled where rusted, damaged or deteriorated. Aggregate surfacing materials shall not be reinstalled.

1511.6 Flashings. Flashings shall be reconstructed in accordance with *approved* manufacturer's installation instructions. Metal flashing to which bituminous materials are to be adhered shall be primed prior to installation.

SECTION 1512
PHOTOVOLTAIC PANELS AND MODULES

1512.1 Photovoltaic panels and modules. *Photovoltaic panels* and *modules* installed on a roof or as an integral part of a roof assembly shall comply with the requirements of this code and the *Fire Code of New York State*.

INTERNATIONAL CODE COUNCIL®
Copyright © 2019 ICC & NYSDOS. ALL RIGHTS RESERVED. Accessed by Lauren Gualdino (lgualdino@briarcliffmanor.org), (-) Order Number #100880972 on May 08, 2020 07:05 AM (PDT) pursuant to License Agreement with ICC & NYSDOS. No further reproduction, no

100880972

INTERNATIONAL CODE COUNCIL®
Copyright © 2019 ICC & NYSDOS. ALL RIGHTS RESERVED. Accessed by Lauren Gualdino (lgualdino@briarcliffmanor.org), (-) Order Number #100880972 on May 08, 2020 07:05 AM (PDT) pursuant to License Agreement with ICC & NYSDOS. No further reproduction, no

100880972

CHAPTER 16

STRUCTURAL DESIGN

SECTION 1601 GENERAL

1601.1 Scope. The provisions of this chapter shall govern the structural design of buildings, structures and portions thereof regulated by this code.

SECTION 1602 NOTATIONS

1602.1 Notations. The following notations are used in this chapter:

D = Dead load.

D_i = Weight of ice in accordance with Chapter 10 of ASCE 7.

E = Combined effect of horizontal and vertical earthquake induced forces as defined in Section 2.3.6 of ASCE 7.

F = Load due to fluids with well-defined pressures and maximum heights.

F_a = Flood load in accordance with Chapter 5 of ASCE 7.

H = Load due to lateral earth pressures, ground water pressure or pressure of bulk materials.

L = Roof live load greater than 20 psf (0.96 kN/m^2) and floor live load.

L_r = Roof live load of 20 psf (0.96 kN/m^2) or less.

R = Rain load.

S = Snow load.

T = Cumulative effects of self-straining load forces and effects.

V_{asd}= Allowable stress design wind speed, miles per hour (mph) (km/hr) where applicable.

V = Basic design wind speeds, miles per hour (mph) (km/hr) determined from Figures 1609.3(1) through 1609.3(8) or ASCE 7.

W = Load due to wind pressure.

W_i = Wind-on-ice in accordance with Chapter 10 of ASCE 7.

SECTION 1603 CONSTRUCTION DOCUMENTS

1603.1 General. *Construction documents* shall show the size, section and relative locations of structural members with floor levels, column centers and offsets dimensioned. The design loads and other information pertinent to the structural design required by Sections 1603.1.1 through 1603.1.9 shall be indicated on the *construction documents*.

Exception: *Construction documents* for buildings constructed in accordance with the *conventional light-frame construction* provisions of Section 2308 shall indicate the following structural design information:

1. Floor and roof dead and live loads.
2. Ground snow load, p_g.
3. Basic design wind speed, V, miles per hour (mph) (km/hr) and allowable stress design wind speed, V_{asd}, as determined in accordance with Section 1609.3.1 and wind exposure.
4. *Seismic design category* and *site class*.
5. Flood design data, if located in *flood hazard areas* established in Section 1612.3.
6. Design load-bearing values of soils.
7. Rain load data.

1603.1.1 Floor live load. The uniformly distributed, concentrated and impact floor live load used in the design shall be indicated for floor areas. Use of live load reduction in accordance with Section 1607.11 shall be indicated for each type of live load used in the design.

1603.1.2 Roof live load. The roof live load used in the design shall be indicated for roof areas (Section 1607.13).

1603.1.3 Roof snow load data. The ground snow load, p_g, shall be indicated. In areas where the ground snow load, p_g, exceeds 10 pounds per square foot (psf) (0.479 kN/m^2), the following additional information shall also be provided, regardless of whether snow loads govern the design of the roof:

1. Flat-roof snow load, p_f.
2. Snow exposure factor, C_e.
3. Snow load importance factor, I_s.
4. Thermal factor, C_t.
5. Slope factor(s), C_s.
6. Drift surcharge load(s), p_d, where the sum of p_d and p_f exceeds 20 psf (0.96 kN/m^2).
7. Width of snow drift(s), w.

1603.1.4 Wind design data. The following information related to wind loads shall be shown, regardless of whether wind loads govern the design of the lateral force-resisting system of the structure:

1. Basic design wind speed, V, miles per hour and allowable stress design wind speed, V_{asd}, as determined in accordance with Section 1609.3.1.
2. *Risk category*.
3. Wind exposure. Applicable wind direction if more than one wind exposure is utilized.
4. Applicable internal pressure coefficient.
5. Design wind pressures to be used for exterior component and cladding materials not specifically

INTERNATIONAL CODE COUNCIL®
Copyright © 2019 ICC & NYSDOS. ALL RIGHTS RESERVED. Accessed by Lauren Gualdino (lgualdino@briarcliffmanor.org), (-) Order Number #100880972 on May 08, 2020 07:05 AM (PDT) pursuant to License Agreement with ICC & NYSDOS. No further reproduction, no

100880972

designed by the *registered design professional* responsible for the design of the structure, psf (kN/m^2).

1603.1.5 Earthquake design data. The following information related to seismic loads shall be shown, regardless of whether seismic loads govern the design of the lateral force-resisting system of the structure:

1. *Risk category*.
2. Seismic importance factor, I_e.
3. Mapped spectral response acceleration parameters, S_S and S_1.
4. *Site class*.
5. Design spectral response acceleration parameters, S_{DS} and S_{D1}.
6. *Seismic design category*.
7. Basic seismic force-resisting system(s).
8. Design base shear(s).
9. Seismic response coefficient(s), *CS*.
10. Response modification coefficient(s), *R*.
11. Analysis procedure used.

1603.1.6 Geotechnical information. The design load-bearing values of soils shall be shown on the *construction documents*.

1603.1.7 Flood design data. For buildings located in whole or in part in *flood hazard areas* as established in Section 1612.3, the documentation pertaining to design, if required in Section 1612.4, shall be included and the following information, referenced to the datum on the community's Flood Insurance Rate Map (FIRM), shall be shown, regardless of whether flood loads govern the design of the building:

1. Flood design class assigned according to ASCE 24.
2. In *flood hazard areas* other than *coastal high hazard areas* or *coastal A zones*, the elevation of the proposed lowest floor, including the basement.
3. In *flood hazard areas* other than *coastal high hazard areas* or *coastal A zones*, the elevation to which any nonresidential building will be dry floodproofed.
4. In *coastal high hazard areas* and *coastal A zones*, the proposed elevation of the bottom of the lowest horizontal structural member of the lowest floor, including the basement.

1603.1.8 Special loads. Special loads that are applicable to the design of the building, structure or portions thereof, including but not limited to the loads of machinery or equipment, and that are greater than specified floor and roof loads shall be specified by their descriptions and locations.

1603.1.8.1 Photovoltaic panel systems. The dead load of rooftop-mounted *photovoltaic panel systems*, including rack support systems, shall be indicated on the construction documents.

1603.1.9 Roof rain load data. Rain intensity, *i* (in/hr) (cm/hr), shall be shown regardless of whether rain loads govern the design.

SECTION 1604
GENERAL DESIGN REQUIREMENTS

1604.1 General. Building, structures and parts thereof shall be designed and constructed in accordance with strength design, *load and resistance factor design*, *allowable stress design*, empirical design or conventional construction methods, as permitted by the applicable material chapters and referenced standards.

1604.2 Strength. Buildings and other structures, and parts thereof, shall be designed and constructed to support safely the factored loads in load combinations defined in this code without exceeding the appropriate strength limit states for the materials of construction. Alternatively, buildings and other structures, and parts thereof, shall be designed and constructed to support safely the *nominal loads* in load combinations defined in this code without exceeding the appropriate specified allowable stresses for the materials of construction.

Loads and forces for occupancies or uses not covered in this chapter shall be subject to the approval of the *building official*.

1604.3 Serviceability. Structural systems and members thereof shall be designed to have adequate stiffness to limit deflections as indicated in Table 1604.3. Drift limits applicable to earthquake loading shall be in accordance with ASCE 7 Chapter 12, 13, 15 or 16, as applicable.

1604.3.1 Deflections. The deflections of structural members shall not exceed the more restrictive of the limitations of Sections 1604.3.2 through 1604.3.5 or that permitted by Table 1604.3.

1604.3.2 Reinforced concrete. The deflection of reinforced concrete structural members shall not exceed that permitted by ACI 318.

1604.3.3 Steel. The deflection of steel structural members shall not exceed that permitted by AISC 360, AISI S100, ASCE 8, SJI 100 or SJI 200, as applicable.

1604.3.4 Masonry. The deflection of masonry structural members shall not exceed that permitted by TMS 402.

1604.3.5 Aluminum. The deflection of aluminum structural members shall not exceed that permitted by AA ADM.

1604.3.6 Limits. The deflection limits of Section 1604.3.1 shall be used unless more restrictive deflection limits are required by a referenced standard for the element or finish material.

1604.3.7 Framing supporting glass. The deflection of framing members supporting glass subjected to 0.6 times the "component and cladding" wind loads shall not exceed either of the following:

1. $^1/_{175}$ of the length of span of the framing member, for framing members having a length not more than 13 feet 6 inches (4115 mm).

INTERNATIONAL CODE COUNCIL®
Copyright © 2019 ICC & NYSDOS. ALL RIGHTS RESERVED. Accessed by Lauren Gualdino (lgualdino@briarcliffmanor.org), (-) Order Number #100880972 on May 08, 2020 07:05 AM (PDT) pursuant to License Agreement with ICC & NYSDOS. No further reproduction, no

100880972

TABLE 1604.3
DEFLECTION LIMITS[a, b, c, h, i]

CONSTRUCTION	*L* or L_r	*S* or *W*[f]	*D* + *L*[d, g]
Roof members:[e]			
Supporting plaster or stucco ceiling	*l*/360	*l*/360	*l*/240
Supporting nonplaster ceiling	*l*/240	*l*/240	*l*/180
Not supporting ceiling	*l*/180	*l*/180	*l*/120
Floor members	*l*/360	—	*l*/240
Exterior walls:			
With plaster or stucco finishes	—	*l*/360	—
With other brittle finishes	—	*l*/240	—
With flexible finishes	—	*l*/120	—
Interior partitions:[b]			
With plaster or stucco finishes	*l*/360	—	—
With other brittle finishes	*l*/240	—	—
With flexible finishes	*l*/120	—	—
Farm buildings	—	—	*l*/180
Greenhouses	—	—	*l*/120

For SI: 1 foot = 304.8 mm.

a. For structural roofing and siding made of formed metal sheets, the total load deflection shall not exceed *l*/60. For secondary roof structural members supporting formed metal roofing, the live load deflection shall not exceed *l*/150. For secondary wall members supporting formed metal siding, the design wind load deflection shall not exceed *l*/90. For roofs, this exception only applies when the metal sheets have no roof covering.

b. Flexible, folding and portable partitions are not governed by the provisions of this section. The deflection criterion for interior partitions is based on the horizontal load defined in Section 1607.15.

c. See Section 2403 for glass supports.

d. The deflection limit for the $D+(L+L_r)$ load combination only applies to the deflection due to the creep component of long-term dead load deflection plus the short-term live load deflection. For lumber, structural glued laminated timber, prefabricated wood I-joists and structural composite lumber members that are dry at time of installation and used under dry conditions in accordance with the ANSI/AWC NDS, the creep component of the long-term deflection shall be permitted to be estimated as the immediate dead load deflection resulting from 0.5D. For lumber and glued laminated timber members installed or used at all other moisture conditions or cross laminated timber and wood structural panels that are dry at time of installation and used under dry conditions in accordance with the ANSI/AWC NDS, the creep component of the long-term deflection is permitted to be estimated as the immediate dead load deflection resulting from D. The value of 0.5D shall not be used in combination with ANSI/AWC NDS provisions for long-term loading.

e. The preceding deflections do not ensure against ponding. Roofs that do not have sufficient slope or camber to ensure adequate drainage shall be investigated for ponding. See Chapter 8 of ASCE 7.

f. The wind load shall be permitted to be taken as 0.42 times the "component and cladding" loads or directly calculated using the 10-year mean return interval wind speed for the purpose of determining deflection limits in Table 1604.3. Where framing members support glass, the deflection limit therein shall not exceed that specified in Section 1604.3.7.

g. For steel structural members, the detection due to creep component of long-term dead load shall be permitted to be taken as zero.

h. For aluminum structural members or aluminum panels used in skylights and sloped glazing framing, roofs or walls of sunroom additions or patio covers not supporting edge of glass or aluminum sandwich panels, the total load deflection shall not exceed *l*/60. For continuous aluminum structural members supporting edge of glass, the total load deflection shall not exceed *l*/175 for each glass lite or *l*/60 for the entire length of the member, whichever is more stringent. For aluminum sandwich panels used in roofs or walls of sunroom additions or patio covers, the total load deflection shall not exceed *l*/120.

i. *l* = Length of the member between supports. For cantilever members, *l* shall be taken as twice the length of the cantilever.

2. $^1/_{240}$ of the length of span of the framing member + $^1/_4$ inch (6.4 mm), for framing members having a length greater than 13 feet 6 inches (4115 mm).

1604.4 Analysis. *Load effects* on structural members and their connections shall be determined by methods of structural analysis that take into account equilibrium, general stability, geometric compatibility and both short- and long-term material properties.

Members that tend to accumulate residual deformations under repeated service loads shall have included in their analysis the effects of added deformations expected to occur during their service life.

Any system or method of construction to be used shall be based on a rational analysis in accordance with well-established principles of mechanics. Such analysis shall result in a system that provides a complete load path capable of transferring loads from their point of origin to the load-resisting elements.

The total lateral force shall be distributed to the various vertical elements of the lateral force-resisting system in proportion to their rigidities, considering the rigidity of the horizontal bracing system or diaphragm. Rigid elements assumed not to be a part of the lateral force-resisting system are permitted to be incorporated into buildings provided that their effect on the action of the system is considered and provided for in the design. A diaphragm is rigid for the purpose of distribution of story shear and torsional moment when the lateral deformation of the diaphragm is less than or equal to two times the average story drift. Where required by ASCE 7, provisions shall be made for the increased forces induced on resisting elements of the structural system resulting from torsion due to eccentricity between the center of application of the lateral forces and the center of rigidity of the lateral force-resisting system.

Every structure shall be designed to resist the effects caused by the forces specified in this chapter, including overturning, uplift and sliding. Where sliding is used to isolate the

INTERNATIONAL CODE COUNCIL®
Copyright © 2019 ICC & NYSDOS. ALL RIGHTS RESERVED. Accessed by Lauren Gualdino (lgualdino@briarcliffmanor.org), (-) Order Number #100880972 on May 08, 2020 07:05 AM (PDT) pursuant to License Agreement with ICC & NYSDOS. No further reproduction, no

100880972

elements, the effects of friction between sliding elements shall be included as a force.

1604.5 Risk category. Each building and structure shall be assigned a risk category in accordance with Table 1604.5. Where a referenced standard specifies an occupancy category, the risk category shall not be taken as lower than the occupancy category specified therein. Where a referenced standard specifies that the assignment of a risk category be in accordance with ASCE 7, Table 1.5-1, Table 1604.5 shall be used in lieu of ASCE 7, Table 1.5-1.

Exception: The assignment of buildings and structures to Tsunami Risk Categories III and IV is permitted to be in accordance with Section 6.4 of ASCE 7.

1604.5.1 Multiple occupancies. Where a building or structure is occupied by two or more occupancies not included in the same *risk category*, it shall be assigned the classification of the highest *risk category* corresponding to the various occupancies. Where buildings or structures have two or more portions that are structurally separated, each portion shall be separately classified. Where a separated portion of a building or structure provides required access to, required egress from or shares life safety components with another portion having a higher *risk category*, both portions shall be assigned to the higher *risk category*.

Exception: Where a *storm shelter* designed and constructed in accordance with ICC 500 is provided in a building, structure or portion thereof normally occupied for other purposes, the *risk category* for the normal occupancy of the building shall apply unless the *storm shelter* is a designated emergency shelter in accordance with Table 1604.5.

TABLE 1604.5
RISK CATEGORY OF BUILDINGS AND OTHER STRUCTURES

RISK CATEGORY	NATURE OF OCCUPANCY
I	Buildings and other structures that represent a low hazard to human life in the event of failure, including but not limited to: • Agricultural facilities. • Certain temporary facilities. • Minor storage facilities.
II	Buildings and other structures except those listed in Risk Categories I, III and IV.
III	Buildings and other structures that represent a substantial hazard to human life in the event of failure, including but not limited to: • Buildings and other structures whose primary occupancy is public assembly with an occupant load greater than 300. • Buildings and other structures containing Group E occupancies with an occupant load greater than 250. • Buildings and other structures containing educational occupancies for students above the 12th grade with an occupant load greater than 500. • Group I-2, Condition 1 occupancies with 50 or more care recipients. • Group I-2, Condition 2 occupancies not having emergency surgery or emergency treatment facilities. • Group I-3 occupancies. • Any other occupancy with an occupant load greater than 5,000.[a] • Power-generating stations, water treatment facilities for potable water, wastewater treatment facilities and other public utility facilities not included in Risk Category IV. • Buildings and other structures not included in Risk Category IV containing quantities of toxic or explosive materials that: Exceed maximum allowable quantities per control area as given in Table 307.1(1) or 307.1(2) or per outdoor control area in accordance with the *Fire Code of New York State*; and Are sufficient to pose a threat to the public if released.[b]
IV	Buildings and other structures designated as essential facilities, including but not limited to: • Group I-2, Condition 2 occupancies having emergency surgery or emergency treatment facilities. • Ambulatory care facilities having emergency surgery or emergency treatment facilities. • Fire, rescue, ambulance and police stations and emergency vehicle garages. • Designated earthquake, hurricane or other emergency shelters. • Designated emergency preparedness, communications and operations centers and other facilities required for emergency response. • Power-generating stations and other public utility facilities required as emergency backup facilities for Risk Category IV structures. • Buildings and other structures containing quantities of highly toxic materials that: Exceed maximum allowable quantities per control area as given in Table 307.1(2) or per outdoor control area in accordance with the *Fire Code of New York State*; and Are sufficient to pose a threat to the public if released.[b] • Aviation control towers, air traffic control centers and emergency aircraft hangars. • Buildings and other structures having critical national defense functions. • Water storage facilities and pump structures required to maintain water pressure for fire suppression.

a. For purposes of occupant load calculation, occupancies required by Table 1004.5 to use gross floor area calculations shall be permitted to use net floor areas to determine the total occupant load.

b. Where approved by the building official, the classification of buildings and other structures as Risk Category III or IV based on their quantities of toxic, highly toxic or explosive materials is permitted to be reduced to Risk Category II, provided that it can be demonstrated by a hazard assessment in accordance with Section 1.5.3 of ASCE 7 that a release of the toxic, highly toxic or explosive materials is not sufficient to pose a threat to the public.

INTERNATIONAL CODE COUNCIL®
Copyright © 2019 ICC & NYSDOS. ALL RIGHTS RESERVED. Accessed by Lauren Gualdino (lgualdino@briarcliffmanor.org), (-) Order Number #100880972 on May 08, 2020 07:05 AM (PDT) pursuant to License Agreement with ICC & NYSDOS. No further reproduction, no

100880972

1604.6 In-situ load tests. The *building official* is authorized to require an engineering analysis or a load test, or both, of any construction whenever there is reason to question the safety of the construction for the intended occupancy. Engineering analysis and load tests shall be conducted in accordance with Section 1708.

1604.7 Preconstruction load tests. Materials and methods of construction that are not capable of being designed by *approved* engineering analysis or that do not comply with the applicable referenced standards, or alternative test procedures in accordance with Section 1707, shall be load tested in accordance with Section 1709.

1604.8 Anchorage. Buildings and other structures, and portions thereof, shall be provided with anchorage in accordance with Sections 1604.8.1 through 1604.8.3, as applicable.

1604.8.1 General. Anchorage of the roof to walls and columns, and of walls and columns to foundations, shall be provided to resist the uplift and sliding forces that result from the application of the prescribed loads.

1604.8.2 Structural walls. Walls that provide vertical load-bearing resistance or lateral shear resistance for a portion of the structure shall be anchored to the roof and to all floors and members that provide lateral support for the wall or that are supported by the wall. The connections shall be capable of resisting the horizontal forces specified in Section 1.4.4 of ASCE 7 for walls of structures assigned to *Seismic Design Category* A and to Section 12.11 of ASCE 7 for walls of structures assigned to all other *seismic design categories*. Required anchors in masonry walls of hollow units or cavity walls shall be embedded in a reinforced grouted structural element of the wall. See Sections 1609 for wind design requirements and 1613 for earthquake design requirements.

1604.8.3 Decks. Where supported by attachment to an *exterior wall*, decks shall be positively anchored to the primary structure and designed for both vertical and lateral loads as applicable. Such attachment shall not be accomplished by the use of toenails or nails subject to withdrawal. Where positive connection to the primary building structure cannot be verified during inspection, decks shall be self-supporting. Connections of decks with cantilevered framing members to exterior walls or other framing members shall be designed for both of the following:

1. The reactions resulting from the dead load and live load specified in Table 1607.1, or the snow load specified in Section 1608, in accordance with Section 1605, acting on all portions of the deck.
2. The reactions resulting from the dead load and live load specified in Table 1607.1, or the snow load specified in Section 1608, in accordance with Section 1605, acting on the cantilevered portion of the deck, and no live load or snow load on the remaining portion of the deck.

1604.9 Wind and seismic detailing. Lateral force-resisting systems shall meet seismic detailing requirements and limitations prescribed in this code and ASCE 7 Chapters 11, 12, 13, 15, 17 and 18 as applicable, even where wind *load effects* are greater than seismic *load effects.*

Exception: References within ASCE 7 to Chapter 14 shall not apply, except as specifically required herein.

1604.10 Loads on storm shelters. Loads and load combinations on storm shelters shall be determined in accordance with ICC 500.

SECTION 1605
LOAD COMBINATIONS

1605.1 General. Buildings and other structures and portions thereof shall be designed to resist all of the following:

1. The load combinations specified in Section 1605.2, 1605.3.1 or 1605.3.2.
2. The load combinations specified in Chapters 18 through 23.
3. The seismic load effects including overstrength factor in accordance with Sections 2.3.6 and 2.4.5 of ASCE 7 where required by Chapters 12, 13, and 15 of ASCE 7. With the simplified procedure of ASCE 7, Section 12.14, the seismic load effects including overstrength factor in accordance with Section 12.14.3.2 and Chapter 2 of ASCE 7 shall be used.

Applicable loads shall be considered, including both earthquake and wind, in accordance with the specified load combinations. Each load combination shall also be investigated with one or more of the variable loads set to zero.

Where the load combinations with overstrength factor in Sections 2.3.6 and 2.4.5 of ASCE 7 apply, they shall be used as follows:

1. The basic combinations for strength design with overstrength factor in lieu of Equations 16-5 and 16-7 in Section 1605.2.
2. The basic combinations for *allowable stress design* with overstrength factor in lieu of Equations 16-12, 16-14 and 16-16 in Section 1605.3.1.
3. The basic combinations for *allowable stress design* with overstrength factor in lieu of Equations 16-21 and 16-22 in Section 1605.3.2.

1605.1.1 Stability. Regardless of which load combinations are used to design for strength, where overall structure stability (such as stability against overturning, sliding, or buoyancy) is being verified, use of the load combinations specified in Section 1605.2 or 1605.3 shall be permitted. Where the load combinations specified in Section 1605.2 are used, strength reduction factors applicable to soil resistance shall be provided by a *registered design professional*. The stability of retaining walls shall be verified in accordance with Section 1807.2.3.

1605.2 Load combinations using strength design or load and resistance factor design. Where strength design or load and resistance factor design is used, buildings and other structures, and portions thereof, shall be designed to resist the

INTERNATIONAL CODE COUNCIL®
Copyright © 2019 ICC & NYSDOS. ALL RIGHTS RESERVED. Accessed by Lauren Gualdino (lgualdino@briarcliffmanor.org), (-) Order Number #100880972 on May 08, 2020 07:05 AM (PDT) pursuant to License Agreement with ICC & NYSDOS. No further reproduction, no

100880972

most critical effects resulting from the following combinations of factored loads:

$1.4(D + F)$ **(Equation 16-1)**

$1.2(D + F) + 1.6(L + H) + 0.5(L_r \text{ or } S \text{ or } R)$ **(Equation 16-2)**

$1.2(D + F) + 1.6(L_r \text{ or } S \text{ or } R) + 1.6H + (f_1 L \text{ or } 0.5W)$ **(Equation 16-3)**

$1.2(D + F) + 1.0W + f_1 L + 1.6H + 0.5(L_r \text{ or } S \text{ or } R)$ **(Equation 16-4)**

$1.2(D + F) + 1.0E + f_1 L + 1.6H + f_2 S$ **(Equation 16-5)**

$0.9D + 1.0W + 1.6H$ **(Equation 16-6)**

$0.9(D + F) + 1.0E + 1.6H$ **(Equation 16-7)**

where:

f_1 = 1 for places of public assembly live loads in excess of 100 pounds per square foot (4.79 kN/m^2), and parking garages; and 0.5 for other live loads.

f_2 = 0.7 for roof configurations (such as saw tooth) that do not shed snow off the structure, and 0.2 for other roof configurations.

Exceptions:

1. Where other factored load combinations are specifically required by other provisions of this code, such combinations shall take precedence.
2. Where the effect of H resists the primary variable load effect, a load factor of 0.9 shall be included with H where H is permanent and H shall be set to zero for all other conditions.

1605.2.1 Other loads. Where flood loads, F_a, are to be considered in the design, the load combinations of Section 2.3.2 of ASCE 7 shall be used. Where self-straining loads, T, are considered in design, their structural effects in combination with other loads shall be determined in accordance with Section 2.3.4 of ASCE 7. Where an ice-sensitive structure is subjected to loads due to atmospheric icing, the load combinations of Section 2.3.3 of ASCE 7 shall be considered.

1605.3 Load combinations using allowable stress design. Load combinations for allowable stress design shall be in accordance with Section 1605.3.1 or 1605.3.2.

1605.3.1 Basic load combinations. Where *allowable stress design* (working stress design), as permitted by this code, is used, structures and portions thereof shall resist the most critical effects resulting from the following combinations of loads:

$D + F$ **(Equation 16-8)**

$D + H + F + L$ **(Equation 16-9)**

$D + H + F + (L_r \text{ or } S \text{ or } R)$ **(Equation 16-10)**

$D + H + F + 0.75(L) + 0.75(L_r \text{ or } S \text{ or } R)$ **(Equation 16-11)**

$D + H + F + (0.6W \text{ or } 0.7E)$ **(Equation 16-12)**

$D + H + F + 0.75(0.6W) + 0.75L + 0.75(L_r \text{ or } S \text{ or } R)$ **(Equation 16-13)**

$D + H + F + 0.75\,(0.7\,E) + 0.75\,L + 0.75\,S$ **(Equation 16-14)**

$0.6D + 0.6W + H$ **(Equation 16-15)**

$0.6(D + F) + 0.7E + H$ **(Equation 16-16)**

Exceptions:

1. Crane hook loads need not be combined with roof live load or with more than three-fourths of the snow load or one-half of the wind load.
2. Flat roof snow loads of 30 psf (1.44 kN/m^2) or less and roof live loads of 30 psf (1.44 kN/m^2) or less need not be combined with seismic loads. Where flat roof snow loads exceed 30 psf (1.44 kN/m^2), 20 percent shall be combined with seismic loads.
3. Where the effect of H resists the primary variable load effect, a load factor of 0.6 shall be included with H where H is permanent and H shall be set to zero for all other conditions.
4. In Equation 16-15, the wind load, W, is permitted to be reduced in accordance with Exception 2 of Section 2.4.1 of ASCE 7.
5. In Equation 16-16, 0.6 D is permitted to be increased to 0.9 D for the design of special reinforced masonry shear walls complying with Chapter 21.

1605.3.1.1 Stress increases. Increases in allowable stresses specified in the appropriate material chapter or the referenced standards shall not be used with the load combinations of Section 1605.3.1, except that increases shall be permitted in accordance with Chapter 23.

1605.3.1.2 Other loads. Where flood loads, F_a, are to be considered in design, the load combinations of Section 2.4.2 of ASCE 7 shall be used. Where self-straining loads, T, are considered in design, their structural effects in combination with other loads shall be determined in accordance with Section 2.4.4 of ASCE 7. Where an ice-sensitive structure is subjected to loads due to atmospheric icing, the load combinations of Section 2.4.3 of ASCE 7 shall be considered.

1605.3.2 Alternative basic load combinations. In lieu of the basic load combinations specified in Section 1605.3.1, structures and portions thereof shall be permitted to be designed for the most critical effects resulting from the following combinations. Where using these alternative basic allowable stress load combinations that include wind or seismic loads, allowable stresses are permitted to be increased or load combinations reduced where permitted by the material chapter of this code or the referenced standards. For load combinations that include the counteracting effects of dead and wind loads, only two-thirds of the minimum dead load likely to be in place during a design

INTERNATIONAL CODE COUNCIL®
Copyright © 2019 ICC & NYSDOS. ALL RIGHTS RESERVED. Accessed by Lauren Gualdino (lgualdino@briarcliffmanor.org), (-) Order Number #100880972 on May 08, 2020 07:05 AM (PDT) pursuant to License Agreement with ICC & NYSDOS. No further reproduction, no

100880972

wind event shall be used. Where using allowable stresses that have been increased or load combinations that have been reduced as permitted by the material chapter of this code or the referenced standards, where wind loads are calculated in accordance with Chapters 26 through 31 of ASCE 7, the coefficient (ω) in the following equations shall be taken as 1.3. For other wind loads, (ω) shall be taken as 1. Where allowable stresses have not been increased or load combinations have not been reduced as permitted by the material chapter of this code or the referenced standards, (ω) shall be taken as 1. Where using these alternative load combinations to evaluate sliding, overturning and soil bearing at the soil-structure interface, the reduction of foundation overturning from Section 12.13.4 in ASCE 7 shall not be used. Where using these alternative basic load combinations for proportioning foundations for loadings, which include seismic loads, the vertical seismic *load effect*, E_v, in Equation 12.4-4 of ASCE 7 is permitted to be taken equal to zero.

$D + L + (L_r \text{ or } S \text{ or } R)$ **(Equation 16-17)**

$D + L + 0.6\,\omega W$ **(Equation 16-18)**

$D + L + 0.6\,\omega W + S/2$ **(Equation 16-19)**

$D + L + S + 0.6\,\omega W/2$ **(Equation 16-20)**

$D + L + S + E/1.4$ **(Equation 16-21)**

$0.9D + E/1.4$ **(Equation 16-22)**

Exceptions:

1. Crane hook loads need not be combined with roof live loads or with more than three-fourths of the snow load or one-half of the wind load.
2. Flat roof snow loads of 30 psf (1.44 kN/m^2) or less and roof live loads of 30 psf (1.44 kN/m^2) or less need not be combined with seismic loads. Where flat roof snow loads exceed 30 psf (1.44 kN/m^2), 20 percent shall be combined with seismic loads.

1605.3.2.1 Other loads. Where *F*, *H* or *T* are to be considered in the design, each applicable load shall be added to the combinations specified in Section 1605.3.2. Where self-straining loads, *T*, are considered in the design, their structural effects in combination with other loads shall be determined in accordance with Section 2.4.4 of ASCE 7.

SECTION 1606
DEAD LOADS

1606.1 General. Dead loads are those loads defined in Chapter 2 of this code. Dead loads shall be considered to be permanent loads.

1606.2 Design dead load. For purposes of design, the actual weights of materials of construction and fixed service equipment shall be used. In the absence of definite information, values used shall be subject to the approval of the *building official*.

SECTION 1607
LIVE LOADS

1607.1 General. Live loads are those loads defined in Chapter 2 of this code.

1607.2 Loads not specified. For occupancies or uses not designated in Table 1607.1, the live load shall be determined in accordance with a method *approved* by the *building official*.

1607.3 Uniform live loads. The live loads used in the design of buildings and other structures shall be the maximum loads expected by the intended use or occupancy but shall not be less than the minimum uniformly distributed live loads given in Table 1607.1.

1607.4 Concentrated live loads. Floors, roofs and other similar surfaces shall be designed to support the uniformly distributed live loads prescribed in Section 1607.3 or the concentrated live loads, given in Table 1607.1, whichever produces the greater *load effects*. Unless otherwise specified, the indicated concentration shall be assumed to be uniformly distributed over an area of $2^1/_2$ feet by $2^1/_2$ feet (762 mm by 762 mm) and shall be located so as to produce the maximum *load effects* in the structural members.

1607.5 Partition loads. In office buildings and in other buildings where partition locations are subject to change, provisions for partition weight shall be made, whether or not partitions are shown on the construction documents, unless the specified live load is 80 psf (3.83 kN/m^2) or greater. The partition load shall be not less than a uniformly distributed live load of 15 psf (0.72 kN/m^2).

1607.6 Helipads. Helipads shall be designed for the following live loads:

1. A uniform live load, *L*, as specified in Items 1.1 and 1.2. This load shall not be reduced.
   1.1. 40 psf (1.92 kN/m^2) where the design basis helicopter has a maximum take-off weight of 3,000 pounds (13.35 kN) or less.
   1.2. 60 psf (2.87 kN/m^2) where the design basis helicopter has a maximum take-off weight greater than 3,000 pounds (13.35 kN).
2. A single concentrated live load, *L*, of 3,000 pounds (13.35 kN) applied over an area of 4.5 inches by 4.5 inches (114 mm by 114 mm) and located so as to produce the maximum load effects on the structural elements under consideration. The concentrated load is not required to act concurrently with other uniform or concentrated live loads.
3. Two single concentrated live loads, *L*, 8 feet (2438 mm) apart applied on the landing pad (representing the helicopter's two main landing gear, whether skid type or wheeled type), each having a magnitude of 0.75 times the maximum take-off weight of the helicopter, and located so as to produce the maximum load effects on the structural elements under consideration. The concentrated loads shall be applied over an area of 8 inches by 8 inches (203 mm by 203 mm) and are not required to act concurrently with other uniform or concentrated live loads.

INTERNATIONAL CODE COUNCIL®
Copyright © 2019 ICC & NYSDOS. ALL RIGHTS RESERVED. Accessed by Lauren Gualdino (lgualdino@briarcliffmanor.org), (-) Order Number #100880972 on May 08, 2020 07:05 AM (PDT) pursuant to License Agreement with ICC & NYSDOS. No further reproduction, no

100880972

TABLE 1607.1
MINIMUM UNIFORMLY DISTRIBUTED LIVE LOADS, L_o, AND MINIMUM CONCENTRATED LIVE LOADS[g]

OCCUPANCY OR USE	UNIFORM (psf)	CONCENTRATED (pounds)
1. Apartments (see residential)	—	—
2. Access floor systems		
Office use	50	2,000
Computer use	100	2,000
3. Armories and drill rooms	150[n]	—
4. Assembly areas		
Fixed seats (fastened to floor)	60[m]	
Follow spot, projections and control rooms	50	
Lobbies	100[m]	—
Movable seats	100[m]	
Stage floors	150[n]	
Platforms (assembly)	100[m]	
Other assembly areas	100[m]	
5. Balconies and decks[h]	1.5 times the live load for the area served, not required to exceed 100	—
6. Catwalks	40	300
7. Cornices	60	—
8. Corridors		
First floor	100	
Other floors	Same as occupancy served except as indicated	—
9. Dining rooms and restaurants	100[m]	—
10. Dwellings (see residential)	—	—
11. Elevator machine room and controlroom grating (on area of 2 inches by 2 inches)	—	300
12. Finish light floor plate construction (on area of 1 inch by 1 inch)	—	200
13. Fire escapes	100	
On single-family dwellings only	40	—
14. Garages (passenger vehicles only)	40[o]	Note a
Trucks and buses	See Section 1607.7	
15. Handrails, guards and grab bars	See Section 1607.8	
16. Helipads	See Section 1607.6	
17. Hospitals		
Corridors above first floor	80	1,000
Operating rooms, laboratories	60	1,000
Patient rooms	40	1,000
18. Hotels (see residential)	—	—
19. Libraries		
Corridors above first floor	80	1,000
Reading rooms	60	1,000
Stack rooms	150[b, n]	1,000
20. Manufacturing		
Heavy	250[n]	3,000
Light	125[n]	2,000
21. Marquees, except one- and two-family dwellings	75	—
22. Office buildings		
Corridors above first floor	80	2,000
File and computer rooms shall be designed for heavier loads based on anticipated occupancy	—	—
Lobbies and first-floor corridors	100	2,000
Offices	50	2,000

(continued)

TABLE 1607.1—continued
MINIMUM UNIFORMLY DISTRIBUTED LIVE LOADS, L_o, AND MINIMUM CONCENTRATED LIVE LOADS[g]

OCCUPANCY OR USE	UNIFORM (psf)	CONCENTRATED (pounds)
23. Penal institutions		
Cell blocks	40	—
Corridors	100	
24. Recreational uses:		
Bowling alleys, poolrooms and similar uses	75[m]	
Dance halls and ballrooms	100[m]	
Gymnasiums	100[m]	
Ice skating rink	250[n]	—
Reviewing stands, grandstands and bleachers	100[c, m]	
Roller skating rink	100[m]	
Stadiums and arenas with fixed seats (fastened to floor)	60[c, m]	
25. Residential		
One- and two-family dwellings		
Uninhabitable attics without storagei	10	
Uninhabitable attics with storage[i, j, k]	20	
Habitable attics and sleeping areas[k]	30	
Canopies, including marquees	20	—
All other areas	40	
Hotels and multifamily dwellings		
Private rooms and corridors serving them	40	
Public roomsm and corridors serving them	100	
26. Roofs		
All roof surfaces subject to maintenance workers		300
Awnings and canopies:		
Fabric construction supported by a skeleton structure	5[m]	
All other construction, except one- and two-family dwellings	20	
Ordinary flat, pitched, and curved roofs (that are not occupiable)	20	
Primary roof members exposed to a work floor		
Single panel point of lower chord of roof trusses or any point along primary structural members supporting roofs over manufacturing, storage warehouses, and repair garages		2,000
All other primary roof members		300
Occupiable roofs:		
Roof gardens	100	
Assembly areas	100[m]	
All other similar areas	Note 1	Note 1
27. Schools		
Classrooms	40	1,000
Corridors above first floor	80	1,000
First-floor corridors	100	1,000
28. Scuttles, skylight ribs and accessible ceilings	—	200
29. Sidewalks, vehicular driveways and yards, subject to trucking	250[d, n]	8,000[e]
30. Stairs and exits		
One- and two-family dwellings	40	300[f]
All other	100	300[f]

(continued)

INTERNATIONAL CODE COUNCIL®
Copyright © 2019 ICC & NYSDOS. ALL RIGHTS RESERVED. Accessed by Lauren Gualdino (lgualdino@briarcliffmanor.org), (-) Order Number #100880972 on May 08, 2020 07:05 AM (PDT) pursuant to License Agreement with ICC & NYSDOS. No further reproduction, no

100880972

TABLE 1607.1—continued
MINIMUM UNIFORMLY DISTRIBUTED LIVE LOADS, L_o, AND MINIMUM CONCENTRATED LIVE LOADS[g]

OCCUPANCY OR USE	UNIFORM (psf)	CONCENTRATED (pounds)
31. Storage warehouses (shall be designed for heavier loads if required for anticipated storage) Heavy Light	 250[n] 125[n]	—
32. Stores Retail First floor Upper floors Wholesale, all floors	 100 75 125[n]	 1,000 1,000 1,000
33. Vehicle barriers	See Section 1607.9	
34. Walkways and elevated platforms (other than exitways)	60	—
35. Yards and terraces, pedestrians	100[m]	—

For SI: 1 inch = 25.4 mm, 1 square inch = 645.16 mm^2, 1 square foot = 0.0929 m^2, 1 pound per square foot = 0.0479 kN/m^2, 1 pound = 0.004448 kN, 1 pound per cubic foot = 16 kg/m^3.

a. Floors in garages or portions of buildings used for the storage of motor vehicles shall be designed for the uniformly distributed live loads of this table or the following concentrated loads: (1) for garages restricted to passenger vehicles accommodating not more than nine passengers, 3,000 pounds acting on an area of $4^1/_2$ inches by $4^1/_2$ inches; (2) for mechanical parking structures without slab or deck that are used for storing passenger vehicles only, 2,250 pounds per wheel.

b. The loading applies to stack room floors that support nonmobile, double-faced library book stacks, subject to the following limitations:
   1. The nominal book stack unit height shall not exceed 90 inches.
   2. The nominal shelf depth shall not exceed 12 inches for each face.
   3. Parallel rows of double-faced book stacks shall be separated by aisles not less than 36 inches wide.

c. Design in accordance with ICC 300.

d. Other uniform loads in accordance with an approved method containing provisions for truck loadings shall be considered where appropriate.

e. The concentrated wheel load shall be applied on an area of 4.5 inches by 4.5 inches.

f. The minimum concentrated load on stair treads shall be applied on an area of 2 inches by 2 inches. This load need not be assumed to act concurrently with the uniform load.

g. Where snow loads occur that are in excess of the design conditions, the structure shall be designed to support the loads due to the increased loads caused by drift buildup or a greater snow design determined by the building official (see Section 1608).

h. See Section 1604.8.3 for decks attached to exterior walls.

i. Uninhabitable attics without storage are those where the maximum clear height between the joists and rafters is less than 42 inches, or where there are not two or more adjacent trusses with web configurations capable of accommodating an assumed rectangle 42 inches in height by 24 inches in width, or greater, within the plane of the trusses. This live load need not be assumed to act concurrently with any other live load requirements.

j. Uninhabitable attics with storage are those where the maximum clear height between the joists and rafters is 42 inches or greater, or where there are two or more adjacent trusses with web configurations capable of accommodating an assumed rectangle 42 inches in height by 24 inches in width, or greater, within the plane of the trusses.

   The live load need only be applied to those portions of the joists or truss bottom chords where both of the following conditions are met:
   i. The attic area is accessible from an opening not less than 20 inches in width by 30 inches in length that is located where the clear height in the attic is not less than 30 inches.
   ii. The slopes of the joists or truss bottom chords are not greater than two units vertical in 12 units horizontal.

   The remaining portions of the joists or truss bottom chords shall be designed for a uniformly distributed concurrent live load of not less than 10 pounds per square foot.

(continued)

TABLE 1607.1—continued
MINIMUM UNIFORMLY DISTRIBUTED LIVE LOADS, L_o, AND MINIMUM CONCENTRATED LIVE LOADS[g]

k. Attic spaces served by stairways other than the pull-down type shall be designed to support the minimum live load specified for habitable attics and sleeping rooms.

l. Areas of occupiable roofs, other than roof gardens and assembly areas, shall be designed for appropriate loads as approved by the building official. Unoccupied landscaped areas of roofs shall be designed in accordance with Section 1607.13.3.

m. Live load reduction is not permitted.

n. Live load reduction is only permitted in accordance with Section 1607.11.1.2 or Item 1 of Section 1607.11.2.

o. Live load reduction is only permitted in accordance with Section 1607.11.1.3 or Item 2 of Section 1607.11.2.

Landing areas designed for a design basis helicopter with maximum take-off weight of 3,000-pounds (13.35 kN) shall be identified with a 3,000 pound (13.34 kN) weight limitation. The landing area weight limitation shall be indicated by the numeral "3" (kips) located in the bottom right corner of the landing area as viewed from the primary approach path. The indication for the landing area weight limitation shall be a minimum 5 feet (1524 mm) in height.

1607.7 Heavy vehicle loads. Floors and other surfaces that are intended to support vehicle loads greater than a 10,000-pound (4536 kg) gross vehicle weight rating shall comply with Sections 1607.7.1 through 1607.7.5.

1607.7.1 Loads. Where any structure does not restrict access for vehicles that exceed a 10,000-pound (4536 kg) gross vehicle weight rating, those portions of the structure subject to such loads shall be designed using the vehicular live loads, including consideration of impact and fatigue, in accordance with the codes and specifications required by the jurisdiction having authority for the design and construction of the roadways and bridges in the same location of the structure.

1607.7.2 Fire truck and emergency vehicles. Where a structure or portions of a structure are accessed and loaded by fire department access vehicles and other similar emergency vehicles, the structure shall be designed for the greater of the following loads:

1. The actual operational loads, including outrigger reactions and contact areas of the vehicles as stipulated and approved by the building official.
2. The live loading specified in Section 1607.7.1.

1607.7.3 Heavy vehicle garages. Garages designed to accommodate vehicles that exceed a 10,000-pound (4536 kg) gross vehicle weight rating, shall be designed using the live loading specified by Section 1607.7.1. For garages the design for impact and fatigue is not required.

Exception: The vehicular live loads and load placement are allowed to be determined using the actual vehicle weights for the vehicles allowed onto the garage floors, provided that such loads and placement are based on rational engineering principles and are approved by the building official, but shall be not less than 50 psf (2.9 kN/m^2). This live load shall not be reduced.

1607.7.4 Forklifts and movable equipment. Where a structure is intended to have forklifts or other movable

INTERNATIONAL CODE COUNCIL®
Copyright © 2019 ICC & NYSDOS. ALL RIGHTS RESERVED. Accessed by Lauren Gualdino (lgualdino@briarcliffmanor.org), (-) Order Number #100880972 on May 08, 2020 07:05 AM (PDT) pursuant to License Agreement with ICC & NYSDOS. No further reproduction, no

100880972

equipment present, the structure shall be designed for the total vehicle or equipment load and the individual wheel loads for the anticipated vehicles as specified by the owner of the facility. These loads shall be posted in accordance with Section 1607.7.5.

1607.7.4.1 Impact and fatigue. Impact loads and fatigue loading shall be considered in the design of the supporting structure. For the purposes of design, the vehicle and wheel loads shall be increased by 30 percent to account for impact.

[NY] 1607.7.5 Posting. The maximum weight of vehicles allowed into or on a garage or other structure shall be posted by the owner or the owner's authorized agent.

1607.8 Loads on handrails, guards, grab bars and seats. Handrails and *guards* shall be designed and constructed for the structural loading conditions set forth in Section 1607.8.1. Grab bars, shower seats and accessible benches shall be designed and constructed for the structural loading conditions set forth in Section 1607.8.2.

1607.8.1 Handrails and guards. Handrails and *guards* shall be designed to resist a linear load of 50 pounds per linear foot (plf) (0.73 kN/m) in accordance with Section 4.5.1.1 of ASCE 7. Glass handrail assemblies and *guards* shall comply with Section 2407.

Exceptions:

1. For one- and two-family dwellings, only the single concentrated load required by Section 1607.8.1.1 shall be applied.
2. In Group I-3, F, H and S occupancies, for areas that are not accessible to the general public and that have an *occupant load* less than 50, the minimum load shall be 20 pounds per foot (0.29 kN/m).

1607.8.1.1 Concentrated load. Handrails and guards shall be designed to resist a concentrated load of 200 pounds (0.89 kN) in accordance with Section 4.5.1.1 of ASCE 7.

1607.8.1.2 Intermediate rails. Intermediate rails (all those except the handrail), balusters and panel fillers shall be designed to resist a concentrated load of 50 pounds (0.22 kN) in accordance with Section 4.5.1.1 of ASCE 7.

1607.8.2 Grab bars, shower seats and dressing room bench seats. Grab bars, shower seats and dressing room bench seats shall be designed to resist a single concentrated load of 250 pounds (1.11 kN) applied in any direction at any point on the grab bar or seat so as to produce the maximum load effects.

1607.9 Vehicle barriers. Vehicle barriers for passenger vehicles shall be designed to resist a concentrated load of 6,000 pounds (26.70 kN) in accordance with Section 4.5.3 of ASCE 7. Garages accommodating trucks and buses shall be designed in accordance with an *approved* method that contains provisions for traffic railings.

1607.10 Impact loads. The live loads specified in Sections 1607.3 through 1607.9 shall be assumed to include adequate allowance for ordinary impact conditions. Provisions shall be made in the structural design for uses and loads that involve unusual vibration and impact forces.

1607.10.1 Elevators. Members, elements and components subject to dynamic loads from elevators shall be designed for impact loads and deflection limits prescribed by ASME A17.1/CSA B44.

1607.10.2 Machinery. For the purpose of design, the weight of machinery and moving loads shall be increased as follows to allow for impact:

1. Light machinery, shaft- or motor-driven, 20 percent.
2. Reciprocating machinery or power-driven units, 50 percent.

Percentages shall be increased where specified by the manufacturer.

1607.10.3 Elements supporting hoists for façade access and building maintenance equipment. In addition to any other applicable live loads, structural elements that support hoists for façade access and building maintenance equipment shall be designed for a live load of 2.5 times the rated load of the hoist or the stall load of the hoist, whichever is larger.

1607.10.4 Fall arrest and lifeline anchorages. In addition to any other applicable live loads, fall arrest and lifeline anchorages and structural elements that support these anchorages shall be designed for a live load of not less than 3,100 pounds (13.8 kN) for each attached lifeline, in every direction that a fall arrest load can be applied.

1607.11 Reduction in uniform live loads. Except for uniform live loads at roofs, all other minimum uniformly distributed live loads, L_o, in Table 1607.1 are permitted to be reduced in accordance with Section 1607.11.1 or 1607.11.2. Uniform live loads at roofs are permitted to be reduced in accordance with Section 1607.13.2.

1607.11.1 Basic uniform live load reduction. Subject to the limitations of Sections 1607.11.1.1 through 1607.11.1.3 and Table 1607.1, members for which a value of $K_{LL}A_T$ is 400 square feet (37.16 m^2) or more are permitted to be designed for a reduced uniformly distributed live load, L, in accordance with the following equation:

$$L = L_o\left(0.25 + \frac{15}{\sqrt{K_{LL}A_T}}\right) \qquad \textbf{(Equation 16-23)}$$

For SI: $L = L_o\left(0.25 + \frac{4.57}{\sqrt{K_{LL}A_T}}\right)$

where:

L = Reduced design live load per square foot (m^2) of area supported by the member.

L_o = Unreduced design live load per square foot (m^2) of area supported by the member (see Table 1607.1).

K_{LL} = Live load element factor (see Table 1607.11.1).

A_T = Tributary area, in square feet (m^2).

L shall be not less than $0.50L_o$ for members supporting one floor and L shall be not less than $0.40L_o$ for members supporting two or more floors.

INTERNATIONAL CODE COUNCIL®
Copyright © 2019 ICC & NYSDOS. ALL RIGHTS RESERVED. Accessed by Lauren Gualdino (lgualdino@briarcliffmanor.org), (-) Order Number #100880972 on May 08, 2020 07:05 AM (PDT) pursuant to License Agreement with ICC & NYSDOS. No further reproduction, no

100880972

1607.11.1.1 One-way slabs. The tributary area, A_T, for use in Equation 16-23 for one-way slabs shall not exceed an area defined by the slab span times a width normal to the span of 1.5 times the slab span.

1607.11.1.2 Heavy live loads. Live loads that exceed 100 psf (4.79 kN/m^2) shall not be reduced.

Exceptions:

1. The live loads for members supporting two or more floors are permitted to be reduced by not greater than 20 percent, but the live load shall be not less than L as calculated in Section 1607.11.1.
2. For uses other than storage, where *approved*, additional live load reductions shall be permitted where shown by the *registered design professional* that a rational approach has been used and that such reductions are warranted.

1607.11.1.3 Passenger vehicle garages. The live loads shall not be reduced in passenger vehicle garages.

Exception: The live loads for members supporting two or more floors are permitted to be reduced by not greater than 20 percent, but the live load be shall be not less than L as calculated in Section 1607.11.1.

TABLE 1607.11.1
LIVE LOAD ELEMENT FACTOR, K_{LL}

ELEMENT	K_{LL}
Interior columns Exterior columns without cantilever slabs	4 4
Edge columns with cantilever slabs	3
Corner columns with cantilever slabs Edge beams without cantilever slabs Interior beams	2 2 2
Members not previously identified including: Edge beams with cantilever slabs Cantilever beams One-way slabs Two-way slabs Members without provisions for continuous shear transfer normal to their span	1

1607.11.2 Alternative uniform live load reduction. As an alternative to Section 1607.11.1 and subject to the limitations of Table 1607.1, uniformly distributed live loads are permitted to be reduced in accordance with the following provisions. Such reductions shall apply to slab systems, beams, girders, columns, piers, walls and foundations.

1. A reduction shall not be permitted where the live load exceeds 100 psf (4.79 kN/m^2) except that the design live load for members supporting two or more floors is permitted to be reduced by not greater than 20 percent.

   Exception: For uses other than storage, where approved, additional live load reductions shall be permitted where shown by the *registered design professional* that a rational approach has been used and that such reductions are warranted.

2. A reduction shall not be permitted in passenger vehicle parking garages except that the live loads for members supporting two or more floors are permitted to be reduced by not greater than 20 percent.
3. For live loads not exceeding 100 psf (4.79 kN/m^2), the design live load for any structural member supporting 150 square feet (13.94 m^2) or more is permitted to be reduced in accordance with Equation 16-24.
4. For one-way slabs, the area, A, for use in Equation 16-24 shall not exceed the product of the slab span and a width normal to the span of 0.5 times the slab span.

$$R = 0.08(A - 150) \qquad \textbf{(Equation 16-24)}$$

For SI: $R = 0.861(A - 13.94)$

Such reduction shall not exceed the smallest of:

1. 40 percent for members supporting one floor.
2. 60 percent for members supporting two or more floors.
3. R as determined by the following equation:

$$R = 23.1(1 + D/L_o) \qquad \textbf{(Equation 16-25)}$$

where:

A = Area of floor supported by the member, square feet (m^2).

D = Dead load per square foot (m^2) of area supported.

L_o = Unreduced live load per square foot (m^2) of area supported.

R = Reduction in percent.

1607.12 Distribution of floor loads. Where uniform floor live loads are involved in the design of structural members arranged so as to create continuity, the minimum applied loads shall be the full dead loads on all spans in combination with the floor live loads on spans selected to produce the greatest *load effect* at each location under consideration. Floor live loads are permitted to be reduced in accordance with Section 1607.11.

1607.13 Roof loads. The structural supports of roofs and marquees shall be designed to resist wind and, where applicable, snow and earthquake loads, in addition to the dead load of construction and the appropriate live loads as prescribed in this section, or as set forth in Table 1607.1. The live loads acting on a sloping surface shall be assumed to act vertically on the horizontal projection of that surface.

1607.13.1 Distribution of roof loads. Where uniform roof live loads are reduced to less than 20 psf (0.96 kN/m^2) in accordance with Section 1607.13.2.1 and are applied to the design of structural members arranged so as to create continuity, the reduced roof live load shall be applied to adjacent spans or to alternate spans, whichever produces the most unfavorable *load effect*. See Section 1607.13.2 for reductions in minimum roof live loads and Section 7.5 of ASCE 7 for partial snow loading.

1607.13.2 General. The minimum uniformly distributed live loads of roofs and marquees, L_o, in Table 1607.1 are permitted to be reduced in accordance with Section 1607.13.2.1.

INTERNATIONAL CODE COUNCIL®
Copyright © 2019 ICC & NYSDOS. ALL RIGHTS RESERVED. Accessed by Lauren Gualdino (lgualdino@briarcliffmanor.org), (-) Order Number #100880972 on May 08, 2020 07:05 AM (PDT) pursuant to License Agreement with ICC & NYSDOS. No further reproduction, no

100880972

1607.13.2.1 Ordinary roofs, awnings and canopies. Ordinary flat, pitched and curved roofs, and awnings and canopies other than of fabric construction supported by a skeleton structure, are permitted to be designed for a reduced uniformly distributed roof live load, L_r, as specified in the following equations or other controlling combinations of loads as specified in Section 1605, whichever produces the greater *load effect*.

In structures such as greenhouses, where special scaffolding is used as a work surface for workers and materials during maintenance and repair operations, a lower roof load than specified in the following equations shall not be used unless *approved* by the *building official*. Such structures shall be designed for a minimum roof live load of 12 psf (0.58 kN/m^2).

$L_r = L_o R_1 R_2$ **(Equation 16-26)**

where: $12 \le L_r \le 20$

For SI: $L_r = L_o R_1 R_2$

where: $0.58 \le L_r \le 0.96$

L_o = Unreduced roof live load per square foot (m^2) of horizontal projection supported by the member (see Table 1607.1).

L_r = Reduced roof live load per square foot (m^2) of horizontal projection supported by the member.

The reduction factors R_1 and R_2 shall be determined as follows:

$R_1 = 1$ for $A_t \le 200$ square feet (18.58 m^2) **(Equation 16-27)**

$R_1 = 1.2 - 0.001A_t$ for 200 square feet $< A_t <$ 600 square feet **(Equation 16-28)**

For SI: $1.2 - 0.011A_t$ for 18.58 square meters $< A_t <$ 55.74 square meters

$R_1 = 0.6$ for $A_t \ge 600$ square feet (55.74 m^2) **(Equation 16-29)**

where:

A_t = Tributary area (span length multiplied by effective width) in square feet (m^2) supported by the member, and

$R_2 = 1$ for $F \le 4$ **(Equation 16-30)**

$R_2 = 1.2 - 0.05F$ for $4 < F < 12$ **(Equation 16-31)**

$R_2 = 0.6$ for $F \ge 12$ **(Equation 16-32)**

where:

F = For a sloped roof, the number of inches of rise per foot (for SI: $F = 0.12 \times$ slope, with slope expressed as a percentage), or for an arch or dome, the rise-to-span ratio multiplied by 32.

1607.13.3 Occupiable roofs. Areas of roofs that are occupiable, such as *vegetative roofs*, roof gardens or for assembly or other similar purposes, and marquees are permitted to have their uniformly distributed live loads reduced in accordance with Section 1607.11.

1607.13.3.1 Vegetative and landscaped roofs. The weight of all landscaping materials shall be considered as dead load and shall be computed on the basis of saturation of the soil as determined in accordance with Section 3.1.4 of ASCE 7. The uniform design live load in unoccupied landscaped areas on roofs shall be 20 psf (0.958 kN/m^2). The uniform design live load for occupied landscaped areas on roofs shall be determined in accordance with Table 1607.1.

1607.13.4 Awnings and canopies. Awnings and canopies shall be designed for uniform live loads as required in Table 1607.1 as well as for snow loads and wind loads as specified in Sections 1608 and 1609.

1607.13.5 Photovoltaic panel systems. Roof structures that provide support for *photovoltaic panel systems* shall be designed in accordance with Sections 1607.13.5.1 through 1607.13.5.4, as applicable.

1607.13.5.1 Roof live load. Roof structures that support photovoltaic panel systems shall be designed to resist each of the following conditions:

1. Applicable uniform and concentrated roof loads with the photovoltaic panel system dead loads.

   Exception: Roof live loads need not be applied to the area covered by photovoltaic panels where the clear space between the panels and the roof surface is 24 inches (610 mm) or less.

2. Applicable uniform and concentrated roof loads without the photovoltaic panel system present.

1607.13.5.2 Photovoltaic panels or modules. The structure of a roof that supports solar photovoltaic panels or modules shall be designed to accommodate the full solar photovoltaic panels or modules and ballast dead load, including concentrated loads from support frames in combination with the loads from Section 1607.13.5.1 and other applicable loads. Where applicable, snow drift loads created by the photovoltaic panels or modules shall be included.

1607.13.5.2.1 Photovoltaic panels installed on open grid roof structures. Structures with open grid framing and without a roof deck or sheathing supporting photovoltaic panel systems shall be designed to support the uniform and concentrated roof live loads specified in Section 1607.13.5.1, except that the uniform roof live load shall be permitted to be reduced to 12 psf (0.57 kN/m^2).

1607.13.5.3 Photovoltaic panels or modules installed as an independent structure. Solar photovoltaic panels or modules that are independent structures and do not have accessible/occupied space underneath are not required to accommodate a roof photovoltaic live load, provided that the area under the structure is restricted to keep the public away. Other loads and combinations in accordance with Section 1605 shall be accommodated.

Solar photovoltaic panels or modules that are designed to be the roof, span to structural supports and have accessible/occupied space underneath shall have the panels or modules and all supporting structures designed to support a roof photovoltaic live load, as defined in Section 1607.13.5.1 in combination with other applicable loads.

INTERNATIONAL CODE COUNCIL®
Copyright © 2019 ICC & NYSDOS. ALL RIGHTS RESERVED. Accessed by Lauren Gualdino (lgualdino@briarcliffmanor.org), (-) Order Number #100880972 on May 08, 2020 07:05 AM (PDT) pursuant to License Agreement with ICC & NYSDOS. No further reproduction, no

100880972

Solar photovoltaic panels or modules in this application are not permitted to be classified as "not accessible" in accordance with Section 1607.13.5.1.

1607.13.5.4 Ballasted photovoltaic panel systems. Roof structures that provide support for ballasted *photovoltaic panel systems* shall be designed, or analyzed, in accordance with Section 1604.4; checked in accordance with Section 1604.3.6 for deflections; and checked in accordance with Section 1611 for ponding.

1607.14 Crane loads. The crane live load shall be the rated capacity of the crane. Design loads for the runway beams, including connections and support brackets, of moving bridge cranes and monorail cranes shall include the maximum wheel loads of the crane and the vertical impact, lateral and longitudinal forces induced by the moving crane.

1607.14.1 Maximum wheel load. The maximum wheel loads shall be the wheel loads produced by the weight of the bridge, as applicable, plus the sum of the rated capacity and the weight of the trolley with the trolley positioned on its runway at the location where the resulting load effect is maximum.

1607.14.2 Vertical impact force. The maximum wheel loads of the crane shall be increased by the following percentages to determine the induced vertical impact or vibration force:

Monorail cranes (powered)	25 percent
Cab-operated or remotely operated bridge cranes (powered)	25 percent
Pendant-operated bridge cranes (powered)	10 percent
Bridge cranes or monorail cranes with hand-geared bridge, trolley and hoist	0 percent

1607.14.3 Lateral force. The lateral force on crane runway beams with electrically powered trolleys shall be calculated as 20 percent of the sum of the rated capacity of the crane and the weight of the hoist and trolley. The lateral force shall be assumed to act horizontally at the traction surface of a runway beam, in either direction perpendicular to the beam, and shall be distributed with due regard to the lateral stiffness of the runway beam and supporting structure.

1607.14.4 Longitudinal force. The longitudinal force on crane runway beams, except for bridge cranes with hand-geared bridges, shall be calculated as 10 percent of the maximum wheel loads of the crane. The longitudinal force shall be assumed to act horizontally at the traction surface of a runway beam, in either direction parallel to the beam.

1607.15 Interior walls and partitions. Interior walls and partitions that exceed 6 feet (1829 mm) in height, including their finish materials, shall have adequate strength and stiffness to resist the loads to which they are subjected but not less than a horizontal load of 5 psf (0.240 kN/m^2).

1607.15.1 Fabric partitions. Fabric partitions that exceed 6 feet (1829 mm) in height, including their finish materials, shall have adequate strength and stiffness to resist the following load conditions:

1. The horizontal distributed load need only be applied to the partition framing. The total area used to determine the distributed load shall be the area of the fabric face between the framing members to which the fabric is attached. The total distributed load shall be uniformly applied to such framing members in proportion to the length of each member.
2. A concentrated load of 40 pounds (0.176 kN) applied to an 8-inch-diameter (203 mm) area [50.3 square inches (32 452 mm^2)] of the fabric face at a height of 54 inches (1372 mm) above the floor.

1607.15.2 Fire walls. In order to meet the structural stability requirements of Section 706.2 where the structure on either side of the wall has collapsed, fire walls and their supports shall be designed to withstand a minimum horizontal allowable stress load of 5 psf (0.240 kN/m^2).

SECTION 1608
SNOW LOADS

1608.1 General. Design snow loads shall be determined in accordance with Chapter 7 of ASCE 7, but the design roof load shall be not less than that determined by Section 1607.

[NY] 1608.2 Ground snow loads. The ground snow loads to be used in determining the design snow loads for roofs shall be determined in accordance with ASCE 7 or Figure 1608.2. When using Figure 1608.2 for sites at elevations above 1,000 feet (304.8 m), the ground snow load shall be increased from the mapped value by 2 psf (0.096 kN/m^2) for every 100 feet (30.48 m) above 1,000 feet (304.8 m). Site specific case studies may be made in lieu of snow loads in Figure 1608.2 or ASCE 7. Ground snow load determination for site-specific case studies shall be approved and shall be based on an extreme value statistical analysis of data available in the vicinity of the site using a value with a 2-percent annual probability of being exceeded (50-year mean recurrence interval).

1608.3 Ponding instability. Susceptible bays of roofs shall be evaluated for ponding instability in accordance with Chapters 7 and 8 of ASCE 7.

SECTION 1609
WIND LOADS

1609.1 Applications. Buildings, structures and parts thereof shall be designed to withstand the minimum wind loads prescribed herein. Decreases in wind loads shall not be made for the effect of shielding by other structures.

1609.1.1 Determination of wind loads. Wind loads on every building or structure shall be determined in accordance with Chapters 26 to 30 of ASCE 7. The type of opening protection required, the basic design wind speed, V, and the exposure category for a site is permitted to be determined in accordance with Section 1609 or ASCE 7. Wind shall be assumed to come from any horizontal direction and wind pressures shall be assumed to act normal to the surface considered.

Exceptions:

1. Subject to the limitations of Section 1609.1.1.1, the provisions of ICC 600 shall be permitted for applicable Group R-2 and R-3 buildings.

INTERNATIONAL CODE COUNCIL®
Copyright © 2019 ICC & NYSDOS. ALL RIGHTS RESERVED. Accessed by Lauren Gualdino (lgualdino@briarcliffmanor.org), (-) Order Number #100880972 on May 08, 2020 07:05 AM (PDT) pursuant to License Agreement with ICC & NYSDOS. No further reproduction, no

100880972

2. Subject to the limitations of Section 1609.1.1.1, residential structures using the provisions of AWC WFCM.
3. Subject to the limitations of Section 1609.1.1.1, residential structures using the provisions of AISI S230.
4. Designs using NAAMM FP 1001.
5. Designs using TIA-222 for antenna-supporting structures and antennas, provided that the horizontal extent of Topographic Category 2 escarpments in Section 2.6.6.2 of TIA-222 shall be 16 times the height of the escarpment.
6. Wind tunnel tests in accordance with ASCE 49 and Sections 31.4 and 31.5 of ASCE 7.

The wind speeds in Figures 1609.3(1) through 1609.3(8) are basic design wind speeds, V, and shall be converted in accordance with Section 1609.3.1 to allowable stress design wind speeds, V_{asd}, when the provisions of the standards referenced in Exceptions 4 and 5 are used.

1609.1.1.1 Applicability. The provisions of ICC 600 are applicable only to buildings located within Exposure B or C as defined in Section 1609.4. The provisions of ICC 600, AWC WFCM and AISI S230 shall not apply to buildings sited on the upper half of an isolated hill, ridge or escarpment meeting all of the following conditions:

1. The hill, ridge or escarpment is 60 feet (18 288 mm) or higher if located in Exposure B or 30 feet (9144 mm) or higher if located in Exposure C.
2. The maximum average slope of the hill exceeds 10 percent.
3. The hill, ridge or escarpment is unobstructed upwind by other such topographic features for a distance from the high point of 50 times the height of the hill or 2 miles (3.22 km), whichever is greater.

1609.2 Protection of openings. In *windborne debris regions*, glazing in buildings shall be impact resistant or protected with an impact-resistant covering meeting the requirements of an *approved* impact-resistant standard or ASTM E1996 and ASTM E1886 referenced herein as follows:

1. Glazed openings located within 30 feet (9144 mm) of grade shall meet the requirements of the large missile test of ASTM E1996.



[NY] FIGURE 1608.2
GROUND SNOW LOADS, p_g, FOR NEW YORK STATE (psf)

INTERNATIONAL CODE COUNCIL®
Copyright © 2019 ICC & NYSDOS. ALL RIGHTS RESERVED. Accessed by Lauren Gualdino (lgualdino@briarcliffmanor.org), (-) Order Number #100880972 on May 08, 2020 07:05 AM (PDT) pursuant to License Agreement with ICC & NYSDOS. No further reproduction, no

100880972

2. Glazed openings located more than 30 feet (9144 mm) above grade shall meet the provisions of the small missile test of ASTM E1996.

Exceptions:

1. Wood structural panels with a minimum thickness of $^{7}/_{16}$ inch (11.1 mm) and maximum panel span of 8 feet (2438 mm) shall be permitted for opening protection in buildings with a mean roof height of 33 feet (10 058 mm) or less that are classified as a Group R-3 or R-4 occupancy. Panels shall be precut so that they shall be attached to the framing surrounding the opening containing the product with the glazed opening. Panels shall be predrilled as required for the anchorage method and shall be secured with the attachment hardware provided. Attachments shall be designed to resist the components and cladding loads determined in accordance with the provisions of ASCE 7, with corrosion-resistant attachment hardware provided and anchors permanently installed on the building. Attachment in accordance with Table 1609.2 with corrosion-resistant attachment hardware provided and anchors permanently installed on the building is permitted for buildings with a mean roof height of 45 feet (13 716 mm) or less where V_{asd} determined in accordance with Section 1609.3.1 does not exceed 140 mph (63 m/s).
2. Glazing in *Risk Category* I buildings, including greenhouses that are occupied for growing plants on a production or research basis, without public access shall be permitted to be unprotected.
3. Glazing in *Risk Category* II, III or IV buildings located over 60 feet (18 288 mm) above the ground and over 30 feet (9144 mm) above aggregate surface roofs located within 1,500 feet (458 m) of the building shall be permitted to be unprotected.

1609.2.1 Louvers. Louvers protecting intake and exhaust ventilation ducts not assumed to be open that are located within 30 feet (9144 mm) of grade shall meet the requirements of AMCA 540.

1609.2.2 Application of ASTM E1996. The text of Section 6.2.2 of ASTM E1996 shall be substituted as follows:

6.2.2 Unless otherwise specified, select the wind zone based on the basic design wind speed, *V*, as follows:

6.2.2.1 *Wind Zone 1*—130 mph ≤ basic design wind speed, *V*< 140 mph.

6.2.2.2 *Wind Zone 2*—140 mph ≤ basic design wind speed, *V* < 150 mph at greater than one mile (1.6 km) from the coastline. The coastline shall be measured from the mean high water mark.

6.2.2.3 *Wind Zone 3*—150 mph (58 m/s) ≤ basic design wind speed, *V* ≤ 160 mph (63 m/s), or 140 mph (54 m/s) ≤ basic design wind speed, *V* ≤ 160 mph (63 m/s) and within one mile (1.6 km) of the coastline. The coastline shall be measured from the mean high water mark.

6.2.2.4 *Wind Zone 4*— basic design wind speed, *V* > 160 mph (63 m/s).

1609.2.3 Garage doors. Garage door glazed opening protection for windborne debris shall meet the requirements of an *approved* impact-resisting standard or ANSI/DASMA 115.

1609.3 Basic design wind speed. The basic design wind speed, *V*, in mph, for the determination of the wind loads shall be determined by Figures 1609.3(1) through (8). The basic design wind speed, *V*, for use in the design of Risk Category II buildings and structures shall be obtained from Figures 1609.3(1) and 1609.3(5). The basic design wind speed, *V*, for use in the design of Risk Category III buildings and structures shall be obtained from Figures 1609.3(2) and 1609.3(6). The basic design wind speed, V, for use in the design of Risk Category IV buildings and structures shall be obtained from Figures 1609.3(3) and 1609.3(7). The basic design wind speed, *V*, for use in the design of Risk Category I buildings and structures shall be obtained from Figures 1609.3(4) and 1609.3(8). The basic design wind speed, *V*, for

TABLE 1609.2
WINDBORNE DEBRIS PROTECTION FASTENING SCHEDULE FOR WOOD STRUCTURAL PANELS[a, b, c, d]

FASTENER TYPE	FASTENER SPACING (inches)		
	Panel Span ≤ 4 feet	4 feet < Panel Span ≤ 6 feet	6 feet < Panel Span ≤ 8 feet
No. 8 wood-screw-based anchor with 2-inch embedment length	16	10	8
No. 10 wood-screw-based anchor with 2-inch embedment length	16	12	9
$^{1}/_{4}$-inch diameter lag-screw-based anchor with 2-inch embedment length	16	16	16

For SI: 1 inch = 25.4 mm, 1 foot = 304.8 mm, 1 pound = 4.448 N, 1 mile per hour = 0.447 m/s.

a. This table is based on 140 mph wind speeds and a 45-foot mean roof height.

b. Fasteners shall be installed at opposing ends of the wood structural panel. Fasteners shall be located not less than 1 inch from the edge of the panel.

c. Anchors shall penetrate through the exterior wall covering with an embedment length of 2 inches minimum into the building frame. Fasteners shall be located not less than $2^{1}/_{2}$ inches from the edge of concrete block or concrete.

d. Where panels are attached to masonry or masonry/stucco, they shall be attached using vibration-resistant anchors having a minimum ultimate withdrawal capacity of 1,500 pounds.

INTERNATIONAL CODE COUNCIL®
Copyright © 2019 ICC & NYSDOS. ALL RIGHTS RESERVED. Accessed by Lauren Gualdino (lgualdino@briarcliffmanor.org), (-) Order Number #100880972 on May 08, 2020 07:05 AM (PDT) pursuant to License Agreement with ICC & NYSDOS. No further reproduction, no

100880972

the special wind regions indicated near mountainous terrain and near gorges shall be in accordance with local jurisdiction requirements. The basic design wind speeds, *V*, determined by the local jurisdiction shall be in accordance with Chapter 26 of ASCE 7.

In nonhurricane-prone regions, when the basic design wind speed, *V*, is estimated from regional climatic data, the basic design wind speed, *V*, shall be determined in accordance with Chapter 26 of ASCE 7.

1609.3.1 Wind speed conversion. Where required, the basic design wind speeds of Figures 1609.3(1) through 1609.3(8) shall be converted to allowable stress design wind speeds, V_{asd}, using Table 1609.3.1 or Equation 16-33.

$$V_{asd} = V\sqrt{0.6} \qquad \textbf{(Equation 16-33)}$$

where:

V_{asd} = Allowable stress design wind speed applicable to methods specified in Exceptions 4 and 5 of Section 1609.1.1.

V = Basic design wind speeds determined from Figures 1609.3(1) through 1609.3(8).

1609.4 Exposure category. For each wind direction considered, an exposure category that adequately reflects the characteristics of ground surface irregularities shall be determined for the site at which the building or structure is to be constructed. Account shall be taken of variations in ground surface roughness that arise from natural topography and vegetation as well as from constructed features.

1609.4.1 Wind directions and sectors. For each selected wind direction at which the wind loads are to be evaluated, the exposure of the building or structure shall be determined for the two upwind sectors extending 45 degrees (0.79 rad) either side of the selected wind direction. The exposures in these two sectors shall be determined in accordance with Sections 1609.4.2 and 1609.4.3 and the exposure resulting in the highest wind loads shall be used to represent winds from that direction.

1609.4.2 Surface roughness categories. A ground surface roughness within each 45-degree (0.79 rad) sector shall be determined for a distance upwind of the site as defined in Section 1609.4.3 from the following categories, for the purpose of assigning an exposure category as defined in Section 1609.4.3.

Surface Roughness B. Urban and suburban areas, wooded areas or other terrain with numerous closely spaced obstructions having the size of single-family dwellings or larger.

Surface Roughness C. Open terrain with scattered obstructions having heights generally less than 30 feet (9144 mm). This category includes flat open country, and grasslands.

Surface Roughness D. Flat, unobstructed areas and water surfaces. This category includes smooth mud flats, salt flats and unbroken ice.

1609.4.3 Exposure categories. An exposure category shall be determined in accordance with the following:

Exposure B. For buildings with a mean roof height of less than or equal to 30 feet (9144 mm), Exposure B shall apply where the ground surface roughness, as defined by Surface Roughness B, prevails in the upwind direction for a distance of not less than 1,500 feet (457 m). For buildings with a mean roof height greater than 30 feet (9144 mm), Exposure B shall apply where Surface Roughness B prevails in the upwind direction for a distance of not less than 2,600 feet (792 m) or 20 times the height of the building, whichever is greater.

Exposure C. Exposure C shall apply for all cases where Exposure B or D does not apply.

Exposure D. Exposure D shall apply where the ground surface roughness, as defined by Surface Roughness D, prevails in the upwind direction for a distance of not less than 5,000 feet (1524 m) or 20 times the height of the building, whichever is greater. Exposure D shall apply where the ground surface roughness immediately upwind of the site is B or C, and the site is within a distance of 600 feet (183 m) or 20 times the building height, whichever is greater, from an Exposure D condition as defined in the previous sentence.

1609.5 Roof systems. Roof systems shall be designed and constructed in accordance with Sections 1609.5.1 through 1609.5.3, as applicable.

1609.5.1 Roof deck. The roof deck shall be designed to withstand the wind pressures determined in accordance with ASCE 7.

1609.5.2 Roof coverings. Roof coverings shall comply with Section 1609.5.1.

Exception: Rigid tile roof coverings that are air permeable and installed over a roof deck complying with Section 1609.5.1 are permitted to be designed in accordance with Section 1609.5.3.

Asphalt shingles installed over a roof deck complying with Section 1609.5.1 shall comply with the wind-resistance requirements of Section 1504.1.1.

TABLE 1609.3.1
WIND SPEED CONVERSIONS[a, b, c]

V	100	110	120	130	140	150	160	170	180	190	200
V_{asd}	78	85	93	101	108	116	124	132	139	147	155

For SI: 1 mile per hour = 0.44 m/s.

a. Linear interpolation is permitted.

b. V_{asd} = allowable stress design wind speed applicable to methods specified in Exceptions 1 through 5 of Section 1609.1.1.

c. V= basic design wind speeds determined from Figures 1609.3(1) through 1609.3(8).

INTERNATIONAL CODE COUNCIL®
Copyright © 2019 ICC & NYSDOS. ALL RIGHTS RESERVED. Accessed by Lauren Gualdino (lgualdino@briarcliffmanor.org), (-) Order Number #100880972 on May 08, 2020 07:05 AM (PDT) pursuant to License Agreement with ICC & NYSDOS. No further reproduction, no

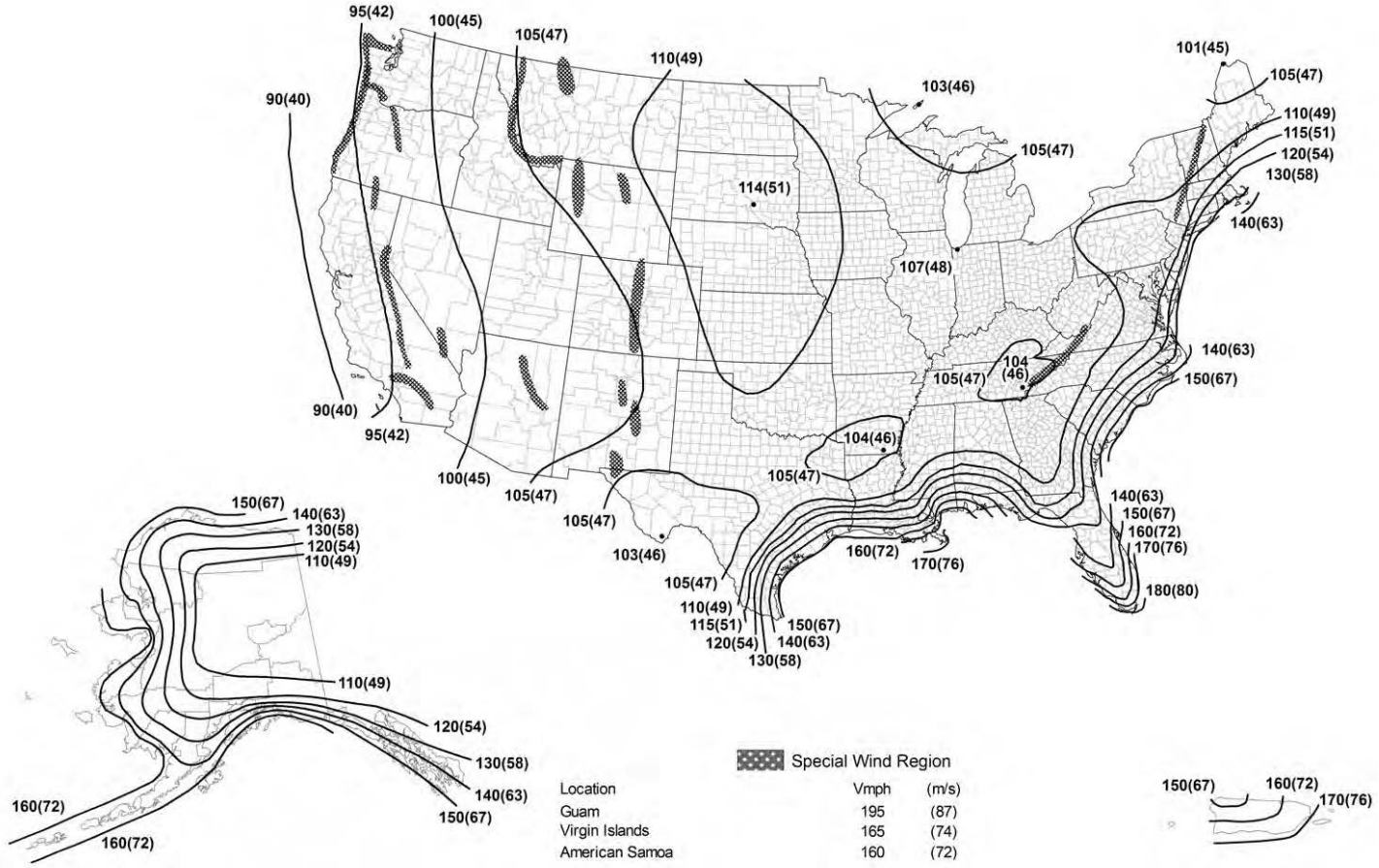

Notes:

1. Values are nominal design 3-second gust wind speeds in miles per hour (m/s) at 33 ft. (10 m) above ground for exposure C category
2. Linear interpolation is permitted between contours. Point values are provided to aid with interpolation.
3. Islands, coastal areas, and land boundaries outside the last contour shall use the last wind speed contour.
4. Mountainous terrain, gorges, ocean promontories, and special wind regions shall be examined for unusual wind conditions,
5. Wind speeds correspond to approximately a 7% probability of exceedance in 50 years (Annual Exceedance Probability = 0.00143, MRI = 700 Years).
6. Location-specific basic wind speeds shall be permitted to be determined using www.hazards.atcouncil.org.

FIGURE 1609.3(1)
BASIC DESIGN WIND SPEEDS, *V*, FOR RISK CATEGORY II BUILDINGS AND OTHER STRUCTURES

INTERNATIONAL CODE COUNCIL®
Copyright © 2019 ICC & NYSDOS. ALL RIGHTS RESERVED. Accessed by Lauren Gualdino (lgualdino@briarcliffmanor.org). (-) Order Number #100880972 on May 08, 2020 07:05 AM (PDT) pursuant to License Agreement with ICC & NYSDOS. No further reproduction, no
100880972

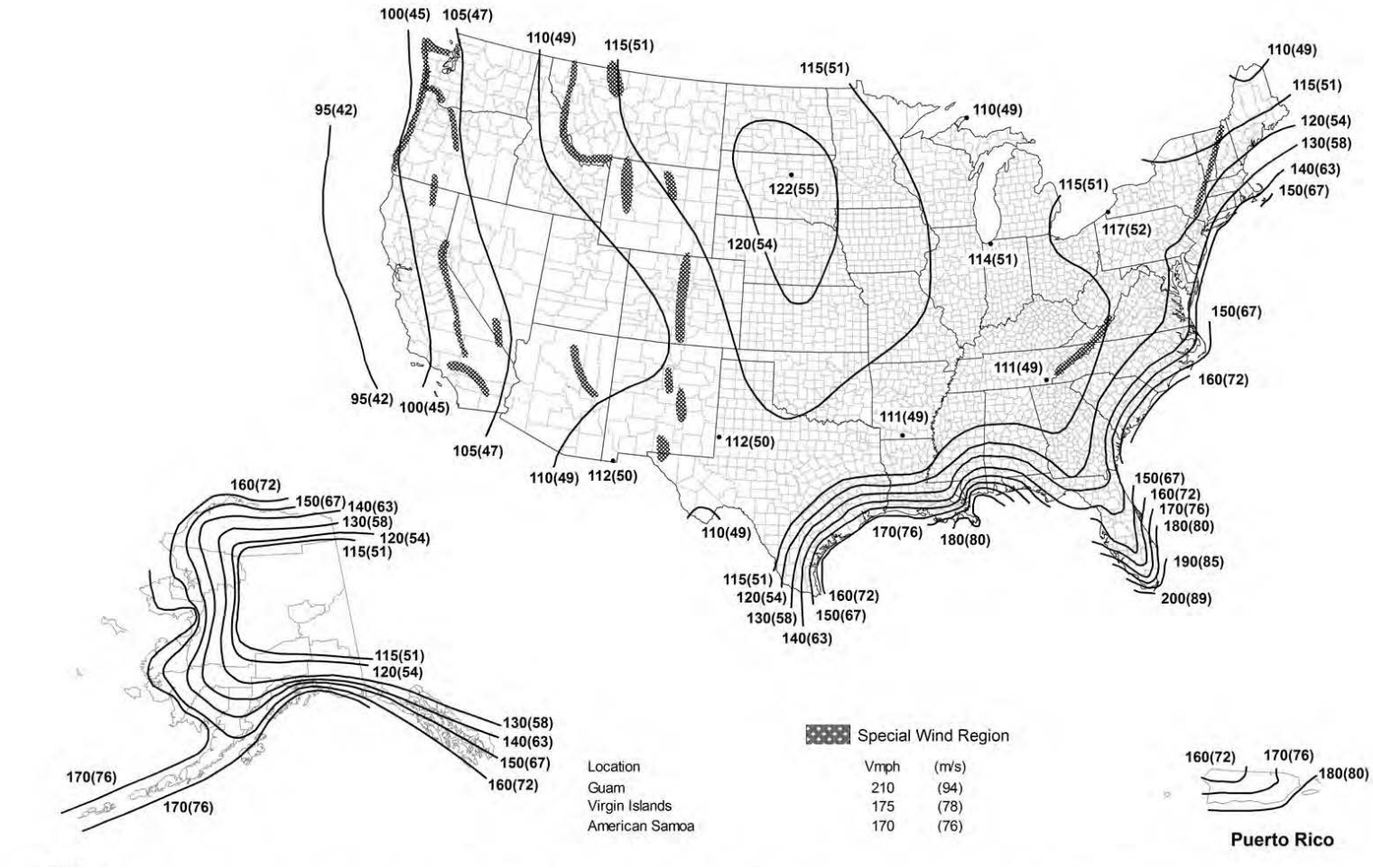

Notes:
1. Values are nominal design 3-second gust wind speeds in miles per hour (m/s) at 33 ft. (10 m) above ground for exposure C category
2. Linear interpolation is permitted between contours. Point values are provided to aid with interpolation.
3. Islands, coastal areas, and land boundaries outside the last contour shall use the last wind speed contour.
4. Mountainous terrain, gorges, ocean promontories, and special wind regions shall be examined for unusual wind conditions,
5. Wind speeds correspond to approximately a 7% probability of exceedance in 50 years (Annual Exceedance Probability = 0.000588, MRI = 1700 Years).
6. Location-specific basic wind speeds shall be permitted to be determined using www.hazards.atcouncil.org.

FIGURE 1609.3(2)
BASIC DESIGN WIND SPEEDS, *V*, FOR RISK CATEGORY III BUILDINGS AND OTHER STRUCTURES

Copyright © 2019 ICC & NYSDOS. ALL RIGHTS RESERVED. Accessed by Lauren Gualdino (lgualdino@briarcliffmanor.org). (-) Order Number #100880972 on May 08, 2020 07:05 AM (PDT) pursuant to License Agreement with ICC & NYSDOS. No further reproduction, no

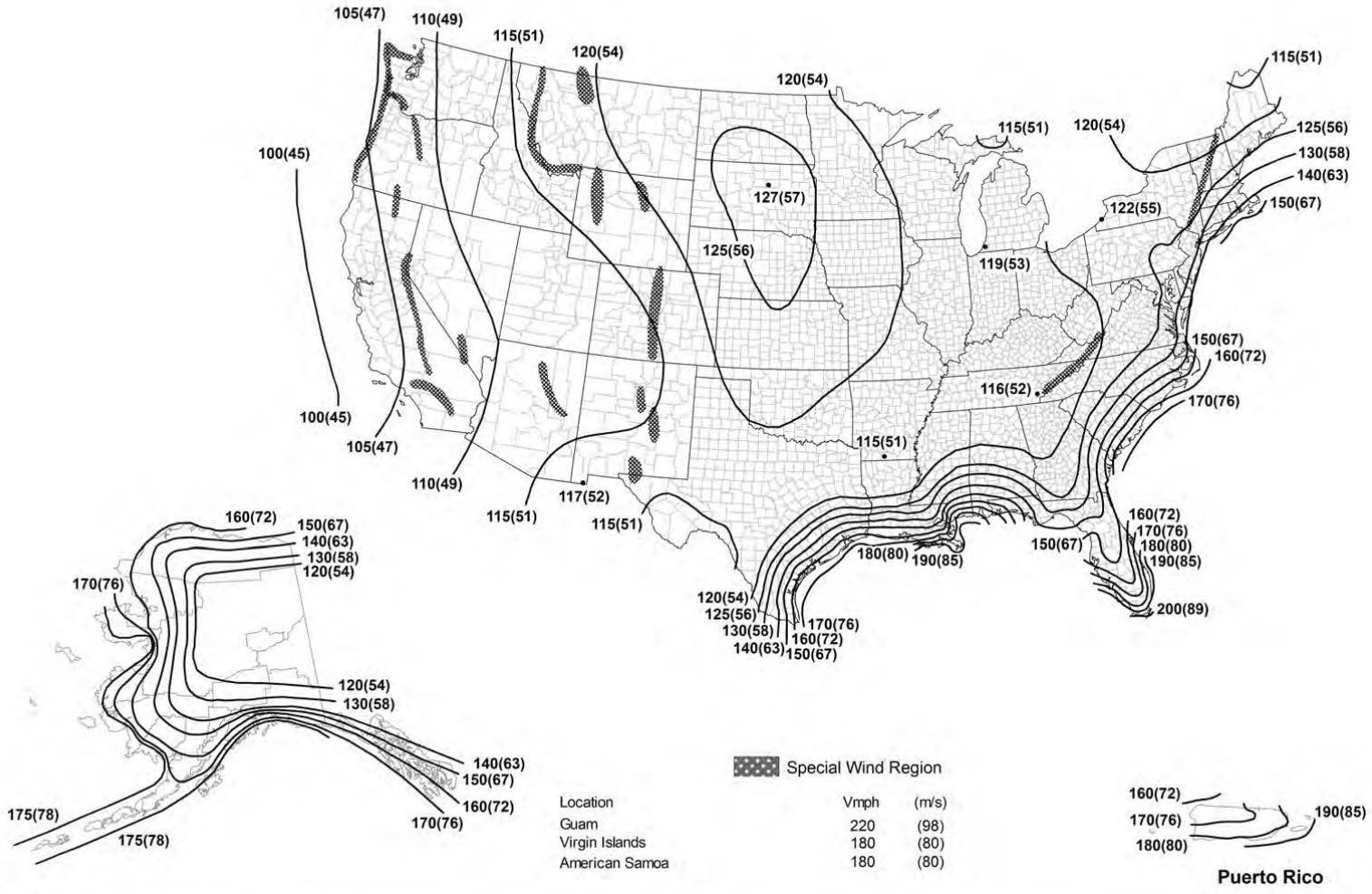

Notes:

1. Values are nominal design 3-second gust wind speeds in miles per hour (m/s) at 33 ft. (10 m) above ground for exposure C category
2. Linear interpolation is permitted between contours. Point values are provided to aid with interpolation.
3. Islands, coastal areas, and land boundries outside the last contour shall use the last wind speed countour.
4. Mountainous terrain, gorges, ocean promontories, and special wind regions shall be examined for unusual wind conditions,
5. Wind speeds correspond to approximately a 1.6% probability of exceedance in 50 years (Annual Exceedance Probability = 0.00033, MRI = 3,000 Years).
6. Location-specific basic wind speeds shall be permitted to be determined using www.hazards.atcouncil.org.

FIGURE 1609.3(3)
BASIC DESIGN WIND SPEEDS, *V*, FOR RISK CATEGORY IV BUILDINGS AND OTHER STRUCTURES

INTERNATIONAL CODE COUNCIL®
Copyright © 2019 ICC & NYSDOS. ALL RIGHTS RESERVED. Accessed by Lauren Gualdino (lgualdino@briarcliffmanor.org). (-) Order Number #100880972 on May 08, 2020 07:05 AM (PDT) pursuant to License Agreement with ICC & NYSDOS. No further reproduction, no
100880972

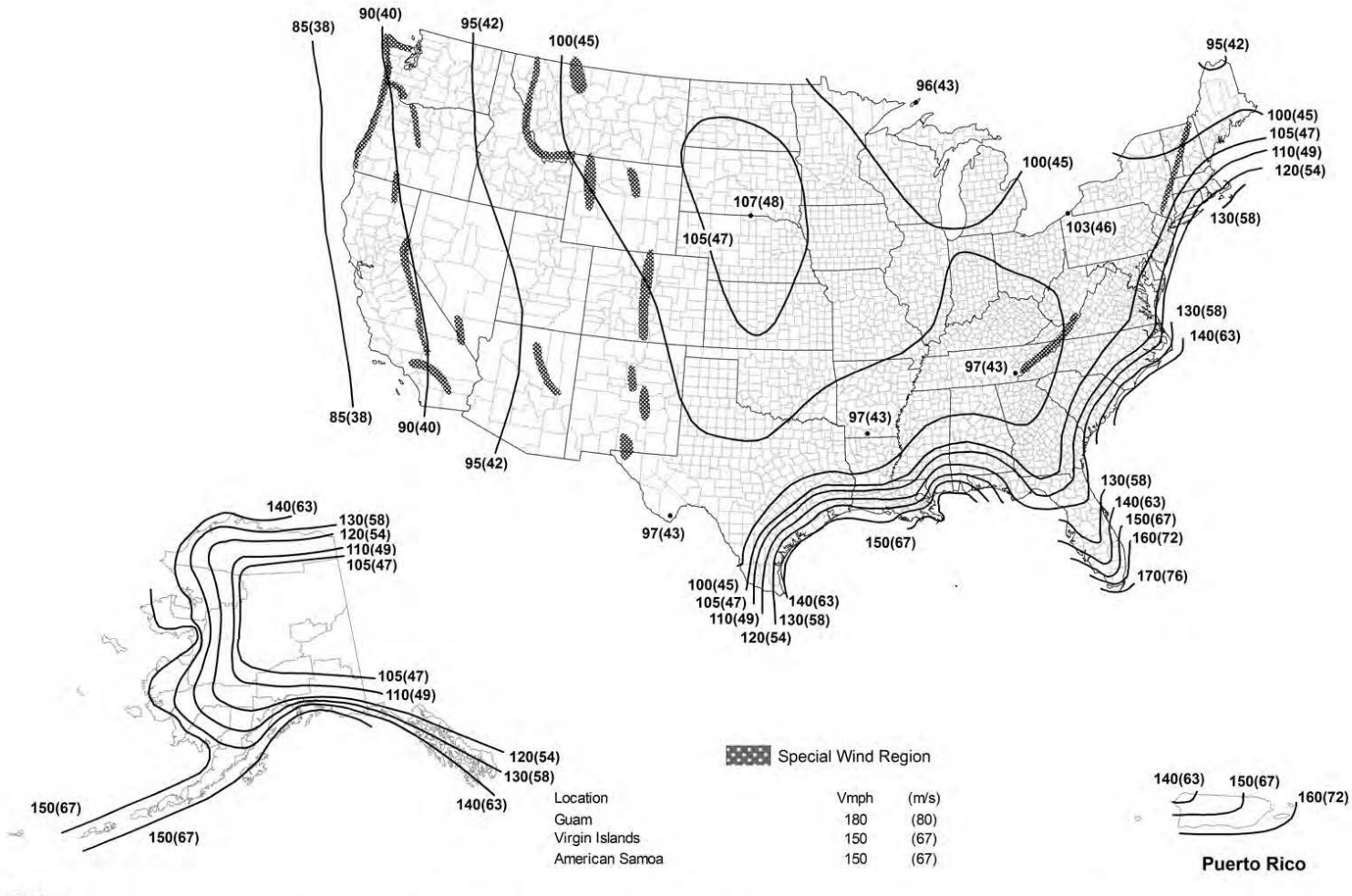

Notes:
1. Values are nominal design 3-second gust wind speeds in miles per hour (m/s) at 33 ft. (10 m) above ground for exposure C category
2. Linear interpolation is permitted between contours. Point values are provided to aid with interpolation.
3. Islands, coastal areas, and land boundaries outside the last contour shall use the last wind speed contour.
4. Mountainous terrain, gorges, ocean promontories, and special wind regions shall be examined for unusual wind conditions,
5. Wind speeds correspond to approximately a 7% probability of exceedance in 50 years (Annual Exceedance Probability = 0.00143, MRI = 700 Years).
6. Location-specific basic wind speeds shall be permitted to be determined using www.hazards.atcouncil.org.

FIGURE 1609.3(4)
BASIC DESIGN WIND SPEEDS, *V*, FOR RISK CATEGORY I BUILDINGS AND OTHER STRUCTURES

Copyright © 2019 ICC & NYSDOS. ALL RIGHTS RESERVED. Accessed by Lauren Gualdino (lgualdino@briarcliffmanor.org). (-) Order Number #100880972 on May 08, 2020 07:05 AM (PDT) pursuant to License Agreement with ICC & NYSDOS. No further reproduction, no

100880972

100880972

1609.5.3 Rigid tile. Wind loads on rigid tile roof coverings shall be determined in accordance with the following equation:

$$M_a = q_h C_L b L L_a [1.0 - G C_p] \quad \textbf{(Equation 16-34)}$$

For SI:

$$M_a = \frac{q_h C_L b L L_a [1.0 - G C_p]}{1,000}$$

where:

b = Exposed width, feet (mm) of the roof tile.

C_L = Lift coefficient. The lift coefficient for concrete and clay tile shall be 0.2 or shall be determined by test in accordance with Section 1504.2.1.

GC_p = Roof pressure coefficient for each applicable roof zone determined from Chapter 30 of ASCE 7. Roof coefficients shall not be adjusted for internal pressure.

L = Length, feet (mm) of the roof tile.

L_a = Moment arm, feet (mm) from the axis of rotation to the point of uplift on the roof tile. The point of uplift shall be taken at 0.76L from the head of the tile and the middle of the exposed width. For roof tiles with nails or screws (with or without a tail clip), the axis of rotation shall be taken as the head of the tile for direct deck application or as the top edge of the batten for battened applications. For roof tiles fastened only by a nail or screw along the side of the tile, the axis of rotation shall be determined by testing. For roof tiles installed with battens and fastened only by a clip near the tail of the tile, the moment arm shall be determined about the top edge of the batten with consideration given for the point of rotation of the tiles based on straight bond or broken bond and the tile profile.

M_a = Aerodynamic uplift moment, feet-pounds (N-mm) acting to raise the tail of the tile.

q_h = Wind velocity pressure, psf (kN/m^2) determined from Section 26.10.2 of ASCE 7.

Concrete and clay roof tiles complying with the following limitations shall be designed to withstand the aerodynamic uplift moment as determined by this section.

1. The roof tiles shall be either loose laid on battens, mechanically fastened, mortar set or adhesive set.
2. The roof tiles shall be installed on solid sheathing that has been designed as components and cladding.
3. An underlayment shall be installed in accordance with Chapter 15.
4. The tile shall be single lapped interlocking with a minimum head lap of not less than 2 inches (51 mm).
5. The length of the tile shall be between 1.0 and 1.75 feet (305 mm and 533 mm).
6. The exposed width of the tile shall be between 0.67 and 1.25 feet (204 mm and 381 mm).
7. The maximum thickness of the tail of the tile shall not exceed 1.3 inches (33 mm).
8. Roof tiles using mortar set or adhesive set systems shall have not less than two-thirds of the tile's area free of mortar or adhesive contact.

SECTION 1610
SOIL LATERAL LOADS

1610.1 General. Foundation walls and retaining walls shall be designed to resist lateral soil loads. Soil loads specified in Table 1610.1 shall be used as the minimum design lateral soil loads unless determined otherwise by a geotechnical investigation in accordance with Section 1803. Foundation walls and other walls in which horizontal movement is restricted at the top shall be designed for at-rest pressure. Retaining walls free to move and rotate at the top shall be permitted to be designed for active pressure. Design lateral pressure from surcharge loads shall be added to the lateral earth pressure load. Design lateral pressure shall be increased if soils at the site are expansive. Foundation walls shall be designed to support the weight of the full hydrostatic pressure of undrained backfill unless a drainage system is installed in accordance with Sections 1805.4.2 and 1805.4.3.

Exception: Foundation walls extending not more than 8 feet (2438 mm) below grade and laterally supported at the top by flexible diaphragms shall be permitted to be designed for active pressure.

SECTION 1611
RAIN LOADS

1611.1 Design rain loads. Each portion of a roof shall be designed to sustain the load of rainwater that will accumulate on it if the primary drainage system for that portion is blocked plus the uniform load caused by water that rises above the inlet of the secondary drainage system at its design flow. The design rainfall shall be based on the 100-year hourly rainfall rate indicated in Figure 1611.1 or on other rainfall rates determined from *approved* local weather data.

$$R = 5.2(d_s + d_h) \quad \textbf{(Equation 16-35)}$$

For SI: $R = 0.0098(d_s + d_h)$

where:

d_h = Additional depth of water on the undeflected roof above the inlet of secondary drainage system at its design flow (in other words, the hydraulic head), in inches (mm).

d_s = Depth of water on the undeflected roof up to the inlet of secondary drainage system when the primary drainage system is blocked (in other words, the static head), in inches (mm).

R = Rain load on the undeflected roof, in psf (kN/m$_2$). Where the phrase "undeflected roof" is used, deflections from loads (including dead loads) shall not be considered when determining the amount of rain on the roof.

INTERNATIONAL CODE COUNCIL®
Copyright © 2019 ICC & NYSDOS. ALL RIGHTS RESERVED. Accessed by Lauren Gualdino (lgualdino@briarcliffmanor.org), (-) Order Number #100880972 on May 08, 2020 07:05 AM (PDT) pursuant to License Agreement with ICC & NYSDOS. No further reproduction, no

100880972

TABLE 1610.1
LATERAL SOIL LOAD

DESCRIPTION OF BACKFILL MATERIAL[c]	UNIFIED SOIL CLASSIFICATION	DESIGN LATERAL SOIL LOAD[a] (pound per square foot per foot of depth)	
		Active pressure	At-rest pressure
Well-graded, clean gravels; gravel-sand mixes	GW	30	60
Poorly graded clean gravels; gravel-sand mixes	GP	30	60
Silty gravels, poorly graded gravel-sand mixes	GM	40	60
Clayey gravels, poorly graded gravel-and-clay mixes	GC	45	60
Well-graded, clean sands; gravelly sand mixes	SW	30	60
Poorly graded clean sands; sand-gravel mixes	SP	30	60
Silty sands, poorly graded sand-silt mixes	SM	45	60
Sand-silt clay mix with plastic fines	SM-SC	45	100
Clayey sands, poorly graded sand-clay mixes	SC	60	100
Inorganic silts and clayey silts	ML	45	100
Mixture of inorganic silt and clay	ML-CL	60	100
Inorganic clays of low to medium plasticity	CL	60	100
Organic silts and silt clays, low plasticity	OL	Note b	Note b
Inorganic clayey silts, elastic silts	MH	Note b	Note b
Inorganic clays of high plasticity	CH	Note b	Note b
Organic clays and silty clays	OH	Note b	Note b

For SI: 1 pound per square foot per foot of depth = 0.157 kPa/m, 1 foot = 304.8 mm.

a. Design lateral soil loads are given for moist conditions for the specified soils at their optimum densities. Actual field conditions shall govern. Submerged or saturated soil pressures shall include the weight of the buoyant soil plus the hydrostatic loads.

b. Unsuitable as backfill material.

c. The definition and classification of soil materials shall be in accordance with ASTM D2487.

1611.2 Ponding instability. Susceptible bays of roofs shall be evaluated for ponding instability in accordance with Section 8.4 of ASCE 7.

1611.3 Controlled drainage. Roofs equipped with hardware to control the rate of drainage shall be equipped with a secondary drainage system at a higher elevation that limits accumulation of water on the roof above that elevation. Such roofs shall be designed to sustain the load of rainwater that will accumulate on them to the elevation of the secondary drainage system plus the uniform load caused by water that rises above the inlet of the secondary drainage system at its design flow determined from Section 1611.1. Such roofs shall be checked for ponding instability in accordance with Section 1611.2.

SECTION 1612
FLOOD LOADS

1612.1 General. Within *flood hazard areas* as established in Section 1612.3, all new construction of buildings, structures and portions of buildings and structures, including substantial improvement and restoration of substantial damage to buildings and structures, shall be designed and constructed to resist the effects of flood hazards and flood loads. For buildings that are located in more than one *flood hazard area*, the provisions associated with the most restrictive *flood hazard area* shall apply. ➡

1612.2 Design and construction. The design and construction of buildings and structures located in *flood hazard areas,* including *coastal high hazard areas* and *coastal A zones*, shall be in accordance with Chapter 5 of ASCE 7 and ASCE 24.

[NY] 1612.2.1 ASCE 7 and ASCE 24. The design flood elevation (DFE) specified in ASCE 7 and ASCE 24 shall be the design flood elevation determined in accordance with Sections 1612.3 through 1612.3.1.1.

[NY] 1612.3 Establishment of flood hazard areas. To establish flood hazard areas, each community regulated under Title 19, Part 1203 of the Official Compilation of Codes, Rules and Regulations of the State of New York (NYCRR) shall adopt a flood hazard map and supporting data. The flood hazard map shall include, at a minimum, the special flood hazard areas as identified by the Federal Emergency Management Agency in the Flood Insurance Study for the community, as amended or revised with:

1. The accompanying Flood Insurance Rate Map (FIRM),
2. The Flood Boundary and Floodway Map (FBFM), and
3. Related supporting data along with any revisions thereto.

The adopted flood hazard map and supporting data are hereby adopted by reference and declared to be part of this section.

INTERNATIONAL CODE COUNCIL®
Copyright © 2019 ICC & NYSDOS. ALL RIGHTS RESERVED. Accessed by Lauren Gualdino (lgualdino@briarcliffmanor.org), (-) Order Number #100880972 on May 08, 2020 07:05 AM (PDT) pursuant to License Agreement with ICC & NYSDOS. No further reproduction, no

100880972

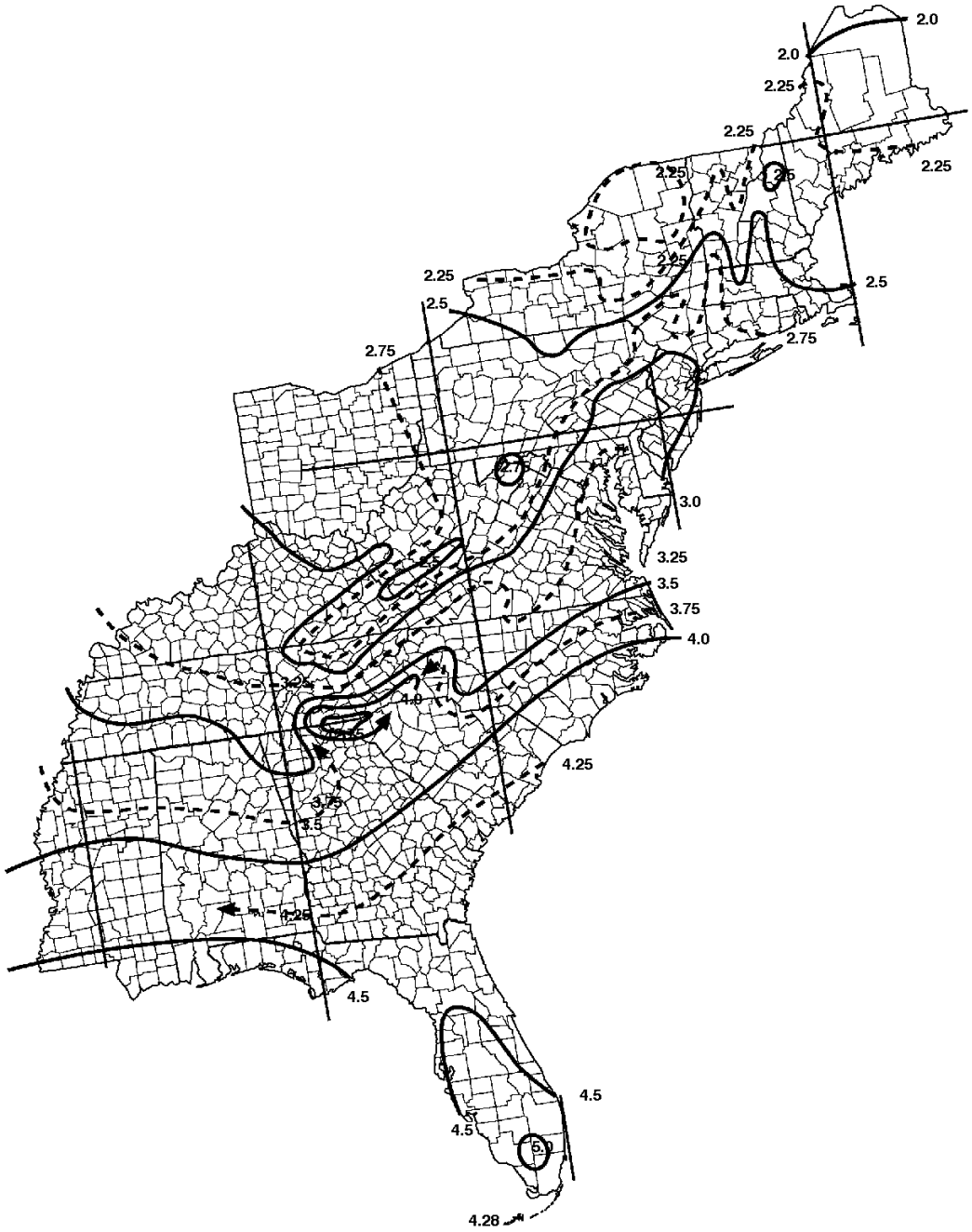

For SI: 1 inch = 25.4 mm.
Source: National Weather Service, National Oceanic and Atmospheric Administration, Washington, DC.

[NY] FIGURE 1611.1
100-YEAR, 1-HOUR RAINFALL (INCHES) EASTERN UNITED STATES

INTERNATIONAL CODE COUNCIL®
Copyright © 2019 ICC & NYSDOS. ALL RIGHTS RESERVED. Accessed by Lauren Gualdino (lgualdino@briarcliffmanor.org), (-) Order Number #100880972 on May 08, 2020 07:05 AM (PDT) pursuant to License Agreement with ICC & NYSDOS. No further reproduction, no

100880972

[NY] 1612.3.1 Design flood elevations. Where design flood elevations are not included in the *flood hazard areas* established in Section 1612.3, or where floodways are not designated, the *building official* is authorized to require the applicant to do one of the following:

1. Obtain and reasonably utilize any design flood elevation (DFE) and floodway data available from a federal, state or other source.
2. Determine the design flood elevation or floodway in accordance with accepted hydrologic and hydraulic engineering practices used to define special flood hazard areas. Determinations shall be undertaken by a *registered design professional* who shall document that the technical methods used reflect currently accepted engineering practice.

   Exception: Where it is not possible to obtain a design flood elevation in accordance with Section 1612.3.1, Items 1 and 2, the design flood elevation shall be 3 feet (914 mm) above the highest adjacent grade, where the highest adjacent grade is the natural ground elevation within the perimeter of the proposed building prior to construction.

[NY] 1612.3.1.1 Freeboard. The design flood elevation for the design and construction of buildings and structures shall be determined in accordance with Sections 1612.3 through 1612.3.1, as applicable, plus a freeboard of 2 feet (610 mm).

Exception: Freeboard is not required when the exception to 1612.3.1 is applied.

[NY] 1612.3.2 Determination of impacts. In riverine *flood hazard areas* where design flood elevations are specified but floodways have not been designated, the applicant shall provide a floodway analysis that demonstrates that the proposed work will not increase the design flood elevation more than 1 foot (305 mm) at any point within the jurisdiction of the applicable governing authority. For the purpose of applying this section, the design flood elevation shall be the elevation established in accordance with Sections 1612.3 through 1612.3.1 and shall not include the application of freeboard.

[NY] 1612.4 Flood hazard documentation. The following documentation shall be prepared and sealed by a *registered design professional* and submitted to the *building official*:

1. For construction in *flood hazard areas* other than *coastal high hazard areas* or *coastal A zones*:
   1.1. The elevation of the lowest floor, including the basement, as required in Section 106.2.6.2.
   1.2. For fully enclosed areas below the design flood elevation where provisions to allow for the automatic entry and exit of floodwaters do not meet the minimum requirements in Section 2.7.2.1 of ASCE 24, *construction documents* shall include a statement that the design will provide for equalization of hydrostatic flood forces in accordance with Section 2.7.2.2 of ASCE 24.
   1.3. For dry floodproofed nonresidential buildings, *construction documents* shall include a statement that the dry floodproofing is designed in accordance with ASCE 24.
2. For construction in *coastal high hazard areas* and *coastal A zones*:
   2.1. The elevation of the bottom of the lowest horizontal structural member as required in Section 106.2.6.2.
   2.2. *Construction documents* shall include a statement that the building is designed in accordance with ASCE 24, including that the pile or column foundation and building or structure to be attached thereto is designed to be anchored to resist flotation, collapse and lateral movement due to the effects of wind and flood loads acting simultaneously on all building components, and other load requirements of Chapter 16.
   2.3. For breakaway walls designed to have a resistance of more than 20 psf (0.96 kN/m^2) determined using allowable stress design, *construction documents* shall include a statement that the breakaway wall is designed in accordance with ASCE 24.

SECTION 1613
EARTHQUAKE LOADS

1613.1 Scope. Every structure, and portion thereof, including nonstructural components that are permanently attached to structures and their supports and attachments, shall be designed and constructed to resist the effects of earthquake motions in accordance with Chapters 11, 12, 13, 15, 17 and 18 of ASCE 7, as applicable. The *seismic design category* for a structure is permitted to be determined in accordance with Section 1613 or ASCE 7.

Exceptions:

1. Detached one- and two-family dwellings, assigned to *Seismic Design Category* A, B or C, or located where the mapped short-period spectral response acceleration, S_S, is less than 0.4 g.
2. The seismic force-resisting system of wood-frame buildings that conform to the provisions of Section 2308 are not required to be analyzed as specified in this section.
3. Agricultural storage structures intended only for incidental human occupancy.
4. Structures that require special consideration of their response characteristics and environment that are not addressed by this code or ASCE 7 and for which other regulations provide seismic criteria, such as vehicular bridges, electrical transmission towers, hydraulic structures, buried utility lines and their appurtenances and nuclear reactors.
5. References within ASCE 7 to Chapter 14 shall not apply, except as specifically required herein.

INTERNATIONAL CODE COUNCIL®
Copyright © 2019 ICC & NYSDOS. ALL RIGHTS RESERVED. Accessed by Lauren Gualdino (lgualdino@briarcliffmanor.org), (-) Order Number #100880972 on May 08, 2020 07:05 AM (PDT) pursuant to License Agreement with ICC & NYSDOS. No further reproduction, no

100880972

1613.2 Seismic ground motion values. Seismic ground motion values shall be determined in accordance with this section.

1613.2.1 Mapped acceleration parameters. The parameters S_S and S_1 shall be determined from the 0.2 and 1-second spectral response accelerations shown on Figures 1613.2.1(1) through 1613.2.1(8). Where S_1 is less than or equal to 0.04 and S_S is less than or equal to 0.15, the structure is permitted to be assigned *Seismic Design Category* A.

1613.2.2 Site class definitions. Based on the site soil properties, the site shall be classified as *Site Class* A, B, C, D, E or F in accordance with Chapter 20 of ASCE 7.

Where the soil properties are not known in sufficient detail to determine the site class, Site Class D, subjected to the requirements of Section 1613.2.3, shall be used unless the *building official* or geotechnical data determines that Site Class E or F soils are present at the site.

Where site investigations that are performed in accordance with Chapter 20 of ASCE 7 reveal rock conditions consistent with Site Class B, but site-specific velocity measurements are not made, the site coefficients F_a and F_v shall be taken at unity (1.0).

1613.2.3 Site coefficients and adjusted maximum considered earthquake spectral response acceleration parameters. The maximum considered earthquake spectral response acceleration for short periods, S_{MS}, and at 1-second period, S_{M1}, adjusted for *site class* effects shall be determined by Equations 16-36 and 16-37, respectively:

$$S_{MS} = F_a S_s \quad \textbf{(Equation 16-36)}$$

$$S_{M1} = F_v S_1 \quad \textbf{(Equation 16-37)}$$

but S_{MS} shall not be taken less than S_{M1} except when determining the seismic design category in accordance with Section 1613.2.5.

where:

F_a = Site coefficient defined in Table 1613.2.3(1).

F_v = Site coefficient defined in Table 1613.2.3(2).

S_S = The mapped spectral accelerations for short periods as determined in Section 1613.2.1.

S_1 = The mapped spectral accelerations for a 1-second period as determined in Section 1613.2.1.

Where Site Class D is selected as the default site class per Section 1613.2.2, the value of F_a shall be not less than 1.2. Where the simplified design procedure of ASCE 7 Section 12.14 is used, the value of F_a shall be determined in accordance with ASCE 7 Section 12.14.8.1, and the values of F_v, S_{MS} and S_{M1} need not be determined.

1613.2.4 Design spectral response acceleration parameters. Five-percent damped design spectral response acceleration at short periods, $S_{DS,}$ and at 1-second period, S_{D1}, shall be determined from Equations 16-38 and 16-39, respectively:

$$S_{DS} = \frac{2}{3} S_{MS} \quad \textbf{(Equation 16-38)}$$

$$S_{D1} = \frac{2}{3} S_{M1} \quad \textbf{(Equation 16-39)}$$

where:

S_{MS} = The maximum considered earthquake spectral response accelerations for short period as determined in Section 1613.2.3.

S_{M1} = The maximum considered earthquake spectral response accelerations for 1-second period as determined in Section 1613.2.3.

1613.2.5 Determination of seismic design category. Structures classified as *Risk Category* I, II or III that are located where the mapped spectral response acceleration parameter at 1-second period, S_1, is greater than or equal to 0.75 shall be assigned to *Seismic Design Category* E. Structures classified as *Risk Category* IV that are located where the mapped spectral response acceleration parameter at 1-second period, S_1, is greater than or equal to 0.75 shall be assigned to *Seismic Design Category* F. Other structures shall be assigned to a *seismic design category* based on their *risk category* and the design spectral response acceleration parameters, S_{DS} and S_{D1}, determined in accordance with Section 1613.2.4 or the site-specific procedures of ASCE 7. Each building and structure shall be assigned to the more severe *seismic design category* in accordance with Table 1613.2.5(1) or 1613.2.5(2), irrespective of the fundamental period of vibration of the structure, T.

1613.2.5.1 Alternative seismic design category determination. Where S_1 is less than 0.75, the *seismic design category* is permitted to be determined from Table 1613.2.5(1) alone where all of the following apply:

1. In each of the two orthogonal directions, the approximate fundamental period of the structure, T_a, in each of the two orthogonal directions determined in accordance with Section 12.8.2.1 of ASCE 7, is less than 0.8 T_s determined in accordance with Section 11.8.6 of ASCE 7.
2. In each of the two orthogonal directions, the fundamental period of the structure used to calculate the story drift is less than T_s.
3. Equation 12.8-2 of ASCE 7 is used to determine the seismic response coefficient, C_s.
4. The diaphragms are rigid or are permitted to be idealized as rigid in accordance with Section 12.3.1 of ASCE 7 or, for diaphragms permitted to be idealized as flexible in accordance with Section 12.3.1 of ASCE 7, the distances between vertical elements of the seismic force-resisting system do not exceed 40 feet (12 192 mm).

1613.2.5.2 Simplified design procedure. Where the alternate simplified design procedure of ASCE 7 is used, the *seismic design category* shall be determined in accordance with ASCE 7.

INTERNATIONAL CODE COUNCIL®
Copyright © 2019 ICC & NYSDOS. ALL RIGHTS RESERVED. Accessed by Lauren Gualdino (lgualdino@briarcliffmanor.org), (-) Order Number #100880972 on May 08, 2020 07:05 AM (PDT) pursuant to License Agreement with ICC & NYSDOS. No further reproduction, no



[NY] FIGURE 1613.2.1(1)
RISK-TARGETED MAXIMUM CONSIDERED EARTHQUAKE (MCE_R) GROUND MOTION RESPONSE ACCELERATIONS FOR THE CONTERMINOUS UNITED STATES OF 0.2-SECOND SPECTRAL RESPONSE ACCELERATION (5% OF CRITICAL DAMPING)

INTERNATIONAL CODE COUNCIL®
Copyright © 2019 ICC & NYSDOS. ALL RIGHTS RESERVED. Accessed by Lauren Gualdino (lgualdino@briarcliffmanor.org), (-) Order Number #100880972 on May 08, 2020 07:05 AM (PDT) pursuant to License Agreement with ICC & NYSDOS. No further reproduction, no

100880972

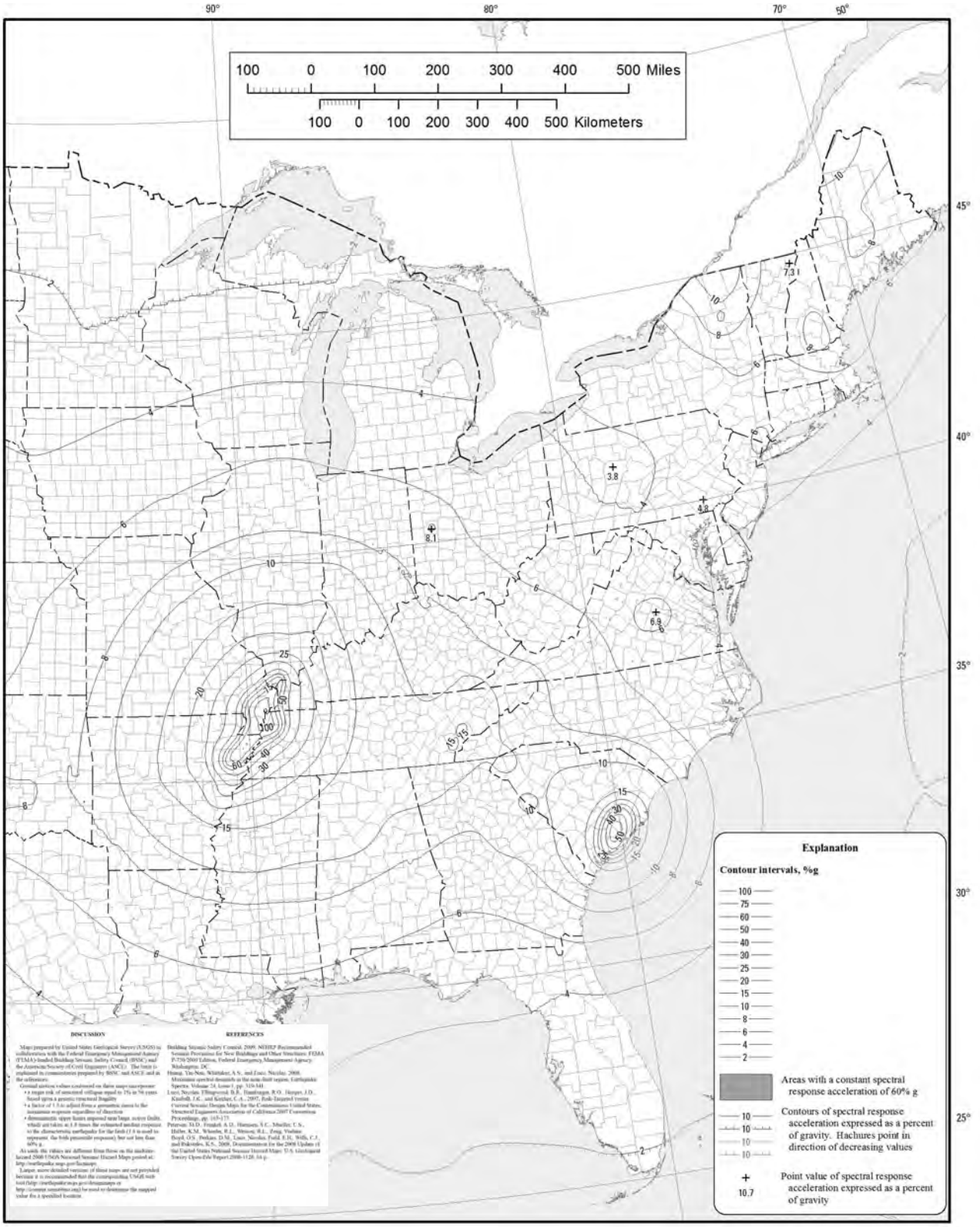

[NY] FIGURE 1613.2.1(2)
RISK-TARGETED MAXIMUM CONSIDERED EARTHQUAKE (MCE_R) GROUND MOTION RESPONSE ACCELERATIONS FOR THE CONTERMINOUS UNITED STATES OF 1-SECOND SPECTRAL RESPONSE ACCELERATION (5% OF CRITICAL DAMPING)

INTERNATIONAL CODE COUNCIL®
Copyright © 2019 ICC & NYSDOS. ALL RIGHTS RESERVED. Accessed by Lauren Gualdino (lgualdino@briarcliffmanor.org), (-) Order Number #100880972 on May 08, 2020 07:05 AM (PDT) pursuant to License Agreement with ICC & NYSDOS. No further reproduction, no

100880972

1613.3 Ballasted photovoltaic panel systems. Ballasted, roof-mounted *photovoltaic panel systems* need not be rigidly attached to the roof or supporting structure. Ballasted nonpenetrating systems shall be designed and installed only on roofs with slopes not more than one unit vertical in 12 units horizontal. Ballasted nonpenetrating systems shall be designed to resist sliding and uplift resulting from lateral and vertical forces as required by Section 1605, using a coefficient of friction determined by acceptable engineering principles. In structures assigned to *Seismic Design Category* C, D, E or F, ballasted nonpenetrating systems shall be designed to accommodate seismic displacement determined by nonlinear response-history or other approved analysis or shake-table testing, using input motions consistent with ASCE 7 lateral and vertical seismic forces for nonstructural components on roofs.

SECTION 1614
ATMOSPHERIC ICE LOADS

1614.1 General. Ice-sensitive structures shall be designed for atmospheric ice loads in accordance with Chapter 10 of ASCE 7.

SECTION 1615
TSUNAMI LOADS

1615.1 General. The design and construction of Risk Category III and IV buildings and structures located in the Tsunami Design Zones defined in the Tsunami Design Geodatabase shall be in accordance with Chapter 6 of ASCE 7, except as modified by this code.

SECTION 1616
STRUCTURAL INTEGRITY

1616.1 General. *High-rise buildings* that are assigned to *Risk Category* III or IV shall comply with the requirements of Section 1616.2 if they are frame structures, or Section 1616.3 if they are bearing wall structures.

1616.2 Frame structures. Frame structures shall comply with the requirements of this section.

1616.2.1 Concrete frame structures. Frame structures constructed primarily of reinforced or prestressed concrete, either cast-in-place or precast, or a combination of these, shall conform to the requirements of Section 4.10 of ACI 318. Where ACI 318 requires that nonprestressed

TABLE 1613.2.3(1)
VALUES OF SITE COEFFICIENT F_a [a]

SITE CLASS	MAPPED RISK TARGETED MAXIMUM CONSIDERED EARTHQUAKE (MCE_R) SPECTRAL RESPONSE ACCELERATION PARAMETER AT SHORT PERIOD					
	$S_s \le 0.25$	$S_s = 0.50$	$S_s = 0.75$	$S_s = 1.00$	$S_s = 1.25$	$S_s \ge 1.5$
A	0.8	0.8	0.8	0.8	0.8	0.8
B	0.9	0.9	0.9	0.9	0.9	0.9
C	1.3	1.3	1.2	1.2	1.2	1.2
D	1.6	1.4	1.2	1.1	1.0	1.0
E	2.4	1.7	1.3	Note b	Note b	Note b
F	Note b	Note b	Note b	Note b	Note b	Note b

a. Use straight-line interpolation for intermediate values of mapped spectral response acceleration at short period, S_s.
b. Values shall be determined in accordance with Section 11.4.8 of ASCE 7.

TABLE 1613.2.3(2)
VALUES OF SITE COEFFICIENT F_V [a]

SITE CLASS	MAPPED RISK TARGETED MAXIMUM CONSIDERED EARTHQUAKE (MCE_R) SPECTRAL RESPONSE ACCELERATION PARAMETER AT 1-SECOND PERIOD					
	$S_1 \le 0.1$	$S_1 = 0.2$	$S_1 = 0.3$	$S_1 = 0.4$	$S_1 = 0.5$	$S_1 \ge 0.6$
A	0.8	0.8	0.8	0.8	0.8	0.8
B	0.8	0.8	0.8	0.8	0.8	0.8
C	1.5	1.5	1.5	1.5	1.5	1.4
D	2.4	2.2[c]	2.0[c]	1.9[c]	1.8[c]	1.7[c]
E	4.2	3.3[c]	2.8[c]	2.4[c]	2.2[c]	2.0[c]
F	Note b	Note b	Note b	Note b	Note b	Note b

a. Use straight-line interpolation for intermediate values of mapped spectral response acceleration at 1-second period, S_1.
b. Values shall be determined in accordance with Section 11.4.8 of ASCE 7.
c. See requirements for site-specific ground motions in Section 11.4.8 of ASCE 7.

INTERNATIONAL CODE COUNCIL®
Copyright © 2019 ICC & NYSDOS. ALL RIGHTS RESERVED. Accessed by Lauren Gualdino (lgualdino@briarcliffmanor.org), (-) Order Number #100880972 on May 08, 2020 07:05 AM (PDT) pursuant to License Agreement with ICC & NYSDOS. No further reproduction, no

100880972

TABLE 1613.2.5(1)
SEISMIC DESIGN CATEGORY BASED ON SHORT-PERIOD (0.2 second) RESPONSE ACCELERATION

VALUE OF S_{DS}	RISK CATEGORY		
	I or II	III	IV
$S_{DS} < 0.167g$	A	A	A
$0.167g \le S_{DS} < 0.33g$	B	B	C
$0.33g \le S_{DS} < 0.50g$	C	C	D
$0.50g \le S_{DS}$	D	D	D

TABLE 1613.2.5(2)
SEISMIC DESIGN CATEGORY BASED ON 1-SECOND PERIOD RESPONSE ACCELERATION

VALUE OF S_{D1}	RISK CATEGORY		
	I or II	III	IV
$S_{D1} < 0.067g$	A	A	A
$0.067g \le S_{D1} < 0.133g$	B	B	C
$0.133g \le S_{D1} < 0.20g$	C	C	D
$0.20g \le S_{D1}$	D	D	D

reinforcing or prestressing steel pass through the region bounded by the longitudinal column reinforcement, that reinforcing or prestressing steel shall have a minimum nominal tensile strength equal to two-thirds of the required one-way vertical strength of the connection of the floor or roof system to the column in each direction of beam or slab reinforcement passing through the column.

Exception: Where concrete slabs with continuous reinforcement having an area not less than 0.0015 times the concrete area in each of two orthogonal directions are present and are either monolithic with or equivalently bonded to beams, girders or columns, the longitudinal reinforcing or prestressing steel passing through the column reinforcement shall have a nominal tensile strength of one-third of the required one-way vertical strength of the connection of the floor or roof system to the column in each direction of beam or slab reinforcement passing through the column.

1616.2.2 Structural steel, open web steel joist or joist girder, or composite steel and concrete frame structures. Frame structures constructed with a structural steel frame or a frame composed of open web steel joists, joist girders with or without other structural steel elements or a frame composed of composite steel or composite steel joists and reinforced concrete elements shall conform to the requirements of this section.

1616.2.2.1 Columns. Each column splice shall have the minimum design strength in tension to transfer the design dead and live load tributary to the column between the splice and the splice or base immediately below.

1616.2.2.2 Beams. End connections of all beams and girders shall have a minimum nominal axial tensile strength equal to the required vertical shear strength for *allowable stress design* (ASD) or two-thirds of the required shear strength for *load and resistance factor design* (LRFD) but not less than 10 kips (45 kN). For the purpose of this section, the shear force and the axial tensile force need not be considered to act simultaneously.

Exception: Where beams, girders, open web joist and joist girders support a concrete slab or concrete slab on metal deck that is attached to the beam or girder with not less than $^3/_8$-inch-diameter (9.5 mm) headed shear studs, at a spacing of not more than 12 inches (305 mm) on center, averaged over the length of the member, or other attachment having equivalent shear strength, and the slab contains continuous distributed reinforcement in each of two orthogonal directions with an area not less than 0.0015 times the concrete area, the nominal axial tension strength of the end connection shall be permitted to be taken as half the required vertical shear strength for ASD or one-third of the required shear strength for LRFD, but not less than 10 kips (45 kN).

1616.3 Bearing wall structures. Bearing wall structures shall have vertical ties in all load-bearing walls and longitudinal ties, transverse ties and perimeter ties at each floor level in accordance with this section and as shown in Figure 1616.3.

1616.3.1 Concrete wall structures. Precast bearing wall structures constructed solely of reinforced or prestressed concrete, or combinations of these shall conform to the requirements of Sections 16.2.4 and 16.2.5 of ACI 318.

1616.3.2 Other bearing wall structures. Ties in bearing wall structures other than those covered in Section 1616.3.1 shall conform to this section.

INTERNATIONAL CODE COUNCIL®
Copyright © 2019 ICC & NYSDOS. ALL RIGHTS RESERVED. Accessed by Lauren Gualdino (lgualdino@briarcliffmanor.org), (-) Order Number #100880972 on May 08, 2020 07:05 AM (PDT) pursuant to License Agreement with ICC & NYSDOS. No further reproduction, no

100880972

1616.3.2.1 Longitudinal ties. Longitudinal ties shall consist of continuous reinforcement in slabs; continuous or spliced decks or sheathing; continuous or spliced members framing to, within or across walls; or connections of continuous framing members to walls. Longitudinal ties shall extend across interior load-bearing walls and shall connect to exterior load-bearing walls and shall be spaced at not greater than 10 feet (3038 mm) on center. Ties shall have a minimum nominal tensile strength, T_T, given by Equation 16-40. For ASD the minimum nominal tensile strength shall be permitted to be taken as 1.5 times the allowable tensile stress times the area of the tie.

$$T_T = w\,LS \le \alpha_T S \qquad \textbf{(Equation 16-40)}$$

where:

L = The span of the horizontal element in the direction of the tie, between bearing walls, feet (m).

w = The weight per unit area of the floor or roof in the span being tied to or across the wall, psf (N/m^2).

S = The spacing between ties, feet (m).

α_T = A coefficient with a value of 1,500 pounds per foot (2.25 kN/m) for masonry bearing wall structures and a value of 375 pounds per foot (0.6 kN/m) for structures with bearing walls of cold-formed steel light-frame construction.

1616.3.2.2 Transverse ties. Transverse ties shall consist of continuous reinforcement in slabs; continuous or spliced decks or sheathing; continuous or spliced members framing to, within or across walls; or connections of continuous framing members to walls. Transverse ties shall be placed not farther apart than the spacing of load-bearing walls. Transverse ties shall have minimum nominal tensile strength T_T, given by Equation 16-24. For ASD the minimum nominal tensile strength shall be permitted to be taken as 1.5 times the allowable tensile stress times the area of the tie.

1616.3.2.3 Perimeter ties. Perimeter ties shall consist of continuous reinforcement in slabs; continuous or spliced decks or sheathing; continuous or spliced members framing to, within or across walls; or connections of continuous framing members to walls. Ties around the perimeter of each floor and roof shall be located within 4 feet (1219 mm) of the edge and shall provide a nominal strength in tension not less than T_p, given by Equation 16-41. For ASD the minimum nominal tensile strength shall be permitted to be taken as 1.5 times the allowable tensile stress times the area of the tie.

$$T_p = 200w \le \beta_T \qquad \textbf{(Equation 16-41)}$$

For SI: $T_p = 90.7w \le \beta_T$

where:

w = As defined in Section 1616.3.2.1.

β_T = A coefficient with a value of 16,000 pounds (7200 kN) for structures with masonry bearing walls and a value of 4,000 pounds (1300 kN) for structures with bearing walls of cold-formed steel light-frame construction.

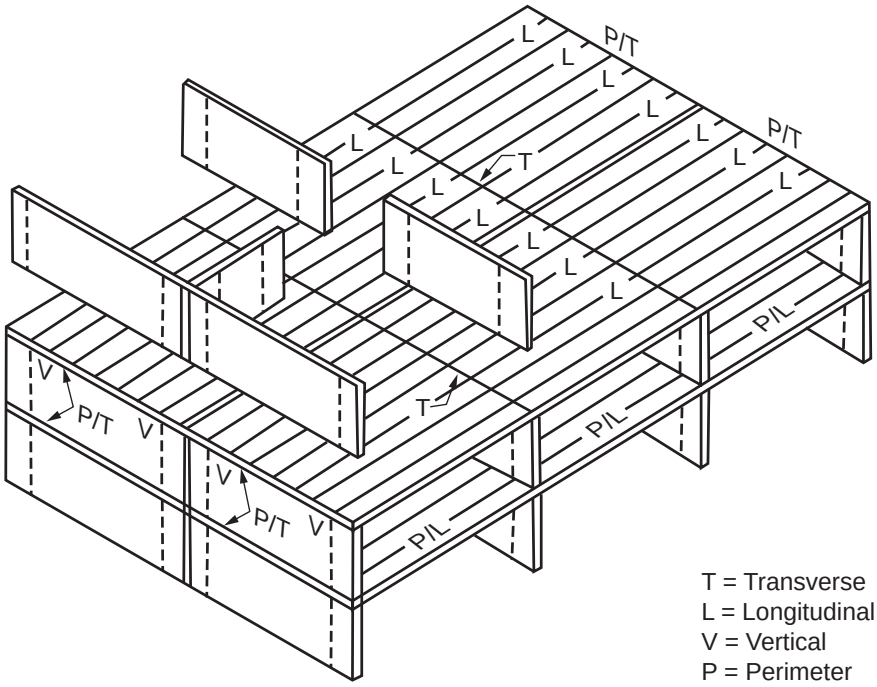

FIGURE 1616.3
LONGITUDINAL, PERIMETER, TRANSVERSE AND VERTICAL TIES

INTERNATIONAL CODE COUNCIL®
Copyright © 2019 ICC & NYSDOS. ALL RIGHTS RESERVED. Accessed by Lauren Gualdino (lgualdino@briarcliffmanor.org), (-) Order Number #100880972 on May 08, 2020 07:05 AM (PDT) pursuant to License Agreement with ICC & NYSDOS. No further reproduction, no

100880972

1616.3.2.4 Vertical ties. Vertical ties shall consist of continuous or spliced reinforcing, continuous or spliced members, wall sheathing or other engineered systems. Vertical tension ties shall be provided in bearing walls and shall be continuous over the height of the building. The minimum nominal tensile strength for vertical ties within a bearing wall shall be equal to the weight of the wall within that *story* plus the weight of the diaphragm tributary to the wall in the *story* below. Not fewer than two ties shall be provided for each wall. The strength of each tie need not exceed 3,000 pounds per foot (450 kN/m) of wall tributary to the tie for walls of masonry construction or 750 pounds per foot (140 kN/m) of wall tributary to the tie for walls of cold-formed steel light-frame construction.

INTERNATIONAL CODE COUNCIL®
Copyright © 2019 ICC & NYSDOS. ALL RIGHTS RESERVED. Accessed by Lauren Gualdino (lgualdino@briarcliffmanor.org), (-) Order Number #100880972 on May 08, 2020 07:05 AM (PDT) pursuant to License Agreement with ICC & NYSDOS. No further reproduction, no

100880972

INTERNATIONAL CODE COUNCIL®
Copyright © 2019 ICC & NYSDOS. ALL RIGHTS RESERVED. Accessed by Lauren Gualdino (lgualdino@briarcliffmanor.org), (-) Order Number #100880972 on May 08, 2020 07:05 AM (PDT) pursuant to License Agreement with ICC & NYSDOS. No further reproduction, no

100880972

CHAPTER 17
SPECIAL INSPECTIONS AND TESTS

SECTION 1701
GENERAL

1701.1 Scope. The provisions of this chapter shall govern the quality, workmanship and requirements for materials covered. Materials of construction and tests shall conform to the applicable standards listed in this code.

SECTION 1702
NEW MATERIALS

1702.1 General. New building materials, equipment, appliances, systems or methods of construction not provided for in this code, and any material of questioned suitability proposed for use in the construction of a building or structure, shall be subjected to the tests prescribed in this chapter and in the approved rules to determine character, quality and limitations of use.

SECTION 1703
APPROVALS

1703.1 Approved agency. An approved agency shall provide all information as necessary for the *building official* to determine that the agency meets the applicable requirements specified in Sections 1703.1.1 through 1703.1.3.

1703.1.1 Independence. An *approved agency* shall be objective, competent and independent from the contractor responsible for the work being inspected. The agency shall disclose to the *building official* and the *registered design professional in responsible charge* possible conflicts of interest so that objectivity can be confirmed.

1703.1.2 Equipment. An *approved agency* shall have adequate equipment to perform required tests. The equipment shall be periodically calibrated.

1703.1.3 Personnel. An *approved agency* shall employ experienced personnel educated in conducting, supervising and evaluating tests and *special inspections*.

1703.2 Written approval. Any material, appliance, equipment, system or method of construction meeting the requirements of this code shall be *approved* in writing after satisfactory completion of the required tests and submission of required test reports.

1703.3 Record of approval. For any material, appliance, equipment, system or method of construction that has been *approved*, a record of such approval, including the conditions and limitations of the approval, shall be kept on file in the *building official's* office and shall be available for public review at appropriate times.

1703.4 Performance. Specific information consisting of test reports conducted by an *approved* agency in accordance with the appropriate referenced standards, or other such information as necessary, shall be provided for the *building official* to determine that the product, material or assembly meets the applicable code requirements.

1703.4.1 Research and investigation. Sufficient technical data shall be submitted to the *building official* to substantiate the proposed use of any product, material or assembly. If it is determined that the evidence submitted is satisfactory proof of performance for the use intended, the *building official* shall approve the use of the product, material or assembly subject to the requirements of this code. The costs, reports and investigations required under these provisions shall be paid by the owner or the owner's authorized agent.

1703.4.2 Research reports. Supporting data, where necessary to assist in the approval of products, materials or assemblies not specifically provided for in this code, shall consist of valid research reports from *approved* sources.

1703.5 Labeling. Products, materials or assemblies required to be *labeled* shall be *labeled* in accordance with the procedures set forth in Sections 1703.5.1 through 1703.5.4.

1703.5.1 Testing. An *approved agency* shall test a representative sample of the product, material or assembly being *labeled* to the relevant standard or standards. The *approved agency* shall maintain a record of the tests performed. The record shall provide sufficient detail to verify compliance with the test standard.

1703.5.2 Inspection and identification. The *approved agency* shall periodically perform an inspection, which shall be in-plant if necessary, of the product or material that is to be *labeled*. The inspection shall verify that the labeled product, material or assembly is representative of the product, material or assembly tested.

1703.5.3 Label information. The *label* shall contain the manufacturer's identification, model number, serial number or definitive information describing the performance characteristics of the product, material or assembly and the *approved agency's* identification.

1703.5.4 Method of labeling. Information required to be permanently identified on the product, material or assembly shall be acid etched, sand blasted, ceramic fired, laser etched, embossed or of a type that, once applied, cannot be removed without being destroyed.

1703.6 Evaluation and follow-up inspection services. Where structural components or other items regulated by this code are not visible for inspection after completion of a prefabricated assembly, the owner or the owner's authorized agent shall submit a report of each prefabricated assembly. The report shall indicate the complete details of the assembly, including a description of the assembly and its components, the basis upon which the assembly is being evaluated, test results and similar information and other data as necessary for the *building official* to determine conformance to this code. Such a report shall be *approved* by the *building official*.

INTERNATIONAL CODE COUNCIL®
Copyright © 2019 ICC & NYSDOS. ALL RIGHTS RESERVED. Accessed by Lauren Gualdino (lgualdino@briarcliffmanor.org), (-) Order Number #100880972 on May 08, 2020 07:05 AM (PDT) pursuant to License Agreement with ICC & NYSDOS. No further reproduction, no

100880972

1703.6.1 Follow-up inspection. The owner or the owner's authorized agent shall provide for *special inspections* of fabricated items in accordance with Section 1704.2.5.

1703.6.2 Test and inspection records. Copies of necessary test and *special inspection* records shall be filed with the building official.

SECTION 1704
SPECIAL INSPECTIONS AND TESTS, CONTRACTOR RESPONSIBILITY AND STRUCTURAL OBSERVATION

1704.1 General. Special inspections and tests, statements of special inspections, responsibilities of contractors, submittals to the *building official* and structural observations shall meet the applicable requirements of this section.

[NY] 1704.2 Special inspections and tests. Where application is made to the *building official* for construction as specified in Section 105, the owner or the owner's authorized agent, other than the contractor, shall employ one or more *approved agencies* to provide *special inspections* and tests during construction on the types of work specified in Section 1705 and identify the *approved agencies* to the *building official*. These *special inspections* and tests are in addition to the inspections by the *building official* that are identified in Section 105.

Exceptions:

1. *Special inspections* and tests are not required for construction of a minor nature or as warranted by conditions in the jurisdiction as *approved* by the *building official.*
2. Unless otherwise required by the *building official*, *special inspections* and tests are not required for Group U occupancies that are accessory to a residential occupancy including, but not limited to, those listed in Section 312.1.
3. *Special inspections* and tests are not required for portions of structures designed and constructed in accordance with the cold-formed steel light-frame construction provisions of Section 2211.1.2 or the conventional light-frame construction provisions of Section 2308.
4. The contractor is permitted to employ the *approved agencies* where the contractor is also the owner.

1704.2.1 Special inspector qualifications. Prior to the start of the construction, the *approved agencies* shall provide written documentation to the *building official* demonstrating the competence and relevant experience or training of the *special inspectors* who will perform the *special inspections* and tests during construction. Experience or training shall be considered to be relevant where the documented experience or training is related in complexity to the same type of *special inspection* or testing activities for projects of similar complexity and material qualities. These qualifications are in addition to qualifications specified in other sections of this code.

The *registered design professional in responsible charge* and engineers of record involved in the design of the project are permitted to act as the *approved agency* and their personnel are permitted to act as special inspectors for the work designed by them, provided they qualify as special inspectors.

1704.2.2 Access for special inspection. The construction or work for which *special inspection* or testing is required shall remain accessible and exposed for *special inspection* or testing purposes until completion of the required *special inspections* or tests.

[NY] 1704.2.3 Statement of special inspections. The applicant shall submit a statement of *special inspections* in accordance with Section 106.1 as a condition for permit issuance. This statement shall be in accordance with Section 1704.3.

Exception: A statement of *special inspections* is not required for portions of structures designed and constructed in accordance with the cold-formed steel light-frame construction provisions of Section 2211.1.2 or the conventional light-frame construction provisions of Section 2308.

1704.2.4 Report requirement. *Approved agencies* shall keep records of special inspections and tests. The *approved agency* shall submit reports of *special* inspections and tests to the *building official* and to the *registered design professional in responsible charge*. Reports shall indicate that work inspected or tested was or was not completed in conformance to *approved construction documents*. Discrepancies shall be brought to the immediate attention of the contractor for correction. If they are not corrected, the discrepancies shall be brought to the attention of the *building official* and to the *registered design professional in responsible charge* prior to the completion of that phase of the work. A final report documenting required *special inspections* and tests, and correction of any discrepancies noted in the inspections or tests, shall be submitted at a point in time agreed upon prior to the start of work by the owner or the owner's authorized agent to the *building official*.

1704.2.5 Special inspection of fabricated items. Where fabrication of structural, load-bearing or lateral load-resisting members or assemblies is being conducted on the premises of a fabricator's shop, *special inspections* of the *fabricated items* shall be performed during fabrication, except where the fabricator has been approved to perform work without special inspections in accordance with Section 1704.2.5.1.

1704.2.5.1 Fabricator approval. *Special inspections* during fabrication are not required where the work is done on the premises of a fabricator approved to perform such work without *special inspection.* Approval shall be based on review of the fabricator's written fabrication procedures and quality control manuals that provide a basis for control of materials and workmanship, with periodic auditing of fabrication and quality control practices by an approved agency or the *building official*. At completion of fabrication, the *approved* fabricator shall submit a *certificate of compliance* to the owner or the owner's authorized agent for submittal to the *building official* as specified in Section 1704.5 stat-

INTERNATIONAL CODE COUNCIL®
Copyright © 2019 ICC & NYSDOS. ALL RIGHTS RESERVED. Accessed by Lauren Gualdino (lgualdino@briarcliffmanor.org), (-) Order Number #100880972 on May 08, 2020 07:05 AM (PDT) pursuant to License Agreement with ICC & NYSDOS. No further reproduction, no

100880972

ing that the work was performed in accordance with the *approved construction documents.*

1704.3 Statement of special inspections. Where *special inspections* or tests are required by Section 1705, the *registered design professional in responsible charge* shall prepare a statement of *special inspections* in accordance with Section 1704.3.1 for submittal by the applicant in accordance with Section 1704.2.3.

Exception: The statement of *special inspections* is permitted to be prepared by a qualified person *approved* by the *building official* for construction not designed by a *registered design professional*.

1704.3.1 Content of statement of special inspections. The statement of *special inspections* shall identify the following:

1. The materials, systems, components and work required to have *special inspections* or tests by the *building official* or by the *registered design professional* responsible for each portion of the work.
2. The type and extent of each *special inspection*.
3. The type and extent of each test.
4. Additional requirements for *special inspections* or tests for seismic or wind resistance as specified in Sections 1705.11, 1705.12 and 1705.13.
5. For each type of *special inspection*, identification as to whether it will be continuous *special inspection*, periodic *special inspection* or performed in accordance with the notation used in the referenced standard where the inspections are defined.

1704.3.2 Seismic requirements in the statement of special inspections. Where Section 1705.12 or 1705.13 specifies *special inspections* or tests for seismic resistance, the statement of *special inspections* shall identify the designated seismic systems and seismic force-resisting systems that are subject to the *special inspections* or tests.

1704.3.3 Wind requirements in the statement of special inspections. Where Section 1705.11 specifies *special inspection* for wind resistance, the statement of *special inspections* shall identify the main windforce-resisting systems and wind-resisting components that are subject to *special inspections*.

1704.4 Contractor responsibility. Each contractor responsible for the construction of a main wind- or seismic force-resisting system, designated seismic system or a wind- or seismic force-resisting component listed in the statement of special inspections shall submit a written statement of responsibility to the *building official* and the owner or the owner's authorized agent prior to the commencement of work on the system or component. The contractor's statement of responsibility shall contain acknowledgement of awareness of the special requirements contained in the statement of *special inspections*.

1704.5 Submittals to the building official. In addition to the submittal of reports of *special inspections* and tests in accordance with Section 1704.2.4, reports and certificates shall be submitted by the owner or the owner's authorized agent to the *building official* for each of the following:

1. *Certificates of compliance* for the fabrication of structural, load-bearing or lateral load-resisting members or assemblies on the premises of an *approved fabricator* in accordance with Section 1704.2.5.1.
2. *Certificates of compliance* for the seismic qualification of nonstructural components, supports and attachments in accordance with Section 1705.13.2.
3. *Certificates of compliance* for *designated seismic systems* in accordance with Section 1705.13.3.
4. Reports of preconstruction tests for shotcrete in accordance with Section 1908.5.
5. *Certificates of compliance* for open web steel joists and joist girders in accordance with Section 2207.5.
6. Reports of material properties verifying compliance with the requirements of AWS D1.4 for weldability as specified in Section 26.6.4 of ACI 318 for reinforcing bars in concrete complying with a standard other than ASTM A706 that are to be welded.
7. Reports of mill tests in accordance with Section 20.2.2.5 of ACI 318 for reinforcing bars complying with ASTM A615 and used to resist earthquake-induced flexural or axial forces in the special moment frames, special structural walls or coupling beams connecting special structural walls of *seismic force-resisting systems* in *structures* assigned to *Seismic Design Category* B, C, D, E or F.

[NY] 1704.6 Structural observations. Where required by the provisions of Section 1704.6.1, 1704.6.2 or 1704.6.3, the owner or the owner's authorized agent shall employ a *registered design professional* to perform structural observations. Structural observation does not include or waive the responsibility for the inspections in Section 105 or the *special inspections* in Section 1705 or other sections of this code.

Prior to the commencement of observations, the structural observer shall submit to the *building official* a written statement identifying the frequency and extent of structural observations.

At the conclusion of the work included in the permit, the structural observer shall submit to the *building official* a written statement that the site visits have been made and identify any reported deficiencies that, to the best of the structural observer's knowledge, have not been resolved.

1704.6.1 Structural observations for structures. Structural observations shall be provided for those structures where one or more of the following conditions exist:

1. The structure is classified as *Risk Category IV*.
2. The structure is a *high-rise building.*
3. Such observation is required by the *registered design professional* responsible for the structural design.
4. Such observation is specifically required by the *building official.*

1704.6.2 Structural observations for seismic resistance. Structural observations shall be provided for those struc-

INTERNATIONAL CODE COUNCIL®
Copyright © 2019 ICC & NYSDOS. ALL RIGHTS RESERVED. Accessed by Lauren Gualdino (lgualdino@briarcliffmanor.org), (-) Order Number #100880972 on May 08, 2020 07:05 AM (PDT) pursuant to License Agreement with ICC & NYSDOS. No further reproduction, no

100880972

tures assigned to *Seismic Design Category* D, E or F where one or more of the following conditions exist:

1. The structure is classified as *Risk Category* III or IV.
2. The structure is assigned to *Seismic Design Category* E, is classified as *Risk Category* I or II, and is greater than two *stories above* the *grade plane*.

1704.6.3 Structural observations for wind resistance. Structural observations shall be provided for those structures sited where *V* is 130 mph (58 m/sec) or greater and the structure is classified as *Risk Category* III or IV.

SECTION 1705
REQUIRED SPECIAL INSPECTIONS AND TESTS

1705.1 General. *Special inspections* and tests of elements and nonstructural components of buildings and structures shall meet the applicable requirements of this section.

1705.1.1 Special cases. *Special inspections* and tests shall be required for proposed work that is, in the opinion of the building official, unusual in its nature, such as, but not limited to, the following examples:

1. Construction materials and systems that are alternatives to materials and systems prescribed by this code.
2. Unusual design applications of materials described in this code.
3. Materials and systems required to be installed in accordance with additional manufacturer's instructions that prescribe requirements not contained in this code or in standards referenced by this code.

1705.2 Steel construction. The *special inspections* and nondestructive testing of steel construction in buildings, structures, and portions thereof shall be in accordance with this section.

Exception: *Special inspections* of the steel fabrication process shall not be required where the fabrication process for the entire building or structure does not include any welding, thermal cutting or heating operation of any kind. In such cases, the fabricator shall be required to submit a detailed procedure for material control that demonstrates the fabricator's ability to maintain suitable records and procedures such that, at any time during the fabrication process, the material specification and grade for the main stress-carrying elements are capable of being determined. Mill test reports shall be identifiable to the main stress-carrying elements where required by the *approved construction documents*.

1705.2.1 Structural steel. *Special inspections* and nondestructive testing of *structural steel elements* in buildings, structures and portions thereof shall be in accordance with the quality assurance inspection requirements of AISC 360.

Exception: *Special inspection* of railing systems composed of *structural steel elements* shall be limited to welding inspection of welds at the base of cantilevered rail posts.

1705.2.2 Cold-formed steel deck. *Special inspections* and qualification of welding special inspectors for cold-formed steel floor and roof deck shall be in accordance with the quality assurance inspection requirements of SDI QA/QC.

1705.2.3 Open-web steel joists and joist girders. *Special inspections* of open-web steel joists and joist girders in buildings, structures and portions thereof shall be in accordance with Table 1705.2.3.

1705.2.4 Cold-formed steel trusses spanning 60 feet or greater. Where a cold-formed steel truss clear span is 60 feet (18 288 mm) or greater, the special inspector shall verify that the temporary installation restraint/bracing and the permanent individual truss member restraint/bracing are installed in accordance with the *approved* truss submittal package.

1705.3 Concrete construction. *Special inspections* and tests of concrete construction shall be performed in accordance with this section and Table 1705.3.

Exception: *Special inspections* and tests shall not be required for:

1. Isolated spread concrete footings of buildings three stories or less above *grade plane* that are fully supported on earth or rock.
2. Continuous concrete footings supporting walls of buildings three stories or less above *grade plane* that are fully supported on earth or rock where:
   2.1. The footings support walls of light-frame construction.
   2.2. The footings are designed in accordance with Table 1809.7.
   2.3. The structural design of the footing is based on a specified compressive strength, f'_c, not more than 2,500 pounds per square inch (psi) (17.2 MPa), regardless of the compressive strength specified in the *approved construction documents* or used in the footing construction.
3. Nonstructural concrete slabs supported directly on the ground, including prestressed slabs on grade, where the effective prestress in the concrete is less than 150 psi (1.03 MPa).
4. Concrete foundation walls constructed in accordance with Table 1807.1.6.2.
5. Concrete patios, driveways and sidewalks, on grade.

1705.3.1 Welding of reinforcing bars. *Special inspections* of welding and qualifications of *special inspectors* for reinforcing bars shall be in accordance with the requirements of AWS D1.4 for *special inspection* and of AWS D1.4 for special inspector qualification.

1705.3.2 Material tests. In the absence of sufficient data or documentation providing evidence of conformance to quality standards for materials in Chapters 19 and 20 of ACI 318, the *building official* shall require testing of materials in accordance with the appropriate standards and criteria for the material in Chapters 19 and 20 of ACI 318.

INTERNATIONAL CODE COUNCIL®
Copyright © 2019 ICC & NYSDOS. ALL RIGHTS RESERVED. Accessed by Lauren Gualdino (lgualdino@briarcliffmanor.org), (-) Order Number #100880972 on May 08, 2020 07:05 AM (PDT) pursuant to License Agreement with ICC & NYSDOS. No further reproduction, no

100880972

TABLE 1705.2.3
REQUIRED SPECIAL INSPECTIONS OF OPEN-WEB STEEL JOISTS AND JOIST GIRDERS

TYPE	CONTINUOUS SPECIAL INSPECTION	PERIODIC SPECIAL INSPECTION	REFERENCED STANDARD[a]
1. Installation of open-web steel joists and joist girders.			
a. End connections – welding or bolted.	—	X	SJI specifications listed in Section 2207.1.
b. Bridging – horizontal or diagonal.	—	—	—
1. Standard bridging.	—	X	SJI specifications listed in Section 2207.1.
2. Bridging that differs from the SJI specifications listed in Section 2207.1.	—	X	—

For SI: 1 inch = 25.4 mm.

a. Where applicable, see Section 1705.12, Special inspections for seismic resistance.

1705.4 Masonry construction. *Special inspections* and tests of masonry construction shall be performed in accordance with the quality assurance program requirements of TMS 402 and TMS 602.

Exception: *Special inspections* and tests shall not be required for:

1. Empirically designed masonry, glass unit masonry or masonry veneer designed in accordance with Section 2109, 2110 or Chapter 14, respectively, where they are part of a structure classified as *Risk Category* I, II or III.
2. Masonry foundation walls constructed in accordance with Table 1807.1.6.3(1), 1807.1.6.3(2), 1807.1.6.3(3) or 1807.1.6.3(4).
3. Masonry fireplaces, masonry heaters or masonry chimneys installed or constructed in accordance with Section 2111, 2112 or 2113, respectively.

1705.4.1 Empirically designed masonry, glass unit masonry and masonry veneer in Risk Category IV. *Special inspections* and tests for empirically designed masonry, glass unit masonry or masonry veneer designed in accordance with Section 2109, 2110 or Chapter 14, respectively, where they are part of a structure classified as *Risk Category* IV shall be performed in accordance with TMS 602, Level 2.

1705.4.2 Vertical masonry foundation elements. *Special inspections* and tests of *vertical masonry foundation elements* shall be performed in accordance with Section 1705.4.

1705.5 Wood construction. *Special inspections* of prefabricated wood structural elements and assemblies shall be in accordance with Section 1704.2.5. *Special inspections* of site-built assemblies shall be in accordance with this section.

1705.5.1 High-load diaphragms. High-load diaphragms designed in accordance with Section 2306.2 shall be installed with *special inspections* as indicated in Section 1704.2. The special inspector shall inspect the wood structural panel sheathing to ascertain whether it is of the grade and thickness shown on the *approved construction documents*. Additionally, the special inspector must verify the nominal size of framing members at adjoining panel edges, the nail or staple diameter and length, the number of fastener lines and that the spacing between fasteners in each line and at edge margins agrees with the *approved construction documents*.

1705.5.2 Metal-plate-connected wood trusses spanning 60 feet or greater. Where a truss clear span is 60 feet (18 288 mm) or greater, the special inspector shall verify that the temporary installation restraint/bracing and the permanent individual truss member restraint/bracing are installed in accordance with the approved truss submittal package.

1705.6 Soils. *Special inspections* and tests of existing site soil conditions, fill placement and load-bearing requirements shall be performed in accordance with this section and Table 1705.6. The *approved* geotechnical report and the *construction documents* prepared by the *registered design professionals* shall be used to determine compliance. During fill placement, the special inspector shall verify that proper materials and procedures are used in accordance with the provisions of the *approved* geotechnical report.

Exception: Where Section 1803 does not require reporting of materials and procedures for fill placement, the special inspector shall verify that the in-place dry density of the compacted fill is not less than 90 percent of the maximum dry density at optimum moisture content determined in accordance with ASTM D1557.

1705.7 Driven deep foundations. *Special inspections* and tests shall be performed during installation of driven deep foundation elements as specified in Table 1705.7. The approved geotechnical report and the *construction documents* prepared by the *registered design professionals* shall be used to determine compliance.

1705.8 Cast-in-place deep foundations. *Special inspections* and tests shall be performed during installation of cast-in-place deep foundation elements as specified in Table 1705.8. The *approved* geotechnical report and the *construction documents* prepared by the *registered design professionals* shall be used to determine compliance.

1705.9 Helical pile foundations. *Continuous special inspections* shall be performed during installation of helical pile foundations. The information recorded shall include installation equipment used, pile dimensions, tip elevations, final depth, final installation torque and other pertinent installation data as required by the *registered design professional in responsible charge*. The *approved* geotechnical report and the *construction documents* prepared by the *registered design professional* shall be used to determine compliance.

INTERNATIONAL CODE COUNCIL®
Copyright © 2019 ICC & NYSDOS. ALL RIGHTS RESERVED. Accessed by Lauren Gualdino (lgualdino@briarcliffmanor.org), (-) Order Number #100880972 on May 08, 2020 07:05 AM (PDT) pursuant to License Agreement with ICC & NYSDOS. No further reproduction, no

100880972

TABLE 1705.3
REQUIRED SPECIAL INSPECTIONS AND TESTS OF CONCRETE CONSTRUCTION

TYPE	CONTINUOUS SPECIAL INSPECTION	PERIODIC SPECIAL INSPECTION	REFERENCED STANDARD[a]	IBC REFERENCE
1. Inspect reinforcement, including prestressing tendons, and verify placement.	—	X	ACI 318: Ch. 20, 25.2, 25.3, 26.6.1-26.6.3	1908.4
2. Reinforcing bar welding: a. Verify weldability of reinforcing bars other than ASTM A706; b. Inspect single-pass fillet welds, maximum $^5/_{16}$″; and c. Inspect all other welds.	— X	X X	AWS D1.4 ACI 318: 26.6.4	—
3. Inspect anchors cast in concrete.	—	X	ACI 318: 17.8.2	—
4. Inspect anchors post-installed in hardened concrete members.[b] a. Adhesive anchors installed in horizontally or upwardly inclined orientations to resist sustained tension loads. b. Mechanical anchors and adhesive anchors not defined in 4.a.	X	 X	ACI 318: 17.8.2.4 ACI 318: 17.8.2	—
5. Verify use of required design mix.	—	X	ACI 318: Ch. 19, 26.4.3, 26.4.4	1904.1, 1904.2, 1908.2, 1908.3
6. Prior to concrete placement, fabricate specimens for strength tests, perform slump and air content tests, and determine the temperature of the concrete.	X	—	ASTM C172 ASTM C31 ACI 318: 26.5, 26.12	1908.10
7. Inspect concrete and shotcrete placement for proper application techniques.	X	—	ACI 318: 26.5	1908.6, 1908.7, 1908.8
8. Verify maintenance of specified curing temperature and techniques.	—	X	ACI 318: 26.5.3-26.5.5	1908.9
9. Inspect prestressed concrete for: a. Application of prestressing forces; and b. Grouting of bonded prestressing tendons.	 X X	 — —	ACI 318: 26.10	—
10. Inspect erection of precast concrete members.	—	X	ACI 318: 26.9	—
11. Verify in-situ concrete strength, prior to stressing of tendons in post-tensioned concrete and prior to removal of shores and forms from beams and structural slabs.	—	X	ACI 318: 26.11.2	—
12. Inspect formwork for shape, location and dimensions of the concrete member being formed.	—	X	ACI 318: 26.11.1.2(b)	—

For SI: 1 inch = 25.4 mm.

a. Where applicable, see Section 1705.12, Special inspections for seismic resistance.

b. Specific requirements for special inspection shall be included in the research report for the anchor issued by an approved source in accordance with 17.8.2 in ACI 318, or other qualification procedures. Where specific requirements are not provided, special inspection requirements shall be specified by the registered design professional and shall be approved by the building official prior to the commencement of the work.

INTERNATIONAL CODE COUNCIL®
Copyright © 2019 ICC & NYSDOS. ALL RIGHTS RESERVED. Accessed by Lauren Gualdino (lgualdino@briarcliffmanor.org), (-) Order Number #100880972 on May 08, 2020 07:05 AM (PDT) pursuant to License Agreement with ICC & NYSDOS. No further reproduction, no

100880972

TABLE 1705.6
REQUIRED SPECIAL INSPECTIONS AND TESTS OF SOILS

TYPE	CONTINUOUS SPECIAL INSPECTION	PERIODIC SPECIAL INSPECTION
1. Verify materials below shallow foundations are adequate to achieve the design bearing capacity.	—	X
2. Verify excavations are extended to proper depth and have reached proper material.	—	X
3. Perform classification and testing of compacted fill materials.	—	X
4. Verify use of proper materials, densities and lift thicknesses during placement and compaction of compacted fill.	X	—
5. Prior to placement of compacted fill, inspect subgrade and verify that site has been prepared properly.	—	X

TABLE 1705.7
REQUIRED SPECIAL INSPECTIONS AND TESTS OF DRIVEN DEEP FOUNDATION ELEMENTS

TYPE	CONTINUOUS SPECIAL INSPECTION	PERIODIC SPECIAL INSPECTION
1. Verify element materials, sizes and lengths comply with the requirements.	X	—
2. Determine capacities of test elements and conduct additional load tests, as required.	X	—
3. Inspect driving operations and maintain complete and accurate records for each element.	X	—
4. Verify placement locations and plumbness, confirm type and size of hammer, record number of blows per foot of penetration, determine required penetrations to achieve design capacity, record tip and butt elevations and document any damage to foundation element.	X	—
5. For steel elements, perform additional special inspections in accordance with Section 1705.2.	—	—
6. For concrete elements and concrete-filled elements, perform tests and additional special inspections in accordance with Section 1705.3.	—	—
7. For specialty elements, perform additional inspections as determined by the registered design professional in responsible charge.	—	—

TABLE 1705.8
REQUIRED SPECIAL INSPECTIONS AND TESTS OF CAST-IN-PLACE DEEP FOUNDATION ELEMENTS

TYPE	CONTINUOUS SPECIAL INSPECTION	PERIODIC SPECIAL INSPECTION
1. Inspect drilling operations and maintain complete and accurate records for each element.	X	—
2. Verify placement locations and plumbness, confirm element diameters, bell diameters (if applicable), lengths, embedment into bedrock (if applicable) and adequate end-bearing strata capacity. Record concrete or grout volumes.	X	—
3. For concrete elements, perform tests and additional special inspections in accordance with Section 1705.3.	—	—

1705.10 Fabricated items. *Special inspections* of *fabricated items* shall be performed in accordance with Section 1704.2.5.

1705.11 Special inspections for wind resistance. *Special inspections* for wind resistance specified in Sections 1705.11.1 through 1705.11.3, unless exempted by the exceptions to Section 1704.2, are required for buildings and structures constructed in the following areas:

1. In wind Exposure Category B, where V_{asd} as determined in accordance with Section 1609.3.1 is 120 miles per hour (52.8 m/sec) or greater.
2. In wind Exposure Category C or D, where V_{asd} as determined in accordance with Section 1609.3.1 is 110 mph (49 m/sec) or greater.

1705.11.1 Structural wood. *Continuous special inspection* is required during field gluing operations of elements of the main windforce-resisting system. *Periodic special inspection* is required for nailing, bolting, anchoring and other fastening of elements of the main windforce-resisting system, including wood shear walls, wood diaphragms, drag struts, braces and hold-downs.

Exception: *Special inspections* are not required for wood shear walls, shear panels and diaphragms, including nailing, bolting, anchoring and other fastening to other elements of the main windforce-resisting system, where the specified fastener spacing at panel edges is more than 4 inches (102 mm) on center.

INTERNATIONAL CODE COUNCIL®
Copyright © 2019 ICC & NYSDOS. ALL RIGHTS RESERVED. Accessed by Lauren Gualdino (lgualdino@briarcliffmanor.org), (-) Order Number #100880972 on May 08, 2020 07:05 AM (PDT) pursuant to License Agreement with ICC & NYSDOS. No further reproduction, no

100880972

1705.11.2 Cold-formed steel light-frame construction. *Periodic special inspection* is required for welding operations of elements of the main windforce-resisting system. *Periodic special inspection* is required for screw attachment, bolting, anchoring and other fastening of elements of the main windforce-resisting system, including shear walls, braces, diaphragms, collectors (drag struts) and hold-downs.

Exception: *Special inspections* are not required for cold-formed steel light-frame shear walls and diaphragms, including screwing, bolting, anchoring and other fastening to components of the windforce resisting system, where either of the following applies:

1. The sheathing is gypsum board or fiberboard.
2. The sheathing is wood structural panel or steel sheets on only one side of the shear wall, shear panel or diaphragm assembly and the fastener spacing of the sheathing is more than 4 inches (102 mm) on center (o.c.).

1705.11.3 Wind-resisting components. *Periodic special inspection* is required for fastening of the following systems and components:

1. Roof covering, roof deck and roof framing connections.
2. Exterior wall covering and wall connections to roof and floor diaphragms and framing.

1705.12 Special inspections for seismic resistance. *Special inspections* for seismic resistance shall be required as specified in Sections 1705.12.1 through 1705.12.9, unless exempted by the exceptions of Section 1704.2.

Exception: The *special inspections* specified in Sections 1705.12.1 through 1705.12.9 are not required for structures designed and constructed in accordance with one of the following:

1. The structure consists of light-frame construction; the design spectral response acceleration at short periods, S_{DS}, as determined in Section 1613.2.4, does not exceed 0.5; and the *building height* of the structure does not exceed 35 feet (10 668 mm).
2. The seismic force-resisting system of the structure consists of reinforced masonry or reinforced concrete; the design spectral response acceleration at short periods, S_{DS}, as determined in Section 1613.2.4, does not exceed 0.5; and the *building height* of the structure does not exceed 25 feet (7620 mm).
3. The structure is a detached one- or two-family dwelling not exceeding two *stories above grade plane* and does not have any of the following horizontal or vertical irregularities in accordance with Section 12.3 of ASCE 7:
    3.1. Torsional or extreme torsional irregularity.
    3.2. Nonparallel systems irregularity.
    3.3. Stiffness-soft story or stiffness-extreme soft story irregularity.
    3.4. Discontinuity in lateral strength-weak story irregularity.

1705.12.1 Structural steel. *Special inspections* for seismic resistance shall be in accordance with Section 1705.12.1.1 or 1705.12.1.2, as applicable.

1705.12.1.1 Seismic force-resisting systems. *Special inspections* of structural steel in the seismic force-resisting systems in buildings and structures assigned to *Seismic Design Category* B, C, D, E or F shall be performed in accordance with the quality assurance requirements of AISC 341.

Exceptions:

1. In buildings and structures assigned to *Seismic Design Category* B or C, *special inspections* are not required for structural steel seismic force-resisting systems where the response modification coefficient, *R*, designated for "Steel systems not specifically detailed for seismic resistance, excluding cantilever column systems" in ASCE 7, Table 12.2-1, has been used for design and detailing.
2. In structures assigned to *Seismic Design Category* D, E, or F, *special inspections* are not required for structural steel seismic force-resisting systems where design and detailing in accordance with AISC 360 is permitted by ASCE 7, Table 15.4-1.

1705.12.1.2 Structural steel elements. *Special inspections* of *structural steel elements* in the seismic force-resisting systems of buildings and structures assigned to *Seismic Design Category* B, C, D, E or F other than those covered in Section 1705.12.1.1, including struts, collectors, chords and foundation elements, shall be performed in accordance with the quality assurance requirements of AISC 341.

Exceptions:

1. In buildings and structures assigned to *Seismic Design Category* B or C, *special inspections* of *structural steel elements* are not required for seismic force-resisting systems with a response modification coefficient, *R*, of 3 or less.
2. In structures assigned to *Seismic Design Category* D, E, or F, *special inspections* of *structural steel elements* are not required for seismic force-resisting systems where design and detailing other than AISC 341 is permitted by ASCE 7, Table 15.4-1. *Special inspection* shall be in accordance with the applicable referenced standard listed in ASCE 7, Table 15.4-1.

1705.12.2 Structural wood. For the seismic force-resisting systems of structures assigned to *Seismic Design Category* C, D, E or F:

1. *Continuous special inspection* shall be required during field gluing operations of elements of the seismic force-resisting system.
2. *Periodic special inspection* shall be required for nailing, bolting, anchoring and other fastening of

INTERNATIONAL CODE COUNCIL®
Copyright © 2019 ICC & NYSDOS. ALL RIGHTS RESERVED. Accessed by Lauren Gualdino (lgualdino@briarcliffmanor.org), (-) Order Number #100880972 on May 08, 2020 07:05 AM (PDT) pursuant to License Agreement with ICC & NYSDOS. No further reproduction, no

100880972

elements of the seismic force-resisting system, including wood shear walls, wood diaphragms, drag struts, braces, shear panels and hold-downs.

Exception: *Special inspections* are not required for wood shear walls, shear panels and diaphragms, including nailing, bolting, anchoring and other fastening to other elements of the seismic force-resisting system, where the fastener spacing of the sheathing is more than 4 inches (102 mm) on center.

1705.12.3 Cold-formed steel light-frame construction. For the seismic force-resisting systems of structures assigned to *Seismic Design Category* C, D, E or F, periodic special inspection shall be required for both:

1. Welding operations of elements of the seismic force-resisting system.
2. Screw attachment, bolting, anchoring and other fastening of elements of the seismic force-resisting system, including shear walls, braces, diaphragms, collectors (drag struts) and hold-downs.

Exception: *Special inspections* are not required for cold-formed steel light-frame shear walls and diaphragms, including screw installation, bolting, anchoring and other fastening to components of the seismic force-resisting system, where either of the following applies:

1. The sheathing is gypsum board or fiberboard.
2. The sheathing is wood structural panel or steel sheets on only one side of the shear wall, shear panel or diaphragm assembly and the fastener spacing of the sheathing is more than 4 inches (102 mm) on center.

1705.12.4 Designated seismic systems. For structures assigned to *Seismic Design Category* C, D, E or F, the special inspector shall examine *designated seismic systems* requiring seismic qualification in accordance with Section 13.2.2 of ASCE 7 and verify that the label, anchorage and mounting conform to the *certificate of compliance*.

1705.12.5 Architectural components. *Periodic special inspection* is required for the erection and fastening of exterior cladding, interior and exterior nonbearing walls and interior and exterior veneer in structures assigned to *Seismic Design Category* D, E or F.

Exception: *Periodic special inspection* is not required for the following:

1. Exterior cladding, interior and exterior nonbearing walls and interior and exterior veneer 30 feet (9144 mm) or less in height above grade or walking surface.
2. Exterior cladding and interior and exterior veneer weighing 5 psf (24.5 N/m^2) or less.
3. Interior nonbearing walls weighing 15 psf (73.5 N/m^2) or less.

1705.12.5.1 Access floors. Periodic *special inspection* is required for the anchorage of access floors in structures assigned to *Seismic Design Category* D, E or F.

1705.12.6 Plumbing, mechanical and electrical components. *Periodic special inspection* of plumbing, mechanical and electrical components shall be required for the following:

1. Anchorage of electrical equipment for emergency and standby power systems in structures assigned to *Seismic Design Category* C, D, E or F.
2. Anchorage of other electrical equipment in structures assigned to *Seismic Design Category* E or F.
3. Installation and anchorage of piping systems designed to carry hazardous materials and their associated mechanical units in structures assigned to *Seismic Design Category* C, D, E or F.
4. Installation and anchorage of ductwork designed to carry hazardous materials in structures assigned to *Seismic Design Category* C, D, E or F.
5. Installation and anchorage of vibration isolation systems in structures assigned to *Seismic Design Category* C, D, E or F where the *approved construction documents* require a nominal clearance of $^1/_4$ inch (6.4 mm) or less between the equipment support frame and restraint.
6. Installation of mechanical and electrical equipment, including duct work, piping systems and their structural supports, where automatic fire sprinkler systems are installed in structures assigned to Seismic Design Category C, D, E or F to verify one of the following:
   6.1. Minimum clearances have been provided as required by Section 13.2.3 ASCE/SEI 7.
   6.2. A nominal clearance of not less than 3 inches (76 mm) has been be provided between fire protection sprinkler system drops and sprigs and: structural members not used collectively or independently to support the sprinklers; equipment attached to the building structure; and other systems' piping.

   Where flexible sprinkler hose fittings are used, special inspection of minimum clearances is not required.

1705.12.7 Storage racks. *Periodic special inspection* is required for the anchorage of storage racks that are 8 feet (2438 mm) or greater in height in structures assigned to *Seismic Design Category* D, E or F.

1705.12.8 Seismic isolation systems. *Periodic special inspection* shall be provided for seismic isolation systems in seismically isolated structures assigned to *Seismic Design Category* B, C, D, E or F during the fabrication and installation of isolator units and energy dissipation devices.

1705.12.9 Cold-formed steel special bolted moment frames. *Periodic special inspection* shall be provided for the installation of cold-formed steel special bolted moment frames in the *seismic force-resisting systems* of structures assigned to *Seismic Design Category* D, E or F.

1705.13 Testing for seismic resistance. Testing for seismic resistance shall be required as specified in Sections 1705.13.1

INTERNATIONAL CODE COUNCIL®
Copyright © 2019 ICC & NYSDOS. ALL RIGHTS RESERVED. Accessed by Lauren Gualdino (lgualdino@briarcliffmanor.org), (-) Order Number #100880972 on May 08, 2020 07:05 AM (PDT) pursuant to License Agreement with ICC & NYSDOS. No further reproduction, no

100880972

through 1705.13.4, unless exempted from *special inspections* by the exceptions of Section 1704.2.

1705.13.1 Structural steel. Nondestructive testing for seismic resistance shall be in accordance with Section 1705.13.1.1 or 1705.13.1.2, as applicable.

1705.13.1.1 Seismic force-resisting systems. Nondestructive testing of structural steel in the seismic force-resisting systems in buildings and structures assigned to *Seismic Design Category* B, C, D, E or F shall be performed in accordance with the quality assurance requirements of AISC 341.

Exceptions:

1. In buildings and structures assigned to *Seismic Design Category* B or C, nondestructive testing is not required for structural steel seismic force-resisting systems where the response modification coefficient, *R*, designated for "Steel systems not specifically detailed for seismic resistance, excluding cantilever column systems" in ASCE 7, Table 12.2-1, has been used for design and detailing.
2. In structures assigned to *Seismic Design Category* D, E, or F, nondestructive testing is not required for structural steel seismic force-resisting systems where design and detailing in accordance with AISC 360 is permitted by ASCE 7, Table 15.4-1.

1705.13.1.2 Structural steel elements. Nondestructive testing of structural steel elements in the seismic force-resisting systems of buildings and structures assigned to *Seismic Design Category* B, C, D, E or F other than those covered in Section 1705.13.1.1, including struts, collectors, chords and foundation elements, shall be performed in accordance with the quality assurance requirements of AISC 341.

Exceptions:

1. In buildings and structures assigned to *Seismic Design Category* B or C, nondestructive testing of *structural steel elements* is not required for seismic force-resisting systems with a response modification coefficient, *R*, of 3 or less.
2. In structures assigned to *Seismic Design Category* D, E or F, nondestructive testing of *structural steel elements* is not required for seismic force-resisting systems where design and detailing other than AISC 341 is permitted by ASCE 7, Table 15.4-1. Nondestructive testing of *structural steel elements* shall be in accordance with the applicable referenced standard listed in ASCE 7, Table 15.4-1.

1705.13.2 Nonstructural components. For structures assigned to *Seismic Design Category* B, C, D, E or F, where the requirements of Section 13.2.1 of ASCE 7 for nonstructural components, supports or attachments are met by seismic qualification as specified in Item 2 therein, the *registered design professional* shall specify on the *approved construction documents* the requirements for seismic qualification by analysis, testing or experience data. *Certificates of compliance* for the seismic qualification shall be submitted to the *building official* as specified in Section 1704.5.

1705.13.3 Designated seismic systems. For structures assigned to *Seismic Design Category* C, D, E or F and with *designated seismic systems* that are subject to the requirements of Section 13.2.2 of ASCE 7 for certification, the *registered design professional* shall specify on the *approved construction documents* the requirements to be met by analysis, testing or experience data as specified therein. *Certificates of compliance* documenting that the requirements are met shall be submitted to the *building official* as specified in Section 1704.5.

1705.13.4 Seismic isolation systems. Seismic isolation systems in seismically isolated structures assigned to *Seismic Design Category* B, C, D, E or F shall be tested in accordance with Section 17.8 of ASCE 7.

[BF] 1705.14 Sprayed fire-resistant materials. *Special inspections* and tests of sprayed fire-resistant materials applied to floor, roof and wall assemblies and structural members shall be performed in accordance with Sections 1705.14.1 through 1705.14.6. *Special inspections* shall be based on the fire-resistance design as designated in the *approved construction documents*. The tests set forth in this section shall be based on samplings from specific floor, roof and wall assemblies and structural members. *Special inspections* and tests shall be performed after the rough installation of electrical, automatic sprinkler, mechanical and plumbing systems and suspension systems for ceilings, where applicable.

[BF] 1705.14.1 Physical and visual tests. The *special inspections* and tests shall include the following to demonstrate compliance with the listing and the *fire-resistance rating*:

1. Condition of substrates.
2. Thickness of application.
3. Density in pounds per cubic foot (kg/m^3).
4. Bond strength adhesion/cohesion.
5. Condition of finished application.

[BF] 1705.14.2 Structural member surface conditions. The surfaces shall be prepared in accordance with the *approved* fire-resistance design and the written instructions of *approved* manufacturers. The prepared surface of structural members to be sprayed shall be inspected by the special inspector before the application of the sprayed fire-resistant material.

[BF] 1705.14.3 Application. The substrate shall have a minimum ambient temperature before and after application as specified in the written instructions of *approved* manufacturers. The area for application shall be ventilated during and after application as required by the written instructions of *approved* manufacturers.

[BF] 1705.14.4 Thickness. Not more than 10 percent of the thickness measurements of the sprayed fire-resistant materials applied to floor, roof and wall assemblies and

INTERNATIONAL CODE COUNCIL®
Copyright © 2019 ICC & NYSDOS. ALL RIGHTS RESERVED. Accessed by Lauren Gualdino (lgualdino@briarcliffmanor.org), (-) Order Number #100880972 on May 08, 2020 07:05 AM (PDT) pursuant to License Agreement with ICC & NYSDOS. No further reproduction, no

100880972

structural members shall be less than the thickness required by the *approved* fire-resistance design, and none shall be less than the minimum allowable thickness required by Section 1705.14.4.1.

[BF] 1705.14.4.1 Minimum allowable thickness. For design thicknesses 1 inch (25 mm) or greater, the minimum allowable individual thickness shall be the design thickness minus $^1/_4$ inch (6.4 mm). For design thicknesses less than 1 inch (25 mm), the minimum allowable individual thickness shall be the design thickness minus 25 percent. Thickness shall be determined in accordance with ASTM E605. Samples of the sprayed fire-resistant materials shall be selected in accordance with Sections 1705.14.4.2 and 1705.14.4.3.

[BF] 1705.14.4.2 Floor, roof and wall assemblies. The thickness of the sprayed fire-resistant material applied to floor, roof and wall assemblies shall be determined in accordance with ASTM E605, making not less than four measurements for each 1,000 square feet (93 m^2) of the sprayed area, or portion thereof, in each *story*.

[BF] 1705.14.4.3 Cellular decks. Thickness measurements shall be selected from a square area, 12 inches by 12 inches (305 mm by 305 mm) in size. Not fewer than four measurements shall be made, located symmetrically within the square area.

[BF] 1705.14.4.4 Fluted decks. Thickness measurements shall be selected from a square area, 12 inches by 12 inches (305 mm by 305 mm) in size. Not fewer than four measurements shall be made, located symmetrically within the square area, including one each of the following: valley, crest and sides. The average of the measurements shall be reported.

[BF] 1705.14.4.5 Structural members. The thickness of the sprayed fire-resistant material applied to structural members shall be determined in accordance with ASTM E605. Thickness testing shall be performed on not less than 25 percent of the structural members on each floor.

[BF] 1705.14.4.6 Beams and girders. At beams and girders thickness measurements shall be made at nine locations around the beam or girder at each end of a 12-inch (305 mm) length.

[BF] 1705.14.4.7 Joists and trusses. At joists and trusses, thickness measurements shall be made at seven locations around the joist or truss at each end of a 12-inch (305 mm) length.

[BF] 1705.14.4.8 Wide-flanged columns. At wide-flanged columns, thickness measurements shall be made at 12 locations around the column at each end of a 12-inch (305 mm) length.

[BF] 1705.14.4.9 Hollow structural section and pipe columns. At hollow structural section and pipe columns, thickness measurements shall be made at not fewer than four locations around the column at each end of a 12-inch (305 mm) length.

[BF] 1705.14.5 Density. The density of the sprayed fire-resistant material shall be not less than the density specified in the *approved* fire-resistance design. Density of the sprayed fire-resistant material shall be determined in accordance with ASTM E605. The test samples for determining the density of the sprayed fire-resistant materials shall be selected as follows:

1. From each floor, roof and wall assembly at the rate of not less than one sample for every 2,500 square feet (232 m^2) or portion thereof of the sprayed area in each *story*.
2. From beams, girders, trusses and columns at the rate of not less than one sample for each type of structural member for each 2,500 square feet (232 m^2) of floor area or portion thereof in each *story*.

[BF] 1705.14.6 Bond strength. The cohesive/adhesive bond strength of the cured sprayed fire-resistant material applied to floor, roof and wall assemblies and structural members shall be not less than 150 pounds per square foot (psf) (7.18 kN/m^2). The cohesive/adhesive bond strength shall be determined in accordance with the field test specified in ASTM E736 by testing in-place samples of the sprayed fire-resistant material selected in accordance with Sections 1705.14.6.1 through 1705.14.6.3.

[BF] 1705.14.6.1 Floor, roof and wall assemblies. The test samples for determining the cohesive/adhesive bond strength of the sprayed fire-resistant materials shall be selected from each floor, roof and wall assembly at the rate of not less than one sample for every 2,500 square feet (232 m^2) of the sprayed area, or portion thereof, in each *story*.

[BF] 1705.14.6.2 Structural members. The test samples for determining the cohesive/adhesive bond strength of the sprayed fire-resistant materials shall be selected from beams, girders, trusses, columns and other structural members at the rate of not less than one sample for each type of structural member for each 2,500 square feet (232 m^2) of floor area or portion thereof in each *story*.

[BF] 1705.14.6.3 Primer, paint and encapsulant bond tests. Bond tests to qualify a primer, paint or encapsulant shall be conducted where the sprayed fire-resistant material is applied to a primed, painted or encapsulated surface for which acceptable bond-strength performance between these coatings and the fire-resistant material has not been determined. A bonding agent *approved* by the SFRM manufacturer shall be applied to a primed, painted or encapsulated surface where the bond strengths are found to be less than required values.

[BF] 1705.15 Mastic and intumescent fire-resistant coatings. *Special inspections* and tests for mastic and intumescent fire-resistant coatings applied to structural elements and decks shall be performed in accordance with AWCI 12-B. *Special inspections* and tests shall be based on the fire-resistance design as designated in the *approved construction documents.*

INTERNATIONAL CODE COUNCIL®
Copyright © 2019 ICC & NYSDOS. ALL RIGHTS RESERVED. Accessed by Lauren Gualdino (lgualdino@briarcliffmanor.org), (-) Order Number #100880972 on May 08, 2020 07:05 AM (PDT) pursuant to License Agreement with ICC & NYSDOS. No further reproduction, no

100880972

1705.16 Exterior insulation and finish systems (EIFS). *Special inspections* shall be required for all EIFS applications.

Exceptions:

1. *Special inspections* shall not be required for EIFS applications installed over a *water-resistive barrier* with a means of draining moisture to the exterior.
2. *Special inspections* shall not be required for EIFS applications installed over masonry or concrete walls.

1705.16.1 Water-resistive barrier coating. A *water-resistive barrier* coating complying with ASTM E2570 requires *special inspection* of the *water-resistive barrier* coating where installed over a sheathing substrate.

[BF] 1705.17 Fire-resistant penetrations and joints. In *high-rise buildings* or in buildings assigned to *Risk Category* III or IV, *special inspections* for *through-penetrations*, membrane penetration firestops, *fire-resistant joint systems* and perimeter fire barrier systems that are tested and *listed* in accordance with Sections 714.4.1.2, 714.5.1.2, 715.3 and 715.4 shall be in accordance with Section 1705.17.1 or 1705.17.2.

[BF] 1705.17.1 Penetration firestops. Inspections of penetration firestop systems that are tested and *listed* in accordance with Sections 714.4.1.2 and 714.5.1.2 shall be conducted by an *approved agency* in accordance with ASTM E2174.

[BF] 1705.17.2 Fire-resistant joint systems. Inspection of fire-resistant joint systems that are tested and *listed* in accordance with Sections 715.3 and 715.4 shall be conducted by an *approved agency* in accordance with ASTM E2393.

[F] 1705.18 Testing for smoke control. Smoke control systems shall be tested by a special inspector.

[F] 1705.18.1 Testing scope. The test scope shall be as follows:

1. During erection of ductwork and prior to concealment for the purposes of leakage testing and recording of device location.
2. Prior to occupancy and after sufficient completion for the purposes of pressure difference testing, flow measurements and detection and control verification.

[F] 1705.18.2 Qualifications. *Approved agencies* for smoke control testing shall have expertise in fire protection engineering, mechanical engineering and certification as air balancers.

SECTION 1706
DESIGN STRENGTHS OF MATERIALS

1706.1 Conformance to standards. The design strengths and permissible stresses of any structural material that are identified by a manufacturer's designation as to manufacture and grade by mill tests, or the strength and stress grade is otherwise confirmed to the satisfaction of the *building official*, shall conform to the specifications and methods of design of accepted engineering practice or the *approved* rules in the absence of applicable standards.

1706.2 New materials. For materials that are not specifically provided for in this code, the design strengths and permissible stresses shall be established by tests as provided for in Section 1707.

SECTION 1707
ALTERNATIVE TEST PROCEDURE

[NY] 1707.1 General. In the absence of *approved* rules or other *approved* standards, the *building official* shall make, or cause to be made, the necessary tests and investigations; or the *building official* shall accept duly authenticated reports from *approved agencies* in respect to the quality and manner of use of new materials or assemblies as provided for in Section 104.3. The cost of all tests and other investigations required under the provisions of this code shall be borne by the owner or the owner's authorized agent.

SECTION 1708
IN-SITU LOAD TESTS

1708.1 General. Whenever there is a reasonable doubt as to the stability or load-bearing capacity of a completed building, structure or portion thereof for the expected loads, an engineering assessment shall be required. The engineering assessment shall involve either a structural analysis or an in-situ load test, or both. The structural analysis shall be based on actual material properties and other as-built conditions that affect stability or load-bearing capacity, and shall be conducted in accordance with the applicable design standard. The in-situ load tests shall be conducted in accordance with Section 1708.2. If the building, structure or portion thereof is found to have inadequate stability or load-bearing capacity for the expected loads, modifications to ensure structural adequacy or the removal of the inadequate construction shall be required.

1708.2 In-situ load tests. In-situ load tests shall be conducted in accordance with Section 1708.2.1 or 1708.2.2 and shall be supervised by a *registered design professional*. The test shall simulate the applicable loading conditions specified in Chapter 16 as necessary to address the concerns regarding structural stability of the building, structure or portion thereof.

1708.2.1 Load test procedure specified. Where a referenced material standard contains an applicable load test procedure and acceptance criteria, the test procedure and acceptance criteria in the standard shall apply. In the absence of specific load factors or acceptance criteria, the load factors and acceptance criteria in Section 1708.2.2 shall apply.

1708.2.2 Load test procedure not specified. In the absence of applicable load test procedures contained within a material standard referenced by this code or acceptance criteria for a specific material or method of construction, such *existing structure* shall be subjected to an approved test procedure developed by a *registered design professional* that simulates applicable loading and

INTERNATIONAL CODE COUNCIL®
Copyright © 2019 ICC & NYSDOS. ALL RIGHTS RESERVED. Accessed by Lauren Gualdino (lgualdino@briarcliffmanor.org), (-) Order Number #100880972 on May 08, 2020 07:05 AM (PDT) pursuant to License Agreement with ICC & NYSDOS. No further reproduction, no

100880972

deformation conditions. For components that are not a part of the seismic force-resisting system, at a minimum the test load shall be equal to the specified factored design loads. For materials such as wood that have strengths that are dependent on load duration, the test load shall be adjusted to account for the difference in load duration of the test compared to the expected duration of the design loads being considered. For statically loaded components, the test load shall be left in place for a period of 24 hours. For components that carry dynamic loads (for example, machine supports or fall arrest anchors), the load shall be left in place for a period consistent with the component's actual function. The structure shall be considered to have successfully met the test requirements where the following criteria are satisfied:

1. Under the design load, the deflection shall not exceed the limitations specified in Section 1604.3.
2. Within 24 hours after removal of the test load, the structure shall have recovered not less than 75 percent of the maximum deflection.
3. During and immediately after the test, the structure shall not show evidence of failure.

SECTION 1709
PRECONSTRUCTION LOAD TESTS

1709.1 General. Where proposed construction is not capable of being designed by *approved* engineering analysis, or where proposed construction design method does not comply with the applicable material design standard, the system of construction or the structural unit and the connections shall be subjected to the tests prescribed in Section 1709. The *building official* shall accept certified reports of such tests conducted by an *approved* testing agency, provided that such tests meet the requirements of this code and *approved* procedures.

1709.2 Load test procedures specified. Where specific load test procedures, load factors and acceptance criteria are included in the applicable referenced standards, such test procedures, load factors and acceptance criteria shall apply. In the absence of specific test procedures, load factors or acceptance criteria, the corresponding provisions in Section 1709.3 shall apply.

1709.3 Load test procedures not specified. Where load test procedures are not specified in the applicable referenced standards, the load-bearing and deformation capacity of structural components and assemblies shall be determined on the basis of a test procedure developed by a *registered design professional* that simulates applicable loading and deformation conditions. For components and assemblies that are not a part of the seismic force-resisting system, the test shall be as specified in Section 1709.3.1. Load tests shall simulate the applicable loading conditions specified in Chapter 16.

1709.3.1 Test procedure. The test assembly shall be subjected to an increasing superimposed load equal to not less than two times the superimposed design load. The test load shall be left in place for a period of 24 hours. The tested assembly shall be considered to have successfully met the test requirements if the assembly recovers not less than 75 percent of the maximum deflection within 24 hours after the removal of the test load. The test assembly shall then be reloaded and subjected to an increasing superimposed load until either structural failure occurs or the superimposed load is equal to two and one-half times the load at which the deflection limitations specified in Section 1709.3.2 were reached, or the load is equal to two and one-half times the superimposed design load. In the case of structural components and assemblies for which deflection limitations are not specified in Section 1709.3.2, the test specimen shall be subjected to an increasing superimposed load until structural failure occurs or the load is equal to two and one-half times the desired superimposed design load. The allowable superimposed design load shall be taken as the lesser of:

1. The load at the deflection limitation given in Section 1709.3.2.
2. The failure load divided by 2.5.
3. The maximum load applied divided by 2.5.

1709.3.2 Deflection. The deflection of structural members under the design load shall not exceed the limitations in Section 1604.3.

1709.4 Wall and partition assemblies. *Load-bearing wall* and partition assemblies shall sustain the test load both with and without window framing. The test load shall include all design load components. Wall and partition assemblies shall be tested both with and without door and window framing.

1709.5 Exterior window and door assemblies. The design pressure rating of exterior windows and doors in buildings shall be determined in accordance with Section 1709.5.1 or 1709.5.2. For exterior windows and doors tested in accordance with Sections 1709.5.1 or 1709.5.2, required design wind pressures determined from ASCE 7 shall be permitted to be converted to allowable stress design by multiplying by 0.6.

Exception: Structural wind load design pressures for window units smaller than the size tested in accordance with Section 1709.5.1 or 1709.5.2 shall be permitted to be higher than the design value of the tested unit provided such higher pressures are determined by accepted engineering analysis. Components of the small unit shall be the same as the tested unit. Where such calculated design pressures are used, they shall be validated by an additional test of the window unit having the highest allowable design pressure.

1709.5.1 Exterior windows and doors. Exterior windows and sliding doors shall be tested and *labeled* as conforming to AAMA/WDMA/CSA101/I.S.2/A440. The *label* shall state the name of the manufacturer, the *approved* labeling agency and the product designation as specified in AAMA/WDMA/CSA101/I.S.2/A440. Exterior side-hinged doors shall be tested and *labeled* as conforming to AAMA/WDMA/CSA101/I.S.2/A440 or comply with Section 1709.5.2. Products tested and *labeled* as conforming to AAMA/WDMA/CSA 101/I.S.2/A440 shall not be subject to the requirements of Sections 2403.2 and 2403.3.

INTERNATIONAL CODE COUNCIL®
Copyright © 2019 ICC & NYSDOS. ALL RIGHTS RESERVED. Accessed by Lauren Gualdino (lgualdino@briarcliffmanor.org), (-) Order Number #100880972 on May 08, 2020 07:05 AM (PDT) pursuant to License Agreement with ICC & NYSDOS. No further reproduction, no

100880972

1709.5.2 Exterior windows and door assemblies not provided for in Section 1709.5.1. Exterior window and door assemblies shall be tested in accordance with ASTM E330. Structural performance of garage doors and rolling doors shall be determined in accordance with either ASTM E330 or ANSI/DASMA 108, and shall meet the acceptance criteria of ANSI/DASMA 108. Exterior window and door assemblies containing glass shall comply with Section 2403. The design pressure for testing shall be calculated in accordance with Chapter 16. Each assembly shall be tested for 10 seconds at a load equal to 1.5 times the design pressure.

1709.6 Skylights and sloped glazing. Skylights and sloped glazing shall comply with the requirements of Chapter 24.

1709.7 Test specimens. Test specimens and construction shall be representative of the materials, workmanship and details normally used in practice. The properties of the materials used to construct the test assembly shall be determined on the basis of tests on samples taken from the load assembly or on representative samples of the materials used to construct the load test assembly. Required tests shall be conducted or witnessed by an *approved agency*.

INTERNATIONAL CODE COUNCIL®
Copyright © 2019 ICC & NYSDOS. ALL RIGHTS RESERVED. Accessed by Lauren Gualdino (lgualdino@briarcliffmanor.org), (-) Order Number #100880972 on May 08, 2020 07:05 AM (PDT) pursuant to License Agreement with ICC & NYSDOS. No further reproduction, no

100880972

CHAPTER 18

SOILS AND FOUNDATIONS

SECTION 1801 GENERAL

1801.1 Scope. The provisions of this chapter shall apply to building and foundation systems.

SECTION 1802 DESIGN BASIS

1802.1 General. Allowable bearing pressures, allowable stresses and design formulas provided in this chapter shall be used with the *allowable stress design* load combinations specified in Section 1605.3. The quality and design of materials used structurally in excavations and foundations shall comply with the requirements specified in Chapters 16, 19, 21, 22 and 23. Excavations and fills shall comply with Chapter 33.

SECTION 1803 GEOTECHNICAL INVESTIGATIONS

1803.1 General. Geotechnical investigations shall be conducted in accordance with Section 1803.2 and reported in accordance with Section 1803.6. Where required by the *building official* or where geotechnical investigations involve in-situ testing, laboratory testing or engineering calculations, such investigations shall be conducted by a *registered design professional*.

1803.2 Investigations required. Geotechnical investigations shall be conducted in accordance with Sections 1803.3 through 1803.5.

Exception: The *building official* shall be permitted to waive the requirement for a geotechnical investigation where satisfactory data from adjacent areas is available that demonstrates an investigation is not necessary for any of the conditions in Sections 1803.5.1 through 1803.5.6 and Sections 1803.5.10 and 1803.5.11.

1803.3 Basis of investigation. Soil classification shall be based on observation and any necessary tests of the materials disclosed by borings, test pits or other subsurface exploration made in appropriate locations. Additional studies shall be made as necessary to evaluate slope stability, soil strength, position and adequacy of load-bearing soils, the effect of moisture variation on soil-bearing capacity, compressibility, liquefaction and expansiveness.

1803.3.1 Scope of investigation. The scope of the geotechnical investigation including the number and types of borings or soundings, the equipment used to drill or sample, the in-situ testing equipment and the laboratory testing program shall be determined by a *registered design professional*.

1803.4 Qualified representative. The investigation procedure and apparatus shall be in accordance with generally accepted engineering practice. The *registered design professional* shall have a fully qualified representative on site during all boring or sampling operations.

1803.5 Investigated conditions. Geotechnical investigations shall be conducted as indicated in Sections 1803.5.1 through 1803.5.12.

1803.5.1 Classification. Soil materials shall be classified in accordance with ASTM D2487.

1803.5.2 Questionable soil. Where the classification, strength or compressibility of the soil is in doubt or where a load-bearing value superior to that specified in this code is claimed, the *building official* shall be permitted to require that a geotechnical investigation be conducted.

1803.5.3 Expansive soil. In areas likely to have expansive soil, the *building official* shall require soil tests to determine where such soils do exist.

Soils meeting all four of the following provisions shall be considered to be expansive, except that tests to show compliance with Items 1, 2 and 3 shall not be required if the test prescribed in Item 4 is conducted:

1. Plasticity index (PI) of 15 or greater, determined in accordance with ASTM D4318.
2. More than 10 percent of the soil particles pass a No. 200 sieve (75 μm), determined in accordance with ASTM D422.
3. More than 10 percent of the soil particles are less than 5 micrometers in size, determined in accordance with ASTM D422.
4. Expansion index greater than 20, determined in accordance with ASTM D4829.

1803.5.4 Ground water table. A subsurface soil investigation shall be performed to determine whether the existing ground water table is above or within 5 feet (1524 mm) below the elevation of the lowest floor level where such floor is located below the finished ground level adjacent to the foundation.

Exception: A subsurface soil investigation to determine the location of the ground water table shall not be required where waterproofing is provided in accordance with Section 1805.

1803.5.5 Deep foundations. Where deep foundations will be used, a geotechnical investigation shall be conducted and shall include all of the following, unless sufficient data on which to base the design and installation is otherwise available:

1. Recommended deep foundation types and installed capacities.
2. Recommended center-to-center spacing of deep foundation elements.
3. Driving criteria.
4. Installation procedures.

INTERNATIONAL CODE COUNCIL®
Copyright © 2019 ICC & NYSDOS. ALL RIGHTS RESERVED. Accessed by Lauren Gualdino (lgualdino@briarcliffmanor.org), (-) Order Number #100880972 on May 08, 2020 07:05 AM (PDT) pursuant to License Agreement with ICC & NYSDOS. No further reproduction, no

100880972

5. Field inspection and reporting procedures (to include procedures for verification of the installed bearing capacity where required).
6. Load test requirements.
7. Suitability of deep foundation materials for the intended environment.
8. Designation of bearing stratum or strata.
9. Reductions for group action, where necessary.

1803.5.6 Rock strata. Where subsurface explorations at the project site indicate variations in the structure of rock on which foundations are to be constructed, a sufficient number of borings shall be drilled to sufficient depths to assess the competency of the rock and its load-bearing capacity.

1803.5.7 Excavation near foundations. Where excavation will reduce support from any foundation, a *registered design professional* shall prepare an assessment of the structure as determined from examination of the structure, the review of available design documents and, if necessary, excavation of test pits. The *registered design professional* shall determine the requirements for underpinning and protection and prepare site-specific plans, details and sequence of work for submission. Such support shall be provided by underpinning, sheeting and bracing, or by other means acceptable to the *building official*.

1803.5.8 Compacted fill material. Where shallow foundations will bear on compacted fill material more than 12 inches (305 mm) in depth, a geotechnical investigation shall be conducted and shall include all of the following:

1. Specifications for the preparation of the site prior to placement of compacted fill material.
2. Specifications for material to be used as compacted fill.
3. Test methods to be used to determine the maximum dry density and optimum moisture content of the material to be used as compacted fill.
4. Maximum allowable thickness of each lift of compacted fill material.
5. Field test method for determining the in-place dry density of the compacted fill.
6. Minimum acceptable in-place dry density expressed as a percentage of the maximum dry density determined in accordance with Item 3.
7. Number and frequency of field tests required to determine compliance with Item 6.

1803.5.9 Controlled low-strength material (CLSM). Where shallow foundations will bear on controlled low-strength material (CLSM), a geotechnical investigation shall be conducted and shall include all of the following:

1. Specifications for the preparation of the site prior to placement of the CLSM.
2. Specifications for the CLSM.
3. Laboratory or field test method(s) to be used to determine the compressive strength or bearing capacity of the CLSM.
4. Test methods for determining the acceptance of the CLSM in the field.
5. Number and frequency of field tests required to determine compliance with Item 4.

1803.5.10 Alternate setback and clearance. Where setbacks or clearances other than those required in Section 1808.7 are desired, the *building official* shall be permitted to require a geotechnical investigation by a *registered design professional* to demonstrate that the intent of Section 1808.7 would be satisfied. Such an investigation shall include consideration of material, height of slope, slope gradient, load intensity and erosion characteristics of slope material.

1803.5.11 Seismic Design Categories C through F. For structures assigned to *Seismic Design Category* C, D, E or F, a geotechnical investigation shall be conducted, and shall include an evaluation of all of the following potential geologic and seismic hazards:

1. Slope instability.
2. Liquefaction.
3. Total and differential settlement.
4. Surface displacement due to faulting or seismically induced lateral spreading or lateral flow.

1803.5.12 Seismic Design Categories D through F. For structures assigned to *Seismic Design Category* D, E or F, the geotechnical investigation required by Section 1803.5.11 shall include all of the following as applicable:

1. The determination of dynamic seismic lateral earth pressures on foundation walls and retaining walls supporting more than 6 feet (1.83 m) of backfill height due to design earthquake ground motions.
2. The potential for liquefaction and soil strength loss evaluated for site peak ground acceleration, earthquake magnitude and source characteristics consistent with the maximum considered earthquake ground motions. Peak ground acceleration shall be determined based on one of the following:
    2.1. A site-specific study in accordance with Chapter 21 of ASCE 7.
    2.2. In accordance with Section 11.8.3 of ASCE 7.
3. An assessment of potential consequences of liquefaction and soil strength loss including, but not limited to, the following:
    3.1. Estimation of total and differential settlement.
    3.2. Lateral soil movement.
    3.3. Lateral soil loads on foundations.
    3.4. Reduction in foundation soil-bearing capacity and lateral soil reaction.
    3.5. Soil downdrag and reduction in axial and lateral soil reaction for pile foundations.
    3.6. Increases in soil lateral pressures on retaining walls.
    3.7. Flotation of buried structures.

INTERNATIONAL CODE COUNCIL®
Copyright © 2019 ICC & NYSDOS. ALL RIGHTS RESERVED. Accessed by Lauren Gualdino (lgualdino@briarcliffmanor.org), (-) Order Number #100880972 on May 08, 2020 07:05 AM (PDT) pursuant to License Agreement with ICC & NYSDOS. No further reproduction, no

100880972

4. Discussion of mitigation measures such as, but not limited to, the following:
    4.1. Selection of appropriate foundation type and depths.
    4.2. Selection of appropriate structural systems to accommodate anticipated displacements and forces.
    4.3. Ground stabilization.
    4.4. Any combination of these measures and how they shall be considered in the design of the structure.

1803.6 Reporting. Where geotechnical investigations are required, a written report of the investigations shall be submitted to the *building official* by the permit applicant at the time of permit application. This geotechnical report shall include, but need not be limited to, the following information:

1. A plot showing the location of the soil investigations.
2. A complete record of the soil boring and penetration test logs and soil samples.
3. A record of the soil profile.
4. Elevation of the water table, if encountered.
5. Recommendations for foundation type and design criteria, including but not limited to: bearing capacity of natural or compacted soil; provisions to mitigate the effects of expansive soils; mitigation of the effects of liquefaction, differential settlement and varying soil strength; and the effects of adjacent loads.
6. Expected total and differential settlement.
7. Deep foundation information in accordance with Section 1803.5.5.
8. Special design and construction provisions for foundations of structures founded on expansive soils, as necessary.
9. Compacted fill material properties and testing in accordance with Section 1803.5.8.
10. Controlled low-strength material properties and testing in accordance with Section 1803.5.9.

SECTION 1804
EXCAVATION, GRADING AND FILL

1804.1 Excavation near foundations. Excavation for any purpose shall not reduce vertical or lateral support for any foundation or adjacent foundation without first underpinning or protecting the foundation against detrimental lateral or vertical movement, or both.

1804.2 Underpinning. Where underpinning is chosen to provide the protection or support of adjacent structures, the underpinning system shall be designed and installed in accordance with provisions of this chapter and Chapter 33.

1804.2.1 Underpinning sequencing. Underpinning shall be installed in a sequential manner that protects the neighboring structure and the working construction site. The sequence of installation shall be identified in the *approved construction documents*.

1804.3 Placement of backfill. The excavation outside the foundation shall be backfilled with soil that is free of organic material, construction debris, cobbles and boulders or with a controlled low-strength material (CLSM). The backfill shall be placed in lifts and compacted in a manner that does not damage the foundation or the waterproofing or dampproofing material.

Exception: CLSM need not be compacted.

1804.4 Site grading. The ground immediately adjacent to the foundation shall be sloped away from the building at a slope of not less than one unit vertical in 20 units horizontal (5-percent slope) for a minimum distance of 10 feet (3048 mm) measured perpendicular to the face of the wall. If physical obstructions or lot lines prohibit 10 feet (3048 mm) of horizontal distance, a 5-percent slope shall be provided to an *approved* alternative method of diverting water away from the foundation. Swales used for this purpose shall be sloped not less than 2 percent where located within 10 feet (3048 mm) of the building foundation. Impervious surfaces within 10 feet (3048 mm) of the building foundation shall be sloped not less than 2 percent away from the building.

Exceptions:

1. Where climatic or soil conditions warrant, the slope of the ground away from the building foundation shall be permitted to be reduced to not less than one unit vertical in 48 units horizontal (2-percent slope).
2. Impervious surfaces shall be permitted to be sloped less than 2 percent where the surface is a door landing or ramp that is required to comply with Section 1010.1.5, 1012.3 or 1012.6.1.

The procedure used to establish the final ground level adjacent to the foundation shall account for additional settlement of the backfill.

[NY] 1804.5 Grading and fill in flood hazard areas. In *flood hazard areas* established in Section 1612.3, grading, fill, or both, shall not be *approved*:

1. Unless such fill is placed, compacted and sloped to minimize shifting, slumping and erosion during the rise and fall of floodwater and, as applicable, wave action.
2. In floodways, unless it has been demonstrated through hydrologic and hydraulic analyses performed by a *registered design professional* in accordance with standard engineering practice that the proposed grading or fill, or both, will not result in any increase in flood levels during the occurrence of the *design flood*.
3. In *coastal high hazard areas*, unless such fill is conducted or placed to avoid diversion of water and waves toward any building or structure.
4. Where design flood elevations are specified but floodways have not been designated, unless it has been demonstrated that the cumulative effect of the proposed *flood hazard area* encroachment, when combined with all other existing and anticipated *flood hazard area* encroachment, will not increase the design flood elevation more than 1 foot (305 mm) at any point. For the

INTERNATIONAL CODE COUNCIL®
Copyright © 2019 ICC & NYSDOS. ALL RIGHTS RESERVED. Accessed by Lauren Gualdino (lgualdino@briarcliffmanor.org), (-) Order Number #100880972 on May 08, 2020 07:05 AM (PDT) pursuant to License Agreement with ICC & NYSDOS. No further reproduction, no

100880972

purpose of applying this section, the design flood elevation shall be the elevation established in accordance with Sections 1612.3 through 1612.3.1 and shall not include the application of freeboard.

1804.6 Compacted fill material. Where shallow foundations will bear on compacted fill material, the compacted fill shall comply with the provisions of an *approved* geotechnical report, as set forth in Section 1803.

Exception: Compacted fill material 12 inches (305 mm) in depth or less need not comply with an *approved* report, provided that the in-place dry density is not less than 90 percent of the maximum dry density at optimum moisture content determined in accordance with ASTM D1557. The compaction shall be verified by *special inspection* in accordance with Section 1705.6.

1804.7 Controlled low-strength material (CLSM). Where shallow foundations will bear on controlled low-strength material (CLSM), the CLSM shall comply with the provisions of an *approved* geotechnical report, as set forth in Section 1803.

SECTION 1805
DAMPPROOFING AND WATERPROOFING

1805.1 General. Walls or portions thereof that retain earth and enclose interior spaces and floors below grade shall be waterproofed and dampproofed in accordance with this section, with the exception of those spaces containing groups other than residential and institutional where such omission is not detrimental to the building or occupancy.

Ventilation for crawl spaces shall comply with Section 1203.4.

1805.1.1 Story above grade plane. Where a basement is considered a *story above grade plane* and the finished ground level adjacent to the basement wall is below the basement floor elevation for 25 percent or more of the perimeter, the floor and walls shall be dampproofed in accordance with Section 1805.2 and a foundation drain shall be installed in accordance with Section 1805.4.2. The foundation drain shall be installed around the portion of the perimeter where the basement floor is below ground level. The provisions of Sections 1803.5.4, 1805.3 and 1805.4.1 shall not apply in this case.

1805.1.2 Under-floor space. The finished ground level of an under-floor space such as a crawl space shall not be located below the bottom of the footings. Where there is evidence that the ground water table rises to within 6 inches (152 mm) of the ground level at the outside building perimeter, or that the surface water does not readily drain from the building site, the ground level of the under-floor space shall be as high as the outside finished ground level, unless an *approved* drainage system is provided. The provisions of Sections 1803.5.4, 1805.2, 1805.3 and 1805.4 shall not apply in this case.

1805.1.2.1 Flood hazard areas. For buildings and structures in *flood hazard areas* as established in Section 1612.3, the finished ground level of an under-floor space such as a crawl space shall be equal to or higher than the outside finished ground level on one side or more.

Exception: Under-floor spaces of Group R-3 buildings that meet the requirements of FEMA TB 11.

1805.1.3 Ground water control. Where the ground water table is lowered and maintained at an elevation not less than 6 inches (152 mm) below the bottom of the lowest floor, the floor and walls shall be dampproofed in accordance with Section 1805.2. The design of the system to lower the ground water table shall be based on accepted principles of engineering that shall consider, but not necessarily be limited to, permeability of the soil, rate at which water enters the drainage system, rated capacity of pumps, head against which pumps are to operate and the rated capacity of the disposal area of the system.

1805.2 Dampproofing. Where hydrostatic pressure will not occur as determined by Section 1803.5.4, floors and walls for other than wood foundation systems shall be dampproofed in accordance with this section. Wood foundation systems shall be constructed in accordance with AWC PWF.

1805.2.1 Floors. Dampproofing materials for floors shall be installed between the floor and the base course required by Section 1805.4.1, except where a separate floor is provided above a concrete slab.

Where installed beneath the slab, dampproofing shall consist of not less than 6-mil (0.006 inch; 0.152 mm) polyethylene with joints lapped not less than 6 inches (152 mm), or other *approved* methods or materials. Where permitted to be installed on top of the slab, dampproofing shall consist of mopped-on bitumen, not less than 4-mil (0.004 inch; 0.102 mm) polyethylene, or other *approved* methods or materials. Joints in the membrane shall be lapped and sealed in accordance with the manufacturer's installation instructions.

1805.2.2 Walls. Dampproofing materials for walls shall be installed on the exterior surface of the wall, and shall extend from the top of the footing to above ground level.

Dampproofing shall consist of a bituminous material, 3 pounds per square *yard* (16 N/m^2) of acrylic modified cement, $^1/_8$ inch (3.2 mm) coat of surface-bonding mortar complying with ASTM C887, any of the materials permitted for waterproofing by Section 1805.3.2 or other *approved* methods or materials.

1805.2.2.1 Surface preparation of walls. Prior to application of dampproofing materials on concrete walls, holes and recesses resulting from the removal of form ties shall be sealed with a bituminous material or other *approved* methods or materials. Unit masonry walls shall be parged on the exterior surface below ground level with not less than $^3/_8$ inch (9.5 mm) of Portland cement mortar. The parging shall be coved at the footing.

Exception: Parging of unit masonry walls is not required where a material is *approved* for direct application to the masonry.

1805.3 Waterproofing. Where the ground water investigation required by Section 1803.5.4 indicates that a hydrostatic

INTERNATIONAL CODE COUNCIL®
Copyright © 2019 ICC & NYSDOS. ALL RIGHTS RESERVED. Accessed by Lauren Gualdino (lgualdino@briarcliffmanor.org), (-) Order Number #100880972 on May 08, 2020 07:05 AM (PDT) pursuant to License Agreement with ICC & NYSDOS. No further reproduction, no

100880972

pressure condition exists, and the design does not include a ground water control system as described in Section 1805.1.3, walls and floors shall be waterproofed in accordance with this section.

1805.3.1 Floors. Floors required to be waterproofed shall be of concrete and designed and constructed to withstand the hydrostatic pressures to which the floors will be subjected.

Waterproofing shall be accomplished by placing a membrane of rubberized asphalt, butyl rubber, fully adhered/fully bonded HDPE or polyolefin composite membrane or not less than 6-mil [0.006 inch (0.152 mm)] polyvinyl chloride with joints lapped not less than 6 inches (152 mm) or other *approved* materials under the slab. Joints in the membrane shall be lapped and sealed in accordance with the manufacturer's installation instructions.

1805.3.2 Walls. Walls required to be waterproofed shall be of concrete or masonry and shall be designed and constructed to withstand the hydrostatic pressures and other lateral loads to which the walls will be subjected.

Waterproofing shall be applied from the bottom of the wall to not less than 12 inches (305 mm) above the maximum elevation of the ground water table. The remainder of the wall shall be dampproofed in accordance with Section 1805.2.2. Waterproofing shall consist of two-ply hot-mopped felts, not less than 6-mil (0.006 inch; 0.152 mm) polyvinyl chloride, 40-mil (0.040 inch; 1.02 mm) polymer-modified asphalt, 6-mil (0.006 inch; 0.152 mm) polyethylene or other *approved* methods or materials capable of bridging nonstructural cracks. Joints in the membrane shall be lapped and sealed in accordance with the manufacturer's installation instructions.

1805.3.2.1 Surface preparation of walls. Prior to the application of waterproofing materials on concrete or masonry walls, the walls shall be prepared in accordance with Section 1805.2.2.1.

1805.3.3 Joints and penetrations. Joints in walls and floors, joints between the wall and floor and penetrations of the wall and floor shall be made watertight utilizing *approved* methods and materials.

1805.4 Subsoil drainage system. Where a hydrostatic pressure condition does not exist, dampproofing shall be provided and a base shall be installed under the floor and a drain installed around the foundation perimeter. A subsoil drainage system designed and constructed in accordance with Section 1805.1.3 shall be deemed adequate for lowering the groundwater table.

1805.4.1 Floor base course. Floors of basements, except as provided for in Section 1805.1.1, shall be placed over a floor base course not less than 4 inches (102 mm) in thickness that consists of gravel or crushed stone containing not more than 10 percent of material that passes through a No. 4 (4.75 mm) sieve.

Exception: Where a site is located in well-drained gravel or sand/gravel mixture soils, a floor base course is not required.

1805.4.2 Foundation drain. A drain shall be placed around the perimeter of a foundation that consists of gravel or crushed stone containing not more than 10-percent material that passes through a No. 4 (4.75 mm) sieve. The drain shall extend not less than 12 inches (305 mm) beyond the outside edge of the footing. The thickness shall be such that the bottom of the drain is not higher than the bottom of the base under the floor, and that the top of the drain is not less than 6 inches (152 mm) above the top of the footing. The top of the drain shall be covered with an *approved* filter membrane material. Where a drain tile or perforated pipe is used, the invert of the pipe or tile shall not be higher than the floor elevation. The top of joints or the top of perforations shall be protected with an *approved* filter membrane material. The pipe or tile shall be placed on not less than 2 inches (51 mm) of gravel or crushed stone complying with Section 1805.4.1, and shall be covered with not less than 6 inches (152 mm) of the same material.

1805.4.3 Drainage discharge. The floor base and foundation perimeter drain shall discharge by gravity or mechanical means into an *approved* drainage system that complies with the *Plumbing Code of New York State*.

Exception: Where a site is located in well-drained gravel or sand/gravel mixture soils, a dedicated drainage system is not required.

SECTION 1806
PRESUMPTIVE LOAD-BEARING VALUES OF SOILS

1806.1 Load combinations. The presumptive load-bearing values provided in Table 1806.2 shall be used with the *allowable stress design* load combinations specified in Section 1605.3. The values of vertical foundation pressure and lateral bearing pressure given in Table 1806.2 shall be permitted to be increased by one-third where used with the alternative basic load combinations of Section 1605.3.2 that include wind or earthquake loads.

1806.2 Presumptive load-bearing values. The load-bearing values used in design for supporting soils near the surface shall not exceed the values specified in Table 1806.2 unless data to substantiate the use of higher values are submitted and *approved*. Where the *building official* has reason to doubt the classification, strength or compressibility of the soil, the requirements of Section 1803.5.2 shall be satisfied.

Presumptive load-bearing values shall apply to materials with similar physical characteristics and dispositions. Mud, organic silt, organic clays, peat or unprepared fill shall not be assumed to have a presumptive load-bearing capacity unless data to substantiate the use of such a value are submitted.

Exception: A presumptive load-bearing capacity shall be permitted to be used where the *building official* deems the load-bearing capacity of mud, organic silt or unprepared fill is adequate for the support of lightweight or temporary structures.

1806.3 Lateral load resistance. Where the presumptive values of Table 1806.2 are used to determine resistance to lateral

INTERNATIONAL CODE COUNCIL®
Copyright © 2019 ICC & NYSDOS. ALL RIGHTS RESERVED. Accessed by Lauren Gualdino (lgualdino@briarcliffmanor.org), (-) Order Number #100880972 on May 08, 2020 07:05 AM (PDT) pursuant to License Agreement with ICC & NYSDOS. No further reproduction, no

100880972

loads, the calculations shall be in accordance with Sections 1806.3.1 through 1806.3.4.

1806.3.1 Combined resistance. The total resistance to lateral loads shall be permitted to be determined by combining the values derived from the lateral bearing pressure and the lateral sliding resistance specified in Table 1806.2.

1806.3.2 Lateral sliding resistance limit. For clay, sandy clay, silty clay, clayey silt, silt and sandy silt, the lateral sliding resistance shall not exceed one-half the dead load.

1806.3.3 Increase for depth. The lateral bearing pressures specified in Table 1806.2 shall be permitted to be increased by the tabular value for each additional foot (305 mm) of depth to a value that is not greater than 15 times the tabular value.

1806.3.4 Increase for poles. Isolated poles for uses such as flagpoles or signs and poles used to support buildings that are not adversely affected by a $^1/_2$-inch (12.7 mm) motion at the ground surface due to short-term lateral loads shall be permitted to be designed using lateral bearing pressures equal to two times the tabular values.

SECTION 1807
FOUNDATION WALLS, RETAINING WALLS AND EMBEDDED POSTS AND POLES

1807.1 Foundation walls. Foundation walls shall be designed and constructed in accordance with Sections 1807.1.1 through 1807.1.6. Foundation walls shall be supported by foundations designed in accordance with Section 1808.

1807.1.1 Design lateral soil loads. Foundation walls shall be designed for the lateral soil loads set forth in Section 1610.

1807.1.2 Unbalanced backfill height. Unbalanced backfill height is the difference in height between the exterior finish ground level and the lower of the top of the concrete footing that supports the foundation wall or the interior finish ground level. Where an interior concrete slab on grade is provided and is in contact with the interior surface of the foundation wall, the unbalanced backfill height shall be permitted to be measured from the exterior finish ground level to the top of the interior concrete slab.

1807.1.3 Rubble stone foundation walls. Foundation walls of rough or random rubble stone shall be not less than 16 inches (406 mm) thick. Rubble stone shall not be used for foundation walls of structures assigned to *Seismic Design Category* C, D, E or F.

1807.1.4 Permanent wood foundation systems. Permanent wood foundation systems shall be designed and installed in accordance with AWC PWF. Lumber and plywood shall be preservative treated in accordance with AWPA U1 (Commodity Specification A, Special Requirement 4.2) and shall be identified in accordance with Section 2303.1.9.1.

1807.1.5 Concrete and masonry foundation walls. Concrete and masonry foundation walls shall be designed in accordance with Chapter 19 or 21, as applicable.

Exception: Concrete and masonry foundation walls shall be permitted to be designed and constructed in accordance with Section 1807.1.6.

1807.1.6 Prescriptive design of concrete and masonry foundation walls. Concrete and masonry foundation walls that are laterally supported at the top and bottom shall be permitted to be designed and constructed in accordance with this section.

1807.1.6.1 Foundation wall thickness. The thickness of prescriptively designed foundation walls shall be not less than the thickness of the wall supported, except that foundation walls of not less than 8-inch (203 mm) nominal width shall be permitted to support brick-veneered frame walls and 10-inch-wide (254 mm) cavity walls provided that the requirements of Section 1807.1.6.2 or 1807.1.6.3 are met.

1807.1.6.2 Concrete foundation walls. Concrete foundation walls shall comply with the following:

1. The thickness shall comply with the requirements of Table 1807.1.6.2.
2. The size and spacing of vertical reinforcement shown in Table 1807.1.6.2 are based on the use of reinforcement with a minimum yield strength of 60,000 pounds per square inch (psi) (414 MPa). Vertical reinforcement with a minimum yield strength of 40,000 psi (276 MPa) or 50,000 psi (345 MPa) shall be permitted, provided that

TABLE 1806.2
PRESUMPTIVE LOAD-BEARING VALUES

CLASS OF MATERIALS	VERTICAL FOUNDATION PRESSURE (psf)	LATERAL BEARING PRESSURE (psf/ft below natural grade)	LATERAL SLIDING RESISTANCE	
			Coefficient of friction[a]	Cohesion (psf)[b]
1. Crystalline bedrock	12,000	1,200	0.70	—
2. Sedimentary and foliated rock	4,000	400	0.35	—
3. Sandy gravel and gravel (GW and GP)	3,000	200	0.35	—
4. Sand, silty sand, clayey sand, silty gravel and clayey gravel (SW, SP, SM, SC, GM and GC)	2,000	150	0.25	—
5. Clay, sandy clay, silty clay, clayey silt, silt and sandy silt (CL, ML, MH and CH)	1,500	100	—	130

For SI: 1 pound per square foot = 0.0479kPa, 1 pound per square foot per foot = 0.157 kPa/m.

a. Coefficient to be multiplied by the dead load.

b. Cohesion value to be multiplied by the contact area, as limited by Section 1806.3.2.

INTERNATIONAL CODE COUNCIL®
Copyright © 2019 ICC & NYSDOS. ALL RIGHTS RESERVED. Accessed by Lauren Gualdino (lgualdino@briarcliffmanor.org), (-) Order Number #100880972 on May 08, 2020 07:05 AM (PDT) pursuant to License Agreement with ICC & NYSDOS. No further reproduction, no

100880972

the same size bar is used and the spacing shown in the table is reduced by multiplying the spacing by 0.67 or 0.83, respectively.

3. Vertical reinforcement, where required, shall be placed nearest the inside face of the wall a distance, d, from the outside face (soil face) of the wall. The distance, d, is equal to the wall thickness, t, minus 1.25 inches (32 mm) plus one-half the bar diameter, d_b, [$d = t - (1.25 + d_b / 2)$]. The reinforcement shall be placed within a tolerance of $\pm\ ^3/_8$ inch (9.5 mm) where d is less than or equal to 8 inches (203 mm) or $\pm\ ^1/_2$ inch (12.7 mm) where d is greater than 8 inches (203 mm).
4. In lieu of the reinforcement shown in Table 1807.1.6.2, smaller reinforcing bar sizes with closer spacings that provide an equivalent cross-sectional area of reinforcement per unit length shall be permitted.
5. Concrete cover for reinforcement measured from the inside face of the wall shall be not less than $^3/_4$ inch (19.1 mm). Concrete cover for reinforcement measured from the outside face of the wall shall be not less than $1^1/_2$ inches (38 mm) for No. 5 bars and smaller, and not less than 2 inches (51 mm) for larger bars.
6. Concrete shall have a specified compressive strength, f'_c, of not less than 2,500 psi (17.2 MPa).
7. The unfactored axial load per linear foot of wall shall not exceed $1.2\ t\ f'_c$ where t is the specified wall thickness in inches.

1807.1.6.2.1 Seismic requirements. Based on the *seismic design category* assigned to the structure in accordance with Section 1613, concrete foundation walls designed using Table 1807.1.6.2 shall be subject to the following limitations:

1. *Seismic Design Categories* A and B. Not less than one No. 5 bar shall be provided around window, door and similar sized openings. The bar shall be anchored to develop f_y in tension at the corners of openings.
2. *Seismic Design Categories* C, D, E and F. Tables shall not be used except as allowed for plain concrete members in Section 1905.1.7.

1807.1.6.3 Masonry foundation walls. Masonry foundation walls shall comply with the following:

1. The thickness shall comply with the requirements of Table 1807.1.6.3(1) for plain masonry walls or Table 1807.1.6.3(2), 1807.1.6.3(3) or 1807.1.6.3(4) for masonry walls with reinforcement.
2. Vertical reinforcement shall have a minimum yield strength of 60,000 psi (414 MPa).
3. The specified location of the reinforcement shall equal or exceed the effective depth distance, d, noted in Tables 1807.1.6.3(2), 1807.1.6.3(3) and 1807.1.6.3(4) and shall be measured from the face of the exterior (soil) side of the wall to the center of the vertical reinforcement. The reinforcement shall be placed within the tolerances specified in TMS 602, Article 3.4.B.11, of the specified location.
4. Grout shall comply with Section 2103.3.
5. Concrete masonry units shall comply with ASTM C90.
6. Clay masonry units shall comply with ASTM C652 for hollow brick, except compliance with ASTM C62 or ASTM C216 shall be permitted where solid masonry units are installed in accordance with Table 1807.1.6.3(1) for plain masonry.
7. Masonry units shall be laid in running bond and installed with Type M or S mortar in accordance with Section 2103.2.1.
8. The unfactored axial load per linear foot of wall shall not exceed $1.2\ t\ f'_m$ where t is the specified wall thickness in inches and f'_m is the specified compressive strength of masonry in pounds per square inch.
9. Not less than 4 inches (102 mm) of solid masonry shall be provided at girder supports at the top of hollow masonry unit foundation walls.
10. Corbeling of masonry shall be in accordance with Section 2104.1. Where an 8-inch (203 mm) wall is corbeled, the top corbel shall not extend higher than the bottom of the floor framing and shall be a full course of headers not less than 6 inches (152 mm) in length or the top course bed joint shall be tied to the vertical wall projection. The tie shall be W2.8 (4.8 mm) and spaced at a maximum horizontal distance of 36 inches (914 mm). The hollow space behind the corbelled masonry shall be filled with mortar or grout.

1807.1.6.3.1 Alternative foundation wall reinforcement. In lieu of the reinforcement provisions for masonry foundation walls in Table 1807.1.6.3(2), 1807.1.6.3(3) or 1807.1.6.3(4), alternative reinforcing bar sizes and spacings having an equivalent cross-sectional area of reinforcement per linear foot (mm) of wall shall be permitted to be used, provided that the spacing of reinforcement does not exceed 72 inches (1829 mm) and reinforcing bar sizes do not exceed No. 11.

1807.1.6.3.2 Seismic requirements. Based on the *seismic design category* assigned to the structure in accordance with Section 1613, masonry foundation walls designed using Tables 1807.1.6.3(1) through 1807.1.6.3(4) shall be subject to the following limitations:

1. *Seismic Design Categories* A and B. No additional seismic requirements.
2. *Seismic Design Category* C. A design using Tables 1807.1.6.3(1) through 1807.1.6.3(4) is

INTERNATIONAL CODE COUNCIL®
Copyright © 2019 ICC & NYSDOS. ALL RIGHTS RESERVED. Accessed by Lauren Gualdino (lgualdino@briarcliffmanor.org), (-) Order Number #100880972 on May 08, 2020 07:05 AM (PDT) pursuant to License Agreement with ICC & NYSDOS. No further reproduction, no

100880972

TABLE 1807.1.6.2
CONCRETE FOUNDATION WALLS[b, c]

MAXIMUM WALL HEIGHT (feet)	MAXIMUM UNBALANCED BACKFILL HEIGHT[e] (feet)	MINIMUM VERTICAL REINFORCEMENT-BAR SIZE AND SPACING (inches)								
		Design lateral soil load[a] (psf per foot of depth)								
		30[d]			45[d]			60		
		Minimum wall thickness (inches)								
		7.5	9.5	11.5	7.5	9.5	11.5	7.5	9.5	11.5
5	4	PC	PC	PC	PC	PC	PC	PC	PC	PC
	5	PC	PC	PC	PC	PC	PC	PC	PC	PC
6	4	PC	PC	PC	PC	PC	PC	PC	PC	PC
	5	PC	PC	PC	PC	PC	PC	PC	PC	PC
	6	PC	PC	PC	PC	PC	PC	PC	PC	PC
7	4	PC	PC	PC	PC	PC	PC	PC	PC	PC
	5	PC	PC	PC	PC	PC	PC	PC	PC	PC
	6	PC	PC	PC	PC	PC	PC	#5 at 48	PC	PC
	7	PC	PC	PC	#5 at 46	PC	PC	#6 at 48	PC	PC
8	4	PC	PC	PC	PC	PC	PC	PC	PC	PC
	5	PC	PC	PC	PC	PC	PC	PC	PC	PC
	6	PC	PC	PC	PC	PC	PC	#5 at 43	PC	PC
	7	PC	PC	PC	#5 at 41	PC	PC	#6 at 43	PC	PC
	8	#5 at 47	PC	PC	#6 at 43	PC	PC	#6 at 32	#6 at 44	PC
9	4	PC	PC	PC	PC	PC	PC	PC	PC	PC
	5	PC	PC	PC	PC	PC	PC	PC	PC	PC
	6	PC	PC	PC	PC	PC	PC	#5 at 39	PC	PC
	7	PC	PC	PC	#5 at 37	PC	PC	#6 at 38	#5 at 37	PC
	8	#5 at 41	PC	PC	#6 at 38	#5 at 37	PC	#7 at 39	#6 at 39	#4 at 48
	9[d]	#6 at 46	PC	PC	#7 at 41	#6 at 41	PC	#7 at 31	#7 at 41	#6 at 39
10	4	PC	PC	PC	PC	PC	PC	PC	PC	PC
	5	PC	PC	PC	PC	PC	PC	PC	PC	PC
	6	PC	PC	PC	PC	PC	PC	#5 at 37	PC	PC
	7	PC	PC	PC	#6 at 48	PC	PC	#6 at 35	#6 at 48	PC
	8	#5 at 38	PC	PC	#7 at 47	#6 at 47	PC	#7 at 35	#7 at 47	#6 at 45
	9[d]	#6 at 41	#4 at 48	PC	#7 at 37	#7 at 48	#4 at 48	#6 at 22	#7 at 37	#7 at 47
	10[d]	#7 at 45	#6 at 45	PC	#7 at 31	#7 at 40	#6 at 38	#6 at 22	#7 at 30	#7 at 38

For SI: 1 inch = 25.4 mm, 1 foot = 304.8 mm, 1 pound per square foot per foot = 0.157 kPa/m.

a. For design lateral soil loads, see Section 1610.

b. Provisions for this table are based on design and construction requirements specified in Section 1807.1.6.2.

c. PC = Plain Concrete.

d. Where unbalanced backfill height exceeds 8 feet and design lateral soil loads from Table 1610.1 are used, the requirements for 30 and 45 psf per foot of depth are not applicable (see Section 1610).

e. For height of unbalanced backfill, see Section 1807.1.2.

subject to the seismic requirements of Section 7.4.3 of TMS 402.

3. *Seismic Design Category* D. A design using Tables 1807.1.6.3(2) through 1807.1.6.3(4) is subject to the seismic requirements of Section 7.4.4 of TMS 402.
4. *Seismic Design Categories* E and F. A design using Tables 1807.1.6.3(2) through 1807.1.6.3(4) is subject to the seismic requirements of Section 7.4.5 of TMS 402.

1807.2 Retaining walls. Retaining walls shall be designed in accordance with Sections 1807.2.1 through 1807.2.3.

1807.2.1 General. Retaining walls shall be designed to ensure stability against overturning, sliding, excessive foundation pressure and water uplift.

1807.2.2 Design lateral soil loads. Retaining walls shall be designed for the lateral soil loads set forth in Section 1610. For structures assigned to Seismic Design Category D, E, or F, the design of retaining walls supporting more than 6 feet (1829 mm) of backfill height shall incorporate the additional seismic lateral earth pressure in accordance with the geotechnical investigation where required in Section 1803.2.

1807.2.3 Safety factor. Retaining walls shall be designed to resist the lateral action of soil to produce sliding and overturning with a minimum safety factor of 1.5 in each case. The load combinations of Section 1605 shall not apply to this requirement. Instead, design shall be based on 0.7 times nominal earthquake loads, 1.0 times other *nominal loads*, and investigation with one or more of the variable loads set to zero. The safety factor against lateral sliding shall be taken as the available soil resistance at the base of the retaining wall foundation divided by the net lateral force applied to the retaining wall.

Exception: Where earthquake loads are included, the minimum safety factor for retaining wall sliding and overturning shall be 1.1.

INTERNATIONAL CODE COUNCIL®
Copyright © 2019 ICC & NYSDOS. ALL RIGHTS RESERVED. Accessed by Lauren Gualdino (lgualdino@briarcliffmanor.org), (-) Order Number #100880972 on May 08, 2020 07:05 AM (PDT) pursuant to License Agreement with ICC & NYSDOS. No further reproduction, no

100880972

TABLE 1807.1.6.3(1)
PLAIN MASONRY FOUNDATION WALLS[a, b, c]

MAXIMUM WALL HEIGHT (feet)	MAXIMUM UNBALANCED BACKFILL HEIGHT[e] (feet)	MINIMUM NOMINAL WALL THICKNESS (inches)		
		Design lateral soil load[a] (psf per foot of depth)		
		30[f]	45[f]	60
7	4 (or less)	8	8	8
	5	8	10	10
	6	10	12	10 (solid[c])
	7	12	10 (solid[c])	10 (solid[c])
8	4 (or less)	8	8	8
	5	8	10	12
	6	10	12	12 (solid[c])
	7	12	12 (solid[c])	Note d
	8	10 (solid[c])	12 (solid[c])	Note d
9	4 (or less)	8	8	8
	5	8	10	12
	6	12	12	12 (solid[c])
	7	12 (solid[c])	12 (solid[c])	Note d
	8	12 (solid[c])	Note d	Note d
	9[f]	Note d	Note d	Note d

For SI: 1 inch = 25.4 mm, 1 foot = 304.8 mm, 1 pound per square foot per foot = 0.157 kPa/m.

a. For design lateral soil loads, see Section 1610.

b. Provisions for this table are based on design and construction requirements specified in Section 1807.1.6.3.

c. Solid grouted hollow units or solid masonry units.

d. A design in compliance with Chapter 21 or reinforcement in accordance with Table 1807.1.6.3(2) is required.

e. For height of unbalanced backfill, see Section 1807.1.2.

f. Where unbalanced backfill height exceeds 8 feet and design lateral soil loads from Table 1610.1 are used, the requirements for 30 and 45 psf per foot of depth are not applicable (see Section 1610).

1807.3 Embedded posts and poles. Designs to resist both axial and lateral loads employing posts or poles as columns embedded in earth or in concrete footings in earth shall be in accordance with Sections 1807.3.1 through 1807.3.3.

1807.3.1 Limitations. The design procedures outlined in this section are subject to the following limitations:

1. The frictional resistance for structural walls and slabs on silts and clays shall be limited to one-half of the normal force imposed on the soil by the weight of the footing or slab.
2. Posts embedded in earth shall not be used to provide lateral support for structural or nonstructural materials such as plaster, masonry or concrete unless bracing is provided that develops the limited deflection required.

Wood poles shall be treated in accordance with AWPA U1 for sawn timber posts (Commodity Specification A, Use Category 4B) and for round timber posts (Commodity Specification B, Use Category 4B).

1807.3.2 Design criteria. The depth to resist lateral loads shall be determined using the design criteria established in Sections 1807.3.2.1 through 1807.3.2.3, or by other methods *approved* by the *building official*.

1807.3.2.1 Nonconstrained. The following formula shall be used in determining the depth of embedment required to resist lateral loads where lateral constraint is not provided at the ground surface, such as by a rigid floor or rigid ground surface pavement, and where lateral constraint is not provided above the ground surface, such as by a structural diaphragm.

$$d = 0.5A\{1 + [1 + (4.36h/A)]^{1/2}\} \quad \textbf{(Equation 18-1)}$$

where:

A = $2.34P/(S_1 b)$.

b = Diameter of round post or footing or diagonal dimension of square post or footing, feet (m).

d = Depth of embedment in earth in feet (m) but not over 12 feet (3658 mm) for purpose of computing lateral pressure.

h = Distance in feet (m) from ground surface to point of application of "P."

P = Applied lateral force in pounds (kN).

S_1 = Allowable lateral soil-bearing pressure as set forth in Section 1806.2 based on a depth of one-third the depth of embedment in pounds per square foot (psf) (kPa).

1807.3.2.2 Constrained. The following formula shall be used to determine the depth of embedment required to resist lateral loads where lateral constraint is provided at the ground surface, such as by a rigid floor or pavement.

$$d = \sqrt{\frac{4.25Ph}{S_3 b}} \quad \textbf{(Equation 18-2)}$$

or alternatively

$$d = \sqrt{\frac{4.25M_g}{S_3 b}} \quad \textbf{(Equation 18-3)}$$

where:

M_g = Moment in the post at grade, in foot-pounds (kN-m).

INTERNATIONAL CODE COUNCIL®
Copyright © 2019 ICC & NYSDOS. ALL RIGHTS RESERVED. Accessed by Lauren Gualdino (lgualdino@briarcliffmanor.org), (-) Order Number #100880972 on May 08, 2020 07:05 AM (PDT) pursuant to License Agreement with ICC & NYSDOS. No further reproduction, no

100880972

TABLE 1807.1.6.3(2)
8-INCH MASONRY FOUNDATION WALLS WITH REINFORCEMENT WHERE d ≥ 5 INCHES[a, b, c]

MAXIMUM WALL HEIGHT (feet-inches)	MAXIMUM UNBALANCED BACKFILL HEIGHT[d] (feet-inches)	MINIMUM VERTICAL REINFORCEMENT-BAR SIZE AND SPACING (inches)		
		Design lateral soil load[a] (psf per foot of depth)		
		30[e]	45[e]	60
7-4	4-0 (or less)	#4 at 48	#4 at 48	#4 at 48
	5-0	#4 at 48	#4 at 48	#4 at 48
	6-0	#4 at 48	#5 at 48	#5 at 48
	7-4	#5 at 48	#6 at 48	#7 at 48
8-0	4-0 (or less)	#4 at 48	#4 at 48	#4 at 48
	5-0	#4 at 48	#4 at 48	#4 at 48
	6-0	#4 at 48	#5 at 48	#5 at 48
	7-0	#5 at 48	#6 at 48	#7 at 48
	8-0	#5 at 48	#6 at 48	#7 at 48
8-8	4-0 (or less)	#4 at 48	#4 at 48	#4 at 48
	5-0	#4 at 48	#4 at 48	#5 at 48
	6-0	#4 at 48	#5 at 48	#6 at 48
	7-0	#5 at 48	#6 at 48	#7 at 48
	8-8[e]	#6 at 48	#7 at 48	#8 at 48
9-4	4-0 (or less)	#4 at 48	#4 at 48	#4 at 48
	5-0	#4 at 48	#4 at 48	#5 at 48
	6-0	#4 at 48	#5 at 48	#6 at 48
	7-0	#5 at 48	#6 at 48	#7 at 48
	8-0	#6 at 48	#7 at 48	#8 at 48
	9-4[e]	#7 at 48	#8 at 48	#9 at 48
10-0	4-0 (or less)	#4 at 48	#4 at 48	#4 at 48
	5-0	#4 at 48	#4 at 48	#5 at 48
	6-0	#4 at 48	#5 at 48	#6 at 48
	7-0	#5 at 48	#6 at 48	#7 at 48
	8-0	#6 at 48	#7 at 48	#8 at 48
	9-0[e]	#7 at 48	#8 at 48	#9 at 48
	10-0[e]	#7 at 48	#9 at 48	#9 at 48

For SI: 1 inch = 25.4 mm, 1 foot = 304.8 mm, 1 pound per square foot per foot = 0.157 kPa/m.

a. For design lateral soil loads, see Section 1610.

b. Provisions for this table are based on design and construction requirements specified in Section 1807.1.6.3.

c. For alternative reinforcement, see Section 1807.1.6.3.1.

d. For height of unbalanced backfill, see Section 1807.1.2.

e. Where unbalanced backfill height exceeds 8 feet and design lateral soil loads from Table 1610.1 are used, the requirements for 30 and 45 psf per foot of depth are not applicable. See Section 1610.

S_3 = Allowable lateral soil-bearing pressure as set forth in Section 1806.2 based on a depth equal to the depth of embedment in pounds per square foot (kPa).

1807.3.2.3 Vertical load. The resistance to vertical loads shall be determined using the vertical foundation pressure set forth in Table 1806.2.

1807.3.3 Backfill. The backfill in the annular space around columns not embedded in poured footings shall be by one of the following methods:

1. Backfill shall be of concrete with a specified compressive strength of not less than 2,000 psi (13.8 MPa). The hole shall be not less than 4 inches (102 mm) larger than the diameter of the column at its bottom or 4 inches (102 mm) larger than the diagonal dimension of a square or rectangular column.
2. Backfill shall be of clean sand. The sand shall be thoroughly compacted by tamping in layers not more than 8 inches (203 mm) in depth.
3. Backfill shall be of controlled low-strength material (CLSM).

SECTION 1808
FOUNDATIONS

1808.1 General. Foundations shall be designed and constructed in accordance with Sections 1808.2 through 1808.9. Shallow foundations shall satisfy the requirements of Section 1809. Deep foundations shall satisfy the requirements of Section 1810.

1808.2 Design for capacity and settlement. Foundations shall be so designed that the allowable bearing capacity of the soil is not exceeded, and that differential settlement is minimized. Foundations in areas with expansive soils shall be designed in accordance with the provisions of Section 1808.6.

1808.3 Design loads. Foundations shall be designed for the most unfavorable effects due to the combinations of loads specified in Section 1605.2 or 1605.3. The dead load is permitted to include the weight of foundations and overlying fill. Reduced live loads, as specified in Sections 1607.11 and 1607.13, shall be permitted to be used in the design of foundations.

INTERNATIONAL CODE COUNCIL®
Copyright © 2019 ICC & NYSDOS. ALL RIGHTS RESERVED. Accessed by Lauren Gualdino (lgualdino@briarcliffmanor.org), (-) Order Number #100880972 on May 08, 2020 07:05 AM (PDT) pursuant to License Agreement with ICC & NYSDOS. No further reproduction, no

100880972

TABLE 1807.1.6.3(3)
10-INCH MASONRY FOUNDATION WALLS WITH REINFORCEMENT WHERE d ≥ 6.75 INCHES [a, b, c]

MAXIMUM WALL HEIGHT (feet-inches)	MAXIMUM UNBALANCED BACKFILL HEIGHT[d] (feet-inches)	MINIMUM VERTICAL REINFORCEMENT-BAR SIZE AND SPACING (inches)		
		Design lateral soil load[a] (psf per foot of depth)		
		30[e]	45[e]	60
7-4	4-0 (or less)	#4 at 56	#4 at 56	#4 at 56
	5-0	#4 at 56	#4 at 56	#4 at 56
	6-0	#4 at 56	#4 at 56	#5 at 56
	7-4	#4 at 56	#5 at 56	#6 at 56
8-0	4-0 (or less)	#4 at 56	#4 at 56	#4 at 56
	5-0	#4 at 56	#4 at 56	#4 at 56
	6-0	#4 at 56	#4 at 56	#5 at 56
	7-0	#4 at 56	#5 at 56	#6 at 56
	8-0	#5 at 56	#6 at 56	#7 at 56
8-8	4-0 (or less)	#4 at 56	#4 at 56	#4 at 56
	5-0	#4 at 56	#4 at 56	#4 at 56
	6-0	#4 at 56	#4 at 56	#5 at 56
	7-0	#4 at 56	#5 at 56	#6 at 56
	8-8[e]	#5 at 56	#7 at 56	#8 at 56
9-4	4-0 (or less)	#4 at 56	#4 at 56	#4 at 56
	5-0	#4 at 56	#4 at 56	#4 at 56
	6-0	#4 at 56	#5 at 56	#5 at 56
	7-0	#4 at 56	#5 at 56	#6 at 56
	8-0	#5 at 56	#6 at 56	#7 at 56
	9-4[e]	#6 at 56	#7 at 56	#7 at 56
10-0	4-0 (or less)	#4 at 56	#4 at 56	#4 at 56
	5-0	#4 at 56	#4 at 56	#4 at 56
	6-0	#4 at 56	#5 at 56	#5 at 56
	7-0	#5 at 56	#6 at 56	#7 at 56
	8-0	#5 at 56	#7 at 56	#8 at 56
	9-0[e]	#6 at 56	#7 at 56	#9 at 56
	10-0[e]	#7 at 56	#8 at 56	#9 at 56

For SI: 1 inch = 25.4 mm, 1 foot = 304.8 mm, 1 pound per square foot per foot = 1.157 kPa/m.

a. For design lateral soil loads, see Section 1610.

b. Provisions for this table are based on design and construction requirements specified in Section 1807.1.6.3.

c. For alternative reinforcement, see Section 1807.1.6.3.1.

d. For height of unbalanced backfill, see Section 1807.1.2.

e. Where unbalanced backfill height exceeds 8 feet and design lateral soil loads from Table 1610.1 are used, the requirements for 30 and 45 psf per foot of depth are not applicable. See Section 1610.

1808.3.1 Seismic overturning. Where foundations are proportioned using the load combinations of Section 1605.2 or 1605.3.1, and the computation of seismic overturning effects is by equivalent lateral force analysis or modal analysis, the proportioning shall be in accordance with Section 12.13.4 of ASCE 7.

1808.3.2 Surcharge. Fill or other surcharge loads shall not be placed adjacent to any building or structure unless such building or structure is capable of withstanding the additional loads caused by the fill or the surcharge. Existing footings or foundations that will be affected by any excavation shall be underpinned or otherwise protected against settlement and shall be protected against detrimental lateral or vertical movement or both.

Exception: Minor grading for landscaping purposes shall be permitted where done with walk-behind equipment, where the grade is not increased more than 1 foot (305 mm) from original design grade or where *approved* by the *building official*.

1808.4 Vibratory loads. Where machinery operations or other vibrations are transmitted through the foundation, consideration shall be given in the foundation design to prevent detrimental disturbances of the soil.

1808.5 Shifting or moving soils. Where it is known that the shallow subsoils are of a shifting or moving character, foundations shall be carried to a sufficient depth to ensure stability.

1808.6 Design for expansive soils. Foundations for buildings and structures founded on expansive soils shall be designed in accordance with Section 1808.6.1 or 1808.6.2.

Exception: Foundation design need not comply with Section 1808.6.1 or 1808.6.2 where one of the following conditions is satisfied:

1. The soil is removed in accordance with Section 1808.6.3.
2. The *building official* approves stabilization of the soil in accordance with Section 1808.6.4.

INTERNATIONAL CODE COUNCIL®
Copyright © 2019 ICC & NYSDOS. ALL RIGHTS RESERVED. Accessed by Lauren Gualdino (lgualdino@briarcliffmanor.org), (-) Order Number #100880972 on May 08, 2020 07:05 AM (PDT) pursuant to License Agreement with ICC & NYSDOS. No further reproduction, no

100880972

TABLE 1807.1.6.3(4)
12-INCH MASONRY FOUNDATION WALLS WITH REINFORCEMENT WHERE d ≥ 8.75 INCHES[a, b, c]

MAXIMUM WALL HEIGHT (feet-inches)	MAXIMUM UNBALANCED BACKFILL HEIGHT[d] (feet-inches)	MINIMUM VERTICAL REINFORCEMENT-BAR SIZE AND SPACING (inches)		
		Design lateral soil load[a] (psf per foot of depth)		
		30[e]	45[e]	60
7-4	4 (or less)	#4 at 72	#4 at 72	#4 at 72
	5-0	#4 at 72	#4 at 72	#4 at 72
	6-0	#4 at 72	#4 at 72	#5 at 72
	7-4	#4 at 72	#5 at 72	#6 at 72
8-0	4 (or less)	#4 at 72	#4 at 72	#4 at 72
	5-0	#4 at 72	#4 at 72	#4 at 72
	6-0	#4 at 72	#4 at 72	#5 at 72
	7-0	#4 at 72	#5 at 72	#6 at 72
	8-0	#5 at 72	#6 at 72	#8 at 72
8-8	4 (or less)	#4 at 72	#4 at 72	#4 at 72
	5-0	#4 at 72	#4 at 72	#4 at 72
	6-0	#4 at 72	#4 at 72	#5 at 72
	7-0	#4 at 72	#5 at 72	#6 at 72
	8-8[e]	#5 at 72	#7 at 72	#8 at 72
9-4	4 (or less)	#4 at 72	#4 at 72	#4 at 72
	5-0	#4 at 72	#4 at 72	#4 at 72
	6-0	#4 at 72	#5 at 72	#5 at 72
	7-0	#4 at 72	#5 at 72	#6 at 72
	8-0	#5 at 72	#6 at 72	#7 at 72
	9-4[e]	#6 at 72	#7 at 72	#8 at 72
10-0	4 (or less)	#4 at 72	#4 at 72	#4 at 72
	5-0	#4 at 72	#4 at 72	#4 at 72
	6-0	#4 at 72	#5 at 72	#5 at 72
	7-0	#4 at 72	#6 at 72	#6 at 72
	8-0	#5 at 72	#6 at 72	#7 at 72
	9-0[e]	#6 at 72	#7 at 72	#8 at 72
	10-0[e]	#7 at 72	#8 at 72	#9 at 72

For SI: 1 inch = 25.4 mm, 1 foot = 304.8 mm, 1 pound per square foot per foot = 0.157 kPa/m.

a. For design lateral soil loads, see Section 1610.

b. Provisions for this table are based on design and construction requirements specified in Section 1807.1.6.3.

c. For alternative reinforcement, see Section 1807.1.6.3.1.

d. For height of unbalanced backfill, see Section 1807.1.2.

e Where unbalanced backfill height exceeds 8 feet and design lateral soil loads from Table 1610.1 are used, the requirements for 30 and 45 psf per foot of depth are not applicable. See Section 1610.

1808.6.1 Foundations. Foundations placed on or within the active zone of expansive soils shall be designed to resist differential volume changes and to prevent structural damage to the supported structure. Deflection and racking of the supported structure shall be limited to that which will not interfere with the usability and serviceability of the structure.

Foundations placed below where volume change occurs or below expansive soil shall comply with the following provisions:

1. Foundations extending into or penetrating expansive soils shall be designed to prevent uplift of the supported structure.
2. Foundations penetrating expansive soils shall be designed to resist forces exerted on the foundation due to soil volume changes or shall be isolated from the expansive soil.

1808.6.2 Slab-on-ground foundations. Moments, shears and deflections for use in designing slab-on-ground, mat or raft foundations on expansive soils shall be determined in accordance with *WRI/CRSI Design of Slab-on-Ground Foundations* or *PTI DC 10.5*. Using the moments, shears and deflections determined above, nonprestressed slabs-on-ground, mat or raft foundations on expansive soils shall be designed in accordance with *WRI/CRSI Design of Slab-on-Ground Foundations* and post-tensioned slab-on-ground, mat or raft foundations on expansive soils shall be designed in accordance with *PTI DC 10.5*. It shall be permitted to analyze and design such slabs by other methods that account for soil-structure interaction, the deformed shape of the soil support, the plate or stiffened plate action of the slab as well as both center lift and edge lift conditions. Such alternative methods shall be rational and the basis for all aspects and parameters of the method shall be available for peer review.

1808.6.3 Removal of expansive soil. Where expansive soil is removed in lieu of designing foundations in accordance with Section 1808.6.1 or 1808.6.2, the soil shall be removed to a depth sufficient to ensure a constant moisture

INTERNATIONAL CODE COUNCIL®
Copyright © 2019 ICC & NYSDOS. ALL RIGHTS RESERVED. Accessed by Lauren Gualdino (lgualdino@briarcliffmanor.org), (-) Order Number #100880972 on May 08, 2020 07:05 AM (PDT) pursuant to License Agreement with ICC & NYSDOS. No further reproduction, no

100880972

content in the remaining soil. Fill material shall not contain expansive soils and shall comply with Section 1804.5 or 1804.6.

Exception: Expansive soil need not be removed to the depth of constant moisture, provided that the confining pressure in the expansive soil created by the fill and supported structure exceeds the swell pressure.

1808.6.4 Stabilization. Where the active zone of expansive soils is stabilized in lieu of designing foundations in accordance with Section 1808.6.1 or 1808.6.2, the soil shall be stabilized by chemical, dewatering, presaturation or equivalent techniques.

1808.7 Foundations on or adjacent to slopes. The placement of buildings and structures on or adjacent to slopes steeper than one unit vertical in three units horizontal (33.3-percent slope) shall comply with Sections 1808.7.1 through 1808.7.5.

1808.7.1 Building clearance from ascending slopes. In general, buildings below slopes shall be set a sufficient distance from the slope to provide protection from slope drainage, erosion and shallow failures. Except as provided in Section 1808.7.5 and Figure 1808.7.1, the following criteria will be assumed to provide this protection. Where the existing slope is steeper than one unit vertical in one unit horizontal (100-percent slope), the toe of the slope shall be assumed to be at the intersection of a horizontal plane drawn from the top of the foundation and a plane drawn tangent to the slope at an angle of 45 degrees (0.79 rad) to the horizontal. Where a retaining wall is constructed at the toe of the slope, the height of the slope shall be measured from the top of the wall to the top of the slope.

1808.7.2 Foundation setback from descending slope surface. Foundations on or adjacent to slope surfaces shall be founded in firm material with an embedment and set back from the slope surface sufficient to provide vertical and lateral support for the foundation without detrimental settlement. Except as provided for in Section 1808.7.5 and Figure 1808.7.1, the following setback is deemed adequate to meet the criteria. Where the slope is steeper than 1 unit vertical in 1 unit horizontal (100-percent slope), the required setback shall be measured from an imaginary plane 45 degrees (0.79 rad) to the horizontal, projected upward from the toe of the slope.

1808.7.3 Pools. The setback between pools regulated by this code and slopes shall be equal to one-half the building footing setback distance required by this section. That portion of the pool wall within a horizontal distance of 7 feet (2134 mm) from the top of the slope shall be capable of supporting the water in the pool without soil support.

1808.7.4 Foundation elevation. On graded sites, the top of any exterior foundation shall extend above the elevation of the street gutter at point of discharge or the inlet of an *approved* drainage device not less than 12 inches (305 mm) plus 2 percent. Alternate elevations are permitted subject to the approval of the *building official*, provided that it can be demonstrated that required drainage to the point of discharge and away from the structure is provided at all locations on the site.

1808.7.5 Alternate setback and clearance. Alternate setbacks and clearances are permitted, subject to the approval of the *building official*. The *building official* shall be permitted to require a geotechnical investigation as set forth in Section 1803.5.10.

1808.8 Concrete foundations. The design, materials and construction of concrete foundations shall comply with Sections 1808.8.1 through 1808.8.6 and the provisions of Chapter 19.

Exception: Where concrete footings supporting walls of light-frame construction are designed in accordance with Table 1809.7, a specific design in accordance with Chapter 19 is not required.

1808.8.1 Concrete or grout strength and mix proportioning. Concrete or grout in foundations shall have a specified compressive strength (f'_c) not less than the largest applicable value indicated in Table 1808.8.1.

Where concrete is placed through a funnel hopper at the top of a deep foundation element, the concrete mix shall be designed and proportioned so as to produce a cohesive workable mix having a slump of not less than 4 inches (102 mm) and not more than 8 inches (204 mm). Where concrete or grout is to be pumped, the mix design including slump shall be adjusted to produce a pumpable mixture.

1808.8.2 Concrete cover. The concrete cover provided for prestressed and nonprestressed reinforcement in foundations shall be not less than the largest applicable value

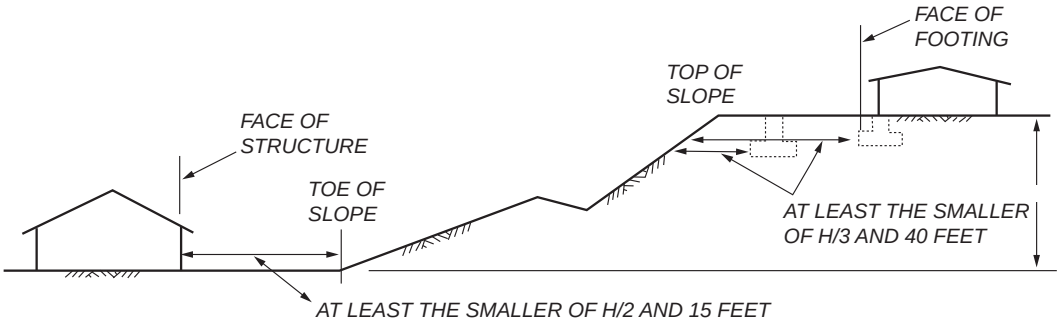

For SI: 1 foot = 304.8 mm.

FIGURE 1808.7.1
FOUNDATION CLEARANCES FROM SLOPES

INTERNATIONAL CODE COUNCIL®
Copyright © 2019 ICC & NYSDOS. ALL RIGHTS RESERVED. Accessed by Lauren Gualdino (lgualdino@briarcliffmanor.org), (-) Order Number #100880972 on May 08, 2020 07:05 AM (PDT) pursuant to License Agreement with ICC & NYSDOS. No further reproduction, no

100880972

specified in Table 1808.8.2. Longitudinal bars spaced less than $1^1/_2$ inches (38 mm) clear distance apart shall be considered to be bundled bars for which the concrete cover provided shall be not less than that required by Section 20.6.1.3.4 of ACI 318. Concrete cover shall be measured from the concrete surface to the outermost surface of the steel to which the cover requirement applies. Where concrete is placed in a temporary or permanent casing or a mandrel, the inside face of the casing or mandrel shall be considered to be the concrete surface.

1808.8.3 Placement of concrete. Concrete shall be placed in such a manner as to ensure the exclusion of any foreign matter and to secure a full-size foundation. Concrete shall not be placed through water unless a tremie or other method *approved* by the *building official* is used. Where placed under or in the presence of water, the concrete shall be deposited by *approved* means to ensure minimum segregation of the mix and negligible turbulence of the water. Where depositing concrete from the top of a deep foundation element, the concrete shall be chuted directly into smooth-sided pipes or tubes or placed in a rapid and continuous operation through a funnel hopper centered at the top of the element.

1808.8.4 Protection of concrete. Concrete foundations shall be protected from freezing during depositing and for a period of not less than 5 days thereafter. Water shall not be allowed to flow through the deposited concrete.

1808.8.5 Forming of concrete. Concrete foundations are permitted to be cast against the earth where, in the opinion of the *building official*, soil conditions do not require formwork. Where formwork is required, it shall be in accordance with Section 26.11 of ACI 318.

1808.8.6 Seismic requirements. See Section 1905 for additional requirements for foundations of structures assigned to *Seismic Design Category* C, D, E or F.

For structures assigned to *Seismic Design Category* D, E or F, provisions of Section 18.13 of ACI 318 shall apply where not in conflict with the provisions of Sections 1808 through 1810.

Exceptions:

1. Detached one- and two-family dwellings of light-frame construction and two stories or less above *grade plane* are not required to comply with the provisions of Section 18.13 of ACI 318.
2. Section 18.13.4.3(a) of ACI 318 shall not apply.

TABLE 1808.8.1
MINIMUM SPECIFIED COMPRESSIVE STRENGTH f'_c OF CONCRETE OR GROUT

FOUNDATION ELEMENT OR CONDITION	SPECIFIED COMPRESSIVE STRENGTH, f'_c
1. Foundations for structures assigned to Seismic Design Category A, B or C	2,500 psi
2a. Foundations for Group R or U occupancies of light-frame construction, two stories or less in height, assigned to Seismic Design Category D, E or F	2,500 psi
2b. Foundations for other structures assigned to Seismic Design Category D, E or F	3,000 psi
3. Precast nonprestressed driven piles	4,000 psi
4. Socketed drilled shafts	4,000 psi
5. Micropiles	4,000 psi
6. Precast prestressed driven piles	5,000 psi

For SI: 1 pound per square inch = 0.00689 MPa.

TABLE 1808.8.2
MINIMUM CONCRETE COVER

FOUNDATION ELEMENT OR CONDITION	MINIMUM COVER
1. Shallow foundations	In accordance with Section 20.6 of ACI 318
2. Precast nonprestressed deep foundation elements Exposed to seawater Not manufactured under plant conditions Manufactured under plant control conditions	 3 inches 2 inches In accordance with Section 20.6.1.3.3 of ACI 318
3. Precast prestressed deep foundation elements Exposed to seawater Other	 2.5 inches In accordance with Section 20.6.1.3.3 of ACI 318
4. Cast-in-place deep foundation elements not enclosed by a steel pipe, tube or permanent casing	2.5 inches
5. Cast-in-place deep foundation elements enclosed by a steel pipe, tube or permanent casing	1 inch
6. Structural steel core within a steel pipe, tube or permanent casing	2 inches
7. Cast-in-place drilled shafts enclosed by a stable rock socket	1.5 inches

For SI: 1 inch = 25.4 mm.

INTERNATIONAL CODE COUNCIL®
Copyright © 2019 ICC & NYSDOS. ALL RIGHTS RESERVED. Accessed by Lauren Gualdino (lgualdino@briarcliffmanor.org), (-) Order Number #100880972 on May 08, 2020 07:05 AM (PDT) pursuant to License Agreement with ICC & NYSDOS. No further reproduction, no

100880972

1808.9 Vertical masonry foundation elements. Vertical masonry foundation elements that are not foundation piers as defined in Section 202 shall be designed as piers, walls or columns, as applicable, in accordance with TMS 402.

SECTION 1809
SHALLOW FOUNDATIONS

1809.1 General. Shallow foundations shall be designed and constructed in accordance with Sections 1809.2 through 1809.13.

1809.2 Supporting soils. Shallow foundations shall be built on undisturbed soil, compacted fill material or controlled low-strength material (CLSM). Compacted fill material shall be placed in accordance with Section 1804.5. CLSM shall be placed in accordance with Section 1804.6.

1809.3 Stepped footings. The top surface of footings shall be level. The bottom surface of footings shall be permitted to have a slope not exceeding one unit vertical in 10 units horizontal (10-percent slope). Footings shall be stepped where it is necessary to change the elevation of the top surface of the footing or where the surface of the ground slopes more than one unit vertical in 10 units horizontal (10-percent slope).

1809.4 Depth and width of footings. The minimum depth of footings below the undisturbed ground surface shall be 12 inches (305 mm). Where applicable, the requirements of Section 1809.5 shall be satisfied. The minimum width of footings shall be 12 inches (305 mm).

1809.5 Frost protection. Except where otherwise protected from frost, foundations and other permanent supports of buildings and structures shall be protected from frost by one or more of the following methods:

1. Extending below the frost line of the locality.
2. Constructing in accordance with ASCE 32.
3. Erecting on solid rock.

   Exception: Free-standing buildings meeting all of the following conditions shall not be required to be protected:

   1. Assigned to *Risk Category* I.
   2. Area of 600 square feet (56 m^2) or less for light-frame construction or 400 square feet (37 m^2) or less for other than light-frame construction.
   3. Eave height of 10 feet (3048 mm) or less.

Shallow foundations shall not bear on frozen soil unless such frozen condition is of a permanent character.

1809.6 Location of footings. Footings on granular soil shall be so located that the line drawn between the lower edges of adjoining footings shall not have a slope steeper than 30 degrees (0.52 rad) with the horizontal, unless the material supporting the higher footing is braced or retained or otherwise laterally supported in an *approved* manner or a greater slope has been properly established by engineering analysis.

1809.7 Prescriptive footings for light-frame construction. Where a specific design is not provided, concrete or masonry-unit footings supporting walls of light-frame construction shall be permitted to be designed in accordance with Table 1809.7.

TABLE 1809.7
PRESCRIPTIVE FOOTINGS SUPPORTING WALLS OF LIGHT-FRAME CONSTRUCTION[a, b, c, d, e]

NUMBER OF FLOORS SUPPORTED BY THE FOOTING[f]	WIDTH OF FOOTING (inches)	THICKNESS OF FOOTING (inches)
1	12	6
2	15	6
3	18	8[g]

For SI: 1 inch = 25.4 mm, 1 foot = 304.8 mm.

a. Depth of footings shall be in accordance with Section 1809.4.

b. The ground under the floor shall be permitted to be excavated to the elevation of the top of the footing.

c. Interior stud-bearing walls shall be permitted to be supported by isolated footings. The footing width and length shall be twice the width shown in this table, and footings shall be spaced not more than 6 feet on center.

d. See Section 1905 for additional requirements for concrete footings of structures assigned to Seismic Design Category C, D, E or F.

e. For thickness of foundation walls, see Section 1807.1.6.

f. Footings shall be permitted to support a roof in addition to the stipulated number of floors. Footings supporting roof only shall be as required for supporting one floor.

g. Plain concrete footings for Group R-3 occupancies shall be permitted to be 6 inches thick.

1809.8 Plain concrete footings. The edge thickness of plain concrete footings supporting walls of other than light-frame construction shall be not less than 8 inches (203 mm) where placed on soil or rock.

Exception: For plain concrete footings supporting Group R-3 occupancies, the edge thickness is permitted to be 6 inches (152 mm), provided that the footing does not extend beyond a distance greater than the thickness of the footing on either side of the supported wall.

1809.9 Masonry-unit footings. The design, materials and construction of masonry-unit footings shall comply with Sections 1809.9.1 and 1809.9.2, and the provisions of Chapter 21.

Exception: Where a specific design is not provided, masonry-unit footings supporting walls of light-frame construction shall be permitted to be designed in accordance with Table 1809.7.

1809.9.1 Dimensions. Masonry-unit footings shall be laid in Type M or S mortar complying with Section 2103.2.1 and the depth shall be not less than twice the projection beyond the wall, pier or column. The width shall be not less than 8 inches (203 mm) wider than the wall supported thereon.

1809.9.2 Offsets. The maximum offset of each course in brick foundation walls stepped up from the footings shall be $1^1/_2$ inches (38 mm) where laid in single courses, and 3 inches (76 mm) where laid in double courses.

1809.10 Pier and curtain wall foundations. Except in *Seismic Design Categories* D, E and F, pier and curtain wall foundations shall be permitted to be used to support light-frame construction not more than two *stories above grade plane*, provided that the following requirements are met:

1. All load-bearing walls shall be placed on continuous concrete footings bonded integrally with the *exterior wall* footings.

INTERNATIONAL CODE COUNCIL®
Copyright © 2019 ICC & NYSDOS. ALL RIGHTS RESERVED. Accessed by Lauren Gualdino (lgualdino@briarcliffmanor.org), (-) Order Number #100880972 on May 08, 2020 07:05 AM (PDT) pursuant to License Agreement with ICC & NYSDOS. No further reproduction, no

100880972

2. The minimum actual thickness of a load-bearing masonry wall shall be not less than 4 inches (102 mm) nominal or $3^5/_8$ inches (92 mm) actual thickness, and shall be bonded integrally with piers spaced 6 feet (1829 mm) on center (o.c.).
3. Piers shall be constructed in accordance with Chapter 21 and the following:
    3.1. The unsupported height of the masonry piers shall not exceed 10 times their least dimension.
    3.2. Where structural clay tile or hollow concrete masonry units are used for piers supporting beams and girders, the cellular spaces shall be filled solidly with concrete or Type M or S mortar.

        Exception: Unfilled hollow piers shall be permitted where the unsupported height of the pier is not more than four times its least dimension.

    3.3. Hollow piers shall be capped with 4 inches (102 mm) of solid masonry or concrete or the cavities of the top course shall be filled with concrete or grout.
4. The maximum height of a 4-inch (102 mm) load-bearing masonry foundation wall supporting wood frame walls and floors shall not be more than 4 feet (1219 mm) in height.
5. The unbalanced fill for 4-inch (102 mm) foundation walls shall not exceed 24 inches (610 mm) for solid masonry, nor 12 inches (305 mm) for hollow masonry.

1809.11 Steel grillage footings. Grillage footings of *structural steel elements* shall be separated with *approved* steel spacers and be entirely encased in concrete with not less than 6 inches (152 mm) on the bottom and not less than 4 inches (102 mm) at all other points. The spaces between the shapes shall be completely filled with concrete or cement grout.

1809.12 Timber footings. Timber footings shall be permitted for buildings of Type V construction and as otherwise *approved* by the *building official*. Such footings shall be treated in accordance with AWPA U1 (Commodity Specification A, Use Category 4B). Treated timbers are not required where placed entirely below permanent water level, or where used as capping for wood piles that project above the water level over submerged or marsh lands. The compressive stresses perpendicular to grain in untreated timber footings supported on treated piles shall not exceed 70 percent of the allowable stresses for the species and grade of timber as specified in the ANSI/AWC NDS.

1809.13 Footing seismic ties. Where a structure is assigned to *Seismic Design Category* D, E or F, individual spread footings founded on soil defined in Chapter 20 of ASCE 7 as *Site Class* E or F shall be interconnected by ties. Unless it is demonstrated that equivalent restraint is provided by reinforced concrete beams within slabs on grade or reinforced concrete slabs on grade, ties shall be capable of carrying, in tension or compression, a force equal to the lesser of the product of the larger footing design gravity load times the seismic coefficient, S_{DS}, divided by 10 and 25 percent of the smaller footing design gravity load.

SECTION 1810
DEEP FOUNDATIONS

1810.1 General. Deep foundations shall be analyzed, designed, detailed and installed in accordance with Sections 1810.1 through 1810.4.

1810.1.1 Geotechnical investigation. Deep foundations shall be designed and installed on the basis of a geotechnical investigation as set forth in Section 1803.

1810.1.2 Use of existing deep foundation elements. Deep foundation elements left in place where a structure has been demolished shall not be used for the support of new construction unless satisfactory evidence is submitted to the *building official*, which indicates that the elements are sound and meet the requirements of this code. Such elements shall be load tested or redriven to verify their capacities. The design load applied to such elements shall be the lowest allowable load as determined by tests or redriving data.

1810.1.3 Deep foundation elements classified as columns. Deep foundation elements standing unbraced in air, water or fluid soils shall be classified as columns and designed as such in accordance with the provisions of this code from their top down to the point where adequate lateral support is provided in accordance with Section 1810.2.1.

Exception: Where the unsupported height to least horizontal dimension of a cast-in-place deep foundation element does not exceed three, it shall be permitted to design and construct such an element as a pedestal in accordance with ACI 318.

1810.1.4 Special types of deep foundations. The use of types of deep foundation elements not specifically mentioned herein is permitted, subject to the approval of the *building official*, upon the submission of acceptable test data, calculations and other information relating to the structural properties and load capacity of such elements. The allowable stresses for materials shall not in any case exceed the limitations specified herein.

1810.2 Analysis. The analysis of deep foundations for design shall be in accordance with Sections 1810.2.1 through 1810.2.5.

1810.2.1 Lateral support. Any soil other than fluid soil shall be deemed to afford sufficient lateral support to prevent buckling of deep foundation elements and to permit the design of the elements in accordance with accepted engineering practice and the applicable provisions of this code.

Where deep foundation elements stand unbraced in air, water or fluid soils, it shall be permitted to consider them laterally supported at a point 5 feet (1524 mm) into stiff soil or 10 feet (3048 mm) into soft soil unless otherwise *approved* by the *building official* on the basis of a geotechnical investigation by a *registered design professional*.

INTERNATIONAL CODE COUNCIL®
Copyright © 2019 ICC & NYSDOS. ALL RIGHTS RESERVED. Accessed by Lauren Gualdino (lgualdino@briarcliffmanor.org), (-) Order Number #100880972 on May 08, 2020 07:05 AM (PDT) pursuant to License Agreement with ICC & NYSDOS. No further reproduction, no

100880972

1810.2.2 Stability. Deep foundation elements shall be braced to provide lateral stability in all directions. Three or more elements connected by a rigid cap shall be considered to be braced, provided that the elements are located in radial directions from the centroid of the group not less than 60 degrees (1 rad) apart. A two-element group in a rigid cap shall be considered to be braced along the axis connecting the two elements. Methods used to brace deep foundation elements shall be subject to the approval of the *building official*.

Deep foundation elements supporting walls shall be placed alternately in lines spaced not less than 1 foot (305 mm) apart and located symmetrically under the center of gravity of the wall load carried, unless effective measures are taken to provide for eccentricity and lateral forces, or the foundation elements are adequately braced to provide for lateral stability.

Exceptions:

1. Isolated cast-in-place deep foundation elements without lateral bracing shall be permitted where the least horizontal dimension is not less than 2 feet (610 mm), adequate lateral support in accordance with Section 1810.2.1 is provided for the entire height and the height does not exceed 12 times the least horizontal dimension.
2. A single row of deep foundation elements without lateral bracing is permitted for one- and two-family dwellings and lightweight construction not exceeding two *stories above grade plane* or 35 feet (10 668 mm) in *building height*, provided that the centers of the elements are located within the width of the supported wall.

1810.2.3 Settlement. The settlement of a single deep foundation element or group thereof shall be estimated based on *approved* methods of analysis. The predicted settlement shall cause neither harmful distortion of, nor instability in, the structure, nor cause any element to be loaded beyond its capacity.

1810.2.4 Lateral loads. The moments, shears and lateral deflections used for design of deep foundation elements shall be established considering the nonlinear interaction of the shaft and soil, as determined by a *registered design professional*. Where the ratio of the depth of embedment of the element to its least horizontal dimension is less than or equal to six, it shall be permitted to assume the element is rigid.

1810.2.4.1 Seismic Design Categories D through F. For structures assigned to *Seismic Design Category* D, E or F, deep foundation elements on *Site Class* E or F sites, as determined in Section 1613.2.2, shall be designed and constructed to withstand maximum imposed curvatures from earthquake ground motions and structure response. Curvatures shall include free-field soil strains modified for soil-foundation-structure interaction coupled with foundation element deformations associated with earthquake loads imparted to the foundation by the structure.

Exception: Deep foundation elements that satisfy the following additional detailing requirements shall be deemed to comply with the curvature capacity requirements of this section.

1. Precast prestressed concrete piles detailed in accordance with Section 1810.3.8.3.3.
2. Cast-in-place deep foundation elements with a minimum longitudinal reinforcement ratio of 0.005 extending the full length of the element and detailed in accordance with Sections 18.7.5.2, 18.7.5.3 and 18.7.5.4 of ACI 318 as required by Section 1810.3.9.4.2.2.

1810.2.5 Group effects. The analysis shall include group effects on lateral behavior where the center-to-center spacing of deep foundation elements in the direction of lateral force is less than eight times the least horizontal dimension of an element. The analysis shall include group effects on axial behavior where the center-to-center spacing of deep foundation elements is less than three times the least horizontal dimension of an element. Group effects shall be evaluated using a generally accepted method of analysis; the analysis for uplift of grouped elements with center-to-center spacing less than three times the least horizontal dimension of an element shall be evaluated in accordance with Section 1810.3.3.1.6.

1810.3 Design and detailing. Deep foundations shall be designed and detailed in accordance with Sections 1810.3.1 through 1810.3.13.

1810.3.1 Design conditions. Design of deep foundations shall include the design conditions specified in Sections 1810.3.1.1 through 1810.3.1.6, as applicable.

1810.3.1.1 Design methods for concrete elements. Where concrete deep foundations are laterally supported in accordance with Section 1810.2.1 for the entire height and applied forces cause bending moments not greater than those resulting from accidental eccentricities, structural design of the element using the load combinations of Section 1605.3 and the allowable stresses specified in this chapter shall be permitted. Otherwise, the structural design of concrete deep foundation elements shall use the load combinations of Section 1605.2 and *approved* strength design methods.

1810.3.1.2 Composite elements. Where a single deep foundation element comprises two or more sections of different materials or different types spliced together, each section of the composite assembly shall satisfy the applicable requirements of this code, and the maximum allowable load in each section shall be limited by the structural capacity of that section.

1810.3.1.3 Mislocation. The foundation or superstructure shall be designed to resist the effects of the mislocation of any deep foundation element by not less than 3 inches (76 mm). To resist the effects of mislocation,

INTERNATIONAL CODE COUNCIL®
Copyright © 2019 ICC & NYSDOS. ALL RIGHTS RESERVED. Accessed by Lauren Gualdino (lgualdino@briarcliffmanor.org), (-) Order Number #100880972 on May 08, 2020 07:05 AM (PDT) pursuant to License Agreement with ICC & NYSDOS. No further reproduction, no

100880972

compressive overload of deep foundation elements to 110 percent of the allowable design load shall be permitted.

1810.3.1.4 Driven piles. Driven piles shall be designed and manufactured in accordance with accepted engineering practice to resist all stresses induced by handling, driving and service loads.

1810.3.1.5 Helical piles. Helical piles shall be designed and manufactured in accordance with accepted engineering practice to resist all stresses induced by installation into the ground and service loads.

1810.3.1.6 Casings. Temporary and permanent casings shall be of steel and shall be sufficiently strong to resist collapse and sufficiently watertight to exclude any foreign materials during the placing of concrete. Where a permanent casing is considered reinforcing steel, the steel shall be protected under the conditions specified in Section 1810.3.2.5. Horizontal joints in the casing shall be spliced in accordance with Section 1810.3.6.

1810.3.2 Materials. The materials used in deep foundation elements shall satisfy the requirements of Sections 1810.3.2.1 through 1810.3.2.8, as applicable.

1810.3.2.1 Concrete. Where concrete is cast in a steel pipe or where an enlarged base is formed by compacting concrete, the maximum size for coarse aggregate shall be $^3/_4$ inch (19.1 mm). Concrete to be compacted shall have a zero slump.

1810.3.2.1.1 Seismic hooks. For structures assigned to *Seismic Design Category* C, D, E or F, the ends of hoops, spirals and ties used in concrete deep foundation elements shall be terminated with seismic hooks, as defined in ACI 318, and shall be turned into the confined concrete core.

1810.3.2.1.2 ACI 318 Equation (25.7.3.3). Where this chapter requires detailing of concrete deep foundation elements in accordance with Section 18.7.5.4 of ACI 318, compliance with Equation (25.7.3.3) of ACI 318 shall not be required.

1810.3.2.2 Prestressing steel. Prestressing steel shall conform to ASTM A416.

1810.3.2.3 Steel. Structural steel H-piles and structural steel sheet piling shall conform to the material requirements in ASTM A6. Steel pipe piles shall conform to the material requirements in ASTM A252. Fully welded steel piles shall be fabricated from plates that conform to the material requirements in ASTM A36, ASTM A283, ASTM A572, ASTM A588 or ASTM A690.

1810.3.2.4 Timber. Timber deep foundation elements shall be designed as piles or poles in accordance with ANSI/AWC NDS. Round timber elements shall conform to ASTM D25. Sawn timber elements shall conform to DOC PS-20.

1810.3.2.4.1 Preservative treatment. Timber deep foundation elements used to support permanent structures shall be treated in accordance with this section unless it is established that the tops of the untreated timber elements will be below the lowest ground water level assumed to exist during the life of the structure. Preservative and minimum final retention shall be in accordance with AWPA U1 (Commodity Specification E, Use Category 4C) for round timber elements and AWPA U1 (Commodity Specification A, Use Category 4B) for sawn timber elements. Preservative-treated timber elements shall be subject to a quality control program administered by an *approved agency*. Element cutoffs shall be treated in accordance with AWPA M4.

1810.3.2.5 Protection of materials. Where boring records or site conditions indicate possible deleterious action on the materials used in deep foundation elements because of soil constituents, changing water levels or other factors, the elements shall be adequately protected by materials, methods or processes *approved* by the *building official*. Protective materials shall be applied to the elements so as not to be rendered ineffective by installation. The effectiveness of such protective measures for the particular purpose shall have been thoroughly established by satisfactory service records or other evidence.

1810.3.2.6 Allowable stresses. The allowable stresses for materials used in deep foundation elements shall not exceed those specified in Table 1810.3.2.6.

1810.3.2.7 Increased allowable compressive stress for cased mandrel-driven cast-in-place elements. The allowable compressive stress in the concrete shall be permitted to be increased as specified in Table 1810.3.2.6 for those portions of permanently cased cast-in-place elements that satisfy all of the following conditions:

1. The design shall not use the casing to resist any portion of the axial load imposed.
2. The casing shall have a sealed tip and be mandrel driven.
3. The thickness of the casing shall be not less than manufacturer's standard gage No.14 (0.068 inch) (1.75 mm).
4. The casing shall be seamless or provided with seams of strength equal to the basic material and be of a configuration that will provide confinement to the cast-in-place concrete.
5. The ratio of steel yield strength (F_y) to specified compressive strength (f'_c) shall be not less than six.
6. The nominal diameter of the element shall not be greater than 16 inches (406 mm).

INTERNATIONAL CODE COUNCIL®
Copyright © 2019 ICC & NYSDOS. ALL RIGHTS RESERVED. Accessed by Lauren Gualdino (lgualdino@briarcliffmanor.org), (-) Order Number #100880972 on May 08, 2020 07:05 AM (PDT) pursuant to License Agreement with ICC & NYSDOS. No further reproduction, no

100880972

TABLE 1810.3.2.6
ALLOWABLE STRESSES FOR MATERIALS USED IN DEEP FOUNDATION ELEMENTS

MATERIAL TYPE AND CONDITION	MAXIMUM ALLOWABLE STRESS[a]
1. Concrete or grout in compression[b]	
Cast-in-place with a permanent casing in accordance with Section 1810.3.2.7	$0.4\ f'_c$
Cast-in-place in a pipe, tube, other permanent casing or rock	$0.33\ f'_c$
Cast-in-place without a permanent casing	$0.3\ f'_c$
Precast nonprestressed	$0.33\ f'_c$
Precast prestressed	$0.33\ f'_c - 0.27\ f_{pc}$
2. Nonprestressed reinforcement in compression	$0.4\ f_y \le 30{,}000$ psi
3. Steel in compression	
Cores within concrete-filled pipes or tubes	$0.5\ F_y \le 32{,}000$ psi
Pipes, tubes or H-piles, where justified in accordance with Section 1810.3.2.8	$0.5\ F_y \le 32{,}000$ psi
Pipes or tubes for micropiles	$0.4\ F_y \le 32{,}000$ psi
Other pipes, tubes or H-piles	$0.35\ F_y \le 16{,}000$ psi
Helical piles	$0.6\ F_y \le 0.5\ F_u$
4. Nonprestressed reinforcement in tension	
Within micropiles	$0.6\ f_y$
Other conditions	$0.5\ f_y \le 24{,}000$ psi
5. Steel in tension	
Pipes, tubes or H-piles, where justified in accordance with Section 1810.3.2.8	$0.5\ F_y \le 32{,}000$ psi
Other pipes, tubes or H-piles	$0.35\ F_y \le 16{,}000$ psi
Helical piles	$0.6\ F_y \le 0.5\ F_u$
6. Timber	In accordance with the ANSI/AWC NDS

a. f'_c is the specified compressive strength of the concrete or grout; f_{pc} is the compressive stress on the gross concrete section due to effective prestress forces only; f_y is the specified yield strength of reinforcement; F_y is the specified minimum yield stress of steel; F_u is the specified minimum tensile stress of structural steel.

b. The stresses specified apply to the gross cross-sectional area within the concrete surface. Where a temporary or permanent casing is used, the inside face of the casing shall be considered to be the concrete surface.

1810.3.2.8 Justification of higher allowable stresses. Use of allowable stresses greater than those specified in Section 1810.3.2.6 shall be permitted where supporting data justifying such higher stresses is filed with the *building official*. Such substantiating data shall include the following:

1. A geotechnical investigation in accordance with Section 1803.
2. Load tests in accordance with Section 1810.3.3.1.2, regardless of the load supported by the element.

The design and installation of the deep foundation elements shall be under the direct supervision of a *registered design professional* knowledgeable in the field of soil mechanics and deep foundations who shall submit a report to the *building official* stating that the elements as installed satisfy the design criteria.

1810.3.3 Determination of allowable loads. The allowable axial and lateral loads on deep foundation elements shall be determined by an *approved* formula, load tests or method of analysis.

1810.3.3.1 Allowable axial load. The allowable axial load on a deep foundation element shall be determined in accordance with Sections 1810.3.3.1.1 through 1810.3.3.1.9.

1810.3.3.1.1 Driving criteria. The allowable compressive load on any driven deep foundation element where determined by the application of an *approved* driving formula shall not exceed 40 tons (356 kN). For allowable loads above 40 tons (356 kN), the wave equation method of analysis shall be used to estimate drivability for both driving stresses and net displacement per blow at the ultimate load. Allowable loads shall be verified by load tests in accordance with Section 1810.3.3.1.2. The formula or wave equation load shall be determined for gravity-drop or power-actuated hammers and the hammer energy used shall be the maximum consistent with the size, strength and weight of the driven elements. The use of a follower is permitted only with the approval of the *building official*. The introduction of fresh hammer cushion or pile cushion material just prior to final penetration is not permitted.

1810.3.3.1.2 Load tests. Where design compressive loads are greater than those determined using the allowable stresses specified in Section 1810.3.2.6, where the design load for any deep foundation element is in doubt, or where cast-in-place deep foundation elements have an enlarged base formed either by compacting concrete or by driving a precast base, control test elements shall be tested in accordance with ASTM D1143 or ASTM D4945. One element or more shall be load tested in each area of uniform subsoil conditions. Where required by the *building official*, additional elements shall be load tested where necessary to establish the safe design capacity. The resulting allowable loads shall not be more

INTERNATIONAL CODE COUNCIL®
Copyright © 2019 ICC & NYSDOS. ALL RIGHTS RESERVED. Accessed by Lauren Gualdino (lgualdino@briarcliffmanor.org), (-) Order Number #100880972 on May 08, 2020 07:05 AM (PDT) pursuant to License Agreement with ICC & NYSDOS. No further reproduction, no

100880972

than one-half of the ultimate axial load capacity of the test element as assessed by one of the published methods listed in Section 1810.3.3.1.3 with consideration for the test type, duration and subsoil. The ultimate axial load capacity shall be determined by a *registered design professional* with consideration given to tolerable total and differential settlements at design load in accordance with Section 1810.2.3. In subsequent installation of the balance of deep foundation elements, all elements shall be deemed to have a supporting capacity equal to that of the control element where such elements are of the same type, size and relative length as the test element; are installed using the same or comparable methods and equipment as the test element; are installed in similar subsoil conditions as the test element; and, for driven elements, where the rate of penetration (for example, net displacement per blow) of such elements is equal to or less than that of the test element driven with the same hammer through a comparable driving distance.

1810.3.3.1.3 Load test evaluation methods. It shall be permitted to evaluate load tests of deep foundation elements using any of the following methods:

1. Davisson Offset Limit.
2. Brinch-Hansen 90-percent Criterion.
3. Butler-Hoy Criterion.
4. Other methods *approved* by the *building official*.

1810.3.3.1.4 Allowable shaft resistance. The assumed shaft resistance developed by any uncased cast-in-place deep foundation element shall not exceed one-sixth of the bearing value of the soil material at minimum depth as set forth in Table 1806.2, up to 500 psf (24 kPa), unless a greater value is allowed by the *building official* on the basis of a geotechnical investigation as specified in Section 1803 or a greater value is substantiated by a load test in accordance with Section 1810.3.3.1.2. Shaft resistance and end-bearing resistance shall not be assumed to act simultaneously unless determined by a geotechnical investigation in accordance with Section 1803.

1810.3.3.1.5 Uplift capacity of a single deep foundation element. Where required by the design, the uplift capacity of a single deep foundation element shall be determined by an *approved* method of analysis based on a minimum factor of safety of three or by load tests conducted in accordance with ASTM D3689. The maximum allowable uplift load shall not exceed the ultimate load capacity as determined in Section 1810.3.3.1.2, using the results of load tests conducted in accordance with ASTM D3689, divided by a factor of safety of two.

Exception: Where uplift is due to wind or seismic loading, the minimum factor of safety shall be two where capacity is determined by an analysis and one and one-half where capacity is determined by load tests.

1810.3.3.1.6 Allowable uplift load of grouped deep foundation elements. For grouped deep foundation elements subjected to uplift, the allowable uplift load for the group shall be calculated by a generally accepted method of analysis. Where the deep foundation elements in the group are placed at a center-to-center spacing less than three times the least horizontal dimension of the largest single element, the allowable uplift load for the group is permitted to be calculated as the lesser of:

1. The proposed individual allowable uplift load times the number of elements in the group.
2. Two-thirds of the effective weight of the group and the soil contained within a block defined by the perimeter of the group and the length of the element, plus two-thirds of the ultimate shear resistance along the soil block.

1810.3.3.1.7 Load-bearing capacity. Deep foundation elements shall develop ultimate load capacities of not less than twice the design working loads in the designated load-bearing layers. Analysis shall show that soil layers underlying the designated load-bearing layers do not cause the load-bearing capacity safety factor to be less than two.

1810.3.3.1.8 Bent deep foundation elements. The load-bearing capacity of deep foundation elements discovered to have a sharp or sweeping bend shall be determined by an *approved* method of analysis or by load testing a representative element.

1810.3.3.1.9 Helical piles. The allowable axial design load, P_a, of helical piles shall be determined as follows:

$$P_a = 0.5\ P_u \qquad \textbf{(Equation 18-4)}$$

where P_u is the least value of:

1. Sum of the areas of the helical bearing plates times the ultimate bearing capacity of the soil or rock comprising the bearing stratum.
2. Ultimate capacity determined from well-documented correlations with installation torque.
3. Ultimate capacity determined from load tests.
4. Ultimate axial capacity of pile shaft.
5. Ultimate axial capacity of pile shaft couplings.
6. Sum of the ultimate axial capacity of helical bearing plates affixed to pile.

1810.3.3.2 Allowable lateral load. Where required by the design, the lateral load capacity of a single deep foundation element or a group thereof shall be determined by an *approved* method of analysis or by lateral load tests to not less than twice the proposed design working load. The resulting allowable load shall not be more than one-half of the load that produces a gross lateral movement of 1 inch (25 mm) at the lower of the top of foundation element and the ground surface, unless it can be shown that the predicted lateral move-

INTERNATIONAL CODE COUNCIL®
Copyright © 2019 ICC & NYSDOS. ALL RIGHTS RESERVED. Accessed by Lauren Gualdino (lgualdino@briarcliffmanor.org), (-) Order Number #100880972 on May 08, 2020 07:05 AM (PDT) pursuant to License Agreement with ICC & NYSDOS. No further reproduction, no

100880972

ment shall cause neither harmful distortion of, nor instability in, the structure, nor cause any element to be loaded beyond its capacity.

1810.3.4 Subsiding soils. Where deep foundation elements are installed through subsiding fills or other subsiding strata and derive support from underlying firmer materials, consideration shall be given to the downward frictional forces potentially imposed on the elements by the subsiding upper strata.

Where the influence of subsiding fills is considered as imposing loads on the element, the allowable stresses specified in this chapter shall be permitted to be increased where satisfactory substantiating data are submitted.

1810.3.5 Dimensions of deep foundation elements. The dimensions of deep foundation elements shall be in accordance with Sections 1810.3.5.1 through 1810.3.5.3, as applicable.

1810.3.5.1 Precast. The minimum lateral dimension of precast concrete deep foundation elements shall be 8 inches (203 mm). Corners of square elements shall be chamfered.

1810.3.5.2 Cast-in-place or grouted-in-place. Cast-in-place and grouted-in-place deep foundation elements shall satisfy the requirements of this section.

1810.3.5.2.1 Cased. Cast-in-place or grouted-in-place deep foundation elements with a permanent casing shall have a nominal outside diameter of not less than 8 inches (203 mm).

1810.3.5.2.2 Uncased. Cast-in-place or grouted-in-place deep foundation elements without a permanent casing shall have a specified diameter of not less than 12 inches (305 mm). The element length shall not exceed 30 times the specified diameter.

Exception: The length of the element is permitted to exceed 30 times the specified diameter, provided that the design and installation of the deep foundations are under the direct supervision of a *registered design professional* knowledgeable in the field of soil mechanics and deep foundations. The *registered design professional* shall submit a report to the *building official* stating that the elements were installed in compliance with the *approved construction documents*.

1810.3.5.2.3 Micropiles. Micropiles shall have a nominal diameter of 12 inches (305 mm) or less. The minimum diameter set forth elsewhere in Section 1810.3.5 shall not apply to micropiles.

1810.3.5.3 Steel. Steel deep foundation elements shall satisfy the requirements of this section.

1810.3.5.3.1 Structural steel H-piles. Sections of structural steel H-piles shall comply with the requirements for HP shapes in ASTM A6, or the following:

1. The flange projections shall not exceed 14 times the minimum thickness of metal in either the flange or the web and the flange widths shall be not less than 80 percent of the depth of the section.
2. The nominal depth in the direction of the web shall be not less than 8 inches (203 mm).
3. Flanges and web shall have a minimum nominal thickness of $^3/_8$ inch (9.5 mm).

1810.3.5.3.2 Fully welded steel piles fabricated from plates. Sections of fully welded steel piles fabricated from plates shall comply with the following:

1. The flange projections shall not exceed 14 times the minimum thickness of metal in either the flange or the web and the flange widths shall be not less than 80 percent of the depth of the section.
2. The nominal depth in the direction of the web shall be not less than 8 inches (203 mm).
3. Flanges and web shall have a minimum nominal thickness of $^3/_8$ inch (9.5 mm).

1810.3.5.3.3 Structural steel sheet piling. Individual sections of structural steel sheet piling shall conform to the profile indicated by the manufacturer, and shall conform to the general requirements specified by ASTM A6.

1810.3.5.3.4 Steel pipes and tubes. Steel pipes and tubes used as deep foundation elements shall have a nominal outside diameter of not less than 8 inches (203 mm). Where steel pipes or tubes are driven open ended, they shall have not less than 0.34 square inch (219 mm^2) of steel in cross section to resist each 1,000 foot-pounds (1356 Nm) of pile hammer energy, or shall have the equivalent strength for steels having a yield strength greater than 35,000 psi (241 MPa) or the wave equation analysis shall be permitted to be used to assess compression stresses induced by driving to evaluate if the pile section is appropriate for the selected hammer. Where a pipe or tube with wall thickness less than 0.179 inch (4.6 mm) is driven open ended, a suitable cutting shoe shall be provided. Concrete-filled steel pipes or tubes in structures assigned to *Seismic Design Category* C, D, E or F shall have a wall thickness of not less than $^3/_{16}$ inch (5 mm). The pipe or tube casing for socketed drilled shafts shall have a nominal outside diameter of not less than 18 inches (457 mm), a wall thickness of not less than $^3/_8$ inch (9.5 mm) and a suitable steel driving shoe welded to the bottom; the diameter of the rock socket shall be approximately equal to the inside diameter of the casing.

Exceptions:

1. There is no minimum diameter for steel pipes or tubes used in micropiles.
2. For mandrel-driven pipes or tubes, the minimum wall thickness shall be $^1/_{10}$ inch (2.5 mm).

1810.3.5.3.5 Helical piles. Dimensions of the central shaft and the number, size and thickness of heli-

INTERNATIONAL CODE COUNCIL®
Copyright © 2019 ICC & NYSDOS. ALL RIGHTS RESERVED. Accessed by Lauren Gualdino (lgualdino@briarcliffmanor.org), (-) Order Number #100880972 on May 08, 2020 07:05 AM (PDT) pursuant to License Agreement with ICC & NYSDOS. No further reproduction, no

100880972

cal bearing plates shall be sufficient to support the design loads.

1810.3.6 Splices. Splices shall be constructed so as to provide and maintain true alignment and position of the component parts of the deep foundation element during installation and subsequent thereto and shall be designed to resist the axial and shear forces and moments occurring at the location of the splice during driving and for design load combinations. Where deep foundation elements of the same type are being spliced, splices shall develop not less than 50 percent of the bending strength of the weaker section. Where deep foundation elements of different materials or different types are being spliced, splices shall develop the full compressive strength and not less than 50 percent of the tension and bending strength of the weaker section. Where structural steel cores are to be spliced, the ends shall be milled or ground to provide full contact and shall be full-depth welded.

Splices occurring in the upper 10 feet (3048 mm) of the embedded portion of an element shall be designed to resist at allowable stresses the moment and shear that would result from an assumed eccentricity of the axial load of 3 inches (76 mm), or the element shall be braced in accordance with Section 1810.2.2 to other deep foundation elements that do not have splices in the upper 10 feet (3048 mm) of embedment.

1810.3.6.1 Seismic Design Categories C through F. For structures assigned to *Seismic Design Category* C, D, E or F splices of deep foundation elements shall develop the lesser of the following:

1. The nominal strength of the deep foundation element.
2. The axial and shear forces and moments from the seismic load effects including overstrength factor in accordance with Section 2.3.6 or 2.4.5 of ASCE 7.

1810.3.7 Top of element detailing at cutoffs. Where a minimum length for reinforcement or the extent of closely spaced confinement reinforcement is specified at the top of a deep foundation element, provisions shall be made so that those specified lengths or extents are maintained after cutoff.

1810.3.8 Precast concrete piles. Precast concrete piles shall be designed and detailed in accordance with Sections 1810.3.8.1 through 1810.3.8.3.

1810.3.8.1 Reinforcement. Longitudinal steel shall be arranged in a symmetrical pattern and be laterally tied with steel ties or wire spiral spaced center to center as follows:

1. At not more than 1 inch (25 mm) for the first five ties or spirals at each end; then
2. At not more than 4 inches (102 mm), for the remainder of the first 2 feet (610 mm) from each end; and then
3. At not more than 6 inches (152 mm) elsewhere.

The size of ties and spirals shall be as follows:

1. For piles having a least horizontal dimension of 16 inches (406 mm) or less, wire shall not be smaller than 0.22 inch (5.6 mm) (No. 5 gage).
2. For piles having a least horizontal dimension of more than 16 inches (406 mm) and less than 20 inches (508 mm), wire shall not be smaller than 0.238 inch (6 mm) (No. 4 gage).
3. For piles having a least horizontal dimension of 20 inches (508 mm) and larger, wire shall not be smaller than $^1/_4$ inch (6.4 mm) round or 0.259 inch (6.6 mm) (No. 3 gage).

1810.3.8.2 Precast nonprestressed piles. Precast nonprestressed concrete piles shall comply with the requirements of Sections 1810.3.8.2.1 through 1810.3.8.2.3.

1810.3.8.2.1 Minimum reinforcement. Longitudinal reinforcement shall consist of not fewer than four bars with a minimum longitudinal reinforcement ratio of 0.008.

1810.3.8.2.2 Seismic reinforcement in Seismic Design Categories C through F. For structures assigned to *Seismic Design Category* C, D, E or F, precast nonprestressed piles shall be reinforced as specified in this section. The minimum longitudinal reinforcement ratio shall be 0.01 throughout the length. Transverse reinforcement shall consist of closed ties or spirals with a minimum $^3/_8$ inch (9.5 mm) diameter. Spacing of transverse reinforcement shall not exceed the smaller of eight times the diameter of the smallest longitudinal bar or 6 inches (152 mm) within a distance of three times the least pile dimension from the bottom of the pile cap. Spacing of transverse reinforcement shall not exceed 6 inches (152 mm) throughout the remainder of the pile.

1810.3.8.2.3 Additional seismic reinforcement in Seismic Design Categories D through F. For structures assigned to *Seismic Design Category* D, E or F, transverse reinforcement shall be in accordance with Section 1810.3.9.4.2.

1810.3.8.3 Precast prestressed piles. Precast prestressed concrete piles shall comply with the requirements of Sections 1810.3.8.3.1 through 1810.3.8.3.3.

1810.3.8.3.1 Effective prestress. The effective prestress in the pile shall be not less than 400 psi (2.76 MPa) for piles up to 30 feet (9144 mm) in length, 550 psi (3.79 MPa) for piles up to 50 feet (15 240 mm) in length and 700 psi (4.83 MPa) for piles greater than 50 feet (15 240 mm) in length.

Effective prestress shall be based on an assumed loss of 30,000 psi (207 MPa) in the prestressing steel. The tensile stress in the prestressing steel shall not exceed the values specified in ACI 318.

INTERNATIONAL CODE COUNCIL®
Copyright © 2019 ICC & NYSDOS. ALL RIGHTS RESERVED. Accessed by Lauren Gualdino (lgualdino@briarcliffmanor.org), (-) Order Number #100880972 on May 08, 2020 07:05 AM (PDT) pursuant to License Agreement with ICC & NYSDOS. No further reproduction, no

100880972

1810.3.8.3.2 Seismic reinforcement in Seismic Design Category C. For structures assigned to *Seismic Design Category* C, precast prestressed piles shall have transverse reinforcement in accordance with this section. The volumetric ratio of spiral reinforcement shall not be less than the amount required by the following formula for the upper 20 feet (6096 mm) of the pile.

$$\rho_s = 0.04(f'_c / f_{yh})[2.8 + 2.34P/f'_c A_g)] \quad \textbf{(Equation 18-5)}$$

where:

A_g = Pile cross-sectional area square inches (mm^2).

f'_c = Specified compressive strength of concrete, psi (MPa).

f_{yh} = Yield strength of spiral reinforcement ≤ 85,000 psi (586 MPa).

P = Axial load on pile, pounds (kN), as determined from Equations 16-5 and 16-7.

ρ_s = Spiral reinforcement index or volumetric ratio (vol. spiral/vol. core).

Not less than one-half the volumetric ratio required by Equation 18-5 shall be provided below the upper 20 feet (6096 mm) of the pile.

Exception: The minimum spiral reinforcement index required by Equation 18-5 shall not apply in cases where the design includes full consideration of load combinations specified in ASCE 7, Section 2.3.6 and the applicable overstrength factor, Ω_0. In such cases, minimum spiral reinforcement index shall be as specified in Section 1810.3.8.1.

1810.3.8.3.3 Seismic reinforcement in Seismic Design Categories D through F. For structures assigned to *Seismic Design Category* D, E or F, precast prestressed piles shall have transverse reinforcement in accordance with the following:

1. Requirements in ACI 318, Chapter 18, need not apply, unless specifically referenced.
2. Where the total pile length in the soil is 35 feet (10 668 mm) or less, the lateral transverse reinforcement in the ductile region shall occur through the length of the pile. Where the pile length exceeds 35 feet (10 668 mm), the ductile pile region shall be taken as the greater of 35 feet (10 668 mm) or the distance from the underside of the pile cap to the point of zero curvature plus three times the least pile dimension.
3. In the ductile region, the center-to-center spacing of the spirals or hoop reinforcement shall not exceed one-fifth of the least pile dimension, six times the diameter of the longitudinal strand or 8 inches (203 mm), whichever is smallest.
4. Circular spiral reinforcement shall be spliced by lapping one full turn and bending the end of each spiral to a 90-degree hook or by use of a mechanical or welded splice complying with Section 25.5.7 of ACI 318.
5. Where the transverse reinforcement consists of circular spirals, the volumetric ratio of spiral transverse reinforcement in the ductile region shall comply with the following:

$$\rho_s = 0.06(f'_c / f_{yh})[2.8 + 2.34P/f'_c A_g)] \quad \textbf{(Equation 18-6)}$$

but not exceed:

$$\rho_s = 0.021 \quad \textbf{(Equation 18-7)}$$

where:

A_g = Pile cross-sectional area, square inches (mm^2).

f'_c = Specified compressive strength of concrete, psi (MPa).

f_{yh} = Yield strength of spiral reinforcement ≤ 85,000 psi (586 MPa).

P = Axial load on pile, pounds (kN), as determined from Equations 16-5 and 16-7.

ρ_s = Volumetric ratio (vol. spiral/vol. core).

This required amount of spiral reinforcement is permitted to be obtained by providing an inner and outer spiral.

Exception: The minimum spiral reinforcement required by Equation 18-6 shall not apply in cases where the design includes full consideration of load combinations specified in ASCE 7, Section 2.3.6 and the applicable overstrength factor, Ω_0. In such cases, minimum spiral reinforcement shall be as specified in Section 1810.3.8.1.

6. Where transverse reinforcement consists of rectangular hoops and cross ties, the total cross-sectional area of lateral transverse reinforcement in the ductile region with spacing, s, and perpendicular dimension, h_c, shall conform to:

$$A_{sh} = 0.3s\, h_c\, (f'_c / f_{yh})(A_g / A_{ch} - 1.0)\, [0.5 + 1.4P/(f'_c A_g)] \quad \textbf{(Equation 18-8)}$$

but not less than:

$$A_{sh} = 0.12s\, h_c\, (f'_c / f_{yh})\, [0.5 + 1.4P/(f'_c A_g)] \quad \textbf{(Equation 18-9)}$$

where:

f_{yh} = yield strength of transverse reinforcement ≤ 70,000 psi (483 MPa).

h_c = Cross-sectional dimension of pile core measured center to center of hoop reinforcement, inch (mm).

INTERNATIONAL CODE COUNCIL®
Copyright © 2019 ICC & NYSDOS. ALL RIGHTS RESERVED. Accessed by Lauren Gualdino (lgualdino@briarcliffmanor.org), (-) Order Number #100880972 on May 08, 2020 07:05 AM (PDT) pursuant to License Agreement with ICC & NYSDOS. No further reproduction, no

100880972

s = Spacing of transverse reinforcement measured along length of pile, inch (mm).

A_{sh} = Cross-sectional area of transverse reinforcement, square inches (mm^2).

f'_c = Specified compressive strength of concrete, psi (MPa).

The hoops and cross ties shall be equivalent to deformed bars not less than No. 3 in size. Rectangular hoop ends shall terminate at a corner with seismic hooks.

Outside of the length of the pile requiring transverse confinement reinforcing, the spiral or hoop reinforcing with a volumetric ratio not less than one-half of that required for transverse confinement reinforcing shall be provided.

1810.3.8.3.4 Axial load limit in Seismic Design Categories C through F. For structures assigned to Seismic Design Category C, D, E, or F, the maximum factored axial load on precast prestressed piles subjected to a combination of seismic lateral force and axial load shall not exceed the following values:

1. $0.2f'_c A_g$ for square piles
2. $0.4f'_c A_g$ for circular or octagonal piles

1810.3.9 Cast-in-place deep foundations. Cast-in-place deep foundation elements shall be designed and detailed in accordance with Sections 1810.3.9.1 through 1810.3.9.6.

1810.3.9.1 Design cracking moment. The design cracking moment (ϕM_n) for a cast-in-place deep foundation element not enclosed by a structural steel pipe or tube shall be determined using the following equation:

$$\phi M_n = 3\sqrt{f'_c} S_m \qquad \textbf{(Equation 18-10)}$$

For SI: $\phi M_n = 0.25\sqrt{f'_c} S_m$

where:

f'_c = Specified compressive strength of concrete or grout, psi (MPa).

S_m = Elastic section modulus, neglecting reinforcement and casing, cubic inches (mm^3).

1810.3.9.2 Required reinforcement. Where subject to uplift or where the required moment strength determined using the load combinations of Section 1605.2 exceeds the design cracking moment determined in accordance with Section 1810.3.9.1, cast-in-place deep foundations not enclosed by a structural steel pipe or tube shall be reinforced.

1810.3.9.3 Placement of reinforcement. Reinforcement where required shall be assembled and tied together and shall be placed in the deep foundation element as a unit before the reinforced portion of the element is filled with concrete.

Exceptions:

1. Steel dowels embedded 5 feet (1524 mm) or less shall be permitted to be placed after concreting, while the concrete is still in a semifluid state.
2. For deep foundation elements installed with a hollow-stem auger, tied reinforcement shall be placed after elements are concreted, while the concrete is still in a semifluid state. Longitudinal reinforcement without lateral ties shall be placed either through the hollow stem of the auger prior to concreting or after concreting, while the concrete is still in a semifluid state.
3. For Group R-3 and U occupancies not exceeding two stories of light-frame construction, reinforcement is permitted to be placed after concreting, while the concrete is still in a semifluid state, and the concrete cover requirement is permitted to be reduced to 2 inches (51 mm), provided that the construction method can be demonstrated to the satisfaction of the *building official*.

1810.3.9.4 Seismic reinforcement. Where a structure is assigned to *Seismic Design Category* C, reinforcement shall be provided in accordance with Section 1810.3.9.4.1. Where a structure is assigned to *Seismic Design Category* D, E or F, reinforcement shall be provided in accordance with Section 1810.3.9.4.2.

Exceptions:

1. Isolated deep foundation elements supporting posts of Group R-3 and U occupancies not exceeding two stories of light-frame construction shall be permitted to be reinforced as required by rational analysis but with not less than one No. 4 bar, without ties or spirals, where detailed so the element is not subject to lateral loads and the soil provides adequate lateral support in accordance with Section 1810.2.1.
2. Isolated deep foundation elements supporting posts and bracing from decks and patios appurtenant to Group R-3 and U occupancies not exceeding two stories of light-frame construction shall be permitted to be reinforced as required by rational analysis but with not less than one No. 4 bar, without ties or spirals, where the lateral load, *E*, to the top of the element does not exceed 200 pounds (890 N) and the soil provides adequate lateral support in accordance with Section 1810.2.1.
3. Deep foundation elements supporting the concrete foundation wall of Group R-3 and U occupancies not exceeding two stories of

INTERNATIONAL CODE COUNCIL®
Copyright © 2019 ICC & NYSDOS. ALL RIGHTS RESERVED. Accessed by Lauren Gualdino (lgualdino@briarcliffmanor.org), (-) Order Number #100880972 on May 08, 2020 07:05 AM (PDT) pursuant to License Agreement with ICC & NYSDOS. No further reproduction, no

100880972

light-frame construction shall be permitted to be reinforced as required by rational analysis but with not less than two No. 4 bars, without ties or spirals, where the design cracking moment determined in accordance with Section 1810.3.9.1 exceeds the required moment strength determined using the load combinations with overstrength factor in Section 2.3.6 or 2.4.5 of ASCE 7 and the soil provides adequate lateral support in accordance with Section 1810.2.1.

4. Closed ties or spirals where required by Section 1810.3.9.4.2 shall be permitted to be limited to the top 3 feet (914 mm) of deep foundation elements 10 feet (3048 mm) or less in depth supporting Group R-3 and U occupancies of *Seismic Design Category* D, not exceeding two stories of light-frame construction.

1810.3.9.4.1 Seismic reinforcement in Seismic Design Category C. For structures assigned to *Seismic Design Category* C, cast-in-place deep foundation elements shall be reinforced as specified in this section. Reinforcement shall be provided where required by analysis.

Not fewer than four longitudinal bars, with a minimum longitudinal reinforcement ratio of 0.0025, shall be provided throughout the minimum reinforced length of the element as defined in this section starting at the top of the element. The minimum reinforced length of the element shall be taken as the greatest of the following:

1. One-third of the element length.
2. A distance of 10 feet (3048 mm).
3. Three times the least element dimension.
4. The distance from the top of the element to the point where the design cracking moment determined in accordance with Section 1810.3.9.1 exceeds the required moment strength determined using the load combinations of Section 1605.2.

Transverse reinforcement shall consist of closed ties or spirals with a minimum $^3/_8$ inch (9.5 mm) diameter. Spacing of transverse reinforcement shall not exceed the smaller of 6 inches (152 mm) or 8-longitudinal-bar diameters, within a distance of three times the least element dimension from the bottom of the pile cap. Spacing of transverse reinforcement shall not exceed 16 longitudinal bar diameters throughout the remainder of the reinforced length.

Exceptions:

1. The requirements of this section shall not apply to concrete cast in structural steel pipes or tubes.
2. A spiral-welded metal casing of a thickness not less than the manufacturer's standard No. 14 gage (0.068 inch) is permitted to provide concrete confinement in lieu of the closed ties or spirals. Where used as such, the metal casing shall be protected against possible deleterious action due to soil constituents, changing water levels or other factors indicated by boring records of site conditions.

1810.3.9.4.2 Seismic reinforcement in Seismic Design Categories D through F. For structures assigned to *Seismic Design Category* D, E or F, cast-in-place deep foundation elements shall be reinforced as specified in this section. Reinforcement shall be provided where required by analysis.

Not fewer than four longitudinal bars, with a minimum longitudinal reinforcement ratio of 0.005, shall be provided throughout the minimum reinforced length of the element as defined in this section starting at the top of the element. The minimum reinforced length of the element shall be taken as the greatest of the following:

1. One-half of the element length.
2. A distance of 10 feet (3048 mm).
3. Three times the least element dimension.
4. The distance from the top of the element to the point where the design cracking moment determined in accordance with Section 1810.3.9.1 exceeds the required moment strength determined using the load combinations of Section 1605.2.

Transverse reinforcement shall consist of closed ties or spirals not smaller than No. 3 bars for elements with a least dimension up to 20 inches (508 mm), and No. 4 bars for larger elements. Throughout the remainder of the reinforced length outside the regions with transverse confinement reinforcement, as specified in Section 1810.3.9.4.2.1 or 1810.3.9.4.2.2, the spacing of transverse reinforcement shall not exceed the least of the following:

1. 12 longitudinal bar diameters.
2. One-half the least dimension of the element.
3. 12 inches (305 mm).

Exceptions:

1. The requirements of this section shall not apply to concrete cast in structural steel pipes or tubes.
2. A spiral-welded metal casing of a thickness not less than manufacturer's standard No. 14 gage (0.068 inch) is permitted to provide concrete confinement in lieu of the closed ties or spirals. Where used as such, the metal casing shall be protected against possible deleterious action due to soil constituents, changing water levels or other factors indicated by boring records of site conditions.

INTERNATIONAL CODE COUNCIL®
Copyright © 2019 ICC & NYSDOS. ALL RIGHTS RESERVED. Accessed by Lauren Gualdino (lgualdino@briarcliffmanor.org), (-) Order Number #100880972 on May 08, 2020 07:05 AM (PDT) pursuant to License Agreement with ICC & NYSDOS. No further reproduction, no

100880972

1810.3.9.4.2.1 Site Classes A through D. For *Site Class* A, B, C or D sites, transverse confinement reinforcement shall be provided in the element in accordance with Sections 18.7.5.2, 18.7.5.3 and 18.7.5.4 of ACI 318 within three times the least element dimension of the bottom of the pile cap. A transverse spiral reinforcement ratio of not less than one-half of that required in Table 18.10.6.4(f) of ACI 318 shall be permitted.

1810.3.9.4.2.2 Site Classes E and F. For *Site Class* E or F sites, transverse confinement reinforcement shall be provided in the element in accordance with Sections 18.7.5.2, 18.7.5.3 and 18.7.5.4 of ACI 318 within seven times the least element dimension of the pile cap and within seven times the least element dimension of the interfaces of strata that are hard or stiff and strata that are liquefiable or are composed of soft- to medium-stiff clay.

1810.3.9.5 Belled drilled shafts. Where drilled shafts are belled at the bottom, the edge thickness of the bell shall be not less than that required for the edge of footings. Where the sides of the bell slope at an angle less than 60 degrees (1 rad) from the horizontal, the effects of vertical shear shall be considered.

1810.3.9.6 Socketed drilled shafts. Socketed drilled shafts shall have a permanent pipe or tube casing that extends down to bedrock and an uncased socket drilled into the bedrock, both filled with concrete. Socketed drilled shafts shall have reinforcement or a structural steel core for the length as indicated by an *approved* method of analysis.

The depth of the rock socket shall be sufficient to develop the full load-bearing capacity of the element with a minimum safety factor of two, but the depth shall be not less than the outside diameter of the pipe or tube casing. The design of the rock socket is permitted to be predicated on the sum of the allowable load-bearing pressure on the bottom of the socket plus bond along the sides of the socket.

Where a structural steel core is used, the gross cross-sectional area of the core shall not exceed 25 percent of the gross area of the drilled shaft.

1810.3.10 Micropiles. Micropiles shall be designed and detailed in accordance with Sections 1810.3.10.1 through 1810.3.10.4.

1810.3.10.1 Construction. Micropiles shall develop their load-carrying capacity by means of a bond zone in soil, bedrock or a combination of soil and bedrock. Micropiles shall be grouted and have either a steel pipe or tube or steel reinforcement at every section along the length. It shall be permitted to transition from deformed reinforcing bars to steel pipe or tube reinforcement by extending the bars into the pipe or tube section by not less than their development length in tension in accordance with ACI 318.

1810.3.10.2 Materials. Reinforcement shall consist of deformed reinforcing bars in accordance with ASTM A615 Grade 60 or 75 or ASTM A722 Grade 150.

The steel pipe or tube shall have a minimum wall thickness of $^{3}/_{16}$ inch (4.8 mm). Splices shall comply with Section 1810.3.6. The steel pipe or tube shall have a minimum yield strength of 45,000 psi (310 MPa) and a minimum elongation of 15 percent as shown by mill certifications or two coupon test samples per 40,000 pounds (18 160 kg) of pipe or tube.

1810.3.10.3 Reinforcement. For micropiles or portions thereof grouted inside a temporary or permanent casing or inside a hole drilled into bedrock or a hole drilled with grout, the steel pipe or tube or steel reinforcement shall be designed to carry not less than 40 percent of the design compression load. Micropiles or portions thereof grouted in an open hole in soil without temporary or permanent casing and without suitable means of verifying the hole diameter during grouting shall be designed to carry the entire compression load in the reinforcing steel. Where a steel pipe or tube is used for reinforcement, the portion of the grout enclosed within the pipe is permitted to be included in the determination of the allowable stress in the grout.

[NY] 1810.3.10.4 Seismic reinforcement. For structures assigned to *Seismic Design Category* C, a permanent steel casing shall be provided from the top of the micropile down to the point of zero curvature. For structures assigned to *Seismic Design Category* D, E or F, the micropile shall be considered as an alternative system in accordance with Section 104.3. The alternative system design, supporting documentation and test data shall be submitted to the *building official* for review and approval.

1810.3.11 Pile caps. Pile caps shall be of reinforced concrete, and shall include all elements to which vertical deep foundation elements are connected, including grade beams and mats. The soil immediately below the pile cap shall not be considered as carrying any vertical load, with the exception of a combined pile raft. The tops of vertical deep foundation elements shall be embedded not less than 3 inches (76 mm) into pile caps and the caps shall extend not less than 4 inches (102 mm) beyond the edges of the elements. The tops of elements shall be cut or chipped back to sound material before capping.

1810.3.11.1 Seismic Design Categories C through F. For structures assigned to *Seismic Design Category* C, D, E or F, concrete deep foundation elements shall be connected to the pile cap by embedding the element reinforcement or field-placed dowels anchored in the element into the pile cap for a distance equal to their development length in accordance with ACI 318. It shall be permitted to connect precast prestressed piles to the pile cap by developing the element prestressing strands into the pile cap provided that the connection is ductile. For deformed bars, the development length is the full development length for compression, or tension in the case of uplift, without reduction for excess reinforcement in accordance with Section 25.4.10 of ACI

INTERNATIONAL CODE COUNCIL®
Copyright © 2019 ICC & NYSDOS. ALL RIGHTS RESERVED. Accessed by Lauren Gualdino (lgualdino@briarcliffmanor.org), (-) Order Number #100880972 on May 08, 2020 07:05 AM (PDT) pursuant to License Agreement with ICC & NYSDOS. No further reproduction, no

100880972

318. Alternative measures for laterally confining concrete and maintaining toughness and ductile-like behavior at the top of the element shall be permitted provided that the design is such that any hinging occurs in the confined region.

The minimum transverse steel ratio for confinement shall be not less than one-half of that required for columns.

For resistance to uplift forces, anchorage of steel pipes, tubes or H-piles to the pile cap shall be made by means other than concrete bond to the bare steel section. Concrete-filled steel pipes or tubes shall have reinforcement of not less than 0.01 times the cross-sectional area of the concrete fill developed into the cap and extending into the fill a length equal to two times the required cap embedment, but not less than the development length in tension of the reinforcement.

1810.3.11.2 Seismic Design Categories D through F. For structures assigned to *Seismic Design Category* D, E or F, deep foundation element resistance to uplift forces or rotational restraint shall be provided by anchorage into the pile cap, designed considering the combined effect of axial forces due to uplift and bending moments due to fixity to the pile cap. Anchorage shall develop not less than 25 percent of the strength of the element in tension. Anchorage into the pile cap shall comply with the following:

1. In the case of uplift, the anchorage shall be capable of developing the least of the following:
    1.1. The nominal tensile strength of the longitudinal reinforcement in a concrete element.
    1.2. The nominal tensile strength of a steel element.
    1.3. The frictional force developed between the element and the soil multiplied by 1.3.

    Exception: The anchorage is permitted to be designed to resist the axial tension force resulting from the seismic load effects including overstrength factor in accordance with Section 2.3.6 or 2.4.5 of ASCE 7.
2. In the case of rotational restraint, the anchorage shall be designed to resist the axial and shear forces, and moments resulting from the seismic load effects including overstrength factor in accordance with Section 2.3.6 or 2.4.5 of ASCE 7 or the anchorage shall be capable of developing the full axial, bending and shear nominal strength of the element.

Where the vertical lateral-force-resisting elements are columns, the pile cap flexural strengths shall exceed the column flexural strength. The connection between batter piles and pile caps shall be designed to resist the nominal strength of the pile acting as a short column. Batter piles and their connection shall be designed to resist forces and moments that result from the application of seismic load effects including overstrength factor in accordance with Section 2.3.6 or 2.4.5 of ASCE 7.

1810.3.12 Grade beams. For structures assigned to *Seismic Design Category* D, E or F, grade beams shall comply with the provisions in Section 18.13.3 of ACI 318 for grade beams, except where they are designed to resist the seismic load effects including overstrength factor in accordance with Section 2.3.6 or 2.4.5 of ASCE 7.

1810.3.13 Seismic ties. For structures assigned to *Seismic Design Category* C, D, E or F, individual deep foundations shall be interconnected by ties. Unless it can be demonstrated that equivalent restraint is provided by reinforced concrete beams within slabs on grade or reinforced concrete slabs on grade or confinement by competent rock, hard cohesive soils or very dense granular soils, ties shall be capable of carrying, in tension or compression, a force equal to the lesser of the product of the larger pile cap or column design gravity load times the seismic coefficient, S_{DS}, divided by 10, and 25 percent of the smaller pile or column design gravity load.

Exception: In Group R-3 and U occupancies of light-frame construction, deep foundation elements supporting foundation walls, isolated interior posts detailed so the element is not subject to lateral loads or exterior decks and patios are not subject to interconnection where the soils are of adequate stiffness, subject to the approval of the *building official*.

1810.4 Installation. Deep foundations shall be installed in accordance with Section 1810.4. Where a single deep foundation element comprises two or more sections of different materials or different types spliced together, each section shall satisfy the applicable conditions of installation.

1810.4.1 Structural integrity. Deep foundation elements shall be installed in such a manner and sequence as to prevent distortion or damage that would adversely affect the structural integrity of adjacent structures or of foundation elements being installed or already in place and as to avoid compacting the surrounding soil to the extent that other foundation elements cannot be installed properly.

1810.4.1.1 Compressive strength of precast concrete piles. A precast concrete pile shall not be driven before the concrete has attained a compressive strength of not less than 75 percent of the specified compressive strength (f'_c), but not less than the strength sufficient to withstand handling and driving forces.

1810.4.1.2 Casing. Where cast-in-place deep foundation elements are formed through unstable soils and concrete is placed in an open-drilled hole, a casing shall be inserted in the hole prior to placing the concrete. Where the casing is withdrawn during concreting, the level of concrete shall be maintained above the bottom of the casing at a sufficient height to offset any hydrostatic or lateral soil pressure. Driven casings shall be mandrel driven their full length in contact with the surrounding soil.

1810.4.1.3 Driving near uncased concrete. Deep foundation elements shall not be driven within six ele-

INTERNATIONAL CODE COUNCIL®
Copyright © 2019 ICC & NYSDOS. ALL RIGHTS RESERVED. Accessed by Lauren Gualdino (lgualdino@briarcliffmanor.org), (-) Order Number #100880972 on May 08, 2020 07:05 AM (PDT) pursuant to License Agreement with ICC & NYSDOS. No further reproduction, no

100880972

ment diameters center to center in granular soils or within one-half the element length in cohesive soils of an uncased element filled with concrete less than 48 hours old unless *approved* by the *building official*. If the concrete surface in any completed element rises or drops, the element shall be replaced. Driven uncased deep foundation elements shall not be installed in soils that could cause heave.

1810.4.1.4 Driving near cased concrete. Deep foundation elements shall not be driven within four and one-half average diameters of a cased element filled with concrete less than 24 hours old unless *approved* by the *building official*. Concrete shall not be placed in casings within heave range of driving.

1810.4.1.5 Defective timber piles. Any substantial sudden change in rate of penetration of a timber pile shall be investigated for possible damage. If the sudden change in rate of penetration cannot be correlated to soil strata, the pile shall be removed for inspection or rejected.

1810.4.2 Identification. Deep foundation materials shall be identified for conformity to the specified grade with this identity maintained continuously from the point of manufacture to the point of installation or shall be tested by an *approved agency* to determine conformity to the specified grade. The *approved agency* shall furnish an affidavit of compliance to the *building official*.

1810.4.3 Location plan. A plan showing the location and designation of deep foundation elements by an identification system shall be filed with the *building official* prior to installation of such elements. Detailed records for elements shall bear an identification corresponding to that shown on the plan.

1810.4.4 Preexcavation. The use of jetting, augering or other methods of preexcavation shall be subject to the approval of the *building official*. Where permitted, preexcavation shall be carried out in the same manner as used for deep foundation elements subject to load tests and in such a manner that will not impair the carrying capacity of the elements already in place or damage adjacent structures. Element tips shall be advanced below the preexcavated depth until the required resistance or penetration is obtained.

1810.4.5 Vibratory driving. Vibratory drivers shall only be used to install deep foundation elements where the element load capacity is verified by load tests in accordance with Section 1810.3.3.1.2. The installation of production elements shall be controlled according to power consumption, rate of penetration or other *approved* means that ensure element capacities equal or exceed those of the test elements.

1810.4.6 Heaved elements. Deep foundation elements that have heaved during the driving of adjacent elements shall be redriven as necessary to develop the required capacity and penetration, or the capacity of the element shall be verified by load tests in accordance with Section 1810.3.3.1.2.

1810.4.7 Enlarged base cast-in-place elements. Enlarged bases for cast-in-place deep foundation elements formed by compacting concrete or by driving a precast base shall be formed in or driven into granular soils. Such elements shall be constructed in the same manner as successful prototype test elements driven for the project. Shafts extending through peat or other organic soil shall be encased in a permanent steel casing. Where a cased shaft is used, the shaft shall be adequately reinforced to resist column action or the annular space around the shaft shall be filled sufficiently to reestablish lateral support by the soil. Where heave occurs, the element shall be replaced unless it is demonstrated that the element is undamaged and capable of carrying twice its design load.

1810.4.8 Hollow-stem augered, cast-in-place elements. Where concrete or grout is placed by pumping through a hollow-stem auger, the auger shall be permitted to rotate in a clockwise direction during withdrawal. As the auger is withdrawn at a steady rate or in increments not to exceed 1 foot (305 mm), concreting or grouting pumping pressures shall be measured and maintained high enough at all times to offset hydrostatic and lateral earth pressures. Concrete or grout volumes shall be measured to ensure that the volume of concrete or grout placed in each element is equal to or greater than the theoretical volume of the hole created by the auger. Where the installation process of any element is interrupted or a loss of concreting or grouting pressure occurs, the element shall be redrilled to 5 feet (1524 mm) below the elevation of the tip of the auger when the installation was interrupted or concrete or grout pressure was lost and reformed. Augered cast-in-place elements shall not be installed within six diameters center to center of an element filled with concrete or grout less than 12 hours old, unless *approved* by the *building official*. If the concrete or grout level in any completed element drops due to installation of an adjacent element, the element shall be replaced.

1810.4.9 Socketed drilled shafts. The rock socket and pipe or tube casing of socketed drilled shafts shall be thoroughly cleaned of foreign materials before filling with concrete. Steel cores shall be bedded in cement grout at the base of the rock socket.

1810.4.10 Micropiles. Micropile deep foundation elements shall be permitted to be formed in holes advanced by rotary or percussive drilling methods, with or without casing. The elements shall be grouted with a fluid cement grout. The grout shall be pumped through a tremie pipe extending to the bottom of the element until grout of suitable quality returns at the top of the element. The following requirements apply to specific installation methods:

1. For micropiles grouted inside a temporary casing, the reinforcing bars shall be inserted prior to withdrawal of the casing. The casing shall be withdrawn in a controlled manner with the grout level maintained at the top of the element to ensure that the grout completely fills the drill hole. During withdrawal of the casing, the grout level inside the casing shall be monitored to verify that the flow of grout inside the casing is not obstructed.

INTERNATIONAL CODE COUNCIL®
Copyright © 2019 ICC & NYSDOS. ALL RIGHTS RESERVED. Accessed by Lauren Gualdino (lgualdino@briarcliffmanor.org), (-) Order Number #100880972 on May 08, 2020 07:05 AM (PDT) pursuant to License Agreement with ICC & NYSDOS. No further reproduction, no

100880972

2. For a micropile or portion thereof grouted in an open drill hole in soil without temporary casing, the minimum design diameter of the drill hole shall be verified by a suitable device during grouting.
3. For micropiles designed for end bearing, a suitable means shall be employed to verify that the bearing surface is properly cleaned prior to grouting.
4. Subsequent micropiles shall not be drilled near elements that have been grouted until the grout has had sufficient time to harden.
5. Micropiles shall be grouted as soon as possible after drilling is completed.
6. For micropiles designed with a full-length casing, the casing shall be pulled back to the top of the bond zone and reinserted or some other suitable means employed to ensure grout coverage outside the casing.

1810.4.11 Helical piles. Helical piles shall be installed to specified embedment depth and torsional resistance criteria as determined by a *registered design professional*. The torque applied during installation shall not exceed the maximum allowable installation torque of the helical pile.

1810.4.12 Special inspection. *Special inspections* in accordance with Sections 1705.7 and 1705.8 shall be provided for driven and cast-in-place deep foundation elements, respectively. *Special inspections* in accordance with Section 1705.9 shall be provided for helical piles.

INTERNATIONAL CODE COUNCIL®
Copyright © 2019 ICC & NYSDOS. ALL RIGHTS RESERVED. Accessed by Lauren Gualdino (lgualdino@briarcliffmanor.org), (-) Order Number #100880972 on May 08, 2020 07:05 AM (PDT) pursuant to License Agreement with ICC & NYSDOS. No further reproduction, no

100880972

INTERNATIONAL CODE COUNCIL®
Copyright © 2019 ICC & NYSDOS. ALL RIGHTS RESERVED. Accessed by Lauren Gualdino (lgualdino@briarcliffmanor.org), (-) Order Number #100880972 on May 08, 2020 07:05 AM (PDT) pursuant to License Agreement with ICC & NYSDOS. No further reproduction, no

100880972

CHAPTER 19

CONCRETE

Italics are used for text within Sections 1903 through 1905 of this code to indicate provisions that differ from ACI 318.

SECTION 1901
GENERAL

1901.1 Scope. The provisions of this chapter shall govern the materials, quality control, design and construction of concrete used in structures.

1901.2 Plain and reinforced concrete. Structural concrete shall be designed and constructed in accordance with the requirements of this chapter and ACI 318 as amended in Section 1905 of this code. Except for the provisions of Sections 1904 and 1907, the design and construction of slabs on grade shall not be governed by this chapter unless they transmit vertical loads or lateral forces from other parts of the structure to the soil. Precast concrete diaphragms in buildings assigned to Seismic Design Category C, D, E or F shall be designed in accordance with the requirements of ASCE 7, Section 14.2.4.

1901.3 Anchoring to concrete. Anchoring to concrete shall be in accordance with ACI 318 as amended in Section 1905, and applies to cast-in (headed bolts, headed studs and hooked J- or L-bolts), post-installed expansion (torque-controlled and displacement-controlled), undercut and adhesive anchors.

1901.4 Composite structural steel and concrete structures. Systems of structural steel acting compositely with reinforced concrete shall be designed in accordance with Section 2206 of this code.

1901.5 Construction documents. The *construction documents* for structural concrete construction shall include:

1. The specified compressive strength of concrete at the stated ages or stages of construction for which each concrete element is designed.
2. The specified strength or grade of reinforcement.
3. The size and location of structural elements, reinforcement and anchors.
4. Provision for dimensional changes resulting from creep, shrinkage and temperature.
5. The magnitude and location of prestressing forces.
6. Anchorage length of reinforcement and location and length of lap splices.
7. Type and location of mechanical and welded splices of reinforcement.
8. Details and location of contraction or isolation joints specified for plain concrete.
9. Minimum concrete compressive strength at time of posttensioning.
10. Stressing sequence for posttensioning tendons.
11. For structures assigned to *Seismic Design Category* D, E or F, a statement if slab on grade is designed as a structural diaphragm.

1901.6 Special inspections and tests. *Special inspections* and tests of concrete elements of buildings and structures and concreting operations shall be as required by Chapter 17.

SECTION 1902
DEFINITIONS

1902.1 General. The words and terms defined in ACI 318 shall, for the purposes of this chapter and as used elsewhere in this code for concrete construction, have the meanings shown in ACI 318 as modified by Section 1905.1.1.

SECTION 1903
SPECIFICATIONS FOR TESTS AND MATERIALS

1903.1 General. Materials used to produce concrete, concrete itself and testing thereof shall comply with the applicable standards listed in ACI 318.

Exception: *The following standards as referenced in Chapter 35 shall be permitted to be used.*

1. *ASTM C150*
2. *ASTM C595*
3. *ASTM C1157*

1903.2 Special inspections. *Where required, special inspections and tests shall be in accordance with Chapter 17.*

1903.3 Glass fiber-reinforced concrete. *Glass fiber-reinforced concrete (GFRC) and the materials used in such concrete shall be in accordance with the PCI MNL 128 standard.*

1903.4 Flat wall insulating concrete form (ICF) systems. *Insulating concrete form material used for forming flat concrete walls shall conform to ASTM E2634.*

SECTION 1904
DURABILITY REQUIREMENTS

1904.1 Structural concrete. Structural concrete shall conform to the durability requirements of ACI 318.

Exception: *For Group R-2 and R-3 occupancies not more than three stories above grade plane, the specified compressive strength, f'_c, for concrete in basement walls, foundation walls, exterior walls and other vertical surfaces exposed to the weather shall be not less than 3,000 psi (20.7 MPa).*

1904.2 Nonstructural concrete. *The registered design professional shall assign nonstructural concrete a freeze-thaw exposure class, as defined in ACI 318, based on the anticipated exposure of nonstructural concrete. Nonstructural concrete shall have a minimum specified compressive strength, f'_c, of 2,500 psi (17.2 MPa) for Class F0; 3,000 psi (20.7 MPa) for Class F1; and 3,500 psi (24.1 MPa) for Classes F2 and F3.*

INTERNATIONAL CODE COUNCIL®
Copyright © 2019 ICC & NYSDOS. ALL RIGHTS RESERVED. Accessed by Lauren Gualdino (lgualdino@briarcliffmanor.org), (-) Order Number #100880972 on May 08, 2020 07:05 AM (PDT) pursuant to License Agreement with ICC & NYSDOS. No further reproduction, no

100880972

Nonstructural concrete shall be air entrained in accordance with ACI 318.

SECTION 1905
MODIFICATIONS TO ACI 318

1905.1 General. The text of ACI 318 shall be modified as indicated in Sections 1905.1.1 through 1905.1.8.

1905.1.1 ACI 318, Section 2.3. Modify existing definitions and add the following definitions to ACI 318, Section 2.3.

DESIGN DISPLACEMENT. Total lateral displacement expected for the design-basis earthquake, *as specified by Section 12.8.6 of ASCE 7*.

DETAILED PLAIN CONCRETE STRUCTURAL WALL. A wall complying with the requirements of Chapter 14, including 14.6.2.

ORDINARY PRECAST STRUCTURAL WALL. A precast wall complying with the requirements of Chapters 1 through 13, 15, 16 and 19 through 26.

ORDINARY REINFORCED CONCRETE STRUCTURAL WALL. A *cast-in-place* wall complying with the requirements of Chapters 1 through 13, 15, 16 and 19 through 26.

ORDINARY STRUCTURAL PLAIN CONCRETE WALL. A wall complying with the requirements of Chapter 14, *excluding 14.6.2*.

SPECIAL STRUCTURAL WALL. A cast-in-place or precast wall complying with the requirements of 18.2.4 through 18.2.8, 18.10 and 18.11, as applicable, in addition to the requirements for ordinary reinforced concrete structural walls *or ordinary precast structural walls, as applicable*. *Where ASCE 7 refers to a "special reinforced concrete structural wall," it shall be deemed to mean a "special structural wall."*

1905.1.2 ACI 318, Section 18.2.1. Modify ACI 318 Sections 18.2.1.2 and 18.2.1.6 to read as follows:

18.2.1.2 – Structures assigned to Seismic Design Category A shall satisfy requirements of Chapters 1 through 17 and 19 through 26*; Chapter 18 does not apply*. Structures assigned to *Seismic Design Category* B, C, D, E or F shall satisfy 18.2.1.3 through 18.2.1.7, as applicable. *Except for structural elements of plain concrete complying with Section 1905.1.7 of the Building Code of New York State, structural elements of plain concrete are prohibited in structures assigned to Seismic Design Category C, D, E or F.*

18.2.1.6 – Structural systems designated as part of the seismic force-resisting system shall be restricted to those *permitted by ASCE 7*. Except for *Seismic Design Category* A, for which Chapter 18 does not apply, the following provisions shall be satisfied for each structural system designated as part of the seismic force-resisting system, regardless of the *seismic design category*:

(a) Ordinary moment frames shall satisfy 18.3.

(b) Ordinary reinforced concrete structural walls *and ordinary precast structural walls* need not satisfy any provisions in Chapter 18.

(c) Intermediate moment frames shall satisfy 18.4.

(d) Intermediate precast *structural* walls shall satisfy 18.5.

(e) Special moment frames shall satisfy 18.6 through 18.9.

(f) Special structural walls shall satisfy 18.10.

(g) Special structural walls constructed using precast concrete shall satisfy 18.11.

Special moment frames and special structural walls shall also satisfy 18.2.4 through 18.2.8.

1905.1.3 ACI 318, Section 18.5. Modify ACI 318, Section 18.5 by adding new Section 18.5.2.2 and renumbering existing Sections 18.5.2.2 and 18.5.2.3 to become 18.5.2.3 and 18.5.2.4, respectively.

18.5.2.2 – Connections that are designed to yield shall be capable of maintaining 80 percent of their design strength at the deformation induced by the design displacement or shall use Type 2 mechanical splices.

18.5.2.3 – Elements of the connection that are not designed to yield shall develop at least 1.5 S_y.

18.5.2.4 – In structures assigned to SDC D, E or F, wall piers shall be designed in accordance with 18.10.8 or 18.14 in ACI 318.

1905.1.4 ACI 318, Section 18.11. Modify ACI 318, Section 18.11.2.1 to read as follows:

18.11.2.1 – Special structural walls constructed using precast concrete shall satisfy all the requirements of 18.10 *for cast-in-place special structural walls* in addition to 18.5.2.

1905.1.5 ACI 318, Section 18.13.1.1. Modify ACI 318, Section 18.13.1.1 to read as follows:

18.13.1.1 – Foundations resisting earthquake-induced forces or transferring earthquake-induced forces between a structure and ground shall comply with the requirements of 18.13 and other applicable provisions of ACI 318 *unless modified by Chapter 18 of the Building Code of New York State.*

1905.1.6 ACI 318, Section 14.6. Modify ACI 318, Section 14.6 by adding new Section 14.6.2 to read as follows:

14.6.2 – Detailed plain concrete structural walls.

14.6.2.1 – Detailed plain concrete structural walls are walls conforming to the requirements of ordinary structural plain concrete walls and 14.6.2.2.

14.6.2.2 – Reinforcement shall be provided as follows:

(a) Vertical reinforcement of at least 0.20 square inch (129 mm^2) in cross-sectional area shall be provided continuously from support to support at each corner, at each side of each opening and at the ends of walls. The continuous vertical bar required beside an opening is permitted to substitute for one of the two No. 5 bars required by 14.6.1.

INTERNATIONAL CODE COUNCIL®
Copyright © 2019 ICC & NYSDOS. ALL RIGHTS RESERVED. Accessed by Lauren Gualdino (lgualdino@briarcliffmanor.org), (-) Order Number #100880972 on May 08, 2020 07:05 AM (PDT) pursuant to License Agreement with ICC & NYSDOS. No further reproduction, no

100880972

(b) Horizontal reinforcement at least 0.20 square inch (129 mm^2) in cross-sectional area shall be provided:

1. *Continuously at structurally connected roof and floor levels and at the top of walls.*
2. *At the bottom of load-bearing walls or in the top of foundations where doweled to the wall.*
3. *At a maximum spacing of 120 inches (3048 mm).*

Reinforcement at the top and bottom of openings, where used in determining the maximum spacing specified in Item 3 above, shall be continuous in the wall.

1905.1.7 ACI 318, Section 14.1.4. Delete ACI 318, Section 14.1.4 and replace with the following:

14.1.4 – Plain concrete in structures assigned to Seismic Design Category C, D, E or F.

14.1.4.1 – Structures assigned to Seismic Design Category C, D, E or F shall not have elements of structural plain concrete, except as follows:

(a) Structural plain concrete basement, foundation or other walls below the base as defined in ASCE 7 are permitted in detached one- and two-family dwellings three stories or less in height constructed with stud-bearing walls. In dwellings assigned to Seismic Design Category D or E, the height of the wall shall not exceed 8 feet (2438 mm), the thickness shall be not less than 7$^1/_2$ inches (190 mm), and the wall shall retain no more than 4 feet (1219 mm) of unbalanced fill. Walls shall have reinforcement in accordance with 14.6.1.

(b) Isolated footings of plain concrete supporting pedestals or columns are permitted, provided the projection of the footing beyond the face of the supported member does not exceed the footing thickness.

***Exception:** In detached one- and two-family dwellings three stories or less in height, the projection of the footing beyond the face of the supported member is permitted to exceed the footing thickness.*

(c) Plain concrete footings supporting walls are permitted, provided the footings have at least two continuous longitudinal reinforcing bars. Bars shall not be smaller than No. 4 and shall have a total area of not less than 0.002 times the gross cross-sectional area of the footing. For footings that exceed 8 inches (203 mm) in thickness, a minimum of one bar shall be provided at the top and bottom of the footing. Continuity of reinforcement shall be provided at corners and intersections.

Exceptions:

1. *In Seismic Design Categories A, B and C, detached one- and two-family dwellings three stories or less in height constructed with stud-bearing walls are permitted to have plain concrete footings without longitudinal reinforcement.*
2. *For foundation systems consisting of a plain concrete footing and a plain concrete stemwall, a minimum of one bar shall be provided at the top of the stemwall and at the bottom of the footing.*
3. *Where a slab on ground is cast monolithically with the footing, one No. 5 bar is permitted to be located at either the top of the slab or bottom of the footing.*

1905.1.8 ACI 318, Section 17.2.3. Modify ACI 318 Sections 17.2.3.4.2, 17.2.3.4.3(d) and 17.2.3.5.2 to read as follows:

17.2.3.4.2 – Where the tensile component of the strength-level earthquake force applied to anchors exceeds 20 percent of the total factored anchor tensile force associated with the same load combination, anchors and their attachments shall be designed in accordance with 17.2.3.4.3. The anchor design tensile strength shall be determined in accordance with 17.2.3.4.4.

***Exception:** Anchors designed to resist wall out-of-plane forces with design strengths equal to or greater than the force determined in accordance with ASCE 7 Equation 12.11-1 or 12.14-10 shall be deemed to satisfy Section 17.2.3.4.3(d).*

17.2.3.4.3(d) – The anchor or group of anchors shall be designed for the maximum tension obtained from design load combinations that include ***E***, with ***E*** increased by Ω_0. The anchor design tensile strength shall *be calculated from 17.2.3.4.4*.

17.2.3.5.2 – Where the shear component of the strength-level earthquake force applied to anchors exceeds 20 percent of the total factored anchor shear force associated with the same load combination, anchors and their attachments shall be designed in accordance with 17.2.3.5.3. The anchor design shear strength for resisting earthquake forces shall be determined in accordance with 17.5.

Exceptions:

1. *For the calculation of the in-plane shear strength of anchor bolts attaching wood sill plates of bearing or nonbearing walls of light-*

INTERNATIONAL CODE COUNCIL®
Copyright © 2019 ICC & NYSDOS. ALL RIGHTS RESERVED. Accessed by Lauren Gualdino (lgualdino@briarcliffmanor.org), (-) Order Number #100880972 on May 08, 2020 07:05 AM (PDT) pursuant to License Agreement with ICC & NYSDOS. No further reproduction, no

100880972

frame wood structures to foundations or foundation stem walls, the in-plane shear strength in accordance with 17.5.2 and 17.5.3 need not be computed and 17.2.3.5.3 shall be deemed to be satisfied provided all of the following are met:

1.1. The allowable in-plane shear strength of the anchor is determined in accordance with ANSI/AWC NDS Table 12E for lateral design values parallel to grain.

1.2. The maximum anchor nominal diameter is $^5/_8$ inch (16 mm).

1.3. Anchor bolts are embedded into concrete a minimum of 7 inches (178 mm).

1.4. Anchor bolts are located a minimum of $1^3/_4$ inches (45 mm) from the edge of the concrete parallel to the length of the wood sill plate.

1.5. Anchor bolts are located a minimum of 15 anchor diameters from the edge of the concrete perpendicular to the length of the wood sill plate.

1.6. The sill plate is 2-inch (51 mm) or 3-inch (76 mm) nominal thickness.

2. For the calculation of the in-plane shear strength of anchor bolts attaching cold-formed steel track of bearing or nonbearing walls of light-frame construction to foundations or foundation stem walls, the in-plane shear strength in accordance with 17.5.2 and 17.5.3 need not be computed and 17.2.3.5.3 shall be deemed to be satisfied provided all of the following are met:

2.1. The maximum anchor nominal diameter is $^5/_8$ inch (16 mm).

2.2. Anchors are embedded into concrete a minimum of 7 inches (178 mm).

2.3. Anchors are located a minimum of $1^3/_4$ inches (45 mm) from the edge of the concrete parallel to the length of the track.

2.4. Anchors are located a minimum of 15 anchor diameters from the edge of the concrete perpendicular to the length of the track.

2.5. The track is 33 to 68 mil (0.84 mm to 1.73 mm) designation thickness.

Allowable in-plane shear strength of exempt anchors, parallel to the edge of concrete, shall be permitted to be determined in accordance with AISI S100 Section E3.3.1.

3. In light-frame construction bearing or nonbearing walls, shear strength of concrete anchors less than or equal to 1 inch [25 mm] in diameter attaching sill plate or track to foundation or foundation stem wall need not satisfy 17.2.3.5.3(a) through (c) when the design strength of the anchors is determined in accordance with 17.5.2.1(c).

SECTION 1906
STRUCTURAL PLAIN CONCRETE

1906.1 Scope. The design and construction of structural plain concrete, both cast-in-place and precast, shall comply with the minimum requirements of ACI 318, as modified in Section 1905.

Exception: For Group R-3 occupancies and buildings of other occupancies less than two stories above grade plane of light-frame construction, the required footing thickness of ACI 318 is permitted to be reduced to 6 inches (152 mm), provided that the footing does not extend more than 4 inches (102 mm) on either side of the supported wall.

SECTION 1907
MINIMUM SLAB PROVISIONS

1907.1 General. The thickness of concrete floor slabs supported directly on the ground shall be not less than $3^1/_2$ inches (89 mm). A 6-mil (0.006 inch; 0.15 mm) polyethylene vapor retarder with joints lapped not less than 6 inches (152 mm) shall be placed between the base course or subgrade and the concrete floor slab, or other *approved* equivalent methods or materials shall be used to retard vapor transmission through the floor slab.

Exception: A vapor retarder is not required:

1. For detached structures accessory to occupancies in Group R-3, such as garages, utility buildings or other unheated facilities.
2. For unheated storage rooms having an area of less than 70 square feet (6.5 m^2) and carports attached to occupancies in Group R-3.
3. For buildings of other occupancies where migration of moisture through the slab from below will not be detrimental to the intended occupancy of the building.
4. For driveways, walks, patios and other flatwork that will not be enclosed at a later date.
5. Where *approved* based on local site conditions.

SECTION 1908
SHOTCRETE

1908.1 General. Shotcrete is mortar or concrete that is pneumatically projected at high velocity onto a surface. Except as specified in this section, shotcrete shall conform to the requirements of this chapter for plain or reinforced concrete.

1908.2 Proportions and materials. Shotcrete proportions shall be selected that allow suitable placement procedures using the delivery equipment selected and shall result in fin-

INTERNATIONAL CODE COUNCIL®
Copyright © 2019 ICC & NYSDOS. ALL RIGHTS RESERVED. Accessed by Lauren Gualdino (lgualdino@briarcliffmanor.org), (-) Order Number #100880972 on May 08, 2020 07:05 AM (PDT) pursuant to License Agreement with ICC & NYSDOS. No further reproduction, no

100880972

ished in-place hardened shotcrete meeting the strength requirements of this code.

1908.3 Aggregate. Coarse aggregate, if used, shall not exceed $^3/_4$ inch (19.1 mm).

1908.4 Reinforcement. Reinforcement used in shotcrete construction shall comply with the provisions of Sections 1908.4.1 through 1908.4.4.

1908.4.1 Size. The maximum size of reinforcement shall be No. 5 bars unless it is demonstrated by preconstruction tests that adequate encasement of larger bars will be achieved.

1908.4.2 Clearance. Where No. 5 or smaller bars are used, there shall be a minimum clearance between parallel reinforcement bars of $2^1/_2$ inches (64 mm). When bars larger than No. 5 are permitted, there shall be a minimum clearance between parallel bars equal to six diameters of the bars used. Where two curtains of steel are provided, the curtain nearer the nozzle shall have a minimum spacing equal to 12 bar diameters and the remaining curtain shall have a minimum spacing of six bar diameters.

Exception: Subject to the approval of the *building official*, required clearances shall be reduced where it is demonstrated by preconstruction tests that adequate encasement of the bars used in the design will be achieved.

1908.4.3 Splices. Lap splices of reinforcing bars shall utilize the noncontact lap splice method with a minimum clearance of 2 inches (51 mm) between bars. The use of contact lap splices necessary for support of the reinforcing is permitted where *approved* by the *building official*, based on satisfactory preconstruction tests that show that adequate encasement of the bars will be achieved, and provided that the splice is oriented so that a plane through the center of the spliced bars is perpendicular to the surface of the shotcrete.

1908.4.4 Spirally tied columns. Shotcrete shall not be applied to spirally tied columns.

1908.5 Preconstruction tests. Where preconstruction tests are required by Section 1908.4, a test panel shall be shot, cured, cored or sawn, examined and tested prior to commencement of the project. The sample panel shall be representative of the project and simulate job conditions as closely as possible. The panel thickness and reinforcing shall reproduce the thickest and most congested area specified in the structural design. It shall be shot at the same angle, using the same nozzleman and with the same concrete mix design that will be used on the project. The equipment used in preconstruction testing shall be the same equipment used in the work requiring such testing, unless substitute equipment is *approved* by the *building official*. Reports of preconstruction tests shall be submitted to the *building official* as specified in Section 1704.5.

1908.6 Rebound. Any rebound or accumulated loose aggregate shall be removed from the surfaces to be covered prior to placing the initial or any succeeding layers of shotcrete. Rebound shall not be used as aggregate.

1908.7 Joints. Except where permitted herein, unfinished work shall not be allowed to stand for more than 30 minutes unless edges are sloped to a thin edge. For structural elements that will be under compression and for construction joints shown on the *approved construction documents*, square joints are permitted. Before placing additional material adjacent to previously applied work, sloping and square edges shall be cleaned and wetted.

1908.8 Damage. In-place shotcrete that exhibits sags, sloughs, segregation, honeycombing, sand pockets or other obvious defects shall be removed and replaced. Shotcrete above sags and sloughs shall be removed and replaced while still plastic.

1908.9 Curing. During the curing periods specified herein, shotcrete shall be maintained above 40°F (4°C) and in moist condition.

1908.9.1 Initial curing. Shotcrete shall be kept continuously moist for 24 hours after shotcreting is complete or shall be sealed with an *approved* curing compound.

1908.9.2 Final curing. Final curing shall continue for seven days after shotcreting, or for three days if high-early-strength cement is used, or until the specified strength is obtained. Final curing shall consist of the initial curing process or the shotcrete shall be covered with an *approved* moisture-retaining cover.

1908.9.3 Natural curing. Natural curing shall not be used in lieu of that specified in this section unless the relative humidity remains at or above 85 percent, and is authorized by the *registered design professional* and *approved* by the *building official*.

1908.10 Strength tests. Strength tests for shotcrete shall be made by an *approved agency* on specimens that are representative of the work and that have been water soaked for not fewer than 24 hours prior to testing. Where the maximum-size aggregate is larger than $^3/_8$ inch (9.5 mm), specimens shall consist of not less than three 3-inch-diameter (76 mm) cores or 3-inch (76 mm) cubes. Where the maximum-size aggregate is $^3/_8$ inch (9.5 mm) or smaller, specimens shall consist of not less than 2-inch-diameter (51 mm) cores or 2-inch (51 mm) cubes.

1908.10.1 Sampling. Specimens shall be taken from the in-place work or from test panels, and shall be taken not less than once each shift, but not less than one for each 50 cubic yards (38.2 m^3) of shotcrete.

1908.10.2 Panel criteria. Where the maximum-size aggregate is larger than $^3/_8$ inch (9.5 mm), the test panels shall have minimum dimensions of 18 inches by 18 inches (457 mm by 457 mm). Where the maximum-size aggregate is $^3/_8$ inch (9.5 mm) or smaller, the test panels shall have minimum dimensions of 12 inches by 12 inches (305 mm by 305 mm). Panels shall be shot in the same position as the work, during the course of the work and by the nozzlemen doing the work. The conditions under which the panels are cured shall be the same as the work.

1908.10.3 Acceptance criteria. The average compressive strength of three cores from the in-place work or a single test panel shall equal or exceed $0.85 f'_c$ with no single core less than $0.75 f'_c$. The average compressive strength of

INTERNATIONAL CODE COUNCIL®
Copyright © 2019 ICC & NYSDOS. ALL RIGHTS RESERVED. Accessed by Lauren Gualdino (lgualdino@briarcliffmanor.org), (-) Order Number #100880972 on May 08, 2020 07:05 AM (PDT) pursuant to License Agreement with ICC & NYSDOS. No further reproduction, no

100880972

three cubes taken from the in-place work or a single test panel shall equal or exceed f'_c with no individual cube less than $0.88 f'_c$. To check accuracy, locations represented by erratic core or cube strengths shall be retested.

INTERNATIONAL CODE COUNCIL®
Copyright © 2019 ICC & NYSDOS. ALL RIGHTS RESERVED. Accessed by Lauren Gualdino (lgualdino@briarcliffmanor.org), (-) Order Number #100880972 on May 08, 2020 07:05 AM (PDT) pursuant to License Agreement with ICC & NYSDOS. No further reproduction, no

100880972

CHAPTER 20

ALUMINUM

SECTION 2001
GENERAL

2001.1 Scope. This chapter shall govern the quality, design, fabrication and erection of aluminum.

SECTION 2002
MATERIALS

2002.1 General. Aluminum used for structural purposes in buildings and structures shall comply with AA ASM 35 and AA ADM. The *nominal loads* shall be the minimum design loads required by Chapter 16.

INTERNATIONAL CODE COUNCIL®
Copyright © 2019 ICC & NYSDOS. ALL RIGHTS RESERVED. Accessed by Lauren Gualdino (lgualdino@briarcliffmanor.org), (-) Order Number #100880972 on May 08, 2020 07:05 AM (PDT) pursuant to License Agreement with ICC & NYSDOS. No further reproduction, no

100880972

INTERNATIONAL CODE COUNCIL®
Copyright © 2019 ICC & NYSDOS. ALL RIGHTS RESERVED. Accessed by Lauren Gualdino (lgualdino@briarcliffmanor.org), (-) Order Number #100880972 on May 08, 2020 07:05 AM (PDT) pursuant to License Agreement with ICC & NYSDOS. No further reproduction, no

100880972

CHAPTER 21

MASONRY

SECTION 2101
GENERAL

2101.1 Scope. This chapter shall govern the materials, design, construction and quality of masonry.

2101.2 Design methods. Masonry shall comply with the provisions of TMS 402, TMS 403 or TMS 404 as well as applicable requirements of this chapter.

2101.2.1 Masonry veneer. Masonry veneer shall comply with the provisions of Chapter 14.

2101.3 Special inspection. The *special inspection* of masonry shall be as defined in Chapter 17, or an itemized testing and inspection program shall be provided that meets or exceeds the requirements of Chapter 17.

SECTION 2102
NOTATIONS

2102.1 General. The following notations are used in the chapter:

NOTATIONS.

d_b = Diameter of reinforcement, inches (mm).

F_s = Allowable tensile or compressive stress in reinforcement, psi (MPa).

f_r = Modulus of rupture, psi (MPa).

f'_{AAC} = Specified compressive strength of AAC masonry, the minimum compressive strength for a class of AAC masonry as specified in ASTM C1386, psi (MPa).

f'_m = Specified compressive strength of masonry at age of 28 days, psi (MPa).

f'_{mi} = Specified compressive strength of masonry at the time of prestress transfer, psi (MPa).

K = The lesser of the masonry cover, clear spacing between adjacent reinforcement, or five times d_b, inches (mm).

L_s = Distance between supports, inches (mm).

l_d = Required development length or lap length of reinforcement, inches (mm).

P = The applied load at failure, pounds (N).

S_t = Thickness of the test specimen measured parallel to the direction of load, inches (mm).

S_w = Width of the test specimen measured parallel to the loading cylinder, inches (mm).

SECTION 2103
MASONRY CONSTRUCTION MATERIALS

2103.1 Masonry units. Concrete masonry units, clay or shale masonry units, stone masonry units, glass unit masonry and AAC masonry units shall comply with Article 2.3 of TMS 602. Architectural cast stone shall conform to ASTM C1364 and TMS 504. Adhered manufactured stone masonry veneer units shall conform to ASTM C1670.

Exception: Structural clay tile for nonstructural use in fireproofing of structural members and in wall furring shall not be required to meet the compressive strength specifications. The fire-resistance rating shall be determined in accordance with ASTM E119 or UL 263 and shall comply with the requirements of Table 602.

2103.1.1 Second-hand units. Second-hand masonry units shall not be reused unless they conform to the requirements of new units. The units shall be of whole, sound materials and free from cracks and other defects that will interfere with proper laying or use. Old mortar shall be cleaned from the unit before reuse.

2103.2 Mortar. Mortar for masonry construction shall comply with Section 2103.2.1, 2103.2.2, 2103.2.3 or 2103.2.4.

2103.2.1 Masonry mortar. Mortar for use in masonry construction shall conform to Articles 2.1 and 2.6 A of TMS 602.

2103.2.2 Surface-bonding mortar. Surface-bonding mortar shall comply with ASTM C887. Surface bonding of concrete masonry units shall comply with ASTM C946.

2103.2.3 Mortars for ceramic wall and floor tile. Portland cement mortars for installing ceramic wall and floor tile shall comply with ANSI A108.1A and ANSI A108.1B and be of the compositions indicated in Table 2103.2.3.

TABLE 2103.2.3
CERAMIC TILE MORTAR COMPOSITIONS

LOCATION	MORTAR	COMPOSITION
Walls	Scratchcoat	1 cement; $^1/_5$ hydrated lime; 4 dry or 5 damp sand
	Setting bed and leveling coat	1 cement; $^1/_2$ hydrated lime; 5 damp sand to 1 cement 1 hydrated lime, 7 damp sand
Floors	Setting bed	1 cement; $^1/_{10}$ hydrated lime; 5 dry or 6 damp sand; or 1 cement; 5 dry or 6 damp sand
Ceilings	Scratchcoat and sand bed	1 cement; $^1/_2$ hydrated lime; $2^1/_2$ dry sand or 3 damp sand

2103.2.3.1 Dry-set Portland cement mortars. Premixed prepared Portland cement mortars, which require only the addition of water and are used in the installation of ceramic tile, shall comply with ANSI A118.1. The shear bond strength for tile set in such mortar shall be as required in accordance with ANSI A118.1. Tile set in dry-set Portland cement mortar shall be installed in accordance with ANSI A108.5.

2103.2.3.2 Latex-modified Portland cement mortar. Latex-modified Portland cement thin-set mortars in

INTERNATIONAL CODE COUNCIL®
Copyright © 2019 ICC & NYSDOS. ALL RIGHTS RESERVED. Accessed by Lauren Gualdino (lgualdino@briarcliffmanor.org), (-) Order Number #100880972 on May 08, 2020 07:05 AM (PDT) pursuant to License Agreement with ICC & NYSDOS. No further reproduction, no

100880972

which latex is added to dry-set mortar as a replacement for all or part of the gauging water that are used for the installation of ceramic tile shall comply with ANSI A118.4. Tile set in latex-modified Portland cement shall be installed in accordance with ANSI A108.5.

2103.2.3.3 Epoxy mortar. Ceramic tile set and grouted with chemical-resistant epoxy shall comply with ANSI A118.3. Tile set and grouted with epoxy shall be installed in accordance with ANSI A108.6.

2103.2.3.4 Furan mortar and grout. Chemical-resistant furan mortar and grout that are used to install ceramic tile shall comply with ANSI A118.5. Tile set and grouted with furan shall be installed in accordance with ANSI A108.8.

2103.2.3.5 Modified epoxy-emulsion mortar and grout. Modified epoxy-emulsion mortar and grout that are used to install ceramic tile shall comply with ANSI A118.8. Tile set and grouted with modified epoxy-emulsion mortar and grout shall be installed in accordance with ANSI A108.9.

2103.2.3.6 Organic adhesives. Water-resistant organic adhesives used for the installation of ceramic tile shall comply with ANSI A136.1. The shear bond strength after water immersion shall be not less than 40 psi (275 kPa) for Type I adhesive and not less than 20 psi (138 kPa) for Type II adhesive when tested in accordance with ANSI A136.1. Tile set in organic adhesives shall be installed in accordance with ANSI A108.4.

2103.2.3.7 Portland cement grouts. Portland cement grouts used for the installation of ceramic tile shall comply with ANSI A118.6. Portland cement grouts for tile work shall be installed in accordance with ANSI A108.10.

2103.2.4 Mortar for adhered masonry veneer. Mortar for use with adhered masonry veneer shall conform to ASTM C270 for Type N or S, or shall comply with ANSI A118.4 for latex-modified Portland cement mortar.

2103.3 Grout. Grout shall comply with Article 2.2 of TMS 602.

2103.4 Metal reinforcement and accessories. Metal reinforcement and accessories shall conform to Article 2.4 of TMS 602. Where unidentified reinforcement is *approved* for use, not less than three tension and three bending tests shall be made on representative specimens of the reinforcement from each shipment and grade of reinforcing steel proposed for use in the work.

SECTION 2104
CONSTRUCTION

2104.1 Masonry construction. Masonry construction shall comply with the requirements of Sections 2104.1.1 through 2104.1.3 and with the requirements of either TMS 602 or TMS 604.

2104.1.1 Support on wood. Masonry shall not be supported on wood girders or other forms of wood construction except as permitted in Section 2304.12.

2104.1.2 Molded cornices. Unless structural support and anchorage are provided to resist the overturning moment, the center of gravity of projecting masonry or molded cornices shall lie within the middle one-third of the supporting wall. Terra cotta and metal cornices shall be provided with a structural frame of *approved* noncombustible material anchored in an *approved* manner.

SECTION 2105
QUALITY ASSURANCE

2105.1 General. A quality assurance program shall be used to ensure that the constructed masonry is in compliance with the *approved construction documents*.

The quality assurance program shall comply with the inspection and testing requirements of Chapter 17 and TMS 602.

SECTION 2106
SEISMIC DESIGN

2106.1 Seismic design requirements for masonry. Masonry structures and components shall comply with the requirements in Chapter 7 of TMS 402 depending on the structure's *seismic design category*.

SECTION 2107
ALLOWABLE STRESS DESIGN

2107.1 General. The design of masonry structures using *allowable stress design* shall comply with Section 2106 and the requirements of Chapters 1 through 8 of TMS 402 except as modified by Sections 2107.2 through 2107.3.

2107.2 TMS 402, Section 6.1.6.1.1, lap splices. As an alternative to Section 6.1.6.1.1, it shall be permitted to design lap splices in accordance with Section 2107.2.1.

2107.2.1 Lap splices. The minimum length of lap splices for reinforcing bars in tension or compression, l_d, shall be:

$$l_d = 0.002 d_b f_s \qquad \textbf{(Equation 21-1)}$$

For SI: $l_d = 0.29 d_b f_s$

but not less than 12 inches (305 mm). The length of the lapped splice shall be not less than 40 bar diameters.

where:

d_b = Diameter of reinforcement, inches (mm).

f_s = Computed stress in reinforcement due to design loads, psi (MPa).

In regions of moment where the design tensile stresses in the reinforcement are greater than 80 percent of the allowable steel tension stress, F_s, the lap length of splices shall be increased not less than 50 percent of the minimum required length, but need not be greater than 72 d_b. Other equivalent means of stress transfer to accomplish the same 50 percent increase shall be permitted. Where epoxy coated bars are used, lap length shall be increased by 50 percent.

INTERNATIONAL CODE COUNCIL®
Copyright © 2019 ICC & NYSDOS. ALL RIGHTS RESERVED. Accessed by Lauren Gualdino (lgualdino@briarcliffmanor.org), (-) Order Number #100880972 on May 08, 2020 07:05 AM (PDT) pursuant to License Agreement with ICC & NYSDOS. No further reproduction, no

100880972

2107.3 TMS 402, Section 6.1.6.1, splices of reinforcement. Modify Section 6.1.6.1 as follows:

6.1.6.1 – Splices of reinforcement. Lap splices, welded splices or mechanical splices are permitted in accordance with the provisions of this section. Welding shall conform to AWS D1.4. Welded splices shall be of ASTM A706 steel reinforcement. Reinforcement larger than No. 9 (M #29) shall be spliced using mechanical connections in accordance with Section 6.1.6.1.3.

SECTION 2108
STRENGTH DESIGN OF MASONRY

2108.1 General. The design of masonry structures using strength design shall comply with Section 2106 and the requirements of Chapters 1 through 7 and Chapter 9 of TMS 402, except as modified by Sections 2108.2 through 2108.3.

Exception: AAC masonry shall comply with the requirements of Chapters 1 through 7 and Chapter 11 of TMS 402.

2108.2 TMS 402, Section 6.1.5.1.1, development. Modify the second paragraph of Section 6.1.5.1.1 as follows:

The required development length of reinforcement shall be determined by Equation (6-1), but shall be not less than 12 inches (305 mm) and need not be greater than 72 d_b.

2108.3 TMS 402, Section 6.1.6.1.1, splices. Modify Sections 6.1.6.1.2 and 6.1.6.1.3 as follows:

6.1.6.1.2 – A welded splice shall have the bars butted and welded to develop not less than 125 percent of the yield strength, f_y, of the bar in tension or compression, as required. Welded splices shall be of ASTM A706 steel reinforcement. Welded splices shall not be permitted in plastic hinge zones of intermediate or special reinforced walls.

6.1.6.1.3 – Mechanical splices shall be classified as Type 1 or 2 in accordance with Section 18.2.7.1 of ACI 318. Type 1 mechanical splices shall not be used within a plastic hinge zone or within a beam-column joint of intermediate or special reinforced masonry shear walls. Type 2 mechanical splices are permitted in any location within a member.

SECTION 2109
EMPIRICAL DESIGN OF ADOBE MASONRY

2109.1 General. Empirically designed adobe masonry shall conform to the requirements of Appendix A of TMS 402, except where otherwise noted in this section.

2109.1.1 Limitations. The use of empirical design of adobe masonry shall be limited as noted in Section A.1.2 of TMS 402. In buildings that exceed one or more of the limitations of Section A.1.2 of TMS 402, masonry shall be designed in accordance with the engineered design provisions of Section 2101.2 or the foundation wall provisions of Section 1807.1.5.

Section A.1.2.2 of TMS 402 shall be modified as follows:

A.1.2.2 – *Wind*. Empirical requirements shall not apply to the design or construction of masonry for buildings, parts of buildings, or other structures to be located in areas where V_{asd} as determined in accordance with Section 1609.3.1 of the *Building Code of New York State* exceeds 110 mph.

2109.2 Adobe construction. Adobe construction shall comply with this section and shall be subject to the requirements of this code for Type V construction, Appendix A of TMS 402, and this section.

2109.2.1 Unstabilized adobe. Unstabilized adobe shall comply with Sections 2109.2.1.1 through 2109.2.1.4.

2109.2.1.1 Compressive strength. Adobe units shall have an average compressive strength of 300 psi (2068 kPa) when tested in accordance with ASTM C67. Five samples shall be tested and individual units are not permitted to have a compressive strength of less than 250 psi (1724 kPa).

2109.2.1.2 Modulus of rupture. Adobe units shall have an average modulus of rupture of 50 psi (345 kPa) when tested in accordance with the following procedure. Five samples shall be tested and individual units shall not have a modulus of rupture of less than 35 psi (241 kPa).

2109.2.1.2.1 Support conditions. A cured unit shall be simply supported by 2-inch-diameter (51 mm) cylindrical supports located 2 inches (51 mm) in from each end and extending the full width of the unit.

2109.2.1.2.2 Loading conditions. A 2-inch-diameter (51 mm) cylinder shall be placed at midspan parallel to the supports.

2109.2.1.2.3 Testing procedure. A vertical load shall be applied to the cylinder at the rate of 500 pounds per minute (37 N/s) until failure occurs.

2109.2.1.2.4 Modulus of rupture determination. The modulus of rupture shall be determined by the equation:

$$f_r = 3\,PL_s\,/2\,S_w(S_t^2) \qquad \textbf{(Equation 21-2)}$$

where, for the purposes of this section only:

S_w = Width of the test specimen measured parallel to the loading cylinder, inches (mm).

f_r = Modulus of rupture, psi (MPa).

L_s = Distance between supports, inches (mm).

S_t = Thickness of the test specimen measured parallel to the direction of load, inches (mm).

P = The applied load at failure, pounds (N).

2109.2.1.3 Moisture content requirements. Adobe units shall have a moisture content not exceeding 4 percent by weight.

INTERNATIONAL CODE COUNCIL®
Copyright © 2019 ICC & NYSDOS. ALL RIGHTS RESERVED. Accessed by Lauren Gualdino (lgualdino@briarcliffmanor.org), (-) Order Number #100880972 on May 08, 2020 07:05 AM (PDT) pursuant to License Agreement with ICC & NYSDOS. No further reproduction, no

100880972

2109.2.1.4 Shrinkage cracks. Adobe units shall not contain more than three shrinkage cracks and any single shrinkage crack shall not exceed 3 inches (76 mm) in length or $^1/_8$ inch (3.2 mm) in width.

2109.2.2 Stabilized adobe. Stabilized adobe shall comply with Section 2109.2.1 for unstabilized adobe in addition to Sections 2109.2.2.1 and 2109.2.2.2.

2109.2.2.1 Soil requirements. Soil used for stabilized adobe units shall be chemically compatible with the stabilizing material.

2109.2.2.2 Absorption requirements. A 4-inch (102 mm) cube, cut from a stabilized adobe unit dried to a constant weight in a ventilated oven at 212°F to 239°F (100°C to 115°C), shall not absorb more than $2^1/_2$ percent moisture by weight when placed on a constantly water-saturated, porous surface for seven days. Not fewer than five specimens shall be tested and each specimen shall be cut from a separate unit.

2109.2.3 Allowable stress. The allowable compressive stress based on gross cross-sectional area of adobe shall not exceed 30 psi (207 kPa).

2109.2.3.1 Bolts. Bolt values shall not exceed those set forth in Table 2109.2.3.1.

TABLE 2109.2.3.1
ALLOWABLE SHEAR ON BOLTS IN ADOBE MASONRY

DIAMETER OF BOLTS (inches)	MINIMUM EMBEDMENT (inches)	SHEAR (pounds)
$^1/_2$	—	—
$^5/_8$	12	200
$^3/_4$	15	300
$^7/_8$	18	400
1	21	500
$1^1/_8$	24	600

For SI: 1 inch = 25.4 mm, 1 pound = 4.448 N.

2109.2.4 Detailed requirements. Adobe construction shall comply with Sections 2109.2.4.1 through 2109.2.4.9.

2109.2.4.1 Number of stories. Adobe construction shall be limited to buildings not exceeding one *story*, except that two-*story* construction is allowed where designed by a *registered design professional*.

2109.2.4.2 Mortar. Mortar for adobe construction shall comply with Sections 2109.2.4.2.1 and 2109.2.4.2.2.

2109.2.4.2.1 General. Mortar for adobe units shall be in accordance with Section 2103.2.1, or be composed of adobe soil of the same composition and stabilization as the adobe brick units. Unstabilized adobe soil mortar is permitted in conjunction with unstabilized adobe brick units.

2109.2.4.2.2 Mortar joints. Adobe units shall be laid with full head and bed joints and in full running bond.

2109.2.4.3 Parapet walls. Parapet walls constructed of adobe units shall be waterproofed.

2109.2.4.4 Wall thickness. The minimum thickness of *exterior walls* in one-story buildings shall be 10 inches (254 mm). The walls shall be laterally supported at intervals not exceeding 24 feet (7315 mm). The minimum thickness of interior *load-bearing walls* shall be 8 inches (203 mm). The unsupported height of any wall constructed of adobe units shall not exceed 10 times the thickness of such wall.

2109.2.4.5 Foundations. Foundations for adobe construction shall be in accordance with Sections 2109.2.4.5.1 and 2109.2.4.5.2.

2109.2.4.5.1 Foundation support. Walls and partitions constructed of adobe units shall be supported by foundations or footings that extend not less than 6 inches (152 mm) above adjacent ground surfaces and are constructed of solid masonry (excluding adobe) or concrete. Footings and foundations shall comply with Chapter 18.

2109.2.4.5.2 Lower course requirements. Stabilized adobe units shall be used in adobe walls for the first 4 inches (102 mm) above the finished first-floor elevation.

2109.2.4.6 Isolated piers or columns. Adobe units shall not be used for isolated piers or columns in a load-bearing capacity. Walls less than 24 inches (610 mm) in length shall be considered to be isolated piers or columns.

2109.2.4.7 Tie beams. *Exterior walls* and interior *load-bearing walls* constructed of adobe units shall have a continuous tie beam at the level of the floor or roof bearing and meeting the following requirements.

2109.2.4.7.1 Concrete tie beams. Concrete tie beams shall be 6 inches (152 mm) or more in depth and10 inches (254 mm) or more in width. Concrete tie beams shall be continuously reinforced with not fewer than two No. 4 reinforcing bars. The specified compressive strength of concrete shall be not less than 2,500 psi (17.2 MPa).

2109.2.4.7.2 Wood tie beams. Wood tie beams shall be solid or built up of lumber having a nominal thickness of not less than 1 inch (25 mm), and shall have a depth of not less than 6 inches (152 mm) and a width of not less than 10 inches (254 mm). Joints in wood tie beams shall be spliced not less than 6 inches (152 mm). Splices shall not be allowed within 12 inches (305 mm) of an opening. Wood used in tie beams shall be *approved* naturally decay-resistant or preservative-treated wood.

2109.2.4.8 Exterior finish. *Exterior walls* constructed of unstabilized adobe units shall have their exterior surface covered with not fewer than two coats of Portland cement plaster having a minimum thickness of $^3/_4$ inch (19.1 mm) and conforming to ASTM C926. Lathing

INTERNATIONAL CODE COUNCIL®
Copyright © 2019 ICC & NYSDOS. ALL RIGHTS RESERVED. Accessed by Lauren Gualdino (lgualdino@briarcliffmanor.org), (-) Order Number #100880972 on May 08, 2020 07:05 AM (PDT) pursuant to License Agreement with ICC & NYSDOS. No further reproduction, no

100880972

shall comply with ASTM C1063. Fasteners shall be spaced at 16 inches (406 mm) on center maximum. Exposed wood surfaces shall be treated with an *approved* wood preservative or other protective coating prior to lath application.

2109.2.4.9 Lintels. Lintels shall be considered to be structural members and shall be designed in accordance with the applicable provisions of Chapter 16.

SECTION 2110
GLASS UNIT MASONRY

2110.1 General. Glass unit masonry construction shall comply with Chapter 13 of TMS 402 and this section.

2110.1.1 Limitations. Solid or hollow *approved* glass block shall not be used in fire walls, party walls, fire barriers, fire partitions or smoke barriers, or for load-bearing construction. Such blocks shall be erected with mortar and reinforcement in metal channel-type frames, structural frames, masonry or concrete recesses, embedded panel anchors as provided for both exterior and interior walls or other *approved* joint materials. Wood strip framing shall not be used in walls required to have a fire-resistance rating by other provisions of this code.

Exceptions:

1. Glass-block assemblies having a fire protection rating of not less than $^3/_4$ hour shall be permitted as opening protectives in accordance with Section 716 in fire barriers, fire partitions and smoke barriers that have a required fire-resistance rating of 1 hour or less and do not enclose exit stairways and ramps or exit passageways.
2. Glass-block assemblies as permitted in Section 404.6, Exception 2.

SECTION 2111
MASONRY FIREPLACES

2111.1 General. The construction of masonry fireplaces, consisting of concrete or masonry, shall be in accordance with this section.

2111.2 Fireplace drawings. The *construction documents* shall describe in sufficient detail the location, size and construction of masonry fireplaces. The thickness and characteristics of materials and the clearances from walls, partitions and ceilings shall be indicated.

2111.3 Footings and foundations. Footings for masonry fireplaces and their chimneys shall be constructed of concrete or solid masonry not less than 12 inches (305 mm) thick and shall extend not less than 6 inches (153 mm) beyond the face of the fireplace or foundation wall on all sides. Footings shall be founded on natural undisturbed earth or engineered fill below frost depth. In areas not subjected to freezing, footings shall be not less than 12 inches (305 mm) below finished grade.

2111.3.1 Ash dump cleanout. Cleanout openings, located within foundation walls below fireboxes, where provided, shall be equipped with ferrous metal or masonry doors and frames constructed to remain tightly closed, except when in use. Cleanouts shall be accessible and located so that ash removal will not create a hazard to combustible materials.

2111.4 Seismic reinforcement. In structures assigned to *Seismic Design Category* A or B, seismic reinforcement is not required. In structures assigned to *Seismic Design Category* C or D, masonry fireplaces shall be reinforced and anchored in accordance with Sections 2111.4.1, 2111.4.2 and 2111.5. In structures assigned to *Seismic Design Category* E or F, masonry fireplaces shall be reinforced in accordance with the requirements of Sections 2101 through 2108.

2111.4.1 Vertical reinforcing. For fireplaces with chimneys up to 40 inches (1016 mm) wide, four No. 4 continuous vertical bars, anchored in the foundation, shall be placed in the concrete between wythes of solid masonry or within the cells of hollow unit masonry and grouted in accordance with Section 2103.3. For fireplaces with chimneys greater than 40 inches (1016 mm) wide, two additional No. 4 vertical bars shall be provided for each additional 40 inches (1016 mm) in width or fraction thereof.

2111.4.2 Horizontal reinforcing. Vertical reinforcement shall be placed enclosed within $^1/_4$-inch (6.4 mm) ties or other reinforcing of equivalent net cross-sectional area, spaced not to exceed 18 inches (457 mm) on center in concrete; or placed in the bed joints of unit masonry at not less than every 18 inches (457 mm) of vertical height. Two such ties shall be provided at each bend in the vertical bars.

2111.5 Seismic anchorage. Masonry fireplaces and foundations shall be anchored at each floor, ceiling or roof line more than 6 feet (1829 mm) above grade with two $^3/_{16}$-inch by 1-inch (4.8 mm by 25 mm) straps embedded not less than 12 inches (305 mm) into the chimney. Straps shall be hooked around the outer bars and extend 6 inches (152 mm) beyond the bend. Each strap shall be fastened to not fewer than four floor joists with two $^1/_2$-inch (12.7 mm) bolts.

Exception: Seismic anchorage is not required for the following:

1. In structures assigned to *Seismic Design Category* A or B.
2. Where the masonry fireplace is constructed completely within the exterior walls.

2111.6 Firebox walls. Masonry fireboxes shall be constructed of solid masonry units, hollow masonry units grouted solid, stone or concrete. Where a lining of firebrick not less than 2 inches (51 mm) in thickness or other *approved* lining is provided, the minimum thickness of back and sidewalls shall each be 8 inches (203 mm) of solid masonry, including the lining. The width of joints between firebricks shall be not greater than $^1/_4$ inch (6.4 mm). Where a lining is not provided, the total minimum thickness of back and sidewalls shall be 10 inches (254 mm) of solid masonry. Firebrick shall conform to ASTM C27 or ASTM C1261 and shall be laid with medium-duty refractory mortar conforming to ASTM C199.

INTERNATIONAL CODE COUNCIL®
Copyright © 2019 ICC & NYSDOS. ALL RIGHTS RESERVED. Accessed by Lauren Gualdino (lgualdino@briarcliffmanor.org), (-) Order Number #100880972 on May 08, 2020 07:05 AM (PDT) pursuant to License Agreement with ICC & NYSDOS. No further reproduction, no

100880972

2111.6.1 Steel fireplace units. Steel fireplace units are permitted to be installed with solid masonry to form a masonry fireplace provided that they are installed according to either the requirements of their listing or the requirements of this section. Steel fireplace units incorporating a steel firebox lining shall be constructed with steel not less than $^1/_4$ inch (6.4 mm) in thickness, and an air-circulating chamber that is ducted to the interior of the building. The firebox lining shall be encased with solid masonry to provide a total thickness at the back and sides of not less than 8 inches (203 mm), of which not less than 4 inches (102 mm) shall be of solid masonry or concrete. Circulating air ducts employed with steel fireplace units shall be constructed of metal or masonry.

2111.7 Firebox dimensions. The firebox of a concrete or masonry fireplace shall have a minimum depth of 20 inches (508 mm). The throat shall be not less than 8 inches (203 mm) above the fireplace opening. The throat opening shall be not less than 4 inches (102 mm) in depth. The cross-sectional area of the passageway above the firebox, including the throat, damper and smoke chamber, shall be not less than the cross-sectional area of the flue.

Exception: Rumford fireplaces shall be permitted provided that the depth of the fireplace is not less than 12 inches (305 mm) and not less than one-third of the width of the fireplace opening, and the throat is not less than 12 inches (305 mm) above the lintel, and not less than $^1/_{20}$ the cross-sectional area of the fireplace opening.

2111.8 Lintel and throat. Masonry over a fireplace opening shall be supported by a lintel of noncombustible material. The minimum required bearing length on each end of the fireplace opening shall be 4 inches (102 mm). The fireplace throat or damper shall be located not less than 8 inches (203 mm) above the top of the fireplace opening.

2111.8.1 Damper. Masonry fireplaces shall be equipped with a ferrous metal damper located not less than 8 inches (203 mm) above the top of the fireplace opening. Dampers shall be installed in the fireplace or at the top of the flue venting the fireplace, and shall be operable from the room containing the fireplace. Damper controls shall be permitted to be located in the fireplace.

2111.9 Smoke chamber walls. Smoke chamber walls shall be constructed of solid masonry units, hollow masonry units grouted solid, stone or concrete. The total minimum thickness of front, back and sidewalls shall be 8 inches (203 mm) of solid masonry. The inside surface shall be parged smooth with refractory mortar conforming to ASTM C199. Where a lining of firebrick not less than 2 inches (51 mm) thick, or a lining of vitrified clay not less than $^5/_8$ inch (15.9 mm) thick, is provided, the total minimum thickness of front, back and sidewalls shall be 6 inches (152 mm) of solid masonry, including the lining. Firebrick shall conform to ASTM C1261 and shall be laid with refractory mortar conforming to ASTM C199. Vitrified clay linings shall conform to ASTM C315.

2111.9.1 Smoke chamber dimensions. The inside height of the smoke chamber from the fireplace throat to the beginning of the flue shall be not greater than the inside width of the fireplace opening. The inside surface of the smoke chamber shall not be inclined more than 45 degrees (0.76 rad) from vertical where prefabricated smoke chamber linings are used or where the smoke chamber walls are rolled or sloped rather than corbeled. Where the inside surface of the smoke chamber is formed by corbeled masonry, the walls shall not be corbeled more than 30 degrees (0.52 rad) from vertical.

2111.10 Hearth and hearth extension. Masonry fireplace hearths and hearth extensions shall be constructed of concrete or masonry, supported by noncombustible materials, and reinforced to carry their own weight and all imposed loads. Combustible material shall not remain against the underside of hearths or hearth extensions after construction.

2111.10.1 Hearth thickness. The minimum thickness of fireplace hearths shall be 4 inches (102 mm).

2111.10.2 Hearth extension thickness. The minimum thickness of hearth extensions shall be 2 inches (51 mm).

Exception: Where the bottom of the firebox opening is raised not less than 8 inches (203 mm) above the top of the hearth extension, a hearth extension of not less than $^3/_8$-inch-thick (9.5 mm) brick, concrete, stone, tile or other *approved* noncombustible material is permitted.

2111.11 Hearth extension dimensions. Hearth extensions shall extend not less than 16 inches (406 mm) in front of, and not less than 8 inches (203 mm) beyond, each side of the fireplace opening. Where the fireplace opening is 6 square feet (0.557 m^2) or larger, the hearth extension shall extend not less than 20 inches (508 mm) in front of, and not less than 12 inches (305 mm) beyond, each side of the fireplace opening.

2111.12 Fireplace clearance. Any portion of a masonry fireplace located in the interior of a building or within the *exterior wall* of a building shall have a clearance to combustibles of not less than 2 inches (51 mm) from the front faces and sides of masonry fireplaces and not less than 4 inches (102 mm) from the back faces of masonry fireplaces. The airspace shall not be filled, except to provide fireblocking in accordance with Section 2111.13.

Exceptions:

1. Masonry fireplaces *listed* and *labeled* for use in contact with combustibles in accordance with UL 127 and installed in accordance with the manufacturer's instructions are permitted to have combustible material in contact with their exterior surfaces.
2. Where masonry fireplaces are constructed as part of masonry or concrete walls, combustible materials shall not be in contact with the masonry or concrete walls less than 12 inches (306 mm) from the inside surface of the nearest firebox lining.
3. Exposed combustible *trim* and the edges of sheathing materials, such as wood siding, flooring and drywall, are permitted to abut the masonry fireplace sidewalls and hearth extension, in accordance with Figure 2111.12, provided that such combustible *trim* or sheathing is not less than 12 inches (306 mm) from the inside surface of the nearest firebox lining.

INTERNATIONAL CODE COUNCIL®
Copyright © 2019 ICC & NYSDOS. ALL RIGHTS RESERVED. Accessed by Lauren Gualdino (lgualdino@briarcliffmanor.org), (-) Order Number #100880972 on May 08, 2020 07:05 AM (PDT) pursuant to License Agreement with ICC & NYSDOS. No further reproduction, no

100880972

4. Exposed combustible mantels or *trim* is permitted to be placed directly on the masonry fireplace front surrounding the fireplace opening, provided that such combustible materials shall not be placed within 6 inches (153 mm) of a fireplace opening. Combustible material directly above and within 12 inches (305 mm) of the fireplace opening shall not project more than $^1/_8$ inch (3.2 mm) for each 1-inch (25 mm) distance from such opening. Combustible materials located along the sides of the fireplace opening that project more than $1^1/_2$ inches (38 mm) from the face of the fireplace shall have an additional clearance equal to the projection.

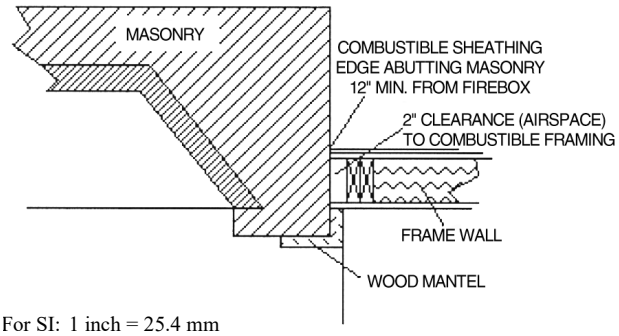

For SI: 1 inch = 25.4 mm

FIGURE 2111.12
ILLUSTRATION OF EXCEPTION TO FIREPLACE CLEARANCE PROVISION

2111.13 Fireplace fireblocking. All spaces between fireplaces and floors and ceilings through which fireplaces pass shall be fireblocked with noncombustible material securely fastened in place. The fireblocking of spaces between wood joists, beams or headers shall be to a depth of 1 inch (25 mm) and shall only be placed on strips of metal or metal lath laid across the spaces between combustible material and the chimney.

2111.14 Exterior air. Factory-built or masonry fireplaces covered in this section shall be equipped with an exterior air supply to ensure proper fuel combustion unless the room is mechanically ventilated and controlled so that the indoor pressure is neutral or positive.

2111.14.1 Factory-built fireplaces. Exterior combustion air ducts for factory-built fireplaces shall be *listed* components of the fireplace, and installed according to the fireplace manufacturer's instructions.

2111.14.2 Masonry fireplaces. *Listed* combustion air ducts for masonry fireplaces shall be installed according to the terms of their listing and manufacturer's instructions.

2111.14.3 Exterior air intake. The exterior air intake shall be capable of providing all combustion air from the exterior of the *dwelling*. The exterior air intake shall not be located within a garage, *attic*, basement or crawl space of the *dwelling* nor shall the air intake be located at an elevation higher than the firebox. The exterior air intake shall be covered with a corrosion-resistant screen of $^1/_4$-inch (6.4 mm) mesh.

2111.14.4 Clearance. Unlisted combustion air ducts shall be installed with a minimum 1-inch (25 mm) clearance to combustibles for all parts of the duct within 5 feet (1524 mm) of the duct outlet.

2111.14.5 Passageway. The combustion air passageway shall be not less than 6 square inches (3870 mm^2) and not more than 55 square inches (0.035 m^2), except that combustion air systems for *listed* fireplaces or for fireplaces tested for emissions shall be constructed according to the fireplace manufacturer's instructions.

2111.14.6 Outlet. The exterior air outlet is permitted to be located in the back or sides of the firebox chamber or within 24 inches (610 mm) of the firebox opening on or near the floor. The outlet shall be closable and designed to prevent burning material from dropping into concealed combustible spaces.

SECTION 2112
MASONRY HEATERS

2112.1 Definition. A masonry heater is a heating appliance constructed of concrete or solid masonry, hereinafter referred to as "masonry," which is designed to absorb and store heat from a solid fuel fire built in the firebox by routing the exhaust gases through internal heat exchange channels in which the flow path downstream of the firebox includes flow in either a horizontal or downward direction before entering the chimney and which delivers heat by radiation from the masonry surface of the heater.

2112.2 Installation. Masonry heaters shall be installed in accordance with this section and comply with one of the following:

1. Masonry heaters shall comply with the requirements of ASTM E1602.
2. Masonry heaters shall be *listed* and *labeled* in accordance with UL 1482 or EN 15250 and installed in accordance with the manufacturer's instructions.

2112.3 Footings and foundation. The firebox floor of a masonry heater shall be a minimum thickness of 4 inches (102 mm) of noncombustible material and be supported on a noncombustible footing and foundation in accordance with Section 2113.2.

2112.4 Seismic reinforcing. In structures assigned to *Seismic Design Category* D, E or F, masonry heaters shall be anchored to the masonry foundation in accordance with Section 2113.3. Seismic reinforcing shall not be required within the body of a masonry heater with a height that is equal to or less than 3.5 times its body width and where the masonry chimney serving the heater is not supported by the body of the heater. Where the masonry chimney shares a common wall with the facing of the masonry heater, the chimney portion of the structure shall be reinforced in accordance with Section 2113.

2112.5 Masonry heater clearance. Combustible materials shall not be placed within 36 inches (914 mm) or the distance of the allowed reduction method from the outside surface of a masonry heater in accordance with NFPA 211, Section 12.6,

INTERNATIONAL CODE COUNCIL®
Copyright © 2019 ICC & NYSDOS. ALL RIGHTS RESERVED. Accessed by Lauren Gualdino (lgualdino@briarcliffmanor.org), (-) Order Number #100880972 on May 08, 2020 07:05 AM (PDT) pursuant to License Agreement with ICC & NYSDOS. No further reproduction, no

100880972

and the required space between the heater and combustible material shall be fully vented to permit the free flow of air around all heater surfaces.

Exceptions:

1. Where the masonry heater wall thickness is not less than 8 inches (203 mm) of solid masonry and the wall thickness of the heat exchange channels is not less than 5 inches (127 mm) of solid masonry, combustible materials shall not be placed within 4 inches (102 mm) of the outside surface of a masonry heater. A clearance of not less than 8 inches (203 mm) shall be provided between the gastight capping slab of the heater and a combustible ceiling.
2. Masonry heaters *listed* and *labeled* in accordance with UL 1482 or EN 15250 and installed in accordance with the manufacturer's instructions.

SECTION 2113
MASONRY CHIMNEYS

2113.1 General. The construction of masonry chimneys consisting of solid masonry units, hollow masonry units grouted solid, stone or concrete shall be in accordance with this section.

2113.2 Footings and foundations. Footings for masonry chimneys shall be constructed of concrete or solid masonry not less than 12 inches (305 mm) thick and shall extend not less than 6 inches (152 mm) beyond the face of the foundation or support wall on all sides. Footings shall be founded on natural undisturbed earth or engineered fill below frost depth. In areas not subjected to freezing, footings shall be not less than 12 inches (305 mm) below finished grade.

2113.3 Seismic reinforcement. In structures assigned to *Seismic Design Category* A or B, seismic reinforcement is not required. In structures assigned to *Seismic Design Category* C or D, masonry chimneys shall be reinforced and anchored in accordance with Sections 2113.3.1, 2113.3.2 and 2113.4. In structures assigned to *Seismic Design Category* E or F, masonry chimneys shall be reinforced in accordance with the requirements of Sections 2101 through 2108 and anchored in accordance with Section 2113.4.

2113.3.1 Vertical reinforcement. For chimneys up to 40 inches (1016 mm) wide, four No. 4 continuous vertical bars anchored in the foundation shall be placed in the concrete between wythes of solid masonry or within the cells of hollow unit masonry and grouted in accordance with Section 2103.3. Grout shall be prevented from bonding with the flue liner so that the flue liner is free to move with thermal expansion. For chimneys greater than 40 inches (1016 mm) wide, two additional No. 4 vertical bars shall be provided for each additional 40 inches (1016 mm) in width or fraction thereof.

2113.3.2 Horizontal reinforcement. Vertical reinforcement shall be placed enclosed within $^1/_4$-inch (6.4 mm) ties, or other reinforcing of equivalent net cross-sectional area, spaced not to exceed 18 inches (457 mm) on center in concrete, or placed in the bed joints of unit masonry, at not less than every 18 inches (457 mm) of vertical height. Two such ties shall be provided at each bend in the vertical bars.

2113.4 Seismic anchorage. Masonry chimneys and foundations shall be anchored at each floor, ceiling or roof line more than 6 feet (1829 mm) above grade with two $^3/_{16}$-inch by 1-inch (4.8 mm by 25 mm) straps embedded not less than 12 inches (305 mm) into the chimney. Straps shall be hooked around the outer bars and extend 6 inches (152 mm) beyond the bend. Each strap shall be fastened to not less than four floor joists with two $^1/_2$-inch (12.7 mm) bolts.

Exception: Seismic anchorage is not required for the following:

1. In structures assigned to *Seismic Design Category* A or B.
2. Where the masonry fireplace is constructed completely within the exterior walls.

2113.5 Corbeling. Masonry chimneys shall not be corbeled more than half of the chimney's wall thickness from a wall or foundation, nor shall a chimney be corbeled from a wall or foundation that is less than 12 inches (305 mm) in thickness unless it projects equally on each side of the wall, except that on the second *story* of a two-story *dwelling*, corbeling of chimneys on the exterior of the enclosing walls is permitted to equal the wall thickness. The projection of a single course shall not exceed one-half the unit height or one-third of the unit bed depth, whichever is less.

2113.6 Changes in dimension. The chimney wall or chimney flue lining shall not change in size or shape within 6 inches (152 mm) above or below where the chimney passes through floor components, ceiling components or roof components.

2113.7 Offsets. Where a masonry chimney is constructed with a fireclay flue liner surrounded by one wythe of masonry, the maximum offset shall be such that the centerline of the flue above the offset does not extend beyond the center of the chimney wall below the offset. Where the chimney offset is supported by masonry below the offset in an *approved* manner, the maximum offset limitations shall not apply. Each individual corbeled masonry course of the offset shall not exceed the projection limitations specified in Section 2113.5.

2113.8 Additional load. Chimneys shall not support loads other than their own weight unless they are designed and constructed to support the additional load. Masonry chimneys are permitted to be constructed as part of the masonry walls or concrete walls of the building.

2113.9 Termination. Chimneys shall extend not less than 2 feet (610 mm) higher than any portion of the building within 10 feet (3048 mm), but shall be not less than 3 feet (914 mm) above the highest point where the chimney passes through the roof.

2113.9.1 Chimney caps. Masonry chimneys shall have a concrete, metal or stone cap, sloped to shed water, a drip edge and a caulked bond break around any flue liners in accordance with ASTM C1283.

INTERNATIONAL CODE COUNCIL®
Copyright © 2019 ICC & NYSDOS. ALL RIGHTS RESERVED. Accessed by Lauren Gualdino (lgualdino@briarcliffmanor.org), (-) Order Number #100880972 on May 08, 2020 07:05 AM (PDT) pursuant to License Agreement with ICC & NYSDOS. No further reproduction, no

100880972

2113.9.2 Spark arrestors. Where a spark arrestor is installed on a masonry chimney, the spark arrestor shall meet all of the following requirements:

1. The net free area of the arrestor shall be not less than four times the net free area of the outlet of the chimney flue it serves.
2. The arrestor screen shall have heat and corrosion resistance equivalent to 19-gage galvanized steel or 24-gage stainless steel.
3. Openings shall not permit the passage of spheres having a diameter greater than $^1/_2$ inch (12.7 mm) nor block the passage of spheres having a diameter less than $^3/_8$ inch (9.5 mm).
4. The spark arrestor shall be accessible for cleaning and the screen or chimney cap shall be removable to allow for cleaning of the chimney flue.

2113.9.3 Rain caps. Where a masonry or metal rain cap is installed on a masonry chimney, the net free area under the cap shall be not less than four times the net free area of the outlet of the chimney flue it serves.

2113.10 Wall thickness. Masonry chimney walls shall be constructed of concrete, solid masonry units or hollow masonry units grouted solid with not less than 4 inches (102 mm) nominal thickness.

2113.10.1 Masonry veneer chimneys. Where masonry is used as veneer for a framed chimney, through flashing and weep holes shall be provided as required by Chapter 14.

2113.11 Flue lining (material). Masonry chimneys shall be lined. The lining material shall be appropriate for the type of appliance connected, according to the terms of the appliance listing and the manufacturer's instructions.

2113.11.1 Residential-type appliances (general). Flue lining systems shall comply with one of the following:

1. Clay flue lining complying with the requirements of ASTM C315.
2. *Listed* chimney lining systems complying with UL 1777.
3. Factory-built chimneys or chimney units *listed* for installation within masonry chimneys.
4. Other *approved* materials that will resist corrosion, erosion, softening or cracking from flue gases and condensate at temperatures up to 1,800°F (982°C).

2113.11.1.1 Flue linings for specific appliances. Flue linings other than those covered in Section 2113.11.1 intended for use with specific appliances shall comply with Sections 2113.11.1.2 through 2113.11.1.4, 2113.11.2 and 2113.11.3.

2113.11.1.2 Gas appliances. Flue lining systems for gas appliances shall be in accordance with the *Fuel Gas Code of New York State*.

2113.11.1.3 Pellet fuel-burning appliances. Flue lining and vent systems for use in masonry chimneys with pellet fuel-burning appliances shall be limited to flue lining systems complying with Section 2113.11.1 and pellet vents *listed* for installation within masonry chimneys (see Section 2113.11.1.5 for marking).

2113.11.1.4 Oil-fired appliances approved for use with L-vent. Flue lining and vent systems for use in masonry chimneys with oil-fired appliances *approved* for use with Type L vent shall be limited to flue lining systems complying with Section 2113.11.1 and *listed* chimney liners complying with UL 641 (see Section 2113.11.1.5 for marking).

2113.11.1.5 Notice of usage. When a flue is relined with a material not complying with Section 2113.11.1, the chimney shall be plainly and permanently identified by a *label* attached to a wall, ceiling or other conspicuous location adjacent to where the connector enters the chimney. The *label* shall include the following message or equivalent language: "This chimney is for use only with (type or category of appliance) that burns (type of fuel). Do not connect other types of appliances."

2113.11.2 Concrete and masonry chimneys for medium-heat appliances. Concrete and masonry chimneys for medium-heat appliances shall comply with Sections 2113.11.2.1 through 2113.11.2.5.

2113.11.2.1 Construction. Chimneys for medium-heat appliances shall be constructed of solid masonry units or of concrete with walls not less than 8 inches (203 mm) thick, or with stone masonry not less than 12 inches (305 mm) thick.

2113.11.2.2 Lining. Concrete and masonry chimneys shall be lined with an *approved* medium-duty refractory brick not less than $4^1/_2$ inches (114 mm) thick laid on the $4^1/_2$-inch bed (114 mm) in an *approved* medium-duty refractory mortar. The lining shall start 2 feet (610 mm) or more below the lowest chimney connector entrance. Chimneys terminating 25 feet (7620 mm) or less above a chimney connector entrance shall be lined to the top.

2113.11.2.3 Multiple passageway. Concrete and masonry chimneys containing more than one passageway shall have the liners separated by a minimum 4-inch-thick (102 mm) concrete or solid masonry wall.

2113.11.2.4 Termination height. Concrete and masonry chimneys for medium-heat appliances shall extend not less than 10 feet (3048 mm) higher than any portion of any building within 25 feet (7620 mm).

2113.11.2.5 Clearance. A minimum clearance of 4 inches (102 mm) shall be provided between the exterior surfaces of a concrete or masonry chimney for medium-heat appliances and combustible material.

2113.11.3 Concrete and masonry chimneys for high-heat appliances. Concrete and masonry chimneys for high-heat appliances shall comply with 2113.11.3.1 through 2113.11.3.4.

INTERNATIONAL CODE COUNCIL®
Copyright © 2019 ICC & NYSDOS. ALL RIGHTS RESERVED. Accessed by Lauren Gualdino (lgualdino@briarcliffmanor.org), (-) Order Number #100880972 on May 08, 2020 07:05 AM (PDT) pursuant to License Agreement with ICC & NYSDOS. No further reproduction, no

100880972

2113.11.3.1 Construction. Chimneys for high-heat appliances shall be constructed with double walls of solid masonry units or of concrete, each wall to be not less than 8 inches (203 mm) thick with a minimum airspace of 2 inches (51 mm) between the walls.

2113.11.3.2 Lining. The inside of the interior wall shall be lined with an *approved* high-duty refractory brick, not less than $4^1/_2$ inches (114 mm) thick laid on the $4^1/_2$-inch bed (114 mm) in an *approved* high-duty refractory mortar. The lining shall start at the base of the chimney and extend continuously to the top.

2113.11.3.3 Termination height. Concrete and masonry chimneys for high-heat appliances shall extend not less than 20 feet (6096 mm) higher than any portion of any building within 50 feet (15 240 mm).

2113.11.3.4 Clearance. Concrete and masonry chimneys for high-heat appliances shall have *approved* clearance from buildings and structures to prevent overheating combustible materials, permit inspection and maintenance operations on the chimney and prevent danger of burns to persons.

2113.12 Clay flue lining (installation). Clay flue liners shall be installed in accordance with ASTM C1283 and extend from a point not less than 8 inches (203 mm) below the lowest inlet or, in the case of fireplaces, from the top of the smoke chamber to a point above the enclosing walls. The lining shall be carried up vertically, with a maximum slope not greater than 30 degrees (0.52 rad) from the vertical.

Clay flue liners shall be laid in medium-duty nonwater-soluble refractory mortar conforming to ASTM C199 with tight mortar joints left smooth on the inside and installed to maintain an airspace or insulation not to exceed the thickness of the flue liner separating the flue liners from the interior face of the chimney masonry walls. Flue lining shall be supported on all sides. Only enough mortar shall be placed to make the joint and hold the liners in position.

2113.13 Additional requirements.

2113.13.1 Listed materials. *Listed* materials used as flue linings shall be installed in accordance with the terms of their listings and the manufacturer's instructions.

2113.13.2 Space around lining. The space surrounding a chimney lining system or vent installed within a masonry chimney shall not be used to vent any other appliance.

Exception: This shall not prevent the installation of a separate flue lining in accordance with the manufacturer's instructions.

2113.14 Multiple flues. Where two or more flues are located in the same chimney, masonry wythes shall be built between adjacent flue linings. The masonry wythes shall be not less than 4 inches (102 mm) thick and bonded into the walls of the chimney.

Exception: Where venting only one appliance, two flues are permitted to adjoin each other in the same chimney with only the flue lining separation between them. The joints of the adjacent flue linings shall be staggered not less than 4 inches (102 mm).

2113.15 Flue area (appliance). Chimney flues shall not be smaller in area than the area of the connector from the appliance. Chimney flues connected to more than one appliance shall be not less than the area of the largest connector plus 50 percent of the areas of additional chimney connectors.

Exceptions:

1. Chimney flues serving oil-fired appliances sized in accordance with NFPA 31.
2. Chimney flues serving gas-fired appliances sized in accordance with the *Fuel Gas Code of New York State*.

2113.16 Flue area (masonry fireplace). Flue sizing for chimneys serving fireplaces shall be in accordance with Section 2113.16.1 or 2113.16.2.

2113.16.1 Minimum area. Round chimney flues shall have a minimum net cross-sectional area of not less than $^1/_{12}$ of the fireplace opening. Square chimney flues shall have a minimum net cross-sectional area of not less than $^1/_{10}$ of the fireplace opening. Rectangular chimney flues with an aspect ratio less than 2 to 1 shall have a minimum net cross-sectional area of not less than $^1/_{10}$ of the fireplace opening. Rectangular chimney flues with an aspect ratio of 2 to 1 or more shall have a minimum net cross-sectional area of not less than $^1/_8$ of the fireplace opening.

2113.16.2 Determination of minimum area. The minimum net cross-sectional area of the flue shall be determined in accordance with Figure 2113.16. A flue size providing not less than the equivalent net cross-sectional area shall be used. Cross-sectional areas of clay flue linings are as provided in Tables 2113.16(1) and 2113.16(2) or as provided by the manufacturer or as measured in the field. The height of the chimney shall be measured from the firebox floor to the top of the chimney flue.

2113.17 Inlet. Inlets to masonry chimneys shall enter from the side. Inlets shall have a thimble of fireclay, rigid refractory material or metal that will prevent the connector from pulling out of the inlet or from extending beyond the wall of the liner.

2113.18 Masonry chimney cleanout openings. Cleanout openings shall be provided within 6 inches (152 mm) of the base of each flue within every masonry chimney. The upper edge of the cleanout shall be located not less than 6 inches (152 mm) below the lowest chimney inlet opening. The height of the opening shall be not less than 6 inches (152 mm). The cleanout shall be provided with a noncombustible cover.

Exception: Chimney flues serving masonry fireplaces, where cleaning is possible through the fireplace opening.

INTERNATIONAL CODE COUNCIL®
Copyright © 2019 ICC & NYSDOS. ALL RIGHTS RESERVED. Accessed by Lauren Gualdino (lgualdino@briarcliffmanor.org), (-) Order Number #100880972 on May 08, 2020 07:05 AM (PDT) pursuant to License Agreement with ICC & NYSDOS. No further reproduction, no

100880972

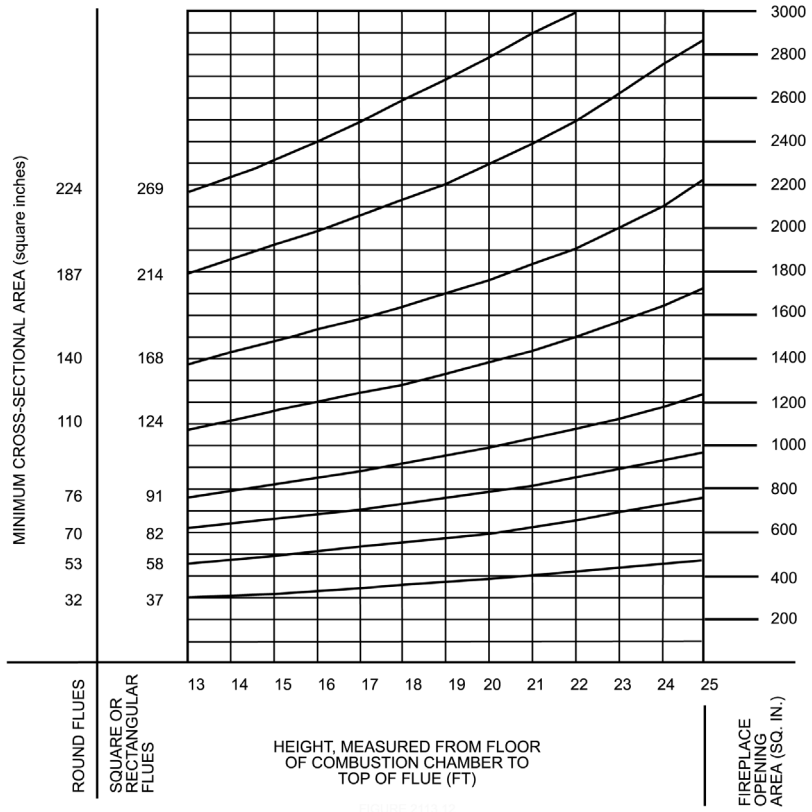

For SI: 1 inch = 25.4 mm, 1 square inch = 645 mm^2.

FIGURE 2113.16
FLUE SIZES FOR MASONRY CHIMNEYS

TABLE 2113.16(1)
NET CROSS-SECTIONAL AREA OF ROUND FLUE SIZES[a]

FLUE SIZE, INSIDE DIAMETER (inches)	CROSS-SECTIONAL AREA (square inches)
6	28
7	38
8	50
10	78
$10^3/_4$	90
12	113
15	176
18	254

For SI: 1 inch = 25.4 mm, 1 square inch = 645.16 mm^2.
a. Flue sizes are based on ASTM C315.

TABLE 2113.16(2)
NET CROSS-SECTIONAL AREA OF SQUARE AND RECTANGULAR FLUE SIZES

FLUE SIZE, OUTSIDE NOMINAL DIMENSIONS (inches)	CROSS-SECTIONAL AREA (square inches)
4.5 × 8.5	23
4.5 × 13	34
8 × 8	42
8.5 × 8.5	49
8 × 12	67
8.5 × 13	76
12 × 12	102
8.5 × 18	101
13 ×13	127
12 × 16	131
13 × 18	173
16 × 16	181
16 × 20	222
18 × 18	233
20 × 20	298
20 × 24	335
24 × 24	431

For SI: 1 inch = 25.4 mm, 1 square inch = 645.16 mm^2.

INTERNATIONAL CODE COUNCIL®
Copyright © 2019 ICC & NYSDOS. ALL RIGHTS RESERVED. Accessed by Lauren Gualdino (lgualdino@briarcliffmanor.org), (-) Order Number #100880972 on May 08, 2020 07:05 AM (PDT) pursuant to License Agreement with ICC & NYSDOS. No further reproduction, no

100880972

2113.19 Chimney clearances. Any portion of a masonry chimney located in the interior of the building or within the *exterior wall* of the building shall have a minimum airspace clearance to combustibles of 2 inches (51 mm). Chimneys located entirely outside the *exterior walls* of the building, including chimneys that pass through the soffit or cornice, shall have a minimum airspace clearance of 1 inch (25 mm). The airspace shall not be filled, except to provide fireblocking in accordance with Section 2113.20.

Exceptions:

1. Masonry chimneys equipped with a chimney lining system *listed* and *labeled* for use in chimneys in contact with combustibles in accordance with UL 1777, and installed in accordance with the manufacturer's instructions, are permitted to have combustible material in contact with their exterior surfaces.
2. Where masonry chimneys are constructed as part of masonry or concrete walls, combustible materials shall not be in contact with the masonry or concrete wall less than 12 inches (305 mm) from the inside surface of the nearest flue lining.
3. Exposed combustible *trim* and the edges of sheathing materials, such as wood siding, are permitted to abut the masonry chimney sidewalls, in accordance with Figure 2113.19, provided that such combustible *trim* or sheathing is not less than 12 inches (305 mm) from the inside surface of the nearest flue lining. Combustible material and *trim* shall not overlap the corners of the chimney by more than 1 inch (25 mm).

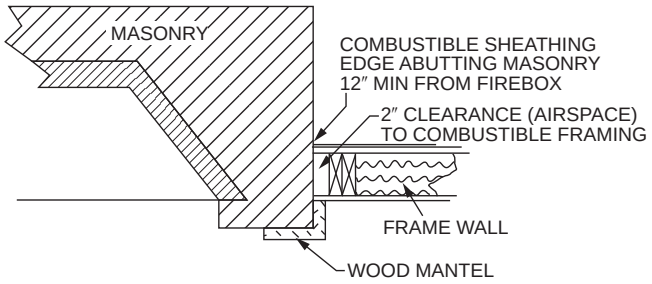

FIGURE 2113.19
ILLUSTRATION OF EXCEPTION THREE
CHIMNEY CLEARANCE PROVISION

2113.20 Chimney fireblocking. All spaces between chimneys and floors and ceilings through which chimneys pass shall be fireblocked with noncombustible material securely fastened in place. The fireblocking of spaces between wood joists, beams or headers shall be self-supporting or be placed on strips of metal or metal lath laid across the spaces between combustible material and the chimney.

SECTION 2114
DRY-STACK MASONRY

2114.1 General. The design of dry-stack masonry structures shall comply with the requirements of Chapters 1 through 8 of TMS 402 except as modified by Sections 2114.2 through 2114.5.

2114.2 Limitations. Dry-stack masonry shall be prohibited in Risk Category IV structures.

2114.3 Materials. Concrete masonry units complying with ASTM C90 shall be used.

2114.4 Strength. Dry-stack masonry shall be of adequate strength and proportions to support all superimposed loads without exceeding the allowable stresses listed in Table 2114.4. Allowable stresses not specified in Table 2114.4 shall comply with the requirements of Chapter 8 of TMS 402.

TABLE 2114.4
GROSS CROSS-SECTIONAL AREA
ALLOWABLE STRESS FOR DRY-STACK MASONRY

DESCRIPTION	MAXIMUM ALLOWABLE STRESS (psi)
Compression	45
Flexural tension Horizontal span Vertical span	 30 18
Shear	10

For SI:1 pound per square inch = 0.006895 MPa.

2114.5 Construction. Construction of dry-stack masonry shall comply with ASTM C946.

INTERNATIONAL CODE COUNCIL®
Copyright © 2019 ICC & NYSDOS. ALL RIGHTS RESERVED. Accessed by Lauren Gualdino (lgualdino@briarcliffmanor.org), (-) Order Number #100880972 on May 08, 2020 07:05 AM (PDT) pursuant to License Agreement with ICC & NYSDOS. No further reproduction, no

100880972

CHAPTER 22

STEEL

SECTION 2201
GENERAL

2201.1 Scope. The provisions of this chapter govern the quality, design, fabrication and erection of steel construction.

SECTION 2202
IDENTIFICATION OF STEEL FOR STRUCTURAL PURPOSES

2202.1 General. Identification of structural steel elements shall be in accordance with AISC 360. Identification of cold-formed steel members shall be in accordance with AISI S100. Identification of cold-formed steel light-frame construction shall also comply with the requirements contained in AISI S240 or AISI S220, as applicable. Other steel furnished for structural load-carrying purposes shall be properly identified for conformity to the ordered grade in accordance with the specified ASTM standard or other specification and the provisions of this chapter. Where the steel grade is not readily identifiable from marking and test records, the steel shall be tested to verify conformity to such standards.

SECTION 2203
PROTECTION OF STEEL FOR STRUCTURAL PURPOSES

2203.1 General. Painting of *structural steel elements* shall be in accordance with AISC 360. Painting of open-web steel joists and joist girders shall be in accordance with SJI 100 and SJI 200. Individual structural members and assembled panels of cold-formed steel construction shall be protected against corrosion in accordance with the requirements contained in AISI S100. Protection of cold-formed steel light-frame construction shall be in accordance with AISI S240 or AISI S220, as applicable.

SECTION 2204
CONNECTIONS

2204.1 Welding. The details of design, workmanship and technique for welding and qualification of welding personnel shall be in accordance with the specifications listed in Sections 2205, 2206, 2207, 2208, 2210 and 2211. For *special inspection* of welding, see Section 1705.2.

2204.2 Bolting. The design, installation and inspection of bolts shall be in accordance with the requirements of Sections 2205, 2206, 2207, 2210 and 2211. For *special inspection* of the installation of high-strength bolts, see Section 1705.2.

2204.3 Anchor rods. Anchor rods shall be set in accordance with the *approved construction documents*. The protrusion of the threaded ends through the connected material shall fully engage the threads of the nuts but shall not be greater than the length of the threads on the bolts.

SECTION 2205
STRUCTURAL STEEL

2205.1 General. The design, fabrication and erection of *structural steel elements* in buildings, structures and portions thereof shall be in accordance with AISC 360.

2205.2 Seismic design. Where required, the seismic design, fabrication and erection of buildings, structures and portions thereof shall be in accordance with Section 2205.2.1 or 2205.2.2, as applicable.

2205.2.1 Structural steel seismic force-resisting systems. The design, detailing, fabrication and erection of structural steel seismic force-resisting systems shall be in accordance with the provisions of Section 2205.2.1.1 or 2205.2.1.2, as applicable.

2205.2.1.1 Seismic Design Category B or C. Structures assigned to *Seismic Design Category* B or C shall be of any construction permitted in Section 2205. Where a response modification coefficient, *R*, in accordance with ASCE 7, Table 12.2-1, is used for the design of structures assigned to *Seismic Design Category* B or C, the structures shall be designed and detailed in accordance with the requirements of AISC 341.

Exception: The response modification coefficient, *R*, designated for "Steel systems not specifically detailed for seismic resistance, excluding cantilever column systems" in ASCE 7, Table 12.2-1, shall be permitted for systems designed and detailed in accordance with AISC 360, and need not be designed and detailed in accordance with AISC 341.

2205.2.1.2 Seismic Design Category D, E or F. Structures assigned to *Seismic Design Category* D, E or F shall be designed and detailed in accordance with AISC 341, except as permitted in ASCE 7, Table 15.4-1.

2205.2.2 Structural steel elements. The design, detailing, fabrication and erection of *structural steel elements* in seismic force-resisting systems other than those covered in Section 2205.2.1, including struts, collectors, chords and foundation elements, shall be in accordance with AISC 341 where either of the following applies:

1. The structure is assigned to *Seismic Design Category* D, E or F, except as permitted in ASCE 7, Table 15.4-1.
2. A response modification coefficient, *R*, greater than 3 in accordance with ASCE 7, Table 12.2-1, is used for the design of the structure assigned to *Seismic Design Category* B or C.

INTERNATIONAL CODE COUNCIL®
Copyright © 2019 ICC & NYSDOS. ALL RIGHTS RESERVED. Accessed by Lauren Gualdino (lgualdino@briarcliffmanor.org), (-) Order Number #100880972 on May 08, 2020 07:05 AM (PDT) pursuant to License Agreement with ICC & NYSDOS. No further reproduction, no

100880972

SECTION 2206
COMPOSITE STRUCTURAL STEEL AND CONCRETE STRUCTURES

2206.1 General. Systems of *structural steel elements* acting compositely with reinforced concrete shall be designed in accordance with AISC 360 and ACI 318, excluding ACI 318 Chapter 14.

2206.2 Seismic design. Where required, the seismic design, fabrication and erection of composite steel and concrete systems shall be in accordance with Section 2206.2.1.

2206.2.1 Seismic requirements for composite structural steel and concrete construction. Where a response modification coefficient, *R*, in accordance with ASCE 7, Table 12.2-1, is used for the design of systems of structural steel acting compositely with reinforced concrete, the structures shall be designed and detailed in accordance with the requirements of AISC 341.

SECTION 2207
STEEL JOISTS

2207.1 General. The design, manufacture and use of open-web steel joists and joist girders shall be in accordance with either SJI 100 or SJI 200, as applicable.

2207.1.1 Seismic design. Where required, the seismic design of buildings shall be in accordance with the additional provisions of Section 2205.2 or 2211.1.1.

2207.2 Design. The *registered design professional* shall indicate on the *construction documents* the steel joist and steel joist girder designations from the specifications listed in Section 2207.1; and shall indicate the requirements for joist and joist girder design, layout, end supports, anchorage, bridging design that differs from the SJI specifications listed in Section 2207.1, bridging termination connections and bearing connection design to resist uplift and lateral loads. These documents shall indicate special requirements as follows:

1. Special loads including:
    - 1.1. Concentrated loads.
    - 1.2. Nonuniform loads.
    - 1.3. Net uplift loads.
    - 1.4. Axial loads.
    - 1.5. End moments.
    - 1.6. Connection forces.
2. Special considerations including:
    - 2.1. Profiles for joist and joist girder configurations that differ from those defined by the SJI specifications listed in Section 2207.1.
    - 2.2. Oversized or other nonstandard web openings.
    - 2.3. Extended ends.
3. Live and total load deflection criteria for joists and joist girder configurations that differ from those defined by the SJI specifications listed in Section 2207.1.

2207.3 Calculations. The steel joist and joist girder manufacturer shall design the steel joists and steel joist girders in accordance with the SJI specifications listed in Section 2207.1 to support the load requirements of Section 2207.2. The *registered design professional* shall be permitted to require submission of the steel joist and joist girder calculations as prepared by a *registered design professional* responsible for the product design. Where requested by the *registered design professional*, the steel joist manufacturer shall submit design calculations with a cover letter bearing the seal and signature of the joist manufacturer's *registered design professional*. In addition to the design calculations submitted under seal and signature, the following shall be included:

1. Bridging design that differs from the SJI specifications listed in Section 2207.1, such as cantilevered conditions and net uplift.
2. Connection design for:
    - 2.1. Connections that differ from the SJI specifications listed in Section 2207.1, such as flush-framed or framed connections.
    - 2.2. Field splices.
    - 2.3. Joist headers.

2207.4 Steel joist drawings. Steel joist placement plans shall be provided to show the steel joist products as specified on the *approved construction documents* and are to be utilized for field installation in accordance with specific project requirements as stated in Section 2207.2. Steel joist placement plans shall include, at a minimum, the following:

1. Listing of applicable loads as stated in Section 2207.2 and used in the design of the steel joists and joist girders as specified in the *approved construction documents*.
2. Profiles for joist and joist girder configurations that differ from those defined by the SJI specifications listed in Section 2207.1.
3. Connection requirements for:
    - 3.1. Joist supports.
    - 3.2. Joist girder supports.
    - 3.3. Field splices.
    - 3.4. Bridging attachments.
4. Live and total load deflection criteria for joists and joist girder configurations that differ from those defined by the SJI specifications listed in Section 2207.1.
5. Size, location and connections for bridging.
6. Joist headers.

Steel joist placement plans do not require the seal and signature of the joist manufacturer's *registered design professional*.

2207.5 Certification. At completion of manufacture, the steel joist manufacturer shall submit a *certificate of compliance* to the owner or the owner's authorized agent for submittal to the *building official* as specified in Section 1704.5 stating that work was performed in accordance with *approved construction documents* and with SJI specifications listed in Section 2207.1.

INTERNATIONAL CODE COUNCIL®
Copyright © 2019 ICC & NYSDOS. ALL RIGHTS RESERVED. Accessed by Lauren Gualdino (lgualdino@briarcliffmanor.org), (-) Order Number #100880972 on May 08, 2020 07:05 AM (PDT) pursuant to License Agreement with ICC & NYSDOS. No further reproduction, no

100880972

SECTION 2208
STEEL CABLE STRUCTURES

2208.1 General. The design, fabrication and erection including related connections, and protective coatings of steel cables for buildings shall be in accordance with ASCE 19.

SECTION 2209
STEEL STORAGE RACKS

2209.1 Storage racks. The design, testing and utilization of *storage racks* made of cold-formed or hot-rolled steel structural members shall be in accordance with RMI ANSI/MH 16.1. Where required by ASCE 7, the seismic design of *storage racks* shall be in accordance with Section 15.5.3 of ASCE 7.

2209.2 Cantilevered steel storage racks. The design, testing, and utilization of cantilevered storage racks made of cold-formed or hot-rolled steel structural members shall be in accordance with RMI ANSI/MH 16.3. Where required by ASCE 7, the seismic design of cantilevered steel storage racks shall be in accordance with Section 15.5.3 of ASCE 7.

SECTION 2210
COLD-FORMED STEEL

2210.1 General. The design of cold-formed carbon and low-alloy steel structural members shall be in accordance with AISI S100. The design of cold-formed stainless-steel structural members shall be in accordance with ASCE 8. Cold-formed steel light-frame construction shall comply with Section 2211. Where required, the seismic design of cold-formed steel structures shall be in accordance with the additional provisions of Section 2210.2.

2210.1.1 Steel decks. The design and construction of cold-formed steel decks shall be in accordance with this section.

2210.1.1.1 Noncomposite steel floor decks. Noncomposite steel floor decks shall be permitted to be designed and constructed in accordance with ANSI/SDI-NC1.0.

2210.1.1.2 Steel roof deck. Steel roof decks shall be permitted to be designed and constructed in accordance with ANSI/SDI-RD1.0.

2210.1.1.3 Composite slabs on steel decks. Composite slabs of concrete and steel deck shall be permitted to be designed and constructed in accordance with SDI-C.

2210.2 Seismic requirements for cold-formed steel structures. Where a response modification coefficient, *R*, in accordance with ASCE 7, Table 12.2-1, is used for the design of cold-formed steel structures, the structures shall be designed and detailed in accordance with the requirements of AISI S100, ASCE 8, or, for cold-formed steel special-bolted moment frames, AISI S400.

SECTION 2211
COLD-FORMED STEEL LIGHT-FRAME CONSTRUCTION

2211.1 Structural framing. For cold-formed steel light-frame construction, the design and installation of the following structural framing systems, including their members and connections, shall be in accordance with AISI S240, and Sections 2211.1.1 through 2211.1.3, as applicable:

1. Floor and roof systems.
2. Structural walls.
3. Shear walls, strap-braced walls and diaphragms that resist in-plane lateral loads.
4. Trusses.

2211.1.1 Seismic requirements for cold-formed steel structural systems. The design of cold-formed steel light-frame construction to resist seismic forces shall be in accordance with the provisions of Section 2211.1.1.1 or 2211.1.1.2, as applicable.

2211.1.1.1 Seismic Design Categories B and C. Where a response modification coefficient, *R*, in accordance with ASCE 7, Table 12.2-1 is used for the design of cold-formed steel light-frame construction assigned to *Seismic Design Category* B or C, the seismic force-resisting system shall be designed and detailed in accordance with the requirements of AISI S400.

Exception: The response modification coefficient, *R*, designated for "Steel systems not specifically detailed for seismic resistance, excluding cantilever column systems" in ASCE 7, Table 12.2-1, shall be permitted for systems designed and detailed in accordance with AISI S240 and need not be designed and detailed in accordance with AISI S400.

2211.1.1.2 Seismic Design Categories D through F. In cold-formed steel light-frame construction assigned to *Seismic Design Category* D, E or F, the seismic force-resisting system shall be designed and detailed in accordance with AISI S400.

2211.1.2 Prescriptive framing. Detached one- and two-family *dwellings* and *townhouses*, less than or equal to three *stories above grade plane*, shall be permitted to be constructed in accordance with AISI S230 subject to the limitations therein.

2211.1.3 Truss design. Cold-formed steel trusses shall comply with the additional provisions of Sections 2211.1.3.1. through 2211.1.3.3.

2211.1.3.1 Truss design drawings. The truss design drawings shall conform to the requirements of Section I1 of AISI S202 and shall be provided with the shipment of trusses delivered to the job site. The truss design drawings shall include the details of permanent individual truss member restraint/bracing in accordance with Section I1.6 of AISI S202 where these methods are utilized to provide restraint/bracing.

2211.1.3.2 Trusses spanning 60 feet or greater. The owner or the owner's authorized agent shall contract with a *registered design professional* for the design of the temporary installation restraint/bracing and the permanent individual truss member restraint/bracing for trusses with clear spans 60 feet (18 288 mm) or greater. *Special inspection* of trusses over 60 feet (18 288 mm) in length shall be in accordance with Section 1705.2.

INTERNATIONAL CODE COUNCIL®
Copyright © 2019 ICC & NYSDOS. ALL RIGHTS RESERVED. Accessed by Lauren Gualdino (lgualdino@briarcliffmanor.org), (-) Order Number #100880972 on May 08, 2020 07:05 AM (PDT) pursuant to License Agreement with ICC & NYSDOS. No further reproduction, no

100880972

2211.1.3.3 Truss quality assurance. Trusses not part of a manufacturing process that provides requirements for quality control done under the supervision of a third-party quality control agency in accordance with AISI S240 Chapter D shall be fabricated in compliance with Sections 1704.2.5 and 1705.2, as applicable.

2211.2 Nonstructural members. For cold-formed steel light-frame construction, the design and installation of non-structural members and connections shall be in accordance with AISI S220.

INTERNATIONAL CODE COUNCIL®
Copyright © 2019 ICC & NYSDOS. ALL RIGHTS RESERVED. Accessed by Lauren Gualdino (lgualdino@briarcliffmanor.org), (-) Order Number #100880972 on May 08, 2020 07:05 AM (PDT) pursuant to License Agreement with ICC & NYSDOS. No further reproduction, no

100880972

CHAPTER 23

WOOD

SECTION 2301
GENERAL

2301.1 Scope. The provisions of this chapter shall govern the materials, design, construction and quality of wood members and their fasteners.

2301.2 Nominal sizes. For the purposes of this chapter, where dimensions of lumber are specified, they shall be deemed to be nominal dimensions unless specifically designated as actual dimensions (see Section 2304.2).

SECTION 2302
DESIGN REQUIREMENTS

2302.1 General. The design of structural elements or systems, constructed partially or wholly of wood or wood-based products, shall be in accordance with one of the following methods:

1. *Allowable stress design* in accordance with Sections 2304, 2305 and 2306.
2. *Load and resistance factor design* in accordance with Sections 2304, 2305 and 2307.
3. *Conventional light-frame construction* in accordance with Sections 2304 and 2308.
4. AWC WFCM in accordance with Section 2309.
5. The design and construction of log structures in accordance with the provisions of ICC 400.

SECTION 2303
MINIMUM STANDARDS AND QUALITY

2303.1 General. Structural sawn lumber; end-jointed lumber; prefabricated wood I-joists; structural glued-laminated timber; wood structural panels; fiberboard sheathing (where used structurally); hardboard siding (where used structurally); particleboard; *preservative-treated wood*; structural log members; structural composite lumber; round timber poles and piles; *fire-retardant-treated wood*; hardwood plywood; wood trusses; joist hangers; nails; and staples shall conform to the applicable provisions of this section.

[NY] 2303.1.1 Sawn lumber. Sawn lumber used for load-supporting purposes, including end-jointed or edge-glued lumber, machine stress-rated or machine-evaluated lumber, shall be identified by the grade *mark* of a lumber grading or inspection agency that has been approved by an accreditation body that complies with DOC PS 20 or equivalent. Grading practices and identification shall comply with rules published by an agency approved in accordance with the procedures of DOC PS 20 or equivalent procedures.

Exception: In lieu of compliance with Section 2303.1.1, lumber used for load-bearing purposes, which is neither identified by a grade mark nor issued a certificate of inspection by a lumber grading or inspection agency, may be used under the following conditions when authorized by the *authority having jurisdiction*:

1. The producing mill shall sell or provide the lumber directly to the ultimate consumer or the consumer's contract builder for use in an approved structure.
2. The producing mill shall certify in writing to the consumer or contract builder on a form to be produced by the *authority having jurisdiction* that the quality and safe working stresses of such lumber are equal to or exceed No. 2 grade of the species in accordance with the conditions set forth in DOC PS 20. Such certification shall be filed as part of the building permit application.
3. The use of such lumber shall be in accordance with Section 503 of the *Building Code of New York State*, limited to:
    a. Buildings of residential Group R occupancy not exceeding three stories in height.
    b. Buildings of assembly Group A, business Group B, educational Group E, factory industrial Group F, high-hazard Group H, institutional Group I, mercantile Group M, storage Group S, and utility miscellaneous Group U occupancies not exceeding 10,000 square feet (929 m^2) of cumulative floor area or 35 feet (10 668 mm) in height.

2303.1.1.1 Certificate of inspection. In lieu of a grade *mark* on the material, a certificate of inspection as to species and grade issued by a lumber grading or inspection agency meeting the requirements of this section is permitted to be accepted for precut, remanufactured or rough-sawn lumber and for sizes larger than 3 inches (76 mm) nominal thickness.

2303.1.1.2 End-jointed lumber. *Approved* end-jointed lumber is permitted to be used interchangeably with solid-sawn members of the same species and grade. End-jointed lumber used in an assembly required to have a fire-resistance rating shall have the designation "Heat Resistant Adhesive" or "HRA" included in its grade mark.

2303.1.2 Prefabricated wood I-joists. Structural capacities and design provisions for prefabricated wood I-joists shall be established and monitored in accordance with ASTM D5055.

2303.1.3 Structural glued-laminated timber. Glued-laminated timbers shall be manufactured and identified as required in ANSI/AITC A 190.1 and ASTM D3737.

INTERNATIONAL CODE COUNCIL®
Copyright © 2019 ICC & NYSDOS. ALL RIGHTS RESERVED. Accessed by Lauren Gualdino (lgualdino@briarcliffmanor.org), (-) Order Number #100880972 on May 08, 2020 07:05 AM (PDT) pursuant to License Agreement with ICC & NYSDOS. No further reproduction, no

100880972

2303.1.4 Structural glued cross-laminated timber. Cross-laminated timbers shall be manufactured and identified in accordance with ANSI/APA PRG 320.

2303.1.5 Wood structural panels. Wood structural panels, where used structurally (including those used for siding, roof and wall sheathing, subflooring, diaphragms and built-up members), shall conform to the requirements for their type in DOC PS 1, DOC PS 2 or ANSI/APA PRP 210. Each panel or member shall be identified for grade, bond classification, and Performance Category by the trademarks of an *approved* testing and grading agency. The Performance Category value shall be used as the "nominal panel thickness" or "panel thickness" whenever referenced in this code. Wood structural panel components shall be designed and fabricated in accordance with the applicable standards listed in Section 2306.1 and identified by the trademarks of an *approved* testing and inspection agency indicating conformance to the applicable standard. In addition, wood structural panels where permanently exposed in outdoor applications shall be of exterior type, except that wood structural panel roof sheathing exposed to the outdoors on the underside is permitted to be Exposure 1 type.

2303.1.6 Fiberboard. Fiberboard for its various uses shall conform to ASTM C208. Fiberboard sheathing, where used structurally, shall be identified by an *approved* agency as conforming to ASTM C208.

2303.1.6.1 Jointing. To ensure tight-fitting assemblies, edges shall be manufactured with square, shiplapped, beveled, tongue-and-groove or U-shaped joints.

2303.1.6.2 Roof insulation. Where used as roof insulation in all types of construction, fiberboard shall be protected with an *approved* roof covering.

2303.1.6.3 Wall insulation. Where installed and fireblocked to comply with Chapter 7, fiberboards are permitted as wall insulation in all types of construction. In fire walls and fire barriers, unless treated to comply with Section 803.1 for Class A materials, the boards shall be cemented directly to the concrete, masonry or other noncombustible base and shall be protected with an *approved* noncombustible veneer anchored to the base without intervening airspaces.

2303.1.6.3.1 Protection. Fiberboard wall insulation applied on the exterior of foundation walls shall be protected below ground level with a bituminous coating.

2303.1.7 Hardboard. Hardboard siding shall conform to the requirements of ANSI A135.6 and, where used structurally, shall be identified by the label of an *approved agency*. Hardboard underlayment shall meet the strength requirements of $^{7}/_{32}$-inch (5.6 mm) or $^{1}/_{4}$-inch (6.4 mm) service class hardboard planed or sanded on one side to a uniform thickness of not less than 0.200 inch (5.1 mm). Prefinished hardboard paneling shall meet the requirements of ANSI A135.5. Other basic hardboard products shall meet the requirements of ANSI A135.4. Hardboard products shall be installed in accordance with manufacture's recommendations.

2303.1.8 Particleboard. Particleboard shall conform to ANSI A208.1. Particleboard shall be identified by the grade *mark* or certificate of inspection issued by an *approved agency*. Particleboard shall not be utilized for applications other than indicated in this section unless the particleboard complies with the provisions of Section 2306.3.

2303.1.8.1 Floor underlayment. Particleboard floor underlayment shall conform to Type PBU of ANSI A208.1. Type PBU underlayment shall be not less than $^{1}/_{4}$-inch (6.4 mm) thick and shall be installed in accordance with the instructions of the Composite Panel Association.

2303.1.9 Preservative-treated wood. Lumber, timber, plywood, piles and poles supporting permanent structures required by Section 2304.12 to be preservative treated shall conform to AWPA U1 and M4. Lumber and plywood used in permanent wood foundation systems shall conform to Chapter 18.

2303.1.9.1 Identification. Wood required by Section 2304.12 to be preservative treated shall bear the quality *mark* of an inspection agency that maintains continuing supervision, testing and inspection over the quality of the *preservative-treated wood*. Inspection agencies for *preservative-treated wood* shall be *listed* by an accreditation body that complies with the requirements of the American Lumber Standards Treated Wood Program, or equivalent. The quality *mark* shall be on a stamp or *label* affixed to the *preservative-treated wood*, and shall include the following information:

1. Identification of treating manufacturer.
2. Type of preservative used.
3. Minimum preservative retention (pcf).
4. End use for which the product is treated.
5. AWPA standard to which the product was treated.
6. Identity of the accredited inspection agency.

2303.1.9.2 Moisture content. Where *preservative-treated wood* is used in enclosed locations where drying in service cannot readily occur, such wood shall be at a moisture content of 19 percent or less before being covered with insulation, interior wall finish, floor covering or other materials.

2303.1.10 Structural composite lumber. Structural capacities for structural composite lumber shall be established and monitored in accordance with ASTM D5456.

2303.1.11 Structural log members. Stress grading of structural log members of nonrectangular shape, as typically used in log buildings, shall be in accordance with ASTM D3957. Such structural log members shall be identified by the grade *mark* of an *approved* lumber grading or inspection agency. In lieu of a grade *mark* on the material, a certificate of inspection as to species and grade issued by a lumber grading or inspection agency meeting the requirements of this section shall be permitted.

INTERNATIONAL CODE COUNCIL®
Copyright © 2019 ICC & NYSDOS. ALL RIGHTS RESERVED. Accessed by Lauren Gualdino (lgualdino@briarcliffmanor.org), (-) Order Number #100880972 on May 08, 2020 07:05 AM (PDT) pursuant to License Agreement with ICC & NYSDOS. No further reproduction, no

100880972

2303.1.12 Round timber poles and piles. Round timber poles and piles shall comply with ASTM D3200 and ASTM D25, respectively.

2303.1.13 Engineered wood rim board. Engineered wood rim boards shall conform to ANSI/APA PRR 410 or shall be evaluated in accordance with ASTM D7672. Structural capacities shall be in accordance with ANSI/APA PRR 410 or established in accordance with ASTM D7672. Rim boards conforming to ANSI/APA PRR 410 shall be marked in accordance with that standard.

2303.2 Fire-retardant-treated wood. *Fire-retardant-treated wood* is any wood product that, when impregnated with chemicals by a pressure process or other means during manufacture, shall have, when tested in accordance with ASTM E84 or UL 723, a *listed* flame spread index of 25 or less and show no evidence of significant progressive combustion when the test is continued for an additional 20-minute period. Additionally, the flame front shall not progress more than $10^{1}/_{2}$ feet (3200 mm) beyond the centerline of the burners at any time during the test.

2303.2.1 Pressure process. For wood products impregnated with chemicals by a pressure process, the process shall be performed in closed vessels under pressures not less than 50 pounds per square inch gauge (psig) (345 kPa).

2303.2.2 Other means during manufacture. For wood products impregnated with chemicals by other means during manufacture, the treatment shall be an integral part of the manufacturing process of the wood product. The treatment shall provide permanent protection to all surfaces of the wood product. The use of paints, coating, stains or other surface treatments is not an approved method of protection as required in this section.

2303.2.3 Testing. For wood products produced by other means during manufacture, other than a pressure process, all sides of the wood product shall be tested in accordance with and produce the results required in Section 2303.2. Wood structural panels shall be permitted to test only the front and back faces.

2303.2.4 Labeling. In addition to the labels required in Section 2303.1.1 for sawn lumber and Section 2303.1.5 for wood structural panels, each piece of fire-retardant-treated lumber and wood structural panels shall be labeled. The *label* shall contain the following items:

1. The identification *mark* of an *approved agency* in accordance with Section 1703.5.
2. Identification of the treating manufacturer.
3. The name of the fire-retardant treatment.
4. The species of wood treated.
5. Flame spread and smoke-developed index.
6. Method of drying after treatment.
7. Conformance with appropriate standards in accordance with Sections 2303.2.5 through 2303.2.8.
8. For *fire-retardant-treated wood* exposed to weather, damp or wet locations, include the words "No increase in the *listed* classification when subjected to the Standard Rain Test" (ASTM D2898).

2303.2.5 Strength adjustments. Design values for untreated lumber and wood structural panels, as specified in Section 2303.1, shall be adjusted for *fire-retardant-treated wood*. Adjustments to design values shall be based on an *approved* method of investigation that takes into consideration the effects of the anticipated temperature and humidity to which the *fire-retardant-treated wood* will be subjected, the type of treatment and redrying procedures.

2303.2.5.1 Wood structural panels. The effect of treatment and the method of redrying after treatment, and exposure to high temperatures and high humidities on the flexure properties of fire-retardant-treated softwood plywood shall be determined in accordance with ASTM D5516. The test data developed by ASTM D5516 shall be used to develop adjustment factors, maximum loads and spans, or both, for untreated plywood design values in accordance with ASTM D6305. Each manufacturer shall publish the allowable maximum loads and spans for service as floor and roof sheathing for its treatment.

2303.2.5.2 Lumber. For each species of wood that is treated, the effects of the treatment, the method of redrying after treatment and exposure to high temperatures and high humidities on the allowable design properties of fire-retardant-treated lumber shall be determined in accordance with ASTM D5664. The test data developed by ASTM D5664 shall be used to develop modification factors for use at or near room temperature and at elevated temperatures and humidity in accordance with ASTM D6841. Each manufacturer shall publish the modification factors for service at temperatures of not less than 80°F (27°C) and for roof framing. The roof framing modification factors shall take into consideration the climatological location.

2303.2.6 Exposure to weather, damp or wet locations. Where *fire-retardant-treated wood* is exposed to weather, or damp or wet locations, it shall be identified as "Exterior" to indicate there is no increase in the *listed* flame spread index as defined in Section 2303.2 when subjected to ASTM D2898.

2303.2.7 Interior applications. Interior *fire-retardant-treated wood* shall have moisture content of not over 28 percent when tested in accordance with ASTM D3201 procedures at 92-percent relative humidity. Interior *fire-retardant-treated wood* shall be tested in accordance with Section 2303.2.5.1 or 2303.2.5.2. Interior *fire-retardant-treated wood* designated as Type A shall be tested in accordance with the provisions of this section.

2303.2.8 Moisture content. *Fire-retardant-treated wood* shall be dried to a moisture content of 19 percent or less for lumber and 15 percent or less for wood structural panels before use. For wood kiln-dried after treatment (KDAT), the kiln temperatures shall not exceed those used in kiln drying the lumber and plywood submitted for the tests described in Section 2303.2.5.1 for plywood and 2303.2.5.2 for lumber.

INTERNATIONAL CODE COUNCIL®
Copyright © 2019 ICC & NYSDOS. ALL RIGHTS RESERVED. Accessed by Lauren Gualdino (lgualdino@briarcliffmanor.org), (-) Order Number #100880972 on May 08, 2020 07:05 AM (PDT) pursuant to License Agreement with ICC & NYSDOS. No further reproduction, no

100880972

2303.2.9 Type I and II construction applications. See Section 603.1 for limitations on the use of *fire-retardant-treated wood* in buildings of Type I or II construction.

2303.3 Hardwood and plywood. Hardwood and decorative plywood shall be manufactured and identified as required in HPVA HP-1.

2303.4 Trusses. Wood trusses shall comply with Sections 2303.4.1 through 2303.4.7.

2303.4.1 Design. Wood trusses shall be designed in accordance with the provisions of this code and accepted engineering practice. Members are permitted to be joined by nails, glue, bolts, timber connectors, metal connector plates or other *approved* framing devices.

2303.4.1.1 Truss design drawings. The written, graphic and pictorial depiction of each individual truss shall be provided to the *building official* for approval prior to installation. Truss design drawings shall be provided with the shipment of trusses delivered to the job site. Truss design drawings shall include, at a minimum, the following information:

1. Slope or depth, span and spacing.
2. Location of all joints and support locations.
3. Number of plies if greater than one.
4. Required bearing widths.
5. Design loads as applicable, including:
   - 5.1. Top chord live load.
   - 5.2. Top chord dead load.
   - 5.3. Bottom chord live load.
   - 5.4. Bottom chord dead load.
   - 5.5. Additional loads and locations.
   - 5.6. Environmental design criteria and loads (such as wind, rain, snow, seismic).
6. Other lateral loads, including drag strut loads.
7. Adjustments to wood member and metal connector plate design value for conditions of use.
8. Maximum reaction force and direction, including maximum uplift reaction forces where applicable.
9. Joint connection type and description, such as size and thickness or gage, and the dimensioned location of each joint connector except where symmetrically located relative to the joint interface.
10. Size, species and grade for each wood member.
11. Truss-to-truss connections and truss field assembly requirements.
12. Calculated span-to-deflection ratio and maximum vertical and horizontal deflection for live and total load as applicable.
13. Maximum axial tension and compression forces in the truss members.
14. Required permanent individual truss member restraint location and the method and details of restraint/bracing to be used in accordance with Section 2303.4.1.2.

2303.4.1.2 Permanent individual truss member restraint. Where permanent restraint of truss members is required on the truss design drawings, it shall be accomplished by one of the following methods:

1. Permanent individual truss member restraint/bracing shall be installed using standard industry lateral restraint/bracing details in accordance with generally accepted engineering practice. Locations for lateral restraint shall be identified on the truss design drawing.
2. The trusses shall be designed so that the buckling of any individual truss member is resisted internally by the individual truss through suitable means (for example, buckling reinforcement by T-reinforcement or L-reinforcement, proprietary reinforcement). The buckling reinforcement of individual members of the trusses shall be installed as shown on the truss design drawing or on supplemental truss member buckling reinforcement details provided by the truss designer.
3. A project-specific permanent individual truss member restraint/bracing design shall be permitted to be specified by any *registered design professional*.

2303.4.1.3 Trusses spanning 60 feet or greater. The owner or the owner's authorized agent shall contract with any qualified *registered design professional* for the design of the temporary installation restraint/bracing and the permanent individual truss member restraint/bracing for all trusses with clear spans 60 feet (18 288 mm) or greater.

2303.4.1.4 Truss designer. The individual or organization responsible for the design of trusses.

2303.4.1.4.1 Truss design drawings. Where required by the *registered design professional*, the *building official* or the statutes of the jurisdiction in which the project is to be constructed, each individual truss design drawing shall bear the seal and signature of the truss designer.

Exceptions:

1. Where a cover sheet and truss index sheet are combined into a single sheet and attached to the set of truss design drawings, the single cover/truss index sheet is the only document required to be signed and sealed by the truss designer.
2. Where a cover sheet and a truss index sheet are separately provided and attached to the set of truss design drawings, the cover sheet and the truss index sheet are the only documents required to be signed and sealed by the truss designer.

2303.4.2 Truss placement diagram. The truss manufacturer shall provide a truss placement diagram that identifies the proposed location for each individually designated

INTERNATIONAL CODE COUNCIL®
Copyright © 2019 ICC & NYSDOS. ALL RIGHTS RESERVED. Accessed by Lauren Gualdino (lgualdino@briarcliffmanor.org), (-) Order Number #100880972 on May 08, 2020 07:05 AM (PDT) pursuant to License Agreement with ICC & NYSDOS. No further reproduction, no

100880972

truss and references the corresponding truss design drawing. The truss placement diagram shall be provided as part of the truss submittal package, and with the shipment of trusses delivered to the job site. Truss placement diagrams that serve only as a guide for installation and do not deviate from the *permit* submittal drawings shall not be required to bear the seal or signature of the truss designer.

2303.4.3 Truss submittal package. The truss submittal package provided by the truss manufacturer shall consist of each individual truss design drawing, the truss placement diagram, the permanent individual truss member restraint/bracing method and details and any other structural details germane to the trusses; and, as applicable, the cover/truss index sheet.

2303.4.4 Anchorage. The design for the transfer of loads and anchorage of each truss to the supporting structure is the responsibility of the *registered design professional*.

2303.4.5 Alterations to trusses. Truss members and components shall not be cut, notched, drilled, spliced or otherwise altered in any way without written concurrence and approval of a *registered design professional*. Alterations resulting in the addition of loads to any member (for example, HVAC equipment, piping, additional roofing or insulation) shall not be permitted without verification that the truss is capable of supporting such additional loading.

[NY] 2303.4.6 TPI 1 specifications. In addition to Sections 2303.4.1 through 2303.4.5, the design, manufacture and quality assurance of metal-plate-connected wood trusses shall be in accordance with TPI 1.

2303.4.7 Truss quality assurance. Trusses not part of a manufacturing process in accordance with either Section 2303.4.6 or a referenced standard, which provides requirements for quality control done under the supervision of a third-party quality control agency, shall be manufactured in compliance with Sections 1704.2.5 and 1705.5, as applicable.

2303.5 Test standard for joist hangers. Joist hangers shall be in accordance with ASTM D7147.

2303.6 Nails and staples. Nails and staples shall conform to requirements of ASTM F1667, including Supplement 1. Nails used for framing and sheathing connections shall have minimum average bending yield strengths as follows: 80 kips per square inch (ksi) (551 MPa) for shank diameters larger than 0.177 inch (4.50 mm) but not larger than 0.254 inch (6.45 mm), 90 ksi (620 MPa) for shank diameters larger than 0.142 inch (3.61 mm) but not larger than 0.177 inch (4.50 mm) and 100 ksi (689 MPa) for shank diameters of not less than 0.099 inch (2.51 mm) but not larger than 0.142 inch (3.61 mm). Staples used for framing and sheathing connections shall have minimum average bending moments as follows: 3.6 in.-lbs (0.41 N-m) for No. 16 gage staples, 4.0 in.-lbs (0.45 N-m) for No. 15 gage staples, and 4.3 in.-lbs (0.49 N-m) for No. 14 gage staples.

2303.7 Shrinkage. Consideration shall be given in design to the possible effect of cross-grain dimensional changes considered vertically that may occur in lumber fabricated in a green condition.

SECTION 2304
GENERAL CONSTRUCTION REQUIREMENTS

2304.1 General. The provisions of this section apply to design methods specified in Section 2302.1.

2304.2 Size of structural members. Computations to determine the required sizes of members shall be based on the net dimensions (actual sizes) and not nominal sizes.

2304.3 Wall framing. The framing of exterior and interior walls shall be in accordance with the provisions specified in Section 2308 unless a specific design is furnished.

2304.3.1 Bottom plates. Studs shall have full bearing on a 2-inch-thick (actual $1^1/_2$-inch, 38 mm) or larger plate or sill having a width not less than equal to the width of the studs.

2304.3.2 Framing over openings. Headers, double joists, trusses or other *approved* assemblies that are of adequate size to transfer loads to the vertical members shall be provided over window and door openings in load-bearing walls and partitions.

2304.3.3 Shrinkage. Wood walls and bearing partitions shall not support more than two floors and a roof unless an analysis satisfactory to the *building official* shows that shrinkage of the wood framing will not have adverse effects on the structure or any plumbing, electrical or mechanical systems or other equipment installed therein due to excessive shrinkage or differential movements caused by shrinkage. The analysis shall show that the roof drainage system and the foregoing systems or equipment will not be adversely affected or, as an alternate, such systems shall be designed to accommodate the differential shrinkage or movements.

2304.4 Floor and roof framing. The framing of wood-joisted floors and wood-framed roofs shall be in accordance with the provisions specified in Section 2308 unless a specific design is furnished.

2304.5 Framing around flues and chimneys. Combustible framing shall be not less than 2 inches (51 mm), but shall be not less than the distance specified in Sections 2111 and 2113 and the *Mechanical Code of New York State*, from flues, chimneys and fireplaces, and 6 inches (152 mm) away from flue openings.

2304.6 Exterior wall sheathing. Wall sheathing on the outside of exterior walls, including gables, and the connection of the sheathing to framing shall be designed in accordance with the general provisions of this code and shall be capable of resisting wind pressures in accordance with Section 1609.

2304.6.1 Wood structural panel sheathing. Where wood structural panel sheathing is used as the exposed finish on the outside of exterior walls, it shall have an exterior exposure durability classification. Where wood structural panel sheathing is used elsewhere, but not as the exposed finish, it shall be of a type manufactured with exterior glue (Exposure 1 or Exterior). Wood structural panel sheathing, connections and framing spacing shall be in accordance with Table 2304.6.1 for the applicable wind speed and exposure category where used in enclosed buildings with a mean roof height not greater than 30 feet (9144 mm) and a topographic factor (K_{zt}) of 1.0.

INTERNATIONAL CODE COUNCIL®
Copyright © 2019 ICC & NYSDOS. ALL RIGHTS RESERVED. Accessed by Lauren Gualdino (lgualdino@briarcliffmanor.org), (-) Order Number #100880972 on May 08, 2020 07:05 AM (PDT) pursuant to License Agreement with ICC & NYSDOS. No further reproduction, no

100880972

TABLE 2304.6.1
MAXIMUM ALLOWABLE STRESS DESIGN WIND SPEED, V_{asd} PERMITTED FOR WOOD STRUCTURAL PANEL WALL SHEATHING USED TO RESIST WIND PRESSURES[a, b, c]

MINIMUM NAIL		MINIMUM WOOD STRUCTURAL PANEL SPAN RATING	MINIMUM NOMINAL PANEL THICKNESS (inches)	MAXIMUM WALL STUD SPACING (inches)	PANEL NAIL SPACING		MAXIMUM ALLOWABLE STRESS DESIGN WIND SPEED, V_{asd} [d] (MPH)		
Size	Penetration (inches)				Edges (inches o.c.)	Field (inches o.c.)	Wind exposure category		
							B	C	D
6d common (2.0″ × 0.113″)	1.5	24/0	3/8	16	6	12	110	90	85
		24/16	7/16	16	6	12	110	100	90
						6	150	125	110
8d common (2.5″ × 0.131″)	1.75	24/16	7/16	16	6	12	130	110	105
						6	150	125	110
				24	6	12	110	90	85
						6	110	90	85

For SI: 1 inch = 25.4 mm, 1 mile per hour = 0.447 m/s.

a. Panel strength axis shall be parallel or perpendicular to supports. Three-ply plywood sheathing with studs spaced more than 16 inches on center shall be applied with panel strength axis perpendicular to supports.

b. The table is based on wind pressures acting toward and away from building surfaces in accordance with Section 30.7 of ASCE 7. Lateral requirements shall be in accordance with Section 2305 or 2308.

c. Wood structural panels with span ratings of wall-16 or wall-24 shall be permitted as an alternative to panels with a 24/0 span rating. Plywood siding rated 16 on center or 24 on center shall be permitted as an alternative to panels with a 24/16 span rating. Wall-16 and plywood siding 16 on center shall be used with studs spaced not more than 16 inches on center.

d. V_{asd} shall be determined in accordance with Section 1609.3.1.

2304.7 Interior paneling. Softwood wood structural panels used for interior paneling shall conform to the provisions of Chapter 8 and shall be installed in accordance with Table 2304.10.1. Panels shall comply with DOC PS 1, DOC PS 2 or ANSI/APA PRP 210. Prefinished hardboard paneling shall meet the requirements of ANSI A135.5. Hardwood plywood shall conform to HPVA HP-1.

2304.8 Floor and roof sheathing. Structural floor sheathing and structural roof sheathing shall comply with Sections 2304.8.1 and 2304.8.2, respectively.

2304.8.1 Structural floor sheathing. Structural floor sheathing shall be designed in accordance with the general provisions of this code.

Floor sheathing conforming to the provisions of Table 2304.8(1), 2304.8(2), 2304.8(3) or 2304.8(4) shall be deemed to meet the requirements of this section.

2304.8.2 Structural roof sheathing. Structural roof sheathing shall be designed in accordance with the general provisions of this code and the special provisions in this section.

Roof sheathing conforming to the provisions of Table 2304.8(1), 2304.8(2), 2304.8(3) or 2304.8(5) shall be deemed to meet the requirements of this section. Wood structural panel roof sheathing shall be of a type manufactured with exterior glue (Exposure 1 or Exterior).

2304.9 Lumber decking. Lumber decking shall be designed and installed in accordance with the general provisions of this code and Sections 2304.9.1 through 2304.9.5.3.

2304.9.1 General. Each piece of lumber decking shall be square-end trimmed. Where random lengths are furnished, each piece shall be square end trimmed across the face so that not less than 90 percent of the pieces are within 0.5 degrees (0.00873 rad) of square. The ends of the pieces shall be permitted to be beveled up to 2 degrees (0.0349 rad) from the vertical with the exposed face of the piece slightly longer than the opposite face of the piece. Tongue-and-groove decking shall be installed with the tongues up on sloped or pitched roofs with pattern faces down.

2304.9.2 Layup patterns. Lumber decking is permitted to be laid up following one of five standard patterns as defined in Sections 2304.9.2.1 through 2304.9.2.5. Other patterns are permitted to be used provided that they are substantiated through engineering analysis.

2304.9.2.1 Simple span pattern. All pieces shall be supported on their ends (in other words, by two supports).

2304.9.2.2 Two-span continuous pattern. All pieces shall be supported by three supports, and all end joints shall occur in line on alternating supports. Supporting members shall be designed to accommodate the load redistribution caused by this pattern.

2304.9.2.3 Combination simple and two-span continuous pattern. Courses in end spans shall be alternating simple-span pattern and two-span continuous pattern. End joints shall be staggered in adjacent courses and shall bear on supports.

INTERNATIONAL CODE COUNCIL®
Copyright © 2019 ICC & NYSDOS. ALL RIGHTS RESERVED. Accessed by Lauren Gualdino (lgualdino@briarcliffmanor.org), (-) Order Number #100880972 on May 08, 2020 07:05 AM (PDT) pursuant to License Agreement with ICC & NYSDOS. No further reproduction, no

100880972

2304.9.2.4 Cantilevered pieces intermixed pattern. The decking shall extend across not fewer than three spans. Pieces in each starter course and every third course shall be simple span pattern. Pieces in other courses shall be cantilevered over the supports with end joints at alternating quarter or third points of the spans. Each piece shall bear on one support or more.

2304.9.2.5 Controlled random pattern. The decking shall extend across not fewer than three spans. End joints of pieces within 6 inches (152 mm) of the end joints of the adjacent pieces in either direction shall be separated by not fewer than two intervening courses. In the end bays, each piece shall bear on one support or more. Where an end joint occurs in an end bay, the next piece in the same course shall continue over the first inner support for not less than 24 inches (610 mm). The details of the controlled random pattern shall be as specified for each decking material in Section 2304.9.3.3, 2304.9.4.3 or 2304.9.5.3.

Decking that cantilevers beyond a support for a horizontal distance greater than 18 inches (457 mm), 24 inches (610 mm) or 36 inches (914 mm) for 2-inch (51 mm), 3-inch (76 mm) and 4-inch (102 mm) nominal thickness decking, respectively, shall comply with the following:

1. The maximum cantilevered length shall be 30 percent of the length of the first adjacent interior span.
2. A structural fascia shall be fastened to each decking piece to maintain a continuous, straight line.
3. End joints shall not be in the decking between the cantilevered end of the decking and the centerline of the first adjacent interior span.

2304.9.3 Mechanically laminated decking. Mechanically laminated decking shall comply with Sections 2304.9.3.1 through 2304.9.3.3.

2304.9.3.1 General. Mechanically laminated decking consists of square-edged dimension lumber laminations set on edge and nailed to the adjacent pieces and to the supports.

2304.9.3.2 Nailing. The length of nails connecting laminations shall be not less than two and one-half times the net thickness of each lamination. Where decking supports are 48 inches (1219 mm) on center or less, side nails shall be installed not more than 30 inches (762 mm) on center alternating between top and bottom edges, and staggered one-third of the spacing in adjacent laminations. Where supports are spaced more than 48 inches (1219 mm) on center, side nails shall be installed not more than 18 inches (457 mm) on center alternating between top and bottom edges and staggered one-third of the spacing in adjacent laminations. For mechanically laminated decking constructed with laminations of 2-inch (51 mm) nominal thickness, nailing in accordance with Table 2304.9.3.2 shall be permitted. Two side nails shall be installed at each end of butt-jointed pieces.

Laminations shall be toenailed to supports with 20d or larger common nails. Where the supports are 48 inches (1219 mm) on center or less, alternate laminations shall be toenailed to alternate supports; where supports are spaced more than 48 inches (1219 mm) on center, alternate laminations shall be toenailed to every support. For mechanically laminated decking constructed with laminations of 2-inch (51 mm) nominal thickness, toenailing in accordance with Table 2304.9.3.2 shall be permitted.

TABLE 2304.8(1)
ALLOWABLE SPANS FOR LUMBER FLOOR AND ROOF SHEATHING

SPAN (inches)	MINIMUM NET THICKNESS (inches) OF LUMBER PLACED			
	Perpendicular to supports		Diagonally to supports	
	Surfaced dry[a]	Surfaced unseasoned	Surfaced dry[a]	Surfaced unseasoned
Floors				
24	3/4	25/32	3/4	25/32
16	5/8	11/16	5/8	11/16
Roofs				
24	5/8	11/16	3/4	25/32

For SI: 1 inch = 25.4 mm.

a. Maximum 19-percent moisture content.

TABLE 2304.8(2)
SHEATHING LUMBER, MINIMUM GRADE REQUIREMENTS: BOARD GRADE

SOLID FLOOR OR ROOF SHEATHING	SPACED ROOF SHEATHING	GRADING RULES
Utility	Standard	NLGA, WCLIB, WWPA
4 common or utility	3 common or standard	NLGA, WCLIB, WWPA, NSLB or NELMA
No. 3	No. 2	SPIB
Merchantable	Construction common	RIS

INTERNATIONAL CODE COUNCIL®
Copyright © 2019 ICC & NYSDOS. ALL RIGHTS RESERVED. Accessed by Lauren Gualdino (lgualdino@briarcliffmanor.org), (-) Order Number #100880972 on May 08, 2020 07:05 AM (PDT) pursuant to License Agreement with ICC & NYSDOS. No further reproduction, no

TABLE 2304.8(3)
ALLOWABLE SPANS AND LOADS FOR WOOD STRUCTURAL PANEL SHEATHING AND SINGLE-FLOOR GRADES CONTINUOUS OVER TWO OR MORE SPANS WITH STRENGTH AXIS PERPENDICULAR TO SUPPORTS[a]

SHEATHING GRADES		ROOF[b]				FLOOR[c]
Panel span rating roof/ floor span	Panel thickness (inches)	Maximum span (inches)		Load[d](psf)		Maximum span (inches)
		With edge support[e]	Without edge support	Total load	Live load	
16/0	3/8	16	16	40	30	0
20/0	3/8	20	20	40	30	0
24/0	3/8, 7/16, 1/2	24	20[f]	40	30	0
24/16	7/16, 1/2	24	24	50	40	16
32/16	15/32, 1/2, 5/8	32	28	40	30	16[g]
40/20	19/32, 5/8, 3/4, 7/8	40	32	40	30	20[g, h]
48/24	23/32, 3/4, 7/8	48	36	45	35	24
54/32	7/8, 1	54	40	45	35	32
60/32	7/8, 1 1/8	60	48	45	35	32
SINGLE FLOOR GRADES		**ROOF[b]**				**FLOOR[c]**
Panel span rating	Panel thickness (inches)	Maximum span (inches)		Load[e](psf)		Maximum span (inches)
		With edge support[e]	Without edge support	Total load	Live load	
16 o.c.	1/2, 19/32, 5/8	24	24	50	40	16[g]
20 o.c.	19/32, 5/8, 3/4	32	32	40	30	20[g, h]
24 o.c.	23/32, 3/4	48	36	35	25	24
32 o.c.	7/8, 1	48	40	50	40	32
48 o.c.	1 3/32, 1 1/8	60	48	50	40	48

For SI: 1 inch = 25.4 mm, 1 pound per square foot = 0.0479 kN/m^2.

a. Applies to panels 24 inches or wider.

b. Uniform load deflection limitations $^1/_{180}$ of span under live load plus dead load, $^1/_{240}$ under live load only.

c. Panel edges shall have approved tongue-and-groove joints or shall be supported with blocking unless $^1/_4$-inch minimum thickness underlayment or $1^1/_2$ inches of approved cellular or lightweight concrete is placed over the subfloor, or finish floor is $^3/_4$-inch wood strip. Allowable uniform load based on deflection of $^1/_{360}$ of span is 100 pounds per square foot except the span rating of 48 inches on center is based on a total load of 65 pounds per square foot.

d. Allowable load at maximum span.

e. Tongue-and-groove edges, panel edge clips (one midway between each support, except two equally spaced between supports 48 inches on center), lumber blocking or other. Only lumber blocking shall satisfy blocked diaphragm requirements.

f. For $^1/_2$-inch panel, maximum span shall be 24 inches.

g. Span is permitted to be 24 inches on center where $^3/_4$-inch wood strip flooring is installed at right angles to joist.

h. Span is permitted to be 24 inches on center for floors where $1^1/_2$ inches of cellular or lightweight concrete is applied over the panels.

TABLE 2304.8(4)
ALLOWABLE SPAN FOR WOOD STRUCTURAL PANEL COMBINATION SUBFLOOR-UNDERLAYMENT (SINGLE FLOOR)[a]
(Panels Continuous Over Two or More Spans and Strength Axis Perpendicular to Supports)

IDENTIFICATION	MAXIMUM SPACING OF JOISTS (inches)				
	16	20	24	32	48
Species group[b]	Thickness (inches)				
1	1/2	5/8	3/4	—	—
2, 3	5/8	3/4	7/8	—	—
4	3/4	7/8	1	—	—
Single floor span rating[c]	16 o.c.	20 o.c.	24 o.c.	32 o.c.	48 o.c.

For SI: 1 inch = 25.4 mm, 1 pound per square foot = 0.0479 kN/m^2.

a. Spans limited to value shown because of possible effects of concentrated loads. Allowable uniform loads based on deflection of $^1/_{360}$ of span is 100 pounds per square foot except allowable total uniform load for $1^1/_8$-inch wood structural panels over joists spaced 48 inches on center is 65 pounds per square foot. Panel edges shall have approved tongue-and-groove joints or shall be supported with blocking, unless $^1/_4$-inch minimum thickness underlayment or $1^1/_2$ inches of approved cellular or lightweight concrete is placed over the subfloor, or finish floor is $^3/_4$-inch wood strip.

b. Applicable to all grades of sanded exterior-type plywood. See DOC PS 1 for plywood species groups.

c. Applicable to Underlayment grade, C-C (Plugged) plywood, and Single Floor grade wood structural panels.

INTERNATIONAL CODE COUNCIL®
Copyright © 2019 ICC & NYSDOS. ALL RIGHTS RESERVED. Accessed by Lauren Gualdino (lgualdino@briarcliffmanor.org), (-) Order Number #100880972 on May 08, 2020 07:05 AM (PDT) pursuant to License Agreement with ICC & NYSDOS. No further reproduction, no

100880972

TABLE 2304.8(5)
ALLOWABLE LOAD (PSF) FOR WOOD STRUCTURAL PANEL ROOF SHEATHING CONTINUOUS OVER TWO OR MORE SPANS AND STRENGTH AXIS PARALLEL TO SUPPORTS
(Plywood structural panels are five-ply, five-layer unless otherwise noted)[a]

PANEL GRADE	THICKNESS (inch)	MAXIMUM SPAN (inches)	LOAD AT MAXIMUM SPAN (psf)	
			Live	Total
Structural I sheathing	7/16	24	20	30
	15/32	24	35[b]	45[b]
	1/2	24	40[b]	50[b]
	19/32, 5/8	24	70	80
	23/32, 3/4	24	90	100
Sheathing, other grades covered in DOC PS 1 or DOC PS 2	7/16	16	40	50
	15/32	24	20	25
	1/2	24	25	30
	19/32	24	40[b]	50[b]
	5/8	24	45[b]	55[b]
	23/32, 3/4	24	60[b]	65[b]

For SI: 1 inch = 25.4 mm, 1 pound per square foot = 0.0479 kN/m^2.

a. Uniform load deflection limitations 1/180 of span under live load plus dead load, 1/240 under live load only. Edges shall be blocked with lumber or other approved type of edge supports.

b. For composite and four-ply plywood structural panel, load shall be reduced by 15 pounds per square foot.

TABLE 2304.9.3.2
FASTENING SCHEDULE FOR MECHANICALLY LAMINATED DECKING USING LAMINATIONS OF 2-INCH NOMINAL THICKNESS

MINIMUM NAIL SIZE (Length x Diameter) (inches)	MAXIMUM SPACING BETWEEN FACE NAILS [a, b] (inches)		NUMBER OF TOENAILS INTO SUPPORTS[c]
	Decking Supports ≤ 48 inches o.c.	Decking Supports > 48 inches o.c.	
4 × 0.192	30	18	1
4 × 0.162	24	14	2
4 × 0.148	22	13	2
3 1/2 × 0.162	20	12	2
3 1/2 × 0.148	19	11	2
3 1/2 × 0.135	17	10	2
3 × 0.148	11	7	2
3 × 0.128	9	5	2
2 3/4 × 0.148	10	6	2
2 3/4 × 0.131	9	6	3
2 3/4 × 0.120	8	5	3

For SI: 1 inch = 25.4 mm

a. Nails shall be driven perpendicular to the lamination face, alternating between top and bottom edges.

b. Where nails penetrate through two laminations and into the third, they shall be staggered one-third of the spacing in adjacent laminations. Otherwise, nails shall be staggered one-half of the spacing in adjacent laminations.

c. Where supports are 48 inches on center or less, alternate laminations shall be toenailed to alternate supports; where supports are spaced more than 48 inches on center, alternate laminations shall be toenailed to every support.

2304.9.3.3 Controlled random pattern. There shall be a minimum distance of 24 inches (610 mm) between end joints in adjacent courses. The pieces in the first and second courses shall bear on not fewer than two supports with end joints in these two courses occurring on alternate supports. Not more than seven intervening courses shall be permitted before this pattern is repeated.

2304.9.4 Two-inch sawn tongue-and-groove decking. Two-inch (51 mm) sawn tongue-and-groove decking shall comply with Sections 2304.9.4.1 through 2304.9.4.3.

INTERNATIONAL CODE COUNCIL®
Copyright © 2019 ICC & NYSDOS. ALL RIGHTS RESERVED. Accessed by Lauren Gualdino (lgualdino@briarcliffmanor.org), (-) Order Number #100880972 on May 08, 2020 07:05 AM (PDT) pursuant to License Agreement with ICC & NYSDOS. No further reproduction, no

100880972

2304.9.4.1 General. Two-inch (51 mm) decking shall have a maximum moisture content of 15 percent. Decking shall be machined with a single tongue-and-groove pattern. Each decking piece shall be nailed to each support.

2304.9.4.2 Nailing. Each piece of decking shall be toenailed at each support with one 16d common nail through the tongue and face-nailed with one 16d common nail.

2304.9.4.3 Controlled random pattern. There shall be a minimum distance of 24 inches (610 mm) between end joints in adjacent courses. The pieces in the first and second courses shall bear on not fewer than two supports with end joints in these two courses occurring on alternate supports. Not more than seven intervening courses shall be permitted before this pattern is repeated.

2304.9.5 Three- and four-inch sawn tongue-and-groove decking. Three- and four-inch (76 mm and 102 mm) sawn tongue-and-groove decking shall comply with Sections 2304.9.5.1 through 2304.9.5.3.

2304.9.5.1 General. Three-inch (76 mm) and four-inch (102 mm) decking shall have a maximum moisture content of 19 percent. Decking shall be machined with a double tongue-and-groove pattern. Decking pieces shall be interconnected and nailed to the supports.

2304.9.5.2 Nailing. Each piece shall be toenailed at each support with one 40d common nail and face-nailed with one 60d common nail. Courses shall be spiked to each other with 8-inch (203 mm) spikes at maximum intervals of 30 inches (762 mm) through predrilled edge holes penetrating to a depth of approximately 4 inches (102 mm). One spike shall be installed at a distance not exceeding 10 inches (254 mm) from the end of each piece.

2304.9.5.3 Controlled random pattern. There shall be a minimum distance of 48 inches (1219 mm) between end joints in adjacent courses. Pieces not bearing on a support are permitted to be located in interior bays provided that the adjacent pieces in the same course continue over the support for not less than 24 inches (610 mm). This condition shall not occur more than once in every six courses in each interior bay.

2304.10 Connectors and fasteners. Connectors and fasteners shall comply with the applicable provisions of Sections 2304.10.1 through 2304.10.7.

2304.10.1 Fastener requirements. Connections for wood members shall be designed in accordance with the appropriate methodology in Section 2302.1. The number and size of fasteners connecting wood members shall be not less than that set forth in Table 2304.10.1.

2304.10.2 Sheathing fasteners. Sheathing nails or other *approved* sheathing connectors shall be driven so that their head or crown is flush with the surface of the sheathing.

2304.10.3 Joist hangers and framing anchors. Connections depending on joist hangers or framing anchors, ties and other mechanical fastenings not otherwise covered are permitted where *approved*. The vertical load-bearing capacity, torsional moment capacity and deflection characteristics of joist hangers shall be determined in accordance with ASTM D7147.

2304.10.4 Other fasteners. Clips, staples, glues and other *approved* methods of fastening are permitted where *approved*.

2304.10.5 Fasteners and connectors in contact with preservative-treated and fire-retardant-treated wood. Fasteners, including nuts and washers, and connectors in contact with *preservative-treated* and *fire-retardant-treated wood* shall be in accordance with Sections 2304.10.5.1 through 2304.10.5.4. The coating weights for zinc-coated fasteners shall be in accordance with ASTM A153. Stainless steel driven fasteners shall be in accordance with the material requirements of ASTM F1667.

2304.10.5.1 Fasteners and connectors for preservative-treated wood. Fasteners, including nuts and washers, in contact with *preservative-treated wood* shall be of hot-dipped zinc-coated galvanized steel, stainless steel, silicon bronze or copper. Staples shall be of stainless steel. Fasteners other than nails, staples, timber rivets, wood screws and lag screws shall be permitted to be of mechanically deposited zinc-coated steel with coating weights in accordance with ASTM B695, Class 55 minimum. Connectors that are used in exterior applications and in contact with *preservative-treated wood* shall have coating types and weights in accordance with the treated wood or connector manufacturer's recommendations. In the absence of manufacturer's recommendations, not less than ASTM A653, Type G185 zinc-coated galvanized steel, or equivalent, shall be used.

Exception: Plain carbon steel fasteners, including nuts and washers, in SBX/DOT and zinc borate *preservative-treated wood* in an interior, dry environment shall be permitted.

2304.10.5.2 Fastenings for wood foundations. Fastenings, including nuts and washers, for wood foundations shall be as required in AWC PWF.

2304.10.5.3 Fasteners for fire-retardant-treated wood used in exterior applications or wet or damp locations. Fasteners, including nuts and washers, for *fire-retardant-treated wood* used in exterior applications or wet or damp locations shall be of hot-dipped zinc-coated galvanized steel, stainless steel, silicon bronze or copper. Staples shall be of stainless steel. Fasteners other than nails, staples, timber rivets, wood screws and lag screws shall be permitted to be of mechanically deposited zinc-coated steel with coating weights in accordance with ASTM B695, Class 55 minimum.

2304.10.5.4 Fasteners for fire-retardant-treated wood used in interior applications. Fasteners, including nuts and washers, for *fire-retardant-treated wood* used in interior locations shall be in accordance with

INTERNATIONAL CODE COUNCIL®
Copyright © 2019 ICC & NYSDOS. ALL RIGHTS RESERVED. Accessed by Lauren Gualdino (lgualdino@briarcliffmanor.org), (-) Order Number #100880972 on May 08, 2020 07:05 AM (PDT) pursuant to License Agreement with ICC & NYSDOS. No further reproduction, no

100880972

TABLE 2304.10.1
FASTENING SCHEDULE

DESCRIPTION OF BUILDING ELEMENTS	NUMBER AND TYPE OF FASTENER	SPACING AND LOCATION
Roof		
1. Blocking between ceiling joists, rafters or trusses to top plate or other framing below	3-8d common ($2^1/_2$″ × 0.131″); or 3-10d box (3″ × 0.128″); or 3-3″ × 0.131″ nails; or 3-3″ 14 gage staples, $^7/_{16}$″ crown	Each end, toenail
Blocking between rafters or truss not at the wall top plate, to rafter or truss	2-8d common ($2^1/_2$″ × 0.131″) 2-3″ × 0.131″ nails 2-3″ 14 gage staples	Each end, toenail
	2-16 d common ($3^1/_2$″ × 0.162″) 3-3″ × 0.131″ nails 3-3″ 14 gage staples	End nail
Flat blocking to truss and web filler	16d common ($3^1/_2$″ × 0.162″) @ 6″ o.c. 3″ × 0.131″ nails @ 6″ o.c. 3″ × 14 gage staples @ 6″ o.c	Face nail
2. Ceiling joists to top plate	3-8d common ($2^1/_2$″ × 0.131″); or 3-10d box (3″ × 0.128″); or 3-3″ × 0.131″ nails; or 3-3″ 14 gage staples, $^7/_{16}$″ crown	Each joist, toenail
3. Ceiling joist not attached to parallel rafter, laps over partitions (no thrust) (see Section 2308.7.3.1, Table 2308.7.3.1)	3-16d common ($3^1/_2$″ × 0.162″); or 4-10d box (3″ × 0.128″); or 4-3″ × 0.131″ nails; or 4-3″ 14 gage staples, $^7/_{16}$″ crown	Face nail
4. Ceiling joist attached to parallel rafter (heel joint) (see Section 2308.7.3.1, Table 2308.7.3.1)	Per Table 2308.7.3.1	Face nail
5. Collar tie to rafter	3-10d common (3″ × 0.148″); or 4-10d box (3″ × 0.128″); or 4-3″ × 0.131″ nails; or 4-3″ 14 gage staples, $^7/_{16}$″ crown	Face nail
6. Rafter or roof truss to top plate (See Section 2308.7.5, Table 2308.7.5)	3-10 common (3″ × 0.148″); or 3-16d box ($3^1/_2$″ × 0.135″); or 4-10d box (3″ × 0.128″); or 4-3″ × 0.131 nails; or 4-3″ 14 gage staples, $^7/_{16}$″ crown	Toenail[e]
7. Roof rafters to ridge valley or hip rafters; or roof rafter to 2-inch ridge beam	2-16d common ($3^1/_2$″ × 0.162″); or 3-10d box (3″ × 0.128″); or 3-3″ × 0.131″ nails; or 3-3″ 14 gage staples, $^7/_{16}$″ crown; or	End nail
	3-10d common (3″ × 0.148″); or 4-16d box ($3^1/_2$″ × 0.135″); or 4-10d box (3″ × 0.128″); or 4-3″ × 0.131″ nails; or 4-3″ 14 gage staples, $^7/_{16}$″ crown	Toenail

(continued)

INTERNATIONAL CODE COUNCIL®
Copyright © 2019 ICC & NYSDOS. ALL RIGHTS RESERVED. Accessed by Lauren Gualdino (lgualdino@briarcliffmanor.org), (-) Order Number #100880972 on May 08, 2020 07:05 AM (PDT) pursuant to License Agreement with ICC & NYSDOS. No further reproduction, no

100880972

TABLE 2304.10.1—continued
FASTENING SCHEDULE

DESCRIPTION OF BUILDING ELEMENTS	NUMBER AND TYPE OF FASTENER	SPACING AND LOCATION
Wall		
8. Stud to stud (not at braced wall panels)	16d common ($3^1/_2$″ × 0.162″);	24″ o.c. face nail
	10d box (3″ × 0.128″); or 3″ × 0.131″ nails; or 3-3″ 14 gage staples, $^7/_{16}$″ crown	16″ o.c. face nail
9. Stud to stud and abutting studs at intersecting wall corners (at braced wall panels)	16d common ($3^1/_2$″ × 0.162″); or	16″ o.c. face nail
	16d box ($3^1/_2$″ × 0.135″); or	12″ o.c. face nail
	3″ × 0.131″ nails; or 3-3″ 14 gage staples, $^7/_{16}$″ crown	12″ o.c. face nail
10. Built-up header (2″ to 2″ header)	16d common ($3^1/_2$″ × 0.162″); or	16″ o.c. each edge, face nail
	16d box ($3^1/_2$″ × 0.135″)	12″ o.c. each edge, face nail
11. Continuous header to stud	4-8d common ($2^1/_2$″ × 0.131″); or 4-10d box (3″ × 0.128″)	Toenail
12. Top plate to top plate	16d common ($3^1/_2$″ × 0.162″); or	16″ o.c. face nail
	10d box (3″ × 0.128″); or 3″ × 0.131″ nails; or 3″ 14 gage staples, $^7/_{16}$″ crown	12″ o.c. face nail
13. Top plate to top plate, at end joints	8-16d common ($3^1/_2$″ × 0.162″); or 12-10d box (3″ × 0.128″); or 12-3″ × 0.131″ nails; or 12-3″ 14 gage staples, $^7/_{16}$″ crown	Each side of end joint, face nail (minimum 24" lap splice length each side of end joint)
14. Bottom plate to joist, rim joist, band joist or blocking (not at braced wall panels)	16d common ($3^1/_2$″ × 0.162″); or	16″ o.c. face nail
	16d box ($3^1/_2$″ × 0.135″); or 3″ × 0.131″ nails; or 3″ 14 gage staples, $^7/_{16}$″ crown	12″ o.c. face nail
15. Bottom plate to joist, rim joist, band joist or blocking at braced wall panels	2-16d common ($3^1/_2$″ × 0.162″); or 3-16d box ($3^1/_2$″ × 0.135″); or 4-3″ × 0.131″ nails; or 4-3″ 14 gage staples, $^7/_{16}$″ crown	16″ o.c. face nail
16. Stud to top or bottom plate	4-8d common ($2^1/_2$″ × 0.131″); or 4-10d box (3″ × 0.128″); or 4-3″ × 0.131″ nails; or 4-3″ 14 gage staples, $^7/_{16}$″ crown; or	Toenail
	2-16d common ($3^1/_2$″ × 0.162″); or 3-10d box (3″ × 0.128″); or 3-3″ × 0.131″ nails; or 3-3″ 14 gage staples, $^7/_{16}$″ crown	End nail
17. Top plates, laps at corners and intersections	2-16d common ($3^1/_2$″ × 0.162″); or 3-10d box (3″ × 0.128″); or 3-3″ × 0.131″ nails; or 3-3″ 14 gage staples, $^7/_{16}$″ crown	Face nail

(continued)

INTERNATIONAL CODE COUNCIL®
Copyright © 2019 ICC & NYSDOS. ALL RIGHTS RESERVED. Accessed by Lauren Gualdino (lgualdino@briarcliffmanor.org), (-) Order Number #100880972 on May 08, 2020 07:05 AM (PDT) pursuant to License Agreement with ICC & NYSDOS. No further reproduction, no

100880972

TABLE 2304.10.1—continued
FASTENING SCHEDULE

DESCRIPTION OF BUILDING ELEMENTS	NUMBER AND TYPE OF FASTENER	SPACING AND LOCATION
Wall		
18. 1″ brace to each stud and plate	2-8d common ($2^1/_2$″ × 0.131″); or 2-10d box (3″ × 0.128″); or 2-3″ × 0.131″ nails; or 2-3″ 14 gage staples, $^7/_{16}$″ crown	Face nail
19. 1″ × 6″ sheathing to each bearing	2-8d common ($2^1/_2$″ × 0.131″); or 2-10d box (3″ × 0.128″)	Face nail
20. 1″ × 8″ and wider sheathing to each bearing	3-8d common ($2^1/_2$″ × 0.131″); or 3-10d box (3″ × 0.128″)	Face nail
Floor		
21. Joist to sill, top plate, or girder	3-8d common ($2^1/_2$″ × 0.131″); or floor 3-10d box (3″ × 0.128″); or 3-3″ × 0.131″ nails; or 3-3″ 14 gage staples, $^7/_{16}$″ crown	Toenail
22. Rim joist, band joist, or blocking to top plate, sill or other framing below	8d common ($2^1/_2$″ × 0.131″); or 10d box (3″ × 0.128″); or 3″ × 0.131″ nails; or 3″ 14 gage staples, $^7/_{16}$″ crown	6″ o.c., toenail
23. 1″ × 6″ subfloor or less to each joist	2-8d common ($2^1/_2$″ × 0.131″); or 2-10d box (3″ × 0.128″)	Face nail
24. 2″ subfloor to joist or girder	2-16d common ($3^1/_2$″ × 0.162″)	Face nail
25. 2″ planks (plank & beam – floor & roof)	2-16d common ($3^1/_2$″ × 0.162″)	Each bearing, face nail
26. Built-up girders and beams, 2″ lumber layers	20d common (4″ × 0.192″)	32″ o.c., face nail at top and bottom staggered on opposite sides
	10d box (3″ × 0.128″); or 3″ × 0.131″ nails; or 3″ 14 gage staples, $^7/_{16}$″ crown	24″ o.c. face nail at top and bottom staggered on opposite sides
	And: 2-20d common (4″ × 0.192″); or 3-10d box (3″ × 0.128″); or 3-3″ × 0.131″ nails; or 3-3″ 14 gage staples, $^7/_{16}$″ crown	Ends and at each splice, face nail
27. Ledger strip supporting joists or rafters	3-16d common ($3^1/_2$″ × 0.162″); or 4-10d box (3″ × 0.128″); or 4-3″ × 0.131″ nails; or 4-3″ 14 gage staples, $^7/_{16}$″ crown	Each joist or rafter, face nail
28. Joist to band joist or rim joist	3-16d common ($3^1/_2$″ × 0.162″); or 4-10d box (3″ × 0.128″); or 4-3″ × 0.131″ nails; or 4-3″ 14 gage staples, $^7/_{16}$″ crown	End nail
29. Bridging or blocking to joist, rafter or truss	2-8d common ($2^1/_2$″ × 0.131″); or 2-10d box (3″ × 0.128″); or 2-3″ × 0.131″ nails; or 2-3″ 14 gage staples, $^7/_{16}$″ crown	Each end, toenail

(continued)

INTERNATIONAL CODE COUNCIL®
Copyright © 2019 ICC & NYSDOS. ALL RIGHTS RESERVED. Accessed by Lauren Gualdino (lgualdino@briarcliffmanor.org), (-) Order Number #100880972 on May 08, 2020 07:05 AM (PDT) pursuant to License Agreement with ICC & NYSDOS. No further reproduction, no

100880972

TABLE 2304.10.1—continued
FASTENING SCHEDULE

DESCRIPTION OF BUILDING ELEMENTS	NUMBER AND TYPE OF FASTENER	SPACING AND LOCATION	
Wood structural panels (WSP), subfloor, roof and interior wall sheathing to framing and particleboard wall sheathing to framing[a]			
		Edges (inches)	Intermediate supports (inches)
30. $^{3}/_{8}$″ – $^{1}/_{2}$″	6d common or deformed (2″ × 0.113″) (subfloor and wall)	6	12
	8d common or deformed ($2^{1}/_{2}$″ × 0.131″) (roof) or RSRS-01 ($2^{3}/_{8}$″ × 0.113″) nail (roof)[d]	6	12
	$2^{3}/_{8}$″ × 0.113″ nail (subfloor and wall)	6	12
	$1^{3}/_{4}$″ 16 gage staple, $^{7}/_{16}$″ crown (subfloor and wall)	4	8
	$2^{3}/_{8}$″ × 0.113″ nail (roof)	4	8
	$1^{3}/_{4}$″ 16 gage staple, $^{7}/_{16}$″ crown (roof)	3	6
31. $^{19}/_{32}$″ – $^{3}/_{4}$″	8d common ($2^{1}/_{2}$″ × 0.131″); or 6d deformed (2″ × 0.113″) (subfloor and wall)	6	12
	8d common or deformed ($2^{1}/_{2}$″ × 0.131″) (roof) or RSRS-01 ($2^{3}/_{8}$″ × 0.113”) nail (roof)[d]	6	12
	$2^{3}/_{8}$″ × 0.113″ nail; or 2″ 16 gage staple, $^{7}/_{16}$″ crown	4	8
32. $^{7}/_{8}$″ – $1^{1}/_{4}$″	10d common (3″ × 0.148″); or 8d deformed ($2^{1}/_{2}$″ × 0.131″)	6	12
Other exterior wall sheathing			
33. $^{1}/_{2}$″ fiberboard sheathing[b]	$1^{1}/_{2}$″ galvanized roofing nail ($^{7}/_{16}$″ head diameter); or $1^{1}/_{4}$″ 16 gage staple with $^{7}/_{16}$″ or 1″ crown	3	6
34. $^{25}/_{32}$″ fiberboard sheathing[b]	$1^{3}/_{4}$″ galvanized roofing nail ($^{7}/_{16}$″ diameter head); or $1^{1}/_{2}$″ 16 gage staple with $^{7}/_{16}$″ or 1″ crown	3	6
Wood structural panels, combination subfloor underlayment to framing			
35. $^{3}/_{4}$″ and less	8d common ($2^{1}/_{2}$″ × 0.131″); or 6d deformed (2″ × 0.113″)	6	12
36. $^{7}/_{8}$″ – 1″	8d common ($2^{1}/_{2}$″ × 0.131″); or 8d deformed ($2^{1}/_{2}$″ × 0.131″)	6	12
37. $1^{1}/_{8}$″ – $1^{1}/_{4}$″	10d common (3″ × 0.148″); or 8d deformed ($2^{1}/_{2}$″ × 0.131″)	6	12
Panel siding to framing			
38. $^{1}/_{2}$″ or less	6d corrosion-resistant siding ($1^{7}/_{8}$″ × 0.106″); or 6d corrosion-resistant casing (2″ × 0.099″)	6	12
39. $^{5}/_{8}$″	8d corrosion-resistant siding ($2^{3}/_{8}$″ × 0.128″); or 8d corrosion-resistant casing ($2^{1}/_{2}$″ × 0.113″)	6	12

(continued)

INTERNATIONAL CODE COUNCIL®
Copyright © 2019 ICC & NYSDOS. ALL RIGHTS RESERVED. Accessed by Lauren Gualdino (lgualdino@briarcliffmanor.org), (-) Order Number #100880972 on May 08, 2020 07:05 AM (PDT) pursuant to License Agreement with ICC & NYSDOS. No further reproduction, no

100880972

TABLE 2304.10.1—continued
FASTENING SCHEDULE

DESCRIPTION OF BUILDING ELEMENTS	NUMBER AND TYPE OF FASTENER	SPACING AND LOCATION	
Wood structural panels (WSP), subfloor, roof and interior wall sheathing to framing and particleboard wall sheathing to framing[a]			
		Edges (inches)	**Intermediate supports (inches)**
Interior paneling			
40. $^1/_4$″	4d casing ($1^1/_2$″ × 0.080″); or 4d finish ($1^1/_2$″ × 0.072″)	6	12
41. $^3/_8$″	6d casing (2″ × 0.099″); or 6d finish (Panel supports at 24 inches)	6	12

For SI: 1 inch = 25.4 mm.

a. Nails spaced at 6 inches at intermediate supports where spans are 48 inches or more. For nailing of wood structural panel and particleboard diaphragms and shear walls, refer to Section 2305. Nails for wall sheathing are permitted to be common, box or casing.

b. Spacing shall be 6 inches on center on the edges and 12 inches on center at intermediate supports for nonstructural applications. Panel supports at 16 inches (20 inches if strength axis in the long direction of the panel, unless otherwise marked).

c. Where a rafter is fastened to an adjacent parallel ceiling joist in accordance with this schedule and the ceiling joist is fastened to the top plate in accordance with this schedule, the number of toenails in the rafter shall be permitted to be reduced by one nail.

d. RSRS-01 is a Roof Sheathing Ring Shank nail meeting the specifications in ASTM F1667.

the manufacturer's recommendations. In the absence of manufacturer's recommendations, Section 2304.10.5.3 shall apply.

2304.10.6 Load path. Where wall framing members are not continuous from the foundation sill to the roof, the members shall be secured to ensure a continuous load path. Where required, sheet metal clamps, ties or clips shall be formed of galvanized steel or other *approved* corrosion-resistant material not less than 0.0329-inch (0.836 mm) base metal thickness.

2304.10.7 Framing requirements. Wood columns and posts shall be framed to provide full end bearing. Alternatively, column-and-post end connections shall be designed to resist the full compressive loads, neglecting end-bearing capacity. Column-and-post end connections shall be fastened to resist lateral and net induced uplift forces.

2304.11 Heavy timber construction. Where a structure, portion thereof or individual structural elements are required by provisions of this code to be of heavy timber, the building elements therein shall comply with the applicable provisions of Sections 2304.11.1 through 2304.11.4. Minimum dimensions of heavy timber shall comply with the applicable requirements in Table 2304.11 based on roofs or floors supported and the configuration of each structural element, or in Sections 2304.11.2 through 2304.11.4. Lumber decking shall be in accordance with Section 2304.9.

2304.11.1 Details of heavy timber structural members. Heavy timber structural members shall be detailed and constructed in accordance with Sections 2304.11.1 through 2304.11.1.3.

2304.11.1.1 Columns. Minimum dimensions of columns shall be in accordance with Table 2304.11. Columns shall be continuous or superimposed throughout all stories and connected in an approved manner. Girders and beams at column connections shall be closely fitted around columns and adjoining ends shall be cross tied to each other, or intertied by caps or ties, to transfer horizontal loads across joints. Wood bolsters shall not be placed on tops of columns unless the columns support roof loads only. Where traditional heavy timber detailing is used, connections shall be by means of reinforced concrete or metal caps with brackets, by properly designed steel or iron caps, with pintles and base plates, by timber splice plates affixed to the columns by metal connectors housed within the contact faces, or by other approved methods.

2304.11.1.2 Floor framing. Minimum dimensions of floor framing shall be in accordance with Table 2304.11. *Approved* wall plate boxes or hangers shall be provided where wood beams, girders or trusses rest on masonry or concrete walls. Where intermediate beams are used to support a floor, they shall rest on top of girders, or shall be supported by an *approved* metal hanger into which the ends of the beams shall be closely fitted. Where traditional heavy timber detailing is used, these connections shall be permitted to be supported by ledgers or blocks securely fastened to the sides of the girders.

2304.11.1.3 Roof framing. Minimum dimensions of roof framing shall be in accordance with Table 2304.11. Every roof girder and not less than every alternate roof beam shall be anchored to its supporting member to resist forces as required in Chapter 16.

2304.11.2 Partitions and walls. Partitions and walls shall comply with Section 2304.11.2.1 or 2304.11.2.2.

2304.11.2.1 Exterior walls. Exterior walls shall be permitted to be *cross-laminated timber* not less than 4 inches (102 mm) in thickness meeting the requirements of Section 2303.1.4.

2304.11.2.2 Interior walls and partitions. Interior walls and partitions shall be of solid wood construction formed by not less than two layers of 1-inch (25 mm) matched boards or laminated construction 4 inches (102 mm) thick, or of 1-hour fire-resistance-rated construction.

2304.11.3 Floors. Floors shall be without concealed spaces. Wood floors shall be constructed in accordance with Section 2304.11.3.1 or 2304.11.3.2.

INTERNATIONAL CODE COUNCIL®
Copyright © 2019 ICC & NYSDOS. ALL RIGHTS RESERVED. Accessed by Lauren Gualdino (lgualdino@briarcliffmanor.org), (-) Order Number #100880972 on May 08, 2020 07:05 AM (PDT) pursuant to License Agreement with ICC & NYSDOS. No further reproduction, no

100880972

2304.11.3.1 Cross-laminated timber floors. Cross-laminated timber shall be not less than 4 inches (102 mm) in actual thickness. Cross-laminated timber shall be continuous from support to support and mechanically fastened to one another. Cross-laminated timber shall be permitted to be connected to walls without a shrinkage gap providing swelling or shrinking is considered in the design. Corbelling of masonry walls under the floor shall be permitted to be used.

2304.11.3.2 Sawn or glued-laminated plank floors. Sawn or glued-laminated plank floors shall be one of the following:

1. Sawn or glued-laminated planks, splined or tongue-and-groove, of not less than 3 inches (76 mm) nominal in thickness covered with 1-inch (25 mm) nominal dimension tongue-and-groove flooring, laid crosswise or diagonally, $^{15}/_{32}$-inch (12 mm) wood structural panel or $^{1}/_{2}$-inch (12.7 mm) particleboard.
2. Planks not less than 4 inches (102 mm) nominal in width set on edge close together and well spiked and covered with 1-inch (25 mm) nominal dimension flooring or $^{15}/_{32}$-inch (12 mm) wood structural panel or $^{1}/_{2}$-inch (12.7 mm) particleboard.

The lumber shall be laid so that continuous lines of joints will occur only at points of support. Floors shall not extend closer than $^{1}/_{2}$ inch (12.7 mm) to walls. Such $^{1}/_{2}$-inch (12.7 mm) space shall be covered by a molding fastened to the wall and so arranged that it will not obstruct the swelling or shrinkage movements of the floor. Corbelling of masonry walls under the floor shall be permitted to be used in place of molding.

2304.11.4 Roof decks. Roofs shall be without concealed spaces and roof decks shall be constructed in accordance with Section 2304.11.4.1 or 2304.11.4.2. Other types of decking shall be an alternative that provides equivalent fire resistance and structural properties. Where supported by a wall, roof decks shall be anchored to walls to resist forces determined in accordance with Chapter 16. Such anchors shall consist of steel bolts, lags, screws or *approved* hardware of sufficient strength to resist prescribed forces.

2304.11.4.1 Cross-laminated timber roofs. Cross-laminated timber roofs shall be not less than 3 inches (76 mm) nominal in thickness and shall be continuous from support to support and mechanically fastened to one another.

2304.11.4.2 Sawn, wood structural panel, or glued-laminated plank roofs. Sawn, wood structural panel, or glued-laminated plank roofs shall be one of the following:

1. Sawn or glued laminated, splined or tongue-and-groove plank, not less than 2 inches (51 mm) nominal in thickness.

**

TABLE 2304.11
MINIMUM DIMENSIONS OF HEAVY TIMBER STRUCTURAL MEMBERS

		MINIMUM NOMINAL SOLID SAWN SIZE		MINIMUM GLUED-LAMINATED NET SIZE		MINIMUM STRUCTURAL COMPOSITE LUMBER NET SIZE	
SUPPORTING	HEAVY TIMBER STRUCTURAL ELEMENTS	Width, inch	Depth, inch	Width, inch	Depth, inch	Width, inch	Depth, inch
Floor loads only or combined floor and roof loads	Columns; Framed sawn or glued-laminated timber arches that spring from the floor line; Framed timber trusses	8	8	$6^{3}/_{4}$	$8^{1}/_{4}$	7	$7^{1}/_{2}$
	Wood beams and girders	6	10	5	$10^{1}/_{2}$	$5^{1}/_{4}$	$9^{1}/_{2}$
Roof loads only	Columns (roof and ceiling loads); Lower half of: wood-frame or glued-laminated arches that spring from the floor line or from grade	6	8	5	$8^{1}/_{4}$	$5^{1}/_{4}$	$7^{1}/_{2}$
	Upper half of: wood-frame or glued-laminated arches that spring from the floor line or from grade	6	6	5	6	$5^{1}/_{4}$	$5^{1}/_{2}$
	Framed timber trusses and other roof framing; [a] Framed or glued-laminated arches that spring from the top of walls or wall abutments	4[b]	6	3[b]	$6^{7}/_{8}$	$3^{1}/_{2}$[b]	$5^{1}/_{2}$

For SI: 1 inch = 25.4 mm.

a. Spaced members shall be permitted to be composed of two or more pieces not less than 3 inches nominal in thickness where blocked solidly throughout their intervening spaces or where spaces are tightly closed by a continuous wood cover plate of not less than 2 inches nominal in thickness secured to the underside of the members. Splice plates shall be not less than 3 inches nominal in thickness.

b. Where protected by approved automatic sprinklers under the roof deck, framing members shall be not less than 3 inches nominal in width.

INTERNATIONAL CODE COUNCIL®
Copyright © 2019 ICC & NYSDOS. ALL RIGHTS RESERVED. Accessed by Lauren Gualdino (lgualdino@briarcliffmanor.org), (-) Order Number #100880972 on May 08, 2020 07:05 AM (PDT) pursuant to License Agreement with ICC & NYSDOS. No further reproduction, no

100880972

2. $1^1/_8$-inch-thick (32 mm) wood structural panel (exterior glue).
3. Planks not less than 3 inches (76 mm) nominal in width, set on edge close together and laid as required for floors.

2304.12 Protection against decay and termites. Wood shall be protected from decay and termites in accordance with the applicable provisions of Sections 2304.12.1 through 2304.12.7.

2304.12.1 Locations requiring waterborne preservatives or naturally durable wood. Wood used above ground in the locations specified in Sections 2304.12.1.1 through 2304.12.1.5, 2304.12.3 and 2304.12.5 shall be naturally durable wood or *preservative-treated wood* using waterborne preservatives, in accordance with AWPA U1 for above-ground use.

2304.12.1.1 Joists, girders and subfloor. Wood joists or wood structural floors that are closer than 18 inches (457 mm) or wood girders that are closer than 12 inches (305 mm) to the exposed ground in crawl spaces or unexcavated areas located within the perimeter of the building foundation shall be of naturally durable or *preservative-treated wood*.

2304.12.1.2 Wood supported by exterior foundation walls. Wood framing members, including wood sheathing, that are in contact with exterior foundation walls and are less than 8 inches (203 mm) from exposed earth shall be of naturally durable or *preservative-treated wood*.

2304.12.1.3 Exterior walls below grade. Wood framing members and furring strips in direct contact with the interior of exterior masonry or concrete walls below grade shall be of naturally durable or *preservative-treated wood*.

2304.12.1.4 Sleepers and sills. Sleepers and sills on a concrete or masonry slab that is in direct contact with earth shall be of naturally durable or *preservative-treated wood*.

2304.12.1.5 Wood siding. Clearance between wood siding and earth on the exterior of a building shall be not less than 6 inches (152 mm) or less than 2 inches (51 mm) vertical from concrete steps, porch slabs, patio slabs and similar horizontal surfaces exposed to the weather except where siding, sheathing and wall framing are of naturally durable or *preservative-treated wood*.

2304.12.2 Other locations. Wood used in the locations specified in Sections 2304.12.2.1 through 2304.12.2.5 shall be naturally durable wood or *preservative-treated* wood in accordance with AWPA U1. *Preservative-treated* wood used in interior locations shall be protected with two coats of urethane, shellac, latex epoxy or varnish unless waterborne preservatives are used. Prior to application of the protective finish, the wood shall be dried in accordance with the manufacturer's recommendations.

2304.12.2.1 Girder ends. The ends of wood girders entering exterior masonry or concrete walls shall be provided with a $^1/_2$-inch (12.7 mm) airspace on top, sides and end, unless naturally durable or *preservative-treated wood* is used.

2304.12.2.2 Posts or columns. Posts or columns supporting permanent structures and supported by a concrete or masonry slab or footing that is in direct contact with the earth shall be of naturally durable or *preservative-treated wood*.

Exception: Posts or columns that meet all of the following:

1. Are not exposed to the weather, or are protected by a roof, eave, overhang, or other covering if exposed to the weather.
2. Are supported by concrete piers or metal pedestals projected not less than 1 inch (25 mm) above the slab or deck and are separated from the concrete pier by an impervious moisture barrier.
3. Are located not less than 8 inches (203 mm) above exposed earth.

2304.12.2.3 Supporting member for permanent appurtenances. Naturally durable or *preservative-treated wood* shall be utilized for those portions of wood members that form the structural supports of buildings, balconies, porches or similar permanent building appurtenances where such members are exposed to the weather without adequate protection from a roof, eave, overhang or other covering to prevent moisture or water accumulation on the surface or at joints between members.

Exception: Buildings located in a geographical region where experience has demonstrated that climatic conditions preclude the need to use durable materials where the structure is exposed to the weather.

2304.12.2.4 Laminated timbers. The portions of glued-laminated timbers that form the structural supports of a building or other structure and are exposed to weather and not fully protected from moisture by a roof, eave or similar covering shall be pressure treated with preservative or be manufactured from naturally durable or *preservative-treated wood*.

2304.12.2.5 Supporting members for permeable floors and roofs. Wood structural members that support moisture-permeable floors or roofs that are exposed to the weather, such as concrete or masonry slabs, shall be of naturally durable or *preservative-treated wood* unless separated from such floors or roofs by an impervious moisture barrier. The impervious moisture barrier system protecting the structure supporting floors shall provide positive drainage of water that infiltrates the moisture-permeable floor topping.

2304.12.2.6 Ventilation beneath balcony or elevated walking surfaces. Enclosed framing in exterior balconies and elevated walking surfaces that are exposed to rain, snow or drainage from irrigation shall be provided with openings that provide a net free cross-ventilation

INTERNATIONAL CODE COUNCIL®
Copyright © 2019 ICC & NYSDOS. ALL RIGHTS RESERVED. Accessed by Lauren Gualdino (lgualdino@briarcliffmanor.org), (-) Order Number #100880972 on May 08, 2020 07:05 AM (PDT) pursuant to License Agreement with ICC & NYSDOS. No further reproduction, no

100880972

area not less than $^{1}/_{150}$ of the area of each separate space.

2304.12.3 Wood in contact with the ground or fresh water. Wood used in contact with exposed earth shall be naturally durable for both decay and termite resistance or preservative treated in accordance with AWPA U1 for soil or fresh water use.

Exception: Untreated wood is permitted where such wood is continuously and entirely below the groundwater level or submerged in fresh water.

2304.12.3.1 Posts or columns. Posts and columns that are supporting permanent structures and embedded in concrete that is exposed to the weather or in direct contact with the earth shall be of *preservative-treated wood*.

2304.12.4 Termite protection. In geographical areas where hazard of termite damage is known to be very heavy, wood floor framing in the locations specified in Section 2304.12.1.1 and exposed framing of exterior decks or balconies shall be of naturally durable species (termite resistant) or preservative treated in accordance with AWPA U1 for the species, product preservative and end use or provided with *approved* methods of termite protection.

2304.12.5 Wood used in retaining walls and cribs. Wood installed in retaining or crib walls shall be preservative treated in accordance with AWPA U1 for soil and fresh water use.

2304.12.6 Attic ventilation. For *attic* ventilation, see Section 1202.2.2.

2304.12.7 Under-floor ventilation (crawl space). For under-floor ventilation (crawl space), see Section 1202.4.

2304.13 Long-term loading. Wood members supporting concrete, masonry or similar materials shall be checked for the effects of long-term loading using the provisions of the ANSI/AWC NDS. The total deflection, including the effects of long-term loading, shall be limited in accordance with Section 1604.3.1 for these supported materials.

Exception: Horizontal wood members supporting masonry or concrete nonstructural floor or roof surfacing not more than 4 inches (102 mm) thick need not be checked for long-term loading.

SECTION 2305
GENERAL DESIGN REQUIREMENTS FOR LATERAL FORCE-RESISTING SYSTEMS

2305.1 General. Structures using wood-frame shear walls or wood-frame diaphragms to resist wind, seismic or other lateral loads shall be designed and constructed in accordance with AWC SDPWS and the applicable provisions of Sections 2305, 2306 and 2307.

2305.1.1 Openings in shear panels. Openings in shear panels that materially affect their strength shall be detailed on the plans and shall have their edges adequately reinforced to transfer all shearing stresses.

2305.2 Diaphragm deflection. The deflection of wood-frame diaphragms shall be determined in accordance with AWC SDPWS. The deflection (Δ_{dia}) of a blocked wood structural panel diaphragm uniformly fastened throughout with staples is permitted to be calculated in accordance with Equation 23-1. If not uniformly fastened, the constant 0.188 (For SI: 1/1627) in the third term shall be modified by an approved method.

$$\Delta_{dia} = 5vL^3/8EAW + vL/4Gt + 0.188Le_n + \Sigma(x\Delta_c)/2W \quad \textbf{(Equation 23-1)}$$

For SI: $\Delta_{dia} = 0.052vL^3/EAW + vL/4Gt + Le_n/1627 + \Sigma(x\Delta_c)/2W$

where:

A = Area of chord cross section, in square inches (mm^2).

E = Modulus of elasticity of diaphragm chords, in pounds per square inch (N/mm^2).

e_n = Staple slip, in inches (mm) [see Table 2305.2(1)].

Gt = Panel rigidity through the thickness, in pounds per inch (N/mm) of panel width or depth [see Table 2305.2(2)].

L = Diaphragm length (dimension perpendicular to the direction of the applied load), in feet (mm).

v = Induced unit shear in pounds per linear foot (plf) (N/mm).

W = Diaphragm width [in the direction of applied force, in feet (mm)].

x = Distance from chord splice to nearest support, in feet (mm).

Δ_c = Diaphragm chord splice slip at the induced unit shear, in inches (mm).

Δ_{dia} = Maximum mid-span diaphragm deflection determined by elastic analysis, in inches (mm).

TABLE 2305.2(1)
e_n VALUES (inches) FOR USE IN CALCULATING DIAPHRAGM AND SHEAR WALL DEFLECTION DUE TO FASTENER SLIP (Structural I)[a, c]

LOAD PER FASTENER[b] (pounds)	FASTENER DESIGNATIONS
	14-Ga staple x 2 inches long
60	0.011
80	0.018
100	0.028
120	0.04
140	0.053
160	0.068

For SI: 1 inch = 25.4 mm, 1 foot = 304.8 mm, 1 pound = 4.448 N.

a. Increase e_n values 20 percent for plywood grades other than Structural I.

b. Load per fastener = maximum shear per foot divided by the number of fasteners per foot at interior panel edges.

c. Decrease e_n values 50 percent for seasoned lumber (moisture content < 19 percent).

INTERNATIONAL CODE COUNCIL®
Copyright © 2019 ICC & NYSDOS. ALL RIGHTS RESERVED. Accessed by Lauren Gualdino (lgualdino@briarcliffmanor.org), (-) Order Number #100880972 on May 08, 2020 07:05 AM (PDT) pursuant to License Agreement with ICC & NYSDOS. No further reproduction, no

100880972

TABLE 2305.2(2)
VALUES OF *Gt* FOR USE IN CALCULATING DEFLECTION OF WOOD STRUCTURAL PANEL SHEAR WALLS AND DIAPHRAGMS

PANEL TYPE	SPAN RATING	VALUES OF *Gt* (lb/in. panel depth or width)							
		Structural Sheathing				Structural I			
		Plywood			OSB	Plywood			OSB
		3-ply	4-ply	5-ply[a]		3-ply	4-ply	5-ply[a]	
Sheathing	24/0	25,000	32,500	37,500	77,500	32,500	42,500	41,500	77,500
	24/16	27,000	35,000	40,500	83,500	35,000	45,500	44,500	83,500
	32/16	27,000	35,000	40,500	83,500	35,000	45,500	44,500	83,500
	40/20	28,500	37,000	43,000	88,500	37,000	48,000	47,500	88,500
	48/24	31,000	40,500	46,500	96,000	40,500	52,500	51,000	96,000
Single Floor	16 o.c.	27,000	35,000	40,500	83,500	35,000	45,500	44,500	83,500
	20 o.c.	28,000	36,500	42,000	87,000	36,500	47,500	46,000	87,000
	24 o.c.	30,000	39,000	45,000	93,000	39,000	50,500	49,500	93,000
	32 o.c.	36,000	47,000	54,000	110,000	47,000	61,000	59,500	110,000
	48 o.c.	50,500	65,500	76,000	155,000	65,500	85,000	83,500	155,000

		Structural Sheathing			Structural I		
	Thickness (in.)	A-A, A-C	Marine	All Other Grades	A-A, A-C	Marine	All Other Grades
Sanded Plywood	1/4	24,000	31,000	24,000	31,000	31,000	31,000
	11/32	25,500	33,000	25,500	33,000	33,000	33,000
	3/8	26,000	34,000	26,000	34,000	34,000	34,000
	15/32	38,000	49,500	38,000	49,500	49,500	49,500
	1/2	38,500	50,000	38,500	50,000	50,000	50,000
	19/32	49,000	63,500	49,000	63,500	63,500	63,500
	5/8	49,500	64,500	49,500	64,500	64,500	64,500
	23/32	50,500	65,500	50,500	65,500	65,500	65,500
	3/4	51,000	66,500	51,000	66,500	66,500	66,500
	7/8	52,500	68,500	52,500	68,500	68,500	68,500
	1	73,500	95,500	73,500	95,500	95,500	95,500
	1 1/8	75,000	97,500	75,000	97,500	97,500	97,500

For SI: 1 inch = 25.4 mm, 1 pound/inch = 0.1751 N/mm.
a. 5-ply applies to plywood with five or more layers. For 5-ply plywood with three layers, use values for 4-ply panels.

2305.3 Shear wall deflection. The deflection of wood-frame shear walls shall be determined in accordance with AWC SDPWS. The deflection (Δ_{sw}) of a blocked wood structural panel shear wall uniformly fastened throughout with staples is permitted to be calculated in accordance with Equation 23-2.

$$\Delta_{sw} = 8vh^3/EAb + vh/4Gt + 0.75he_n + d_a h/b \quad \textbf{(Equation 23-2)}$$

For SI: $vh^3/3EAb + vh/Gt + \frac{he_n}{407.6} + d_a h/b$

where:

A = Area of end-post cross section in square inches (mm^2).

b = Shear wall length, in feet (mm).

d_a = Total vertical elongation of wall anchorage system (such as fastener slip, device elongation, rod elongation) at the induced unit shear in the shear wall (v).

E = Modulus of elasticity of end posts, in pounds per square inch (N/mm^2).

e_n = Staple slip, in inches (mm) [see Table 2305.2(1)].

Gt = Panel rigidity through the thickness, in pounds per inch (N/mm) of panel width or depth [see Table 2305.2(2)].

h = Shear wall height, in feet (mm).

v = Induced unit shear, in pounds per linear foot (N/mm).

Δ_{sw} = Maximum shear wall deflection determined by elastic analysis, in inches (mm).

INTERNATIONAL CODE COUNCIL®
Copyright © 2019 ICC & NYSDOS. ALL RIGHTS RESERVED. Accessed by Lauren Gualdino (lgualdino@briarcliffmanor.org), (-) Order Number #100880972 on May 08, 2020 07:05 AM (PDT) pursuant to License Agreement with ICC & NYSDOS. No further reproduction, no

100880972

SECTION 2306
ALLOWABLE STRESS DESIGN

2306.1 Allowable stress design. The design and construction of wood elements in structures using *allowable stress design* shall be in accordance with the following applicable standards:

American Wood Council.

ANSI/AWC NDS	National Design Specification for Wood Construction
SDPWS	Special Design Provisions for Wind and Seismic

American Society of Agricultural and Biological Engineers.

ASABE EP 484.3	Diaphragm Design of Metal-clad, Wood-frame Rectangular Buildings
ASABE EP 486.2	Shallow Post Foundation Design
ASABE EP 559.1	Design Requirements and Bending Properties for Mechanically Laminated Wood Assemblies

APA—The Engineered Wood Association.

ANSI 117 Standard Specifications for Structural Glued Laminated Timber of Softwood Species

ANSI A190.1 Structural Glued Laminated Timber

Panel Design Specification

Plywood Design Specification Supplement 1—Design & Fabrication of Plywood Curved Panel

Plywood Design Specification Supplement 2—Design & Fabrication of Glued Plywood-lumber Beams

Plywood Design Specification Supplement 3—Design & Fabrication of Plywood Stressed-skin Panels

Plywood Design Specification Supplement 4—Design & Fabrication of Plywood Sandwich Panels

Plywood Design Specification Supplement 5—Design & Fabrication of All-plywood Beams

APA T300	Glulam Connection Details
APA S560	Field Notching and Drilling of Glued Laminated Timber Beams
APA S475	Glued Laminated Beam Design Tables
APA X450	Glulam in Residential Construction
APA X440	Product and Application Guide: Glulam
APA R540	Builders Tips: Proper Storage and Handling of Glulam Beams

Truss Plate Institute, Inc.

TPI 1	National Design Standard for Metal Plate Connected Wood Truss Construction

West Coast Lumber Inspection Bureau

AITC 104	Typical Construction Details
AITC 110	Standard Appearance Grades for Structural Glued Laminated Timber
AITC 113	Standard for Dimensions of Structural Glued Laminated Timber
AITC 119	Standard Specifications for Structural Glued Laminated Timber of Hardwood Species
AITC 200	Inspection Manual

2306.1.1 Joists and rafters. The design of rafter spans is permitted to be in accordance with the AWC STJR.

2306.1.2 Plank and beam flooring. The design of plank and beam flooring is permitted to be in accordance with the AWC *Wood Construction Data No. 4*.

2306.1.3 Treated wood stress adjustments. The allowable unit stresses for *preservative-treated wood* need not be adjusted for treatment, but are subject to other adjustments.

The allowable unit stresses for *fire-retardant-treated wood*, including fastener values, shall be developed from an *approved* method of investigation that considers the effects of anticipated temperature and humidity to which the *fire-retardant-treated wood* will be subjected, the type of treatment and the redrying process. Other adjustments are applicable except that the impact load duration shall not apply.

2306.1.4 Lumber decking. The capacity of lumber decking arranged according to the patterns described in Section 2304.9.2 shall be the lesser of the capacities determined for flexure and deflection according to the formulas in Table 2306.1.4.

2306.2 Wood-frame diaphragms. Wood-frame diaphragms shall be designed and constructed in accordance with AWC SDPWS. Where panels are fastened to framing members with staples, requirements and limitations of AWC SDPWS shall be met and the allowable shear values set forth in Table 2306.2(1) or 2306.2(2) shall be permitted. The allowable shear values in Tables 2306.2(1) and 2306.2(2) are permitted to be increased 40 percent for wind design.

2306.2.1 Gypsum board diaphragm ceilings. Gypsum board diaphragm ceilings shall be in accordance with Section 2508.6.

2306.3 Wood-frame shear walls. Wood-frame shear walls shall be designed and constructed in accordance with AWC SDPWS. Where panels are fastened to framing members with staples, requirements and limitations of AWC SDPWS shall be met and the allowable shear values set forth in Table 2306.3(1), 2306.3(2) or 2306.3(3) shall be permitted. The allowable shear values in Tables 2306.3(1) and 2306.3(2) are permitted to be increased 40 percent for wind design. Panels complying with ANSI/APA PRP-210 shall be permitted to use design values for Plywood Siding in the AWC SDPWS.

INTERNATIONAL CODE COUNCIL®
Copyright © 2019 ICC & NYSDOS. ALL RIGHTS RESERVED. Accessed by Lauren Gualdino (lgualdino@briarcliffmanor.org), (-) Order Number #100880972 on May 08, 2020 07:05 AM (PDT) pursuant to License Agreement with ICC & NYSDOS. No further reproduction, no

100880972

TABLE 2306.1.4
ALLOWABLE LOADS FOR LUMBER DECKING

PATTERN	ALLOWABLE AREA LOAD[a, b]	
	Flexure	Deflection
Simple span	$\sigma_b = \frac{8F_b'd^2}{l^2 6}$	$\sigma_\Delta = \frac{384\Delta E'd^3}{5l^4 12}$
Two-span continuous	$\sigma_b = \frac{8F_b'd^2}{l^2 6}$	$\sigma_\Delta = \frac{185\Delta E'd^3}{l^4 12}$
Combination simple- and two-span continuous	$\sigma_b = \frac{8F_b'd^2}{l^2 6}$	$\sigma_\Delta = \frac{131\Delta E'd^3}{l^4 12}$
Cantilevered pieces intermixed	$\sigma_b = \frac{20F_b'd^2}{3l^2 6}$	$\sigma_\Delta = \frac{105\Delta E'd^3}{l^4 12}$
Controlled random layup		
Mechanically laminated decking	$\sigma_b = \frac{20F_b'd^2}{3l^2 6}$	$\sigma_\Delta = \frac{100\Delta E'd^3}{l^4 12}$
2-inch decking	$\sigma_b = \frac{20F_b'd^2}{3l^2 6}$	$\sigma_\Delta = \frac{100\Delta E'd^3}{l^4 12}$
3-inch and 4-inch decking	$\sigma_b = \frac{20F_b'd^2}{3l^2 6}$	$\sigma_\Delta = \frac{116\Delta E'd^3}{l^4 12}$

For SI: 1 inch = 25.4 mm.

a. σ_b = Allowable total uniform load limited by bending.
σ_Δ = Allowable total uniform load limited by deflection.

b. d = Actual decking thickness.
l = Span of decking.
F_b' = Allowable bending stress adjusted by applicable factors.
E' = Modulus of elasticity adjusted by applicable factors.

SECTION 2307
LOAD AND RESISTANCE FACTOR DESIGN

2307.1 Load and resistance factor design. The design and construction of wood elements and structures using *load and resistance factor design* shall be in accordance with ANSI/AWC NDS and AWC SDPWS.

SECTION 2308
CONVENTIONAL LIGHT-FRAME CONSTRUCTION

2308.1 General. The requirements of this section are intended for *conventional light-frame construction*. Other construction methods are permitted to be used, provided that a satisfactory design is submitted showing compliance with other provisions of this code. Interior nonload-bearing partitions, ceilings and curtain walls of *conventional light-frame construction* are not subject to the limitations of Section 2308.2. Detached one- and two-family dwellings and townhouses not more than three *stories above grade plane* in height with a separate means of egress and their accessory structures shall comply with the *Residential Code of New York State*.

2308.1.1 Portions exceeding limitations of conventional light-frame construction. Where portions of a building of otherwise *conventional light-frame construction* exceed the limits of Section 2308.2, those portions and the supporting load path shall be designed in accordance with accepted engineering practice and the provisions of this code. For the purposes of this section, the term "portions" shall mean parts of buildings containing volume and area such as a room or a series of rooms. The extent of such design need only demonstrate compliance of the nonconventional light-framed elements with other applicable provisions of this code and shall be compatible with the performance of the conventional light-framed system.

2308.1.2 Connections and fasteners. Connectors and fasteners used in conventional construction shall comply with the requirements of Section 2304.10.

2308.2 Limitations. Buildings are permitted to be constructed in accordance with the provisions of *conventional light-frame construction*, subject to the limitations in Sections 2308.2.1 through 2308.2.6.

INTERNATIONAL CODE COUNCIL®
Copyright © 2019 ICC & NYSDOS. ALL RIGHTS RESERVED. Accessed by Lauren Gualdino (lgualdino@briarcliffmanor.org), (-) Order Number #100880972 on May 08, 2020 07:05 AM (PDT) pursuant to License Agreement with ICC & NYSDOS. No further reproduction, no

100880972

TABLE 2306.2(1)
ALLOWABLE SHEAR VALUES (POUNDS PER FOOT) FOR WOOD STRUCTURAL PANEL DIAPHRAGMS UTILIZING STAPLES WITH FRAMING OF DOUGLAS FIR-LARCH, OR SOUTHERN PINE[a] FOR WIND OR SEISMIC LOADING[f]

PANEL GRADE	STAPLE LENGTH AND GAGE[d]	MINIMUM FASTENER PENETRATION IN FRAMING (inches)	MINIMUM NOMINAL PANEL THICKNESS (inch)	MINIMUM NOMINAL WIDTH OF FRAMING MEMBERS AT ADJOINING PANEL EDGES AND BOUNDARIES[e] (inches)	BLOCKED DIAPHRAGMS				UNBLOCKED DIAPHRAGMS	
					Fastener spacing (inches) at diaphragm boundaries (all cases) at continuous panel edges parallel to load (Cases 3, 4), and at all panel edges (Cases 5, 6)[b]				Fasteners spaced 6 max. at supported edges[b]	
					6	4	$2^1/_2$[c]	2[c]	Case 1 (No unblocked edges or continuous joints parallel to load)	All other configurations (Cases 2, 3, 4, 5 and 6)
					Fastener spacing (inches) at other panel edges (Cases 1, 2, 3 and 4)[b]					
					6	6	4	3		
Structural I grades	$1^1/_2$ 16 gage	1	$^3/_8$	2	175	235	350	400	155	115
				3	200	265	395	450	175	130
			$^{15}/_{32}$	2	175	235	350	400	155	120
				3	200	265	395	450	175	130
Sheathing, single floor and other grades covered in DOC PS 1 and PS 2	$1^1/_2$ 16 gage	1	$^3/_8$	2	160	210	315	360	140	105
				3	180	235	355	400	160	120
			$^7/_{16}$	2	165	225	335	380	150	110
				3	190	250	375	425	165	125
			$^{15}/_{32}$	2	160	210	315	360	140	105
				3	180	235	355	405	160	120
			$^{19}/_{32}$	2	175	235	350	400	155	115
				3	200	265	395	450	175	130

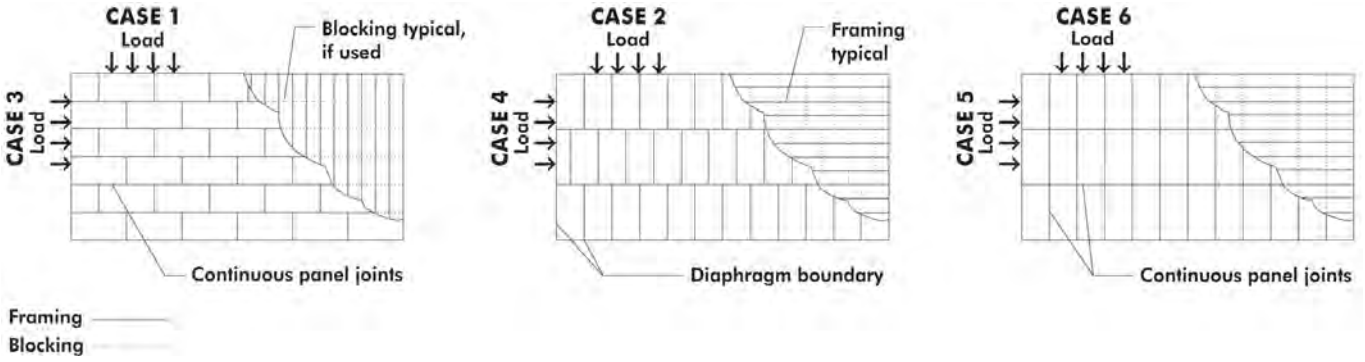

For SI: 1 inch = 25.4 mm, 1 pound per foot = 14.5939 N/m.

a. For framing of other species: (1) Find specific gravity for species of lumber in ANSI/AWC NDS. (2) For staples find shear value from table for Structural I panels (regardless of actual grade) and multiply value by 0.82 for species with specific gravity of 0.42 or greater, or 0.65 for all other species.

b. Space fasteners maximum 12 inches on center along intermediate framing members (6 inches on center where supports are spaced 48 inches on center).

c. Framing at adjoining panel edges shall be 3 inches nominal or wider.

d. Staples shall have a minimum crown width of $^7/_{16}$ inch and shall be installed with their crowns parallel to the long dimension of the framing members.

e. The minimum nominal width of framing members not located at boundaries or adjoining panel edges shall be 2 inches.

f. For shear loads of normal or permanent load duration as defined by the ANSI/AWC NDS, the values in the table shall be multiplied by 0.63 or 0.56, respectively.

INTERNATIONAL CODE COUNCIL®
Copyright © 2019 ICC & NYSDOS. ALL RIGHTS RESERVED. Accessed by Lauren Gualdino (lgualdino@briarcliffmanor.org), (-) Order Number #100880972 on May 08, 2020 07:05 AM (PDT) pursuant to License Agreement with ICC & NYSDOS. No further reproduction, no

100880972

TABLE 2306.2(2)
ALLOWABLE SHEAR VALUES (POUNDS PER FOOT) FOR WOOD STRUCTURAL PANEL BLOCKED DIAPHRAGMS UTILIZING MULTIPLE ROWS OF STAPLES (HIGH-LOAD DIAPHRAGMS) WITH FRAMING OF DOUGLAS FIR-LARCH OR SOUTHERN PINE[a] FOR WIND OR SEISMIC LOADING[b, g, h]

PANEL GRADE[c]	STAPLE GAGE[f]	MINIMUM FASTENER PENETRATION IN FRAMING (inches)	MINIMUM NOMINAL PANEL THICKNESS (inch)	MINIMUM NOMINAL WIDTH OF FRAMING MEMBER AT ADJOINING PANEL EDGES AND BOUNDARIES[e]	LINES OF FASTENERS	BLOCKED DIAPHRAGMS					
						Cases 1 and 2[d]					
						Fastener Spacing Per Line at Boundaries (inches)					
						4		$2^1/_2$		2	
						Fastener Spacing Per Line at Other Panel Edges (inches)					
						6	4	4	3	3	2
Structural I grades	14 gage staples	2	$^{15}/_{32}$	3	2	600	600	860	960	1,060	1,200
				4	3	860	900	1,160	1,295	1,295	1,400
			$^{19}/_{32}$	3	2	600	600	875	960	1,075	1,200
				4	3	875	900	1,175	1,440	1,475	1,795
Sheathing single floor and other grades covered in DOC PS 1 and PS 2	14 gage staples	2	$^{15}/_{32}$	3	2	540	540	735	865	915	1,080
				4	3	735	810	1,005	1,105	1,105	1,195
			$^{19}/_{32}$	3	2	600	600	865	960	1,065	1,200
				4	3	865	900	1,130	1,430	1,370	1,485
			$^{23}/_{32}$	4	3	865	900	1,130	1,490	1,430	1,545

For SI: 1 inch = 25.4 mm, 1 pound per foot = 14.5939 N/m.

a. For framing of other species: (1) Find specific gravity for species of framing lumber in ANSI/AWC NDS. (2) For staples, find shear value from table for Structural I panels (regardless of actual grade) and multiply value by 0.82 for species with specific gravity of 0.42 or greater, or 0.65 for all other species.

b. Fastening along intermediate framing members: Space fasteners not greater than 12 inches on center, except 6 inches on center for spans greater than 32 inches.

c. Panels conforming to PS 1 or PS 2.

d. This table gives shear values for Cases 1 and 2 as shown in Table 2306.2(1). The values shown are applicable to Cases 3, 4, 5 and 6 as shown in Table 2306.2(1), providing fasteners at all continuous panel edges are spaced in accordance with the boundary fastener spacing.

e. The minimum nominal depth of framing members shall be 3 inches nominal. The minimum nominal width of framing members not located at boundaries or adjoining panel edges shall be 2 inches.

f. Staples shall have a minimum crown width of $^7/_{16}$ inch, and shall be installed with their crowns parallel to the long dimension of the framing members.

g. High-load diaphragms shall be subject to special inspection in accordance with Section 1705.5.1.

h. For shear loads of normal or permanent load duration as defined by the ANSI/AWC NDS, the values in the table shall be multiplied by 0.63 or 0.56, respectively.

(continued)

INTERNATIONAL CODE COUNCIL®
Copyright © 2019 ICC & NYSDOS. ALL RIGHTS RESERVED. Accessed by Lauren Gualdino (lgualdino@briarcliffmanor.org), (-) Order Number #100880972 on May 08, 2020 07:05 AM (PDT) pursuant to License Agreement with ICC & NYSDOS. No further reproduction, no

100880972

TABLE 2306.2(2)—continued
ALLOWABLE SHEAR VALUES (POUNDS PER FOOT) FOR WOOD STRUCTURAL PANEL BLOCKED DIAPHRAGMS UTILIZING MULTIPLE ROWS OF STAPLES (HIGH-LOAD DIAPHRAGMS) WITH FRAMING OF DOUGLAS FIR-LARCH OR SOUTHERN PINE FOR WIND OR SEISMIC LOADING

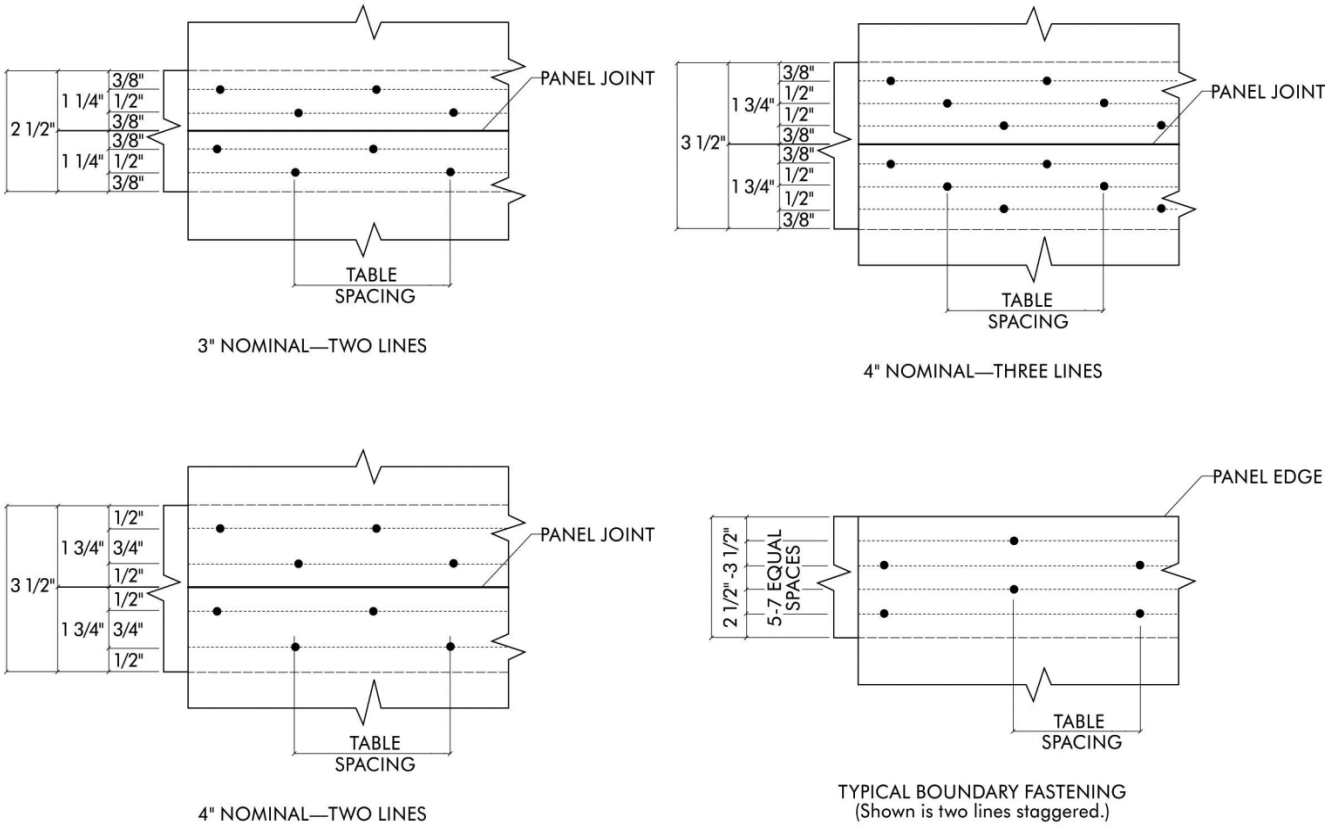

NOTE: SPACE PANEL END AND EDGE JOINT 1/8 INCH. REDUCE SPACING BETWEEN LINES OF NAILS AS NECESSARY TO MAINTAIN MINIMUM 3/8 INCH FASTERNER EDGE MARGINS, MINIMUM SPACING BETWEEN LINES IS 3/8 INCH

INTERNATIONAL CODE COUNCIL®
Copyright © 2019 ICC & NYSDOS. ALL RIGHTS RESERVED. Accessed by Lauren Gualdino (lgualdino@briarcliffmanor.org), (-) Order Number #100880972 on May 08, 2020 07:05 AM (PDT) pursuant to License Agreement with ICC & NYSDOS. No further reproduction, no

TABLE 2306.3(1)
ALLOWABLE SHEAR VALUES (POUNDS PER FOOT) FOR WOOD STRUCTURAL PANEL SHEAR WALLS UTILIZING STAPLES WITH FRAMING OF DOUGLAS FIR-LARCH OR SOUTHERN PINE[a] FOR WIND OR SEISMIC LOADING[b, f, g, i]

PANEL GRADE	MINIMUM NOMINAL PANEL THICKNESS (inch)	MINIMUM FASTENER PENETRATION IN FRAMING (inches)	PANELS APPLIED DIRECT TO FRAMING					PANELS APPLIED OVER 1/2" OR 5/8" GYPSUM SHEATHING				
			Staple length and gage[h] (inches)	Fastener spacing at panel edges (inches)				Staple length and gage[h] (inches)	Fastener spacing at panel edges (inches)			
				6	4	3	2[d]		6	4	3	2[d]
Structural I sheathing	3/8	1	1 1/2 16 Gage	155	235	315	400	2 16 Gage	155	235	310	400
	7/16			170	260	345	440		155	235	310	400
	15/32			185	280	375	475		155	235	300	400
Sheathing, plywood siding[e] except Group 5 Species, ANSI/APA PRP 210 siding[e]	5/16[c] or 1/4[c]	1	1 1/2 16 Gage	145	220	295	375	2 16 Gage	110	165	220	285
	3/8			140	210	280	360		140	210	280	360
	7/16			155	230	310	395		140	210	280	360
	15/32			170	255	335	430		140	210	280	360
	19/32		1 3/4 16 Gage	185	280	375	475	—	—	—	—	—

For SI: 1 inch = 25.4 mm, 1 pound per foot = 14.5939 N/m.

a. For framing of other species: (1) Find specific gravity for species of lumber in ANSI/AWC NDS. (2) For staples find shear value from table for Structural I panels (regardless of actual grade) and multiply value by 0.82 for species with specific gravity of 0.42 or greater, or 0.65 for all other species.

b. Panel edges backed with 2-inch nominal or wider framing. Install panels either horizontally or vertically. Space fasteners maximum 6 inches on center along intermediate framing members for 3/8-inch and 7/16-inch panels installed on studs spaced 24 inches on center. For other conditions and panel thickness, space fasteners maximum 12 inches on center on intermediate supports.

c. 3/8-inch panel thickness or siding with a span rating of 16 inches on center is the minimum recommended where applied directly to framing as exterior siding. For grooved panel siding, the nominal panel thickness is the thickness of the panel measured at the point of fastening.

d. Framing at adjoining panel edges shall be 3 inches nominal or wider.

e. Values apply to all-veneer plywood. Thickness at point of fastening on panel edges governs shear values.

f. Where panels are applied on both faces of a wall and fastener spacing is less than 6 inches on center on either side, panel joints shall be offset to fall on different framing members, or framing shall be 3 inches nominal or thicker at adjoining panel edges.

g. In Seismic Design Category D, E or F, where shear design values exceed 350 pounds per linear foot, all framing members receiving edge fastening from abutting panels shall be not less than a single 3-inch nominal member, or two 2-inch nominal members fastened together in accordance with Section 2306.1 to transfer the design shear value between framing members. Wood structural panel joint and sill plate nailing shall be staggered at all panel edges. See AWC SDPWS for sill plate size and anchorage requirements.

h. Staples shall have a minimum crown width of 7/16 inch and shall be installed with their crowns parallel to the long dimension of the framing members.

i. For shear loads of normal or permanent load duration as defined by the ANSI/AWC NDS, the values in the table shall be multiplied by 0.63 or 0.56, respectively.

TABLE 2306.3(2)
ALLOWABLE SHEAR VALUES (plf) FOR WIND OR SEISMIC LOADING ON SHEAR WALLS OF FIBERBOARD SHEATHING BOARD CONSTRUCTION UTILIZING STAPLES FOR TYPE V CONSTRUCTION ONLY[a, b, c, d, e]

THICKNESS AND GRADE (inches)	STAPLE GAGE AND DIMENSIONS	ALLOWABLE SHEAR VALUE (pounds per linear foot) STAPLE SPACING AT PANEL EDGES (inches)[a]		
		4	3	2
1/2 or 25/32 Structural	No. 16 gage galvanized staple, 7/16″ crown 1 3/4 inch long	150	200	225
	No. 16 gage galvanized staple, 1″ crown 1 3/4 inch long	220	290	325

For SI: 1 inch = 25.4 mm, 1 pound per foot = 14.5939 N/m.

a. Fiberboard sheathing shall not be used to brace concrete or masonry walls.

b. Panel edges shall be backed with 2-inch or wider framing of Douglas Fir-larch or Southern Pine. For framing of other species: (1) Find specific gravity for species of framing lumber in ANSI/AWC NDS. (2) For staples, multiply the shear value from the table by 0.82 for species with specific gravity of 0.42 or greater, or 0.65 for all other species.

c. Values shown are for fiberboard sheathing on one side only with long panel dimension either parallel or perpendicular to studs.

d. Fastener shall be spaced 6 inches on center along intermediate framing members.

e. Values are not permitted in Seismic Design Category D, E or F.

INTERNATIONAL CODE COUNCIL®
Copyright © 2019 ICC & NYSDOS. ALL RIGHTS RESERVED. Accessed by Lauren Gualdino (lgualdino@briarcliffmanor.org), (-) Order Number #100880972 on May 08, 2020 07:05 AM (PDT) pursuant to License Agreement with ICC & NYSDOS. No further reproduction, no

100880972

TABLE 2306.3(3)
ALLOWABLE SHEAR VALUES FOR WIND OR SEISMIC FORCES FOR SHEAR WALLS OF LATH AND PLASTER OR GYPSUM BOARD WOOD FRAMED WALL ASSEMBLIES UTILIZING STAPLES

TYPE OF MATERIAL	THICKNESS OF MATERIAL	WALL CONSTRUCTION	STAPLE SPACING[b] MAXIMUM (inches)	SHEAR VALUE[a, c] (plf)	MINIMUM STAPLE SIZE [f, g]
1. Expanded metal or woven wire lath and Portland cement plaster	$^7/_8$″	Unblocked	6	180	No. 16 gage galv. staple, $^7/_8$″ legs
2. Gypsum lath, plain or perforated	$^3/_8$″ lath and $^1/_2$″ plaster	Unblocked	5	100	No. 16 gage galv. staple, $1^1/_8$″ long
3. Gypsum sheathing	$^1/_2$″ × 2′ × 8′	Unblocked	4	75	No. 16 gage galv. staple, $1^3/_4$″ long
	$^1/_2$″ × 4′	Blocked[d] Unblocked	4 7	175 100	
4. Gypsum board, gypsum veneer base or water-resistant gypsum backing board	$^1/_2$″	Unblocked[d]	7	75	No. 16 gage galv. staple, $1^1/_2$″ long
		Unblocked[d]	4	110	
		Unblocked	7	100	
		Unblocked	4	125	
		Blocked[e]	7	125	
		Blocked[e]	4	150	
	$^5/_8$″	Unblocked[d]	7	115	No. 16 gage galv. staple, $1^1/_2$″ legs, $1^5/_8$″ long
			4	145	
		Blocked[e]	7	145	
			4	175	
		Blocked[e] Two-ply	Base ply: 9 Face ply: 7	250	No. 16 gage galv. staple $1^5/_8$″ long No. 15 gage galv. staple, $2^1/_4$″ long

For SI: 1 inch = 25.4 mm, 1 foot = 304.8 mm, 1 pound per foot = 14.5939 N/m.

a. These shear walls shall not be used to resist loads imposed by masonry or concrete walls (see AWC SDPWS). Values shown are for short-term loading due to wind or seismic loading. Walls resisting seismic loads shall be subject to the limitations in Section 12.2.1 of ASCE 7. Values shown shall be reduced 25 percent for normal loading.

b. Applies to fastening at studs, top and bottom plates and blocking.

c. Except as noted, shear values are based on a maximum framing spacing of 16 inches on center.

d. Maximum framing spacing of 24 inches on center.

e. All edges are blocked, and edge fastening is provided at all supports and all panel edges.

f. Staples shall have a minimum crown width of $^7/_{16}$ inch, measured outside the legs, and shall be installed with their crowns parallel to the long dimension of the framing members.

g. Staples for the attachment of gypsum lath and woven-wire lath shall have a minimum crown width of $^3/_4$ inch, measured outside the legs.

2308.2.1 Stories. Structures of *conventional light-frame construction* shall be limited in *story* height in accordance with Table 2308.2.1.

TABLE 2308.2.1
ALLOWABLE STORY HEIGHT

SEISMIC DESIGN CATEGORY	ALLOWABLE STORY ABOVE GRADE PLANE
A and B	Three stories
C	Two stories
D and E[a]	One story

For SI: 1 inch = 25.4 mm.

a. For the purposes of this section, for buildings assigned to Seismic Design Category D or E, cripple walls shall be considered to be a story unless cripple walls are solid blocked and do not exceed 14 inches in height.

2308.2.2 Allowable floor-to-floor height. Maximum floor-to-floor height shall not exceed 11 feet, 7 inches (3531 mm). Exterior bearing wall and interior braced wall heights shall not exceed a stud height of 10 feet (3048 mm).

2308.2.3 Allowable loads. Loads shall be in accordance with Chapter 16 and shall not exceed the following:

1. Average dead loads shall not exceed 15 psf (718 N/m^2) for combined roof and ceiling, exterior walls, floors and partitions.

Exceptions:

1. Subject to the limitations of Section 2308.6.10, stone or masonry veneer up to the lesser of 5 inches (127 mm) thick or 50 psf (2395 N/m^2) and installed in accordance with Chapter 14 is permitted to a height of 30 feet (9144 mm) above a noncombustible foundation, with an additional 8 feet (2438 mm) permitted for gable ends.

INTERNATIONAL CODE COUNCIL®
Copyright © 2019 ICC & NYSDOS. ALL RIGHTS RESERVED. Accessed by Lauren Gualdino (lgualdino@briarcliffmanor.org), (-) Order Number #100880972 on May 08, 2020 07:05 AM (PDT) pursuant to License Agreement with ICC & NYSDOS. No further reproduction, no

100880972

2. Concrete or masonry fireplaces, heaters and chimneys shall be permitted in accordance with the provisions of this code.

2. Live loads shall not exceed 40 psf (1916 N/m^2) for floors.

Exception: Live loads for concrete slab-on-ground floors in Risk Categories I and II shall be not more than 125 psf.

3. Ground snow loads shall not exceed 50 psf (2395 N/m^2).

2308.2.4 Basic wind speed. *V* shall not exceed 130 miles per hour (57 m/s) (3-second gust).

Exceptions:

1. *V* shall not exceed 140 mph (61.6 m/s) (3-second gust) for buildings in Exposure Category B that are not located in a *hurricane-prone region*.
2. Where *V* exceeds 130 mph (3-second gust), the provisions of either AWC WFCM or ICC 600 are permitted to be used.

2308.2.5 Allowable roof span. Ceiling joist and rafter framing constructed in accordance with Section 2308.7 and trusses shall not span more than 40 feet (12 192 mm) between points of vertical support. A ridge board in accordance with Section 2308.7 or 2308.7.3.1 shall not be considered a vertical support.

2308.2.6 Risk category limitation. The use of the provisions for *conventional light-frame construction* in this section shall not be permitted for *Risk Category* IV buildings assigned to *Seismic Design Category* B, C, D or F.

2308.3 Foundations and footings. Foundations and footings shall be designed and constructed in accordance with Chapter 18. Connections to foundations and footings shall comply with this section.

2308.3.1 Foundation plates or sills. Foundation plates or sills resting on concrete or masonry foundations shall comply with Section 2304.3.1. Foundation plates or sills shall be bolted or anchored to the foundation with not less than $^1/_2$-inch-diameter (12.7 mm) steel bolts or *approved* anchors spaced to provide equivalent anchorage as the steel bolts. Bolts shall be embedded not less than 7 inches (178 mm) into concrete or masonry. The bolts shall be located in the middle third of the width of the plate. Bolts shall be spaced not more than 6 feet (1829 mm) on center and there shall be not less than two bolts or anchor straps per piece with one bolt or anchor strap located not more than 12 inches (305 mm) or less than 4 inches (102 mm) from each end of each piece. Bolts in sill plates of braced wall lines in structures over two stories above grade shall be spaced not more than 4 feet (1219 mm) on center. A properly sized nut and washer shall be tightened on each bolt to the plate.

2308.3.1.1 Braced wall line sill plate anchorage in Seismic Design Category D. Sill plates along *braced wall lines* in buildings assigned to *Seismic Design Category* D shall be anchored with not less than $^1/_2$-inch (12.7 mm) diameter anchor bolts with steel plate washers between the foundation sill plate and the nut, or approved anchor straps load-rated in accordance with Section 2304.10.3 and spaced to provide equivalent anchorage. Plate washers shall be not less than 0.229 inch by 3 inches by 3 inches (5.82 mm by 76 mm by 76 mm) in size. The hole in the plate washer is permitted to be diagonally slotted with a width of up to $^3/_{16}$ inch (4.76 mm) larger than the bolt diameter and a slot length not to exceed $1^3/_4$ inches (44 mm), provided that a standard cut washer is placed between the plate washer and the nut.

2308.3.1.2 Braced wall line sill plate anchorage in Seismic Design Category E. Sill plates along braced wall lines in buildings assigned to Seismic Design Category E shall be anchored with not less than $^5/_8$-inch diameter (15.9 mm) anchor bolts with steel plate washers between the foundation sill plate and the nut, or approved anchor straps load-rated in accordance with Section 2304.10.3 and spaced to provide equivalent anchorage. Plate washers shall be not less than 0.229 inch by 3 inches by 3 inches (5.82 mm by 76 mm by 76 mm) in size. The hole in the plate washer is permitted to be diagonally slotted with a width of up to $^3/_{16}$ inch (4.76 mm) larger than the bolt diameter and a slot length not to exceed $1^3/_4$ inches (44 mm), provided that a standard cut washer is placed between the plate washer and the nut.

2308.4 Floor framing. Floor framing shall comply with this section.

2308.4.1 Girders. Girders for single-story construction or girders supporting loads from a single floor shall be not less than 4 inches by 6 inches (102 mm by 152 mm) for spans 6 feet (1829 mm) or less, provided that girders are spaced not more than 8 feet (2438 mm) on center. Other girders shall be designed to support the loads specified in this code. Girder end joints shall occur over supports.

Where a girder is spliced over a support, an adequate tie shall be provided. The ends of beams or girders supported on masonry or concrete shall not have less than 3 inches (76 mm) of bearing.

2308.4.1.1 Allowable girder spans. The allowable spans of girders that are fabricated of dimension lumber shall not exceed the values set forth in Table 2308.4.1.1(1) or 2308.4.1.1(2).

2308.4.2 Floor joists. Floor joists shall comply with this section.

2308.4.2.1 Span. Spans for floor joists shall be in accordance with Table 2308.4.2.1(1) or 2308.4.2.1(2) or the AWC STJR.

2308.4.2.2 Bearing. The ends of each joist shall have not less than $1^1/_2$ inches (38 mm) of bearing on wood or metal, or not less than 3 inches (76 mm) on masonry, except where supported on a 1-inch by 4-inch (25 mm by 102 mm) ribbon strip and nailed to the adjoining stud.

2308.4.2.3 Framing details. Joists shall be supported laterally at the ends and at each support by solid blocking except where the ends of the joists are nailed to a header, band or rim joist or to an adjoining stud or by other means. Solid blocking shall be not less than 2 inches (51 mm) in thickness and the full depth of the

INTERNATIONAL CODE COUNCIL®
Copyright © 2019 ICC & NYSDOS. ALL RIGHTS RESERVED. Accessed by Lauren Gualdino (lgualdino@briarcliffmanor.org), (-) Order Number #100880972 on May 08, 2020 07:05 AM (PDT) pursuant to License Agreement with ICC & NYSDOS. No further reproduction, no

100880972

joist. Joist framing from opposite sides of a beam, girder or partition shall be lapped not less than 3 inches (76 mm) or the opposing joists shall be tied together in an approved manner. Joists framing into the side of a wood girder shall be supported by framing anchors or on ledger strips not less than 2 inches by 2 inches (51 mm by 51 mm).

2308.4.2.4 Notches and holes. Notches on the ends of joists shall not exceed one-fourth the joist depth. Notches in the top or bottom of joists shall not exceed one-sixth the depth and shall not be located in the middle third of the span. Holes bored in joists shall not be within 2 inches (51 mm) of the top or bottom of the joist and the diameter of any such hole shall not exceed one-third the depth of the joist.

2308.4.3 Engineered wood products. Engineered wood products shall be installed in accordance with manufacturer's recommendations. Cuts, notches and holes bored in trusses, structural composite lumber, structural glued-laminated members or I-joists are not permitted except where permitted by the manufacturer's recommendations or where the effects of such alterations are specifically considered in the design of the member by a *registered design professional*.

2308.4.4 Framing around openings. Trimmer and header joists shall be doubled, or of lumber of equivalent cross section, where the span of the header exceeds 4 feet (1219 mm). The ends of header joists more than 6 feet (1829 mm) in length shall be supported by framing anchors or joist hangers unless bearing on a beam, partition or wall. Tail joists over 12 feet (3658 mm) in length shall be supported at the header by framing anchors or on ledger strips not less than 2 inches by 2 inches (51 mm by 51 mm).

2308.4.4.1 Openings in floor diaphragms in Seismic Design Categories B, C, D and E. Openings in horizontal diaphragms in *Seismic Design Categories* B, C, D and E with a dimension that is greater than 4 feet (1219 mm) shall be constructed with metal ties and blocking in accordance with this section and Figure 2308.4.4.1(1). Metal ties shall be not less than 0.058 inch [1.47 mm (16 galvanized gage)] in thickness by $1^1/_2$ inches (38 mm) in width and shall have a yield stress not less than 33,000 psi (227 Mpa). Blocking shall extend not less than the dimension of the opening in the direction of the tie and blocking. Ties shall be attached to blocking in accordance with the manufacturer's instructions but with not less than eight 16d common nails on each side of the header-joist intersection.

Openings in floor diaphragms in *Seismic Design Categories* D and E shall not have any dimension exceeding 50 percent of the distance between braced wall lines or an area greater than 25 percent of the area between orthogonal pairs of braced wall lines [see Figure 2308.4.4.1(2)]; or the portion of the structure containing the opening shall be designed in accordance with accepted engineering practice to resist the forces specified in Chapter 16, to the extent such irregular opening affects the performance of the conventional framing system.

2308.4.4.2 Vertical offsets in floor diaphragms in Seismic Design Categories D and E. In *Seismic Design Categories* D and E, portions of a floor level shall not be vertically offset such that the framing members on either side of the offset cannot be lapped or tied together in an *approved* manner in accordance with Figure 2308.4.4.2 unless the portion of the structure containing the irregular offset is designed in accordance with accepted engineering practice.

Exception: Framing supported directly by foundations need not be lapped or tied directly together.

2308.4.5 Joists supporting bearing partitions. Bearing partitions parallel to joists shall be supported on beams, girders, doubled joists, walls or other bearing partitions. Bearing partitions perpendicular to joists shall not be offset from supporting girders, walls or partitions more than the joist depth unless such joists are of sufficient size to carry the additional load.

2308.4.6 Lateral support. Floor and ceiling framing with a nominal depth-to-thickness ratio not less than 5 to 1 shall have one edge held in line for the entire span. Where the nominal depth-to-thickness ratio of the framing member exceeds 6 to 1, there shall be one line of bridging for each 8 feet (2438 mm) of span, unless both edges of the member are held in line. The bridging shall consist of not less than 1-inch by 3-inch (25 mm by 76 mm) lumber, double nailed at each end, or equivalent metal bracing of equal rigidity, full-depth solid blocking or other *approved* means. A line of bridging shall be required at supports where equivalent lateral support is not otherwise provided.

2308.4.7 Structural floor sheathing. Structural floor sheathing shall comply with the provisions of Section 2304.8.1.

2308.4.8 Under-floor ventilation. For under-floor ventilation, see Section 1202.4.

2308.4.9 Floor framing supporting braced wall panels. Where braced wall panels are supported by cantilevered floors or are set back from the floor joist support, the floor framing shall comply with Section 2308.6.7.

2308.4.10 Anchorage of exterior means of egress components in Seismic Design Categories D and E. Exterior egress balconies, exterior stairways and ramps and similar means of egress components in structures assigned to *Seismic Design Category* D or E shall be positively anchored to the primary structure at not more than 8 feet (2438 mm) on center or shall be designed for lateral forces. Such attachment shall not be accomplished by use of toenails or nails subject to withdrawal.

2308.5 Wall construction. Walls of *conventional light-frame* construction shall be in accordance with this section.

2308.5.1 Stud size, height and spacing. The size, height and spacing of studs shall be in accordance with Table 2308.5.1.

INTERNATIONAL CODE COUNCIL®
Copyright © 2019 ICC & NYSDOS. ALL RIGHTS RESERVED. Accessed by Lauren Gualdino (lgualdino@briarcliffmanor.org), (-) Order Number #100880972 on May 08, 2020 07:05 AM (PDT) pursuant to License Agreement with ICC & NYSDOS. No further reproduction, no

100880972

TABLE 2308.4.1.1(1)
HEADER AND GIRDER SPANS[a, b] FOR EXTERIOR BEARING WALLS
(Maximum spans for Douglas fir-larch, hem-fir, Southern pine and spruce-pine-fir and required number of jack studs)

GIRDERS AND HEADERS SUPPORTING	SIZE	GROUND SNOW LOAD (psf)[e]																	
		30						50						70					
		Building width[c] (feet)																	
		12		24		36		12		24		36		12		24		36	
		Span[f]	NJ[d]	Span[f]	NJ[d]	Span[f]	NJ[d]	Span[f]	NJ[d]	Span[f]	NJ[d]	Span[f]	NJ[d]	Span[f]	NJ[d]	Span[f]	NJ[d]	Span[f]	NJ[d]
Roof and ceiling	1-2 × 6	4-0	1	3-1	2	2-7	2	3-5	1	2-8	2	2-3	2	3-0	2	2-4	2	2-0	2
	1-2 × 8	5-1	2	3-11	2	3-3	2	4-4	2	3-4	2	2-10	2	3-10	2	3-0	2	2-6	3
	1-2 × 10	6-0	2	4-8	2	3-11	2	5-2	2	4-0	2	3-4	3	4-7	2	3-6	3	3-0	3
	1-2 × 12	7-1	2	5-5	2	4-7	3	6-1	2	4-8	3	3-11	3	5-5	2	4-2	3	3-6	3
	2-2 × 4	4-0	1	3-1	1	2-7	1	3-5	1	2-7	1	2-2	1	3-0	1	2-4	1	2-0	1
	2-2 × 6	6-0	1	4-7	1	3-10	1	5-1	1	3-11	1	3-3	2	4-6	1	3-6	2	2-11	2
	2-2 × 8	7-7	1	5-9	1	4-10	2	6-5	1	5-0	2	4-2	2	5-9	1	4-5	2	3-9	2
	2-2 × 10	9-0	1	6-10	2	5-9	2	7-8	2	5-11	2	4-11	2	6-9	2	5-3	2	4-5	2
	2-2 × 12	10-7	2	8-1	2	6-10	2	9-0	2	6-11	2	5-10	2	8-0	2	6-2	2	5-2	3
	3-2 × 8	9-5	1	7-3	1	6-1	1	8-1	1	6-3	1	5-3	2	7-2	1	5-6	2	4-8	2
	3-2 × 10	11-3	1	8-7	1	7-3	2	9-7	1	7-4	2	6-2	2	8-6	1	6-7	2	5-6	2
	3-2 × 12	13-2	1	10-1	2	8-6	2	11-3	2	8-8	2	7-4	2	10-0	2	7-9	2	6-6	2
	4-2 × 8	10-11	1	8-4	1	7-0	1	9-4	1	7-2	1	6-0	1	8-3	1	6-4	1	5-4	2
	4-2 × 10	12-11	1	9-11	1	8-4	1	11-1	1	8-6	1	7-2	2	9-10	1	7-7	2	6-4	2
	4-2 × 12	15-3	1	11-8	1	9-10	2	13-0	1	10-0	2	8-5	2	11-7	1	8-11	2	7-6	2
Roof, ceiling and one center-bearing floor	1-2 × 6	3-3	1	2-7	2	2-2	2	3-0	2	2-4	2	2-0	2	2-9	2	2-2	2	1-10	2
	1-2 × 8	4-1	2	3-3	2	2-9	2	3-9	2	3-0	2	2-6	3	3-6	2	2-9	2	2-4	3
	1-2 × 10	4-11	2	3-10	2	3-3	3	4-6	2	3-6	3	3-0	3	4-1	2	3-3	3	2-9	3
	1-2 × 12	5-9	2	4-6	3	3-10	3	5-3	2	4-2	3	3-6	3	4-10	3	3-10	3	3-3	4
	2-2 × 4	3-3	1	2-6	1	2-2	1	3-0	1	2-4	1	2-0	1	2-8	1	2-2	1	1-10	1
	2-2 × 6	4-10	1	3-9	1	3-3	2	4-5	1	3-6	2	3-0	2	4-1	1	3-3	2	2-9	2
	2-2 × 8	6-1	1	4-10	2	4-1	2	5-7	2	4-5	2	3-9	2	5-2	2	4-1	2	3-6	2
	2-2 × 10	7-3	2	5-8	2	4-10	2	6-8	2	5-3	2	4-5	2	6-1	2	4-10	2	4-1	2
	2-2 × 12	8-6	2	6-8	2	5-8	2	7-10	2	6-2	2	5-3	3	7-2	2	5-8	2	4-10	3
	3-2 × 8	7-8	1	6-0	1	5-1	2	7-0	1	5-6	2	4-8	2	6-5	1	5-1	2	4-4	2
	3-2 × 10	9-1	1	7-2	2	6-1	2	8-4	1	6-7	2	5-7	2	7-8	2	6-1	2	5-2	2
	3-2 × 12	10-8	2	8-5	2	7-2	2	9-10	2	7-8	2	6-7	2	9-0	2	7-1	2	6-1	2
	4-2 × 8	8-10	1	6-11	1	5-11	1	8-1	1	6-4	1	5-5	2	7-5	1	5-11	1	5-0	2
	4-2 × 10	10-6	1	8-3	2	7-0	2	9-8	1	7-7	2	6-5	2	8-10	1	7-0	2	6-0	2
	4-2 × 12	12-4	1	9-8	2	8-3	2	11-4	2	8-11	2	7-7	2	10-4	2	8-3	2	7-0	2
Roof, ceiling and one clear span floor	1-2 × 6	2-11	2	2-3	2	1-11	2	2-9	2	2-1	2	1-9	2	2-7	2	2-0	2	1-8	2
	1-2 × 8	3-9	2	2-10	2	2-5	3	3-6	2	2-8	2	2-3	3	3-3	2	2-6	3	2-2	3
	1-2 × 10	4-5	2	3-5	3	2-10	3	4-2	2	3-2	3	2-8	3	3-11	2	3-0	3	2-6	3
	1-2 × 12	5-2	2	4-0	3	3-4	3	4-10	3	3-9	3	3-2	4	4-7	3	3-6	3	3-0	4
	2-2 × 4	2-11	1	2-3	1	1-10	1	2-9	1	2-1	1	1-9	1	2-7	1	2-0	1	1-8	1
	2-2 × 6	4-4	1	3-4	2	2-10	2	4-1	1	3-2	2	2-8	2	3-10	1	3-0	2	2-6	2
	2-2 × 8	5-6	2	4-3	2	3-7	2	5-2	2	4-0	2	3-4	2	4-10	2	3-9	2	3-2	2
	2-2 × 10	6-7	2	5-0	2	4-2	2	6-1	2	4-9	2	4-0	2	5-9	2	4-5	2	3-9	3
	2-2 × 12	7-9	2	5-11	2	4-11	3	7-2	2	5-7	2	4-8	3	6-9	2	5-3	3	4-5	3
	3-2 × 8	6-11	1	5-3	2	4-5	2	6-5	1	5-0	2	4-2	2	6-1	1	4-8	2	4-0	2
	3-2 × 10	8-3	2	6-3	2	5-3	2	7-8	2	5-11	2	5-0	2	7-3	2	5-7	2	4-8	2
	3-2 × 12	9-8	2	7-5	2	6-2	2	9-0	2	7-0	2	5-10	2	8-6	2	6-7	2	5-6	3
	4-2 × 8	8-0	1	6-1	1	5-1	2	7-5	1	5-9	2	4-10	2	7-0	1	5-5	2	4-7	2
	4-2 × 10	9-6	1	7-3	2	6-1	2	8-10	1	6-10	2	5-9	2	8-4	1	6-5	2	5-5	2
	4-2 × 12	11-2	2	8-6	2	7-2	2	10-5	2	8-0	2	6-9	2	9-10	2	7-7	2	6-5	2

(continued)

INTERNATIONAL CODE COUNCIL®
Copyright © 2019 ICC & NYSDOS. ALL RIGHTS RESERVED. Accessed by Lauren Gualdino (lgualdino@briarcliffmanor.org), (-) Order Number #100880972 on May 08, 2020 07:05 AM (PDT) pursuant to License Agreement with ICC & NYSDOS. No further reproduction, no

100880972

TABLE 2308.4.1.1(1)—continued
HEADER AND GIRDER SPANS[a, b] FOR EXTERIOR BEARING WALLS
(Maximum spans for Douglas fir-larch, hem-fir, Southern pine and spruce-pine-fir[b] and required number of jack studs)

GIRDERS AND HEADERS SUPPORTING	SIZE	GROUND SNOW LOAD (psf)[e]																	
		30						50						70					
		Building width[c] (feet)																	
		12		24		36		12		24		36		12		24		36	
		Span[f]	NJ[d]	Span[f]	NJ[d]	Span[f]	NJ[d]	Span[f]	NJ[d]	Span[f]	NJ[d]	Span[f]	NJ[d]	Span[f]	NJ[d]	Span[f]	NJ[d]	Span[f]	NJ[d]
Roof, ceiling and two center-bearing floors	1-2 × 6	2-8	2	2-1	2	1-10	2	2-7	2	2-0	2	1-9	2	2-5	2	1-11	2	1-8	2
	1-2 × 8	3-5	2	2-8	2	2-4	3	3-3	2	2-7	2	2-2	3	3-1	2	2-5	3	2-1	3
	1-2 × 10	4-0	2	3-2	3	2-9	3	3-10	2	3-1	3	2-7	3	3-8	2	2-11	3	2-5	3
	1-2 × 12	4-9	3	3-9	3	3-2	4	4-6	3	3-7	3	3-1	4	4-3	3	3-5	3	2-11	4
	2-2 × 4	2-8	1	2-1	1	1-9	1	2-6	1	2-0	1	1-8	1	2-5	1	1-11	1	1-7	1
	2-2 × 6	4-0	1	3-2	2	2-8	2	3-9	1	3-0	2	2-7	2	3-7	1	2-10	2	2-5	2
	2-2 × 8	5-0	2	4-0	2	3-5	2	4-10	2	3-10	2	3-3	2	4-7	2	3-7	2	3-1	2
	2-2 × 10	6-0	2	4-9	2	4-0	2	5-8	2	4-6	2	3-10	3	5-5	2	4-3	2	3-8	3
	2-2 × 12	7-0	2	5-7	2	4-9	3	6-8	2	5-4	3	4-6	3	6-4	2	5-0	3	4-3	3
	3-2 × 8	6-4	1	5-0	2	4-3	2	6-0	1	4-9	2	4-1	2	5-8	2	4-6	2	3-10	2
	3-2 × 10	7-6	2	5-11	2	5-1	2	7-1	2	5-8	2	4-10	2	6-9	2	5-4	2	4-7	2
	3-2 × 12	8-10	2	7-0	2	5-11	2	8-5	2	6-8	2	5-8	3	8-0	2	6-4	2	5-4	3
	4-2 × 8	7-3	1	5-9	1	4-11	2	6-11	1	5-6	2	4-8	2	6-7	1	5-2	2	4-5	2
	4-2 × 10	8-8	1	6-10	2	5-10	2	8-3	2	6-6	2	5-7	2	7-10	2	6-2	2	5-3	2
	4-2 × 12	10-2	2	8-1	2	6-10	2	9-8	2	7-8	2	6-7	2	9-2	2	7-3	2	6-2	2
Roof, ceiling and two clear span floors	1-2 × 6	2-3	2	1-9	2	1-5	2	2-3	2	1-9	2	1-5	3	2-2	2	1-8	2	1-5	3
	1-2 × 8	2-10	2	2-2	3	1-10	3	2-10	2	2-2	3	1-10	3	2-9	2	2-1	3	1-10	3
	1-2 × 10	3-4	2	2-7	3	2-2	3	3-4	3	2-7	3	2-2	4	3-3	3	2-6	3	2-2	4
	1-2 × 12	4-0	3	3-0	3	2-7	4	4-0	3	3-0	4	2-7	4	3-10	3	3-0	4	2-6	4
	2-2 × 4	2-3	1	1-8	1	1-4	1	2-3	1	1-8	1	1-4	1	2-2	1	1-8	1	1-4	2
	2-2 × 6	3-4	1	2-6	2	2-2	2	3-4	2	2-6	2	2-2	2	3-3	2	2-6	2	2-1	2
	2-2 × 8	4-3	2	3-3	2	2-8	2	4-3	2	3-3	2	2-8	2	4-1	2	3-2	2	2-8	3
	2-2 × 10	5-0	2	3-10	2	3-2	3	5-0	2	3-10	2	3-2	3	4-10	2	3-9	3	3-2	3
	2-2 × 12	5-11	2	4-6	3	3-9	3	5-11	2	4-6	3	3-9	3	5-8	2	4-5	3	3-9	3
	3-2 × 8	5-3	1	4-0	2	3-5	2	5-3	2	4-0	2	3-5	2	5-1	2	3-11	2	3-4	2
	3-2 × 10	6-3	2	4-9	2	4-0	2	6-3	2	4-9	2	4-0	2	6-1	2	4-8	2	4-0	3
	3-2 × 12	7-5	2	5-8	2	4-9	3	7-5	2	5-8	2	4-9	3	7-2	2	5-6	3	4-8	3
	4-2 × 8	6-1	1	4-8	2	3-11	2	6-1	1	4-8	2	3-11	2	5-11	1	4-7	2	3-10	2
	4-2 × 10	7-3	2	5-6	2	4-8	2	7-3	2	5-6	2	4-8	2	7-0	2	5-5	2	4-7	2
	4-2 × 12	8-6	2	6-6	2	5-6	2	8-6	2	6-6	2	5-6	2	8-3	2	6-4	2	5-4	3

For SI: 1 inch = 25.4 mm, 1 pound per square foot = 0.0479 kPa.

a. Spans are given in feet and inches.

b. Spans are based on minimum design properties for No. 2 grade lumber of Douglas fir-larch, hem-fir, Southern pine and spruce-pine fir.

c. Building width is measured perpendicular to the ridge. For widths between those shown, spans are permitted to be interpolated.

d. NJ = Number of jack studs required to support each end. Where the number of required jack studs equals one, the header is permitted to be supported by an approved framing anchor attached to the full-height wall stud and to the header.

e. Use 30 psf ground snow load for cases in which ground snow load is less than 30 psf and the roof live load is equal to or less than 20 psf.

f. Spans are calculated assuming the top of the header or girder is laterally braced by perpendicular framing. Where the top of the header or girder is not laterally braced (for example, cripple studs bearing on the header), tabulated spans for headers consisting of 2 × 8, 2 × 10, or 2 × 12 sizes shall be multiplied by 0.70 or the header or girder shall be designed.

INTERNATIONAL CODE COUNCIL®
Copyright © 2019 ICC & NYSDOS. ALL RIGHTS RESERVED. Accessed by Lauren Gualdino (lgualdino@briarcliffmanor.org), (-) Order Number #100880972 on May 08, 2020 07:05 AM (PDT) pursuant to License Agreement with ICC & NYSDOS. No further reproduction, no

100880972

TABLE 2308.4.1.1(2)
HEADER AND GIRDER SPANS[a, b] FOR INTERIOR BEARING WALLS
(Maximum spans for Douglas fir-larch, hem-fir, Southern pine and spruce-pine-fir and required number of jack studs)

HEADERS AND GIRDERS SUPPORTING	SIZE	BUILDING WIDTH[c] (feet)					
		12		24		36	
		Span[e]	NJ[d]	Span[e]	NJ[d]	Span[e]	NJ[d]
One floor only	2-2 × 4	4-1	1	2-10	1	2-4	1
	2-2 × 6	6-1	1	4-4	1	3-6	1
	2-2 × 8	7-9	1	5-5	1	4-5	2
	2-2 × 10	9-2	1	6-6	2	5-3	2
	2-2 × 12	10-9	1	7-7	2	6-3	2
	3-2 × 8	9-8	1	6-10	1	5-7	1
	3-2 × 10	11-5	1	8-1	1	6-7	2
	3-2 × 12	13-6	1	9-6	2	7-9	2
	4-2 × 8	11-2	1	7-11	1	6-5	1
	4-2 × 10	13-3	1	9-4	1	7-8	1
	4-2 × 12	15-7	1	11-0	1	9-0	2
Two floors	2-2 × 4	2-7	1	1-11	1	1-7	1
	2-2 × 6	3-11	1	2-11	2	2-5	2
	2-2 × 8	5-0	1	3-8	2	3-1	2
	2-2 × 10	5-11	2	4-4	2	3-7	2
	2-2 × 12	6-11	2	5-2	2	4-3	3
	3-2 × 8	6-3	1	4-7	2	3-10	2
	3-2 × 10	7-5	1	5-6	2	4-6	2
	3-2 × 12	8-8	2	6-5	2	5-4	2
	4-2 × 8	7-2	1	5-4	1	4-5	2
	4-2 × 10	8-6	1	6-4	2	5-3	2
	4-2 × 12	10-1	1	7-5	2	6-2	2

For SI: 1 inch = 25.4 mm, 1 foot = 304.8 mm.

a. Spans are given in feet and inches.

b. Spans are based on minimum design properties for No. 2 grade lumber of Douglas fir-larch, hem-fir, Southern pine and spruce-pine fir.

c. Building width is measured perpendicular to the ridge. For widths between those shown, spans are permitted to be interpolated.

d. NJ = Number of jack studs required to support each end. Where the number of required jack studs equals one, the header is permitted to be supported by an approved framing anchor attached to the full-height wall stud and to the header.

e. Spans are calculated assuming the top of the header or girder is laterally braced by perpendicular framing. Where the top of the header or girder is not laterally braced (for example, cripple studs bearing on the header), tabulated spans for headers consisting of 2 × 8, 2 × 10, or 2 × 12 sizes shall be multiplied by 0.70 or the header or girder shall be designed.

INTERNATIONAL CODE COUNCIL®
Copyright © 2019 ICC & NYSDOS. ALL RIGHTS RESERVED. Accessed by Lauren Gualdino (lgualdino@briarcliffmanor.org), (-) Order Number #100880972 on May 08, 2020 07:05 AM (PDT) pursuant to License Agreement with ICC & NYSDOS. No further reproduction, no

100880972

TABLE 2308.4.2.1(1)
FLOOR JOIST SPANS FOR COMMON LUMBER SPECIES
(Residential sleeping areas, live load = 30 psf, L/Δ = 360)

JOIST SPACING (inches)	SPECIES AND GRADE		DEAD LOAD = 10 psf				DEAD LOAD = 20 psf			
			2 × 6	2 × 8	2 × 10	2 × 12	2 × 6	2 × 8	2 × 10	2 × 12
			Maximum floor joist spans							
			(ft. - in.)	(ft. - in.)	(ft. - in.)	(ft. - in.)	(ft. - in.)	(ft. - in.)	(ft. - in.)	(ft. - in.)
12	Douglas Fir-Larch	SS	12-6	16-6	21-0	25-7	12-6	16-6	21-0	25-7
	Douglas Fir-Larch	#1	12-0	15-10	20-3	24-8	12-0	15-7	19-0	22-0
	Douglas Fir-Larch	#2	11-10	15-7	19-10	23-0	11-6	14-7	17-9	20-7
	Douglas Fir-Larch	#3	9-8	12-4	15-0	17-5	8-8	11-0	13-5	15-7
	Hem-Fir	SS	11-10	15-7	19-10	24-2	11-10	15-7	19-10	24-2
	Hem-Fir	#1	11-7	15-3	19-5	23-7	11-7	15-2	18-6	21-6
	Hem-Fir	#2	11-0	14-6	18-6	22-6	11-0	14-4	17-6	20-4
	Hem-Fir	#3	9-8	12-4	15-0	17-5	8-8	11-0	13-5	15-7
	Southern Pine	SS	12-3	16-2	20-8	25-1	12-3	16-2	20-8	25-1
	Southern Pine	#1	11-10	15-7	19-10	24-2	11-10	15-7	18-7	22-0
	Southern Pine	#2	11-3	14-11	18-1	21-4	10-9	13-8	16-2	19-1
	Southern Pine	#3	9-2	11-6	14-0	16-6	8-2	10-3	12-6	14-9
	Spruce-Pine-Fir	SS	11-7	15-3	19-5	23-7	11-7	15-3	19-5	23-7
	Spruce-Pine-Fir	#1	11-3	14-11	19-0	23-0	11-3	14-7	17-9	20-7
	Spruce-Pine-Fir	#2	11-3	14-11	19-0	23-0	11-3	14-7	17-9	20-7
	Spruce-Pine-Fir	#3	9-8	12-4	15-0	17-5	8-8	11-0	13-5	15-7
16	Douglas Fir-Larch	SS	11-4	15-0	19-1	23-3	11-4	15-0	19-1	23-0
	Douglas Fir-Larch	#1	10-11	14-5	18-5	21-4	10-8	13-6	16-5	19-1
	Douglas Fir-Larch	#2	10-9	14-1	17-2	19-11	9-11	12-7	15-5	17-10
	Douglas Fir-Larch	#3	8-5	10-8	13-0	15-1	7-6	9-6	11-8	13-6
	Hem-Fir	SS	10-9	14-2	18-0	21-11	10-9	14-2	18-0	21-11
	Hem-Fir	#1	10-6	13-10	17-8	20-9	10-4	13-1	16-0	18-7
	Hem-Fir	#2	10-0	13-2	16-10	19-8	9-10	12-5	15-2	17-7
	Hem-Fir	#3	8-5	10-8	13-0	15-1	7-6	9-6	11-8	13-6
	Southern Pine	SS	11-2	14-8	18-9	22-10	11-2	14-8	18-9	22-10
	Southern Pine	#1	10-9	14-2	18-0	21-4	10-9	13-9	16-1	19-1
	Southern Pine	#2	10-3	13-3	15-8	18-6	9-4	11-10	14-0	16-6
	Southern Pine	#3	7-11	10-10	12-1	14-4	7-1	8-11	10-10	12-10
	Spruce-Pine-Fir	SS	10-6	13-10	17-8	21-6	10-6	13-10	17-8	21-4
	Spruce-Pine-Fir	#1	10-3	13-6	17-2	19-11	9-11	12-7	15-5	17-10
	Spruce-Pine-Fir	#2	10-3	13-6	17-2	19-11	9-11	12-7	15-5	17-10
	Spruce-Pine-Fir	#3	8-5	10-8	13-0	15-1	7-6	9-6	11-8	13-6

(continued)

INTERNATIONAL CODE COUNCIL®
Copyright © 2019 ICC & NYSDOS. ALL RIGHTS RESERVED. Accessed by Lauren Gualdino (lgualdino@briarcliffmanor.org), (-) Order Number #100880972 on May 08, 2020 07:05 AM (PDT) pursuant to License Agreement with ICC & NYSDOS. No further reproduction, no

100880972

TABLE 2308.4.2.1(1)—continued
FLOOR JOIST SPANS FOR COMMON LUMBER SPECIES
(Residential sleeping areas, live load = 30 psf, L/Δ = 360)

JOIST SPACING (inches)	SPECIES AND GRADE		DEAD LOAD = 10 psf				DEAD LOAD = 20 psf			
			2 × 6	2 × 8	2 × 10	2 × 12	2 × 6	2 × 8	2 × 10	2 × 12
			Maximum floor joist spans							
			(ft. - in.)	(ft. - in.)	(ft. - in.)	(ft. - in.)	(ft. - in.)	(ft. - in.)	(ft. - in.)	(ft. - in.)
19.2	Douglas Fir-Larch	SS	10-8	14-1	18-0	21-10	10-8	14-1	18-0	21-0
	Douglas Fir-Larch	#1	10-4	13-7	16-9	19-6	9-8	12-4	15-0	17-5
	Douglas Fir-Larch	#2	10-1	12-10	15-8	18-3	9-1	11-6	14-1	16-3
	Douglas Fir-Larch	#3	7-8	9-9	11-10	13-9	6-10	8-8	10-7	12-4
	Hem-Fir	SS	10-1	13-4	17-0	20-8	10-1	13-4	17-0	20-7
	Hem-Fir	#1	9-10	13-0	16-4	19-0	9-6	12-0	14-8	17-0
	Hem-Fir	#2	9-5	12-5	15-6	17-1	8-11	11-4	13-10	16-1
	Hem-Fir	#3	7-8	9-9	11-10	13-9	6-10	8-8	10-7	12-4
	Southern Pine	SS	10-6	13-10	17-8	21-6	10-6	13-10	17-8	21-6
	Southern Pine	#1	10-1	13-4	16-5	19-6	9-11	12-7	14-8	17-5
	Southern Pine	#2	9-6	12-1	14-4	16-10	8-6	10-10	12-10	15-1
	Southern Pine	#3	7-3	9-1	11-0	13-1	6-5	8-2	9-10	11-8
	Spruce-Pine-Fir	SS	9-10	13-0	16-7	20-2	9-10	13-0	16-7	19-6
	Spruce-Pine-Fir	#1	9-8	12-9	15-8	18-3	9-1	11-6	14-1	16-3
	Spruce-Pine-Fir	#2	9-8	12-9	15-8	18-3	9-1	11-6	14-1	16-3
	Spruce-Pine-Fir	#3	7-8	9-9	11-10	13-9	6-10	8-8	10-7	12-4
24	Douglas Fir-Larch	SS	9-11	13-1	16-8	20-3	9-11	13-1	16-2	18-9
	Douglas Fir-Larch	#1	9-7	12-4	15-0	17-5	8-8	11-0	13-5	15-7
	Douglas Fir-Larch	#2	9-1	11-6	14-1	16-3	8-1	10-3	12-7	14-7
	Douglas Fir-Larch	#3	6-10	8-8	10-7	12-4	6-2	7-9	9-6	11-0
	Hem-Fir	SS	9-4	12-4	15-9	19-2	9-4	12-4	15-9	18-5
	Hem-Fir	#1	9-2	12-0	14-8	17-0	8-6	10-9	13-1	15-2
	Hem-Fir	#2	8-9	11-4	13-10	16-1	8-0	10-2	12-5	14-4
	Hem-Fir	#3	6-10	8-8	10-7	12-4	6-2	7-9	9-6	11-0
	Southern Pine	SS	9-9	12-10	16-5	19-11	9-9	12-10	16-5	19-8
	Southern Pine	#1	9-4	12-4	14-8	17-5	8-10	11-3	13-1	15-7
	Southern Pine	#2	8-6	10-10	12-10	15-1	7-7	9-8	11-5	13-6
	Southern Pine	#3	6-5	8-2	9-10	11-8	5-9	7-3	8-10	10-5
	Spruce-Pine-Fir	SS	9-2	12-1	15-5	18-9	9-2	12-1	15-0	17-5
	Spruce-Pine-Fir	#1	8-11	11-6	14-1	16-3	8-1	10-3	12-7	14-7
	Spruce-Pine-Fir	#2	8-11	11-6	14-1	16-3	8-1	10-3	12-7	14-7
	Spruce-Pine-Fir	#3	6-10	8-8	10-7	12-4	6-2	7-9	9-6	11-0

For SI: 1 inch = 25.4 mm, 1 foot = 304.8 mm, 1 pound per square foot = 0.0479 kPa.
Note: Check sources for availability of lumber in lengths greater than 20 feet.

INTERNATIONAL CODE COUNCIL®
Copyright © 2019 ICC & NYSDOS. ALL RIGHTS RESERVED. Accessed by Lauren Gualdino (lgualdino@briarcliffmanor.org), (-) Order Number #100880972 on May 08, 2020 07:05 AM (PDT) pursuant to License Agreement with ICC & NYSDOS. No further reproduction, no

100880972

TABLE 2308.4.2.1(2)
FLOOR JOIST SPANS FOR COMMON LUMBER SPECIES
(Residential living areas, live load = 40 psf, L/Δ = 360)

JOIST SPACING (inches)	SPECIES AND GRADE		DEAD LOAD = 10 psf				DEAD LOAD = 20 psf			
			2 × 6	2 × 8	2 × 10	2 × 12	2 × 6	2 × 8	2 × 10	2 × 12
			Maximum floor joist spans							
			(ft. - in.)	(ft. - in.)	(ft. - in.)	(ft. - in.)	(ft. - in.)	(ft. - in.)	(ft. - in.)	(ft. - in.)
12	Douglas Fir-Larch	SS	11-4	15-0	19-1	23-3	11-4	15-0	19-1	23-3
	Douglas Fir-Larch	#1	10-11	14-5	18-5	22-0	10-11	14-2	17-4	20-1
	Douglas Fir-Larch	#2	10-9	14-2	17-9	20-7	10-6	13-3	16-3	18-10
	Douglas Fir-Larch	#3	8-8	11-0	13-5	15-7	7-11	10-0	12-3	14-3
	Hem-Fir	SS	10-9	14-2	18-0	21-11	10-9	14-2	18-0	21-11
	Hem-Fir	#1	10-6	13-10	17-8	21-6	10-6	13-10	16-11	19-7
	Hem-Fir	#2	10-0	13-2	16-10	20-4	10-0	13-1	16-0	18-6
	Hem-Fir	#3	8-8	11-0	13-5	15-7	7-11	10-0	12-3	14-3
	Southern Pine	SS	11-2	14-8	18-9	22-10	11-2	14-8	18-9	22-10
	Southern Pine	#1	10-9	14-2	18-0	21-11	10-9	14-2	16-11	20-1
	Southern Pine	#2	10-3	13-6	16-2	19-1	9-10	12-6	14-9	17-5
	Southern Pine	#3	8-2	10-3	12-6	14-9	7-5	9-5	11-5	13-6
	Spruce-Pine-Fir	SS	10-6	13-10	17-8	21-6	10-6	13-10	17-8	21-6
	Spruce-Pine-Fir	#1	10-3	13-6	17-3	20-7	10-3	13-3	16-3	18-10
	Spruce-Pine-Fir	#2	10-3	13-6	17-3	20-7	10-3	13-3	16-3	18-10
	Spruce-Pine-Fir	#3	8-8	11-0	13-5	15-7	7-11	10-0	12-3	14-3
16	Douglas Fir-Larch	SS	10-4	13-7	17-4	21-1	10-4	13-7	17-4	21-0
	Douglas Fir-Larch	#1	9-11	13-1	16-5	19-1	9-8	12-4	15-0	17-5
	Douglas Fir-Larch	#2	9-9	12-7	15-5	17-10	9-1	11-6	14-1	16-3
	Douglas Fir-Larch	#3	7-6	9-6	11-8	13-6	6-10	8-8	10-7	12-4
	Hem-Fir	SS	9-9	12-10	16-5	19-11	9-9	12-10	16-5	19-11
	Hem-Fir	#1	9-6	12-7	16-0	18-7	9-6	12-0	14-8	17-0
	Hem-Fir	#2	9-1	12-0	15-2	17-7	8-11	11-4	13-10	16-1
	Hem-Fir	#3	7-6	9-6	11-8	13-6	6-10	8-8	10-7	12-4
	Southern Pine	SS	10-2	13-4	17-0	20-9	10-2	13-4	17-0	20-9
	Southern Pine	#1	9-9	12-10	16-1	19-1	9-9	12-7	14-8	17-5
	Southern Pine	#2	9-4	11-10	14-0	16-6	8-6	10-10	12-10	15-1
	Southern Pine	#3	7-1	8-11	10-10	12-10	6-5	8-2	9-10	11-8
	Spruce-Pine-Fir	SS	9-6	12-7	16-0	19-6	9-6	12-7	16-0	19-6
	Spruce-Pine-Fir	#1	9-4	12-3	15-5	17-10	9-1	11-6	14-1	16-3
	Spruce-Pine-Fir	#2	9-4	12-3	15-5	17-10	9-1	11-6	14-1	16-3
	Spruce-Pine-Fir	#3	7-6	9-6	11-8	13-6	6-10	8-8	10-7	12-4

(continued)

INTERNATIONAL CODE COUNCIL®
Copyright © 2019 ICC & NYSDOS. ALL RIGHTS RESERVED. Accessed by Lauren Gualdino (lgualdino@briarcliffmanor.org), (-) Order Number #100880972 on May 08, 2020 07:05 AM (PDT) pursuant to License Agreement with ICC & NYSDOS. No further reproduction, no

100880972

TABLE 2308.4.2.1(2)—continued
FLOOR JOIST SPANS FOR COMMON LUMBER SPECIES
(Residential living areas, live load = 40 psf, L/Δ = 360)

JOIST SPACING (inches)	SPECIES AND GRADE		DEAD LOAD = 10 psf				DEAD LOAD = 20 psf			
			2 × 6	2 × 8	2 × 10	2 × 12	2 × 6	2 × 8	2 × 10	2 × 12
			Maximum floor joist spans							
			(ft. - in.)	(ft. - in.)	(ft. - in.)	(ft. - in.)	(ft. - in.)	(ft. - in.)	(ft. - in.)	(ft. - in.)
19.2	Douglas Fir-Larch	SS	9-8	12-10	16-4	19-10	9-8	12-10	16-4	19-2
	Douglas Fir-Larch	#1	9-4	12-4	15-0	17-5	8-10	11-3	13-8	15-11
	Douglas Fir-Larch	#2	9-1	11-6	14-1	16-3	8-3	10-6	12-10	14-10
	Douglas Fir-Larch	#3	6-10	8-8	10-7	12-4	6-3	7-11	9-8	11-3
	Hem-Fir	SS	9-2	12-1	15-5	18-9	9-2	12-1	15-5	18-9
	Hem-Fir	#1	9-0	11-10	14-8	17-0	8-8	10-11	13-4	15-6
	Hem-Fir	#2	8-7	11-3	13-10	16-1	8-2	10-4	12-8	14-8
	Hem-Fir	#3	6-10	8-8	10-7	12-4	6-3	7-11	9-8	11-3
	Southern Pine	SS	9-6	12-7	16-0	19-6	9-6	12-7	16-0	19-6
	Southern Pine	#1	9-2	12-1	14-8	17-5	9-0	11-5	13-5	15-11
	Southern Pine	#2	8-6	10-10	12-10	15-1	7-9	9-10	11-8	13-9
	Southern Pine	#3	6-5	8-2	9-10	11-8	5-11	7-5	9-0	10-8
	Spruce-Pine-Fir	SS	9-0	11-10	15-1	18-4	9-0	11-10	15-1	17-9
	Spruce-Pine-Fir	#	8-9	11-6	14-1	16-3	8-3	10-6	12-10	14-10
	Spruce-Pine-Fir	#2	8-9	11-6	14-1	16-3	8-3	10-6	12-10	14-10
	Spruce-Pine-Fir	#3	6-10	8-8	10-7	12-4	6-3	7-11	9-8	11-3
24	Douglas Fir-Larch	SS	9-0	11-11	15-2	18-5	9-0	11-11	14-9	17-1
	Douglas Fir-Larch	#1	8-8	11-0	13-5	15-7	7-11	10-0	12-3	14-3
	Douglas Fir-Larch	#2	8-1	10-3	12-7	14-7	7-5	9-5	11-6	13-4
	Douglas Fir-Larch	#3	6-2	7-9	9-6	11-0	5-7	7-1	8-8	10-1
	Hem-Fir	SS	8-6	11-3	14-4	17-5	8-6	11-3	14-4	16-10[a]
	Hem-Fir	#1	8-4	10-9	13-1	15-2	7-9	9-9	11-11	13-10
	Hem-Fir	#2	7-11	10-2	12-5	14-4	7-4	9-3	11-4	13-1
	Hem-Fir	#3	6-2	7-9	9-6	11-0	5-7	7-1	8-8	10-1
	Southern Pine	SS	8-10	11-8	14-11	18-1	8-10	11-8	14-11	18-0
	Southern Pine	#1	8-6	11-3	13-1	15-7	8-1	10-3	12-0	14-3
	Southern Pine	#2	7-7	9-8	11-5	13-6	7-0	8-10	10-5	12-4
	Southern Pine	#3	5-9	7-3	8-10	10-5	5-3	6-8	8-1	9-6
	Spruce-Pine-Fir	SS	8-4	11-0	14-0	17-0	8-4	11-0	13-8	15-11
	Spruce-Pine-Fir	#1	8-1	10-3	12-7	14-7	7-5	9-5	11-6	13-4
	Spruce-Pine-Fir	#2	8-1	10-3	12-7	14-7	7-5	9-5	11-6	13-4
	Spruce-Pine-Fir	#3	6-2	7-9	9-6	11-0	5-7	7-1	8-8	10-1

For SI: 1 inch = 25.4 mm, 1 foot = 304.8 mm, 1 pound per square foot = 0.0479 kPa.

Note: Check sources for availability of lumber in lengths greater than 20 feet.

a. End bearing length shall be increased to 2 inches.

INTERNATIONAL CODE COUNCIL®
Copyright © 2019 ICC & NYSDOS. ALL RIGHTS RESERVED. Accessed by Lauren Gualdino (lgualdino@briarcliffmanor.org), (-) Order Number #100880972 on May 08, 2020 07:05 AM (PDT) pursuant to License Agreement with ICC & NYSDOS. No further reproduction, no

100880972

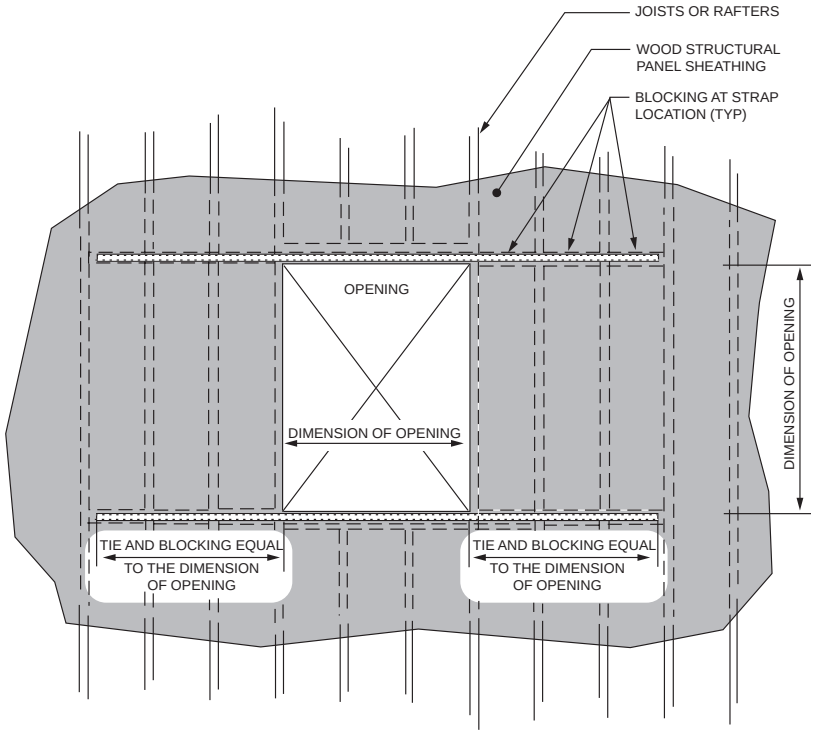

FIGURE 2308.4.4.1(1)
OPENINGS IN FLOOR AND ROOF DIAPHRAGMS

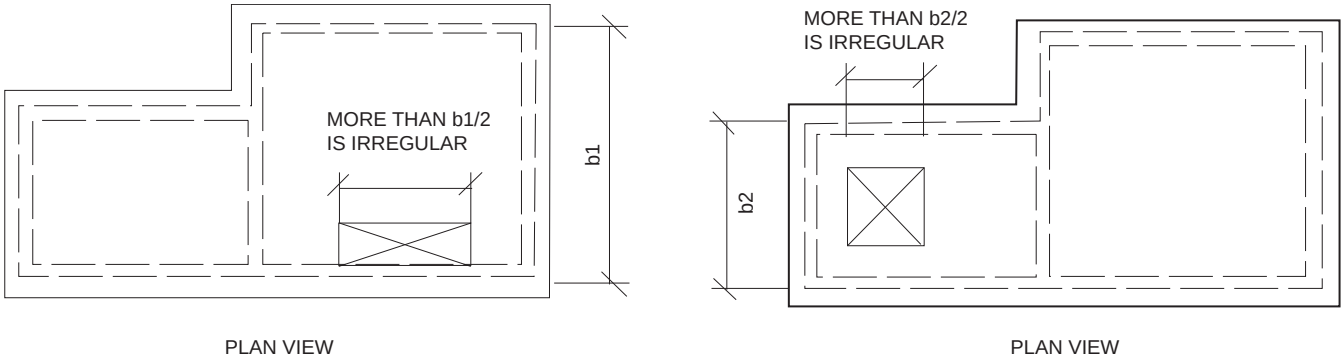

FIGURE 2308.4.4.1(2)
OPENING LIMITATIONS FOR FLOOR AND ROOF DIAPHRAGMS

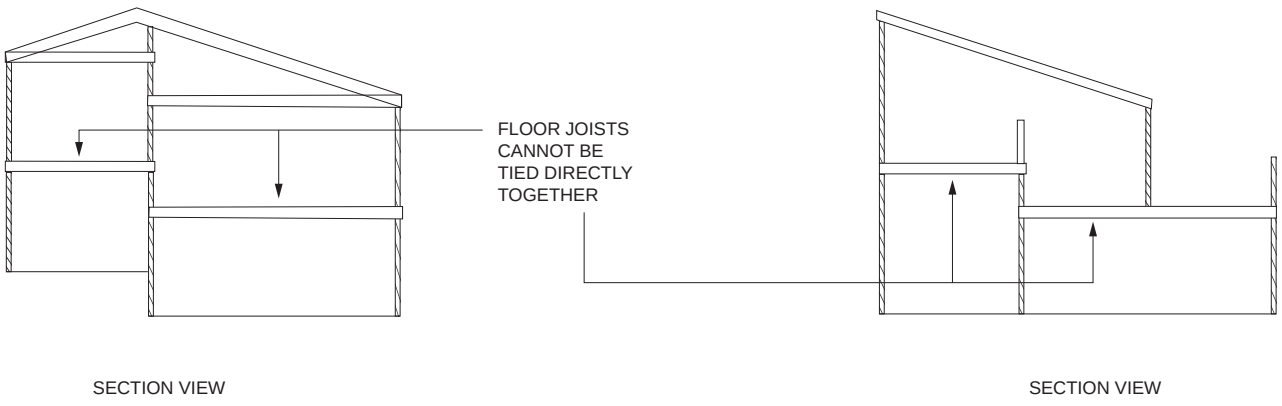

FIGURE 2308.4.4.2
PORTIONS OF FLOOR LEVEL OFFSET VERTICALLY

INTERNATIONAL CODE COUNCIL®
Copyright © 2019 ICC & NYSDOS. ALL RIGHTS RESERVED. Accessed by Lauren Gualdino (lgualdino@briarcliffmanor.org), (-) Order Number #100880972 on May 08, 2020 07:05 AM (PDT) pursuant to License Agreement with ICC & NYSDOS. No further reproduction, no

100880972

Studs shall be continuous from a support at the sole plate to a support at the top plate to resist loads perpendicular to the wall. The support shall be a foundation or floor, ceiling or roof diaphragm or shall be designed in accordance with accepted engineering practice.

Exception: Jack studs, trimmer studs and cripple studs at openings in walls that comply with Table 2308.4.1.1(1) or 2308.4.1.1(2).

2308.5.2 Framing details. Studs shall be placed with their wide dimension perpendicular to the wall. Not less than three studs shall be installed at each corner of an *exterior wall*.

Exceptions:

1. In interior nonbearing walls and partitions, studs are permitted to be set with the long dimension parallel to the wall.
2. At corners, two studs are permitted, provided that wood spacers or backup cleats of $^3/_8$-inch-thick (9.5 mm) wood structural panel, $^3/_8$-inch (9.5 mm) Type M "Exterior Glue" particleboard, 1-inch-thick (25 mm) lumber or other approved devices that will serve as an adequate backing for the attachment of facing materials are used. Where *fire-resistance ratings* or shear values are involved, wood spacers, backup cleats or other devices shall not be used unless specifically *approved* for such use.

2308.5.3 Plates and sills. Studs shall have plates and sills in accordance with this section.

2308.5.3.1 Bottom plate or sill. Studs shall have full bearing on a plate or sill. Plates or sills shall be not less than 2 inches (51 mm) nominal in thickness and have a width not less than the width of the wall studs.

2308.5.3.2 Top plates. Bearing and exterior wall studs shall be capped with double top plates installed to provide overlapping at corners and at intersections with other partitions. End joints in double top plates shall be offset not less than 48 inches (1219 mm), and shall be nailed in accordance with Table 2304.10.1. Plates shall be a nominal 2 inches (51 mm) in depth and have a width not less than the width of the studs.

Exception: A single top plate is permitted, provided that the plate is adequately tied at corners and intersecting walls by not less than the equivalent of 3-inch by 6-inch (76 mm by 152 mm) by 0.036-inch-thick (0.914 mm) galvanized steel plate that is nailed to each wall or segment of wall by six 8d [$2^1/_2$-inch × 0.113-inch (64-mm by 2.87 mm)] box nails or equivalent on each side of the joint. For the butt-joint splice between adjacent single top plates, not less than the equivalent of a 3-inch by 12-inch (76 mm by 304 mm) by 0.036-inch-thick (0.914 mm) galvanized steel plate that is nailed to each wall or segment of wall by 12 8d [$2^1/_2$-inch × 0.113-inch (64 mm by 2.87 mm)] box nails on each side of the joint shall be required, provided that the rafters, joists or trusses are centered over the studs with a tolerance of not more than 1 inch (25 mm). The top plate shall not be required over headers that are in the same plane and in line with the upper surface of the adjacent top plates and are tied to adjacent wall sections as required for the butt joint splice between adjacent single top plates.

Where bearing studs are spaced at 24-inch (610 mm) intervals, top plates are less than two 2-inch by 6-inch (51 mm by 152 mm) or two 3-inch by 4-inch (76 mm by 102 mm) members and the floor joists, floor trusses or roof trusses that they support are spaced at more than 16-inch (406 mm) intervals, such joists or trusses shall bear within 5 inches (127 mm) of the studs beneath or a third plate shall be installed.

2308.5.4 Nonload-bearing walls and partitions. In nonload-bearing walls and partitions, that are not part of a braced wall panel, studs shall be spaced not more than 24 inches (610 mm) on center. In interior nonload-bearing walls and partitions, studs are permitted to be set with the long dimension parallel to the wall. Where studs are set with the long dimensions parallel to the wall, use of utility grade lumber or studs exceeding 10 feet (3048 mm) is not permitted. Interior nonload-bearing partitions shall be

TABLE 2308.5.1
SIZE, HEIGHT AND SPACING OF WOOD STUDS[c]

STUD SIZE (inches)	BEARING WALLS				NONBEARING WALLS	
	Laterally unsupported stud height[a] (feet)	Supporting roof and ceiling only	Supporting one floor, roof and ceiling	Supporting two floors, roof and ceiling	Laterally unsupported stud height[a] (feet)	Spacing (inches)
		Spacing (inches)				
2 × 3[b]	—	—	—	—	10	16
2 × 4	10	24	16	—	14	24
3 × 4	10	24	24	16	14	24
2 × 5	10	24	24	—	16	24
2 × 6	10	24	24	16	20	24

For SI: 1 inch = 25.4 mm, 1 foot = 304.8 mm.

a. Listed heights are distances between points of lateral support placed perpendicular to the plane of the wall. Increases in unsupported height are permitted where justified by an analysis.

b. Shall not be used in exterior walls.

c. Utility-grade studs shall not be spaced more than 16 inches on center or support more than a roof and ceiling, or exceed 8 feet in height for exterior walls and load-bearing walls or 10 feet for interior nonload-bearing walls.

INTERNATIONAL CODE COUNCIL®
Copyright © 2019 ICC & NYSDOS. ALL RIGHTS RESERVED. Accessed by Lauren Gualdino (lgualdino@briarcliffmanor.org), (-) Order Number #100880972 on May 08, 2020 07:05 AM (PDT) pursuant to License Agreement with ICC & NYSDOS. No further reproduction, no

100880972

capped with not less than a single top plate installed to provide overlapping at corners and at intersections with other walls and partitions. The plate shall be continuously tied at joints by solid blocking not less than 16 inches (406 mm) in length and equal in size to the plate or by $^1/_2$-inch by $1^1/_2$-inch (12.7 mm by 38 mm) metal ties with spliced sections fastened with two 16d nails on each side of the joint.

2308.5.5 Openings in walls and partitions. Openings in exterior and interior walls and partitions shall comply with Sections 2308.5.5.1 through 2308.5.5.3.

2308.5.5.1 Openings in exterior bearing walls. Headers shall be provided over each opening in exterior bearing walls. The size and spans in Table 2308.4.1.1(1) are permitted to be used for one- and two-family *dwellings*. Headers for other buildings shall be designed in accordance with Section 2301.2, Item 1 or 2. Headers of two or more pieces of nominal 2-inch (51 mm) framing lumber set on edge shall be permitted in accordance with Table 2308.4.1.1(1) and nailed together in accordance with Table 2304.10.1 or of solid lumber of equivalent size.

Single-member headers of nominal 2-inch (51 mm) thickness shall be framed with a single flat 2-inch-nominal (51 mm) member or wall plate not less in width than the wall studs on the top and bottom of the header in accordance with Figures 2308.5.5.1(1) and 2308.5.5.1(2) and face nailed to the top and bottom of the header with 10d box nails [3 inches × 0.128 inches (76 mm × 3.3 mm)] spaced 12 inches (305 mm) on center.

Wall studs shall support the ends of the header in accordance with Table 2308.4.1.1(1). Each end of a lintel or header shall have a bearing length of not less than $1^1/_2$ inches (38 mm) for the full width of the lintel.

2308.5.5.2 Openings in interior bearing partitions. Headers shall be provided over each opening in interior bearing partitions as required in Section 2308.5.5.1. The spans in Table 2308.4.1.1(2) are permitted to be used. Wall studs shall support the ends of the header in accordance with Table 2308.4.1.1(1) or 2308.4.1.1(2), as applicable.

2308.5.5.3 Openings in interior nonbearing partitions. Openings in nonbearing partitions are permitted to be framed with single studs and headers. Each end of a lintel or header shall have a bearing length of not less than $1^1/_2$ inches (38 mm) for the full width of the lintel.

2308.5.6 Cripple walls. Foundation cripple walls shall be framed of studs that are not less than the size of the studding above and not less than 14 inches (356 mm) in length, or shall be framed of solid blocking. Where exceeding 4 feet (1219 mm) in height, such walls shall be framed of studs having the size required for an additional *story*. See Section 2308.6.6 for cripple wall bracing.

2308.5.7 Bridging. Unless covered by interior or *exterior wall coverings* or sheathing meeting the minimum requirements of this code, stud partitions or walls with studs having a height-to-least-thickness ratio exceeding 50 shall have bridging that is not less than 2 inches (51 mm) in thickness and of the same width as the studs fitted snugly and nailed thereto to provide adequate lateral support. Bridging shall be placed in every stud cavity and at a frequency such that studs so braced shall not have a height-to-least-thickness ratio exceeding 50 with the height of the stud measured between horizontal framing and bridging or between bridging, whichever is greater.

2308.5.8 Pipes in walls. Stud partitions containing plumbing, heating or other pipes shall be framed and the joists underneath spaced to provide proper clearance for the piping. Where a partition containing piping runs parallel to the floor joists, the joists underneath such partitions shall be doubled and spaced to permit the passage of pipes and shall be bridged. Where plumbing, heating or other pipes are placed in, or partly in, a partition, necessitating the cutting of the soles or plates, a metal tie not less than 0.058 inch (1.47 mm) (16 galvanized gage) and $1^1/_2$ inches (38 mm) in width shall be fastened to each plate across and to each side of the opening with not less than six 16d nails.

2308.5.9 Cutting and notching. In exterior walls and bearing partitions, wood studs are permitted to be cut or notched to a depth not exceeding 25 percent of the width of the stud. Cutting or notching of studs to a depth not greater than 40 percent of the width of the stud is permitted in nonbearing partitions not supporting loads other than the weight of the partition.

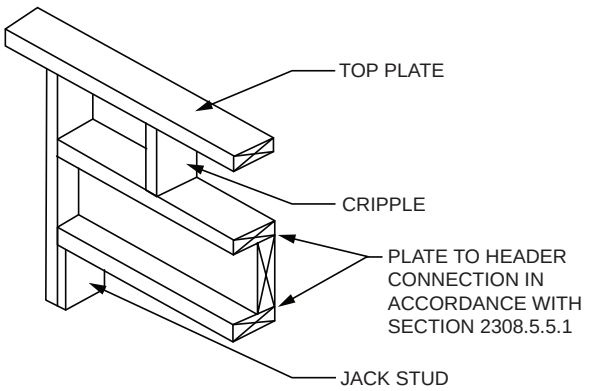

FIGURE 2308.5.5.1(1)
SINGLE-MEMBER HEADER IN EXTERIOR BEARING WALL

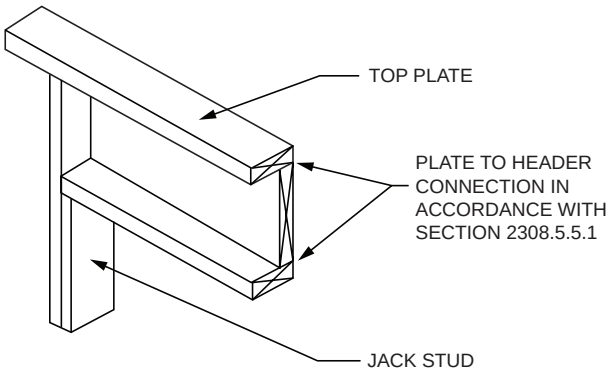

FIGURE 2308.5.5.1(2)
ALTERNATIVE SINGLE-MEMBER HEADER WITHOUT CRIPPLE

INTERNATIONAL CODE COUNCIL®
Copyright © 2019 ICC & NYSDOS. ALL RIGHTS RESERVED. Accessed by Lauren Gualdino (lgualdino@briarcliffmanor.org), (-) Order Number #100880972 on May 08, 2020 07:05 AM (PDT) pursuant to License Agreement with ICC & NYSDOS. No further reproduction, no

100880972

2308.5.10 Bored holes. Bored holes not greater than 40 percent of the stud width are permitted to be bored in any wood stud. Bored holes not greater than 60 percent of the stud width are permitted in nonbearing partitions or in any wall where each bored stud is doubled, provided that not more than two such successive doubled studs are so bored. The edge of a bored hole shall not be nearer than $^5/_8$ inch (15.9 mm) to the edge of the stud. Bored holes shall not be located at the same section of stud as a cut or notch.

2308.5.11 Exterior wall sheathing. Except where stucco construction that complies with Section 2510 is installed, the outside of exterior walls, including gables, of enclosed buildings shall be sheathed with one of the materials of the nominal thickness specified in Table 2308.5.11 with fasteners in accordance with the requirements of Section 2304.10 or fasteners designed in accordance with accepted engineering practice. Alternatively, sheathing materials and fasteners complying with Section 2304.6 shall be permitted.

2308.6 Wall bracing. Buildings shall be provided with exterior and interior braced wall lines as described in Sections 2308.6.1 through 2308.6.10.2.

2308.6.1 Braced wall lines. For the purpose of determining the amount and location of bracing required along each *story* level of a building, *braced wall lines* shall be designated as straight lines through the building plan in both the longitudinal and transverse direction and placed in accordance with Table 2308.6.1 and Figure 2308.6.1. Braced wall line spacing shall not exceed the distance specified in Table 2308.6.1. In structures assigned to *Seismic Design Category* D or E, braced wall lines shall intersect perpendicularly to each other.

2308.6.2 Braced wall panels. *Braced wall panels* shall be placed along *braced wall lines* in accordance with Table 2308.6.1 and Figure 2308.6.1 and as specified in Table 2308.6.3(1). A *braced wall panel* shall be located at each end of the *braced wall line* and at the corners of intersecting *braced wall lines* or shall begin within the maximum distance from the end of the *braced wall line* in accordance with Table 2308.6.1. *Braced wall panels* in a *braced wall line* shall not be offset from each other by more than 4 feet (1219 mm). *Braced wall panels* shall be clearly indicated on the plans.

2308.6.3 Braced wall panel methods. Construction of *braced wall panels* shall be by one or a combination of the methods in Table 2308.6.3(1). *Braced wall panel* length shall be in accordance with Section 2308.6.4 or 2308.6.5.

2308.6.4 Braced wall panel construction. For Methods DWB, WSP, SFB, PBS, PCP and HPS, each panel must be not less than 48 inches (1219 mm) in length, covering three stud spaces where studs are spaced 16 inches (406 mm) on center and covering two stud spaces where studs are spaced 24 inches (610 mm) on center. *Braced wall panels* less than 48 inches (1219 mm) in length shall not contribute toward the amount of required bracing. *Braced wall panels* that are longer than the required length shall be credited for their actual length. For Method GB, each panel must be not less than 96 inches (2438 mm) in length where applied to one side of the studs or 48 inches (1219 mm) in length where applied to both sides.

Vertical joints of panel sheathing shall occur over studs and adjacent panel joints shall be nailed to common framing members. Horizontal joints shall occur over blocking or other framing equal in size to the studding except where waived by the installation requirements for the specific sheathing materials. Sole plates shall be nailed to the floor framing in accordance with Section 2308.6.7 and top plates shall be connected to the framing above in accordance with Section 2308.6.7.2. Where joists are perpendicular to braced wall lines above, blocking shall be provided under and in line with the braced *wall panels*.

2308.6.5 Alternative bracing. An alternate braced wall (ABW) or a portal frame with hold-downs (PFH) described in this section is permitted to substitute for a 48-inch (1219 mm) *braced wall panel* of Method DWB, WSP, SFB, PBS, PCP or HPS. For Method GB, each 96-inch (2438 mm) section (applied to one face) or 48-inch (1219 mm) section (applied to both faces) or portion thereof required by Table 2308.6.1 is permitted to be replaced by one panel constructed in accordance with Method ABW or PFH.

2308.6.5.1. Alternate braced wall (ABW). An ABW shall be constructed in accordance with this section and Figure 2308.6.5.1. In one-story buildings, each panel shall have a length of not less than 2 feet 8 inches (813 mm) and a height of not more than 10 feet (3048 mm).

TABLE 2308.5.11
MINIMUM THICKNESS OF WALL SHEATHING

SHEATHING TYPE	MINIMUM THICKNESS	MAXIMUM WALL STUD SPACING
Diagonal wood boards	$^5/_8$ inch	24 inches on center
Structural fiberboard	$^1/_2$ inch	16 inches on center
Wood structural panel	In accordance with Tables 2308.6.3(2) and 2308.6.3(3)	—
M-S “Exterior Glue” and M-2 “Exterior Glue” particleboard	In accordance with Section 2306.3 and Table 2308.6.3(4)	—
Gypsum sheathing	$^1/_2$ inch	16 inches on center
Reinforced cement mortar	1 inch	24 inches on center
Hardboard panel siding	In accordance with Table 2308.6.3(5)	—

For SI: 1 inch = 25.4 mm.

INTERNATIONAL CODE COUNCIL®
Copyright © 2019 ICC & NYSDOS. ALL RIGHTS RESERVED. Accessed by Lauren Gualdino (lgualdino@briarcliffmanor.org), (-) Order Number #100880972 on May 08, 2020 07:05 AM (PDT) pursuant to License Agreement with ICC & NYSDOS. No further reproduction, no

100880972

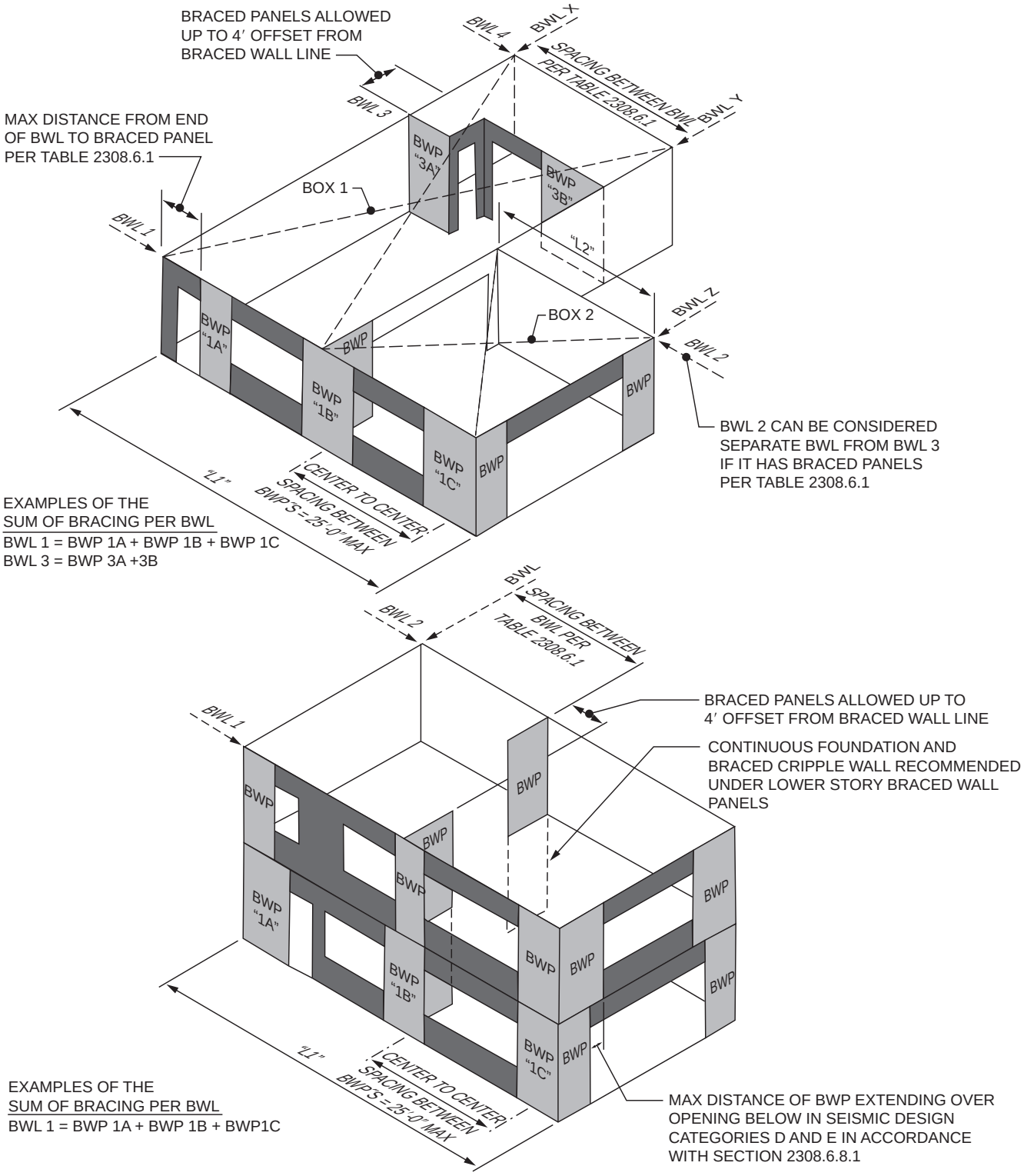

For SI: 1 foot = 304.8 mm.

FIGURE 2308.6.1
BASIC COMPONENTS OF THE LATERAL BRACING SYSTEM

INTERNATIONAL CODE COUNCIL®
Copyright © 2019 ICC & NYSDOS. ALL RIGHTS RESERVED. Accessed by Lauren Gualdino (lgualdino@briarcliffmanor.org), (-) Order Number #100880972 on May 08, 2020 07:05 AM (PDT) pursuant to License Agreement with ICC & NYSDOS. No further reproduction, no

100880972

TABLE 2308.6.1[a]
WALL BRACING REQUIREMENTS

SEISMIC DESIGN CATEGORY	STORY CONDITION (SEE SECTION 2308.2)	MAXIMUM SPACING OF BRACED WALL LINES	BRACED PANEL LOCATION, SPACING (O.C.) AND MINIMUM PERCENTAGE (X)			MAXIMUM DISTANCE OF BRACED WALL PANELS FROM EACH END OF BRACED WALL LINE
			Bracing method[b]			
			LIB	DWB, WSP	SFB, PBS, PCP, HPS, GB[c, d]	
A and B	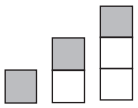	35′- 0″	Each end and ≤ 25′- 0″ o.c.	Each end and ≤ 25′- 0″ o.c.	Each end and ≤ 25′- 0″ o.c.	12′- 6″
	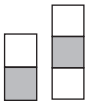	35′- 0″	Each end and ≤ 25′- 0″ o.c.	Each end and ≤ 25′- 0″ o.c.	Each end and ≤ 25′- 0″ o.c.	12′- 6″
		35′- 0″	NP	Each end and ≤ 25′- 0″ o.c.	Each end and ≤ 25′- 0″ o.c.	12′- 6″
C		35′- 0″	NP	Each end and ≤ 25′- 0″ o.c.	Each end and ≤ 25′- 0″ o.c.	12′- 6″
		35′- 0″	NP	Each end and ≤ 25′- 0″ o.c. (minimum 25% of wall length)[e]	Each end and ≤ 25′- 0″ o.c. (minimum 25% of wall length)[e]	12′- 6″
D and E		25′- 0″	NP	S_{DS} < 0.50: Each end and ≤ 25′- 0″ o.c. (minimum 21% of wall length)[e]	S_{DS} < 0.50: Each end and ≤ 25′- 0″ o.c. (minimum 43% of wall length)[e]	8′- 0″
				0.5 ≤ S_{DS} < 0.75: Each end and ≤ 25′- 0″ o.c. (minimum 32% of wall length)[e]	0.5 ≤ S_{DS} < 0.75: Each end and ≤ 25′- 0″ o.c. (minimum 59% of wall length)[e]	
				0.75 ≤ S_{DS} ≤ 1.00: Each end and ≤ 25′- 0″ o.c. (minimum 37% of wall length)[e]	0.75 ≤ S_{DS} ≤ 1.00: Each end and ≤ 25′- 0″ o.c. (minimum 75% of wall length)[e]	
				S_{DS} > 1.00: Each end and ≤ 25′- 0″ o.c. (minimum 48% of wall length)[e]	S_{DS} > 1.00: Each end and ≤ 25′- 0″ o.c. (minimum 100% of wall length)[e]	

For SI: 1 inch = 25.4 mm, 1 foot = 304.8 mm.

NP = Not Permitted.

a. This table specifies minimum requirements for braced wall panels along interior or exterior braced wall lines.

b. See Section 2308.6.3 for full description of bracing methods.

c. For Method GB, gypsum wallboard applied to framing supports that are spaced at 16 inches on center.

d. The required lengths shall be doubled for gypsum board applied to only one face of a braced wall panel.

e. Percentage shown represents the minimum amount of bracing required along the building length (or wall length if the structure has an irregular shape).

INTERNATIONAL CODE COUNCIL®
Copyright © 2019 ICC & NYSDOS. ALL RIGHTS RESERVED. Accessed by Lauren Gualdino (lgualdino@briarcliffmanor.org), (-) Order Number #100880972 on May 08, 2020 07:05 AM (PDT) pursuant to License Agreement with ICC & NYSDOS. No further reproduction, no

100880972

Each panel shall be sheathed on one face with $^3/_8$-inch (3.2 mm) minimum-thickness wood structural panel sheathing nailed with 8d common or galvanized box nails in accordance with Table 2304.10.1 and blocked at wood structural panel edges. Two anchor bolts installed in accordance with Section 2308.3.1 shall be provided in each panel. Anchor bolts shall be placed at each panel outside quarter points. Each panel end stud shall have a hold-down device fastened to the foundation, capable of providing an *approved* uplift capacity of not less than 1,800 pounds (8006 N). The hold-down device shall be installed in accordance with the manufacturer's recommendations. The ABW shall be supported directly on a foundation or on floor framing supported directly on a foundation that is continuous across the entire length of the *braced wall line*. This foundation shall be reinforced with not less than one No. 4 bar top and bottom. Where the continuous foundation is required to have a depth greater than 12 inches (305 mm), a minimum 12-inch by 12-inch (305 mm by 305 mm) continuous footing or turned-down slab edge is permitted at door openings in the *braced wall line*. This continuous footing or turned-down slab edge shall be reinforced with not less than one No. 4 bar top and bottom. This reinforcement shall be lapped 15 inches (381 mm) with the reinforcement required in the continuous foundation located directly under the *braced wall line*.

Where the ABW is installed at the first *story* of two-story buildings, the wood structural panel sheathing shall be provided on both faces, three anchor bolts shall be placed at one-quarter points and tie-down device uplift capacity shall be not less than 3,000 pounds (13 344 N).

2308.6.5.2 Portal frame with hold-downs (PFH). A PFH shall be constructed in accordance with this section and Figure 2308.6.5.2. The adjacent door or window opening shall have a full-length header.

In one-story buildings, each panel shall have a length of not less than 16 inches (406 mm) and a height of not more than 10 feet (3048 mm). Each panel shall be sheathed on one face with a single layer of $^3/_8$-inch (9.5 mm) minimum-thickness wood structural panel sheathing nailed with 8d common or galvanized box nails in accordance with Figure 2308.6.5.2. The wood structural panel sheathing shall extend up over the solid sawn or glued-laminated header and shall be nailed in accordance with Figure 2308.6.5.2. A built-up header consisting of not fewer than two 2-inch by 12-inch (51 mm by 305 mm) boards, fastened in accordance with Item 24 of Table 2304.10.1 shall be permitted to be used. A spacer, if used, shall be placed on the side of the built-up beam opposite the wood structural panel sheathing. The header shall extend between the inside faces of the first full-length outer studs of each panel. The clear span of the header between the inner studs of each panel shall be not less than 6 feet (1829 mm) and not more than 18 feet (5486 mm) in length. A strap with an uplift capacity of not less than 1,000 pounds (4,400 N) shall fasten the header to the inner studs

TABLE 2308.6.3(1)
BRACING METHODS

METHODS, MATERIAL	MINIMUM THICKNESS	FIGURE	CONNECTION CRITERIA[a]	
			Fasteners	Spacing
LIB[a] Let-in-bracing	1″ × 4″ wood or approved metal straps attached at 45° to 60° angles to studs at maximum of 16″ o.c.	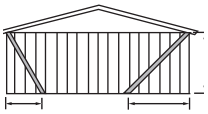	Table 2304.10.1	Wood: per stud plus top and bottom plates
			Metal strap: installed in accordance with manufacturer's recommendations	Metal strap: installed in accordance with manufacturer's recommendations
DWB Diagonal wood boards	$^3/_4$″ thick (1″ nominal) × 6″ minimum width to studs at maximum of 24″ o.c.	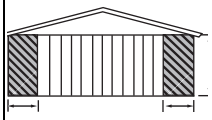	Table 2304.10.1	Per stud
WSP Wood structural panel	$^3/_8$″ in accordance with Table 2308.6.3(2) or 2308.6.3(3)	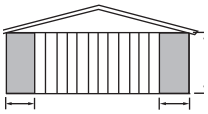	Table 2304.10.1	6″ edges 12″ field
SFB Structural fiberboard sheathing	$^1/_2$″ in accordance with Table 2304.10.1 to studs at maximum 16″ o.c.		Table 2304.10.1	3″ edges 6″ field

(continued)

INTERNATIONAL CODE COUNCIL®
Copyright © 2019 ICC & NYSDOS. ALL RIGHTS RESERVED. Accessed by Lauren Gualdino (lgualdino@briarcliffmanor.org), (-) Order Number #100880972 on May 08, 2020 07:05 AM (PDT) pursuant to License Agreement with ICC & NYSDOS. No further reproduction, no

100880972

TABLE 2308.6.3(1)—continued
BRACING METHODS

METHODS, MATERIAL	MINIMUM THICKNESS	FIGURE	CONNECTION CRITERIA[a]	
			Fasteners	Spacing
GB Gypsum board (Double sided)	$^1/_2$″ or $^5/_8$″ by not less than 4′ wide to studs at maximum of 24″ o.c.	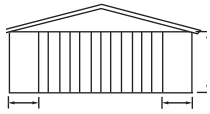	Section 2506.2 for exterior and interior sheathing: 5d annual ringed cooler nails ($1^5/_8$″ × 0.086″) or $1^1/_4$″ screws (Type W or S) for $^1/_2$″ gypsum board or $1^5/_8$″ screws (Type W or S) for $^5/_8$″ gypsum board	For all braced wall panel locations: 7″ o.c. along panel edges (including top and bottom plates) and 7″ o.c. in the field
PBS Particleboard sheathing	$^3/_8$″ or $^1/_2$″ in accordance with Table 2308.6.3(4) to studs at maximum of 16″ o.c.	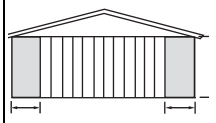	6d common (2″ long × 0.113″ dia.) nails for $^3/_8$″ thick sheathing or 8d common ($2^1/_2$″ long × 0.131″ dia.) nails for $^1/_2$″ thick sheathing	3″ edges 6″ field
PCP Portland cement plaster	Section 2510 to studs at maximum of 16″ o.c.	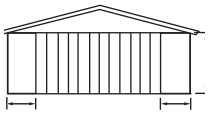	$1^1/_2$″ long, 11 gage, $^7/_{16}$″ dia. head nails or $^7/_8$″ long, 16 gage staples	6″ o.c. on all framing members
HPS Hardboard panel siding	$^7/_{16}$″ in accordance with Table 2308.6.3(5)	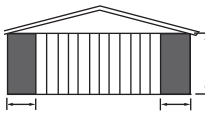	Table 2304.10.1	4″ edges 8″ field
ABW Alternate braced wall	$^3/_8$″	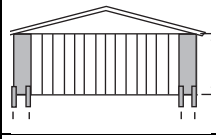	Figure 2308.6.5.1 and Section 2308.6.5.1	Figure 2308.6.5.1
PFH Portal frame with hold-downs	$^3/_8$″	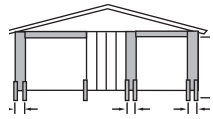	Figure 2308.6.5.2 and Section 2308.6.5.2	Figure 2308.6.5.2

For SI: 1 foot = 304.8 mm, 1 degree = 0.01745 rad.

a. Method LIB shall have gypsum board fastened to one or more side(s) with nails or screws.

TABLE 2308.6.3(2)
EXPOSED PLYWOOD PANEL SIDING

MINIMUM THICKNESS[a] (inch)	MINIMUM NUMBER OF PLIES	STUD SPACING (inches) Plywood siding applied directly to studs or over sheathing
$^3/_8$	3	16[b]
$^1/_2$	4	24

For SI: 1 inch = 25.4 mm.

a. Thickness of grooved panels is measured at bottom of grooves.

b. Spans are permitted to be 24 inches if plywood siding applied with face grain perpendicular to studs or over one of the following: 1-inch board sheathing; $^7/_{16}$-inch wood structural panel sheathing; or $^3/_8$-inch wood structural panel sheathing with strength axis (which is the long direction of the panel unless otherwise marked) of sheathing perpendicular to studs.

INTERNATIONAL CODE COUNCIL®
Copyright © 2019 ICC & NYSDOS. ALL RIGHTS RESERVED. Accessed by Lauren Gualdino (lgualdino@briarcliffmanor.org), (-) Order Number #100880972 on May 08, 2020 07:05 AM (PDT) pursuant to License Agreement with ICC & NYSDOS. No further reproduction, no

100880972

TABLE 2308.6.3(3)
WOOD STRUCTURAL PANEL WALL SHEATHING[b]
(Not exposed to the weather, strength axis parallel or perpendicular to studs except as Indicated)

MINIMUM THICKNESS (inch)	PANEL SPAN RATING	STUD SPACING (inches)		
		Siding nailed to studs	Nailable sheathing	
			Sheathing parallel to studs	Sheathing perpendicular to studs
3/8, 15/32, 1/2	16/0, 20/0, 24/0, 32/16 Wall—24″ o.c.	24	16	24
7/16, 15/32, 1/2	24/0, 24/16, 32/16 Wall—24″ o.c.	24	24[a]	24

For SI: 1 inch = 25.4 mm.

a. Plywood shall consist of four or more plies.

b. Blocking of horizontal joints shall not be required except as specified in Section 2308.6.4.

TABLE 2308.6.3(4)
ALLOWABLE SPANS FOR PARTICLEBOARD WALL SHEATHING
(Not exposed to the weather, long dimension of the panel parallel or perpendicular to studs)

GRADE	THICKNESS (inch)	STUD SPACING (inches)	
		Siding nailed to studs	Sheathing under coverings specified in Section 2308.6.3 parallel or perpendicular to studs
M-S "Exterior Glue" and M-2 "Exterior Glue"	3/8	16	—
	1/2	16	16

For SI: 1 inch = 25.4 mm.

TABLE 2308.6.3(5)
HARDBOARD SIDING

SIDING	MINIMUM NOMINAL THICKNESS (inch)	2 × 4 FRAMING MAXIMUM SPACING	NAIL SIZE[a, b, d]	NAIL SPACING	
				General	Bracing panels[c]
1. Lap siding					
Direct to studs	3/8	16″ o.c.	8d	16″ o.c.	Not applicable
Over sheathing	3/8	16″ o.c.	10d	16″ o.c.	Not applicable
2. Square edge panel siding					
Direct to studs	3/8	24″ o.c.	6d	6″ o.c. edges; 12″ o.c. at intermediate supports	4″ o.c. edges; 8″ o.c. at intermediate supports
Over sheathing	3/8	24″ o.c.	8d	6″ o.c. edges; 12″ o.c. at intermediate supports	4″ o.c. edges; 8″ o.c. at intermediate supports
3. Shiplap edge panel siding					
Direct to studs	3/8	16″ o.c.	6d	6″ o.c. edges; 12″ o.c. at intermediate supports	4″ o.c. edges; 8″ o.c. at intermediate supports
Over sheathing	3/8	16″ o.c.	8d	6″ o.c. edges; 12″ o.c. at intermediate supports	4″ o.c. edges; 8″ o.c. at intermediate supports

For SI: 1 inch = 25.4 mm.

a. Nails shall be corrosion resistant.

b. Minimum acceptable nail dimensions:

c. Where used to comply with Section 2308.6.

d. Nail length must accommodate the sheathing and penetrate framing 1 1/2 inches.

	Panel Siding (inch)	Lap Siding (inch)
Shank diameter	0.092	0.099
Head diameter	0.225	0.240

INTERNATIONAL CODE COUNCIL®
Copyright © 2019 ICC & NYSDOS. ALL RIGHTS RESERVED. Accessed by Lauren Gualdino (lgualdino@briarcliffmanor.org), (-) Order Number #100880972 on May 08, 2020 07:05 AM (PDT) pursuant to License Agreement with ICC & NYSDOS. No further reproduction, no

100880972

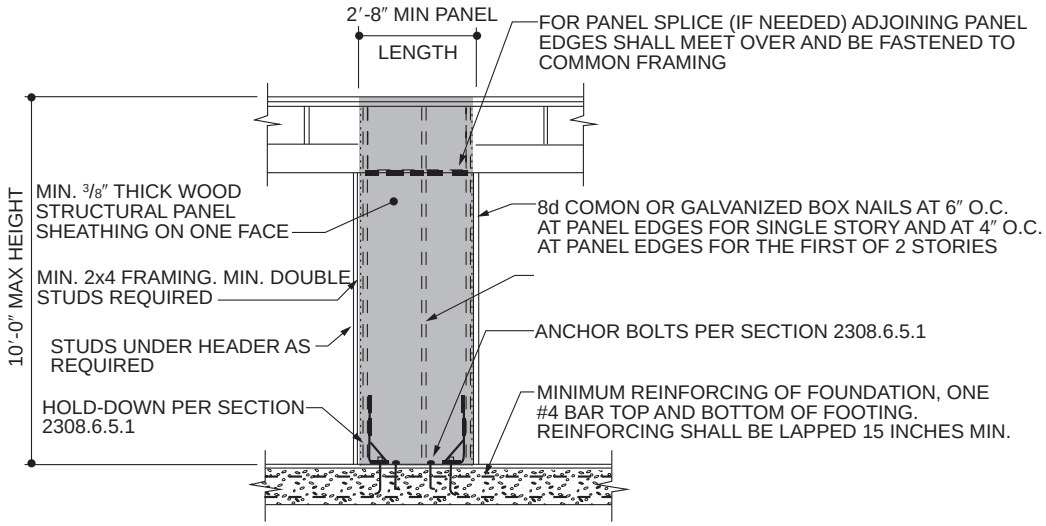

For SI: 1 inch = 25.4 mm, 1 foot = 304.8 mm.

FIGURE 2308.6.5.1
ALTERNATE BRACED WALL PANEL (ABW)

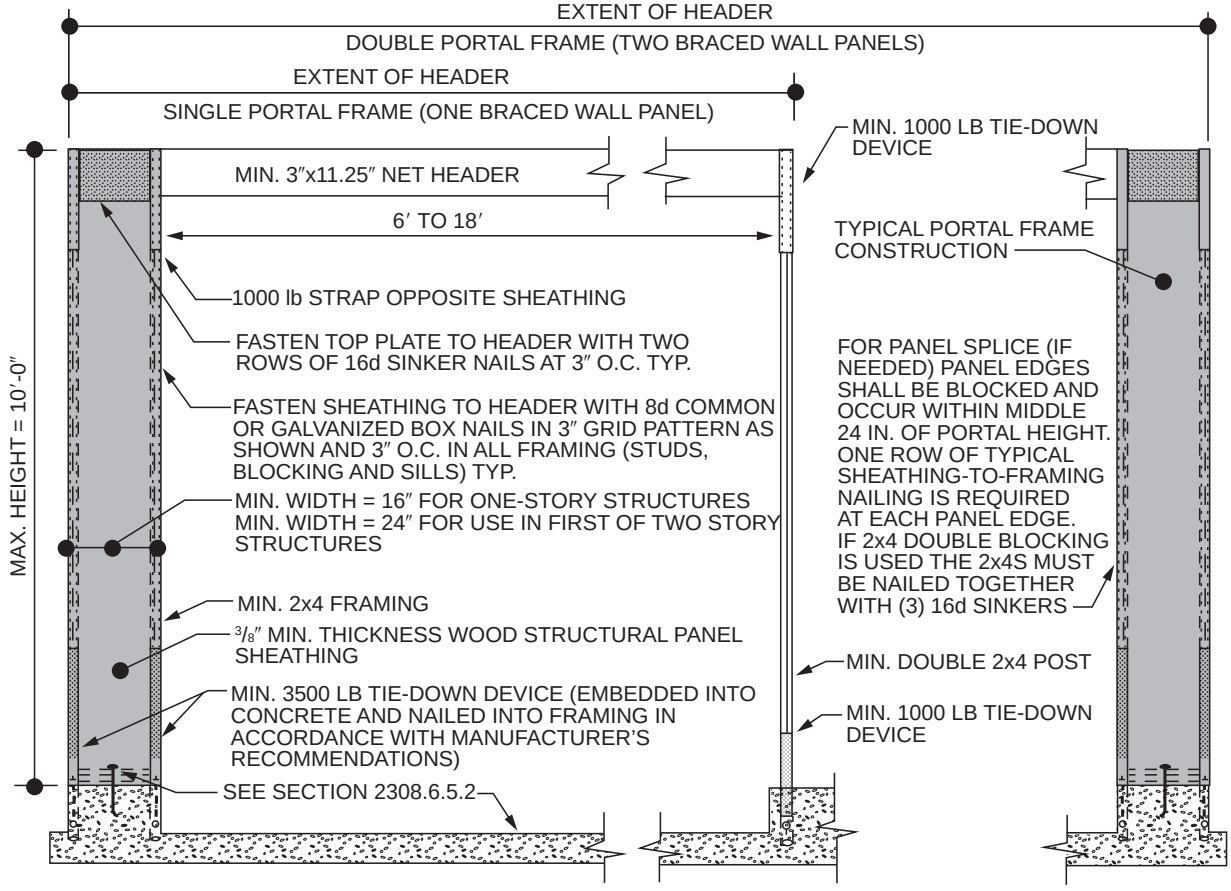

For SI: 1 inch = 25.4 mm, 1 foot = 304.8 mm, 1 pound = 4.448 N.

FIGURE 2308.6.5.2
PORTAL FRAME WITH HOLD-DOWNS (PFH)

INTERNATIONAL CODE COUNCIL®
Copyright © 2019 ICC & NYSDOS. ALL RIGHTS RESERVED. Accessed by Lauren Gualdino (lgualdino@briarcliffmanor.org), (-) Order Number #100880972 on May 08, 2020 07:05 AM (PDT) pursuant to License Agreement with ICC & NYSDOS. No further reproduction, no

100880972

opposite the sheathing. One anchor bolt not less than $^5/_8$ inch (15.9 mm) diameter and installed in accordance with Section 2308.3.1 shall be provided in the center of each sill plate. The studs at each end of the panel shall have a hold-down device fastened to the foundation with an uplift capacity of not less than 3,500 pounds (15 570 N).

Where a panel is located on one side of the opening, the header shall extend between the inside face of the first full-length stud of the panel and the bearing studs at the other end of the opening. A strap with an uplift capacity of not less than 1,000 pounds (4400 N) shall fasten the header to the bearing studs. The bearing studs shall have a hold-down device fastened to the foundation with an uplift capacity of not less than 1,000 pounds (4400 N). The hold-down devices shall be an embedded strap type, installed in accordance with the manufacturer's recommendations. The PFH panels shall be supported directly on a foundation that is continuous across the entire length of the braced wall line. This foundation shall be reinforced with not less than one No. 4 bar top and bottom. Where the continuous foundation is required to have a depth greater than 12 inches (305 mm), a minimum 12-inch by 12-inch (305 mm by 305 mm) continuous footing or turned-down slab edge is permitted at door openings in the braced wall line. This continuous footing or turned-down slab edge shall be reinforced with not less than one No. 4 bar top and bottom. This reinforcement shall be lapped not less than 15 inches (381 mm) with the reinforcement required in the continuous foundation located directly under the braced wall line.

Where a PFH is installed at the first *story* of two-story buildings, each panel shall have a length of not less than 24 inches (610 mm).

2308.6.6 Cripple wall bracing. Cripple walls shall be braced in accordance with Section 2308.6.6.1 or 2308.6.6.2.

2308.6.6.1 Cripple wall bracing in Seismic Design Categories A, B and C. For the purposes of this section, cripple walls in *Seismic Design Categories* A, B and C having a stud height exceeding 14 inches (356 mm) shall be considered to be a *story* and shall be braced in accordance with Table 2308.6.1. Spacing of edge nailing for required cripple wall bracing shall not exceed 6 inches (152 mm) on center along the foundation plate and the top plate of the cripple wall. Nail size, nail spacing for field nailing and more restrictive boundary nailing requirements shall be as required elsewhere in the code for the specific bracing material used.

2308.6.6.2 Cripple wall bracing in Seismic Design Categories D and E. For the purposes of this section, cripple walls in *Seismic Design Categories* D and E having a stud height exceeding 14 inches (356 mm) shall be considered to be a *story* and shall be braced in accordance with Table 2308.6.1. Where interior braced wall lines occur without a continuous foundation below, the length of parallel exterior cripple wall bracing shall be one and one-half times the lengths required by Table 2308.6.1. Where the cripple wall sheathing type used is Method WSP or DWB and this additional length of bracing cannot be provided, the capacity of WSP or DWB sheathing shall be increased by reducing the spacing of fasteners along the perimeter of each piece of sheathing to 4 inches (102 mm) on center.

2308.6.7 Connections of braced wall panels. *Braced wall panel* joints shall occur over studs or blocking. *Braced wall panels* shall be fastened to studs, top and bottom plates and at panel edges. *Braced wall panels* shall be applied to nominal 2-inch-wide [actual $1^1/_2$-inch (38 mm)] or larger stud framing.

2308.6.7.1 Bottom plate connection. *Braced wall line* bottom plates shall be connected to joists or full-depth blocking below in accordance with Table 2304.10.1, or to foundations in accordance with Section 2308.6.7.3.

2308.6.7.2 Top plate connection. Where joists or rafters are used, *braced wall line* top plates shall be fastened over the full length of the braced wall line to joists, rafters, rim boards or full-depth blocking above in accordance with Table 2304.10.1, as applicable, based on the orientation of the joists or rafters to the *braced wall line*. Blocking shall be not less than 2 inches (51 mm) in nominal thickness and shall be fastened to the *braced wall line* top plate as specified in Table 2304.10.1. Notching or drilling of holes in blocking in accordance with the requirements of Section 2308.4.2.4 or 2308.7.4 shall be permitted.

At exterior gable end walls, *braced wall panel* sheathing in the top *story* shall be extended and fastened to the roof framing where the spacing between parallel exterior braced wall lines is greater than 50 feet (15 240 mm).

Where roof trusses are used and are installed perpendicular to an exterior *braced wall line*, lateral forces shall be transferred from the roof diaphragm to the braced wall over the full length of the *braced wall line* by blocking of the ends of the trusses or by other *approved* methods providing equivalent lateral force transfer. Blocking shall be not less than 2 inches (51 mm) in nominal thickness and equal to the depth of the truss at the wall line and shall be fastened to the braced wall line top plate as specified in Table 2304.10.1. Notching or drilling of holes in blocking in accordance with the requirements of Section 2308.4.2.4 or 2308.7.4 shall be permitted.

Exception: Where the roof sheathing is greater than $9^1/_4$ inches (235 mm) above the top plate, solid blocking is not required where the framing members are connected using one of the following methods:

1. In accordance with Figure 2308.6.7.2(1).
2. In accordance with Figure 2308.6.7.2(2).
3. Full-height engineered blocking panels designed for values listed in AWC WFCM.

INTERNATIONAL CODE COUNCIL®
Copyright © 2019 ICC & NYSDOS. ALL RIGHTS RESERVED. Accessed by Lauren Gualdino (lgualdino@briarcliffmanor.org), (-) Order Number #100880972 on May 08, 2020 07:05 AM (PDT) pursuant to License Agreement with ICC & NYSDOS. No further reproduction, no

100880972

4. A design in accordance with accepted engineering methods.

2308.6.7.3 Sill anchorage. Where foundations are required by Section 2308.6.8, braced wall line sills shall be anchored to concrete or masonry foundations. Such anchorage shall conform to the requirements of Section 2308.3. The anchors shall be distributed along the length of the braced wall line. Other anchorage devices having equivalent capacity are permitted.

2308.6.7.4 Anchorage to all-wood foundations. Where all-wood foundations are used, the force transfer from the *braced wall lines* shall be determined based on calculation and shall have a capacity that is not less than the connections required by Section 2308.3.

2308.6.8 Braced wall line and diaphragm support. *Braced wall lines* and floor and roof diaphragms shall be supported in accordance with this section.

2308.6.8.1 Foundation requirements. *Braced wall lines* shall be supported by continuous foundations.

Exception: For structures with a maximum plan dimension not more than 50 feet (15 240 mm), continuous foundations are required at exterior walls only.

For structures in *Seismic Design Categories* D and E, exterior *braced wall panels* shall be in the same plane vertically with the foundation or the portion of the structure containing the offset shall be designed in accordance with accepted engineering practice and Section 2308.1.1.

Exceptions:

1. Exterior *braced wall panels* shall be permitted to be located not more than 4 feet (1219 mm) from the foundation below where supported by a floor constructed in accordance with all of the following:
   1.1. Cantilevers or setbacks shall not exceed four times the nominal depth of the floor joists.
   1.2. Floor joists shall be 2 inches by 10 inches (51 mm by 254 mm) or larger and spaced not more than 16 inches (406 mm) on center.
   1.3. The ratio of the back span to the cantilever shall be not less than 2 to 1.
   1.4. Floor joists at ends of *braced wall panels* shall be doubled.
   1.5. A continuous rim joist shall be connected to the ends of cantilevered joists. The rim joist is permitted to be spliced using a metal tie not less than 0.058 inch (1.47 mm) (16 galvanized gage) and $1^1/_2$ inches (38 mm) in width fastened with six 16d common nails on each side. The metal tie shall have a yield stress not less than 33,000 psi (227 MPa).
   1.6. Joists at setbacks or the end of cantilevered joists shall not carry gravity loads from more than a single *story* having uniform wall and roof loads nor carry the reactions from headers having a span of 8 feet (2438 mm) or more.
2. The end of a required *braced wall panel* shall be allowed to extend not more than 1 foot (305 mm) over an opening in the wall below. This requirement is applicable to *braced wall panels* offset in plane and *braced wall panels* offset out of plane as permitted by Exception 1. *Braced wall panels* are permitted to extend over an opening not more than 8 feet (2438 mm) in width where the header is a 4-inch by 12-inch (102 mm by 305 mm) or larger member.

2308.6.8.2 Floor and roof diaphragm support in Seismic Design Categories D and E. In structures assigned to *Seismic Design Categories* D or E, floor and roof diaphragms shall be laterally supported by *braced wall lines* on all edges and connected in accordance with Section 2308.6.7 [see Figure 2308.6.8.2(1)].

Exception: Portions of roofs or floors that do not support *braced wall panels* above are permitted to extend up to 6 feet (1829 mm) beyond a *braced wall line* [see Figure 2308.6.8.2(2)] provided that the framing members are connected to the *braced wall line* below in accordance with Section 2308.6.7.

2308.6.8.3 Stepped footings in Seismic Design Categories B, C, D and E. In *Seismic Design Categories* B, C, D and E, where the height of a required *braced wall panel* extending from foundation to floor above varies more than 4 feet (1219 mm), the following construction shall be used:

1. Where the bottom of the footing is stepped and the lowest floor framing rests directly on a sill bolted to the footings, the sill shall be anchored as required in Section 2308.3.
2. Where the lowest floor framing rests directly on a sill bolted to a footing not less than 8 feet (2438 mm) in length along a line of bracing, the line shall be considered to be braced. The double plate of the cripple stud wall beyond the segment of footing extending to the lowest framed floor shall be spliced to the sill plate with metal ties, one on each side of the sill and plate. The metal ties shall be not less than 0.058 inch [1.47 mm (16 galvanized gage)] by $1^1/_2$ inches (38 mm) in width by 48 inches (1219 mm) with eight 16d common nails on each side of the splice location (see Figure 2308.6.8.3). The metal tie shall have a yield stress not less than 33,000 pounds per square inch (psi) (227 MPa).
3. Where cripple walls occur between the top of the footing and the lowest floor framing, the bracing requirements for a *story* shall apply.

2308.6.9 Attachment of sheathing. Fastening of *braced wall panel* sheathing shall be not less than that prescribed

INTERNATIONAL CODE COUNCIL®
Copyright © 2019 ICC & NYSDOS. ALL RIGHTS RESERVED. Accessed by Lauren Gualdino (lgualdino@briarcliffmanor.org), (-) Order Number #100880972 on May 08, 2020 07:05 AM (PDT) pursuant to License Agreement with ICC & NYSDOS. No further reproduction, no

100880972

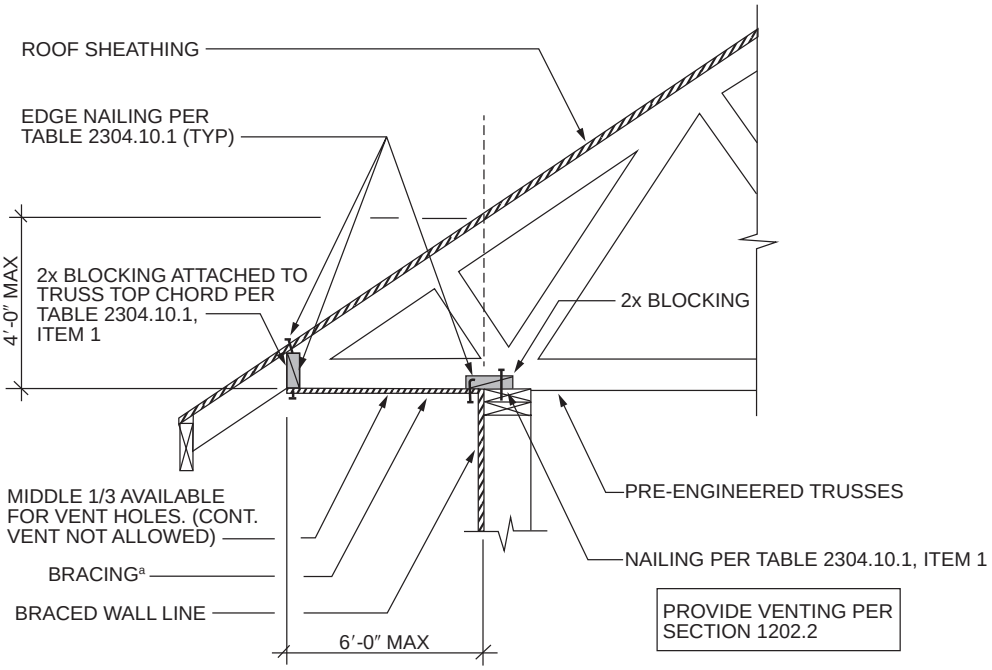

a. Methods of bracing shall be as described in Table 2308.6.3(1) DWB, WSP, SFB, GB, PBS, PCP or HPS.

For SI: 1 foot = 304.8 mm.

FIGURE 2308.6.7.2(1)
BRACED WALL LINE TOP PLATE CONNECTION

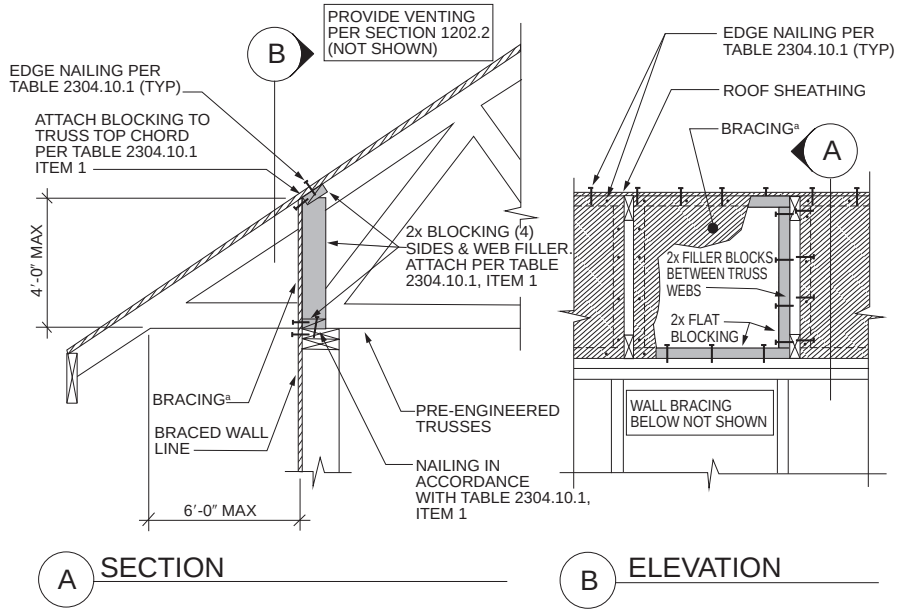

a. Methods of bracing shall be as described in Table 2308.6.3(1) DWB, WSP, SFB, GB, PBS, PCP or HPS.

For SI: 1 foot = 304.8 mm.

FIGURE 2308.6.7.2(2)
BRACED WALL PANEL TOP PLATE CONNECTION

INTERNATIONAL CODE COUNCIL®
Copyright © 2019 ICC & NYSDOS. ALL RIGHTS RESERVED. Accessed by Lauren Gualdino (lgualdino@briarcliffmanor.org), (-) Order Number #100880972 on May 08, 2020 07:05 AM (PDT) pursuant to License Agreement with ICC & NYSDOS. No further reproduction, no

100880972

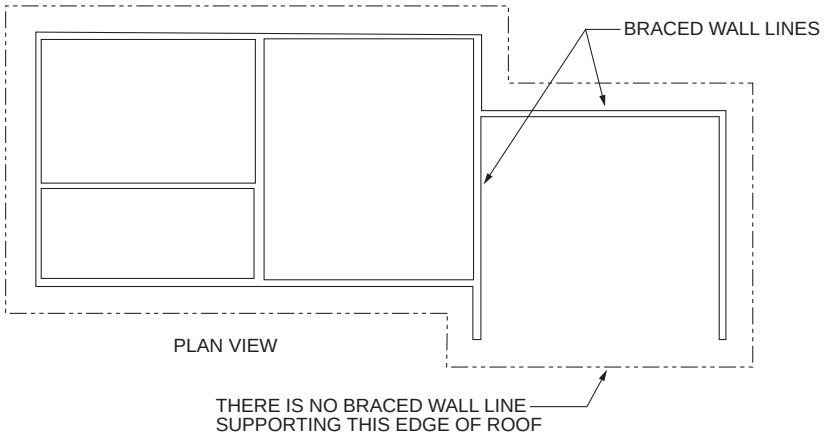

FIGURE 2308.6.8.2(1)
ROOF IN SDC D OR E NOT SUPPORTED ON ALL EDGES

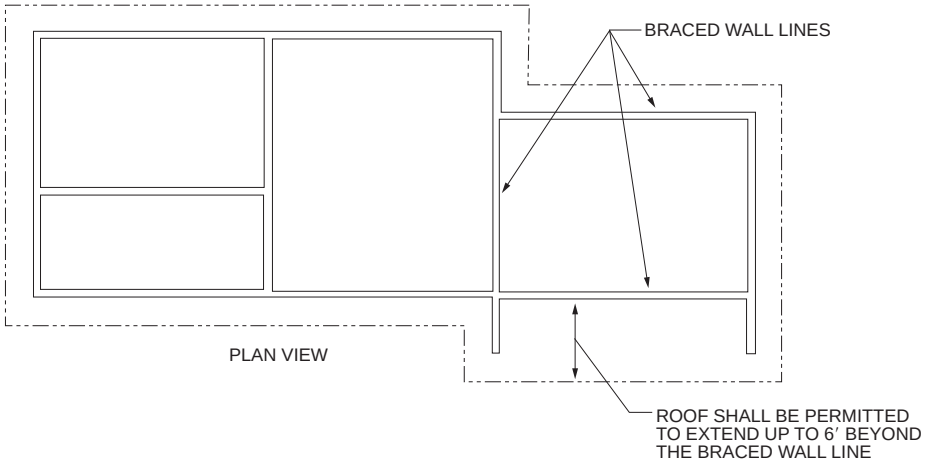

For SI: 1 foot = 304.8 mm.

FIGURE 2308.6.8.2(2)
ROOF EXTENSION IN SDC D OR E BEYOND BRACED WALL LINE

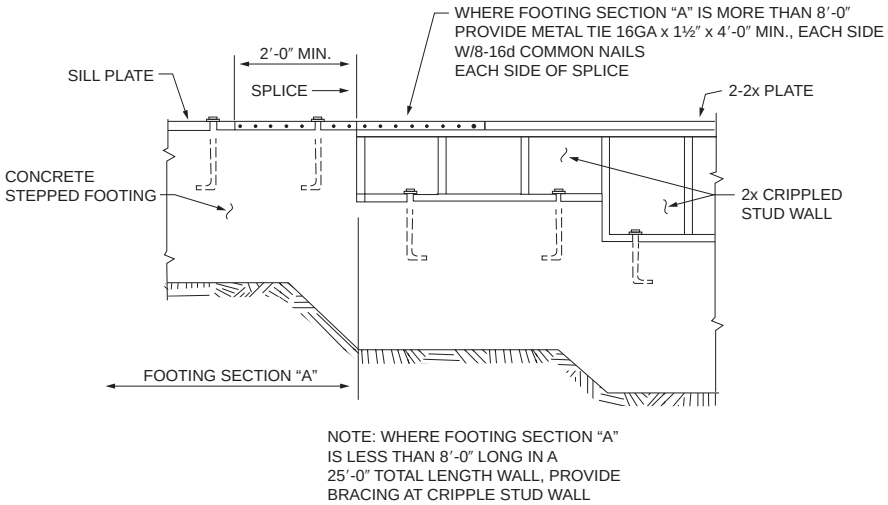

For SI: 1 inch = 25.4 mm, 1 foot = 304.8 mm.

FIGURE 2308.6.8.3
STEPPED FOOTING CONNECTION DETAILS

INTERNATIONAL CODE COUNCIL®
Copyright © 2019 ICC & NYSDOS. ALL RIGHTS RESERVED. Accessed by Lauren Gualdino (lgualdino@briarcliffmanor.org), (-) Order Number #100880972 on May 08, 2020 07:05 AM (PDT) pursuant to License Agreement with ICC & NYSDOS. No further reproduction, no

100880972

in Tables 2308.6.1 and 2304.10.1. Wall sheathing shall not be attached to framing members by adhesives.

2308.6.10 Limitations of concrete or masonry veneer. Concrete or masonry veneer shall comply with Chapter 14 and this section.

2308.6.10.1 Limitations of concrete or masonry veneer in Seismic Design Category B or C. In *Seismic Design Categories* B and C, concrete or masonry walls and stone or masonry veneer shall not extend above a basement.

Exceptions:

1. In structures assigned to *Seismic Design Category* B, stone and masonry veneer is permitted to be used in the first two *stories above grade plane* or the first three *stories above grade plane* where the lowest *story* has concrete or masonry walls, provided that wood structural panel wall bracing is used and the length of bracing provided is one and one-half times the required length specified in Table 2308.6.1.
2. Stone and masonry veneer is permitted to be used in the first *story above grade plane* or the first two *stories above grade plane* where the lowest *story* has concrete or masonry walls.
3. Stone and masonry veneer is permitted to be used in both *stories* of buildings with two *stories above grade plane*, provided that the following criteria are met:
   - 3.1. Type of brace in accordance with Section 2308.6.1 shall be WSP and the allowable shear capacity in accordance with Section 2306.3 shall be not less than 350 plf (5108 N/m).
   - 3.2. *Braced wall panels* in the second *story* shall be located in accordance with Section 2308.6.1 and not more than 25 feet (7620 mm) on center, and the total length of *braced wall panels* shall be not less than 25 percent of the *braced wall line* length. *Braced wall panels* in the first *story* shall be located in accordance with Section 2308.6.1 and not more than 25 feet (7620 mm) on center, and the total length of *braced wall panels* shall be not less than 45 percent of the *braced wall line* length.
   - 3.3. Hold-down connectors with an allowable capacity of 2,000 pounds (8896 N) shall be provided at the ends of each *braced wall panel* for the second *story* to the first *story* connection. Hold-down connectors with an allowable capacity of 3,900 pounds (17 347 N) shall be provided at the ends of each *braced wall panel* for the first *story* to the foundation connection. In all cases, the hold-down connector force shall be transferred to the foundation.
   - 3.4. Cripple walls shall not be permitted.

2308.6.10.2 Limitations of concrete or masonry in Seismic Design Categories D and E. In *Seismic Design Categories* D and E, concrete or masonry walls and stone or masonry veneer shall not extend above a basement.

Exception: In structures assigned to *Seismic Design Category* D, stone and masonry veneer is permitted to be used in the first *story above grade plane*, provided that the following criteria are met:

1. Type of brace in accordance with Section 2308.6.1 shall be WSP and the allowable shear capacity in accordance with Section 2306.3 shall be not less than 350 plf (5108 N/m).
2. The *braced wall panels* in the first *story* shall be located at each end of the *braced wall line* and not more than 25 feet (7620 mm) on center, and the total length of *braced wall panels* shall be not less than 45 percent of the *braced wall line* length.
3. Hold-down connectors shall be provided at the ends of braced walls for the first floor to foundation with an allowable capacity of 2,100 pounds (9341 N).
4. Cripple walls shall not be permitted.

2308.7 Roof and ceiling framing. The framing details required in this section apply to roofs having a slope of not less than three units vertical in 12 units horizontal (25-percent slope). Where the roof slope is less than three units vertical in 12 units horizontal (25-percent slope), members supporting rafters and ceiling joists such as ridge board, hips and valleys shall be designed as beams.

2308.7.1 Ceiling joist spans. Spans for ceiling joists shall be in accordance with Table 2308.7.1(1) or 2308.7.1(2). For other grades and species, and other loading conditions, refer to the AWC STJR.

2308.7.2 Rafter spans. Spans for rafters shall be in accordance with Table 2308.7.2(1), 2308.7.2(2), 2308.7.2(3), 2308.7.2(4), 2308.7.2(5) or 2308.7.2(6). For other grades and species and other loading conditions, refer to the AWC STJR. The span of each rafter shall be measured along the horizontal projection of the rafter.

2308.7.3 Ceiling joist and rafter framing. Rafters shall be framed directly opposite each other at the ridge. There shall be a ridge board not less than 1-inch (25 mm) nominal thickness at ridges and not less in depth than the cut end of the rafter. At valleys and hips, there shall be a single valley or hip rafter not less than 2-inch (51 mm) nominal thickness and not less in depth than the cut end of the rafter.

2308.7.3.1 Ceiling joist and rafter connections. Ceiling joists and rafters shall be nailed to each other and the assembly shall be nailed to the top wall plate in accordance with Tables 2304.10.1 and 2308.7.5. Ceiling joists shall be continuous or securely joined where they meet over interior partitions and be fastened to adjacent rafters in accordance with Tables 2304.10.1

INTERNATIONAL CODE COUNCIL®
Copyright © 2019 ICC & NYSDOS. ALL RIGHTS RESERVED. Accessed by Lauren Gualdino (lgualdino@briarcliffmanor.org), (-) Order Number #100880972 on May 08, 2020 07:05 AM (PDT) pursuant to License Agreement with ICC & NYSDOS. No further reproduction, no

100880972

and 2308.7.3.1 to provide a continuous rafter tie across the building where such joists are parallel to the rafters. Ceiling joists shall have a bearing surface of not less than $1^1/_2$ inches (38 mm) on the top plate at each end.

Where ceiling joists are not parallel to rafters, an equivalent rafter tie shall be installed in a manner to provide a continuous tie across the building, at a spacing of not more than 4 feet (1219 mm) on center. The connections shall be in accordance with Tables 2308.7.3.1 and 2304.10.1, or connections of equivalent capacities shall be provided. Where ceiling joists or rafter ties are not provided at the top of the rafter support walls, the ridge formed by these rafters shall be supported by a girder conforming to Section 2308.8. Rafter ties shall be spaced not more than 4 feet (1219 mm) on center.

Rafter tie connections shall be based on the equivalent rafter spacing in Table 2308.7.3.1. Rafter-to-ceiling joist connections and rafter tie connections shall be of sufficient size and number to prevent splitting from nailing.

Roof framing member connection to braced wall lines shall be in accordance with Section 2308.6.7.2.

2308.7.4 Notches and holes. Notching at the ends of rafters or ceiling joists shall not exceed one-fourth the depth. Notches in the top or bottom of the rafter or ceiling joist shall not exceed one-sixth the depth and shall not be located in the middle one-third of the span, except that a notch not more than one-third of the depth is permitted in the top of the rafter or ceiling joist not further from the face of the support than the depth of the member. Holes bored in rafters or ceiling joists shall not be within 2 inches (51 mm) of the top and bottom and their diameter shall not exceed one-third the depth of the member.

2308.7.5 Wind uplift. The roof construction shall have rafter and truss ties to the wall below. Resultant uplift loads shall be transferred to the foundation using a continuous load path. The rafter or truss to wall connection shall comply with Tables 2304.10.1 and 2308.7.5.

2308.7.6 Framing around openings. Trimmer and header rafters shall be doubled, or of lumber of equivalent cross section, where the span of the header exceeds 4 feet (1219 mm). The ends of header rafters that are more than 6 feet (1829 mm) in length shall be supported by framing anchors or rafter hangers unless bearing on a beam, partition or wall.

2308.7.6.1 Openings in roof diaphragms in Seismic Design Categories B, C, D and E. In buildings classified as *Seismic Design Category* B, C, D or E. openings in horizontal diaphragms with a dimension that is greater than 4 feet (1219 mm) shall be constructed with metal ties and blocking in accordance with this section and Figure 2308.4.4.1(1). Metal ties shall be not less than 0.058 inch [1.47 mm (16 galvanized gage)] in thickness by $1^1/_2$ inches (38 mm) in width and shall have a yield stress not less than 33,000 psi (227 Mpa). Blocking shall extend not less than the dimension of the opening in the direction of the tie and blocking. Ties shall be attached to blocking in accordance with the manufacturer's instructions but with not less than eight 16d common nails on each side of the header-joist intersection.

2308.7.7 Purlins. Purlins to support roof loads are permitted to be installed to reduce the span of rafters within allowable limits and shall be supported by struts to bearing walls. The maximum span of 2-inch by 4-inch (51 mm by 102 mm) purlins shall be 4 feet (1219 mm). The maximum span of the 2-inch by 6-inch (51 mm by 152 mm) purlin shall be 6 feet (1829 mm), but the purlin shall not be smaller than the supported rafter. Struts shall be not less than 2-inch by 4-inch (51 mm by 102 mm) members. The unbraced length of struts shall not exceed 8 feet (2438 mm) and the slope of the struts shall be not less than 45 degrees (0.79 rad) from the horizontal.

2308.7.8 Blocking. Roof rafters and ceiling joists shall be supported laterally to prevent rotation and lateral displacement in accordance with Section 2308.4.6 and connected to braced wall lines in accordance with Section 2308.6.7.2.

2308.7.9 Engineered wood products. Prefabricated wood I-joists, structural glued-laminated timber and structural composite lumber shall not be notched or drilled except where permitted by the manufacturer's recommendations or where the effects of such alterations are specifically considered in the design of the member by a *registered design professional*.

2308.7.10 Roof sheathing. Roof sheathing shall be in accordance with Tables 2304.8(3) and 2304.8(5) for wood structural panels, and Tables 2304.8(1) and 2304.8(2) for lumber and shall comply with Section 2304.8.2.

2308.7.11 Joints. Joints in lumber sheathing shall occur over supports unless *approved* end-matched lumber is used, in which case each piece shall bear on not fewer than two supports.

2308.7.12 Roof planking. Planking shall be designed in accordance with the general provisions of this code.

In lieu of such design, 2-inch (51 mm) tongue-and groove planking is permitted in accordance with Table 2308.7.12. Joints in such planking are permitted to be randomly spaced, provided that the system is applied to not less than three continuous spans, planks are center matched and end matched or splined, each plank bears on one support or more, and joints are separated by not less than 24 inches (610 mm) in adjacent pieces.

2308.7.13 Wood trusses. Wood trusses shall be designed in accordance with Section 2303.4. Connection to braced wall lines shall be in accordance with Section 2308.6.7.2.

2308.7.14 Attic ventilation. For *attic* ventilation, see Section 1203.2.

INTERNATIONAL CODE COUNCIL®
Copyright © 2019 ICC & NYSDOS. ALL RIGHTS RESERVED. Accessed by Lauren Gualdino (lgualdino@briarcliffmanor.org), (-) Order Number #100880972 on May 08, 2020 07:05 AM (PDT) pursuant to License Agreement with ICC & NYSDOS. No further reproduction, no

100880972

TABLE 2308.7.5
REQUIRED RATING OF APPROVED UPLIFT CONNECTORS (pounds)[a, b, c, e, f, g, h]

NOMINAL DESIGN WIND SPEED, V_{asd} [i]	ROOF SPAN (feet)							OVERHANGS (pounds/feet)[d]
	12	20	24	28	32	36	40	
85	-72	-120	-145	-169	-193	-217	-241	-38.55
90	-91	-151	-181	-212	-242	-272	-302	-43.22
100	-131	-281	-262	-305	-349	-393	-436	-53.36
110	-175	-292	-351	-409	-467	-526	-584	-64.56

For SI: 1 inch = 25.4 mm, 1 foot = 304.8 mm, 1 mile per hour = 1.61 km/hr, 1 pound = 0.454 Kg, 1 pound/foot = 14.5939 N/m.

a. The uplift connection requirements are based on a 30-foot mean roof height located in Exposure B. For Exposure C or D and for other mean roof heights, multiply the loads by the following adjustment coefficients:

	Mean Roof Height (feet)									
EXPOSURE	15	20	25	30	35	40	45	50	55	60
B	1.00	1.00	1.00	1.00	1.05	1.09	1.12	1.16	1.19	1.22
C	1.21	1.29	1.35	1.40	1.45	1.49	1.53	1.56	1.59	1.62
D	1.47	1.55	1.61	1.66	1.70	1.74	1.78	1.81	1.84	1.87

b. The uplift connection requirements are based on the framing being spaced 24 inches on center. Multiply by 0.67 for framing spaced 16 inches on center and multiply by 0.5 for framing spaced 12 inches on center.

c. The uplift connection requirements include an allowance for 10 pounds of dead load.

d. The uplift connection requirements do not account for the effects of overhangs. The magnitude of the loads shall be increased by adding the overhang loads found in the table. The overhang loads are based on framing spaced 24 inches on center. The overhang loads given shall be multiplied by the overhang projection and added to the roof uplift value in the table.

e. The uplift connection requirements are based on wind loading on end zones as defined in Figure 28.5-1 of ASCE 7. Connection loads for connections located a distance of 20 percent of the least horizontal dimension of the building from the corner of the building are permitted to be reduced by multiplying the table connection value by 0.7 and multiplying the overhang load by 0.8.

f. For wall-to-wall and wall-to-foundation connections, the capacity of the uplift connector is permitted to be reduced by 100 pounds for each full wall above. (For example, if a 500-pound rated connector is used on the roof framing, a 400-pound rated connector is permitted at the next floor level down).

g. Interpolation is permitted for intermediate values of V_{asd} and roof spans.

h. The rated capacity of approved tie-down devices is permitted to include up to a 60-percent increase for wind effects where allowed by material specifications.

i. V_{asd} shall be determined in accordance with Section 1609.3.1.

2308.8 Design of elements. Combining of engineered elements or systems and conventionally specified elements or systems shall be permitted subject to the limits of Sections 2308.8.1 and 2308.8.2.

2308.8.1 Elements exceeding limitations of conventional construction. Where a building of otherwise conventional construction contains structural elements exceeding the limits of Section 2308.2, these elements and the supporting load path shall be designed in accordance with accepted engineering practice and the provisions of this code.

2308.8.2 Structural elements or systems not described herein. Where a building of otherwise conventional construction contains structural elements or systems not described in Section 2308, these elements or systems shall be designed in accordance with accepted engineering practice and the provisions of this code. The extent of such design need only demonstrate compliance of the nonconventional elements with other applicable provisions of this code and shall be compatible with the performance of the conventionally framed system.

SECTION 2309
WOOD FRAME CONSTRUCTION MANUAL

2309.1 Wood Frame Construction Manual. Structural design in accordance with the AWC WFCM shall be permitted for buildings assigned to Risk Category I or II subject to the limitations of Section 1.1.3 of the AWC WFCM and the load assumptions contained therein. Structural elements beyond these limitations shall be designed in accordance with accepted engineering practice.

INTERNATIONAL CODE COUNCIL®
Copyright © 2019 ICC & NYSDOS. ALL RIGHTS RESERVED. Accessed by Lauren Gualdino (lgualdino@briarcliffmanor.org), (-) Order Number #100880972 on May 08, 2020 07:05 AM (PDT) pursuant to License Agreement with ICC & NYSDOS. No further reproduction, no

100880972

TABLE 2308.7.1(1)
CEILING JOIST SPANS FOR COMMON LUMBER SPECIES
(Uninhabitable attics without storage, live load = 10 psf, L/Δ = 240)

CEILING JOIST SPACING (inches)	SPECIES AND GRADE		DEAD LOAD = 5 psf			
			2 × 4	2 × 6	2 × 8	2 × 10
			Maximum ceiling joist spans			
			(ft. - in.)	(ft. - in.)	(ft. - in.)	(ft. - in.)
12	Douglas Fir-Larch	SS	13-2	20-8	Note a	Note a
	Douglas Fir-Larch	#1	12-8	19-11	Note a	Note a
	Douglas Fir-Larch	#2	12-5	19-6	25-8	Note a
	Douglas Fir-Larch	#3	10-10	15-10	20-1	24-6
	Hem-Fir	SS	12-5	19-6	25-8	Note a
	Hem-Fir	#1	12-2	19-1	25-2	Note a
	Hem-Fir	#2	11-7	18-2	24-0	Note a
	Hem-Fir	#3	10-10	15-10	20-1	24-6
	Southern Pine	SS	12-11	20-3	Note a	Note a
	Southern Pine	#1	12-5	19-6	25-8	Note a
	Southern Pine	#2	11-10	18-8	24-7	Note a
	Southern Pine	#3	10-1	14-11	18-9	22-9
	Spruce-Pine-Fir	SS	12-2	19-1	25-2	Note a
	Spruce-Pine-Fir	#1	11-10	18-8	24-7	Note a
	Spruce-Pine-Fir	#2	11-10	18-8	24-7	Note a
	Spruce-Pine-Fir	#3	10-10	15-10	20-1	24-6
16	Douglas Fir-Larch	SS	11-11	18-9	24-8	Note a
	Douglas Fir-Larch	#1	11-6	18-1	23-10	Note a
	Douglas Fir-Larch	#2	11-3	17-8	23-0	Note a
	Douglas Fir-Larch	#3	9-5	13-9	17-5	21-3
	Hem-Fir	SS	11-3	17-8	23-4	Note a
	Hem-Fir	#1	11-0	17-4	22-10	Note a
	Hem-Fir	#2	10-6	16-6	21-9	Note a
	Hem-Fir	#3	9-5	13-9	17-5	21-3
	Southern Pine	SS	11-9	18-5	24-3	Note a
	Southern Pine	#1	11-3	17-8	23-4	Note a
	Southern Pine	#2	10-9	16-11	21-7	25-7
	Southern Pine	#3	8-9	12-11	16-3	19-9
	Spruce-Pine-Fir	SS	11-0	17-4	22-10	Note a
	Spruce-Pine-Fir	#1	10-9	16-11	22-4	Note a
	Spruce-Pine-Fir	#2	10-9	16-11	22-4	Note a
	Spruce-Pine-Fir	#3	9-5	13-9	17-5	21-3

(continued)

INTERNATIONAL CODE COUNCIL®
Copyright © 2019 ICC & NYSDOS. ALL RIGHTS RESERVED. Accessed by Lauren Gualdino (lgualdino@briarcliffmanor.org), (-) Order Number #100880972 on May 08, 2020 07:05 AM (PDT) pursuant to License Agreement with ICC & NYSDOS. No further reproduction, no

100880972

TABLE 2308.7.1(1)—continued
CEILING JOIST SPANS FOR COMMON LUMBER SPECIES
(Uninhabitable attics without storage, live load = 10 psf, L/Δ = 240)

CEILING JOIST SPACING (inches)	SPECIES AND GRADE		DEAD LOAD = 5 psf			
			2 × 4	2 × 6	2 × 8	2 × 10
			Maximum ceiling joist spans			
			(ft. - in.)	(ft. - in.)	(ft. - in.)	(ft. - in.)
19.2	Douglas Fir-Larch	SS	11-3	17-8	23-3	Note a
	Douglas Fir-Larch	#1	10-10	17-0	22-5	Note a
	Douglas Fir-Larch	#2	10-7	16-7	21-0	25-8
	Douglas Fir-Larch	#3	8-7	12-6	15-10	19-5
	Hem-Fir	SS	10-7	16-8	21-11	Note a
	Hem-Fir	#1	10-4	16-4	21-6	Note a
	Hem-Fir	#2	9-11	15-7	20-6	25-3
	Hem-Fir	#3	8-7	12-6	15-10	19-5
	Southern Pine	SS	11-0	17-4	22-10	Note a
	Southern Pine	#1	10-7	16-8	22-0	Note a
	Southern Pine	#2	10-2	15-7	19-8	23-5
	Southern Pine	#3	8-0	11-9	14-10	18-0
	Spruce-Pine-Fir	SS	10-4	16-4	21-6	Note a
	Spruce-Pine-Fir	#1	10-2	15-11	21-0	25-8
	Spruce-Pine-Fir	#2	10-2	15-11	21-0	25-8
	Spruce-Pine-Fir	#3	8-7	12-6	15-10	19-5
24	Douglas Fir-Larch	SS	10-5	16-4	21-7	Note a
	Douglas Fir-Larch	#1	10-0	15-9	20-1	24-6
	Douglas Fir-Larch	#2	9-10	14-10	18-9	22-11
	Douglas Fir-Larch	#3	7-8	11-2	14-2	17-4
	Hem-Fir	SS	9-10	15-6	20-5	Note a
	Hem-Fir	#1	9-8	15-2	19-7	23-11
	Hem-Fir	#2	9-2	14-5	18-6	22-7
	Hem-Fir	#3	7-8	11-2	14-2	17-4
	Southern Pine	SS	10-3	16-1	21-2	Note a
	Southern Pine	#1	9-10	15-6	20-5	24-0
	Southern Pine	#2	9-3	13-11	17-7	20-11
	Southern Pine	#3	7-2	10-6	13-3	16-1
	Spruce-Pine-Fir	SS	9-8	15-2	19-11	25-5
	Spruce-Pine-Fir	#1	9-5	14-9	18-9	22-11
	Spruce-Pine-Fir	#2	9-5	14-9	18-9	22-11
	Spruce-Pine-Fir	#3	7-8	11-2	14-2	17-4

Check sources for availability of lumber in lengths greater than 20 feet.

For SI: 1 inch = 25.4 mm, 1 foot = 304.8 mm, 1 pound per square foot = 0.0479 kPa.

a. Span exceeds 26 feet in length.

INTERNATIONAL CODE COUNCIL®
Copyright © 2019 ICC & NYSDOS. ALL RIGHTS RESERVED. Accessed by Lauren Gualdino (lgualdino@briarcliffmanor.org), (-) Order Number #100880972 on May 08, 2020 07:05 AM (PDT) pursuant to License Agreement with ICC & NYSDOS. No further reproduction, no

100880972

TABLE 2308.7.1(2)
CEILING JOIST SPANS FOR COMMON LUMBER SPECIES
(Uninhabitable attics with limited storage, live load = 20 psf, L/Δ = 240)

CEILING JOIST SPACING (inches)	SPECIES AND GRADE		DEAD LOAD = 10 psf			
			2 × 4	2 × 6	2 × 8	2 × 10
			Maximum ceiling joist spans			
			(ft. - in.)	(ft. - in.)	(ft. - in.)	(ft. - in.)
12	Douglas Fir-Larch	SS	10-5	16-4	21-7	Note a
	Douglas Fir-Larch	#1	10-0	15-9	20-1	24-6
	Douglas Fir-Larch	#2	9-10	14-10	18-9	22-11
	Douglas Fir-Larch	#3	7-8	11-2	14-2	17-4
	Hem-Fir	SS	9-10	15-6	20-5	Note a
	Hem-Fir	#1	9-8	15-2	19-7	23-11
	Hem-Fir	#2	9-2	14-5	18-6	22-7
	Hem-Fir	#3	7-8	11-2	14-2	17-4
	Southern Pine	SS	10-3	16-1	21-2	Note a
	Southern Pine	#1	9-10	15-6	20-5	24-0
	Southern Pine	#2	9-3	13-11	17-7	20-11
	Southern Pine	#3	7-2	10-6	13-3	16-1
	Spruce-Pine-Fir	SS	9-8	15-2	19-11	25-5
	Spruce-Pine-Fir	#1	9-5	14-9	18-9	22-11
	Spruce-Pine-Fir	#2	9-5	14-9	18-9	22-11
	Spruce-Pine-Fir	#3	7-8	11-2	14-2	17-4
16	Douglas Fir-Larch	SS	9-6	14-11	19-7	25-0
	Douglas Fir-Larch	#1	9-1	13-9	17-5	21-3
	Douglas Fir-Larch	#2	8-9	12-10	16-3	19-10
	Douglas Fir-Larch	#3	6-8	9-8	12-4	15-0
	Hem-Fir	SS	8-11	14-1	18-6	23-8
	Hem-Fir	#1	8-9	13-5	16-10	20-8
	Hem-Fir	#2	8-4	12-8	16-0	19-7
	Hem-Fir	#3	6-8	9-8	12-4	15-0
	Southern Pine	SS	9-4	14-7	19-3	24-7
	Southern Pine	#1	8-11	14-0	17-9	20-9
	Southern Pine	#2	8-0	12-0	15-3	18-1
	Southern Pine	#3	6-2	9-2	11-6	14-0
	Spruce-Pine-Fir	SS	8-9	13-9	18-1	23-1
	Spruce-Pine-Fir	#1	8-7	12-10	16-3	19-10
	Spruce-Pine-Fir	#2	8-7	12-10	16-3	19-10
	Spruce-Pine-Fir	#3	6-8	9-8	12-4	15-0

(continued)

INTERNATIONAL CODE COUNCIL®
Copyright © 2019 ICC & NYSDOS. ALL RIGHTS RESERVED. Accessed by Lauren Gualdino (lgualdino@briarcliffmanor.org), (-) Order Number #100880972 on May 08, 2020 07:05 AM (PDT) pursuant to License Agreement with ICC & NYSDOS. No further reproduction, no

100880972

TABLE 2308.7.1(2)—continued
CEILING JOIST SPANS FOR COMMON LUMBER SPECIES
(Uninhabitable attics with limited storage, live load = 20 psf, L/Δ = 240)

CEILING JOIST SPACING (inches)	SPECIES AND GRADE		DEAD LOAD = 10 psf			
			2 × 4	2 × 6	2 × 8	2 × 10
			Maximum ceiling joist spans			
			(ft. - in.)	(ft. - in.)	(ft. - in.)	(ft. - in.)
19.2	Douglas Fir-Larch	SS	8-11	14-0	18-5	23-4
	Douglas Fir-Larch	#1	8-7	12-6	15-10	19-5
	Douglas Fir-Larch	#2	8-0	11-9	14-10	18-2
	Douglas Fir-Larch	#3	6-1	8-10	11-3	13-8
	Hem-Fir	SS	8-5	13-3	17-5	22-3
	Hem-Fir	#1	8-3	12-3	15-6	18-11
	Hem-Fir	#2	7-10	11-7	14-8	17-10
	Hem-Fir	#3	6-1	8-10	11-3	13-8
	Southern Pine	SS	8-9	13-9	18-2	23-1
	Southern Pine	#1	8-5	12-9	16-2	18-11
	Southern Pine	#2	7-4	11-0	13-11	16-6
	Southern Pine	#3	5-8	8-4	10-6	12-9
	Spruce-Pine-Fir	SS	8-3	12-11	17-1	21-8
	Spruce-Pine-Fir	#1	8-0	11-9	14-10	18-2
	Spruce-Pine-Fir	#2	8-0	11-9	14-10	18-2
	Spruce-Pine-Fir	#3	6-1	8-10	11-3	13-8
24	Douglas Fir-Larch	SS	8-3	13-0	17-1	20-11
	Douglas Fir-Larch	#1	7-8	11-2	14-2	17-4
	Douglas Fir-Larch	#2	7-2	10-6	13-3	16-3
	Douglas Fir-Larch	#3	5-5	7-11	10-0	12-3
	Hem-Fir	SS	7-10	12-3	16-2	20-6
	Hem-Fir	#1	7-6	10-11	13-10	16-11
	Hem-Fir	#2	7-1	10-4	13-1	16-0
	Hem-Fir	#3	5-5	7-11	10-0	12-3
	Southern Pine	SS	8-1	12-9	16-10	21-6
	Southern Pine	#1	7-8	11-5	14-6	16-11
	Southern Pine	#2	6-7	9-10	12-6	14-9
	Southern Pine	#3	5-1	7-5	9-5	11-5
	Spruce-Pine-Fir	SS	7-8	12-0	15-10	19-5
	Spruce-Pine-Fir	#1	7-2	10-6	13-3	16-3
	Spruce-Pine-Fir	#2	7-2	10-6	13-3	16-3
	Spruce-Pine-Fir	#3	5-5	7-11	10-0	12-3

Check sources for availability of lumber in lengths greater than 20 feet.
For SI: 1 inch = 25.4 mm, 1 foot = 304.8 mm, 1 pound per square foot = 0.0479 kPa.
a. Span exceeds 26 feet in length.

INTERNATIONAL CODE COUNCIL®
Copyright © 2019 ICC & NYSDOS. ALL RIGHTS RESERVED. Accessed by Lauren Gualdino (lgualdino@briarcliffmanor.org), (-) Order Number #100880972 on May 08, 2020 07:05 AM (PDT) pursuant to License Agreement with ICC & NYSDOS. No further reproduction, no

100880972

TABLE 2308.7.2(1)
RAFTER SPANS FOR COMMON LUMBER SPECIES
(Roof live load = 20 psf, ceiling not attached to rafters, L/Δ = 180)

RAFTER SPACING (inches)	SPECIES AND GRADE		DEAD LOAD = 10 psf					DEAD LOAD = 20 psf				
			2 × 4	2 × 6	2 × 8	2 × 10	2 × 12	2 × 4	2 × 6	2 × 8	2 × 10	2 × 12
			Maximum rafter spans[a]									
			(ft. - in.)	(ft. - in.)	(ft. - in.)	(ft. - in.)	(ft. - in.)	(ft. - in.)	(ft. - in.)	(ft. - in.)	(ft. - in.)	(ft. - in.)
12	Douglas Fir-Larch	SS	11-6	18-0	23-9	Note b	Note b	11-6	18-0	23-5	Note b	Note b
	Douglas Fir-Larch	#1	11-1	17-4	22-5	Note b	Note b	10-6	15-4	19-5	23-9	Note b
	Douglas Fir-Larch	#2	10-10	16-7	21-0	25-8	Note b	9-10	14-4	18-2	22-3	25-9
	Douglas Fir-Larch	#3	8-7	12-6	15-10	19-5	22-6	7-5	10-10	13-9	16-9	19-6
	Hem-Fir	SS	10-10	17-0	22-5	Note b	Note b	10-10	17-0	22-5	Note b	Note b
	Hem-Fir	#1	10 -7	16-8	21-10	Note b	Note b	10-3	14-11	18-11	23-2	Note b
	Hem-Fir	#2	10-1	15-11	20-8	25-3	Note b	9-8	14-2	17-11	21-11	25-5
	Hem-Fir	#3	8-7	12-6	15-10	19-5	22-6	7-5	10-10	13-9	16-9	19-6
	Southern Pine	SS	11-3	17-8	23-4	Note b	Note b	11-3	17-8	23-4	Note b	Note b
	Southern Pine	#1	10-10	17-0	22-5	26-0	26-0	10-6	15-8	19-10	23-2	Note b
	Southern Pine	#2	10-4	15-7	19-8	23-5	26-0	9-0	13-6	17-1	20-3	23-10
	Southern Pine	#3	8-0	11-9	14-10	18-0	21-4	6-11	10-2	12-10	15-7	18-6
	Spruce-Pine-Fir	SS	10-7	16-8	21-11	Note b	Note b	10-7	16-8	21-9	Note b	Note b
	Spruce-Pine-Fir	#1	10-4	16-3	21-0	25-8	Note b	9-10	14-4	18-2	22-3	25-9
	Spruce-Pine-Fir	#2	10-4	16-3	21-0	25-8	Note b	9-10	14-4	18-2	22-3	25-9
	Spruce-Pine-Fir	#3	8-7	12-6	15-10	19-5	22-6	7-5	10-10	13-9	16-9	19-6
16	Douglas Fir-Larch	SS	10-5	16-4	21-7	Note b	Note b	10-5	16-0	20-3	24-9	Note b
	Douglas Fir-Larch	#1	10-0	15-4	19-5	23-9	Note b	9-1	13-3	16-10	20-7	23-10
	Douglas Fir-Larch	#2	9-10	14-4	18-2	22-3	25-9	8-6	12-5	15-9	19-3	22-4
	Douglas Fir-Larch	#3	7-5	10-10	13-9	16-9	19-6	6-5	9-5	11-11	14-6	16-10
	Hem-Fir	SS	9-10	15-6	20-5	Note b	Note b	9-10	15-6	19-11	24-4	Note b
	Hem-Fir	#1	9-8	14-11	18-11	23-2	Note b	8-10	12-11	16-5	20-0	23-3
	Hem-Fir	#2	9-2	14-2	17-11	21-11	25-5	8-5	12-3	15-6	18-11	22-0
	Hem-Fir	#3	7-5	10-10	13-9	16-9	19-6	6-5	9-5	11-11	14-6	16-10
	Southern Pine	SS	10-3	16-1	21-2	Note b	Note b	10-3	16-1	21-2	25-7	Note b
	Southern Pine	#1	9-10	15-6	19-10	23-2	26-0	9-1	13-7	17-2	20-1	23-10
	Southern Pine	#2	9-0	13-6	17-1	20-3	23-10	7-9	11-8	14-9	17-6	20-8
	Southern Pine	#3	6-11	10-2	12-10	15-7	18-6	6-0	8-10	11-2	13-6	16-0
	Spruce-Pine-Fir	SS	9-8	15-2	19-11	25-5	Note b	9-8	14-10	18-10	23-0	Note b
	Spruce-Pine-Fir	#1	9-5	14-4	18-2	22-3	25-9	8-6	12-5	15-9	19-3	22-4
	Spruce-Pine-Fir	#2	9-5	14-4	18-2	22-3	25-9	8-6	12-5	15-9	19-3	22-4
	Spruce-Pine-Fir	#3	7-5	10-10	13-9	16-9	19-6	6-5	9-5	11-11	14-6	16-10
19.2	Douglas Fir-Larch	SS	9-10	15-5	20-4	25-11	Note b	9-10	14-7	18-6	22-7	Note b
	Douglas Fir-Larch	#1	9-5	14-0	17-9	21-8	25-2	8-4	12-2	15-4	18-9	21-9
	Douglas Fir-Larch	#2	8-11	13-1	16-7	20-3	23-6	7-9	11-4	14-4	17-7	20-4
	Douglas Fir-Larch	#3	6-9	9-11	12-7	15-4	17-9	5-10	8-7	10-10	13-3	15-5
	Hem-Fir	SS	9-3	14-7	19-2	24-6	Note b	9-3	14-4	18-2	22-3	25-9
	Hem-Fir	#1	9-1	13-8	17-4	21-1	24-6	8-1	11-10	15-0	18-4	21-3
	Hem-Fir	#2	8-8	12-11	16-4	20-0	23-2	7-8	11-2	14-2	17-4	20-1
	Hem-Fir	#3	6-9	9-11	12-7	15-4	17-9	5-10	8-7	10-10	13-3	15-5
	Southern Pine	SS	9-8	15-2	19-11	25-5	Note b	9-8	15-2	19-7	23-4	Note b
	Southern Pine	#1	9-3	14-3	18-1	21-2	25-2	8-4	12-4	15-8	18-4	21-9
	Southern Pine	#2	8-2	12-3	15-7	18-6	21-9	7-1	10-8	13-6	16-0	18-10
	Southern Pine	#3	6-4	9-4	11-9	14-3	16-10	5-6	8-1	10-2	12-4	14-7
	Spruce-Pine-Fir	SS	9-1	14-3	18-9	23-11	Note b	9-1	13-7	17-2	21-0	24-4
	Spruce-Pine-Fir	#1	8-10	13-1	16-7	20-3	23-6	7-9	11-4	14-4	17-7	20-4
	Spruce-Pine-Fir	#2	8-10	13-1	16-7	20-3	23-6	7-9	11-4	14-4	17-7	20-4
	Spruce-Pine-Fir	#3	6-9	9-11	12-7	15-4	17-9	5-10	8-7	10-10	13-3	15-5

(continued)

INTERNATIONAL CODE COUNCIL®
Copyright © 2019 ICC & NYSDOS. ALL RIGHTS RESERVED. Accessed by Lauren Gualdino (lgualdino@briarcliffmanor.org), (-) Order Number #100880972 on May 08, 2020 07:05 AM (PDT) pursuant to License Agreement with ICC & NYSDOS. No further reproduction, no

100880972

TABLE 2308.7.2(1)—continued
RAFTER SPANS FOR COMMON LUMBER SPECIES
(Roof live load = 20 psf, ceiling not attached to rafters, L/Δ = 180)

RAFTER SPACING (inches)	SPECIES AND GRADE		DEAD LOAD = 10 psf					DEAD LOAD = 20 psf				
			2 × 4	2 × 6	2 × 8	2 × 10	2 × 12	2 × 4	2 × 6	2 × 8	2 × 10	2 × 12
			Maximum rafter spans[a]									
			(ft. - in.)	(ft. - in.)	(ft. - in.)	(ft. - in.)	(ft. - in.)	(ft. - in.)	(ft. - in.)	(ft. - in.)	(ft. - in.)	(ft. - in.)
24	Douglas Fir-Larch	SS	9-1	14-4	18-10	23-4	Note b	8-11	13-1	16-7	20-3	23-5
	Douglas Fir-Larch	#1	8-7	12-6	15-10	19-5	22-6	7-5	10-10	13-9	16-9	19-6
	Douglas Fir-Larch	#2	8-0	11-9	14-10	18-2	21-0	6-11	10-2	12-10	15-8	18-3
	Douglas Fir-Larch	#3	6-1	8-10	11-3	13-8	15-11	5-3	7-8	9-9	11-10	13-9
	Hem-Fir	SS	8-7	13-6	17-10	22-9	Note b	8-7	12-10	16-3	19-10	23-0
	Hem-Fir	#1	8-4	12-3	15-6	18-11	21-11	7-3	10-7	13-5	16-4	19-0
	Hem-Fir	#2	7-11	11-7	14-8	17-10	20-9	6-10	10-0	12-8	15-6	17-11
	Hem-Fir	#3	6-1	8-10	11-3	13-8	15-11	5-3	7-8	9-9	11-10	13-9
	Southern Pine	SS	8-11	14-1	18-6	23-8	Note b	8-11	13-10	17-6	20-10	24-8
	Southern Pine	#1	8-7	12-9	16-2	18-11	22-6	7-5	11-1	14-0	16-5	19-6
	Southern Pine	#2	7-4	11-0	13-11	16-6	19-6	6-4	9-6	12-1	14-4	16-10
	Southern Pine	#3	5-8	8-4	10-6	12-9	15-1	4-11	7-3	9-1	11-0	13-1
	Spruce-Pine-Fir	SS	8-5	13-3	17-5	21-8	25-2	8-4	12-2	15-4	18-9	21-9
	Spruce-Pine-Fir	#1	8-0	11-9	14-10	18-2	21-0	6-11	10-2	12-10	15-8	18-3
	Spruce-Pine-Fir	#2	8-0	11-9	14-10	18-2	21-0	6-11	10-2	12-10	15-8	18-3
	Spruce-Pine-Fir	#3	6-1	8-10	11-3	13-8	15-11	5-3	7-8	9-9	11-10	13-9

Check sources for availability of lumber in lengths greater than 20 feet.

For SI: 1 inch = 25.4 mm, 1 foot = 304.8 mm, 1 pound per square foot = 0.0479 kPa.

a. The tabulated rafter spans assume that ceiling joists are located at the bottom of the attic space or that some other method of resisting the outward push of the rafters on the bearing walls, such as rafter ties, is provided at that location. Where ceiling joists or rafter ties are located higher in the attic space, the rafter spans shall be multiplied by the following factors:

H_C/H_R	Rafter Span Adjustment Factor
1/3	0.67
1/4	0.76
1/5	0.83
1/6	0.90
1/7.5 or less	1.00

where:

H_C = Height of ceiling joists or rafter ties measured vertically above the top of the rafter support walls.

H_R = Height of roof ridge measured vertically above the top of the rafter support walls.

b. Span exceeds 26 feet in length.

INTERNATIONAL CODE COUNCIL®
Copyright © 2019 ICC & NYSDOS. ALL RIGHTS RESERVED. Accessed by Lauren Gualdino (lgualdino@briarcliffmanor.org), (-) Order Number #100880972 on May 08, 2020 07:05 AM (PDT) pursuant to License Agreement with ICC & NYSDOS. No further reproduction, no

100880972

TABLE 2308.7.2(2)
RAFTER SPANS FOR COMMON LUMBER SPECIES
(Roof live load = 20 psf, ceiling attached to rafters, L/Δ = 240)

RAFTER SPACING (inches)	SPECIES AND GRADE		DEAD LOAD = 10 psf					DEAD LOAD = 20 psf				
			2 × 4	2 × 6	2 × 8	2 × 10	2 × 12	2 × 4	2 × 6	2 × 8	2 × 10	2 × 12
			Maximum rafter spans[a]									
			(ft. - in.)	(ft. - in.)	(ft. - in.)	(ft. - in.)	(ft. - in.)	(ft. - in.)	(ft. - in.)	(ft. - in.)	(ft. - in.)	(ft. - in.)
12	Douglas Fir-Larch	SS	10-5	16-4	21-7	Note b	Note b	10-5	16-4	21-7	Note b	Note b
	Douglas Fir-Larch	#1	10-0	15-9	20-10	Note b	Note b	10-0	15-4	19-5	23-9	Note b
	Douglas Fir-Larch	#2	9-10	15-6	20-5	25-8	Note b	9-10	14-4	18-2	22-3	25-9
	Douglas Fir-Larch	#3	8-7	12-6	15-10	19-5	22-6	7-5	10-10	13-9	16-9	19-6
	Hem-Fir	SS	9-10	15-6	20-5	Note b	Note b	9-10	15-6	20-5	Note b	Note b
	Hem-Fir	#1	9-8	15-2	19-11	25-5	Note b	9-8	14-11	18-11	23-2	Note b
	Hem-Fir	#2	9-2	14-5	19-0	24-3	Note b	9-2	14-2	17-11	21-11	25-5
	Hem-Fir	#3	8-7	12-6	15-10	19-5	22-6	7-5	10-10	13-9	16-9	19-6
	Southern Pine	SS	10-3	16-1	21-2	Note b	Note b	10-3	16-1	21-2	Note b	Note b
	Southern Pine	#1	9-10	15-6	20-5	26-0	26-0	9-10	15-6	19-10	23-2	26-0
	Southern Pine	#2	9-5	14-9	19-6	23-5	26-0	9-0	13-6	17-1	20-3	23-10
	Southern Pine	#3	8-0	11-9	14-10	18-0	21-4	6-11	10-2	12-10	15-7	18-6
	Spruce-Pine-Fir	SS	9-8	15-2	19-11	25-5	Note b	9-8	15-2	19-11	25-5	Note b
	Spruce-Pine-Fir	#1	9-5	14-9	19-6	24-10	Note b	9-5	14-4	18-2	22-3	25-9
	Spruce-Pine-Fir	#2	9-5	14-9	19-6	24-10	Note b	9-5	14-4	18-2	22-3	25-9
	Spruce-Pine-Fir	#3	8-7	12-6	15-10	19-5	22-6	7-5	10-10	13-9	16-9	19-6
16	Douglas Fir-Larch	SS	9-6	14-11	19-7	25-0	Note b	9-6	14-11	19-7	24-9	Note b
	Douglas Fir-Larch	#1	9-1	14-4	18-11	23-9	Note b	9-1	13-3	16-10	20-7	23-10
	Douglas Fir-Larch	#2	8-11	14-1	18-2	22-3	25-9	8-6	12-5	15-9	19-3	22-4
	Douglas Fir-Larch	#3	7-5	10-10	13-9	16-9	19-6	6-5	9-5	11-11	14-6	16-10
	Hem-Fir	SS	8-11	14-1	18-6	23-8	Note b	8-11	14-1	18-6	23-8	Note b
	Hem-Fir	#1	8-9	13-9	18-1	23-1	Note b	8-9	12-11	16-5	20-0	23-3
	Hem-Fir	#2	8-4	13-1	17-3	21-11	25-5	8-4	12-3	15-6	18-11	22-0
	Hem-Fir	#3	7-5	10-10	13-9	16-9	19-6	6-5	9-5	11-11	14-6	16-10
	Southern Pine	SS	9-4	14-7	19-3	24-7	Note b	9-4	14-7	19-3	24-7	Note b
	Southern Pine	#1	8-11	14-1	18-6	23-2	26-0	8-11	13-7	17-2	20-1	23-10
	Southern Pine	#2	8-7	13-5	17-1	20-3	23-10	7-9	11-8	14-9	17-6	20-8
	Southern Pine	#3	6-11	10-2	12-10	15-7	18-6	6-0	8-10	11-2	13-6	16-0
	Spruce-Pine-Fir	SS	8-9	13-9	18-1	23-1	Note b	8-9	13-9	18-1	23-0	Note b
	Spruce-Pine-Fir	#1	8-7	13-5	17-9	22-3	25-9	8-6	12-5	15-9	19-3	22-4
	Spruce-Pine-Fir	#2	8-7	13-5	17-9	22-3	25-9	8-6	12-5	15-9	19-3	22-4
	Spruce-Pine-Fir	#3	7-5	10-10	13-9	16-9	19-6	6-5	9-5	11-11	14-6	16-10
19.2	Douglas Fir-Larch	SS	8-11	14-0	18-5	23-7	Note b	8-11	14-0	18-5	22-7	Note b
	Douglas Fir-Larch	#1	8-7	13-6	17-9	21-8	25-2	8-4	12-2	15-4	18-9	21-9
	Douglas Fir-Larch	#2	8-5	13-1	16-7	20-3	23-6	7-9	11-4	14-4	17-7	20-4
	Douglas Fir-Larch	#3	6-9	9-11	12-7	15-4	17-9	5-10	8-7	10-10	13-3	15-5
	Hem-Fir	SS	8-5	13-3	17-5	22-3	Note b	8-5	13-3	17-5	22-3	25-9
	Hem-Fir	#1	8-3	12-11	17-1	21-1	24-6	8-1	11-10	15-0	18-4	21-3
	Hem-Fir	#2	7-10	12-4	16-3	20-0	23-2	7-8	11-2	14-2	17-4	20-1
	Hem-Fir	#3	6-9	9-11	12-7	15-4	17-9	5-10	8-7	10-10	13-3	15-5

(continued)

INTERNATIONAL CODE COUNCIL®
Copyright © 2019 ICC & NYSDOS. ALL RIGHTS RESERVED. Accessed by Lauren Gualdino (lgualdino@briarcliffmanor.org), (-) Order Number #100880972 on May 08, 2020 07:05 AM (PDT) pursuant to License Agreement with ICC & NYSDOS. No further reproduction, no

100880972

TABLE 2308.7.2(2)—continued
RAFTER SPANS FOR COMMON LUMBER SPECIES
(Roof live load = 20 psf, ceiling attached to rafters, L/Δ = 240)

RAFTER SPACING (inches)	SPECIES AND GRADE		DEAD LOAD = 10 psf					DEAD LOAD = 20 psf				
			2 × 4	2 × 6	2 × 8	2 × 10	2 × 12	2 × 4	2 × 6	2 × 8	2 × 10	2 × 12
			Maximum rafter spans[a]									
			(ft. - in.)	(ft. - in.)	(ft. - in.)	(ft. - in.)	(ft. - in.)	(ft. - in.)	(ft. - in.)	(ft. - in.)	(ft. - in.)	(ft. - in.)
19.2	Southern Pine	SS	8-9	13-9	18-2	23-1	Note b	8-9	13-9	18-2	23-1	Note b
	Southern Pine	#1	8-5	13-3	17-5	21-2	25-2	8-4	12-4	15-8	18-4	21-9
	Southern Pine	#2	8-1	12-3	15-7	18-6	21-9	7-1	10-8	13-6	16-0	18-10
	Southern Pine	#3	6-4	9-4	11-9	14-3	16-10	5-6	8-1	10-2	12-4	14-7
	Spruce-Pine-Fir	SS	8-3	12-11	17-1	21-9	Note b	8-3	12-11	17-1	21-0	24-4
	Spruce-Pine-Fir	#1	8-1	12-8	16-7	20-3	23-6	7-9	11-4	14-4	17-7	20-4
	Spruce-Pine-Fir	#2	8-1	12-8	16-7	20-3	23-6	7-9	11-4	14-4	17-7	20-4
	Spruce-Pine-Fir	#3	6-9	9-11	12-7	15-4	17-9	5-10	8-7	10-10	13-3	15-5
24	Douglas Fir-Larch	SS	8-3	13-0	17-2	21-10	Note b	8-3	13-0	16-7	20-3	23-5
	Douglas Fir-Larch	#1	8-0	12-6	15-10	19-5	22-6	7-5	10-10	13-9	16-9	19-6
	Douglas Fir-Larch	#2	7-10	11-9	14-10	18-2	21-0	6-11	10-2	12-10	15-8	18-3
	Douglas Fir-Larch	#3	6-1	8-10	11-3	13-8	15-11	5-3	7-8	9-9	11-10	13-9
	Hem-Fir	SS	7-10	12-3	16-2	20-8	25-1	7-10	12-3	16-2	19-10	23-0
	Hem-Fir	#1	7-8	12-0	15-6	18-11	21-11	7-3	10-7	13-5	16-4	19-0
	Hem-Fir	#2	7-3	11-5	14-8	17-10	20-9	6-10	10-0	12-8	15-6	17-11
	Hem-Fir	#3	6-1	8-10	11-3	13-8	15-11	5-3	7-8	9-9	11-10	13-9
	Southern Pine	SS	8-1	12-9	16-10	21-6	Note b	8-1	12-9	16-10	20-10	24-8
	Southern Pine	#1	7-10	12-3	16-2	18-11	22-6	7-5	11-1	14-0	16-5	19-6
	Southern Pine	#2	7-4	11-0	13-11	16-6	19-6	6-4	9-6	12-1	14-4	16-10
	Southern Pine	#3	5-8	8-4	10-6	12-9	15-1	4-11	7-3	9-1	11-0	13-1
	Spruce-Pine-Fir	SS	7-8	12-0	15-10	20-2	24-7	7-8	12-0	15-4	18-9	21-9
	Spruce-Pine-Fir	#1	7-6	11-9	14-10	18-2	21-0	6-11	10-2	12-10	15-8	18-3
	Spruce-Pine-Fir	#2	7-6	11-9	14-10	18-2	21-0	6-11	10-2	12-10	15-8	18-3
	Spruce-Pine-Fir	#3	6-1	8-10	11-3	13-8	15-11	5-3	7-8	9-9	11-10	13-9

Check sources for availability of lumber in lengths greater than 20 feet.

For SI: 1 inch = 25.4 mm, 1 foot = 304.8 mm, 1 pound per square foot = 0.0479 kPa.

a. The tabulated rafter spans assume that ceiling joists are located at the bottom of the attic space or that some other method of resisting the outward push of the rafters on the bearing walls, such as rafter ties, is provided at that location. Where ceiling joists or rafter ties are located higher in the attic space, the rafter spans shall be multiplied by the following factors:

H_C/H_R	Rafter Span Adjustment Factor
1/3	0.67
1/4	0.76
1/5	0.83
1/6	0.90
1/7.5 or less	1.00

where:

H_C = Height of ceiling joists or rafter ties measured vertically above the top of the rafter support walls.

H_R = Height of roof ridge measured vertically above the top of the rafter support walls.

b. Span exceeds 26 feet in length.

INTERNATIONAL CODE COUNCIL®
Copyright © 2019 ICC & NYSDOS. ALL RIGHTS RESERVED. Accessed by Lauren Gualdino (lgualdino@briarcliffmanor.org), (-) Order Number #100880972 on May 08, 2020 07:05 AM (PDT) pursuant to License Agreement with ICC & NYSDOS. No further reproduction, no

100880972

TABLE 2308.7.2(3)
RAFTER SPANS FOR COMMON LUMBER SPECIES
(Ground snow load = 30 psf, ceiling not attached to rafters, L/Δ = 180)

RAFTER SPACING (inches)	SPECIES AND GRADE		DEAD LOAD = 10 psf					DEAD LOAD = 20 psf				
			2 × 4	2 × 6	2 × 8	2 × 10	2 × 12	2 × 4	2 × 6	2 × 8	2 × 10	2 × 12
			Maximum rafter spans[a]									
			(ft. - in.)	(ft. - in.)	(ft. - in.)	(ft. - in.)	(ft. - in.)	(ft. - in.)	(ft. - in.)	(ft. - in.)	(ft. - in.)	(ft. - in.)
12	Douglas Fir-Larch	SS	10-0	15-9	20-9	Note b	Note b	10-0	15-9	20-1	24-6	Note b
	Douglas Fir-Larch	#1	9-8	14-9	18-8	22-9	Note b	9-0	13-2	16-8	20-4	23-7
	Douglas Fir-Larch	#2	9-5	13-9	17-5	21-4	24-8	8-5	12-4	15-7	19-1	22-1
	Douglas Fir-Larch	#3	7-1	10-5	13-2	16-1	18-8	6-4	9-4	11-9	14-5	16-8
	Hem-Fir	SS	9-6	14-10	19-7	25-0	Note b	9-6	14-10	19-7	24-1	Note b
	Hem-Fir	#1	9-3	14-4	18-2	22-2	25-9	8-9	12-10	16-3	19-10	23-0
	Hem-Fir	#2	8-10	13-7	17-2	21-0	24-4	8-4	12-2	15-4	18-9	21-9
	Hem-Fir	#3	7-1	10-5	13-2	16-1	18-8	6-4	9-4	11-9	14-5	16-8
	Southern Pine	SS	9-10	15-6	20-5	Note b	Note b	9-10	15-6	20-5	25-4	Note b
	Southern Pine	#1	9-6	14-10	19-0	22-3	26-0	9-0	13-5	17-0	19-11	23-7
	Southern Pine	#2	8-7	12-11	16-4	19-5	22-10	7-8	11-7	14-8	17-4	20-5
	Southern Pine	#3	6-7	9-9	12-4	15-0	17-9	5-11	8-9	11-0	13-5	15-10
	Spruce-Pine-Fir	SS	9-3	14-7	19-2	24-6	Note b	9-3	14-7	18-8	22-9	Note b
	Spruce-Pine-Fir	#1	9-1	13-9	17-5	21-4	24-8	8-5	12-4	15-7	19-1	22-1
	Spruce-Pine-Fir	#2	9-1	13-9	17-5	21-4	24-8	8-5	12-4	15-7	19-1	22-1
	Spruce-Pine-Fir	#3	7-1	10-5	13-2	16-1	18-8	6-4	9-4	11-9	14-5	16-8
16	Douglas Fir-Larch	SS	9-1	14-4	18-10	23-9	Note b	9-1	13-9	17-5	21-3	24-8
	Douglas Fir-Larch	#1	8-9	12-9	16-2	19-9	22-10	7-10	11-5	14-5	17-8	20-5
	Douglas Fir-Larch	#2	8-2	11-11	15-1	18-5	21-5	7-3	10-8	13-6	16-6	19-2
	Douglas Fir-Larch	#3	6-2	9-0	11-5	13-11	16-2	5-6	8-1	10-3	12-6	14-6
	Hem-Fir	SS	8-7	13-6	17-10	22-9	Note b	8-7	13-6	17-1	20-10	24-2
	Hem-Fir	#1	8-5	12-5	15-9	19-3	22-3	7-7	11-1	14-1	17-2	19-11
	Hem-Fir	#2	8-0	11-9	14-11	18-2	21-1	7-2	10-6	13-4	16-3	18-10
	Hem-Fir	#3	6-2	9-0	11-5	13-11	16-2	5-6	8-1	10-3	12-6	14-6
	Southern Pine	SS	8-11	14-1	18-6	23-8	Note b	8-11	14-1	18-5	21-11	25-11
	Southern Pine	#1	8-7	13-0	16-6	19-3	22-10	7-10	11-7	14-9	17-3	20-5
	Southern Pine	#2	7-6	11-2	14-2	16-10	19-10	6-8	10-0	12-8	15-1	17-9
	Southern Pine	#3	5-9	8-6	10-8	13-0	15-4	5-2	7-7	9-7	11-7	13-9
	Spruce-Pine-Fir	SS	8-5	13-3	17-5	22-1	25-7	8-5	12-9	16-2	19-9	22-10
	Spruce-Pine-Fir	#1	8-2	11-11	15-1	18-5	21-5	7-3	10-8	13-6	16-6	19-2
	Spruce-Pine-Fir	#2	8-2	11-11	15-1	18-5	21-5	7-3	10-8	13-6	16-6	19-2
	Spruce-Pine-Fir	#3	6-2	9-0	11-5	13-11	16-2	5-6	8-1	10-3	12-6	14-6
19.2	Douglas Fir-Larch	SS	8-7	13-6	17-9	21-8	25-2	8-7	12-6	15-10	19-5	22-6
	Douglas Fir-Larch	#1	7-11	11-8	14-9	18-0	20-11	7-1	10-5	13-2	16-1	18-8
	Douglas Fir-Larch	#2	7-5	10-11	13-9	16-10	19-6	6-8	9-9	12-4	15-1	17-6
	Douglas Fir-Larch	#3	5-7	8-3	10-5	12-9	14-9	5-0	7-4	9-4	11-5	13-2
	Hem-Fir	SS	8-1	12-9	16-9	21-4	24-8	8-1	12-4	15-7	19-1	22-1
	Hem-Fir	#1	7-9	11-4	14-4	17-7	20-4	6-11	10-2	12-10	15-8	18-2
	Hem-Fir	#2	7-4	10-9	13-7	16-7	19-3	6-7	9-7	12-2	14-10	17-3
	Hem-Fir	#3	5-7	8-3	10-5	12-9	14-9	5-0	7-4	9-4	11-5	13-2

(continued)

INTERNATIONAL CODE COUNCIL®
Copyright © 2019 ICC & NYSDOS. ALL RIGHTS RESERVED. Accessed by Lauren Gualdino (lgualdino@briarcliffmanor.org), (-) Order Number #100880972 on May 08, 2020 07:05 AM (PDT) pursuant to License Agreement with ICC & NYSDOS. No further reproduction, no

100880972

TABLE 2308.7.2(3)—continued
RAFTER SPANS FOR COMMON LUMBER SPECIES
(Ground snow load = 30 psf, ceiling not attached to rafters, L/Δ = 180)

RAFTER SPACING (inches)	SPECIES AND GRADE		DEAD LOAD = 10 psf					DEAD LOAD = 20 psf				
			2 × 4	2 × 6	2 × 8	2 × 10	2 × 12	2 × 4	2 × 6	2 × 8	2 × 10	2 × 12
			Maximum rafter spans[a]									
			(ft. - in.)	(ft. - in.)	(ft. - in.)	(ft. - in.)	(ft. - in.)	(ft. - in.)	(ft. - in.)	(ft. - in.)	(ft. - in.)	(ft. - in.)
19.2	Southern Pine	SS	8-5	13-3	17-5	22-3	Note b	8-5	13-3	16-10	20-0	23-7
	Southern Pine	#1	8-0	11-10	15-1	17-7	20-11	7-1	10-7	13-5	15-9	18-8
	Southern Pine	#2	6-10	10-2	12-11	15-4	18-1	6-1	9-2	11-7	13-9	16-2
	Southern Pine	#3	5-3	7-9	9-9	11-10	14-0	4-8	6-11	8-9	10-7	12-6
	Spruce-Pine-Fir	SS	7-11	12-5	16-5	20-2	23-4	7-11	11-8	14-9	18-0	20-11
	Spruce-Pine-Fir	#1	7-5	10-11	13-9	16-10	19-6	6-8	9-9	12-4	15-1	17-6
	Spruce-Pine-Fir	#2	7-5	10-11	13-9	16-10	19-6	6-8	9-9	12-4	15-1	17-6
	Spruce-Pine-Fir	#3	5-7	8-3	10-5	12-9	14-9	5-0	7-4	9-4	11-5	13-2
24	Douglas Fir-Larch	SS	7-11	12-6	15-10	19-5	22-6	7-8	11-3	14-2	17-4	20-1
	Douglas Fir-Larch	#1	7-1	10-5	13-2	16-1	18-8	6-4	9-4	11-9	14-5	16-8
	Douglas Fir-Larch	#2	6-8	9-9	12-4	15-1	17-6	5-11	8-8	11-0	13-6	15-7
	Douglas Fir-Larch	#3	5-0	7-4	9-4	11-5	13-2	4-6	6-7	8-4	10-2	11-10
	Hem-Fir	SS	7-6	11-10	15-7	19-1	22-1	7-6	11-0	13-11	17-0	19-9
	Hem-Fir	#1	6-11	10-2	12-10	15-8	18-2	6-2	9-1	11-6	14-0	16-3
	Hem-Fir	#2	6-7	9-7	12-2	14-10	17-3	5-10	8-7	10-10	13-3	15-5
	Hem-Fir	#3	5-0	7-4	9-4	11-5	13-2	4-6	6-7	8-4	10-2	11-10
	Southern Pine	SS	7-10	12-3	16-2	20-0	23-7	7-10	11-10	15-0	17-11	21-2
	Southern Pine	#1	7-1	10-7	13-5	15-9	18-8	6-4	9-6	12-0	14-1	16-8
	Southern Pine	#2	6-1	9-2	11-7	13-9	16-2	5-5	8-2	10-4	12-3	14-6
	Southern Pine	#3	4-8	6-11	8-9	10-7	12-6	4-2	6-2	7-10	9-6	11-2
	Spruce-Pine-Fir	SS	7-4	11-7	14-9	18-0	20-11	7-1	10-5	13-2	16-1	18-8
	Spruce-Pine-Fir	#1	6-8	9-9	12-4	15-1	17-6	5-11	8-8	11-0	13-6	15-7
	Spruce-Pine-Fir	#2	6-8	9-9	12-4	15-1	17-6	5-11	8-8	11-0	13-6	15-7
	Spruce-Pine-Fir	#3	5-0	7-4	9-4	11-5	13-2	4-6	6-7	8-4	10-2	11-10

Check sources for availability of lumber in lengths greater than 20 feet.

For SI: 1 inch = 25.4 mm, 1 foot = 304.8 mm, 1 pound per square foot = 0.0479 kPa.

a. The tabulated rafter spans assume that ceiling joists are located at the bottom of the attic space or that some other method of resisting the outward push of the rafters on the bearing walls, such as rafter ties, is provided at that location. Where ceiling joists or rafter ties are located higher in the attic space, the rafter spans shall be multiplied by the following factors:

H_C/H_R	Rafter Span Adjustment Factor
1/3	0.67
1/4	0.76
1/5	0.83
1/6	0.90
1/7.5 or less	1.00

where:

H_C = Height of ceiling joists or rafter ties measured vertically above the top of the rafter support walls.

H_R = Height of roof ridge measured vertically above the top of the rafter support walls.

b. Span exceeds 26 feet in length.

INTERNATIONAL CODE COUNCIL®
Copyright © 2019 ICC & NYSDOS. ALL RIGHTS RESERVED. Accessed by Lauren Gualdino (lgualdino@briarcliffmanor.org), (-) Order Number #100880972 on May 08, 2020 07:05 AM (PDT) pursuant to License Agreement with ICC & NYSDOS. No further reproduction, no

100880972

TABLE 2308.7.2(4)
RAFTER SPANS FOR COMMON LUMBER SPECIES
(Ground snow load = 50 psf, ceiling not attached to rafters, L/Δ = 180)

RAFTER SPACING (inches)	SPECIES AND GRADE		DEAD LOAD = 10 psf					DEAD LOAD = 20 psf				
			2 × 4	2 × 6	2 × 8	2 × 10	2 × 12	2 × 4	2 × 6	2 × 8	2 × 10	2 × 12
			Maximum rafter spans[a]									
			(ft. - in.)	(ft. - in.)	(ft. - in.)	(ft. - in.)	(ft. - in.)	(ft. - in.)	(ft. - in.)	(ft. - in.)	(ft. - in.)	(ft. - in.)
12	Douglas Fir-Larch	SS	8-5	13-3	17-6	22-4	26-0	8-5	13-3	17-0	20-9	24-0
	Douglas Fir-larch	#1	8-2	12-0	15-3	18-7	21-7	7-7	11-2	14-1	17-3	20-0
	Douglas Fir-larch	#2	7-8	11-3	14-3	17-5	20-2	7-1	10-5	13-2	16-1	18-8
	Douglas Fir-larch	#3	5-10	8-6	10-9	13-2	15-3	5-5	7-10	10-0	12-2	14-1
	Hem-Fir	SS	8-0	12-6	16-6	21-1	25-6	8-0	12-6	16-6	20-4	23-7
	Hem-Fir	#1	7-10	11-9	14-10	18-1	21-0	7-5	10-10	13-9	16-9	19-5
	Hem-Fir	#2	7-5	11-1	14-0	17-2	19-11	7-0	10-3	13-0	15-10	18-5
	Hem-Fir	#3	5-10	8-6	10-9	13-2	15-3	5-5	7-10	10-0	12-2	14-1
	Southern Pine	SS	8-4	13-1	17-2	21-11	Note b	8-4	13-1	17-2	21-5	25-3
	Southern Pine	#1	8-0	12-3	15-6	18-2	21-7	7-7	11-4	14-5	16-10	20-0
	Southern Pine	#2	7-0	10-6	13-4	15-10	18-8	6-6	9-9	12-4	14-8	17-3
	Southern Pine	#3	5-5	8-0	10-1	12-3	14-6	5-0	7-5	9-4	11-4	13-5
	Spruce-Pine-Fir	SS	7-10	12-3	16-2	20-8	24-1	7-10	12-3	15-9	19-3	22-4
	Spruce-Pine-Fir	#1	7-8	11-3	14-3	17-5	20-2	7-1	10-5	13-2	16-1	18-8
	Spruce-Pine-Fir	#2	7-8	11-3	14-3	17-5	20-2	7-1	10-5	13-2	16-1	18-8
	Spruce-Pine-Fir	#3	5-10	8-6	10-9	13-2	15-3	5-5	7-10	10-0	12-2	14-1
16	Douglas Fir-Larch	SS	7-8	12-1	15-10	19-5	22-6	7-8	11-7	14-8	17-11	20-10
	Douglas Fir-Larch	#1	7-1	10-5	13-2	16-1	18-8	6-7	9-8	12-2	14-11	17-3
	Douglas Fir-Larch	#2	6-8	9-9	12-4	15-1	17-6	6-2	9-0	11-5	13-11	16-2
	Douglas Fir-Larch	#3	5-0	7-4	9-4	11-5	13-2	4-8	6-10	8-8	10-6	12-3
	Hem-Fir	SS	7-3	11-5	15-0	19-1	22-1	7-3	11-5	14-5	17-8	20-5
	Hem-Fir	#1	6-11	10-2	12-10	15-8	18-2	6-5	9-5	11-11	14-6	16-10
	Hem-Fir	#2	6-7	9-7	12-2	14-10	17-3	6-1	8-11	11-3	13-9	15-11
	Hem-Fir	#3	5-0	7-4	9-4	11-5	13-2	4-8	6-10	8-8	10-6	12-3
	Southern Pine	SS	7-6	11-10	15-7	19-11	23-7	7-6	11-10	15-7	18-6	21-10
	Southern Pine	#1	7-1	10-7	13-5	15-9	18-8	6-7	9-10	12-5	14-7	17-3
	Southern Pine	#2	6-1	9-2	11-7	13-9	16-2	5-8	8-5	10-9	12-9	15-0
	Southern Pine	#3	4-8	6-11	8-9	10-7	12-6	4-4	6-5	8-1	9-10	11-7
	Spruce-Pine-Fir	SS	7-1	11-2	14-8	18-0	20-11	7-1	10-9	13-8	15-11	19-4
	Spruce-Pine-Fir	#1	6-8	9-9	12-4	15-1	17-6	6-2	9-0	11-5	13-11	16-2
	Spruce-Pine-Fir	#2	6-8	9-9	12-4	15-1	17-6	6-2	9-0	11-5	13-11	16-2
	Spruce-Pine-Fir	#3	5-0	7-4	9-4	11-5	13-2	4-8	6-10	8-8	10-6	12-3
19.2	Douglas Fir-Larch	SS	7-3	11-4	14-6	17-8	20-6	7-3	10-7	13-5	16-5	19-0
	Douglas Fir-Larch	#1	6-6	9-6	12-0	14-8	17-1	6-0	8-10	11-2	13-7	15-9
	Douglas Fir-Larch	#2	6-1	8-11	11-3	13-9	15-11	5-7	8-3	10-5	12-9	14-9
	Douglas Fir-Larch	#3	4-7	6-9	8-6	10-5	12-1	4-3	6-3	7-11	9-7	11-2
	Hem-Fir	SS	6-10	10-9	14-2	17-5	20-2	6-10	10-5	13-2	16-1	18-8
	Hem-Fir	#1	6-4	9-3	11-9	14-4	16-7	5-10	8-7	10-10	13-3	15-5
	Hem-Fir	#2	6-0	8-9	11-1	13-7	15-9	5-7	8-1	10-3	12-7	14-7
	Hem-Fir	#3	4-7	6-9	8-6	10-5	12-1	4-3	6-3	7-11	9-7	11-2

(continued)

INTERNATIONAL CODE COUNCIL®
Copyright © 2019 ICC & NYSDOS. ALL RIGHTS RESERVED. Accessed by Lauren Gualdino (lgualdino@briarcliffmanor.org), (-) Order Number #100880972 on May 08, 2020 07:05 AM (PDT) pursuant to License Agreement with ICC & NYSDOS. No further reproduction, no

100880972

TABLE 2308.7.2(4)
RAFTER SPANS FOR COMMON LUMBER SPECIES
(Ground snow load = 50 psf, ceiling not attached to rafters, L/Δ = 180)

RAFTER SPACING (inches)	SPECIES AND GRADE		DEAD LOAD = 10 psf					DEAD LOAD = 20 psf				
			2 × 4	2 × 6	2 × 8	2 × 10	2 × 12	2 × 4	2 × 6	2 × 8	2 × 10	2 × 12
			Maximum rafter spans[a]									
			(ft. - in.)	(ft. - in.)	(ft. - in.)	(ft. - in.)	(ft. - in.)	(ft. - in.)	(ft. - in.)	(ft. - in.)	(ft. - in.)	(ft. - in.)
19.2	Southern Pine	SS	7-1	11-2	14-8	18-3	21-7	7-1	11-2	14-2	16-11	20-0
	Southern Pine	#1	6-6	9-8	12-3	14-4	17-1	6-0	9-0	11-4	13-4	15-9
	Southern Pine	#2	5-7	8-4	10-7	12-6	14-9	5-2	7-9	9-9	11-7	13-8
	Southern Pine	#3	4-3	6-4	8-0	9-8	11-5	4-0	5-10	7-4	8-11	10-7
	Spruce-Pine-Fir	SS	6-8	10-6	13-5	16-5	19-1	6-8	9-10	12-5	15-3	17-8
	Spruce-Pine-Fir	#1	6-1	8-11	11-3	13-9	15-11	5-7	8-3	10-5	12-9	14-9
	Spruce-Pine-Fir	#2	6-1	8-11	11-3	13-9	15-11	5-7	8-3	10-5	12-9	14-9
	Spruce-Pine-Fir	#3	4-7	6-9	8-6	10-5	12-1	4-3	6-3	7-11	9-7	11-2
24	Douglas Fir-Larch	SS	6-8	10-3	13-0	15-10	18-4	6-6	9-6	12-0	14-8	17-0
	Douglas Fir-Larch	#1	5-10	8-6	10-9	13-2	15-3	5-5	7-10	10-0	12-2	14-1
	Douglas Fir-Larch	#2	5-5	7-11	10-1	12-4	14-3	5-0	7-4	9-4	11-5	13-2
	Douglas Fir-Larch	#3	4-1	6-0	7-7	9-4	10-9	3-10	5-7	7-1	8-7	10-0
	Hem-Fir	SS	6-4	9-11	12-9	15-7	18-0	6-4	9-4	11-9	14-5	16-8
	Hem-Fir	#1	5-8	8-3	10-6	12-10	14-10	5-3	7-8	9-9	11-10	13-9
	Hem-Fir	#2	5-4	7-10	9-11	12-1	14-1	4-11	7-3	9-2	11-3	13-0
	Hem-Fir	#3	4-1	6-0	7-7	9-4	10-9	3-10	5-7	7-1	8-7	10-0
	Southern Pine	SS	6-7	10-4	13-8	16-4	19-3	6-7	10-0	12-8	15-2	17-10
	Southern Pine	#1	5-10	8-8	11-0	12-10	15-3	5-5	8-0	10-2	11-11	14-1
	Southern Pine	#2	5-0	7-5	9-5	11-3	13-2	4-7	6-11	8-9	10-5	12-3
	Southern Pine	#3	3-10	5-8	7-1	8-8	10-3	3-6	5-3	6-7	8-0	9-6
	Spruce-Pine-Fir	SS	6-2	9-6	12-0	14-8	17-1	6-0	8-10	11-2	13-7	15-9
	Spruce-Pine-Fir	#1	5-5	7-11	10-1	12-4	14-3	5-0	7-4	9-4	11-5	13-2
	Spruce-Pine-Fir	#2	5-5	7-11	10-1	12-4	14-3	5-0	7-4	9-4	11-5	13-2
	Spruce-Pine-Fir	#3	4-1	6-0	7-7	9-4	10-9	3-10	5-7	7-1	8-7	10-0

Check sources for availability of lumber in lengths greater than 20 feet.

For SI: 1 inch = 25.4 mm, 1 foot = 304.8 mm, 1 pound per square foot = 0.0479 kPa.

a. The tabulated rafter spans assume that ceiling joists are located at the bottom of the attic space or that some other method of resisting the outward push of the rafters on the bearing walls, such as rafter ties, is provided at that location. Where ceiling joists or rafter ties are located higher in the attic space, the rafter spans shall be multiplied by the following factors:

H_C/H_R	Rafter Span Adjustment Factor
1/3	0.67
1/4	0.76
1/5	0.83
1/6	0.90
1/7.5 or less	1.00

where:

H_C = Height of ceiling joists or rafter ties measured vertically above the top of the rafter support walls.

H_R = Height of roof ridge measured vertically above the top of the rafter support walls.

b. Span exceeds 26 feet in length.

INTERNATIONAL CODE COUNCIL®
Copyright © 2019 ICC & NYSDOS. ALL RIGHTS RESERVED. Accessed by Lauren Gualdino (lgualdino@briarcliffmanor.org), (-) Order Number #100880972 on May 08, 2020 07:05 AM (PDT) pursuant to License Agreement with ICC & NYSDOS. No further reproduction, no

100880972

TABLE 2308.7.2(5)
RAFTER SPANS FOR COMMON LUMBER SPECIES
(Ground snow load = 30 psf, ceiling attached to rafters, L/Δ = 240)

RAFTER SPACING (inches)	SPECIES AND GRADE		DEAD LOAD = 10 psf					DEAD LOAD = 20 psf				
			2 × 4	2 × 6	2 × 8	2 × 10	2 × 12	2 × 4	2 × 6	2 × 8	2 × 10	2 × 12
			Maximum rafter spans[a]									
			(ft. - in.)	(ft. - in.)	(ft. - in.)	(ft. - in.)	(ft. - in.)	(ft. - in.)	(ft. - in.)	(ft. - in.)	(ft. - in.)	(ft. - in.)
12	Douglas Fir-Larch	SS	9-1	14-4	18-10	24-1	Note b	9-1	14-4	18-10	24-1	Note b
	Douglas Fir-Larch	#1	8-9	13-9	18-2	22-9	Note b	8-9	13-2	16-8	20-4	23-7
	Douglas Fir-Larch	#2	8-7	13-6	17-5	21-4	24-8	8-5	12-4	15-7	19-1	22-1
	Douglas Fir-Larch	#3	7-1	10-5	13-2	16-1	18-8	6-4	9-4	11-9	14-5	16-8
	Hem-Fir	SS	8-7	13-6	17-10	22-9	Note b	8-7	13-6	17-10	22-9	Note b
	Hem-Fir	#1	8-5	13-3	17-5	22-2	25-9	8-5	12-10	16-3	19-10	23-0
	Hem-Fir	#2	8-0	12-7	16-7	21-0	24-4	8-0	12-2	15-4	18-9	21-9
	Hem-Fir	#3	7-1	10-5	13-2	16-1	18-8	6-4	9-4	11-9	14-5	16-8
	Southern Pine	SS	8-11	14-1	18-6	23-8	Note b	8-11	14-1	18-6	23-8	Note b
	Southern Pine	#1	8-7	13-6	17-10	22-3	Note b	8-7	13-5	17-0	19-11	23-7
	Southern Pine	#2	8-3	12-11	16-4	19-5	22-10	7-8	11-7	14-8	17-4	20-5
	Southern Pine	#3	6-7	9-9	12-4	15-0	17-9	5-11	8-9	11-0	13-5	15-10
	Spruce-Pine-Fir	SS	8-5	13-3	17-5	22-3	Note b	8-5	13-3	17-5	22-3	Note b
	Spruce-Pine-Fir	#1	8-3	12-11	17-0	21-4	24-8	8-3	12-4	15-7	19-1	22-1
	Spruce-Pine-Fir	#2	8-3	12-11	17-0	21-4	24-8	8-3	12-4	15-7	19-1	22-1
	Spruce-Pine-Fir	#3	7-1	10-5	13-2	16-1	18-8	6-4	9-4	11-9	14-5	16-8
16	Douglas Fir-Larch	SS	8-3	13-0	17-2	21-10	Note b	8-3	13-0	17-2	21-3	24-8
	Douglas Fir-Larch	#1	8-0	12-6	16-2	19-9	22-10	7-10	11-5	14-5	17-8	20-5
	Douglas Fir-Larch	#2	7-10	11-11	15-1	18-5	21-5	7-3	10-8	13-6	16-6	19-2
	Douglas Fir-Larch	#3	6-2	9-0	11-5	13-11	16-2	5-6	8-1	10-3	12-6	14-6
	Hem-Fir	SS	7-10	12-3	16-2	20-8	25-1	7-10	12-3	16-2	20-8	24-2
	Hem-Fir	#1	7-8	12-0	15-9	19-3	22-3	7-7	11-1	14-1	17-2	19-11
	Hem-Fir	#2	7-3	11-5	14-11	18-2	21-1	7-2	10-6	13-4	16-3	18-10
	Hem-Fir	#3	6-2	9-0	11-5	13-11	16-2	5-6	8-1	10-3	12-6	14-6
	Southern Pine	SS	8-1	12-9	16-10	21-6	Note b	8-1	12-9	16-10	21-6	25-11
	Southern Pine	#1	7-10	12-3	16-2	19-3	22-10	7-10	11-7	14-9	17-3	20-5
	Southern Pine	#2	7-6	11-2	14-2	16-10	19-10	6-8	10-0	12-8	15-1	17-9
	Southern Pine	#3	5-9	8-6	10-8	13-0	15-4	5-2	7-7	9-7	11-7	13-9
	Spruce-Pine-Fir	SS	7-8	12-0	15-10	20-2	24-7	7-8	12-0	15-10	19-9	22-10
	Spruce-Pine-Fir	#1	7-6	11-9	15-1	18-5	21-5	7-3	10-8	13-6	16-6	19-2
	Spruce-Pine-Fir	#2	7-6	11-9	15-1	18-5	21-5	7-3	10-8	13-6	16-6	19-2
	Spruce-Pine-Fir	#3	6-2	9-0	11-5	13-11	16-2	5-6	8-1	10-3	12-6	14-6
19.2	Douglas Fir-Larch	SS	7-9	12-3	16-1	20-7	25-0	7-9	12-3	15-10	19-5	22-6
	Douglas Fir-Larch	#1	7-6	11-8	14-9	18-0	20-11	7-1	10-5	13-2	16-1	18-8
	Douglas Fir-Larch	#2	7-4	10-11	13-9	16-10	19-6	6-8	9-9	12-4	15-1	17-6
	Douglas Fir-Larch	#3	5-7	8-3	10-5	12-9	14-9	5-0	7-4	9-4	11-5	13-2
	Hem-Fir	SS	7-4	11-7	15-3	19-5	23-7	7-4	11-7	15-3	19-1	22-1
	Hem-Fir	#1	7-2	11-4	14-4	17-7	20-4	6-11	10-2	12-10	15-8	18-2
	Hem-Fir	#2	6-10	10-9	13-7	16-7	19-3	6-7	9-7	12-2	14-10	17-3
	Hem-Fir	#3	5-7	8-3	10-5	12-9	14-9	5-0	7-4	9-4	11-5	13-2

(continued)

INTERNATIONAL CODE COUNCIL®
Copyright © 2019 ICC & NYSDOS. ALL RIGHTS RESERVED. Accessed by Lauren Gualdino (lgualdino@briarcliffmanor.org), (-) Order Number #100880972 on May 08, 2020 07:05 AM (PDT) pursuant to License Agreement with ICC & NYSDOS. No further reproduction, no

100880972

TABLE 2308.7.2(5)—continued
RAFTER SPANS FOR COMMON LUMBER SPECIES
(Ground snow load = 30 psf, ceiling attached to rafters, L/Δ = 240)

RAFTER SPACING (inches)	SPECIES AND GRADE		DEAD LOAD = 10 psf					DEAD LOAD = 20 psf				
			2 × 4	2 × 6	2 × 8	2 × 10	2 × 12	2 × 4	2 × 6	2 × 8	2 × 10	2 × 12
			Maximum rafter spans[a]									
			(ft. - in.)	(ft. - in.)	(ft. - in.)	(ft. - in.)	(ft. - in.)	(ft. - in.)	(ft. - in.)	(ft. - in.)	(ft. - in.)	(ft. - in.)
19.2	Southern Pine	SS	7-8	12-0	15-10	20-2	24-7	7-8	12-0	15-10	20-0	23-7
	Southern Pine	#1	7-4	11-7	15-1	17-7	20-11	7-1	10-7	13-5	15-9	18-8
	Southern Pine	#2	6-10	10-2	12-11	15-4	18-1	6-1	9-2	11-7	13-9	16-2
	Southern Pine	#3	5-3	7-9	9-9	11-10	14-0	4-8	6-11	8-9	10-7	12-6
	Spruce-Pine-Fir	SS	7-2	11-4	14-11	19-0	23-1	7-2	11-4	14-9	18-0	20-11
	Spruce-Pine-Fir	#1	7-0	10-11	13-9	16-10	19-6	6-8	9-9	12-4	15-1	17-6
	Spruce-Pine-Fir	#2	7-0	10-11	13-9	16-10	19-6	6-8	9-9	12-4	15-1	17-6
	Spruce-Pine-Fir	#3	5-7	8-3	10-5	12-9	14-9	5-0	7-4	9-4	11-5	13-2
24	Douglas Fir-Larch	SS	7-3	11-4	15-0	19-1	22-6	7-3	11-3	14-2	17-4	20-1
	Douglas Fir-Larch	#1	7-0	10-5	13-2	16-1	18-8	6-4	9-4	11-9	14-5	16-8
	Douglas Fir-Larch	#2	6-8	9-9	12-4	15-1	17-6	5-11	8-8	11-0	13-6	15-7
	Douglas Fir-Larch	#3	5-0	7-4	9-4	11-5	13-2	4-6	6-7	8-4	10-2	11-10
	Hem-Fir	SS	6-10	10-9	14-2	18-0	21-11	6-10	10-9	13-11	17-0	19-9
	Hem-Fir	#1	6-8	10-2	12-10	15-8	18-2	6-2	9-1	11-6	14-0	16-3
	Hem-Fir	#2	6-4	9-7	12-2	14-10	17-3	5-10	8-7	10-10	13-3	15-5
	Hem-Fir	#3	5-0	7-4	9-4	11-5	13-2	4-6	6-7	8-4	10-2	11-10
	Southern Pine	SS	7-1	11-2	14-8	18-9	22-10	7-1	11-2	14-8	17-11	21-2
	Southern Pine	#1	6-10	10-7	13-5	15-9	18-8	6-4	9-6	12-0	14-1	16-8
	Southern Pine	#2	6-1	9-2	11-7	13-9	16-2	5-5	8-2	10-4	12-3	14-6
	Southern Pine	#3	4-8	6-11	8-9	10-7	12-6	4-2	6-2	7-10	9-6	11-2
	Spruce-Pine-Fir	SS	6-8	10-6	13-10	17-8	20-11	6-8	10-5	13-2	16-1	18-8
	Spruce-Pine-Fir	#1	6-6	9-9	12-4	15-1	17-6	5-11	8-8	11-0	13-6	15-7
	Spruce-Pine-Fir	#2	6-6	9-9	12-4	15-1	17-6	5-11	8-8	11-0	13-6	15-7
	Spruce-Pine-Fir	#3	5-0	7-4	9-4	11-5	13-2	4-6	6-7	8-4	10-2	11-10

Check sources for availability of lumber in lengths greater than 20 feet.

For SI: 1 inch = 25.4 mm, 1 foot = 304.8 mm, 1 pound per square foot = 0.0479 kPa.

a. The tabulated rafter spans assume that ceiling joists are located at the bottom of the attic space or that some other method of resisting the outward push of the rafters on the bearing walls, such as rafter ties, is provided at that location. Where ceiling joists or rafter ties are located higher in the attic space, the rafter spans shall be multiplied by the following factors:

H_C/H_R	Rafter Span Adjustment Factor
1/3	0.67
1/4	0.76
1/5	0.83
1/6	0.90
1/7.5 or less	1.00

where:

H_C = Height of ceiling joists or rafter ties measured vertically above the top of the rafter support walls.

H_R = Height of roof ridge measured vertically above the top of the rafter support walls.

b. Span exceeds 26 feet in length.

INTERNATIONAL CODE COUNCIL®
Copyright © 2019 ICC & NYSDOS. ALL RIGHTS RESERVED. Accessed by Lauren Gualdino (lgualdino@briarcliffmanor.org), (-) Order Number #100880972 on May 08, 2020 07:05 AM (PDT) pursuant to License Agreement with ICC & NYSDOS. No further reproduction, no

100880972

TABLE 2308.7.2(6)
RAFTER SPANS FOR COMMON LUMBER SPECIES
(Ground snow load = 50 psf, ceiling attached to rafters, L/Δ = 240)

RAFTER SPACING (inches)	SPECIES AND GRADE		DEAD LOAD = 10 psf					DEAD LOAD = 20 psf				
			2 × 4	2 × 6	2 × 8	2 × 10	2 × 12	2 × 4	2 × 6	2 × 8	2 × 10	2 × 12
			Maximum rafter spans[a]									
			(ft. - in.)	(ft. - in.)	(ft. - in.)	(ft. - in.)	(ft. - in.)	(ft. - in.)	(ft. - in.)	(ft. - in.)	(ft. - in.)	(ft. - in.)
12	Douglas Fir-Larch	SS	7-8	12-1	15-11	20-3	24-8	7-8	12-1	15-11	20-3	24-0
	Douglas Fir-Larch	#1	7-5	11-7	15-3	18-7	21-7	7-5	11-2	14-1	17-3	20-0
	Douglas Fir-Larch	#2	7-3	11-3	14-3	17-5	20-2	7-1	10-5	13-2	16-1	18-8
	Douglas Fir-Larch	#3	5-10	8-6	10-9	13-2	15-3	5-5	7-10	10-0	12-2	14-1
	Hem-Fir	SS	7-3	11-5	15-0	19-2	23-4	7-3	11-5	15-0	19-2	23-4
	Hem-Fir	#1	7-1	11-2	14-8	18-1	21-0	7-1	10-10	13-9	16-9	19-5
	Hem-Fir	#2	6-9	10-8	14-0	17-2	19-11	6-9	10-3	13-0	15-10	18-5
	Hem-Fir	#3	5-10	8-6	10-9	13-2	15-3	5-5	7-10	10-0	12-2	14-1
	Southern Pine	SS	7-6	11-10	15-7	19-11	24-3	7-6	11-10	15-7	19-11	24-3
	Southern Pine	#1	7-3	11-5	15-0	18-2	21-7	7-3	11-4	14-5	16-10	20-0
	Southern Pine	#2	6-11	10-6	13-4	15-10	18-8	6-6	9-9	12-4	14-8	17-3
	Southern Pine	#3	5-5	8-0	10-1	12-3	14-6	5-0	7-5	9-4	11-4	13-5
	Spruce-Pine-Fir	SS	7-1	11-2	14-8	18-9	22-10	7-1	11-2	14-8	18-9	22-4
	Spruce-Pine-Fir	#1	6-11	10-11	14-3	17-5	20-2	6-11	10-5	13-2	16-1	18-8
	Spruce-Pine-Fir	#2	6-11	10-11	14-3	17-5	20-2	6-11	10-5	13-2	16-1	18-8
	Spruce-Pine-Fir	#3	5-10	8-6	10-9	13-2	15-3	5-5	7-10	10-0	12-2	14-1
16	Douglas Fir-Larch	SS	7-0	11-0	14-5	18-5	22-5	7-0	11-0	14-5	17-11	20-10
	Douglas Fir-Larch	#1	6-9	10-5	13-2	16-1	18-8	6-7	9-8	12-2	14-11	17-3
	Douglas Fir-Larch	#2	6-7	9-9	12-4	15-1	17-6	6-2	9-0	11-5	13-11	16-2
	Douglas Fir-Larch	#3	5-0	7-4	9-4	11-5	13-2	4-8	6-10	8-8	10-6	12-3
	Hem-Fir	SS	6-7	10-4	13-8	17-5	21-2	6-7	10-4	13-8	17-5	20-5
	Hem-Fir	#1	6-5	10-2	12-10	15-8	18-2	6-5	9-5	11-11	14-6	16-10
	Hem-Fir	#2	6-2	9-7	12-2	14-10	17-3	6-1	8-11	11-3	13-9	15-11
	Hem-Fir	#3	5-0	7-4	9-4	11-5	13-2	4-8	6-10	8-8	10-6	12-3
	Southern Pine	SS	6-10	10-9	14-2	18-1	22-0	6-10	10-9	14-2	18-1	21-10
	Southern Pine	#1	6-7	10-4	13-5	15-9	18-8	6-7	9-10	12-5	14-7	17-3
	Southern Pine	#2	6-1	9-2	11-7	13-9	16-2	5-8	8-5	10-9	12-9	15-0
	Southern Pine	#3	4-8	6-11	8-9	10-7	12-6	4-4	6-5	8-1	9-10	11-7
	Spruce-Pine-Fir	SS	6-5	10-2	13-4	17-0	20-9	6-5	10-2	13-4	16-8	19-4
	Spruce-Pine-Fir	#1	6-4	9-9	12-4	15-1	17-6	6-2	9-0	11-5	13-11	16-2
	Spruce-Pine-Fir	#2	6-4	9-9	12-4	15-1	17-6	6-2	9-0	11-5	13-11	16-2
	Spruce-Pine-Fir	#3	5-0	7-4	9-4	11-5	13-2	4-8	6-10	8-8	10-6	12-3
19.2	Douglas Fir-Larch	SS	6-7	10-4	13-7	17-4	20-6	6-7	10-4	13-5	16-5	19-0
	Douglas Fir-Larch	#1	6-4	9-6	12-0	14-8	17-1	6-0	8-10	11-2	13-7	15-9
	Douglas Fir-Larch	#2	6-1	8-11	11-3	13-9	15-11	5-7	8-3	10-5	12-9	14-9
	Douglas Fir-Larch	#3	4-7	6-9	8-6	10-5	12-1	4-3	6-3	7-11	9-7	11-2
	Hem-Fir	SS	6-2	9-9	12-10	16-5	19-11	6-2	9-9	12-10	16-1	18-8
	Hem-Fir	#1	6-1	9-3	11-9	14-4	16-7	5-10	8-7	10-10	13-3	15-5
	Hem-Fir	#2	5-9	8-9	11-1	13-7	15-9	5-7	8-1	10-3	12-7	14-7
	Hem-Fir	#3	4-7	6-9	8-6	10-5	12-1	4-3	6-3	7-11	9-7	11-2

(continued)

INTERNATIONAL CODE COUNCIL®
Copyright © 2019 ICC & NYSDOS. ALL RIGHTS RESERVED. Accessed by Lauren Gualdino (lgualdino@briarcliffmanor.org), (-) Order Number #100880972 on May 08, 2020 07:05 AM (PDT) pursuant to License Agreement with ICC & NYSDOS. No further reproduction, no

100880972

TABLE 2308.7.2(6)—continued
RAFTER SPANS FOR COMMON LUMBER SPECIES
(Ground snow load = 50 psf, ceiling attached to rafters, L/Δ = 240)

RAFTER SPACING (inches)	SPECIES AND GRADE		DEAD LOAD = 10 psf					DEAD LOAD = 20 psf				
			2 × 4	2 × 6	2 × 8	2 × 10	2 × 12	2 × 4	2 × 6	2 × 8	2 × 10	2 × 12
			Maximum rafter spans[a]									
			(ft. - in.)	(ft. - in.)	(ft. - in.)	(ft. - in.)	(ft. - in.)	(ft. - in.)	(ft. - in.)	(ft. - in.)	(ft. - in.)	(ft. - in.)
19.2	Southern Pine	SS	6-5	10-2	13-4	17-0	20-9	6-5	10-2	13-4	16-11	20-0
	Southern Pine	#1	6-2	9-8	12-3	14-4	17-1	6-0	9-0	11-4	13-4	15-9
	Southern Pine	#2	5-7	8-4	10-7	12-6	14-9	5-2	7-9	9-9	11-7	13-8
	Southern Pine	#3	4-3	6-4	8-0	9-8	11-5	4-0	5-10	7-4	8-11	10-7
	Spruce-Pine-Fir	SS	6-1	9-6	12-7	16-0	19-1	6-1	9-6	12-5	15-3	17-8
	Spruce-Pine-Fir	#1	5-11	8-11	11-3	13-9	15-11	5-7	8-3	10-5	12-9	14-9
	Spruce-Pine-Fir	#2	5-11	8-11	11-3	13-9	15-11	5-7	8-3	10-5	12-9	14-9
	Spruce-Pine-Fir	#3	4-7	6-9	8-6	10-5	12-1	4-3	6-3	7-11	9-7	11-2
24	Douglas Fir-Larch	SS	6-1	9-7	12-7	15-10	18-4	6-1	9-6	12-0	14-8	17-0
	Douglas Fir-Larch	#1	5-10	8-6	10-9	13-2	15-3	5-5	7-10	10-0	12-2	14-1
	Douglas Fir-Larch	#2	5-5	7-11	10-1	12-4	14-3	5-0	7-4	9-4	11-5	13-2
	Douglas Fir-Larch	#3	4-1	6-0	7-7	9-4	10-9	3-10	5-7	7-1	8-7	10-0
	Hem-Fir	SS	5-9	9-1	11-11	15-2	18-0	5-9	9-1	11-9	14-5	15-11
	Hem-Fir	#1	5-8	8-3	10-6	12-10	14-10	5-3	7-8	9-9	11-10	13-9
	Hem-Fir	#2	5-4	7-10	9-11	12-1	14-1	4-11	7-3	9-2	11-3	13-0
	Hem-Fir	#3	4-1	6-0	7-7	9-4	10-9	3-10	5-7	7-1	8-7	10-0
	Southern Pine	SS	6-0	9-5	12-5	15-10	19-3	6-0	9-5	12-5	15-2	17-10
	Southern Pine	#1	5-9	8-8	11-0	12-10	15-3	5-5	8-0	10-2	11-11	14-1
	Southern Pine	#2	5-0	7-5	9-5	11-3	13-2	4-7	6-11	8-9	10-5	12-3
	Southern Pine	#3	3-10	5-8	7-1	8-8	10-3	3-6	5-3	6-7	8-0	9-6
	Spruce-Pine-Fir	SS	5-8	8-10	11-8	14-8	17-1	5-8	8-10	11-2	13-7	15-9
	Spruce-Pine-Fir	#1	5-5	7-11	10-1	12-4	14-3	5-0	7-4	9-4	11-5	13-2
	Spruce-Pine-Fir	#2	5-5	7-11	10-1	12-4	14-3	5-0	7-4	9-4	11-5	13-2
	Spruce-Pine-Fir	#3	4-1	6-0	7-7	9-4	10-9	3-10	5-7	7-1	8-7	10-0

Check sources for availability of lumber in lengths greater than 20 feet.

For SI: 1 inch = 25.4 mm, 1 foot = 304.8 mm, 1 pound per square foot = 0.0479 kPa.

a. The tabulated rafter spans assume that ceiling joists are located at the bottom of the attic space or that some other method of resisting the outward push of the rafters on the bearing walls, such as rafter ties, is provided at that location. Where ceiling joists or rafter ties are located higher in the attic space, the rafter spans shall be multiplied by the following factors:

H_C/H_R	Rafter Span Adjustment Factor
1/3	0.67
1/4	0.76
1/5	0.83
1/6	0.90
1/7.5 or less	1.00

where:

H_C = Height of ceiling joists or rafter ties measured vertically above the top of the rafter support walls.

H_R = Height of roof ridge measured vertically above the top of the rafter support walls.

INTERNATIONAL CODE COUNCIL®
Copyright © 2019 ICC & NYSDOS. ALL RIGHTS RESERVED. Accessed by Lauren Gualdino (lgualdino@briarcliffmanor.org), (-) Order Number #100880972 on May 08, 2020 07:05 AM (PDT) pursuant to License Agreement with ICC & NYSDOS. No further reproduction, no

100880972

TABLE 2308.7.3.1
RAFTER TIE CONNECTIONS[g]

RAFTER SLOPE	TIE SPACING (inches)	NO SNOW LOAD				GROUND SNOW LOAD (pound per square foot)							
						30 pounds per square foot				50 pounds per square foot			
		Roof span (feet)											
		12	20	28	36	12	20	28	36	12	20	28	36
		Required number of 16d common ($3^1/_2$″ x 0.162″) nails[a, b] per connection[c, d, e, f]											
3:12	12	4	6	8	10	4	6	8	11	5	8	12	15
	16	5	7	10	13	5	8	11	14	6	11	15	20
	24	7	11	15	19	7	11	16	21	9	16	23	30
	32	10	14	19	25	10	16	22	28	12	27	30	40
	48	14	21	29	37	14	32	36	42	18	32	46	60
4:12	12	3	4	5	6	3	5	6	8	4	6	9	11
	16	3	5	7	8	4	6	8	11	5	8	12	15
	24	4	7	10	12	5	9	12	16	7	12	17	22
	32	6	9	13	16	8	12	16	22	10	16	24	30
	48	8	14	19	24	10	18	24	32	14	24	34	44
5:12	12	3	3	4	5	3	4	5	7	3	5	7	9
	16	3	4	5	7	3	5	7	9	4	7	9	12
	24	4	6	8	10	4	7	10	13	6	10	14	18
	32	5	8	10	13	6	10	14	18	8	14	18	24
	48	7	11	15	20	8	14	20	26	12	20	28	36
7:12	12	3	3	3	4	3	3	4	5	3	4	5	7
	16	3	3	4	5	3	4	5	6	3	5	7	9
	24	3	4	6	7	3	5	7	9	4	7	10	13
	32	4	6	8	10	4	8	10	12	6	10	14	18
	48	5	8	11	14	6	10	14	18	9	14	20	26
9:12	12	3	3	3	3	3	3	3	4	3	3	4	5
	16	3	3	3	4	3	3	4	5	3	4	5	7
	24	3	3	5	6	3	4	6	7	3	6	8	10
	32	3	4	6	8	4	6	8	10	5	8	10	14
	48	4	6	9	11	5	8	12	14	7	12	16	20
12:12	12	3	3	3	3	3	3	3	3	3	3	3	4
	16	3	3	3	3	3	3	3	4	3	3	4	5
	24	3	3	3	4	3	3	4	6	3	4	6	8
	32	3	3	4	5	3	5	6	8	4	6	8	10
	48	3	4	6	7	4	7	8	12	6	8	12	16

For SI: 1 inch = 25.4 mm, 1 foot = 304.8 mm, 1 pound per square foot = 47.8 N/m^2.

a. 40d box (5″ × 0.162″) or 16d sinker ($3^1/_4$″ × 0.148″) nails are permitted to be substituted for 16d common ($3^1/_2$″ × 0.16″) nails.

b. Nailing requirements are permitted to be reduced 25 percent if nails are clinched.

c. Rafter tie heel joint connections are not required where the ridge is supported by a load-bearing wall, header or ridge beam.

d. Where intermediate support of the rafter is provided by vertical struts or purlins to a load-bearing wall, the tabulated heel joint connection requirements are permitted to be reduced proportionally to the reduction in span.

e. Equivalent nailing patterns are required for ceiling joist to ceiling joist lap splices.

f. Connected members shall be of sufficient size to prevent splitting due to nailing.

g. For snow loads less than 30 pounds per square foot, the required number of nails is permitted to be reduced by multiplying by the ratio of actual snow load plus 10 divided by 40, but not less than the number required for no snow load.

INTERNATIONAL CODE COUNCIL®
Copyright © 2019 ICC & NYSDOS. ALL RIGHTS RESERVED. Accessed by Lauren Gualdino (lgualdino@briarcliffmanor.org), (-) Order Number #100880972 on May 08, 2020 07:05 AM (PDT) pursuant to License Agreement with ICC & NYSDOS. No further reproduction, no

100880972

TABLE 2308.7.12
ALLOWABLE SPANS FOR 2-INCH TONGUE-AND-GROOVE DECKING

SPAN[a] (feet)	LIVE LOAD (pounds per square foot)	DEFLECTION LIMIT	BENDING STRESS (f) (pounds per square inch)	MODULUS OF ELASTICITY (E) (pounds per square inch)
Roofs				
4	20	1/240 1/360	160	170,000 256,000
	30	1/240 1/360	210	256,000 384,000
	40	1/240 1/360	270	340,000 512,000
4.5	20	1/240 1/360	200	242,000 305,000
	30	1/240 1/360	270	363,000 405,000
	40	1/240 1/360	350	484,000 725,000
5.0	20	1/240 1/360	250	332,000 500,000
	30	1/240 1/360	330	495,000 742,000
	40	1/240 1/360	420	660,000 1,000,000
5.5	20	1/240 1/360	300	442,000 660,000
	30	1/240 1/360	400	662,000 998,000
	40	1/240 1/360	500	884,000 1,330,000
6.0	20	1/240 1/360	360	575,000 862,000
	30	1/240 1/360	480	862,000 1,295,000
	40	1/240 1/360	600	1,150,000 1,730,000

(continued)

INTERNATIONAL CODE COUNCIL®
Copyright © 2019 ICC & NYSDOS. ALL RIGHTS RESERVED. Accessed by Lauren Gualdino (lgualdino@briarcliffmanor.org), (-) Order Number #100880972 on May 08, 2020 07:05 AM (PDT) pursuant to License Agreement with ICC & NYSDOS. No further reproduction, no

100880972

TABLE 2308.7.12—continued
ALLOWABLE SPANS FOR 2-INCH TONGUE-AND-GROOVE DECKING

SPAN[a] (feet)	LIVE LOAD (pounds per square foot)	DEFLECTION LIMIT	BENDING STRESS (f) (pounds per square inch)	MODULUS OF ELASTICITY (E) (pounds per square inch)
Roofs				
6.5	20	1/240 1/360	420	595,000 892,000
	30	1/240 1/360	560	892,000 1,340,000
	40	1/240 1/360	700	1,190,000 1,730,000
7.0	20	1/240 1/360	490	910,000 1,360,000
	30	1/240 1/360	650	1,370,000 2,000,000
	40	1/240 1/360	810	1,820,000 2,725,000
7.5	20	1/240 1/360	560	1,125,000 1,685,000
	30	1/240 1/360	750	1,685,000 2,530,000
	40	1/240 1/360	930	2,250,000 3,380,000
8.0	20	1/240 1/360	640	1,360,000 2,040,000
	30	1/240 1/360	850	2,040,000 3,060,000
Floors				
4 4.5 5.0	40	1/360	840 950 1,060	1,000,000 1,300,000 1,600,000

For SI: 1 inch = 25.4 mm, 1 foot = 304.8 mm, 1 pound per square foot = 0.0479 kN/m^2, 1 pound per square inch = 0.00689 N/mm^2.

a. Spans are based on simple beam action with 10 pounds per square foot dead load and provisions for a 300-pound concentrated load on a 12-inch width of decking. Random layup is permitted in accordance with the provisions of Section 2308.7.12. Lumber thickness is $1^1/_2$ inches nominal.

INTERNATIONAL CODE COUNCIL®
Copyright © 2019 ICC & NYSDOS. ALL RIGHTS RESERVED. Accessed by Lauren Gualdino (lgualdino@briarcliffmanor.org), (-) Order Number #100880972 on May 08, 2020 07:05 AM (PDT) pursuant to License Agreement with ICC & NYSDOS. No further reproduction, no

100880972

INTERNATIONAL CODE COUNCIL®
Copyright © 2019 ICC & NYSDOS. ALL RIGHTS RESERVED. Accessed by Lauren Gualdino (lgualdino@briarcliffmanor.org), (-) Order Number #100880972 on May 08, 2020 07:05 AM (PDT) pursuant to License Agreement with ICC & NYSDOS. No further reproduction, no

100880972

CHAPTER 24

GLASS AND GLAZING

SECTION 2401 GENERAL

2401.1 Scope. The provisions of this chapter shall govern the materials, design, construction and quality of glass, light-transmitting ceramic and light-transmitting plastic panels for exterior and interior use in both vertical and sloped applications in buildings and structures.

SECTION 2402 GLAZING REPLACEMENT

2402.1 General. The installation of replacement glass shall be as required for new installations.

SECTION 2403 GENERAL REQUIREMENTS FOR GLASS

2403.1 Identification. Each pane shall bear the manufacturer's *mark* designating the type and thickness of the glass or glazing material. The identification shall not be omitted unless *approved* and an affidavit is furnished by the glazing contractor certifying that each light is glazed in accordance with *approved construction documents* that comply with the provisions of this chapter. Safety glazing shall be identified in accordance with Section 2406.3.

Each pane of tempered glass, except tempered spandrel glass, shall be permanently identified by the manufacturer. The identification *mark* shall be acid etched, sand blasted, ceramic fired, laser etched, embossed or of a type that, once applied, cannot be removed without being destroyed.

Tempered spandrel glass shall be provided with a removable paper marking by the manufacturer.

2403.2 Glass supports. Where one or more sides of any pane of glass are not firmly supported, or are subjected to unusual load conditions, detailed *construction documents*, detailed shop drawings and analysis or test data ensuring safe performance for the specific installation shall be prepared by a *registered design professional*.

2403.3 Framing. To be considered firmly supported, the framing members for each individual pane of glass shall be designed so the deflection of the edge of the glass perpendicular to the glass pane shall not exceed $^1/_{175}$ of the glass edge length or $^3/_4$ inch (19.1 mm), whichever is less, when subjected to the larger of the positive or negative load where loads are combined as specified in Section 1605.

2403.4 Interior glazed areas. Where interior glazing is installed adjacent to a walking surface, the differential deflection of two adjacent unsupported edges shall be not greater than the thickness of the panels when a force of 50 pounds per linear foot (plf) (730 N/m) is applied horizontally to one panel at any point up to 42 inches (1067 mm) above the walking surface.

2403.5 Louvered windows or jalousies. Float, wired and patterned glass in louvered windows and jalousies shall be not thinner than nominal $^3/_{16}$ inch (4.8 mm) and not longer than 48 inches (1219 mm). Exposed glass edges shall be smooth.

Wired glass with wire exposed on longitudinal edges shall not be used in louvered windows or jalousies.

Where other glass types are used, the design shall be submitted to the *building official* for approval.

SECTION 2404 WIND, SNOW, SEISMIC AND DEAD LOADS ON GLASS

2404.1 Vertical glass. Glass sloped 15 degrees (0.26 rad) or less from vertical in windows, curtain and window walls, doors and other exterior applications shall be designed to resist the wind loads due to basic design wind speed, *V*, in Section 1609 for components and cladding. Glass in glazed curtain walls, glazed storefronts and glazed partitions shall meet the seismic requirements of ASCE 7, Section 13.5.9. The load resistance of glass under uniform load shall be determined in accordance with ASTM E1300.

The design of vertical glazing shall be based on Equation 24-1.

$$0.6F_{gw} \le F_{ga} \qquad \textbf{(Equation 24-1)}$$

where:

F_{gw} = Wind load on the glass due to basic design wind speed, *V*, computed in accordance with Section 1609.

F_{ga} = Short duration load on the glass as determined in accordance with ASTM E1300.

2404.2 Sloped glass. Glass sloped more than 15 degrees (0.26 rad) from vertical in skylights, sunrooms, sloped roofs and other exterior applications shall be designed to resist the most critical combinations of loads determined by Equations 24-2, 24-3 and 24-4.

$$F_g = 0.6W_o - D \qquad \textbf{(Equation 24-2)}$$

$$F_g = 0.6W_i + D + 0.5\,S \qquad \textbf{(Equation 24-3)}$$

$$F_g = 0.3\,W_i + D + S \qquad \textbf{(Equation 24-4)}$$

where:

D = Glass dead load psf (kN/m^2).

For glass sloped 30 degrees (0.52 rad) or less from horizontal,

= 13 t_g (For SI: 0.0245 t_g).

INTERNATIONAL CODE COUNCIL®
Copyright © 2019 ICC & NYSDOS. ALL RIGHTS RESERVED. Accessed by Lauren Gualdino (lgualdino@briarcliffmanor.org), (-) Order Number #100880972 on May 08, 2020 07:05 AM (PDT) pursuant to License Agreement with ICC & NYSDOS. No further reproduction, no

100880972

For glass sloped more than 30 degrees (0.52 rad) from horizontal,

= 13 t_g cos θ (For SI: 0.0245 t_g cos θ).

F_g = Total load, psf (kN/m^2) on glass.

S = Snow load, psf (kN/m^2) as determined in Section 1608.

t_g = Total glass thickness, inches (mm) of glass panes and plies.

W_i = Inward wind force, psf (kN/m^2) due to basic design wind speed, V, as calculated in Section 1609.

W_o = Outward wind force, psf (kN/m^2) due to basic design wind speed, V, as calculated in Section 1609.

θ = Angle of slope from horizontal.

Exception: The performance grade rating of unit skylights and tubular daylighting devices shall be determined in accordance with Section 2405.5.

The design of sloped glazing shall be based on Equation 24-5.

$$F_g \le F_{ga} \qquad \textbf{(Equation 24-5)}$$

where:

F_g = Total load on the glass as determined by Equations 24-2, 24-3 and 24-4.

F_{ga} = Short duration load resistance of the glass as determined in accordance with ASTM E1300 for Equations 24-2 and 24-3; or the long duration load resistance of the glass as determined in accordance with ASTM E1300 for Equation 24-4.

2404.3 Wired, patterned and sandblasted glass.

2404.3.1 Vertical wired glass. Wired glass sloped 15 degrees (0.26 rad) or less from vertical in windows, curtain and window walls, doors and other exterior applications shall be designed to resist the wind loads in Section 1609 for components and cladding according to the following equation:

$$0.6F_{gw} < 0.5\ F_{ge} \qquad \textbf{(Equation 24-6)}$$

where:

F_{gw} = Wind load on the glass due to basic design wind speed, V, computed in accordance with Section 1609.

F_{ge} = Nonfactored load from ASTM E1300 using a thickness designation for monolithic glass that is not greater than the thickness of wired glass.

2404.3.2 Sloped wired glass. Wired glass sloped more than 15 degrees (0.26 rad) from vertical in skylights, sunspaces, sloped roofs and other exterior applications shall be designed to resist the most critical of the combinations of loads from Section 2404.2.

For Equations 24-2 and 24-3:

$$F_g < 0.5\ F_{ge} \qquad \textbf{(Equation 24-7)}$$

For Equation 24-4:

$$F_g < 0.3\ F_{ge} \qquad \textbf{(Equation 24-8)}$$

where:

F_g = Total load on the glass as determined by Equations 24-2, 24-3 and 24-4.

F_{ge} = Nonfactored load in accordance with ASTM E1300.

2404.3.3 Vertical patterned glass. Patterned glass sloped 15 degrees (0.26 rad) or less from vertical in windows, curtain and window walls, doors and other exterior applications shall be designed to resist the wind loads in Section 1609 for components and cladding according to Equation 24-9.

$$F_{gw} < 1.0\ F_{ge} \qquad \textbf{(Equation 24-9)}$$

where:

F_{gw} = Wind load on the glass due to basic design wind speed, V, computed in accordance with Section 1609.

F_{ge} = Nonfactored load in accordance with ASTM E1300. The value for patterned glass shall be based on the thinnest part of the glass. Interpolation between nonfactored load charts in ASTM E1300 shall be permitted.

2404.3.4 Sloped patterned glass. Patterned glass sloped more than 15 degrees (0.26 rad) from vertical in skylights, sunspaces, sloped roofs and other exterior applications shall be designed to resist the most critical of the combinations of loads from Section 2404.2.

For Equations 24-2 and 24-3:

$$F_g < 1.0\ F_{ge} \qquad \textbf{(Equation 24-10)}$$

For Equation 24-4:

$$F_g < 0.6F_{ge} \qquad \textbf{(Equation 24-11)}$$

where:

F_g = Total load on the glass as determined by Equations 24-2, 24-3 and 24-4.

F_{ge} = Nonfactored load in accordance with ASTM E1300. The value for patterned glass shall be based on the thinnest part of the glass. Interpolation between the nonfactored load charts in ASTM E1300 shall be permitted.

2404.3.5 Vertical sandblasted glass. Sandblasted glass sloped 15 degrees (0.26 rad) or less from vertical in windows, curtain and window walls, doors, and other exterior applications shall be designed to resist the wind loads in Section 1609 for components and cladding according to Equation 24-12.

$$0.6F_{gw} < 0.5\ F_{ge} \qquad \textbf{(Equation 24-12)}$$

where:

F_g = Wind load on the glass due to basic design wind speed, V, computed in accordance with Section 1609.

F_{ge} = Nonfactored load in accordance with ASTM E1300. The value for sandblasted glass is for moderate levels of sandblasting.

INTERNATIONAL CODE COUNCIL®
Copyright © 2019 ICC & NYSDOS. ALL RIGHTS RESERVED. Accessed by Lauren Gualdino (lgualdino@briarcliffmanor.org), (-) Order Number #100880972 on May 08, 2020 07:05 AM (PDT) pursuant to License Agreement with ICC & NYSDOS. No further reproduction, no

100880972

2404.4 Other designs. For designs outside the scope of this section, an analysis or test data for the specific installation shall be prepared by a *registered design professional*.

SECTION 2405
SLOPED GLAZING AND SKYLIGHTS

2405.1 Scope. This section applies to the installation of glass and other transparent, translucent or opaque glazing material installed at a slope more than 15 degrees (0.26 rad) from the vertical plane, including glazing materials in skylights, roofs and sloped walls.

2405.2 Allowable glazing materials and limitations. Sloped glazing shall be any of the following materials, subject to the listed limitations.

1. For monolithic glazing systems, the glazing material of the single light or layer shall be laminated glass with a minimum 30-mil (0.76 mm) polyvinyl butyral (or equivalent) interlayer, wired glass, light-transmitting plastic materials meeting the requirements of Section 2607, heat-strengthened glass or fully tempered glass.
2. For multiple-layer glazing systems, each light or layer shall consist of any of the glazing materials specified in Item 1.

Annealed glass is permitted to be used as specified in Exceptions 2 and 3 of Section 2405.3.

For additional requirements for plastic skylights, see Section 2610. Glass-block construction shall conform to the requirements of Section 2110.1.

2405.3 Screening. Where used in monolithic glazing systems, heat-strengthened and fully tempered glass shall have screens installed below the glazing material. The screens and their fastenings shall be: capable of supporting twice the weight of the glazing; firmly and substantially fastened to the framing members; and installed within 4 inches (102 mm) of the glass. The screens shall be constructed of a noncombustible material not thinner than No. 12 B&S gage (0.0808 inch) with mesh not larger than 1 inch by 1 inch (25 mm by 25 mm). In a corrosive atmosphere, structurally equivalent noncorrosive screen materials shall be used. Heat-strengthened glass, fully tempered glass and wired glass, where used in multiple-layer glazing systems as the bottom glass layer over the walking surface, shall be equipped with screening that conforms to the requirements for monolithic glazing systems.

Exception: In monolithic and multiple-layer sloped glazing systems, the following applies:

1. Fully tempered glass installed without protective screens where glazed between intervening floors at a slope of 30 degrees (0.52 rad) or less from the vertical plane shall have the highest point of the glass 10 feet (3048 mm) or less above the walking surface.
2. Screens are not required below any glazing material, including annealed glass, where the walking surface below the glazing material is permanently protected from the risk of falling glass or the area below the glazing material is not a walking surface.
3. Any glazing material, including annealed glass, is permitted to be installed without screens in the sloped glazing systems of commercial or detached noncombustible greenhouses used exclusively for growing plants and not open to the public, provided that the height of the greenhouse at the ridge does not exceed 30 feet (9144 mm) above grade.
4. Screens shall not be required in individual *dwelling units* in Groups R-2, R-3 and R-4 where fully tempered glass is used as single glazing or as both panes in an insulating glass unit, and the following conditions are met:
   4.1. Each pane of the glass is 16 square feet (1.5 m^2) or less in area.
   4.2. The highest point of the glass is 12 feet (3658 mm) or less above any walking surface or other accessible area.
   4.3. The glass thickness is $^3/_{16}$ inch (4.8 mm) or less.
5. Screens shall not be required for laminated glass with a 15-mil (0.38 mm) polyvinyl butyral (or equivalent) interlayer used in individual *dwelling units* in Groups R-2, R-3 and R-4 within the following limits:
   5.1. Each pane of glass is 16 square feet (1.5 m^2) or less in area.
   5.2. The highest point of the glass is 12 feet (3658 mm) or less above a walking surface or other accessible area.

2405.4 Framing. In Type I and II construction, sloped glazing and skylight frames shall be constructed of noncombustible materials. In structures where acid fumes deleterious to metal are incidental to the use of the buildings, *approved* pressure-treated wood or other *approved* noncorrosive materials are permitted to be used for sash and frames. Framing supporting sloped glazing and skylights shall be designed to resist the tributary roof loads in Chapter 16. Skylights set at an angle of less than 45 degrees (0.79 rad) from the horizontal plane shall be mounted not less than 4 inches (102 mm) above the plane of the roof on a curb constructed as required for the frame. Skylights shall not be installed in the plane of the roof where the roof pitch is less than 45 degrees (0.79 rad) from the horizontal.

Exception: Installation of a skylight without a curb shall be permitted on roofs with a minimum slope of 14 degrees (three units vertical in 12 units horizontal) in Group R-3 occupancies. Unit skylights installed in a roof with a pitch flatter than 14 degrees (0.25 rad) shall be mounted not less than 4 inches (102 mm) above the plane of the roof on a curb constructed as required for the frame unless otherwise specified in the manufacturer's installation instructions.

2405.5 Unit skylights and tubular daylighting devices. Unit skylights and tubular daylighting devices shall be tested and labeled as complying with AAMA/WDMA/CSA 101/I.S.2/A440. The *label* shall state the name of the manufacturer, the *approved* labeling agency, the product designation

INTERNATIONAL CODE COUNCIL®
Copyright © 2019 ICC & NYSDOS. ALL RIGHTS RESERVED. Accessed by Lauren Gualdino (lgualdino@briarcliffmanor.org), (-) Order Number #100880972 on May 08, 2020 07:05 AM (PDT) pursuant to License Agreement with ICC & NYSDOS. No further reproduction, no

100880972

and the performance grade rating as specified in AAMA/WDMA/CSA 101/I.S.2/A440. Where the product manufacturer has chosen to have the performance grade of the skylight rated separately for positive and negative design pressure, then the *label* shall state both performance grade ratings as specified in AAMA/WDMA/CSA 101/I.S.2/A440 and the skylight shall comply with Section 2405.5.2. Where the skylight is not rated separately for positive and negative pressure, then the performance grade rating shown on the *label* shall be the performance grade rating determined in accordance with AAMA/WDMA/CSA 101/I.S.2/A440 for both positive and negative design pressure and the skylight shall conform to Section 2405.5.1.

2405.5.1 Skylights rated for the same performance grade for both positive and negative design pressure. The design of skylights shall be based on Equation 24-13.

$$F_g \le PG \qquad \textbf{(Equation 24-13)}$$

where:

F_g = Maximum load on the skylight determined from Equations 24-2 through 24-4 in Section 2404.2.

PG = Performance grade rating of the skylight.

2405.5.2 Skylights rated for separate performance grades for positive and negative design pressure. The design of skylights rated for performance grade for both positive and negative design pressures shall be based on Equations 24-14 and 24-15.

$$F_{gi} \le PG_{Pos} \qquad \textbf{(Equation 24-14)}$$

$$F_{go} \le PG_{Neg} \qquad \textbf{(Equation 24-15)}$$

where:

PG_{Pos} = Performance grade rating of the skylight under positive design pressure;

PG_{Neg} = Performance grade rating of the skylight under negative design pressure; and

F_{gi} and F_{go} are determined in accordance with the following:

For $0.6W_o \ge D$,

where:

W_o = Outward wind force, psf (kN/m^2) due to basic design wind speed, V, as calculated in Section 1609.

D = The dead weight of the glazing, psf (kN/m^2) as determined in Section 2404.2 for glass, or by the weight of the plastic, psf (kN/m^2) for plastic glazing.

F_{gi} = Maximum load on the skylight determined from Equations 24-3 and 24-4 in Section 2404.2.

F_{go} = Maximum load on the skylight determined from Equation 24-2.

For $0.6\ W_o < D$,

where:

W_o = The outward wind force, psf (kN/m^2) due to basic design wind speed, V, as calculated in Section 1609.

D = The dead weight of the glazing, psf (kN/m^2) as determined in Section 2404.2 for glass, or by the weight of the plastic for plastic glazing.

F_{gi} = Maximum load on the skylight determined from Equations 24-2 through 24-4 in Section 2404.2.

F_{go} = 0.

SECTION 2406
SAFETY GLAZING

2406.1 Human impact loads. Individual glazed areas, including glass mirrors, in hazardous locations as defined in Section 2406.4 shall comply with Sections 2406.1.1 through 2406.1.4.

Exception: Mirrors and other glass panels mounted or hung on a surface that provides a continuous backing support.

2406.1.1 Impact test. Except as provided in Sections 2406.1.2 through 2406.1.4, all glazing shall pass the impact test requirements of Section 2406.2.

2406.1.2 Plastic glazing. Plastic glazing shall meet the weathering requirements of ANSI Z97.1.

2406.1.3 Glass block. Glass-block walls shall comply with Section 2110.

2406.1.4 Louvered windows and jalousies. Louvered windows and jalousies shall comply with Section 2403.5.

2406.2 Impact test. Where required by other sections of this code, glazing shall be tested in accordance with CPSC 16 CFR Part 1201. Glazing shall comply with the test criteria for Category II, unless otherwise indicated in Table 2406.2(1).

Exception: Glazing not in doors or enclosures for hot tubs, whirlpools, saunas, steam rooms, bathtubs and showers shall be permitted to be tested in accordance with ANSI Z97.1. Glazing shall comply with the test criteria for Class A, unless otherwise indicated in Table 2406.2(2).

2406.3 Identification of safety glazing. Except as indicated in Section 2406.3.1, each pane of safety glazing installed in hazardous locations shall be identified by a manufacturer's designation specifying who applied the designation, the manufacturer or installer and the safety glazing standard with which it complies, as well as the information specified in Section 2403.1. The designation shall be acid etched, sand blasted, ceramic fired, laser etched, embossed or of a type that once applied, cannot be removed without being destroyed. A *label* meeting the requirements of this section shall be permitted in lieu of the manufacturer's designation.

Exceptions:

1. For other than tempered glass, manufacturer's designations are not required, provided that the *building official* approves the use of a certificate, affidavit or other evidence confirming compliance with this code.
2. Tempered spandrel glass is permitted to be identified by the manufacturer with a removable paper designation.

2406.3.1 Multipane assemblies. Multipane glazed assemblies having individual panes not exceeding 1 square foot (0.09 m^2) in exposed areas shall have one pane or more in the assembly marked as indicated in Section 2406.3. Other panes in the assembly shall be marked "CPSC 16 CFR Part 1201" or "ANSI Z97.1," as appropriate.

INTERNATIONAL CODE COUNCIL®
Copyright © 2019 ICC & NYSDOS. ALL RIGHTS RESERVED. Accessed by Lauren Gualdino (lgualdino@briarcliffmanor.org), (-) Order Number #100880972 on May 08, 2020 07:05 AM (PDT) pursuant to License Agreement with ICC & NYSDOS. No further reproduction, no

100880972

2406.4 Hazardous locations. The locations specified in Sections 2406.4.1 through 2406.4.7 shall be considered to be specific hazardous locations requiring safety glazing materials.

2406.4.1 Glazing in doors. Glazing in all fixed and operable panels of swinging, sliding and bifold doors shall be considered to be a hazardous location.

Exceptions:

1. Glazed openings of a size through which a 3-inch-diameter (76 mm) sphere is unable to pass.
2. Decorative glazing.
3. Glazing materials used as curved glazed panels in revolving doors.
4. Commercial refrigerated cabinet glazed doors.

2406.4.2 Glazing adjacent to doors. Glazing in an individual fixed or operable panel adjacent to a door where the nearest vertical edge of the glazing is within a 24-inch (610 mm) arc of either vertical edge of the door in a closed position and where the bottom exposed edge of the glazing is less than 60 inches (1524 mm) above the walking surface shall be considered to be a hazardous location.

Exceptions:

1. Decorative glazing.
2. Where there is an intervening wall or other permanent barrier between the door and glazing.
3. Where access through the door is to a closet or storage area 3 feet (914 mm) or less in depth. Glazing in this application shall comply with Section 2406.4.3.
4. Glazing in walls on the latch side of and perpendicular to the plane of the door in a closed position in one- and two-family dwellings or within dwelling units in Group R-2.

2406.4.3 Glazing in windows. Glazing in an individual fixed or operable panel that meets all of the following conditions shall be considered to be a hazardous location:

1. The exposed area of an individual pane is greater than 9 square feet (0.84 m^2).
2. The bottom edge of the glazing is less than 18 inches (457 mm) above the floor.
3. The top edge of the glazing is greater than 36 inches (914 mm) above the floor.
4. One or more walking surface(s) are within 36 inches (914 mm), measured horizontally and in a straight line, of the plane of the glazing.

Exceptions:

1. Decorative glazing.
2. Where a horizontal rail is installed on the accessible side(s) of the glazing 34 to 38 inches (864 to 965 mm) above the walking surface. The rail shall be capable of withstanding a horizontal load of 50 pounds per linear foot (730 N/m) without contacting the glass and be not less than $1^1/_2$ inches (38 mm) in cross-sectional height.
3. Outboard panes in insulating glass units or multiple glazing where the bottom exposed edge of the glass is 25 feet (7620 mm) or more above any grade, roof, walking surface or other horizontal or sloped (within 45 degrees of horizontal) (0.79 rad) surface adjacent to the glass exterior.

2406.4.4 Glazing in guards and railings. Glazing in *guards* and railings, including structural baluster panels and nonstructural in-fill panels, regardless of area or height above a walking surface shall be considered to be a hazardous location.

2406.4.5 Glazing and wet surfaces. Glazing in walls, enclosures or fences containing or facing hot tubs, spas, whirlpools, saunas, steam rooms, bathtubs, showers and indoor or outdoor swimming pools where the bottom

TABLE 2406.2(1)
MINIMUM CATEGORY CLASSIFICATION OF GLAZING USING CPSC 16 CFR PART 1201

EXPOSED SURFACE AREA OF ONE SIDE OF ONE LITE	GLAZING IN STORM OR COMBINATION DOORS (Category class)	GLAZING IN DOORS (Category class)	GLAZED PANELS REGULATED BY SECTION 2406.4.3 (Category class)	GLAZED PANELS REGULATED BY SECTION 2406.4.2 (Category class)	DOORS AND ENCLOSURES REGULATED BY SECTION 2406.4.5 (Category class)	SLIDING GLASS DOORS PATIO TYPE (Category class)
9 square feet or less	I	I	No requirement	I	II	II
More than 9 square feet	II	II	II	II	II	II

For SI: 1 square foot = 0.0929 m^2.

TABLE 2406.2(2)
MINIMUM CATEGORY CLASSIFICATION OF GLAZING USING ANSI Z97.1

EXPOSED SURFACE AREA OF ONE SIDE OF ONE LITE	GLAZED PANELS REGULATED BY SECTION 2406.4.3 (Category class)	GLAZED PANELS REGULATED BY SECTION 2406.4.2 (Category class)	DOORS AND ENCLOSURES REGULATED BY SECTION 2406.4.5[a] (Category class)
9 square feet or less	No requirement	B	A
More than 9 square feet	A	A	A

For SI: square foot = 0.0929 m^2.

a. Use is only permitted by the exception to Section 2406.2.

INTERNATIONAL CODE COUNCIL®
Copyright © 2019 ICC & NYSDOS. ALL RIGHTS RESERVED. Accessed by Lauren Gualdino (lgualdino@briarcliffmanor.org), (-) Order Number #100880972 on May 08, 2020 07:05 AM (PDT) pursuant to License Agreement with ICC & NYSDOS. No further reproduction, no

100880972

exposed edge of the glazing is less than 60 inches (1524 mm) measured vertically above any standing or walking surface shall be considered to be a hazardous location. This shall apply to single glazing and all panes in multiple glazing.

Exception: Glazing that is more than 60 inches (1524 mm), measured horizontally and in a straight line, from the water's edge of a bathtub, hot tub, spa, whirlpool or swimming pool.

2406.4.6 Glazing adjacent to stairways and ramps. Glazing where the bottom exposed edge of the glazing is less than 60 inches (1524 mm) above the plane of the adjacent walking surface of stairways, landings between flights of stairs and ramps shall be considered to be a hazardous location.

Exceptions:

1. The side of a stairway, landing or ramp that has a guard complying with the provisions of Sections 1015 and 1607.8, and the plane of the glass is greater than 18 inches (457 mm) from the railing.
2. Glazing 36 inches (914 mm) or more measured horizontally from the walking surface.

2406.4.7 Glazing adjacent to the bottom stairway landing. Glazing adjacent to the landing at the bottom of a stairway where the glazing is less than 60 inches (1524 mm) above the landing and within a 60-inch (1524 mm) horizontal arc that is less than 180 degrees (3.14 rad) from the bottom tread nosing shall be considered to be a hazardous location.

Exception: Glazing that is protected by a guard complying with Sections 1015 and 1607.8 where the plane of the glass is greater than 18 inches (457 mm) from the guard.

2406.5 Fire department access panels. Fire department glass access panels shall be of tempered glass. For insulating glass units, all panes shall be tempered glass.

SECTION 2407
GLASS IN HANDRAILS AND GUARDS

2407.1 Materials. Glass used in a handrail or a *guard* shall be laminated glass constructed of fully tempered or heat-strengthened glass and shall comply with Category II or CPSC 16 CFR Part 1201 or Class A of ANSI Z97.1. Glazing in railing in-fill panels shall be of an *approved* safety glazing material that conforms to the provisions of Section 2406.1.1. For all glazing types, the minimum nominal thickness shall be $^1/_4$ inch (6.4 mm).

Exception: Single fully tempered glass complying with Category II of CPSC 16 CFR Part 1201 or Class A of ANSI Z97.1 shall be permitted to be used in handrails and guardrails where there is no walking surface beneath them or the walking surface is permanently protected from the risk of falling glass.

2407.1.1 Loads. The panels and their support system shall be designed to withstand the loads specified in Section 1607.8. Glass guard elements shall be designed using a factor of safety of four.

2407.1.2 Structural glass baluster panels. Guards with structural glass baluster panels shall be installed with an attached top rail or handrail. The top rail or handrail shall be supported by not fewer than three glass baluster panels, or shall be otherwise supported to remain in place should one glass baluster panel fail.

Exception: An attached top rail or handrail is not required where the glass baluster panels are laminated glass with two or more glass plies of equal thickness and of the same glass type. The panels shall be tested to remain in place as a barrier following impact or glass breakage in accordance with ASTM E2353.

2407.1.3 Parking garages. Glazing materials shall not be installed in handrails or *guards* in parking garages except for pedestrian areas not exposed to impact from vehicles.

2407.1.4 Glazing in windborne debris regions. Glazing installed in in-fill panels or balusters in *windborne debris regions* shall comply with the following:

2407.1.4.1 Balusters and in-fill panels. Glass installed in exterior railing in-fill panels or balusters shall be laminated glass complying with Category II of CPSC 16 CFR Part 1201 or Class A of ANSI Z97.1.

2407.1.4.2 Glass supporting top rail. Where the top rail is supported by glass, the assembly shall be tested according to the impact requirements of Section 1609.2. The top rail shall remain in place after impact.

SECTION 2408
GLAZING IN ATHLETIC FACILITIES

2408.1 General. Glazing in athletic facilities and similar uses subject to impact loads, which forms whole or partial wall sections or which is used as a door or part of a door, shall comply with this section.

2408.2 Racquetball and squash courts.

2408.2.1 Testing. Test methods and loads for individual glazed areas in racquetball and squash courts subject to impact loads shall conform to those of CPSC 16 CFR Part 1201 or ANSI Z97.1 with impacts being applied at a height of 59 inches (1499 mm) above the playing surface to an actual or simulated glass wall installation with fixtures, fittings and methods of assembly identical to those used in practice.

Glass walls shall comply with the following conditions:

1. A glass wall in a racquetball or squash court, or similar use subject to impact loads, shall remain intact following a test impact.
2. The deflection of such walls shall be not greater than $1^1/_2$ inches (38 mm) at the point of impact for a drop height of 48 inches (1219 mm).

INTERNATIONAL CODE COUNCIL®
Copyright © 2019 ICC & NYSDOS. ALL RIGHTS RESERVED. Accessed by Lauren Gualdino (lgualdino@briarcliffmanor.org), (-) Order Number #100880972 on May 08, 2020 07:05 AM (PDT) pursuant to License Agreement with ICC & NYSDOS. No further reproduction, no

100880972

Glass doors shall comply with the following conditions:

1. Glass doors shall remain intact following a test impact at the prescribed height in the center of the door.
2. The relative deflection between the edge of a glass door and the adjacent wall shall not exceed the thickness of the wall plus $^1/_2$ inch (12.7 mm) for a drop height of 48 inches (1219 mm).

2408.3 Gymnasiums and basketball courts. Glazing in multipurpose gymnasiums, basketball courts and similar athletic facilities subject to human impact loads shall comply with Category II of CPSC 16 CFR Part 1201 or Class A of ANSI Z97.1.

SECTION 2409
GLASS IN WALKWAYS, ELEVATOR HOISTWAYS AND ELEVATOR CARS

2409.1 Glass walkways. Glass installed as a part of a floor/ceiling assembly as a walking surface and constructed with laminated glass shall comply with ASTM E2751 or with the load requirements specified in Chapter 16. Such assemblies shall comply with the *fire-resistance rating* and marking requirements of this code where applicable.

2409.2 Glass in elevator hoistway enclosures. Glass in elevator hoistway enclosures and hoistway doors shall be laminated glass conforming to ANSI Z97.1 or CPSC 16 CFR Part 1201.

2409.2.1 Fire-resistance-rated hoistways. Glass installed in hoistways and hoistway doors where the hoistway is required to have a fire-resistance rating shall comply with Section 716.

2409.2.2 Glass hoistway doors. The glass in glass hoistway doors shall be not less than 60 percent of the total visible door panel surface area as seen from the landing side.

2409.3 Visions panels in elevator hoistway doors. Glass in vision panels in elevator hoistway doors shall be permitted to be any transparent glazing material not less than $^1/_4$ inch (6.4 mm) in thickness conforming to Class A in accordance with ANSI Z97.1 or Category II in accordance with CPSC 16 CFR Part 1201. The area of any single vision panel shall be not less than 24 square inches (15 484 mm^2) and the total area of one or more vision panels in any hoistway door shall be not more than 85 square inches (54 839 mm^2).

2409.4 Glass in elevator cars. Glass in elevator cars shall be in accordance with this section.

2409.4.1 Glass types. Glass in elevator car enclosures, glass elevator car doors and glass used for lining walls and ceilings of elevator cars shall be laminated glass conforming to Class A in accordance with ANSI Z97.1 or Category II in accordance with CPSC 16 CFR Part 1201.

Exception: Tempered glass shall be permitted to be used for lining walls and ceilings of elevator cars provided that:

1. The glass is bonded to a nonpolymeric coating, sheeting or film backing having a physical integrity to hold the fragments when the glass breaks.
2. The glass is not subjected to further treatment such as sandblasting; etching; heat treatment or painting that could alter the original properties of the glass.
3. The glass is tested to the acceptance criteria for laminated glass as specified for Class A in accordance with ANSI Z97.l or Category II in accordance with CPSC 16 CFR Part 1201.

2409.4.2 Surface area. The glass in glass elevator car doors shall be not less than 60 percent of the total visible door panel surface area as seen from the car side of the doors.

INTERNATIONAL CODE COUNCIL®
Copyright © 2019 ICC & NYSDOS. ALL RIGHTS RESERVED. Accessed by Lauren Gualdino (lgualdino@briarcliffmanor.org), (-) Order Number #100880972 on May 08, 2020 07:05 AM (PDT) pursuant to License Agreement with ICC & NYSDOS. No further reproduction, no

100880972

INTERNATIONAL CODE COUNCIL®
Copyright © 2019 ICC & NYSDOS. ALL RIGHTS RESERVED. Accessed by Lauren Gualdino (lgualdino@briarcliffmanor.org), (-) Order Number #100880972 on May 08, 2020 07:05 AM (PDT) pursuant to License Agreement with ICC & NYSDOS. No further reproduction, no

100880972

CHAPTER 25

GYPSUM BOARD, GYPSUM PANEL PRODUCTS AND PLASTER

SECTION 2501
GENERAL

2501.1 Scope. Provisions of this chapter shall govern the materials, design, construction and quality of gypsum board, gypsum panel products, lath, gypsum plaster, cement plaster and reinforced gypsum concrete.

2501.2 Other materials. Other *approved* wall or ceiling coverings shall be permitted to be installed in accordance with the recommendations of the manufacturer and the conditions of approval.

SECTION 2502
PERFORMANCE

2502.1 General. Lathing, plastering and gypsum board and gypsum panel product construction shall be done in the manner and with the materials specified in this chapter and, where required for fire protection, shall comply with the provisions of Chapter 7.

SECTION 2503
INSPECTION

[NY] 2503.1 Inspection. Lath, gypsum board and gypsum panel products shall be inspected in accordance with Section 105.3.

SECTION 2504
VERTICAL AND HORIZONTAL ASSEMBLIES

2504.1 Scope. The following requirements shall be met where construction involves gypsum board, gypsum panel products or lath and plaster in vertical and horizontal assemblies.

2504.1.1 Wood framing. Wood supports for lath, gypsum board or gypsum panel products, as well as wood stripping or furring, shall be not less than 2 inches (51 mm) nominal thickness in the least dimension.

Exception: The minimum nominal dimension of wood furring strips installed over solid backing shall be not less than 1 inch by 2 inches (25 mm by 51 mm).

2504.1.2 Studless partitions. The minimum thickness of vertically erected studless solid plaster partitions of $^{3}/_{8}$-inch (9.5 mm) and $^{3}/_{4}$-inch (19.1 mm) rib metal lath, $^{1}/_{2}$-inch-thick (12.7 mm) gypsum lath, gypsum board or gypsum panel product shall be 2 inches (51 mm).

SECTION 2505
SHEAR WALL CONSTRUCTION

2505.1 Resistance to shear (wood framing). Wood-frame shear walls sheathed with gypsum board, gypsum panel products or lath and plaster shall be designed and constructed in accordance with Section 2306.3 and are permitted to resist wind and seismic loads. Walls resisting seismic loads shall be subject to the limitations in Section 12.2.1 of ASCE 7.

2505.2 Resistance to shear (steel framing). Cold-formed steel-frame shear walls sheathed with gypsum board or gypsum panel products and constructed in accordance with the materials and provisions of Section 2211.1.1 are permitted to resist wind and seismic loads. Walls resisting seismic loads shall be subject to the limitations in Section 12.2.1 of ASCE 7.

SECTION 2506
GYPSUM BOARD AND GYPSUM PANEL PRODUCT MATERIALS

2506.1 General. Gypsum board, gypsum panel products and accessories shall be identified by the manufacturer's designation to indicate compliance with the appropriate standards referenced in this section and stored to protect such materials from the weather.

2506.2 Standards. Gypsum board and gypsum panel products shall conform to the appropriate standards listed in Table 2506.2 and Chapter 35 and, where required for fire protection, shall conform to the provisions of Chapter 7.

2506.2.1 Other materials. Metal suspension systems for acoustical and lay-in panel ceilings shall comply with ASTM C635 listed in Chapter 35 and Section 13.5.6 of ASCE 7 for installation in high seismic areas.

SECTION 2507
LATHING AND PLASTERING

2507.1 General. Lathing and plastering materials and accessories shall be marked by the manufacturer's designation to indicate compliance with the appropriate standards referenced in this section and stored in such a manner to protect them from the weather.

2507.2 Standards. Lathing and plastering materials shall conform to the standards listed in Table 2507.2 and Chapter 35 and, where required for fire protection, shall conform to the provisions of Chapter 7.

INTERNATIONAL CODE COUNCIL®
Copyright © 2019 ICC & NYSDOS. ALL RIGHTS RESERVED. Accessed by Lauren Gualdino (lgualdino@briarcliffmanor.org), (-) Order Number #100880972 on May 08, 2020 07:05 AM (PDT) pursuant to License Agreement with ICC & NYSDOS. No further reproduction, no

100880972

TABLE 2506.2
GYPSUM BOARD AND GYPSUM PANEL PRODUCTS MATERIALS AND ACCESSORIES

MATERIAL	STANDARD
Accessories for gypsum board	ASTM C1047
Adhesives for fastening gypsum board	ASTM C557
Cold-formed steel studs and track, structural	AISI S240
Cold-formed steel studs and track, nonstructural	AISI S220
Elastomeric joint sealants	ASTM C920
Expandable foam adhesives for fastening gypsum wallboard	ASTM D6464
Factory-laminated gypsum panel products	ASTM C1766
Fiber-reinforced gypsum panels	ASTM C1278
Glass mat gypsum backing panel	ASTM C1178
Glass mat gypsum panel 5	ASTM C1658
Glass mat gypsum substrate	ASTM C1177
Joint reinforcing tape and compound	ASTM C474; C475
Nails for gypsum boards	ASTM C514, F547, F1667
Steel screws	ASTM C954; C1002
Standard specification for gypsum board	ASTM C1396
Testing gypsum and gypsum products	ASTM C22; C472; C473

SECTION 2508
GYPSUM CONSTRUCTION

2508.1 General. Gypsum board, gypsum panel products and gypsum plaster construction shall be of the materials listed in Tables 2506.2 and 2507.2. These materials shall be assembled and installed in compliance with the appropriate standards listed in Tables 2508.1 and 2511.1.1 and Chapter 35.

TABLE 2508.1
INSTALLATION OF GYPSUM CONSTRUCTION

MATERIAL	STANDARD
Gypsum board and gypsum panel products	GA-216; ASTM C840
Gypsum sheathing and gypsum panel products	ASTM C1280
Gypsum veneer base	ASTM C844
Interior lathing and furring	ASTM C841
Steel framing for gypsum board and gypsum panel products	ASTM C754; C1007

2508.2 Limitations. Gypsum wallboard or gypsum plaster shall not be used in any exterior surface where such gypsum construction will be exposed directly to the weather. Gypsum wallboard shall not be used where there will be direct exposure to water or continuous high humidity conditions. Gypsum sheathing shall be installed on exterior surfaces in accordance with ASTM C1280.

2508.2.1 Weather protection. Gypsum wallboard, gypsum lath or gypsum plaster shall not be installed until weather protection for the installation is provided.

2508.3 Single-ply application. Edges and ends of gypsum board and gypsum panel products shall occur on the framing members, except those edges and ends that are perpendicular to the framing members. Edges and ends of gypsum board and gypsum panel products shall be in moderate contact except in concealed spaces where fire-resistance-rated construction, shear resistance or diaphragm action is not required.

2508.3.1 Floating angles. Fasteners at the top and bottom plates of vertical assemblies, or the edges and ends of horizontal assemblies perpendicular to supports, and at the wall line are permitted to be omitted except on shear resisting elements or fire-resistance-rated assemblies. Fasteners shall be applied in such a manner as not to fracture the face paper with the fastener head.

2508.4 Adhesives. Gypsum board and gypsum panel products secured to framing with adhesives in ceiling assemblies shall be attached using an approved fastening schedule. Expandable foam adhesives for fastening gypsum wallboard shall conform to ASTM D6464. Other adhesives for the installation of gypsum wallboard shall conform to ASTM C557.

2508.5 Joint treatment. Gypsum board and gypsum panel product fire-resistance-rated assemblies shall have joints and fasteners treated.

Exception: Joint and fastener treatment need not be provided where any of the following conditions occur:

1. Where the gypsum board or the gypsum panel product is to receive a decorative finish such as wood paneling, battens, acoustical finishes or any similar application that would be equivalent to joint treatment.
2. On single-layer systems where joints occur over wood framing members.

INTERNATIONAL CODE COUNCIL®
Copyright © 2019 ICC & NYSDOS. ALL RIGHTS RESERVED. Accessed by Lauren Gualdino (lgualdino@briarcliffmanor.org), (-) Order Number #100880972 on May 08, 2020 07:05 AM (PDT) pursuant to License Agreement with ICC & NYSDOS. No further reproduction, no

100880972

TABLE 2507.2
LATH, PLASTERING MATERIALS AND ACCESSORIES

MATERIAL	STANDARD
Accessories for gypsum veneer base	ASTM C1047
Blended cement	ASTM C595
Cold-formed steel studs and track, structural	AISI S240
Cold-formed steel studs and track, nonstructural	AISI S220
Exterior plaster bonding compounds	ASTM C932
Hydraulic cement	ASTM C1157; C1600
Gypsum casting and molding plaster	ASTM C59
Gypsum Keene's cement	ASTM C61
Gypsum plaster	ASTM C28
Gypsum veneer plaster	ASTM C587
Interior bonding compounds, gypsum	ASTM C631
Lime plasters	ASTM C5; C206
Masonry cement	ASTM C91
Metal lath	ASTM C847
Plaster aggregates Sand Perlite Vermiculite	 ASTM C35; C897 ASTM C35 ASTM C35
Plastic cement	ASTM C1328
Portland cement	ASTM C150
Steel screws	ASTM C1002; C954
Welded wire lath	ASTM C933
Woven wire plaster base	ASTM C1032

3. Square edge or tongue-and-groove edge gypsum board (V-edge), gypsum panel products, gypsum backing board or gypsum sheathing.
4. On multilayer systems where the joints of adjacent layers are offset.
5. Assemblies tested without joint treatment.

2508.6 Horizontal gypsum board or gypsum panel product diaphragm ceilings. Gypsum board or gypsum panel products shall be permitted to be used on wood joists to create a horizontal diaphragm ceiling in accordance with Table 2508.6.

2508.6.1 Diaphragm proportions. The maximum allowable diaphragm proportions shall be $1^1/_2$:1 between shear resisting elements. Rotation or cantilever conditions shall not be permitted.

2508.6.2 Installation. Gypsum board or gypsum panel products used in a horizontal diaphragm ceiling shall be installed perpendicular to ceiling framing members. End joints of adjacent courses of gypsum board shall not occur on the same joist.

2508.6.3 Blocking of perimeter edges. Perimeter edges shall be blocked using a wood member not less than 2-inch by 6-inch (51 mm by 152 mm) nominal dimension. Blocking material shall be installed flat over the top plate of the wall to provide a nailing surface not less than 2 inches (51 mm) in width for the attachment of the gypsum board or gypsum panel product.

2508.6.4 Fasteners. Fasteners used for the attachment of gypsum board or gypsum panel products to a horizontal diaphragm ceiling shall be as defined in Table 2508.6. Fasteners shall be spaced not more than 7 inches (178 mm) on center at all supports, including perimeter blocking, and not more than $^3/_8$ inch (9.5 mm) from the edges and ends of the gypsum board or gypsum panel product.

2508.6.5 Lateral force restrictions. Gypsum board or gypsum panel products shall not be used in diaphragm ceilings to resist lateral forces imposed by masonry or concrete construction.

SECTION 2509
SHOWERS AND WATER CLOSETS

2509.1 Wet areas. Showers and public toilet walls shall conform to Section 1210.2.

2509.2 Base for tile. Materials used as a base for wall tile in tub and shower areas and wall and ceiling panels in shower areas shall be of materials listed in Table 2509.2 and installed in accordance with the manufacturer's recommendations. Water-resistant gypsum backing board shall be used as a base for tile in water closet compartment walls when installed in accordance with GA-216 or ASTM C840 and the manufacturer's recommendations. Regular gypsum wallboard is permitted under tile or wall panels in other wall and ceiling areas when installed in accordance with GA-216 or ASTM C840.

INTERNATIONAL CODE COUNCIL®
Copyright © 2019 ICC & NYSDOS. ALL RIGHTS RESERVED. Accessed by Lauren Gualdino (lgualdino@briarcliffmanor.org), (-) Order Number #100880972 on May 08, 2020 07:05 AM (PDT) pursuant to License Agreement with ICC & NYSDOS. No further reproduction, no

100880972

TABLE 2508.6
SHEAR CAPACITY FOR HORIZONTAL WOOD-FRAME GYPSUM BOARD DIAPHRAGM CEILING ASSEMBLIES

MATERIAL	THICKNESS OF MATERIAL (MINIMUM) (inches)	SPACING OF FRAMING MEMBERS (inches)	SHEAR VALUE[a, b] (PLF OF CEILING)	MIMIMUM FASTENER SIZE
Gypsum board or gypsum panel product	$^1/_2$	16 o.c.	90	5d cooler or wallboard nail; $1^5/_8$-inch long; 0.086-inch shank; $^{15}/_{64}$-inch head[c]
Gypsum board or gypsum panel product	$^1/_2$	24 o.c.	70	5d cooler or wallboard nail; $1^5/_8$-inch long; 0.086-inch shank; $^{15}/_{64}$-inch head[c]

For SI: 1 inch = 25.4 mm, 1 pound per foot = 14.59 N/m.

a. Values are not cumulative with other horizontal diaphragm values and are for short-term wind or seismic loading. Values shall be reduced 25 percent for normal loading.

b. Values shall be reduced 50 percent in Seismic Design Categories D, E and F.

c. $1^1/_4$-inch, No. 6 Type S or W screws are permitted to be substituted for the listed nails.

TABLE 2509.2
BACKERBOARD MATERIALS

MATERIAL	STANDARD
Glass mat gypsum backing panel	ASTM C1178
Nonasbestos fiber-cement backer board	ASTM C1288 or ISO 8336, Category C
Nonasbestos fiber-mat reinforced cementitious backer unit	ASTM C1325

2509.3 Limitations. Water-resistant gypsum backing board shall not be used in the following locations:

1. Over a vapor retarder in shower or bathtub compartments.
2. Where there will be direct exposure to water or in areas subject to continuous high humidity.

SECTION 2510
LATHING AND FURRING FOR CEMENT PLASTER (STUCCO)

2510.1 General. Exterior and interior cement plaster and lathing shall be done with the appropriate materials listed in Table 2507.2 and Chapter 35.

2510.2 Weather protection. Materials shall be stored in such a manner as to protect them from the weather.

2510.3 Installation. Installation of these materials shall be in compliance with ASTM C926 and ASTM C1063.

2510.4 Corrosion resistance. Metal lath and lath attachments shall be of corrosion-resistant material.

2510.5 Backing. Backing or a lath shall provide sufficient rigidity to permit plaster applications.

2510.5.1 Support of lath. Where lath on vertical surfaces extends between rafters or other similar projecting members, solid backing shall be installed to provide support for lath and attachments.

2510.5.2 Use of gypsum backing board. Gypsum backing for cement plaster shall be in accordance with Section 2510.5.2.1 or 2510.5.2.2.

2510.5.2.1 Gypsum board as a backing board. Gypsum lath or gypsum wallboard shall not be used as a backing for cement plaster.

Exception: Gypsum lath or gypsum wallboard is permitted, with a *water-resistive barrier*, as a backing for self-furred metal lath or self-furred wire fabric lath and cement plaster where either of the following conditions occur:

1. On horizontal supports of ceilings or roof soffits.
2. On interior walls.

2510.5.2.2 Gypsum sheathing backing. Gypsum sheathing is permitted as a backing for metal or wire fabric lath and cement plaster on walls. A *water-resistive barrier* shall be provided in accordance with Section 2510.6.

2510.5.3 Backing not required. Wire backing is not required under expanded metal lath or paperbacked wire fabric lath.

2510.6 Water-resistive barriers. *Water-resistive barriers* shall be installed as required in Section 1403.2 and, where applied over wood-based sheathing, shall include a water-resistive vapor-permeable barrier with a performance at least equivalent to two layers of *water-resistive barrier* complying with ASTM E2556, Type I. The individual layers shall be installed independently such that each layer provides a separate continuous plane and any flashing (installed in accordance with Section 1404.4) intended to drain to the *water-resistive barrier* is directed between the layers.

Exceptions:

1. Where the *water-resistive barrier* that is applied over wood-based sheathing has a water resistance equal to or greater than that of a *water-resistive barrier* complying with ASTM E2556, Type II and is separated from the stucco by an intervening, substantially nonwater-absorbing layer or drainage space.

INTERNATIONAL CODE COUNCIL®
Copyright © 2019 ICC & NYSDOS. ALL RIGHTS RESERVED. Accessed by Lauren Gualdino (lgualdino@briarcliffmanor.org), (-) Order Number #100880972 on May 08, 2020 07:05 AM (PDT) pursuant to License Agreement with ICC & NYSDOS. No further reproduction, no

100880972

2. Where the *water-resistive barrier* is applied over wood-based sheathing in Climate Zone 1A, 2A or 3A, a ventilated air space shall be provided between the stucco and *water-resistive barrier.*

2510.7 Preparation of masonry and concrete. Surfaces shall be clean, free from efflorescence, sufficiently damp and rough for proper bond. If the surface is insufficiently rough, *approved* bonding agents or a Portland cement dash bond coat mixed in proportions of not more than two parts volume of sand to one part volume of Portland cement or plastic cement shall be applied. The dash bond coat shall be left undisturbed and shall be moist cured not less than 24 hours.

SECTION 2511
INTERIOR PLASTER

2511.1 General. Plastering gypsum plaster or cement plaster shall be not less than three coats where applied over metal lath or wire fabric lath and not less than two coats where applied over other bases permitted by this chapter.

Exception: Gypsum veneer plaster and cement plaster specifically designed and *approved* for one-coat applications.

2511.1.1 Installation. Installation of lathing and plaster materials shall conform to Table 2511.1.1 and Section 2507.

TABLE 2511.1.1
INSTALLATION OF PLASTER CONSTRUCTION

MATERIAL	STANDARD
Cement plaster	ASTM C926
Gypsum plaster	ASTM C842
Gypsum veneer plaster	ASTM C843
Interior lathing and furring (gypsum plaster)	ASTM C841
Lathing and furring (cement plaster)	ASTM C1063
Steel framing	ASTM C754; C1007

2511.2 Limitations. Plaster shall not be applied directly to fiber insulation board. Cement plaster shall not be applied directly to gypsum lath or gypsum plaster except as specified in Sections 2510.5.1 and 2510.5.2.

2511.3 Grounds. Where installed, grounds shall ensure the minimum thickness of plaster as set forth in ASTM C842 and ASTM C926. Plaster thickness shall be measured from the face of lath and other bases.

2511.4 Interior masonry or concrete. Condition of surfaces shall be as specified in Section 2510.7. *Approved* specially prepared gypsum plaster designed for application to concrete surfaces or *approved* acoustical plaster is permitted. The total thickness of base coat plaster applied to concrete ceilings shall be as set forth in ASTM C842 or ASTM C926. Should ceiling surfaces require more than the maximum thickness permitted in ASTM C842 or ASTM C926, metal lath or wire fabric lath shall be installed on such surfaces before plastering.

2511.5 Wet areas. Showers and public toilet walls shall conform to Sections 1209.2 and 1209.3. Where wood frame walls and partitions are covered on the interior with cement plaster or tile of similar material and are subject to water splash, the framing shall be protected with an *approved* moisture barrier.

SECTION 2512
EXTERIOR PLASTER

2512.1 General. Plastering with cement plaster shall be not less than three coats where applied over metal lath or wire fabric lath or gypsum board backing as specified in Section 2510.5 and shall be not less than two coats where applied over masonry or concrete. If the plaster surface is to be completely covered by veneer or other facing material, or is completely concealed by another wall, plaster application need only be two coats, provided that the total thickness is as set forth in ASTM C926.

2512.1.1 On-grade floor slab. On wood frame or steel stud construction with an on-grade concrete floor slab system, exterior plaster shall be applied in such a manner as to cover, but not to extend below, the lath and paper. The application of lath, paper and flashing or drip screeds shall comply with ASTM C1063.

2512.1.2 Weep screeds. A minimum 0.019-inch (0.48 mm) (No. 26 galvanized sheet gage), corrosion-resistant weep screed with a minimum vertical attachment flange of $3^1/_2$ inches (89 mm) shall be provided at or below the foundation plate line on exterior stud walls in accordance with ASTM C926. The weep screed shall be placed not less than 4 inches (102 mm) above the earth or 2 inches (51 mm) above paved areas and be of a type that will allow trapped water to drain to the exterior of the building. The *water-resistive barrier* shall lap the attachment flange. The exterior lath shall cover and terminate on the attachment flange of the weep screed.

2512.2 Plasticity agents. Only *approved* plasticity agents and *approved* amounts thereof shall be added to Portland cement or blended cements. Where plastic cement or masonry cement is used, additional lime or plasticizers shall not be added. Hydrated lime or the equivalent amount of lime putty used as a plasticizer is permitted to be added to cement plaster or cement and lime plaster in an amount not to exceed that set forth in ASTM C926.

2512.3 Limitations. Gypsum plaster shall not be used on exterior surfaces.

2512.4 Cement plaster. Plaster coats shall be protected from freezing for a period of not less than 24 hours after set has occurred. Plaster shall be applied when the ambient temperature is higher than 40°F (4°C), unless provisions are made to keep cement plaster work above 40°F (4°C) during application and 48 hours thereafter.

2512.5 Second-coat application. The second coat shall be brought out to proper thickness, rodded and floated sufficiently rough to provide adequate bond for the finish coat. The second coat shall not have variations greater than $^1/_4$ inch (6.4 mm) in any direction under a 5-foot (1524 mm) straight edge.

INTERNATIONAL CODE COUNCIL®
Copyright © 2019 ICC & NYSDOS. ALL RIGHTS RESERVED. Accessed by Lauren Gualdino (lgualdino@briarcliffmanor.org), (-) Order Number #100880972 on May 08, 2020 07:05 AM (PDT) pursuant to License Agreement with ICC & NYSDOS. No further reproduction, no

100880972

2512.6 Curing and interval. First and second coats of cement plaster shall be applied and moist cured as set forth in ASTM C926 and Table 2512.6.

TABLE 2512.6
CEMENT PLASTERS

COAT	MINIMUM PERIOD MOIST CURING	MINIMUM INTERVAL BETWEEN COATS
First	48 hours[a]	48 hours[b]
Second	48 hours	7 days[c]
Finish	—	Note c

a. The first two coats shall be as required for the first coats of exterior plaster, except that the moist-curing time period between the first and second coats shall be not less than 24 hours. Moist curing shall not be required where job and weather conditions are favorable to the retention of moisture in the cement plaster for the required time period.

b. Twenty-four-hour minimum interval between coats of interior cement plaster. For alternative method of application, see Section 2512.8.

c. Finish coat plaster is permitted to be applied to interior cement plaster base coats after a 48-hour period.

2512.7 Application to solid backings. Where applied over gypsum backing as specified in Section 2510.5 or directly to unit masonry surfaces, the second coat is permitted to be applied as soon as the first coat has attained sufficient hardness.

2512.8 Alternate method of application. The second coat is permitted to be applied as soon as the first coat has attained sufficient rigidity to receive the second coat.

2512.8.1 Admixtures. Where using this method of application, calcium aluminate cement up to 15 percent of the weight of the Portland cement is permitted to be added to the mix.

2512.8.2 Curing. Curing of the first coat is permitted to be omitted and the second coat shall be cured as set forth in ASTM C926 and Table 2512.6.

2512.9 Finish coats. Cement plaster finish coats shall be applied over base coats that have been in place for the time periods set forth in ASTM C926. The third or finish coat shall be applied with sufficient material and pressure to bond and to cover the brown coat and shall be of sufficient thickness to conceal the brown coat.

SECTION 2513
EXPOSED AGGREGATE PLASTER

2513.1 General. Exposed natural or integrally colored aggregate is permitted to be partially embedded in a natural or colored bedding coat of cement plaster or gypsum plaster, subject to the provisions of this section.

2513.2 Aggregate. The aggregate shall be applied manually or mechanically and shall consist of marble chips, pebbles or similar durable, moderately hard (three or more on the Mohs hardness scale), nonreactive materials.

2513.3 Bedding coat proportions. The bedding coat for interior or exterior surfaces shall be composed of one part Portland cement and one part Type S lime; or one part blended cement and one part Type S lime; or masonry cement; or plastic cement and not more than three parts of graded white or natural sand by volume. The bedding coat for interior surfaces shall be composed of 100 pounds (45.4 kg) of neat gypsum plaster and not more than 200 pounds (90.8 kg) of graded white sand. A factory-prepared bedding coat for interior or exterior use is permitted. The bedding coat for exterior surfaces shall have a minimum compressive strength of 1,000 pounds per square inch (psi) (6895 kPa).

2513.4 Application. The bedding coat is permitted to be applied directly over the first (scratch) coat of plaster, provided that the ultimate overall thickness is not less than $^{7}/_{8}$ inch (22 mm), including lath. Over concrete or masonry surfaces, the overall thickness shall be not less than $^{1}/_{2}$ inch (12.7 mm).

2513.5 Bases. Exposed aggregate plaster is permitted to be applied over concrete, masonry, cement plaster base coats or gypsum plaster base coats installed in accordance with Section 2511 or 2512.

2513.6 Preparation of masonry and concrete. Masonry and concrete surfaces shall be prepared in accordance with the provisions of Section 2510.7.

2513.7 Curing of base coats. Cement plaster base coats shall be cured in accordance with ASTM C926. Cement plaster bedding coats shall retain sufficient moisture for hydration (hardening) for 24 hours minimum or, where necessary, shall be kept damp for 24 hours by light water spraying.

SECTION 2514
REINFORCED GYPSUM CONCRETE

2514.1 General. Reinforced gypsum concrete shall comply with the requirements of ASTM C317 and ASTM C956.

2514.2 Minimum thickness. The minimum thickness of reinforced gypsum concrete shall be 2 inches (51 mm) except the minimum required thickness shall be reduced to $1^{1}/_{2}$ inches (38 mm), provided that the following conditions are satisfied:

1. The overall thickness, including the formboard, is not less than 2 inches (51 mm).
2. The clear span of the gypsum concrete between supports does not exceed 33 inches (838 mm).
3. Diaphragm action is not required.
4. The design live load does not exceed 40 pounds per square foot (psf) (1915 Pa).

INTERNATIONAL CODE COUNCIL®
Copyright © 2019 ICC & NYSDOS. ALL RIGHTS RESERVED. Accessed by Lauren Gualdino (lgualdino@briarcliffmanor.org), (-) Order Number #100880972 on May 08, 2020 07:05 AM (PDT) pursuant to License Agreement with ICC & NYSDOS. No further reproduction, no

100880972

CHAPTER 26

PLASTIC

SECTION 2601 GENERAL

2601.1 Scope. These provisions shall govern the materials, design, application, construction and installation of foam plastic, foam plastic insulation, plastic veneer, interior plastic finish and *trim*, light-transmitting plastics and plastic composites, including plastic lumber.

SECTION 2602 FINISH AND TRIM

2602.1 Exterior finish and trim. See Chapter 14 for requirements for *exterior wall* finish and trim.

2602.2 Interior finish and trim. See Section 2604 for requirements for interior finish and trim.

SECTION 2603 FOAM PLASTIC INSULATION

2603.1 General. The provisions of this section shall govern the requirements and uses of foam plastic insulation in buildings and structures.

2603.2 Labeling and identification. Packages and containers of foam plastic insulation and foam plastic insulation components delivered to the job site shall bear the *label* of an *approved agency* showing the manufacturer's name, product listing, product identification and information sufficient to determine that the end use will comply with the code requirements.

2603.3 Surface-burning characteristics. Unless otherwise indicated in this section, foam plastic insulation and foam plastic cores of manufactured assemblies shall have a flame spread index of not more than 75 and a smoke-developed index of not more than 450 where tested in the maximum thickness intended for use in accordance with ASTM E84 or UL 723. Loose fill-type foam plastic insulation shall be tested as board stock for the flame spread and smoke-developed indices.

Exceptions:

1. Smoke-developed index for interior *trim* as provided for in Section 2604.2.
2. In cold storage buildings, ice plants, food plants, food processing rooms and similar areas, foam plastic insulation where tested in a thickness of 4 inches (102 mm) shall be permitted in a thickness up to 10 inches (254 mm) where the building is equipped throughout with an automatic fire sprinkler system in accordance with Section 903.3.1.1. The approved *automatic sprinkler system* shall be provided in both the room and that part of the building in which the room is located.
3. Foam plastic insulation that is a part of a Class A, B or C roof-covering assembly provided that the assembly with the foam plastic insulation satisfactorily passes NFPA 276 or UL 1256. The smoke-developed index shall not be limited for roof applications.
4. Foam plastic insulation greater than 4 inches (102 mm) in thickness shall have a maximum flame spread index of 75 and a smoke-developed index of 450 where tested at a minimum thickness of 4 inches (102 mm), provided that the end use is approved in accordance with Section 2603.9 using the maximum thickness and density intended for use.
5. Flame spread and smoke-developed indices for foam plastic interior signs in *covered and open mall buildings* provided that the signs comply with Section 402.6.4.

2603.4 Thermal barrier. Except as provided for in Sections 2603.4.1 and 2603.9, foam plastic shall be separated from the interior of a building by an approved thermal barrier of $^1/_2$-inch (12.7 mm) gypsum wallboard, heavy timber in accordance with Section 602.4 or a material that is tested in accordance with and meets the acceptance criteria of both the Temperature Transmission Fire Test and the Integrity Fire Test of NFPA 275. Combustible concealed spaces shall comply with Section 718.

2603.4.1 Thermal barrier not required. The thermal barrier specified in Section 2603.4 is not required under the conditions set forth in Sections 2603.4.1.1 through 2603.4.1.14.

2603.4.1.1 Masonry or concrete construction. A thermal barrier is not required for foam plastic installed in a masonry or concrete wall, floor or roof system where the foam plastic insulation is covered on each face by not less than 1-inch (25 mm) thickness of masonry or concrete.

2603.4.1.2 Cooler and freezer walls. Foam plastic installed in a maximum thickness of 10 inches (254 mm) in cooler and freezer walls shall:

1. Have a flame spread index of 25 or less and a smoke-developed index of not more than 450, where tested in a minimum 4-inch (102 mm) thickness.
2. Have flash ignition and self-ignition temperatures of not less than 600°F and 800°F (316°C and 427°C), respectively.
3. Have a covering of not less than 0.032-inch (0.8 mm) aluminum or corrosion-resistant steel having a base metal thickness not less than 0.0160 inch (0.4 mm) at any point.
4. Be protected by an *automatic sprinkler system* in accordance with Section 903.3.1.1. Where the

INTERNATIONAL CODE COUNCIL®
Copyright © 2019 ICC & NYSDOS. ALL RIGHTS RESERVED. Accessed by Lauren Gualdino (lgualdino@briarcliffmanor.org), (-) Order Number #100880972 on May 08, 2020 07:05 AM (PDT) pursuant to License Agreement with ICC & NYSDOS. No further reproduction, no

100880972

cooler or freezer is within a building, both the cooler or freezer and that part of the building in which it is located shall be sprinklered.

2603.4.1.3 Walk-in coolers. In nonsprinklered buildings, foam plastic having a thickness that does not exceed 4 inches (102 mm) and a maximum flame spread index of 75 is permitted in walk-in coolers or freezer units where the aggregate floor area does not exceed 400 square feet (37 m^2) and the foam plastic is covered by a metal facing not less than 0.032-inch-thick (0.81 mm) aluminum or corrosion-resistant steel having a minimum base metal thickness of 0.016 inch (0.41 mm). A thickness of up to 10 inches (254 mm) is permitted where protected by a thermal barrier.

2603.4.1.4 Exterior walls-one-story buildings. For one-*story* buildings, foam plastic having a flame spread index of 25 or less, and a smoke-developed index of not more than 450, shall be permitted without thermal barriers in or on *exterior walls* in a thickness not more than 4 inches (102 mm) where the foam plastic is covered by a thickness of not less than 0.032-inch-thick (0.81 mm) aluminum or corrosion-resistant steel having a base metal thickness of 0.0160 inch (0.41 mm) and the building is equipped throughout with an *automatic sprinkler system* in accordance with Section 903.3.1.1.

2603.4.1.5 Roofing. A thermal barrier is not required for foam plastic insulation that is a part of a Class A, B or C roof-covering assembly that is installed in accordance with the code and the manufacturer's instructions and is either constructed as described in Item 1 or tested as described in Item 2.

1. The roof assembly is separated from the interior of the building by wood structural panel sheathing not less than 0.47 inch (11.9 mm) in thickness bonded with exterior glue, with edges supported by blocking, tongue-and-groove joints, other approved type of edge support or an equivalent material.
2. The assembly with the foam plastic insulation satisfactorily passes NFPA 276 or UL 1256.

2603.4.1.6 Attics and crawl spaces. Within an attic or crawl space where entry is made only for service of utilities, foam plastic insulation shall be protected against ignition by $1^1/_2$-inch-thick (38 mm) mineral fiber insulation; $^1/_4$-inch-thick (6.4 mm) wood structural panel, particleboard or hardboard; $^3/_8$-inch (9.5 mm) gypsum wallboard, corrosion-resistant steel having a base metal thickness of 0.016 inch (0.4 mm); $1^1/_2$-inch-thick (38 mm) self-supported spray-applied cellulose insulation in attic spaces only or other approved material installed in such a manner that the foam plastic insulation is not exposed. The protective covering shall be consistent with the requirements for the type of construction.

2603.4.1.7 Doors not required to have a fire protection rating. Where pivoted or side-hinged doors are permitted without a fire protection rating, foam plastic insulation, having a flame spread index of 75 or less and a smoke-developed index of not more than 450, shall be permitted as a core material where the door facing is of metal having a minimum thickness of 0.032-inch (0.8 mm) aluminum or steel having a base metal thickness of not less than 0.016 inch (0.4 mm) at any point.

2603.4.1.8 Exterior doors in buildings of Group R-2 or R-3. In occupancies classified as Group R-2 or R-3, foam-filled exterior entrance doors to individual *dwelling units* that do not require a fire-resistance rating shall be faced with aluminum, steel, fiberglass, wood or other approved materials.

2603.4.1.9 Garage doors. Where garage doors are permitted without a fire-resistance rating and foam plastic is used as a core material, the door facing shall be metal having a minimum thickness of 0.032-inch (0.8 mm) aluminum or 0.010-inch (0.25 mm) steel or the facing shall be minimum 0.125-inch-thick (3.2 mm) wood. Garage doors having facings other than those described in this section shall be tested in accordance with, and meet the acceptance criteria of, DASMA 107.

Exception: Garage doors using foam plastic insulation complying with Section 2603.3 in detached and attached garages associated with one- and two-family dwellings need not be provided with a thermal barrier.

2603.4.1.10 Siding backer board. Foam plastic insulation of not more than 2,000 British thermal units per square feet (Btu/sq. ft.) (22.7 mJ/m^2) as determined by NFPA 259 shall be permitted as a siding backer board with a maximum thickness of $^1/_2$ inch (12.7 mm), provided that it is separated from the interior of the building by not less than 2 inches (51 mm) of mineral fiber insulation or equivalent or where applied as insulation with re-siding over existing wall construction.

2603.4.1.11 Interior trim. Foam plastic used as interior *trim* in accordance with Section 2604 shall be permitted without a thermal barrier.

2603.4.1.12 Interior signs. Foam plastic used for interior signs in *covered mall buildings* in accordance with Section 402.6.4 shall be permitted without a thermal barrier. Foam plastic signs that are not affixed to interior building surfaces shall comply with Chapter 8 of the *Fire Code of New York State*.

2603.4.1.13 Type V construction. Foam plastic spray applied to a sill plate, joist header and rim joist in Type V construction is subject to all of the following:

1. The maximum thickness of the foam plastic shall be $3^1/_4$ inches (82.6 mm).
2. The density of the foam plastic shall be in the range of 1.5 to 2.0 pcf (24 to 32 kg/m^3).
3. The foam plastic shall have a flame spread index of 25 or less and an accompanying smoke-developed index of 450 or less when tested in accordance with ASTM E84 or UL 723.

2603.4.1.14 Floors. The thermal barrier specified in Section 2603.4 is not required to be installed on the

INTERNATIONAL CODE COUNCIL®
Copyright © 2019 ICC & NYSDOS. ALL RIGHTS RESERVED. Accessed by Lauren Gualdino (lgualdino@briarcliffmanor.org), (-) Order Number #100880972 on May 08, 2020 07:05 AM (PDT) pursuant to License Agreement with ICC & NYSDOS. No further reproduction, no

100880972

walking surface of a structural floor system that contains foam plastic insulation where the foam plastic is covered by a minimum nominal $^1/_2$-inch-thick (12.7 mm) wood structural panel or approved equivalent. The thermal barrier specified in Section 2603.4 is required on the underside of the structural floor system that contains foam plastic insulation where the underside of the structural floor system is exposed to the interior of the building.

Exception: Foam plastic used as part of an interior floor finish.

2603.5 Exterior walls of buildings of any height. *Exterior walls* of buildings of Type I, II, III or IV construction of any height shall comply with Sections 2603.5.1 through 2603.5.7. *Exterior walls* of cold storage buildings required to be constructed of noncombustible materials, where the building is more than one *story* in height, shall comply with the provisions of Sections 2603.5.1 through 2603.5.7. *Exterior walls* of buildings of Type V construction shall comply with Sections 2603.2, 2603.3 and 2603.4. Fireblocking shall be in accordance with Section 718.2.

2603.5.1 Fire-resistance-rated walls. Where the wall is required to have a fire-resistance rating, data based on tests conducted in accordance with ASTM E119 or UL 263 shall be provided to substantiate that the fire-resistance rating is maintained.

2603.5.2 Thermal barrier. Any foam plastic insulation shall be separated from the building interior by a thermal barrier meeting the provisions of Section 2603.4, unless special approval is obtained on the basis of Section 2603.9.

Exception: One-story buildings complying with Section 2603.4.1.4.

2603.5.3 Potential heat. The potential heat of foam plastic insulation in any portion of the wall or panel shall not exceed the potential heat expressed in Btu per square feet (mJ/m^2) of the foam plastic insulation contained in the wall assembly tested in accordance with Section 2603.5.5. The potential heat of the foam plastic insulation shall be determined by tests conducted in accordance with NFPA 259 and the results shall be expressed in Btu per square feet (mJ/m^2).

Exception: One-story buildings complying with Section 2603.4.1.4.

2603.5.4 Flame spread and smoke-developed indices. Foam plastic insulation, exterior coatings and facings shall be tested separately in the thickness intended for use, but not to exceed 4 inches (102 mm), and shall each have a flame spread index of 25 or less and a smoke-developed index of 450 or less as determined in accordance with ASTM E84 or UL 723.

Exception: Prefabricated or factory-manufactured panels having minimum 0.020-inch (0.51 mm) aluminum facings and a total thickness of $^1/_4$ inch (6.4 mm) or less are permitted to be tested as an assembly where the foam plastic core is not exposed in the course of construction.

2603.5.5 Vertical and lateral fire propagation. The exterior wall assembly shall be tested in accordance with and comply with the acceptance criteria of NFPA 285.

Exceptions:

1. One-story buildings complying with Section 2603.4.1.4.
2. Wall assemblies where the foam plastic insulation is covered on each face by not less than 1-inch (25 mm) thickness of masonry or concrete and meeting one of the following:
   2.1. There is no airspace between the insulation and the concrete or masonry.
   2.2. The insulation has a flame spread index of not more than 25 as determined in accordance with ASTM E84 or UL 723 and the maximum airspace between the insulation and the concrete or masonry is not more than 1 inch (25 mm).

2603.5.6 Label required. The edge or face of each piece, package or container of foam plastic insulation shall bear the *label* of an *approved agency*. The *label* shall contain the manufacturer's or distributor's identification, model number, serial number or definitive information describing the product or materials' performance characteristics and *approved agency*'s identification.

2603.5.7 Ignition. *Exterior walls* shall not exhibit sustained flaming where tested in accordance with NFPA 268. Where a material is intended to be installed in more than one thickness, tests of the minimum and maximum thickness intended for use shall be performed.

Exception: Assemblies protected on the outside with one of the following:

1. A thermal barrier complying with Section 2603.4.
2. A minimum 1-inch (25 mm) thickness of concrete or masonry.
3. Glass-fiber-reinforced concrete panels of a minimum thickness of $^3/_8$ inch (9.5 mm).
4. Metal-faced panels having minimum 0.019-inch-thick (0.48 mm) aluminum or 0.016-inch-thick (0.41 mm) corrosion-resistant steel outer facings.
5. A minimum $^7/_8$-inch (22.2 mm) thickness of stucco complying with Section 2510.
6. A minimum $^1/_4$-inch (6.4 mm) thickness of fiber-cement lap, panel or shingle siding complying with Section 1404.16 and Section 1404.16.1 or 1404.16.2.

2603.6 Roofing. Foam plastic insulation meeting the requirements of Sections 2603.2, 2603.3 and 2603.4 shall be permitted as part of a roof-covering assembly, provided that the assembly with the foam plastic insulation is a Class A, B or C roofing assembly where tested in accordance with ASTM E108 or UL 790.

2603.7 Foam plastic in plenums as interior finish or interior trim. Foam plastic in plenums used as interior wall or ceiling finish, or interior trim, shall exhibit a flame spread index of 25 or less and a smoke-developed index of 50 or less

INTERNATIONAL CODE COUNCIL®
Copyright © 2019 ICC & NYSDOS. ALL RIGHTS RESERVED. Accessed by Lauren Gualdino (lgualdino@briarcliffmanor.org), (-) Order Number #100880972 on May 08, 2020 07:05 AM (PDT) pursuant to License Agreement with ICC & NYSDOS. No further reproduction, no

100880972

when tested in accordance with ASTM E84 or UL 723 at the maximum thickness and density intended for use, and shall be tested in accordance with NFPA 286 and meet the acceptance criteria of Section 803.1.1. As an alternative to testing to NFPA 286, the foam plastic shall be approved based on tests conducted in accordance with Section 2603.9.

Exceptions:

1. Foam plastic in plenums used as interior wall or ceiling finish, or interior trim, shall exhibit a flame spread index of 75 or less and a smoke-developed index of 450 or less when tested in accordance with ASTM E84 or UL 723 at the maximum thickness and density intended for use, where it is separated from the airflow in the plenum by a thermal barrier complying with Section 2603.4.
2. Foam plastic in plenums used as interior wall or ceiling finish, or interior trim, shall exhibit a flame spread index of 75 or less and a smoke-developed index of 450 or less when tested in accordance with ASTM E84 or UL 723 at the maximum thickness and density intended for use, where it is separated from the airflow in the plenum by corrosion-resistant steel having a base metal thickness of not less than 0.0160 inch (0.4 mm).
3. Foam plastic in plenums used as interior wall or ceiling finish, or interior trim, shall exhibit a flame spread index of 75 or less and a smoke-developed index of 450 or less when tested in accordance with ASTM E84 or UL 723 at the maximum thickness and density intended for use, where it is separated from the airflow in the plenum by not less than a 1-inch (25 mm) thickness of masonry or concrete.

2603.8 Protection against termites. In areas where the probability of termite infestation is very heavy in accordance with Figure 2603.8, extruded and expanded polystyrene, polyisocyanurate and other foam plastics shall not be installed on the exterior face or under interior or exterior foundation walls or slab foundations located below grade. The clearance between foam plastics installed above grade and exposed earth shall be not less than 6 inches (152 mm).

Exceptions:

1. Buildings where the structural members of walls, floors, ceilings and roofs are entirely of noncombustible materials or preservative-treated wood.
2. An approved method of protecting the foam plastic and structure from subterranean termite damage is provided.
3. On the interior side of basement walls.

2603.9 Special approval. Foam plastic shall not be required to comply with the requirements of Section 2603.4 or those of Section 2603.6 where specifically approved based on large-scale tests such as, but not limited to, NFPA 286 (with the acceptance criteria of Section 803.1.1.1), FM 4880, UL 1040 or UL 1715. Such testing shall be related to the actual end-use configuration and be performed on the finished manufactured foam plastic assembly in the maximum thickness intended for use. Foam plastics that are used as interior finish on the basis of special tests shall conform to the flame spread and smoke-developed requirements of Chapter 8. Assemblies tested shall include seams, joints and other typical details used in the installation of the assembly and shall be tested in the manner intended for use.

2603.10 Wind resistance. Foam plastic insulation complying with ASTM C578 and ASTM C1289 and used as exterior wall sheathing on framed wall assemblies shall comply with ANSI/FS 100 for wind pressure resistance.

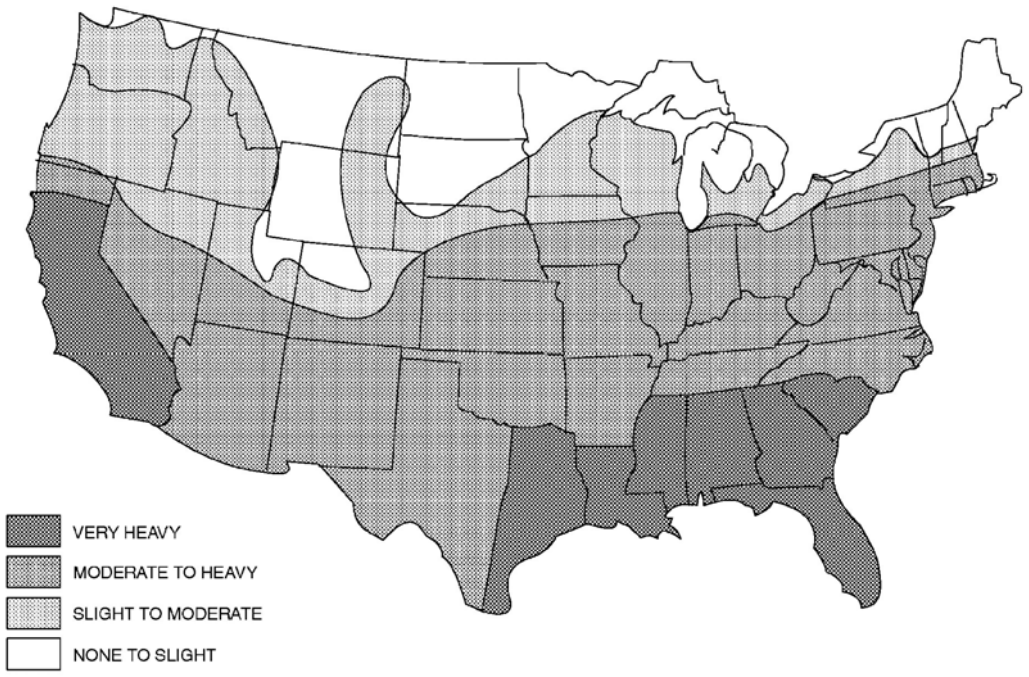

FIGURE 2603.8
TERMITE INFESTATION PROBABILITY MAP

INTERNATIONAL CODE COUNCIL®
Copyright © 2019 ICC & NYSDOS. ALL RIGHTS RESERVED. Accessed by Lauren Gualdino (lgualdino@briarcliffmanor.org), (-) Order Number #100880972 on May 08, 2020 07:05 AM (PDT) pursuant to License Agreement with ICC & NYSDOS. No further reproduction, no

100880972

2603.11 Cladding attachment over foam sheathing to masonry or concrete wall construction. Cladding shall be specified and installed in accordance with Chapter 14 and the cladding manufacturer's installation instructions or an approved design. Foam sheathing shall be attached to masonry or concrete construction in accordance with the insulation manufacturer's installation instructions or an approved design. Furring and furring attachments through foam sheathing shall be designed to resist design loads determined in accordance with Chapter 16, including support of cladding weight as applicable. Fasteners used to attach cladding or furring through foam sheathing to masonry or concrete substrates shall be approved for application into masonry or concrete material and shall be installed in accordance with the fastener manufacturer's installation instructions.

Exceptions:

1. Where the cladding manufacturer has provided approved installation instructions for application over foam sheathing and connection to a masonry or concrete substrate, those requirements shall apply.
2. For exterior insulation and finish systems, refer to Section 1407.
3. For anchored masonry or stone veneer installed over foam sheathing, refer to Section 1404.

2603.12 Cladding attachment over foam sheathing to cold-formed steel framing. Cladding shall be specified and installed in accordance with Chapter 14 and the cladding manufacturer's approved installation instructions, including any limitations for use over foam plastic sheathing, or an approved design. Where used, furring and furring attachments shall be designed to resist design loads determined in accordance with Chapter 16. In addition, the cladding or furring attachments through foam sheathing to cold-formed steel framing shall meet or exceed the minimum fastening requirements of Sections 2603.12.1 and 2603.12.2, or an approved design for support of cladding weight.

Exceptions:

1. Where the cladding manufacturer has provided approved installation instructions for application over foam sheathing, those requirements shall apply.
2. For exterior insulation and finish systems, refer to Section 1407.
3. For anchored masonry or stone veneer installed over foam sheathing, refer to Section 1404.

2603.12.1 Direct attachment. Where cladding is installed directly over foam sheathing without the use of furring, cladding minimum fastening requirements to support the cladding weight shall be as specified in Table 2603.12.1.

2603.12.2 Furred cladding attachment. Where steel or wood furring is used to attach cladding over foam sheathing, furring minimum fastening requirements to support the cladding weight shall be as specified in Table 2603.12.2. Where placed horizontally, wood furring shall be preservative-treated wood in accordance with Section 2303.1.9 or naturally durable wood and fasteners shall be corrosion resistant in accordance Section 2304.10.5. Steel furring shall have a minimum G60 galvanized coating.

2603.13 Cladding attachment over foam sheathing to wood framing. Cladding shall be specified and installed in accordance with Chapter 14 and the cladding manufacturer's installation instructions. Where used, furring and furring attachments shall be designed to resist design loads determined in accordance with Chapter 16. In addition, the cladding or furring attachments through foam sheathing to framing shall meet or exceed the minimum fastening requirements of Section 2603.13.1 or 2603.13.2, or an approved design for support of cladding weight.

Exceptions:

1. Where the cladding manufacturer has provided approved installation instructions for application over foam sheathing, those requirements shall apply.
2. For exterior insulation and finish systems, refer to Section 1407.
3. For anchored masonry or stone veneer installed over foam sheathing, refer to Section 1404.

2603.13.1 Direct attachment. Where cladding is installed directly over foam sheathing without the use of furring, minimum fastening requirements to support the cladding weight shall be as specified in Table 2603.13.1.

2603.13.2 Furred cladding attachment. Where wood furring is used to attach cladding over foam sheathing, furring minimum fastening requirements to support the cladding weight shall be as specified in Table 2603.13.2. Where placed horizontally, wood furring shall be preservative-treated wood in accordance with Section 2303.1.9 or naturally durable wood and fasteners shall be corrosion resistant in accordance with Section 2304.10.5.

SECTION 2604
INTERIOR FINISH AND TRIM

2604.1 General. Plastic materials installed as interior finish or *trim* shall comply with Chapter 8. Foam plastics shall only be installed as interior finish where approved in accordance with the special provisions of Section 2603.9. Foam plastics that are used as interior finish shall meet the flame spread and smoke-developed index requirements for interior finish in accordance with Chapter 8. Foam plastics installed as interior *trim* shall comply with Section 2604.2.

2604.1.1 Plenums. Foam plastics installed in plenums as interior wall or ceiling finish shall comply with Section 2603.7. Foam plastics installed in plenums as interior trim shall comply with Sections 2604.2 and 2603.7.

[F] 2604.2 Interior trim. Foam plastic used as interior *trim* shall comply with Sections 2604.2.1 through 2604.2.4.

INTERNATIONAL CODE COUNCIL®
Copyright © 2019 ICC & NYSDOS. ALL RIGHTS RESERVED. Accessed by Lauren Gualdino (lgualdino@briarcliffmanor.org), (-) Order Number #100880972 on May 08, 2020 07:05 AM (PDT) pursuant to License Agreement with ICC & NYSDOS. No further reproduction, no

100880972

TABLE 2603.12.1
CLADDING MINIMUM FASTENING REQUIREMENTS FOR DIRECT ATTACHMENT OVER FOAM PLASTIC SHEATHING TO SUPPORT CLADDING WEIGHT[a]

CLADDING FASTENER THROUGH FOAM SHEATHING INTO:	CLADDING FASTENER TYPE AND MINIMUM SIZE[b]	CLADDING FASTENER VERTICAL SPACING (inches)	MAXIMUM THICKNESS OF FOAM SHEATHING[c] (inches)							
			16″ o.c. fastener horizontal spacing				24″ o.c. fastener horizontal spacing			
			Cladding weight				Cladding weight			
			3 psf	11 psf	18 psf	25 psf	3 psf	11 psf	18 psf	25 psf
Cold-formed steel framing (minimum penetration of steel thickness plus 3 threads)	#8 screw into 33 mil steel or thicker	6	3.00	2.95	2.20	1.45	3.00	2.35	1.25	DR
		8	3.00	2.55	1.60	0.60	3.00	1.80	DR	DR
		12	3.00	1.80	DR	DR	3.00	0.65	DR	DR
	#10 screw into 33 mil steel	6	4.00	3.50	2.70	1.95	4.00	2.90	1.70	0.55
		8	4.00	3.10	2.05	1.00	4.00	2.25	0.70	DR
		12	4.00	2.25	0.70	DR	3.70	1.05	DR	DR
	#10 screw into 43 mil steel or thicker	6	4.00	4.00	4.00	3.60	4.00	4.00	3.45	2.70
		8	4.00	4.00	3.70	3.00	4.00	3.85	2.80	1.80
		12	4.00	3.85	2.80	1.80	4.00	3.05	1.50	DR

For SI: 1 inch = 25.4 mm, 1 pound per square foot (psf) = 0.0479 kPa, 1 pound per square inch = 0.00689 MPa.
DR = design required, o.c. = on center.

a. Cold-formed steel framing shall be minimum 33 ksi steel for 33 mil and 43 mil steel and 50 ksi steel for 54 mil steel or thicker.
b. Screws shall comply with the requirements of AISI S240.
c. Foam sheathing shall have a minimum compressive strength of 15 pounds per square inch in accordance with ASTM C578 or ASTM C1289.

TABLE 2603.12.2
FURRING MINIMUM FASTENING REQUIREMENTS FOR APPLICATION OVER FOAM PLASTIC SHEATHING TO SUPPORT CLADDING WEIGHT[a]

FURRING MATERIAL	FRAMING MEMBER	FASTENER TYPE AND MINIMUM SIZE[b]	MINIMUM PENETRATION INTO WALL FRAMING (inches)	FASTENER SPACING IN FURRING (inches)	MAXIMUM THICKNESS OF FOAM SHEATHING[d] (inches)							
					16" o.c. furring[e]				24" o.c. furring[e]			
					Cladding weight				Cladding weight			
					3 psf	11 psf	18 psf	25 psf	3 psf	11 psf	18 psf	25 psf
Minimum 33 mil steel furring or minimum 1x wood furring[c]	33 mil cold-formed steel stud	#8 screw	Steel thickness plus 3 threads	12	3.00	1.80	DR	DR	3.00	0.65	DR	DR
				16	3.00	1.00	DR	DR	2.85	DR	DR	DR
				24	2.85	DR	DR	DR	2.20	DR	DR	DR
		#10 screw	Steel thickness plus 3 threads	12	4.00	2.25	0.70	DR	3.70	1.05	DR	DR
				16	3.85	1.45	DR	DR	3.40	DR	DR	DR
				24	3.40	DR	DR	DR	2.70	DR	DR	DR
	43 mil or thicker cold-formed steel stud	#8 Screw	Steel thickness plus 3 threads	12	3.00	1.80	DR	DR	3.00	0.65	DR	DR
				16	3.00	1.00	DR	DR	2.85	DR	DR	DR
				24	2.85	DR	DR	DR	2.20	DR	DR	DR
		#10 screw	Steel thickness plus 3 threads	12	4.00	3.85	2.80	1.80	4.00	3.05	1.50	DR
				16	4.00	3.30	1.95	0.60	4.00	2.25	DR	DR
				24	4.00	2.25	DR	DR	4.00	0.65	DR	DR

For SI: 1 inch = 25.4 mm, 1 pound per square foot (psf) = 0.0479 kPa, 1 pound per square inch = 0.00689 MPa.
DR = Design Required, o.c. = on center.

a. Wood furring shall be spruce-pine-fir or any softwood species with a specific gravity of 0.42 or greater. Steel furring shall be minimum 33 ksi steel. Cold-formed steel studs shall be minimum 33 ksi steel for 33 mil and 43 mil thickness and 50 ksi steel for 54 mil steel or thicker.
b. Screws shall comply with the requirements of AISI S240.
c. Where the required cladding fastener penetration into wood material exceeds $^3/_4$ inch and is not more than $1^1/_2$ inches, a minimum 2-inch nominal wood furring or an approved design shall be used.
d. Foam sheathing shall have a minimum compressive strength of 15 pounds per square inch in accordance with ASTM C578 or ASTM C1289.
e. Furring shall be spaced not more than 24 inches on center, in a vertical or horizontal orientation. In a vertical orientation, furring shall be located over wall studs and attached with the required fastener spacing. In a horizontal orientation, the indicated 8-inch and 12-inch fastener spacing in furring shall be achieved by use of two fasteners into studs at 16 inches and 24 inches on center, respectively.

INTERNATIONAL CODE COUNCIL®
Copyright © 2019 ICC & NYSDOS. ALL RIGHTS RESERVED. Accessed by Lauren Gualdino (lgualdino@briarcliffmanor.org), (-) Order Number #100880972 on May 08, 2020 07:05 AM (PDT) pursuant to License Agreement with ICC & NYSDOS. No further reproduction, no

100880972

TABLE 2603.13.1
CLADDING MINIMUM FASTENING REQUIREMENTS FOR DIRECT ATTACHMENT OVER FOAM PLASTIC SHEATHING TO SUPPORT CLADDING WEIGHT[a]

CLADDING FASTENER THROUGH FOAM SHEATHING INTO:	CLADDING FASTENER TYPE AND MINIMUM SIZE[b]	CLADDING FASTENER VERTICAL SPACING (INCHES)	MAXIMUM THICKNESS OF FOAM SHEATHING[c] (INCHES)							
			16″ o.c. fastener horizontal spacing				24″ o.c. fastener horizontal spacing			
			Cladding weight:				Cladding weight:			
			3 psf	11 psf	18 psf	25 psf	3 psf	11 psf	18 psf	25 psf
Wood Framing (minimum $1^1/_4$-inch penetration)	0.113" diameter nail	6	2.00	1.45	0.75	DR	2.00	0.85	DR	DR
		8	2.00	1.00	DR	DR	2.00	0.55	DR	DR
		12	2.00	0.55	DR	DR	1.85	DR	DR	DR
	0.120" diameter nail	6	3.00	1.70	0.90	0.55	3.00	1.05	0.50	DR
		8	3.00	1.20	0.60	DR	3.00	0.70	DR	DR
		12	3.00	0.70	DR	DR	2.15	DR	DR	DR
	0.131" diameter nail	6	4.00	2.15	1.20	0.75	4.00	1.35	0.70	DR
		8	4.00	1.55	0.80	DR	4.00	0.90	DR	DR
		12	4.00	0.90	DR	DR	2.70	0.50	DR	DR
	0.162" diameter nail	6	4.00	3.55	2.05	1.40	4.00	2.25	1.25	0.80
		8	4.00	2.55	1.45	0.95	4.00	1.60	0.85	0.50
		12	4.00	1.60	0.85	0.50	4.00	0.95	DR	DR

For SI: 1 inch = 25.4 mm, 1 pound per square foot (psf) = 0.0479 kPa.

DR = Design Required, o.c. = on center.

a. Wood framing shall be spruce-pine-fir or any wood species with a specific gravity of 0.42 or greater in accordance with ANSI/AWC NDS.

b. Nail fasteners shall comply with ASTM F1667, except nail length shall be permitted to exceed ASTM F1667 standard lengths.

c. Foam sheathing shall have a minimum compressive strength of 15 psi in accordance with ASTM C578 or ASTM C1289.

[F] 2604.2.1 Density. The minimum density of the interior *trim* shall be 20 pcf (320 kg/m^3).

[F] 2604.2.2 Thickness. The maximum thickness of the interior *trim* shall be $^1/_2$ inch (12.7 mm) and the maximum width shall be 8 inches (204 mm).

[F] 2604.2.3 Area limitation. The interior *trim* shall not constitute more than 10 percent of the specific wall or ceiling areas to which it is attached.

[F] 2604.2.4 Flame spread. The flame spread index shall not exceed 75 where tested in accordance with ASTM E84 or UL 723. The smoke-developed index shall not be limited.

Exception: Where the interior *trim* material has been tested as an interior finish in accordance with NFPA 286 and complies with the acceptance criteria in Section 803.1.1.1, it shall not be required to be tested for flame spread index in accordance with ASTM E84 or UL 723.

SECTION 2605
PLASTIC VENEER

2605.1 Interior use. Where used within a building, plastic veneer shall comply with the interior finish requirements of Chapter 8.

2605.2 Exterior use. Exterior plastic veneer, other than plastic siding, shall be permitted to be installed on the *exterior walls* of buildings of any type of construction in accordance with all of the following requirements:

1. Plastic veneer shall comply with Section 2606.4.
2. Plastic veneer shall not be attached to any exterior wall to a height greater than 50 feet (15 240 mm) above grade.
3. Sections of plastic veneer shall not exceed 300 square feet (27.9 m^2) in area and shall be separated by not less than 4 feet (1219 mm) vertically.

Exception: The area and separation requirements and the smoke-density limitation are not applicable to plastic veneer applied to buildings constructed of Type VB construction, provided that the walls are not required to have a fire-resistance rating.

2605.3 Plastic siding. Plastic siding shall comply with the requirements of Sections 1403 and 1404.

SECTION 2606
LIGHT-TRANSMITTING PLASTICS

2606.1 General. The provisions of this section and Sections 2607 through 2611 shall govern the quality and methods of application of light-transmitting plastics for use as light-transmitting materials in buildings and structures. Foam plastics shall comply with Section 2603. Light-transmitting plastic materials that meet the other code requirements for walls and roofs shall be permitted to be used in accordance with the other applicable chapters of the code.

2606.2 Approval for use. Sufficient technical data shall be submitted to substantiate the proposed use of any light-transmitting material, as approved by the *building official* and subject to the requirements of this section.

INTERNATIONAL CODE COUNCIL®
Copyright © 2019 ICC & NYSDOS. ALL RIGHTS RESERVED. Accessed by Lauren Gualdino (lgualdino@briarcliffmanor.org), (-) Order Number #100880972 on May 08, 2020 07:05 AM (PDT) pursuant to License Agreement with ICC & NYSDOS. No further reproduction, no

100880972

TABLE 2603.13.2
FURRING MINIMUM FASTENING REQUIREMENTS FOR APPLICATION OVER FOAM PLASTIC SHEATHING TO SUPPORT CLADDING WEIGHT[a, b]

FURRING MATERIAL	FRAMING MEMBER	FASTENER TYPE AND MINIMUM SIZE	MINIMUM PENETRATION INTO WALL FRAMING (INCHES)	FASTENER SPACING IN FURRING (INCHES)	MAXIMUM THICKNESS OF FOAM SHEATHING[d] (INCHES)							
					16″ o.c. furring[e]				24″ o.c. furring[e]			
					Siding weight:				Siding weight:			
					3 psf	11 psf	18 psf	25 psf	3 psf	11 psf	18 psf	25 psf
Minimum 1x Wood Furring[c]	Minimum 2x Wood Stud	0.131" diameter nail	$1^1/_4$	8	4.00	2.45	1.45	0.95	4.00	1.60	0.85	DR
				12	4.00	1.60	0.85	DR	4.00	0.95	DR	DR
				16	4.00	1.10	DR	DR	3.05	0.60	DR	DR
		0.162" diameter nail	$1^1/_4$	8	4.00	4.00	2.45	1.60	4.00	2.75	1.45	0.85
				12	4.00	2.75	1.45	0.85	4.00	1.65	0.75	DR
				16	4.00	1.90	0.95	DR	4.00	1.05	DR	DR
		No. 10 wood screw	1	12	4.00	2.30	1.20	0.70	4.00	1.40	0.60	DR
				16	4.00	1.65	0.75	DR	4.00	0.90	DR	DR
				24	4.00	0.90	DR	DR	2.85	DR	DR	DR
		$^1/_4$" lag screw	$1^1/_2$	12	4.00	2.65	1.50	0.90	4.00	1.65	0.80	DR
				16	4.00	1.95	0.95	0.50	4.00	1.10	DR	DR
				24	4.00	1.10	DR	DR	3.25	0.50	DR	DR

For SI: 1 inch = 25.4 mm, 1 pound per square foot (psf) = 0.0479 kPa, 1 pound per square inch = 0.00689 MPa.

DR = Design Required, o.c. = on center.

a. Wood framing and furring shall be spruce-pine-fir or any wood species with a specific gravity of 0.42 or greater in accordance with ANSI/AWC NDS.

b. Nail fasteners shall comply with ASTM F1667, except nail length shall be permitted to exceed ASTM F1667 standard lengths.

c. Where the required cladding fastener penetration into wood material exceeds $^3/_4$ inch and is not more than $1^1/_2$ inches, a minimum 2-inch nominal wood furring or an approved design shall be used.

d. Foam sheathing shall have a minimum compressive strength of 15 psi in accordance with ASTM C578 or ASTM C1289.

e. Furring shall be spaced not greater than 24 inches on center in a vertical or horizontal orientation. In a vertical orientation, furring shall be located over wall studs and attached with the required fastener spacing. In a horizontal orientation, the indicated 8-inch and 12-inch fastener spacing in furring shall be achieved by use of two fasteners into studs at 16 inches and 24 inches on center, respectively.

2606.3 Identification. Each unit or package of light-transmitting plastic shall be identified with a *mark* or decal satisfactory to the *building official*, which includes identification as to the material classification.

2606.4 Specifications. Light-transmitting plastics, including thermoplastic, thermosetting or reinforced thermosetting plastic material, shall have a self-ignition temperature of 650°F (343°C) or greater where tested in accordance with ASTM D1929; a smoke-developed index not greater than 450 where tested in the manner intended for use in accordance with ASTM E84 or UL 723, or a maximum average smoke density rating not greater than 75 where tested in the thickness intended for use in accordance with ASTM D2843 and shall conform to one of the following combustibility classifications:

Class CC1: Plastic materials that have a burning extent of 1 inch (25 mm) or less where tested at a nominal thickness of 0.060 inch (1.5 mm), or in the thickness intended for use, in accordance with ASTM D635.

Class CC2: Plastic materials that have a burning rate of $2^1/_2$ inches per minute (1.06 mm/s) or less where tested at a nominal thickness of 0.060 inch (1.5 mm), or in the thickness intended for use, in accordance with ASTM D635.

2606.5 Structural requirements. Light-transmitting plastic materials in their assembly shall be of adequate strength and durability to withstand the loads indicated in Chapter 16. Technical data shall be submitted to establish stresses, maximum unsupported spans and such other information for the various thicknesses and forms used as deemed necessary by the *building official*.

2606.6 Fastening. Fastening shall be adequate to withstand the loads in Chapter 16. Proper allowance shall be made for expansion and contraction of light-transmitting plastic materials in accordance with accepted data on the coefficient of expansion of the material and other material in conjunction with which it is employed.

2606.7 Light-diffusing systems. Unless the building is equipped throughout with an *automatic sprinkler system* in accordance with Section 903.3.1.1, light-diffusing systems

INTERNATIONAL CODE COUNCIL®
Copyright © 2019 ICC & NYSDOS. ALL RIGHTS RESERVED. Accessed by Lauren Gualdino (lgualdino@briarcliffmanor.org), (-) Order Number #100880972 on May 08, 2020 07:05 AM (PDT) pursuant to License Agreement with ICC & NYSDOS. No further reproduction, no

100880972

shall not be installed in the following occupancies and locations:

1. Group A with an *occupant load* of 1,000 or more.
2. Theaters with a stage and proscenium opening and an *occupant load* of 700 or more.
3. Group I-2.
4. Group I-3.
5. Interior exit stairways and ramps and *exit* passageways.

2606.7.1 Support. Light-transmitting plastic diffusers shall be supported directly or indirectly from ceiling or roof construction by use of noncombustible hangers. Hangers shall be not less than No. 12 steel-wire gage (0.106 inch) galvanized wire or equivalent.

2606.7.2 Installation. Light-transmitting plastic diffusers shall comply with Chapter 8 unless the light-transmitting plastic diffusers will fall from the mountings before igniting, at an ambient temperature of not less than 200°F (111°C) below the ignition temperature of the panels. The panels shall remain in place at an ambient room temperature of 175°F (79°C) for a period of not less than 15 minutes.

2606.7.3 Size limitations. Individual panels or units shall not exceed 10 feet (3048 mm) in length nor 30 square feet (2.79 m^2) in area.

2606.7.4 Fire suppression system. In buildings that are equipped throughout with an *automatic sprinkler system* in accordance with Section 903.3.1.1, plastic light-diffusing systems shall be protected both above and below unless the sprinkler system has been specifically approved for installation only above the light-diffusing system. Areas of light-diffusing systems that are protected in accordance with this section shall not be limited.

2606.7.5 Electrical luminaires. Light-transmitting plastic panels and light-diffuser panels that are installed in approved electrical luminaires shall comply with the requirements of Chapter 8 unless the light-transmitting plastic panels conform to the requirements of Section 2606.7.2. The area of approved light-transmitting plastic materials that is used in required *exits* or *corridors* shall not exceed 30 percent of the aggregate area of the ceiling in which such panels are installed, unless the building is equipped throughout with an *automatic sprinkler system* in accordance with Section 903.3.1.1.

2606.8 Partitions. Light-transmitting plastics used in or as partitions shall comply with the requirements of Chapters 6 and 8.

2606.9 Bathroom accessories. Light-transmitting plastics shall be permitted as glazing in shower stalls, shower doors, bathtub enclosures and similar accessory units. Safety glazing shall be provided in accordance with Chapter 24.

2606.10 Awnings, patio covers and similar structures. *Awnings* constructed of light-transmitting plastics shall be constructed in accordance with the provisions specified in Section 3105 and Chapter 32 for projections. Patio covers constructed of light-transmitting plastics shall comply with Section 2606. Light-transmitting plastics used in canopies at motor fuel-dispensing facilities shall comply with Section 2606, except as modified by Section 406.7.2.

2606.11 Greenhouses. Light-transmitting plastics shall be permitted in lieu of glass in greenhouses.

2606.12 Solar collectors. Light-transmitting plastic covers on solar collectors having noncombustible sides and bottoms shall be permitted on buildings not over three *stories above grade plane* or 9,000 square feet (836.1 m^2) in total floor area, provided that the light-transmitting plastic cover does not exceed 33.33 percent of the roof area for CC1 materials or 25 percent of the roof area for CC2 materials.

Exception: Light-transmitting plastic covers having a thickness of 0.010 inch (0.3 mm) or less shall be permitted to be of any plastic material provided that the area of the solar collectors does not exceed 33.33 percent of the roof area.

SECTION 2607
LIGHT-TRANSMITTING PLASTIC WALL PANELS

2607.1 General. Light-transmitting plastics shall not be used as wall panels in *exterior walls* in occupancies in Groups A-l, A-2, H, I-2 and I-3. In other groups, light-transmitting plastics shall be permitted to be used as wall panels in *exterior walls*, provided that the walls are not required to have a fire-resistance rating and the installation conforms to the requirements of this section. Such panels shall be erected and anchored on a foundation, waterproofed or otherwise protected from moisture absorption and sealed with a coat of mastic or other approved waterproof coating. Light-transmitting plastic wall panels shall comply with Section 2606.

2607.2 Installation. *Exterior wall* panels installed as provided for herein shall not alter the type of construction classification of the building.

2607.3 Height limitation. Light-transmitting plastics shall not be installed more than 75 feet (22 860 mm) above *grade plane*, except as allowed by Section 2607.5.

2607.4 Area limitation and separation. The maximum area of a single wall panel and minimum vertical and horizontal separation requirements for exterior light-transmitting plastic wall panels shall be as provided for in Table 2607.4. The maximum percentage of wall area of any *story* in light-transmitting plastic wall panels shall not exceed that indicated in Table 2607.4 or the percentage of unprotected openings permitted by Section 705.8, whichever is smaller.

Exceptions:

1. In structures provided with approved flame barriers extending 30 inches (760 mm) beyond the *exterior wall* in the plane of the floor, a vertical separation is not required at the floor except that provided by the vertical thickness of the flame barrier projection.
2. Veneers of approved weather-resistant light-transmitting plastics used as exterior siding in buildings of Type V construction in compliance with Section 1405.
3. The area of light-transmitting plastic wall panels in *exterior walls* of greenhouses shall be exempt from the area limitations of Table 2607.4 but shall be limited as required for unprotected openings in accordance with Section 705.8.

INTERNATIONAL CODE COUNCIL®
Copyright © 2019 ICC & NYSDOS. ALL RIGHTS RESERVED. Accessed by Lauren Gualdino (lgualdino@briarcliffmanor.org), (-) Order Number #100880972 on May 08, 2020 07:05 AM (PDT) pursuant to License Agreement with ICC & NYSDOS. No further reproduction, no

100880972

TABLE 2607.4
AREA LIMITATION AND SEPARATION REQUIREMENTS FOR LIGHT-TRANSMITTING PLASTIC WALL PANELS[a]

FIRE SEPARATION DISTANCE (feet)	CLASS OF PLASTIC	MAXIMUM PERCENTAGE AREA OF EXTERIOR WALL IN PLASTIC WALL PANELS	MAXIMUM SINGLE AREA OF PLASTIC WALL PANELS (square feet)	MINIMUM SEPARATION OF PLASTIC WALL PANELS (feet)	
				Vertical	Horizontal
Less than 6	—	Not Permitted	Not Permitted	—	—
6 or more but less than 11	CC1	10	50	8	4
	CC2	Not Permitted	Not Permitted	—	—
11 or more but less than or equal to 30	CC1	25	90	6	4
	CC2	15	70	8	4
Over 30	CC1	50	Not Limited	3[b]	0
	CC2	50	100	6[b]	3

For SI: 1 foot = 304.8 mm, 1 square foot = 0.0929 m^2.

a. For combinations of plastic glazing and plastic wall panel areas permitted, see Section 2607.6.

b. For reductions in vertical separation allowed, see Section 2607.4.

2607.5 Automatic sprinkler system. Where the building is equipped throughout with an *automatic sprinkler system* in accordance with Section 903.3.1.1, the maximum percentage area of *exterior wall* in any *story* in light-transmitting plastic wall panels and the maximum square footage of a single area given in Table 2607.4 shall be increased 100 percent, but the area of light-transmitting plastic wall panels shall not exceed 50 percent of the wall area in any story, or the area permitted by Section 705.8 for unprotected openings, whichever is smaller. These installations shall be exempt from height limitations.

2607.6 Combinations of glazing and wall panels. Combinations of light-transmitting plastic glazing and light-transmitting plastic wall panels shall be subject to the area, height and percentage limitations and the separation requirements applicable to the class of light-transmitting plastic as prescribed for light-transmitting plastic wall panel installations.

SECTION 2608
LIGHT-TRANSMITTING PLASTIC GLAZING

2608.1 Buildings of Type VB construction. Openings in the *exterior walls* of buildings of Type VB construction, where not required to be protected by Section 705, shall be permitted to be glazed or equipped with light-transmitting plastic. Light-transmitting plastic glazing shall comply with Section 2606.

2608.2 Buildings of other types of construction. Openings in the *exterior walls* of buildings of types of construction other than Type VB, where not required to be protected by Section 705, shall be permitted to be glazed or equipped with light-transmitting plastic in accordance with Section 2606 and all of the following:

1. The aggregate area of light-transmitting plastic glazing shall not exceed 25 percent of the area of any wall face of the *story* in which it is installed. The area of a single pane of glazing installed above the first *story above grade plane* shall not exceed 16 square feet (1.5 m^2) and the vertical dimension of a single pane shall not exceed 4 feet (1219 mm).

   Exception: Where an *automatic sprinkler system* is provided throughout in accordance with Section 903.3.1.1, the area of allowable glazing shall be increased to not more than 50 percent of the wall face of the *story* in which it is installed with no limit on the maximum dimension or area of a single pane of glazing.
2. Approved flame barriers extending 30 inches (762 mm) beyond the *exterior wall* in the plane of the floor, or vertical panels not less than 4 feet (1219 mm) in height, shall be installed between glazed units located in adjacent stories.

   Exception: Buildings equipped throughout with an *automatic sprinkler system* in accordance with Section 903.3.1.1.
3. Light-transmitting plastics shall not be installed more than 75 feet (22 860 mm) above grade level.

   Exception: Buildings equipped throughout with an *automatic sprinkler system* in accordance with Section 903.3.1.1.

SECTION 2609
LIGHT-TRANSMITTING PLASTIC ROOF PANELS

2609.1 General. Light-transmitting plastic roof panels shall comply with this section and Section 2606. Light-transmitting plastic roof panels shall not be installed in Groups H, I-2 and I-3. In all other groups, light-transmitting plastic roof panels shall comply with any one of the following conditions:

1. The building is equipped throughout with an *automatic sprinkler system* in accordance with Section 903.3.1.1.
2. The roof construction is not required to have a fire-resistance rating by Table 601.

INTERNATIONAL CODE COUNCIL®
Copyright © 2019 ICC & NYSDOS. ALL RIGHTS RESERVED. Accessed by Lauren Gualdino (lgualdino@briarcliffmanor.org), (-) Order Number #100880972 on May 08, 2020 07:05 AM (PDT) pursuant to License Agreement with ICC & NYSDOS. No further reproduction, no

100880972

3. The roof panels meet the requirements for roof coverings in accordance with Chapter 15.

2609.2 Separation. Individual roof panels shall be separated from each other by a distance of not less than 4 feet (1219 mm) measured in a horizontal plane.

Exceptions:

1. The separation between roof panels is not required in a building equipped throughout with an *automatic sprinkler system* in accordance with Section 903.3.1.1.
2. The separation between roof panels is not required in low-hazard occupancy buildings complying with the conditions of Section 2609.4, Exception 2 or 3.

2609.3 Location. Where *exterior wall* openings are required to be protected by Section 705.8, a roof panel shall not be installed within 6 feet (1829 mm) of such *exterior wall*.

2609.4 Area limitations. Roof panels shall be limited in area and the aggregate area of panels shall be limited by a percentage of the floor area of the room or space sheltered in accordance with Table 2609.4.

Exceptions:

1. The area limitations of Table 2609.4 shall be permitted to be increased by 100 percent in buildings equipped throughout with an *automatic sprinkler system* in accordance with Section 903.3.1.1.
2. Low-hazard occupancy buildings, such as swimming pool shelters, shall be exempt from the area limitations of Table 2609.4, provided that the buildings do not exceed 5,000 square feet (465 m^2) in area and have a minimum fire separation distance of 10 feet (3048 mm).
3. Greenhouses that are occupied for growing or maintaining plants, without public access, shall be exempt from the area limitations of Table 2609.4 provided that they have a minimum fire separation distance of 4 feet (1220 mm).
4. Roof coverings over terraces and patios in occupancies in Group R-3 shall be exempt from the area limitations of Table 2609.4 and shall be permitted with light-transmitting plastics.

TABLE 2609.4
AREA LIMITATIONS FOR
LIGHT-TRANSMITTING PLASTIC ROOF PANELS

CLASS OF PLASTIC	MAXIMUM AREA OF INDIVIDUAL ROOF PANELS (square feet)	MAXIMUM AGGREGATE AREA OF ROOF PANELS (percent of floor area)
CC1	300	30
CC2	100	25

For SI: 1 square foot = 0.0929 m^2.

SECTION 2610
LIGHT-TRANSMITTING PLASTIC SKYLIGHT GLAZING

2610.1 Light-transmitting plastic glazing of skylight assemblies. Skylight assemblies glazed with light-transmitting plastic shall conform to the provisions of this section and Section 2606. Unit skylights glazed with light-transmitting plastic shall comply with Section 2405.5.

Exception: Skylights in which the light-transmitting plastic conforms to the required roof-covering class in accordance with Section 1505.

2610.2 Mounting. The light-transmitting plastic shall be mounted above the plane of the roof on a curb constructed in accordance with the requirements for the type of construction classification, but not less than 4 inches (102 mm) above the plane of the roof. Edges of the light-transmitting plastic skylights or domes shall be protected by metal or other approved noncombustible material, or the light transmitting plastic dome or skylight shall be shown to be able to resist ignition where exposed at the edge to a flame from a Class B brand as described in ASTM E108 or UL 790. The Class B brand test shall be conducted on a skylight that is elevated to a height as specified in the manufacturer's installation instructions, but not less than 4 inches (102 mm).

Exceptions:

1. Curbs shall not be required for skylights used on roofs having a minimum slope of three units vertical in 12 units horizontal (25-percent slope) in occupancies in Group R-3 and on buildings with a nonclassified roof covering.
2. The metal or noncombustible edge material is not required where nonclassified roof coverings are permitted.

2610.3 Slope. Flat or corrugated light-transmitting plastic skylights shall slope not less than four units vertical in 12 units horizontal (4:12). Dome-shaped skylights shall rise above the mounting flange a minimum distance equal to 10 percent of the maximum width of the dome but not less than 3 inches (76 mm).

Exception: Skylights that pass the Class B Burning Brand Test specified in ASTM E108 or UL 790.

2610.4 Maximum area of skylights. Each skylight shall have a maximum area within the curb of 100 square feet (9.3 m^2).

Exception: The area limitation shall not apply where the building is equipped throughout with an *automatic sprinkler system* in accordance with Section 903.3.1.1 or the building is equipped with smoke and heat vents in accordance with Section 910.

2610.5 Aggregate area of skylights. The aggregate area of skylights shall not exceed $33^1/_3$ percent of the floor area of the room or space sheltered by the roof in which such skylights are installed where Class CC1 materials are utilized, and 25 percent where Class CC2 materials are utilized.

Exception: The aggregate area limitations of light-transmitting plastic skylights shall be increased 100 percent beyond the limitations set forth in this section where the building is equipped throughout with an *automatic sprinkler system* in accordance with Section 903.3.1.1 or the building is equipped with smoke and heat vents in accordance with Section 910.

INTERNATIONAL CODE COUNCIL®
Copyright © 2019 ICC & NYSDOS. ALL RIGHTS RESERVED. Accessed by Lauren Gualdino (lgualdino@briarcliffmanor.org), (-) Order Number #100880972 on May 08, 2020 07:05 AM (PDT) pursuant to License Agreement with ICC & NYSDOS. No further reproduction, no

100880972

2610.6 Separation. Skylights shall be separated from each other by a distance of not less than 4 feet (1219 mm) measured in a horizontal plane.

Exceptions:

1. Buildings equipped throughout with an *automatic sprinkler system* in accordance with Section 903.3.1.1.
2. In Group R-3, multiple skylights located above the same room or space with a combined area not exceeding the limits set forth in Section 2610.4.

2610.7 Location. Where *exterior wall* openings are required to be protected in accordance with Section 705, a skylight shall not be installed within 6 feet (1829 mm) of such *exterior wall*.

2610.8 Combinations of roof panels and skylights. Combinations of light-transmitting plastic roof panels and skylights shall be subject to the area and percentage limitations and separation requirements applicable to roof panel installations.

SECTION 2611
LIGHT-TRANSMITTING PLASTIC INTERIOR SIGNS

2611.1 General. Light-transmitting plastic interior signs shall be limited as specified in Sections 2606 and 2611.2 through 2611.4.

Exception: Light-transmitting plastic interior wall signs in *covered and open mall buildings* shall comply with Section 402.6.4.

2611.2 Maximum area. The aggregate area of all light-transmitting plastics shall not exceed 24 square feet (2.23 m^2).

Exception: In buildings equipped throughout with an automatic sprinkler system in accordance with Section 903.3.1.1, the aggregate area of light-transmitting plastics shall not exceed 100 square feet (9.29 m^2), provided that all plastics are Class CC1 in accordance with Section 2606.4.

2611.3 Separation. Signs exceeding the aggregate area of Section 2611.2 shall be separated from each other by not less than 4 feet (1219 mm) horizontally and 8 feet (2438 mm) vertically.

2611.4 Encasement. Backs of wall-mounted signs and nonilluminated portions of all signs regulated by this section shall be fully encased in metal.

SECTION 2612
PLASTIC COMPOSITES

2612.1 General. Plastic composites shall consist of either wood/plastic composites or plastic lumber. Plastic composites shall comply with the provisions of this code and with the additional requirements of Section 2612.

2612.2 Labeling. Plastic composite deck boards and stair treads, or their packaging, shall bear a *label* that indicates compliance with ASTM D7032 and includes the allowable load and maximum allowable span determined in accordance with ASTM D7032. Plastic composite handrails and guards, or their packaging, shall bear a label that indicates compliance with ASTM D7032 and includes the maximum allowable span determined in accordance with ASTM D7032.

2612.3 Flame spread index. Plastic composite deck boards, stair treads, handrails and guards shall exhibit a flame spread index not exceeding 200 when tested in accordance with ASTM E84 or UL 723 with the test specimen remaining in place during the test.

Exception: Materials determined to be noncombustible in accordance with Section 703.5.

2612.4 Termite and decay resistance. Where required by Section 2304.12, plastic composite deck boards, stair treads, handrails and guards containing wood, cellulosic or any other biodegradable materials shall be termite and decay resistant as determined in accordance with ASTM D7032.

2612.5 Construction requirements. Plastic composites meeting the requirements of Section 2612 shall be permitted to be used as exterior deck boards, stair treads, handrails and guards where combustible construction is permitted.

2612.5.1 Span rating. Plastic composites used as exterior deck boards shall have a span rating determined in accordance with ASTM D7032.

2612.6 Plastic composite deck boards, stair treads, handrails and guards. Plastic composite deck boards, stair treads, handrails and guards shall be installed in accordance with this code and the manufacturer's instructions.

SECTION 2613
FIBER-REINFORCED POLYMER

2613.1 General. The provisions of this section shall govern the requirements and uses of *fiber-reinforced polymer* in and on buildings and structures.

2613.2 Labeling and identification. Packages and containers of *fiber-reinforced polymer* and their components delivered to the job site shall bear the *label* of an *approved agency* showing the manufacturer's name, product listing, product identification and information sufficient to determine that the end use will comply with the code requirements.

2613.3 Interior finishes. *Fiber-reinforced polymer* used as *interior finishes, decorative materials or trim* shall comply with Chapter 8.

2613.3.1 Foam plastic cores. *Fiber-reinforced polymer* used as interior finish and that contains foam plastic cores shall comply with Chapter 8 and this chapter.

2613.4 Light-transmitting materials. *Fiber-reinforced polymer* used as light-transmitting materials shall comply with Sections 2606 through 2611 as required for the specific application.

2613.5 Exterior use. *Fiber-reinforced polymer* shall be permitted to be installed on the *exterior walls* of buildings of any type of construction where such polymers meet the require-

INTERNATIONAL CODE COUNCIL®
Copyright © 2019 ICC & NYSDOS. ALL RIGHTS RESERVED. Accessed by Lauren Gualdino (lgualdino@briarcliffmanor.org), (-) Order Number #100880972 on May 08, 2020 07:05 AM (PDT) pursuant to License Agreement with ICC & NYSDOS. No further reproduction, no

100880972

ments of Section 2603.5. Fireblocking shall be installed in accordance with Section 718.

Exceptions:

1. Compliance with Section 2603.5 is not required where all of the following conditions are met:
   1.1. The *fiber-reinforced polymer* shall not exceed an aggregate total of 20 percent of the area of the specific wall to which it is attached, and single architectural elements shall not exceed 10 percent of the area of the specific wall to which it is attached, and no contiguous sets of architectural elements shall not exceed 10 percent of the area of the specific wall to which they are attached.
   1.2. The *fiber-reinforced polymer* shall have a flame spread index of 25 or less. The flame spread index requirement shall not be required for coatings or paints having a thickness of less than 0.036 inch (0.9 mm) that are applied directly to the surface of the *fiber-reinforced polymer*.
   1.3. Fireblocking complying with Section 718.2.6 shall be installed.
   1.4. The *fiber-reinforced polymer* shall be installed directly to a noncombustible substrate or be separated from the exterior wall by one of the following materials: corrosion-resistant steel having a minimum base metal thickness of 0.016 inch (0.41 mm) at any point, aluminum having a minimum thickness of 0.019 inch (0.5 mm) or other approved noncombustible material.
2. Compliance with Section 2603.5 is not required where the *fiber-reinforced polymer* is installed on buildings that are 40 feet (12 190 mm) or less above grade and the following conditions are met:
   2.1. The *fiber-reinforced polymer* shall meet the requirements of Section 1405.1.
   2.2. Where the fire separation distance is 5 feet (1524 mm) or less, the area of the fiber-reinforced polymer shall not exceed 10 percent of the wall area. Where the fire separation distance is greater than 5 feet (1524 mm), the area of the *exterior wall* coverage using *fiber-reinforced polymer* shall not be limited.
   2.3. The *fiber-reinforced polymer* shall have a flame spread index of 200 or less. The flame spread index requirements do not apply to coatings or paints having a thickness of less than 0.036 inch (0.9 mm) that are applied directly to the surface of the *fiber-reinforced polymer*.
   2.4. Fireblocking complying with Section 718.2.6 shall be installed.

SECTION 2614
REFLECTIVE PLASTIC CORE INSULATION

2614.1 General. The provisions of this section shall govern the requirements and uses of reflective plastic core insulation in buildings and structures. Reflective plastic core insulation shall comply with the requirements of Section 2614 and of Section 2614.3 or 2614.4.

2614.2 Identification. Packages and containers of reflective plastic core insulation delivered to the job site shall show the manufacturer's or supplier's name, product identification and information sufficient to determine that the end use will comply with the code requirements.

2614.3 Surface-burning characteristics. Reflective plastic core insulation shall have a flame spread index of not more than 25 and a smoke-developed index of not more than 450 when tested in accordance with ASTM E84 or UL 723. The reflective plastic core insulation shall be tested at the maximum thickness intended for use. Test specimen preparation and mounting shall be in accordance with ASTM E2599.

2614.4 Room corner test heat release. Reflective plastic core insulation shall comply with the acceptance criteria of Section 803.1.1.1 when tested in accordance with NFPA 286 or UL 1715 in the manner intended for use and at the maximum thickness intended for use.

INTERNATIONAL CODE COUNCIL®
Copyright © 2019 ICC & NYSDOS. ALL RIGHTS RESERVED. Accessed by Lauren Gualdino (lgualdino@briarcliffmanor.org), (-) Order Number #100880972 on May 08, 2020 07:05 AM (PDT) pursuant to License Agreement with ICC & NYSDOS. No further reproduction, no

100880972

INTERNATIONAL CODE COUNCIL®
Copyright © 2019 ICC & NYSDOS. ALL RIGHTS RESERVED. Accessed by Lauren Gualdino (lgualdino@briarcliffmanor.org), (-) Order Number #100880972 on May 08, 2020 07:05 AM (PDT) pursuant to License Agreement with ICC & NYSDOS. No further reproduction, no

100880972

CHAPTER 27

ELECTRICAL

SECTION 2701 GENERAL

2701.1 Scope. The provisions of this chapter and NFPA 70 shall govern the design, construction, erection and installation of the electrical components, appliances, equipment and systems used in buildings and structures covered by this code. The *Fire Code of New York State,* the *Property Maintenance Code of New York State* and NFPA 70 shall govern the use and maintenance of electrical components, appliances, equipment and systems. The *Existing Building Code of New York State* and NFPA 70 shall govern the alteration, repair, relocation, replacement and addition of electrical components, appliances, or equipment and systems.

SECTION 2702 EMERGENCY AND STANDBY POWER SYSTEMS

[F] 2702.1 General. Emergency power systems and standby power systems shall comply with Sections 2702.1.1 through 2702.1.8.

[F] 2702.1.1 Stationary generators. Stationary emergency and standby power generators required by this code shall be listed in accordance with UL 2200.

[F] 2702.1.2 Fuel-line piping protection. Fuel lines supplying a generator set inside a *high-rise building* shall be separated from areas of the *building* other than the room the generator is located in by an *approved* method, or an assembly that has a fire-resistance rating of not less than 2 hours. Where the *building* is protected throughout with an automatic sprinkler system installed in accordance with Section 903.3.1.1, the required fire-resistance rating shall be reduced to 1 hour.

[F] 2702.1.3 Installation. Emergency power systems and standby power systems required by this code or the *Fire Code of New York State* shall be installed in accordance with the *Fire Code of New York State*, NFPA 70, NFPA 110 and NFPA 111.

[F] 2702.1.4 Load transfer. Emergency power systems shall automatically provide secondary power within 10 seconds after primary power is lost, unless specified otherwise in this code. Standby power systems shall automatically provide secondary power within 60 seconds after primary power is lost, unless specified otherwise in this code.

[F] 2702.1.5 Load duration. Emergency power systems and standby power systems shall be designed to provide the required power for a minimum duration of 2 hours without being refueled or recharged, unless specified otherwise in this code.

[F] 2702.1.6 Uninterruptable power source. An uninterrupted source of power shall be provided for equipment where required by the manufacturer's instructions, the listing, this code or applicable referenced standards.

[F] 2702.1.7 Interchangeability. Emergency power systems shall be an acceptable alternative for installations that require standby power systems.

[F] 2702.1.8 Group I-2 occupancies. In Group I-2 occupancies located in flood hazard areas established in Section 1612.3, where new essential electrical systems are installed, and where new essential electrical system generators are installed, the systems and generators shall be located and installed in accordance with ASCE 24. Where connections for hookup of temporary generators are provided, the connections shall be located at or above the elevation required in ASCE 24.

[F] 2702.2 Where required. Emergency and standby power systems shall be provided where required by Sections 2702.2.1 through 2702.2.18.

[F] 2702.2.1 Ambulatory care facilities. Essential electrical systems for ambulatory care facilities shall comply with Section 422.6.

[F] 2702.2.2 Elevators and platform lifts. Standby power shall be provided for elevators and platform lifts as required in Sections 1009.4.1, 1009.5, 3003.1, 3007.8 and 3008.8.

[F] 2702.2.3 Emergency responder radio coverage systems. Standby power shall be provided for emergency responder radio coverage systems required in Section 918 and the *Fire Code of New York State*. The standby power supply shall be capable of operating the emergency responder radio coverage system for a duration of not less than 12 hours at 100-percent system operation capacity.

[F] 2702.2.4 Emergency voice/alarm communication systems. Emergency power shall be provided for emergency voice/alarm communication systems as required in Section 907.5.2.2.5. The system shall be capable of powering the required load for a duration of not less than 24 hours, as required in NFPA 72.

[F] 2702.2.5 Exhaust systems. Standby power shall be provided for common exhaust systems for domestic kitchens located in multistory structures as required in Section 505.5 of the *Mechanical Code of New York State.* Standby power shall be provided for common exhaust systems for clothes dryers located in multistory structures as required in Section 504.10 of the *Mechanical Code of New York State* and Section 614.10 of the *Fuel Gas Code of New York State*.

[F] 2702.2.6 Exit signs. Emergency power shall be provided for exit signs as required in Section 1013.6.3. The system shall be capable of powering the required load for a duration of not less than 90 minutes.

INTERNATIONAL CODE COUNCIL®
Copyright © 2019 ICC & NYSDOS. ALL RIGHTS RESERVED. Accessed by Lauren Gualdino (lgualdino@briarcliffmanor.org), (-) Order Number #100880972 on May 08, 2020 07:05 AM (PDT) pursuant to License Agreement with ICC & NYSDOS. No further reproduction, no

100880972

[F] 2702.2.7 Gas detection system. Emergency or standby power shall be provided for gas detection systems in accordance with the *Fire Code of New York State*.

[F] 2702.2.8 Group I-2 occupancies. Essential electrical systems for Group I-2 occupancies shall be in accordance with Section 407.11.

[F] 2702.2.9 Group I-3 occupancies. Emergency power shall be provided for power-operated doors and locks in Group I-3 occupancies as required in Section 408.4.2.

[F] 2702.2.10 Hazardous materials. Emergency or standby power shall be provided in occupancies with hazardous materials where required by the *Fire Code of New York State*.

[F] 2702.2.11 High-rise buildings. Emergency and standby power shall be provided in high-rise buildings as required in Section 403.4.8.

[F] 2702.2.12 Laboratory suites. Standby or emergency power shall be provided in accordance with Section 5004.7 of the *Fire Code of New York State* where *laboratory suites* are located above the sixth story above grade plane or located in a story below grade plane.

[F] 2702.2.13 Means of egress illumination. Emergency power shall be provided for means of egress illumination as required in Section 1008.3. The system shall be capable of powering the required load for a duration of not less than 90 minutes.

[F] 2702.2.14 Membrane structures. Standby power shall be provided for auxiliary inflation systems in permanent membrane structures as required in Section 3102.8.2. Standby power shall be provided for a duration of not less than 4 hours. Auxiliary inflation systems in temporary air-supported and air-inflated membrane structures shall be provided in accordance with Section 3103.10.4 of the *Fire Code of New York State.*

[F] 2702.2.15 Semiconductor fabrication facilities. Emergency power shall be provided for semiconductor fabrication facilities as required in Section 415.11.10.

[F] 2702.2.16 Smoke control systems. Standby power shall be provided for smoke control systems as required in Sections 404.7, 909.11, 909.20.6.2 and 909.21.5.

[F] 2702.2.17 Special purpose horizontal sliding, accordion or folding doors. Standby power shall be provided for special purpose horizontal sliding, accordion or folding doors as required in Section 1010.1.4.3. The standby power supply shall have a capacity to operate not fewer than 50 closing cycles of the door.

[F] 2702.2.18 Underground buildings. Emergency and standby power shall be provided in underground buildings as required in Section 405.

[NY] 2702.2.19 Exhaust ventilation systems. Standby power shall be provided for mechanical exhaust ventilation systems in accordance with the *Fire Code of New York State*.

[F] 2702.3 Critical circuits. Required critical circuits shall be protected using one of the following methods:

1. Cables, used for survivability of required critical circuits, that are listed in accordance with UL 2196 and have a fire-resistance rating of not less than 1 hour.
2. Electrical circuit protective systems having a fire-resistance rating of not less than 1 hour. Electrical circuit protective systems are installed in accordance with their listing requirements.
3. Construction having a fire-resistance rating of not less than 1 hour.

[F] 2702.4 Maintenance. Emergency and standby power systems shall be maintained and tested in accordance with the *Fire Code of New York State*.

INTERNATIONAL CODE COUNCIL®
Copyright © 2019 ICC & NYSDOS. ALL RIGHTS RESERVED. Accessed by Lauren Gualdino (lgualdino@briarcliffmanor.org), (-) Order Number #100880972 on May 08, 2020 07:05 AM (PDT) pursuant to License Agreement with ICC & NYSDOS. No further reproduction, no

100880972

CHAPTER 28

MECHANICAL SYSTEMS

SECTION 2801
GENERAL

[M] 2801.1 Scope. The provisions of this chapter, the *Mechanical Code of New York State* and the *Fuel Gas Code of New York State* shall govern the design, construction, erection and installation of mechanical appliances, equipment and systems used in buildings and structures covered by this code. Masonry chimneys, fireplaces and barbecues shall comply with the *Mechanical Code of New York State* and Chapter 21 of this code. The *Fire Code of New York State,* the *Property Maintenance Code of New York State,* the *Mechanical Code of New York State* and the *Fuel Gas Code of New York State* shall govern the use and maintenance of mechanical components, appliances, equipment and systems. The *Existing Building Code of New York State,* the *Mechanical Code of New York State* and the *Fuel Gas Code of New York State* shall govern the alteration, repair, relocation, replacement and addition of mechanical components, appliances, equipment and systems.

INTERNATIONAL CODE COUNCIL®
Copyright © 2019 ICC & NYSDOS. ALL RIGHTS RESERVED. Accessed by Lauren Gualdino (lgualdino@briarcliffmanor.org), (-) Order Number #100880972 on May 08, 2020 07:05 AM (PDT) pursuant to License Agreement with ICC & NYSDOS. No further reproduction, no

100880972

INTERNATIONAL CODE COUNCIL®
Copyright © 2019 ICC & NYSDOS. ALL RIGHTS RESERVED. Accessed by Lauren Gualdino (lgualdino@briarcliffmanor.org), (-) Order Number #100880972 on May 08, 2020 07:05 AM (PDT) pursuant to License Agreement with ICC & NYSDOS. No further reproduction, no

CHAPTER 29

PLUMBING SYSTEMS

SECTION 2901
GENERAL

[NY] 2901.1 Scope. The provisions of this chapter and the *Plumbing Code of New York State* shall govern the design, construction, erection and installation of plumbing components, appliances, equipment and systems used in *buildings* and structures covered by this code. Toilet and bathing rooms shall be constructed in accordance with Section 1209. The *Fire Code of New York State*, the *Property Maintenance Code of New York State* and the *Plumbing Code of New York State* shall govern the use and maintenance of plumbing components, appliances, equipment and systems. The *Existing Building Code of New York State* and the *Plumbing Code of New York State* shall govern the *alteration*, *repair*, relocation, replacement and *addition* of plumbing components, *appliances*, *equipment* and systems.

SECTION 2902
MINIMUM PLUMBING FACILITIES

[P] 2902.1 Minimum number of fixtures. Plumbing fixtures shall be provided in the minimum number as shown in Table 2902.1 based on the actual use of the building or space. Uses not shown in Table 2902.1 shall be considered individually by the *building official*. The number of occupants shall be determined by this code.

[NY] 2902.1.1 Fixture calculations. To determine the occupant load of each sex, the total occupant load shall be divided in half. To determine the required number of fixtures for each sex, the fixture ratio or ratios for each fixture type shall be applied to the occupant load of that sex in accordance with Table 2902.1. Fractional numbers resulting from applying the fixture ratios of Table 2902.1 shall be rounded up to the next whole number.

The plumbing fixtures located in single-user toilet facilities and bathing rooms, including family or assisted-use toilet and bathing rooms, shall contribute toward the total number of required plumbing fixtures for a building or tenant space, and shall be deducted proportionately, from the required gender ratios of Table 2902.1.

The total number of fixtures shall be permitted to be based on any combination of single-user, multi-user and separate facilities.

For calculations involving multiple occupancies, such fractional numbers for each *occupancy* shall first be summed and then rounded up to the next whole number.

Exception: The total occupant load shall not be required to be divided in half where approved statistical data indicates a distribution of the sexes of other than 50 percent of each sex.

[NY] 2902.1.2 Single-user toilet and bathing facilities. Single-user toilet and bathing rooms, and family or assisted-use toilet rooms and bathing rooms shall be identified as being available for use by all persons regardless of their sex.

[P] TABLE 2902.1
MINIMUM NUMBER OF REQUIRED PLUMBING FIXTURES[a]
(See Sections 2902.1.1 and 2902.2)

No.	CLASSIFICATION	DESCRIPTION	WATER CLOSETS (URINALS SEE SECTION 424.2 OF THE *PLUMBING CODE OF NEW YORK STATE*)		LAVATORIES		BATHTUBS/ SHOWERS	DRINKING FOUNTAINS (SEE SECTION 410 OF THE *PLUMBING CODE OF NEW YORK STATE)*	OTHER
			Male	Female	Male	Female			
1	Assembly	Theaters and other buildings for the performing arts and motion pictures[d]	1 per 125	1 per 65	1 per 200		—	1 per 500	1 service sink
		Nightclubs, bars, taverns, dance halls and buildings for similar purposes[d]	1 per 40	1 per 40	1 per 75		—	1 per 500	1 service sink
		Restaurants, banquet halls and food courts[d]	1 per 75	1 per 75	1 per 200		—	1 per 500	1 service sink
		Casino gaming areas	1 per 100 for the first 400 and 1 per 250 for the remainder exceeding 400	1 per 50 for the first 400 and 1 per 150 for the remainder exceeding 400	1 per 250 for the first 750 and 1 per 500 for the remainder exceeding 750		—	1 per 1,000	1 service sink

(continued)

INTERNATIONAL CODE COUNCIL®
Copyright © 2019 ICC & NYSDOS. ALL RIGHTS RESERVED. Accessed by Lauren Gualdino (lgualdino@briarcliffmanor.org), (-) Order Number #100880972 on May 08, 2020 07:05 AM (PDT) pursuant to License Agreement with ICC & NYSDOS. No further reproduction, no

100880972

[P] TABLE 2902.1—(continued)
MINIMUM NUMBER OF REQUIRED PLUMBING FIXTURES[a]
(See Sections 2902.1.1 and 2902.2)

No.	CLASSIFICATION	DESCRIPTION	WATER CLOSETS (URINALS SEE SECTION 424.2 OF THE *PLUMBING CODE OF NEW YORK STATE*)		LAVATORIES		BATHTUBS/ SHOWERS	DRINKING FOUNTAINS (SEE SECTION 410 OF THE *PLUMBING CODE OF NEW YORK STATE)*	OTHER
			Male	Female	Male	Female			
1	Assembly	Auditoriums without permanent seating, art galleries, exhibition halls, museums, lecture halls, libraries, arcades and gymnasiums[d]	1 per 125	1 per 65	1 per 200		—	1 per 500	1 service sink
		Passenger terminals and transportation facilities[d]	1 per 500	1 per 500	1 per 750		—	1 per 1,000	1 service sink
		Places of worship and other religious services[d]	1 per 150	1 per 75	1 per 200		—	1 per 1,000	1 service sink
		Coliseums, arenas, skating rinks, pools and tennis courts for indoor sporting events and activities	1 per 75 for the first 1,500 and 1 per 120 for the remainder exceeding 1,500	1 per 40 for the first 1,520 and 1 per 60 for the remainder exceeding 1,520	1 per 200	1 per 150	—	1 per 1,000	1 service sink
		Stadiums, amusement parks, bleachers and grandstands for outdoor sporting events and activities[f]	1 per 75 for the first 1,500 and 1 per 120 for the remainder exceeding 1,500	1 per 40 for the first 1,520 and 1 per 60 for the remainder exceeding 1,520	1 per 200	1 per 150	—	1 per 1,000	1 service sink
2	Business	Buildings for the transaction of business, professional services, other services involving merchandise, office buildings, banks, light industrial, ambulatory care and similar uses	1 per 25 for the first 50 and 1 per 50 for the remainder exceeding 50		1 per 40 for the first 80 and 1 per 80 for the remainder exceeding 80		—	1 per 100	1 service sink[e]
3	Educational	Educational facilities	1 per 50		1 per 50		—	1 per 100	1 service sink
4	Factory and industrial	Structures in which occupants are engaged in work fabricating, assembly or processing of products or materials	1 per 100		1 per 100		—	1 per 400	1 service sink
5	Institutional	Custodial care facilities	1 per 10		1 per 10		1 per 8	1 per 100	1 service sink
		Medical care recipients in hospitals and nursing homes[b]	1 per room[c]		1 per room[c]		1 per 15	1 per 100	1 service sink
		Employees in hospitals and nursing homes[b]	1 per 25		1 per 35		—	1 per 100	—
		Visitors in hospitals and nursing homes	1 per 75		1 per 100		—	1 per 500	—
		Prisons[b]	1 per cell		1 per cell		1 per 15	1 per 100	1 service sink

(continued)

INTERNATIONAL CODE COUNCIL®
Copyright © 2019 ICC & NYSDOS. ALL RIGHTS RESERVED. Accessed by Lauren Gualdino (lgualdino@briarcliffmanor.org), (-) Order Number #100880972 on May 08, 2020 07:05 AM (PDT) pursuant to License Agreement with ICC & NYSDOS. No further reproduction, no

100880972

[P] TABLE 2902.1—continued
MINIMUM NUMBER OF REQUIRED PLUMBING FIXTURES[a]
(See Sections 2902.1.1 and 2902.2)

No.	CLASSIFICATION	DESCRIPTION	WATER CLOSETS (URINALS SEE SECTION 424.2 OF THE *PLUMBING CODE OF NEW YORK STATE*)		LAVATORIES		BATHTUBS OR SHOWERS	DRINKING FOUNTAINS (SEE SECTION 410 OF THE *PLUMBING CODE OF NEW YORK STATE)*	OTHER
			Male	Female	Male	Female			
5	Institutional	Reformatories, detention centers and correctional centers[b]	1 per 15		1 per 15		1 per 15	1 per 100	1 service sink
		Employees in reformitories, detention centers and correctional centers[b]	1 per 25		1 per 35		—	1 per 100	—
		Adult day care and child day care	1 per 15		1 per 15		1	1 per 100	1 service sink
6	Mercantile	Retail stores, service stations, shops, salesrooms, markets and shopping centers	1 per 500		1 per 750		—	1 per 1,000	1 service sink[e]
7	Residential	Hotels, motels, boarding houses (transient)	1 per sleeping unit		1 per sleeping unit		1 per sleeping unit	—	1 service sink
		Dormitories, fraternities, sororities and boarding houses (not transient)	1 per 10		1 per 10		1 per 8	1 per 100	1 service sink
		Apartment house	1 per dwelling unit		1 per dwelling unit		1 per dwelling unit	—	1 kitchen sink per dwelling unit; 1 automatic clothes washer connection per 20 dwelling units
		One- and two-family dwellings and lodging houses with five or fewer guestrooms	1 per dwelling unit		1 per 10		1 per dwelling unit	—	1 kitchen sink per dwelling unit; 1 automatic clothes washer connection per dwelling unit
		Congregate living facilities with 16 or fewer persons	1 per 10		1 per 10		1 per 8	1 per 100	1 service sink
8	Storage	Structures for the storage of goods, warehouses, storehouses and freight depots, low and moderate hazard	1 per 100		1 per 100		—	1 per 1,000	1 service sink

a. The fixtures shown are based on one fixture being the minimum required for the number of persons indicated or any fraction of the number of persons indicated. The number of occupants shall be determined by this code.
b. Toilet facilities for employees shall be separate from facilities for inmates or care recipients.
c. A single-occupant toilet room with one water closet and one lavatory serving not more than two adjacent patient sleeping units shall be permitted, provided that each patient sleeping unit has direct access to the toilet room and provisions for privacy for the toilet room user are provided.
d. The occupant load for seasonal outdoor seating and entertainment areas shall be included when determining the minimum number of facilities required.
e. For business and mercantile classifications with an occupant load of 15 or fewer, a service sink shall not be required.
f. [NY] Reserved.

INTERNATIONAL CODE COUNCIL®
Copyright © 2019 ICC & NYSDOS. ALL RIGHTS RESERVED. Accessed by Lauren Gualdino (lgualdino@briarcliffmanor.org), (-) Order Number #100880972 on May 08, 2020 07:05 AM (PDT) pursuant to License Agreement with ICC & NYSDOS. No further reproduction, no

100880972

[NY] 2902.1.3 Multi-user toilet and bathing facilities. Where multi-user facilities designed to serve all genders are provided, urinals shall be either located in stalls, or located in an area visually separated from the remainder of the facility. Privacy for water closets shall be installed in accordance with Section 1209.3.1.

[NY] 2902.1.4 Lavatory distribution. Where two or more toilet rooms are provided for each sex, the required number of lavatories shall be distributed proportionately to the required number of water closets

[NY] 2902.2 Separate facilities. Where plumbing fixtures are required, separate facilities shall be provided for each sex.

Exceptions:

1. Separate facilities shall not be required for dwelling units and sleeping units.
2. Separate facilities shall not be required in structures or tenant spaces with a total occupant load, including both employees and customers, of 15 or fewer.
3. Separate facilities shall not be required in mercantile occupancies in which the maximum occupant load is 100 or fewer.
4. Separate facilities shall not be required in business occupancies in which the maximum occupant load is 25 or fewer.
5. Single-user toilet and bathing rooms provided in accordance with Section 2902.1.2 shall be designated as gender neutral.
6. Separate facilities shall not be required where multi-user facilities designed for use by both sexes are provided in accordance with Section 2902.1.3.

[P] 2902.2.1 Family or assisted-use toilet facilities serving as separate facilities. Where a building or tenant space requires a separate toilet facility for each sex and each toilet facility is required to have only one water closet, two family or assisted-use toilet facilities shall be permitted to serve as the required separate facilities. Family or assisted-use toilet facilities shall not be required to be identified for exclusive use by either sex as required by Section 2902.4.

[P] 2902.3 Employee and public toilet facilities. For structures and tenant spaces intended for public utilization, customers, patrons and visitors shall be provided with public toilet facilities. Employees associated with structures and tenant spaces shall be provided with toilet facilities. The number of plumbing fixtures located within the required toilet facilities shall be provided in accordance with Section 2902 for all users. Employee toilet facilities shall be either separate or combined employee and public toilet facilities.

Exception: Public toilet facilities shall not be required for:

1. Parking garages where operated without parking attendants.
2. Structures and tenant spaces intended for quick transactions, including takeout, pickup and drop-off, having a public access area less than or equal to 300 square feet (28 m^2).

[P] 2902.3.1 Access. The route to the public toilet facilities required by Section 2902.3 shall not pass through kitchens, storage rooms or closets. Access to the required facilities shall be from within the building or from the exterior of the building. Routes shall comply with the accessibility requirements of this code. The public shall have access to the required toilet facilities at all times that the building is occupied.

[P] 2902.3.2 Prohibited toilet room location. Toilet rooms shall not open directly into a room used for the preparation of food for service to the public.

[P] 2902.3.3 Location of toilet facilities in occupancies other than malls. In occupancies other than covered and open mall buildings, the required public and employee toilet facilities shall be located not more than one *story* above or below the space required to be provided with toilet facilities, and the path of travel to such facilities shall not exceed a distance of 500 feet (152 m).

Exception: The location and maximum distances of travel to required employee facilities in factory and industrial occupancies are permitted to exceed that required by this section, provided that the location and maximum distance of travel are *approved*.

[P] 2902.3.4 Location of toilet facilities in malls. In covered and open mall buildings, the required public and employee toilet facilities shall be located not more than one story above or below the space required to be provided with toilet facilities, and the path of travel to such facilities shall not exceed a distance of 300 feet (91 mm). In mall buildings, the required facilities shall be based on total square footage (m^2) within a covered mall building or within the perimeter line of an open mall building, and facilities shall be installed in each individual store or in a central toilet area located in accordance with this section. The maximum distance of travel to central toilet facilities in mall buildings shall be measured from the main entrance of any store or tenant space. In mall buildings, where employees' toilet facilities are not provided in the individual store, the maximum distance of travel shall be measured from the employees' work area of the store or tenant space.

[P] 2902.3.5 Pay facilities. Where pay facilities are installed, such facilities shall be in excess of the required minimum facilities. Required facilities shall be free of charge.

[P] 2902.3.6 Door locking. Where a toilet room is provided for the use of multiple occupants, the egress door for the room shall not be lockable from the inside of the room. This section does not apply to family or assisted-use toilet rooms.

[NY] 2902.4 Signage. Required public facilities shall be provided with signs that designate the sex, as required by Section 2902.2. Signs shall be readily visible and located near the entrance to each toilet facility. Signs for accessible toilet facilities shall comply with Section 1111.

Exceptions:

1. Single-user facilities shall be designated as gender neutral.
2. Multi-user facilities designed to serve all genders shall not be designated by sex.

[P] 2902.4.1 Directional signage. Directional signage indicating the route to the required public toilet facilities shall be posted in a lobby, corridor, aisle or similar space,

INTERNATIONAL CODE COUNCIL®
Copyright © 2019 ICC & NYSDOS. ALL RIGHTS RESERVED. Accessed by Lauren Gualdino (lgualdino@briarcliffmanor.org), (-) Order Number #100880972 on May 08, 2020 07:05 AM (PDT) pursuant to License Agreement with ICC & NYSDOS. No further reproduction, no

100880972

such that the sign can be readily seen from the main entrance to the building or tenant space.

[P] 2902.5 Drinking fountain location. Drinking fountains shall not be required to be located in individual tenant spaces provided that public drinking fountains are located within a distance of travel of 500 feet (152 m) of the most remote location in the tenant space and not more than one story above or below the tenant space. Where the tenant space is in a covered or open mall, such distance shall not exceed 300 feet (91 440 mm). Drinking fountains shall be located on an accessible route.

[P] 2902.6 Small occupancies. Drinking fountains shall not be required for an occupant load of 15 or fewer.

[NY] 2902.7 Buildings required to provide alternative potable water access. Buildings five or more stories in height that supply potable water from a public water main with the assistance of pumps to *dwelling units* or sleeping units in Groups I-1, I-2, R-1, R-2, and R-4 occupancies shall provide emergency water fixtures. These fixtures shall, in an emergency when such pumps are inoperable, supply potable water from the public water main to the building using only the available pressure in the public water main. Such fixtures shall comply with Sections 2902.7.1 through 2902.7.4.

Exception: Buildings where the pumps used to supply the potable water are connected to an emergency or a standby power system that complies with the requirements of Chapter 27 of the *Building Code of New York State*.

[NY] 2902.7.1 Emergency water fixture. Fixtures capable of supplying an emergency source of potable water in accordance with this section shall consist of either a faucet or a fixture suitable for supplying drinking water for human ingestion conforming to Sections 424.1 and 424.1.1 of the *Plumbing Code of New York State*. Waste fittings shall comply with Section 424.1.2 of the *Plumbing Code of New York State*. Fixtures shall discharge to one of the following:

1. A sink conforming to Section 418 of the *Plumbing Code of New York State*.
2. A floor drain conforming to Section 412 of the *Plumbing Code of New York State*.

[NY] 2902.7.2 Number of emergency water fixtures required. One such fixture shall be provided for each 100 occupants as determined by the occupant load of the building.

[NY] 2902.7.3 Access to emergency water fixtures. Fixtures capable of supplying an emergency source of potable water in accordance with this section shall comply with all of the following:

1. Fixtures shall be located indoors, in one or more common areas of the building, and shall not be located in a bathroom or toilet room.
2. At least 5 percent but not less than one emergency water fixture shall be accessible and on an accessible route complying with Section 1104.3 of the *Building Code of New York State*. Accessible sinks and fixtures shall comply with ICC A117.1.
3. Floor drains shall not be used in conjunction with accessible emergency water fixtures.

[NY] 2902.7.4 Signage. Fixtures capable of supplying an emergency source of potable water in accordance with this section shall be identified by a legible sign stating: "EMERGENCY DRINKING WATER." Signs shall be readily visible and located near such fixtures and on the door to any room or closet in which such a fixture is located.

INTERNATIONAL CODE COUNCIL®
Copyright © 2019 ICC & NYSDOS. ALL RIGHTS RESERVED. Accessed by Lauren Gualdino (lgualdino@briarcliffmanor.org), (-) Order Number #100880972 on May 08, 2020 07:05 AM (PDT) pursuant to License Agreement with ICC & NYSDOS. No further reproduction, no

100880972

INTERNATIONAL CODE COUNCIL®
Copyright © 2019 ICC & NYSDOS. ALL RIGHTS RESERVED. Accessed by Lauren Gualdino (lgualdino@briarcliffmanor.org), (-) Order Number #100880972 on May 08, 2020 07:05 AM (PDT) pursuant to License Agreement with ICC & NYSDOS. No further reproduction, no

100880972

CHAPTER 30

ELEVATORS AND CONVEYING SYSTEMS

SECTION 3001 GENERAL

3001.1 Scope. This chapter governs the design, construction, installation, *alteration* and repair of elevators and conveying systems and their components.

[NY] 3001.2 Emergency elevator communication systems for the deaf, hard of hearing and speech impaired. An emergency two-way communication system shall be provided. The system shall provide visible text and audible modes that:

1. When operating in each mode, includes a live interactive system that allows back and forth conversation between the elevator occupants and emergency personnel.
2. Is operational when the elevator is operational.
3. Allows elevator occupants to select the text-based or audible mode depending on their communication needs to interact with emergency personnel.

3001.3 Referenced standards. Except as otherwise provided for in this code, the design, construction, installation, *alteration*, repair and maintenance of elevators and conveying systems and their components shall conform to the applicable standard specified in Table 3001.3 and ASCE 24 for construction in flood hazard areas established in Section 1612.3.

3001.4 Accessibility. Passenger elevators required to be accessible or to serve as part of an *accessible means of egress* shall comply with Sections 1009 and 1109.7.

3001.5 Change in use. A change in use of an elevator from freight to passenger, passenger to freight, or from one freight class to another freight class shall comply with Section 8.7 of ASME A17.1/CSA B44.

TABLE 3001.3
ELEVATORS AND CONVEYING SYSTEMS AND COMPONENTS

TYPE	STANDARD
Automotive lifts	ALI ALCTV
Belt manlifts	ASME A90.1
Conveyors and related equipment	ASME B20.1
Elevators, escalators, dumbwaiters, moving walks, material lifts	ASME A17.1/CSA B44, ASME A17.7/CSA B44.7
Industrial scissor lifts	ANSI MH29.1
Platform lifts, stairway chairlifts, wheelchair lifts	ASME A18.1

SECTION 3002 HOISTWAY ENCLOSURES

3002.1 Hoistway enclosure protection. Elevator, dumbwaiter and other hoistway enclosures shall be *shaft enclosures* complying with Sections 712 and 713.

3002.1.1 Opening protectives. Openings in hoistway enclosures shall be protected as required in Chapter 7.

Exception: The elevator car doors and the associated hoistway enclosure doors at the floor level designated for recall in accordance with Section 3003.2 shall be permitted to remain open during Phase I Emergency Recall Operation.

3002.1.2 Hardware. Hardware on opening protectives shall be of an *approved* type installed as tested, except that *approved* interlocks, mechanical locks and electric contacts, door and gate electric contacts and door-operating mechanisms shall be exempt from the fire test requirements.

3002.2 Number of elevator cars in a hoistway. Where four or more elevator cars serve all or the same portion of a building, the elevators shall be located in not fewer than two separate hoistways. Not more than four elevator cars shall be located in any single hoistway enclosure.

3002.3 Emergency signs. An *approved* pictorial sign of a standardized design shall be posted adjacent to each elevator call station on all floors instructing occupants to use the *exit stairways* and not to use the elevators in case of fire. The sign shall read: IN CASE OF FIRE, ELEVATORS ARE OUT OF SERVICE. USE EXIT STAIRS.

Exceptions:

1. The emergency sign shall not be required for elevators that are part of an *accessible means of egress* complying with Section 1009.4.
2. The emergency sign shall not be required for elevators that are used for occupant self-evacuation in accordance with Section 3008.

3002.4 Elevator car to accommodate ambulance stretcher. Where elevators are provided in buildings four or more *stories* above, or four or more *stories* below, *grade plane*, not fewer than one elevator shall be provided for fire department emergency access to all floors. The elevator car shall be of such a size and arrangement to accommodate an ambulance stretcher 24 inches by 84 inches (610 mm by 2134 mm) with not less than 5-inch (127 mm) radius corners, in the horizontal, open position and shall be identified by the international symbol for emergency medical services (star of life). The symbol shall be not less than 3 inches (76 mm) in height and shall be placed inside on both sides of the hoistway door frame.

3002.5 Emergency doors. Where an elevator is installed in a single blind hoistway or on the outside of a building, there shall be installed in the blind portion of the hoistway or blank face of the building, an emergency door in accordance with ASME A17.1/CSA B44.

3002.6 Prohibited doors. Doors, other than hoistway doors and the elevator car door, shall be prohibited at the point of access to an elevator car unless such doors are readily open-

INTERNATIONAL CODE COUNCIL®
Copyright © 2019 ICC & NYSDOS. ALL RIGHTS RESERVED. Accessed by Lauren Gualdino (lgualdino@briarcliffmanor.org), (-) Order Number #100880972 on May 08, 2020 07:05 AM (PDT) pursuant to License Agreement with ICC & NYSDOS. No further reproduction, no

100880972

able from the car side without a key, tool, special knowledge or effort.

3002.7 Common enclosure with stairway. Elevators shall not be in a common *shaft enclosure* with a *stairway*.

Exception: Elevators within o*pen parking garages need not be separated from stairway enclosures.*

3002.8 Glass in elevator enclosures. Glass in elevator enclosures shall comply with Section 2409.2.

3002.9 Plumbing and mechanical systems. Plumbing and mechanical systems shall not be located in an elevator hoistway enclosure.

Exception: Floor drains, sumps and sump pumps shall be permitted at the base of the hoistway enclosure provided that they are indirectly connected to the plumbing system.

SECTION 3003
EMERGENCY OPERATIONS

[F] 3003.1 Standby power. In buildings and structures where standby power is required or furnished to operate an elevator, the operation shall be in accordance with Sections 3003.1.1 through 3003.1.4.

[F] 3003.1.1 Manual transfer. Standby power shall be manually transferable to all elevators in each bank.

[F] 3003.1.2 One elevator. Where only one elevator is installed, the elevator shall automatically transfer to standby power within 60 seconds after failure of normal power.

[F] 3003.1.3 Two or more elevators. Where two or more elevators are controlled by a common operating system, all elevators shall automatically transfer to standby power within 60 seconds after failure of normal power where the standby power source is of sufficient capacity to operate all elevators at the same time. Where the standby power source is not of sufficient capacity to operate all elevators at the same time, all elevators shall transfer to standby power in sequence, return to the designated landing and disconnect from the standby power source. After all elevators have been returned to the designated level, not less than one elevator shall remain operable from the standby power source.

[F] 3003.1.4 Venting. Where standby power is connected to elevators, the machine room *ventilation* or air conditioning shall be connected to the standby power source.

[F] 3003.2 Fire fighters' emergency operation. Elevators shall be provided with Phase I emergency recall operation and Phase II emergency in-car operation in accordance with ASME A17.1/CSA B44.

[F] 3003.3 Standardized fire service elevator keys. All elevators shall be equipped to operate with a standardized fire service elevator key in accordance with the *Fire Code of New York State*.

SECTION 3004
CONVEYING SYSTEMS

3004.1 General. Escalators, moving walks, conveyors, personnel hoists and material hoists shall comply with the provisions of Sections 3004.2 through 3004.4.

3004.2 Escalators and moving walks. Escalators and moving walks shall be constructed of *approved* noncombustible and fire-retardant materials. This requirement shall not apply to electrical equipment, wiring, wheels, handrails and the use of $^{1}/_{28}$-inch (0.9 mm) wood veneers on balustrades backed up with noncombustible materials.

3004.2.1 Enclosure. Escalator floor openings shall be enclosed with *shaft enclosures* complying with Section 713.

3004.2.2 Escalators. Where provided in below-grade transportation stations, escalators shall have a clear width of not less than 32 inches (815 mm).

3004.3 Conveyors. Conveyors and conveying systems shall comply with ASME B20.1.

3004.3.1 Enclosure. Conveyors and related equipment connecting successive floors or levels shall be enclosed with *shaft enclosures* complying with Section 713.

3004.3.2 Conveyor safeties. Power-operated conveyors, belts and other material-moving devices shall be equipped with automatic limit switches that will shut off the power in an emergency and automatically stop all operation of the device.

3004.4 Personnel and material hoists. Personnel and material hoists shall be designed utilizing an *approved* method that accounts for the conditions imposed during the intended operation of the hoist device. The design shall include, but is not limited to, anticipated loads, structural stability, impact, vibration, stresses and seismic restraint. The design shall account for the construction, installation, operation and inspection of the hoist tower, car, machinery and control equipment, guide members and hoisting mechanism. Additionally, the design of personnel hoists shall include provisions for field testing and maintenance that will demonstrate that the hoist device functions in accordance with the design. Field tests shall be conducted upon the completion of an installation or following a major *alteration* of a personnel hoist.

SECTION 3005
MACHINE ROOMS

3005.1 Access. An *approved* means of access shall be provided to elevator machine rooms, control rooms, control spaces and machinery spaces.

3005.2 Venting. Elevator machine rooms, machinery spaces that contain the driving machine, and control rooms or spaces that contain the operation or motion controller for elevator operation shall be provided with an independent *ventilation* or air-conditioning system to protect against the overheating of the electrical equipment. The system shall be capable of maintaining temperatures within the range established for the elevator equipment.

INTERNATIONAL CODE COUNCIL®
Copyright © 2019 ICC & NYSDOS. ALL RIGHTS RESERVED. Accessed by Lauren Gualdino (lgualdino@briarcliffmanor.org), (-) Order Number #100880972 on May 08, 2020 07:05 AM (PDT) pursuant to License Agreement with ICC & NYSDOS. No further reproduction, no

100880972

3005.3 Pressurization. The elevator machine room, control rooms or control space with openings into a pressurized elevator hoistway shall be pressurized upon activation of a *heat or smoke detector* located in the elevator machine room, control room or control space.

3005.4 Machine rooms, control rooms, machinery spaces, and control spaces. Elevator machine rooms, control rooms, control spaces and machinery spaces outside of but attached to a hoistway that have openings into the hoistway shall be enclosed with *fire barriers* constructed in accordance with Section 707 or *horizontal assemblies* constructed in accordance with Section 711, or both. The *fire-resistance rating* shall be not less than the required rating of the hoistway enclosure served by the machinery. Openings in the *fire barriers* shall be protected with assemblies having a f*ire protection rating* not less than that required for the hoistway enclosure doors.

Exceptions:

1. For other than fire service access elevators and occupant evacuation elevators, where machine rooms, machinery spaces, control rooms and control spaces do not abut and do not have openings to the hoistway enclosure they serve, the *fire barriers* constructed in accordance with Section 707 or *horizontal assemblies* constructed in accordance with Section 711, or both, shall be permitted to be reduced to a 1-hour *fire-resistance rating*.
2. For other than fire service access elevators and occupant evacuation elevators, in buildings four *stories* or less above *grade plane* where machine room, machinery spaces, control rooms and control spaces do not abut and do not have openings to the hoistway enclosure they serve, the machine room, machinery spaces, control rooms and control spaces are not required to be fire-resistance rated.

3005.5 Shunt trip. Where elevator hoistways, elevator machine rooms, control rooms and control spaces containing elevator control equipment are protected with automatic sprinklers, a means installed in accordance with Section 21.4 of NFPA 72 shall be provided to automatically disconnect the main line power supply to the affected elevator prior to the application of water. This means shall not be self-resetting. The activation of automatic sprinklers outside the hoistway, machine room, machinery space, control room or control space shall not disconnect the main line power supply.

3005.6 Plumbing systems. Plumbing systems shall not be located in elevator equipment rooms.

SECTION 3006
ELEVATOR LOBBIES AND HOISTWAY OPENING PROTECTION

3006.1 General. Elevator hoistway openings and enclosed elevator lobbies shall be provided in accordance with the following:

1. Where hoistway opening protection is required by Section 3006.2, such protection shall be in accordance with Section 3006.3.
2. Where enclosed elevator lobbies are required for underground buildings, such lobbies shall comply with Section 405.4.3.
3. Where an area of refuge is required and an enclosed elevator lobby is provided to serve as an area of refuge, the enclosed elevator lobby shall comply with Section 1009.6.
4. Where fire service access elevators are provided, enclosed elevator lobbies shall comply with Section 3007.6.
5. Where occupant evacuation elevators are provided, enclosed elevator lobbies shall comply with Section 3008.6.

3006.2 Hoistway opening protection required. Elevator hoistway door openings shall be protected in accordance with Section 3006.3 where an elevator hoistway connects more than three stories, is required to be enclosed within a shaft enclosure in accordance with Section 712.1.1 and any of the following conditions apply:

1. The building is not protected throughout with an *automatic sprinkler system* in accordance with Section 903.3.1.1 or 903.3.1.2.
2. The building contains a Group I-1, Condition 2 occupancy.
3. The building contains a Group I-2 occupancy.
4. The building contains a Group I-3 occupancy.
5. The building is a high rise and the elevator hoistway is more than 75 feet (22 860 mm) in height. The height of the hoistway shall be measured from the lowest floor to the highest floor of the floors served by the hoistway.

Exceptions:

1. Protection of elevator hoistway door openings is not required where the elevator serves only open parking garages in accordance with Section 406.5.
2. Protection of elevator hoistway door openings is not required at the level(s) of exit discharge, provided that the level(s) of exit discharge is equipped with an *automatic sprinkler system* in accordance with Section 903.3.1.1.
3. Enclosed elevator lobbies and protection of elevator hoistway door openings are not required on levels where the elevator hoistway opens to the exterior.

3006.2.1 Rated corridors. Where corridors are required to be fire-resistance rated in accordance with Section 1020.1, elevator hoistway openings shall be protected in accordance with Section 3006.3.

3006.3 Hoistway opening protection. Where Section 3006.2 requires protection of the elevator hoistway door opening, the protection shall be provided by one of the following:

1. An enclosed elevator lobby shall be provided at each floor to separate the elevator hoistway shaft enclosure doors from each floor by fire partitions in accordance with Section 708. In addition, doors protecting openings in the elevator lobby enclosure walls shall comply with Section 716.2.2.1 as required for corridor walls. Penetrations of the enclosed elevator lobby by ducts

INTERNATIONAL CODE COUNCIL®
Copyright © 2019 ICC & NYSDOS. ALL RIGHTS RESERVED. Accessed by Lauren Gualdino (lgualdino@briarcliffmanor.org), (-) Order Number #100880972 on May 08, 2020 07:05 AM (PDT) pursuant to License Agreement with ICC & NYSDOS. No further reproduction, no

100880972

and air transfer openings shall be protected as required for corridors in accordance with Section 717.5.4.1.

2. An enclosed elevator lobby shall be provided at each floor to separate the elevator hoistway shaft enclosure doors from each floor by smoke partitions in accordance with Section 710 where the building is equipped throughout with an *automatic sprinkler system* installed in accordance with Section 903.3.1.1 or 903.3.1.2. In addition, doors protecting openings in the smoke partitions shall comply with Sections 710.5.2.2, 710.5.2.3 and 716.2.6.1. Penetrations of the enclosed elevator lobby by ducts and air transfer openings shall be protected as required for corridors in accordance with Section 717.5.4.1.
3. Additional doors shall be provided at each elevator hoistway door opening in accordance with Section 3002.6. Such door shall comply with the smoke and draft control door assembly requirements in Section 716.2.2.1.1 when tested in accordance with UL 1784 without an artificial bottom seal.
4. The elevator hoistway shall be pressurized in accordance with Section 909.21.

3006.4 Means of egress. Elevator lobbies shall be provided with not less than one means of egress complying with Chapter 10 and other provisions in this code. Egress through an enclosed elevator lobby shall be permitted in accordance with Item 1 of Section 1016.2.

SECTION 3007
FIRE SERVICE ACCESS ELEVATOR

3007.1 General. Where required by Section 403.6.1, every floor above and including the lowest level of fire department vehicle access of the building shall be served by fire service access elevators complying with Sections 3007.1 through 3007.9. Except as modified in this section, fire service access elevators shall be installed in accordance with this chapter and ASME A17.1/CSA B44.

Exception: Elevators that only service an open or enclosed parking garage and the lobby of the building shall not be required to serve as fire service access elevators.

3007.2 Automatic sprinkler system. The building shall be equipped throughout with an *automatic sprinkler system* in accordance with Section 903.3.1.1, except as otherwise permitted by Section 903.3.1.1.1 and as prohibited by Section 3007.2.1.

3007.2.1 Prohibited locations. Automatic sprinklers shall not be installed in machine rooms, elevator machinery spaces, control rooms, control spaces and elevator hoistways of fire service access elevators.

3007.2.2 Sprinkler system monitoring. The sprinkler system shall have a sprinkler control valve supervisory switch and water-flow-initiating device provided for each floor that is monitored by the building's *fire alarm system*.

3007.3 Water protection. Water from the operation of an automatic sprinkler system outside the enclosed lobby shall be prevented from infiltrating into the hoistway enclosure in accordance with an approved method.

3007.4 Shunt trip. Means for elevator shutdown in accordance with Section 3005.5 shall not be installed on elevator systems used for fire service access elevators.

3007.5 Hoistway enclosures. The fire service access elevator hoistway shall be located in a *shaft enclosure* complying with Section 713.

3007.5.1 Structural integrity of hoistway enclosures. The fire service access elevator hoistway enclosure shall comply with Sections 403.2.3.1 through 403.2.3.4.

3007.5.2 Hoistway lighting. When fire-fighters' emergency operation is active, the entire height of the hoistway shall be illuminated at not less than 1 *foot-candle* (11 lux) as measured from the top of the car of each fire service access elevator.

3007.6 Fire service access elevator lobby. The fire service access elevator shall open into an enclosed fire service access elevator lobby in accordance with Sections 3007.6.1 through 3007.6.5. Egress is permitted through the enclosed elevator lobby in accordance with Item 1 of Section 1016.2.

Exception: Where a fire service access elevator has two entrances onto a floor, the second entrance shall be permitted to be protected in accordance with Section 3006.3.

3007.6.1 Access to interior exit stairway or ramp. The enclosed fire service access elevator lobby shall have direct access from the enclosed elevator lobby to an enclosure for an *interior exit stairway* or *ramp*.

Exception: Access to an *interior exit stairway* or *ramp* shall be permitted to be through a protected path of travel that has a level of fire protection not less than the elevator lobby enclosure. The protected path shall be separated from the enclosed elevator lobby through an opening protected by a smoke and draft control assembly in accordance Section 716.2.2.1.

3007.6.2 Lobby enclosure. The fire service access elevator lobby shall be enclosed with a *smoke barrier* having a *fire-resistance rating* of not less than 1 hour, except that lobby doorways shall comply with Section 3007.6.3.

Exception: Enclosed fire service access elevator lobbies are not required at the *levels of exit discharge*.

3007.6.3 Lobby doorways. Other than doors to the hoistway, elevator control room or elevator control space, each doorway to an enclosed fire service access elevator lobby shall be provided with a $^{3}/_{4}$-hour *fire door assembly* complying with Section 716. The *fire door assembly* shall comply with the smoke and draft control door assembly requirements of Section 716.2.2.1.1 and be tested in accordance with UL 1784 without an artificial bottom seal.

3007.6.4 Lobby size. Regardless of the number of fire service access elevators served by the same elevator lobby, the enclosed fire service access elevator lobby shall be not less than 150 square feet (14 m^2) in an area with a dimension of not less than 8 feet (2440 mm).

3007.6.5 Fire service access elevator symbol. A pictorial symbol of a standardized design designating which elevators are fire service access elevators shall be installed on

INTERNATIONAL CODE COUNCIL®
Copyright © 2019 ICC & NYSDOS. ALL RIGHTS RESERVED. Accessed by Lauren Gualdino (lgualdino@briarcliffmanor.org), (-) Order Number #100880972 on May 08, 2020 07:05 AM (PDT) pursuant to License Agreement with ICC & NYSDOS. No further reproduction, no

100880972

each side of the hoistway door frame on the portion of the frame at right angles to the fire service access elevator lobby. The fire service access elevator symbol shall be designed as shown in Figure 3007.6.5 and shall comply with the following:

1. The fire service access elevator symbol shall be not less than 3 inches (76 mm) in height.
2. The helmet shall contrast with the background, with either a light helmet on a dark background or a dark helmet on a light background.
3. The vertical center line of the fire service access elevator symbol shall be centered on the hoistway door frame. Each symbol shall be not less than 78 inches (1981 mm), and not more than 84 inches (2134 mm) above the finished floor at the threshold.

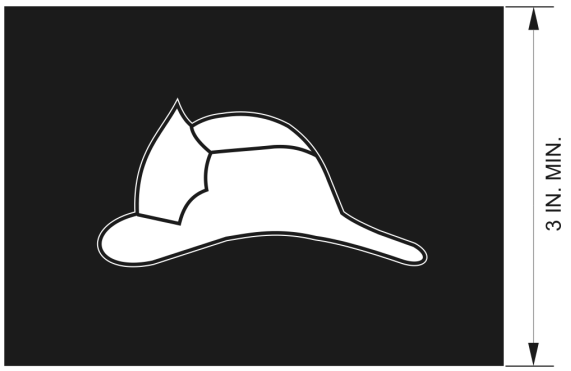

For SI: 1 inch = 25.4 mm.

FIGURE 3007.6.5
FIRE SERVICE ACCESS ELEVATOR SYMBOL

3007.7 Elevator system monitoring. The fire service access elevator shall be continuously monitored at the *fire command center* by a standard emergency service interface system meeting the requirements of NFPA 72.

3007.8 Electrical power. The following features serving each fire service access elevator shall be supplied by both normal power and Type 60/Class 2/Level 1 standby power:

1. Elevator equipment.
2. Elevator hoistway lighting.
3. *Ventilation* and cooling equipment for elevator machine rooms, control rooms, machine spaces and control spaces.
4. Elevator car lighting.

3007.8.1 Protection of wiring or cables. Wires or cables that are located outside of the elevator hoistway and machine room and that provide normal or standby power, control signals, communication with the car, lighting, heating, air conditioning, *ventilation* and fire-detecting systems to fire service access elevators shall be protected using one of the following methods:

1. Cables used for survivability of required critical circuits shall be listed in accordance with UL 2196 and shall have a *fire-resistance rating* of not less than 2 hours.
2. Electrical circuit protective systems shall have a *fire-resistance rating* of not less than 2 hours. Electrical circuit protective systems shall be installed in accordance with their listing requirements.
3. Construction having a *fire-resistance rating* of not less than 2 hours.

Exception: Wiring and cables to control signals are not required to be protected provided that wiring and cables do not serve Phase II emergency in-car operations.

3007.9 Standpipe hose connection. A Class I standpipe hose connection in accordance with Section 905 shall be provided in the *interior exit stairway* and *ramp* having direct access from the enclosed fire service access elevator lobby.

3007.9.1 Access. The *exit* enclosure containing the standpipe shall have access to the floor without passing through the enclosed fire service access elevator lobby.

SECTION 3008
OCCUPANT EVACUATION ELEVATORS

3008.1 General. Elevators used for occupant self-evacuation during fires shall comply with Sections 3008.1 through 3008.10.

3008.1.1 Number of occupant evacuation elevators. The number of elevators available for occupant evacuation shall be determined based on an egress analysis that addresses one of the following scenarios:

1. Full-building evacuation where the analysis demonstrates that the number of elevators provided for evacuation results in an evacuation time less than 1 hour.
2. Evacuation of the five consecutive floors with the highest cumulative occupant load where the analysis demonstrates that the number of elevators provided for evacuation results in an evacuation time less than 15 minutes.

Not less than one elevator in each bank shall be designated for occupant evacuation. Not less than two shall be provided in each occupant evacuation elevator lobby where more than one elevator opens into the lobby. Signage shall be provided to denote which elevators are available for occupant evacuation.

3008.1.2 Additional exit stairway. Where an additional *means of egress* is required in accordance with Section 403.5.2, an additional *exit stairway* shall not be required to be installed in buildings provided with occupant evacuation elevators complying with Section 3008.1.

3008.1.3 Fire safety and evacuation plan. The building shall have an *approved* fire safety and evacuation plan in accordance with the applicable requirements of Section 404 of the *Fire Code of New York State*. The fire safety and evacuation plan shall incorporate specific procedures for the occupants using evacuation elevators.

3008.1.4 Operation. The occupant evacuation elevators shall be used for occupant self-evacuation in accordance with the occupant evacuation operation requirements in

INTERNATIONAL CODE COUNCIL®
Copyright © 2019 ICC & NYSDOS. ALL RIGHTS RESERVED. Accessed by Lauren Gualdino (lgualdino@briarcliffmanor.org), (-) Order Number #100880972 on May 08, 2020 07:05 AM (PDT) pursuant to License Agreement with ICC & NYSDOS. No further reproduction, no

100880972

ASME A17.1/CSA B44 and the building's fire safety and evacuation plan.

3008.2 Automatic sprinkler system. The building shall be equipped throughout with an *approved*, electrically supervised *automatic sprinkler system* in accordance with Section 903.3.1.1, except as otherwise permitted by Section 903.3.1.1.1 and as prohibited by Section 3008.2.1.

3008.2.1 Prohibited locations. Automatic sprinklers shall not be installed in elevator machine rooms, machinery spaces, control rooms, control spaces and elevator hoistways of occupant evacuation elevators.

3008.2.2 Sprinkler system monitoring. The automatic sprinkler system shall have a sprinkler control valve supervisory switch and water-flow-initiating device provided for each floor that is monitored by the building's *fire alarm system*.

3008.3 Water protection. Water from the operation of an automatic sprinkler system outside the enclosed lobby shall be prevented from infiltrating into the hoistway enclosure in accordance with an approved method.

3008.4 Shunt trip. Means for elevator shutdown in accordance with Section 3005.5 shall not be installed on elevator systems used for occupant evacuation elevators.

3008.5 Hoistway enclosure protection. Occupant evacuation elevator hoistways shall be located in *shaft enclosures* complying with Section 713.

3008.5.1 Structural integrity of hoistway enclosures. Occupant evacuation elevator hoistway enclosures shall comply with Sections 403.2.3.1 through 403.2.3.4.

3008.6 Occupant evacuation elevator lobby. Occupant evacuation elevators shall open into an enclosed elevator lobby in accordance with Sections 3008.6.1 through 3008.6.6. Egress is permitted through the elevator lobby in accordance with Item 1 of Section 1016.2.

3008.6.1 Access to interior exit stairway or ramp. The occupant evacuation elevator lobby shall have direct access from the enclosed elevator lobby to an *interior exit stairway* or *ramp*.

Exceptions:

1. Access to an *interior exit stairway* or *ramp* shall be permitted to be through a protected path of travel that has a level of fire protection not less than the elevator lobby enclosure. The protected path shall be separated from the enclosed elevator lobby through an opening protected by a smoke and draft control assembly in accordance Section 716.2.2.1.
2. Elevators that only service an open parking garage and the lobby of the building shall not be required to provide direct access.

3008.6.2 Lobby enclosure. The occupant evacuation elevator lobby shall be enclosed with a *smoke barrier* having a *fire-resistance rating* of not less than 1 hour, except that lobby doorways shall comply with Section 3008.6.3.

Exception: Enclosed occupant evacuation elevator lobbies are not required at the *levels of exit discharge*.

3008.6.3 Lobby doorways. Other than the doors to the hoistway, elevator machine rooms, machinery spaces, control rooms and control spaces within the lobby enclosure smoke barrier, each doorway to an occupant evacuation elevator lobby shall be provided with a $^{3}/_{4}$-hour *fire door assembly* complying with Section 716. The *fire door assembly* shall comply with the smoke and draft control assembly requirements of Section 716.2.2.1.1 and be tested in accordance with UL 1784 without an artificial bottom seal.

3008.6.3.1 Vision panel. A vision panel shall be installed in each *fire door assembly* protecting the lobby doorway. The vision panel shall consist of fire-protection-rated glazing, shall comply with the requirements of Section 716 and shall be located to furnish clear vision of the occupant evacuation elevator lobby.

3008.6.3.2 Door closing. Each *fire door assembly* protecting the lobby doorway shall be automatic-closing upon receipt of any fire alarm signal from the *emergency voice/alarm communication system* serving the building.

3008.6.4 Lobby size. Each occupant evacuation elevator lobby shall have minimum floor area as follows:

1. The occupant evacuation elevator lobby floor area shall accommodate, at 3 square feet (0.28 m^2) per person, not less than 25 percent of the *occupant load* of the floor area served by the lobby.
2. The occupant evacuation elevator lobby floor area shall accommodate one *wheelchair space* of 30 inches by 48 inches (760 mm by 1220 mm) for each 50 persons, or portion thereof, of the *occupant load* of the floor area served by the lobby.

Exception: The size of lobbies serving multiple banks of elevators shall have the minimum floor area *approved* on an individual basis and shall be consistent with the building's fire safety and evacuation plan.

3008.6.5 Signage. An *approved* sign indicating elevators are suitable for occupant self-evacuation shall be posted on all floors adjacent to each elevator call station serving occupant evacuation elevators.

3008.6.6 Two-way communication system. A two-way communication system shall be provided in each occupant evacuation elevator lobby for the purpose of initiating communication with the *fire command center* or an alternate location *approved* by the fire department. The two-way communication system shall be designed and installed in accordance with Sections 1009.8.1 and 1009.8.2.

3008.7 Elevator system monitoring. The occupant evacuation elevators shall be continuously monitored at the *fire command center* or a central control point *approved* by the fire department and arranged to display all of the following information:

1. Floor location of each elevator car.
2. Direction of travel of each elevator car.
3. Status of each elevator car with respect to whether it is occupied.

INTERNATIONAL CODE COUNCIL®
Copyright © 2019 ICC & NYSDOS. ALL RIGHTS RESERVED. Accessed by Lauren Gualdino (lgualdino@briarcliffmanor.org), (-) Order Number #100880972 on May 08, 2020 07:05 AM (PDT) pursuant to License Agreement with ICC & NYSDOS. No further reproduction, no

100880972

4. Status of normal power to the elevator equipment, elevator machinery and electrical apparatus cooling equipment where provided, elevator machine room, control room and control space *ventilation* and cooling equipment.
5. Status of standby or emergency power system that provides backup power to the elevator equipment, elevator machinery and electrical cooling equipment where provided, elevator machine room, control room and control space *ventilation* and cooling equipment.
6. Activation of any fire alarm initiating device in any elevator lobby, elevator machine room, machine space containing a motor controller or electric driving machine, control space, control room or elevator hoistway.

3008.7.1 Elevator recall. The *fire command center* or an alternate location *approved* by the fire department shall be provided with the means to manually initiate a Phase I Emergency Recall of the occupant evacuation elevators in accordance with ASME A17.1/CSA B44.

3008.8 Electrical power. The following features serving each occupant evacuation elevator shall be supplied by both normal power and Type 60/Class 2/Level 1 standby power:

1. Elevator equipment.
2. *Ventilation* and cooling equipment for elevator machine rooms, control rooms, machinery spaces and control spaces.
3. Elevator car lighting.

3008.8.1 Determination of standby power load. Standby power loads shall be based on the determination of the number of occupant evacuation elevators in Section 3008.1.1.

3008.8.2 Protection of wiring or cables. Wires or cables that are located outside of the elevator hoistway, machine room, control room and control space and that provide normal or standby power, control signals, communication with the car, lighting, heating, air conditioning, *ventilation* and fire-detecting systems to occupant evacuation elevators shall be protected using one of the following methods:

1. Cables used for survivability of required critical circuits shall be listed in accordance with UL 2196 and shall have a *fire-resistance rating* of not less than 2 hours.
2. Electrical circuit protective systems shall have a *fire-resistance rating* of not less than 2 hours. Electrical circuit protective systems shall be installed in accordance with their listing requirements.
3. Construction having a *fire-resistance rating* of not less than 2 hours.

Exception: Wiring and cables to control signals are not required to be protected provided that wiring and cables do not serve Phase II emergency in-car operation.

3008.9 Emergency voice/alarm communication system. The building shall be provided with an *emergency voice/alarm communication system*. The *emergency voice/alarm communication system* shall be accessible to the fire department. The system shall be provided in accordance with Section 907.5.2.2.

3008.9.1 Notification appliances. Not fewer than one audible and one visible notification appliance shall be installed within each occupant evacuation elevator lobby.

3008.10 Hazardous material areas. Building areas shall not contain hazardous materials exceeding the maximum allowable quantities per *control area* as addressed in Section 414.2.

INTERNATIONAL CODE COUNCIL®
Copyright © 2019 ICC & NYSDOS. ALL RIGHTS RESERVED. Accessed by Lauren Gualdino (lgualdino@briarcliffmanor.org), (-) Order Number #100880972 on May 08, 2020 07:05 AM (PDT) pursuant to License Agreement with ICC & NYSDOS. No further reproduction, no

100880972

INTERNATIONAL CODE COUNCIL®
Copyright © 2019 ICC & NYSDOS. ALL RIGHTS RESERVED. Accessed by Lauren Gualdino (lgualdino@briarcliffmanor.org), (-) Order Number #100880972 on May 08, 2020 07:05 AM (PDT) pursuant to License Agreement with ICC & NYSDOS. No further reproduction, no

100880972

CHAPTER 31

SPECIAL CONSTRUCTION

SECTION 3101 GENERAL

3101.1 Scope. The provisions of this chapter shall govern special building construction including membrane structures, temporary structures, *pedestrian walkways* and tunnels, automatic *vehicular gates*, *awnings* and *canopies*, *marquees*, signs, towers, antennas, relocatable buildings, swimming pool enclosures and safety devices, and solar energy systems.

SECTION 3102 MEMBRANE STRUCTURES

3102.1 General. The provisions of Sections 3102.1 through 3102.8 shall apply to air-supported, air-inflated, membrane-covered cable, membrane-covered frame and *tensile membrane structures*, collectively known as membrane structures, erected for a period of 180 days or longer. Those erected for a shorter period of time shall comply with the *Fire Code of New York State*. Membrane structures covering water storage facilities, water clarifiers, water treatment plants, sewage treatment plants, greenhouses and similar facilities not used for human occupancy are required to meet only the requirements of Sections 3102.3.1 and 3102.7. Membrane structures erected on a building, balcony, deck or other structure for any period of time shall comply with this section.

3102.2 Tensile membrane structures and air-supported structures. Tensile membrane structures and air-supported structures, including permanent and temporary structures, shall be designed and constructed in accordance with ASCE 55. The provisions in Sections 3102.3 through 3102.6 shall apply.

3102.3 Type of construction. Noncombustible membrane structures shall be classified as Type IIB construction. Noncombustible frame or cable-supported structures covered by an approved membrane in accordance with Section 3102.3.1 shall be classified as Type IIB construction. Heavy timber frame-supported structures covered by an *approved* membrane in accordance with Section 3102.3.1 shall be classified as Type IV construction. Other membrane structures shall be classified as Type V construction.

Exception: Plastic less than 30 feet (9144 mm) above any floor used in greenhouses, where occupancy by the general public is not authorized, and for aquaculture pond covers is not required to meet the fire propagation performance criteria of Test Method 1 or Test Method 2, as appropriate, of NFPA 701.

3102.3.1 Membrane and interior liner material. Membranes and interior liners shall be either noncombustible as set forth in Section 703.5 or meet the fire propagation performance criteria of Test Method 1 or Test Method 2, as appropriate, of NFPA 701 and the manufacturer's test protocol.

Exception: Plastic less than 20 mil (0.5 mm) in thickness used in greenhouses, where occupancy by the general public is not authorized, and for aquaculture pond covers is not required to meet the fire propagation performance criteria of Test Method 1 or Test Method 2, as appropriate, of NFPA 701.

3102.4 Allowable floor areas. The area of a membrane structure shall not exceed the limitations specified in Section 506.

3102.5 Maximum height. Membrane structures shall not exceed one story nor shall such structures exceed the height limitations in feet specified in Section 504.3.

Exception: Noncombustible membrane structures serving as roofs only.

3102.6 Mixed construction. Membrane structures shall be permitted to be utilized as specified in this section as a portion of buildings of other types of construction. Height and area limits shall be as specified for the type of construction and occupancy of the building.

3102.6.1 Noncombustible membrane. A noncombustible membrane shall be permitted for use as the roof or as a skylight of any building or atrium of a building of any type of construction provided that the membrane is not less than 20 feet (6096 mm) above any floor, balcony or gallery.

3102.6.1.1 Membrane. A membrane meeting the fire propagation performance criteria of Test Method 1 or Test Method 2, as appropriate, of NFPA 701 shall be permitted to be used as the roof or as a skylight on buildings of Type IIB, III, IV and V construction, provided that the membrane is not less than 20 feet (6096 mm) above any floor, balcony or gallery.

3102.7 Engineering design. The structure shall be designed and constructed to sustain dead loads; loads due to tension or inflation; live loads including wind, snow or flood and seismic loads and in accordance with Chapter 16.

3102.7.1 Lateral restraint. For membrane-covered frame structures, the membrane shall not be considered to provide lateral restraint in the calculation of the capacities of the frame members.

3102.8 Inflation systems. Air-supported and air-inflated structures shall be provided with primary and auxiliary inflation systems to meet the minimum requirements of Sections 3102.8.1 through 3102.8.3.

3102.8.1 Equipment requirements. The inflation system shall consist of one or more blowers and shall include provisions for automatic control to maintain the required

INTERNATIONAL CODE COUNCIL®
Copyright © 2019 ICC & NYSDOS. ALL RIGHTS RESERVED. Accessed by Lauren Gualdino (lgualdino@briarcliffmanor.org), (-) Order Number #100880972 on May 08, 2020 07:05 AM (PDT) pursuant to License Agreement with ICC & NYSDOS. No further reproduction, no

100880972

inflation pressures. The system shall be so designed as to prevent overpressurization of the system.

3102.8.1.1 Auxiliary inflation system. In addition to the primary inflation system, in buildings larger than 1,500 square feet (140 m^2) in area, an auxiliary inflation system shall be provided with sufficient capacity to maintain the inflation of the structure in case of primary system failure. The auxiliary inflation system shall operate automatically when there is a loss of internal pressure and when the primary blower system becomes inoperative.

3102.8.1.2 Blower equipment. Blower equipment shall meet all of the following requirements:

1. Blowers shall be powered by continuous-rated motors at the maximum power required for any flow condition as required by the structural design.
2. Blowers shall be provided with inlet screens, belt guards and other protective devices as required by the *building official* to provide protection from injury.
3. Blowers shall be housed within a weather-protecting structure.
4. Blowers shall be equipped with backdraft check dampers to minimize air loss when inoperative.
5. Blower inlets shall be located to provide protection from air contamination. The location of inlets shall be *approved*.

3102.8.2 Standby power. Wherever an auxiliary inflation system is required, an *approved* standby power-generating system shall be provided. The system shall be equipped with a suitable means for automatically starting the generator set upon failure of the normal electrical service and for automatic transfer and operation of all of the required electrical functions at full power within 60 seconds of such service failure. Standby power shall be capable of operating independently for not less than 4 hours.

3102.8.3 Support provisions. A system capable of supporting the membrane in the event of deflation shall be provided for in air-supported and air-inflated structures having an *occupant load* of 50 or more or where covering a swimming pool regardless of *occupant load*. The support system shall be capable of maintaining membrane structures used as a roof for Type I construction not less than 20 feet (6096 mm) above floor or seating areas. The support system shall be capable of maintaining other membranes not less than 7 feet (2134 mm) above the floor, seating area or surface of the water.

SECTION 3103
TEMPORARY STRUCTURES

3103.1 General. The provisions of Sections 3103.1 through 3103.4 shall apply to structures erected for a period of less than 180 days. Tents, umbrella structures and other membrane structures erected for a period of less than 180 days shall comply with the *Fire Code of New York State*. Those erected for a longer period of time shall comply with applicable sections of this code.

3103.1.1 Conformance. Temporary structures and uses shall conform to the structural strength, fire safety, *means of egress*, accessibility, light, ventilation and sanitary requirements of this code as necessary to ensure public health, safety and general welfare.

[NY]3103.1.2 Approval required. Temporary structures that cover an area greater than 120 square feet (11.16 m^2), including connecting areas or spaces with a common *means of egress* or entrance that are used or intended to be used for the gathering together of 10 or more persons, shall not be erected, operated or maintained for any purpose without obtaining *approval* from the *building official*.

[NY] 3103.2 Construction documents. *Construction documents* shall be submitted for each installation of a temporary structure. The *construction documents* shall include a site plan indicating the location of the temporary structure and information delineating the *means of egress* and the *occupant load*.

3103.3 Location. Temporary structures shall be located in accordance with the requirements of Table 602 based on the *fire-resistance rating* of the *exterior walls* for the proposed type of construction.

3103.4 Means of egress. Temporary structures shall conform to the *means of egress* requirements of Chapter 10 and shall have an *exit access* travel distance of 100 feet (30 480 mm) or less.

SECTION 3104
PEDESTRIAN WALKWAYS AND TUNNELS

3104.1 General. This section shall apply to connections between buildings such as *pedestrian walkways* or tunnels, located at, above or below grade level, that are used as a means of travel by persons. The *pedestrian walkway* shall not contribute to the *building area* or the number of *stories* or height of connected buildings.

3104.1.1 Application. Pedestrian walkways shall be designed and constructed in accordance with Sections 3104.2 through 3104.9. Tunnels shall be designed and constructed in accordance with Sections 3104.2 and 3104.10.

3104.2 Separate structures. Buildings connected by *pedestrian walkways* or tunnels shall be considered to be separate structures.

Exceptions:

1. Buildings that are on the same lot and considered as portions of a single building in accordance with Section 503.1.2.
2. For purposes of calculating the number of Type B units required by Chapter 11, structurally connected buildings and buildings with multiple wings shall be considered to be one structure.

INTERNATIONAL CODE COUNCIL®
Copyright © 2019 ICC & NYSDOS. ALL RIGHTS RESERVED. Accessed by Lauren Gualdino (lgualdino@briarcliffmanor.org), (-) Order Number #100880972 on May 08, 2020 07:05 AM (PDT) pursuant to License Agreement with ICC & NYSDOS. No further reproduction, no

100880972

3104.3 Construction. The *pedestrian walkway* shall be of noncombustible construction.

Exceptions:

1. Combustible construction shall be permitted where connected buildings are of combustible construction.
2. *Fire-retardant-treated wood*, in accordance with Section 603.1, Item 1.3, shall be permitted for the roof construction of the *pedestrian walkway* where connected buildings are not less than Type I or II construction.

3104.4 Contents. Only materials and decorations *approved* by the *building official* shall be located in the *pedestrian walkway*.

3104.5 Connections of pedestrian walkways to buildings. The connection of a *pedestrian walkway* to a building shall comply with Section 3104.5.1, 3104.5.2, 3104.5.3 or 3104.5.4.

Exception: Buildings that are on the same lot and considered as portions of a single building in accordance with Section 503.1.2.

3104.5.1 Fire barriers. *Pedestrian walkways* shall be separated from the interior of the building by not less than 2-hour *fire barriers* constructed in accordance with Section 707 and Sections 3104.5.1.1 through 3104.5.1.3.

3104.5.1.1 Exterior walls. Exterior walls of buildings connected to *pedestrian walkways* shall be 2-hour fire-resistance rated. This protection shall extend not less than 10 feet (3048 mm) in every direction surrounding the perimeter of the pedestrian walkway.

3104.5.1.2 Openings in exterior walls of connected buildings. Openings in exterior walls required to be fire-resistance rated in accordance with Section 3104.5.1.1 shall be equipped with opening protectives providing a not less than $^{3}/_{4}$-hour *fire protection rating* in accordance with Section 716.

3104.5.1.3 Supporting construction. The fire barrier shall be supported by construction as required by Section 707.5.1.

3104.5.2 Alternative separation. The wall separating the *pedestrian walkway* and the building shall comply with Section 3104.5.2.1 or 3104.5.2.2 where:

1. The distance between the connected buildings is more than 10 feet (3048 mm).
2. The *pedestrian walkway* and connected buildings are equipped throughout with an *automatic sprinkler system* in accordance with Section 903.3.1.1, and the roof of the walkway is not more than 55 feet (16 764 mm) above grade connecting to the fifth, or lower, story above grade plane, of each building.

   Exception: Open parking garages need not be equipped with an automatic sprinkler system.

3104.5.2.1 Passage of smoke. The wall shall be capable of resisting the passage of smoke.

3104.5.2.2 Glass. The wall shall be constructed of a tempered, wired or laminated glass and doors separating the interior of the building from the pedestrian walkway. The glass shall be protected by an *automatic sprinkler system* in accordance with Section 903.3.1.1 that, when actuated, shall completely wet the entire surface of interior sides of the wall or glass. Obstructions shall not be installed between the sprinkler heads and the wall or glass. The glass shall be in a gasketed frame and installed in such a manner that the framing system will deflect without breaking (loading) the glass before the sprinkler operates.

3104.5.3 Open sides on walkway. Where the distance between the connected buildings is more than 10 feet (3048 mm), the walls at the intersection of the *pedestrian walkway* and each building need not be fire-resistance rated provided that both sidewalls of the pedestrian walkway are not less than 50 percent open with the open area uniformly distributed to prevent the accumulation of smoke and *toxic* gases. The roof of the walkway shall be located not more than 40 feet (12 160 mm) above grade plane, and the walkway shall only be permitted to connect to the third or lower story of each building.

Exception: Where the *pedestrian walkway* is protected with a sprinkler system in accordance with Section 903.3.1.1, the roof of the walkway shall be located not more than 55 feet (16 764 mm) above grade plane and the walkway shall only be permitted to connect to the fifth or lower story of each building.

3104.5.4 Exterior walls greater than 2 hours. Where *exterior walls* of connected buildings are required by Section 705 to have a *fire-resistance rating* greater than 2 hours, the walls at the intersection of the pedestrian walkway and each building need not be fire-resistance rated provided:

1. The *pedestrian walkway* is equipped throughout with an *automatic sprinkler system* installed in accordance with Section 903.3.1.1.
2. The roof of the walkway is not located more than 55 feet (16 764 mm) above grade plane and the walkway connects to the fifth, or lower, story above grade plane of each building.

3104.6 Public way. *Pedestrian walkways* over a *public way* shall comply with Chapter 32.

3104.7 Egress. Access shall be provided at all times to a *pedestrian walkway* that serves as a required *exit*.

3104.8 Width. The unobstructed width of *pedestrian walkways* shall be not less than 36 inches (914 mm). The total width shall be not greater than 30 feet (9144 mm).

3104.9 Exit access travel. The length of *exit access* travel shall be 200 feet (60 960 mm) or less.

Exceptions:

1. *Exit access* travel distance on a *pedestrian walkway* equipped throughout with an *automatic sprinkler system* in accordance with Section 903.3.1.1 shall be 250 feet (76 200 mm) or less.
2. *Exit access* travel distance on a *pedestrian walkway* constructed with both sides not less than 50 percent open shall be 300 feet (91 440 mm) or less.

INTERNATIONAL CODE COUNCIL®
Copyright © 2019 ICC & NYSDOS. ALL RIGHTS RESERVED. Accessed by Lauren Gualdino (lgualdino@briarcliffmanor.org), (-) Order Number #100880972 on May 08, 2020 07:05 AM (PDT) pursuant to License Agreement with ICC & NYSDOS. No further reproduction, no

100880972

3. *Exit access* travel distance on a *pedestrian walkway* constructed with both sides not less than 50 percent open, and equipped throughout with an *automatic sprinkler system* in accordance with Section 903.3.1.1, shall be 400 feet (122 m) or less.

3104.10 Tunneled walkway. Separation between the tunneled walkway and the building to which it is connected shall be not less than 2-hour fire-resistant construction and openings therein shall be protected in accordance with Section 716.

SECTION 3105
AWNINGS AND CANOPIES

3105.1 General. *Awnings* and *canopies* shall comply with the requirements of Sections 3105.2 and 3105.3 and other applicable sections of this code.

3105.2 Design and construction. *Awnings* and *canopies* shall be designed and constructed to withstand wind or other lateral loads and live loads as required by Chapter 16 with due allowance for shape, open construction and similar features that relieve the pressures or loads. Structural members shall be protected to prevent deterioration. *Awnings* shall have frames of noncombustible material, *fire-retardant-treated wood*, heavy timber complying with Section 2304.11, or 1-hour construction with combustible or noncombustible covers and shall be either fixed, retractable, folding or collapsible.

3105.3 Awnings and canopy materials. Awnings and *canopies* shall be provided with an *approved* covering that complies with one of the following:

1. The fire propagation performance criteria of Test Method 1 or Test Method 2, as appropriate, of NFPA 701.
2. Has a flame spread index not greater than 25 when tested in accordance with ASTM E84 or UL 723.
3. Meets all of the following criteria when tested in accordance with NFPA 286:
   - 3.1. During the 40 kW exposure, flames shall not spread to the ceiling.
   - 3.2. Flashover, as defined in NFPA 286, shall not occur.
   - 3.3. The flame shall not spread to the outer extremity of the sample on any wall or ceiling.
   - 3.4. The peak heat release rate throughout the test shall not exceed 800 kW.

Exception: The fire propagation performance and flame spread index requirements shall not apply to awnings installed on detached one- and two-family dwellings.

SECTION 3106
MARQUEES

3106.1 General. Marquees shall comply with Sections 3106.2 through 3106.5 and other applicable sections of this code.

3106.2 Thickness. The height or thickness of a marquee measured vertically from its lowest to its highest point shall be not greater than 3 feet (914 mm) where the marquee projects more than two-thirds of the distance from the *lot line* to the curb line, and shall be not greater than 9 feet (2743 mm) where the marquee is less than two-thirds of the distance from the lot line to the curb line.

3106.3 Roof construction. Where the roof or any part thereof is a skylight, the skylight shall comply with the requirements of Chapter 24. Every roof and skylight of a marquee shall be sloped to downspouts that shall conduct any drainage from the marquee in such a manner so as not to spill over the sidewalk.

3106.4 Location prohibited. Every marquee shall be so located as not to interfere with the operation of any exterior standpipe, and such that the marquee does not obstruct the clear passage of *stairways* or *exit discharge* from the building or the installation or maintenance of street lighting.

3106.5 Construction. A marquee shall be supported entirely from the building and constructed of noncombustible materials. Marquees shall be designed as required in Chapter 16. Structural members shall be protected to prevent deterioration.

SECTION 3107
SIGNS

3107.1 General. Signs shall be designed, constructed and maintained in accordance with this code.

SECTION 3108
TELECOMMUNICATION AND BROADCAST TOWERS

[BS] 3108.1 General. Towers shall be designed and constructed in accordance with the provisions of TIA-222. Towers shall be designed for seismic loads; exceptions related to seismic design listed in Section 2.7.3 of TIA-222 shall not apply. In Section 2.6.6.2 of TIA 222, the horizontal extent of Topographic Category 2, escarpments, shall be 16 times the height of the escarpment.

Exception: Single free-standing poles used to support antennas not greater than 75 feet (22 860 mm), measured from the top of the pole to grade, shall not be required to be noncombustible.

[BS] 3108.2 Location and access. Towers shall be located such that guy wires and other accessories shall not cross or encroach on any street or other public space, or over above-ground electric utility lines, or encroach on any privately owned property without the written consent of the owner of the encroached-upon property, space or above-ground electric utility lines. Towers shall be equipped with climbing and working facilities in compliance with TIA-222. Access to the tower sites shall be limited as required by applicable OSHA, FCC and EPA regulations.

SECTION 3109
SWIMMING POOLS, SPAS AND HOT TUBS

[NY] 3109.1 General. The provisions of this section shall control the design and construction as well as substantial modification of swimming pools, spas and hot tubs installed

INTERNATIONAL CODE COUNCIL®
Copyright © 2019 ICC & NYSDOS. ALL RIGHTS RESERVED. Accessed by Lauren Gualdino (lgualdino@briarcliffmanor.org), (-) Order Number #100880972 on May 08, 2020 07:05 AM (PDT) pursuant to License Agreement with ICC & NYSDOS. No further reproduction, no

100880972

in or on the lot of buildings regulated under the *Building Code of New York State*.

Exceptions:

1. Pools located in or on the lot of detached one- and two-family dwellings classified as Group R-3 and constructed under the *Building Code of New York State* may be regulated by the *Residential Code of New York State*.
2. Swimming pools which contain, are designated to contain, or are capable of containing water less than 24 inches (610 mm) deep at any point shall be regulated by Section 3109.1.1.

[NY] 3109.1.1 Compliance with other codes. Swimming pools, wading pools, spas and hot tubs shall comply with this section and other applicable sections of this code. The requirements of this section and of the other applicable sections of this code shall be in addition to, and not in replacement of or substitution for, the requirements of other applicable federal, state and local laws and regulations, including, but not necessarily limited to:

1. The requirements of Subpart 6-1 (Swimming pools) of Title 10 of the Official Compilation of Codes, Rules and Regulations of the State of New York (NYCRR), where applicable (DOH 10 NYCRR 6-1).
2. The requirements of Section 8003 (Federal swimming pool and spa drain cover standard) of Title 15 of the United States Code (CPSC 15 USC 8003), where applicable.

[NY] 3109.2 Definitions. For the purpose of these requirements, the terms used shall be defined as follows and as set forth in Chapter 2.

BARRIER, PERMANENT. A fence, the walls of a permanent structure, any other structure or combination thereof which completely surrounds the *swimming pool* and sufficiently obstructs access to the *swimming pool*.

BARRIER, TEMPORARY. An approved temporary fence, permanent fence, the walls of a permanent structure, any other structure, or any combination thereof that sufficiently prevents access to the swimming pool by any person not engaged in the installation or construction of the *swimming pool* during its installation or construction.

HOT TUB. See "Spa."

SPA. A portable or nonportable structure intended for recreational or therapeutic bathing, in which all controls, water-heating and water-circulating equipment are an integral part of the product. Spas are shallow in depth and are not designed for swimming or diving.

SUBSTANTIAL DAMAGE. For the purpose of determining compliance with the pool alarm provisions of this section, damage of any origin sustained by a *swimming pool* whereby the cost of restoring the *swimming pool* to its before-damaged condition would equal or exceed 50 percent of the market value of the *swimming pool* before the damage occurred.

SUBSTANTIAL MODIFICATION. For the purpose of determining compliance with the pool alarm provisions of this section, any repair, alteration, addition or improvement of a *swimming pool*, the cost of which equals or exceeds 50 percent of the market value of the *swimming pool* before the improvement or repair is started. If a *swimming pool* has sustained *substantial damage*, any repairs are considered substantial modification regardless of the actual repair work performed.

SUCTION OUTLET. A fitting, fitting assembly, cover/grate, sump, and related components that provide a localized low-pressure area for the transfer of water from a *swimming pool*.

SWIMMING POOL, INDOOR. A *swimming pool* which is totally contained within a structure and surrounded on all four sides by the walls of the enclosing structure.

SWIMMING POOL, OUTDOOR. Any *swimming pool* which is not an indoor pool.

[NY] 3109.3 Barriers, application. The provisions of this section shall control the design of barriers for swimming pools, spas and hot tubs. These design controls are intended to provide protection against potential drowning and near-drowning by sufficiently preventing access to swimming pools, spas and hot tubs by persons outside the property, persons within buildings on the property, and persons in other parts of the property not contained within the pool enclosure.

[NY] 3109.3.1 Temporary barriers. An outdoor swimming pool shall be surrounded by a temporary barrier during installation or construction that shall remain in place until a permanent barrier in compliance with Section 3109.3.2 is provided.

Exceptions:

1. Above-ground or on-ground pools where the pool structure constitutes a barrier in compliance with Section 3109.3.2.10.
2. Spas or hot tubs with a safety cover which complies with ASTM F1346, provided that such safety cover is in place during the period of installation or construction of such hot tub or spa. The temporary removal of a safety cover as required to facilitate the installation or construction of a hot tub or spa during periods when at least one person engaged in the installation or construction is present is permitted.

[NY] 3109.3.1.1 Height. The top of the temporary barrier shall be at least 48 inches (1219 mm) above grade measured on the side of the barrier which faces away from the swimming pool.

[NY] 3109.3.1.2 Replacement by a permanent barrier. A temporary barrier shall be replaced by a complying permanent barrier within either of the following periods.

1. Within 90 days of the date of issuance of the building permit for the installation or construction of the swimming pool.

INTERNATIONAL CODE COUNCIL®
Copyright © 2019 ICC & NYSDOS. ALL RIGHTS RESERVED. Accessed by Lauren Gualdino (lgualdino@briarcliffmanor.org), (-) Order Number #100880972 on May 08, 2020 07:05 AM (PDT) pursuant to License Agreement with ICC & NYSDOS. No further reproduction, no

100880972

2. Within 90 days of the date of commencement of the installation or construction of the swimming pool.

[NY] 3109.3.1.3 Replacement extension. Subject to the approval of the *building official*, the time period for completion of the permanent barrier may be extended for good cause, including, but not limited to, adverse weather conditions delaying construction.

[NY] 3109.3.2 Permanent barriers. Swimming pools shall be completely enclosed by a permanent barrier complying with Sections 3109.3.2.1 through 3109.3.2.6.

[NY] 3109.3.2.1 Barrier height and clearances. The top of the barrier shall be not less than 48 inches (1219 mm) above grade measured on the side of the barrier that faces away from the swimming pool. The vertical clearance between grade and the bottom of the barrier shall be not greater than 2 inches (51 mm) measured on the side of the barrier that faces away from the swimming pool. Where the top of the pool structure is above grade, the barrier may be at ground level, or mounted on top of the pool structure. Where the barrier is mounted on top of the pool structure, the barrier shall comply with Sections 3109.3.2.2 and 3109.3.2.3.

[NY] 3109.3.2.2 Solid barrier surfaces. Solid barriers which do not have openings shall not contain indentations or protrusions except for normal construction tolerances and tooled masonry joints.

[NY] 3109.3.2.3 Closely spaced horizontal members. Where the barrier is composed of horizontal and vertical members and the distance between the tops of the horizontal members is less than 45 inches (1143 mm), the horizontal members shall be located on the swimming pool side of the fence. Spacing between vertical members shall be not greater than 1.75 inches (44 mm) in width. Where there are decorative cutouts within vertical members, spacing within the cutouts shall be not greater than 1.75 inches (44 mm) in width.

[NY] 3109.3.2.4 Widely spaced horizontal members. Where the barrier is composed of horizontal and vertical members and the distance between the tops of the horizontal members is 45 inches (1143 mm) or more, spacing between vertical members shall be not greater than 4 inches (102 mm). Where there are decorative cutouts within vertical members, spacing within the cutouts shall be not greater than 1.75 inches (44 mm) in width.

[NY] 3109.3.2.5 Chain link dimensions. Mesh size for chain link fences shall be not greater than a 2.25-inch (57 mm) square, unless the fence is provided with vertical slats fastened at the top or the bottom that reduce the openings to not more than 1.75 inches (44 mm).

[NY] 3109.3.2.6 Diagonal members. Where the barrier is composed of diagonal members, the maximum opening formed by the diagonal members shall be not greater than 1.75 inches (44 mm).

[NY] 3109.3.2.7 Gates. Gates shall comply with the requirements of Sections 3109.3.2.1 through 3109.3.2.6 and with the following requirements:

[NY] 3109.3.2.7.1 Self-closing and opening configuration. All gates shall be self-closing. In addition, if the gate is a pedestrian access gate, the gate shall open outward, away from the pool.

[NY] 3109.3.2.7.2 Latching. All gates shall be self-latching, with the latch handle located within the enclosure (i.e., on the pool side of the enclosure) and at least 40 inches (1016 mm) above grade. In addition, if the latch handle is located less than 54 inches (1372 mm) from grade, the latch handle shall be located at least 3 inches (76 mm) below the top of the gate, and neither the gate nor barrier shall have any opening greater than 0.5 inch (12.7 mm) within 18 inches (457 mm) of the latch handle.

[NY] 3109.3.2.7.3 Locking. All gates shall be securely locked with a key, combination or other child-proof lock sufficient to prevent access to the swimming pool through such gate when the swimming pool is not in use or supervised.

[NY] 3109.3.2.8 Building wall as a barrier. A wall or walls of a building may serve as part of the barrier, provided that the wall or walls meet the applicable barrier requirements of Sections 3109.3.2.1 through 3109.3.2.6, and one of the following conditions shall be met:

1. Doors and windows. All of the following must be met.
   1.1. Doors with direct access to the pool through that wall shall be equipped with an alarm that produces an audible warning when the door or its screen, if present, are opened. The alarm shall be listed and labeled in accordance with UL 2017.
   1.2. Operable windows in the wall or walls used as a barrier shall have a latching device located not less than 48 inches (1219 mm) above the floor. Openings in operable windows shall not allow a 4-inch-diameter (102 mm) sphere to pass through the opening when the window is in its largest opened position.
   1.3. Where the building is wholly contained within the pool barrier or enclosure, alarms shall be provided at every door with direct access to the pool.
2. Other approved means of protection, such as self-closing with self-latching devices, so long as the degree of protection afforded is not less than the protection afforded by Item 1 described above.

[NY] 3109.3.2.8.1 Alarm deactivation switch location. Where an alarm is provided, the deactivation switch shall be located 54 inches (1372 mm) or more above the threshold of the door. In locations required to be accessible, the deactivation switch shall be located 48 inches (1219 mm) above the threshold of the door.

INTERNATIONAL CODE COUNCIL®
Copyright © 2019 ICC & NYSDOS. ALL RIGHTS RESERVED. Accessed by Lauren Gualdino (lgualdino@briarcliffmanor.org), (-) Order Number #100880972 on May 08, 2020 07:05 AM (PDT) pursuant to License Agreement with ICC & NYSDOS. No further reproduction, no

100880972

[NY] 3109.3.2.8.2 Multiple dwelling wall as a barrier. A wall or walls of a multiple dwelling may serve as part of the barrier, provided there is no direct access from the dwelling to the pool.

[NY] 3109.3.2.9 Pool structure as a barrier. Where an above-ground pool structure is used as a barrier or where the barrier is mounted on top of the pool structure, the pool structure shall be capable of withstanding the structural loads imposed and meet the applicable barrier requirements of Sections 3109.3.2.1 through 3109.3.2.8. Where the means of access is a ladder or steps, one of the following conditions shall be met:

1. The ladder or steps shall be capable of being secured, locked or removed to prevent access. When the ladder or steps are secured, locked or removed, any opening created shall not allow the passage of a 4-inch-diameter (102 mm) sphere.
2. The ladder or steps shall be surrounded by a barrier that meets the requirements of Sections 3109.3.2.1 through 3109.3.2.8.

[NY] 3109.3.3 Indoor swimming pools. Walls surrounding indoor swimming pools shall be required to comply with Section 3109.3.2.8.

[NY] 3109.3.4 Prohibited locations. Barriers shall be located so as to prohibit permanent structures, equipment or similar objects from being used to climb the barriers.

[NY] 3109.4 Entrapment avoidance. Suction outlets shall be designed and installed in accordance with the requirements of CPSC 15 USC 8003 and ANSI/APSP/ICC 7, where applicable.

[NY] 3109.5 Swimming pool and spa alarms, applicability. A swimming pool or spa installed, constructed or substantially modified after December 14, 2006, shall be equipped with an approved pool alarm. Pool alarms shall comply with ASTM F2208 (Standard Specification for Pool Alarms) and shall be installed, used and maintained in accordance with the manufacturer's instructions and this section.

Exceptions:

1. A hot tub or spa equipped with a safety cover which complies with ASTM F1346.
2. A swimming pool (other than a hot tub or spa) equipped with an automatic power safety cover which complies with ASTM F1346.

[NY] 3109.5.1 Multiple alarms. A pool alarm must be capable of detecting entry into the water at any point on the surface of the swimming pool. If necessary to provide detection capability at every point on the surface of the swimming pool, more than one pool alarm shall be provided.

[NY] 3109.5.2 Alarm activation. Pool alarms shall activate upon detecting entry into the water and shall sound poolside and inside the building where it is monitored.

[NY] 3109.5.3 Prohibited alarms. The use of personal immersion alarms shall not be construed as compliance with this section.

SECTION 3110
AUTOMATIC VEHICULAR GATES

3110.1 General. *Automatic vehicular gates* shall comply with the requirements of Sections 3110.2 and 3110.3 and other applicable sections of this code.

3110.2 Vehicular gates intended for automation. *Vehicular gates* intended for automation shall be designed, constructed and installed to comply with the requirements of ASTM F2200.

3110.3 Vehicular gate openers. *Vehicular gate* openers, where provided, shall be *listed* in accordance with UL 325.

SECTION 3111
SOLAR ENERGY SYSTEMS

3111.1 General. Solar energy systems shall comply with the requirements of this section.

3111.1.1 Wind resistance. Rooftop-mounted photovoltaic panels and modules and solar thermal collectors shall be designed in accordance with Section 1609.

3111.1.2 Roof live load. Roof structures that provide support for solar energy systems shall be designed in accordance with Section 1607.13.5.

3111.2 Solar thermal systems. Solar thermal systems shall be designed and installed in accordance with Section 2606.12, the *Plumbing Code of New York State,* the *Mechanical Code of New York State* and the *Fire Code of New York State.*

3111.2.1 Equipment. Solar thermal systems and components shall be *listed* and *labeled* in accordance with ICC 900/SRCC 300 and ICC 901/SRCC 100.

3111.3 Photovoltaic solar energy systems. Photovoltaic solar energy systems shall be designed and installed in accordance with this section, the *Fire Code of New York State,* NFPA 70 and the manufacturer's installation instructions.

3111.3.1 Equipment. Photovoltaic panels and modules shall be *listed* and *labeled* in accordance with UL 1703. Inverters shall be *listed* and *labeled* in accordance with UL 1741. Systems connected to the utility grid shall use inverters *listed* for utility interaction.

3111.3.2 Fire classification. Rooftop-mounted photovoltaic systems shall have a fire classification in accordance with Section 1505.9. Building-integrated photovoltaic systems shall have a fire classification in accordance with Section 1505.8.

3111.3.3 Building-integrated photovoltaic systems. Building-integrated photovoltaic systems that serve as roof coverings shall be designed and installed in accordance with Section 1507.18.

3111.3.4 Access and pathways. Roof access, pathways and spacing requirements shall be provided in accordance with Section 1204 of the *Fire Code of New York State*.

3111.3.5 Ground-mounted photovoltaic systems. Ground-mounted photovoltaic systems shall be designed and installed in accordance with Chapter 16 and the *Fire Code of New York State.*

INTERNATIONAL CODE COUNCIL®
Copyright © 2019 ICC & NYSDOS. ALL RIGHTS RESERVED. Accessed by Lauren Gualdino (lgualdino@briarcliffmanor.org), (-) Order Number #100880972 on May 08, 2020 07:05 AM (PDT) pursuant to License Agreement with ICC & NYSDOS. No further reproduction, no

100880972

3111.3.5.1 Fire separation distances. Ground-mounted photovoltaic systems shall be subject to the fire separation distance requirements determined by the local jurisdiction.

SECTION 3112
GREENHOUSES

3112.1 General. The provisions of this section shall apply to greenhouses that are designed and used for the cultivation, maintenance, or protection of plants.

3112.2 Accessibility. *Greenhouses* shall be accessible in accordance with Chapter 11.

3112.3 Structural design. *Greenhouses* shall comply with the structural design requirements for *greenhouses* in Chapter 16.

3112.4 Glass and glazing. Glass and glazing used in greenhouses shall comply with Section 2405.

3112.5 Light-transmitting plastics. Light-transmitting plastics shall be permitted in lieu of plain glass in *greenhouses* and shall comply with Section 2606.

3112.6 Membrane structures. *Greenhouses* that are membrane structures shall comply with Section 3102.

3112.6.1 Plastic film. Plastic films used in *greenhouses* shall comply with Section 3102.3.

SECTION 3113
RELOCATABLE BUILDINGS

3113.1 General. The provisions of this section shall apply to relocatable buildings. Relocatable buildings manufactured after the effective date of this code shall comply with the applicable provisions of this code.

Exception: This section shall not apply to manufactured housing used as dwellings.

3113.1.1 Compliance. A newly constructed relocatable building shall comply with the requirements of this code for new construction. An existing relocatable building that is undergoing alteration, addition, change of occupancy or relocation shall comply with Chapter 14 of the *Existing Building Code of New York State.*

3113.2 Supplemental information. Supplemental information specific to a relocatable building shall be submitted to the authority having jurisdiction. It shall, as a minimum, include the following in addition to the information required by Section 105:

1. Manufacturer's name and address.
2. Date of manufacture.
3. Serial number of module.
4. Manufacturer's design drawings.
5. Type of construction in accordance with Section 602.
6. Design loads including: roof live load, roof snow load, floor live load, wind load and seismic site class, use group and design category.
7. Additional building planning and structural design data.
8. Site-built structure or appurtenance attached to the relocatable building.

3113.3 Manufacturer's data plate. Each relocatable module shall have a data plate that is permanently attached on or adjacent to the electrical panel, and shall include the following information:

1. Occupancy group.
2. Manufacturer's name and address.
3. Date of manufacture.
4. Serial number of module.
5. Design roof live load, design floor live load, snow load, wind and seismic design.
6. *Approved* quality assurance agency or *approved* inspection agency.
7. Codes and standards of construction.
8. Envelope thermal resistance values.
9. Electrical service size.
10. Fuel-burning equipment and size.
11. Special limitations if any.

[NY] 3113.4 Inspection agencies. The building official is authorized to accept reports of inspections conducted by *approved* inspection agencies during off-site construction of the relocatable building, and to satisfy the applicable requirements of Section 105.

INTERNATIONAL CODE COUNCIL®
Copyright © 2019 ICC & NYSDOS. ALL RIGHTS RESERVED. Accessed by Lauren Gualdino (lgualdino@briarcliffmanor.org), (-) Order Number #100880972 on May 08, 2020 07:05 AM (PDT) pursuant to License Agreement with ICC & NYSDOS. No further reproduction, no

100880972

CHAPTER 32

ENCROACHMENTS INTO THE PUBLIC RIGHT-OF-WAY

SECTION 3201
GENERAL

3201.1 Scope. The provisions of this chapter shall govern the encroachment of structures into the public right-of-way.

3201.2 Measurement. The projection of any structure or portion thereof shall be the distance measured horizontally from the *lot line* to the outermost point of the projection.

3201.3 Other laws. The provisions of this chapter shall not be construed to permit the violation of other laws or ordinances regulating the use and occupancy of public property.

3201.4 Drainage. Drainage water collected from a roof, *awning*, canopy or marquee, and condensate from mechanical equipment shall not flow over a public walking surface.

SECTION 3202
ENCROACHMENTS

3202.1 Encroachments below grade. Encroachments below grade shall comply with Sections 3202.1.1 through 3202.1.3.

3202.1.1 Structural support. A part of a building erected below grade that is necessary for structural support of the building or structure shall not project beyond the *lot lines*, except that the footings of street walls or their supports that are located not less than 8 feet (2438 mm) below grade shall not project more than 12 inches (305 mm) beyond the street *lot line.*

3202.1.2 Vaults and other enclosed spaces. The construction and utilization of vaults and other enclosed spaces below grade shall be subject to the terms and conditions of the applicable governing authority.

3202.1.3 Areaways. Areaways shall be protected by grates, *guards* or other *approved* means.

3202.2 Encroachments above grade and below 8 feet in height. Encroachments into the public right-of-way above grade and below 8 feet (2438 mm) in height shall be prohibited except as provided for in Sections 3202.2.1 through 3202.2.3. Doors and windows shall not open or project into the public right-of-way.

3202.2.1 Steps. Steps shall not project more than 12 inches (305 mm) and shall be guarded by *approved* devices not less than 3 feet (914 mm) in height, or shall be located between columns or pilasters.

3202.2.2 Architectural features. Columns or pilasters, including bases and moldings, shall not project more than 12 inches (305 mm). Belt courses, lintels, sills, architraves, pediments and similar architectural features shall not project more than 4 inches (102 mm).

3202.2.3 Awnings. The vertical clearance from the public right-of-way to the lowest part of any *awning*, including valances, shall be not less than 7 feet (2134 mm).

3202.3 Encroachments 8 feet or more above grade. Encroachments 8 feet (2438 mm) or more above grade shall comply with Sections 3202.3.1 through 3202.3.4.

3202.3.1 Awnings, canopies, marquees and signs. *Awnings*, canopies, marquees and signs shall be constructed so as to support applicable loads as specified in Chapter 16. *Awnings*, canopies, marquees and signs with less than 15 feet (4572 mm) of clearance above the sidewalk shall not extend into or occupy more than two-thirds the width of the sidewalk measured from the building. Stanchions or columns that support *awnings*, canopies, marquees and signs shall be located not less than 2 feet (610 mm) in from the curb line.

3202.3.2 Windows, balconies, architectural features and mechanical equipment. Where the vertical clearance above grade to projecting windows, balconies, architectural features or mechanical equipment is more than 8 feet (2438 mm), 1 inch (25 mm) of encroachment is permitted for each additional 1 inch (25 mm) of clearance above 8 feet (2438 mm), but the maximum encroachment shall be 4 feet (1219 mm).

3202.3.3 Encroachments 15 feet or more above grade. Encroachments 15 feet (4572 mm) or more above grade shall not be limited.

3202.3.4 Pedestrian walkways. The installation of a pedestrian walkway over a public right-of-way shall be subject to the approval of the applicable governing authority. The vertical clearance from the public right-of-way to the lowest part of a *pedestrian walkway* shall be not less than 15 feet (4572 mm).

3202.4 Temporary encroachments. Where allowed by the applicable governing authority, vestibules and storm enclosures shall not be erected for a period of time exceeding 7 months in any 1 year and shall not encroach more than 3 feet (914 mm) nor more than one-fourth of the width of the sidewalk beyond the street *lot line*. Temporary entrance *awnings* shall be erected with a clearance of not less than 7 feet (2134 mm) to the lowest portion of the hood or *awning* where supported on removable steel or other *approved* noncombustible support.

INTERNATIONAL CODE COUNCIL®
Copyright © 2019 ICC & NYSDOS. ALL RIGHTS RESERVED. Accessed by Lauren Gualdino (lgualdino@briarcliffmanor.org), (-) Order Number #100880972 on May 08, 2020 07:05 AM (PDT) pursuant to License Agreement with ICC & NYSDOS. No further reproduction, no

100880972

INTERNATIONAL CODE COUNCIL®
Copyright © 2019 ICC & NYSDOS. ALL RIGHTS RESERVED. Accessed by Lauren Gualdino (lgualdino@briarcliffmanor.org), (-) Order Number #100880972 on May 08, 2020 07:05 AM (PDT) pursuant to License Agreement with ICC & NYSDOS. No further reproduction, no

100880972

CHAPTER 33

SAFEGUARDS DURING CONSTRUCTION

SECTION 3301
GENERAL

3301.1 Scope. The provisions of this chapter shall govern safety during construction and the protection of adjacent public and private properties.

3301.2 Storage and placement. Construction equipment and materials shall be stored and placed so as not to endanger the public, the workers or adjoining property for the duration of the construction project.

SECTION 3302
CONSTRUCTION SAFEGUARDS

3302.1 Alterations, repairs and additions. Required *exits*, existing structural elements, fire protection devices and sanitary safeguards shall be maintained at all times during *alterations*, *repairs* or *additions* to any building or structure.

Exceptions:

1. Where such required elements or devices are being altered or repaired, adequate substitute provisions shall be made.
2. Maintenance of such elements and devices is not required where the existing building is not occupied.

3302.2 Manner of removal. Waste materials shall be removed in a manner that prevents injury or damage to persons, adjoining properties and public rights-of-way.

3302.3 Fire safety during construction. Fire safety during construction shall comply with the applicable requirements of this code and the applicable provisions of Chapter 33 of the *Fire Code of New York State.*

SECTION 3303
DEMOLITION

3303.1 Construction documents. *Construction documents* and a schedule for demolition shall be submitted where required by the *building official*. Where such information is required, work shall not be done until such *construction documents* or schedule, or both, are *approved*.

3303.2 Pedestrian protection. The work of demolishing any building shall not be commenced until pedestrian protection is in place as required by this chapter.

3303.3 Means of egress. A *horizontal exit* shall not be destroyed unless and until a substitute *means of egress* has been provided and *approved*.

3303.4 Vacant lot. Where a structure has been demolished or removed, the vacant lot shall be filled and maintained to the existing grade or in accordance with the ordinances of the jurisdiction having authority.

3303.5 Water accumulation. Provision shall be made to prevent the accumulation of water or damage to any foundations on the premises or the adjoining property.

3303.6 Utility connections. Service utility connections shall be discontinued and capped in accordance with the *approved* rules and the requirements of the applicable governing authority.

3303.7 Fire safety during demolition. Fire safety during demolition shall comply with the applicable requirements of this code and the applicable provisions of Chapter 33 of the *Fire Code of New York State.*

SECTION 3304
SITE WORK

3304.1 Excavation and fill. Excavation and fill for buildings and structures shall be constructed or protected so as not to endanger life or property. Stumps and roots shall be removed from the soil to a depth of not less than 12 inches (305 mm) below the surface of the ground in the area to be occupied by the building. Wood forms that have been used in placing concrete, if within the ground or between foundation sills and the ground, shall be removed before a building is occupied or used for any purpose. Before completion, loose or casual wood shall be removed from direct contact with the ground under the building.

3304.1.1 Slope limits. Slopes for permanent fill shall be not steeper than one unit vertical in two units horizontal (50-percent slope). Cut slopes for permanent excavations shall be not steeper than one unit vertical in two units horizontal (50-percent slope). Deviation from the foregoing limitations for cut slopes shall be permitted only upon the presentation of a soil investigation report acceptable to the *building official*.

3304.1.2 Surcharge. Fill or other surcharge loads shall not be placed adjacent to any building or structure unless such building or structure is capable of withstanding the additional loads caused by the fill or surcharge. Existing footings or foundations that can be affected by any excavation shall be underpinned adequately or otherwise protected against settlement and shall be protected against lateral movement.

3304.1.3 Footings on adjacent slopes. For footings on adjacent slopes, see Chapter 18.

3304.1.4 Fill supporting foundations. Fill to be used to support the foundations of any building or structure shall comply with Section 1804.6. *Special inspections* of compacted fill shall be in accordance with Section 1705.6.

INTERNATIONAL CODE COUNCIL®
Copyright © 2019 ICC & NYSDOS. ALL RIGHTS RESERVED. Accessed by Lauren Gualdino (lgualdino@briarcliffmanor.org), (-) Order Number #100880972 on May 08, 2020 07:05 AM (PDT) pursuant to License Agreement with ICC & NYSDOS. No further reproduction, no

100880972

SECTION 3305
SANITARY

3305.1 Facilities required. Sanitary facilities shall be provided during construction, remodeling or demolition activities in accordance with the *Plumbing Code of New York State*.

SECTION 3306
PROTECTION OF PEDESTRIANS

[BS] 3306.1 Protection required. Pedestrians shall be protected during construction, remodeling and demolition activities as required by this chapter and Table 3306.1. Signs shall be provided to direct pedestrian traffic.

[BS] 3306.2 Walkways. A walkway shall be provided for pedestrian travel in front of every construction and demolition site unless the applicable governing authority authorizes the sidewalk to be fenced or closed. A walkway shall be provided for pedestrian travel that leads from a *building* entrance or exit of an occupied structure to a public way. Walkways shall be of sufficient width to accommodate the pedestrian traffic, but shall be not less than 4 feet (1219 mm) in width. Walkways shall be provided with a durable walking surface. Walkways shall be *accessible* in accordance with Chapter 11 and shall be designed to support all imposed loads, and the design live load shall be not less than 150 pounds per square foot (psf) (7.2 kN/m^2).

[BS] 3306.3 Directional barricades. Pedestrian traffic shall be protected by a directional barricade where the walkway extends into the street. The directional barricade shall be of sufficient size and construction to direct vehicular traffic away from the pedestrian path.

[BS] 3306.4 Construction railings. Construction railings shall be not less than 42 inches (1067 mm) in height and shall be sufficient to direct pedestrians around construction areas.

[BS] 3306.5 Barriers. Barriers shall be not less than 8 feet (2438 mm) in height and shall be placed on the side of the walkway nearest the construction. Barriers shall extend the entire length of the construction site. Openings in such barriers shall be protected by doors that are normally kept closed.

[BS] 3306.6 Barrier design. Barriers shall be designed to resist loads required in Chapter 16 unless constructed as follows:

1. Barriers shall be provided with 2-inch by 4-inch (51 mm by 102 mm) top and bottom plates.
2. The barrier material shall be boards not less than $^3/_4$-inch (19.1 mm) thick or wood structural panels not less than $^1/_4$-inch (6.4 mm) thick.
3. Wood structural use panels shall be bonded with an adhesive identical to that for exterior wood structural use panels.
4. Wood structural use panels $^1/_4$ inch (6.4 mm) or $^5/_{16}$ inch (23.8 mm) in thickness shall have studs spaced not more than 2 feet (610 mm) on center.
5. Wood structural use panels $^3/_8$ inch (9.5 mm) or $^1/_2$ inch (12.7 mm) in thickness shall have studs spaced not more than 4 feet (1219 mm) on center provided that a 2-inch by 4-inch (51 mm by 102 mm) stiffener is placed horizontally at mid-height where the stud spacing is greater than 2 feet (610 mm) on center.
6. Wood structural use panels $^5/_8$ inch (15.9 mm) or thicker shall not span over 8 feet (2438 mm).

[BS] 3306.7 Covered walkways. Covered walkways shall have a clear height of not less than 8 feet (2438 mm) as measured from the floor surface to the canopy overhead. Adequate lighting shall be provided at all times. Covered walkways shall be designed to support all imposed loads. The design live load shall be not less than 150 psf (7.2 kN/m^2) for the entire structure.

Exception: Roofs and supporting structures of covered walkways for new, light-frame construction not exceeding two *stories* above *grade plane* are permitted to be designed for a live load of 75 psf (3.6kN/m^2) or the loads imposed on them, whichever is greater. In lieu of such designs, the roof and supporting structure of a covered walkway are permitted to be constructed as follows:

1. Footings shall be continuous 2-inch by 6-inch (51 mm by 152 mm) members.
2. Posts not less than 4 inches by 6 inches (102 mm by 152 mm) shall be provided on both sides of the roof and spaced not more than 12 feet (3658 mm) on center.
3. Stringers not less than 4 inches by 12 inches (102 mm by 305 mm) shall be placed on edge upon the posts.
4. Joists resting on the stringers shall be not less than 2 inches by 8 inches (51 mm by 203 mm) and shall be spaced not more than 2 feet (610 mm) on center.

TABLE 3306.1
PROTECTION OF PEDESTRIANS

HEIGHT OF CONSTRUCTION	DISTANCE FROM CONSTRUCTION TO LOT LINE	TYPE OF PROTECTION REQUIRED
8 feet or less	Less than 5 feet	Construction railings
	5 feet or more	None
More than 8 feet	Less than 5 feet	Barrier and covered walkway
	5 feet or more, but not more than one-fourth the height of construction	Barrier and covered walkway
	5 feet or more, but between one-fourth and one-half the height of construction	Barrier
	5 feet or more, but exceeding one-half the height of construction	None

For SI: 1 foot = 304.8 mm.

INTERNATIONAL CODE COUNCIL®
Copyright © 2019 ICC & NYSDOS. ALL RIGHTS RESERVED. Accessed by Lauren Gualdino (lgualdino@briarcliffmanor.org), (-) Order Number #100880972 on May 08, 2020 07:05 AM (PDT) pursuant to License Agreement with ICC & NYSDOS. No further reproduction, no

100880972

5. The deck shall be planks not less than 2 inches (51 mm) thick or wood structural panels with an exterior exposure durability classification not less than $^{23}/_{32}$ inch (18.3 mm) thick nailed to the joists.
6. Each post shall be knee braced to joists and stringers by members not less than 2 inches by 4 inches (51 mm by 102 mm); 4 feet (1219 mm) in length.
7. A curb that is not less than 2 inches by 4 inches (51 mm by 102 mm) shall be set on edge along the outside edge of the deck.

[BS] 3306.8 Repair, maintenance and removal. Pedestrian protection required by this chapter shall be maintained in place and kept in good order for the entire length of time pedestrians are subject to being endangered. The *owner* or the *owner's* authorized agent, on completion of the construction activity, shall immediately remove walkways, debris and other obstructions and leave such public property in as good a condition as it was before such work was commenced.

[BS] 3306.9 Adjacent to excavations. Every excavation on a site located 5 feet (1524 mm) or less from the street *lot line* shall be enclosed with a barrier not less than 6 feet (1829 mm) in height. Where located more than 5 feet (1524 mm) from the street *lot line*, a barrier shall be erected where required by the *building official*. Barriers shall be of adequate strength to resist wind pressure as specified in Chapter 16.

SECTION 3307
PROTECTION OF ADJOINING PROPERTY

[BS] 3307.1 Protection required. Adjoining public and private property shall be protected from damage during construction, remodeling and demolition work. Protection shall be provided for footings, foundations, party walls, chimneys, skylights and roofs. Provisions shall be made to control water runoff and erosion during construction or demolition activities. The person making or causing an excavation to be made shall provide written notice to the *owners* of adjoining buildings advising them that the excavation is to be made and that the adjoining buildings should be protected. Said notification shall be delivered not less than 10 days prior to the scheduled starting date of the excavation.

SECTION 3308
TEMPORARY USE OF STREETS, ALLEYS AND PUBLIC PROPERTY

3308.1 Storage and handling of materials. The temporary use of streets or public property for the storage or handling of materials or of equipment required for construction or demolition, and the protection provided to the public shall comply with the provisions of the applicable governing authority and this chapter.

3308.1.1 Obstructions. Construction materials and equipment shall not be placed or stored so as to obstruct access to fire hydrants, standpipes, fire or police alarm boxes, catch basins or manholes, nor shall such material or equipment be located within 20 feet (6096 mm) of a street intersection, or placed so as to obstruct normal observations of traffic signals or to hinder the use of public transit loading platforms.

3308.2 Utility fixtures. Building materials, fences, sheds or any obstruction of any kind shall not be placed so as to obstruct free approach to any fire hydrant, fire department connection, utility pole, manhole, fire alarm box or catch basin, or so as to interfere with the passage of water in the gutter. Protection against damage shall be provided to such utility fixtures during the progress of the work, but sight of them shall not be obstructed.

SECTION 3309
FIRE EXTINGUISHERS

[F] 3309.1 Where required. Structures under construction, *alteration* or demolition shall be provided with not fewer than one *approved* portable fire extinguisher in accordance with Section 906 and sized for not less than ordinary hazard as follows:

1. At each *stairway* on all floor levels where combustible materials have accumulated.
2. In every storage and construction shed.
3. Additional portable fire extinguishers shall be provided where special hazards exist, such as the storage and use of flammable and combustible liquids.

[F] 3309.2 Fire hazards. The provisions of this code and the *Fire Code of New York State* shall be strictly observed to safeguard against all fire hazards attendant upon construction operations.

SECTION 3310
MEANS OF EGRESS

3310.1 Stairways required. Where building construction exceeds 40 feet (12 192 mm) in height above the lowest level of fire department vehicle access, a temporary or permanent stairway shall be provided. As construction progresses, such stairway shall be extended to within one floor of the highest point of construction having secured decking or flooring.

[F] 3310.2 Maintenance of means of egress. *Means of egress* and required *accessible means of egress* shall be maintained at all times during construction, demolition, remodeling or *alterations* and *additions* to any building.

Exception: Existing means of egress need not be maintained where a*pproved* temporary *means of egress* systems and facilities are provided.

SECTION 3311
STANDPIPES

[F] 3311.1 Where required. In buildings required to have standpipes by Section 905.3.1, not fewer than one standpipe shall be provided for use during construction. Such standpipes shall be installed prior to construction exceeding 40 feet (12 192 mm) in height above the lowest level of fire department vehicle access. Such standpipes shall be provided with fire department hose connections at locations adjacent to *stairways* complying with Section 3310.1. As construction

INTERNATIONAL CODE COUNCIL®
Copyright © 2019 ICC & NYSDOS. ALL RIGHTS RESERVED. Accessed by Lauren Gualdino (lgualdino@briarcliffmanor.org), (-) Order Number #100880972 on May 08, 2020 07:05 AM (PDT) pursuant to License Agreement with ICC & NYSDOS. No further reproduction, no

100880972

progresses, such standpipes shall be extended to within one floor of the highest point of construction having secured decking or flooring.

[F] 3311.2 Buildings being demolished. Where a building is being demolished and a standpipe exists within such a building, such standpipe shall be maintained in an operable condition so as to be available for use by the fire department. Such standpipe shall be demolished with the building but shall not be demolished more than one floor below the floor being demolished.

[F] 3311.3 Detailed requirements. Standpipes shall be installed in accordance with the provisions of Chapter 9.

Exception: Standpipes shall be either temporary or permanent in nature, and with or without a water supply, provided that such standpipes conform to the requirements of Section 905 as to capacity, outlets and materials.

SECTION 3312
AUTOMATIC SPRINKLER SYSTEM

[NY] 3312.1 Completion before occupancy. In buildings where an *automatic sprinkler system* is required by this code, it shall be unlawful to occupy any portion of a building or structure until the *automatic sprinkler system* installation has been tested and *approved*.

[F] 3312.2 Operation of valves. Operation of sprinkler control valves shall be permitted only by properly authorized personnel and shall be accompanied by notification of duly designated parties. When the sprinkler protection is being regularly turned off and on to facilitate connection of newly completed segments, the sprinkler control valves shall be checked at the end of each work period to ascertain that protection is in service.

SECTION 3313
WATER SUPPLY FOR FIRE PROTECTION

[F] 3313.1 Where required. An *approved* water supply for fire protection, either temporary or permanent, shall be made available as soon as combustible material arrives on the site.

SECTION 3314
FIRE WATCH DURING CONSTRUCTON

[F] 3314.1 Fire watch during combustible construction. Where required by the *fire code official*, a fire watch shall be provided during nonworking hours for construction that exceeds 40 feet (12 192 mm) in height above the lowest adjacent grade.

INTERNATIONAL CODE COUNCIL®
Copyright © 2019 ICC & NYSDOS. ALL RIGHTS RESERVED. Accessed by Lauren Gualdino (lgualdino@briarcliffmanor.org), (-) Order Number #100880972 on May 08, 2020 07:05 AM (PDT) pursuant to License Agreement with ICC & NYSDOS. No further reproduction, no

100880972

CHAPTER 34

RESERVED

Action taken during the Code Development Process removed Chapter 34, Existing Structures, from the Building Code of New York State. The provisions of this chapter are contained in the Existing Building Code of New York State. See Section 101.4.7.

INTERNATIONAL CODE COUNCIL®
Copyright © 2019 ICC & NYSDOS. ALL RIGHTS RESERVED. Accessed by Lauren Gualdino (lgualdino@briarcliffmanor.org), (-) Order Number #100880972 on May 08, 2020 07:05 AM (PDT) pursuant to License Agreement with ICC & NYSDOS. No further reproduction, no

100880972

INTERNATIONAL CODE COUNCIL®
Copyright © 2019 ICC & NYSDOS. ALL RIGHTS RESERVED. Accessed by Lauren Gualdino (lgualdino@briarcliffmanor.org), (-) Order Number #100880972 on May 08, 2020 07:05 AM (PDT) pursuant to License Agreement with ICC & NYSDOS. No further reproduction, no

100880972

CHAPTER 35
REFERENCED STANDARDS

User note:

This chapter lists the standards that are referenced in various sections of this document. The standards are listed herein by the promulgating agency of the standard, the standard identification, the effective date and title, and the section or sections of this document that reference the standard. The application of the referenced standards shall be as specified in Section 102.4.

** Denotes standards that have been incorporated by reference into 19 NYCRR Part 1221.*

AA

Aluminum Association
1400 Crystal Drive, Suite 430
Arlington, VA 22202

***ADM—2015: Aluminum Design Manual: Part 1—A Specification for Aluminum Structures**
1604.3.5, 2002.1

***ASM 35—00: Aluminum Sheet Metal Work in Building Construction (Fourth Edition)**
2002.1

AAMA

American Architectural Manufacturers Association
1827 Waldon Office Square, Suite 550
Schaumburg, IL 60173

711—13: Voluntary Specification for Self Adhering Flashing Used for Installation of Exterior Wall Fenestration Products
1404.4

714—15: Voluntary Specification for Liquid Applied Flashing Used to Create a Water-resistive Seal around Exterior Wall Openings in Buildings
1404.4

1402—09: Standard Specifications for Aluminum Siding, Soffit and Fascia
1403.5.1

AAMA/WDMA/CSA 101/I.S.2/A440—17: North American Fenestration Standard/Specifications for Windows, Doors and Skylights
1709.5.1, 2405.5

ACI

American Concrete Institute
38800 Country Club Drive
Farmington Hills, MI 48331

***216.1—14: Code Requirements for Determining Fire Resistance of Concrete and Masonry Construction Assemblies**
Table 721.1(2), 722.1

***318—14: Building Code Requirements for Structural Concrete**
722.2.4.3, 1604.3.2, 1616.2.1, 1616.3.1, 1704.5, Table 1705.3, 1705.3.2, 1808.8.2, Table 1808.8.2, 1808.8.5, 1808.8.6, 1810.1.3, 1810.2.4.1, 1810.3.2.1.1, 1810.3.2.1.2, 1810.3.8.3.1, 1810.3.8.3.3, 1810.3.9.4.2.1, 1810.3.9.4.2.2, 1810.3.10.1, 1810.3.11.1, 1810.3.12, 1901.2, 1901.3, 1902.1, 1903.1, 1904.1, 1904.2, 1905.1, 1905.1.1, 1905.1.2, 1905.1.3, 1905.1.4, 1905.1.5, 1905.1.6, 1905.1.7, 1905.1.8, 1906.1, 2108.3, 2206.1

AISC

American Institute of Steel
130 East Randolph Street, Suite 2000
Chicago, IL 60601-6219

***ANSI/AISC 341—16: Seismic Provisions for Structural Steel Buildings**
1705.12.1.1, 1705.12.1.2, 1705.13.1.1, 1705.13.1.2, 2205.2.1.1, 2205.2.1.2, 2205.2.2, 2206.2.1

INTERNATIONAL CODE COUNCIL®
Copyright © 2019 ICC & NYSDOS. ALL RIGHTS RESERVED. Accessed by Lauren Gualdino (lgualdino@briarcliffmanor.org), (-) Order Number #100880972 on May 08, 2020 07:05 AM (PDT) pursuant to License Agreement with ICC & NYSDOS. No further reproduction, no

100880972

AISC—continued

***ANSI/AISC 360—16: Specification for Structural Steel Buildings**
722.5.2.2.1, 1604.3.3, 1705.2.1, 2202.1, 2203.1, 2205.1, 2205.2.1.1, 2206.1

AISI

American Iron and Steel Institute
25 Massachusetts Avenue, NW Suite 800
Washington, DC 20001

AISI S100—16: North American Specification for the Design of Cold-formed Steel Structural Members, 2016
1604.3.3, 1905.1.8, 2202.1, 2203.1, 2210.1, 2210.2

AISI S202—15: Code of Standard Practice for Cold-formed Steel Framing, 2015
2211.1.3.1

AISI S220—15: North American Standard for Cold-formed Steel Framing—Nonstructural Members, 2015
2202.1, 2203.1, 2211.2, Table 2506.2, Table 2507.2

AISI S230—15: Standard for Cold-formed Steel Framing—Prescriptive Method for One- and Two-family Dwellings, 2015
1609.1.1, 1609.1.1.1, 2211.1.2

AISI S240—15: North American Standard for Cold-Formed Steel Structuring Framing, 2015
1705.2.2.2, 2202.1, 2203.1, 2211.1, 2211.1.1.1, 2211.1.3.3, Table 2306.12.2, Table 2506.2, Table 2507.2, Table 2603.12.1

AISI S400—15/S1—16: North American Standard for Seismic Design of Cold-formed Steel Structural Systems, 2015, with Supplement 1, dated 2016.
2210.2, 2211.1.1.1, 2211.1.1.2

ALI

Automotive Lift Institute, Inc.
P.O. Box 85
Cortland, NY 13045

***ALI ALCTV—2011: Standard for Automotive Lifts—Safety Requirements for Construction, Testing and Validation (ANSI)**
Table 3001.3

AMCA

Air Movement and Control Association International
30 West University Drive
Arlington Heights, IL 60004

540—13: Test Method for Louvers Impacted by Wind Borne Debris
1609.2.1

ANSI

American National Standards Institute
25 West 43rd Street, Fourth Floor
New York, NY 10036

A13.1—2015: Scheme for the Identification of Piping Systems
415.11.6.5

***A108.1A—99: Installation of Ceramic Tile in the Wet-set Method, with Portland Cement Mortar**
2103.2.3

***A108.1B—99: Installation of Ceramic Tile, Quarry Tile on a Cured Portland Cement Mortar Setting Bed with Dry-set or Latex-Portland Mortar**
2103.2.3

***A108.4—99: Installation of Ceramic Tile with Organic Adhesives or Water-cleanable Tile-setting Epoxy Adhesive**
2103.2.3.6

***A108.5—99: Installation of Ceramic Tile with Dry-set Portland Cement Mortar or Latex-Portland Cement Mortar**
2103.2.3.1, 2103.2.3.2

***A108.6—99: Installation of Ceramic Tile with Chemical-resistant, Water Cleanable Tile-setting and -grouting Epoxy**
2103.2.3.3

***A108.8—99: Installation of Ceramic Tile with Chemical-resistant Furan Resin Mortar and Grout**
2103.2.3.4

INTERNATIONAL CODE COUNCIL®
Copyright © 2019 ICC & NYSDOS. ALL RIGHTS RESERVED. Accessed by Lauren Gualdino (lgualdino@briarcliffmanor.org), (-) Order Number #100880972 on May 08, 2020 07:05 AM (PDT) pursuant to License Agreement with ICC & NYSDOS. No further reproduction, no

100880972

ANSI—continued

***A108.9—99: Installation of Ceramic Tile with Modified Epoxy Emulsion Mortar/Grout**
2103.2.3.5

***A108.10—99: Installation of Grout in Tilework**
2103.2.3.7

A118.1—16: American National Standard Specifications for Dry-set Portland Cement Mortar
2103.2.3.1

A118.3—13: American National Standard Specifications for Chemical-resistant, Water-cleanable Tile-setting and -grouting Epoxy and Water Cleanable Tile-setting Epoxy Adhesive
2103.2.3.3

A118.4—16: American National Standard Specifications for Modified Dry-set Cement Mortar
2103.2.3.2, 2103.2.4

A118.5—99: American National Standard Specifications for Chemical Resistant Furan Mortar and Grouts for Tile Installation
2103.2.3.4

A118.6—10: American National Standard Specifications for Cement Grouts for Tile Installation
2103.2.3.7

A118.8—99: American National Standard Specifications for Modified Epoxy Emulsion Mortar/Grout
2103.2.3.5

A136.1—08: American National Standard Specifications for the Installation of Ceramic Tile
2103.2.3.6

A137.1—17: American National Standard Specifications for Ceramic Tile
202

Z 97.1—14: Safety Glazing Materials Used in Buildings—Safety Performance Specifications and Methods of Test
2406.1.2, 2406.2, Table 2406.2(2), 2406.3.1, 2407.1, 2407.1.4.1, 2408.2.1, 2408.3, 2409.2, 2409.3, 2409.4.1

APA

APA - Engineered Wood Association
7011 South 19th Street
Tacoma, WA 98466

ANSI 117—15: Standard Specification for Structural Glued Laminated Timber of Softwood Species
2306.1

ANSI/APA A190.1—17: Structural Glued Laminated Timber
2303.1.3, 2306.1

ANSI/APA PRP 210—14: Standard for Performance-Rated Engineered Wood Siding
2303.1.5, 2304.7, 2306.3, Table 2306.3(1)

ANSI/APA PRR 410—16: Standard for Performance-Rated Engineered Wood Rim Boards
2303.1.13

***APA PDS—12: Panel Design Specification**
2306.1

***APA PDS Supplement 1—12: Design and Fabrication of Plywood Curved Panels (revised 2013)**
2306.1

***APA PDS Supplement 2—12: Design and Fabrication of Plywood-lumber Beams (revised 2013)**
2306.1

***APA PDS Supplement 3—12: Design and Fabrication of Plywood Stressed-skin Panels (revised 2013)**
2306.1

***APA PDS Supplement 4—12: Design and Fabrication of Plywood Sandwich Panels (revised 2013)**
2306.1

***APA PDS Supplement 5—16: Design and Fabrication of All-plywood Beams (revised 2013)**
2306.1

ANSI/APA PRG 320—17: Standard for Performance-rated Cross-laminated Timber
2303.1.4

***APA R540—13: Builders Tips: Proper Storage and Handling of Glulam Beams**
2306.1

INTERNATIONAL CODE COUNCIL®
Copyright © 2019 ICC & NYSDOS. ALL RIGHTS RESERVED. Accessed by Lauren Gualdino (lgualdino@briarcliffmanor.org), (-) Order Number #100880972 on May 08, 2020 07:05 AM (PDT) pursuant to License Agreement with ICC & NYSDOS. No further reproduction, no

100880972

APA—continued

***APA S475—16: Glued Laminated Beam Design Tables**
2306.1

***APA S560—14: Field Notching and Drilling of Glued Laminated Timber Beams**
2306.1

***APA T300—16: Glulam Connection Details**
2306.1

***APA X440—17: Product Guide: Glulam**
2306.1

APA X450—01: Glulam in Residential Construction—Western Edition
2306.1

APSP

Pool & Hot Tub Alliance
2111 Eisenhower Avenue, Suite 500
Alexandria, VA 22314

***ANSI/APSP/ICC 7—2013: American National Standard for Suction Entrapment Avoidance in Swimming Pools, Wading Pools, Spas, Hot Tubs and Catch Basins**
3109.4

ASABE

American Society of Agricultural and Biological Engineers
2950 Niles Road
St. Joseph, MI 49085

***EP 484.3 MON1998: Diaphragm Design of Metal-clad, Wood-frame Rectangular Buildings**
2306.1

***EP 486.2 OCT 2012ED: Shallow-post and Pier Foundation Design**
2306.1

***EP 559.1 MON2010: Design Requirements and Bending Properties for Mechanically Laminated Wood Assemblies**
2306.1

ASCE/SEI

American Society of Civil Engineers
Structural Engineering Institute
1801 Alexander Bell Drive
Reston, VA 20191-4400

7—16: Minimum Design Loads and Associated Criteria for Buildings and Other Structures
202, Table 1504.1.1, Table 1504.8, 1602.1, 1604.3, Table 1604.3, 1604.5, Table 1604.5, 1604.8.2, 1604.9, 1605.1, 1605.2.1, 1605.3.1, 1605.3.1.2, 1605.3.2, 1605.3.2.1, 1607.8.1, 1607.8.1.1, 1607.8.1.2, 1607.9, 1607.13.1, 1607.13.3.1, 1608.1, 1608.2, 1608.3, 1609.1.1, 1609.2, 1609.3, 1609.5.1, 1609.5.3, 1611.2, 1612.2, 1613.1, 1613.2.2, 1613.2.3, 1613.2.5, Table 1613.2.3(1), Table 1613.2.3(2), 1613.2.5.1, 1613.2.5.2, 1613.3, 1614.1, 1615.1, 1705.12, 1705.12.1.1, 1705.12.1.2, 1705.12.4, 1705.13.1.1, 1705.13.1.2, 1705.13.2, 1705.13.3, 1705.13.4, 1709.5, 1803.5.12, 1808.3.1, 1809.13, 1810.3.6.1, 1810.3.8.3.2, 1810.3.8.3.3, 1810.3.9.4, 1810.3.11.2, 1810.3.12, 1901.2, 1905.1.1, 1905.1.2, 1905.1.7, 1905.1.8, 2205.2.1.1, 2205.2.1.2, 2205.2.2, 2206.2.1, 2209.1, 2209.2, 2210.2, 2211.1.1.1, Table 2304.6.1, Table 2306.3(3), Table 2308.7.5, 2404.1, 2505.1, 2505.2, 2506.2.1

8—02: Standard Specification for the Design of Cold-formed Stainless Steel Structural Members
1604.3.3, 2210.1, 2210.2

19—16: Structural Applications of Steel Cables for Buildings
2208.1

***24—14: Flood Resistant Design and Construction**
1202.4.2, 1202.4.4, 1612.4, 1612.5, 2702.1.8, 3001.3

29—05: Standard Calculation Methods for Structural Fire Protection
722.1

32—01: Design and Construction of Frost Protected Shallow Foundations
1809.5

INTERNATIONAL CODE COUNCIL®
Copyright © 2019 ICC & NYSDOS. ALL RIGHTS RESERVED. Accessed by Lauren Gualdino (lgualdino@briarcliffmanor.org), (-) Order Number #100880972 on May 08, 2020 07:05 AM (PDT) pursuant to License Agreement with ICC & NYSDOS. No further reproduction, no

100880972

ASCE/SEI—continued

49—12: Wind Tunnel Testing for Buildings and Other Structures
1609.1.1

55—16: Tensile Membrane Structures
3102.2

ASME

American Society of Mechanical Engineers
Two Park Avenue
New York, NY 10016-5990

***ASME/A17.1—2016/CSA B44—16: Safety Code for Elevators and Escalators**
907.3.3, 911.1.6, 1009.4.1, 1607.10.1, 3001.2, Table 3001.3, 3001.4, 3001.5, 3002.5, 3003.2, 3007.1, 3008.1.4, 3008.7.1

***A17.7—2007/CSA B44—07(R2012): Performance-based Safety Code for Elevators and Escalators**
Table 3001.3, 3001.5, 3002.5

***A18.1—2014: Safety Standard for Platform Lifts and Stairway Chairlifts**
1109.8, Table 3001.3

***A90.1—2015: Safety Standard for Belt Manlifts**
Table 3001.3

B16.18—2012: Cast Copper Alloy Solder Joint Pressure Fittings
909.13.1

B16.22—2013: Wrought Copper and Copper Alloy Solder Joint Pressure Fittings
909.13.1

***B20.1—2015: Safety Standard for Conveyors and Related Equipment**
Table 3001.3, 3004.3

B31.3—2016: Process Piping
415.11.6

ASSE

American Society of Safety Engineers
520 N. Northwest Highway
Park Ridge, IL 60068

***ANSI/ASSE Z359.1—2007: Requirements for the ANSI/ASSE Z359 Fall Protection Code**
1015.6, 1015.7

ASTM

ASTM International
100 Barr Harbor Drive, P.O. Box C700
West Conshohocken, PA 19428-2959

A6/A6M—14: Standard Specification for General Requirements for Rolled Structural Steel Bars, Plates, Shapes and Sheet Piling
1810.3.2.3, 1810.3.5.3.1, 1810.3.5.3.3

A36/A36M—14: Specification for Carbon Structural Steel
1810.3.2.3

A153/A153M—09: Specification for Zinc Coating (Hot-dip) on Iron and Steel Hardware
2304.10.5

A240/A240M—15a: Standard Specification for Chromium and Chromium-nickel Stainless Steel Plate, Sheet and Strip for Pressure Vessels and for General Applications
Table 1507.4.3(1)

A252—10: Specification for Welded and Seamless Steel Pipe Piles
1810.3.2.3

A283/A283M—13: Specification for Low and Intermediate Tensile Strength Carbon Steel Plates
1810.3.2.3

A416/A416M—15: Specification for Steel Strand, Uncoated Seven-wire for Prestressed Concrete
1810.3.2.2

A463/A463M—15: Standard Specification for Steel Sheet, Aluminum-coated, by the Hot-dip Process
Table 1507.4.3(2)

INTERNATIONAL CODE COUNCIL®
Copyright © 2019 ICC & NYSDOS. ALL RIGHTS RESERVED. Accessed by Lauren Gualdino (lgualdino@briarcliffmanor.org), (-) Order Number #100880972 on May 08, 2020 07:05 AM (PDT) pursuant to License Agreement with ICC & NYSDOS. No further reproduction, no

100880972

ASTM—continued

A572/A572M—15: Specification for High-strength Low-alloy Columbium-Vanadium Structural Steel
1810.3.2.3

A588/A588M—15: Specification for High-strength Low-alloy Structural Steel with 50 ksi (345 MPa) Minimum Yield Point with Atmospheric Corrosion Resistance
1810.3.2.3

A615/A615M—15ae1: Specification for Deformed and Plain Carbon-steel Bars for Concrete Reinforcement
1704.5, 1810.3.10.2

A653/A653M—15: Specification for Steel Sheet, Zinc-coated Galvanized or Zinc-iron Alloy-coated Galvannealed by the Hot-dip Process
Table 1507.4.3(1), Table 1507.4.3(2), 2304.10.5.1

A690/A690M—13a: Standard Specification for High-strength Low-alloy Nickel, Copper, Phosphorus Steel H-piles and Sheet Piling with Atmospheric Corrosion Resistance for Use in Marine Environments
1810.3.2.3

A706/A706M—15: Specification for Low-alloy Steel Deformed and Plain Bars for Concrete Reinforcement
1704.5, Table 1705.3, 2107.3, 2108.3

A722/A722M—15: Specification for High-strength Steel Bars for Prestressed Concrete
1810.3.10.2

A755/A755M—15: Specification for Steel Sheet, Metallic-coated by the Hot-dip Process and Prepainted by the Coil-coating Process for Exterior Exposed Building Products
Table 1507.4.3(1), Table 1507.4.3(2)

A792/A792M—10(2015): Specification for Steel Sheet, 55% Aluminum-zinc Alloy-coated by the Hot-dip Process
Table 1507.4.3(1), Table 1507.4.3(2)

A875/A875M—13: Standard Specification for Steel Sheet, Zinc-5%, Aluminum Alloy-coated by the Hot-dip Process
Table 1507.4.3(2)

A924/A924M—14: Standard Specification for General Requirements for Steel Sheet, Metallic-coated by the Hot-dip Process
Table 1507.4.3(1)

B42—2015A: Specification for Seamless Copper Pipe, Standard Sizes
909.13.1

B43—15: Specification for Seamless Red Brass Pipe, Standard Sizes
909.13.1

B68/B68M—11: Specification for Seamless Copper Tube, Bright Annealed (Metric)
909.13.1

B88—14: Specification for Seamless Copper Water Tube
909.13.1

B101—12: Specification for Lead-coated Copper Sheet and Strip for Building Construction
1403.5.3, Table 1507.2.8.2, Table 1507.4.3(1)

B209—14: Specification for Aluminum and Aluminum Alloy Steel and Plate
Table 1507.4.3(1)

B251—10: Specification for General Requirements for Wrought Seamless Copper and Copper-alloy Tube
909.13.1

B280—13: Specification for Seamless Copper Tube for Air Conditioning and Refrigeration Field Service
909.13.1

B370—12: Specification for Copper Sheet and Strip for Building Construction
1403.5.2, Table 1507.2.8.2, Table 1507.4.3(1)

B695—04(2009): Standard Specification for Coatings of Zinc Mechanically Deposited on Iron and Steel Strip for Building Construction
2304.10.5.1, 2304.10.5.3

C5—10: Specification for Quicklime for Structural Purposes
Table 2507.2

C22/C22M—00(2015): Specification for Gypsum
Table 2506.2

C27—98(2013): Specification for Classification of Fireclay and High-alumina Refractory Brick
2111.6

INTERNATIONAL CODE COUNCIL®
Copyright © 2019 ICC & NYSDOS. ALL RIGHTS RESERVED. Accessed by Lauren Gualdino (lgualdino@briarcliffmanor.org), (-) Order Number #100880972 on May 08, 2020 07:05 AM (PDT) pursuant to License Agreement with ICC & NYSDOS. No further reproduction, no

100880972

ASTM—continued

C28/C28M—10(2015): Specification for Gypsum Plasters
Table 2507.2

C31/C31M—15: Practice for Making and Curing Concrete Test Specimens in the Field
Table 1705.3

C33/C33M—13: Specification for Concrete Aggregates
722.3.1.4, 722.4.1.1.3

C35/C35—01(2014): Specification for Inorganic Aggregates for Use in Gypsum Plaster
Table 2507.2

C55—2014a: Specification for Concrete Building Brick
Table 722.3.2

C59/C59M—00(2015): Specification for Gypsum Casting Plaster and Molding Plaster
Table 2507.2

C61/C61M—00(2015): Specification for Gypsum Keene's Cement
Table 2507.2

C62—13a: Standard Specification for Building Brick (Solid Masonry Units Made from Clay or Shale)
1807.1.6.3

C67—14: Test Methods of Sampling and Testing Brick and Structural Clay Tile
722.4.1.1.1, 2109.2.1.1

C73—14: Specification for Calcium Silicate Brick (Sand-lime Brick)
Table 722.3.2

C90—14: Specification for Loadbearing Concrete Masonry Units
Table 722.3.2, 1807.1.6.3, 2114.3

C91/C91M—12: Specification for Masonry Cement
Table 2507.2

C94/C94M—15a: Specification for Ready-mixed Concrete
110.3.1

C140/C140M—15: Test Method Sampling and Testing Concrete Masonry Units and Related Units
722.3.1.2

C150/C150M—15: Specification for Portland Cement
1903.1, Table 2507.2

C172/C172M—14a: Practice for Sampling Freshly Mixed Concrete
Table 1705.3

C199—84(2011): Test Method for Pier Test for Refractory Mortars
2111.6, 2111.9, 2113.12

C206—14: Specification for Finishing Hydrated Lime
Table 2507.2

C208—12: Specification for Cellulosic Fiber Insulating Board
Table 1508.2, 2303.1.6

C216—15: Specification for Facing Brick (Solid Masonry Units Made from Clay or Shale)
Table 721.1(2), 1807.1.6.3

C270—14a: Specification for Mortar for Unit Masonry
2103.2.4

C315—07(2011): Specification for Clay Flue Liners and Chimney Pots
2111.9, 2113.11.1, Table 2113.16(1)

C317/C317M—00(2015): Specification for Gypsum Concrete
2514.1

C330/C330M—14: Specification for Lightweight Aggregates for Structural Concrete
202

C331/C331M—14: Specification for Lightweight Aggregates for Concrete Masonry Units
722.3.1.4, 722.4.1.1.3

C406/C406M—15: Specification for Roofing Slate
1507.7.5

INTERNATIONAL CODE COUNCIL®
Copyright © 2019 ICC & NYSDOS. ALL RIGHTS RESERVED. Accessed by Lauren Gualdino (lgualdino@briarcliffmanor.org), (-) Order Number #100880972 on May 08, 2020 07:05 AM (PDT) pursuant to License Agreement with ICC & NYSDOS. No further reproduction, no

100880972

ASTM—continued

C472—99(2014): Standard Test Methods for Physical Testing of Gypsum, Gypsum Plasters and Gypsum Concrete
Table 2506.2

C473—15: Test Methods for Physical Testing of Gypsum Panel Products
Table 2506.2

C474—15: Test Methods for Joint Treatment Materials for Gypsum Board Construction
Table 2506.2

C475/C475M—15: Specification for Joint Compound and Joint Tape for Finishing Gypsum Board
Table 2506.2

C514—04(2014): Specification for Nails for the Application of Gypsum Board
Table 721.1(2), Table 721.1(3), Table 2506.2

C516—08(2014)e1: Specifications for Vermiculite Loose Fill Thermal Insulation
722.3.1.4, 722.4.1.1.3

C547—15: Specification for Mineral Fiber Pipe Insulation
Table 721.1(2), Table 721.1(3)

C549—06(2012): Specification for Perlite Loose Fill Insulation
722.3.1.4, 722.4.1.1.3

C552—15: Standard Specification for Cellular Glass Thermal Insulation
Table 1508.2

C557—03(2009)e01: Specification for Adhesives for Fastening Gypsum Wallboard to Wood Framing
Table 2506.2, 2508.4

C578—15: Standard Specification for Rigid, Cellular Polystyrene Thermal Insulation
Table 1508.2, 2603.10, Table 2603.12.1, Table 2603.12.2, Table 2603.13.1, Table 2603.13.2

C587—04(2014): Specification for Gypsum Veneer Plaster
Table 2507.2

C595/C595M—14e1: Specification for Blended Hydraulic Cements
1903.1, Table 2507.2

C631—09(2014): Specification for Bonding Compounds for Interior Gypsum Plastering
Table 2507.2

C635/C635M—13a: Specification for the Manufacture, Performance and Testing of Metal Suspension Systems for Acoustical Tile and Lay-in Panel Ceilings
801.1.1.1, 2506.2.1

***C636/C636M—08: Practice for Installation of Metal Ceiling Suspension Systems for Acoustical Tile and Lay-in Panels**
808.1.1.1

C652—15: Specification for Hollow Brick (Hollow Masonry Units Made from Clay or Shale)
1807.1.6.3

C726—12: Standard Specification for Mineral Wool Roof Insulation Board
Table 1508.2

C728—15: Standard Specification for Perlite Thermal Insulation Board
Table 1508.2

C744—14: Specification for Prefaced Concrete and Calcium Silicate Masonry Units
Table 722.3.2

***C754—11: Specification for Installation of Steel Framing Members to Receive Screw-attached Gypsum Panel Products**
Table 2508.1, Table 2511.1.1

C836/C836M—15: Specification for High-solids Content, Cold Liquid-applied Elastomeric Waterproofing Membrane for Use with Separate Wearing Course
1507.15.2

***C840—11: Specification for Application and Finishing of Gypsum Board**
Table 2508.1, 2509.2

***C841—03(2008 E1): Specification for Installation of Interior Lathing and Furring**
Table 2508.1, Table 2511.1.1

***C842—05(2010 E1): Specification for Application of Interior Gypsum Plaster**
Table 2511.1.1, 2511.3, 2511.4

INTERNATIONAL CODE COUNCIL®
Copyright © 2019 ICC & NYSDOS. ALL RIGHTS RESERVED. Accessed by Lauren Gualdino (lgualdino@briarcliffmanor.org), (-) Order Number #100880972 on May 08, 2020 07:05 AM (PDT) pursuant to License Agreement with ICC & NYSDOS. No further reproduction, no

100880972

ASTM—continued

***C843—99(2012): Specification for Application of Gypsum Veneer Plaster**
Table 2511.1.1

***C844—2010: Specification for Application of Gypsum Base to Receive Gypsum Veneer Plaster**
Table 2508.1

C847—14a: Specification for Metal Lath
Table 2507.2

C887—13: Specification for Packaged, Dry Combined Materials for Surface Bonding Mortar
1805.2.2, 2103.2.2

C897—15: Specification for Aggregate for Job-mixed Portland Cement-based Plaster
Table 2507.2

C920—14a: Standard for Specification for Elastomeric Joint Sealants
Table 2506.2

***C926—13: Specification for Application of Portland Cement-based Plaster**
2109.2.4.8, 2510.3, Table 2511.1.1, 2511.3, 2511.4, 2512.1, 2512.1.2, 2512.2, 2512.6, 2512.8.2, 2512.9, 2513.7

C932—06(2013): Specification for Surface-applied Bonding Compounds for Exterior Plastering
Table 2507.2

C933—14: Specification for Welded Wire Lath
Table 2507.2

***C946—10: Specification for Construction of Dry-stacked, Surface-bonded Walls**
2103.2.2, 2114.5

C954—15: Specification for Steel Drill Screws for the Application of Gypsum Panel Products or Metal Plaster Bases to Steel Studs from 0.033 inch (0.84 mm) to 0.112 inch (2.84 mm) in Thickness
Table 2506.2, Table 2507.2

C956—04(2015): Specification for Installation of Cast-in-place Reinforced Gypsum Concrete
2514.1

C957/C957M—15: Specification for High-solids Content, Cold Liquid-applied Elastomeric Waterproofing Membrane with Integral Wearing Surface
1507.15.2

C1002—14: Specification for Steel Self-piercing Tapping Screws for the Application of Gypsum Panel Products or Metal Plaster Bases to Wood Studs or Steel Studs
Table 2506.2, Table 2507.2

***C1007—11a(2011): Specification for Installation of Load Bearing (Transverse and Axial) Steel Studs and Related Accessories**
Table 2508.1, Table 2511.1.1

C1029—15: Specification for Spray-applied Rigid Cellular Polyurethane Thermal Insulation
1507.14.2

C1032—14: Specification for Woven Wire Plaster Base
Table 2507.2

C1047—14a: Specification for Accessories for Gypsum Wallboard and Gypsum Veneer Base
Table 2506.2, Table 2507.2

***C1063—14d: Specification for Installation of Lathing and Furring to Receive Interior and Exterior Portland Cement-based Plaster**
2109.2.4.8, 2510.3, Table 2511.1.1, 2512.1.1

C1088—14: Specification for Thin Veneer Brick Units Made from Clay or Shale
Table 721.1(2)

C1157/C1157M—11: Standard Performance Specification for Hydraulic Cement
1903.1, Table 2507.2

C1167—11: Specification for Clay Roof Tiles
1507.3.4

C1177/C1177M—13: Specification for Glass Mat Gypsum Substrate for Use as Sheathing
Table 1508.2, Table 2506.2

C1178/C1178M—13: Specification for Coated Mat Water-resistant Gypsum Backing Panel
Table 2506.2, Table 2509.2

INTERNATIONAL CODE COUNCIL®
Copyright © 2019 ICC & NYSDOS. ALL RIGHTS RESERVED. Accessed by Lauren Gualdino (lgualdino@briarcliffmanor.org), (-) Order Number #100880972 on May 08, 2020 07:05 AM (PDT) pursuant to License Agreement with ICC & NYSDOS. No further reproduction, no

100880972

ASTM—continued

C1186—08(2012): Specification for Flat Fiber Cement Sheets
1403.10, 1404.16.1, 1404.16.2

C1261—13: Specification for Firebox Brick for Residential Fireplaces
2111.6, 2111.9

C1278/C1278M—07a(2011): Specification for Fiber-reinforced Gypsum Panel
Table 1508.2, Table 2506.2

C1280—13a: Specification for Application of Exterior Gypsum Panel Products for Use as Sheathing
Table 2508.1, 2508.2

***C1283—11: Practice for Installing Clay Flue Lining**
2113.9.1, 2113.12

C1288—14: Standard Specification for Discrete Nonasbestos Fiber-cement Interior Substrate Sheets
Table 2509.2

C1289—15: Standard Specification for Faced Rigid Cellular Polyisocyanurate Thermal Insulation Board
Table 1508.2, 2603.10, Table 2603.12.1, Table 2603.12.2

C1313/C1313M—13: Standard Specification for Sheet Radiant Barriers for Building Construction Applications
1509.4

C1325—14: Standard Specification for Nonasbestos Fiber-mat Reinforced Cement Backer Units
Table 2509.2

C1328/C1328M—12: Specification for Plastic (Stucco Cement)
Table 2507.2

C1364—10B: Standard Specification for Architectural Cast Stone
2103.1

C1396/C1396M—14a: Specification for Gypsum Board
Figure 722.5.1(2), Figure 722.5.1(3), Table 2506.2

C1492—03(2009): Standard Specification for Concrete Roof Tile
1507.3.5

C1568—08(2013): Standard Test Method for Wind Resistance of Concrete and Clay Roof Tiles (Mechanical Uplift Resistance Method)
1504.2.1.1

C1600/C1600M—11: Standard Specification for Rapid Hardening Hydraulic Cement
Table 2507.2

C1629/C1629M—15: Standard Classification for Abuse-resistant Nondecorated Interior Gypsum Panel Products and Fiber-reinforced Cement Panels
403.2.3.1, 403.2.3.2, 403.2.3.4

C1658/C1658M—13: Standard Specification for Glass Mat Gypsum Panels
Table 2506.2

C1670—16: Standard Specification for Adhered Manufactured Stone Masonry Veneer Units
2103.1

C1766—13: Standard Specification for Factory-laminated Gypsum Panel Products
Table 2506.2

D25—12: Specification for Round Timber Piles
1810.3.2.4, 2303.1.12

D41/D41M—11: Specification for Asphalt Primer Used in Roofing, Dampproofing and Waterproofing
Table 1507.10.2

D43/D43M—00(2012)e1: Specification for Coal Tar Primer Used in Roofing, Dampproofing and Waterproofing
Table 1507.10.2

D56—05(2010): Test Method for Flash Point by Tag Closed Cup Tester
202

D86—15: Test Method for Distillation of Petroleum Products and Liquid Fuels at Atmospheric Pressure
202

D93—15: Test Methods for Flash Point by Pensky-Martens Closed Cup Tester
202

INTERNATIONAL CODE COUNCIL®
Copyright © 2019 ICC & NYSDOS. ALL RIGHTS RESERVED. Accessed by Lauren Gualdino (lgualdino@briarcliffmanor.org), (-) Order Number #100880972 on May 08, 2020 07:05 AM (PDT) pursuant to License Agreement with ICC & NYSDOS. No further reproduction, no

100880972

ASTM—continued

D226/D226M—09: Specification for Asphalt-saturated Organic Felt Used in Roofing and Waterproofing
1403.2, 1505.2, 1507.1.1, Table 1507.1.1(1), 1507.3.3, Table 1507.8, 1507.9.5, Table 1507.10.2, 1507.18.3, 1507.18.4.1

D227/D227M—03(2011)e1: Specification for Coal-tar-saturated Organic Felt Used in Roofing and Waterproofing
Table 1507.10.2

D312/D312M—15: Specification for Asphalt Used in Roofing
Table 1507.10.2

D422—63(2007)e2: Test Method for Particle-size Analysis of Soils
1803.5.3

D448—2012: Standard Classification for Sizes of Aggregate for Road and Bridge Construction
1507.12.3, 1507.13.3

D450/D450M—07(2013)e1: Specification for Coal-tar Pitch Used in Roofing, Dampproofing and Waterproofing
Table 1507.10.2

D635—14: Test Method for Rate of Burning and/or Extent and Time of Burning of Plastics in a Horizontal Position
2606.4

D1143/D1143M—07(2013): Test Methods for Deep Foundations Under Static Axial Compressive Load
1810.3.3.1.2

D1227—13: Specification for Emulsified Asphalt Used as a Protective Coating for Roofing
Table 1507.10.2, 1507.15.2

D1557—12e1: Test Methods for Laboratory Compaction Characteristics of Soil Using Modified Effort [56,000 ft-lb/ft^3 (2,700 kN m/m^3)]
1705.6, 1804.6

D1863/D1863M—05(2011)e1: Specification for Mineral Aggregate Used on Built-up Roofs
Table 1507.10.2

D1929—16: Standard Test Method for Determining Ignition Temperature of Plastics
402.6.4.4, 406.7.2, 1406.11.2.1, 1406.11.3.3, 1406.11.4.2, 1408.11.2.1, 2606.4

D1970/D1970M—15a: Specification for Self-adhering Polymer Modified Bituminous Sheet Materials Used as Steep Roof Underlayment for Ice Dam Protection
1507.1.1, 1502.2.8.2, 1507.3.9, 1507.5.7, 1507.8.8, 1507.9.9, 1507.11.2.1, 1507.18.4.1

D2178/D2178M—15: Specification for Asphalt Glass Felt Used in Roofing and Waterproofing
Table 1507.10.2

D2487—11: Practice for Classification of Soils for Engineering Purposes (Unified Soil Classification System)
Table 1610.1, 1803.5.1

D2626/D2626M—04(2012)e1: Specification for Asphalt Saturated and Coated Organic Felt Base Sheet Used in Roofing
Table 1507.1.1(1),1507.3.3, Table 1507.10.2

D2822/D2822M—05(2011)e1: Specification for Asphalt Roof Cement, Asbestos Containing
Table 1507.10.2

D2823/D2823M—05(2011)e1: Specification for Asphalt Roof Coatings, Asbestos Containing
Table 1507.10.2

D2824/D2824M—13: Standard Specification for Aluminum-pigmented Asphalt Roof Coatings, Nonfibered and Fibered without Asbestos
Table 1507.10.2

D2843—16: Standard Test Method for Density of Smoke from the Burning or Decomposition of Plastics
2606.4

D2859—16: Standard Test Method for Ignition Characteristics of Finished Textile Floor Covering Materials
804.4.1, 804.4.2

D2898—10: Test Methods for Accelerated Weathering of Fire-retardant-treated Wood for Fire Testing
1505.1, 2303.2.4, 2303.2.6

D3019—08: Specification for Lap Cement Used with Asphalt Roll Roofing, Nonfibered, Asbestos Fibered and Nonasbestos Fibered
Table 1507.10.2

D3161/D3161M—15: Test Method for Wind Resistance of Steep Slope Roofing Products (Fan Induced Method)
1504.1.1, Table 1504.1.1, 1504.3.3, 1507.17.8

INTERNATIONAL CODE COUNCIL®
Copyright © 2019 ICC & NYSDOS. ALL RIGHTS RESERVED. Accessed by Lauren Gualdino (lgualdino@briarcliffmanor.org), (-) Order Number #100880972 on May 08, 2020 07:05 AM (PDT) pursuant to License Agreement with ICC & NYSDOS. No further reproduction, no

100880972

ASTM—continued

D3200—74(2012): Standard Specification and Test Method for Establishing Recommended Design Stresses for Round Timber Construction Poles
2303.1.12

D3201/D3201M—13: Test Method for Hygroscopic Properties of Fire-retardant-treated Wood and Wood-based Products
2303.2.7

D3278—96(2011): Test Methods for Flash Point of Liquids by Small Scale Closed-cup Apparatus
202

D3462/D3462M—10a: Specification for Asphalt Shingles Made from Glass Felt and Surfaced with Mineral Granules
1507.2.4

D3468/D3468M—99(2013)e1: Specification for Liquid-applied Neoprene and Chlorosulfonated Polyethylene Used in Roofing and Waterproofing
1507.15.2

D3679—13: Specification for Rigid Poly (Vinyl Chloride) (PVC) Siding
1403.9, 1404.14

D3689/D3698M—07(2013)e1: Test Methods for Deep Foundations under Static Axial Tensile Load
1810.3.3.1.5

D3737—12: Practice for Establishing Allowable Properties for Structural Glued Laminated Timber (Glulam)
2303.1.3

D3746—85(2008): Test Method for Impact Resistance of Bituminous Roofing Systems
1504.7

D3747—79(2007): Specification for Emulsified Asphalt Adhesive for Adhering Roof Insulation
Table 1507.10.2

D3909/D3909M—14: Specification for Asphalt Roll Roofing (Glass Felt) Surfaced with Mineral Granules
1507.2.8.2, 1507.6.5, Table 1507.10.2

D3957—09: Standard Practices for Establishing Stress Grades for Structural Members Used in Log Buildings
2303.1.11

D4022/D4022M—07(2012)e1: Specification for Coal Tar Roof Cement, Asbestos Containing
Table 1507.10.2

D4272—15: Test Method for Total Energy Impact of Plastic Films by Dart Drop
1504.7

D4318—10e1: Test Methods for Liquid Limit, Plastic Limit and Plasticity Index of Soils
1803.5.3

D4434/D4434M—12: Specification for Poly (Vinyl Chloride) Sheet Roofing
1507.13.2

D4479/D4479M—07(2012)e1: Specification for Asphalt Roof Coatings—Asbestos-free
Table 1507.10.2

D4586/D4586M—07(2012)e1: Specification for Asphalt Roof Cement—Asbestos-free
Table 1507.10.2

D4601/D4601M—04(2012)e1: Specification for Asphalt-coated Glass Fiber Base Sheet Used in Roofing
Table 1507.10.2, 1507.11.2.1

D4637/D4637M—14e1: Specification for EPDM Sheet Used in Single-ply Roof Membrane
1507.12.2

D4829—11: Test Method for Expansion Index of Soils
1803.5.3

D4869/D4869M—15: Specification for Asphalt-saturated (Organic Felt) Underlayment Used in Steep Slope Roofing
1507.1.1, Table 1507.1.1(1), 1507.18.3, 1507.18.4.1

D4897/D4897M—01(2009): Specification for Asphalt-coated Glass Fiber Venting Base Sheet Used in Roofing
Table 1507.10.2

D4945—12: Test Method for High-strain Dynamic Testing of Deep Foundations
1810.3.3.1.2

D4990—97a(2013): Specification for Coal Tar Glass Felt Used in Roofing and Waterproofing
Table 1507.10.2

INTERNATIONAL CODE COUNCIL®
Copyright © 2019 ICC & NYSDOS. ALL RIGHTS RESERVED. Accessed by Lauren Gualdino (lgualdino@briarcliffmanor.org), (-) Order Number #100880972 on May 08, 2020 07:05 AM (PDT) pursuant to License Agreement with ICC & NYSDOS. No further reproduction, no

100880972

ASTM—continued

D5019—07a: Specification for Reinforced Nonvulcanized Polymeric Sheet Used in Roofing Membrane
1507.12.2

D5055—13e1: Specification for Establishing and Monitoring Structural Capacities of Prefabricated Wood I-joists
2303.1.2

D5456—14b: Specification for Evaluation of Structural Composite Lumber Products
2303.1.10

D5516—09: Test Method of Evaluating the Flexural Properties of Fire-retardant Treated Softwood Plywood Exposed to Elevated Temperatures
2303.2.5.1

D5643/D5643M—06(2012)e1: Specification for Coal Tar Roof Cement, Asbestos-free
Table 1507.10.2

D5664—10: Standard Test Method for Evaluating the Effects of Fire-retardant Treatment and Elevated Temperatures on Strength Properties of Fire-retardant Treated Lumber
2303.2.5.2

D5665/D5665M—99a(2014)e1: Specification for Thermoplastic Fabrics Used in Cold-applied Roofing and Waterproofing
Table 1507.10.2

D5726—98(2013): Specification for Thermoplastic Fabrics Used in Hot-applied Roofing and Waterproofing
Table 1507.10.2

D6083—05e01: Specification for Liquid Applied Acrylic Coating Used in Roofing
Table 1507.10.2, Table 1507.14.3, 1507.15.2

D6162/D6162M—00a(2015)e1: Specification for Styrene-butadiene-styrene (SBS) Modified Bituminous Sheet Materials Using a Combination of Polyester and Glass Fiber Reinforcements
1507.11.2

D6163/D6163M—00(2015)e1: Specification for Styrene-butadiene-styrene (SBS) Modified Bituminous Sheet Materials Using Glass Fiber Reinforcements
1507.11.2

D6164/D6164M—11: Specification for Styrene-butadiene-styrene (SBS) Modified Bituminous Sheet Metal Materials Using Polyester Reinforcements
1507.11.2

D6222/D6222M—11: Specification for Atactic Polypropylene (APP) Modified Bituminous Sheet Materials Using Polyester Reinforcements
1507.11.2

D6223/D6223M—02(2009)e1: Specification for Atactic Polypropylene (APP) Modified Bituminous Sheet Materials Using a Combination of Polyester and Glass Fiber Reinforcements
1507.11.2

D6298—13: Specification for Fiberglass Reinforced Styrene-butadiene-styrene (SBS) Modified Bituminous Sheets with a Factory Applied Metal Surface
1507.11.2

D6305—08(2015)e1: Practice for Calculating Bending Strength Design Adjustment Factors for Fire-retardant-treated Plywood Roof Sheathing
2303.2.5.1

D6380/D6380M—03(2013)e1: Standard Specification for Asphalt Roll Roofing (Organic) Felt
Table 1507.1.1(1), 1507.2.8.2, 1507.3.3, 1507.6.5

D6464—03a(2009)e1: Standard Specification for Expandable Foam Adhesives for Fastening Gypsum Wallboard to Wood Framing
Table 2506.2, 2508.4

D6509/D6509M—09(2015): Standard Specification for Atactic Polypropylene (APP) Modified Bituminous Base Sheet Materials Using Glass Fiber Reinforcements
1507.11.2

D6694/D6694M—08(2013)e1: Standard Specification for Liquid-applied Silicone Coating Used in Spray Polyurethane Foam Roofing Systems
Table 1507.14.3, 1507.15.2

D6754/D6754M—10: Standard Specification for Ketone Ethylene Ester Based Sheet Roofing
1507.13.2

INTERNATIONAL CODE COUNCIL®
Copyright © 2019 ICC & NYSDOS. ALL RIGHTS RESERVED. Accessed by Lauren Gualdino (lgualdino@briarcliffmanor.org), (-) Order Number #100880972 on May 08, 2020 07:05 AM (PDT) pursuant to License Agreement with ICC & NYSDOS. No further reproduction, no

100880972

ASTM—continued

D6757—2013: Specification for Underlayment Felt Containing Inorganic Fibers Used in Steep Slope Roofing
1507.1.1, Table 1507.1.1(1), 1507.18.3, 1507.18.4.1

D6841—08: Standard Practice for Calculating Design Value Treatment Adjustment Factors for Fire-retardant Treated Lumber
2303.2.5.2

D6878/D6878M—13: Standard Specification for Thermoplastic Polyolefin Based Sheet Roofing
1507.13.2

D6947/D6947M—07(2013)e1: Standard Specification for Liquid Applied Moisture Cured Polyurethane Coating Used in Spray Polyurethane Foam Roofing System
Table 1507.14.3, 1507.15.2

D7032—14: Standard Specification for Establishing Performance Ratings for Wood, Plastic Composite Deck Boards and Guardrail Systems (Guards or Rails)
705.2.3.1, 2612.2, 2612.4, 2612.5.1

D7147—11: Specification for Testing and Establishing Allowable Loads of Joist Hangers
2303.5, 2304.10.3

D7158/D7158M—16: Standard Test Method for Wind Resistance of Asphalt Shingles (Uplift Force/Uplift Resistance Method)
1504.1.1, Table 1504.1.1

D7254—15: Standard Specification for Polypropylene (PP) Siding
1403.12

D7425/D7425M—13: Standard Specification for Spray Polyurethane Foam Used for Roofing Applications
1507.14.2

D7655/D7655M—12: Standard Classification for Size of Aggregate Used as Ballast for Roof Membrane Systems
1507.12.3, 1507.13.3

D7672—14: Standard Specification for Evaluating Structural Capacities of Rim Board Products and Assemblies
2303.1.13

E84—16: Standard Test Methods for Surface Burning Characteristics of Building Materials
202, 402.6.4.4, 406.7.2, 703.5.2, 720.1, 720.4, 803.1.2, 803.5.2, 803.10, 803.11, 803.12, 803.13, 806.7, 1402.5, 1403.12.1, 1406.9, 1406.10.1, 1408.9, 1408.10.1, 1510.6.2, 1510.6.3, 2303.2, 2603.3, 2603.4.1.13, 2603.5.4, 2603.5.5, 2603.7, 2604.2.4, 2606.4, 2612.3, 2614.3, 3105.3, D102.2.8

E90—09: Test Method for Laboratory Measurement of Airborne Sound Transmission Loss of Building Partitions and Elements
1206.2, 1206.2.1

***E96/E96M—00: Standard Test Methods for Water Vapor Transmission of Materials**
202

E108—16: Standard Test Methods for Fire Tests of Roof Coverings
1505.1, 2603.6, 2610.2, 2610.3

E119—16: Standard Test Methods for Fire Tests of Building Construction and Materials
703.2, 703.2.1, 703.2.3, 703.2.5, 703.3, 703.4, 703.6, 704.12, 705.7, 705.8.5, 707.6, 712.1.13.2, 714.4.1, 714.5.1, 715.1, 715.4, Table 716.1(1), Table 716.1(2), Table 716.1(3), 716.1.2.3, 716.2.5.1.1, 716.2.5.4, 716.3.2.1.1, 717.3.1, 717.5.2, 717.5.3, 717.6.1, 717.6.2, Table 721.1(1), 2103.1, 2603.5.1

E136—16: Standard Test Method for Behavior of Materials in a Vertical Tube Furnace at 750°C
703.5.1

E283—04(2012): Standard Test Method for Determining Rate of Air Leakage through Exterior Windows, Curtain Walls and Doors Under Specified Pressure Differences across the Specimen
202

E330/E330M—14: Standard Test Method for Structural Performance of Exterior Windows, Doors, Skylights and Curtain Walls by Uniform Static Air Pressure Difference
1709.5.2

E331—00(2009): Standard Test Method for Water Penetration of Exterior Windows, Skylights, Doors and Curtain Walls by Uniform Static Air Pressure Difference
1402.2

E492—09: Test Method for Laboratory Measurement of Impact Sound Transmission Through Floor-ceiling Assemblies Using the Tapping Machine
1206.3

INTERNATIONAL CODE COUNCIL®
Copyright © 2019 ICC & NYSDOS. ALL RIGHTS RESERVED. Accessed by Lauren Gualdino (lgualdino@briarcliffmanor.org), (-) Order Number #100880972 on May 08, 2020 07:05 AM (PDT) pursuant to License Agreement with ICC & NYSDOS. No further reproduction, no

100880972

ASTM—continued

E605/E605M—93(2015)e1: Test Method for Thickness and Density of Sprayed Fire-resistive Material (SFRM) Applied to Structural Members
1705.14.4.1, 1705.14.4.2, 1705.14.4.5, 1705.14.5

E648—15e1: Standard Test Method for Critical Radiant Flux of Floor-covering Systems Using a Radiant Heat Energy Source
406.2.4, 424.2, 804.2, 804.3

E681—09(2015): Test Methods for Concentration Limits of Flammability of Chemical Vapors and Gases
202

E736/E736M—00(2015)e1: Test Method for Cohesion/Adhesion of Sprayed Fire-resistive Materials Applied to Structural Members
704.13.3.2, 1705.14.6

E814—2013A: Test Method for Fire Tests of Penetration Firestop Systems
202, 714.4.1.2, 714.4.2, 714.5.1.2

E970—14: Standard Test Method for Critical Radiant Flux of Exposed Attic Floor Insulation Using a Radiant Heat Energy Source
720.3.1

E1300—12ae1: Practice for Determining Load Resistance of Glass in Buildings
2404.1, 2404.2, 2404.3.1, 2404.3.2, 2404.3.3, 2404.3.4, 2404.3.5

E1354—16: Standard Test Method for Heat and Visible Smoke Release Rates for Materials and Products Using an Oxygen Consumption Calorimeter
424.2

E1592—05(2012): Test Method for Structural Performance of Sheet Metal Roof and Siding Systems by Uniform Static Air Pressure Difference
1504.3.2

***E1602—03e1: Guide for Construction of Solid Fuel-burning Masonry Heaters**
2112.2

E1886—13A: Standard Test Method for Performance of Exterior Windows, Curtain Walls, Doors and Impact Protective Systems Impacted by Missile(s) and Exposed to Cyclic Pressure Differentials
1609.2

E1966—15: Standard Test Method for Fire-resistive Joint Systems
202, 715.3

E1996—14a: Specification for Performance of Exterior Windows, Curtain Walls, Doors and Impact Protective Systems Impacted by Windborne Debris in Hurricanes
1609.2, 1609.2.2

E2072—14: Standard Specification for Photoluminescent (Phosphorescent) Safety Markings
1025.4

E2174—14b: Standard Practice for On-site Inspection of Installed Fire Stops
1705.17.1

E2178—13: Standard Test Method for Air Permeance of Building Materials
202

E2273—03(2011): Standard Test Method for Determining the Drainage Efficiency of Exterior Insulation and Finish Systems (EIFS) Clad Wall Assemblies
1407.4.1

E2307—15b: Standard Test Method for Determining Fire Resistance of Perimeter Fire Barriers Using the Intermediate-scale, Multistory Test Apparatus
715.4

E2353—14: Standard Test Methods for Performance of Glazing in Permanent Railing Systems, Guards and Balustrades
2407.1.2

E2393—10a(2015): Standard Practice for On-site Inspection of Installed Fire Resistive Joint Systems and Perimeter Fire Barriers
1705.17.2

E2404—15a: Practice for Specimen Preparation and Mounting of Textile, Paper or Polymeric (Including Vinyl) and Wood Wall or Ceiling Coverings, Facing and Veneers to Assess Surface Burning Characteristics
803.5.2, 803.12

INTERNATIONAL CODE COUNCIL®
Copyright © 2019 ICC & NYSDOS. ALL RIGHTS RESERVED. Accessed by Lauren Gualdino (lgualdino@briarcliffmanor.org), (-) Order Number #100880972 on May 08, 2020 07:05 AM (PDT) pursuant to License Agreement with ICC & NYSDOS. No further reproduction, no

100880972

ASTM—continued

E2556/E2556M—10: Standard Specification for Vapor Permeable Flexible Sheet Water-resistive Barriers Intended for Mechanical Attachment
2510.6

E2568—09e1: Standard Specification for PB Exterior Insulation and Finish Systems
1407.2

E2570/E2570M—07(2014)e1: Standard Test Method for Evaluating Water-resistive Barrier (WRB) Coatings Used under Exterior Insulation and Finish Systems (EIFS) for EIFS with Drainage
1407.4.1.1, 1705.16.1

E2573—12: Standard Practice for Specimen Preparation and Mounting of Site-fabricated Stretch Systems to Assess Surface Burning Characteristics
803.10

E2579—13: Standard Practice for Specimen Preparation and Mounting of Wood Products to Assess Surface Burning Characteristics
803.11

E2599—15: Standard Practice for Specimen Preparation and Mounting of Reflective Insulation, Radiant Barrier and Vinyl Stretch Ceiling Materials for Building Applications to Assess Surface Burning Characteristics
2614.3

E2634—11(2015): Standard Specification for Flat Wall Insulating Concrete Form (ICF) Systems
1903.4

E2751/E2751M—13: Practice for Design and Performance of Supported Laminated Glass Walkways
2409.1

F547—06(2012): Terminology of Nails for Use with Wood and Wood-base Materials
Table 2506.2

F1346—91(2010): Standard Performance Specification for Safety Covers and Labeling Requirements for All Covers for Swimming Pools, Spas and Hot Tubs
3109.3.1

F1667—15: Specification for Driven Fasteners: Nails, Spikes and Staples
Table 721.1(2), Table 721.1(3), 1507.2.5, 1507.17.5, 2303.6, Table 2304.10.1, 2304.10.5, Table 2506.2, Table 2603.13.1, Table 2603.13.2

F2006—17: Standard/Safety Specification for Window Fall Prevention Devices for Nonemergency Escape (Egress) and Rescue (Ingress) Windows
1015.8

F2090—17: Specification for Window Fall Prevention Devices with Emergency Escape (Egress) Release Mechanisms
1015.8, 1015.8.1

F2200—14: Standard Specification for Automated Vehicular Gate Construction
3110.2

F2208—09(2014): Standard Safety Specification for Residential Pool Alarms
3109.5

G152—13: Practice for Operating Open Flame Carbon Arc Light Apparatus for Exposure of Nonmetallic Materials
1504.6

G154—12a: Practice for Operating Fluorescent Light Apparatus for UV Exposure of Nonmetallic Materials
1504.6

G155—13: Practice for Operating Xenon Arc Light Apparatus for Exposure of Nonmetallic Materials
1504.6

AWC

American Wood Council
222 Catoctin Circle SE, Suite 201
Leesburg, VA 20175

***AWC WCD No. 4—2003: Wood Construction Data—Plank and Beam Framing for Residential Buildings**
2306.1.2

***ANSI/AWC WFCM—2018: Wood Frame Construction Manual for One- and Two-Family Dwellings**
1609.1.1, 1609.1.1.1, 2302.1, 2308.2.4, 2308.6.7.2, 2309.1

INTERNATIONAL CODE COUNCIL®
Copyright © 2019 ICC & NYSDOS. ALL RIGHTS RESERVED. Accessed by Lauren Gualdino (lgualdino@briarcliffmanor.org), (-) Order Number #100880972 on May 08, 2020 07:05 AM (PDT) pursuant to License Agreement with ICC & NYSDOS. No further reproduction, no

100880972

AWC—continued

***ANSI/AWC NDS—2018: National Design Specification (NDS) for Wood Construction—with 2018 NDS Supplement**
202, 722.1, Table 1604.3, 1809.12, 1810.3.2.4, Table 1810.3.2.6, 1905.1.8, 2304.13, 2306.1, Table 2306.2(1), Table 2306.2(2), Table 2306.3(1), Table 2306.3(2), 2307.1, Table 2603.1.3.1, Table 2603.13.2

***AWC STJR—2015: Span Tables for Joists and Rafters**
2306.1.1, 2308.4.2.1, 2308.7.1, 2308.7.2

***ANSI/AWC PWF—2015: Permanent Wood Foundation Design Specification**
1805.2, 1807.1.4, 2304.10.5.2

***ANSI/AWC SDPWS—2015: Special Design Provisions for Wind and Seismic**
202, 2305.1, 2305.2, 2305.3, 2306.1, 2306.2, 2306.3, Table 2306.3(1), Table 2306.3(3), 2307.1

AWCI

Association of the Wall and Ceiling Industry
513 West Broad Street, Suite 210
Falls Church, VA 22046

12-B—14: Technical Manual 12B, Third Edition; Standard Practice for the Testing and Inspection of Field Applied Thin Film Intumescent Fire-resistive Materials; an Annotated Guide:
1705.15

AWPA

American Wood Protection Association
P.O. Box 361784
Birmingham, AL 35236-1784

C1—03: All Timber Products—Preservative Treatment by Pressure Processes
1505.6

M4—16: Standard for the Care of Preservative-treated Wood Products
1810.3.2.4.1, 2303.1.9

U1—16: USE CATEGORY SYSTEM: User Specification for Treated Wood Except Commodity Specification H
Table 1507.9.6, 1807.1.4, 1807.3.1, 1809.12, 1810.3.2.4.1, 2303.1.9, 2304.12.1, 2304.12.2, 2304.12.3, 2304.12.4, 2304.12.5

AWS

American Welding Society
8669 NW 36 Street, #130
Miami, FL 33166

D1.4/D1.4M—2011: Structural Welding Code—Reinforcing Steel Including Metal Inserts and Connections In Reinforced Concrete Construction
1704.5, Table 1705.3, 1705.3.1, 2107.3

BHMA

Builders Hardware Manufacturers' Association
355 Lexington Avenue, 15th Floor
New York, NY 10017-6603

***A 156.10—2011: Power Operated Pedestrian Doors**
1010.1.4.2

***A 156.19—2013: Standard for Power Assist and Low Energy Power Operated Doors**
1010.1.4.2

***A 156.27—2011: Power and Manual Operated Revolving Pedestrian Doors**
1010.1.4.1.1

A 156.38—2014: Low Energy Power Operated Sliding and Folding Doors
1010.1.4.2

CEN

European Committee for Standardization (CEN)
Central Secretariat
Rue de Stassart 36
B-10 50 Brussels

EN 1081—98: Resilient Floor Coverings—Determination of the Electrical Resistance
406.7.1

INTERNATIONAL CODE COUNCIL®
Copyright © 2019 ICC & NYSDOS. ALL RIGHTS RESERVED. Accessed by Lauren Gualdino (lgualdino@briarcliffmanor.org), (-) Order Number #100880972 on May 08, 2020 07:05 AM (PDT) pursuant to License Agreement with ICC & NYSDOS. No further reproduction, no

100880972

CEN—continued

BS EN 15250—2007: Slow Heat Release Appliances Fired by Solid Fuel Requirements and Test Methods
2112.2, 2112.5

CPA

Composite Panel Association
19465 Deerfield Avenue, Suite 306
Leesburg, VA 20176

ANSI A135.4—2012: Basic Hardboard
1403.3.1, 2303.1.7

ANSI A135.5—2012: Prefinished Hardboard Paneling
2303.1.7, 2304.7

ANSI A135.6—2012: Engineered Wood Siding
1403.3.2, 2303.1.7

A208.1—2016: Particleboard
2303.1.8, 2303.1.8.1

CPSC

Consumer Product Safety Commission
4330 East/West Highway
Bethesda, MD 20814

16 CFR Part 1201 (2002): Safety Standard for Architectural Glazing Material
2406.2, Table 2406.2(1), 2406.3.1, 2407.1, 2407.1.4.1, 2408.2.1, 2408.3, 2409.2, 2409.3.1, 2409.4.1

16 CFR Part 1209 (2002): Interim Safety Standard for Cellulose Insulation
720.6

16 CFR Part 1404 (2002): Cellulose Insulation
720.6

16 CFR Part 1500 (2009): Hazardous Substances and Articles; Administration and Enforcement Regulations
202

16 CFR Part 1500.44 (2009): Method for Determining Extremely Flammable and Flammable Solids
202

16 CFR Part 1507 (2002): Fireworks Devices
202

16 CFR Part 1630 (2007): Standard for the Surface Flammability of Carpets and Rugs
804.4.1

CSA

Canadian Standards Association
8501 East Pleasant Valley Road
Cleveland, OH 44131-5516

AAMA/WDMA/CSA 101/I.S.2/A440—17: North American Fenestration Standard/Specifications for Windows, Doors and Unit Skylights
1709.5.1, 2405.5

***ASME A17.1—2016/CSA B44—16: Safety Code for Elevators and Escalators**
907.3.3, 911.1.6, 1009.4.1, 1607.10.1, 3001.2, Table 3001.3, 3001.5, 3002.5, 3003.2, 3007.1, 3008.1.4, 3008.7.1

ASME A17.7—2007/CSA B44.7—07: Performance-based Safety Code for Elevators and Escalators
Table 3001.3, 3001.5, 3002.5

CSSB

Cedar Shake & Shingle Bureau
P. O. Box 1178
Sumas, WA 98295-1178

CSSB—97: Grading and Packing Rules for Western Red Cedar Shakes and Western Red Shingles of the Cedar Shake and Shingle Bureau
Table 1507.8.5, Table 1507.9.6

INTERNATIONAL CODE COUNCIL®
Copyright © 2019 ICC & NYSDOS. ALL RIGHTS RESERVED. Accessed by Lauren Gualdino (lgualdino@briarcliffmanor.org), (-) Order Number #100880972 on May 08, 2020 07:05 AM (PDT) pursuant to License Agreement with ICC & NYSDOS. No further reproduction, no

100880972

DASMA

Door & Access Systems Manufacturers Association International
1300 Sumner Avenue
Cleveland, OH 44115-2851

ANSI/DASMA 107—2017: Room Fire Test Standard for Garage Doors Using Foam Plastic Insulation
2603.4.1.9

ANSI/DASMA 108—2017: Standard Method for Testing Sectional Garage Doors, Rolling Doors and Flexible Doors: Determination of Structural Performance Under Uniform Static Air Pressure Difference
1709.5.2

ANSI/DASMA 115—2016: Standard Method for Testing Sectional Garage Doors, Rolling Doors and Flexible Doors: Determination of Structural Performance Under Missile Impact and Cyclic Wind Pressure
1609.2.3

DOC

U.S. Department of Commerce
National Institute of Standards and Technology
1401 Constitution Avenue NW
Washington, DC 20230

PS 1—09: Structural Plywood
2303.1.5, 2304.7, Table 2304.8(4), Table 2304.8(5), Table 2306.2(1), Table 2306.2(2)

PS 2—10: Performance Standard for Wood-based Structural-use Panels
2303.1.5, 2304.7, Table 2304.8(5), Table 2306.2(1), Table 2306.2(2)

PS 20—05: American Softwood Lumber Standard
202, 1810.3.2.4, 2303.1.1

DOL

U.S. Department of Labor
Occupational Safety and Health Administration
c/o Superintendent of Documents
U.S. Government Printing Office
Washington, DC 20402-9325

29 CFR Part 1910.1000 (2015) : Air Contaminants
202

DOTn

U.S. Department of Transportation
Office of Hazardous Material Safety
1200 New Jersey Avenue, SE
East Building, 2nd Floor
Washington, DC 20590

49 CFR Parts 100–185—2015: Hazardous Materials Regulations
202

***49 CFR Parts 173.137—(2009): Shippers—General Requirements for Shipments and Packaging—Class 8—Assignment of Packing Group**
202

49 CFR Parts 173–178—2015: Specification of Transportation of Explosive and Other Dangerous Articles, UN 0335, UN 0336 Shipping Containers
202

FEMA

Federal Emergency Management Agency
Federal Center Plaza
500 C Street S.W.
Washington, DC 20472

***FEMA-TB-11—01: Crawlspace Construction for Buildings Located in Special Flood Hazard Areas**
1805.1.2.1

INTERNATIONAL CODE COUNCIL®
Copyright © 2019 ICC & NYSDOS. ALL RIGHTS RESERVED. Accessed by Lauren Gualdino (lgualdino@briarcliffmanor.org), (-) Order Number #100880972 on May 08, 2020 07:05 AM (PDT) pursuant to License Agreement with ICC & NYSDOS. No further reproduction, no

100880972

FM

FM Approvals
Headquarters Office
1151 Boston-Providence Turnpike
P.O. Box 9102
Norwood, MA 02062

4430—2012: Approval Standard for Heat and Smoke Vents
910.3.1

4450—(1989): Approval Standard for Class 1 Insulated Steel Deck Roofs—with Supplements through July 1992
1509.2

4470—2016: Approval Standard for Single-ply Polymer-modified Bitumen Sheet, Built-up Roof (BUR) and Liquid Applied Roof Assemblies for Use in Class 1 and Noncombustible Roof Deck Construction
1504.7

4474—2011: American National Standard for Evaluating the Simulated Wind Uplift Resistance of Roof Assemblies Using Static Positive and/or Negative Differential Pressures
1504.3.1, 1504.3.2, 1504.3.3

4880—2015: Approval Standard for Class 1 Fire Rating of Building Panels or Interior Finish Materials
2603.4, 2603.9

GA

Gypsum Association
962 Wayne Ave, Suite 620
Silver Springs, MD 20910

***GA 216—2013: Application and Finishing of Gypsum Panel Products**
Table 2508.1, 2509.2

GA 600—2015: Fire-resistance Design Manual, 21st Edition
Table 721.1(1), Table 721.1(2), Table 721.1(3)

HPVA

Hardwood Plywood & Veneer Association
1825 Michael Faraday Drive
Reston, VA 20190

ANSI/HPVA HP-1—2016: American National Standard for Hardwood and Decorative Plywood
2303.3, 2304.7

ICC

International Code Council, Inc.
500 New Jersey Ave NW
6th Floor
Washington, DC 20001

***EBCNYS—20: Existing Building Code of New York State**
101.4.7, 102.6, 201.3, Table 504.3, Table 504.4, Table 504.6, 2701.1, 2801.1, 3113.1.1

***ECCCNYS—20: Energy Conservation Construction Code of New York State**
101.4.6, 201.3, 202, 1202.1, 1202.4.3.2, 1301.1.1, 1405.3

INTERNATIONAL CODE COUNCIL®
Copyright © 2019 ICC & NYSDOS. ALL RIGHTS RESERVED. Accessed by Lauren Gualdino (lgualdino@briarcliffmanor.org), (-) Order Number #100880972 on May 08, 2020 07:05 AM (PDT) pursuant to License Agreement with ICC & NYSDOS. No further reproduction, no

100880972

ICC—continued

***FCNYS—20: Fire Code of New York State**
101.4.5, 102.6, 201.3, 202, 307.1, Table 307.1(1), Table 307.1(2), 307.1.1, 307.1.2, 403.4.5, 404.2, 406.2.9, 406.7, 406.8, 407.4, 410.2.6, 411.1, 412.1, 412.5.1, 413.1, 414.1.1, 414.1.2, 414.1.2.1, 414.2, Table 414.2.5(1), 414.2.5.1, 414.2.5.2, Table 414.2.5(2), 414.2.5.3, 414.3, 414.5, 414.5.1, Table 414.5.1, 414.5.2, 414.5.3, 414.6, 415.2, 415.6, 415.6.1, 415.6.1.1, 415.6.1.4, Table 415.6.2, 415.7.3, 415.8.2, 415.9, 415.9.1, 415.9.1.3, 415.9.1.4, 415.9.1.6, 415.9.1.7, 415.9.1.8, 415.9.2, 415.9.3, 415.10, 415.11, 415.11.1.7, 415.11.4, 415.11.7.2, 415.11.9.3, 415.11.10.1, 416.1, 416.2.3, 416.4, 422.3.1, 426.1, 426.1.4, 427.1, 427.2.3, 428.1, 428.2, 428.3, Table 504.3, Table 504.4, Table 506.2, 507.4, 507.8.1.1.1, 507.8.1.1.2, 507.8.1.1.3, Table 509, 705.8.1, 707.1, 806.3, 901.2, 901.3, 901.5, 901.6.3, 901.6.4, 903.2.7.1, Table 903.2.11.6, 903.2.12, 903.5, 904.2.2, 904.11.3, 905.1, 905.3.6, 905.3.7, 906.1, Table 906.1, 906.4, 907.1.1, 907.2.5, 907.2.6, 907.2.8, 907.2.12.2, 907.2.14, 907.2.15, 907.2.22, 907.5.2.2, 907.6.6, 907.6.6.2, 907.8, 909.6.3, 909.12.1, 909.19, 909.20, 910.2.2, 910.5, 912.4.3, 915.1, 916.7, 916.11, 918.1, 1002.1, 1002.2, 1010.1.9.7, 1202.5.2, 1202.6, 1507.16, 1512.1, Table 1604.5, 2603.4.1.12, 2701.1, 2702.1.3, 2702.2.3, 2702.2.7, 2702.2.10, 2702.2.12, 2702.2.14, 2702.4, 3003.3, 3008.1.3, 3102.1, 3102.8.3, 3103.1, 3111.1.2, 3111.2, 3111.3, 3111.3.4, 3111.3.5, 3302.3, 3303.7, 3309.2

***FGCNYS—20: Fuel Gas Code of New York State**
101.4.1, 201.3, Table 307.1(1), 415.9.2, 2113.11.1.2, 2113.15, 2702.2.6, 2801.1

***ICC A117.1—09: Accessible and Usable Buildings and Facilities**
202, 907.5.2.3.3, 1009.8.2, 1009.9, 1009.11, 1010.1.9.8.1, 1012.1, 1012.6.5, 1012.10, 1013.4, 1023.9, 1102.1, 1107.2, 1109.1, 1109.2, 1109.5.1, 1109.5.2, 1111.2, 1111.3, 1111.4, 1111.4.2

***ICC 300—17: ICC Standard on Bleachers, Folding and Telescopic Seating and Grandstands**
1029.1.1, 1029.7, Table 1607.1

***ICC 400—17: Standard on Design and Construction of Log Structures**
2302.2

***ICC 500—14: ICC/NSSA Standard on the Design and Construction of Storm Shelters**
202, 423.1, 423.2, 423.3, 423.4, 1604.5.1, 1604.10

***ICC 600—14: Standard for Residential Construction in High-wind Regions**
1609.1.1, 1609.1.1.1, 2308.2.4

ICC 900/SRCC 300—2015: Solar Thermal System Standard
3111.2.1

ICC 901/SRCC 100—2015: Solar Thermal Collector Standard
3111.2.1

IPSDC—18: International Private Sewage Disposal Code®
101.4.3, 2901.1

ISPSC—18: International Swimming Pool and Spa Code®
3109.1

IWUIC—18: International Wildland-Urban Interface Code®
Table 1505.1

***MCNYS—20: Mechanical Code of New York State**
101.4.2, 201.3, Table 307.1(1), 406.2.9, 406.6.2, 406.8.1, 406.8.4, 407.2.6, 409.3, 412.5.6, 414.1.2, 414.3, 415.9.1, 415.9.2, 415.9.3, 415.11.11, 416.2.3, 420.8, 420.9, 420.10.1, 421.4, 426.1.4, 427.2.2, 427.2.3, 428.4.7, 603.1, 603.1.1, 603.1.2, 712.1.6, 717.2.2, 717.5.3, 715.4, 715.5, 717.6.1, 717.6.2, 717.6.3, 718.5, 720.1, 720.7, 903.2.11.4, 904.2.2, 904.12, 907.3.1, 909.1, 909.10.2, 909.13.1, 910.4.7, 1006.2.2.3, 1011.16, 1020.5.1, 1202.1, 1202.2.2, 1202.4.3.2, 1202.5.2.1, 1202.6, 1208.3, 2702.2.5, 2801.1, 3111.2

***PCNYS—20: Plumbing Code of New York State**
101.4.3, 201.3, 415.9.3, 603.1.2, 718.5, 903.3.5, 1205.3.3, 1502.1, 1502.2, 1805.4.3, 2901.1, Table 2902.1, 3111.2, 3305.1

***PMCNYS—20: Property Maintenance Code of New York State**
101.4.4, 102.6, 103.3, 2701.1, 2801.1

***RCNYS—20: Residential Code of New York State**
101.2, 305.2.3, 308.2.4, 308.3.2, 308.5.4, 310.1, 310.4.1, 310.4.2, 2308.1

SBCCI SSTD 11—97: Test Standard for Determining Wind Resistance of Concrete or Clay Roof Tiles
1504.2.1.1, 1504.2.1.2

INTERNATIONAL CODE COUNCIL®
Copyright © 2019 ICC & NYSDOS. ALL RIGHTS RESERVED. Accessed by Lauren Gualdino (lgualdino@briarcliffmanor.org), (-) Order Number #100880972 on May 08, 2020 07:05 AM (PDT) pursuant to License Agreement with ICC & NYSDOS. No further reproduction, no

100880972

ISO

International Organization for Standardization
Chemin de Blandonnet 8
CP 401
1214 Vernier
Geneva, Switzerland

ISO 8115—86: Cotton Bales—Dimensions and Density
Table 307.1(1), Table 415.11.1.1.1

ISO 8336—09: Fiber-cement Flat Sheets—Product Specification and Test Methods
1403.10, 1404.16.1, 1404.16.2, Table 2509.2

MHI

Material Handling Institute
8720 Red Oak Blvd. Suite 201
Charlotte, NC 28217

ANSI MH29.1—08: Safety Requirements for Industrial Scissors Lifts
Table 3001.3

NAAMM

National Association of Architectural Metal Manufacturers
800 Roosevelt Road, Bldg. C, Suite 312
Glen Ellyn, IL 60137

FP 1001—07: Guide Specifications for Design of Metal Flag Poles
1609.1.1

NCMA

National Concrete Masonry Association
13750 Sunrise Valley
Herndon, VA 22071-4662

TEK 5—84(1996): Details for Concrete Masonry Fire Walls
Table 721.1(2)

NFPA

National Fire Protection Association
1 Batterymarch Park
Quincy, MA 02169-7471

***10—18: Standard for Portable Fire Extinguishers**
906.2, 906.3.2, 906.3.4, Table 906.3(1), Table 906.3(2)

***11—16: Standard for Low Expansion Foam**
904.7

***12—15: Standard on Carbon Dioxide Extinguishing Systems**
904.8, 904.12

***12A—15: Standard on Halon 1301 Fire Extinguishing Systems**
904.9

***13—16: Standard for Installation of Sprinkler Systems**
712.1.3.1, 903.3.1.1, 903.3.2, 903.3.8.2, 903.3.8.5, 904.12, 905.3.4, 907.6.4, 1019.3

***13D—16: Standard for the Installation of Sprinkler Systems in One- and Two-family Dwellings and Manufactured Homes**
903.3.1.3

***13R—16: Standard for the Installation of Sprinkler Systems in Low-rise Residential Occupancies**
903.3.1.2, 903.3.5.2, 903.4

***14—16: Standard for the Installation of Standpipe and Hose System**
905.2, 905.3.4, 905.4.2, 905.6.2, 905.8

***16—15: Standard for the Installation of Foam-water Sprinkler and Foam-water Spray Systems**
904.7, 904.12

***17—17: Standard for Dry Chemical Extinguishing Systems**
904.6, 904.12

INTERNATIONAL CODE COUNCIL®
Copyright © 2019 ICC & NYSDOS. ALL RIGHTS RESERVED. Accessed by Lauren Gualdino (lgualdino@briarcliffmanor.org), (-) Order Number #100880972 on May 08, 2020 07:05 AM (PDT) pursuant to License Agreement with ICC & NYSDOS. No further reproduction, no

100880972

NFPA—continued

***17A—17: Standard for Wet Chemical Extinguishing Systems**
904.5, 904.12

***20—16: Standard for the Installation of Stationary Pumps for Fire Protection**
412.2.4.1, 913.1, 913.2, 913.2.1, 913.5

***30—18: Flammable and Combustible Liquids Code**
415.6, 507.8.1.1.1, 507.8.1.1.2

***30A—18: Code for Motor Fuel Dispensing Facilities and Repair Garages**
406.2.9.2

***31—16: Standard for the Installation of Oil-burning Equipment**
2113.15

***32—16: Standard for Dry Cleaning Plants**
415.9.3

***40—16: Standard for the Storage and Handling of Cellulose Nitrate Film**
409.1

***45—15: Standard on Fire Protection Laboratories Using Chemicals (2015 Edition)**
428.3.7

***58—17: Liquefied Petroleum Gas Code**
415.9.2

***61—17: Standard for the Prevention of Fires and Dust Explosions in Agricultural and Food Product Facilities**
426.1

***70—17: National Electrical Code**
108.3, 406.2.7, 406.2.9, 412.5.7, 415.11.1.8, Table 509, 904.3.1, 907.6.1, 909.12.2, 909.16.3, 910.4.6, 1204.4.1, 2701.1, 2702.1.3, 3111.3

***72—16: National Fire Alarm and Signaling Code**
407.4.4.3, 407.4.4.5, 407.4.4.5.1, 901.6, 903.4.1, 904.3.5, 907.1.2, 907.2, 907.2.6, 907.2.9.3, 907.2.10, 907.2.12.2, 907.3, 907.3.3, 907.3.4, 907.5.2.1.2, 907.5.2.2, 907.5.2.2.5, 907.6, 907.6.1, 907.6.2, 907.6.6, 907.7, 907.7.1, 907.7.2, 911.1.6, 917.1, 2702.2.4, 3005.5, 3007.7

***80—16: Standard for Fire Doors and Other Opening Protectives**
410.2.5, 509.4.2, 716.1, 716.2.5.1, 716.2.6.4, 716.2.9, 716.3.4.1, 716.3.5, 1010.1.4.3

***82—14: Standard on Incinerators and Waste and Linen Handling Systems and Equipment**
713.13

***85—15: Boiler and Combustion System Hazards Code**
426.1

***92—15: Standard for Smoke Control Systems**
909.7, 909.8

***99—18: Health Care Facilities Code**
407.11, 422.6, 425.1

***101—18: Life Safety Code**
1029.6.2

***105—16: Standard for Smoke Door Assemblies and Other Opening Protectives**
405.4.2, 710.5.2.2, 716.2.10, 909.20.4.1

***110—16: Standard for Emergency and Standby Power Systems**
2702.1.3

***111—13: Standard on Stored Electrical Energy Emergency and Standby Power Systems**
2702.1.3

***120—15: Standard for Fire Prevention and Control in Coal Mines**
426.1

***170—18: Standard for Fire Safety and Emergency Symbols**
1025.2.6.1

***211—16: Standard for Chimneys, Fireplaces, Vents and Solid Fuel-burning Appliances**
2112.5

***221—18: Standard for High Challenge Fire Walls, Fire Walls and Fire Barrier Walls**
706.2

INTERNATIONAL CODE COUNCIL®
Copyright © 2019 ICC & NYSDOS. ALL RIGHTS RESERVED. Accessed by Lauren Gualdino (lgualdino@briarcliffmanor.org), (-) Order Number #100880972 on May 08, 2020 07:05 AM (PDT) pursuant to License Agreement with ICC & NYSDOS. No further reproduction, no

100880972

NFPA—continued

***252—17: Standard Methods of Fire Tests of Door Assemblies**
Table 716.1(1), 716.1.1, 716.1.2.2.1, 716.2.1.1, 716.2.1.2, 716.2.2.1, 716.2.2.2, 716.2.2.3.1, 716.2.5.1.1

***253—15: Standard Method of Test for Critical Radiant Flux of Floor Covering Systems Using a Radiant Heat Energy Source**
406.2.4, 424.2, 804.2, 804.3

***257—17: Standard for Fire Test for Window and Glass Block Assemblies**
Table 716.1(1), 716.1.1, 716.1.2.2.2, T716.2.1.3, 716.3.1.1, 716.3.1.2, 716.3.2.1.3, 716.3.4

***259—18: Standard Test Method for Potential Heat of Building Materials**
2603.4.1.10, 2603.5.3

***265—15: Standard Methods of Fire Tests for Evaluating Room Fire Growth Contribution of Textile Wall Coverings on Full Height Panels and Walls**
803.5.1, 803.5.1.1

***268—17: Standard Test Method for Determining Ignitability of Exterior Wall Assemblies Using a Radiant Heat Energy Source**
1405.1.1.1, 1405.1.1.1.1, 1405.1.1.1.2, 2603.5.7

***275—17: Standard Method of Fire Tests for the Evaluation of Thermal Barriers**
1406.10.2, 1408.10.2, 2603.4

***276—15: Standard Method of Fire Tests for Determining the Heat Release Rate of Roofing Assemblies with Combustible Above-deck Roofing Components**
1508.1, 2603.3, 2603.4.1.5

***285—12: Standard Fire Test Method for the Evaluation of Fire Propagation Characteristics of Exterior Nonload-bearing Wall Assemblies Containing Combustible Components**
718.2.6, 1402.5, 1406.10.4, 1408.10.4, 1510.6.2, 2603.5.5

***286—15: Standard Methods of Fire Test for Evaluating Contribution of Wall and Ceiling Interior Finish to Room Fire Growth**
402.6.4.4, 803.1.1, 803.1.1.1, 803.11, 803.12, 803.13, 1406.10.3, 2603.7, 2603.9, 2604.2.4, 2614.4, 3105.3

***288—17: Standard Methods of Fire Tests of Horizontal Fire Door Assemblies Installed in Horizontal in Fire-resistance-rated Floor Systems**
712.1.13.1

***289—13: Standard Method of Fire Test for Individual Fuel Packages**
402.6.2, 402.6.4.5, 424.2, 806.4

***409—16: Standard for Aircraft Hangars**
412.3.6, Table 412.3.6, 412.3.6.1, 412.5.5

*** 418—16: Standard for Heliports**
412.7.4

***484—15: Standard for Combustible Metals**
426.1

***652—16: Standard on the Fundamentals of Combustible Dust**
426.1

***654—17: Standard for the Prevention of Fire and Dust Explosions from the Manufacturing, Processing and Handling of Combustible Particulate Solids**
426.1

***655—17: Standard for the Prevention of Sulfur Fires and Explosions**
426.1

***664—17: Standard for the Prevention of Fires and Explosions in Wood Processing and Woodworking Facilities**
426.1

***701—15: Standard Methods of Fire Tests for Flame Propagation of Textiles and Films**
410.2.6, 424.2, 806.4, 3102.3, 3102.3.1, 3102.6.1.1, 3105.3

***704—17: Standard System for the Identification of the Hazards of Materials for Emergency Response**
202, 415.5.2

***750—15: Standard on Water Mist Fire Protection Systems**
202, 904.11.1.1, 904.12

***1124—06: Code for the Manufacture, Transportation, Storage and Retail Sales of Fireworks and Pyrotechnic Articles**
415.6.1.1

INTERNATIONAL CODE COUNCIL®
Copyright © 2019 ICC & NYSDOS. ALL RIGHTS RESERVED. Accessed by Lauren Gualdino (lgualdino@briarcliffmanor.org), (-) Order Number #100880972 on May 08, 2020 07:05 AM (PDT) pursuant to License Agreement with ICC & NYSDOS. No further reproduction, no

100880972

NFPA—continued

***1402—19: Guide to Building Fire Service Training Centers**
430.1

***1403—18: Standard on Live Fire Training Evolutions**
430.1

***2001—15: Standard on Clean Agent Fire Extinguishing Systems**
904.10

***2010—15: Standard for Fixed Aerosol Fire-extinguishing Systems**
904.14

PCI

Precast Prestressed Concrete Institute
200 West Adams Street, Suite 2100
Chicago, IL 60606-6938

MNL 124—11: Design for Fire Resistance of Precast Prestressed Concrete
722.2.3.1

MNL 128—01: Recommended Practice for Glass Fiber Reinforced Concrete Panels
1903.3

PTI

Post-Tensioning Institute
38800 Country Club Drive
Farmington Hills, MI 48331

PTI DC—10.5-12: Standard Requirements for Design and Analysis of Shallow Concrete Foundations on Expansive Soils
1808.6.2

RMI

Rack Manufacturers Institute
8720 Red Oak Boulevard, Suite 201
Charlotte, NC 28217

***ANSI/MH16.1—12: Specification for Design, Testing and Utilization of Industrial Steel Storage Racks**
2209.1

ANSI/MH16.3—16: Specification for the Design, Testing and Utilization of Industrial Steel Cantilevered Storage Racks
2209.2

SBCA

Structural Building Components Association
6300 Enterprise Lane
Madison, WI 53719

ANSI/FS 100-12: Standard Requirements for Wind Pressure Resistance of Foam Plastic Insulating Sheathing Used in Exterior Wall Covering Assemblies
2603.10

SDI

Steel Deck Institute
2661 Clearview Road #3
Allison Park, PA 15101

***SDI NC—2010: Standard for Noncomposite Steel Floor Deck**
2210.1.1.1

***SDI RD—2010: Standard for Steel Roof Deck**
2210.1.1.2

***SDI-C—2011: Standard for Composite Steel Floor Deck—Slabs**
2210.1.1.3

SDI-QA/QC—2017: Standard for Quality Control and Quality Assurance for Installation of Steel Deck
1705.2.2

INTERNATIONAL CODE COUNCIL®
Copyright © 2019 ICC & NYSDOS. ALL RIGHTS RESERVED. Accessed by Lauren Gualdino (lgualdino@briarcliffmanor.org), (-) Order Number #100880972 on May 08, 2020 07:05 AM (PDT) pursuant to License Agreement with ICC & NYSDOS. No further reproduction, no

100880972

SJI

Steel Joist Institute
234 W. Cheves Street
Florence, SC 29501

***SJI 100—15: 44th Edition Standard Specification Load Tables and Weight Tables for Steel Joists and Joist Girders K-Series, LH-Series, DHL-Series, Joist Girders**
1604.3.3, 2203.2, 2207.1

***SJI 200—15: Standard Specification for Composite Steel Joists, CJ-Series**
1604.3.3, 2203.2, 2207.1

SPRI

Single-Ply Roofing Institute
465 Waverly Oaks Road, Suite 421
Waltham, MA 02452

***ANSI/SPRI/FM 4435-ES-1—11: Wind Test Design Standard for Edge Systems Used with Low Slope Roofing Systems**
1504.5

***ANSI/SPRI RP-4—13: Wind Design Guide for Ballasted Single-ply Roofing Systems**
1504.4

ANSI/SPRI VF1—10: External Fire Design Standard for Vegetative Roofs
1505.10

SRCC

Solar Rating & Certification Corporation
400 High Point Drive, Suite 400
Cocoa, FL 32926

ICC 900/SRCC 300—2015: Solar Thermal System Standard
3111.2.1

ICC 901/SRCC 100—2015: Solar Thermal Collector Standard
3111.2.1

TIA

Telecommunications Industry Association
1320 N. Courthouse Road #200
Arlington, VA 22201-3834

***222-G—2005: Structural Standards for Antenna Supporting Structures and Antennas**
1609.1.1, 3108.1, 3108.2

TMS

The Masonry Society
105 South Sunset Street, Suite Q
Longmont, CO 80501

***216—2014: Standard Method for Determining Fire Resistance of Concrete and Masonry Construction Assemblies**
Table 721.1(2), 722.1

***302—2012: Standard Method for Determining the Sound Transmission Class Rating for Masonry Walls**
1207.2.1

***402—2013: Building Code for Masonry Structures**
1404.6, 1404.6.2, 1404.10, 1604.3.4, 1705.4, 1705.4.1, 1807.1.6.3.2, 1808.9, 2101.2, 2106.1, 2107.1, 2107.2, 2107.3, 2108.1, 2108.2, 2108.3, 2109.1, 2109.1.1, 2109.2, 2110.1, 2114.1, 2114.4

403—2017: Direct Design Handbook for Masonry Structures
2101.2

404—2016: Standard for the Design of Architectural Cast Stone
2102.2

504—2016: Standard for the Fabrication of Architectural Cast Stone
2103.1

***602—2013: Specification for Masonry Structures**
1404.6.1, 1705.4, 1807.1.6.3, 2103.1, 2103.2.1, 2103.3, 2103.4, 2104.1, 2105.1

INTERNATIONAL CODE COUNCIL®
Copyright © 2019 ICC & NYSDOS. ALL RIGHTS RESERVED. Accessed by Lauren Gualdino (lgualdino@briarcliffmanor.org), (-) Order Number #100880972 on May 08, 2020 07:05 AM (PDT) pursuant to License Agreement with ICC & NYSDOS. No further reproduction, no

100880972

TMS—continued

604—2016: Standard for the Installation of Architectural Cast Stone
2104.1

TPI

Truss Plate Institute
218 N. Lee Street, Suite 312
Alexandria, VA 22314

TPI 1—2014: National Design Standard for Metal-plate-connected Wood Truss Construction
2303.4.6, 2306.1

UL

UL LLC
333 Pfingsten Road
Northbrook, IL 60062-2096

9—2009: Fire Tests of Window Assemblies—with Revisions through February 2015
Table 716.1(1), 716.1.1, 716.1.2.2.2, 716.2.1.3, 716.3.1.1, 716.3.1.2, 716.3.2.1.3, 716.3.4, 1013.5

10A—2009: Tin Clad Fire Doors—with Revisions through December 2013
716.2.1

10B—2008: Fire Tests of Door Assemblies—with Revisions through February 2015
Table 716.1(1), 716.1.1, 716.1.2.2.1, 716.2.1.2, 716.2.2.2, 716.2.2.3.1, 716.2.5.1.1

10C—2009: Positive Pressure Fire Tests of Door Assemblies—with Revisions through February 2015
Table 716.1(1), 716.1.1, 716.1.2.2.1, 716.2.1.1, 716.2.2.1, 716.2.2.2, 716.2.2.3.1, 716.2.5.1.1, 1010.1.10.1

14B—2008: Sliding Hardware for Standard Horizontally Mounted Tin Clad Fire Doors—with Revisions through May 2013
716.2.1

14C—06: Swinging Hardware for Standard Tin Clad Fire Doors Mounted Singly and in Pairs—with Revisions through May 2013
716.2.1

55A—04: Materials for Built-up Roof Coverings
1507.10.2

103—2010: Factory-built Chimneys, for Residential Type and Building Heating Appliances—with Revisions through July 2012
718.2.5.1

127—2011: Factory-built Fireplaces—with Revisions through May 2015
718.2.5.1, 2111.12

199E—04: Outline of Investigation for Fire Testing of Sprinklers and Water Spray Nozzles for Protection of Deep Fat Fryers
904.12.4.1

217—06: Single and Multiple Station Smoke Alarms—with Revisions through October 2015
907.2.10

263—11: Fire Tests of Building Construction and Materials—with Revisions through June 2015
703.2, 703.2.1, 703.2.3, 703.2.5, 703.3, 703.4, 703.6, 704.12, 705.7, 705.8.5, 707.6, 712.1.13.2, 714.4.1, 714.5.1, 715.1, Table 716.1(1), Table 716.1(3), 716.1.2.3, 716.2.5.1.1, 716.2.5.4, 716.3.2.1.1, 717.3.1, 717.5.2, 717.5.3, 717.6.1, 717.6.2, Table 721.1(1), 2103.1, 2603.5.1

268—09: Smoke Detectors for Fire Alarm Systems
407.9, 907.2.6.2, 907.2.10.7

294—1999: Access Control System Units—with Revisions through February 2015
1010.1.9.7, 1010.1.9.8.1, 1010.1.9.9, 1010.1.9.10

300—05(R2010): Fire Testing of Fire Extinguishing Systems for Protection of Commercial Cooking Equipment—with Revisions through December 2014
904.12

300A—06: Outline of Investigation for Extinguishing System Units for Residential Range Top Cooking Surfaces
904.13.1.1

305—2012: Panic Hardware—with Revisions through August 2014
1010.1.10.1

325—02: Door, Drapery, Gate, Louver and Window Operations and Systems—with Revisions through May 2015
406.2.1, 3110.3

INTERNATIONAL CODE COUNCIL®
Copyright © 2019 ICC & NYSDOS. ALL RIGHTS RESERVED. Accessed by Lauren Gualdino (lgualdino@briarcliffmanor.org), (-) Order Number #100880972 on May 08, 2020 07:05 AM (PDT) pursuant to License Agreement with ICC & NYSDOS. No further reproduction, no

100880972

UL—continued

555—2006: Fire Dampers—with Revisions through May 2014
717.3.1

555C—2006: Ceiling Dampers—with Revisions through December 2014
717.3.1

555S—99: Smoke Dampers—with Revisions through February 2014
717.3.1

580—2006: Test for Uplift Resistance of Roof Assemblies—with Revisions through October 2013
1504.3.1, 1504.3.2

641—2010: Type L Low-temperature Venting Systems—with Revisions through June 2013
2113.11.1.4

710B—2011: Recirculating Systems—with Revisions through August 2014
904.12

723—2008: Test for Surface Burning Characteristics of Building Materials—with Revisions through August 2013
202, 402.6.4.4, 406.7.2, 703.5.2, 720.1, 720.4, 803.1.2, 803.5.2, 803.10, 803.11, 803.12, 803.13, 806.7, 1402.5, 1403.12.1, 1406.9, 1406.10.1, 1408.9, 1408.10.1, 1510.6.2, 1510.6.3, 2303.2, 2603.3, 2603.4.1.13, 2603.5.4, 2603.5.5, 2603.7, 2604.2.4, 2606.4, 2612.3, 2614.3, 3105.3

790—04: Standard Test Methods for Fire Tests of Roof Coverings—with Revisions through July 2014
1505.1, 2603.6, 2610.2, 2610.3

793—08: Automatically Operated Roof Vents for Smoke and Heat—with Revisions through September 2011
910.3.1

864—03: Control Units and Accessories for Fire Alarm Systems—with Revisions through December 2014
909.12

924—06: Safety Emergency Lighting and Power Equipment—with Revisions through April 2014
1013.5

1040—96: Fire Test of Insulated Wall Construction—with Revisions through October 2012
1406.10.3, 1408.10.3, 2603.9

1256—02: Fire Test of Roof Deck Construction—with Revisions through July 2013
1508.1, 2603.3, 2603.4.1.5

1479—03: Fire Tests of Penetration Firestops—with Revisions through June 2015
202, 714.4.1.2, 714.4.2, 714.5.1.2, 714.5.4

1482—2011: Solid-fuel Type Room Heaters—with Revisions through August 2015
2112.2, 2112.5

1703—02: Flat-plate Photovoltaic Modules and Panels—with Revisions through October 2015
1505.9, 1507.17.6, 1507.18.5, 1510.7.2, 3111.3.1

1715—97: Fire Test of Interior Finish Material—with Revisions through January 2013
1406.10.3, 1408.10.3, 2603.9, 2614.4

1741—2010: Inverters, Converters, Controllers and Interconnection System Equipment for Use with Distributed Energy Resources—with Revisions through January 2015
3111.3.1

1777—2007: Chimney Liners—with Revisions through October 2015
2113.11.1, 2113.19

1784—01: Air Leakage Tests of Door Assemblies—with Revisions through February 2015
405.4.3, 710.5.2.2, 710.5.2.2.1, 716.2.1.4, 716.2.9.1, 716.2.9.3, 3006.3, 3007.6.3, 3008.6.3

1897—12: Uplift Tests for Roof Covering Systems—with Revisions through September 2015
1504.3.1, 1504.3.3, 1507.18.7

1975—06: Fire Tests for Foamed Plastics Used for Decorative Purposes
402.6.2, 402.6.4.5, 424.2

1994—04: Luminous Egress Path Marking Systems—with Revisions through May 2015
411.6, 1008.2.1, 1025.2.1, 1025.2.3, 1025.2.4, 1025.2.5, 1025.4

2079—04: Tests for Fire Resistance of Building Joint Systems—with Revisions through August 2015
202, 715.3, 715.6

2196—2001: Tests for Fire Resistive Cables—with Revisions through March 2012
909.20.6.1, 913.2.2, 2702.3, 3007.8.1, 3008.8.2

INTERNATIONAL CODE COUNCIL®
Copyright © 2019 ICC & NYSDOS. ALL RIGHTS RESERVED. Accessed by Lauren Gualdino (lgualdino@briarcliffmanor.org), (-) Order Number #100880972 on May 08, 2020 07:05 AM (PDT) pursuant to License Agreement with ICC & NYSDOS. No further reproduction, no

100880972

UL—continued

2200—2012: Stationary Engine Generator Assemblies—with Revisions through July 2015
2702.1.1

2202—2009: Electric Vehicle (EV) Charging System Equipment
406.2.7

2594—2013: Electric Vehicle Supply Equipment
406.2.7

2703—2014: Outline of Investigation for Mounting Systems, Mounting Devices, Clamping/Retention Devices and Ground Lugs for Use with Flat-plate Photovoltaic Modules and Panels
1505.9

ULC

Underwriters Laboratories of Canada
13775 Commerce Parkway
Richmond, BC V6V 2V4

CAN/ULC S 102.2—2010: Standard Method of Test for Surface Burning Characteristics of Flooring, Floor Coverings and Miscellaneous Materials and Assemblies—with 2000 Revisions
720.2, 720.3, 720.4

USC

United States Code
c/o Superintendent of Documents
U.S. Government Printing Office
732 North Capitol Street NW
Washington, DC 20401

18 USC Part 1, Ch.40: Importation, Manufacture, Distribution and Storage of Explosive Materials
202

WCLIB

West Coast Lumber Inspection Bureau
P.O. Box 23145
Portland, OR 97281

***AITC 104—03: Typical Construction Details**
2306.1

***AITC 110—01: Standard Appearance Grades for Structural Glued Laminated Timber**
2306.1

***AITC 113—10: Standard for Dimensions of Structural Glued Laminated Timber**
2306.1

***AITC 119—96: Standard Specifications for Structural Glued Laminated Timber of Hardwood Species**
2306.1

***AITC 200—09: Manufacturing Quality Control Systems Manual for Structural Glued Laminated Timber**
2306.1

WDMA

Window and Door Manufacturers Association
2025 M Street NW, Suite 800
Washington, DC 20036-3309

AAMA/WDMA/CSA 101/I.S.2/A440—17: Specifications for Windows, Doors and Unit Skylights
1709.5.1, 2405.5

WRI

Wire Reinforcement Institute, Inc.
942 Main Street, Suite 300
Hartford, CT 06103

***WRI/CRSI—81: Design of Slab-on-ground Foundations—with 1996 Update**
1808.6.2

INTERNATIONAL CODE COUNCIL®
Copyright © 2019 ICC & NYSDOS. ALL RIGHTS RESERVED. Accessed by Lauren Gualdino (lgualdino@briarcliffmanor.org), (-) Order Number #100880972 on May 08, 2020 07:05 AM (PDT) pursuant to License Agreement with ICC & NYSDOS. No further reproduction, no

100880972

INTERNATIONAL CODE COUNCIL®
Copyright © 2019 ICC & NYSDOS. ALL RIGHTS RESERVED. Accessed by Lauren Gualdino (lgualdino@briarcliffmanor.org), (-) Order Number #100880972 on May 08, 2020 07:05 AM (PDT) pursuant to License Agreement with ICC & NYSDOS. No further reproduction, no

100880972

APPENDIX A

EMPLOYEE QUALIFICATIONS

This appendix is informative and is not part of this code.

SECTION A101
BUILDING OFFICIAL QUALIFICATIONS

[A] A101.1 Building official. The *building official* shall have not fewer than 10 years' experience or equivalent as an architect, engineer, inspector, contractor or superintendent of construction, or any combination of these, 5 years of which shall have been supervisory experience. The *building official* should be certified as a *building official* through a recognized certification program. The building official shall be appointed or hired by the applicable governing authority.

[A] A101.2 Chief inspector. The *building official* can designate supervisors to administer the provisions of this code and the *International Mechanical*, *Plumbing* and *Fuel Gas Codes*. Each supervisor shall have not fewer than 10 years experience or equivalent as an architect, engineer, inspector, contractor or superintendent of construction, or any combination of these, 5 years of which shall have been in a supervisory capacity. They shall be certified through a recognized certification program for the appropriate trade.

[A] A101.3 Inspector and plans examiner. The *building official* shall appoint or hire such number of officers, inspectors, assistants and other employees as shall be authorized by the jurisdiction. A person who has fewer than 5 years of experience as a contractor, engineer, architect, or as a superintendent, foreman or competent mechanic in charge of construction shall not be appointed or hired as inspector of construction or plans examiner. The inspector or plans examiner shall be certified through a recognized certification program for the appropriate trade.

[A] A101.4 Termination of employment. Employees in the position of *building official*, chief inspector or inspector shall not be removed from office except for cause after full opportunity has been given to be heard on specific charges before such applicable governing authority.

[A] SECTION A102
REFERENCED STANDARDS

IBC—18	*International Building Code*®	A101.2
IMC—18	*International Mechanical Code*®	A101.2
IPC—18	*International Plumbing Code*®	A101.2
IFGC—18	*International Fuel Gas Code*®	A101.2

INTERNATIONAL CODE COUNCIL®
Copyright © 2019 ICC & NYSDOS. ALL RIGHTS RESERVED. Accessed by Lauren Gualdino (lgualdino@briarcliffmanor.org), (-) Order Number #100880972 on May 08, 2020 07:05 AM (PDT) pursuant to License Agreement with ICC & NYSDOS. No further reproduction, no

100880972

INTERNATIONAL CODE COUNCIL®
Copyright © 2019 ICC & NYSDOS. ALL RIGHTS RESERVED. Accessed by Lauren Gualdino (lgualdino@briarcliffmanor.org), (-) Order Number #100880972 on May 08, 2020 07:05 AM (PDT) pursuant to License Agreement with ICC & NYSDOS. No further reproduction, no

100880972

[NY] APPENDIX B

RESERVED

INTERNATIONAL CODE COUNCIL®
Copyright © 2019 ICC & NYSDOS. ALL RIGHTS RESERVED. Accessed by Lauren Gualdino (lgualdino@briarcliffmanor.org), (-) Order Number #100880972 on May 08, 2020 07:05 AM (PDT) pursuant to License Agreement with ICC & NYSDOS. No further reproduction, no

100880972

INTERNATIONAL CODE COUNCIL®
Copyright © 2019 ICC & NYSDOS. ALL RIGHTS RESERVED. Accessed by Lauren Gualdino (lgualdino@briarcliffmanor.org), (-) Order Number #100880972 on May 08, 2020 07:05 AM (PDT) pursuant to License Agreement with ICC & NYSDOS. No further reproduction, no

100880972

APPENDIX C

GROUP U—AGRICULTURAL BUILDINGS

This appendix is informative and not part of the code.

SECTION C101 GENERAL

C101.1 Scope. The provisions of this appendix shall apply exclusively to agricultural buildings. Such buildings shall be classified as Group U and shall include the following uses:

1. Livestock shelters or buildings, including shade structures and milking barns.
2. Poultry buildings or shelters.
3. Barns.
4. Storage of equipment and machinery used exclusively in agriculture.
5. Horticultural structures, including detached production greenhouses and crop protection shelters.
6. Sheds.
7. Grain silos.
8. Stables.

SECTION C102 ALLOWABLE HEIGHT AND AREA

C102.1 General. Buildings classified as Group U Agricultural shall not exceed the area or height limits specified in Table C102.1.

C102.2 One-story unlimited area. The area of a one-story Group U agricultural building shall not be limited if the building is surrounded and adjoined by *public ways* or yards not less than 60 feet (18 288 mm) in width.

C102.3 Two-story unlimited area. The area of a two-story Group U agricultural building shall not be limited if the building is surrounded and adjoined by *public ways* or *yards* not less than 60 feet (18 288 mm) in width and is provided with an *approved automatic sprinkler system* throughout in accordance with Section 903.3.1.1.

SECTION C103 MIXED OCCUPANCIES

C103.1 Mixed occupancies. Mixed occupancies shall be protected in accordance with Section 508.

SECTION C104 EXITS

C104.1 Exit facilities. Exits shall be provided in accordance with Chapters 10 and 11.

Exceptions:

1. The maximum travel distance from any point in the building to an approved exit shall not exceed 300 feet (91 440 mm).
2. One exit is required for each 15,000 square feet (1393.5 m^2) of area or fraction thereof.

TABLE C102.1
BASIC ALLOWABLE AREA FOR A GROUP U, ONE STORY IN HEIGHT AND MAXIMUM HEIGHT OF SUCH OCCUPANCY

I		II		III and IV		V	
A	B	A	B	III A and IV	III B	A	B
ALLOWABLE AREA (square feet)[a]							
Unlimited	60,000	27,100	18,000	27,100	18,000	21,100	12,000
MAXIMUM HEIGHT IN STORIES							
Unlimited	12	4	2	4	2	3	2
MAXIMUM HEIGHT IN FEET							
Unlimited	160	65	55	65	55	50	40

For SI: 1 square foot = 0.0929 m^2.

a. See Section C102 for unlimited area under certain conditions.

INTERNATIONAL CODE COUNCIL®
Copyright © 2019 ICC & NYSDOS. ALL RIGHTS RESERVED. Accessed by Lauren Gualdino (lgualdino@briarcliffmanor.org), (-) Order Number #100880972 on May 08, 2020 07:05 AM (PDT) pursuant to License Agreement with ICC & NYSDOS. No further reproduction, no

100880972

INTERNATIONAL CODE COUNCIL®
Copyright © 2019 ICC & NYSDOS. ALL RIGHTS RESERVED. Accessed by Lauren Gualdino (lgualdino@briarcliffmanor.org), (-) Order Number #100880972 on May 08, 2020 07:05 AM (PDT) pursuant to License Agreement with ICC & NYSDOS. No further reproduction, no

100880972

APPENDIX D

FIRE DISTRICTS

This appendix is informative and is not part of this code.

SECTION D101
GENERAL

D101.1 Scope. The fire district shall include such territory or portion as outlined in an ordinance or law entitled "An Ordinance (Resolution) Creating and Establishing a Fire District." Wherever, in such ordinance creating and establishing a fire district, reference is made to the fire district, it shall be construed to mean the fire district designated and referred to in this appendix.

D101.1.1 Mapping. The fire district complying with the provisions of Section D101.1 shall be shown on a map that shall be available to the public.

D101.2 Establishment of area. For the purpose of this code, the fire district shall include that territory or area as described in Sections D101.2.1 through D101.2.3.

D101.2.1 Adjoining blocks. Two or more adjoining blocks, exclusive of intervening streets, where not less than 50 percent of the ground area is built upon and more than 50 percent of the built-on area is devoted to hotels and motels of Group R-1; Group B occupancies; theaters, nightclubs, restaurants of Group A-1 and A-2 occupancies; garages, express and freight depots, warehouses and storage buildings used for the storage of finished products (not located with and forming a part of a manufactured or industrial plant); or Group S occupancy. Where the average height of a building is two and one-half *stories* or more, a block should be considered if the ground area built upon is not less than 40 percent.

D101.2.2 Buffer zone. Where four contiguous blocks or more comprise a fire district, there shall be a buffer zone of 200 feet (60 960 mm) around the perimeter of such district. Streets, rights-of-way and other open spaces not subject to building construction can be included in the 200-foot (60 960 mm) buffer zone.

D101.2.3 Developed blocks. Where blocks adjacent to the fire district have developed to the extent that not less than 25 percent of the ground area is built upon and 40 percent or more of the built-on area is devoted to the occupancies specified in Section D101.2.1, they can be considered for inclusion in the fire district, and can form all or a portion of the 200-foot (60 960 mm) buffer zone required in Section D101.2.2.

SECTION D102
BUILDING RESTRICTIONS

D102.1 Types of construction permitted. Within the fire district every building hereafter erected shall be either Type I, II, III or IV, except as permitted in Section D104.

D102.2 Other specific requirements.

D102.2.1 Exterior walls. Exterior walls of buildings located in the fire district shall comply with the requirements in Table 601 except as required in Section D102.2.6.

D102.2.2 Group H prohibited. Group H occupancies shall be prohibited from location within the fire district.

D102.2.3 Construction type. Every building shall be constructed as required based on the type of construction indicated in Chapter 6.

D102.2.4 Roof covering. Roof covering in the fire district shall conform to the requirements of Class A or B roof coverings as defined in Section 1505.

D102.2.5 Structural fire rating. Walls, floors, roofs and their supporting structural members shall be not less than 1-hour fire-resistance-rated construction.

Exceptions:

1. Buildings of Type IV construction.
2. Buildings equipped throughout with an *automatic sprinkler system* in accordance with Section 903.3.1.1.
3. Automobile parking structures.
4. Buildings surrounded on all sides by a permanently open space of not less than 30 feet (9144 mm).
5. Partitions complying with Section 603.1, Item 11.

D102.2.6 Exterior walls. Exterior load-bearing walls of Type II buildings shall have a *fire-resistance rating* of 2 hours or more where such walls are located within 30 feet (9144 mm) of a common property line or an assumed property line. Exterior nonload-bearing walls of Type II buildings located within 30 feet (9144 mm) of a common property line or an assumed property line shall have fire-resistance ratings as required by Table 601, but not less than 1 hour. Exterior walls located more than 30 feet (9144 mm) from a common property line or an assumed property line shall comply with Table 601.

Exception: In the case of one-story buildings that are 2,000 square feet (186 m^2) or less in area, exterior walls located more than 15 feet (4572 mm) from a common property line or an assumed property line need only comply with Table 601.

D102.2.7 Architectural trim. Architectural *trim* on buildings located in the fire district shall be constructed of *approved* noncombustible materials or *fire-retardant-treated wood*.

INTERNATIONAL CODE COUNCIL®
Copyright © 2019 ICC & NYSDOS. ALL RIGHTS RESERVED. Accessed by Lauren Gualdino (lgualdino@briarcliffmanor.org), (-) Order Number #100880972 on May 08, 2020 07:05 AM (PDT) pursuant to License Agreement with ICC & NYSDOS. No further reproduction, no

100880972

D102.2.8 Permanent canopies. Permanent canopies are permitted to extend over adjacent open spaces provided that all of the following are met:

1. The canopy and its supports shall be of noncombustible material, *fire-retardant-treated wood*, Type IV construction or of 1-hour fire-resistance-rated construction.

   Exception: Any textile covering for the canopy shall be flame resistant as determined by tests conducted in accordance with NFPA 701 after both accelerated water leaching and accelerated weathering.

2. Any canopy covering, other than textiles, shall have a *flame spread index* not greater than 25 when tested in accordance with ASTM E84 or UL 723 in the form intended for use.
3. The canopy shall have one long side open.
4. The maximum horizontal width of the canopy shall be not greater than 15 feet (4572 mm).
5. The *fire resistance* of *exterior walls* shall not be reduced.

D102.2.9 Roof structures. Structures, except aerial supports 12 feet (3658 mm) high or less, flagpoles, water tanks and cooling towers, placed above the roof of any building within the fire district shall be of noncombustible material and shall be supported by construction of noncombustible material.

D102.2.10 Plastic signs. The use of plastics complying with Section 2611 for signs is permitted provided that the structure of the sign in which the plastic is mounted or installed is noncombustible.

D102.2.11 Plastic veneer. Exterior plastic veneer is not permitted in the fire district.

SECTION D103
CHANGES TO BUILDINGS

D103.1 Existing buildings within the fire district. An existing building shall not be increased in height or area unless it is of a type of construction permitted for new buildings within the fire district or is altered to comply with the requirements for such type of construction. Nor shall any existing building be extended on any side, nor square footage or floors added within the existing building unless such modifications are of a type of construction permitted for new buildings within the fire district.

D103.2 Other alterations. Nothing in Section D103.1 shall prohibit other alterations within the fire district provided that such *alterations* do not create a change of occupancy that is otherwise prohibited or increase the fire hazard.

D103.3 Moving buildings. Buildings shall not hereafter be moved into the fire district or to another lot in the fire district unless the building is of a type of construction permitted in the fire district.

SECTION D104
BUILDINGS LOCATED PARTIALLY IN THE FIRE DISTRICT

D104.1 General. Any building located partially in the fire district shall be of a type of construction required for the fire district, unless the major portion of such building lies outside of the fire district and all portions of it extend not more than 10 feet (3048 mm) inside the boundaries of the fire district.

SECTION D105
EXCEPTIONS TO RESTRICTIONS IN FIRE DISTRICT

D105.1 General. The preceding provisions of this appendix shall not apply in the following instances:

1. Temporary buildings used in connection with duly authorized construction.
2. A private garage used exclusively as such, not more than one *story* in height, nor more than 650 square feet (60 m^2) in area, located on the same lot with a *dwelling.*
3. Fences not over 8 feet (2438 mm) high.
4. Coal tipples, material bins and trestles of Type IV construction.
5. Water tanks and cooling towers conforming to Sections 1509.3 and 1509.4.
6. Greenhouses less than 15 feet (4572 mm) high.
7. Porches on dwellings not over one *story* in height, and not over 10 feet (3048 mm) wide from the face of the building, provided that such porch does not come within 5 feet (1524 mm) of any property line.
8. Sheds open on a long side not over 15 feet (4572 mm) high and 500 square feet (46 m^2) in area.
9. One- and two-family *dwellings* where of a type of construction not permitted in the fire district can be extended 25 percent of the floor area existing at the time of inclusion in the fire district by any type of construction permitted by this code.
10. Wood decks less than 600 square feet (56 m^2) where constructed of 2-inch (51 mm) nominal wood, pressure treated for exterior use.
11. Wood veneers on *exterior walls* conforming to Section 1404.5.
12. Exterior plastic veneer complying with Section 2605.2 where installed on exterior walls required to have a *fire-resistance rating* not less than 1 hour, provided that the exterior plastic veneer does not exhibit sustained flaming as defined in NFPA 268.

SECTION D106
REFERENCED STANDARDS

ASTM E84—2016	Test Method for Surface Burning Characteristics of Building Materials	D102.2.8

INTERNATIONAL CODE COUNCIL®
Copyright © 2019 ICC & NYSDOS. ALL RIGHTS RESERVED. Accessed by Lauren Gualdino (lgualdino@briarcliffmanor.org), (-) Order Number #100880972 on May 08, 2020 07:05 AM (PDT) pursuant to License Agreement with ICC & NYSDOS. No further reproduction, no

100880972

NFPA 268—17	Test Method for Determining Ignitability of Exterior Wall Assemblies Using a Radiant Heat Energy Source	D105.1
NFPA 701—15	Methods of Fire Tests for Flame-Propagation of Textiles and Films	D102.2.8
UL 723—08	Standard for Test for Surface Burning Characteristics of Building Materials, with Revisions through August 2013	D102.2.8

INTERNATIONAL CODE COUNCIL®
Copyright © 2019 ICC & NYSDOS. ALL RIGHTS RESERVED. Accessed by Lauren Gualdino (lgualdino@briarcliffmanor.org), (-) Order Number #100880972 on May 08, 2020 07:05 AM (PDT) pursuant to License Agreement with ICC & NYSDOS. No further reproduction, no

100880972

INTERNATIONAL CODE COUNCIL®
Copyright © 2019 ICC & NYSDOS. ALL RIGHTS RESERVED. Accessed by Lauren Gualdino (lgualdino@briarcliffmanor.org), (-) Order Number #100880972 on May 08, 2020 07:05 AM (PDT) pursuant to License Agreement with ICC & NYSDOS. No further reproduction, no

100880972

APPENDIX E
SUPPLEMENTARY ACCESSIBILITY REQUIREMENTS

SECTION E101
GENERAL

E101.1 Scope. The provisions of this appendix shall control the supplementary requirements for the design and construction of facilities for *accessibility* for individuals with disabilities.

E101.2 Design. Technical requirements for items herein shall comply with this code and ICC A117.1.

SECTION E102
DEFINITIONS

E102.1 General. The following words and terms shall, for the purposes of this appendix, have the meanings shown herein. Refer to Chapter 2 of this code for general definitions.

CLOSED-CIRCUIT TELEPHONE. A telephone with a dedicated line such as a house phone, courtesy phone or phone that must be used to gain entrance to a facility.

MAILBOXES. Receptacles for the receipt of documents, packages or other deliverable matter. *Mailboxes* include, but are not limited to, post office boxes and receptacles provided by commercial mail-receiving agencies, apartment houses and schools.

TRANSIENT LODGING. A building, facility or portion thereof, excluding inpatient medical care facilities and long-term care facilities, that contains one or more *dwelling units* or *sleeping units*. Examples of *transient lodging* include, but are not limited to, resorts, group homes, hotels, motels, dormitories, homeless shelters, halfway houses and social service lodging.

SECTION E103
ACCESSIBLE ROUTE

E103.1 Raised platforms. In banquet rooms or spaces where a head table or speaker's lectern is located on a raised platform, an *accessible* route shall be provided to the platform.

SECTION E104
SPECIAL OCCUPANCIES

E104.1 General. *Transient lodging* facilities shall be provided with *accessible* features in accordance with Section E104.2. Group I-3 occupancies shall be provided with *accessible* features in accordance with Section E104.2.

E104.2 Communication features. *Accessible* communication features shall be provided in accordance with Sections E104.2.1 through E104.2.4.

E104.2.1 Transient lodging. In *transient lodging* facilities, *sleeping units* with *accessible* communication features shall be provided in accordance with Table E104.2.1. Units required to comply with Table E104.2.1 shall be dispersed among the various classes of units.

E104.2.2 Group I-3. In Group I-3 occupancies at least 2 percent, but no fewer than one of the total number of general holding cells and general housing cells equipped with audible *emergency alarm systems* and permanently installed telephones within the cell, shall comply with Section E104.2.4.

E104.2.3 Dwelling units and sleeping units. Where *dwelling units* and *sleeping units* are altered or added, the requirements of Section E104.2 shall apply only to the units being altered or added until the number of units with *accessible* communication features complies with the minimum number required for new construction.

E104.2.4 Notification devices. Visual notification devices shall be provided to alert room occupants of incoming telephone calls and a door knock or bell. Notification devices shall not be connected to visual alarm signal appliances. Permanently installed telephones shall have volume controls and an electrical outlet complying with ICC A117.1 located within 48 inches (1219 mm) of the telephone to facilitate the use of a TTY.

SECTION E105
OTHER FEATURES AND FACILITIES

E105.1 Portable toilets and bathing rooms. Where multiple single-user portable toilet or bathing units are clustered at a single location, at least 5 percent, but not less than one toilet unit or bathing unit at each cluster, shall be *accessible*. Signs containing the International Symbol of Accessibility shall identify *accessible* portable toilets and bathing units.

Exception: Portable toilet units provided for use exclusively by construction personnel on a construction site.

E105.2 Laundry equipment. Where provided in spaces required to be *accessible*, washing machines and clothes dryers shall comply with this section.

E105.2.1 Washing machines. Where three or fewer washing machines are provided, one or more shall be *accessible*. Where more than three washing machines are provided, two or more shall be *accessible*.

E105.2.2 Clothes dryers. Where three or fewer clothes dryers are provided, one or more shall be *accessible*. Where more than three clothes dryers are provided, two or more shall be *accessible*.

E105.3 Gaming machines, depositories, vending machines, change machines and similar equipment. Not fewer than one of each type of depository, vending machine, change machine and similar equipment shall be *accessible*. Two percent of gaming machines shall be *accessible* and provided with a front approach. *Accessible* gaming machines

INTERNATIONAL CODE COUNCIL®
Copyright © 2019 ICC & NYSDOS. ALL RIGHTS RESERVED. Accessed by Lauren Gualdino (lgualdino@briarcliffmanor.org), (-) Order Number #100880972 on May 08, 2020 07:05 AM (PDT) pursuant to License Agreement with ICC & NYSDOS. No further reproduction, no

100880972

shall be distributed throughout the different types of gaming machines provided.

Exception: Drive-up-only depositories are not required to comply with this section.

E105.4 Mailboxes. Where *mailboxes* are provided in an interior location, 5 percent of the total, but not less than one, of each type shall be *accessible*. In residential and institutional facilities, where *mailboxes* are provided for each *dwelling unit* or *sleeping unit*, *accessible mailboxes* shall be provided for each unit required to be an *Accessible unit*.

E105.5 Automatic teller machines and fare machines. Where automatic teller machines or self-service fare vending, collection or adjustment machines are provided, not fewer than one machine of each type at each location where such machines are provided shall be *accessible*. Where bins are provided for envelopes, wastepaper or other purposes, not fewer than one of each type shall be *accessible*.

E105.6 Two-way communication systems. Where two-way communication systems are provided to gain admittance to a building or facility or to restricted areas within a building or facility, the system shall be *accessible*.

SECTION E106
TELEPHONES

E106.1 General. Where coin-operated public pay telephones, coinless public pay telephones, public *closed-circuit telephones*, courtesy phones or other types of public telephones are provided, *accessible* public telephones shall be provided in accordance with Sections E106.2 through E106.5 for each type of public telephone provided. For purposes of this section, a bank of telephones shall be considered to consist of two or more adjacent telephones.

E106.2 Wheelchair-accessible telephones. Where public telephones are provided, wheelchair-accessible telephones shall be provided in accordance with Table E106.2.

Exception: Drive-up-only public telephones are not required to be *accessible*.

TABLE E106.2
WHEELCHAIR-ACCESSIBLE TELEPHONES

NUMBER OF TELEPHONES PROVIDED ON A FLOOR, LEVEL OR EXTERIOR SITE	MINIMUM REQUIRED NUMBER OF WHEELCHAIR-ACCESSIBLE TELEPHONES
1 or more single unit	1 per floor, level and exterior site
1 bank	1 per floor, level and exterior site
2 or more banks	1 per bank

E106.3 Volume controls. All public telephones provided shall have *accessible* volume control.

E106.4 TTYs. TTYs shall be provided in accordance with Sections E106.4.1 through E106.4.9.

E106.4.1 Bank requirement. Where four or more public pay telephones are provided at a bank of telephones, at least one public TTY shall be provided at that bank.

Exception: TTYs are not required at banks of telephones located within 200 feet (60 960 mm) of, and on the same floor as, a bank containing a public TTY.

E106.4.2 Floor requirement. Where four or more public pay telephones are provided on a floor of a privately owned building, one or more public TTY shall be provided on that floor. Where one public pay telephone or more, is provided on a floor of a publicly owned building, not fewer than one public TTY shall be provided on that floor.

E106.4.3 Building requirement. Where four or more public pay telephones are provided in a privately owned building, one or more public TTY shall be provided in the building. Where at least one public pay telephone is provided in a publicly owned building, one or more public TTY shall be provided in the building.

E106.4.4 Site requirement. Where four or more public pay telephones are provided on a site, one or more public TTY shall be provided on the site.

E106.4.5 Rest stops, emergency road stops and service plazas. Where a public pay telephone is provided at a pub-

TABLE E104.2.1
DWELLING OR SLEEPING UNITS WITH ACCESSIBLE COMMUNICATION FEATURES

TOTAL NUMBER OF DWELLING OR SLEEPING UNITS PROVIDED	MINIMUM REQUIRED NUMBER OF DWELLING OR SLEEPING UNITS WITH ACCESSIBLE COMMUNICATION FEATURES
1	1
2 to 25	2
26 to 50	4
51 to 75	7
76 to 100	9
101 to 150	12
151 to 200	14
201 to 300	17
301 to 400	20
401 to 500	22
501 to 1,000	5% of total
1,001 and over	50 plus 3 for each 100 over 1,000

INTERNATIONAL CODE COUNCIL®
Copyright © 2019 ICC & NYSDOS. ALL RIGHTS RESERVED. Accessed by Lauren Gualdino (lgualdino@briarcliffmanor.org), (-) Order Number #100880972 on May 08, 2020 07:05 AM (PDT) pursuant to License Agreement with ICC & NYSDOS. No further reproduction, no

100880972

lic rest stop, emergency road stop or service plaza, at least one public TTY shall be provided.

E106.4.6 Hospitals. Where a public pay telephone is provided in or adjacent to a hospital emergency room, hospital recovery room or hospital waiting room, one or more public TTY shall be provided at each such location.

E106.4.7 Transportation facilities. Transportation facilities shall be provided with TTYs in accordance with Sections E109.2.5 and E110.2 in addition to the TTYs required by Sections E106.4.1 through E106.4.4.

E106.4.8 Detention and correctional facilities. In detention and correctional facilities, where a public pay telephone is provided in a secured area used only by detainees or inmates and security personnel, then not fewer than one TTY shall be provided in not fewer than one secured area.

E106.4.9 Signs. Public TTYs shall be identified by the International Symbol of TTY complying with ICC A117.1. Directional signs indicating the location of the nearest public TTY shall be provided at banks of public pay telephones not containing a public TTY. Additionally, where signs provide direction to public pay telephones, they shall provide direction to public TTYs. Such signs shall comply with visual signage requirements in ICC A117.1 and shall include the International Symbol of TTY.

E106.5 Shelves for portable TTYs. Where a bank of telephones in the interior of a building consists of three or more public pay telephones, not fewer than one public pay telephone at the bank shall be provided with a shelf and an electrical outlet.

Exceptions:

1. In secured areas of detention and correctional facilities, if shelves and outlets are prohibited for purposes of security or safety shelves and outlets for TTYs are not required to be provided.
2. The shelf and electrical outlet shall not be required at a bank of telephones with a TTY.

SECTION E107
SIGNAGE

E107.1 Signs. Required *accessible* portable toilets and bathing facilities shall be identified by the International Symbol of Accessibility.

E107.2 Designations. Interior and exterior signs identifying permanent rooms and spaces shall be visual characters, raised characters and braille complying with ICC A117.1. Where pictograms are provided as designations of interior rooms and spaces, the pictograms shall have visual characters, raised characters and braille complying with ICC A117.1.

Exceptions:

1. Exterior signs that are not located at the door to the space they serve are not required to comply.
2. Building directories, menus, seat and row designations in assembly areas, occupant names, building addresses and company names and logos are not required to comply.
3. Signs in parking facilities are not required to comply.
4. Temporary (seven days or less) signs are not required to comply.
5. In detention and correctional facilities, signs not located in public areas are not required to comply.

E107.3 Directional and informational signs. Signs that provide direction to, or information about, permanent interior spaces of the site and facilities shall contain visual characters complying with ICC A117.1.

Exception: Building directories, personnel names, company or occupant names and logos, menus and temporary (seven days or less) signs are not required to comply with ICC A117.1.

E107.4 Other signs. Signage indicating special accessibility provisions shall be provided as follows:

1. At bus stops and terminals, signage must be provided in accordance with Section E108.4.
2. At fixed facilities and stations, signage must be provided in accordance with Sections E109.2.2 through E109.2.2.3.
3. At airports, terminal information systems must be provided in accordance with Section E110.3.

SECTION E108
BUS STOPS

E108.1 General. Bus stops shall comply with Sections E108.2 through E108.5.

E108.2 Bus boarding and alighting areas. Bus boarding and alighting areas shall comply with Sections E108.2.1 through E108.2.4.

E108.2.1 Surface. Bus boarding and alighting areas shall have a firm, stable surface.

E108.2.2 Dimensions. Bus boarding and alighting areas shall have a clear length of 96 inches (2440 mm) minimum, measured perpendicular to the curb or vehicle roadway edge, and a clear width of 60 inches (1525 mm) minimum, measured parallel to the vehicle roadway.

E108.2.3 Connection. Bus boarding and alighting areas shall be connected to streets, sidewalks or pedestrian paths by an *accessible route* complying with Section 1104.

E108.2.4 Slope. Parallel to the roadway, the slope of the bus boarding and alighting area shall be the same as the roadway, to the maximum extent practicable. For water drainage, a maximum slope of 1:48 perpendicular to the roadway is allowed.

E108.3 Bus shelters. Where provided, new or replaced bus shelters shall provide a minimum clear floor or ground space complying with ICC A117.1, Section 305, entirely within the shelter. Such shelters shall be connected by an *accessible route* to the boarding area required by Section E108.2.

E108.4 Signs. New bus route identification signs shall have finish and contrast complying with ICC A117.1. Additionally, to the maximum extent practicable, new bus route iden-

INTERNATIONAL CODE COUNCIL®
Copyright © 2019 ICC & NYSDOS. ALL RIGHTS RESERVED. Accessed by Lauren Gualdino (lgualdino@briarcliffmanor.org), (-) Order Number #100880972 on May 08, 2020 07:05 AM (PDT) pursuant to License Agreement with ICC & NYSDOS. No further reproduction, no

100880972

tification signs shall provide visual characters complying with ICC A117.1.

Exception: Bus schedules, timetables and maps that are posted at the bus stop or bus bay are not required to meet this requirement.

E108.5 Bus stop siting. Bus stop sites shall be chosen such that, to the maximum extent practicable, the areas where lifts or ramps are to be deployed comply with Sections E108.2 and E108.3.

SECTION E109
TRANSPORTATION FACILITIES AND STATIONS

E109.1 General. Fixed transportation facilities and stations shall comply with the applicable provisions of Section E109.2.

E109.2 New construction. New stations in rapid rail, light rail, commuter rail, intercity rail, high speed rail and other fixed guideway systems shall comply with Sections E109.2.1 through E109.2.8.

E109.2.1 Station entrances. Where different entrances to a station serve different transportation fixed routes or groups of fixed routes, at least one entrance serving each group or route shall comply with Section 1104.

E109.2.2 Signs. Signage in fixed transportation facilities and stations shall comply with Sections E109.2.2.1 through E109.2.2.3.

E109.2.2.1 Raised character and braille signs. Where signs are provided at entrances to stations identifying the station or the entrance, or both, at least one sign at each entrance shall be raised characters and braille. A minimum of one raised character and braille sign identifying the specific station shall be provided on each platform or boarding area. Such signs shall be placed in uniform locations at entrances and on platforms or boarding areas within the transit system to the maximum extent practicable.

Exceptions:

1. Where the station does not have a defined entrance but signs are provided, the raised characters and braille signs shall be placed in a central location.
2. Signs are not required to be raised characters and braille where audible signs are remotely transmitted to hand-held receivers, or are user or proximity actuated.

E109.2.2.2 Identification signs. Stations covered by this section shall have identification signs containing visual characters complying with ICC A117.1. Signs shall be clearly visible and within the sightlines of a standing or sitting passenger from within the train on both sides when not obstructed by another train.

E109.2.2.3 Informational signs. Lists of stations, routes and destinations served by the station that are located on boarding areas, *platforms* or *mezzanines* shall provide visual characters complying with ICC A117.1. Signs covered by this provision shall, to the maximum extent practicable, be placed in uniform locations within the transit system.

E109.2.3 Fare machines. Self-service fare vending, collection and adjustment machines shall comply with ICC A117.1, Section 707. Where self-service fare vending, collection or adjustment machines are provided for the use of the general public, at least one *accessible* machine of each type provided shall be provided at each *accessible* point of entry and *exit*.

E109.2.4 Rail-to-platform height. Station platforms shall be positioned to coordinate with vehicles in accordance with the applicable provisions of 36 CFR, Part 1192. Low-level platforms shall be 8 inches (250 mm) minimum above top of rail.

Exception: Where vehicles are boarded from sidewalks or street level, low-level platforms shall be permitted to be less than 8 inches (250 mm).

E109.2.5 TTYs. Where a public pay telephone is provided in a transit facility (as defined by the Department of Transportation), at least one public TTY complying with ICC A117.1, Section 704.4, shall be provided in the station. In addition, where one or more public pay telephones serve a particular entrance to a transportation facility, at least one TTY telephone complying with ICC A117.1, Section 704.4, shall be provided to serve that entrance.

E109.2.6 Track crossings. Where a circulation path serving boarding platforms crosses tracks, an *accessible* route shall be provided.

Exception: Openings for wheel flanges shall be permitted to be $2^{1}/_{2}$ inches (64 mm) maximum.

E109.2.7 Public address systems. Where public address systems convey audible information to the public, the same or equivalent information shall be provided in a visual format.

E109.2.8 Clocks. Where clocks are provided for use by the general public, the clock face shall be uncluttered so that its elements are clearly visible. Hands, numerals and digits shall contrast with the background either light-on-dark or dark-on-light. Where clocks are mounted overhead, numerals and digits shall comply with visual character requirements.

SECTION E110
AIRPORTS

E110.1 New construction. New construction of airports shall comply with Sections E110.2 through E110.4.

E110.2 TTYs. Where public pay telephones are provided, at least one TTY shall be provided in compliance with ICC A117.1, Section 704.4. Additionally, if four or more public pay telephones are located in a main terminal outside the security areas, a concourse within the security areas or a baggage claim area in a terminal, at least one public TTY complying with ICC A117.1, Section 704.4, shall also be provided in each such location.

INTERNATIONAL CODE COUNCIL®
Copyright © 2019 ICC & NYSDOS. ALL RIGHTS RESERVED. Accessed by Lauren Gualdino (lgualdino@briarcliffmanor.org), (-) Order Number #100880972 on May 08, 2020 07:05 AM (PDT) pursuant to License Agreement with ICC & NYSDOS. No further reproduction, no

100880972

E110.3 Terminal information systems. Where terminal information systems convey audible information to the public, the same or equivalent information shall be provided in a visual format.

E110.4 Clocks. Where clocks are provided for use by the general public, the clock face shall be uncluttered so that its elements are clearly visible. Hands, numerals and digits shall contrast with the background either light-on-dark or dark-on-light. Where clocks are mounted overhead, numerals and digits shall comply with visual character requirements.

SECTION E111
REFERENCED STANDARDS

DOJ 36 CFR Part 1192	Americans with Disabilities Act (ADA) Accessibility Guidelines for Transportation Vehicles (ADAAG). Washington, DC: Department of Justice, 1991	E109.2.4
IBC—18	*International Building Code*	E102.1
ICC A117.1—09	Accessible and Usable Buildings and Facilities	E101.2, E104.2.4, E106.4.9, E107.2, E107.3, E108.3, E108.4, E109.2.2.2, E109.2.2.3, E109.2.3, E109.2.5, E110.2

INTERNATIONAL CODE COUNCIL®
Copyright © 2019 ICC & NYSDOS. ALL RIGHTS RESERVED. Accessed by Lauren Gualdino (lgualdino@briarcliffmanor.org), (-) Order Number #100880972 on May 08, 2020 07:05 AM (PDT) pursuant to License Agreement with ICC & NYSDOS. No further reproduction, no

100880972

INTERNATIONAL CODE COUNCIL®
Copyright © 2019 ICC & NYSDOS. ALL RIGHTS RESERVED. Accessed by Lauren Gualdino (lgualdino@briarcliffmanor.org), (-) Order Number #100880972 on May 08, 2020 07:05 AM (PDT) pursuant to License Agreement with ICC & NYSDOS. No further reproduction, no

100880972

APPENDIX F

RODENTPROOFING

SECTION F101
GENERAL

F101.1 General. Buildings or structures and the walls enclosing habitable or occupiable rooms and spaces in which persons live, sleep or work, or in which feed, food or foodstuffs are stored, prepared, processed, served or sold, shall be constructed in accordance with the provisions of this section.

F101.2 Foundation wall ventilation openings. Foundation wall ventilation openings shall be covered for their height and width with perforated sheet metal plates not less than 0.070 inch (1.8 mm) thick, expanded sheet metal plates not less than 0.047 inch (1.2 mm) thick, cast-iron grills or grating, extruded aluminum load-bearing vents or with hardware cloth of 0.035 inch (0.89 mm) wire or heavier. The openings therein shall not exceed $^1/_4$ inch (6.4 mm).

F101.3 Foundation and exterior wall sealing. Annular spaces around pipes, electric cables, conduits or other openings in the walls shall be protected against the passage of rodents by closing such openings with cement mortar, concrete masonry or noncorrosive metal.

F101.4 Doors. Doors on which metal protection has been applied shall be hinged so as to be free swinging. When closed, the maximum clearance between any door, door jambs and sills shall be not greater than $^3/_8$ inch (9.5 mm).

F101.5 Windows and other openings. Windows and other openings for the purpose of light or ventilation located in exterior walls within 2 feet (610 mm) above the existing ground level immediately below such opening shall be covered for their entire height and width, including frame, with hardware cloth of not less than 0.035-inch (0.89 mm) wire or heavier.

F101.5.1 Rodent-accessible openings. Windows and other openings for the purpose of light and ventilation in the exterior walls not covered in this chapter, accessible to rodents by way of exposed pipes, wires, conduits and other appurtenances, shall be covered with wire cloth of at least 0.035-inch (0.89 mm) wire. In lieu of wire cloth covering, said pipes, wires, conduits and other appurtenances shall be blocked from rodent usage by installing solid sheet metal guards 0.024 inch (0.61 mm) thick or heavier. Guards shall be fitted around pipes, wires, conduits or other appurtenances. In addition, they shall be fastened securely to and shall extend perpendicularly from the exterior wall for not less than 12 inches (305 mm) beyond and on either side of pipes, wires, conduits or appurtenances.

F101.6 Pier and wood construction.

F101.6.1 Sill less than 12 inches above ground. Buildings not provided with a continuous foundation shall be provided with protection against rodents at grade by providing either an apron in accordance with Section F101.6.1.1 or a floor slab in accordance with Section F101.6.1.2.

F101.6.1.1 Apron. Where an apron is provided, the apron shall be not less than 8 inches (203 mm) above, nor less than 24 inches (610 mm) below, grade. The apron shall not terminate below the lower edge of the siding material. The apron shall be constructed of an approved nondecayable, water-resistant rodentproofing material of required strength and shall be installed around the entire perimeter of the building. Where constructed of masonry or concrete materials, the apron shall be not less than 4 inches (102 mm) in thickness.

F101.6.1.2 Grade floors. Where continuous concrete-grade floor slabs are provided, open spaces shall not be left between the slab and walls, and openings in the slab shall be protected.

F101.6.2 Sill at or above 12 inches above ground. Buildings not provided with a continuous foundation and that have sills 12 inches (305 mm) or more above ground level shall be provided with protection against rodents at grade in accordance with any of the following:

1. Section F101.6.1.1 or F101.6.1.2.
2. By installing solid sheet metal collars not less than 0.024 inch (0.6 mm) thick at the top of each pier or pile and around each pipe, cable, conduit, wire or other item that provides a continuous pathway from the ground to the floor.
3. By encasing the pipes, cables, conduits or wires in an enclosure constructed in accordance with Section F101.6.1.1.

INTERNATIONAL CODE COUNCIL®
Copyright © 2019 ICC & NYSDOS. ALL RIGHTS RESERVED. Accessed by Lauren Gualdino (lgualdino@briarcliffmanor.org), (-) Order Number #100880972 on May 08, 2020 07:05 AM (PDT) pursuant to License Agreement with ICC & NYSDOS. No further reproduction, no

100880972

INTERNATIONAL CODE COUNCIL®
Copyright © 2019 ICC & NYSDOS. ALL RIGHTS RESERVED. Accessed by Lauren Gualdino (lgualdino@briarcliffmanor.org), (-) Order Number #100880972 on May 08, 2020 07:05 AM (PDT) pursuant to License Agreement with ICC & NYSDOS. No further reproduction, no

100880972

APPENDIX G

FLOOD-RESISTANT CONSTRUCTION

This appendix is informative and is not part of this code.

SECTION G101 ADMINISTRATION

G101.1 Purpose. The purpose of this appendix is to promote the public health, safety and general welfare and to minimize public and private losses due to flood conditions in specific *flood hazard areas* through the establishment of comprehensive regulations for management of *flood hazard areas* designed to:

1. Prevent unnecessary disruption of commerce, access and public service during times of flooding.
2. Manage the alteration of natural flood plains, stream channels and shorelines.
3. Manage filling, grading, dredging and other development that may increase flood damage or erosion potential.
4. Prevent or regulate the construction of flood barriers that will divert floodwaters or that can increase flood hazards.
5. Contribute to improved construction techniques in the flood plain.

G101.2 Objectives. The objectives of this appendix are to protect human life, minimize the expenditure of public money for flood control projects, minimize the need for rescue and relief efforts associated with flooding, minimize prolonged business interruption, minimize damage to public facilities and utilities, help maintain a stable tax base by providing for the sound use and development of flood-prone areas, contribute to improved construction techniques in the flood plain and ensure that potential owners and occupants are notified that property is within *flood hazard areas*.

G101.3 Scope. The provisions of this appendix shall apply to all proposed development in a *flood hazard area* established in Section 1612 of this code, including certain building work exempt from permit under Section 105.2.

G101.4 Violations. Any violation of a provision of this appendix, or failure to comply with a *permit* or variance issued pursuant to this appendix or any requirement of this appendix, shall be handled in accordance with Section 114.

SECTION G102 APPLICABILITY

G102.1 General. This appendix, in conjunction with this code, provides minimum requirements for development located in flood hazard areas, including:

1. The subdivision of land.
2. Site improvements and installation of utilities.
3. Placement and replacement of manufactured homes.
4. Placement of recreational vehicles.
5. New construction and repair, reconstruction, rehabilitation or additions to new construction.
6. Substantial improvement of existing buildings and structures, including restoration after damage.
7. Installation of tanks.
8. Temporary structures.
9. Temporary or permanent storage, utility and miscellaneous Group U buildings and structures.
10. Certain building work exempt from permit under Section 105.2 and other buildings and development activities.

G102.2 Establishment of flood hazard areas. *Flood hazard areas* are established in Section 1612.3 of this code, adopted by the applicable governing authority on **[INSERT DATE]**.

SECTION G103 POWERS AND DUTIES

G103.1 Permit applications. All applications for permits must comply with the following:

1. The *building official* shall review all *permit* applications to determine whether proposed development is located in *flood hazard areas* established in Section G102.2.
2. Where a proposed development site is in a *flood hazard area*, all development to which this appendix is applicable as specified in Section G102.1 shall be designed and constructed with methods, practices and materials that minimize *flood* damage and that are in accordance with this code and ASCE 24.

G103.2 Other permits. It shall be the responsibility of the *building official* to ensure that approval of a proposed development shall not be given until proof that necessary permits have been granted by federal or state agencies having jurisdiction over such development.

G103.3 Determination of design flood elevations. If design flood elevations are not specified, the *building official* is authorized to require the applicant to meet one of the following:

1. Obtain, review and reasonably utilize data available from a federal, state or other source.
2. Determine the design flood elevation in accordance with accepted hydrologic and hydraulic engineering techniques. Such analyses shall be performed and sealed by a *registered design professional*. Studies, analyses and

INTERNATIONAL CODE COUNCIL®
Copyright © 2019 ICC & NYSDOS. ALL RIGHTS RESERVED. Accessed by Lauren Gualdino (lgualdino@briarcliffmanor.org), (-) Order Number #100880972 on May 08, 2020 07:05 AM (PDT) pursuant to License Agreement with ICC & NYSDOS. No further reproduction, no

100880972

computations shall be submitted in sufficient detail to allow review and approval by the *building official*. The accuracy of data submitted for such determination shall be the responsibility of the applicant.

G103.4 Activities in riverine flood hazard areas. In riverine *flood hazard areas* where design flood elevations are specified but *floodways* have not been designated, the *building official* shall not permit any new construction, substantial improvement or other development, including fill, unless the applicant submits an engineering analysis prepared by a *registered design professional*, demonstrating that the cumulative effect of the proposed development, when combined with all other existing and anticipated *flood hazard area* encroachment, will not increase the design flood elevation more than 1 foot (305 mm) at any point within the community.

G103.5 Floodway encroachment. Prior to issuing a *permit* for any *floodway* encroachment, including fill, new construction, substantial improvements and other development or land-disturbing activity, the *building official* shall require submission of a certification, prepared by a r*egistered design professional*, along with supporting technical data, demonstrating that such development will not cause any increase of the base flood level.

G103.5.1 Floodway revisions. A *floodway* encroachment that increases the level of the base flood is authorized if the applicant has applied for a conditional Flood Insurance Rate Map (FIRM) revision and has received the approval of the Federal Emergency Management Agency (FEMA).

G103.6 Watercourse alteration. Prior to issuing a *permit* for any alteration or relocation of any watercourse, the *building official* shall require the applicant to provide notification of the proposal to the appropriate authorities of all adjacent government jurisdictions, as well as appropriate state agencies. A copy of the notification shall be maintained in the permit records and submitted to FEMA.

G103.6.1 Engineering analysis. The *building official* shall require submission of an engineering analysis, prepared by a *registered design professional*, demonstrating that the flood-carrying capacity of the altered or relocated portion of the watercourse will not be decreased. Such watercourses shall be maintained in a manner that preserves the channel's flood-carrying capacity.

G103.7 Alterations in coastal areas. Prior to issuing a *permit* for any alteration of sand dunes and mangrove stands in coastal high-hazard areas and coastal A zones, the *building official* shall require submission of an engineering analysis, prepared by a *registered design professional*, demonstrating that the proposed alteration will not increase the potential for flood damage.

G103.8 Records. The *building official* shall maintain a permanent record of all *permits* issued in *flood hazard areas,* including supporting certifications and documentation required by this appendix and copies of inspection reports, design certifications and documentation of elevations required in Section 1612 of this code and Section R322 of the *Residential Code of New York State.*

G103.9 Inspections. Development for which a *permit* under this appendix is required shall be subject to inspection. The *building official* or the *building official's* designee shall make, or cause to be made, inspections of all development in *flood hazard areas* authorized by issuance of a *permit* under this appendix.

SECTION G104
PERMITS

G104.1 Required. Any person, owner or owner's authorized agent who intends to conduct any development in a *flood hazard area* shall first make application to the *building official* and shall obtain the required *permit.*

G104.2 Application for permit. The applicant shall file an application in writing on a form furnished by the *building official*. Such application shall:

1. Identify and describe the development to be covered by the *permit*.
2. Describe the land on which the proposed development is to be conducted by legal description, street address or similar description that will readily identify and definitely locate the site.
3. Include a site plan showing the delineation of *flood hazard areas*, *floodway* boundaries, flood zones, design flood elevations, ground elevations, proposed fill and excavation and drainage patterns and facilities.
4. Include in subdivision proposals and other proposed developments with more than 50 lots or larger than 5 acres (20 234 m^2), base flood elevation data in accordance with Section 1612.3.1 if such data are not identified for the *flood hazard areas* established in Section G102.2.
5. Indicate the use and occupancy for which the proposed development is intended.
6. Be accompanied by construction documents, grading and filling plans and other information deemed appropriate by the *building official*.
7. State the valuation of the proposed work.
8. Be signed by the applicant or the applicant's authorized agent.

G104.3 Validity of permit. The issuance of a *permit* under this appendix shall not be construed to be a *permit* for, or approval of, any violation of this appendix or any other ordinance of the jurisdiction. The issuance of a *permit* based on submitted documents and information shall not prevent the *building official* from requiring the correction of errors. The *building official* is authorized to prevent occupancy or use of a structure or site that is in violation of this appendix or other ordinances of this jurisdiction.

G104.4 Expiration. A *permit* shall become invalid if the proposed development is not commenced within 180 days after its issuance, or if the work authorized is suspended or abandoned for a period of 180 days after the work commences. Extensions shall be requested in writing and justifiable cause

INTERNATIONAL CODE COUNCIL®
Copyright © 2019 ICC & NYSDOS. ALL RIGHTS RESERVED. Accessed by Lauren Gualdino (lgualdino@briarcliffmanor.org), (-) Order Number #100880972 on May 08, 2020 07:05 AM (PDT) pursuant to License Agreement with ICC & NYSDOS. No further reproduction, no

100880972

demonstrated. The *building official* is authorized to grant, in writing, one or more extensions of time, for periods not more than 180 days each.

G104.5 Suspension or revocation. The *building official* is authorized to suspend or revoke a *permit* issued under this appendix wherever the *permit* is issued in error or on the basis of incorrect, inaccurate or incomplete information, or in violation of any ordinance or code of this jurisdiction.

SECTION G105
VARIANCES

G105.1 General. The *board of appeals* established pursuant to Section 113 shall hear and decide requests for variances. The *board of appeals* shall base its determination on technical justifications, and has the right to attach such conditions to variances as it deems necessary to further the purposes and objectives of this appendix and Section 1612.

G105.2 Records. The *building official* shall maintain a permanent record of all variance actions, including justification for their issuance.

G105.3 Historic structures. A variance is authorized to be issued for the repair or rehabilitation of a historic structure upon a determination that the proposed repair or rehabilitation will not preclude the structure's continued designation as a historic structure, and the variance is the minimum necessary to preserve the historic character and design of the structure.

Exception: Within *flood hazard areas*, *historic structures* that do not meet one or more of the following designations:

1. Listed or preliminarily determined to be eligible for listing in the National Register of Historic Places.
2. Determined by the Secretary of the U.S. Department of Interior as contributing to the historical significance of a registered historic district or a district preliminarily determined to qualify as an historic district.
3. Designated as *historic* under a state or local historic preservation program that is approved by the Department of Interior.

G105.4 Functionally dependent facilities. A variance is authorized to be issued for the construction or substantial improvement of a functionally dependent facility provided that the criteria in Section 1612.1 are met and the variance is the minimum necessary to allow the construction or substantial improvement, and that all due consideration has been given to methods and materials that minimize flood damages during the design flood and do not create additional threats to public safety.

G105.5 Restrictions. The *board of appeals* shall not issue a variance for any proposed development in a floodway if any increase in flood levels would result during the base flood discharge.

G105.6 Considerations. In reviewing applications for variances, the *board of appeals* shall consider all technical evaluations, all relevant factors, all other portions of this appendix and the following:

1. The danger that materials and debris may be swept onto other lands resulting in further injury or damage.
2. The danger to life and property due to flooding or erosion damage.
3. The susceptibility of the proposed development, including contents, to flood damage and the effect of such damage on current and future owners.
4. The importance of the services provided by the proposed development to the community.
5. The availability of alternate locations for the proposed development that are not subject to flooding or erosion.
6. The compatibility of the proposed development with existing and anticipated development.
7. The relationship of the proposed development to the comprehensive plan and flood plain management program for that area.
8. The safety of access to the property in times of flood for ordinary and emergency vehicles.
9. The expected heights, velocity, duration, rate of rise and debris and sediment transport of the floodwaters and the effects of wave action, if applicable, expected at the site.
10. The costs of providing governmental services during and after flood conditions including maintenance and repair of public utilities and facilities such as sewer, gas, electrical and water systems, streets and bridges.

G105.7 Conditions for issuance. Variances shall only be issued by the *board of appeals* where all of the following criteria are met:

1. A technical showing of good and sufficient cause that the unique characteristics of the size, configuration or topography of the site renders the elevation standards inappropriate.
2. A determination that failure to grant the variance would result in exceptional hardship by rendering the lot undevelopable.
3. A determination that the granting of a variance will not result in increased flood heights, additional threats to public safety, extraordinary public expense, nor create nuisances, cause fraud on or victimization of the public or conflict with existing local laws or ordinances.
4. A determination that the variance is the minimum necessary, considering the flood hazard, to afford relief.
5. Notification to the applicant in writing over the signature of the building official that the issuance of a variance to construct a structure below the base flood level will result in increased premium rates for flood insurance up to amounts as high as $25 for $100 of insurance coverage, and that such construction below the base flood level increases risks to life and property.

INTERNATIONAL CODE COUNCIL®
Copyright © 2019 ICC & NYSDOS. ALL RIGHTS RESERVED. Accessed by Lauren Gualdino (lgualdino@briarcliffmanor.org), (-) Order Number #100880972 on May 08, 2020 07:05 AM (PDT) pursuant to License Agreement with ICC & NYSDOS. No further reproduction, no

100880972

SECTION G201
DEFINITIONS

G201.1 General. The following words and terms shall, for the purposes of this appendix, have the meanings shown herein. Refer to Chapter 2 of this code for general definitions.

G201.2 Definitions.

DEVELOPMENT. Any man-made change to improved or unimproved real estate, including but not limited to, buildings or other structures, temporary structures, temporary or permanent storage of materials, mining, dredging, filling, grading, paving, excavations, operations and other land-disturbing activities.

FUNCTIONALLY DEPENDENT FACILITY. A facility that cannot be used for its intended purpose unless it is located or carried out in close proximity to water, such as a docking or port facility necessary for the loading or unloading of cargo or passengers, shipbuilding or ship repair. The term does not include long-term storage, manufacture, sales or service facilities.

MANUFACTURED HOME. A structure that is transportable in one or more sections, built on a permanent chassis, designed for use with or without a permanent foundation when attached to the required utilities, and constructed to the Federal Mobile Home Construction and Safety Standards and rules and regulations promulgated by the U.S. Department of Housing and Urban Development. The term also includes mobile homes, park trailers, travel trailers and similar transportable structures that are placed on a site for 180 consecutive days or longer.

MANUFACTURED HOME PARK OR SUBDIVISION. A parcel (or contiguous parcels) of land divided into two or more manufactured home lots for rent or sale.

RECREATIONAL VEHICLE. A vehicle that is built on a single chassis, 400 square feet (37.16 m^2) or less when measured at the largest horizontal projection, designed to be self-propelled or permanently towable by a light-duty truck, and designed primarily not for use as a permanent dwelling but as temporary living quarters for recreational, camping, travel or seasonal use. A recreational vehicle is ready for highway use if it is on its wheels or jacking system, is attached to the site only by quick disconnect-type utilities and security devices and has no permanently attached additions.

VARIANCE. A grant of relief from the requirements of this section that permits construction in a manner otherwise prohibited by this section where specific enforcement would result in unnecessary hardship.

VIOLATION. A development that is not fully compliant with this appendix or Section 1612, as applicable.

SECTION G301
SUBDIVISIONS

G301.1 General. Any subdivision proposal, including proposals for manufactured home parks and subdivisions, or other proposed new development in a flood hazard area shall be reviewed to verify all of the following:

1. Such proposals are consistent with the need to minimize flood damage.
2. Public utilities and facilities, such as sewer, gas, electric and water systems, are located and constructed to minimize or eliminate flood damage.
3. Adequate drainage is provided to reduce exposure to flood hazards.

G301.2 Subdivision requirements. The following requirements shall apply in the case of any proposed subdivision, including proposals for manufactured home parks and subdivisions, any portion of which lies within a *flood hazard area*:

1. The *flood hazard area*, including *floodways*, coastal high-hazard areas and coastal A zones, as appropriate, shall be delineated on tentative and final subdivision plats.
2. Design flood elevations shall be shown on tentative and final subdivision plats.
3. Residential building lots shall be provided with adequate buildable area outside the *floodway*.
4. The design criteria for utilities and facilities set forth in this appendix and appropriate International Codes shall be met.

SECTION G401
SITE IMPROVEMENT

G401.1 Development in floodways. Development or land-disturbing activity shall not be authorized in the *floodway* unless it has been demonstrated through hydrologic and hydraulic analyses performed in accordance with standard engineering practice, and prepared by a *registered design professional*, that the proposed encroachment will not result in any increase in the base flood level.

G401.2 Coastal high-hazard areas and coastal A zones. In coastal high-hazard areas and coastal A zones:

1. New buildings and buildings that are substantially improved shall only be authorized landward of the reach of mean high tide.
2. The use of fill for structural support of buildings is prohibited.

G401.3 Sewer facilities. All new or replaced sanitary sewer facilities, private sewage treatment plants (including all pumping stations and collector systems) and on-site waste disposal systems shall be designed in accordance with Chapter 7, ASCE 24, to minimize or eliminate infiltration of floodwaters into the facilities and discharge from the facilities into floodwaters, or impairment of the facilities and systems.

G401.4 Water facilities. All new or replacement water facilities shall be designed in accordance with the provisions of Chapter 7, ASCE 24, to minimize or eliminate infiltration of floodwaters into the systems.

G401.5 Storm drainage. Storm drainage shall be designed to convey the flow of surface waters to minimize or eliminate damage to persons or property.

G401.6 Streets and sidewalks. Streets and sidewalks shall be designed to minimize potential for increasing or aggravating flood levels.

INTERNATIONAL CODE COUNCIL®
Copyright © 2019 ICC & NYSDOS. ALL RIGHTS RESERVED. Accessed by Lauren Gualdino (lgualdino@briarcliffmanor.org), (-) Order Number #100880972 on May 08, 2020 07:05 AM (PDT) pursuant to License Agreement with ICC & NYSDOS. No further reproduction, no

100880972

SECTION G501
MANUFACTURED HOMES

G501.1 Elevation. All new and replacement manufactured homes to be placed or substantially improved in a *flood hazard area* shall be elevated such that the lowest floor of the manufactured home is elevated to or above the design flood elevation.

G501.2 Foundations. All new and replacement manufactured homes, including substantial improvement of existing manufactured homes, shall be placed on a permanent, reinforced foundation that is designed in accordance with Section R322 of the *International Residential Code*.

G501.3 Anchoring. All new and replacement manufactured homes to be placed or substantially improved in a *flood hazard area* shall be installed using methods and practices that minimize flood damage. Manufactured homes shall be securely anchored to an adequately anchored foundation system to resist flotation, collapse and lateral movement. Methods of anchoring are authorized to include, but are not limited to, use of over-the-top or frame ties to ground anchors. This requirement is in addition to applicable state and local anchoring requirements for resisting wind forces.

G501.4 Protection of mechanical equipment and outside appliances. Mechanical equipment and outside appliances shall be elevated to or above the *design flood elevation*.

> **Exception:** Where such equipment and appliances are designed and installed to prevent water from entering or accumulating within their components and the systems are constructed to resist hydrostatic and hydrodynamic loads and stresses, including the effects of buoyancy, during the occurrence of flooding up to the elevation required by Section R322 of the *International Residential Code*, the systems and equipment shall be permitted to be located below the elevation required by Section R322 of the *International Residential Code*. Electrical wiring systems shall be permitted below the *design flood elevation* provided that they conform to the provisions of NFPA 70.

G501.5 Enclosures. Fully enclosed areas below elevated manufactured homes shall comply with the requirements of Section R322 of the *International Residential Code*.

SECTION G601
RECREATIONAL VEHICLES

G601.1 Placement prohibited. The placement of recreational vehicles shall not be authorized in coastal high-hazard areas and in *floodways*.

G601.2 Temporary placement. Recreational vehicles in *flood hazard areas* shall be fully licensed and ready for highway use, or shall be placed on a site for less than 180 consecutive days.

G601.3 Permanent placement. Recreational vehicles that are not fully licensed and ready for highway use, or that are to be placed on a site for more than 180 consecutive days, shall meet the requirements of Section G501 for manufactured homes.

SECTION G701
TANKS

G701.1 Tanks. Underground and above-ground tanks shall be designed, constructed, installed and anchored in accordance with ASCE 24.

SECTION G801
OTHER BUILDING WORK

G801.1 Garages and accessory structures. Garages and accessory structures shall be designed and constructed in accordance with ASCE 24.

G801.2 Fences. Fences in floodways that have the potential to block the passage of floodwaters, such as stockade fences and wire mesh fences, shall meet the requirement of Section G103.5.

G801.3 Oil derricks. Oil derricks located in *flood hazard areas* shall be designed in conformance with the flood loads in Sections 1603.1.7 and 1612.

G801.4 Retaining walls, sidewalks and driveways. Retaining walls, sidewalks and driveways shall meet the requirements of Section 1804.5.

G801.5 Swimming pools. Swimming pools shall be designed and constructed in accordance with ASCE 24. Above-ground swimming pools, on-ground swimming pools and in-ground swimming pools that involve placement of fill in *floodways* shall also meet the requirements of Section G103.5.

G801.6 Decks, porches, and patios. Decks, porches and patios shall be designed and constructed in accordance with ASCE 24.

G801.7 Nonstructural concrete slabs in coastal high-hazard areas and coastal A zones. In coastal high-hazard areas and coastal A zones, nonstructural concrete slabs used as parking pads, enclosure floors, landings, decks, walkways, patios and similar nonstructural uses are permitted beneath or adjacent to buildings and structures provided that the concrete slabs shall be constructed in accordance with ASCE 24.

G801.8 Roads and watercourse crossings in regulated floodways. Roads and watercourse crossings that encroach into regulated *floodways*, including roads, bridges, culverts, low-water crossings and similar means for vehicles or pedestrians to travel from one side of a watercourse to the other, shall meet the requirement of Section G103.5.

SECTION G901
TEMPORARY STRUCTURES AND TEMPORARY STORAGE

G901.1 Temporary structures. Temporary structures shall be erected for a period of less than 180 days. Temporary structures shall be anchored to prevent flotation, collapse or lateral movement resulting from hydrostatic loads, including the effects of buoyancy, during conditions of the design flood. Fully enclosed temporary structures shall have flood openings that are in accordance with ASCE 24 to allow for the automatic entry and exit of floodwaters.

INTERNATIONAL CODE COUNCIL®
Copyright © 2019 ICC & NYSDOS. ALL RIGHTS RESERVED. Accessed by Lauren Gualdino (lgualdino@briarcliffmanor.org), (-) Order Number #100880972 on May 08, 2020 07:05 AM (PDT) pursuant to License Agreement with ICC & NYSDOS. No further reproduction, no

100880972

G901.2 Temporary storage. Temporary storage includes storage of goods and materials for a period of less than 180 days. Stored materials shall not include hazardous materials.

G901.3 Floodway encroachment. Temporary structures and temporary storage in floodways shall meet the requirements of G103.5.

SECTION G1001
UTILITY AND MISCELLANEOUS GROUP U

G1001.1 Utility and miscellaneous Group U. Utility and miscellaneous Group U includes buildings that are accessory in character and miscellaneous structures not classified in any specific occupancy in this code, including, but not limited to, agricultural buildings, aircraft hangars (accessory to a one- or two-family residence), barns, carports, fences more than 6 feet (1829 mm) high, grain silos (accessory to a residential occupancy), greenhouses, livestock shelters, private garages, retaining walls, sheds, stables and towers.

G1001.2 Flood loads. Utility and miscellaneous Group U buildings and structures, including substantial improvement of such buildings and structures, shall be anchored to prevent flotation, collapse or lateral movement resulting from flood loads, including the effects of buoyancy, during conditions of the design flood.

G1001.3 Elevation. Utility and miscellaneous Group U buildings and structures, including substantial improvement of such buildings and structures, shall be elevated such that the lowest floor, including basement, is elevated to or above the design flood elevation in accordance with Section 1612 of this code.

G1001.4 Enclosures below design flood elevation. Fully enclosed areas below the design flood elevation shall be constructed in accordance with ASCE 24.

G1001.5 Flood-damage-resistant materials. Flood-damage-resistant materials shall be used below the design flood elevation.

G1001.6 Protection of mechanical, plumbing and electrical systems. Mechanical, plumbing and electrical systems, including plumbing fixtures, shall be elevated to or above the design flood elevation.

> **Exception:** Electrical systems, equipment and components; heating, ventilating, air conditioning and plumbing appliances; plumbing fixtures, duct systems and other service equipment shall be permitted to be located below the design flood elevation provided that they are designed and installed to prevent water from entering or accumulating within the components and to resist hydrostatic and hydrodynamic loads and stresses, including the effects of buoyancy, during the occurrence of flooding to the design flood elevation in compliance with the flood-resistant construction requirements of this code. Electrical wiring systems shall be permitted to be located below the design flood elevation provided that they conform to the provisions of NFPA 70.

SECTION G1101
REFERENCED STANDARDS

ASCE 24—13	Flood Resistant Design and Construction	G103.1, G401.3, G401.4, G701.1, G801.1, G801.5, G801.6, G801.7, G901.1, G1001.4
HUD 24 CFR Part 3280 (2008)	Manufactured Home Construction and Safety Standards	G201
IBC—18	*International Building Code*	G102.2, G1001.1, G1001.3
IRC—18	*International Residential Code*	G501.2, G501.4, G501.5
NFPA 70—17	*National Electrical Code*	G501.4, G1001.6

INTERNATIONAL CODE COUNCIL®
Copyright © 2019 ICC & NYSDOS. ALL RIGHTS RESERVED. Accessed by Lauren Gualdino (lgualdino@briarcliffmanor.org), (-) Order Number #100880972 on May 08, 2020 07:05 AM (PDT) pursuant to License Agreement with ICC & NYSDOS. No further reproduction, no

100880972

APPENDIX H

SIGNS

This appendix is informative and is not part of this code.

SECTION H101 GENERAL

H101.1 General. A sign shall not be erected in a manner that would confuse or obstruct the view of or interfere with exit signs required by Chapter 10 or with official traffic signs, signals or devices. Signs and sign support structures, together with their supports, braces, guys and anchors, shall be kept in repair and in proper state of preservation. The display surfaces of signs shall be kept neatly painted or posted at all times.

H101.2 Signs exempt from permits. The following signs are exempt from the requirements to obtain a *permit* before erection:

1. Painted nonilluminated signs.
2. Temporary signs announcing the sale or rent of property.
3. Signs erected by transportation authorities.
4. Projecting signs not exceeding 2.5 square feet (0.23 m^2).
5. The changing of moveable parts of an approved sign that is designed for such changes, or the repainting or repositioning of display matter shall not be deemed an alteration.

SECTION H102 DEFINITIONS

H102.1 General. The following words and terms shall, for the purposes of this appendix, have the meanings shown herein. Refer to Chapter 2 of this code for general definitions.

COMBINATION SIGN. A sign incorporating any combination of the features of pole, projecting and roof signs.

DISPLAY SIGN. The area made available by the sign structure for the purpose of displaying the advertising message.

ELECTRIC SIGN. A sign containing electrical wiring, but not including signs illuminated by an exterior light source.

GROUND SIGN. A billboard or similar type of sign that is supported by one or more uprights, poles or braces in or upon the ground other than a combination sign or pole sign, as defined by this code.

POLE SIGN. A sign wholly supported by a sign structure in the ground.

PORTABLE DISPLAY SURFACE. A display surface temporarily fixed to a standardized advertising structure that is regularly moved from structure to structure at periodic intervals.

PROJECTING SIGN. A sign other than a wall sign that projects from and is supported by a wall of a building or structure.

ROOF SIGN. A sign erected on or above a roof or parapet of a building or structure.

SIGN. Any letter, figure, character, mark, plane, point, marquee sign, design, poster, pictorial, picture, stroke, stripe, line, trademark, reading matter or illuminated service, which shall be constructed, placed, attached, painted, erected, fastened or manufactured in any manner whatsoever, so that the same shall be used for the attraction of the public to any place, subject, person, firm, corporation, public performance, article, machine or merchandise, whatsoever, which is displayed in any manner outdoors. Every sign shall be classified and conform to the requirements of that classification as set forth in this chapter.

SIGN STRUCTURE. Any structure that supports or is capable of supporting a sign as defined in this code. A sign structure is permitted to be a single pole and is not required to be an integral part of the building.

WALL SIGN. Any sign attached to or erected against the wall of a building or structure, with the exposed face of the sign in a plane parallel to the plane of said wall.

SECTION H103 LOCATION

H103.1 Location restrictions. Signs shall not be erected, constructed or maintained so as to obstruct any fire escape or any window or door or opening used as a *means of egress* or so as to prevent free passage from one part of a roof to any other part thereof. A sign shall not be attached in any form, shape or manner to a fire escape, nor be placed in such manner as to interfere with any opening required for ventilation.

SECTION H104 IDENTIFICATION

H104.1 Identification. Every outdoor advertising display sign hereafter erected, constructed or maintained, for which a permit is required, shall be plainly marked with the name of the person, firm or corporation erecting and maintaining such sign and shall have affixed on the front thereof the permit number issued for said sign or other method of identification *approved* by the *building official*.

INTERNATIONAL CODE COUNCIL®
Copyright © 2019 ICC & NYSDOS. ALL RIGHTS RESERVED. Accessed by Lauren Gualdino (lgualdino@briarcliffmanor.org), (-) Order Number #100880972 on May 08, 2020 07:05 AM (PDT) pursuant to License Agreement with ICC & NYSDOS. No further reproduction, no

100880972

SECTION H105
DESIGN AND CONSTRUCTION

H105.1 General requirements. Signs shall be designed and constructed to comply with the provisions of this code for use of materials, loads and stresses.

H105.2 Permits, drawings and specifications. Where a permit is required, as provided in Chapter 1, construction documents shall be required. These documents shall show the dimensions, material and required details of construction, including loads, stresses and anchors.

H105.3 Wind load. Signs shall be designed and constructed to withstand wind pressure as provided for in Chapter 16.

H105.4 Seismic load. Signs designed to withstand wind pressures shall be considered capable of withstanding earthquake loads, except as provided for in Chapter 16.

H105.5 Working stresses. In outdoor advertising display signs, the allowable working stresses shall conform to the requirements of Chapter 16. The working stresses of wire rope and its fastenings shall not exceed 25 percent of the ultimate strength of the rope or fasteners.

Exceptions:

1. The allowable working stresses for steel and wood shall be in accordance with the provisions of Chapters 22 and 23.
2. The working strength of chains, cables, guys or steel rods shall not exceed one-fifth of the ultimate strength of such chains, cables, guys or steel.

H105.6 Attachment. Signs attached to masonry, concrete or steel shall be safely and securely fastened by means of metal anchors, bolts or approved expansion screws of sufficient size and anchorage to safely support the loads applied.

SECTION H106
ELECTRICAL

H106.1 Illumination. A sign shall not be illuminated by other than electrical means, and electrical devices and wiring shall be installed in accordance with the requirements of NFPA 70. Any open spark or flame shall not be used for display purposes unless specifically approved.

H106.1.1 Internally illuminated signs. Except as provided for in Section 2611, where internally illuminated signs have facings of wood or of approved plastic complying with the requirements of Section 2606.4, the area of such facing section shall be not more than 120 square feet (11.16 m^2) and the wiring for electric lighting shall be entirely enclosed in the sign cabinet with a clearance of not less than 2 inches (51 mm) from the facing material. The dimensional limitation of 120 square feet (11.16 m^2) shall not apply to sign facing sections made from flame-resistant-coated fabric (ordinarily known as "flexible sign face plastic") that weighs less than 20 ounces per square yard (678 g/m^2) and that, when tested in accordance with NFPA 701, meets the fire propagation performance requirements of both Test 1 and Test 2 or that, when tested in accordance with an approved test method, exhibits an average burn time of 2 seconds or less and a burning extent of 5.9 inches (150 mm) or less for 10 specimens.

H106.2 Electrical service. Signs that require electrical service shall comply with NFPA 70.

SECTION H107
COMBUSTIBLE MATERIALS

H107.1 Use of combustibles. Wood, plastics complying with the requirements of Section H107.1.1 or plastic veneer panels as provided for in Chapter 26, or other materials of combustible characteristics similar to wood, used for moldings, cappings, nailing blocks, letters and latticing, shall comply with Section H109.1 and shall not be used for other ornamental features of signs, unless approved.

H107.1.1 Plastic materials. Notwithstanding any other provisions of this code, plastics that burn at a rate not faster than 2.5 inches per minute (64 mm/s) when tested in accordance with ASTM D635 shall be approved for use as the display surface material and for the letters, decorations and facings on signs and outdoor display structures.

H107.1.2 Electric sign faces. Individual plastic facings of electric signs shall not exceed 200 square feet (18.6 m^2) in area.

H107.1.3 Area limitation. If the area of a display surface exceeds 200 square feet (18.6 m^2), the area occupied or covered by plastics complying with the requirements of Section H107.1.1 shall be limited to 200 square feet (18.6 m^2) plus 50 percent of the difference between 200 square feet (18.6 m^2) and the area of display surface. The area of plastic on a display surface shall not in any case exceed 1,100 square feet (102 m^2).

H107.1.4 Plastic appurtenances. Letters and decorations mounted on a plastic facing or display surface can be made of plastics complying with the requirements of Section H107.1.1.

SECTION H108
ANIMATED DEVICES

H108.1 Fail-safe device. Signs that contain moving sections or ornaments shall have fail-safe provisions to prevent the section or ornament from releasing and falling or shifting its center of gravity more than 15 inches (381 mm). The fail-safe device shall be in addition to the mechanism and the mechanism's housing that operate the movable section or ornament. The fail-safe device shall be capable of supporting the full dead weight of the section or ornament when the moving mechanism releases.

SECTION H109
GROUND SIGNS

H109.1 Height restrictions. The structural frame of ground signs shall not be erected of combustible materials to a height of more than 35 feet (10 668 mm) above the ground. Ground signs constructed entirely of noncombustible material shall not be erected to a height of greater than 100 feet (30 480

INTERNATIONAL CODE COUNCIL®
Copyright © 2019 ICC & NYSDOS. ALL RIGHTS RESERVED. Accessed by Lauren Gualdino (lgualdino@briarcliffmanor.org), (-) Order Number #100880972 on May 08, 2020 07:05 AM (PDT) pursuant to License Agreement with ICC & NYSDOS. No further reproduction, no

100880972

mm) above the ground. Greater heights are permitted where approved and located so as not to create a hazard or danger to the public.

H109.2 Required clearance. The bottom coping of every ground sign shall be not less than 3 feet (914 mm) above the ground or street level, which space can be filled with platform decorative trim or light wooden construction.

H109.3 Wood anchors and supports. Where wood anchors or supports are embedded in the soil, the wood shall be pressure treated with an approved preservative.

SECTION H110
ROOF SIGNS

H110.1 General. Roof signs shall be constructed entirely of metal or other approved noncombustible material except as provided for in Sections H106.1.1 and H107.1. Provisions shall be made for electric grounding of metallic parts. Where combustible materials are permitted in letters or other ornamental features, wiring and tubing shall be kept free and insulated therefrom. Roof signs shall be so constructed as to leave a clear space of not less than 6 feet (1829 mm) between the roof level and the lowest part of the sign and shall have not less than 5 feet (1524 mm) clearance between the vertical supports thereof. Roof sign structures shall not project beyond an exterior wall.

Exception: Signs on flat roofs with every part of the roof accessible.

H110.2 Bearing plates. The bearing plates of roof signs shall distribute the load directly to or on masonry walls, steel roof girders, columns or beams. The building shall be designed to avoid overstress of these members.

H110.3 Height of solid signs. A roof sign having a solid surface shall not exceed, at any point, a height of 24 feet (7315 mm) measured from the roof surface.

H110.4 Height of open signs. Open roof signs in which the uniform open area is not less than 40 percent of total gross area shall not exceed a height of 75 feet (22 860 mm) on buildings of Type 1 or Type 2 construction. On buildings of other construction types, the height shall not exceed 40 feet (12 192 mm). Such signs shall be thoroughly secured to the building on which they are installed, erected or constructed by iron, metal anchors, bolts, supports, chains, stranded cables, steel rods or braces and they shall be maintained in good condition.

H110.5 Height of closed signs. A closed roof sign shall not be erected to a height greater than 50 feet (15 240 mm) above the roof of buildings of Type 1 or 2 construction or more than 35 feet (10 668 mm) above the roof of buildings of Type 3, 4 or 5 construction.

SECTION H111
WALL SIGNS

H111.1 Materials. Wall signs that have an area exceeding 40 square feet (3.72 m^2) shall be constructed of metal or other approved noncombustible material, except for nailing rails and as provided for in Sections H106.1.1 and H107.1.

H111.2 Exterior wall mounting details. Wall signs attached to *exterior walls* of solid masonry, concrete or stone shall be safely and securely attached by means of metal anchors, bolts or expansion screws of not less than $^3/_8$ inch (9.5 mm) diameter and shall be embedded not less than 5 inches (127 mm). Wood blocks shall not be used for anchorage, except in the case of wall signs attached to buildings with walls of wood. A wall sign shall not be supported by anchorages secured to an unbraced parapet wall.

H111.3 Extension. Wall signs shall not extend above the top of the wall or beyond the ends of the wall to which the signs are attached unless such signs conform to the requirements for roof signs, projecting signs or ground signs.

SECTION H112
PROJECTING SIGNS

H112.1 General. Projecting signs shall be constructed entirely of metal or other noncombustible material and securely attached to a building or structure by metal supports such as bolts, anchors, supports, chains, guys or steel rods. Staples or nails shall not be used to secure any projecting sign to any building or structure. The *dead load* of projecting signs not parallel to the building or structure and the load due to wind pressure shall be supported with chains, guys or steel rods having net cross-sectional dimension of not less than $^3/_8$ inch (9.5 mm) diameter. Such supports shall be erected or maintained at an angle of not less than 45 percent (0.78 rad) with the horizontal to resist the *dead load* and at angle of 45 percent (0.78 rad) or more with the face of the sign to resist the specified wind pressure. If such projecting sign exceeds 30 square feet (2.8 m^2) in one facial area, there shall be provided not fewer than two such supports on each side not more than 8 feet (2438 mm) apart to resist the wind pressure.

H112.2 Attachment of supports. Supports shall be secured to a bolt or expansion screw that will develop the strength of the supporting chains, guys or steel rods, with a minimum $^5/_8$-inch (15.9 mm) bolt or lag screw, by an expansion shield. Turnbuckles shall be placed in chains, guys or steel rods supporting projecting signs.

H112.3 Wall mounting details. Chains, cables, guys or steel rods used to support the live or dead load of projecting signs are permitted to be fastened to solid masonry walls with expansion bolts or by machine screws in iron supports, but such supports shall not be attached to an unbraced parapet wall. Where the supports must be fastened to walls made of wood, the supporting anchor bolts must go through the wall and be plated or fastened on the inside in a secure manner.

H112.4 Height limitation. A projecting sign shall not be erected on the wall of any building so as to project above the roof or cornice wall or, on buildings without a cornice wall, above the roof level except that a sign erected at a right angle to the building, the horizontal width of which sign is perpendicular to such a wall and does not exceed 18 inches (457 mm), is permitted to be erected to a height not exceeding 2 feet (610 mm) above the roof or cornice wall or above the

INTERNATIONAL CODE COUNCIL®
Copyright © 2019 ICC & NYSDOS. ALL RIGHTS RESERVED. Accessed by Lauren Gualdino (lgualdino@briarcliffmanor.org), (-) Order Number #100880972 on May 08, 2020 07:05 AM (PDT) pursuant to License Agreement with ICC & NYSDOS. No further reproduction, no

100880972

roof level where there is no cornice wall. A sign attached to a corner of a building and parallel to the vertical line of such corner shall be deemed to be erected at a right angle to the building wall.

H112.5 Additional loads. Projecting sign structures that will be used to support an individual on a ladder or other servicing device, whether or not specifically designed for the servicing device, shall be capable of supporting the anticipated additional load, but not less than a 100-pound (445 N) concentrated horizontal load and a 300-pound (1334 N) concentrated vertical load applied at the point of assumed or most eccentric loading. The building component to which the projecting sign is attached shall be designed to support the additional loads.

SECTION H113
MARQUEE SIGNS

H113.1 Materials. Marquee signs shall be constructed entirely of metal or other approved noncombustible material except as provided for in Sections H106.1.1 and H107.1.

H113.2 Attachment. Marquee signs shall be attached to approved marquees that are constructed in accordance with Section 3106.

H113.3 Dimensions. Marquee signs, whether on the front or side, shall not project beyond the perimeter of the marquee.

H113.4 Height limitation. Marquee signs shall not extend more than 6 feet (1829 mm) above, or 1 foot (305 mm) below such marquee. Signs shall not have a vertical dimension greater than 8 feet (2438 mm).

SECTION H114
PORTABLE SIGNS

H114.1 General. Portable signs shall conform to requirements for ground, roof, projecting, flat and temporary signs where such signs are used in a similar capacity. The requirements of this section shall not be construed to require portable signs to have connections to surfaces, tie-downs or foundations where provisions are made by temporary means or configuration of the structure to provide stability for the expected duration of the installation.

TABLE 4-A
SIZE, THICKNESS AND TYPE OF GLASS PANELS IN SIGNS

MAXIMUM SIZE OF EXPOSED PANEL		MINIMUM THICKNESS OF GLASS (inches)	TYPE OF GLASS
Any dimension (inches)	Area (square inches)		
30	500	1/8	Plain, plate or wired
45	700	3/16	Plain, plate or wired
144	3,600	1/4	Plain, plate or wired
> 144	> 3,600	1/4	Wired glass

For SI: 1 inch = 25.4 mm, 1 square inch = 645.16 mm^2.

TABLE 4-B
THICKNESS OF PROJECTION SIGN

PROJECTION (feet)	MAXIMUM THICKNESS (feet)
5	2
4	2.5
3	3
2	3.5
1	4

For SI: 1 foot = 304.8 mm.

SECTION H115
REFERENCED STANDARDS

ASTM D635—10	Test Method for Rate of Burning and/or Extent and Time of Burning of Plastics in a Horizontal Position	H107.1.1
NFPA 70—17	National Electrical Code	H106.1, H106.2
NFPA 701—10	Methods of Fire Test for Flame Propagation of Textiles and Films	H106.1.1

INTERNATIONAL CODE COUNCIL®
Copyright © 2019 ICC & NYSDOS. ALL RIGHTS RESERVED. Accessed by Lauren Gualdino (lgualdino@briarcliffmanor.org), (-) Order Number #100880972 on May 08, 2020 07:05 AM (PDT) pursuant to License Agreement with ICC & NYSDOS. No further reproduction, no

100880972

APPENDIX I

PATIO COVERS

SECTION I101 GENERAL

I101.1 General. Patio covers shall be permitted to be detached from or attached to *dwelling units*. Patio covers shall be used only for recreational, outdoor living purposes and not as carports, garages, storage rooms or habitable rooms.

SECTION I102 DEFINITION

I102.1 General. The following term shall, for the purposes of this appendix, have the meaning shown herein. Refer to Chapter 2 of this code for general definitions.

PATIO COVER. A structure with open or glazed walls that is used for recreational, outdoor living purposes associated with a *dwelling unit.*

SECTION I103 EXTERIOR WALLS AND OPENINGS

I103.1 Enclosure walls. Enclosure walls shall be permitted to be of any configuration, provided that the open or glazed area of the longer wall and one additional wall is equal to not less than 65 percent of the area below not less than 6 feet 8 inches (2032 mm) of each wall, measured from the floor. Openings shall be permitted to be enclosed with insect screening, translucent or transparent plastic conforming to the provisions of Sections 2606 through 2610, glass conforming to the provisions of Chapter 24 or any combination of the foregoing.

I103.2 Light, ventilation and emergency egress. Exterior openings of the *dwelling unit* required for light and ventilation shall be permitted to open into a patio structure. However, the patio structure shall be unenclosed if such openings are serving as emergency egress or rescue openings from sleeping rooms. Where such exterior openings serve as an exit from the dwelling unit, the patio structure, unless unenclosed, shall be provided with exits conforming to the provisions of Chapter 10.

SECTION I104 HEIGHT

I104.1 Height. Patio covers shall be limited to one-story structures not more than 12 feet (3657 mm) in height.

SECTION I105 STRUCTURAL PROVISIONS

I105.1 Design loads. Patio covers shall be designed and constructed to sustain, within the stress limits of this code, all *dead loads* plus a minimum vertical live load of 10 pounds per square foot (0.48 kN/m^2) except that snow loads shall be used where such snow loads exceed this minimum. Such patio covers shall be designed to resist the minimum wind and seismic loads set forth in this code.

I105.2 Footings. In areas with a frost depth of zero, a patio cover shall be permitted to be supported on a concrete slab on grade without footings, provided that the slab conforms to the provisions of Chapter 19 of this code and is not less than $3^1/_2$ inches (89 mm) thick, and the columns do not support loads in excess of 750 pounds (3.36 kN) per column.

INTERNATIONAL CODE COUNCIL®
Copyright © 2019 ICC & NYSDOS. ALL RIGHTS RESERVED. Accessed by Lauren Gualdino (lgualdino@briarcliffmanor.org), (-) Order Number #100880972 on May 08, 2020 07:05 AM (PDT) pursuant to License Agreement with ICC & NYSDOS. No further reproduction, no

100880972

INTERNATIONAL CODE COUNCIL®
Copyright © 2019 ICC & NYSDOS. ALL RIGHTS RESERVED. Accessed by Lauren Gualdino (lgualdino@briarcliffmanor.org), (-) Order Number #100880972 on May 08, 2020 07:05 AM (PDT) pursuant to License Agreement with ICC & NYSDOS. No further reproduction, no

100880972

APPENDIX J

GRADING

This appendix is informative and is not part of this code.

SECTION J101
GENERAL

J101.1 Scope. The provisions of this chapter apply to grading, excavation and earthwork construction, including fills and embankments. Where conflicts occur between the technical requirements of this chapter and the geotechnical report, the geotechnical report shall govern.

J101.2 Flood hazard areas. Unless the applicant has submitted an engineering analysis, prepared in accordance with standard engineering practice by a *registered design professional,* that demonstrates the proposed work will not result in any increase in the level of the base flood, grading, excavation and earthwork construction, including fills and embankments, shall not be permitted in *floodways* that are in *flood hazard areas* established in Section 1612.3 or in *flood hazard areas* where design flood elevations are specified but *floodways* have not been designated.

SECTION J102
DEFINITIONS

J102.1 Definitions. The following words and terms shall, for the purposes of this appendix, have the meanings shown herein. Refer to Chapter 2 of this code for general definitions.

BENCH. A relatively level step excavated into earth material on which fill is to be placed.

COMPACTION. The densification of a fill by mechanical means.

CUT. See "Excavation."

DOWN DRAIN. A device for collecting water from a swale or ditch located on or above a slope, and safely delivering it to an approved drainage facility.

EROSION. The wearing away of the ground surface as a result of the movement of wind, water or ice.

EXCAVATION. The removal of earth material by artificial means, also referred to as a cut.

FILL. Deposition of earth materials by artificial means.

GRADE. The vertical location of the ground surface.

GRADE, EXISTING. The grade prior to grading.

GRADE, FINISHED. The grade of the site at the conclusion of all grading efforts.

GRADING. An excavation or fill or combination thereof.

KEY. A compacted fill placed in a trench excavated in earth material beneath the toe of a slope.

SLOPE. An inclined surface, the inclination of which is expressed as a ratio of horizontal distance to vertical distance.

TERRACE. A relatively level step constructed in the face of a graded slope for drainage and maintenance purposes.

SECTION J103
PERMITS REQUIRED

J103.1 Permits required. Except as exempted in Section J103.2, grading shall not be performed without first having obtained a *permit* therefor from the *building official*. A grading *permit* does not include the construction of retaining walls or other structures.

J103.2 Exemptions. A grading *permit* shall not be required for the following:

1. Grading in an isolated, self-contained area, provided that the public is not endangered and that such grading will not adversely affect adjoining properties.
2. Excavation for construction of a structure permitted under this code.
3. Cemetery graves.
4. Refuse disposal sites controlled by other regulations.
5. Excavations for wells, or trenches for utilities.
6. Mining, quarrying, excavating, processing or stockpiling rock, sand, gravel, aggregate or clay controlled by other regulations, provided that such operations do not affect the lateral support of, or significantly increase stresses in, soil on adjoining properties.
7. Exploratory excavations performed under the direction of a *registered design professional.*

Exemption from the *permit* requirements of this appendix shall not be deemed to grant authorization for any work to be done in any manner in violation of the provisions of this code or any other laws or ordinances of this jurisdiction.

SECTION J104
PERMIT APPLICATION AND SUBMITTALS

J104.1 Submittal requirements. In addition to the provisions of Section 105.3, the applicant shall state the estimated quantities of excavation and fill.

J104.2 Site plan requirements. In addition to the provisions of Section 107, a grading plan shall show the existing grade and finished grade in contour intervals of sufficient clarity to indicate the nature and extent of the work and show in detail that it complies with the requirements of this code. The plans shall show the existing grade on adjoining properties in sufficient detail to identify how grade changes will conform to the requirements of this code.

INTERNATIONAL CODE COUNCIL®
Copyright © 2019 ICC & NYSDOS. ALL RIGHTS RESERVED. Accessed by Lauren Gualdino (lgualdino@briarcliffmanor.org), (-) Order Number #100880972 on May 08, 2020 07:05 AM (PDT) pursuant to License Agreement with ICC & NYSDOS. No further reproduction, no

100880972

J104.3 Geotechnical report. A geotechnical report prepared by a *registered design professional* shall be provided. The report shall contain not less than the following:

1. The nature and distribution of existing soils.
2. Conclusions and recommendations for grading procedures.
3. Soil design criteria for any structures or embankments required to accomplish the proposed grading.
4. Where necessary, slope stability studies, and recommendations and conclusions regarding site geology.

Exception: A geotechnical report is not required where the *building official* determines that the nature of the work applied for is such that a report is not necessary.

J104.4 Liquefaction study. For sites with mapped maximum considered earthquake spectral response accelerations at short periods (S_s) greater than 0.5g as determined by Section 1613, a study of the liquefaction potential of the site shall be provided and the recommendations incorporated in the plans.

Exception: A liquefaction study is not required where the *building official* determines from established local data that the liquefaction potential is low.

SECTION J105
INSPECTIONS

J105.1 General. Inspections shall be governed by Section 110 of this code.

J105.2 Special inspections. The *special inspection* requirements of Section 1705.6 shall apply to work performed under a grading permit where required by the *building official*.

SECTION J106
EXCAVATIONS

J106.1 Maximum slope. The slope of cut surfaces shall be not steeper than is safe for the intended use, and shall be not more than one unit vertical in two units horizontal (50-percent slope) unless the owner or the owner's authorized agent furnishes a geotechnical report justifying a steeper slope.

Exceptions:

1. A cut surface shall be permitted to be at a slope of 1.5 units horizontal to one unit vertical (67-percent slope) provided that all of the following are met:
    1.1. It is not intended to support structures or surcharges.
    1.2. It is adequately protected against erosion.
    1.3. It is not more than 8 feet (2438 mm) in height.
    1.4. It is approved by the *building official*.
    1.5. Ground water is not encountered.
2. A cut surface in bedrock shall be permitted to be at a slope of one unit horizontal to one unit vertical (100-percent slope).

SECTION J107
FILLS

J107.1 General. Unless otherwise recommended in the geotechnical report, fills shall comply with the provisions of this section.

J107.2 Surface preparation. The ground surface shall be prepared to receive fill by removing vegetation, topsoil and other unsuitable materials, and scarifying the ground to provide a bond with the fill material.

J107.3 Benching. Where existing grade is at a slope steeper than one unit vertical in five units horizontal (20-percent slope) and the depth of the fill exceeds 5 feet (1524 mm) benching shall be provided in accordance with Figure J107.3. A key shall be provided that is not less than 10 feet (3048 mm) in width and 2 feet (610 mm) in depth.

J107.4 Fill material. Fill material shall not include organic, frozen or other deleterious materials. Rock or similar irreducible material greater than 12 inches (305 mm) in any dimension shall not be included in fills.

J107.5 Compaction. All fill material shall be compacted to 90 percent of maximum density as determined by ASTM D1557, Modified Proctor, in lifts not exceeding 12 inches (305 mm) in depth.

J107.6 Maximum slope. The slope of fill surfaces shall be not steeper than is safe for the intended use. Fill slopes steeper than one unit vertical in two units horizontal (50-percent slope) shall be justified by a geotechnical report or engineering data.

SECTION J108
SETBACKS

J108.1 General. Cut and fill slopes shall be set back from the property lines in accordance with this section. Setback dimensions shall be measured perpendicular to the property line and shall be as shown in Figure J108.1, unless substantiating data is submitted justifying reduced setbacks.

J108.2 Top of slope. The setback at the top of a cut slope shall be not less than that shown in Figure J108.1, or than is required to accommodate any required interceptor drains, whichever is greater.

J108.3 Slope protection. Where required to protect adjacent properties at the toe of a slope from adverse effects of the grading, additional protection, approved by the *building official*, shall be included. Examples of such protection include but are not be limited to:

1. Setbacks greater than those required by Figure J108.1.
2. Provisions for retaining walls or similar construction.
3. Erosion protection of the fill slopes.
4. Provision for the control of surface waters.

INTERNATIONAL CODE COUNCIL®
Copyright © 2019 ICC & NYSDOS. ALL RIGHTS RESERVED. Accessed by Lauren Gualdino (lgualdino@briarcliffmanor.org), (-) Order Number #100880972 on May 08, 2020 07:05 AM (PDT) pursuant to License Agreement with ICC & NYSDOS. No further reproduction, no

100880972

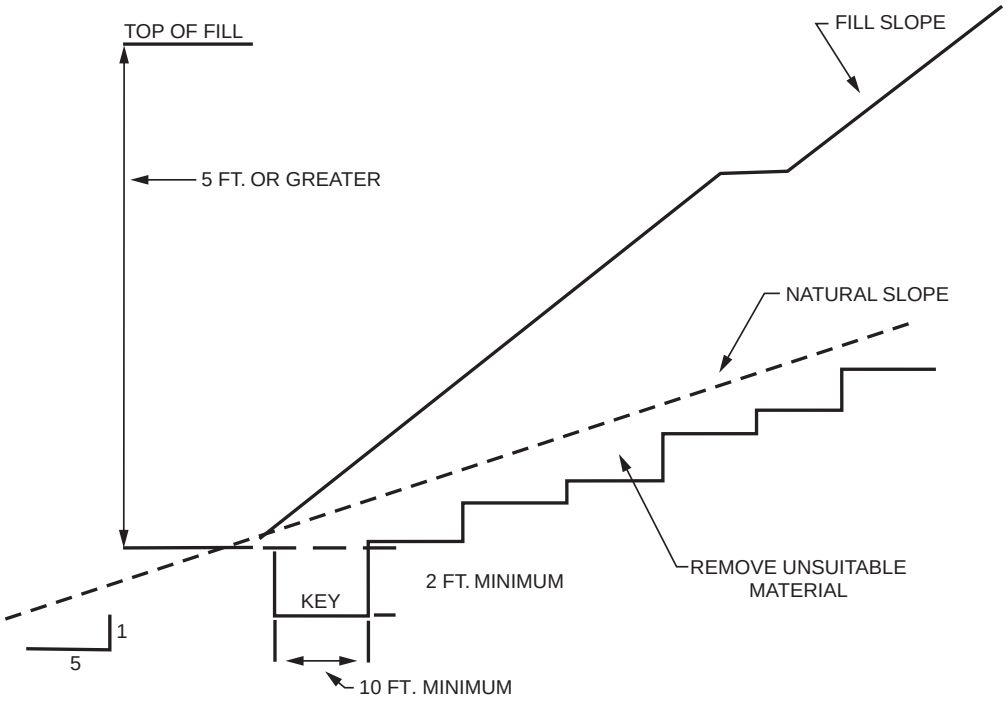

For SI: 1 foot = 304.8 mm.

FIGURE J107.3
BENCHING DETAILS

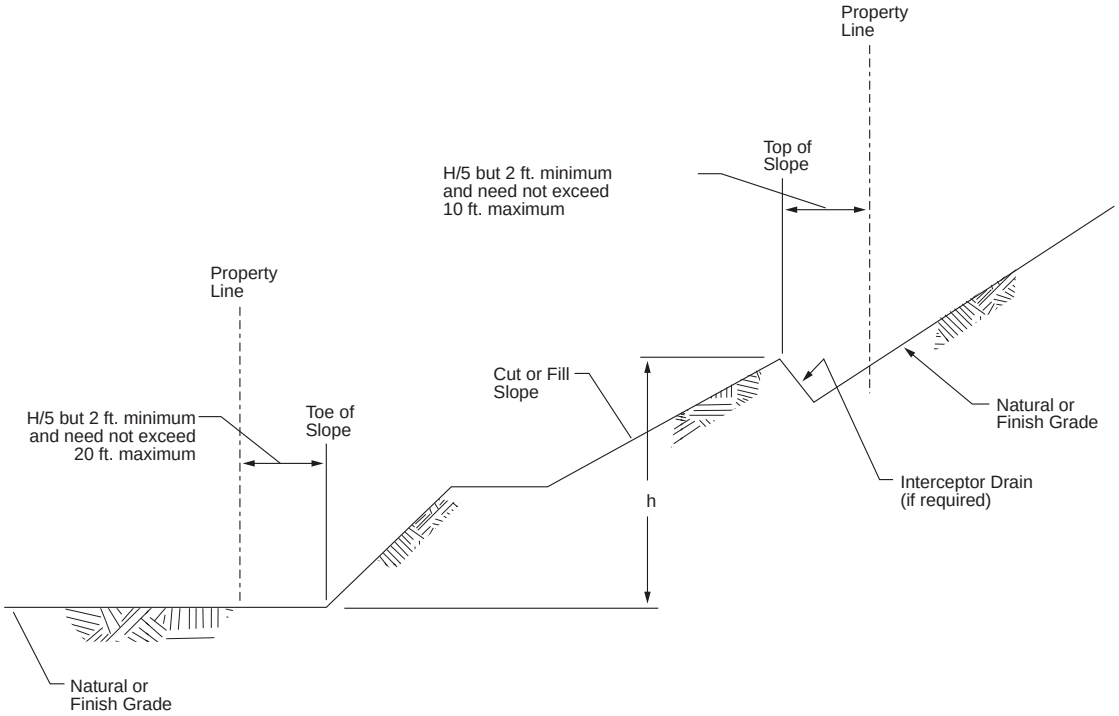

For SI: 1 foot = 304.8 mm.

FIGURE J108.1
DRAINAGE DIMENSIONS

INTERNATIONAL CODE COUNCIL®
Copyright © 2019 ICC & NYSDOS. ALL RIGHTS RESERVED. Accessed by Lauren Gualdino (lgualdino@briarcliffmanor.org), (-) Order Number #100880972 on May 08, 2020 07:05 AM (PDT) pursuant to License Agreement with ICC & NYSDOS. No further reproduction, no

100880972

SECTION J109
DRAINAGE AND TERRACING

J109.1 General. Unless otherwise recommended by a *registered design professional*, drainage facilities and terracing shall be provided in accordance with the requirements of this section.

Exception: Drainage facilities and terracing need not be provided where the ground slope is not steeper than one unit vertical in three units horizontal (33-percent slope).

J109.2 Terraces. Terraces not less than 6 feet (1829 mm) in width shall be established at not more than 30-foot (9144 mm) vertical intervals on all cut or fill slopes to control surface drainage and debris. Suitable access shall be provided to allow for cleaning and maintenance.

Where more than two terraces are required, one terrace, located at approximately mid-height, shall be not less than 12 feet (3658 mm) in width.

Swales or ditches shall be provided on terraces. They shall have a minimum gradient of one unit vertical in 20 units horizontal (5-percent slope) and shall be paved with concrete not less than 3 inches (76 mm) in thickness, or with other materials suitable to the application. They shall have a depth not less than 12 inches (305 mm) and a width not less than 5 feet (1524 mm).

A single run of swale or ditch shall not collect runoff from a tributary area exceeding 13,500 square feet (1256 m^2) (projected) without discharging into a down drain.

J109.3 Interceptor drains. Interceptor drains shall be installed along the top of cut slopes receiving drainage from a tributary width greater than 40 feet (12 192 mm), measured horizontally. They shall have a minimum depth of 1 foot (305 mm) and a minimum width of 3 feet (915 mm). The slope shall be approved by the *building official*, but shall be not less than one unit vertical in 50 units horizontal (2-percent slope). The drain shall be paved with concrete not less than 3 inches (76 mm) in thickness, or by other materials suitable to the application. Discharge from the drain shall be accomplished in a manner to prevent erosion and shall be approved by the *building official.*

J109.4 Drainage across property lines. Drainage across property lines shall not exceed that which existed prior to grading. Excess or concentrated drainage shall be contained on site or directed to an approved drainage facility. Erosion of the ground in the area of discharge shall be prevented by installation of nonerosive down drains or other devices.

SECTION J110
EROSION CONTROL

J110.1 General. The faces of cut and fill slopes shall be prepared and maintained to control erosion. This control shall be permitted to consist of effective planting.

Exception: Erosion control measures need not be provided on cut slopes not subject to erosion due to the erosion-resistant character of the materials.

Erosion control for the slopes shall be installed as soon as practicable and prior to calling for final inspection.

J110.2 Other devices. Where necessary, check dams, cribbing, riprap or other devices or methods shall be employed to control erosion and provide safety.

SECTION J111
REFERENCED STANDARDS

ASTM D1557—12	Test Method for Laboratory Compaction Characteristics of Soil Using Modified Effort [56,000 ft-lb/ft^3 (2,700 kN-m/m^3)].	J107.5

INTERNATIONAL CODE COUNCIL®
Copyright © 2019 ICC & NYSDOS. ALL RIGHTS RESERVED. Accessed by Lauren Gualdino (lgualdino@briarcliffmanor.org), (-) Order Number #100880972 on May 08, 2020 07:05 AM (PDT) pursuant to License Agreement with ICC & NYSDOS. No further reproduction, no

100880972

APPENDIX K
ADMINISTRATIVE PROVISIONS

This appendix is informative and is not part of this code.

With the exception of Section K111, this appendix contains only administrative provisions that are intended to be used by a jurisdiction to implement and enforce NFPA 70, the National Electrical Code. Annex H of NFPA 70 also contains administrative and enforcement provisions, and these provisions may or may not be completely compatible with or consistent with Chapter 1 of the IBC, whereas the provisions in IBC Appendix K are compatible and consistent with Chapter 1 of the IBC and other ICC codes. Section K111 contains technical provisions that are unique to this appendix and are in addition to those of NFPA 70.

The provisions of Appendix K are specific to what might be designated as an Electrical Department of Inspection and Code Enforcement and could be implemented where other such provisions are not adopted.

SECTION K101
GENERAL

K101.1 Purpose. A purpose of this code is to establish minimum requirements to safeguard public health, safety and general welfare by regulating and controlling the design, construction, installation, quality of materials, location, operation and maintenance or use of electrical systems and equipment.

K101.2 Scope. This code applies to the design, construction, installation, *alteration*, repairs, relocation, replacement, *addition* to, use or maintenance of electrical systems and equipment.

SECTION K102
APPLICABILITY

K102.1 General. The provisions of this code apply to all matters affecting or relating to structures and premises, as set forth in Section K101.

K102.2 Existing installations. Except as otherwise provided for in this chapter, a provision in this code shall not require the removal, *alteration* or abandonment of, or prevent the continued utilization and maintenance of, existing electrical systems and equipment lawfully in existence at the time of the adoption of this code.

K102.3 Maintenance. Electrical systems, equipment, materials and appurtenances, both existing and new, and parts thereof shall be maintained in proper operating condition in accordance with the original design and in a safe, hazard-free condition. Devices or safeguards that are required by this code shall be maintained in compliance with the code edition under which installed. The *owner* or the *owner's* authorized agent shall be responsible for the maintenance of the electrical systems and equipment. To determine compliance with this provision, the *building official* shall have the authority to require that the electrical systems and equipment be reinspected.

K102.4 Additions, alterations and repairs. *Additions*, *alterations*, renovations and *repairs* to electrical systems and equipment shall conform to that required for new electrical systems and equipment without requiring that the existing electrical systems or equipment comply with all of the requirements of this code. *Additions*, *alterations* and *repairs* shall not cause existing electrical systems or equipment to become unsafe, hazardous or overloaded.

Minor *additions*, *alterations*, renovations and *repairs* to existing electrical systems and equipment shall meet the provisions for new construction, except where such work is performed in the same manner and arrangement as was in the existing system, is not hazardous and is *approved*.

K102.5 Subjects not regulated by this code. Where no applicable standards or requirements are set forth in this code, or are contained within other laws, codes, regulations, ordinances or bylaws adopted by the jurisdiction, compliance with applicable standards of nationally recognized standards as are *approved* shall be deemed as prima facie evidence of compliance with the intent of this code. Nothing herein shall derogate from the authority of the *building official* to determine compliance with codes or standards for those activities or installations within the building official's jurisdiction or responsibility.

SECTION K103
PERMITS

K103.1 Types of permits. An *owner*, authorized agent or contractor who desires to construct, enlarge, alter, *repair*, move, demolish or change the occupancy of a building or structure, or to erect, install, enlarge, alter, *repair*, remove, convert or replace electrical systems or equipment, the installation of which is regulated by this code, or to cause such work to be done, shall first make application to the *building official* and obtain the required *permit* for the work.

Exception: Where *repair* or replacement of electrical systems or equipment must be performed in an emergency situation, the *permit* application shall be submitted within the next working business day of the department of electrical inspection.

K103.2 Work exempt from permit. The following work shall be exempt from the requirement for a *permit*:

1. Listed cord- and plug-connected temporary decorative lighting.
2. Reinstallation of attachment plug receptacles, but not the outlets therefor.
3. Replacement of branch circuit overcurrent devices of the required capacity in the same location.

INTERNATIONAL CODE COUNCIL®
Copyright © 2019 ICC & NYSDOS. ALL RIGHTS RESERVED. Accessed by Lauren Gualdino (lgualdino@briarcliffmanor.org), (-) Order Number #100880972 on May 08, 2020 07:05 AM (PDT) pursuant to License Agreement with ICC & NYSDOS. No further reproduction, no

100880972

4. Temporary wiring for experimental purposes in suitable experimental laboratories.
5. Electrical wiring, devices, appliances, apparatus or equipment operating at less than 25 volts and not capable of supplying more than 50 watts of energy.

Exemption from the permit requirements of this code shall not be deemed to grant authorization for work to be done in violation of the provisions of this code or other laws or ordinances of this jurisdiction.

SECTION K104
CONSTRUCTION DOCUMENTS

K104.1 Information on construction documents. *Construction documents* shall be drawn to scale upon suitable material. Electronic media documents are permitted to be submitted where *approved* by the *building official*. *Construction documents* shall be of sufficient clarity to indicate the location, nature and extent of the work proposed and show in detail that such work will conform to the provisions of this code and relevant laws, ordinances, rules and regulations, as determined by the *building official*.

K104.2 Penetrations. *Construction documents* shall indicate where penetrations will be made for electrical systems and shall indicate the materials and methods for maintaining required structural safety, *fire-resistance rating* and *fireblocking*.

K104.3 Load calculations. Where an *addition* or *alteration* is made to an existing electrical system, an electrical load calculation shall be prepared to determine if the existing electrical service has the capacity to serve the added load.

SECTION K105
ALTERNATIVE ENGINEERED DESIGN

K105.1 General. The design, documentation, inspection, testing and approval of an alternative engineered design electrical system shall comply with this section.

K105.2 Design criteria. An alternative engineered design shall conform to the intent of the provisions of this code and shall provide an equivalent level of quality, strength, effectiveness, *fire resistance*, durability and safety. Materials, equipment or components shall be designed and installed in accordance with the manufacturer's instructions.

K105.3 Submittal. The *registered design professional* shall indicate on the *permit* application that the electrical system is an alternative engineered design. The *permit* and permanent *permit* records shall indicate that an alternative engineered design was part of the *approved* installation.

K105.4 Technical data. The *registered design professional* shall submit sufficient technical data to substantiate the proposed alternative engineered design and to prove that the performance meets the intent of this code.

K105.5 Construction documents. The *registered design professional* shall submit to the *building official* two complete sets of signed and sealed *construction documents* for the alternative engineered design. The *construction documents* shall include floor plans and a diagram of the work.

K105.6 Design approval. Where the *building official* determines that the alternative engineered design conforms to the intent of this code, the electrical system shall be *approved*. If the alternative engineered design is not *approved*, the *building official* shall notify the *registered design professional* in writing, stating the reasons therefor.

K105.7 Inspection and testing. The alternative engineered design shall be tested and inspected in accordance with the requirements of this code.

SECTION K106
REQUIRED INSPECTIONS

K106.1 General. The *building official*, upon notification, shall make the inspections set forth in this section.

K106.2 Underground. Underground inspection shall be made after trenches or ditches are excavated and bedded, piping and conductors installed, and before backfill is put in place. Where excavated soil contains rocks, broken concrete, frozen chunks and other rubble that would damage or break the raceway, cable or conductors, or where corrosive action will occur, protection shall be provided in the form of granular or selected material, *approved* running boards, sleeves or other means.

K106.3 Rough-in. Rough-in inspection shall be made after the roof, framing, *fireblocking* and bracing are in place and all wiring and other components to be concealed are complete, and prior to the installation of wall or ceiling membranes.

K106.4 Contractors' responsibilities. It shall be the responsibility of every contractor who enters into contracts for the installation or repair of electrical systems for which a *permit* is required to comply with adopted state and local rules and regulations concerning licensing.

SECTION K107
PREFABRICATED CONSTRUCTION

K107.1 Prefabricated construction. Prefabricated construction is subject to Sections K107.2 through K107.5.

K107.2 Evaluation and follow-up inspection services. Prior to the approval of a prefabricated construction assembly having concealed electrical work and the issuance of an electrical *permit*, the *building official* shall require the submittal of an evaluation report on each prefabricated construction assembly, indicating the complete details of the electrical system, including a description of the system and its components, the basis upon which the system is being evaluated, test results and similar information, and other data as necessary for the *building official* to determine conformance to this code.

K107.3 Evaluation service. The *building official* shall designate the evaluation service of an *approved* agency as the evaluation agency and review such agency's evaluation report for adequacy and conformance to this code.

K107.4 Follow-up inspection. Except where ready access is provided to electrical systems, service equipment and accessories for complete inspection at the site without disassembly or dismantling, the *building official* shall conduct the in-plant inspections as frequently as necessary to ensure conformance

INTERNATIONAL CODE COUNCIL®
Copyright © 2019 ICC & NYSDOS. ALL RIGHTS RESERVED. Accessed by Lauren Gualdino (lgualdino@briarcliffmanor.org), (-) Order Number #100880972 on May 08, 2020 07:05 AM (PDT) pursuant to License Agreement with ICC & NYSDOS. No further reproduction, no

100880972

to the *approved* evaluation report or shall designate an independent, *approved* inspection agency to conduct such inspections. The inspection agency shall furnish the *building official* with the follow-up inspection manual and a report of inspections upon request, and the electrical system shall have an identifying label permanently affixed to the system indicating that factory inspections have been performed.

K107.5 Test and inspection records. Required test and inspection records shall be available to the *building official* at all times during the fabrication of the electrical system and the erection of the building; or such records as the *building official* designates shall be filed.

SECTION K108
TESTING

K108.1 Testing. Electrical work shall be tested as required in this code. Tests shall be performed by the *permit* holder and observed by the *building official*.

K108.1.1 Apparatus, material and labor for tests. Apparatus, material and labor required for testing an electrical system or part thereof shall be furnished by the *permit* holder.

K108.1.2 Reinspection and testing. Where any work or installation does not pass an initial test or inspection, the necessary corrections shall be made so as to achieve compliance with this code. The work or installation shall then be resubmitted to the *building official* for inspection and testing.

SECTION K109
RECONNECTION

K109.1 Connection after order to disconnect. A person shall not make utility service or energy source connections to systems regulated by this code, which have been disconnected or ordered to be disconnected by the *building official*, or the use of which has been ordered to be discontinued by the *building official* until the *building official* authorizes the reconnection and use of such systems.

SECTION K110
CONDEMNING ELECTRICAL SYSTEMS

K110.1 Authority to condemn electrical systems. Wherever the *building official* determines that any electrical system, or portion thereof, regulated by this code has become hazardous to life, health or property, the *building official* shall order in writing that such electrical systems either be removed or restored to a safe condition. A time limit for compliance with such order shall be specified in the written notice. A person shall not use or maintain a defective electrical system or equipment after receiving such notice.

Where such electrical system is to be disconnected, written notice as prescribed in this code shall be given. In cases of immediate danger to life or property, such disconnection shall be made immediately without such notice.

SECTION K111
ELECTRICAL PROVISIONS

K111.1 Adoption. Electrical systems and equipment shall be designed, constructed and installed in accordance with the *International Residential Code* or NFPA 70 as applicable, except as otherwise provided in this code.

[F] K111.2 Abatement of electrical hazards. All identified electrical hazards shall be abated. All identified hazardous electrical conditions in permanent wiring shall be brought to the attention of the *building official* responsible for enforcement of this code. Electrical wiring, devices, appliances and other equipment that is modified or damaged and constitutes an electrical shock or fire hazard shall not be used.

[F] K111.3 Appliance and fixture listing. Electrical appliances and fixtures shall be tested and *listed* in published reports of inspected electrical equipment by an *approved* agency and installed in accordance with all instructions included as part of such listing.

K111.4 Nonmetallic-sheathed cable. The use of Type NM, NMC and NMS (nonmetallic sheathed) cable wiring methods shall not be limited based on height, number of stories or construction type of the building or structure.

K111.5 Cutting, notching and boring. The cutting, notching and boring of wood and steel framing members, structural members and engineered wood products shall be in accordance with this code.

K111.6 Smoke alarm circuits. Single- and multiple-station smoke alarms required by this code and installed within *dwelling* units shall not be connected as the only load on a branch circuit. Such alarms shall be supplied by branch circuits having lighting loads consisting of lighting outlets in habitable spaces.

K111.7 Equipment and door labeling. Doors into electrical control panel rooms shall be marked with a plainly visible and legible sign stating ELECTRICAL ROOM or similar *approved* wording. The disconnecting means for each service, feeder or branch circuit originating on a switchboard or panelboard shall be legibly and durably marked to indicate its purpose unless such purpose is clearly evident.

INTERNATIONAL CODE COUNCIL®
Copyright © 2019 ICC & NYSDOS. ALL RIGHTS RESERVED. Accessed by Lauren Gualdino (lgualdino@briarcliffmanor.org), (-) Order Number #100880972 on May 08, 2020 07:05 AM (PDT) pursuant to License Agreement with ICC & NYSDOS. No further reproduction, no

100880972

INTERNATIONAL CODE COUNCIL®
Copyright © 2019 ICC & NYSDOS. ALL RIGHTS RESERVED. Accessed by Lauren Gualdino (lgualdino@briarcliffmanor.org), (-) Order Number #100880972 on May 08, 2020 07:05 AM (PDT) pursuant to License Agreement with ICC & NYSDOS. No further reproduction, no

100880972

APPENDIX L

EARTHQUAKE RECORDING INSTRUMENTATION

This appendix is informative and is not part of this code.

SECTION L101
GENERAL

L101.1 General. Every structure located where the 1-second spectral response acceleration, S_1, determined in accordance with Section 1613.2, is greater than 0.40 and either exceeds six stories in height with an aggregate floor area of 60,000 square feet (5574 m^2) or more, or exceeds 10 *stories* in height regardless of floor area, shall be equipped with not fewer than three approved recording accelerographs. The accelerographs shall be interconnected for common start and common timing.

L101.2 Location. As a minimum, instruments shall be located at the lowest level, mid-height, and near the top of the structure. Each instrument shall be located so that access is maintained at all times and is unobstructed by room contents. A sign stating "MAINTAIN CLEAR ACCESS TO THIS INSTRUMENT" in 1-inch (25 mm) block letters shall be posted in a conspicuous location.

L101.3 Maintenance. Maintenance and service of the instrumentation shall be provided by the owner of the structure. Data produced by the instrument shall be made available to the *building official* on request.

Maintenance and service of the instruments shall be performed annually by an approved testing agency. The owner shall file with the *building official* a written report from an approved testing agency certifying that each instrument has been serviced and is in proper working condition. This report shall be submitted when the instruments are installed and annually thereafter. Each instrument shall have affixed to it an externally visible tag specifying the date of the last maintenance or service and the printed name and address of the testing agency.

INTERNATIONAL CODE COUNCIL®
Copyright © 2019 ICC & NYSDOS. ALL RIGHTS RESERVED. Accessed by Lauren Gualdino (lgualdino@briarcliffmanor.org), (-) Order Number #100880972 on May 08, 2020 07:05 AM (PDT) pursuant to License Agreement with ICC & NYSDOS. No further reproduction, no

100880972

INTERNATIONAL CODE COUNCIL®
Copyright © 2019 ICC & NYSDOS. ALL RIGHTS RESERVED. Accessed by Lauren Gualdino (lgualdino@briarcliffmanor.org), (-) Order Number #100880972 on May 08, 2020 07:05 AM (PDT) pursuant to License Agreement with ICC & NYSDOS. No further reproduction, no

100880972

APPENDIX M

TSUNAMI-GENERATED FLOOD HAZARD

This appendix is informative and is not part of this code.

SECTION M101
REFUGE STRUCTURES FOR VERTICAL EVACUATION FROM TSUNAMI-GENERATED FLOOD HAZARD

M101.1 General. The purpose of this appendix is to provide tsunami vertical evacuation planning criteria for those coastal communities that have a tsunami hazard as shown in a Tsunami Design Zone Map.

M101.2 Definitions. The following term shall, for the purposes of this appendix, have the meaning shown herein. Refer to Chapter 2 of this code for general definitions.

TSUNAMI DESIGN ZONE MAP. A map that designates the extent of inundation by a Maximum Considered Tsunami, as defined by Chapter 6 of ASCE 7.

M101.3 Establishment of tsunami design zone. Where applicable, the Tsunami Design Zone Map shall meet or exceed the inundation limit given by the ASCE 7 Tsunami Design Geodatabase.

M101.4 Planning of tsunami vertical evacuation refuge structures within the tsunami design zone. Tsunami Vertical Evacuation Refuge Structures located within a tsunami hazard design zone shall be planned, sited, and developed in general accordance with the planning criteria of the FEMA P646 guidelines.

Exception: These criteria shall not be considered mandatory for evaluation of existing buildings for evacuation planning purposes.

SECTION M102
REFERENCED STANDARDS

ASCE 7—16	Minimum Design Load and Associated Criteria for Buildings and Other Structures	M101.2, M101.3
FEMA P646—12	Guidelines for Design of Structures for Vertical Evacuation from Tsunamis	M101.4

INTERNATIONAL CODE COUNCIL®
Copyright © 2019 ICC & NYSDOS. ALL RIGHTS RESERVED. Accessed by Lauren Gualdino (lgualdino@briarcliffmanor.org), (-) Order Number #100880972 on May 08, 2020 07:05 AM (PDT) pursuant to License Agreement with ICC & NYSDOS. No further reproduction, no

100880972

INTERNATIONAL CODE COUNCIL®
Copyright © 2019 ICC & NYSDOS. ALL RIGHTS RESERVED. Accessed by Lauren Gualdino (lgualdino@briarcliffmanor.org), (-) Order Number #100880972 on May 08, 2020 07:05 AM (PDT) pursuant to License Agreement with ICC & NYSDOS. No further reproduction, no

100880972

APPENDIX N

REPLICABLE BUILDINGS

This appendix is informative and is not part of this code.

SECTION N101
ADMINISTRATION

N101.1 Purpose. The purpose of this appendix is to provide a format and direction regarding the implementation of a replicable building program.

N101.2 Objectives. Such programs allow a jurisdiction to recover from a natural disaster faster and allow for consistent application of the codes for replicable building projects. It will result in faster turnaround for the end user, and a quicker turnaround through the plan review process.

SECTION N102
DEFINITIONS

N102.1 Definitions. The following words and terms shall, for the purposes of this appendix, have the meanings shown herein.

REPLICABLE BUILDING. A building or structure utilizing a replicable design.

REPLICABLE DESIGN. A prototypical design developed for application in multiple locations with minimal variation or modification.

SECTION N103
REPLICABLE DESIGN REQUIREMENTS

N103.1 Prototypical construction documents. A replicable design shall establish prototypical construction documents for application at multiple locations. The construction documents shall include details appropriate to each wind region, seismic design category, and climate zone for locations in which the replicable design is intended for application. Application of replicable design shall not vary with regard to the following, except for allowable variations in accordance with Section N106.

1. Use and occupancy classification.
2. Building heights and area limitations.
3. Type of construction classification.
4. Fire-resistance ratings.
5. Interior finishes.
6. Fire protection system.
7. Means of egress.
8. Accessibility.
9. Structural design criteria.
10. Energy efficiency.
11. Type of mechanical and electrical systems.
12. Type of plumbing system and number of fixtures.

SECTION N104
REPLICABLE DESIGN SUBMITTAL REQUIREMENTS

N104.1 General. A summary description of the replicable design and related construction documents shall be submitted to an approved agency. Where approval is requested for elements of the replicable design that is not within the scope of the *International Building Code*, the construction documents shall specifically designate the codes for which review is sought. Construction documents shall be signed, sealed and dated by a registered design professional.

N104.1.1 Architectural plans and specifications. Where approval of the architectural requirements of the replicable design is sought, the submittal documents shall include architectural plans and specifications as follows:

1. Description of uses and the proposed occupancy groups for all portions of the building.
2. Proposed type of construction of the building.
3. Fully dimensioned drawings to determine building areas and height.
4. Adequate details and dimensions to evaluate means of egress, including occupant loads for each floor, exit arrangement and sizes, corridors, doors and stairs.
5. Exit signs and means of egress lighting, including power supply.
6. Accessibility scoping provisions.
7. Description and details of proposed special occupancies such as a covered mall, high-rise, mezzanine, atrium and public garage.
8. Adequate details to evaluate fire-resistance-rated construction requirements, including data substantiating required ratings.
9. Details for plastics, insulation and safety glazing installation.
10. Details of required fire protection systems.
11. Material specifications demonstrating fire-resistance criteria.

N104.1.2 Structural plans, specifications and engineering details. Where approval of the structural requirements of the replicable design is sought, the submittal documents shall include details for each wind region, seismic design category and climate zone for which approval is sought; and shall include the following:

1. Signed and sealed structural design calculations that support the member sizes on the drawings.

INTERNATIONAL CODE COUNCIL®
Copyright © 2019 ICC & NYSDOS. ALL RIGHTS RESERVED. Accessed by Lauren Gualdino (lgualdino@briarcliffmanor.org), (-) Order Number #100880972 on May 08, 2020 07:05 AM (PDT) pursuant to License Agreement with ICC & NYSDOS. No further reproduction, no

100880972

2. Design load criteria, including: frost depth, live loads, snow loads, wind loads, earthquake design date, and other special loads.
3. Details of foundations and superstructure.
4. Provisions for special inspections.

N104.1.3 Energy conservation details. Where approval of the energy conservation requirements of the replicable design is sought, the submittal documents shall include details for each climate zone for which approval is sought; and shall include the following:

1. Climate zones for which approval is sought.
2. Building envelope details.
3. Building mechanical system details.
4. Details of electrical power and lighting systems.
5. Provisions for system commissioning.

SECTION N105
REVIEW AND APPROVAL OF REPLICABLE DESIGN

N105.1 General. Proposed replicable designs shall be reviewed by an approved agency. The review shall be applicable only to the replicable design features submitted in accordance with Section N104. The review shall determine compliance with this code and additional codes specified in Section N104.1.

N105.2 Documentation. The results of the review shall be documented indicating compliance with the code requirements.

N105.3 Deficiencies. Where the review of the submitted construction documents identifies elements where the design is deficient and will not comply with the applicable code requirements, the approved agency shall notify the proponent of the replicable design, in writing, of the specific areas of noncompliance and request correction.

N105.4 Approval. Where the review of the submitted construction documents determines that the design is in compliance with the codes designated in Section N104.1, and where deficiencies identified in Section N105.3 have been corrected the approved agency shall issue a summary report of Approved Replicable Design. The summary report shall include any limitations on the approved replicable design including, but not limited to climate zones, wind regions and seismic design categories.

SECTION N106
SITE-SPECIFIC APPLICATION OF APPROVED REPLICABLE DESIGN

N106.1 General. Where site-specific application of a replicable design that has been approved under the provisions of Section N105 is sought, the construction documents submitted to the building official shall comply with this section.

N106.2 Submittal documents. A summary description of the replicable design and related construction document shall be submitted. Construction documents shall be signed, sealed and dated by the registered design professional. A statement, signed, sealed and dated by the registered design professional, that the replicable design submitted for local review is the same as the replicable design reviewed by the approved agency, shall be submitted.

N106.2.1 Architectural plans and specifications. Architectural plans and specifications shall include the following:

1. Construction documents for variations from the replicable design.
2. Construction for portions that are not part of the replicable design.
3. Documents for local requirements as identified by the building official.
4. Construction documents detailing the foundation system.

SECTION N107
SITE-SPECIFIC REVIEW AND APPROVAL OF REPLICABLE DESIGN

N107.1 General. Proposed site-specific application of replicable design shall be submitted to the building official in accordance with the provisions of Chapter 1 and Appendix N.

N107.2 Site-specific review and approval of replicable design. The building official shall verify that the replicable design submitted for site-specific application is the same as the approved replicable design reviewed by the approved agency. In addition, the building official shall review the following for code compliance.

1. Construction documents for variations from the replicable design.
2. Construction for portions of the building that are not part of the replicable design.
3. Documents for local requirements as identified by the building official.

INTERNATIONAL CODE COUNCIL®
Copyright © 2019 ICC & NYSDOS. ALL RIGHTS RESERVED. Accessed by Lauren Gualdino (lgualdino@briarcliffmanor.org), (-) Order Number #100880972 on May 08, 2020 07:05 AM (PDT) pursuant to License Agreement with ICC & NYSDOS. No further reproduction, no

100880972

[NY] APPENDIX O

ASSISTIVE LISTENING SYSTEMS PERFORMANCE STANDARDS

[NY] SECTION O101 GENERAL

[NY] O101.1 Scope. The provisions of this appendix shall control the performance standards of assistive listening systems.

[NY] SECTION O102 INDUCTION LOOP SYSTEM

[NY] O102.1 Induction loop system specifications.

1. If the ambient electromagnetic noise (generally caused by lighting regulation systems or major power supplies) produces a field strength exceeding 30mA/meter at frequencies that would decrease the signal-to-noise ratio specified in Item 4, then it is recommended that, unless the noise can be reduced, an induction loop system not be considered.
2. If the electromagnetic signal produced by a nearby induction loop system spills over into a new user area being considered for a different induction loop system and produces an average magnetic field strength exceeding 15 mA/meter, then it is recommended that, unless the use of each system can be scheduled so as not to occur simultaneously, an induction loop system not be considered in the new area.
3. Given an input signal to the amplifier that has a constant level over a minimum frequency range of 100 Hz to 8,000 Hz, the measured frequency response of the magnetic field generated by the induction loop system over that range shall not vary by more than +/-3 decibels from the value of 1,000 Hz. In actual usage, graphic equalization of the output signal is allowed.
4. Given an output power level equal to the average value specified in Item 6, the minimum signal-to-noise ratio of the program signal carried by the electromagnetic field shall be at least 30 decibels.
5. Given a 1,000 Hz input signal to the amplifier that has a level sufficient to produce the minimum signal-to-noise ratio specified in Item 4, the harmonic distortion between the input signal and the program signal carried by the electromagnetic field shall not vary by more than 5 percent over the field strength range specified in Item 6.
6. Given a 1,000 Hz sinusoidal input signal, at a level equal to the long-time average level of a speech signal, the average value of the magnetic field strength generated within the user area by the loop shall equal 100mA/meter +/-3 decibels. The maximum value of the magnetic field strength for a system set to the above recommended average value shall be 400 mA/meter (derived on the basis that the difference of the maximum short-time average level between a speech signal, approximately 0.125 seconds, and the long-time average level is approximately 12 decibels). Both measurements shall be made 48 inches (1219 mm) above floor level at any point within the user area.
7. If a hand-held receiver with[in] earphone is used, the specifications in Items 3, 4 and 5 shall apply. Additionally, the sound pressure level generated by the receiver and earphone shall be at least 80 decibels. The maximum high-frequency average sound pressure level generated by the receiver earphone shall not exceed 130 decibels.
8. The system must have inputs capable of accepting signals at line level and microphone level and must be capable of interfacing with existing public address systems or stand alone.
9. Any stand-alone devices powered by 110–120 volt AC used as part of the system must have been tested by an approved laboratory.
10. All input and output wiring must comply with NFPA 70. Output wiring may be enclosed in nonmetallic raceways or molding.
11. The installation of all stand-alone components of the system must comply with all state and local codes.

[NY] SECTION O103 INFRARED SYSTEM

[NY] O103.1 Infrared system specifications.

1. If the ambient infrared light (generally caused by other infrared light-generating devices or direct sunlight) produces interference, it is recommended that, unless the interfering infrared light can be reduced, infrared systems not be considered.
2. Given an input signal to the transmitter within the range of levels specified in Item 6 over a minimum frequency range of 200 Hz to 8,000 Hz, the measured frequency response of the output signal generated by the receiver and transducer over that range shall not vary by more than +/-5 decibels from the value at 1,000 Hz. In actual usage, graphic equalization of the output signal is allowed.
3. Given an output signal to the transmitter within the range of levels specified in Item 6, the minimum signal-to-noise ratio of the output generated by the receiver and transducer shall be 35 decibels at all frequencies specified in Item 2.
4. Given an output signal of 1,000 Hz to the transmitter at a level sufficient to produce the minimum signal-to-noise ratio specified in Item 3, the harmonic distor-

INTERNATIONAL CODE COUNCIL®
Copyright © 2019 ICC & NYSDOS. ALL RIGHTS RESERVED. Accessed by Lauren Gualdino (lgualdino@briarcliffmanor.org), (-) Order Number #100880972 on May 08, 2020 07:05 AM (PDT) pursuant to License Agreement with ICC & NYSDOS. No further reproduction, no

100880972

tion produced by the receiver and transducer shall not be more than 5 percent.

5. Given a 1,000 Hz sinusoidal input signal at a level within the range specified in Item 6, the following are the possible transducers:
   a. If using a neckloop as an output transducer, generate a magnetic field strength of at least 150 mA/meter. The peak field strength shall not exceed 600 mA/meter. Measurements shall be made at the geometric center of the plane of the neckloop.
   b. If using a silhouette as an output transducer, generate a magnetic field strength of at least 50 mA/meter (the peak field strength shall not exceed 200 mA/meter). Measurements shall be made at a distance of 10 centimeters from the silhouette.
   c. If using a miniature earphone as an output transducer, generate a sound pressure level of at least 80 decibels. The maximum high-frequency average sound pressure level shall not exceed 130 decibels.
   d. If a direct input cable is used between the output of the receiver and the input of the hearing aid boot or shoe, generate a minimum voltage range of 2 mV to 800 mV and match a boot/shoe input impedance of 50 ohms or greater. The plugs at either end shall be molded 2-pin, 3-pin and/or 3.5-millimeter mini-plug (stereo or mono).
6. The system must have inputs capable of accepting signals at line level and microphone level and must be capable of interfacing with existing public address systems or stand alone.
7. The minimum light level of the transmitted infrared carrier signal must be sufficient so that a receiver can produce the specifications in Items 2, 3, 4 and 5 at any point within the user area.
8. Any stand-alone devices powered by 110–120 volt AC used as part of the system must be tested by an approved laboratory.
9. All input wiring must comply with NFPA 70.
10. The installation of all stand-alone components of the system must comply with all state and local codes.

[NY] SECTION O104
FM SYSTEM

[NY] O104.1 FM system specifications.

1. If an ambient FM signal (generally caused by other agencies on the same frequency or major power supplies) produces interference, it is recommended that, unless the frequency can be changed, an FM system not be considered.
2. Given an input signal to the transmitter within the range of levels specified in Item 6 over a minimum frequency range of 100 Hz to 8,000 Hz, the measured frequency response of the output signal generated by the receiver and a transducer over that range shall not vary by more than +/-5 decibels from the value at 1,000 Hz. In actual usage, graphic equalization of the output signal is allowed
3. Given an input signal to the transmitter within the range of levels specified in Item 6, the minimum signal-to-noise ratio of the output generated by the receiver and transducer shall be 35 decibels at all frequencies specified in Item 2.
4. Given an input signal to the transmitter at 1,000 Hz at a level sufficient to produce the minimum signal-to-noise ratio specified in Item 3, the total harmonic distortion between the input signal and the program signal produced by the receiver and transducer shall not be more than 10 percent.
5. Given a 1,000 Hz sinusoidal input signal at a level within the range specified in Item 6, the following are among the possible transducers:
   a. If using a neckloop as an output transducer, generate a magnetic field strength of at least 150 mA/meter. The peak field strength shall not exceed 600 mA/meter. Measurements shall be made at the geometric center of the plane of the neckloop.
   b. If using a silhouette as an output transducer, generate a magnetic field strength of at least 50 mA/meter. The peak field strength shall not exceed 200 mA/meter. Measurements shall be made at a distance of 10 centimeters from the silhouette.
   c. If using a miniature earphone as an output transducer, generate a sound pressure level of at least 80 decibels. The maximum high-frequency average sound pressure level shall not exceed 130 decibels.
   d. If a direct input cable is used between the output of the receiver and the input of the hearing aid boot or shoe, generate a minimum voltage range of 2 mV to 800 mV and match a boot/shoe input impedance of 50 ohms or greater. The plugs at either end shall be molded 2-pin, 3-pin and/or 3.5-millimeter mini-plug (stereo or mono).
6. The system must have inputs capable of accepting signals at line level and microphone level and must be capable of interfacing with existing public address systems or stand alone.
7. The minimum sensitivity of the receiver shall be at least 2 uV at 12 decibels SINAD. The maximum RF signal generated by the transmitter shall not exceed 8,000 uV/meter at 30 meters.
8. Any stand-alone devices powered by 110–120 volt AC used as part of the system must be tested by an approved laboratory.
9. All input wiring must comply with NFPA 70.
10. The installation of all stand-alone components of the system must comply with all state and local codes.
11. The frequencies used by the transmitter should be in compliance with applicable FCC rules.

INTERNATIONAL CODE COUNCIL®
Copyright © 2019 ICC & NYSDOS. ALL RIGHTS RESERVED. Accessed by Lauren Gualdino (lgualdino@briarcliffmanor.org), (-) Order Number #100880972 on May 08, 2020 07:05 AM (PDT) pursuant to License Agreement with ICC & NYSDOS. No further reproduction, no

100880972

[NY] APPENDIX P

DIAPER CHANGING STATIONS

[NY] SECTION P101 INTRODUCTION

[NY] P101.1 Scope. This Appendix establishes standards for the installation of *diaper changing stations* in all newly constructed buildings that have one or more areas classified as *Assembly Group A occupancies* or *Mercantile Group M occupancies* and in all existing buildings that have one or more areas classified as *Assembly Group A occupancies* or *Mercantile Group M occupancies* and undergo a substantial renovation.

[NY] SECTION P102 PURPOSE

[NY] P102.1 Purpose. This Appendix implements the provisions of subdivisions sixteen and seventeen of Section 378 of the Executive Law, as added by Chapter 58 of the Laws of 2018.

[NY] SECTION P103 DEFINITIONS

[NY]P103.1 Definitions. In this Appendix, the following terms shall have the following meanings:

2009 ICC A117.1. The 2009 edition of the publication entitled ICC A117.1, Accessible and Usable Buildings and Facilities (publication date 2010) published by the International Code Council, Inc.

BUILDING CODE OF NEW YORK STATE. The 2020 edition of the publication entitled "Building Code of New York State" published by the International Code Council, Inc.

EXISTING BUILDING CODE OF NEW YORK STATE. The 2020 edition of the publication entitled "Existing Building Code of New York State" published by the International Code Council, Inc.

APPROVED. Acceptable to the *building official* or *authority having jurisdiction.*

ASSEMBLY GROUP A OCCUPANCY. An Assembly Group A occupancy as described in Section 303 of the *Building Code of New York State*.

DIAPER CHANGING STATION. A diaper changing station, deck, table, or similar amenity that is intended for use by the public for the purpose of changing diapers on children weighing up to 50 pounds.

EXISTING BUILDING. A building constructed before January 1, 2019. For the purposes of this Appendix, where a substantially complete application for a permit for the original construction of a building has been submitted to the *authority having jurisdiction* before January 1, 2019, such building shall be deemed to have been constructed before January 1, 2019 and, accordingly, shall be deemed to be an existing building.

HISTORIC BUILDINGS. Any building or structure that is one or more of the following:

1. Listed, or certified as eligible for listing by the Keeper of the National Register of Historic Places, on the National Register of Historic Places authorized by the National Historic Preservation Act of 1966.
2. Listed, or certified as eligible for listing by the State Historic Preservation Officer, on the statewide inventory of historic property established under Subdivision 2 of Section 14.07 of the Parks, Recreation and Historic Preservation Law.
3. Designated as an historic property under a local designation law or survey.
4. Certified as a contributing resource within a National Register-listed, state designated or locally designated historic district.

LEVEL 2 OR LEVEL 3 ALTERATION. An "alteration" (as defined in the *Existing Building Code of New York State*) that is either a level 2 alteration (as described in Section 603 of the *Existing Building Code of New York State*) or a level 3 alteration (as described in Section 604 of the *Existing Building Code of New York State*).

MERCANTILE GROUP M OCCUPANCY. A *Mercantile Group M occupancy* as described in Section 309 of the *Building Code of New York State.*

NEWLY CONSTRUCTED BUILDING. A building constructed on or after January 1, 2019. For the purposes of this Appendix, where a substantially complete application for a permit for the original construction of a building has been submitted to the *authority having jurisdiction* on or after January 1, 2019, such building shall be deemed to have been constructed on or after January 1, 2019 and, accordingly, shall be deemed to be a newly constructed building.

PUBLIC FAMILY OR ASSISTED-USE TOILET ROOM. A family or assisted-use toilet room as described in Section 1109.2.1 of the *Building Code of New York State* that is intended for use by customers and patrons of and visitors to an area classified as an *Assembly Group A occupancy* or *Mercantile Group M occupancy.*

PUBLIC TOILET ROOM. A room containing public toilet facilities intended for use by customers and patrons of and visitors to an area classified as an *Assembly Group A occupancy* or *Mercantile Group M occupancy*. The term "public toilet room" includes public family or assisted-use toilet room, a public toilet room available for use by both sexes (hereinafter referred to as a "unisex public toilet room"), a public toilet room available for use only by males (hereinafter referred to as a "male public toilet room"), and a public toilet room available for use only by females (hereinafter referred

INTERNATIONAL CODE COUNCIL®
Copyright © 2019 ICC & NYSDOS. ALL RIGHTS RESERVED. Accessed by Lauren Gualdino (lgualdino@briarcliffmanor.org), (-) Order Number #100880972 on May 08, 2020 07:05 AM (PDT) pursuant to License Agreement with ICC & NYSDOS. No further reproduction, no

100880972

to as a "female public toilet room"). A room that meets the definition of "public toilet room" in this subdivision will continue to be deemed to be a public toilet room for the purposes of this Appendix even if such room contains both employee toilet facilities and public toilet facilities.

SUBSTANTIAL RENOVATION. The term "Substantial renovation" means one or more of the categories of work described in Section P104.2 of this Appendix.

[NY] SECTION P104
GENERAL REQUIREMENTS

[NY] P104.1 Newly constructed buildings. In all *newly constructed buildings* that have one or more areas classified as an *Assembly Group A occupancy* or *Mercantile Group M occupancy*, at least one safe, sanitary, and convenient *diaper changing station* available for use by both male and female occupants (or at least one such *diaper changing station* available for use by male occupants and at least one such *diaper changing station* available for use by female occupants) shall be provided on each floor level containing a *public toilet room*.

[NY] P104.2 Existing buildings. Except as otherwise provided in Sections P104.3 and P104.4 of this appendix, in an *existing building* that undergoes work in any one or more of the categories described in this subdivision and has, upon completion of such work, one or more areas classified as an *Assembly Group A occupancy* or *Mercantile Group M occupancy*, safe, sanitary, and convenient *diaper changing stations* shall be provided as follows:

1. In the case of the construction or installation of a new *public family or assisted-use toilet room* or a new unisex public toilet room, at least one such diaper changing station shall be provided in the newly constructed or installed *public family or assisted-use toilet room* or unisex public toilet room.
2. In the case of the construction or installation of a new male *public toilet room* and a new female *public toilet room* on the same floor level, at least one such *diaper changing station* shall be provided in the newly constructed or installed male *public toilet room* and at least one such *diaper changing station* shall be provided in the newly constructed or installed female *public toilet room*.
3. In the case of a *level 2 alteration* of an existing *public family or assisted-use toilet room*, an existing unisex *public toilet room*, or an existing male *public toilet room* and an existing female *public toilet room* that are both on the same floor level, at least one such *diaper changing station* shall be provided in each *public toilet room* undergoing the *level 2 alteration*.
4. In the case of a *level 3 alteration* of an *existing building* where the work area includes an *existing public family or assisted-use toilet room*, an existing unisex *public toilet room*, or an existing male *public toilet room* and an existing female *public toilet room* that are both on the same floor level, at least one such *diaper changing station* shall be provided in each *public toilet room* included in the work area of the *level 3 alteration*.
5. In the case of work that does not fall in any category described in paragraphs (1), (2), (3), or (4) of this subdivision; is a *level 2 or level 3 alteration* of an *existing building*; and has a work area that includes at least 50 percent of the area of an *Assembly Group A occupancy* or *Mercantile Group M occupancy*, safe, sanitary, and convenient *diaper changing stations* shall be provided as follows:
   i. Where such *Assembly Group A occupancy* or *Mercantile Group M occupancy* is served by an existing *public family or assisted-use toilet room* and a *diaper changing station* can be provided in such existing *public family or assisted-use toilet room* without having to reconfigure the space therein or increase the floor area thereof, at least one such *diaper changing station* shall be provided in such existing *public family or assisted-use toilet room*;
   ii. Where such *Assembly Group A occupancy* or *Mercantile Group M occupancy* is served by an existing unisex *public toilet room* and a *diaper changing station* can be provided in such existing unisex *public toilet room* without having to reconfigure the space therein or increase the floor area thereof, at least one such *diaper changing station* shall be provided in such existing unisex *public toilet room*; and
   iii. Where such *Assembly Group A occupancy* or *Mercantile Group M occupancy* is served by an existing male *public toilet room* and an existing female *public toilet room* that are both on the same floor level and a *diaper changing station* can be provided in both of such existing *public toilet rooms* without having to reconfigure the space in, or increase the floor area of, either of such existing *public toilet rooms*, at least one such *diaper changing station* shall be provided in such existing male *public toilet room* and at least one such *diaper changing station* shall be provided in such existing female *public toilet room*.

[NY] P104.3 Exception. Notwithstanding any provision of Section P104.2 of this Appendix to the contrary, if an *existing building* undergoes work in any category described in Section P104.2, not more than one *diaper changing station* available for use by both male and female occupants (or one *diaper changing station* available for use by male occupants and one *diaper changing station* available for use by female occupants) shall be required on any floor level.

[NY] P104.4 Transitional provision. Notwithstanding any provision of Section P104.2 of this Appendix to the contrary, if an *existing building* undergoes work in any category described in Section P104.2 and a substantially complete application for a permit for such work has been submitted to the *authority having jurisdiction* before January 1, 2019, the requirements of Section P104.2 shall not apply to such work.

INTERNATIONAL CODE COUNCIL®
Copyright © 2019 ICC & NYSDOS. ALL RIGHTS RESERVED. Accessed by Lauren Gualdino (lgualdino@briarcliffmanor.org), (-) Order Number #100880972 on May 08, 2020 07:05 AM (PDT) pursuant to License Agreement with ICC & NYSDOS. No further reproduction, no

100880972

[NY] SECTION P105
ACCESSIBILITY, CONSTRUCTION, AND INSTALLATION REQUIREMENTS

[NY] P105.1 Accessibility. All *diaper changing stations* shall comply, at a minimum, with the accessibility requirements of Section 603.5 (Diaper Changing Tables) of the 2009 ICC A117.1.

[NY] P105.2 Design. All *diaper changing stations* shall be designed for use with children weighing up to fifty (50) pounds and shall include a child restraint system.

[NY] P105.3 Listing and labeling. Commercially manufactured wall-mounted or recessed *diaper changing stations* shall be listed and labeled as complying with ASTM F2285—04(2016)e1 (Standard Consumer Safety Performance Specification for Diaper Changing Tables for Commercial Use), shall be approved, and shall be installed in accordance with the manufacturer's installation instructions, the requirements of this Appendix, and any and all other applicable requirements of the Uniform Code.

[NY] P105.4 Installation. Commercially manufactured countertop *diaper changing stations* shall be approved and shall be installed in accordance with the manufacturer's installation instructions, the requirements of this Appendix, and any and all other applicable requirements of the Uniform Code.

[NY] P105.5 Construction. Noncommercially manufactured *diaper changing stations* shall be approved and shall be constructed and installed in accordance with the requirements of this Appendix and any and all other applicable requirements of the Uniform Code.

[NY] SECTION P106
SIGNAGE

[NY] P106.1 Signage. In each building that has one or more areas classified as an *Assembly Group A occupancy* or *Mercantile Group M occupancy* and in which at least one *diaper changing station* is installed on or after January 1, 2019 (whether voluntarily, or pursuant to this Appendix, or pursuant to any other applicable law), each public toilet room that does not have a *diaper changing station* shall be provided with a sign indicating the location of the nearest *diaper changing station* that is available for use by the gender using such *public toilet room*. Where a *diaper changing station* is not available for use by a gender in a building, no such sign shall be required in or adjacent to each *public toilet room* by the gender using such *public toilet room*. Such signs shall be readily visible, shall be posted in a conspicuous place in or adjacent to the *public toilet room*, and shall comply with Section 703.2 (Visual Characters) of the 2009 ICC A117.1. No such sign shall be required in or adjacent to a *public toilet room* in which any *diaper changing station* is located.

[NY] SECTION P107
MAINTENANCE

[NY] P107.1 Maintenance. *Diaper changing stations* installed in any building (whether voluntarily, or pursuant to this Appendix, or pursuant to any other applicable law) shall be maintained in a safe, sanitary, and working condition.

[NY] SECTION P108
HISTORIC BUILDINGS

[NY] P108.1 Historic building. *Historic buildings* are exempt from the requirements of this Appendix except the requirements of Sections P106 and P107.

INTERNATIONAL CODE COUNCIL®
Copyright © 2019 ICC & NYSDOS. ALL RIGHTS RESERVED. Accessed by Lauren Gualdino (lgualdino@briarcliffmanor.org), (-) Order Number #100880972 on May 08, 2020 07:05 AM (PDT) pursuant to License Agreement with ICC & NYSDOS. No further reproduction, no

100880972

INTERNATIONAL CODE COUNCIL®
Copyright © 2019 ICC & NYSDOS. ALL RIGHTS RESERVED. Accessed by Lauren Gualdino (lgualdino@briarcliffmanor.org), (-) Order Number #100880972 on May 08, 2020 07:05 AM (PDT) pursuant to License Agreement with ICC & NYSDOS. No further reproduction, no

100880972

INDEX

A

ACCESS OPENINGS
- Attic 1208.2
- Crawl space 1208.1
- Doors 712.1.13.2
- Fire damper 717.4
- Fire department 402.7.5
- Mechanical appliances 1208.3
- Refuse/laundry chutes 713.13.3

ACCESSIBILITY . . . . . 1009, Chapter 11, Appendix E
- Airport E110
- Airport control towers 412.2.6
- Assembly 1009.1, 1108.2, 1109.11, 1110
- Bus stops E108
- Construction sites 1103.2.5
- Controls 1109.13
- Detectable warnings 1109.10
- Detention and correctional facilities 1103.2.13, 1107.5.5,1108.4.2, E104.1
- Dining areas 1108.2.9, 1109.11
- Dressing rooms 1109.12.1
- Drinking fountains 1109.5
- Dwelling units 1103.2.3, 1105.1.6, 1107
- Egress (see ACCESSIBLE MEANS OF EGRESS) . . . 1009
- Elevators 1009.2.1, 1009.4, 1009.7.3, 1109.7, 3001.2, 3001.4
- Employee work areas 907.5.2.31, 1103.2.2, 1104.3.1
- Entrances 1105
- Exceptions 1103.2, 1104.4, 1107.7
- Existing buildings 1009.1
- Fuel dispensing 1109.14
- Gaming tables and machines 1109.15, E105.3
- Institutional 1103.2.12, 1103.2.13, 1107, 1109.11.2, E104.2.2
- Judicial facilities 1108.4, 1109.11.2
- Kitchens 1109.4
- Laundry E105.2
- Lifts 1009.5, 1109.8
- Live/work unit 419.7, 1107.6.2.1
- Parking and passenger loading facilities 1106
- Performance areas 1108.2.8
- Platform 1108.2.8, E103.1
- Press box 1104.3.2
- Ramps 1012
- Recreational facilities (see RECREATION FACILITIES) . . . 1104.2, 1110
- Religious worship, places of 1103.2.8
- Residential 1103.2.3, 1103.2.11, 1107, E104
- Route 1003.4, 1104, 1107.4, E104
- Saunas and steam rooms 1109.6
- Scoping 1101, 1103.1, E101.1
- Seating 1108.2, 1109.11
- Service facility 1109.12
- Signage . . . . . 1009.8 through 1009.11, 1110, E107
- Sleeping units 1107, 1105.1.6
- Storage 1108.3, 1109.9
- Technical standard 1102.1, E101.2
- Telephone E106
- Toilet and bathing facilities 1107.6.1.1, 1109.2, 1109.3, E105.1
- Train and light-rail stations E109
- Transient lodging 1103.2.11, 1107.6.1, E104.2
- Utility 1103.2.4

ACCESSIBLE MEANS OF EGRESS 1009
- Areas of refuge (see AREA OF REFUGE)
- Assembly 1009.1, 1029.8
- Elevators 1009.2.1, 1009.4, 1009.8
- Existing building 1009.1
- Exterior area for assisted rescue (see EXTERIOR AREA FOR ASSISTED RESCUE)
- Horizontal exit (see HORIZONTAL EXIT)
- Mezzanine 1009.1
- Platform lift 1009.5
- Required 1009.1
- Signage . . . . . 1009.8 through 1009.11, 3002.3
- Stairways 1009.3

ACCESSORY OCCUPANCIES
- As occupancy exceptions 303.1.2, 303.1.4, 305.1.1, 311.1.1, 312.1
- Live/work units 419.1
- Mixed occupancy buildings 508.2
  - Height 508.2.2
  - Occupancy classification 508.2.1
  - Separations 508.2.4
- Unlimited area buildings 507.1.1

ADDITION 101.4.7, D103.1
- Means of egress 3302.1, 3310

ADDRESS IDENTIFICATION 502.1

ADMINISTRATION . . . . . Chapter 1

ADOBE CONSTRUCTION 202, 2109.2

AEROSOL PRODUCTS 202, 307.1, 311.2, 414.1.2.1, 414.2.5, 907.2.16

AGGREGATE 202
- Ballast 1504.8

INTERNATIONAL CODE COUNCIL®
Copyright © 2019 ICC & NYSDOS. ALL RIGHTS RESERVED. Accessed by Lauren Gualdino (lgualdino@briarcliffmanor.org), (-) Order Number #100880972 on May 08, 2020 07:05 AM (PDT) pursuant to License Agreement with ICC & NYSDOS. No further reproduction, no

100880972

AGRICULTURAL BUILDINGS (see GROUP U). . . . . .312.1, 1103.2.4, Appendix C
AIR CONDITIONING (see MECHANICAL) 2801.1, 3005.2
AIR INTAKES (see YARDS OR COURTS) 1205.3.2
AIRCRAFT HANGARS. 412.3
Aircraft paint hangars. 412.5, 507.10
Basements. 412.3.2
Construction. 412.3.1, 412.3.6, 412.5.2
Fire area 412.3.6.2
Fire suppression system 412.3.6, 412.5.5
Heliports and helistops 412.7, 905.3.6, 906.1, 1607.6
Residential. 412.4, 907.2.21
Unlimited height and area 507.10
AIRCRAFT MANUFACTURING FACILITIES . . . 412.6
AIRCRAFT-RELATED OCCUPANCIES . . . 412, E110
Airport traffic control towers. 412.2, 907.2.22
Alarms and detection. 412.2.3.1, 907.2.22
Construction type. 412.2.1, 412.5.2, 412.6
Egress 412.2.2, 412.2.5.1, 412.6.1, 412.7.3
Finishing 412.3.5
Fire suppression 412.2.4, 412.3.6, 412.5.5
Separation 412.3.6.2, 412.4.1
AISLE 1018, 1029.9, 1029.14
Aisle accessways. 1018.4, 1029.13
Assembly seating. 1018.2, 1029.6
Bleachers. 1029.1.1
Business 1018.3
Check-out 1109.12.2
Construction. 1029.12
Converging 1029.9.3
Egress 1018, 1029
Folding and telescopic seating 1029.1.1
Grandstands 1029.1.1
Mercantile 1018.3, 1018.4
Obstructions. 1029.9.6
Tables 1029.13.1
Temporary structures. 3103.4
Transitions 1029.10
Width 1029.9
ALARM SYSTEMS, EMERGENCY 908
ALARMS, FIRE (see FIRE ALARM AND SMOKE DETECTION SYSTEMS)
ALARMS, VISIBLE. 907.5.2.3
Common areas 907.5.2.3.1
Employee work areas 907.5.2.3.1
Group I-1 . . . . . 907.5.2.3.2
Group R-1 . . . . . 907.5.2.3.2
Group R-2 . . . . . 907.5.2.3.3
Public areas 907.5.2.3.1
ALARMS, VOICE 907.5.2.2
Amusement buildings, special 411.5, 907.2.12.3
Covered and open mall buildings. 402.7.4, 907.2.20
Emergency power 2702.2
High-rise buildings 403.4.4, 907.2.13
Occupant evacuation elevators 3008.9
Underground buildings. 405.8.2, 907.2.19
ALLOWABLE STRESS DESIGN 202
Load combinations. 1605.3
Masonry design 2107
Wood design 2102.1, 2306
ALTERATIONS. 101.4.7, D103.1
Means of egress. 3302.1, 3310.2
ALTERNATING TREAD DEVICES 1011.14
Construction. 1011.14.2
Equipment platform 505.5
Heliports. 412.7.3
Technical production areas 410.5.3.4
ALTERNATIVE MATERIALS, DESIGN AND METHODS 104.3
ALUMINUM. . . . . 1403.5.1, 1604.3.5, Chapter 20
AMBULATORY CARE FACILITIES. 422
Alarm and detection 907.2.2.1
Emergency and standby power 2702.2
Incapable of self-preservation 202
Medical gas systems 427
Smoke compartment 422.2, 422.3
AMUSEMENT BUILDING, SPECIAL 411
Alarm and detection 411.2, 411.4, 907.2.12
Classification 411.1
Emergency voice/alarm communications system 411.5, 907.2.12.3
Exit marking 411.6, 411.6.1
Interior finish. 411.7
Sprinklers protection 411.3
AMUSEMENT PARK STRUCTURES 303
Accessibility 1110.4.8
ANCHOR BUILDING (see COVERED MALL AND OPEN MALL BUILDINGS) 402
Construction type 402.4.1.2
Means of egress. 402.8.4.1
Occupant load 402.8.2.3
Separation 402.4.2.2, 402.4.2.3
Sprinkler protection 402.5
ANCHORAGE. 1604.8
Braced wall line sills. 2308.3.1.1, 2308.3.1.2, 2308.6.7, 2308.6.7.3
Concrete. 1901.3

INTERNATIONAL CODE COUNCIL®
Copyright © 2019 ICC & NYSDOS. ALL RIGHTS RESERVED. Accessed by Lauren Gualdino (lgualdino@briarcliffmanor.org), (-) Order Number #100880972 on May 08, 2020 07:05 AM (PDT) pursuant to License Agreement with ICC & NYSDOS. No further reproduction, no

100880972

Conventional light-frame construction 2308.3.1, 2308.4.10
Decks 1604.8.3
Seismic anchorage for masonry chimneys . . . 2113.4
Seismic anchorage for masonry fireplaces . . . 2111.5
Walls 1604.8.2
Wood sill plates 2308.3.1
APARTMENT HOUSES 310.4
APPEALS 113
APPROVED AGENCY 202, 1703.1
ARCHITECT (see definition for REGISTERED DESIGN PROFESSIONAL)
ARCHITECTURAL TRIM 603.1, 1405.1.2, D102.2.7
AREA, BUILDING . . . . . .Chapter 5, 506, Table 506.2
Accessory uses 508.2.3
Aircraft hangars, residential 412.4.5
Allowable area determination 506.2, 506.3
Basements 506.1.3
Buildings on same lot 503.1.2
Covered and open mall building . . 402.4.1, 402.4.1.1
Enclosed parking garage 406.6.1, 510.3
Equipment platforms 505.3.1
Frontage bonus 506.3
Incidental uses 509.3
Limitations 503, 506
Membrane structures 3102.4
Mezzanines 505.2.1
Mixed construction types 3102.6
Mixed occupancy 508.2.3, 508.3.2, 508.4.2
Modifications 506, 510
Occupied roof 503.1.4
Open mall building 402.4.1
Open parking garage 406.5.4, 406.5.4.1, 406.5.5, 510.2, 510.3, 510.4, 510.7, 510.8, 510.9
Private garages and carports 406.3.1
Special provisions 510
Unlimited area 503.1.1, 503.1.3, 506.1.1, 506.2, 507
AREA FOR ASSISTED RESCUE, EXTERIOR (see EXTERIOR AREAS FOR ASSISTED RESCUE)
AREA OF REFUGE (see ACCESSIBLE MEANS OF EGRESS)
Requirements 1009.6
Signage 1009.9, 1009.10, 1009.11
Two-way communication 1009.6.5
Where required 1009.2, 1009.3, 1009.4
ASSEMBLY OCCUPANCY (GROUP A) 303, 1029
Accessibility 1108.2, 1108.4, 1109.2.1, 1110, E103
Alarms and detection 907.2.1
Area 503, 506, 507, 508
Bleachers (see BLEACHERS)
Folding and telescopic seating (see BLEACHERS)
General 303.1
Grandstands (see GRANDSTANDS)
Group-specific provisions
A-1 . . . . . 303.2
A-2 . . . . . 303.3
A-3 . . . . . 303.4
A-4 . . . . . 303.5
A-5 . . . . . 303.6
Motion picture theater 409, 507.12
Special amusement buildings 411
Stages and platforms 410
Height 503, 504, 505, 508, 510
Incidental uses 509
Interior finishes . . . . . Table 803.13, 804
Live load . . . . . Table 1607.1, 1607.13.3.1
Means of egress
Aisles 1018.2, 1029.9, 1029.10, 1029.11
Assembly spaces 1029
Exit signs 1013.1
Guards 1015.2, 1029.17
Main exit 1029.3
Open air 1005.3.1, 1005.3.2, 1006.3, 1009.6.4, 1019.3, 1027, 1029.6.2
Panic hardware 1010.1.10, 1010.2.1
Smoke-protected 1005.3.1, 1005.3.2, 1006.3, 1009.6.4, 1019.3, 1027, 1029.6.2
Travel distance 1016.2.1, 1017.2, 1006.3, 1029.7
Mixed occupancies 508.3, 508.4
Accessory 508.2
Education 303.1.3
Live/work units 419
Mall buildings 402
Other occupancies 303.1.1, 303.1.2, 303.1.3
Parking below/above 510.7, 510.9
Religious facilities 303.1.4
Special mixed 510.2
Motion picture theaters 409, 507.12
Occupancy exceptions 303.1.1, 303.1.2, 303.1.3, 303.1.4, 305.1.1, 305.2.1
Plumbing fixtures 2902
Risk category . . . . . Table 1604.5
Seating, fixed (see SEATING, FIXED)
Seating, smoke-protected 1029.6.2
Sprinkler protection 410, 504.3, 506.2, 507.3, 507.4, 507.6, 507.7, 507.12, 903.2.1

INTERNATIONAL CODE COUNCIL®
Copyright © 2019 ICC & NYSDOS. ALL RIGHTS RESERVED. Accessed by Lauren Gualdino (lgualdino@briarcliffmanor.org), (-) Order Number #100880972 on May 08, 2020 07:05 AM (PDT) pursuant to License Agreement with ICC & NYSDOS. No further reproduction, no

100880972

Stages and platforms 410, 905.3.4
Standpipes 905.3.2, 905.3.4, 905.5.1
Unlimited area 507.4, 507.4.1, 507.6, 507.7, 507.12
ASSISTED LIVING (see GROUP I-1) . . . 308.2, 310.5
Sixteen or fewer residents (see Group R-4) 308.2.3, 308.2.4, 310.4.1, 310.5
ATMOSPHERIC ICE LOADS 1614
ATRIUM 404
Alarms and detection 404.4, 907.2.14
Enclosure 404.6, 707.3.5
Interior finish 404.8
Smoke control 404.5, 909
Sprinkler protection 404.3
Standby power 404.7
Travel distance 404.9, 1016.2.1, 1017.2, 1006.3
Use 404.2
ATTIC
Access 1208.2
Combustible storage 413.2
Draftstopping 718.4
Insulation 720.3.1
Live load . . . . . Table 1607.1
Ventilation 1202.2
AUDITORIUM 303, 305.1.1
Accessibility 1108.2
Foyers and lobbies 1029.4
Interior balconies 1029.5
Motion picture projection rooms 409
Stages and platforms 410
AUTOMOBILE PARKING GARAGE (see GARAGE, AUTOMOBILE PARKING) 406
AWNINGS 3105
Design and construction 3105.2
Drainage, water 3201.4
Encroachment, public right-of-way 3202.2.3, 3202.3.1, 3202.4
Fire district D102.2.8
Live load . . . . Table 1607.1, 1607.13.2.1, 1607.13.4
Materials 3105.3
Motor vehicle service stations (canopies) . . . 406.7.2
Permanent D102.2.8
Plastic 2606.10

B

BALCONIES
Accessibility 1108.2.4
Assembly 1029.5
Construction, exterior 705.3.2.1
Guards 1015.2
Live load . . . . . Table 1607.1
Means of egress 1021, 1029.5
Open mall building 402.4.3, 402.5
Projection 705.2, 705.2.3.1
Public right-of-way encroachments 3202.3.2, 3202.3.3
Travel distance 1017.2.1
BARBECUES 2801
BARRIERS
Fire (see FIRE BARRIER)
Pedestrian protection 3306
Smoke (see SMOKE BARRIER)
Vehicle 202, 406.4.2, 1607.9
BASEMENT
Aircraft hangars 412.3.2
Area modification 506.1.3
Considered a story 202
Emergency escape 1030.1
Exits 1006.3.3
Flood loads 1612.1, 1612.4
Height modifications for 510.5
Prohibited 415.6, 415.7, 415.8, 415.11.5.2, 418.1, 421.2
Rodentproofing . . . . . Appendix F
Sprinkler protection 903.2.11.1
Waterproofing and dampproofing 1805
BASEMENT WALLS
Soil loads 1610.1
Waterproofing and dampproofing 1805
BATH AND BATHING ROOMS (see TOILET AND TOILET ROOMS) . . . . . 101.4.3, Chapter 29
BAY AND ORIEL WINDOWS 705.2.4
Public right-of-way encroachments 3202.3.2, 3202.3.3
BLEACHERS (see GRANDSTANDS) 303.6, 1029.1.1
Accessibility 1108.2
Egress 1029.1.1
Live load . . . . . Table 1607.1
Occupant load 1004.6, 1004.7
Separation 1029.1.1.1
BLOCK (see CONCRETE BLOCK AND GLASS UNIT MASONRY)
BOILER ROOM
Exits 1006.2.2.1
BOLTS 2204.2
Anchor rods 1901.3, 1905, 2204.3
BONDING, MASONRY 2204.3, 2109.2

INTERNATIONAL CODE COUNCIL®
Copyright © 2019 ICC & NYSDOS. ALL RIGHTS RESERVED. Accessed by Lauren Gualdino (lgualdino@briarcliffmanor.org), (-) Order Number #100880972 on May 08, 2020 07:05 AM (PDT) pursuant to License Agreement with ICC & NYSDOS. No further reproduction, no

100880972

BRACED WALL LINE 202
Bracing 2308.6
Seismic requirements 2308.6.10.2, 2308.6.6.2, 2308.6.8
Sill anchorage 2308.6.7.3
Spacing 2308.6.1
Support 2308.6.8
BRACED WALL PANEL 202
Alternative bracing 2308.6.5.1, 2308.6.5.2
Connections 2308.6.7
Length 2308.6.4
Location 2308.6.2
Method 2308.6.3
BRICK (see MASONRY)
BUILDING
Area (see AREA, BUILDING) 502.1, 503, 505, 506, 507, 508, 510
Demolition 3303
Existing 101.4.7
Fire walls 706.1
Height (see HEIGHT, BUILDING) 502.1, 503, 504, 505, 508, 510
Occupancy classification . . . . . Chapter 3
Party walls 706.1.1
BUILDING OFFICIAL 202
BUILT-UP ROOFS 1507.10
BUSINESS OCCUPANCY (GROUP B) 303.1.1, 303.1.2, 304
Alarms and detection 907.2.2
Ambulatory care facilities 304, 422
Area 503, 505, 506, 507, 508
Height 503, 504, 505, 508, 510
Higher education laboratories 428, 2702.2
Incidental uses 509
Interior finishes . . . . . Table 803.13, 804
Live load . . . . . Table 1607.1
Means of egress
Aisles 1018.3
Stairway, exit access 1019
Travel distance 1006.3, 1016.2.1, 1017.2
Mixed occupancies 508.2, 508.3, 508.4
Accessory 303.1.2, 508.2
Ambulatory care facilities 422
Assembly 303.1.2
Educational 303.1, 304.1
Live/work units 419
Mall buildings 402
Parking below/above 510.2, 510.7, 510.8, 510.9
Special mixed 510.2
Occupancy exceptions 303.1.1, 303.1.2
Plumbing fixtures 2902
Risk category . . . . . Table 1604.5
Sprinkler protection 903.2.2
Unlimited area 507.4, 507.5, 507.13

C

CABLES, STEEL STRUCTURAL 2208
CALCULATED FIRE RESISTANCE (see FIRE RESISTANCE, CALCULATED)
CANOPIES 3105
Design and construction 3105.2
Drainage, water 3201.4
Encroachment, public right-of-way 3202.3.1
Fire district D102.2.8
Live load . . . Table 1607.1, 1607.13.2.1, 1607.13.2.4
Materials 3105.3
Motor vehicle service stations 406.7.2
Permanent D102.2.8
Plastic 2606.10
CARBON MONOXIDE ALARMS AND DETECTION 915
CARE FACILITIES (see HEALTH CARE)
CARE PROVIDER STATIONS 407.2.2
CARE SUITES 202, 407.4.4
CARPET
Floor covering 804.2
Textile ceiling finish 803.6
Textile wall coverings 803.5
CATWALKS (see TECHNICAL PRODUCTION AREAS)
Construction 410.2.2
Live loads . . . . . Table 1607.1
Means of egress 410.5
Sprinkler protection 410.6
CEILING
Acoustical 808
Height 406.2.2, 409.2, 909.20.4.3, 1003.2, 1011.3, 1012.5.2, 1204.2.2, 1207.2
Interior finish 803
Penetration of fire-resistant assemblies 713.4, 716.1.2.3, 716.3.4
Suspended acoustical 808.1.1, 2506.2.1
CELLULOSE NITRATE FILM 409.1, 903.2.5.3
CERAMIC TILE
Mortar 2103.2.3
CERTIFICATE OF OCCUPANCY 105.5
CHANGE OF OCCUPANCY 105.5.2, D103.2
CHILD CARE (see DAY CARE) 305.2, 308.5, 310.4.1

INTERNATIONAL CODE COUNCIL®
Copyright © 2019 ICC & NYSDOS. ALL RIGHTS RESERVED. Accessed by Lauren Gualdino (lgualdino@briarcliffmanor.org), (-) Order Number #100880972 on May 08, 2020 07:05 AM (PDT) pursuant to License Agreement with ICC & NYSDOS. No further reproduction, no

100880972

CHILDREN'S PLAY STRUCTURES 424
Accessibility 1110
Covered and open mall building 402.6.3
CHIMNEYS 202
Factory-built 718.2.5
Flashing 1503.5
Masonry 2111, 2112, 2113
Protection from adjacent construction 3307.1
CHURCHES
(see RELIGIOUS WORSHIP, PLACES OF)
CIRCULAR STAIRWAYS
(see CURVED STAIRWAYS)
CLAY ROOF TILE 1507.3
Testing 1504.2
CLINIC
Hospital
[see INSTITUTIONAL (GROUP I-2)] 308.2
Outpatient
(see AMBULATORY CARE FACILITIES) 202, 304.1, 422
COAL POCKETS 426.1.6
CODES . . . . . 101.2, 101.4, 102.2, 102.4, 102.6, Chapter 35
COLD STORAGE
(see FOAM PLASTIC INSULATION)
COLD-FORMED STEEL 202, 2210
Light-frame construction 2211
Special inspection 1705.2.2, 1705.2.4, 1705.11.2, 1705.12.3
COMBUSTIBLE DUSTS 307.4, 414.5.1, 426.1
COMBUSTIBLE LIQUIDS 307.1, 307.4, 307.5, 414.2.5, 414.5.3, 415.9.2, 415.10.1, 418.6
COMBUSTIBLE MATERIAL
Concealed spaces 413.2, 718.5
Exterior side of exterior wall 1405
High-pile stock or rack storage 413.1, 910.2.2
Type I and Type II 603, 805
COMBUSTIBLE PROJECTIONS 705.2, 705.2.3.1
COMBUSTIBLE STORAGE 413, 910.2.2
COMMON PATH OF EGRESS TRAVEL 1006.2.1
COMPARTMENTATION
Ambulatory care facilities 422.2, 422.3
Group I-2 . . . . . 407.5, 407.6
Group I-3 . . . . . 408.6
Laboratory suites 428.3
Underground buildings 405.4, 405.5.2
COMPRESSED GAS 307.2, 415.11.7
CONCEALED SPACES 413.2, 718
CONCRETE . . . . . Chapter 19
ACI 318 modifications 1901.2, 1903.1, 1905
Anchorage 1901.3
Calculated fire resistance 721.2
Construction documents 1901.5
Durability 1904
Footings 1809
Foundation walls 1807.1.5, 1808.8
Materials 1705.3.2, 1903
Plain, structural 1906
Reinforced gypsum concrete 2514
Rodentproofing . . . . . Appendix F
Roof tile 1507.3, 1504.2
Shotcrete 1908
Slab, minimum 1907
Special inspections . . . . . 1705.3, Table 1705.3
Specifications 1903
Strength testing 1705.3.2
Wood support 2304.13
CONCRETE MASONRY
Calculated fire resistance 721.3
Construction 2104
Design 2101.2, 2108, 2109
Materials 2103.1
Surface bonding 2109.2, 2103.2.2
Wood support 2304.13
CONCRETE ROOF TILE 1507.3
Wind resistance 1504.2, 1609.5.3
CONDOMINIUM (see APARTMENT HOUSES)
CONDUIT, PENETRATION PROTECTION 713.3, 1023.5
CONFLICTS IN CODE 102
CONGREGATE LIVING FACILITIES 202, 310.2 310.3, 310.4
CONSTRUCTION
(see SAFEGUARDS DURING CONSTRUCTION)
CONSTRUCTION DOCUMENTS 106, 202, 1603
Alarms and detection 907.1.1
Balconies 106.2.5
Concrete construction 1901.5
Design load-bearing capacity 1803.6
Exterior walls 106.2.4
Fire protection 106.2.2
Fire-resistant joint systems 714
Flood 106.2.6.1, 1603.1.7
Floor live load 1603.1.1
Geotechnical 1603.1.6
Means of egress 106.2.3
Penetrations 713
Permit application 105.2
Relocation 106.2.6
Roof assemblies 1503
Roof live load 1603.1.2
Roof rain load data 1603.1.9
Roof snow load 1603.1.3
Seismic 1603.1.5, 1705.13.2, 1705.13.3

INTERNATIONAL CODE COUNCIL®
Copyright © 2019 ICC & NYSDOS. ALL RIGHTS RESERVED. Accessed by Lauren Gualdino (lgualdino@briarcliffmanor.org), (-) Order Number #100880972 on May 08, 2020 07:05 AM (PDT) pursuant to License Agreement with ICC & NYSDOS. No further reproduction, no

100880972

Site plan 106.2.6
Special loads 1603.1.8
Temporary structures 3103.2
Wind data 1603.1.4

CONSTRUCTION JOINTS
Shotcrete 1908.7

CONSTRUCTION TYPES . . . . . Chapter 6
Aircraft-related occupancies . . . . . 412.2.1, Table 412.3.6, 412.5.2, 412.6.2
Classification 602
Combustible material in Type I and Type II construction 603, 805
Covered and open mall buildings 402.4.1
Fire district D102.2.3
Fire resistance . . . . . Table 601, Table 602
High-rise 403.2
Type I . . . . . Table 601, 602.2, 603
Type II . . . . . Table 601, 602.2, 603
Type III . . . . . Table 601, 602.3
Type IV . . . . . Table 601, 602.4
Type V . . . . . Table 601, 602.5
Underground buildings 405.2

CONTRACTOR'S RESPONSIBILITIES 901.5, 1704.4

CONTROL AREA 414.2, 707.3.7
Construction 414.2.1
Fire-resistance rating 414.2.4
Maximum allowed quantities 414.2.2
Number 414.2.3

CONVENTIONAL LIGHT-FRAME CONSTRUCTION 202, 2302.1, 2308
Additional seismic requirements 2308.6.6, 2308.6.8, 2308.6.10
Braced wall lines 2308.6
Connections and fasteners 2308.1.2
Design of elements 2308.8
Floor joists 2308.4.2
Foundation plates or sills 2308.3
Girders 2308.7
Limitations 2308.2
Roof and ceiling framing 2308.7
Wall framing 2308.5

CONVEYING SYSTEMS 3004

CORNICES
Definition 202
Draftstopping 718.2.6
Live load . . . . . Table 1607.1
Masonry 2104.1.2
Projection 705.2, 705.2.3.1
Public right-of-way encroachments 3202.3.2, 3202.3.3

CORRIDOR (see CORRIDOR PROTECTION, EXIT ACCESS, FIRE PARTITIONS and SERVICE CORRIDORS) 1020
Air movement 1020.5
Continuity 1020.6
Covered and open mall buildings . . . 402.8.1, 402.8.6
Dead end 1020.4
Encroachment 1020.3
Elevation change 1003.5
Group I-1 . . . . . 420.7, 420.8, 420.8.1
Group I-2 . . . . . 407.2, 407.3, 407.4.1, 407.4.3
Group H-5 . . . . . 415.11.2
Headroom 1003.2, 1003.3
HPM service 903.2.5.2
Live load . . . . . Table 1607.1
Walls 709.1, 1020.1
Width/capacity 1003.3.3, 1003.6, 1005.3.2, 1005.7, 1020.2, 1020.3

CORRIDOR PROTECTION, EXIT ACCESS
Construction, fire protection . . . . . 1020.1, Table 1020.1, 1020.6
Doors 715.4
Elevator hoistway opening 3006.2.1
Glazing 715.5
Group I-1 . . . . . 420.7, 420.8
Group I-2 . . . . . 407.3
Interior finish . . . . . Table 803.13, 804.4
Opening protection 715, 716.5.4
Ventilation 1020.5, 1020.5.1

CORROSIVES . . . . . 307.2, 307.6, Table 414.2.5(1), 414.3, 415.10.3, Table 415.11.1.1.1

COURTS (see YARDS OR COURTS) 1205

COVERED AND OPEN MALL BUILDINGS 402
Alarms and detection 402.7.4, 907.2.20, 2702.2
Anchor buildings 402.4.1.2, 402.4.2.2, 402.4.2.3, 402.5, 402.8.2.3, 402.8.4.1
Children's play structures 402.6.3, 424
Construction type 402.4
Fire department 402.3, 402.7.5
Interior finish 402.6.1
Kiosk 402.6.2
Means of egress 402.8
Occupant load 402.8.3
Open mall construction 402.4.3
Open space 402.2
Parking structures 402.4.1.3, 402.4.2.3
Perimeter line 402.1.2
Separation 402.4.2
Signs 402.6.4

INTERNATIONAL CODE COUNCIL®
Copyright © 2019 ICC & NYSDOS. ALL RIGHTS RESERVED. Accessed by Lauren Gualdino (lgualdino@briarcliffmanor.org), (-) Order Number #100880972 on May 08, 2020 07:05 AM (PDT) pursuant to License Agreement with ICC & NYSDOS. No further reproduction, no

100880972

Smoke control 402.7.2
Sprinkler protection 402.5
Standby power 402.7.3
Standpipe system 402.7.1, 905.3.3
Travel distance 402.8.5, 1006.3, 1016.2.1, 1017.2, 2902.3.2, 2902.3.3, 2902.5

COVERED WALKWAY (see PEDESTRIAN WALKWAY) 3104, 3306.7

CRAWL SPACE
Access 1208.1
Drainage 1805.1.2
Ventilation 1202.4

CRIPPLE WALL 202, 2308.5.6, 2308.6.6, 2308.6.8.3

CROSS-LAMINATED TIMBER 602.4, 602.4.2, 2303.1.4
Floors 2304.11.3.1
Roofs 2304.11.4.1

CRYOGENIC . . . . . Table 307.1, Table 414.5.1, Table 415.11.1.1.1

D

DAMPERS (see FIRE DAMPERS AND SMOKE DAMPERS) . . . . . 717.2 through 717.5

DAMPPROOFING AND WATERPROOFING . . . 1805
Required 1805.2, 1805.3
Subsoil drainage system 1805.4

DAY CARE 305.2, 308.5, 310.4.1
Accessibility 1103.2.12
Adult care 308.5
Child care 308.5, 310.4.1
Egress . . . . . 308.5, Table 1004.5, 1006.2.2.4

DAY SURGERY CENTER (see AMBULATORY CARE FACILITIES)

DEAD END 1020.4

DEAD LOAD 202, 1606
Foundation design load 1808.3

DECK
Anchorage 1604.8.3
Live loads . . . . . Table 1607.1

DEFLECTIONS 1604.3.1
Framing supporting glass 2403.3
Preconstruction load tests 1709.3.1
Wood diaphragms 2305
Wood shear walls 2305

DEMOLITION 3303

DESIGN STRENGTH 202
Conformance to standards 1706.1
New materials 1706.2

DESIGNATED SEISMIC SYSTEM 202
Seismic certification 1705.13.3
Special inspection 1705.12.4

DIAPHRAGMS 202
Analysis 1604.4
Ceilings 2508.6
Special inspection 1705.5.1, 1705.11.1, 1705.12.2
Wood 2305, 2306.2

DOORS 1010
Atrium enclosures 404.6
Configuration 1007
Delayed egress 1010.1.9.8
Dwelling unit separations 406.3.2, 412.4.1
Education 1010.1.4.4
Emergency escape 1030.1
Fabrication (HPM) areas 415.11.1.2
Fire (see OPENING PROTECTIVES) . . . 715.4, 1023.4
Glazing 715.4.7, 715.5, 1404.13
Hazardous storage 415.11.5.7
Hardware (see LOCKS AND LATCHES) 1005.7.1, 1010.1.9, 1010.1.10
Horizontal sliding 1010.1.4.3
I-1 occupancies 1010.1.9.7
I-2 occupancies 407.3.1, 1010.1.9.7
I-3 occupancies 408.3, 408.4, 408.8.4, 1010.1.9.11
Landings 1010.1.5, 1010.1.6
Locks for toilet facilities 2902.4
Operation 1010.1.3, 1010.1.9, 1010.1.10
Panic and fire exit hardware 1010.1.10, 1010.2.1
Power-operated 1010.1.4.2
Revolving 1010.1.4.1
Security 402.8.8, 1010.1.4.5, 1010.1.9.3
Sensor release 1010.1.9.9
Side swinging 1010.1.2
Smoke 710.5
Stairways 1010.1.9.12
Stairways, high-rise 403.5.3
Structural testing, exterior 1709.5
Thresholds 1003.5, 1010.1.5, 1010.1.7
Vestibule 1010.1.8
Width 1010.1.1, 1010.1.1.1

DORMITORIES 202, 310.3
Cooking 420.10
Fire alarms and smoke alarms 420.5
Separations 420.2, 420.3
Sprinkler protection 420.4

INTERNATIONAL CODE COUNCIL®
Copyright © 2019 ICC & NYSDOS. ALL RIGHTS RESERVED. Accessed by Lauren Gualdino (lgualdino@briarcliffmanor.org), (-) Order Number #100880972 on May 08, 2020 07:05 AM (PDT) pursuant to License Agreement with ICC & NYSDOS. No further reproduction, no

100880972

DRAFTSTOPPING
Attics 718.4
Floor-ceiling assemblies 718.3
DRINKING FOUNTAINS 1109.5, 2902.5, 2902.6
DRY CLEANING PLANTS 415.9.3
DRYING ROOMS 417
DUCTS AND AIR TRANSFER OPENINGS (see MECHANICAL)
DUMBWAITERS 708.14
DWELLING UNITS 202
Accessibility 1103.2.3, 1103.2.12, 1105.1.6, 1106.2, 1107
Alarms and detection 420.5, 907.2.8, 907.2.9, 907.2.11
Area 1207.3, 1207.4
Group R 310
Live/work units (see LIVE/WORK UNITS)
Scoping 101.2
Plumbing fixtures required . . . . . Table 2902.1
Separation 420.2, 420.3
Sound transmission 1206
Sprinkler protection 420.4, 903.2.8

E

EARTHQUAKE LOADS (see SEISMIC) 1613
EARTHQUAKE RECORDING EQUIPMENT . . . . . Appendix L
EAVES (see COMBUSTIBLE PROJECTIONS AND CORNICES)
EDUCATIONAL OCCUPANCY (GROUP E) 305
Accessibility 1108.2, 1109.5.1, 1109.5.2
Alarms and detection 907.2.3
Area 503, 505, 506, 507, 508
Height 503, 504, 505, 508
Incidental uses 509
Interior finishes . . . . . Table 803.13, 804
Live load . . . . . Table 1607.1
Locking 1010.1.4.4
Means of egress
Aisles 1018.5
Corridors 1020.1, 1020.2
Panic hardware 1010.1.10
Stairway, exit access 1019
Travel distance 1016.2.1, 1017.2, 1006.3.2
Mixed occupancies 508.3, 508.4
Accessory 303.1.3, 508.2
Assembly 303.1.3
Day care 305.2, 308.4, 310.4.1
Education for students above the 12th grade 304, 307.1, 427
Gyms (see GYMNASIUMS) 303.1.3
Libraries (see LIBRARIES) 303.4
Religious facilities 305.2
Stages and platforms 410
Plumbing fixtures 2902
Risk category . . . . . Table 1604.5
Sprinkler protection 903.2.3
Unlimited area 507.11
EGRESS (see MEANS OF EGRESS) . . . . . Chapter 10
ELECTRICAL . . . . . 112, Table 509, Chapter 27, Appendix K
ELEVATOR . . . . . Chapter 30
Accessibility 1009.2.1, 1009.4, 1009.8, 1109.7, 3001.4
Car size 403.6.1, 3001.4, 3002.4
Construction 708.14, 1607.10.1
Conveying systems 3004
Emergency communication 3001.2
Emergency operations 3002.3, 3002.5, 3003, 3007.1, 3008.1.4
Fire service access 403.6.1, 3007
Glass 2409, 3002.8
High-rise 403.2.3, 403.4.8, 403.6
Hoistway enclosures 403.2.3, 708, 1023.4, 1024.3, 3002, 3007.5, 3008.5
Hoistway lighting 3007.5.2
Hoistway pressurization 909.21
Hoistway rated corridor opening 3006.2.1
Keys 3003.3
Lobby 1009.4, 1009.8, 3006, 3007.6, 3008.6
Machine rooms . . . . . Table 1607.1, 3005
Means of egress 403.6, 1003.7, 1009.2.1, 1009.4, 3008
Number of elevator cars in hoistway 3002.2
Occupant evacuation elevators 403.6.2, 3008
Personnel and material hoists 3004.4
Roof access 1011.12.2
Shaft enclosure 713, 3006
Signs 914, 1009.10, 3002.3, 3007.6.5, 3008.6.5
Stairway to elevator equipment 1011.12.1
Standards 3001.3
Standby power 2702.2, 3007.8, 3008.8
System monitoring 3007.7, 3008.7
Underground 405.4.3
EMERGENCY COMMUNICATIONS
Accessible means of egress 1009.8
Alarms (see FIRE ALARMS)
Elevator 3001.2
Elevators, occupant evacuation 3008.6.6
Fire command center 403.4.6, 911, 3007.7, 3008.6.6, 3008.7
Radio coverage 403.4.5, 916

INTERNATIONAL CODE COUNCIL®
Copyright © 2019 ICC & NYSDOS. ALL RIGHTS RESERVED. Accessed by Lauren Gualdino (lgualdino@briarcliffmanor.org), (-) Order Number #100880972 on May 08, 2020 07:05 AM (PDT) pursuant to License Agreement with ICC & NYSDOS. No further reproduction, no

100880972

EMERGENCY ESCAPE AND RESCUE OPENINGS 1030
Required . . . . . Table 1006.3.3(1), Table 1006.3.3(2), 1030.1
Window wells 1030.4, 1030.5
EMERGENCY LIGHTING 1008.3, 1204.5
EMERGENCY POWER 2702
Exit signs 1013.6.3, 2702.2
Hazardous 415.11.10, 2702.2
High-rise 403.4.8, 2702.2
Higher education laboratory 428.3.6, 2702.2
Means of egress illumination 1008.3, 2702.2
Semiconductor fabrication 415.11.10, 2702.2
Underground buildings 405.9, 2702.2
EMERGENCY RESPONDERS
Additional exit stairway 403.5.2
Elevators 403.6, 1009.2.1, 3002.4, 3003, 3007, 3008
Fire command center 403.4.6, 911, 3007.7, 3008.6.6, 3008.7
Mall access 402.7.5
Radio coverage 403.4.4, 918
Roof access 1011.12
Safety features 914
EMPIRICAL DESIGN OF MASONRY
Adobe construction 2109
Dry-stack masonry 2114
Special inspection 1705.4
EMPLOYEE
Accessibility for work areas 907.5.2.3.1, 1103.2.2, 1104.3.1
Qualifications A101
Termination of employment A101.4
Toilet facilities 2902.3
ENCROACHMENTS INTO THE PUBLIC RIGHT-OF-WAY . . . . . Chapter 32
END-JOINTED LUMBER 2303.1.1.2
Relocated structures 101.4.7, D103.3
Rodentproofing . . . . . Appendix F
ENERGY EFFICIENCY . . . . . 101.4.6, Chapter 13
ENGINEER (see definition for REGISTERED DESIGN PROFESSIONAL)
EQUIPMENT PLATFORM 505.3
Area limitation 505.2.1, 505.2.1.1, 505.3.1
Automatic sprinkler system 505.3.2
EQUIVALENT OPENING FACTOR . . . . . Figure 705.7
ESCALATORS 3004
Floor opening protection 708.2
Means of egress 1003.7
ESSENTIAL FACILITIES (see RISK CATEGORY) . . . . . 202, Table 1604.5
EXCAVATION, GRADING AND FILL 1804, 3304
EXISTING BUILDING 101.4.7, 102.6
Additions D103.1
Alteration D103.1
Change of occupancy D103.2
Flood-resistant . . . . . Appendix G
Historic 101.4.7
Relocated structures D103.3
Repairs 101.4.7
Rodentproofing . . . . . Appendix F
EXIT (see MEANS OF EGRESS) . . . . . 1022 through 1027
Basement 1006.2, 1006.3
Boiler rooms 1006.2.2.1
Configuration 1007
Construction 713.2, 1019, 1023.2
Day care 1006.2.2.4
Doorways 1007
Dwellings 1006.2.2.6, 1006.3.3.1
Enclosure 707.3, 1023.2
Fire resistance 707.3, 1019, 1023.2
Furnace rooms 1006.2.2.1
Group H-5 . . . . . 415.11.3.3, 415.11.5.6
Group I-2 . . . . . 407.4
Group I-3 . . . . . 408.3
High rise 403.5, 403.6, 1025
Horizontal 707.3.5, 1026
Incinerator rooms 1006.2.2.1
Interior finish . . . . . Table 803.13, 804
Luminous 403.5.5, 411.6.1, 1025
Mall buildings 402.8
Mezzanines 505.3, 505.4, 1004.2.2
Number, minimum 402.8.3, 403.5, 1006
Occupant load 402.8.2, 1004.2, 1006.3.2
Passageway 1024
Ramps, exterior 1027
Ramps, interior 1023
Refrigerated rooms or spaces 1006.2.2.3
Refrigeration machinery rooms 1006.2.2.2
Signs 1013
Stairways, exterior 1027
Stairways, interior 1023
Stories 1004.2.3, 1006,3, 1017.3.1
Travel distance 402.8.3, 402.8.5, 402.8.6, 404.9, 407.4.2, 408.6.1, 408.8.1, 410.5.3.2, 411.3, 1006.3, 1016.2.1, 1017, 1029.7, 1029.8
Underground buildings 405.7
EXIT ACCESS (see MEANS OF EGRESS) . . . . . 1016 through 1021
Aisles 1018
Balconies 1017.2.1, 1021

INTERNATIONAL CODE COUNCIL®
Copyright © 2019 ICC & NYSDOS. ALL RIGHTS RESERVED. Accessed by Lauren Gualdino (lgualdino@briarcliffmanor.org), (-) Order Number #100880972 on May 08, 2020 07:05 AM (PDT) pursuant to License Agreement with ICC & NYSDOS. No further reproduction, no

100880972

Common path 1016.2.1
Corridors 1020
Doors 1005.7, 1006.2, 1007, 1010, 1022.2
Intervening space 1016.2
Path of egress travel, common 1016.2.1
Ramps 1019
Seating at tables 1029.13.1
Single exit 1006.2, 1006.3.3
Stages 410.5
Stairway 1019
Travel distance 402.8.3, 402.8.5, 402.8.6, 404.9, 408.6.1, 408.8.1, 410.5.3.2, 411.3, 1006.2, 1006.3, 1016.2.1, 1017, 1029.7

EXIT DISCHARGE (see MEANS OF EGRESS) 1028
Atrium 404.10
Courts 1028.4
Horizontal exit 1028.1
Lobbies 1028.1
Marquees 3106.4
Public way 1028.5
Termination 1023.3
Vestibules 1028.1

EXIT PASSAGEWAY (see MEANS OF EGRESS) 402.8.6.1, 707.3.4, 1024
Construction 1024.3
Discharge 1024.4, 1028.1
Elevators 1024.5, 3002.7
Fire-resistant construction 1024.3
High-rise 403.5
Openings 1024.5
Penetrations 1024.6
Pressurization 909.6, 909.20.5
Smokeproof 403.5.4, 405.7.2, 909.20
Width 1024.2
Ventilation 1024.7

EXIT SIGNS 1013
Accessibility 1013.4
Floor level exit signs 1013.2
Group R-1 . . . . . 1013.2
Illumination 1013.3, 1013.5, 1013.6
Required 1013.1
Special amusement buildings 411.6

EXPLOSIVES . . . . . 202, Table 414.5.1, Table 415.6.2
Detached building 415.6.2, 415.8
Explosion control 415.7

EXPOSURE CATEGORY (see WIND LOAD) 1609.4

EXTERIOR AREAS FOR ASSISTED RESCUE
Requirements 1009.7
Signage 1009.9, 1009.10, 1009.11
Where required 1009.2

EXTERIOR INSULATION AND FINISH SYSTEMS (EIFS) 1407
Special inspection 1705.16

EXTERIOR WALLS (see WALLS, EXTERIOR) . . . . . 106.2.4, Table 601, 602, 705, Chapter 14

F

FACTORY OCCUPANCY (GROUP F) 306
Alarm and detection 907.2.4
Area 503, 503.1.1, 505, 506, 507, 508
Equipment platforms 505.2
Groups
Low-hazard occupancy 306.3
Moderate-hazard occupancy 306.2
Height 503, 504, 505, 508
Incidental uses 509
Interior finishes . . . . . Table 803.13, 804
Live load . . . . . Table 1607.1
Means of Egress
Aisles 1018.5
Dead end corridor 1020.4
Stairway, exit access 1019
Travel distance 1006.2, 1006.3, 1016.2.1, 1017.2, 1017.2.2,
Mixed occupancies 508.2, 508.3, 508.4
Plumbing fixtures 2902
Risk category . . . . . Table 1604.5
Sprinkler protection 903.2.4
Unlimited area 507.3, 507.4, 507.5

FARM BUILDINGS . . . . . Appendix C

FENCES 312.1

FIBERBOARD 202, 2303.1.6
Shear wall . . . . . Table 2306.3(2)

FILL MATERIAL 1804, 3304

FINGER-JOINTED LUMBER (see END-JOINTED LUMBER)

FIRE ALARM AND SMOKE DETECTION SYSTEMS
Aerosol storage 907.2.16
Aircraft hangars, residential 412.4.3, 907.2.21
Airport traffic control towers 412.2.3.1, 907.2.22
Ambulatory care facilities 422.5, 907.2.2.1
Assembly 907.2.1
Atriums 404.4, 907.2.14
Audible alarm 907.5.2.1
Battery room 907.2.23

INTERNATIONAL CODE COUNCIL®
Copyright © 2019 ICC & NYSDOS. ALL RIGHTS RESERVED. Accessed by Lauren Gualdino (lgualdino@briarcliffmanor.org), (-) Order Number #100880972 on May 08, 2020 07:05 AM (PDT) pursuant to License Agreement with ICC & NYSDOS. No further reproduction, no

100880972

Children's play structure 424.3
Construction documents 907.1.1
Covered and open mall building 402.7, 907.2.20
Education 907.2.3
Emergency alarm system 908
Factory 907.2.4
Group H 907.2.5
Group I 907.2.6, 907.5.2.3.2
Group M 907.2.7
Group R 420.5, 907.2.8, 907.2.9, 907.2.10, 907.2.11, 907.5.2.3.2, 907.5.2.3.3
High-rise 403.4.1, 403.4.2, 907.2.13
Live/work 419.5
Lumber mills 907.2.17
Occupancy requirements 907.2
Special amusement buildings 411.2, 411.4, 907.2.12
Underground buildings 405.6, 907.2.18, 907.2.19
Visible alarm 907.5.2.3

FIRE ALARM BOX, MANUAL 907.4.2

FIRE AREA 202, 901.7
Ambulatory care facilities 903.2.2, 907.2.2
Assembly 903.2.1
Education 903.2.3
Enclosed parking garages 903.2.10
Factory 903.2.4
Institutional 903.2.6
Mercantile 903.2.7
Residential 903.2.8
Storage 903.2.9, 903.2.10

FIRE BARRIERS 202, 707
Continuity 707.5, 713.5
Exterior walls . . . . . Table 602, 707.4, 713.6
Fire-resistance rating of walls . . . . . 603.1(1), 603.1(22), 603.1(23), 703, 707.3, 713.4
Glazing, rated 716.3.4
Incidental 509.4.1
Joints 707.8, 713.9, 715, 2508.5
Marking 703.7
Materials 707.2, 713.3
Opening protection 707.6, 707.10, 713.7, 713.10, 714.4, 716, 717.5.2
Penetrations 707.7, 713.8
Shaft enclosure 713.1
Special provisions
Aircraft hangars 412.3.4, 412.4.1
Atriums 404.3, 404.6
Covered and open mall buildings 402.4.2,
Fire pumps 403.3.4, 901.8, 913.2.1
Flammable finishes 416.2
Group H-2 . . . . . 415.9.1.2, 426.1.2
Group H-3 and H-4 . . . . . 415.10
Group H-5 . . . . . 415.11.1.2, 415.11.1.5, 415.11.5.1, 415.11.6.4
Group I-3 . . . . . 408.5, 408.7
Hazardous materials 414.2.1
Higher education laboratories 428.3
High-rise 403.2.1.2, 403.2.3, 403.3, 403.4.8.1
Organic coating 418.4, 418.5, 418.6
Stages and platforms 410.5.1, 410.5.2

FIRE COMMAND CENTER 403.4.6, 412.2.3.2, 911, 3007.7, 3008.6.6, 3008.7

FIRE DAMPERS . . . . . 717.2 through 717.5

FIRE DEPARTMENT (see EMERGENCY RESPONDERS)

FIRE DETECTION SYSTEM (see FIRE ALARM AND SMOKE DETECTION SYSTEMS)

FIRE DISTRICT . . . . . Appendix D

FIRE DOOR (see OPENING PROTECTIVES) 716, 1023.4

FIRE ESCAPE 412.7.3

FIRE EXTINGUISHERS, PORTABLE 906, 3309

FIRE EXTINGUISHING SYSTEMS 416.5, 417.4, 903, 904

FIRE PARTITION 202, 709
Continuity 708.4
Elevator lobby 3006.3
Exterior walls . . . . . Table 602, 709.5
Fireblocks and draftstops 708.4.2
Fire-resistance rating . . . . . 603.1(1), 603.1(22), 603.1(23), 703, 708.3
Glazing, rated 716.3.4
Joint treatment gypsum 2508.5
Joints 708.8, 715
Marking 703.6
Materials 708.2
Opening protection 709.6, 714.4, 716, 717.5.4
Penetrations 708.7, 708.9, 714, 717
Special provisions
Covered and open mall buildings 402.4.2.1
Group I-3 . . . . . 408.7
Group I-1, R-1, R-2, R-3, R-4 . . . . . 420.2
Supporting construction 708.4.1

FIRE PREVENTION 101.4.5

FIRE PROTECTION
Explosion control 414.5.1, 415.6, 421.6, 426.1.4
Fire extinguishers, portable 906
Glazing, rated 716.1.2.3

INTERNATIONAL CODE COUNCIL®
Copyright © 2019 ICC & NYSDOS. ALL RIGHTS RESERVED. Accessed by Lauren Gualdino (lgualdino@briarcliffmanor.org), (-) Order Number #100880972 on May 08, 2020 07:05 AM (PDT) pursuant to License Agreement with ICC & NYSDOS. No further reproduction, no

100880972

Smoke and heat removal 910
Smoke control systems 909
Sprinkler systems, automatic 903
FIRE PROTECTION SYSTEMS . . . 106.2.2, Chapter 9
FIRE PUMPS 403.3.2, 902.1, 913, 914.2
FIRE RESISTANCE
Calculated 722
Conditions of restraint 703.2.3
Ducts and air transfer openings 717
Exterior walls . . . . . Table 602, 705.5, 708.5
Fire district D102.2.5
High-rise 403.2
Joint systems 715
Multiple use fire assemblies 702.1
Prescriptive 721
Ratings . . . . . Chapter 6, 703, 705.5, 707.3.10
Roof assemblies 1505
Structural members 704
Tests 703
Thermal and sound insulating materials 720.1
FIRE RESISTANCE, CALCULATED 722
Clay brick and tile masonry 722.4
Concrete assemblies 722.2
Concrete masonry 722.3
Steel assemblies 722.5
Wood assemblies 722.6
FIRE-RESISTANT CONSTRUCTION 701.1
FIRE-RETARDANT-TREATED WOOD 202, 2303.2
Awnings 3105.2
Balconies 705.2.3.1
Canopies 3105.3
Concealed spaces 718.5
Fastening 2304.10.5
Fire wall vertical continuity 706.6
Partitions . . . . . 603.1(1)
Platforms 410.3
Projections 705.2.3
Roof construction . . . . . Table 601, 705.11, 706.6, 1505
Shakes and shingles 1505.6
Type I and II construction . . . . . 603.1(1), 603.1(11)
Type III construction 602.3
Type IV construction 602.4
Veneer 1404.5
FIRE SEPARATION DISTANCE . . . . . 202, Table 602
Exterior walls 1405.1.1.1.1, 1405.1.1.1.2
Ground-mounted photovoltaic systems 3111.3.5
FIRE SERVICE ACCESS ELEVATORS 403.6.1, 3007
FIRE SHUTTER (see OPENING PROTECTIVES) 716.2.1, 716.2.7, 716.2.8
FIRE WALLS 706
Aircraft hangar 412.3.6.2
Combustible framing 706.7
Continuity 706.5, 706.6
Exterior walls . . . . . Table 602, 706.5.1
Fire-resistance rating 703, 706.4
Glazing, rated 716.3.4
Joints 706.10, 715
Marking 703.6
Materials 706.3
Opening protection 706.8, 706.11, 714.4, 716, 717.5.1
Penetration 706.9, 714.4
Special provisions
Covered and open mall buildings 402.4.2.2
Group H-5 . . . . . 415.11.1.6
Structural stability 706.2
FIRE WINDOWS (see OPENING PROTECTIVES)
FIREBLOCKING 718.2
Chimneys 718.2.5.1, 2113.20
Fireplaces 2111.13
Wood construction 718.2.1, 718.2.7, 1405.1.3
Wood stairways 718.2.4
FIRE WATCH DURING CONSTRUCTION 3114
FIREPLACES, FACTORY-BUILT 2111.14.1
FIREPLACES, MASONRY 202
Clearance to combustibles 2111.12
Drawings 2111.2
General provisions 2111
Hearth extension 2111.10, 2111.11
Steel units 2111.6.1
FIREWORKS 202, 307.2, 307.3, 307.5
FLAMESPREAD . . . . . 202, 803.1.2, Table 803.13
FLAMMABLE FINISHES 307.1, 416
FLAMMABLE LIQUIDS 307.4, 307.5, 406.8.2, 412, 414, 415
FLAMMABLE SOLIDS 307.5, 415
FLASHING
Roof 1503.2, 1507.2.8, 1507.3.9, 1507.5.7, 1507.7.7, 1507.8.8, 1507.9.9, 1511.6
Wall, veneer 1404.4, 1404.12.7
FLOOD HAZARD AREAS 202, 1612.3
Coastal A zone 202
Coastal high hazard area 202
Flood insurance rate map 202
FLOOD-RESISTANT CONSTRUCTION
Accessibility 1107.7.5
Existing 101.4.7

INTERNATIONAL CODE COUNCIL®
Copyright © 2019 ICC & NYSDOS. ALL RIGHTS RESERVED. Accessed by Lauren Gualdino (lgualdino@briarcliffmanor.org), (-) Order Number #100880972 on May 08, 2020 07:05 AM (PDT) pursuant to License Agreement with ICC & NYSDOS. No further reproduction, no

100880972

Flood elevation 106.2.6.1, 1612
Flood loads 1603.1, 1603.1.7, 1612, 3001.2
Flood resistance 1402.6, 1402.7
Flood-resistant construction. . . . . Appendix G
Grading and fill. 1804.5, 1805.1.2.1
Historic buildings G105.3
Interior finishes 803.5.1
Manufactured homes G501
Modifications 104.2
Recreational vehicles. G601
Site improvements G401
Site plan. 106.2.6
Subdivisions. G301
Tank. G701
Temporary G901
Utility G1001

FLOOR CONSTRUCTION (see FLOOR CONSTRUCTION, WOOD)
Draftstopping 718.3
Finishes 804, 805, 1003.4, 1209.1
Fire resistance . . . . . Table 601, 711
Loads (see FLOOR LOADS)
Materials . . . . . Chapter 6
Penetration of fire-resistant assemblies. 711, 714.5, 717.2, 717.6

FLOOR CONSTRUCTION, WOOD
Beams and girders. 2304.12.1.1, 2308.4.1
Bridging/blocking 2308.4.6, 2308.7.8
Diaphragms 2305.1
Fastening schedule 2304.10.1
Framing . . . . . 2304.4, Table 2304.11, 2304.11.1.2, 2304.11.3, 2308.4
Joists 2308.4.2
Sheathing. 2304.8

FLOOR LEVEL. 1003.5, 1010.1.5

FLOOR LOADS
Construction documents 106.2
Live 1603.1.1, 1607

FLOOR OPENING PROTECTION (see VERTICAL OPENING PROTECTION)

FLOOR/CEILING (see FLOOR CONSTRUCTION)

FOAM PLASTICS
Attics 720.1, 2603.4.1.6
Cladding attachment 2603.11, 2603.12, 2603.13
Cold storage 2603.3, 2603.4.1.2, 2603.5
Concealed 603
Covered mall and open mall buildings. 402.6.2, 402.6.4.5
Crawl space 2603.4.1.6
Doors . . . . . 2603.4.1.7 through 2603.4.1.9
Exterior wall covering. 806.5
Exterior walls of multistory buildings 1403.13, 2603.5
Interior finish. 801.2.2, 2603.10, 2604
Label/identification 2603.2
Metal composite materials (MCM) 1406.13
Plenums 2603.7, 2604.1.1
Roofing. 2603.4.1.5
Siding backer board 2603.4.1.10
Stages and platform scenery 410.2.6
Surface burning characteristics 2603.3
Termites, protection from 2603.9
Thermal barrier requirements. 2603.5.2
Trim 806.5, 2604.2
Type I and II construction. . . . . 603.1(2), 603.1(3)
Walk-in coolers. 2603.4.1.3
Wind resistance 2603.10

FOLDING AND TELESCOPIC SEATING
(see BLEACHERS and GRANDSTANDS). . 1029.1.1
Accessibility 1108.2
Egress 1029.1.1
Live load. . . . . Table 1607.1
Occupant load 1004.6, 1004.7
Separation 1029.1.1.1

FOOD COURT 202
Occupant load 402.8.2.4
Separation 402.4.2

FOUNDATION (see FOUNDATION, DEEP and FOUNDATION, SHALLOW) . . . . . Chapter 18
Basement. 1610, 1805.1.1, 1806.3, 1807
Concrete. 1808.8, 1809.8, 1810.3.2.1
Dampproofing. 1805.2
Encroachment, public right-of-way. 3202.1
Formwork 3304.1
Geotechnical investigation (see SOILS AND FOUNDATIONS) 1803
Load-bearing value 1806, 1808, 1810
Masonry 1808.9
Pedestrian protection 3306.9
Pier (see FOUNDATION, SHALLOW)
Pile (see FOUNDATION, DEEP)
Plates or sills 2308.3.1
Protection from adjacent construction 3303.5, 3307.1
Rodentproofing. . . . . Appendix F
Special inspections 1705.3, 1705.4.2, 1705.7, 1705.8, 1705.9
Steel 1809.11, 1810.3.2.3, 1810.3.5.3
Timber 1809.12, 1810.3.2.4
Waterproofing. 1805.3

FOUNDATION, DEEP. 202, 1810
Drilled shaft 202
Existing. 1810.1.2

INTERNATIONAL CODE COUNCIL®
Copyright © 2019 ICC & NYSDOS. ALL RIGHTS RESERVED. Accessed by Lauren Gualdino (lgualdino@briarcliffmanor.org), (-) Order Number #100880972 on May 08, 2020 07:05 AM (PDT) pursuant to License Agreement with ICC & NYSDOS. No further reproduction, no

100880972

Geotechnical investigation 1803.5.5
Grade beams 1810.3.12
Helical pile . . . . . 202, 1810.3.1.5, Table 1810.3.2.6, 1810.3.3.1.9, 1810.3.5.5, 1810.4.11, 1810.4.12
Micropile . . . . . 202, Table 1808.8.1, Table 1810.3.2.6, 1810.3.5.2.3, 1810.3.10, 1810.4.10
Piles . . . . . Table 1808.8.1, 1810
FOUNDATION, SHALLOW 202, 1809
Pier and curtain wall 1809.10
Slab-on-grade 1808.6.2
Strip footing 1808.8, 1809
FOYERS
Assembly occupancy 1029.4, 1029.9.5
Corridors 1020.6
Covered and open mall building 402.1
FRATERNITIES 310.4
FROST PROTECTION 1809.5
FURNACE ROOMS 1006.2.2.1

G

GALLERIES
(see TECHNICAL PRODUCTION AREAS)
GARAGE, AUTOMOBILE PARKING
(see PARKING GARAGES)
GARAGE, REPAIR 406.8
Floor surface 406.2.4
Gas detection system 406.8.2, 908.5
Sprinkler protection 406.8.3, 903.2.9.1
Ventilation 406.8.1
GARAGES, TRUCK AND BUS
Live load 1607.7
Sprinkler protection 903.2.10.1
GARAGES AND CARPORTS, PRIVATE
Area limitations 406.3.1
Classification 406.3.1
Parking surfaces 406.2.4
Separation 406.3.2, 406.2.5
GAS 101.4.1, 107
Accessibility 1109.14
Gas detection system 406.8.2, 415.11.7, 421.5, 916
Hydrogen cutoff room 421.6
Motor fuel-dispensing 406.7
GATES 1010.2
Vehicular 406.2.1, 3110
GIFT SHOPS 407.2.4
GIRDERS
Fire resistance . . . . . Table 601
Materials . . . . . Chapter 6
Wood construction 2304.12.1.1, 2308.4.1
GLASS (see GLAZING)
GLASS BLOCK (see GLASS UNIT MASONRY)
GLASS UNIT MASONRY 202, 2110
Atrium enclosure 404.6
Fire resistance 2110.1.1
Hazardous locations 2406.1.3
GLAZING
Athletic facilities 2408
Atrium enclosure 404.6
Doors 705.8, 709.5, 710.5, 716.2.5.3, 1404.13, 1709.1
Elevator hoistway and car . . . 2409.2, 2409.3, 2409.4
Fire doors 716.2.2.3.1, 716.2.5
Fire windows 703.5, 716.2.1
Group I-3 . . . . . 408.7
Guards 1015.2.1, 2406.4.4, 2407
Handrail 1011.11, 2407
Identification 2403.1, 2406.3
Impact loads 2406.1, 2407.1.4.2, 2408.2.1, 2408.3
Impact resistant 1609.2
Jalousies 2403.5
Label/identification 716.1.2.2.1, 716.1.2.2.2, 716.2.9.1, 716.2.9.5, 716.3.5.2
Loads 2404
Louvered windows 2403.5
Opening protection 716.1.2.3
Replacement 2402
Safety 716.1.2.1, 2406
Security 408.7
Skylights 2405
Sloped 2404.2, 2405
Supports 2403.2
Swimming pools 2406.4.5
Testing 1709.5, 2406.1.1, 2408.2.1
Veneer 1404.12
Vertical 2404.1
Walkways 2409.1
GRADE, LUMBER (see LUMBER) 202
GRADE PLANE 202
GRAIN ELEVATORS 426.1.5
GRANDSTANDS (see BLEACHERS) 303.6, 1029.1.1
Accessibility 1108.2
Egress 1029.1.1
Exit sign 1013.1
Live load . . . . . Table 1607.1
Occupant load 1004.6, 1004.7
Separation 1029.1.1.1
GREENHOUSES 303.4, 309.1, 312.1.1, 3112
Accessibility 3112.2
Area . . . . . 503, 506, Table 507, 508

INTERNATIONAL CODE COUNCIL®
Copyright © 2019 ICC & NYSDOS. ALL RIGHTS RESERVED. Accessed by Lauren Gualdino (lgualdino@briarcliffmanor.org), (-) Order Number #100880972 on May 08, 2020 07:05 AM (PDT) pursuant to License Agreement with ICC & NYSDOS. No further reproduction, no

100880972

Definition 202
Deflections . . . . . Table 1604.3
Glazing, glass and lighting 2405, 3112.4
Live load 1607.13.2.1
Membrane structure 3112.6, 3102
Plastic 2606.11, 3112.5
Wind load 1609.2
GRIDIRON (see TECHNICAL PRODUCTION AREAS)
GRINDING ROOMS 426.2
GROSS LEASABLE AREA (see COVERED MALL AND OPEN MALL BUILDINGS) 202, 402.3, 402.8.2
GROUT 714.4.1.1, 714.5.1
GUARDS 1015
Assembly seating 1029.1.1, 1029.17
Equipment platform 505.3.3
Exceptions 1015.2
Glazing 1015.2.1, 2406.4.4, 2407
Height 1015.3
Loads 1607.8
Mechanical equipment 1015.6
Opening limitations 1015.4
Parking garage 406.4.1
Ramps 1012.9
Residential 1015.3
Roof access 1015.7
Screen porches 1015.5
Stairs 1015.2
Vehicle barrier 406.4.2, 1607.9
Windows 1015.8
GUTTERS 1502.4
GYMNASIUMS 303.4
Group E 303.1.3
Live load . . . . . Table 1607.1
Occupant load 1004.5
GYPSUM . . . . . Chapter 25
Board . . . . . 202, Chapter 25
Ceiling diaphragms 2508.6
Concrete, reinforced gypsum 2514
Construction 2508
Draftstopping 718.3.1
Exterior soffit . . . . . Table 2506.2
Fastening . . . . . Table 2306.3(3), 2508.1
Fire resistance 719, 722.2.1.4, 722.6.2
Fire-resistant joint treatment 2508.5
Inspection 2503
Lath 2507, 2510
Lathing and furring for cement plaster 719, 2510
Lathing and plastering 2507
Materials 2506
Panel products . . . . . 202, Chapter 25
Performance 2502
Plaster, exposed aggregate 2513
Plaster, exterior 2512
Plaster, interior 2511
Shear wall construction . . . . . 2211.1.1, Table 2306.3(3), 2308.6.3, 2505
Sheathing . . . . . Table 2308.5.11
Showers and water closets 2509
Stucco 2510
Veneer base 2507.2
Veneer plaster 2507.2
Vertical and horizontal assemblies 2504
Wallboard . . . . . Table 2506.2
Water-resistant backing board 2506.2, 2509.2

H

HANDRAILS 1014
Alternating tread devices 1011.14
Assembly aisles 1029.16
Construction 1014.4, 1014.5, 1014.6
Extensions 1014.6
Glazing 2407
Graspability 1014.3
Guards 1015.3
Height 1014.2
Loads 1607.8
Location 1014.1, 1014.7, 1014.8, 1014.9
Ramps 1012.8
Stairs 1011.11
HARDBOARD 202, 1403.3.2, 2303.1.7
HARDWARE (see DOORS and LOCKS AND LATCHES)
HARDWOOD
Fastening 2304.10
Quality 2303.3
Veneer 1403.3.2
HAZARDOUS MATERIALS 307, 414, 415
Compliance with *Fire Code of New York State* . 307.2
Control areas 414.2
Explosion control . . . . . 414.5.1, Table 414.5.1, 415.11.5.5, 426.1.4
Mercantile occupancies 309.2
Reporting 414.1.3
Sprinkler protection . . . . . Table 414.2.5(1), Table 414.2.5(2), 415.4, 415.11.11, 903.2.5

INTERNATIONAL CODE COUNCIL®
Copyright © 2019 ICC & NYSDOS. ALL RIGHTS RESERVED. Accessed by Lauren Gualdino (lgualdino@briarcliffmanor.org), (-) Order Number #100880972 on May 08, 2020 07:05 AM (PDT) pursuant to License Agreement with ICC & NYSDOS. No further reproduction, no

100880972

Ventilation 414.3, 415.9.1.7, 415.11.1.6, 415.11.1.8.1, 415.11.3.2, 415.11.5.8, 415.11.6.4, 415.11.7, 415.11.10, 1202.6
Weather protection 414.6.1
HAZARDOUS OCCUPANCY (GROUP H), (see HAZARDOUS MATERIALS) 307, 414, 415
Alarm and detection 415.3, 415.5, 415.11.2, 415.11.3.5, 415.11.5.9, 415.11.8, 901.6.3, 907.2.5, 908.1, 908.2
Area 503, 505, 506, 507, 508
Dispensing 414.5, 414.6, 415.6
Gas detection systems 415.11.7
Group provisions
H-1 (detonation) 307.3, 415.6.1.1, 415.6.2 415.7, 415.7.1
H-2 (deflagration) 307.4, 415.8, 415.9
H-3 (physical hazard) 307.5, 415.8, 415.10
H-4 (health hazard). 307.6, 415.10
H-5 (semiconductor 307.7, 415.11
Height 415.7, 415.8.1, 415.9.1.1, 415.8.1.6, 426.1.1, 503, 504, 505, 508
Incidental uses 509
Interior finishes . . . . . 416.2.1, 416.3.1, Table 803.13, 804
Live load . . . . . Table 1607.1
Location on property 414.6.1.2, 415.6
Low hazard 306.3, 311.3
Means of egress
Corridors 415.11.2
One means of egress . . . . . Table 1006.3.3(1), Table 1006.3.3(2)
Panic hardware. 1010.1.10
Stairway, exit access 1019
Travel distance . . . 1006.3, 1016.2.1, Table 1017.2
Mixed occupancies 508.3, 508.4
Accessory 508.2
Moderate hazard 306.2, 311.2
Multiple hazards 307.8
Occupancy exceptions 307.1
Plumbing fixtures . . . . . Chapter 29
Prohibited locations 419.2
Risk category . . . . . Table 1604.5
Smoke and heat removal 910.2
Special provisions—General
Detached buildings 202, 415.6.2, 415.8
Dry cleaning (see DRY CLEANING PLANTS)
Equipment platforms. 505.3
Fire district D102.2.2
Fire separation distance 415.6
Grain elevators 426.1, 426.1.5
Grinding rooms 426.1.2
Higher education laboratories. 428
Separation from other occupancies 415.6.1, 508.1, 508.2.4, 508.3.3, 508.4
Special provisions based on materials
Combustible liquids. . . . . Table 307.1(1), 307.4, 307.5, 414.2.5, 414.5.3, 415.9.2
Corrosives. . . . . 307.6, Table 414.2.5(1), 414.3, 415.10.3, Table 415.11.1.1.1
Cryogenic . . . . . Table 307.1(1), Table 414.5.1, Table 415.11.1.1.1
Explosives. . . . 202, 307.3, 307.3.1, Table 415.6.2
Flammable liquids. 307.4, 307.5, 415.9.1
Flammable solids 307.5, 415.11.1.1.1
Health-hazard materials . . . . . 202, Table 414.2.5(1), 415.6, Table 415.11.1.1.1, 415.11.6.1, 415.11.7.2
Irritants . . . . . Table 414.2.5(1), Table 415.11.1.1.1
Liquid, highly toxic and toxic. . . . . 307.6, Table 414.2.5(1), 415.8.3, 415.9.3, Table 415.11.1.1.1, 908.3
Organic peroxides. . . . . Table 414.5.1, 415.6.1, 415.8.4, Table 415.11.1.1.1, 418
Oxidizers, liquid and solid . . . . . Table 414.2.5(1), Table 414.5.1, 415.8.4, Table 415.11.1.1.1
Pyrophoric materials . . . . . Table 307.1(1), 307.4, Table 414.5.1, 415.7.1, 415.8.4, Table 415.11.1.1.1
Sensitizers . . . . . Table 415.11.1.1.1
Solids, highly toxic and toxic. . . . . 307.6, Table 414.2.5(1), 415.10.4, Table 415.11.1.1.1, 908.3
Unstable materials . . . . . 307.3, Table 414.2.5(1), Table 414.5.1, 415.5.4, Table 415.11.1.1.1
Water-reactive materials. . . . . Table 414.5.1, 415.8.3, 415.8.4, 415.8.5, 415.11, Table 415.11.1.1.1
Sprinkler protection. 415.2, 415.11.6.4, 415.11.9, 415.11.10.1, 415.11.11, 705.8.1, 903.2.5
Standby, emergency power 2702.2
Storage . . . . . 413, 414.1, 414.2.5, 414.5, 414.6, 415.6, Table 415.6.2, 415.7.1, 415.9.1, 426.1
Unlimited area. 507.8, 507.9, 507.10
HEAD JOINT, MASONRY 202

INTERNATIONAL CODE COUNCIL®
Copyright © 2019 ICC & NYSDOS. ALL RIGHTS RESERVED. Accessed by Lauren Gualdino (lgualdino@briarcliffmanor.org), (-) Order Number #100880972 on May 08, 2020 07:05 AM (PDT) pursuant to License Agreement with ICC & NYSDOS. No further reproduction, no

100880972

HEADROOM. 406.2.2, 505.1, 1003.2, 1003.3, 1010.1.1, 1010.1.1.1, 1011.3, 1012.5.2, 1207.2
HEALTH CARE (see INSTITUTIONAL I-1 AND INSTITUTIONAL I-2)
Ambulatory care facilities. 202, 422
Clinics, outpatient 304.1
Hospitals 308.3
HEALTH-HAZARD MATERIALS. . . . . 307.2, Table 414.2.5(1), 415.2, 415.11.1.1.1, Table 415.11.6.1
HEAT VENTS 910
HEATING (see MECHANICAL) 101.4.2
Aircraft hangars 412.3.4
Fire pump rooms 913.3
Fireplace 2111
Masonry heaters 2112
Parking garages. 406.2.9
Repair garages 406.2.9
HEIGHT, BUILDING 503, 504, 505, 508, 510
Limitations 503
Mixed construction types 510
Modifications 504
Roof structures 504.3, 1510
HELIPORT
Definition 202
Live loads. 1607.6
HIGHER EDUCATION LABORATORIES . . . 202, 428
HIGH-PILED COMBUSTIBLE STORAGE. 413, 907.2.15, 910.2.2
HIGH-PRESSURE DECORATIVE EXTERIOR-GRADE COMPACT LAMINATES. 1408
HIGH-RISE BUILDINGS. 403
Alarms and detection 403.4.1, 403.4.2, 907.2.13
Application 403.1
Construction. 403.2
Elevators 403.6, 1009.2.1, 3007, 3008
Emergency power 403.4.8, 2702.2
Emergency systems 403.4
Fire command station 403.4.6
Fire department communication . . . 403.4.3, 403.4.4
Fire service elevators. 403.6.1, 3007
Occupant evacuation elevators 403.6.2, 3008
Smoke removal 403.4.6
Smokeproof enclosure. 403.5.4, 1023.11
Sprayed fire-resistant materials (SFRM) 403.2.4
Sprinkler protection 403.3, 903.2.11.3
Stairways 403.5, 1023, 1025
Standby power. 403.4.7, 2702.2
Structural integrity 403.2.3, 1616
Super high-rise (over 420 feet) 403.2.1, 403.2.3, 403.2.4, 403.3.1, 403.5.2
Voice alarm 403.4.3, 907.2.13
Zones 907.6.3, 907.6.4
HISTORIC BUILDINGS 101.4.7
Flood provisions. G105.3
HORIZONTAL ASSEMBLY 711
Continuity 509.4.1, 711.2.2, 711.2.3, 713.11, 713.12
Fire-resistance rating . . . . . 603.1(1), 603.1(22), 603.1(23), 703, 704.4.2, 707.3.10, 711.2.4
Glazing, rated. 716.3.4
Group I-1 . . . . . 420.3
Group R 420.3
Incidental 509.4
Insulation 720, 807, 808
Joints 715, 2508.4
Nonfire-resistance rating 711.3
Opening protection. . . . 712.1.13.1, 714.5, 716, 717.6
Shaft enclosure 713.1
Special provisions
Atrium. 404.3, 404.6
Covered and open mall buildings. 402.4.2.3, 402.8.7
Fire pumps 913.2.1
Flammable finishes 416.2
Group H-2 . . . . . 415.9.1.1, 415.9.1.2
Groups H-3 and H-4. . . . . 415.10.2
Group H-5 . . . . . 415.11.1.2, 415.11.5.1
Group I-2 . . . . . 407.5
Groups I-1, R-1, R-2, R-3 and R-4. . . . . 420.3
Hazardous materials 414.2
High-rise. 403.2.1, 403.3
Organic coating 418.4, 418.5, 418.6
Stages and platforms 410.3, 410.4.1
HORIZONTAL EXIT 1026
Accessible means of egress 1009.2, 1009.2.1, 1009.3, 1009.4, 1009.6, 1009.6.2
Doors 1026.3
Exit discharge. 1028.1
Fire resistance 1026.2
Institutional I-2 occupancy 407.4, 1026.1
Institutional I-3 occupancy 408.2, 1026.1
Refuge area (see REFUGE AREAS)
HORIZONTAL FIRE SEPARATION (see HORIZONTAL ASSEMBLY)
HOSE CONNECTIONS (see STANDPIPES, REQUIRED)
HOSPITAL (see INSTITUTIONAL GROUP I-2). 308.3, 407
HURRICANE-PRONE REGIONS (see WIND LOADS). 202

INTERNATIONAL CODE COUNCIL®
Copyright © 2019 ICC & NYSDOS. ALL RIGHTS RESERVED. Accessed by Lauren Gualdino (lgualdino@briarcliffmanor.org), (-) Order Number #100880972 on May 08, 2020 07:05 AM (PDT) pursuant to License Agreement with ICC & NYSDOS. No further reproduction, no

100880972

HURRICANE SHELTER (see STORM SHELTER)
HURRICANE SHUTTERS 1609.2
HYDROGEN FUEL GAS ROOMS . . . . 421, Table 509
HYPERBARIC FACILITIES 425

I

ICE-SENSITIVE STRUCTURE
Atmospheric ice loads 1614.1
Definition 202
IDENTIFICATION, REQUIREMENTS FOR
Fire barriers 703.6
Fire partitions 703.6
Fire wall 703.6
Glazing 2403.1, 2406.3
Inspection certificate 202
Labeling 1703.5
Preservative-treated wood 2303.1.9.1
Smoke barrier 703.6
Smoke partition 703.6
Steel 2202.1
IMPACT LOAD 202, 1603.1.1, 1607.10
INCIDENTAL USES
Area 509.3
Occupancy classification 509.2
Separation and protection 509.4
INCINERATOR ROOMS . . . . . Table 509, 1006.2.2.2
INDUSTRIAL (see FACTORY OCCUPANCY)
INSPECTIONS 1704, 1705
Alternative methods and materials 1705.1.1
Concrete construction 1705.3
EIFS 1705.16
Fabricators 1704.2.5
Fire-extinguishing systems 904.4
Fire-resistant materials 1705.14, 1705.15
Fire-resistant penetrations 1705.17
Footing or foundation 1705.3, 1705.4, 1705.7, 1705.8, 1705.9
Lath gypsum board and gypsum panel products 2503
Masonry 110.3.10, 1705.4
Required 105.3
Seismic 1705.12
Smoke control 909.18.8, 1705.18
Soils 1705.6
Special (see SPECIAL INSPECTIONS AND TESTS) 1704, 1705
Sprayed fire-resistant materials 1705.14
Sprinkler protection 903.5
Steel 1705.2
Welding 1705.2, 2204.1
Wind 1705.11
Wood 1705.5
INSTITUTIONAL I-1
[see INSTITUTIONAL OCCUPANCY (GROUP I) and RESIDENTIAL (GROUP R-4)] 308.2, 420
Accessibility 1106.2, 1107.2, 1107.3, 1107.4, 1107.5.1
Alarm and detection 420.5, 907.2.6.1, 907.2.10, 907.2.11.2, 907.5.2.3.2
Combustible decorations 806.1
Cooking 420.8
Emergency escape and rescue 1030
Means of egress
Aisles 1018.5
Corridors 1020.1
Stairway, exit access 1019
Travel distance 1017.2, 1006.3
Occupancy condition 308.2.1, 308.2.2
Occupancy exceptions 308.2.3, 308.2.4
Separation, unit 420.2, 420.3
Spaces open to the corridor 420.7, 420.8, 420.8.1
Sprinkler protection 420.4, 903.2.6, 903.3.2
INSTITUTIONAL I-2
[see INSTITUTIONAL OCCUPANCY (GROUP I)] 308.3, 407
Accessibility 1106.3, 1106.4, 1106.7.2, 1107.2, 1107.3, 1107.4, 1107.5.2, 1107.5.3, 1107.5.4, 1109.2, E106.4.6
Alarms and detection 407.8, 407.9, 907.2.6.2
Care suites 407.4.4
Combustible decorations 806.1
Electrical systems 407.11, 2702.2
Hyperbaric facilities 425
Means of egress 407.4
Aisles 1018.5
Corridors 407.2, 407.3, 407.4, 1020.2
Doors 407.3.1, 1010.1.9.7, 1010.1.9.9
Exterior exit stairway 1027.2
Hardware 1010.1.9.3, 1010.1.9.7
Lighting 1008.2, 1008.2.2, 1008.2.3, 1008.3
Stairway, exit access 1019.4
Travel distance 407.4
Medical gas systems 427
Occupancy condition 308.3.1
Occupancy exceptions 308.3.2
Separation 410
Smoke barriers 407.5
Smoke compartment 407.2.1, 407.2.3, 407.5

INTERNATIONAL CODE COUNCIL®
Copyright © 2019 ICC & NYSDOS. ALL RIGHTS RESERVED. Accessed by Lauren Gualdino (lgualdino@briarcliffmanor.org), (-) Order Number #100880972 on May 08, 2020 07:05 AM (PDT) pursuant to License Agreement with ICC & NYSDOS. No further reproduction, no

100880972

Smoke partitions 407.3
Sprinkler protection 407.7, 903.2.6, 903.3.2
Yards 407.10

INSTITUTIONAL I-3
[see INSTITUTIONAL OCCUPANCY (GROUP I)] 308.4, 408
Accessibility 1103.2.13, 1105.4, 1107.2, 1107.3, 1107.4, 1107.5.5, 1108.4.2, 1109.11.2, E104.2.2, E106.4.8
Alarm and detection 408.10, 907.2.6.3
Combustible decorations 806.1
Means of egress 408.2, 408.3, 408.4
Aisles 1018.5
Doors 408.4, 1010.1.1, 1010.1.2
Exit discharge 408.3.6
Exit sign exemption 1013.1
Hardware 408.4, 1010.1.9.3, 1010.1.9.8, 1010.1.9.9
Stairway, exit access 1019.4
Travel distance 408.6.1, 408.8.1, 1006.3, 1017.2
Occupancy condition . . . . . 308.4.1 through 308.4.5
Security glazing 408.7
Separation 408.5, 408.8
Smoke barrier 408.6
Smoke compartment 408.4.1, 408.6, 408.9
Sprinkler protection 408.11, 903.2.6
Standby/emergency power 2702.2

INSTITUTIONAL I-4
[see INSTITUTIONAL OCCUPANCY (GROUP I)] 308.5
Accessibility 1103.2.12
Alarms and detection 907.2.6
Corridor rating 1020.1
Educational 303.1.3, 308.5.1
Means of egress
Day care 1006.2.2.4
Stairway, exit access 1019
Travel distance 1016.2.1, 1017.2, 1006.3
Occupancy condition . . . . . 308.4.1 through 308.4.5
Sprinkler protection 903.2.6

INSTITUTIONAL OCCUPANCY (GROUP I) 308
Accessory 508.2
Adult care 308.6
Area 503, 505, 506, 507, 508
Child care 303.1.3, 308.6.4, 308.11, 310.1
Group specific provisions
Group I-1 (see INSTITUTIONAL I-1) 308.2
Group I-2 (see INSTITUTIONAL I-2) . . . 308.3, 407
Group I-3 (see INSTITUTIONAL I-3) . . . 308.4, 408
Group I-4 (see INSTITUTIONAL I-4) 308.5, 310.4
Height 503, 504, 505, 508
Incidental uses 509
Interior finishes . . . . . Table 803.13, 804
Live load . . . . . Table 1607.1
Means of egress
Corridors 1020.2
Stairway, exit access 1019
Travel distance 407, 1006.3, 1016.2.1, 1017.2,
Mixed occupancies 508.3, 508.4
Occupancy exceptions . . . . . 303.1.1, 303.1.2, 308.2.3, 308.2.4, 308.3.2, 308.5.1 through 308.5.4, 310.4.1
Plumbing fixtures 2902
Risk category . . . . . Table 1604.5
Standby, emergency power 2702.2

INSULATION
Concealed 720.2
Duct insulation 720.1
Exposed 720.3
Fiberboard . . . . . 720.1, Table 1508.2, 2303.1.6.2, 2303.1.6.3
Foam plastic (see FOAM PLASTICS) 720.1
Loose fill 720.4, 720.6
Pipe insulation 720.1, 720.7
Reflective plastic core 2614
Roof 720.5, 1508
Sound 720, 807, 1206
Thermal 720, 807, 1508

INTERIOR ENVIRONMENT
Lighting 1204
Rodentproofing . . . . . 415.11.1.6, Appendix F
Sound transmission 1206
Space dimensions 1207
Temperature control 1203
Ventilation 409.3, 414.3, 415.9.1.7, 1202.5
Yards or courts 1205.2, 1205.3

INTERIOR FINISHES . . . . . Chapter 8
Acoustical ceiling systems 807, 808
Application 803.14, 804.4
Atriums 404.8
Children's play structures 424
Covered and open mall buildings 402.6
Decorative materials 801.1.2, 806
Floor finish 804, 805
Foam plastic insulation 2603.3, 2603.4
Foam plastic trim 806.5, 2604.2
Insulation 807

INTERNATIONAL CODE COUNCIL®
Copyright © 2019 ICC & NYSDOS. ALL RIGHTS RESERVED. Accessed by Lauren Gualdino (lgualdino@briarcliffmanor.org), (-) Order Number #100880972 on May 08, 2020 07:05 AM (PDT) pursuant to License Agreement with ICC & NYSDOS. No further reproduction, no

100880972

Light-transmitting plastics 2606
Signs 402.6.4, 2611
Trim 806.7, 806.8
Wall and ceiling finishes 803
Wet location 1209

J

JAILS (see INSTITUTIONAL I-3) 308.5, 408
JOINT
Gypsum board 2508.5
Lumber sheathing 2308.7.11
Shotcrete 1908.7
Waterproofing 1805.3.3
JOINTS, FIRE-RESISTANT SYSTEMS 715
Special inspection 1705.17

K

KIOSKS 402.6.2
KITCHENS 303.3, 306.2
Accessibility 1109.4
Dimensions 1208
Means of egress 1016.2
Occupant load . . . . . Table 1004.5
Sinks . . . . . Table 2902.1

L

LABORATORIES
Classification of 304.1, 307.1.1
Hazardous materials 414, 415
Higher education laboratories 307.1.1, 428
Incidental uses . . . . . Table 509
LADDERS
Boiler, incinerator and furnace rooms 1006.2.2.1
Construction 1011.15, 1011.16, 1014.2, 1014.6, 1015.3, 1015.4
Emergency escape window wells 1030.4.2
Group I-3 . . . . . 408.3.5, 1011.15, 1011.16
Heliport 412.7.3
Refrigeration machinery room 1006.2.2.2
Ship's ladders 408.3.5, 1011.15
Stage 410.5.3.4
LAMINATED TIMBER, STRUCTURAL GLUED 602.4, 2303.1, 2303.1.3, 2304.12.2.4, 2306.1, 2308.4.3, 2308.7.9
LANDINGS
Doors 1010.1.6
Ramp 1012.6
Stair 1011.6
LATH, METAL OR WIRE . . . . . Table 2507.2
LAUNDRIES . . . . . 304.1, 306.2, Table 509
LAUNDRY CHUTE 713.13, 903.2.11.2
LEGAL
Federal and state authority 102.2
Registered design professional 106.2.9
LIBRARIES
Classification, other than school 303.1.3, 303.4
Classification, school 303.1.3, 305.1
Live load . . . . . Table 1607.1
LIGHT, REQUIRED 1204
Artificial 1204.3
Emergency (see EMERGENCY LIGHTING)
Means of egress 1008.2
Natural 1204.2
Stairways 1204.4
Yards and courts 1205
LIGHT-FRAME CONSTRUCTION
Definition 202
Cold-formed steel 2211
Conventional (wood) 2308
LIGHTS, PLASTIC CEILING DIFFUSERS 2606.7
LINEN CHUTE 713.13, 903.2.11.2
LINTEL
Adobe 2109.2.4.9
Fire resistance 704.11
Masonry, wood support 2304.13
LIQUEFIED PETROLEUM GAS . . . . . Table 414.5.1, 415.9.2
LIVE LOADS 202, 1607
Construction documents 106.2, 1603.1.1
LIVE/WORK UNITS 202, 310.3, 419
Accessibility 1107.6.2.1
Separation 508.1
LOAD AND RESISTANCE FACTOR DESIGN (LRFD) 1602.1
Factored load 202
Limit state 202
Load combinations 1605.1
Load factor 202
Resistance factor 202
Wood design 2302.1, 2307
LOAD COMBINATIONS 1605
Allowable stress design 1605.1
Alternative allowable stress load combinations 1605.2
Load and resistance factor design 1605.1
Strength design 1605.1
LOADS 106, 202
Atmospheric ice 1614
Combinations 1605

INTERNATIONAL CODE COUNCIL®
Copyright © 2019 ICC & NYSDOS. ALL RIGHTS RESERVED. Accessed by Lauren Gualdino (lgualdino@briarcliffmanor.org), (-) Order Number #100880972 on May 08, 2020 07:05 AM (PDT) pursuant to License Agreement with ICC & NYSDOS. No further reproduction, no

100880972

Dead 202, 1606
Factored load 202, 1604.2
Flood 1603.1.7, 1612
Impact 202, 1607.10
Live 419.6, 1603.1.1, 1607
Load effects 202
Nominal load 202, 1604.2
Rain 1603.1.9, 1611
Seismic 1603.1.5, 1613
Snow 1603.1.3, 1608
Soil lateral 1610
Tsunami 1615
Wind 1603.1.4, 1609

LOBBIES
Assembly occupancy 1029.4
Elevator 405.4.3, 1009.2.1, 1009.4, 3006, 3007.6, 3008.6
Exit discharge 1028.1
Underground buildings 405.4.3

LOCKS AND LATCHES 1010.1.9, 1010.1.10
Delayed egress locks 1010.1.9.8
Electromagnetically locked 1010.1.9.10
Group I-2 . . . . . 407.4.1.1, 1010.1.9.7
Group I-3 . . . . . 408.4, 1010.1.9.11
High-rise 403.5.3
Sensor release 1010.1.9.9
Toilet rooms 2902.3.5

LODGING HOUSES 202, 310.4, 310.4.2

LUMBER
General provisions . . . . . Chapter 23
Quality standards 2303

M

MAINTENANCE
Means of egress 1002.1, 3310.2
Property 101.4.4

MALL
(see COVERED AND OPEN MALL BUILDINGS)

MANUAL FIRE ALARM BOX 907.4.2

MANUFACTURED HOMES
Flood resistant G501

MARQUEES 202, 3106, H113
Drainage, water 3201.4
Construction 3106.5
Live load . . . . . Table 1607.1, 1607.12
Prohibited location 3106.4
Roof construction 3106.3

MASONRY
Adhered veneer 1404.10
Adobe 2109
Anchorage 1604.8.2
Anchored veneer 1404.6
Architectural cast stone 2103.1
Calculated fire resistance 722.4
Chimneys 2113
Construction 2104
Dampproofing 1805.2.2
Design, methods 2101.2, 2107, 2108, 2109
Fire resistance, calculated 722.3.2, 722.3.4
Fireplaces 2111
Floor anchorage 1604.8.2
Foundation walls 1807.1.5
Foundations, adobe 2109.2.4.5
Glass unit 2110
Grouted 202
Heaters 2112
Inspection, special 1705.4
Joint reinforcement 2103.4
Materials 2103
Penetrations 714
Quality assurance 2105
Rodentproofing . . . . . Appendix F
Roof anchorage 1604.8.1
Seismic provisions 2106
Serviceability 1604.3.4
Supported by wood 2304.13
Surface bonding 2103.2.2
Veneer 1404.6, 1404.10, 2101.2.1, 2308.6.10
Wall, composite 202
Wall, hollow 202
Wall anchorage 1604.8.2
Waterproofing 1805.3.2
Wythe 202

MASS NOTIFICATION SYSTEMS 917

MATERIALS
Alternates 104.3
Aluminum . . . . . Chapter 20
Concrete . . . . . Chapter 19
Glass and glazing . . . . . Chapter 24
Gypsum . . . . . Chapter 25
Masonry . . . . . Chapter 21
Noncombustible 703.4
Plastic . . . . . Chapter 26
Steel . . . . . Chapter 22
Testing (see TESTING) 1707
Wood . . . . . Chapter 23

MEANS OF EGRESS . . . . . Chapter 10
Accessible 1009, 2702.2
Aircraft related 412.2.2, 412.2.5.1, 412.4.2, 412.6.1, 412.7.3

INTERNATIONAL CODE COUNCIL®
Copyright © 2019 ICC & NYSDOS. ALL RIGHTS RESERVED. Accessed by Lauren Gualdino (lgualdino@briarcliffmanor.org), (-) Order Number #100880972 on May 08, 2020 07:05 AM (PDT) pursuant to License Agreement with ICC & NYSDOS. No further reproduction, no

100880972

Alternating tread device 412.7.3, 505.3, 1006.2.2.1, 1006.2.2.2, 1011.14,
Ambulatory care facilities 422.3.1, 422.3.3
Assembly 1009.1, 1029
Atrium 404.9, 404.10, 707.3.6
Capacity 1005.3
Ceiling height 1003.2
Child care facilities (see Day care facilities)
Configuration 1007
Construction drawings 106.2
Convergence 1005.6
Covered and open mall buildings 402.8
Day care facilities . . . . . 308.5, 310.4.1, Table 1004.5, 1006.2.2.4
Distribution 1005.5
Doors 1005.7, 1006.2, 1010, 1022.2, 2702.2
During construction. 3303.3, 3310
Elevation change 1003.5
Elevators. 403.5.2, 403.6.1, 1003.7, 1009, 3008
Emergency escape and rescue 1030
Encroachment 1005.7
Equipment platform 505.3
Escalators. 1003.7
Existing buildings 3310
Exit (see EXIT) . . . . . 1022 through 1027
Exit access (see EXIT ACCESS) . . . . . 1016 through 1021
Exit discharge (see EXIT DISCHARGE). 1028
Exit enclosures 1023.2
Exit passageway (see EXIT PASSAGWAY) 1024
Exit signs 1013, 2702.2
Evacuation plans 1002.2
Fire escapes 412.7.3
Fire safety plans 1002.2
Floor surface. 804, 1003.4
Gates 1010.2
Group I-2 . . . . . 407.2, 407.3, 407.4, 1019.4
Group I-3 . . . . . 408.2, 408.3, 408.4, 408.6, 408.8, 1019.4
Guards 1015
Handrails 1014
Hazardous materials. 414.6.1.2, 415.11.2, 415.11.5.6
Headroom. 1003.2, 1003.3
Heliports, Helistops. 412.7.3
High-hazard Group H 415.11.2
High-rise 403.5, 403.6
Illumination 1008, 2702.2
Interior finish 803.13, 804
Ladders (see LADDERS)
Live loads . . . . . Table 1607.1
Live/work units 419.3
Mezzanines. 505.2.2, 505.2.3, 1004.2.2, 1009.1
Moving walk 1003.7
Number 1001.2, 1006
Occupant load. 1004
Parking 406.5.7
Protruding objects. 1003.3, 1005.7
Ramps. 1012, 1027
Scoping. 101.3, 1001.1
Seating, fixed 1009.1, 1029
Special amusement 411.6
Stages. 410.2.3, 410.5
Stairways 403.5, 404.6, 1005.3.1, 1011, 1023.2, 1027
Temporary structures 3103.4
Travel distance (see TRAVEL DISTANCE) 1016.2.1, 1017
Turnstile 1010.3
Underground buildings 405.5.1, 405.7
Width. 1005.1, 1005.2, 1005.4, 1011.2, 1012.5.1, 1020.2, 1029.6, 1029.8

MECHANICAL (see AIR CONDITIONING, HEATING, REFRIGERATION, AND VENTILATION) . . . 101.4.2
Access 1011.12, 1208.3
Air transfer openings. 705.10, 706.11, 707.10, 708.9, 709.8, 711.7, 713.10, 714.1.1, 717
Chimneys (see CHIMNEYS)
Code . . . . . Chapter 28
Disconnected 3303.6
Ducts. 704.8, 705.10, 706.11, 707.10, 712.1.6, 712.1.10.3, 713.10, 708.9, 709.8, 710.8, 711.7, 714.1.1, 717
Encroachment, public right-of-way 3202.3.2
Equipment on roof. 1510, 1511.2
Equipment platforms. 505.3
Factory-built fireplace 2111.14.1
Fireplaces 2111
Incidental use room. . . . . Table 509
Motion picture projection room 409.3
Permit required 105.1, 105.2
Roof access 1011.12
Seismic inspection and testing 1705.12.6, 1705.13.2
Smoke control systems. 909
Systems . . . . . 202, Chapter 28

MECHANICALLY LAMINATED DECKING 2304.9.3
MEDICAL GAS SYSTEMS 427

INTERNATIONAL CODE COUNCIL®
Copyright © 2019 ICC & NYSDOS. ALL RIGHTS RESERVED. Accessed by Lauren Gualdino (lgualdino@briarcliffmanor.org), (-) Order Number #100880972 on May 08, 2020 07:05 AM (PDT) pursuant to License Agreement with ICC & NYSDOS. No further reproduction, no

100880972

MEMBRANE ROOF COVERINGS 1507.11, 1507.12, 1507.13
MEMBRANE STRUCTURES 2702.2, 3102
MENTAL HOSPITALS (see INSTITUTIONAL I-2)
MERCANTILE OCCUPANCY (GROUP M) 309
Accessible 1109.12
Alarm and detection 907.2.7
Area 503, 505, 506, 507, 508
Covered and open mall buildings 402
Hazardous material display and storage 414.2.5
Height 503, 504, 505, 508
Incidental uses 509
Interior finishes . . . . . Table 803.13, 804
Live load . . . . . Table 1607.1
Means of egress
Aisles 1018.3, 1018.4
Stairway, exit access 1019
Travel distance 402.8, 1006.3, 1016.2.1, 1017.2
Mixed occupancies 508.3, 508.4
Accessory 508.2
Live/work units 419
Mall buildings 402
Parking below/above 510.2, 510.7, 510.8, 510.9
Special mixed 510.2
Occupancy exceptions 307.1.1
Plumbing fixtures 2902
Sprinkler protection 903.2.7
Standpipes 905.3.3
Unlimited area 507.5, 507.4, 507.13
METAL
Aluminum . . . . . Chapter 20
Roof coverings 1504.3.2, 1507.4, 1507.5
Steel . . . . . Chapter 22
Veneer 1403.5
METAL COMPOSITE MATERIALS 1406
MEZZANINES 505
Accessibility 1104.4, 1108.2.4, 1108.2.9
Area limitations 505.2.1, 505.2.1.1, 505.3.1
Egress 505.2.2, 505.2.3, 1009.1
Equipment platforms 505.3
Guards 505.3.3, 1015.1
Height 505.2
Occupant load 1004.2.2
Stairways 712.1.11, 1011.14, 1019, 1023.2
MIRRORS 1010.1, 2406.1
MIXED OCCUPANCY (see OCCUPANCY SEPARATION)
MODIFICATIONS 104.2
MOISTURE PROTECTION 1209, 1402.2, 1503
MONASTERIES 310.3
MORTAR 202
Ceramic tile 2103.2.3
Dampproofing 1805.2.2
Fire resistance 714.4.1, 715.4.1
Glass unit masonry 2110.1.1
Masonry 2103.2
Rodentproofing . . . . . Appendix F
MOTELS 310.2, 310.3
MOTION PICTURE PROJECTION ROOMS 409
Construction 409.2
Exhaust air 409.3.2, 409.3.3
Lighting control 409.4
Projection room 409.3
Supply air 409.3.1
Ventilation 409.3
MOTOR FUEL-DISPENSING SYSTEM 406.7
Accessibility 1109.14
MOTOR VEHICLE FACILITIES 304, 311, 406
MOVING, BUILDINGS 101.4.7, D103.3
MOVING WALKS 3004.2
Means of egress 1003.7

N

NAILING 202, 2303.6, 2304, 2304.10
NONCOMBUSTIBLE BUILDING MATERIAL 703.4
NURSES STATIONS (See CARE PROVIDER STATIONS)
NURSING HOMES (see INSTITUTIONAL, GROUP I-2) 308.3, 407

O

OCCUPANCY
Accessory 507.1.1, 508.2
Certificates (see CERTIFICATE OF OCCUPANCY)
Change (see CHANGE OF OCCUPANCY)
Floor loads . . . . . Table 1607.1
Height in mixed occupancy buildings 504.2
Roofs (See OCCUPIED ROOFS) . . . . . .
Special . . . . . Chapter 4
OCCUPANCY CLASSIFICATION . . . . . Chapter 3
Covered and open mall buildings 402
Detailed requirements . . . . . Chapter 4
Exceptions . . . . . 303.1.1 through 303.1.4, 305.1.1, 305.2.1 through 305.2.3, 307.1.1, 308.2.3, 308.2.4, 308.3.2, 308.5.1 through 308.5.4, 310.4.1, 311.1.1
HPM 415.11
Mixed 508, 510
Occupied roofs 302.1, 503.1.4

INTERNATIONAL CODE COUNCIL®
Copyright © 2019 ICC & NYSDOS. ALL RIGHTS RESERVED. Accessed by Lauren Gualdino (lgualdino@briarcliffmanor.org), (-) Order Number #100880972 on May 08, 2020 07:05 AM (PDT) pursuant to License Agreement with ICC & NYSDOS. No further reproduction, no

100880972

OCCUPANCY SEPARATION
Accessory 508.2
Aircraft related 412.4.1
Nonseparated use method 508.3
Separated use method 508.4
Special provisions 510
Unlimited area buildings 507.1.1, 507.4.1, 507.8
OCCUPANT EVACUATION ELEVATORS 403.5.2, 403.6.2, 3008
OCCUPANT LOAD
Business . . . . . Table 1004.2, 1004.8
Calculated 1004.5
Certificate of occupancy 105.5
Covered and open mall building 402.8.2
Cumulative 1004.2
Increased 1004.5.1
Multiple function 1004.3
Multiple occupancies 1004.4
Outdoors 1004.7
Seating, fixed 1004.6
Signs 1004.9
OCCUPIED ROOFS 503.1.4
OFFICE BUILDINGS
(See GROUP B OCCUPANCIES)
Classification 304
Live loads . . . . . Table 1607.1, 1607.5
OPEN MALL BUILDINGS
(see COVERED AND OPEN MALL BUILDINGS)
OPENING PROTECTION, EXTERIOR WALLS 705.8
OPENING PROTECTION, FLOORS
(see VERTICAL OPENING PROTECTION)
OPENING PROTECTIVES 705.8, 706.8, 707.6, 708.6, 709.5, 712.1.13.1, 713.7, 716
Automatic-closing devices 909.5.3
Fire door and shutter assemblies 705.8.2, 712.1.13.1, 716.2.1
Fire windows 716.3.4
Glass unit masonry (see GLASS UNIT MASONRY) 2110.1.1
Glazing 716.6
ORGANIC COATINGS 418
ORGANIC PEROXIDES 307.4, 307.5
OXIDIZERS, LIQUID AND SOLID 307.3, 307.4, 307.5

P

PANIC HARDWARE 1010.1.10
PARAPET, EXTERIOR WALL 705.11, 2109.2.4.3
Construction 705.11.1
Fire wall 706.6
Height 705.11.1
PARKING, ACCESSIBLE 1106, 1111.1
PARKING GARAGES 406.4, 406.5, 406.6
Accessibility 1105.1.1, 1106.1, 1106.7.4, 1111.1
Barriers, vehicle 202, 406.4.2, 1607.9
Classification 311, 312, 406.3, 406.4
Construction type . . . . . 406.5.1, Table 601
Enclosed (see PARKING GARAGE, ENCLOSED) 406.6
Gates 406.2.1, 3110
Guards 406.4.1, 2407.1.3
Height, clear 406.2.2
Live loads . . . . . Table 1607.1, 1607.11.1.3
Means of egress 1006.2.2.5, 1006.3, 1019
Occupancy separation 508, 510
Open (see PARKING GARAGE, OPEN) 406.5
Special provisions 510
Sprinkler protection 903.2.10
Underground 405
Vertical openings 712.1.10
PARKING GARAGES, ENCLOSED 406.6
Area and height [see STORAGE OCCUPANCY (GROUPS)] 406.6.1
Means of egress 1006.2.2.5, 1006.3, 1012.1
Sprinkler protection 406.6.3
Ventilation 406.6.2
PARKING GARAGES, OPEN 202, 406.5
Area and height [see STORAGE OCCUPANCY (GROUP S)] . . . . . 406.5, 406.5.1, Table 406.5.4
Construction type 406.5.1
Means of egress . . . . . 406.5.7, Table 1006.2.1, 1006.3, 1009.3, 1009.4, 1012.1,1017.3, 1019, 1020.1, 1028.1
Mixed occupancy 406.5.3
Standpipes 406.5.8
Ventilation 406.5.10
PARTICLEBOARD 202
Draftstopping 718.3.1
Moisture protection 1402.2, 1404.2
Quality 2303.1.8
Veneer 1404.5
Wall bracing 2308.6.3
PARTITIONS
Fabric partition 202, 1607.15.1
Fire (see FIRE PARTITION)
Live loads 1607.5, 1607.15

INTERNATIONAL CODE COUNCIL®
Copyright © 2019 ICC & NYSDOS. ALL RIGHTS RESERVED. Accessed by Lauren Gualdino (lgualdino@briarcliffmanor.org), (-) Order Number #100880972 on May 08, 2020 07:05 AM (PDT) pursuant to License Agreement with ICC & NYSDOS. No further reproduction, no

100880972

Materials . . . . . 602.4, 603.1(1), 603.1(11)
Occupancy, specific 708.1
Smoke (see SMOKE PARTITION)
Toilets 1209
PARTY WALLS (see FIRE WALLS) . . . . . 706.1.1, Table 716.1(3)
PASSAGEWAY, EXIT (see EXIT) 1024.1
PASSENGER STATIONS 303.4
PATIO COVERS . . . . . 2606.10, Appendix I
PEDESTRIAN
Protection at construction site 3303.2, 3306
Walkways and tunnels 3104, 3202.3.4
PENETRATION-FIRESTOP SYSTEM
Fire-rated horizontal assemblies 714.5.2
Fire-rated walls 714.4.2
PENETRATIONS 714, 717
Fire-resistant assemblies
Exterior wall 705.10
Fire barrier 707.7, 707.10
Fire partition 708.7, 708.9
Fire wall 706.9, 706.11
Horizontal assemblies 714.5
Installation 714.2
Shaft enclosures 712.1, 713.1, 713.8, 713.10
Smoke barriers 709.6, 709.8, 714.5.4
Smoke partitions 710.6, 710.7
Special inspection 1705.17
Walls 714.4
Nonfire-resistant assemblies 714.6
PERFORMANCE CATEGORY
Definition 202
Wood structural panels 2303.1.5
PERLITE . . . . . Table 721.1(1), Table 2507.2
PERMITS 105
Application for 105.2.2
Drawings and specifications 106
Placement of permit 105.2.6
Suspension or revocation 105.2.5
PHOTOVOLTAIC PANEL SYSTEMS 202
Ballasted, seismic design 1613.3
Fire classification 1505.8, 1505.9
Panels/modules 1512
Photovoltaic module 202
Photovoltaic panel 202
Roof live loads 1607.13.5
Rooftop mounted 1510.7
PIER FOUNDATIONS (see FOUNDATION, SHALLOW)
PILE FOUNDATIONS (see FOUNDATION, DEEP)
PIPES
Embedded in fire protection 704.8
Insulation covering 720.1, 720.7
Penetration protection 714, 1023.5
Under platform 410.3
PLAIN CONCRETE (see CONCRETE) 1906
PLAN REVIEW 106.2
PLASTER
Fire-resistance requirements 719
Gypsum 719.1, 719.2
Portland cement . . . . . 719.5, Table 2507.2, Table 2511.1.1
PLASTIC . . . . . Chapter 26
Approval for use 2606.2
Composites 2612
Core insulation, reflective plastic 2614
Decking 1409, 2612
Fiber-reinforced polymer 2613
Finish and trim, exterior 2602.1
Finish and trim, interior 2602.3, 2604
Light-transmitting panels 2401.1, 2607
Roof panels 2609
Signs 402.6.4, 2611, D102.2.10, H107.1.1
Thermal barrier 2603.4
Veneer 1403.8, 2605, D102.2.11
Walls, exterior 2603.4.1.4, 2603.5
PLASTIC, FOAM
Children's play structures 424.2
Insulation (see FOAM PLASTICS) 2603
Interior finish 803.4, 2603.9
Malls 402.6.2, 402.6.4.5
Stages and platforms 410.2.6
PLASTIC, LIGHT-TRANSMITTING
Awnings and patio covers 2606.10
Bathroom accessories 2606.9
Exterior wall panels 2607
Fiberglass-reinforced polymer 2613.4
Fiber-reinforced polymer 2613.4
Glazing 2608
Greenhouses 2609
Light-diffusing systems 2606.7
Roof panels 2609
Signs, interior 2611
Skylight 2610
Solar collectors 2606.12
Structural requirements 2606.5
Unprotected openings 2608.1, 2608.2
Veneer, exterior . . . . . 603.1(15), 603.1(17), 2605
Wall panels 2607
PLATFORM (see STAGES AND PLATFORMS) 410
Construction 410.3
Temporary 410.3.1
PLATFORM, EQUIMENT (see EQUIPMENT PLATFORM)

INTERNATIONAL CODE COUNCIL®
Copyright © 2019 ICC & NYSDOS. ALL RIGHTS RESERVED. Accessed by Lauren Gualdino (lgualdino@briarcliffmanor.org), (-) Order Number #100880972 on May 08, 2020 07:05 AM (PDT) pursuant to License Agreement with ICC & NYSDOS. No further reproduction, no

100880972

PLATFORM LIFTS, WHEELCHAIR
Accessible means of egress 1009.2, 1009.5, 1109.8, 2702.2
Accessibility 1109.8
PLUMBING
(see TOILET AND TOILET ROOMS) . . . . . 101.4.3, 105.2, Chapter 29
Aircraft hangars, residential 412.4.4
Facilities, minimum 2902, 3305.1
Fixtures . . . . . Table 2902.1
Room requirements 1209, 2606.9
PLYWOOD
(see WOOD STRUCTURAL PANELS) 202
Preservative-treated 2303.1.9
PRESCRIPTIVE FIRE RESISTANCE 721
PRESERVATIVE-TREATED WOOD 202
Fastenings 2304.10.5
Quality 2303.1.9
Required 1402.6, 2304.12
Shakes, roof covering 1507.9.6, 1507.9.8
PROJECTION ROOMS
Motion picture 409
PROJECTIONS, COMBUSTIBLE 705.2.3, 705.2.3.1
PROPERTY LINE
(see FIRE SEPARATION DISTANCE) 705.3
PROPERTY MAINTENANCE 101.4.4
PROSCENIUM
Opening protection 410.2.5
Wall 410.2.4
PSYCHIATRIC HOSPITALS
(see INSTITUTIONAL I-2) 308.4
PUBLIC ADDRESS SYSTEM
(see EMERGENCY COMMUNICATIONS)
Covered and open mall buildings 402.7, 907.2.20, 2702.2
Special amusement buildings 411.5
PUBLIC PROPERTY . . . . . Chapter 32, Chapter 33
PUBLIC RIGHT-OF-WAY
Encroachments . . . . . Chapter 32
PYROPHORIC MATERIALS . . . . Table 307.1(1), 307.4

R

RAILING (see GUARDS AND HANDRAILS)
RAMPS 1012
Assembly occupancy 1029.14
Construction . . . . . 1012.2 through 1012.5.3, 1012.7, 1012.10
Exit 1023
Exit access 1019
Exterior 1027
Guards 1012.9, 1015, 1607.8
Handrails 1012.8, 1014, 1607.8
Interior 1012.2
Landings 1012.6
Parking garage 406.4.3
Slope 1012.2
RECREATIONAL FACILITIES
Accessibility 1110
Amusement rides 1110.4.8
Animal containment areas 1110.4.7
Areas of sports activity 202, 1110.4.1
Boat slips 1110.4.9
Bowling lanes 1110.4.3
Boxing rings 1110.4.5
Court sports 1110.4.4
Exercise equipment 1110.4.10
Fishing piers 1110.4.11
Gaming 1109.15
Hot tubs 1110.4.13
Miniature golf 1110.4.12
Referee stands 1110.4.6
Shooting facilities 1110.4.14
Swimming pools 1110.4.13
Team or player seating 1110.4.2
Children's play structure 402.6.3, 424
Special amusement buildings
(see AMUSEMENT BUILDINGS, SPECIAL)
REFERENCED STANDARDS . . . . . Chapter 35
Applicability 102.3, 102.4
Fire resistance 703.2
List . . . . . Chapter 35
Organizations . . . . . Chapter 35
REFORMATORIES 308.4
REFRIGERATION (see MECHANICAL) 101.4.2
Machinery room 1006.2.2.2
REFUGE AREAS (see HORIZONTAL EXIT, SMOKE COMPARTMENTS, STORM SHELTERS) 407.5.3, 408.6.2, 420.6.1, 422.3.2, 423.1.1, 423.3, 423.4, 1026.4
REFUSE CHUTE 713.13
REINFORCED CONCRETE (see CONCRETE)
General 1901.2
Inspections 1705.3
REINFORCEMENT
Masonry 2103.4
Shotcrete 1908.4
RELIGIOUS WORSHIP, PLACES OF
Accessibility 1103.2.8, 1108.2.4
Alarms and detection 907.2.1
Balcony 1029.5, 1108.2.4

INTERNATIONAL CODE COUNCIL®
Copyright © 2019 ICC & NYSDOS. ALL RIGHTS RESERVED. Accessed by Lauren Gualdino (lgualdino@briarcliffmanor.org), (-) Order Number #100880972 on May 08, 2020 07:05 AM (PDT) pursuant to License Agreement with ICC & NYSDOS. No further reproduction, no

100880972

Classification 303.1.4, 303.4, 305.1.1, 305.2.1, 308.5.2
Door operations 1010.1.9.3
Egress 1029
Interior finishes . . . . . Table 803.13, 804
Unlimited area 507.6, 507.7
RELOCATING, BUILDING 101.4.7, 106.2.8, 3113
Compliance 3113.1.1
Inspection agencies 3113.4
Manufacturer's data plate 3113.3
Supplemental information 311.3.2
REPAIRS, BUILDING 101.4.7, 202
Flood 1612.1
Permit required 105.1
RESIDENTIAL OCCUPANCY (GROUP R) 310
Accessibility 1103.2.3, 1103.2.11, 1105.1.7, 1106.2, 1107.2, 1107.3, 1107.4, 1107.6, E104.2
Alarm and detection 907.5.2.3.2, 907.5.2.3.3, 907.2.8, 907.2.9, 907.2.10, 907.2.11
Area 503, 505, 506, 508, 510
Cooking 420.9, 420.10
Draftstopping 708.4.2, 718.4.2
Group provisions
Group R-1 (transient) 310.2
Group R-2 (apartment) 310.3
Group R-3 (two dwellings per building) 310.4
Group R-4 (group homes) 310.5
Height 503, 504, 505, 508, 510
Incidental uses 509
Interior finishes . . . . . Table 803.13, 804
Live load . . . . . Table 1607.1
Live/work units 419
Means of egress
Aisles 1018.5
Corridors 1020.1, 1020.2
Doors 1010.1.1
Emergency escape and rescue 1030.1
Exit signs 1013.1, 1013.2
Single exits 1006.3
Stairway, exit access 1019
Travel distance 1006.3.2, 1016.2.1, 1017.2
Mixed occupancies 508.3, 508.4
Accessory 508.2, G801.1
Live/work units 419
Parking, private 406.2.8, 406.3
Parking below/above 510.4, 510.7, 510.9
Special mixed 510.2
Plumbing fixtures 2902
Risk category . . . . . Table 1604.5
Special provisions 510.2, 510.5, 510.6
Separation 419, 420, 508.2.4, 508.3.3
Swimming pools 3109.1
Sprinkler protection 903.2.8, 903.3.2
RETAINING WALLS 1807.2, 2304.12.5
Flood provisions G801.4
Seismic 1803.5.12
REVIEWING STANDS (see BLEACHERS AND GRANDSTANDS)
RISERS, STAIR (see STAIRWAY CONSTRUCTION)
Alternating tread device 1011.14
Assembly 1011.5.2, 1029.6, 1029.7, 1029.9, 1029.14
Closed 1011.5.5.3
General 1011.5
Spiral 1011.10
Uniformity 1011.5.4
RISK CATEGORY (Structural Design) . . . 202, 1604.5
Multiple occupancies 1604.5.1
RODENTPROOFING . . . . . Appendix F
ROLL ROOFING 1507.6
ROOF ACCESS 1011.12
ROOF ASSEMBLIES AND ROOFTOP STRUCTURES 202
Cooling towers 1510.4
Drainage 1504, 3201.4
Fire classification 1505
Fire district D102.2.9
Height modifications 504.3
Impact resistance 1504.7
Insulation 1508
Materials 1506
Mechanical equipment screen 1510.6
Parapet walls 1503.2, 1503.3
Penthouses 1510.2
Photovoltaic panels and modules . . . 1510.7, 1512.1
Radiant barrier 202, 1509
Roof ventilation 202
Tanks 1510.3
Towers, spires, domes and cupolas 1510.5
Weather protection 1503
Wind resistance 1504.1, 1504.2, 1504.3, 1609.5
ROOF CONSTRUCTION
Construction walkways 3306.7
Coverings (see ROOF COVERINGS) 1609.5.2
Deck 1609.5.1
Draftstopping 718.4
Fire resistance . . . . . Table 601
Fireblocking 718.2
Live loads . . . . . Table 1607.1, 1607.12, 3111.1.2
Materials . . . . . Chapter 6

INTERNATIONAL CODE COUNCIL®
Copyright © 2019 ICC & NYSDOS. ALL RIGHTS RESERVED. Accessed by Lauren Gualdino (lgualdino@briarcliffmanor.org), (-) Order Number #100880972 on May 08, 2020 07:05 AM (PDT) pursuant to License Agreement with ICC & NYSDOS. No further reproduction, no

100880972

Penetration of fire-resistant assemblies 714
Protection from adjacent construction 3307.1
Rain loads 1611
Roof structures 504.3, 1509, D102.2.9
Signs, roof mounted H110
Slope, minimum . . . . . Chapter 15
Solar systems, rooftop-mounted . . . 3111.1, 3111.3.2
Snow load 1608
Trusses 2211.1.3, 2303.4, 2308.7.13
Ventilation 1202.2
Wood (see ROOF CONSTRUCTION, WOOD)
ROOF CONSTRUCTION, WOOD 602.4, 602.5
Anchorage to walls 1604.8.2
Attic access 1208.2
Ceiling joists 2308.7.1
Diaphragms 2305.1, 2306.2
Fastening requirements 2304.10
Fire-retardant-treated . . . . . Table 601, 603.1(1)
Framing 2304.11.4, 2308.7
Rafters 2306.1.1, 2308.7.2
Sheathing 2304.8.2, 2308.7.10
Trusses 2303.4, 2308.7.13
Ventilation, attic 1202.2
Wind uplift 2308.7.5
ROOF COVERINGS 1507
Asphalt shingles 1507.2
Built up 1507.10
Clay tile 1507.3
Concrete tile 1507.3
Fire district D102.2.4
Fire resistance . . . . . 603.1(3), 1505
Flashing 1503.2, 1503.5, 1507.2.8, 1507.3.9, 1507.5.7, 1507.7.7, 1507.8.8, 1507.9.9
Impact resistance 1504.7
Insulation 1508
Liquid-applied coating 1507.15
Membrane 3102
Metal roof panels 1507.4
Metal roof shingles 1507.5
Modified bitumen 1507.11
Photovoltaic roof panels, building-integrated 1507.18
Photovoltaic shingles 1507.17
Plastics, light-transmitting panels 2609
Reroofing 202, 1511
Roll 1507.6
Roof recover 202, 1511.3.1
Roof replacement 202, 1511.3
Single-ply membrane 202, 1507.12
Slate shingles 1507.7
Sprayed polyurethane foam 1507.14
Thermoplastic single-ply 1507.13
Wind loads 1504.1, 1609.5
Wood shakes 1507.9
Wood shingles 1507.8
ROOF DECK 202
ROOF DRAINAGE 1502
Scuppers 202, 1502.3
ROOF, OCCUPIED 503.1.4
ROOF REPLACEMENT/RECOVERING 1511.3
ROOF STRUCTURE (see ROOF ASSEMBLIES AND ROOFTOP STRUCTURES)
ROOM DIMENSIONS 1208
ROOMING HOUSE (see BOARDING HOUSE) . . . 310

S

SAFEGUARDS
DURING CONSTRUCTION . . . . . Chapter 33
Accessibility 1103.2.5
Adjoining property protection 3307
Construction 3302
Demolition 3303
Excavations 1804.1
Fire extinguishers 3309
Fire watch 3314
Means of egress 3310
Protection of pedestrians 3306
Sanitary facilities 3305
Site work 3304
Sprinkler protection 3312
Standpipes 3308.1.1, 3311
Temporary use of streets, alleys and public property 3308
SAFETY GLAZING 716.1.2.1, 2406
SCHOOLS (see EDUCATIONAL OCCUPANCY)
SEATING
Accessibility 1108.2, 1109.11
Tables 1029.9, 1029.13.1
SEATING, FIXED 1029
Accessibility 1108.2, 1109.11
Aisles 1029.9, 1029.13
Bleachers (see BLEACHERS)
Grandstands (see GRANDSTANDS)
Guards 1029.17
Live load . . . . . Table 1607.1
Occupant load 1004.6
Stability 1029.15
Temporary 108
SECURITY GLAZING 408.7
SECURITY GRILLES 402.8.8, 1010.1.4.5

INTERNATIONAL CODE COUNCIL®
Copyright © 2019 ICC & NYSDOS. ALL RIGHTS RESERVED. Accessed by Lauren Gualdino (lgualdino@briarcliffmanor.org), (-) Order Number #100880972 on May 08, 2020 07:05 AM (PDT) pursuant to License Agreement with ICC & NYSDOS. No further reproduction, no

100880972

SEISMIC 1613
Cold-formed steel 2210.2, 2211.1.1
Construction documents . . . 107, 1603.1.5, 1603.1.9
Earthquake recording equipment. . . . . Appendix L
Fire resistance 704.12
Geotechnical investigation. . . . 1803.5.11, 1803.5.12
Glazing. 2404
Loads 1613
Mapped acceleration parameters . . . . . 1613.2.1, Figures 1613.2.1(1) and 1613.2.1(2)
Masonry 2106
Membrane structure. 3102.7
Seismic design category 202, 1613.2.5
Seismic detailing 1604.9
Site class 202, 1613.2.2
Site coefficients 202, 1613.2.4
Special inspection 1705.12
Statement of special inspections 1704.3.2
Steel. 2205.2, 2206.2
Structural observations 1704.6.2
Structural testing 1705.13
Wood 2305, 2308.6.6, 2308.6.8, 2308.6.10
SERVICE SINKS . . . . . 1109.3, Table 2902.1
SERVICE STATION (see MOTOR FUEL-DISPENSING FACILITIES)
SHAFT (see SHAFT ENCLOSURE AND VERTICAL OPENING PROTECTION) 202
SHAFT ENCLOSURE (see VERTICAL OPENING PROTECTION) 713
Continuity. 713.5, 713.11, 713.12
Elevators 713.14
Exceptions 713.2, 1019, 1023
Exterior walls 713.6
Fire-resistance rating 707.3.1, 713.4
Group I-3 . . . . . 408.5
High-rise buildings 403.2.1.2, 403.2.3, 403.3.1.1, 403.5.1
Joints 713.9, 715
Materials 713.3
Opening protection 713.8, 713.10, 714, 717.5.3
Penetrations. 713.8
Refuse and laundry chutes 713.13
Required 713.1
SHEAR WALL
Gypsum board and plaster 2505
Masonry 202
Wood 202, 2305.1, 2306.3
SHEATHING
Clearance from earth 2304.12.1.2
Fastening 2304.10
Fiberboard . . . . . Table 2306.3(2)
Floor. 2304.8, 2308.4.7
Gypsum . . . . . Table 2506.2, 2508
Moisture protection. 2304.12.1.2
Roof 2304.8
Roof sheathing 2308.7.10
Wall 2304.6, 2308.5.11
Wood structural panels 2303.1.5
SHOPPING CENTERS (see COVERED AND OPEN MALL BUILDINGS)
SHOTCRETE 1908
SHUTTERS, FIRE (see OPENING PROTECTIVES). 716.2.1
SIDEWALKS. G801.4
Live loads . . . . . Table 1607.1
SIGNS . . . . . 3107, Appendix H
Accessibility 1013.4, 1110, E106.4.9, E107, E109.2.2
Accessible means of egress . . . . . 1009.8.2, 1009.9 through 1009.11
Animated devices. H108
Construction H105, H107
Covered and open mall building. 402.6.4
Doors 1010.1.9.4, 1010.1.9.8, 1010.1.9.9
Electrical. H106
Elevators 1109.7, 1111.2, 3002.3, 3007.6.5, 3008.6.5
Encroachment, public right-of-way. 3202.3.1
Exit 1013, 2702.2
Ground H109
Height limitation H109.1, H112.4
Illumination H106.1
Luminous 403.5.5, 1013.5, 1025
Marquee H113
Obstruction. 1003.3.2, 1003.3.3, H103
Occupant load, assembly. 1004.9
Parking spaces. 1111.1
Plastic. 2611, D102.2.10
Portable H114
Projecting H112
Protruding objects 1003.3
Roof H110
Stairway identification 1023.8, 1023.9, 1111.2, 1111.3
Standpipe control valve 905.7.1
Toilet room 1111.1, 1111.2, 2902.4, 2902.4.1
Transportation E108.4, E109.2.2
Variable message 1111.4
Walls 703.6, H111
SITE DRAWINGS 106.2.6
SITE WORK 3304
SKYLIGHTS 2405, 3106.3
Light, required 1204.2
Loads 2404

INTERNATIONAL CODE COUNCIL®
Copyright © 2019 ICC & NYSDOS. ALL RIGHTS RESERVED. Accessed by Lauren Gualdino (lgualdino@briarcliffmanor.org), (-) Order Number #100880972 on May 08, 2020 07:05 AM (PDT) pursuant to License Agreement with ICC & NYSDOS. No further reproduction, no

100880972

Plastic 2610
Protection from adjacent construction 3307.1
Vertical opening protective 712.1.15
SLAB ON GROUND, CONCRETE 1907, 2304.12.1.4
SLATE SHINGLES 1507.7
SLEEPING UNITS 202
Accessibility 1103.2.11, 1103.2.13, 1105.1.6, 1106.2, 1106.7.2, 1107
Cooking appliances 420.10, 420.10.2
Group I 308
Group R 310
Scoping 101.2
Separation 420.2, 420.3
SMOKE ALARMS
Bathrooms 907.2.11.4
Cooking appliances 907.2.11.3
Live/work unit 419.5, 907.2.11.2
Multiple-station 907.2.11
Residential aircraft hangars 412.4.3, 412.4.4, 907.2.21
Residential occupancies 420.5, 907.2.11.1, 907.2.11.2
Single-station 907.2.11
SMOKE BARRIERS 202
Construction 407.5, 709.4, 909.5
Doors 709.5, 716.2.2.1, 909.5.3
Fire-resistance rating 703, 709.3
Glazing, rated 716.3.4
Joints 709.7, 715
Marking 703.6
Materials 709.2
Opening protection 709.5, 714.4, 714.5.4, 716, 717.5.5, 909.5.3
Penetrations 709.6, 714
Smoke control 909.5
Special provisions
Ambulatory care facilities 422.2, 422.3, 709.5.1
Group I-1 . . . . . 420.6, 709.5.1
Group I-2 . . . . . 407.5
Group I-3 . . . . . 408.6, 408.7
Underground 405.4.2, 405.4.3
SMOKE COMPARTMENT 407, 408, 422
Refuge area (see REFUGE AREA)
SMOKE CONTROL 909
Amusement buildings, special 411.1
Atrium buildings 404.5
Covered and open mall building 402.7.2
Group I-3 . . . . . 408.9
High-rise (smoke removal) 403.4.7, 1023.11
Special inspections 1705.18
Stages 410.2.7.2
Standby power systems 909.11, 909.20.6.2, 2702.2
Underground buildings 405.5
SMOKE DAMPERS . . . . . 717.2 through 717.5
SMOKE DETECTION SYSTEM (see FIRE ALARM AND SMOKE DETECTION SYSTEMS) 907
SMOKE DETECTORS
Covered and open mall building 402.8.6.1, 907.2.20
High-rise buildings 403.4.1, 907.2.13
HPM 415.11.9.3
Institutional I-2 . . . . . 407.8
Smoke-activated doors 716.2.6.6
Special amusement buildings 411.4
Underground buildings 907.2.18
SMOKE DEVELOPMENT . . . . . 202, 803.1.2, Table 803.13
SMOKE EXHAUST SYSTEMS
Underground buildings 405.5, 907.2.18, 909.2
SMOKE PARTITIONS 202, 710
Continuity 710.4
Doors 710.5
Ducts and air transfer openings 710.8
Fire-resistance rating 710.3
Joints 710.7
Marking 703.6
Materials 710.2
Opening protection 710.5, 717.5.7
Penetrations 710.6
Special provisions
Atriums 404.6
Group I-2 . . . . . 407.3
SMOKE REMOVAL (High rise) 403.4.7
SMOKE VENTS 410.2.7.1, 910
SMOKEPROOF ENCLOSURES 403.5.4, 1023.11
Design 909.20
SNOW LOAD 1608
Glazing 2404
SOILS AND FOUNDATIONS (see FOUNDATION) . . . . . Chapter 18
Depth of footings 1809.4
Excavation, grading and fill . . . 1804, 3304, J106, J107
Expansive 1803.5.3, 1808.6
Flood hazard 1808.4
Footings and foundations 1808
Footings on or adjacent to slopes 1808.7, 3304.1.3
Foundation walls 1807.1.5, 3304.1.4
Geotechnical investigation 1803
Grading . . . . . 1804.4, Appendix J

INTERNATIONAL CODE COUNCIL®
Copyright © 2019 ICC & NYSDOS. ALL RIGHTS RESERVED. Accessed by Lauren Gualdino (lgualdino@briarcliffmanor.org), (-) Order Number #100880972 on May 08, 2020 07:05 AM (PDT) pursuant to License Agreement with ICC & NYSDOS. No further reproduction, no

100880972

Load-bearing values 1806
Soil boring and sampling 1803.4
Soil lateral load 1610
Special inspection 1705.6
SOLAR ENERGY SYSTEMS 3111
Photovoltaic systems 3111.3
Roof live load 3111.1.2
Solar thermal systems 3111.2
Wind resistance 3111.1.1
SORORITIES 310.3
SOUND-INSULATING MATERIALS (see INSULATION) 720
SOUND TRANSMISSION 1206
SPECIAL CONSTRUCTION . . . . . Chapter 31
Automatic vehicular gates 3110
Awnings and canopies (see AWNINGS and CANOPIES) 3105
Marquees (see MARQUEES) 3106
Membrane structures (see MEMBRANE STRUCTURES) 3102
New materials 1702
Pedestrian walkways and tunnels (see WALKWAYS and TUNNELED WALKWAYS) 3104
Signs (see SIGNS) 3107
Solar energy systems 3111
Swimming pool enclosures and safety devices (see SWIMMING POOL) 3109
Telecommunication and broadcast towers (see TOWERS) 3108
Temporary structures (see TEMPORARY STRUCTURES) 3103
SPECIAL INSPECTIONS AND TESTS (see INSPECTIONS) . . . . . Chapter 17
Alternative test procedure 1707
Approvals 1703
Continuous special inspection 202
Contractor responsibilities 1704.4
Design strengths of materials 1706
General 1701
In-situ load tests 1708
Periodic special inspection 202
Preconstruction load tests 1709
Special inspections 1705
Statement of special inspections 1704.3
Structural observations 1704.6
Testing seismic resistance 1705.13
SPECIAL INSPECTOR 202
Qualifications 1704.2.1
SPIRAL STAIRWAYS 1011.10
Construction 1011.2, 1011.3, 1011.10
Exceptions 1011.5.2, 1011.5.3, 1011.5.5.3, 1011.10
Group I-3 . . . . . 408.3.4
Live/work 419.3.2
Stages 410.5.3.4
SPORTS ACTIVITY, AREA OF (see RECREATIONAL FACILITIES) 202, 1110.4.1
SPRAY APPLICATION OF FLAMMABLE FINISHES 416
SPRAYED FIRE-RESISTANT MATERIALS 202
Application 704.13
Inspection 1705.14, 1705.15
Steel column calculated fire resistance 722.5.2.2
SPRINKLER SYSTEM, AUTOMATIC 903, 3312
Exempt locations 903.3.1.1.1, 903.3.1.1.2
Fire department location 912
Limited area sprinkler systems 903.3.8
Signs 914.2
SPRINKLER SYSTEM, REQUIRED 903
Aircraft related 412.2.4, 412.3.6, 412.4.5
Ambulatory care facilities 422.4, 903.2.2
Amusement buildings, special 411.3
Assembly 903.2.1, 1029.6.2.3
Atrium 404.3
Basements 903.2.11.1
Building area 506.2
Children's play structures 424.3
Combustible storage 413
Commercial kitchen 903.2.11.5
Construction 903.2.12
Covered and open mall building 402.5
Drying rooms 417.4
Education 903.2.3
Exempt locations 903.3.1.1.1, 903.3.1.1.2
Factory 903.2.4
Fire areas 707.3.10
Hazardous materials . . . . . Table 414.2.5(1), Table 414.2.5(2), 903.2.11.4
Hazardous occupancies 415.4, 415.11.6.4, 415.11.11, 705.8.1, 903.2.5
Height increase . . . . . Table 504.3
High-rise buildings 403.3, 903.2.11.3
Incidental uses . . . . . Table 509
Institutional 407.7, 408.11, 420.5, 903.2.6, 903.3.2
Laundry chutes, refuse chutes, termination rooms and incinerator rooms 713.13, 903.2.11.2
Live/work units 419.5, 903.2.8
Mercantile 903.2.7
Mezzanines 505.2.1, 505.2.3, 505.3.2
Multistory buildings 903.2.11.3
Occupied roofs 503.1.4

INTERNATIONAL CODE COUNCIL®
Copyright © 2019 ICC & NYSDOS. ALL RIGHTS RESERVED. Accessed by Lauren Gualdino (lgualdino@briarcliffmanor.org), (-) Order Number #100880972 on May 08, 2020 07:05 AM (PDT) pursuant to License Agreement with ICC & NYSDOS. No further reproduction, no

100880972

Parking garages 406.6.3, 903.2.9.1, 903.2.10.1
Residential 420.4, 903.2.8, 903.3.2
Special amusement buildings 411.3
Spray finishing booth 416.5
Stages 410.6
Storage 903.2.9, 903.2.10
Supervision
(see SPRINKLER SYSTEM, SUPERVISION) 903.4
Underground buildings 405.3, 903.2.11.1
Unlimited area 507
SPRINKLER SYSTEM, SUPERVISION 903.4
Service 901.6
Underground buildings 405.3
STAGES AND PLATFORMS 303, 410
Dressing rooms 410.4
Fire barrier wall 410.4.1, 410.4.2
Floor finish and floor covering 410.2, 410.3, 804.4, 805.1
Horizontal assembly 410.4.1, 410.4.2
Means of egress 410.5
Platform, temporary 410.3.1
Platform construction . . . . . 410.3, 603.1(12)
Proscenium curtain 410.2.5
Proscenium wall 410.2.4
Roof vents 410.2.7.1
Scenery 410.2.6
Smoke control 410.2.7.2
Sprinkler protection 410.6
Stage construction . . . . . 410.2, 603.1(12)
Standpipes 410.7, 905.3.4
Technical production areas 202, 410.2.2, 410.5.3
Ventilation 410.2.7
STAIRWAY
(see ALTERNATING TREAD DEVICES, SPIRAL STAIRWAYS, STAIRWAY CONSTRUCTION and STAIRWAY ENCLOSURE)
STAIRWAY CONSTRUCTION
Alternating tread 1011.14
Circular (see Curved)
Construction 1011.7
Curved 1011.4, 1011.9
Discharge barrier 1023.8
During construction 3310.1
Elevators 1011.12.1, 1023.4, 1023.10, 3002.7
Enclosure under 1011.7.3, 1011.7.4
Exit access 1019
Exterior exit 1027, 1028.1
Fireblocking 718.2.4
Guards 1015.2, 1015.3, 1607.7
Handrails 1011.11, 1014, 1607.7
Headroom 1011.3
Interior exit 1023
Illumination 1008.2, 1204.4, 1204.5
Ladders 408.3.5, 410.5.3.4, 1011.15, 1011.16
Landings 1011.6, 1011.8
Live load . . . . . Table 1607.1, 1607.8
Locking 1010.1.9.12
Luminous 403.5.5, 411.6.1, 1025
Roof access 1011.12
Seismic anchorage 2308.4.10
Spiral
(see SPIRAL STAIRWAYS) 408.3.4, 410.5.3.4, 419.3.2, 1011.10
Stepped aisles 1029.14.2
Transitions 1029.9.7, 1029.9.8, 1029.10
Travel distance 1017.3.1
Treads and risers 1011.4, 1011.5
Width/capacity 1005.3.1, 1011.2
Winders 1011.4, 1011.5, 1011.10
STAIRWAY ENCLOSURE 713.1, 1019, 1023
Accessibility 1009.3
Construction 1019, 1023.2
Discharge 1023.3.1, 1028.1
Doors 716.2.6.1, 1010.1.9.12
Elevators within 1023.4, 3002.7
Exit access 1019
Exterior walls 705.2, 707.4, 708.5, 713.6, 1023.2, 1027.6
Fire-resistant construction 1019.2, 1023.2
Group I-2 . . . . . 1019.4
Group I-3 . . . . . 408.3.8, 1019.4
High-rise 403.5
Penetrations 1023.5
Pressurization 909.6, 909.20.5, 1023.11
Smokeproof 403.5.4, 405.7.2, 909.20, 1023.11
Space below, use 1011.7.3, 1011.7.4
Ventilation 1023.6
STANDARDS (see REFERENCED STANDARDS)
STANDBY POWER 2702.1, 2702.2, 2702.4
Atriums 404.7, 2702.2
Covered and open mall buildings 402.7.3, 2702.2
Elevators 1009.4, 2702.2, 3003.1, 3007.8, 3008.8
Fuel line piping protection 2702.1.2
Hazardous occupancy 414.5.2, 415.11.10, 421.7, 2702.2
High-rise 403.4.8, 2702.2
Horizontal sliding doors 1010.1.4.3, 2702.2
Membrane structures 2702.2
Platform lifts 1009.5, 2702.2
Smoke control 909.11, 2702.2

INTERNATIONAL CODE COUNCIL®
Copyright © 2019 ICC & NYSDOS. ALL RIGHTS RESERVED. Accessed by Lauren Gualdino (lgualdino@briarcliffmanor.org), (-) Order Number #100880972 on May 08, 2020 07:05 AM (PDT) pursuant to License Agreement with ICC & NYSDOS. No further reproduction, no

100880972

Smokeproof enclosure 909.20.6.2, 2702.2
Special inspection 1705.12.6
Underground buildings 405.8, 2702.2
STANDPIPE AND HOSE SYSTEMS (see STANDPIPES, REQUIRED) 905, 3106.4, 3308.1.1, 3311
Cabinet locks 905.7.2
Dry 905.8
Hose connection location . . . . . 905.1, 905.4 through 905.6, 912
STANDPIPES, REQUIRED
Assembly 905.3.1, 905.3.2, 905.3.4
Covered and open mall buildings 402.7.1, 905.3.3
During construction 905.10, 3311
Elevators, fire service access 3007.9
Helistops 905.3.6
Marinas 905.3.7
Parking garages 406.5.8
Roof gardens and landscaped roofs 905.3.8
Stages 410.7, 905.3.4
Underground buildings 405.9, 905.3.5
STATE LAW 102.2
STEEL . . . . . Chapter 22
Bolting 2204.2
Cable structures 2208
Calculated fire resistance 722.5
Cold-formed 202, 2210, 2211
Composite structural steel and concrete 2206
Conditions of restraint 703.2.3
Decks 2210.1.1
Identification 2202
Joists 202, 2207
Open-web joist 2207
Parapet walls 1503.3, 1503.5
Protection 2203
Seismic provisions 2205.2, 2206.2, 2207.1.1, 2210.2, 2211.1.1
Special inspections 1705.3
Storage racks 2209
Structural steel 2205
Welding 2204.1
STONE VENEER 1404.7
Slab-type 1404.8
STOP WORK ORDERS 115
STORAGE OCCUPANCY (GROUP S) 311
Accessibility 1108.3
Accessory 311.1.1
Area 406.5.4, 406.5.5, 406.6.1, 503, 505, 506, 507, 508
Equipment platforms 505.2
Group provisions
Hazard storage, low, Group S-2 . . . . . 311.3
Hazard storage, moderate, Group S-1 . . . . . 311.2
Hazardous material display and storage 414.2.5
Height 406.5.4, 406.6.1, 503, 504, 505, 508, 510
Incidental uses 509
Interior finishes . . . . . Table 803.13, 804
Live loads . . . . . Table 1607.1
Means of egress
Aisles 1018.5
Stairway, exit access 1019
Travel distance 1006.3, 1016.2.1, 1017.2, 1017.2.2
Mixed occupancies 508.3, 508.4
Accessory 311.1.1, 508.2
Parking above/below 510.3, 510.4, 510.7, 510.8, 510.9
Special mixed 510.2
Occupancy exception 311.1.1
Plumbing fixtures 2902
Special provisions
Aircraft related occupancies 412
High-piled combustible 413
Parking garages 406, 510
Sprinkler protection 903.2.10
Unlimited area 507.3, 507.4, 507.5
STORM SHELTER 423
Emergency operation facilities 423.3
Education 423.4
Refuge area (see REFUGE AREA)
Risk category 1604.5.1
STRENGTH
Design requirements 1604.2
Masonry 202
Nominal 202
Required 202
STRENGTH DESIGN 202, 1604.1
Factored load 202
Limit state 202
Load combinations 1605.1
Load factor 202
Masonry 2108
STRUCTURAL DESIGN . . . . . 106.2.7, Chapter 16
Aluminum . . . . . Chapter 20
Concrete . . . . . Chapter 19
Foundations . . . . . Chapter 18
Masonry . . . . . Chapter 21
Steel . . . . . Chapter 22
Wood . . . . . Chapter 23
STRUCTURAL OBSERVATION 202, 1704.6
STUCCO 2512

INTERNATIONAL CODE COUNCIL®
Copyright © 2019 ICC & NYSDOS. ALL RIGHTS RESERVED. Accessed by Lauren Gualdino (lgualdino@briarcliffmanor.org), (-) Order Number #100880972 on May 08, 2020 07:05 AM (PDT) pursuant to License Agreement with ICC & NYSDOS. No further reproduction, no

100880972

SUSCEPTIBLE BAY
Definition 202
Ponding instability 1611.2
SWIMMING POOL 3109
Accessibility 1110.2, 1110.3, 1110.4.13
Flood provisions G801.5
Glass 2406.4
Toilet facilities for public pools . . . . . Table 2902.1, 2902.1.1

T

TECHNICAL PRODUCTION AREAS 410.2.2, 410.5.3
TELEPHONE EXCHANGES 304
TELESCOPIC SEATING
(see FOLDING AND TELESCOPIC SEATING)
TEMPORARY STRUCTURES 3103
Certificate of occupancy 105.5
Conformance 3103.1.1
Construction documents 3103.2
Encroachment, public rights-of-way 3202.3
Flood provisions G901
Means of egress 3103.4
Permit 105.2, 3103.1.2
Power, temporary 107
TENANT SEPARATION
Covered and open mall building 402.4.2.1, 708.1
TENTS (see TEMPORARY STRUCTURES)
TERMITES, PROTECTION FROM 2304.12
TERRA COTTA 1404.9
TESTING
Automatic fire-extinguishing systems 904.4
Automatic water mist systems 904.11.3
Carbon dioxide systems 904.8
Clean agent system 904.10
Dry chemical systems 904.6
Emergency and standby power 2702.4
Fire alarm systems 907.7, 907.8
Fire pumps 913.5
Fire-resistant materials 703.2
Foam systems 904.7
Glazing 2406, 2408.2.1
Halon systems 904.9
Personnel and material hoists 3004.4
Roof tile 1504.2.1
Seismic 1705.13
Sound transmission 1207
Smoke control 909.3, 909.5.2, 909.10.2, 909.12.1, 909.13.3, 909.18, 909.20.6.3, 909.21.7, 1705.18
Soils 1803
Sprinkler protection 903.5
Structural
(see SPECIAL INSPECTIONS AND TESTS)
Wet chemical systems 904.5
THEATERS
[see ASSEMBLY OCCUPANCY (GROUP A, PROJECTION ROOMS and STAGES AND PLATFORMS)] 303.2
THERMAL BARRIER, FOAM PLASTIC INSULATION . . . 2603.4, 2603.5.2
THERMAL-INSULATING MATERIALS
(see INSULATION) 719
TILE 202
Ceramic (see CERAMIC TILE)
Fire resistance, clay or shale 721.1
TOILETS and TOILET ROOMS . . . . Chapter 29, 3305
Accessible 1109.2, 1109.3, 1607.8.2
Construction/finish materials 1209
Door locking 1109.2.1.7, 2902.3.5
Family or assisted-use 1109.2.1, 2902.1.3, 2902.2.1
Fixture count . . . . . Table 2902.1
Grab bar live loads 1607.8.2
Lavatory distribution 2902.1.4
Location 2902.3.1, 2902.3.2, 2902.3.3, 2903.3.6
Partitions 1209.3
Privacy 1209.3
Public facilities 2902.3
Signs 1111.1, 1111.2, 2902.4, 2902.4.1
Single user 2902.1.3
Ventilation 1202.5.2.1
TORNADO SHELTER (see STORM SHELTER)
TOWERS
Airport traffic control 412.2
Cooling 1510.4
Location and access 3108.2
Radio 3108
Television 3108
TOXIC MATERIALS
[see HIGH-HAZARD OCCUPANCY (GROUP H)]
Classification 307.6, 414, 415
Gas detection system 415.11.7, 421.5, 908.3
TRANSPORTATION E108, E109, E110
TRAVEL DISTANCE
Area of refuge 1009.6.1
Assembly seating 1029.7
Atrium 404.9
Balcony, exterior 1017.2.1
Care suites (Group I-2) 407.4.2, 407.4.4
Common path of travel 1016.2.1
Drinking fountains 2902.5

INTERNATIONAL CODE COUNCIL®
Copyright © 2019 ICC & NYSDOS. ALL RIGHTS RESERVED. Accessed by Lauren Gualdino (lgualdino@briarcliffmanor.org), (-) Order Number #100880972 on May 08, 2020 07:05 AM (PDT) pursuant to License Agreement with ICC & NYSDOS. No further reproduction, no

100880972

Exit access 1017.2
Mall 402.8.5, 402.8.6
Measurement 1017.3
Refrigeration machinery/ refrigerated rooms 1006.2.2.2, 1006.2.2.3
Smoke compartments (Group I-2 and I-3) 407.5, 408.6, 408.9
Special amusement building 411.3
Stories with one exit 1006.3.3
Toilet facilities 2902.3.2, 2902.3.3

TREADS, STAIR (see STAIRWAY CONSTRUCTION)
Concentrated live load . . . . . Table 1607.1

TREATED WOOD 202
Fire-retardant-treated wood 2303.2
Pressure-treated wood 2303.1.9
Stress adjustments 2306.1.3

TRUSSES
Cold-formed steel 2211.1.3
Fire resistance 704.5
Materials . . . . . Chapter 6
Metal-plate-connected wood 2303.4.6
Wood 2303.4

TSUNAMI
Flood hazard . . . . . Appendix M
Loads 1615

TUNNELED WALKWAY 3104, 3202.1
TURNSTILES 1010.3

U

UNDERGROUND BUILDINGS 405
Alarms and detection 405.6
Compartmentation 405.4
Construction type 405.2
Elevators 405.4.3
Emergency power loads 405.8, 2702.2
Means of egress 405.7
Smoke barrier 405.4.2, 405.4.3
Smoke exhaust/control 405.5
Smokeproof enclosure 405.7.2, 1023.11
Sprinkler protection 405.3
Standby power 405.8, 2702.2
Standpipe system 405.9, 905.3.5

UNDERLAYMENT . . . . . 202, 1507.1.1, 1507.2.3, 1507.3.3, 1507.4.5, 1507.5.3, 1507.6.3, 1507.7.3, Table 1507.8, 1507.8.3, 1507.9.3, 1507.17.3, 1507.18.3
Application 1507.1.1, 1507.3.3, 1507.18.4
Ice barrier 1507.1.2, 1507.2.7, 1507.5.4, 1507.6.4, 1507.7.4, 1507.8.4, 1507.9.4, 1507.17.4

UNLIMITED AREA BUILDINGS 507
UNSAFE STRUCTURES AND EQUIPMENT (see STRUCTURES, UNSAFE) 115
Appeals . . . . . 113, Appendix B
Revocation of permit 105.2.5
Stop work orders 115
Utilities disconnection 107.3

UNSTABLE MATERIALS . . . . 307.3, Table 414.2.5(1), Table 414.5.1, Table 415.6.2, 415.7.1, 415.9

UNUSABLE SPACE 712.3.3
USE AND OCCUPANCY . . . . . Chapter 3
Accessory 508.2
Classification 302.1
Detailed requirements based on occupancy and use . . . . . Chapter 4
Incidental uses . . . . . 509, Table 509
Mixed 508.3, 508.4
Use designation 302.2

UTILITIES 112
Service connection 107.1
Service disconnection 107.3
Temporary connection 107.2

UTILITY AND MISCELLANEOUS OCCUPANCY (GROUP U) 312
Accessibility 1103.2.4, 1104.3.1
Agricultural buildings . . . . . Appendix C
Area 503, 505, 506, 507, 508
Flood provisions G1001
Height 503, 504, 508
Incidental uses 509
Live loads . . . . . Table 1607.1
Means of egress
Exit signs 1013.1
Stairway, exit access 1019
Mixed occupancies 508.3, 508.4
Special provisions
Private garages and carports 406.3
Residential aircraft hangars 412.4
Sprinkler protection 903.2.11
Travel distance 1016.2.1, 1017.1, 1006.3

V

VEHICLE BARRIER SYSTEMS 202, 406.4.2, 1607.9
VEHICLE SHOW ROOMS 304
VEHICULAR FUELING 406.7
VEHICULAR GATES 3110
VEHICULAR REPAIR 406.8

INTERNATIONAL CODE COUNCIL®
Copyright © 2019 ICC & NYSDOS. ALL RIGHTS RESERVED. Accessed by Lauren Gualdino (lgualdino@briarcliffmanor.org), (-) Order Number #100880972 on May 08, 2020 07:05 AM (PDT) pursuant to License Agreement with ICC & NYSDOS. No further reproduction, no

100880972

VENEER
Cement plaster 1404.15
Fastening 1404.17
Fiber-cement siding 1404.16
Glazing 1404.12
Masonry, adhered 1404.10, 2101.2.1, 2103.2.4
Masonry, anchored 1404.6, 2101.2.1
Metal 1404.11
Plastic 2605
Slab-type 1404.8
Stone 1404.7
Terra cotta 1404.9
Vinyl 1404.14
Wood 1404.5
VENTILATION (see MECHANICAL) 101.4.2
Aircraft paint hangars 412.5.6
Attic 1202.2, 1503.4
Bathrooms 1202.4.2.1
Crawl space 1202.4
Exhaust, hazardous 1202.6
Exhaust, HPM 415.11.10.2
Exit enclosure 1023.6
Fabrication areas, HPM 415.11.1.6
Hazardous 414.3, 415.9.1.7, 415.11.1.6, 415.11.5.8, 415.11.6.4, 415.11.7, 415.11.9.3
High-rise stairways 1023.11
HPM service corridors 415.11.3.2
Live/work unit 419.8
Mechanical 1202.1
Natural 1202.5
Parking 406.5.2, 406.5.5, 406.5.10, 406.6.2
Projection rooms 409.3
Repair garages 406.8.1
Roof 1202.2
Smoke exhaust 910
Smoke removal, high-rise buildings 403.4.7
Smokeproof enclosures 909.20.3, 909.20.4, 909.20.6, 1023.11
Spray rooms and spaces 416.2.2, 416.3
Stages 410.2.5, 410.2.7
Under-floor ventilation 1202.4
VENTS, PENETRATION PROTECTION 714
VERMICULITE, FIRE RESISTANT 721
VERTICAL OPENING PROTECTION
Atriums 404.6
Duct penetrations 717.1
Elevators 713.14, 3007.6.1, 3008.6.1
Exceptions 1019, 1023.2
Group I-3 . . . . . 408.5
High-rise 403.2.1.2, 403.2.3, 403.5.1
Live/work units 419.4
Open parking garages 406.5.9
Permitted vertical openings 712
Shaft enclosure 713, 1019, 1023.2
VESTIBULES, EXIT DISCHARGE 1028.1
VINYL
Expanded 202, 803.7, 803.8
Rigid 1404.14
VIOLATIONS 105.7
VOICE ALARM (see ALARMS, VOICE)

W

WALKWAY 3104
During construction 3306
Encroachment, public right-of-way 3202.3.4
Fire resistance . . . . . Table 601
Live load . . . . . Table 1607.1
Materials per construction type . . . . . Chapter 6
Opening protection 716, 717
WALL, EXTERIOR 705, 1401
Bearing . . . . . Chapter 6
Combustible wall covering 1405
Coverings 1404
Drawings 106
Exterior Insulation and Finish Systems (EIFS) 1407
Exterior structural members 704.10
Fire district D102.1, D102.2.6
Fire-resistance ratings . . . . . Table 602, 703, 705.5, 706.5.1, 707.4, 1402.4
Flashing, veneered walls 1404.4, 1404.10.1
Foam plastic insulation 2603.4.1.4, 2603.5
Glazing, rated 715.5
Joints 705.9, 714
Light-transmitting plastic panels 2607
Materials 705.4, 1403.1, 1405
Metal Composite Materials (MCM) 1406
Nonbearing . . . . . Chapter 6
Opening protection 705.8, 705.10, 716.2.5.4
Parapets 705.11
Performance requirements 1402
Projections 705.2
Structural stability 705.6
Vapor retarders 1404.3
Veneer (see VENEER)
Weather resistance 1402.2, 1404.2, 1406.6, 1407.4
Weather-resistant barriers 1404.2

INTERNATIONAL CODE COUNCIL®
Copyright © 2019 ICC & NYSDOS. ALL RIGHTS RESERVED. Accessed by Lauren Gualdino (lgualdino@briarcliffmanor.org), (-) Order Number #100880972 on May 08, 2020 07:05 AM (PDT) pursuant to License Agreement with ICC & NYSDOS. No further reproduction, no

100880972

WALL, FIRE (see FIRE WALLS)
WALL, FOUNDATION (see FOUNDATION)
WALL, INTERIOR
Finishes 803, 1209.2
Opening protection 716, 717
WALL, INTERIOR NONBEARING (see PARTITIONS)
WALL, MASONRY 202
Wood contact 2304.12.1.3, 2304.12.2.1
WALL, PARAPET 705.11, 1503.3, 2109.2.4.3
WALL, PARTY (see FIRE WALLS)
WALL, PENETRATIONS 714.4
WALL, RETAINING (see RETAINING WALL)
WALL, VENEERED (see VENEER) . . . . . Chapter 14
WALL, WOOD CONSTRUCTION
Bracing 2308.6
Cutting, notching, boring 2308.5.9
Exterior framing 2308.5
Fastening schedule . . . . . Table 2304.10.1
Framing 2304.3, 2308.5
Interior bearing partition 2308.5.4
Interior nonbearing partition 2308.5.1
Openings 2308.5.5
Shear walls 2305.1, 2306.3
Sheathing (see SHEATHING)
Studs 2308.5.1
Top plates 2308.5.3.2
WATER-REACTIVE MATERIALS . . . . Table 307.1(1), 307.4, 307.5. 415.8.4
WEATHER PROTECTION
Exterior walls 1404.2
Roofs 1503
WELDING 2204.1
Materials, verification of steel reinforcement 1705.3.2
Special inspections . . . 1705.2, 1705.3.1, 1705.12.3
Splices of reinforcement in masonry 2107.3, 2108.3
WIND LOAD 1609
Basic design wind speed 1609.3
Construction documents 107, 1603.1.4
Exposure category 1609.4
Glazing 1609.2, 2404
Hurricane-prone regions 202
Masonry, empirical design 2109.1.1
Nominal design wind speed 1609.3.1
Roofs 1504.1, 1609.5, 2308.7.5
Seismic detailing required 1604.10
Special inspection 1705.11
Statement of special inspections 1704.3
Structural observation 1704.6.2
Wind tunnel testing 1504.2.1.2, 1609.1.1
Windborne debris region 202
WINDERS, STAIR (see STAIRWAY CONSTRUCTION)
WINDOW
Accessibility 1109.13.1
Emergency egress 1030
Exterior, structural testing 1709.5
Fire (see OPENING PROTECTIVES) 716.2, 716.2.8
Glass (see GLAZING) 1404.13
Guards 1015.8
Required light 1204.1, 1204.2
Wells 1030.5
WIRES, PENETRATION PROTECTION 714
WOOD . . . . . Chapter 23
Allowable stress design 2306
Bracing, walls 2308.6
Calculated fire resistance 722.6
Ceiling framing 2308.7
Connectors and fasteners 2304.10
Contacting concrete, masonry or earth 2304.12.1.3, 2304.12.1.4, 2304.12.2.1, 2304.12.2.2, 2304.12.3
Decay, protection against 2304.12
Diaphragms 2305.1, 2305.2, 2306.2
Draftstopping 718.3, 718.4
End-jointed lumber 2303.1.1.2
Fiberboard . . . . . 2303.1.5, Table 2306.3(2)
Fireblocking 718.2
Fire-retardant treated 2303.2
Floor and roof framing (see FLOOR CONSTRUCTION, WOOD) 2304.4
Floor sheathing 2304.8
Foundation 1807.1.4, 2308.6.7.4
Grade, lumber 2303.1.1
Hardboard 2303.1.7
Heavy timber construction 602.4, 2304.11
Hurricane shutters 1609.2
I-joist 2303.1.2
Inspection, special 1705.5, 1705.11.1, 1705.12.2
Lateral force-resisting systems 2305
Light-frame construction, conventional 2308
Load and resistance factor design 2307
Moisture content 2303.1.9.2, 2303.2.6
Nails and staples 2303.6
Plywood, hardwood 2303.3
Preservative treated 1402.5, 1402.6, 2303.1.9
Roof framing (see ROOF CONSTRUCTION, WOOD) 2304.4
Roof sheathing 2304.8

INTERNATIONAL CODE COUNCIL®
Copyright © 2019 ICC & NYSDOS. ALL RIGHTS RESERVED. Accessed by Lauren Gualdino (lgualdino@briarcliffmanor.org), (-) Order Number #100880972 on May 08, 2020 07:05 AM (PDT) pursuant to License Agreement with ICC & NYSDOS. No further reproduction, no

100880972

Seismic provisions 2305, 2306, 2308.6.6, 2308.6.8, 2308.6.10
Shear walls 2305, 2306.3
Standards and quality, minimum 2303
Structural panels 202, 2303.1.5
Supporting concrete or masonry 2304.13
Termite, protection against 2304.12
Trusses 2303.4
Veneer . . . . . Chapter 14
Wall framing (see WALL, WOOD CONSTRUCTION) . . . 2304.3
Wall sheathing, exterior 2304.6
Wood Frame Construction Manual 2309
WOOD SHINGLES AND SHAKES 1507.8, 1507.9
WOOD STRUCTURAL PANELS (see WOOD) 202, 2303.1.5
Bracing 2308.6
Decorative 2303.3
Diaphragms 2305.2, 2306.2
Fastening 2304.10
Fire-retardant-treated 2303.2
Performance category 202
Quality 2303.1.5
Roof sheathing 2304.8, 2308.7.10
Seismic shear panels 2305.1, 2308.6.6.2
Shear walls 2306.3
Sheathing 2304.6.1
Standards 2306.1
Subfloors 804.4
Veneer 1404.5

Y

YARDS OR COURTS 1205
Exit discharge 1028.4
Group I-2 . . . . . 407.10
Group I-3 . . . . . 408.3.6, 408.6.2
Light, natural 1204
Occupant load 1004.7
Parking garage, open 406.5.5
Unlimited area building 507.2, 507.2.1

INTERNATIONAL CODE COUNCIL®
Copyright © 2019 ICC & NYSDOS. ALL RIGHTS RESERVED. Accessed by Lauren Gualdino (lgualdino@briarcliffmanor.org), (-) Order Number #100880972 on May 08, 2020 07:05 AM (PDT) pursuant to License Agreement with ICC & NYSDOS. No further reproduction, no

100880972

INTERNATIONAL CODE COUNCIL®
Copyright © 2019 ICC & NYSDOS. ALL RIGHTS RESERVED. Accessed by Lauren Gualdino (lgualdino@briarcliffmanor.org), (-) Order Number #100880972 on May 08, 2020 07:05 AM (PDT) pursuant to License Agreement with ICC & NYSDOS. No further reproduction, no

ICC INTERNATIONAL CODE COUNCIL®

People Helping People Build a Safer World®



Helpful tools for Your Building Code

a. 2018 International Building Code Illustrated Handbook

An easy-to-use visual guide to the 2018 IBC, this fully-illustrated guide makes it easy to understand and apply the most critical code provisions. Covering both fire- and life-safety and structural provisions, this practical resource contains 500+ user-friendly diagrams to clarify the application and intent of the IBC.

SOFT COVER #4000S18
PDF DOWNLOAD #8950P844

b. 2018 IBC® Code and Commentary, Volumes 1 & 2 (Chapters 1–35)

This helpful set contains the full text of 2018 IBC, including tables and figures, followed by corresponding commentary at the end of each section to help code users understand the intent of the code provisions and learn how to apply them effectively. Volumes also sold separately.

SOFT COVER #3010S18
PDF DOWNLOAD #870P18
SOFT + PDF COMBO #3010SP18

c. 2018 International Building Code® Study Companion

The ideal way to master the code for everyday application or prepare for exams. The book is organized into 18 study sessions that include learning objectives, key points for review, code text, hundreds of illustrations and commentary applicable to the specific topic. It addresses fundamentals found throughout the IBC, including occupancy classification, types of construction, fire protection systems, fire-resistance-rated construction, and means of egress. The book contains 630 total study questions.

SOFT COVER #4017S18
PDF DOWNLOAD #8950P832

d. Building Codes Illustrated: A Guide to Understanding the 2018 IBC, Sixth Edition

This guide pulls out the portions of the IBC most relevant for the architect and provides an easy-to-understand interpretation in both words and illustrations. Uniquely marrying the graphic skills of bestselling author Francis D.K. Ching with the code expertise of Steven Winkel, FAIA, the guide covers: use and occupancy; building heights and areas; types of construction; fire-resistive construction; interior finishes; means of egress; accessibility; energy efficiency; roof assemblies; structural provisions; special inspections and tests; soils and foundations; building materials and systems; and more.

SOFT COVER #9024S18

e. Building Code Essentials: Based on the 2018 IBC

Explores those code provisions essential to understanding the application of the IBC in a straightforward and easy-to-read format. The user-friendly approach of the text simplifies critical concepts so that users can achieve a more complete understanding of the code's intent. Full-color illustrations, examples and simplified tables assist the reader in visualizing the code requirements. This up-to-date, step-by-step guide's topic organization reflects the intent of the IBC and facilitates understanding and application of the code provisions.

SOFT COVER #4031S18
PDF DOWNLOAD #8951P009

19-17843

Order Your Building Code Tools Today! 1-800-786-4452 | www.iccsafe.org/books

This insert is not part of the official text of the New York State Uniform Fire Prevention and Building Code or New York State Energy Conservation Construction Code.

INTERNATIONAL CODE COUNCIL®
Copyright © 2019 ICC & NYSDOS. ALL RIGHTS RESERVED. Accessed by Lauren Gualdino (lgualdino@briarcliffmanor.org), (-) Order Number #100880972 on May 08, 2020 07:05 AM (PDT) pursuant to License Agreement with ICC & NYSDOS. No further reproduction, no

100880972



ICC INTERNATIONAL CODE COUNCIL®

People Helping People Build a Safer World®

Get FREE access to hundreds of ICC resources and view the largest collection of code titles

ICC's Digital Codes Library (codes.iccsafe.org) conveniently provides access to the latest code text while on the go, at home or in the office, in an easy-to-navigate format.



Available anywhere 24/7

Use on any mobile or digital device

View over 800+ ICC titles

19-17447

Learn how to use this powerful tool at *codes.iccsafe.org*

This insert is not part of the official text of the New York State Uniform Fire Prevention and Building Code or New York State Energy Conservation Construction Code.

INTERNATIONAL CODE COUNCIL®

Copyright © 2019 ICC & NYSDOS. ALL RIGHTS RESERVED. Accessed by Lauren Gualdino (lgualdino@briarcliffmanor.org), (-) Order Number #100880972 on May 08, 2020 07:05 AM (PDT) pursuant to License Agreement with ICC & NYSDOS. No further reproduction, no

100880972

ICC Membership

An Essential Tool to advance your Building Safety Career!

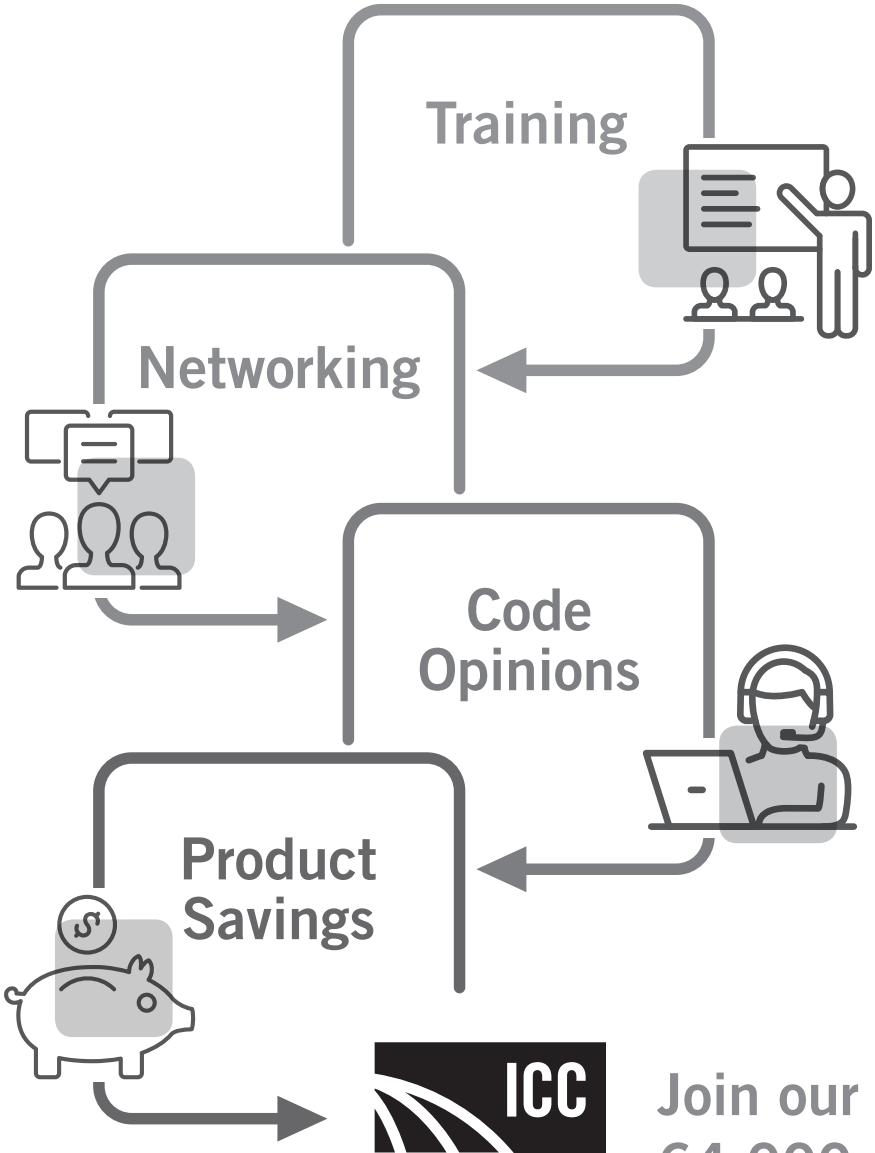

ICC
INTERNATIONAL CODE COUNCIL®

Join our 64,000+ members today!

Put the benefits of ICC Membership to work for you and your career!

Visit **www.iccsafe.org/memnow** or
call **1-888-ICC-SAFE (422-7233), ext. 33804** to learn more.

19-17662

This insert is not part of the official text of the New York State Uniform Fire Prevention and Building Code or New York State Energy Conservation Construction Code.

INTERNATIONAL CODE COUNCIL®

Copyright © 2019 ICC & NYSDOS. ALL RIGHTS RESERVED. Accessed by Lauren Gualdino (lgualdino@briarcliffmanor.org),(-) Order Number #100880972 on May 08, 2020 07:05 AM (PDT) pursuant to License Agreement with ICC & NYSDOS. No further reproduction, no



The ICC Assessment Center (formerly known as ICC Certification & Testing) provides nationally recognized credentials that demonstrate a confirmed commitment to protect public health, safety, and welfare. Raise the professionalism of your department and further your career by pursuing an ICC Certification.

ICC Certifications offer:

- Nationwide recognition
- Increased earning potential
- Career advancement
- Superior knowledge
- Validation of your expertise
- Personal and professional satisfaction

Exams are developed and maintained to the highest standards, which includes continuous peer review by national committees of experienced, practicing professionals. ICC is continually evolving exam offerings, testing options, and technology to ensure that all building and fire safety officials have access to the tools and resources needed to advance in today's fast-paced and rapidly-changing world.

Enhancing Exam Options

Effective July 2018, the Assessment Center enhanced and streamlined exam options and now offers only computer based testing (CBT) at a test site and PRONTO. We no longer offer paper/pencil exams.

Proctored Remote Online Testing Option (PRONTO)

Taking your next ICC certification exam is more convenient, more comfortable and more efficient than ever before with PRONTO.

PRONTO provides a convenient testing experience that is accessible 24 hours a day, 7 days a week, 365 days a year. Required hardware/software is minimal – you will need a webcam and microphone, as well as a reasonably recent operating system.

pronto
ICC ONLINE EXAMS

Whether testing in your office or in the comfort of your home, your ICC exam will continue to maintain its credibility while offering more convenience, allowing you to focus on achieving your professional goals. The Assessment Center continues to add exams to the PRONTO exam catalog regularly.

18-15617

Checkout all the ICC Assessment Center has to offer at iccsafe.org/certification

This insert is not part of the official text of the New York State Uniform Fire Prevention and Building Code or New York State Energy Conservation Construction Code.

INTERNATIONAL CODE COUNCIL®

Copyright © 2019 ICC & NYSDOS. ALL RIGHTS RESERVED. Accessed by Lauren Gualdino (lgualdino@briarcliffmanor.org), (-) Order Number #100880972 on May 08, 2020 07:05 AM (PDT) pursuant to License Agreement with ICC & NYSDOS. No further reproduction, no

100880972

ANDREW M. CUOMO GOVERNOR
ROSSANA ROSADO SECRETARY OF STATE



2020 RESIDENTIAL CODE of NEW YORK STATE

NEW YORK STATE OF OPPORTUNITY.

Building Standards and Codes

ICC INTERNATIONAL CODE COUNCIL®

INTERNATIONAL CODE COUNCIL®

Copyright © 2019 ICC & NYSDOS. ALL RIGHTS RESERVED. Accessed by Lauren Gualdino (lgualdino@briarcliffmanor.org), (-) Order Number #100880972 on May 08, 2020 07:05 AM (PDT) pursuant to License Agreement with ICC & NYSDOS. No further reproduction, no

100880972

ANDREW M. CUOMO GOVERNOR
ROSSANA ROSADO SECRETARY OF STATE

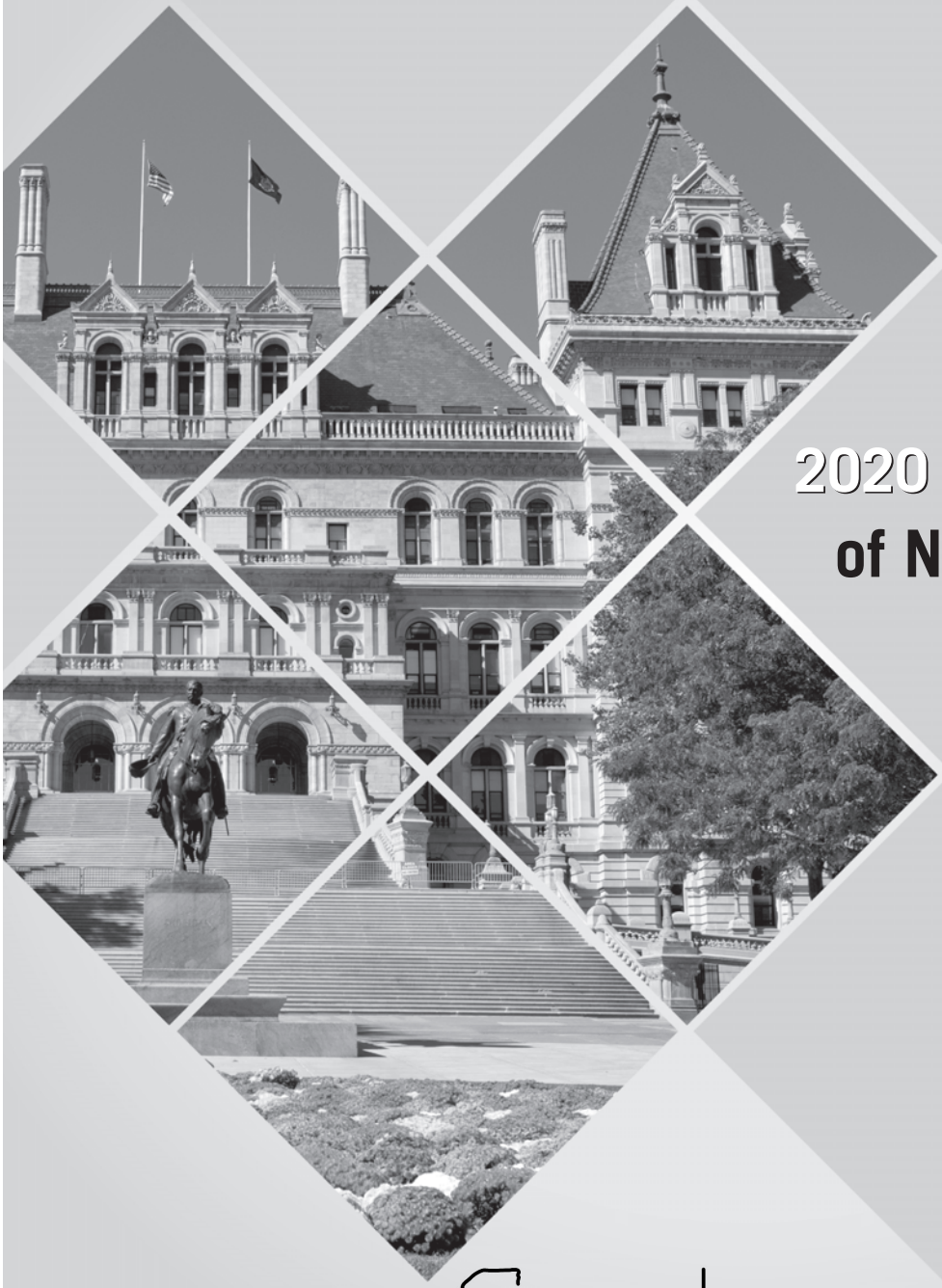

2020 RESIDENTIAL CODE of NEW YORK STATE

NEW YORK STATE OF OPPORTUNITY.

Building Standards and Codes

INTERNATIONAL CODE COUNCIL®

INTERNATIONAL CODE COUNCIL®

Copyright © 2019 ICC & NYSDOS. ALL RIGHTS RESERVED. Accessed by Lauren Gualdino (lgualdino@briarcliffmanor.org), (-) Order Number #100880972 on May 08, 2020 07:05 AM (PDT) pursuant to License Agreement with ICC & NYSDOS. No further reproduction, no

100880972

2020 Residential Code of New York State

Publication Date: November 2019

ISBN: 978-1-60983-919-2

COPYRIGHT © 2019
by
INTERNATIONAL CODE COUNCIL, INC.
and
NEW YORK STATE DEPARTMENT OF STATE

ALL RIGHTS RESERVED. This 2020 *Residential Code of New York State* is a copyrighted work owned by the International Code Council, Inc. ("ICC"). This work contains: (1) portions of the ICC International Codes® (I-Codes®); (2) material that is a derivative of the I-Codes; and (3) wholly original materials prepared by the New York State Department of State (NYSDOS) or by the New York State Fire Prevention and Building Code Council (the "Code Council"). The International Code Council, Inc., has copyright ownership of the I-Codes. The International Code Council and the New York State Department of State have joint copyright ownership of the material that is a derivative of the I-Codes. The New York State Department of State has copyright ownership of the wholly original materials prepared by the New York State Department of State and/or by the Code Council. As to the ICC International Codes, all rights, including the right of reproduction in whole or in part in any form, are reserved to the International Code Council. As to the material that is derivative of the I-Codes, all rights, including the right of reproduction in whole or in part in any form, are reserved to the International Code Council and the New York State Department of State, jointly. As to the wholly original materials prepared by the New York State Department of State or by the Code Council, all rights, including the right of reproduction in whole or in part in any form, are reserved to the New York State Department of State. Without advance written permission from the copyright owner, no part of this book may be reproduced, distributed or transmitted in any form or by any means, including, without limitation, electronic, optical or mechanical means (by way of example, and not limitation, photocopying or recording by or in an information storage retrieval system). For information on use rights and permissions, please contact: ICC Publications, 4051 Flossmoor Road, Country Club Hills, IL 60478. Phone 1-888-ICC-SAFE (422-7233).

Trademarks: "International Code Council," the "International Code Council" logo, "ICC," the "ICC" logo, "International Residential Code," "IRC" and other names and trademarks appearing in this book are registered trademarks of the International Code Council, Inc., and/or its licensors (as applicable), and may not be used without permission.

T024579

PRINTED IN THE USA

INTERNATIONAL CODE COUNCIL®

Copyright © 2019 ICC & NYSDOS. ALL RIGHTS RESERVED. Accessed by Lauren Gualdino (lgualdino@briarcliffmanor.org), (-) Order Number #100880972 on May 08, 2020 07:05 AM (PDT) pursuant to License Agreement with ICC & NYSDOS. No further reproduction, no

100880972

ACKNOWLEDGMENTS

With gratitude, the Department of State acknowledges the contributions of the following individuals in the creation of the 2020 Codes of New York State:

STATE FIRE PREVENTION AND BUILDING CODE COUNCIL

Rossana Rosado	Chair – Secretary of State, New York State Department of State Designee - Matthew W. Tebo, Esq.
Francis J. Nerney, Jr.	State Fire Administrator, Office of Fire Prevention and Control Designee - Paul Martin
RuthAnne Visnauskas	Commissioner, Division of Housing and Community Renewal Designee - Michael Weber Designee - Joseph Palozzola
Roberta Reardon	Commissioner, New York State Department of Labor Designee - Vincent R. Rapacciuolo
Honorable Bill de Blasio	Mayor, City of New York Designee - Keith Wen, NYC Department of Buildings
Honorable Michael R. Sabatino, Jr.	Councilmember, City of Yonkers
Claudia K. Braymer, Esq.	County Board of Supervisors, Warren County
David A. Seeley	Supervisor, Town of Irondequoit
Timothy DeRuyscher, P.E. FSFPE	Professional Engineer Representative
Patrick Dolan	Trade Union Representative, Steamfitters Union, 638
Shawn Hamlin, R.A.	Registered Architect Representative, Hamlin Design Group
Robert Hughes	Code Enforcement Representative, Village of Pleasantville
Dominic Marinelli	Persons with Disabilities Representative, United Spinal Association
Joseph J. Toomey	Fire Service Representative, Albany Fire Department
William W. Tuyn	Builders Representative, Forbes Capretto Homes

DEPARTMENT OF STATE

Rossana Rosado	Secretary of State
Brendan Hughes	Executive Deputy Secretary of State
James W. Leary, Esq.	Assistant Executive Deputy Secretary of State
Mark P. Pattison	Deputy Secretary of State for Local Government
Matthew W. Tebo, Esq.	Deputy Secretary of State for Agency Transformation and External Affairs
John R. Addario, P.E.	Director of the Division of Building Standards and Codes
Brian Tollisen, P.E.	Deputy Director of the Division of Building Standards and Codes
Gerard A. Hathaway, R.A.	Assistant Director for Code Development
Kevin Duerr-Clark, P. E.	Assistant Director for Technical Support
Francis “Nick” McAndrew, P.E.	Assistant Director for Educational Services
Joseph Hill, R.A.	Assistant Director for Code Administration
Jeffrey M. Hinderliter, P.E.	Professional Engineer
Emma Gonzalez-Laders, R.A., LEED AP	Senior Architect
Daniel Carroll	Code Compliance Specialist I
Janet Miller	Program Aide
Joseph P. Ball, Esq.	Supervising Attorney
Panagiota K. Hyde, Esq.	Senior Attorney

IN MEMORIAM

John H. Flanagan	Code Enforcement Representative, Code Council Member (2003–2017)
Honorable Judith Kennedy	Mayor, City of Newburgh, Code Council Member (2013–2018)
Brendan Fitzgerald	Executive Deputy Secretary of State (2016–2018)

INTERNATIONAL CODE COUNCIL®
Copyright © 2019 ICC & NYSDOS. ALL RIGHTS RESERVED. Accessed by Lauren Gualdino (lgualdino@briarcliffmanor.org), (-) Order Number #100880972 on May 08, 2020 07:05 AM (PDT) pursuant to License Agreement with ICC & NYSDOS. No further reproduction, no

100880972

INTERNATIONAL CODE COUNCIL®
Copyright © 2019 ICC & NYSDOS. ALL RIGHTS RESERVED. Accessed by Lauren Gualdino (lgualdino@briarcliffmanor.org), (-) Order Number #100880972 on May 08, 2020 07:05 AM (PDT) pursuant to License Agreement with ICC & NYSDOS. No further reproduction, no

PREFACE

Introduction

The *Residential Code of New York State* (RCNYS) establishes minimum requirements for one- and two-family dwellings and townhouses using prescriptive provisions. It is founded on broad-based principles that make possible the use of new materials and new building designs. This 2020 edition was developed as a derivative work of the 2018 edition of the *International Residential Code*® (IRC®) published by the International Code Council® (ICC®).

Letter Designations in front of Section Numbers

The bracketed letter designations for the party responsible for portions of this code are as follows:

ICC Code Development Committee

[RB] = IRC—Building Code Development Committee

[RE] = International Residential Energy Conservation Code Development Committee;

[MP] = IRC—Mechanical/Plumbing Code Development Committee

New York State Code Development

[NY] New York State Department of State

The [RE] committee is also responsible for the IECC—Residential Provisions and Appendix T.

Marginal Markings

Solid vertical lines in the margins within the body of the code indicate a technical change from the requirements of the 2015 edition of the I-Codes®. Deletion indicators in the form of an arrow (➡) are provided in the margin where an entire section, paragraph, exception or table has been deleted or an item in a list of items or a table has been deleted.

A single asterisk [*] placed in the margin indicates that text or a table has been relocated within the code. A double asterisk [**] placed in the margin indicates that the text or table immediately following it has been relocated there from elsewhere in the code. The following table indicates such relocations in the 2020 edition of the *Residential Code of New York State*.

2020 LOCATION	2015 LOCATION
R703.3.1.2	R703.11.1.4

Italicized Terms

Selected words and terms defined in Chapter 2, Definitions, are italicized where they appear in code text and the Chapter 2 definition applies. Where such words and terms are not italicized, common-use definitions apply. The words and terms selected have code-specific definitions that the user should read carefully to facilitate better understanding of the code.

INTERNATIONAL CODE COUNCIL®
Copyright © 2019 ICC & NYSDOS. ALL RIGHTS RESERVED. Accessed by Lauren Gualdino (lgualdino@briarcliffmanor.org), (-) Order Number #100880972 on May 08, 2020 07:05 AM (PDT) pursuant to License Agreement with ICC & NYSDOS. No further reproduction, no

100880972

INTERNATIONAL CODE COUNCIL®
Copyright © 2019 ICC & NYSDOS. ALL RIGHTS RESERVED. Accessed by Lauren Gualdino (lgualdino@briarcliffmanor.org), (-) Order Number #100880972 on May 08, 2020 07:05 AM (PDT) pursuant to License Agreement with ICC & NYSDOS. No further reproduction, no

100880972

EFFECTIVE USE OF THE RESIDENTIAL CODE OF NEW YORK STATE

The *Residential Code of New York State* (RCNYS) was created to serve as a complete, comprehensive code regulating the construction of single-family houses, two-family houses (duplexes) and buildings consisting of three or more townhouse units. All buildings within the scope of the RCNYS are limited to three stories above grade plane. For example, a four-story single-family house would fall within the scope of the *Building Code of New York State* (BCNYS), not the RCNYS. The benefits of devoting a separate code to residential construction include the fact that the user need not navigate through a multitude of code provisions that do not apply to residential construction in order to locate that which is applicable. A separate code also allows for residential and nonresidential code provisions to be distinct and tailored to the structures that fall within the appropriate code's scopes.

The RCNYS contains coverage for all components of a house or townhouse, including structural components, fireplaces and chimneys, thermal insulation, mechanical systems, fuel gas systems, plumbing systems and electrical systems.

The RCNYS is a prescriptive-oriented (specification) code with some examples of performance code language. It has been said that the RCNYS is the complete cookbook for residential construction. Section R301.1, for example, is written in performance language, but states that the prescriptive requirements of the code will achieve such performance.

It is important to understand that the RCNYS contains coverage for what is conventional and common in residential construction practice. While the RCNYS will provide all of the needed coverage for most residential construction, it might not address construction practices and systems that are atypical or rarely encountered in the industry. Sections such as R301.1.3, R301.2.2.1.1, R320.1, M1301.1, G2401.1 and P2601.1 refer to other codes either as an alternative to the provisions of the RCNYS or where the RCNYS lacks coverage for a particular type of structure, design, system, appliance or method of construction. In other words, the RCNYS is meant to be all inclusive for typical residential construction and it relies on other codes only where alternatives are desired or where the code lacks coverage for the uncommon aspect of residential construction.

The RCNYS is unique in that much of it, including Chapters 3 through 9 and Chapters 34 through 43, is presented in an ordered format that is consistent with the normal progression of construction, starting with the design phase and continuing through the final trim-out phase. This is consistent with the "cookbook" philosophy of the RCNYS.

The RCNYS is divided into eight main parts, specifically: Part I—Administration; Part II—Definitions; Part III—Building Planning and Construction; Part IV—Energy Conservation; Part V—Mechanical; Part VI—Fuel Gas; Part VII—Plumbing; and Part VIII—Electrical.

The following provides a brief description of the content of each chapter and appendix of the RCNYS:

Chapter 1 Scope and Administration. This chapter contains provisions for the application, enforcement and administration of subsequent requirements of the code. In addition to establishing the scope of the code, Chapter 1 identifies which buildings and structures come under its purview.

Chapter 2 Definitions. Terms defined in the code are listed alphabetically in Chapter 2. It is important to note that two chapters have their own definitions sections: Chapter 11 for the defined terms unique to energy conservation, Chapter 24 for the defined terms that are unique to fuel gas and Chapter 35 containing terms that are applicable to electrical Chapters 34 through 43. Where Chapter 24 or 35 defines a term differently than it is defined in Chapter 2, the definition applies in that chapter only. Chapter 2 definitions apply in all other locations in the code.

Where understanding a term's definition is key to or necessary for understanding a particular code provision, the term is shown in italics where it appears in the code. This is true only for those terms that have a meaning that is unique to the code. In other words, the generally understood meaning of a term or phrase might not be sufficient or consistent with the meaning prescribed by the code; therefore, it is essential that the code-defined meaning be known.

INTERNATIONAL CODE COUNCIL®
Copyright © 2019 ICC & NYSDOS. ALL RIGHTS RESERVED. Accessed by Lauren Gualdino (lgualdino@briarcliffmanor.org), (-) Order Number #100880972 on May 08, 2020 07:05 AM (PDT) pursuant to License Agreement with ICC & NYSDOS. No further reproduction, no

100880972

Guidance regarding not only tense, gender and plurality of defined terms, but also terms not defined in this code, is provided.

Chapter 3 Building Planning. Chapter 3 provides guidelines for a minimum level of structural integrity, life safety, fire safety and livability for inhabitants of dwelling units regulated by this code. Chapter 3 is a compilation of the code requirements specific to the building planning sector of the design and construction process. This chapter sets forth code requirements dealing with light, ventilation, sanitation, minimum room size, ceiling height and environmental comfort. Chapter 3 establishes life-safety provisions including limitations on glazing used in hazardous areas, specifications on stairways, use of guards at elevated surfaces, window and fall protection, and rules for means of egress. Snow, wind and seismic design live and dead loads and flood-resistant construction, as well as solar energy systems, and swimming pools, spas and hot tubs, are addressed in this chapter.

Chapter 4 Foundations. Chapter 4 provides the requirements for the design and construction of foundation systems for buildings regulated by this code. Provisions for seismic load, flood load and frost protection are contained in this chapter. A foundation system consists of two interdependent components: the foundation structure itself and the supporting soil.

The prescriptive provisions of this chapter provide requirements for constructing footings and walls for foundations of wood, masonry, concrete and precast concrete. In addition to a foundation's ability to support the required design loads, this chapter addresses several other factors that can affect foundation performance. These include controlling surface water and subsurface drainage, requiring soil tests where conditions warrant and evaluating proximity to slopes and minimum depth requirements. The chapter also provides requirements to minimize adverse effects of moisture, decay and pests in basements and crawl spaces.

Chapter 5 Floors. Chapter 5 provides the requirements for the design and construction of floor systems that will be capable of supporting minimum required design loads. This chapter covers four different types: wood floor framing, wood floors on the ground, cold-formed steel floor framing and concrete slabs on the ground. Allowable span tables are provided that greatly simplify the determination of joist, girder and sheathing sizes for raised floor systems of wood framing and cold-formed steel framing. This chapter also contains prescriptive requirements for wood-framed exterior decks and their attachment to the main building.

Chapter 6 Wall Construction. Chapter 6 contains provisions that regulate the design and construction of walls. The wall construction covered in Chapter 6 consists of five different types: wood framed, cold-formed steel framed, masonry, concrete and structural insulated panel (SIP). The primary concern of this chapter is the structural integrity of wall construction and transfer of all imposed loads to the supporting structure. This chapter provides the requirements for the design and construction of wall systems that are capable of supporting the minimum design vertical loads (dead, live and snow loads) and lateral loads (wind or seismic loads). This chapter contains the prescriptive requirements for wall bracing and/or shear walls to resist the imposed lateral loads due to wind and seismic.

Chapter 6 also regulates exterior windows and doors installed in walls. This chapter contains criteria for the performance of exterior windows and doors and includes provisions for testing and labeling, garage doors, wind-borne debris protection and anchorage details.

Chapter 7 Wall Covering. Chapter 7 contains provisions for the design and construction of interior and exterior wall coverings. This chapter establishes the various types of materials, materials standards and methods of application permitted for use as interior coverings, including interior plaster, gypsum board, ceramic tile, wood veneer paneling, hardboard paneling, wood shakes and wood shingles. Chapter 7 also contains requirements for the use of vapor retarders for moisture control in walls.

Exterior wall coverings provide the weather-resistant exterior envelope that protects the building's interior from the elements. Chapter 7 provides the requirements for wind resistance and water-resistive barrier for exterior wall coverings. This chapter prescribes the exterior wall coverings as well as the water-resistive barrier required beneath the exterior materials. Exterior wall coverings regulated by this section include aluminum, stone and masonry veneer, wood, hardboard, particleboard, wood structural panel siding, wood shakes and shingles, exterior plaster, steel, vinyl, fiber cement and exterior insulation finish systems.

INTERNATIONAL CODE COUNCIL®
Copyright © 2019 ICC & NYSDOS. ALL RIGHTS RESERVED. Accessed by Lauren Gualdino (lgualdino@briarcliffmanor.org), (-) Order Number #100880972 on May 08, 2020 07:05 AM (PDT) pursuant to License Agreement with ICC & NYSDOS. No further reproduction, no

100880972

Chapter 8 Roof-ceiling Construction. Chapter 8 regulates the design and construction of roof-ceiling systems. This chapter contains two roof-ceiling framing systems: wood framing and cold-formed steel framing. Allowable span tables are provided to simplify the selection of rafter and ceiling joist size for wood roof framing and cold-formed steel framing. Chapter 8 also provides requirements for the application of ceiling finishes, the proper ventilation of concealed spaces in roofs (e.g., enclosed attics and rafter spaces), unvented attic assemblies and attic access.

Chapter 9 Roof Assemblies. Chapter 9 regulates the design and construction of roof assemblies. A roof assembly includes the roof deck, vapor retarder, substrate or thermal barrier, insulation, vapor retarder and roof covering. This chapter provides the requirement for wind resistance of roof coverings.

The types of roof covering materials and installation regulated by Chapter 9 are: asphalt shingles, clay and concrete tile, metal roof shingles, mineral-surfaced roll roofing, slate and slate-type shingles, wood shakes and shingles, built-up roofs, metal roof panels, modified bitumen roofing, thermoset and thermoplastic single-ply roofing, sprayed polyurethane foam roofing, liquid applied coatings and photovoltaic shingles. Chapter 9 also provides requirements for roof drainage, flashing, above deck thermal insulation, rooftop-mounted photovoltaic systems and recovering or replacing an existing roof covering.

Chapter 10 Chimneys and Fireplaces. Chapter 10 contains requirements for the safe construction of masonry chimneys and fireplaces and establishes the standards for the use and installation of factory-built chimneys, fireplaces and masonry heaters. Chimneys and fireplaces constructed of masonry rely on prescriptive requirements for the details of their construction; the factory-built type relies on the listing and labeling method of approval. Chapter 10 provides the requirements for seismic reinforcing and anchorage of masonry fireplaces and chimneys.

Chapter 11 [RE] Energy Efficiency. The purpose of Chapter 11 [RE] is to provide minimum design requirements that will promote efficient utilization of energy in buildings. The requirements are directed toward the design of building envelopes with adequate thermal resistance and low air leakage, and toward the design and selection of mechanical, water heating, electrical and illumination systems that promote effective use of depletable energy resources. The provisions of Chapter 11 [RE] are duplicated from the *Energy Conservation Construction Code of New York State—Residential Provisions*, as applicable for buildings which fall under the scope of the RCNYS.

For ease of use and coordination of provisions, the corresponding ECCCNYS—Residential Provisions section number is indicated following the RCNYS section number [e.g. N1102.1 (R402.1)].

Chapter 12 Mechanical Administration. Chapter 12 establishes the limits of applicability of the code and describes how the code is to be applied and enforced. A mechanical code, like any other code, is intended to be adopted as a legally enforceable document and it cannot be effective without adequate provisions for its administration and enforcement. The provisions of Chapter 12 establish the authority and duties of the building official appointed by the jurisdiction having authority and also establish the rights and privileges of the design professional, contractor and property owner. It also relates this chapter to the administrative provisions in Chapter 1.

Chapter 13 General Mechanical System Requirements. Chapter 13 contains broadly applicable requirements related to appliance listing and labeling, appliance location and installation, appliance and systems access, protection of structural elements and clearances to combustibles, among others.

Chapter 14 Heating and Cooling Equipment and Appliances. Chapter 14 is a collection of requirements for various heating and cooling appliances, dedicated to single topics by section. The common theme is that all of these types of appliances use energy in one form or another, and the improper installation of such appliances would present a hazard to the occupants of the dwellings, due to either the potential for fire or the accidental release of refrigerants. Both situations are undesirable in dwellings that are covered by this code.

Chapter 15 Exhaust Systems. Chapter 15 is a compilation of code requirements related to residential exhaust systems, including kitchens and bathrooms, clothes dryers and range hoods. The code regulates the materials used for constructing and installing such duct systems. Air brought into the building for ventilation, combustion or makeup purposes is protected from contamination by the provisions found in this chapter.

INTERNATIONAL CODE COUNCIL®
Copyright © 2019 ICC & NYSDOS. ALL RIGHTS RESERVED. Accessed by Lauren Gualdino (lgualdino@briarcliffmanor.org), (-) Order Number #100880972 on May 08, 2020 07:05 AM (PDT) pursuant to License Agreement with ICC & NYSDOS. No further reproduction, no

100880972

Chapter 16 Duct Systems. Chapter 16 provides requirements for the installation of ducts for supply, return and exhaust air systems. This chapter contains no information on the design of these systems from the standpoint of air movement, but is concerned with the structural integrity of the systems and the overall impact of the systems on the fire-safety performance of the building. This chapter regulates the materials and methods of construction which affect the performance of the entire air distribution system.

Chapter 17 Combustion Air. Complete combustion of solid and liquid fuel is essential for the proper operation of appliances, control of harmful emissions and achieving maximum fuel efficiency. If insufficient quantities of oxygen are supplied, the combustion process will be incomplete, creating dangerous byproducts and wasting energy in the form of unburned fuel (hydrocarbons). The byproducts of incomplete combustion are poisonous, corrosive and combustible, and can cause serious appliance or equipment malfunctions that pose fire or explosion hazards.

The combustion air provisions in this code from previous editions have been deleted from Chapter 17 in favor of a single section that directs the user to NFPA 31 for oil-fired appliance combustion air requirements and the manufacturer's installation instructions for solid fuel-burning appliances. If fuel gas appliances are used, the provisions of Chapter 24 must be followed.

Chapter 18 Chimneys and Vents. Chapter 18 regulates the design, construction, installation, maintenance, repair and approval of chimneys, vents and their connections to fuel-burning appliances. A properly designed chimney or vent system is needed to conduct the flue gases produced by a fuel-burning appliance to the outdoors. The provisions of this chapter are intended to minimize the hazards associated with high temperatures and potentially toxic and corrosive combustion gases. This chapter addresses factory-built and masonry chimneys, vents and venting systems used to vent oil-fired and solid fuel-burning appliances.

Chapter 19 Special Appliances, Equipment and Systems. Chapter 19 regulates the installation of fuel-burning appliances that are not covered in other chapters, such as ranges and ovens, sauna heaters, fuel cell power plants and hydrogen systems. Because the subjects in this chapter do not contain the volume of text necessary to warrant individual chapters, they have been combined into a single chapter. The only commonality is that the subjects use energy to perform some task or function. The intent is to provide a reasonable level of protection for the occupants of the dwelling.

Chapter 20 Boilers and Water Heaters. Chapter 20 regulates the installation of boilers and water heaters. Its purpose is to protect the occupants of the dwelling from the potential hazards associated with such appliances. A water heater is any appliance that heats potable water and supplies it to the plumbing hot water distribution system. A boiler either heats water or generates steam for space heating and is generally a closed system.

Chapter 21 Hydronic Piping. Hydronic piping includes piping, fittings and valves used in building space conditioning systems. Applications include hot water, chilled water, steam, steam condensate, brines and water/antifreeze mixtures. Chapter 21 regulates installation, alteration and repair of all hydronic piping systems to ensure the reliability, serviceability, energy efficiency and safety of such systems.

Chapter 22 Special Piping and Storage Systems. Chapter 22 regulates the design and installation of fuel oil storage and piping systems. The regulations include reference to construction standards for above-ground and underground storage tanks, material standards for piping systems (both above-ground and underground) and extensive requirements for the proper assembly of system piping and components. The purpose of this chapter is to prevent fires, leaks and spills involving fuel oil storage and piping systems, whether inside or outside structures and above or underground.

Chapter 23 Solar Thermal Energy Systems. Chapter 23 contains requirements for the construction, alteration and repair of all systems and components of solar thermal energy systems used for space heating or cooling, and domestic hot water heating or processing. The provisions of this chapter are limited to those necessary to achieve installations that are relatively hazard free.

A solar thermal energy system can be designed to handle 100 percent of the energy load of a building, although this is rarely accomplished. Because solar energy is a low-intensity energy source and dependent on the weather, it is usually necessary to supplement a solar thermal energy system with traditional energy sources.

INTERNATIONAL CODE COUNCIL®
Copyright © 2019 ICC & NYSDOS. ALL RIGHTS RESERVED. Accessed by Lauren Gualdino (lgualdino@briarcliffmanor.org), (-) Order Number #100880972 on May 08, 2020 07:05 AM (PDT) pursuant to License Agreement with ICC & NYSDOS. No further reproduction, no

100880972

As our world strives to find alternate means of producing power for the future, the requirements of this chapter will become more and more important over time.

Chapter 24 Fuel Gas. Chapter 24 regulates the design and installation of fuel gas distribution piping and systems, appliances, appliance venting systems and combustion air provisions. The definition of "Fuel gas" includes natural, liquefied petroleum and manufactured gases and mixtures of these gases.

The purposes of this chapter are to establish the minimum acceptable level of safety and to protect life and property from the potential dangers associated with the storage, distribution and use of fuel gases and the byproducts of combustion of such fuels. This code also protects the personnel who install, maintain, service and replace the systems and appliances addressed herein.

Chapter 24 is composed entirely of text extracted from the *Fuel Gas Code of New York State* (FGCNYS); therefore, whether using the FGCNYS or the RCNYS, the fuel gas provisions will be identical. Note that to avoid the potential for confusion and conflicting definitions, Chapter 24 has its own definition section.

Chapter 25 Plumbing Administration. The requirements of Chapter 25 do not supersede the administrative provisions of Chapter 1. Rather, the administrative guidelines of Chapter 25 pertain to plumbing installations that are best referenced and located within the plumbing chapters. This chapter addresses how to apply the plumbing provisions of this code to specific types or phases of construction. This chapter also outlines the responsibilities of the applicant, installer and inspector with regard to testing plumbing installations.

Chapter 26 General Plumbing Requirements. The content of Chapter 26 is often referred to as "miscellaneous," rather than general plumbing requirements. This is the only chapter of the plumbing chapters of the code whose requirements do not interrelate. If a requirement cannot be located in another plumbing chapter, it should be located in this chapter. Chapter 26 contains safety requirements for the installation of plumbing systems and includes requirements for the identification of pipe, pipe fittings, traps, fixtures, materials and devices used in plumbing systems. If specific provisions do not demand that a requirement be located in another chapter, the requirement is located in this chapter.

Chapter 27 Plumbing Fixtures. Chapter 27 requires fixtures to be of the proper type, approved for the purpose intended and installed properly to promote usability and safe, sanitary conditions. This chapter regulates the quality of fixtures and faucets by requiring those items to comply with nationally recognized standards. Because fixtures must be properly installed so that they are usable by the occupants of the building, this chapter contains the requirements for the installation of fixtures.

Chapter 28 Water Heaters. Chapter 28 regulates the design, approval and installation of water heaters and related safety devices. The intent is to minimize the hazards associated with the installation and operation of water heaters. Although this chapter does not regulate the size of a water heater, it does regulate all other aspects of the water heater installation such as temperature and pressure relief valves, safety drip pans and connections. Where a water heater also supplies water for space heating, this chapter regulates the maximum water temperature supplied to the water distribution system.

Chapter 29 Water Supply and Distribution. This chapter regulates the supply of potable water from both public and individual sources to every fixture and outlet so that it remains potable and uncontaminated by cross connections. Chapter 29 also regulates the design of the water distribution system, which will allow fixtures to function properly. Because it is critical that the potable water supply system remain free of actual or potential sanitary hazards, this chapter has the requirements for providing backflow protection devices.

Chapter 30 Sanitary Drainage. The purpose of Chapter 30 is to regulate the materials, design and installation of sanitary drainage piping systems as well as the connections made to the system. The intent is to design and install sanitary drainage systems that will function reliably, are neither undersized nor oversized and are constructed from materials, fittings and connections whose quality is regulated by this section. This chapter addresses the proper use of fittings for directing the flow into and within the sanitary drain piping system. Materials and provisions necessary for servicing the drainage system are also included in this chapter.

INTERNATIONAL CODE COUNCIL®
Copyright © 2019 ICC & NYSDOS. ALL RIGHTS RESERVED. Accessed by Lauren Gualdino (lgualdino@briarcliffmanor.org), (-) Order Number #100880972 on May 08, 2020 07:05 AM (PDT) pursuant to License Agreement with ICC & NYSDOS. No further reproduction, no

100880972

Chapter 31 Vents. Venting protects the trap seal of each trap. The vents are designed to limit differential pressures at each trap to 1 inch of water column (249 Pa). Because waste flow in the drainage system creates pressure fluctuations that can negatively affect traps, the sanitary drainage system must have a properly designed venting system. Chapter 31 covers the requirements for vents and venting. All of the provisions set forth in this chapter are intended to limit the pressure differentials in the drainage system to a maximum of 1 inch of water column (249 Pa) above or below atmospheric pressure (i.e., positive or negative pressures).

Chapter 32 Traps. Traps prevent sewer gas from escaping from the drainage piping into the building. Water seal traps are the simplest and most reliable means of preventing sewer gas from entering the interior environment. This chapter lists prohibited trap types and specifies the minimum trap size for each type of fixture.

Chapter 33 Storm Drainage. Rainwater infiltration into the ground adjacent to a building can cause the interior of foundation walls to become wet. The installation of a subsoil drainage system prevents the buildup of rainwater on the exterior of the foundation walls. This chapter provides the specifications for subsoil drain piping. Where the discharge of the subsoil drain system is to a sump, this chapter also provides coverage for sump construction, pumps and discharge piping.

Chapter 34 General Requirements. This chapter contains broadly applicable, general and miscellaneous requirements including scope, listing and labeling, equipment locations and clearances for conductor materials and connections and conductor identification.

Chapter 35 Electrical Definitions. Chapter 35 is the repository of the definitions of terms used in the body of Part VIII of the code. To avoid the potential for confusion and conflicting definitions, Part VIII, Electrical, has its own definition chapter.

Codes are technical documents and every word, term and punctuation mark can impact the meaning of the code text and the intended results. The code often uses terms that have a unique meaning in the code, which can differ substantially from the ordinarily understood meaning of the term as used outside of the code.

The terms defined in Chapter 35 are deemed to be of prime importance in establishing the meaning and intent of the electrical code text that uses the terms. The user of the code should be familiar with and consult this chapter because the definitions are essential to the correct interpretation of the code and because the user may not be aware that a term is defined.

Chapter 36 Services. This chapter covers the design, sizing and installation of the building's electrical service equipment and grounding electrode system. It includes an easy-to-use load calculation method and service conductor sizing table. The electrical service is generally the first part of the electrical system to be designed and installed.

Chapter 37 Branch Circuit and Feeder Requirements. Chapter 37 addresses the requirements for designing the power distribution system, which consists of feeders and branch circuits emanating from the service equipment. This chapter dictates the ratings of circuits and the allowable loads, the number and types of branch circuits required, the wire sizing for such branch circuits and feeders and the requirements for protection from overcurrent for conductors. A load calculation method specific to feeders is also included. This chapter is used to design the electrical system on the load side of the service

Chapter 38 Wiring Methods. Chapter 38 specifies the allowable wiring methods, such as cable, conduit and raceway systems, and provides the installation requirements for the wiring methods. This chapter is primarily applicable to the “rough-in” phase of construction.

Chapter 39 Power and Lighting Distribution. This chapter mostly contains installation requirements for the wiring that serves the lighting outlets, receptacle outlets, appliances and switches located throughout the building. The required distribution and spacing of receptacle outlets and lighting outlets is prescribed in this chapter, as well as the requirements for ground-fault and arc-fault circuit-interrupter protection.

Chapter 40 Devices and Luminaires. This chapter focuses on the devices, including switches and receptacles, and lighting fixtures that are typically installed during the final phase of construction.

INTERNATIONAL CODE COUNCIL®
Copyright © 2019 ICC & NYSDOS. ALL RIGHTS RESERVED. Accessed by Lauren Gualdino (lgualdino@briarcliffmanor.org), (-) Order Number #100880972 on May 08, 2020 07:05 AM (PDT) pursuant to License Agreement with ICC & NYSDOS. No further reproduction, no

100880972

Chapter 41 Appliance Installation. Chapter 41 addresses the installation of appliances including HVAC appliances, water heaters, fixed space-heating equipment, dishwashers, garbage disposals, range hoods and suspended paddle fans.

Chapter 42 Swimming Pools. This chapter covers the electrical installation requirements for swimming pools, storable swimming pools, wading pools, decorative pools, fountains, hot tubs, spas and hydromassage bathtubs. The allowable wiring methods are specified along with the required clearances between electrical system components and pools, spas and tubs. This chapter includes the special grounding requirements related to pools, spas and tubs, and also prescribes the equipotential bonding requirements that are unique to pools, spas and tubs.

Chapter 43 Class 2 Remote-control, Signaling and Power-limited Circuits. This chapter covers the power supplies, wiring methods and installation requirements for the Class 2 circuits found in dwellings. Such circuits include thermostat wiring, alarm systems, security systems, automated control systems and doorbell systems.

Chapter 44 Referenced Standards. The code contains numerous references to standards that are used to regulate materials and methods of construction. Chapter 44 contains a comprehensive list of all standards that are referenced in the code. The standards are part of the code to the extent of the reference to the standard. Compliance with the referenced standard is necessary for compliance with this code. By providing specifically adopted standards, the construction and installation requirements necessary for compliance with the code can be readily determined. The basis for code compliance is, therefore, established and available on an equal basis to the building official, contractor, designer and owner.

Chapter 44 is organized in a manner that makes it easy to locate specific standards. It lists all of the referenced standards, alphabetically, by acronym of the promulgating agency of the standard. Each agency's standards are then listed in either alphabetical or numeric order based upon the standard identification. The list also contains the title of the standard; the edition (date) of the standard referenced; any addenda; and the section or sections of this code that reference the standard.

Appendices. Appendices are provided in the RCNYS to offer supplemental criteria to the provisions in the main chapters of the code. Appendices provide additional information for administration of the Uniform Code as well as standards not typically administered by all building departments. Appendices have the same force and effect as the first 44 chapters of the RCNYS only when explicitly adopted (see Section 102.5).

Appendix A Sizing and Capacities of Gas Piping. This appendix is informative and not part of the code. It provides design guidance, useful facts and data and multiple examples of how to apply the sizing tables and sizing methodologies of Chapter 24.

Appendix B Sizing of Venting Systems Serving Appliances Equipped with Draft Hoods, Category I Appliances, and Appliances Listed for Use with Type B Vents. This appendix is informative and not part of the code. It contains multiple examples of how to apply the vent and chimney tables and methodologies of Chapter 24.

Appendix C Exit Terminals of Mechanical Draft and Direct-vent Venting Systems. This appendix is informative and not part of the code. It consists of a figure and notes that visually depict code requirements from Chapter 24 for vent terminals with respect to the openings found in building exterior walls.

Appendix D Recommended Procedure for Safety Inspection of an Existing Appliance Installation. This appendix is informative and not part of the code. It provides recommended procedures for testing and inspecting an appliance installation to determine if the installation is operating safely and if the appliance is in a safe condition.

Appendix E Manufactured Housing Used as Dwellings. The criteria for the construction of manufactured homes are governed by the National Manufactured Housing Construction and Safety Act. While this act may seem to cover the bulk of the construction of manufactured housing, it does not cover those areas related to the placement of the housing on the property. The provisions of Appendix E are not applicable to the design and construction of manufactured homes. Appendix E provides a complete set of regulations in conjunction with federal law for the installation of manufactured housing. This appendix also contains provisions for existing manufactured home installations.

INTERNATIONAL CODE COUNCIL®
Copyright © 2019 ICC & NYSDOS. ALL RIGHTS RESERVED. Accessed by Lauren Gualdino (lgualdino@briarcliffmanor.org), (-) Order Number #100880972 on May 08, 2020 07:05 AM (PDT) pursuant to License Agreement with ICC & NYSDOS. No further reproduction, no

100880972

Appendix F Radon Control Methods. This appendix is informative and not part of the code. Radon comes from the natural (radioactive) decay of the element radium in soil, rock and water and finds its way into the air. Appendix F contains requirements to mitigate the transfer of radon gases from the soil into the dwelling. The provisions of this appendix regulate the design and construction of radon-resistant measures intended to reduce the entry of radon gases into the living space of residential buildings.

Appendix G Piping Standards for Various Applications. This appendix is informative and not part of the code. Appendix G provides standards for various types of plastic piping products.

Appendix H Patio Covers. Appendix H sets forth the regulations and limitations for patio covers. The provisions address those uses permitted in patio cover structures, the minimum design loads to be assigned for structural purposes, and the effect of the patio cover on egress and emergency escape or rescue from sleeping rooms. This appendix also contains the special provisions for aluminum screen enclosures in hurricane-prone regions.

Appendix I Reserved.

Appendix J Existing Buildings and Structures. Appendix J contains the provisions for the repair, renovation, alteration and reconstruction of existing buildings and structures that are within the scope of this code.

Appendix K Sound Transmission. This appendix is informative and not part of the code. Appendix K regulates the sound transmission of wall and floor-ceiling assemblies separating dwelling units and townhouse units. Airborne sound insulation is required for walls. Airborne sound insulation and impact sound insulation are required for floor-ceiling assemblies. The provisions in Appendix K set forth a minimum Sound Transmission Class (STC) rating for common walls and floor-ceiling assemblies between dwelling units. In addition, a minimum Impact Insulation Class (IIC) rating is also established to limit structureborne sound through common floor-ceiling assemblies separating dwelling units.

Appendix L Reserved.

Appendix M Reserved.

Appendix N Venting Methods. This appendix is informative and not part of the code. Because venting of sanitary drainage systems is a difficult concept to understand, and Chapter 31 uses only words to describe venting requirements, illustrations can offer greater insight into what the words mean. Appendix N has a number of illustrations for commonly installed sanitary drainage systems in order for the reader to gain a better understanding of this code's venting requirements.

Appendix O Automatic Vehicular Gates. This appendix is informative and not part of the code. Appendix O provides the requirements for the design and construction of automatic vehicular gates. The provisions are for where automatic gates are installed for use at a vehicular entrance or exit on the lot of a one- or two-family dwelling. The requirements provide protection for individuals from potential entrapment between an automatic gate and a stationary object or surface.

Appendix P Sizing of Water Piping System. This appendix is informative and not part of the code. Appendix P provides two recognized methods for sizing the water service and water distribution piping for a building. The method under Section AP103 provides friction loss diagrams that require the user to "plot" points and read values from the diagrams in order to perform the required calculations and necessary checks. This method is the most accurate of the two presented in this appendix. The method under Section AP201 is known to be conservative; however, very few calculations are necessary in order to determine a pipe size that satisfies the flow requirements of any application.

Appendix Q Tiny Houses. For dwelling units that are 400 square feet (37 m^2) or less in floor area, excluding lofts, Appendix Q provides relaxed provisions as compared to those in the body of the code. These provisions primarily address reduced ceiling heights for loft areas and specific stair and ladder detail requirements that allow for more compact designs where accessing lofts.

INTERNATIONAL CODE COUNCIL®
Copyright © 2019 ICC & NYSDOS. ALL RIGHTS RESERVED. Accessed by Lauren Gualdino (lgualdino@briarcliffmanor.org), (-) Order Number #100880972 on May 08, 2020 07:05 AM (PDT) pursuant to License Agreement with ICC & NYSDOS. No further reproduction, no

100880972

Appendix R Light Straw-Clay Construction. This appendix regulates the use of light straw-clay as a construction material. It is limited in application to nonbearing wall infill systems.

Appendix S Strawbale Construction. This appendix is informative and not part of the code. This appendix provides prescriptive requirements for the use of strawbale as a construction material. It is limited in application to the walls of one-story structures, except where additional engineering is provided.

Appendix T Solar-ready Provisions—Detached One- and Two-family Dwellings and Townhouses. This appendix is informative and not part of the code. This appendix provides requirements for preparation of a house for future installation of solar equipment for electrical power or heating. Given the growing popularity of solar power and the possible need for the equipment in the future, this appendix, if adopted, would require an area be provided on the building roof that would accommodate solar equipment. In addition, pathways for routing of plumbing and conduit need to be provided.

INTERNATIONAL CODE COUNCIL®
Copyright © 2019 ICC & NYSDOS. ALL RIGHTS RESERVED. Accessed by Lauren Gualdino (lgualdino@briarcliffmanor.org), (-) Order Number #100880972 on May 08, 2020 07:05 AM (PDT) pursuant to License Agreement with ICC & NYSDOS. No further reproduction, no

100880972

INTERNATIONAL CODE COUNCIL®
Copyright © 2019 ICC & NYSDOS. ALL RIGHTS RESERVED. Accessed by Lauren Gualdino (lgualdino@briarcliffmanor.org), (-) Order Number #100880972 on May 08, 2020 07:05 AM (PDT) pursuant to License Agreement with ICC & NYSDOS. No further reproduction, no

100880972

TABLE OF CONTENTS

Part I—Administrative **1**

CHAPTER 1 SCOPE AND ADMINISTRATION **1**

Section

R101 Title, Scope and Purpose 1
R102 Applicability 2
R103 Administration and Enforcement 3
R104 Materials, Equipment and Methods of Construction 4
R105 Building Permits, Construction Inspections, Stop Work Orders, and Certificates of Occupancy 4
R106 Submitted Documents 6
R107 Service Utilities 7
R108 Inspection of Solid Fuel-Burning Heating Appliances, Chimneys and Flues 7

Part II—Definitions ***9***

CHAPTER 2 DEFINITIONS **9**

Section

R201 General 9
R202 Definitions 9

Part III—Building Planning and Construction ***27***

CHAPTER 3 BUILDING PLANNING **27**

Section

R301 Design Criteria 27
R302 Fire-resistant Construction 47
R303 Light, Ventilation and Heating 52
R304 Minimum Room Areas 54
R305 Ceiling Height 54
R306 Sanitation 54
R307 Toilet, Bath and Shower Spaces 54
R308 Glazing 54
R309 Garages and Carports 58
R310 Emergency Escape and Rescue Openings 59
R311 Means of Egress 60
R312 Guards and Window Fall Protection 64
R313 Automatic Fire Sprinkler Systems 64
R314 Smoke Alarms and Heat Detection 65
R315 Carbon Monoxide Alarms 66
R316 Foam Plastic 66
R317 Protection of Wood and Wood-based Products against Decay 68
R318 Protection against Subterranean Termites 69
R319 Site Address 70
R320 Accessibility 70
R321 Elevators and Platform Lifts 70
R322 Flood-resistant Construction 70
R323 Storm Shelters 74
R324 Solar Energy Systems 74
R325 Mezzanines 75
R326 Swimming Pools, Spas and Hot Tubs 76
R327 Energy Storage Systems 79

CHAPTER 4 FOUNDATIONS **81**

Section

R401 General 81
R402 Materials 81
R403 Footings 82
R404 Foundation and Retaining Walls 99
R405 Foundation Drainage 119
R406 Foundation Waterproofing and Dampproofing 120
R407 Columns 121
R408 Under-floor Space 121

CHAPTER 5 FLOORS **123**

Section

R501 General 123
R502 Wood Floor Framing 123
R503 Floor Sheathing 132
R504 Pressure Preservative-treated Wood Floors (On Ground) 134
R505 Cold-formed Steel Floor Framing 134
R506 Concrete Floors (On Ground) 149
R507 Exterior Decks 149

CHAPTER 6 WALL CONSTRUCTION **161**

Section

R601 General 161
R602 Wood Wall Framing 161

INTERNATIONAL CODE COUNCIL®
Copyright © 2019 ICC & NYSDOS. ALL RIGHTS RESERVED. Accessed by Lauren Gualdino (lgualdino@briarcliffmanor.org), (-) Order Number #100880972 on May 08, 2020 07:05 AM (PDT) pursuant to License Agreement with ICC & NYSDOS. No further reproduction, no

100880972

R603 Cold-formed Steel Wall Framing 211
R604 Wood Structural Panels 247
R605 Particleboard 247
R606 General Masonry Construction 247
R607 Glass Unit Masonry 264
R608 Exterior Concrete Wall Construction 264
R609 Exterior Windows and Doors 335
R610 Structural Insulated Panel Wall Construction 339

CHAPTER 7 WALL COVERING 349
Section
R701 General 349
R702 Interior Covering 349
R703 Exterior Covering 354

CHAPTER 8 ROOF-CEILING CONSTRUCTION 373
Section
R801 General 373
R802 Wood Roof Framing 373
R803 Roof Sheathing 399
R804 Cold-formed Steel Roof Framing 402
R805 Ceiling Finishes 420
R806 Roof Ventilation 420
R807 Attic Access 421

CHAPTER 9 ROOF ASSEMBLIES 423
Section
R901 General 423
R902 Fire Classification 423
R903 Weather Protection 423
R904 Materials 424
R905 Requirements for Roof Coverings 424
R906 Roof Insulation 436
R907 Rooftop-mounted Photovoltaic Panel Systems . . . 436
R908 Reroofing 437

CHAPTER 10 CHIMNEYS AND FIREPLACES . . . 439
Section
R1001 Masonry Fireplaces 439
R1002 Masonry Heaters 443
R1003 Masonry Chimneys 443
R1004 Factory-built Fireplaces 447
R1005 Factory-built Chimneys 448
R1006 Exterior Air Supply 448

Part IV—Energy Conservation 451

CHAPTER 11 ENERGY EFFICIENCY 451
Section
N1101 General 451
N1102 Building Thermal Envelope 457
N1103 Systems 464
N1104 Electrical Power and Lighting Systems (Mandatory) 467
N1105 Simulated Performance Alternative (Performance) 467
N1106 Energy Rating Index Compliance Alternative 468
N1107 Existing Buildings—General 472
N1108 Additions 473
N1109 Alterations 473
N1110 Repairs 474
N1111 Change of Occupancy or Use 474

Part V—Mechanical 475

CHAPTER 12 MECHANICAL ADMINISTRATION 475
Section
M1201 General 475
M1202 Existing Mechanical Systems 475

CHAPTER 13 GENERAL MECHANICAL SYSTEM REQUIREMENTS 477
Section
M1301 General 477
M1302 Approval 477
M1303 Labeling of Appliances 477
M1304 Type of Fuel 477
M1305 Appliance Access 477
M1306 Clearances from Combustible Construction 478
M1307 Appliance Installation 479
M1308 Mechanical Systems Installation 482

INTERNATIONAL CODE COUNCIL®
Copyright © 2019 ICC & NYSDOS. ALL RIGHTS RESERVED. Accessed by Lauren Gualdino (lgualdino@briarcliffmanor.org), (-) Order Number #100880972 on May 08, 2020 07:05 AM (PDT) pursuant to License Agreement with ICC & NYSDOS. No further reproduction, no

100880972

CHAPTER 14 HEATING AND COOLING EQUIPMENT AND APPLIANCES 483

Section

M1401 General 483
M1402 Central Furnaces 483
M1403 Heat Pump Equipment 483
M1404 Refrigeration Cooling Equipment 483
M1405 Baseboard Convectors 483
M1406 Radiant Heating Systems 483
M1407 Duct Heaters 484
M1408 Vented Floor Furnaces 484
M1409 Vented Wall Furnaces 485
M1410 Vented Room Heaters 485
M1411 Heating and Cooling Equipment 485
M1412 Absorption Cooling Equipment 486
M1413 Evaporative Cooling Equipment 486
M1414 Fireplace Stoves 487
M1415 Masonry Heaters 487
M1416 Portable Kerosene Heaters 487

CHAPTER 15 EXHAUST SYSTEMS 489

Section

M1501 General 489
M1502 Clothes Dryer Exhaust 489
M1503 Domestic Cooking Exhaust Equipment 490
M1504 Exhaust Ducts and Exhaust Openings 491
M1505 Mechanical Ventilation 491

CHAPTER 16 DUCT SYSTEMS 493

Section

M1601 Duct Construction 493
M1602 Return Air 496

CHAPTER 17 COMBUSTION AIR 497

Section

M1701 General 497

CHAPTER 18 CHIMNEYS AND VENTS 499

Section

M1801 General 499
M1802 Vent Components 499
M1803 Chimney and Vent Connectors 500
M1804 Vents 501
M1805 Masonry and Factory-built Chimneys 501

CHAPTER 19 SPECIAL APPLIANCES, EQUIPMENT AND SYSTEMS 503

Section

M1901 Ranges and Ovens 503
M1902 Sauna Heaters 503
M1903 Stationary Fuel Cell Power Plants 503
M1904 Gaseous Hydrogen Systems 503

CHAPTER 20 BOILERS AND WATER HEATERS 505

Section

M2001 Boilers 505
M2002 Operating and Safety Controls 505
M2003 Expansion Tanks 505
M2004 Water Heaters Used for Space Heating 506
M2005 Water Heaters 506
M2006 Pool Heaters 506

CHAPTER 21 HYDRONIC PIPING 507

Section

M2101 Hydronic Piping Systems Installation 507
M2102 Baseboard Convectors 507
M2103 Floor Heating Systems 509
M2104 Low Temperature Piping 509
M2105 Ground-Source Heat-Pump System Loop Piping 509

CHAPTER 22 SPECIAL PIPING AND STORAGE SYSTEMS 513

Section

M2201 Oil Tanks 513
M2202 Oil Piping, Fitting and Connections 513
M2203 Installation 513
M2204 Oil Pumps and Valves 514

CHAPTER 23 SOLAR THERMAL ENERGY SYSTEMS 515

Section

M2301 Solar Thermal Energy Systems 515

Part VI—Fuel Gas* *517

CHAPTER 24 FUEL GAS 517

Section

G2401 General 517
G2402 General 517

INTERNATIONAL CODE COUNCIL®
Copyright © 2019 ICC & NYSDOS. ALL RIGHTS RESERVED. Accessed by Lauren Gualdino (lgualdino@briarcliffmanor.org), (-) Order Number #100880972 on May 08, 2020 07:05 AM (PDT) pursuant to License Agreement with ICC & NYSDOS. No further reproduction, no

100880972

G2403 General Definitions 517
G2404 General. 523
G2405 Structural Safety. 524
G2406 Appliance Location 524
G2407 Combustion, Ventilation and Dilution Air. 525
G2408 Installation 529
G2409 Clearance Reduction 529
G2410 Electrical 531
G2411 Electrical Bonding 531
G2412 General. 533
G2413 Pipe Sizing 534
G2414 Piping Materials 535
G2415 Piping System Installation 558
G2416 Piping Bends and Changes in Direction 560
G2417 Inspection, Testing and Purging 561
G2418 Piping Support 563
G2419 Drips and Sloped Piping 563
G2420 Shutoff Valves 564
G2421 Flow Controls. 564
G2422 Appliance Connections 565
G2423 Compressed Natural Gas Motor Vehicle Fuel-dispensing Facilities. 566
G2424 Piping Support Intervals 566
G2425 General. 566
G2426 Vents 568
G2427 Venting of Appliances 568
G2428 Sizing of Category I Appliance Venting Systems 577
G2429 Direct-vent, Integral Vent, Mechanical Vent and Ventilation/Exhaust Hood Venting 589
G2430 Factory-built Chimneys 589
G2431 General. 589
G2432 Decorative Appliances for Installation in Fireplaces 589
G2433 Log Lighters. 589
G2434 Vented Gas Fireplaces (Decorative Appliances) 589
G2435 Vented Gas Fireplace Heaters 589
G2436 Vented Wall Furnaces 589
G2437 Floor Furnaces 590
G2438 Clothes Dryers 590
G2439 Clothes Dryer Exhaust 590
G2440 Sauna Heaters. 591
G2441 Pool and Spa Heaters 592
G2442 Forced-air Warm-air Furnaces. 592
G2443 Conversion Burners. 593
G2444 Unit Heaters. 593
G2445 Unvented Room Heaters 593
G2446 Vented Room Heaters 593
G2447 Cooking Appliances 594
G2448 Water Heaters 594
G2449 Air-conditioning Appliances 594
G2450 Illuminating Appliances 594
G2451 Infrared Radiant Heaters 595
G2452 Boilers 595
G2453 Chimney Damper Opening Area. 595
G2454 Outdoor Decorative Appliances 595

Part VII—Plumbing 597

CHAPTER 25 PLUMBING ADMINISTRATION 597

Section
P2501 General 597
P2502 Existing Plumbing Systems. 597
P2503 Inspection and Tests 597

CHAPTER 26 GENERAL PLUMBING REQUIREMENTS 599

Section
P2601 General 599
P2602 Individual Water Supply and Sewage Disposal 599
P2603 Structural and Piping Protection 599
P2604 Trenching and Backfilling. 600
P2605 Support 600
P2606 Penetrations 600
P2607 Waterproofing of Openings. 601
P2608 Workmanship 601
P2609 Materials Evaluation and Listing 601

CHAPTER 27 PLUMBING FIXTURES 603

Section
P2701 Fixtures, Faucets and Fixture Fittings 603
P2702 Fixture Accessories 603
P2703 Tail Pieces 603
P2704 Slip-joint Connections. 603
P2705 Installation 603
P2706 Waste Receptors 603
P2707 Directional Fittings 605
P2708 Showers 605

INTERNATIONAL CODE COUNCIL®
Copyright © 2019 ICC & NYSDOS. ALL RIGHTS RESERVED. Accessed by Lauren Gualdino (lgualdino@briarcliffmanor.org), (-) Order Number #100880972 on May 08, 2020 07:05 AM (PDT) pursuant to License Agreement with ICC & NYSDOS. No further reproduction, no

100880972

P2709 Shower Receptors 605
P2710 Shower Walls 606
P2711 Lavatories 606
P2712 Water Closets 606
P2713 Bathtubs 607
P2714 Sinks 607
P2715 Laundry Tubs 607
P2716 Food-waste Disposer 607
P2717 Dishwashing Machines 607
P2718 Clothes Washing Machine 607
P2719 Floor Drains 607
P2720 Whirlpool Bathtubs 607
P2721 Bidet Installations 607
P2722 Fixture Fitting 608
P2723 Macerating Toilet Systems 608
P2724 Specialty Temperature Control Devices and Valves 608
P2725 Nonliquid Saturated Treatment Systems 608

CHAPTER 28 WATER HEATERS 609

Section
P2801 General 609
P2802 Solar Water Heating Systems 609
P2803 Water Heaters Used for Space Heating 609
P2804 Relief Valves 610

CHAPTER 29 WATER SUPPLY AND DISTRIBUTION 611

Section
P2901 General 611
P2902 Protection of Potable Water Supply 611
P2903 Water Supply System 614
P2904 Dwelling Unit Fire Sprinkler Systems 619
P2905 Heated Water Distribution Systems 623
P2906 Materials, Joints and Connections 623
P2907 Changes in Direction 635
P2908 Support 635
P2909 Drinking Water Treatment Units 635
P2910 Nonpotable Water Systems 635
P2911 On-site Nonpotable Water Reuse Systems 638
P2912 Nonpotable Rainwater Collection and Distribution Systems 639
P2913 Reclaimed Water Systems 641

CHAPTER 30 SANITARY DRAINAGE 643

Section
P3001 General 643
P3002 Materials 643
P3003 Joints and Connections 645
P3004 Determining Drainage Fixture Units 647
P3005 Drainage System 647
P3006 Sizing of Drain Pipe Offsets 651
P3007 Sumps and Ejectors 651
P3008 Backwater Valves 652
P3009 Subsurface Landscape Irrigation Systems 652
P3010 Replacement of Underground Building Sewers and Building Drains by Pipe Bursting Methods 654
P3011 Replacement of Underground Sewers by PVC Fold and Form Methods 655

CHAPTER 31 VENTS 657

Section
P3101 Vent Systems 657
P3102 Vent Stacks and Stack Vents 657
P3103 Vent Terminals 657
P3104 Vent Connections and Grades 658
P3105 Fixture Vents 658
P3106 Individual Vent 658
P3107 Common Vent 658
P3108 Wet Venting 659
P3109 Waste Stack Vent 659
P3110 Circuit Venting 659
P3111 Combination Waste and Vent System 660
P3112 Island Fixture Venting 660
P3113 Vent Pipe Sizing 660
P3114 Air Admittance Valves 661

CHAPTER 32 TRAPS 663

Section
P3201 Fixture Traps 663

CHAPTER 33 STORM DRAINAGE 665

Section
P3301 General 665
P3302 Subsoil Drains 665
P3303 Sumps and Pumping Systems 665

INTERNATIONAL CODE COUNCIL®
Copyright © 2019 ICC & NYSDOS. ALL RIGHTS RESERVED. Accessed by Lauren Gualdino (lgualdino@briarcliffmanor.org), (-) Order Number #100880972 on May 08, 2020 07:05 AM (PDT) pursuant to License Agreement with ICC & NYSDOS. No further reproduction, no

100880972

Part VIII—Electrical *667*

CHAPTER 34 GENERAL REQUIREMENTS **667**

Section

E3401 General 667
E3402 Building Structure Protection 668
E3403 Inspection and Approval 668
E3404 General Equipment Requirements 668
E3405 Equipment Location and Clearances 670
E3406 Electrical Conductors and Connections 670
E3407 Conductor and Terminal Identification 673

CHAPTER 35 ELECTRICAL DEFINITIONS **675**

Section

E3501 General 675

CHAPTER 36 SERVICES **681**

Section

E3601 General Services 681
E3602 Service Size and Rating 681
E3603 Service, Feeder and Grounding Electrode Conductor Sizing 682
E3604 Overhead Service and Service-entrance Conductor Installation 683
E3605 Service-entrance Conductors 685
E3606 Service Equipment—General 686
E3607 System Grounding 686
E3608 Grounding Electrode System 687
E3609 Bonding 688
E3610 Grounding Electrode Conductors 690
E3611 Grounding Electrode Conductor Connection to the Grounding Electrodes 690

CHAPTER 37 BRANCH CIRCUIT AND FEEDER REQUIREMENTS **693**

Section

E3701 General 693
E3702 Branch Circuit Ratings 693
E3703 Required Branch Circuits 694
E3704 Feeder Requirements 695
E3705 Conductor Sizing and Overcurrent Protection 696
E3706 Panelboards 699

CHAPTER 38 WIRING METHODS **701**

Section

E3801 General Requirements 701
E3802 Above-ground Installation Requirements 701
E3803 Underground Installation Requirements 703

CHAPTER 39 POWER AND LIGHTING DISTRIBUTION **707**

Section

E3901 Receptacle Outlets 707
E3902 Ground-fault and Arc-fault Circuit-interrupter Protection 709
E3903 Lighting Outlets 711
E3904 General Installation Requirements 711
E3905 Boxes, Conduit Bodies and Fittings 712
E3906 Installation of Boxes, Conduit Bodies and Fittings 726
E3907 Cabinets and Panelboards 728
E3908 Grounding 730
E3909 Flexible Cords 734

CHAPTER 40 DEVICES AND LUMINAIRES **735**

Section

E4001 Switches 735
E4002 Receptacles 736
E4003 Luminaires 738
E4004 Luminaire Installation 739
E4005 Track Lighting 740

CHAPTER 41 APPLIANCE INSTALLATION **741**

Section

E4101 General 741

CHAPTER 42 SWIMMING POOLS **745**

Section

E4201 General 745
E4202 Wiring Methods for Pools, Spas, Hot Tubs and Hydromassage Bathtubs 745
E4203 Equipment Location and Clearances 747
E4204 Bonding 749
E4205 Grounding 751
E4206 Equipment Installation 752
E4207 Storable Swimming Pools, Storable Spas, and Storable Hot Tubs 755

INTERNATIONAL CODE COUNCIL®
Copyright © 2019 ICC & NYSDOS. ALL RIGHTS RESERVED. Accessed by Lauren Gualdino (lgualdino@briarcliffmanor.org), (-) Order Number #100880972 on May 08, 2020 07:05 AM (PDT) pursuant to License Agreement with ICC & NYSDOS. No further reproduction, no

100880972

E4208 Spas and Hot Tubs 755
E4209 Hydromassage Bathtubs. 756

CHAPTER 43 CLASS 2 REMOTE-CONTROL, SIGNALING AND POWER-LIMITED CIRCUITS 757

Section
E4301 General. 757
E4302 Power Sources 757
E4303 Wiring Methods 757
E4304 Installation Requirements 758

Part IX—Referenced Standards 759

CHAPTER 44 REFERENCED STANDARDS 759

APPENDIX A SIZING AND CAPACITIES OF GAS PIPING 797

APPENDIX B SIZING OF VENTING SYSTEMS SERVING APPLIANCES EQUIPPED WITH DRAFT HOODS, CATEGORY I APPLIANCES, AND APPLIANCES LISTED FOR USE WITH TYPE B VENTS 809

APPENDIX C EXIT TERMINALS OF MECHANICAL DRAFT AND DIRECT-VENT VENTING SYSTEMS 819

APPENDIX D RECOMMENDED PROCEDURE FOR SAFETY INSPECTION OF AN EXISTING APPLIANCE INSTALLATION 821

APPENDIX E MANUFACTURED HOUSING USED AS DWELLINGS 827

Section
AE101 Scope 827
AE102 Application to Existing Manufactured Homes and Building Service Equipment 827
AE103 Permits and Inspections 828
AE201 Definitions 828
AE301 Occupancy Classification. 828
AE302 Location on Property 829
AE401 Design 829
AE402 Foundation Systems 829
AE403 Skirting and Perimeter Enclosures. 830
AE404 Building Service Equipment 830
AE405 Exits. 830
AE406 Occupancy, Fire Safety and Energy Conservation Standards 830

APPENDIX F RADON CONTROL METHODS . . . 831

Section
AF101 Scope 831
AF102 Definitions 831
AF103 Requirements. 831

APPENDIX G PIPING STANDARDS FOR VARIOUS APPLICATIONS. 839

Section
AG101 Plastic Piping Standards 839
AG102 Referenced Standards 843

APPENDIX H PATIO COVERS 845

Section
AH101 General 845
AH102 Definition. 845
AH103 Exterior Walls and Openings. 845
AH104 Height 845
AH105 Structural Provisions 845
AH106 Special Provisions for Aluminum Screen Enclosures in Hurricane-prone Regions 845

APPENDIX I RESERVED. 849

APPENDIX J EXISTING BUILDINGS AND STRUCTURES 851

Section
AJ101 Purpose and Intent. 851
AJ102 Compliance 851
AJ103 Applicability 852
AJ104 Energy Efficiency 852
AJ105 Preliminary Meeting 852
AJ106 Evaluation of an Existing Building 852
AJ201 Definitions 852
AJ301 Classification of Work. 854
AJ401 Repairs. 854
AJ501 Alterations—Level 1 856
AJ601 Alterations—Level 2 857
AJ701 Change of Occupancy 859
AJ702 Bed and Breakfast Dwellings 860
AJ801 Additions 860

INTERNATIONAL CODE COUNCIL®
Copyright © 2019 ICC & NYSDOS. ALL RIGHTS RESERVED. Accessed by Lauren Gualdino (lgualdino@briarcliffmanor.org), (-) Order Number #100880972 on May 08, 2020 07:05 AM (PDT) pursuant to License Agreement with ICC & NYSDOS. No further reproduction, no

100880972

AJ901 Historic Buildings 862
AJ1001 Relocated or Moved Buildings 863
AJ1101 Replacement. 864

APPENDIX K SOUND TRANSMISSION. 865
Section
AK101 General. 865
AK102 Airborne Sound 865
AK103 Structural-borne Sound 865
AK104 Referenced Standards. 865

APPENDIX L RESERVED. 867

APPENDIX M RESERVED. 869

APPENDIX N VENTING METHODS. 871

APPENDIX O AUTOMATIC VEHICULAR GATES 877
Section
AO101 General 877
AO102 Definition 877
AO103 Automatic Vehicular Gates 877
AO104 Referenced Standards. 877

APPENDIX P SIZING OF WATER PIPING SYSTEM 879
Section
AP101 General. 879
AP102 Information Required. 879
AP103 Selection of Pipe Size 879
AP201 Selection of Pipe Size 896

APPENDIX Q TINY HOUSES 899
Section
AQ101 General. 899
AQ102 Definitions 899
AQ103 Ceiling Height 899
AQ104 Lofts. 899
AQ105 Emergency Escape and Rescue Openings 900

APPENDIX R LIGHT STRAW-CLAY CONSTRUCTION 901
Section
AR101 General. 901
AR102 Definitions 901
AR103 Nonbearing Light Straw-Clay Construction 901
AR104 Thermal Performance 904
AR105 Referenced Standards 904

APPENDIX S STRAWBALE CONSTRUCTION . . 905
Section
AS101 General 905
AS102 Definitions. 905
AS103 Bales 905
AS104 Finishes 907
AS105 Strawbale Walls—General 908
AS106 Strawbale Walls—Structural. 913
AS107 Fire Resistance 916
AS108 Thermal Insulation 919
AS109 Referenced Standards 919

APPENDIX T SOLAR-READY PROVISIONS—DETACHED ONE- AND TWO-FAMILY DWELLINGS AND TOWNHOUSES 921
Section
T101 Scope. 921
T102 General Definition 921
T103 Solar-ready Zone. 921

INDEX 923

INTERNATIONAL CODE COUNCIL®
Copyright © 2019 ICC & NYSDOS. ALL RIGHTS RESERVED. Accessed by Lauren Gualdino (lgualdino@briarcliffmanor.org), (-) Order Number #100880972 on May 08, 2020 07:05 AM (PDT) pursuant to License Agreement with ICC & NYSDOS. No further reproduction, no

100880972

Part I—Administrative

[NY] CHAPTER 1

SCOPE AND ADMINISTATION

[NY] SECTION R101
TITLE, SCOPE AND PURPOSE

[NY] R101.1 Title. This publication shall be known as the 2020 edition of the *Residential Code of New York State* and is hereinafter referred to as "this code." This code is part of the New York State Uniform Fire Prevention and Building Code (the "*Uniform Code*").

[NY] R101.1.1 Amendments of New York State code books. In Chapter 1, the term "New York State code books" shall include the *Residential Code of New York State* (i.e., this publication), the *Building Code of New York State*, the *Plumbing Code of New York State*, the *Mechanical Code of New York State*, the *Fuel Gas Code of New York State*, the *Fire Code of New York State*, the *Property Maintenance Code of New York State*, the *Existing Building Code of New York State*, and the *Energy Conservation Construction Code of New York State*. Provisions in any one or more of the New York State code books may be amended from time to time by provisions in 19 NYCRR Parts 1220 to 1227 or 19 NYCRR Part 1240, as currently in effect and as hereafter amended from time to time. If this publication is now or hereafter so amended, references in this publication to "this code" shall be deemed to be references to this publication as so amended. If any other New York State code book is now or hereafter so amended, references in this code to such other New York State code book shall be deemed to be references to such New York State code book as so amended.

[NY] R101.2 Scope. The provisions of this code shall apply to the construction, *alteration*, movement, enlargement, replacement, *repair, equipment*, use and occupancy, location, removal and demolition of the following *buildings* and *structures*, provided that such *building* or *structure* is not more than three stories above grade plane in height, and their accessory structures not more than three stories above grade plane in height:

1. Detached one-family *dwellings*;
2. Detached two-family *dwellings* in which each *dwelling unit* has a separate *means of egress*;
3. *Townhouses*;
4. *Bed and breakfast dwellings*;
5. *Live/work units* that (1) are located in *townhouses,* and (2) comply with the requirements of Section 419 of the *Building Code of New York State*; and
6. Owner-occupied *lodging houses* that (1) have five or fewer guestrooms and (2) are provided with a residential fire sprinkler system complying with Section P2904 of this code.

Exception: Application of the provisions of the *Building Code of New York State* to the construction, *alteration*, movement, enlargement, *replacement*, *repair*, *equipment*, use and occupancy, location, removal and demolition of the *buildings* and *structures* listed in Section R101.2 is permitted, provided that all applicable provisions of the *Building Code of New York State* are applied.

[NY] R101.4 Facilities regulated by New York State departments or agencies. Where a building or premises under the custody, licensure, supervision or jurisdiction of a department or agency of the State of New York is regulated as a one- or two-family dwelling or multiple single-family dwelling (townhouse), in accordance with established laws or regulations of that department or agency, said buildings or premises, such as a community residence or hospice residence, and their accessory structures shall comply with the *Residential Code of New York State.*

[NY] R101.5 Change in use or occupancy. No change shall be made in the use or occupancy of any *building* or *structure* unless such *building* or *structure* is made to comply with the requirements of Appendix J of this code.

[NY] R101.6 Factory manufactured buildings (modular buildings). *Factory manufactured buildings* shall be constructed and installed in accordance with the requirements of the *Uniform Code* and shall bear an *Insignia of Approval* issued in accordance with the 19 NYCRR Part 1209 (entitled "Regulations and Fees for Factory Manufactured Homes"), as currently in effect and as hereafter amended from time to time.

[NY] R101.7 Manufactured homes. *Manufactured homes* shall be constructed in accordance with the requirements of the applicable US Department of Housing and Urban Development Manufactured Home Construction and Safety Standards (24 CFR Part 3280); and assembled and installed in accordance with the requirements of this code and in accordance with the 19 NYCRR Part 1210 (entitled "Manufactured Homes"), as currently in effect and as hereafter amended from time to time.

[NY] R101.8 Intent. The purpose of this code is to establish minimum requirements to safeguard the public safety, health and general welfare through affordability, structural strength, means of egress facilities, stability, sanitation, light and ventilation, energy conservation and safety to life and property from fire and other hazards attributed to the built environment, and to provide safety to fire fighters and emergency responders during emergency operations.

INTERNATIONAL CODE COUNCIL®
Copyright © 2019 ICC & NYSDOS. ALL RIGHTS RESERVED. Accessed by Lauren Gualdino (lgualdino@briarcliffmanor.org), (-) Order Number #100880972 on May 08, 2020 07:05 AM (PDT) pursuant to License Agreement with ICC & NYSDOS. No further reproduction, no

100880972

[NY] SECTION R102 APPLICABILITY

[NY] R102.1 General. Where there is a conflict between a general requirement and a specific requirement, the specific requirement shall be applicable. Where, in any specific case, different sections of this code specify different materials, methods of construction or other requirements, the most restrictive shall govern.

[NY] R102.2 Other laws and regulations. This code is part of the New York State Uniform Fire Prevention and Building Code (the *Uniform Code*) promulgated pursuant to Article 18 of the New York State Executive Law. The provisions of the *Uniform Code* shall not be deemed to nullify any federal, state or local statute, rule, regulation, law or ordinance relating to any matter as to which the *Uniform Code* does not provide.

However:

1. Pursuant to Section 383(1) of the Executive Law, and except as otherwise provided in paragraphs a, b, and c of Section 383(1) of the Executive Law, the provisions of the *Uniform Code* supersede any other provision of a general, special or local law, ordinance, administrative code, rule or regulation inconsistent or in conflict with the *Uniform Code*;
2. Pursuant to Section 379(3) of the Executive Law, no city, town, village, county or other municipality shall have the power to supersede, void, repeal, or make less restrictive any provision of the *Uniform Code*; and
3. The ability of any city, town, or village, or the County of Nassau, to enact or adopt, and to enforce, a local law or ordinance imposing higher or more restrictive standards for construction within the jurisdiction of such city, town, village, or county that are applicable generally to such city, town, village, or county in the *Uniform Code* is subject to the provisions and requirements of Section 379 of the Executive Law.

Nothing in this Section R102.2 shall be construed as any of the following:

1. Affecting the authority of the State Labor Department to enforce a safety or health standard issued under provisions of Sections 27 and 27-a of the Labor Law;
2. Relieving a person from complying with a stricter standard issued pursuant to the Occupational Safety and Health Act of 1970, as amended; and
3. Superseding, limiting, impairing or otherwise affecting any provision the *Uniform Code*, as now in effect and as hereafter amended from time to time.

[NY] R102.2.1 Other New York Codes, Rules and Regulations (NYCRR). Additional New York Codes, Rules and Regulations exist that may affect new and existing *buildings, structures*, systems and *equipment*. Such regulations include, but are not limited to:

1. 19 NYCRR Part 300 (Universal Symbol of Access),
2. 19 NYCRR Part 1261 (Recordkeeping—Smoke Detectors in Multiple Dwellings),
3. 19 NYCRR Part 1264 (Identification of Buildings Utilizing Truss Type Construction), and
4. 19 NYCRR Part 1265 (Residential Structures with Truss Type Construction, Pre-Engineered Wood Construction and/or Timber Construction).

[NY] R102.3 Application of references. References to chapter or section numbers, or to provisions not specifically identified by number, shall be construed to refer to such chapter, section or provision of this code.

[NY] R102.4 Referenced codes and standards. The codes and standards referenced in this code shall be considered part of the requirements of this code to the prescribed extent of each such reference and as further regulated in Sections R102.4.1 and R102.4.2.

Exception: Where enforcement of a code provision would violate the conditions of the *listing* of the *equipment* or *appliance*, the conditions of the *listing* and manufacturer's instructions shall apply.

[NY] R102.4.1 Conflicts. Where conflicts occur between provisions of this code and referenced codes and standards, the provisions of this code shall apply.

[NY] R102.4.2 Provisions in referenced codes and standards. Where the extent of the reference to a referenced code or standard includes subject matter that is within the scope of this code, the provisions of this code, as applicable, shall take precedence over the provisions in the referenced code or standard.

[NY] R102.5 Appendices. Provisions in the following appendices have been adopted and are made part of this code:

Appendix E	Manufactured Housing Used as Dwellings
Appendix H	Patio Covers
Appendix J	Existing Buildings and Structures
Appendix Q	Tiny Houses

In addition, the following appendices are included for informational purposes:

Appendix A	Sizing and Capacities of Gas Piping
Appendix B	Sizing of Venting Systems Serving Appliances Equipped with Draft Hoods, Category I Appliances and Appliances Listed for Use with Type B Vents
Appendix C	Exit Terminals of Mechanical Draft and Direct-vent Venting Systems
Appendix D	Recommended Procedure for Safety Inspection of an Existing Appliance Installation
Appendix F	Radon Control Methods
Appendix G	Piping Standards for Various Applications
Appendix K	Sound Transmission
Appendix N	Venting Methods
Appendix O	Automatic Vehicular Gates
Appendix P	Sizing of Water Piping Systems
Appendix R	Light Straw-Clay Construction
Appendix S	Strawbale Construction

INTERNATIONAL CODE COUNCIL®
Copyright © 2019 ICC & NYSDOS. ALL RIGHTS RESERVED. Accessed by Lauren Gualdino (lgualdino@briarcliffmanor.org), (-) Order Number #100880972 on May 08, 2020 07:05 AM (PDT) pursuant to License Agreement with ICC & NYSDOS. No further reproduction, no

100880972

Appendix T Solar-Ready Provisions—Detached One- and Two-family Dwellings and Townhouses

[NY] R102.6 Partial invalidity. In the event any part or provision of this code is held by a court of competent jurisdiction to be illegal or void, this shall not have the effect of making void or illegal any of the other parts or provisions.

[NY] R102.7 Existing structures. The legal occupancy of any structure existing on the effective date of this code shall be permitted to continue without change, except as required by any provision of this code or by any other provision of the *Uniform Code*. For the purposes of this section, the "effective date of this code" shall be deemed to be the 90th day after the date on which the Notice of Adoption of the rule incorporating this code by reference in Part 1220 of the New York Codes, Rules, and Regulations shall have been published in the State Register.

[NY] R102.7.1 Additions, alterations or repairs. *Additions*, *alterations* or repairs to any structure shall conform to the requirements for a new structure without requiring the existing structure to comply with the requirements of this code, unless otherwise stated. *Additions*, *alterations*, repairs and relocations shall not cause an existing structure to become unsafe or adversely affect the performance of the building.

[NY] SECTION R103 ADMINISTRATION AND ENFORCEMENT

[NY] R103.1 Administration and enforcement. The *Uniform Code* shall be administered and enforced by the *authority having jurisdiction*. The identity of the *authority having jurisdiction* in a given situation is determined in accordance with Article 18 of the Executive Law and the regulations promulgated by the Secretary of State pursuant to Executive Law Section 381(1). In general, the *authority having jurisdiction* is the local government (city, town or village) in which the *building* or *structure* is located. In certain situations, the *authority having jurisdiction* may be the county in which the building or *structure* is located. In certain other cases, the State, the Secretary of State (acting through the Department of State) or some other State agency may be the *authority having jurisdiction*. The *authority having jurisdiction* responsible for administration and enforcement of the *Uniform Code* is also responsible for administration and enforcement of the *Energy Code*.

Administration and enforcement of the *Uniform Code* and *Energy Code* shall be in accordance with the following, as applicable:

1. Where a city, town, village or county is the *authority having jurisdiction*:
   1.1. Such city, town, village or county shall provide for administration and enforcement of the *Uniform Code* and *Energy Code* by local law, ordinance, other appropriate regulation, or combination thereof.
   1.2. The *Code Enforcement Program* established by such local law, ordinance or other appropriate regulation, or combination thereof, must include, at a minimum, the features described in *Part 1203* and must satisfy all other requirements of *Part 1203*.
   1.3. Such city, town, village or county shall administer and enforce the *Uniform Code* in accordance with the *Code Enforcement Program* established by such local law, ordinance or other appropriate regulation, or combination thereof.
2. Where the State is the *authority having jurisdiction* pursuant to 19 NYCRR Section 1201.2(d):
   2.1. The *Code Enforcement Program* shall be as established by *Part 1204*.
   2.2. The State, acting through one or more State agencies, shall administer and enforce the *Uniform Code* and *Energy Code* in accordance with *Part 1204*.
3. Where the Department of State is the *authority having jurisdiction*:
   3.1. The *Code Enforcement Program* shall be as established by *Part 1202*.
   3.2. The Department of State shall administer and enforce the *Uniform Code* and *Energy Code* in accordance with *Part 1202*.
4. Where any governmental unit or agency not included in Items 1, 2, and 3 above is the *authority having jurisdiction*:
   4.1. Such governmental unit or agency shall provide for administration and enforcement of the *Uniform Code* and *Energy Code* by regulation.
   4.2. The *Code Enforcement Program* established by such regulation must include, at a minimum, the features described in *Part 1203* and must satisfy all other requirements of *Part 1203*.
   4.3. Such governmental unit or agency shall administer and enforce the *Uniform Code* and *Energy Code* in accordance with the *Code Enforcement Program* established by such regulation.

Every governmental unit or agency thereof charged with administration and enforcement of the *Uniform Code* shall exercise its powers in due and proper manner so as to extend to the public protection from the hazards of fire and inadequate building construction.

Any person or entity constructing or renovating a *building* or *structure*, changing the use or occupancy of a *building* or *structure*, or engaging in any other activity that is subject to the provisions of the *Code Enforcement Program* of the *authority having jurisdiction* responsible for administration and enforcement of the *Uniform Code* with respect to such *building* shall comply with all applicable provisions of such *Code Enforcement Program*.

In addition, persons and entities who construct, renovate, use and occupy *buildings* and *structures* shall comply with all applicable provisions of Section R105 of this code.

INTERNATIONAL CODE COUNCIL®
Copyright © 2019 ICC & NYSDOS. ALL RIGHTS RESERVED. Accessed by Lauren Gualdino (lgualdino@briarcliffmanor.org), (-) Order Number #100880972 on May 08, 2020 07:05 AM (PDT) pursuant to License Agreement with ICC & NYSDOS. No further reproduction, no

100880972

[NY] R103.2 Due process. Nothing in Chapter 1, or elsewhere in the *Uniform Code*, or in any regulation promulgated pursuant to Executive Law Section 381(1), shall be construed as authorizing any *authority having jurisdiction* to administer and enforce the *Uniform Code* in a manner that deprives any person or entity of due process of law. In particular, but not by way of limitation, nothing in Chapter 1, or elsewhere in this code or elsewhere in the *Uniform Code*, or in any regulation promulgated pursuant to Executive Law Section 381(1), relating to posting, placarding and/or condemnation of *buildings* or *structures* that are unsafe, unfit for human occupancy or unlawful shall be construed as authorizing any *authority having jurisdiction* to post, placard or condemn any such *building* or *structure* and/or to remove any owner or occupant or cause any owner or occupant to be removed from any such *building* or *structure* without providing such notice and opportunity to be heard (and, if applicable, right of appeal) as may be required under the applicable circumstances by applicable Constitutional provisions.

[NY] R103.2.1 Imminent danger. In cases of imminent danger, posting, placarding, and condemning a *building* or *structure* and removing *owners* and occupants or causing *owners* and occupants to be removed without first providing an opportunity to be heard shall be permitted to the extent consistent with applicable Constitutional provisions, provided that the affected persons and entities are afforded the opportunity for a post-action hearing to the extent required by applicable Constitutional provisions.

[NY] R103.3 Application for variance or appeal. An application for a variance or modification of any provision or requirement of *Uniform Code* shall be in accordance with the provisions of *Part 1205*. An appeal of any order or determination, or the failure within a reasonable time to make an order or determination, of an administrative official charged to enforce or purporting to enforce the *Uniform Code* may be made in accordance with the provisions of *Part 1205*.

[NY] SECTION R104
MATERIALS, EQUIPMENT AND METHODS OF CONSTRUCTION

[NY] R104.1 Approved materials and equipment. Materials, equipment and devices *approved* by the *building official* shall be constructed and installed in accordance with such approval. Materials, equipment and devices tested by an *approved* testing laboratory shall be permitted to be constructed and installed in accordance with such approval.

[NY] R104.1.1 Used materials and equipment. Used materials, equipment, and devices shall not be reused unless they meet the requirements of this code for new materials.

[NY] R104.2 Waivers, variances, and modifications. Nothing in this code shall be construed as permitting any *building official* or any *authority having jurisdiction* to waive, vary, modify, or otherwise alter any provision or requirement of this code or any other provision or requirement of the *Uniform Code*. Provisions or requirements of the *Uniform Code* may be varied or modified only in accordance with procedures established by 19 NYCRR *Part 1205* or by such other regulations as may hereafter be promulgated by the Secretary of State pursuant to Section 381(1)(f) of the Executive Law.

[NY] R104.3 Alternative materials, equipment, appliances, designs, and methods of construction. The provisions of this code are not intended to prevent the installation of any materials, *equipment*, or *appliances* not specifically prescribed by this code, or to prohibit any designs or methods of construction not specifically prescribed by this code, provided that such alternative materials, *equipment*, *appliances*, designs, or methods of construction (1) are not specifically prohibited by any provision of this code, by any other provision of the *Uniform Code*, or by the *Energy Code* and (2) shall have been approved, in writing, by the *building official*. Alternative materials, equipment, appliances, designs, or methods of construction may be approved only when the *building official* shall have determined, in writing, that such alternative is:

1. Satisfactory and complies with the intent of the provisions and requirements of the *Uniform Code*; and
2. Not less than the equivalent of that prescribed in the *Uniform Code* in quality, strength, effectiveness, fire resistance, durability, and safety.

Nothing in Section R104.3shall be construed as permitting any *building official* or any *authority having jurisdiction* to waive, vary, modify or otherwise alter any provision or requirement of this code or any other provision or requirement of the *Uniform Code*. Provisions or requirements of the *Uniform Code* may be varied or modified only pursuant to procedures established 19 NYCRR *Part 1205* or by such other regulations as may hereafter be promulgated by the Secretary of State pursuant to Section 381(1)(f) of the Executive Law.

[NY] R104.4 Workmanship. Repairs, maintenance work, *alterations* or installations which are caused directly or indirectly by the enforcement of the *Uniform Code* shall be executed and installed in a *workmanlike* manner and in a *workmanlike* manner and in accordance with *Uniform Code* and the manufacturer's installation instructions.

[NY] SECTION R105
BUILDING PERMITS, CONSTRUCTION INSPECTIONS, STOP WORK ORDERS, AND CERTIFICATES OF OCCUPANCY

[NY] R105.1 Purpose. The purpose of Section R105 is to include in the *Uniform Code* provisions requiring persons and entities who construct, renovate, use and occupy *buildings* and *structures* to apply for and obtain *building permits*, to facilitate construction inspections, to obey stop work orders, to obtain *certificates of occupancy*, and to obtain *operating permits*. The provisions in Section R105 are considered to be integral parts of the *Uniform Code*'s standards for construction, maintenance, and fire protection equipment and systems.

[NY] R105.1.1 Definition. For the purpose of Section R105, the term "other applicable law" shall include the *authority having jurisdiction's Code Enforcement Program*; any local law, ordinance, or regulation establishing

INTERNATIONAL CODE COUNCIL®
Copyright © 2019 ICC & NYSDOS. ALL RIGHTS RESERVED. Accessed by Lauren Gualdino (lgualdino@briarcliffmanor.org), (-) Order Number #100880972 on May 08, 2020 07:05 AM (PDT) pursuant to License Agreement with ICC & NYSDOS. No further reproduction, no

100880972

the *authority having jurisdiction's Code Enforcement Program*; and any other applicable statute, regulation, rule, local law, or ordinance.

[NY] R105.2 Building permits. No person or entity shall commence, perform, or continue any work that must conform with the *Uniform Code* and/or *Energy Code* unless:

1. Such person or entity has applied to the *authority having jurisdiction* for a building permit,
2. The *authority having jurisdiction* has issued a building permit authorizing such work,
3. Such *building permit* has not been revoked or suspended, and
4. Such *building permit* has not expired.

[NY] R105.2.1 Work exempt from building permit requirement. A *building permit* shall not be required for work in any category that is excluded from the *building permit* requirement by the *authority having jurisdiction*'s *Code Enforcement Program*, provided that *Part 1203* allows an *authority having jurisdiction* to exclude such category of work from the *building permit requirement*. Exemptions from *building permit* requirements shall not be deemed to grant authorization for any work to be done in any manner in violation of any provision the *Uniform Code*, any provision of the *Energy Code*, or any provision of any other applicable law.

[NY] R105.2.2 Applications for building permits. A person or entity applying for a *building permit* shall submit an application to the *authority having jurisdiction.* An application for a *building permit* shall include:

1. *Construction documents* that satisfy the requirements of Section R106.2.
2. Any and all other submittal documents required by Section R106.
3. Any and all information and documentation that may be required by the stricter of the *authority having jurisdiction*'s *Code Enforcement Program* or a *Part 1203—Compliant Code Enforcement Program*.
4. Such other information and documentation as the *authority having jurisdiction* may determine to be necessary to allow the *authority having jurisdiction* to determine whether the proposed work conforms with the *Uniform Code*, the *Energy Code*, and other relevant codes, laws, ordinances, and regulations.

[NY] R105.2.2.1 Determination of substantially improved or substantially damaged existing buildings in flood hazard areas. For applications for a *building permit* for the reconstruction, rehabilitation, *addition*, *alteration*, repair or other improvement of existing *buildings* or *structures* located in a flood hazard area as established by Table R301.2(1), the *building official* shall examine or cause to be examined the *construction documents* and the construction estimate of the value of the proposed work provided by the applicant. For buildings or *structures* that have sustained damage of any origin, the value of the proposed work shall include the cost to repair the *building* or *structure* to its predamaged condition. If the *building official* finds that the value of proposed work equals or exceeds 50 percent of the market value of the *building* or *structure* before the damage has occurred or the improvement is started, the proposed work is a substantial improvement or repair of substantial damage and the *building official* shall require existing portions of the entire *building* or *structure* to meet the requirements of Section R322.

For the purpose of this determination, a substantial improvement shall mean any repair, reconstruction, rehabilitation, addition or improvement of a *building* or *structure*, the cost of which equals or exceeds 50 percent of the market value of the *building* or *structure* before the improvement or repair is started. Where the *building* or *structure* has sustained substantial damage, repairs necessary to restore the *building* or *structure* to its predamaged condition shall be considered substantial improvements regardless of the actual repair work performed. The term substantial improvement shall not include either of the following:

1. Improvements to a *building* or *structure* that are required to correct existing health, sanitary or safety code violations identified by the *building official* and that are the minimum necessary to ensure safe living conditions.
2. Any *alteration* of a *historic building* or *structure*, provided that the *alteration* will not preclude the continued designation as a *historic building* or *structure*.

[**NY] 105.2.3 Approval of construction documents.** When the *authority having jurisdiction* issues a *building permit*, the *authority having jurisdiction* shall approve the construction documents in writing. Work shall be installed in accordance with the approved construction documents and the terms and conditions, if any, of the *building permit*.

[NY] R105.2.4 Validity of building permit. The issuance or granting of a *building permit* shall not be construed to be a permit for, or an approval of, any violation of any provision of the *Uniform Code*, the *Energy Code*, or of any other applicable law. A *building permit* purporting to give authority to violate or cancel any provision of the *Uniform Code* shall not be valid. The issuance of a *building permit* based on *construction documents* and other data shall not prevent the *building official* from requiring the correction of errors in the *construction documents* and other data.

[NY] R105.2.5 Suspension or revocation of building permit. The *authority having jurisdiction* is authorized to suspend or revoke a *building permit* wherever the *building permit* is issued in error or on the basis of incorrect, inaccurate or incomplete information, or in violation of any provision of the *Uniform Code*, the *Energy Code*, or any other applicable law. Any such suspension or revocation shall be in writing, signed by an authorized agent of the *authority having jurisdiction.*

[NY] R105.2.6 Placement of building permit and approved construction documents. The *building permit,* or a copy thereof, and at least one set of *approved con-*

INTERNATIONAL CODE COUNCIL®
Copyright © 2019 ICC & NYSDOS. ALL RIGHTS RESERVED. Accessed by Lauren Gualdino (lgualdino@briarcliffmanor.org), (-) Order Number #100880972 on May 08, 2020 07:05 AM (PDT) pursuant to License Agreement with ICC & NYSDOS. No further reproduction, no

100880972

struction documents shall be kept on the site of the work until the completion of the project. The *approved construction documents* shall be open to inspection by any authorized representative of the *authority having jurisdiction*.

[NY] R105.3 Construction inspections. Any person or entity performing work for which a *building permit* has been issued shall keep work accessible and exposed until the work has been inspected and accepted by the *authority having jurisdiction*, or its authorized agent, at each element of the construction process that is applicable to the work and specified in the stricter of the *authority having jurisdiction*'s *Code Enforcement Program* or a *Part 1203—Compliant Code Enforcement Program*.

[NY] R105.3.1 Inspection requests. It shall be the duty of the holder of the *building permit* or their duly authorized agent to notify the *building official* when work is ready for inspection. It shall be the duty of the *building permit* holder to provide access to and means for inspections of such work that are required by this code.

[NY] R105.4 Stop work orders. The *authority having jurisdiction* is authorized to issue a stop work order to halt work that is being performed without a required *building permit*; work that is being performed after a required *building permit* has been revoked or suspended or has expired; work that is being conducted in a dangerous or unsafe manner; or work that is contrary to provisions of the *Uniform Code*, the *Energy Code*, the *approved construction documents*, or the terms and conditions (if any) of the *building permit*. No person or entity shall commence, perform or continue any work if the *authority having jurisdiction* has issued a stop work order with respect to such work.

[NY] R105.5 Certificates of occupancy. Where the stricter of the *authority having jurisdiction*'s *Code Enforcement Program* or a *Part 1203—Compliant Code Enforcement Program* requires a *certificate of occupancy* for permission to use or occupy a *building* or *structure*, or any portion thereof, no person or entity shall use or occupy such *building* or *structure*, or such portion thereof, unless:

1. The *authority having jurisdiction* has issued such *certificate of occupancy*,
2. Such *certificate of occupancy* has not been revoked or suspended, and
3. In the case of a temporary *certificate of occupancy*, such temporary *certificate of occupancy* has not expired.

[NY] R105.5.1 Authorized uses and occupancies. Where a *certificate of occupancy* has been issued for a *building* or *structure*, or any portion thereof, no person or entity shall use or occupy such *building* or *structure*, or such portion thereof, for any use or occupancy other than that authorized by such *certificate of occupancy*.

[NY] R105.5.2 Change in use or occupancy. Without regard to whether a *certificate of occupancy* shall have been issued, no person or entity shall convert the use or occupancy of a *building* or *structure*, or any portion thereof, from one use or occupancy to another without first obtaining a *building permit* to perform the work, if any, required for such conversion; performing such required work, if any; and obtaining a *certificate of occupancy* from the *authority having jurisdiction*.

[NY] R105.6 Violations. Any violation of any provision set forth in Sections R105.2 through R105.5 shall be a violation of the *Uniform Code*, and any person or entity violating any such provision shall be subject to the penalties prescribed in Executive Law Section 382(2). In addition, to the extent that any act or omission that violates any provision set forth in Sections R105.2 through R105.5 is also a violation of any other applicable law, any person or entity guilty of such act or omission shall also be subject to the penalties prescribed in or otherwise applicable to a violation of such other applicable law.

[NY] SECTION R106
SUBMITTAL DOCUMENTS

[NY] R106.1 General. Submittal documents consisting of *construction documents*, and other data shall be submitted with each application for a *building permit*.

[NY] R106.1.1 Information on construction documents. *Construction documents* shall define the scope of the proposed work; shall be of sufficient clarity to indicate the location, nature and extent of the proposed work; shall show in detail that the proposed work will conform to the provisions of the *Uniform Code*, the *Energy Code*, and other applicable codes, laws, ordinances, and regulations; and shall include any and all additional information and documentation that may be required by the stricter of the *Code Enforcement Program* of the *authority having jurisdiction* or a *Part 1203—Compliant Code Enforcement Program*.

[NY] R106.1.2 Manufacturer's installation instructions. Manufacturer's installation instructions, as required by any applicable provision of the *Uniform Code* or by any applicable provision of the *Energy Code*, shall be available on the job site at the time of inspection.

[NY] R106.1.3 Information on braced wall design. For *buildings* and *structures* utilizing braced wall design, braced wall lines shall be identified on the *construction documents*. Pertinent information including, but not limited to, bracing methods, location and length of *braced wall panels* and foundation requirements of braced wall panels at top and bottom shall be provided.

[NY] R106.1.4 Information for construction in flood hazard areas. For *buildings* and *structures* located in whole or in part in flood hazard areas as established by Table R301.2(1), *construction documents* shall include:

1. Delineation of flood hazard areas, floodway boundaries and flood zones and the design flood elevation, as appropriate.

INTERNATIONAL CODE COUNCIL®
Copyright © 2019 ICC & NYSDOS. ALL RIGHTS RESERVED. Accessed by Lauren Gualdino (lgualdino@briarcliffmanor.org), (-) Order Number #100880972 on May 08, 2020 07:05 AM (PDT) pursuant to License Agreement with ICC & NYSDOS. No further reproduction, no

100880972

2. The elevation of the proposed lowest floor, including *basement*; in areas of shallow flooding (AO Zones), the height of the proposed lowest floor, including *basement*, above the highest adjacent *grade*.
3. The elevation of the bottom of the lowest horizontal structural member in coastal high-hazard areas (V Zone) and in Coastal A Zones where such zones are delineated on flood hazard maps identified in Table R301.2(1) or otherwise delineated by the jurisdiction.
4. If design flood elevations are not included on the community's Flood Insurance Rate Map (FIRM), the *building official* and the applicant shall obtain and reasonably utilize any design flood elevation and floodway data available from other sources.

[NY] R106.2 Site plan. The *construction documents* submitted with the application for a *building permit* shall be accompanied by a site plan showing the size and location of new construction and existing structures on the site and distances from *lot lines*. In the case of demolition, the site plan shall show construction to be demolished and the location and size of existing structures and construction that are to remain on the site or plot. The *building official* is authorized to waive or modify the requirement for a site plan where the application for *building permit* is for *alteration* or repair or where otherwise warranted.

[NY] R106.3 Design professional. *Construction documents* shall be prepared by a registered *design professional* when required by Article 145 or Article 147 of the New York State Education Law, by the stricter of *Code Enforcement Program* of the *authority having jurisdiction* or a *Part 1203—Compliant Code Enforcement Program*, or by any other applicable statute, regulation, or local law or ordinance.

[NY] SECTION R107 SERVICE UTILITIES

[NY] R107.1 Connection of service utilities. Connections from a utility, source of energy, fuel or power to any *building* or system which is regulated by this code shall be made in accordance with the requirements of the *Uniform Code*; the regulations of the public utility providing such utility, source of energy, fuel or power; and the regulations of any governmental unit or agency having jurisdiction over such utility, source of energy, fuel or power.

[NY] R107.1.1 Temporary connection. Where approved by the *building official*, temporary connections from a utility, source of energy, fuel or power to a building or system may be made. Temporary connections shall be made in accordance with Section R107.1.

[NY] R107.2 Notice of disconnection of service utilities. The owner or the owner's authorized agent shall notify the *building official* of the disconnection of any utility service to the *building*, *structure*, or system regulated by the *Uniform Code*.

[NY] SECTION R108 INSPECTION OF SOLID FUEL-BURNING HEATING APPLIANCES, CHIMNEYS AND FLUES

[NY] R108.1 General. Section R108 is made part of this code pursuant to Executive Law Section 378 (5-c).

[NY] R108.2 Permit. Prior to the installation of any solid fuel-burning heating appliance, *chimney* or flue in any dwelling used as a residence, the owner thereof, or his agent, shall first secure a *permit* from the *authority having jurisdiction*.

[NY] R108.3 Installation and inspection. An appropriate and qualified inspector, as determined by the *authority having jurisdiction*, shall cause an inspection to be made of the solid fuel-burning heating appliance, *chimney* or *flue* at a time when such inspection will best determine conformity of such installation with the *Uniform Code*.

Exception: The *authority having jurisdiction* may waive such inspection for good cause shown.

[NY] R108.4 Certificate of approval. Upon approval of such installation, the *building official* or other appropriate official of the *authority having jurisdiction* shall issue a certificate evidencing compliance with the appropriate provisions of the *Uniform Code* (such certificate being hereinafter referred to as a "certificate of approval"). No *owner* of any *dwelling* used as a residence shall operate, or cause to be operated, any solid fuel-burning heating appliance until such installation, including *chimney* and flue, has been approved and a certificate of approval has been obtained from the *authority having jurisdiction.*

[NY] R108.4.1 Accidental fire. In the event of an accidental fire in a solid fuel-burning heating appliance, *chimney* or *flue* requiring the services of a fire department, the chief of the responding fire department may issue a temporary thirty-day certificate indicating substantial conformity with the *Uniform Code*.

The *authority having jurisdiction* shall cause an inspection to be made by an official inspector, as determined by the *Code Enforcement Program* of the *authority having jurisdiction*, and a new certificate to be issued indicating conformity of such solid fuel-burning heating appliance, *chimney* or *flue* with the *Uniform Code*.

[NY] R108.4.2 Liability. Pursuant to Executive Law Section 378(5-c)(f), the issuance of such certificate of approval shall not be deemed to give rise to any claim or cause of action for damages against the *authority having jurisdiction* or any official of the *authority having jurisdiction* for damages resulting from operation or use of such solid fuel-burning heating appliance, *chimney* or *flue*.

[NY] R108.5 Fee. The *authority having jurisdiction* may establish and collect a reasonable fee for such inspection from the owner of such property or such owner's agent.

[NY] R108.6 Violations. Pursuant to Executive Law Section 378(5-c)(h), any violation of Section R108 shall be deemed a violation and shall be punishable by a fine not to exceed two hundred fifty dollars.

INTERNATIONAL CODE COUNCIL®
Copyright © 2019 ICC & NYSDOS. ALL RIGHTS RESERVED. Accessed by Lauren Gualdino (lgualdino@briarcliffmanor.org), (-) Order Number #100880972 on May 08, 2020 07:05 AM (PDT) pursuant to License Agreement with ICC & NYSDOS. No further reproduction, no

100880972

[NY] R108.7 Emergency repair. Where equipment replacements and repairs must be performed in an emergency situation and where a delay occasioned by the requirement of securing a *permit* could reasonably be expected to cause irreparable damage to the property or serious personal injury to the occupants or other person, the owner or his agent may commence such installation without first obtaining such *permit* provided application therefore is filed within three business days after such work is commenced.

INTERNATIONAL CODE COUNCIL®
Copyright © 2019 ICC & NYSDOS. ALL RIGHTS RESERVED. Accessed by Lauren Gualdino (lgualdino@briarcliffmanor.org), (-) Order Number #100880972 on May 08, 2020 07:05 AM (PDT) pursuant to License Agreement with ICC & NYSDOS. No further reproduction, no

100880972

Part II—Definitions

CHAPTER 2

DEFINITIONS

SECTION R201
GENERAL

R201.1 Scope. Unless otherwise expressly stated, the following words and terms shall, for the purposes of this code, have the meanings indicated in this chapter.

R201.2 Interchangeability. Words used in the present tense include the future; words in the masculine gender include the feminine and neuter; the singular number includes the plural and the plural, the singular.

[NY] R201.3 Terms defined in other codes. Where terms are not defined in this code and are defined in the *Building Code of New York State*, *Property Maintenance Code of New York State*, *Existing Building of New York State*, *Fire Code of New York State*, *Fuel Gas Code of New York State*, *Mechanical Code of New York State* or *Plumbing Code of New York State*, such terms shall have the meanings ascribed to them as stated in those codes.

R201.4 Terms not defined. Where terms are not defined through the methods authorized by this section, such terms shall have ordinarily accepted meanings such as the context implies.

SECTION R202
DEFINITIONS

[RE] ABOVE-GRADE WALL. For the definition applicable in Chapter 11, see Section N1101.6.

[RB] ACCESS (TO). That which enables a device, an appliance or equipment to be reached by ready access or by a means that first requires the removal or movement of a panel, door or similar obstruction.

[NY] ACCESS ROOF. A roof surface that:

1. Can be accessed from the ground by the fire service,
2. Is capable of providing fire service access to the ridge or peak of an opposing or adjacent roof surface that contains photovoltaic modules, panels, or an array,
3. Is relatively free of vents, skylights, conduits, mechanical equipment, and other such obstructions, and
4. Does not contain photovoltaic modules, panels, or an array, or, is a single ridge roof where the maximum edge to edge width of the photovoltaic panel system does not exceed 33 percent of the ridge length.

[RE] ACCESSIBLE. For the definition applicable in Chapter 11, see Section N1101.6.

[RB] ACCESSORY STRUCTURE. A structure that is accessory to and incidental to that of the *dwelling*(*s*) and that is located on the same *lot*.

[RB] ADDITION. An extension or increase in floor area, number of stories or height of a building or structure. For the definition applicable in Chapter 11, see Section N1101.6.

[RB] ADHERED STONE OR MASONRY VENEER. Stone or masonry veneer secured and supported through the adhesion of an *approved* bonding material applied to an *approved* backing.

[MP] AIR ADMITTANCE VALVE. A one-way valve designed to allow air into the plumbing drainage system where a negative pressure develops in the piping. This device shall close by gravity and seal the terminal under conditions of zero differential pressure (no flow conditions) and under positive internal pressure.

[RE] AIR BARRIER. For the definition applicable in Chapter 11, see Section N1101.6.

[MP] AIR BREAK (DRAINAGE SYSTEM). An arrangement where a discharge pipe from a fixture, *appliance* or device drains indirectly into a receptor below the flood-level rim of the receptor and above the trap seal.

[MP] AIR CIRCULATION, FORCED. A means of providing space conditioning utilizing movement of air through ducts or plenums by mechanical means.

[MP] AIR-CONDITIONING SYSTEM. A system that consists of heat exchangers, blowers, filters, supply, exhaust and return-air systems, and shall include any apparatus installed in connection therewith.

[MP] AIR GAP, DRAINAGE SYSTEM. The unobstructed vertical distance through free atmosphere between the outlet of a waste pipe and the flood-level rim of the fixture or receptor into which it is discharging.

[MP] AIR GAP, WATER-DISTRIBUTION SYSTEM. The unobstructed vertical distance through free atmosphere between the lowest opening from a water supply discharge to the flood-level rim of a plumbing fixture.

[NY] AIR-IMPERMEABLE INSULATION. An insulation having an air permanence equal to or less than 0.02 L/s-m^2 at 75 Pa pressure differential as tested in accordance with ASTM E2178 or E283.

[RB] ALTERATION. Any construction, retrofit or renovation to an existing structure other than repair or addition that requires a permit. Also, a change in a building, electrical, gas, mechanical or plumbing system that involves an extension, addition or change to the arrangement, type or purpose of the

INTERNATIONAL CODE COUNCIL®
Copyright © 2019 ICC & NYSDOS. ALL RIGHTS RESERVED. Accessed by Lauren Gualdino (lgualdino@briarcliffmanor.org), (-) Order Number #100880972 on May 08, 2020 07:05 AM (PDT) pursuant to License Agreement with ICC & NYSDOS. No further reproduction, no

100880972

original installation that requires a permit. For the definition applicable in Chapter 11, see Section N1101.6.

[RB] ALTERNATING TREAD DEVICE. A device that has a series of steps between 50 and 70 degrees (0.87 and 1.22 rad) from horizontal, usually attached to a center support rail in an alternating manner so that the user does not have both feet on the same level at the same time.

[RB] ANCHORED STONE OR MASONRY VENEER. Stone or masonry veneer secured with *approved* mechanical fasteners to an *approved* backing.

[MP] ANCHORS. See "Supports."

[MP] ANTISIPHON. A term applied to valves or mechanical devices that eliminate siphonage.

[MP] APPLIANCE. A device or apparatus that is manufactured and designed to utilize energy and for which this code provides specific requirements.

[RB] APPROVED. Acceptable to the *building official*.

[RB] APPROVED AGENCY. An established and recognized agency that is regularly engaged in conducting tests, furnishing inspection services or furnishing product certification, and has been *approved* by the building official. For the definition applicable in Chapter 11, see Section N1101.6.

[MP] APPROVED SOURCE. An independent person, firm or corporation, *approved* by the *building official*, who is competent and experienced in the application of engineering principles to materials, methods or systems analyses.

[RB] ASPECT RATIO. The ratio of longest to shortest perpendicular dimensions, or for wall sections, the ratio of height to length.

[RB] ATTIC. The unfinished space between the ceiling assembly and the roof assembly.

[RB] ATTIC, HABITABLE. A finished or unfinished *habitable space* within an *attic*.

[NY] AUTHORITY HAVING JURISDICTION. The governmental unit or agency responsible for administration and enforcement of this code.

[RE] AUTOMATIC. For the definition applicable in Chapter 11, see Section N1101.6.

[MP] BACKFLOW, DRAINAGE. A reversal of flow in the drainage system.

[MP] BACKFLOW PREVENTER. A backflow prevention assembly, a backflow prevention device or other means or method to prevent backflow into the potable water supply.

[MP] BACKFLOW PREVENTER, REDUCED-PRESSURE-ZONE TYPE. A backflow-prevention device consisting of two independently acting check valves, internally force loaded to a normally closed position and separated by an intermediate chamber (or zone) in which there is an automatic relief means of venting to atmosphere internally loaded to a normally open position between two tightly closing shutoff valves and with means for testing for tightness of the checks and opening of relief means.

[MP] BACKFLOW, WATER DISTRIBUTION. The flow of water or other liquids into the potable water-supply piping from any sources other than its intended source. Backsiphonage is one type of backflow.

[MP] BACKPRESSURE. Pressure created by any means in the water distribution system that by being in excess of the pressure in the water supply mains causes a potential backflow condition.

[MP] BACKPRESSURE, LOW HEAD. A pressure less than or equal to 4.33 psi (29.88 kPa) or the pressure exerted by a 10-foot (3048 mm) column of water.

[MP] BACKSIPHONAGE. The flowing back of used or contaminated water from piping into a potable water-supply pipe due to a negative pressure in such pipe.

[MP] BACKWATER VALVE. A device installed in a drain or pipe to prevent backflow of sewage.

[RB] BASEMENT. A *story* that is not a *story above grade plane* (see "Story above grade plane").

[RE] BASEMENT WALL. For the definition applicable in Chapter 11, see Section N1101.6.

[RB] BASIC WIND SPEED. Three-second gust speed at 33 feet (10 058 mm) above the ground in Exposure C (see Section R301.2.1) as given in Figure R301.2(5)A.

[MP] BATHROOM GROUP. A group of fixtures, including or excluding a bidet, consisting of a water closet, lavatory, and bathtub or shower. Such fixtures are located together on the same floor level.

[RB] BATTERY SYSTEM, STATIONARY STORAGE. A rechargeable energy storage system consisting of electrochemical storage batteries, battery chargers, controls and associated electrical *equipment* designed to provide electrical power to a building. The system is typically used to provide standby or emergency power, an uninterruptable power supply, load shedding, load sharing or similar capabilities.

[NY] BED AND BREAKFAST DWELLING. An owner-occupied residence resulting from a conversion of a one-family dwelling, used for providing overnight accommodations and a morning meal to not more than ten transient lodgers, and containing not more than five bedrooms for such lodgers.

[MP] BEND. A drainage fitting, designed to provide a change in direction of a drain pipe of less than the angle specified by the amount necessary to establish the desired slope of the line (see "Elbow" and "Sweep").

[MP] BOILER. A self-contained *appliance* from which hot water is circulated for heating purposes and then returned to the boiler, and that operates at water pressures not exceeding 160 pounds per square inch gage (psig) (1102 kPa gauge) and at water temperatures not exceeding 250°F (121°C).

[RB] BOND BEAM. A horizontal grouted element within masonry in which reinforcement is embedded.

[RB] BRACED WALL LINE. A straight line through the building plan that represents the location of the lateral resistance provided by the wall bracing.

[RB] BRACED WALL LINE, CONTINUOUSLY SHEATHED. A *braced wall line* with structural sheathing applied to all sheathable surfaces including the areas above and below openings.

INTERNATIONAL CODE COUNCIL®
Copyright © 2019 ICC & NYSDOS. ALL RIGHTS RESERVED. Accessed by Lauren Gualdino (lgualdino@briarcliffmanor.org), (-) Order Number #100880972 on May 08, 2020 07:05 AM (PDT) pursuant to License Agreement with ICC & NYSDOS. No further reproduction, no

100880972

[RB] BRACED WALL PANEL. A full-height section of wall constructed to resist in-plane shear loads through interaction of framing members, sheathing material and anchors. The panel's length meets the requirements of its particular bracing method, and contributes toward the total amount of bracing required along its *braced wall line* in accordance with Section R602.10.1.

[MP] BRANCH. Any part of the piping system other than a riser, main or stack.

[MP] BRANCH, FIXTURE. See "Fixture branch, drainage."

[MP] BRANCH, HORIZONTAL. See "Horizontal branch, drainage."

[MP] BRANCH INTERVAL. A vertical measurement of distance, 8 feet (2438 mm) or more in *developed length*, between the connections of horizontal branches to a drainage stack. Measurements are taken down the stack from the highest horizontal branch connection.

[MP] BRANCH, MAIN. A water-distribution pipe that extends horizontally off a main or riser to convey water to branches or fixture groups.

[MP] BRANCH, VENT. A vent connecting two or more individual vents with a vent stack or stack vent.

[MP] BTU/H. The *listed* maximum capacity of an *appliance*, absorption unit or burner expressed in British thermal units input per hour.

[RB] BUILDING. Any one- or two-family *dwelling* or portion thereof, including *townhouses*, used or intended to be used for human habitation, for living, sleeping, cooking or eating purposes, or any combination thereof, or any *accessory structure*. For the definition applicable in Chapter 11, see Section N1101.6.

[NY] BUILDING CODE OF NEW YORK STATE. The 2020 edition of the publication entitled "Building Code of New York State," published by the International Code Council, Inc. (publication date November 2019).

[MP] BUILDING DRAIN. The lowest piping that collects the discharge from all other drainage piping inside the house and extends 30 inches (762 mm) in *developed length* of pipe, beyond the *exterior walls* and conveys the drainage to the *building sewer*.

[NY] BUILDING, EXISTING. A *building or structure* that is legally occupied and/or for which a *certificate of occupancy* authorizing its use(s) has been issued, without regard to the date on which such legal occupancy began or the date on which such certificate of occupancy was issued.

[RB] BUILDING-INTEGRATED PHOTOVOLTAIC PRODUCT. A building product that incorporates photovoltaic modules and functions as a component of the building envelope.

[RB] BUILDING-INTEGRATED PHOTOVOLTAIC ROOF PANEL (BIPV Roof Panel). A *photovoltaic panel* that functions as a component of the building envelope.

[RB] BUILDING LINE. The line established by law, beyond which a building shall not extend, except as specifically provided by law.

[RB] BUILDING OFFICIAL. The officer or other designated authority charged with the administration and enforcement of this code, or a duly authorized representative. For the definition applicable in Chapter 11, see Section N1101.6.

[MP] BUILDING SEWER. That part of the drainage system that extends from the end of the *building drain* and conveys its discharge to a public sewer, private sewer, individual sewage-disposal system or other point of disposal.

[RE] BUILDING SITE. For the definition applicable in Chapter 11, see Section N1101.6.

[NY] BUILDING THERMAL ENVELOPE. The exterior walls (above and below grade), floors, ceilings, roofs and any other building element assemblies that enclose conditioned space or provide a boundary between conditioned space and unconditioned space.

[RB] BUILT-UP ROOF COVERING. Two or more layers of felt cemented together and surfaced with a cap sheet, mineral aggregate, smooth coating or similar surfacing material.

[RB] CAP PLATE. The top plate of the double top plates used in structural insulated panel (SIP) construction. The cap plate is cut to match the panel thickness such that it overlaps the wood structural panel facing on both sides.

[RB] CARBON MONOXIDE ALARM. A single- or multiple-station alarm intended to detect carbon monoxide gas and alert occupants by a distinct audible signal. It incorporates a sensor, control components and an alarm notification appliance in a single unit.

[RB] CARBON MONOXIDE DETECTOR. A device with an integral sensor to detect carbon monoxide gas and transmit an alarm signal to a connected alarm control unit.

[RB] CEILING HEIGHT. The clear vertical distance from the finished floor to the finished ceiling.

[RB] CEMENT PLASTER. A mixture of Portland or blended cement, Portland cement or blended cement and hydrated lime, masonry cement or plastic cement and aggregate and other *approved* materials as specified in this code.

[NY] CERTIFICATE OF OCCUPANCY. A document issued by the *authority having jurisdiction* certifying that the building complies with the *approved construction documents* that have been submitted to and approved by the *authority having jurisdiction*, indicating it to be in a condition suitable for occupancy.

[RB] CHANGE OF OCCUPANCY. A change in the use of a building or portion of a building that involves a change in the application of the requirements of this code.

[MP] CHIMNEY. A primary vertical structure containing one or more flues, for the purpose of carrying gaseous products of combustion and air from a fuel-burning *appliance* to the outside atmosphere.

[MP] CHIMNEY CONNECTOR. A pipe that connects a fuel-burning *appliance* to a chimney.

INTERNATIONAL CODE COUNCIL®
Copyright © 2019 ICC & NYSDOS. ALL RIGHTS RESERVED. Accessed by Lauren Gualdino (lgualdino@briarcliffmanor.org), (-) Order Number #100880972 on May 08, 2020 07:05 AM (PDT) pursuant to License Agreement with ICC & NYSDOS. No further reproduction, no

100880972

[MP] CHIMNEY TYPES.

Residential-type appliance. An *approved* chimney for removing the products of combustion from fuel-burning, residential-type *appliances* producing combustion gases not in excess of 1,000°F (538°C) under normal operating conditions, and capable of producing combustion gases of 1,400°F (760°C) during intermittent forces firing for periods up to 1 hour. All temperatures shall be measured at the *appliance* flue outlet. Residential-type *appliance* chimneys include masonry and factory-built types.

[MP] CIRCUIT VENT. A vent that connects to a horizontal drainage branch and vents two traps to not more than eight traps or trapped fixtures connected into a battery.

[MP] CIRCULATING HOT WATER SYSTEM. A specifically designed water distribution system where one or more pumps are operated in the service hot water piping to circulate heated water from the water-heating equipment to fixtures and back to the water-heating equipment. For the definition applicable in Chapter 11, see Section N1101.6.

[RB] CLADDING. The exterior materials that cover the surface of the building envelope that is directly loaded by the wind.

[MP] CLEANOUT. An opening in the drainage system used for the removal of possible obstruction and located to allow for *access*.

[RE] CLIMATE ZONE. A geographical region based on climatic criteria as specified in this code. For the definition applicable in Chapter 11, see Section N1101.6.

[RB] CLOSET. A small room or chamber used for storage.

[NY] CODE ENFORCEMENT PROGRAM. The program under which an *authority having jurisdiction* administers and enforces this code, as such program is currently in effect and as such program may hereafter be amended from time to time.

[RB] COLLAPSIBLE SOILS. Soils that exhibit volumetric reduction in response to partial or full wetting under load.

[MP] COLLECTION PIPE. Unpressurized pipe used within the collection system that drains on-site nonpotable water or rainwater to a storage tank by gravity.

[MP] COMBINATION WASTE AND VENT SYSTEM. A specially designed system of waste piping embodying the horizontal wet venting of one or more sinks, lavatories or floor drains by means of a common waste and vent pipe adequately sized to provide free movement of air above the flow line of the drain.

[RB] COMBUSTIBLE MATERIAL. Any material not defined as noncombustible.

[MP] COMBUSTION AIR. The air provided to fuel-burning *equipment* including air for fuel combustion, draft hood dilution and ventilation of the *equipment* enclosure.

[MP] COMMON VENT. A single pipe venting two trap arms within the same *branch interval*, either back-to-back or one above the other.

[RB] COMPRESSIBLE SOILS. Soils that exhibit volumetric reduction in response to the application of load even in the absence of wetting or drying.

[MP] CONDENSATE. The liquid that separates from a gas due to a reduction in temperature; for example, water that condenses from flue gases and water that condenses from air circulating through the cooling coil in air conditioning *equipment*.

[MP] CONDENSING APPLIANCE. An *appliance* that condenses water generated by the burning of fuels.

[RB] CONDITIONED AIR. Air treated to control its temperature, relative humidity or quality.

[RE] CONDITIONED FLOOR AREA. For the definition applicable in Chapter 11, see Section N1101.6.

[NY] CONDITIONED SPACE. An area or room that is enclosed within the *building thermal envelope* and is directly or indirectly heated or cooled using fossil fuel or electricity as the energy source. Spaces are indirectly heated or cooled where they communicate through openings with conditioned spaces; where they are separated from conditioned spaces by uninsulated walls, floors or ceilings; or where they contain uninsulated ducts, piping or other sources of heating or cooling using fossil fuel or electricity.

[RB] CONSTRUCTION DOCUMENTS. Written, graphic and pictorial documents prepared or assembled for describing the design, location and physical characteristics of the elements of a project necessary for obtaining a building *permit*. Construction drawings shall be drawn to an appropriate scale.

[MP] CONTAMINATION. A high-hazard or health-hazard impairment of the quality of the potable water that creates an actual hazard to the public health through poisoning or through the spread of disease by sewage, industrial fluids or waste.

[RE] CONTINUOUS AIR BARRIER. For the definition applicable in Chapter 11, see Section N1101.6.

[RE] CONTINUOUS INSULATION (ci). For the definition applicable in Chapter 11, see Section N1101.6.

[MP] CONTINUOUS WASTE. A drain from two or more similar adjacent fixtures connected to a single trap.

[MP] CONTROL, LIMIT. An automatic control responsive to changes in liquid flow or level, pressure, or temperature for limiting the operation of an *appliance*.

[MP] CONTROL, PRIMARY SAFETY. A safety control responsive directly to flame properties that senses the presence or absence of flame and, in event of ignition failure or unintentional flame extinguishment, automatically causes shutdown of mechanical *equipment*.

[MP] CONVECTOR. A system incorporating a heating element in an enclosure in which air enters an opening below the heating element, is heated and leaves the enclosure through an opening located above the heating element.

[RB] CORE. The lightweight middle section of a structural insulated panel, composed of foam plastic insulation, that provides the link between the two facing shells.

INTERNATIONAL CODE COUNCIL®
Copyright © 2019 ICC & NYSDOS. ALL RIGHTS RESERVED. Accessed by Lauren Gualdino (lgualdino@briarcliffmanor.org), (-) Order Number #100880972 on May 08, 2020 07:05 AM (PDT) pursuant to License Agreement with ICC & NYSDOS. No further reproduction, no

100880972

[RB] CORROSION RESISTANCE. The ability of a material to withstand deterioration of its surface or its properties where exposed to its environment.

[RB] COURT. A space, open and unobstructed to the sky, located at or above *grade* level on a *lot* and bounded on three or more sides by walls or a building.

[RB] CRAWL SPACE. An underfloor space that is not a basement.

[RE] CRAWL SPACE WALL. For the definition applicable in Chapter 11, see Section N1101.6.

[RB] CRIPPLE WALL. A framed wall extending from the top of the foundation to the underside of the floor framing of the first *story above grade plane*.

[MP] CROSS CONNECTION. Any connection between two otherwise separate piping systems that allows a flow from one system to the other.

[RB] CROSS-LAMINATED TIMBER. A prefabricated engineered wood product consisting of not less than three layers of solid-sawn lumber or *structural composite lumber* where the adjacent layers are cross-oriented and bonded with structural adhesive to form a solid wood element.

[NY] CSST. Corrugated stainless steel tubing.

[RE] CURTAIN WALL. For the definition applicable in Chapter 11, see Section N1101.6.

[RB] DALLE GLASS. A decorative composite glazing material made of individual pieces of glass that are embedded in a cast matrix of concrete or epoxy.

[MP] DAMPER, VOLUME. A device that will restrict, retard or direct the flow of air in any duct, or the products of combustion of heat-producing *equipment*, vent connector, vent or chimney.

[RB] DEAD LOADS. The weight of the materials of construction incorporated into the building, including but not limited to walls, floors, roofs, ceilings, stairways, built-in partitions, finishes, cladding, and other similarly incorporated architectural and structural items, and fixed service *equipment*.

[RB] DECORATIVE GLASS. A carved, leaded or Dalle glass or glazing material with a purpose that is decorative or artistic, not functional; with coloring, texture or other design qualities or components that cannot be removed without destroying the glazing material; and with a surface, or assembly into which it is incorporated, that is divided into segments.

[RE] DEMAND RECIRCULATION WATER SYSTEM. For the definition applicable in Chapter 11, see Section N1101.6.

[MP] DESIGN PROFESSIONAL. See "*Registered design professional*."

[MP] DEVELOPED LENGTH. The length of a pipeline measured along the center line of the pipe and fittings.

[MP] DIAMETER. Unless specifically stated, the term "diameter" is the nominal diameter as designated by the *approved* material standard.

[RB] DIAPHRAGM. A horizontal or nearly horizontal system acting to transmit lateral forces to the vertical resisting elements. Where the term "*diaphragm*" is used, it includes horizontal bracing systems.

[MP] DILUTION AIR. Air that enters a draft hood or draft regulator and mixes with flue gases.

[MP] DIRECT SYSTEM. A solar thermal system in which the gas or liquid in the solar collector loop is not separated from the load.

[MP] DIRECT-VENT APPLIANCE. A fuel-burning *appliance* with a sealed combustion system that draws all air for combustion from the outside atmosphere and discharges all flue gases to the outside atmosphere.

[MP] DRAFT. The pressure difference existing between the *appliance* or any component part and the atmosphere, that causes a continuous flow of air and products of combustion through the gas passages of the *appliance* to the atmosphere.

Induced draft. The pressure difference created by the action of a fan, blower or ejector, that is located between the *appliance* and the chimney or vent termination.

Natural draft. The pressure difference created by a vent or chimney because of its height, and the temperature difference between the flue gases and the atmosphere.

[MP] DRAFT HOOD. A device built into an *appliance*, or a part of the vent connector from an *appliance*, that is designed to provide for the ready escape of the flue gases from the *appliance* in the event of no draft, backdraft or stoppage beyond the draft hood; prevent a backdraft from entering the *appliance*; and neutralize the effect of stack action of the chimney or gas vent on the operation of the *appliance*.

[MP] DRAFT REGULATOR. A device that functions to maintain a desired draft in the *appliance* by automatically reducing the draft to the desired value.

[RB] DRAFT STOP. A material, device or construction installed to restrict the movement of air within open spaces of concealed areas of building components such as crawl spaces, floor-ceiling assemblies, roof-ceiling assemblies and *attics*.

[MP] DRAIN. Any pipe that carries soil and waterborne wastes in a building drainage system.

[MP] DRAIN-BACK SYSTEM. A solar thermal system in which the fluid in the solar collector loop is drained from the collector into a holding tank under prescribed circumstances.

[MP] DRAINAGE FITTING. A pipe fitting designed to provide connections in the drainage system that have provisions for establishing the desired slope in the system. These fittings are made from a variety of both metals and plastics. The methods of coupling provide for required slope in the system.

[RE] DUCT. For the definition applicable in Chapter 11, see Section N1101.6.

[MP] DUCT SYSTEM. A continuous passageway for the transmission of air that, in addition to ducts, includes duct fittings, dampers, plenums, fans and accessory air-handling *equipment* and *appliances*.

INTERNATIONAL CODE COUNCIL®
Copyright © 2019 ICC & NYSDOS. ALL RIGHTS RESERVED. Accessed by Lauren Gualdino (lgualdino@briarcliffmanor.org), (-) Order Number #100880972 on May 08, 2020 07:05 AM (PDT) pursuant to License Agreement with ICC & NYSDOS. No further reproduction, no

100880972

For the definition applicable in Chapter 11, see Section N1101.6.

[RB] DWELLING. Any building that contains one or two *dwelling units* used, intended, or designed to be built, used, rented, leased, let or hired out to be occupied, or that are occupied for living purposes.

[NY] DWELLING UNIT. A single unit providing complete independent living facilities for one or more persons, including permanent provisions for living, sleeping, eating, cooking and sanitation. Dwelling units include, but are not limited to, one-family dwellings, each unit in a two-family dwelling, each unit in a multiple single-family dwelling (townhouse), bed and breakfast dwellings, and lodging houses.

[MP] DWV. Abbreviated term for drain, waste and vent piping as used in common plumbing practice.

[MP] EFFECTIVE OPENING. The minimum cross-sectional area at the point of water-supply discharge, measured or expressed in terms of diameter of a circle and if the opening is not circular, the diameter of a circle of equivalent cross-sectional area. (This is applicable to air gap.)

[MP] ELBOW. A pressure pipe fitting designed to provide an exact change in direction of a pipe run. An elbow provides a sharp turn in the flow path (see "Bend" and "Sweep").

[RB] EMERGENCY ESCAPE AND RESCUE OPENING. An operable exterior window, door or similar device that provides for a means of escape and access for rescue in the event of an emergency. (See also "Grade floor opening.")

[RE] ENERGY ANALYSIS. For the definition applicable in Chapter 11, see Section N1101.6.

[NY] ENERGY CODE. The New York State Energy Conservation Construction Code, adopted pursuant to Article 11 of the New York State Energy Law.

[NY] ENERGY CONSERVATION CONSTRUCTION CODE OF NEW YORK STATE. The 2020 edition of the publication entitled "Energy Conservation Construction Code of New York State," published by the International Code Council, Inc. (publication date November 2019).

[RE] ENERGY COST. For the definition applicable in Chapter 11, see Section N1101.6.

[RE]ENERGY SIMULATION TOOL. For the definition applicable in Chapter 11, see Section N1101.6.

[NY] ENERGY STORAGE SYSTEM. One or more devices, assembled together, capable of storing energy in order to supply electrical energy at a future time, not to include a stand-alone 12-volt car battery or an electric motor vehicle.

[RB] ENGINEERED WOOD RIM BOARD. A full-depth structural composite lumber, wood structural panel, structural glued laminated timber or prefabricated wood I-joist member designed to transfer horizontal (shear) and vertical (compression) loads, provide attachment for *diaphragm* sheathing, siding and exterior deck ledgers and provide lateral support at the ends of floor or roof joists or rafters.

[MP] EQUIPMENT. Piping, ducts, vents, control devices and other components of systems other than *appliances* that are permanently installed and integrated to provide control of environmental conditions for buildings. This definition shall also include other systems specifically regulated in this code.

[MP] EQUIVALENT LENGTH. For determining friction losses in a piping system, the effect of a particular fitting equal to the friction loss through a straight piping length of the same nominal diameter.

[NY] ERI REFERENCE DESIGN. A version of the rated design that meets the minimum requirements of the 2006 *International Energy Conservation Code*, and which establishes the index value of 100 on the Energy Rating Index scale.

[RB] ESCARPMENT. With respect to topographic wind effects, a cliff or steep slope generally separating two levels or gently sloping areas.

[MP] ESSENTIALLY NONTOXIC TRANSFER FLUIDS. Fluids having a Gosselin rating of 1, including propylene glycol; mineral oil; polydimethyl oil oxane; hydrochlorofluorocarbon, chlorofluorocarbon and hydrofluorocarbon refrigerants; and FDA-approved boiler water additives for steam boilers.

[MP] ESSENTIALLY TOXIC TRANSFER FLUIDS. Soil, water or graywater and fluids having a Gosselin rating of 2 or more including ethylene glycol, hydrocarbon oils, ammonia refrigerants and hydrazine.

[MP] EVAPORATIVE COOLER. A device used for reducing air temperature by the process of evaporating water into an airstream.

[MP] EXCESS AIR. Air that passes through the combustion chamber and the *appliance* flue in excess of what is theoretically required for complete combustion.

[MP] EXHAUST HOOD, FULL OPENING. An exhaust hood with an opening not less than the diameter of the connecting vent.

[NY] EXISTING BUILDING CODE OF NEW YORK STATE. The 2020 edition of the publication entitled "Existing Building Code of New York State," published by the International Code Council, Inc. (publication date November 2019).

[MP] EXISTING INSTALLATIONS. Any plumbing system regulated by this code that was legally installed prior to the effective date of this code, or for which a *permit* to install has been issued.

[RB] EXPANSIVE SOILS. Soils that exhibit volumetric increase or decrease (swelling or shrinking) in response to partial or full wetting or drying under load.

[RB] EXTERIOR INSULATION AND FINISH SYSTEMS (EIFS). EIFS are nonstructural, nonload-bearing *exterior wall* cladding systems that consist of an insulation board attached either adhesively or mechanically, or both, to the substrate; an integrally reinforced base coat; and a textured protective finish coat.

[RB] EXTERIOR INSULATION AND FINISH SYSTEMS (EIFS) WITH DRAINAGE. An EIFS that incorporates a means of drainage applied over a water-resistive barrier.

INTERNATIONAL CODE COUNCIL®
Copyright © 2019 ICC & NYSDOS. ALL RIGHTS RESERVED. Accessed by Lauren Gualdino (lgualdino@briarcliffmanor.org), (-) Order Number #100880972 on May 08, 2020 07:05 AM (PDT) pursuant to License Agreement with ICC & NYSDOS. No further reproduction, no

100880972

[RE] EXTERIOR WALL. For the definition applicable in Chapter 11, see Section N1101.6.

[RB] EXTERIOR WALL COVERING. A material or assembly of materials applied on the exterior side of exterior walls for the purpose of providing a weather-resistive barrier, insulation or for aesthetics, including but not limited to, veneers, siding, exterior insulation and finish systems, architectural trim and embellishments such as cornices, soffits, and fascias.

[RB] FACING. The wood structural panel facings that form the two outmost rigid layers of the structural insulated panel.

[MP] FACTORY-BUILT CHIMNEY. A *listed* and *labeled* chimney composed of factory-made components assembled in the field in accordance with the manufacturer's instructions and the conditions of the *listing*.

[MP] FACTORY-MADE AIR DUCT. A *listed and labeled* duct manufactured in a factory and assembled in the field in accordance with the manufacturer's instructions and conditions of the *listing*.

[NY] FACTORY MANUFACTURED BUILDINGS (MODULAR BUILDINGS). A commercial or residential *structure* constructed by a method or system of construction whereby the *structure* or its components are wholly or in substantial part manufactured in manufacturing facilities, and whereby all portions may not be reasonably inspected at the installation site without disassembly or destruction thereof. The term includes *buildings* intended or designed for permanent installation, or assembly and permanent installation, on a building site.

[RE] FENESTRATION. Products classified as either vertical fenestration or skylights and sloped glazing, installed in such a manner as to preserve the weather-resistant barrier of the wall or roof in which they are installed. Fenestration includes products with glass or other transparent or translucent materials.

For the definition applicable in Chapter 11, see Section N1101.6.

Skylights. For the definition applicable in Chapter 11, see Section N1101.6.

Vertical fenestration. For the definition applicable in Chapter 11, see Section N1101.6.

[RE] FENESTRATION, VERTICAL. Windows that are fixed or movable, opaque doors, glazed doors, glazed block and combination opaque and glazed doors installed in a wall at less than 15 degrees from vertical.

For the definition applicable in Chapter 11, see Section N1101.6.

[RE] FENESTRATION PRODUCT, SITE-BUILT. For the definition applicable in Chapter 11, see Section N1101.6.

[RB] FIBER-CEMENT (BACKERBOARD, SIDING, SOFFIT, TRIM AND UNDERLAYMENT) PRODUCTS. Manufactured thin section composites of hydraulic cementitious matrices and discrete nonasbestos fibers.

[NY] FIRE CODE OF NEW YORK STATE. The 2020 edition of the publication entitled "Fire Code of New York State," published by the International Code Council, Inc. (publication date November 2019).

[RB] FIRE SEPARATION DISTANCE. The distance measured from the building face to one of the following:

1. To the closest interior *lot line*.
2. To the centerline of a street, an alley or public way.
3. To an imaginary line between two buildings on the *lot*.

The distance shall be measured at a right angle from the face of the wall.

[RB] FIREBLOCKING. Building materials or materials *approved* for use as fireblocking, installed to resist the free passage of flame to other areas of the building through concealed spaces.

[RB] FIREPLACE. An assembly consisting of a hearth and fire chamber of noncombustible material and provided with a chimney, for use with solid fuels.

Factory-built fireplace. A *listed* and *labeled* fireplace and chimney system composed of factory-made components, and assembled in the field in accordance with manufacturer's instructions and the conditions of the listing.

Masonry fireplace. A field-constructed fireplace composed of *solid masonry* units, bricks, stones or concrete.

[MP] FIREPLACE STOVE. A free-standing, chimney-connected solid-fuel-burning heater designed to be operated with the fire chamber doors in either the open or closed position.

[RB] FIREPLACE THROAT. The opening between the top of the firebox and the smoke chamber.

[RB] FIRE-RETARDANT-TREATED WOOD. Pressure-treated lumber and plywood that exhibit reduced surface burning characteristics and resist propagation of fire.

Other means during manufacture. A process where the wood raw material is treated with a fire-retardant formulation while undergoing creation as a finished product.

Pressure process. A process for treating wood using an initial vacuum followed by the introduction of pressure above atmospheric.

[MP] FIXTURE. See "Plumbing fixture."

[MP] FIXTURE BRANCH, DRAINAGE. A drain serving two or more fixtures that discharges into another portion of the drainage system.

[MP] FIXTURE BRANCH, WATER-SUPPLY. A water-supply pipe between the fixture supply and a main water-distribution pipe or fixture group main.

[MP] FIXTURE DRAIN. The drain from the trap of a fixture to the junction of that drain with any other drain pipe.

[MP] FIXTURE FITTING.

Supply fitting. A fitting that controls the volume or directional flow or both of water and that is either attached to or accessed from a fixture or is used with an open or atmospheric discharge.

Waste fitting. A combination of components that conveys the sanitary waste from the outlet of a fixture to the connection of the sanitary drainage system.

INTERNATIONAL CODE COUNCIL®
Copyright © 2019 ICC & NYSDOS. ALL RIGHTS RESERVED. Accessed by Lauren Gualdino (lgualdino@briarcliffmanor.org), (-) Order Number #100880972 on May 08, 2020 07:05 AM (PDT) pursuant to License Agreement with ICC & NYSDOS. No further reproduction, no

100880972

[MP] FIXTURE GROUP, MAIN. The main water-distribution pipe (or secondary branch) serving a plumbing fixture grouping such as a bath, kitchen or laundry area to which two or more individual fixture branch pipes are connected.

[MP] FIXTURE SUPPLY. The water-supply pipe connecting a fixture or fixture fitting to a fixture branch.

[MP] FIXTURE UNIT, DRAINAGE (d.f.u.). A measure of probable discharge into the drainage system by various types of plumbing fixtures, used to size DWV piping systems. The drainage fixture-unit value for a particular fixture depends on its volume rate of drainage discharge, on the time duration of a single drainage operation and on the average time between successive operations.

[MP] FIXTURE UNIT, WATER-SUPPLY (w.s.f.u.). A measure of the probable hydraulic demand on the water supply by various types of plumbing fixtures used to size water-piping systems. The water-supply fixture-unit value for a particular fixture depends on its volume rate of supply, on the time duration of a single supply operation and on the average time between successive operations.

[RB] FLAME SPREAD. The propagation of flame over a surface.

[RB] FLAME SPREAD INDEX. A comparative measure, expressed as a dimensionless number, derived from visual measurements of the spread of flame versus time for a material tested in accordance with ASTM E84 or UL 723.

[MP] FLEXIBLE AIR CONNECTOR. A conduit for transferring air between an air duct or plenum and an air terminal unit, an air inlet or an air outlet. Such conduit is limited in its use, length and location.

[RB] FLIGHT. A continuous run of rectangular treads or winders or combination thereof from one landing to another.

[MP] FLOOD-LEVEL RIM. The edge of the receptor or fixture from which water overflows.

[MP] FLOOR DRAIN. A plumbing fixture for recess in the floor having a floor-level strainer intended for the purpose of the collection and disposal of wastewater used in cleaning the floor and for the collection and disposal of accidental spillage to the floor.

[MP] FLOOR FURNACE. A self-contained furnace suspended from the floor of the space being heated, taking air for combustion from outside such space, and with means for lighting the *appliance* from such space.

[MP] FLOW PRESSURE. The static pressure reading in the water-supply pipe near the faucet or water outlet while the faucet or water outlet is open and flowing at capacity.

[MP] FLUE. See "Vent."

[MP] FLUE, APPLIANCE. The passages within an *appliance* through which combustion products pass from the combustion chamber to the flue collar.

[MP] FLUE COLLAR. The portion of a fuel-burning *appliance* designed for the attachment of a draft hood, vent connector or venting system.

[MP] FLUE GASES. Products of combustion plus excess air in *appliance* flues or heat exchangers.

[MP] FLUSH VALVE. A device located at the bottom of a flush tank that is operated to flush water closets.

[MP] FLUSHOMETER TANK. A device integrated within an air accumulator vessel that is designed to discharge a predetermined quantity of water to fixtures for flushing purposes.

[MP] FLUSHOMETER VALVE. A flushometer valve is a device that discharges a predetermined quantity of water to fixtures for flushing purposes and is actuated by direct water pressure.

[RB] FOAM BACKER BOARD. Foam plastic used in siding applications where the foam plastic is a component of the siding.

[RB] FOAM PLASTIC INSULATION. A plastic that is intentionally expanded by the use of a foaming agent to produce a reduced-density plastic containing voids consisting of open or closed cells distributed throughout the plastic for thermal insulating or acoustic purposes and that has a density less than 20 pounds per cubic foot (320 kg/m^3) unless it is used as interior trim.

[RB] FOAM PLASTIC INTERIOR TRIM. Exposed foam plastic used as picture molds, chair rails, crown moldings, baseboards, handrails, ceiling beams, door trim and window trim and similar decorative or protective materials used in fixed applications.

[NY] FREEBOARD. A factor of safety expressed in feet (mm) above the design flood elevation.

[NY] FUEL GAS CODE OF NEW YORK STATE. The 2020 edition of the publication entitled "Fuel Gas Code of New York State," published by the International Code Council, Inc. (publication date November 2019).

[MP] FUEL-PIPING SYSTEM. All piping, tubing, valves and fittings used to connect fuel utilization *equipment* to the point of fuel delivery.

[MP] FULL-OPEN VALVE. A water control or shutoff component in the water supply system piping that, where adjusted for maximum flow, the flow path through the component's closure member is not a restriction in the component's through-flow area.

[MP] FULLWAY VALVE. A valve that in the full open position has an opening cross-sectional area that is not less than 85 percent of the cross-sectional area of the connecting pipe.

[MP] FURNACE. A vented heating *appliance* designed or arranged to discharge heated air into a *conditioned space* or through a duct or ducts.

[RB] GLAZING AREA. The interior surface area of all glazed fenestration, including the area of sash, curbing or other framing elements, that enclose *conditioned space*. Includes the area of glazed fenestration assemblies in walls bounding conditioned *basements*.

[RB] GRADE. The finished ground level adjoining the building at all *exterior walls*.

[MP] GRADE, PIPING. See "Slope."

INTERNATIONAL CODE COUNCIL®
Copyright © 2019 ICC & NYSDOS. ALL RIGHTS RESERVED. Accessed by Lauren Gualdino (lgualdino@briarcliffmanor.org), (-) Order Number #100880972 on May 08, 2020 07:05 AM (PDT) pursuant to License Agreement with ICC & NYSDOS. No further reproduction, no

100880972

[RB] GRADE FLOOR OPENING. A window or other opening located such that the sill height of the opening is not more than 44 inches (1118 mm) above or below the finished ground level adjacent to the opening. (See also "Emergency escape and rescue opening.")

[RB] GRADE PLANE. A reference plane representing the average of the finished ground level adjoining the building at all *exterior walls*. Where the finished ground level slopes away from the *exterior walls*, the reference plane shall be established by the lowest points within the area between the building and the *lot line* or, where the *lot line* is more than 6 feet (1829 mm) from the building between the structure and a point 6 feet (1829 mm) from the building.

[MP] GRAYWATER. Waste discharged from lavatories, bathtubs, showers, clothes washers and laundry trays.

[MP] GRIDDED WATER DISTRIBUTION SYSTEM. A water distribution system where every water distribution pipe is interconnected so as to provide two or more paths to each fixture supply pipe.

[RB] GROSS AREA OF EXTERIOR WALLS. The normal projection of all *exterior walls*, including the area of all windows and doors installed therein.

[MP] GROUND-SOURCE HEAT PUMP LOOP SYSTEM. Piping buried in horizontal or vertical excavations or placed in a body of water for the purpose of transporting heat transfer liquid to and from a heat pump. Included in this definition are closed loop systems in which the liquid is recirculated and open loop systems in which the liquid is drawn from a well or other source.

[RB] GUARD. A building component or a system of building components located near the open sides of elevated walking surfaces that minimizes the possibility of a fall from the walking surface to the lower level.

[RB] GUESTROOM. Any room or rooms used or intended to be used by one or more guests for living or sleeping purposes.

[RB] GYPSUM BOARD. The generic name for a family of sheet products consisting of a noncombustible core primarily of gypsum with paper surfacing. Gypsum wallboard, gypsum sheathing, gypsum base for gypsum *veneer* plaster, exterior gypsum soffit board, predecorated gypsum board and water-resistant gypsum backing board complying with the standards listed in Section R702.3 and Part IX of this code are types of gypsum board.

[RB] GYPSUM PANEL PRODUCT. The general name for a family of sheet products consisting essentially of gypsum.

[RB] HABITABLE SPACE. A space in a building for living, sleeping, eating or cooking. Bathrooms, toilet rooms, closets, halls, storage or utility spaces and similar areas are not considered *habitable spaces*.

[RB] HANDRAIL. A horizontal or sloping rail intended for grasping by the hand for guidance or support.

[MP] HANGERS. See "Supports."

[MP] HAZARDOUS LOCATION. Any location considered to be a fire hazard for flammable vapors, dust, combustible fibers or other highly combustible substances.

[MP] HEAT PUMP. An *appliance* having heating or heating and cooling capability and that uses refrigerants to extract heat from air, liquid or other sources.

[RE] HEATED SLAB. For the definition applicable in Chapter 11, see Section N1101.6.

[RB] HEIGHT, BUILDING. The vertical distance from *grade plane* to the average height of the highest roof surface.

[RB] HEIGHT, STORY. The vertical distance from top to top of two successive tiers of beams or finished floor surfaces; and, for the topmost *story*, from the top of the floor finish to the top of the ceiling joists or, where there is not a ceiling, to the top of the roof rafters.

[RE] HIGH-EFFICACY LAMPS. For the definition applicable in Chapter 11, see Section N1101.6.

[MP] HIGH-TEMPERATURE (H.T.) CHIMNEY. A high temperature chimney complying with the requirements of UL 103. A Type H.T. chimney is identifiable by the markings "Type H.T." on each chimney pipe section.

[RB] HILL. With respect to topographic wind effects, a land surface characterized by strong relief in any horizontal direction.

[RB] HISTORIC BUILDING. A building or structure that is one or more of the following:

1. Listed, or certified as eligible for listing, by the State Historic Preservation Officer or the Keeper of the National Register of Historic Places in the National Register of Historic Places.
2. Designated as historic under an applicable state or local law.
3. Certified as a contributing resource within a National Register-listed, or a state-designated or locally designated historic district.

For the definition applicable in Chapter 11, see Section N1101.6.

[MP] HORIZONTAL BRANCH, DRAINAGE. A drain pipe extending laterally from a soil or waste stack or *building drain*, that receives the discharge from one or more *fixture drains*.

[MP] HORIZONTAL PIPE. Any pipe or fitting that makes an angle of less than 45 degrees (0.79 rad) with the horizontal.

[NY] HOSPICE RESIDENCE. A one- or two-family dwelling operated for the purpose of providing care to more than two but not more than eight hospice patients, created pursuant to Article 40 of the Public Health Law, and as defined in Section 4002 of said law.

[MP] HOT WATER. Water at a temperature greater than or equal to 110°F (43°C).

[RB] HURRICANE-PRONE REGIONS. Areas vulnerable to hurricanes, defined as the U.S. Atlantic Ocean and Gulf of Mexico coasts where the ultimate design wind speed, V_{ult}, is greater than 115 miles per hour (51 m/s), and Hawaii, Puerto Rico, Guam, Virgin Islands and America Samoa.

INTERNATIONAL CODE COUNCIL®
Copyright © 2019 ICC & NYSDOS. ALL RIGHTS RESERVED. Accessed by Lauren Gualdino (lgualdino@briarcliffmanor.org), (-) Order Number #100880972 on May 08, 2020 07:05 AM (PDT) pursuant to License Agreement with ICC & NYSDOS. No further reproduction, no

100880972

[MP] HYDROGEN-GENERATING APPLIANCE. A self-contained package or factory-matched packages of integrated systems for generating gaseous hydrogen. Hydrogen-generating *appliances* utilize electrolysis, reformation, chemical or other processes to generate hydrogen.

[MP] IGNITION SOURCE. A flame, spark or hot surface capable of igniting flammable vapors or fumes. Such sources include *appliance* burners, burner ignitions and electrical switching devices.

[RB] IMPACT PROTECTIVE SYSTEM. Construction that has been shown by testing to withstand the impact of test missiles and that is applied, attached, or locked over exterior glazing.

[MP] INDIRECT SYSTEM. A solar thermal system in which the gas or liquid in the solar collector loop circulates between the solar collector and a heat exchanger and such gas or liquid is not drained from the system or supplied to the load during normal operation.

[MP] INDIRECT WASTE PIPE. A waste pipe that discharges into the drainage system through an *air gap* into a trap, fixture or receptor.

[MP] INDIVIDUAL SEWAGE DISPOSAL SYSTEM. A system for disposal of sewage by means of a septic tank or mechanical treatment, designed for use apart from a public sewer to serve a single establishment or building.

[MP] INDIVIDUAL VENT. A pipe installed to vent a single *fixture drain* that connects with the vent system above or terminates independently outside the building.

[MP] INDIVIDUAL WATER SUPPLY. A supply other than an approved public water supply that serves one or more families.

[RE] INFILTRATION. For the definition applicable in Chapter 11, see Section N1101.6.

[NY] INSIGNIA OF APPROVAL. The certificate, tab or tag issued by the New York State Department of State Division of Building Standards and Codes to indicate compliance with the standards, rules and regulations established for factory manufactured buildings.

[RB] INSULATED SIDING. A type of continuous insulation, with manufacturer-installed insulating material as an integral part of the cladding product, having a minimum *R*-value of R-2. For the definition applicable in Chapter 11, see Section N1101.6.

[RB] INSULATED VINYL SIDING. A vinyl cladding product, with manufacturer-installed foam plastic insulating material as an integral part of the cladding product, having a thermal resistance of not less than R-2.

[RB] INSULATING CONCRETE FORM (ICF). A concrete forming system using stay-in-place forms of rigid foam plastic insulation, a hybrid of cement and foam insulation, a hybrid of cement and wood chips, or other insulating material for constructing cast-in-place concrete walls.

[RB] INSULATING SHEATHING. An insulating board having a thermal resistance of not less than R-2 of the core material.

For the definition applicable in Chapter 11, see Section N1101.6.

[RB] JURISDICTION. The governmental unit that has adopted this code.

[RB] KITCHEN. Kitchen shall mean an area used, or designated to be used, for the preparation of food.

[RB] LABEL. An identification applied on a product by the manufacturer that contains the name of the manufacturer, the function and performance characteristics of the product or material, and the name and identification of an *approved agency* and that indicates that the representative sample of the product or material has been tested and evaluated by an *approved agency*. (See also "Manufacturer's designation" and "Mark.")

[RB] LABELED. *Equipment*, materials or products to which have been affixed a *label*, seal, symbol or other identifying *mark* of a nationally recognized testing laboratory, approved agency or other organization concerned with product evaluation that maintains periodic inspection of the production of such *labeled* items and whose labeling indicates either that the *equipment*, material or product meets identified standards or has been tested and found suitable for a specified purpose. For the definition applicable in Chapter 11, see Section N1101.6.

[RB] LIGHT-FRAME CONSTRUCTION. Construction whose vertical and horizontal structural elements are primarily formed by a system of repetitive wood or cold-formed steel framing members.

[RB] LISTED. *Equipment*, materials, products or services included in a list published by an organization acceptable to the *building official* and concerned with evaluation of products or services that maintains periodic inspection of production of *listed equipment* or materials or periodic evaluation of services and whose listing states either that the *equipment*, material, product or service meets identified standards or has been tested and found suitable for a specified purpose. For the definition applicable in Chapter 11, see Section N1101.6.

[NY] LISTED ARC-RESISTANT CSST (or LISTED AR-CSST). *CSST* which is:

1. Encased in a conductive jacket, and
2. Listed in a currently effective evaluation report issued by a nationally recognized building product evaluation service as having been:
    - 2.1. Tested in accordance with the published National Standard ANSI LC 1—2018 including the performance criteria of Section 5.16 and
    - 2.2. Shown by such testing to satisfy such published performance criteria and to provide, without additional bonding, protection against damage from indirect lightning strikes that is at least equivalent to that provided by direct bonding as prescribed in Section 310 of the *Fuel Gas Code of New York State*.

INTERNATIONAL CODE COUNCIL®
Copyright © 2019 ICC & NYSDOS. ALL RIGHTS RESERVED. Accessed by Lauren Gualdino (lgualdino@briarcliffmanor.org), (-) Order Number #100880972 on May 08, 2020 07:05 AM (PDT) pursuant to License Agreement with ICC & NYSDOS. No further reproduction, no

100880972

[RB] LIVE LOADS. Those loads produced by the use and occupancy of the building or other structure and do not include construction or environmental loads such as wind load, snow load, rain load, earthquake load, flood load or dead load.

[MP] LIVING SPACE. Space within a *dwelling unit* utilized for living, sleeping, eating, cooking, bathing, washing and sanitation purposes.

[MP] LOCAL EXHAUST. An exhaust system that uses one or more fans to exhaust air from a specific room or rooms within a dwelling.

[MP] LOCKING-TYPE TAMPER-RESISTANT CAP. A cap designed to be unlocked by a specially designed tool or key to prevent removal of the cap by means of hand-loosening or by commonly available tools.

[RB] LODGING HOUSE. A one-family dwelling where one or more occupants are primarily permanent in nature, and rent is paid for guestrooms.

[RB] LOT. A portion or parcel of land considered as a unit.

[RB] LOT LINE. A line dividing one *lot* from another, or from a street or any public place.

[RE] LOW-VOLTAGE LIGHTING. For the definition applicable in Chapter 11, see Section N1101.6.

[MP] MACERATING TOILET SYSTEMS. A system comprised of a sump with macerating pump and with connections for a water closet and other plumbing fixtures, that is designed to accept, grind and pump wastes to an *approved* point of discharge.

[MP] MAIN. The principal pipe artery to which branches may be connected.

[MP] MAIN SEWER. See "Public sewer."

[MP] MANIFOLD WATER DISTRIBUTION SYSTEMS. A fabricated piping arrangement in which a large supply main is fitted with multiple branches in close proximity in which water is distributed separately to fixtures from each branch.

[RE] MANUAL. For the definition applicable in Chapter 11, see Section N1101.6.

[NY] MANUFACTURED HOME. A factory-manufactured dwelling unit built on or after June 15, 1976, and conforming to the requirements of the Department of Housing and Urban Development (HUD), Manufactured Home Construction and Safety Standards, 24 CFR Part 3280, 4/1/93, transportable in one or more sections which in the traveling mode is 8 body feet (2438 body mm) or more in width or 40 feet (12 192 body mm) or more in length, or, where erected on site, is 320 square feet (30 m^2) minimum, constructed on a permanent chassis and designed to be used with or without a permanent foundation where connected to the required utilities, and includes the plumbing, heating, air-conditioning and electrical systems contained therein; The term "Manufactured home" shall also include any structure that meets all the requirements of this definition except the size requirements and with respect to which the manufacturer voluntarily files a certification required by the Federal Department of Housing and Urban Development and complies with the standards established under the national Manufactured Housing Construction and Safety Act of 1974, as amended. The term "Manufactured home" shall not include any self-propelled recreational vehicle.

[RB] MANUFACTURER'S DESIGNATION. An identification applied on a product by the manufacturer indicating that a product or material complies with a specified standard or set of rules. (See also "Mark" and "Label.")

[RB] MANUFACTURER'S INSTALLATION INSTRUCTIONS. Printed instructions included with *equipment* as part of the conditions of their *listing* and *labeling*.

[RB] MARK. An identification applied on a product by the manufacturer indicating the name of the manufacturer and the function of a product or material. (See also "Manufacturer's designation" and "Label.")

[RB] MASONRY CHIMNEY. A field-constructed chimney composed of solid masonry units, bricks, stones or concrete.

[RB] MASONRY HEATER. A masonry heater is a solid fuel burning heating *appliance* constructed predominantly of concrete or solid masonry having a mass of not less than 1,100 pounds (500 kg), excluding the chimney and foundation. It is designed to absorb and store a substantial portion of heat from a fire built in the firebox by routing exhaust gases through internal heat exchange channels in which the flow path downstream of the firebox includes not less than one 180-degree (3.14-rad) change in flow direction before entering the chimney and that deliver heat by radiation through the masonry surface of the heater.

[RB] MASONRY, SOLID. Masonry consisting of solid masonry units laid contiguously with the joints between the units filled with mortar.

[RB] MASONRY UNIT. Brick, tile, stone, architectural cast stone, glass block or concrete block conforming to the requirements specified in Section 2103 of the *Building Code of New York State*.

Clay. A building unit larger in size than a brick, composed of burned clay, shale, fire clay or mixtures thereof.

Concrete. A building unit or block larger in size than 12 inches by 4 inches by 4 inches (305 mm by 102 mm by 102 mm) made of cement and suitable aggregates.

Glass. Nonload-bearing masonry composed of glass units bonded by mortar.

Hollow. A masonry unit with a net cross-sectional area in any plane parallel to the loadbearing surface that is less than 75 percent of its gross cross-sectional area measured in the same plane.

Solid. A masonry unit with a net cross-sectional area in every plane parallel to the loadbearing surface that is 75 percent or more of its cross-sectional area measured in the same plane.

[RB] MEAN ROOF HEIGHT. The average of the roof eave height and the height to the highest point on the roof surface, except that eave height shall be used for roof angle of less than or equal to 10 degrees (0.18 rad).

INTERNATIONAL CODE COUNCIL®
Copyright © 2019 ICC & NYSDOS. ALL RIGHTS RESERVED. Accessed by Lauren Gualdino (lgualdino@briarcliffmanor.org), (-) Order Number #100880972 on May 08, 2020 07:05 AM (PDT) pursuant to License Agreement with ICC & NYSDOS. No further reproduction, no

100880972

[NY] MECHANICAL CODE OF NEW YORK STATE. The 2020 edition of the publication entitled "Mechanical Code of New York State," published by the International Code Council, Inc. (publication date November 2019).

[MP] MECHANICAL DRAFT SYSTEM. A venting system designed to remove flue or vent gases by mechanical means, that consists of an induced draft portion under nonpositive static pressure or a forced draft portion under positive static pressure.

Forced draft venting system. A portion of a venting system using a fan or other mechanical means to cause the removal of flue or vent gases under positive static pressure.

Induced draft venting system. A portion of a venting system using a fan or other mechanical means to cause the removal of flue or vent gases under nonpositive static vent pressure.

Power venting system. A portion of a venting system using a fan or other mechanical means to cause the removal of flue or vent gases under positive static vent pressure.

[MP] MECHANICAL EXHAUST SYSTEM. A system for removing air from a room or space by mechanical means.

[MP] MECHANICAL JOINT.

1. A connection between pipes, fittings or pipes and fittings that is not welded, brazed, caulked, soldered, solvent cemented or heat-fused.
2. A general form of gas- or liquid-tight connections obtained by the joining of parts through a positive holding mechanical construction such as, but not limited to, flanged, screwed, clamped or flared connections.

[MP] MECHANICAL SYSTEM. A system specifically addressed and regulated in this code and composed of components, devices, *appliances* and *equipment*.

[RB] METAL ROOF PANEL. An interlocking metal sheet having an installed weather exposure of not less than 3 square feet (0.28 m^2) per sheet.

[RB] METAL ROOF SHINGLE. An interlocking metal sheet having an installed weather exposure less than 3 square feet (0.28 m^2) per sheet.

[RB] MEZZANINE. An intermediate level or levels between the floor and ceiling of any *story*.

[RB] MODIFIED BITUMEN ROOF COVERING. One or more layers of polymer modified asphalt sheets. The sheet materials shall be fully adhered or mechanically attached to the substrate or held in place with an *approved* ballast layer.

[RB] MULTIPLE-STATION SMOKE ALARM. Two or more single-station alarm devices that are capable of interconnection such that actuation of one causes all integral or separate audible alarms to operate.

[RB] NAILABLE SUBSTRATE. A product or material such as framing, sheathing or furring, composed of wood or wood-based materials, or other materials and fasteners providing equivalent fastener withdrawal resistance.

[MP] NATURAL DRAFT SYSTEM. A venting system designed to remove flue or vent gases under nonpositive static vent pressure entirely by natural draft.

[RB] NATURALLY DURABLE WOOD. The heartwood of the following species with the exception that an occasional piece with corner sapwood is permitted if 90 percent or more of the width of each side on which it occurs is heartwood.

Decay resistant. Redwood, cedar, black locust and black walnut.

Termite resistant. Alaska yellow cedar, redwood, Eastern red cedar and Western red cedar including all sapwood of Western red cedar.

[RB] NONCOMBUSTIBLE MATERIAL. Materials that pass the test procedure for defining noncombustibility of elementary materials set forth in ASTM E136.

[RB] NOSING. The leading edge of treads of stairs and of landings at the top of stairway flights.

[RB] OCCUPIED SPACE. The total area of all buildings or structures on any *lot* or parcel of ground projected on a horizontal plane, excluding permitted projections as allowed by this code.

[MP] OFFSET. A combination of fittings that makes two changes in direction, bringing one section of the pipe out of line and into a line parallel with the other section.

[MP] ON-SITE NONPOTABLE WATER REUSE SYSTEMS. Water systems for the collection, treatment, storage, distribution, and reuse of nonpotable water generated on site, including but not limited to graywater systems. This definition does not include rainwater harvesting systems.

[RE] OPAQUE DOOR. For the definition applicable in Chapter 11, see Section N1101.6.

[RB] OWNER. Any person, agent, firm or corporation having a legal or equitable interest in the property.

[RB] PAN FLASHING. Corrosion-resistant flashing at the base of an opening that is integrated into the building exterior wall to direct water to the exterior and is premanufactured, fabricated, formed or applied at the job site.

[RB] PANEL THICKNESS. Thickness of core plus two layers of structural wood panel facings.

[NY] PART 1202. The regulations set forth in 19 NYCRR Part 1202 ("Uniform Code: Administration and Enforcement in Certain Local Governments"), as currently in effect and as hereafter amended from time to time.

[NY] PART 1203. The regulations set forth in 19 NYCRR Part 1203 ("Uniform Code: Minimum Standards for Administration and Enforcement"), as currently in effect and as hereafter amended from time to time.

[NY] PART 1203—COMPLIANT CODE ENFORCEMENT PROGRAM. A code enforcement program that includes the features required by Part 1203 and satisfies the requirements of Part 1203.

INTERNATIONAL CODE COUNCIL®
Copyright © 2019 ICC & NYSDOS. ALL RIGHTS RESERVED. Accessed by Lauren Gualdino (lgualdino@briarcliffmanor.org), (-) Order Number #100880972 on May 08, 2020 07:05 AM (PDT) pursuant to License Agreement with ICC & NYSDOS. No further reproduction, no

100880972

[NY] PART 1204. The regulations set forth in 19 NYCRR Part 1204 ("Uniform Code: Administration and Enforcement by State Agencies"), as currently in effect and as hereafter amended from time to time.

[NY] PART 1205. The regulations set forth in 19 NYCRR Part 1205 ("Uniform Code: Variance Procedures"), as currently in effect and as hereafter amended from time to time.

[MP] PELLET FUEL-BURNING APPLIANCE. A closed combustion, vented *appliance* equipped with a fuel feed mechanism for burning processed pellets of solid fuel of a specified size and composition.

[MP] PELLET VENT. A vent *listed* and *labeled* for use with a *listed* pellet fuel-burning *appliance*.

[RB] PERFORMANCE CATEGORY. A designation of wood structural panels as related to the panel performance used in Chapters 4, 5, 6 and 8.

[RB] PERMIT. An official document or certificate issued by the *building official* that authorizes performance of a specified activity.

[RB] PERSON. An individual, heirs, executors, administrators or assigns, and a firm, partnership or corporation, its or their successors or assigns, or the agent of any of the aforesaid.

[RB] PHOTOVOLTAIC MODULE. A complete, environmentally protected unit consisting of solar cells, optics and other components, exclusive of a tracker, designed to generate DC power where exposed to sunlight.

[RB] PHOTOVOLTAIC PANEL. A collection of photovoltaic modules mechanically fastened together, wired, and designed to provide a field-installable unit.

[RB] PHOTOVOLTAIC PANEL SYSTEM. A system that incorporates discrete photovoltaic panels that convert solar radiation into electricity, including rack support systems.

[RB] PHOTOVOLTAIC SHINGLES. A *roof covering* that resembles shingles and that incorporates photovoltaic modules.

[MP] PITCH. See "Slope."

[RB] PLASTIC COMPOSITE. A generic designation that refers to wood-plastic composites and plastic lumber.

[RB] PLATFORM CONSTRUCTION. A method of construction by which floor framing bears on load bearing walls that are not continuous through the *story* levels or floor framing.

[MP] PLENUM. A chamber that forms part of an air-circulation system other than the *occupied space* being conditioned.

[MP] PLUMBING. For the purpose of this code, plumbing refers to those installations, repairs, maintenance and *alterations* regulated by Chapters 25 through 33.

[MP] PLUMBING APPLIANCE. An energized household *appliance* with plumbing connections, such as a dishwasher, food waste disposer, clothes washer or water heater.

[MP] PLUMBING APPURTENANCE. A device or assembly that is an adjunct to the basic plumbing system and does not demand additional water supply or add any discharge load to the system. It is presumed that it performs some useful function in the operation, maintenance, servicing, economy or safety of the plumbing system. Examples include filters, relief valves and aerators.

[NY] PLUMBING CODE OF NEW YORK STATE. The 2020 edition of the publication entitled "Plumbing Code of New York State," published by the International Code Council, Inc. (publication date November 2019).

[MP] PLUMBING FIXTURE. A receptacle or device that is connected to a water supply system or discharges to a drainage system or both. Such receptacles or devices require a supply of water; or discharge liquid waste or liquidborne solid waste; or require a supply of water and discharge waste to a drainage system.

[MP] PLUMBING SYSTEMS. Includes the water distribution pipes; plumbing fixtures and traps; water-treating or water-using *equipment*; soil, waste and vent pipes; and building drains; in addition to their respective connections, devices and appurtenances within a structure or premises; and the water service, building sewer and building storm sewer serving such structure or premises.

[MP] POLLUTION. A low-hazard or nonhealth-hazard impairment of the quality of the potable water to a degree that does not create a hazard to the public health and that does adversely and unreasonably affect the aesthetic qualities of such potable water for domestic use.

[RB] POLYPROPYLENE SIDING. A shaped material, made principally from polypropylene homopolymer, or copolymer, that in some cases contains fillers or reinforcements, that is used to clad *exterior walls* or buildings.

[MP] PORTABLE-FUEL-CELL APPLIANCE. A fuel cell generator of electricity that is not fixed in place. A portable-fuel-cell *appliance* utilizes a cord and plug connection to a grid-isolated load and has an integral fuel supply.

[RB] POSITIVE ROOF DRAINAGE. The drainage condition in which consideration has been made for the loading deflections of the roof deck, and additional slope has been provided to ensure drainage of the roof within 48 hours of precipitation.

[MP] POTABLE WATER. Water free from impurities present in amounts sufficient to cause disease or harmful physiological effects and conforming in bacteriological and chemical quality to the requirements of the public health authority having jurisdiction.

[RB] PRECAST CONCRETE. A structural concrete element cast elsewhere than its final position in the structure.

[RB] PRECAST CONCRETE FOUNDATION WALLS. Preengineered, precast concrete wall panels that are designed to withstand specified stresses and used to build below-*grade* foundations.

[MP] PRESSURE-RELIEF VALVE. A pressure-actuated valve held closed by a spring or other means and designed to automatically relieve pressure at the pressure at which it is set.

INTERNATIONAL CODE COUNCIL®
Copyright © 2019 ICC & NYSDOS. ALL RIGHTS RESERVED. Accessed by Lauren Gualdino (lgualdino@briarcliffmanor.org), (-) Order Number #100880972 on May 08, 2020 07:05 AM (PDT) pursuant to License Agreement with ICC & NYSDOS. No further reproduction, no

100880972

[NY] PROPERTY MAINTENANCE CODE OF NEW YORK STATE. The 2020 edition of the publication entitled "Property Maintenance Code of New York State," published by the International Code Council, Inc. (publication date November 2019).

[RE] PROPOSED DESIGN. For the definition applicable in Chapter 11, see Section N1101.6.

[MP] PUBLIC SEWER. A common sewer directly controlled by public authority.

[MP] PUBLIC WATER MAIN. A water-supply pipe for public use controlled by public authority.

[RB] PUBLIC WAY. Any street, alley or other parcel of land open to the outside air leading to a public street, that has been deeded, dedicated or otherwise permanently appropriated to the public for public use and that has a clear width and height of not less than 10 feet (3048 mm).

[MP] PURGE. To clear of air, gas or other foreign substances.

[MP] QUICK-CLOSING VALVE. A valve or faucet that closes automatically where released manually or controlled by mechanical means for fast-action closing.

[RB] RAMP. A walking surface that has a running slope steeper than 1 unit vertical in 20 units horizontal (5-percent slope).

[RE] RATED DESIGN. For the definition applicable in Chapter 11, see Section N1101.6.

[RE] READILY ACCESSIBLE. For the definition applicable in Chapter 11, see Section N1101.6.

[RB] READY ACCESS (TO). That which enables a device, *appliance* or *equipment* to be directly reached, without requiring the removal or movement of any panel, door or similar obstruction.

[MP] RECEPTOR. A fixture or device that receives the discharge from indirect waste pipes.

[MP] RECLAIMED WATER. Nonpotable water that has been derived from the treatment of wastewater by a facility or system licensed or permitted to produce water meeting the *jurisdiction's* water requirements for its intended uses. Also known as "Recycled water."

[MP] REFRIGERANT. A substance used to produce refrigeration by its expansion or evaporation.

[MP] REFRIGERANT COMPRESSOR. A specific machine, with or without accessories, for compressing a given refrigerant vapor.

[MP] REFRIGERATING SYSTEM. A combination of interconnected parts forming a closed circuit in which refrigerant is circulated for the purpose of extracting, then rejecting, heat. A direct refrigerating system is one in which the evaporator or condenser of the refrigerating system is in direct contact with the air or other substances to be cooled or heated. An indirect refrigerating system is one in which a secondary coolant cooled or heated by the refrigerating system is circulated to the air or other substance to be cooled or heated.

[NY] REGISTERED DESIGN PROFESSIONAL. An individual who is a licensed and registered architect (RA) in accordance with Article 147 of the New York State Education Law or a licensed and registered professional engineer (PE) in accordance with Article 145 of the New York State Education Law.

[MP] RELIEF VALVE, VACUUM. A device to prevent excessive buildup of vacuum in a pressure vessel.

[RB] REPAIR. The reconstruction, replacement or renewal of any part of an existing building for the purpose of its maintenance or to correct damage.

For the definition applicable in Chapter 11, see Section N1101.6.

[RB] REROOFING. The process of recovering or replacing an existing roof covering. See "Roof recover."

For the definition applicable in Chapter 11, see Section N1101.6.

[RE] RESIDENTIAL BUILDING. For the definition applicable in Chapter 11, see Section N1101.6.

[MP] RETURN AIR. Air removed from an *approved conditioned space* or location and recirculated or exhausted.

[RB] RIDGE. With respect to topographic wind effects, an elongated crest of a *hill* characterized by strong relief in two directions.

[MP] RISER (PLUMBING). A water pipe that extends vertically one full *story* or more to convey water to branches or to a group of fixtures.

[RB] RISER (STAIR). The vertical component of a step or stair.

[RB] ROOF ASSEMBLY. A system designed to provide weather protection and resistance to design loads. The system consists of a roof covering and roof deck or a single component serving as both the roof covering and the roof deck. A roof assembly includes the roof deck, underlayment and *roof covering,* and can also include a thermal barrier, ignition barrier, insulation or a vapor retarder. For the definition applicable in Chapter 11, see Section N1101.6.

[RB] ROOF COATING. A fluid-applied, adhered coating used for roof maintenance or *roof repair*, or as a component of a *roof covering* system or *roof assembly*.

[RB] ROOF COVERING. The covering applied to the roof deck for weather resistance, fire classification or appearance.

[RB] ROOF COVERING SYSTEM. See "Roof assembly."

[RB] ROOF DECK. The flat or sloped surface not including its supporting members or vertical supports.

[RB] ROOF RECOVER. The process of installing an additional *roof covering* over a prepared existing roof covering without removing the existing roof covering. For the definition applicable in Chapter 11, see Section N1101.6.

[RB] ROOF REPAIR. Reconstruction or renewal of any part of an existing roof for the purposes of its maintenance. For the definition applicable in Chapter 11, see Section N1101.6.

INTERNATIONAL CODE COUNCIL®
Copyright © 2019 ICC & NYSDOS. ALL RIGHTS RESERVED. Accessed by Lauren Gualdino (lgualdino@briarcliffmanor.org), (-) Order Number #100880972 on May 08, 2020 07:05 AM (PDT) pursuant to License Agreement with ICC & NYSDOS. No further reproduction, no

100880972

[RB] ROOF REPLACEMENT. The process of removing the existing *roof covering*, repairing any damaged substrate and installing a new *roof covering*. For the definition applicable in Chapter 11, see Section N1101.6.

[MP] ROOM HEATER. A free-standing heating *appliance* installed in the space being heated and not connected to ducts.

[MP] ROUGH-IN. The installation of the parts of the plumbing system that must be completed prior to the installation of fixtures. This includes DWV, water supply and built-in fixture supports.

[RB] RUNNING BOND. The placement of masonry units such that head joints in successive courses are horizontally offset not less than one-quarter the unit length.

[RE] *R*-VALUE (THERMAL RESISTANCE). For the definition applicable in Chapter 11, see Section N1101.6.

[MP] SANITARY SEWER. A sewer that carries sewage and excludes storm, surface and groundwater.

[RB] SCUPPER. An opening in a wall or parapet that allows water to drain from a roof.

[RB] SEISMIC DESIGN CATEGORY (SDC). A classification assigned to a structure based on its occupancy category and the severity of the design earthquake ground motion at the site.

[MP] SEPTIC TANK. A water-tight receptor that receives the discharge of a building sanitary drainage system and is constructed so as to separate solids from the liquid, digest organic matter through a period of detention, and allow the liquids to discharge into the soil outside of the tank through a system of open joint or perforated piping or a seepage pit.

[RE] SERVICE WATER HEATING. For the definition applicable in Chapter 11, see Section N1101.6.

[MP] SEWAGE. Any liquid waste containing animal matter, vegetable matter or other impurity in suspension or solution.

[MP] SEWAGE PUMP. A permanently installed mechanical device for removing sewage or liquid waste from a sump.

[RB] SHALL. The term, where used in the code, is construed as mandatory.

[RB] SHEAR WALL. A general term for walls that are designed and constructed to resist racking from seismic and wind by use of masonry, concrete, cold-formed steel or wood framing in accordance with Chapter 6 of this code and the associated limitations in Section R301.2 of this code.

[RB] SHINGLE FASHION. A method of installing roof or wall coverings, water-resistive barriers, flashing or other building components such that upper layers of material are placed overlapping lower layers of material to provide drainage and protect against water intrusion at unsealed penetrations and joints or in combination with sealed joints.

[RB] SINGLE-PLY MEMBRANE. A roofing membrane that is field applied using one layer of membrane material (either homogeneous or composite) rather than multiple layers.

[RB] SINGLE-STATION SMOKE ALARM. An assembly incorporating the detector, control *equipment* and alarm sounding device in one unit that is operated from a power supply either in the unit or obtained at the point of installation.

[RE] SKYLIGHT. For the definition applicable in Chapter 11, see Section N1101.6.

[RB] SKYLIGHT, UNIT. A factory assembled, glazed fenestration unit, containing one panel of glazing material, that allows for natural daylighting through an opening in the roof assembly while preserving the weather-resistant barrier of the roof.

[RB] SKYLIGHTS AND SLOPED GLAZING. Glass or other transparent or translucent glazing material installed at a slope of 15 degrees (0.26 rad) or more from vertical. Unit skylights, tubular daylighting devices and glazing materials in solariums, sunrooms, roofs and sloped walls are included in this definition. For the definition applicable in Chapter 11, see Section N1101.6.

[MP] SLIP JOINT. A mechanical-type joint used primarily on fixture traps. The joint tightness is obtained by compressing a friction-type washer such as rubber, nylon, neoprene, lead or special packing material against the pipe by the tightening of a (slip) nut.

[MP] SLOPE. The fall (pitch) of a line of pipe in reference to a horizontal plane. In drainage, the slope is expressed as the fall in units vertical per units horizontal (percent) for a length of pipe.

[RB] SMOKE-DEVELOPED INDEX. A comparative measure, expressed as a dimensionless number, derived from measurements of smoke obscuration versus time for a material tested in accordance with ASTM E84 or UL 723.

[MP] SOIL STACK OR PIPE. A pipe that conveys sewage containing fecal material.

[RB] SOLAR ENERGY SYSTEM. A system that converts solar radiation to usable energy, including *photovoltaic panel systems* and *solar thermal systems*.

[RE] SOLAR HEAT GAIN COEFFICIENT (SHGC). For the definition applicable in Chapter 11, see Section N1101.6.

[MP] SOLAR THERMAL COLLECTOR. Components in a *solar thermal system* that collect and convert solar radiation to thermal energy.

[MP] SOLAR THERMAL SYSTEM. A system that converts solar radiation to thermal energy for use in heating or cooling.

[RB] SOLID MASONRY. Load-bearing or nonload-bearing construction using masonry units where the net cross-sectional area of each unit in any plane parallel to the bearing surface is not less than 75 percent of its gross cross-sectional area. Solid masonry units shall conform to ASTM C55, C62, C73, C145 or C216.

[RB] SPLINE. A strip of wood structural panel cut from the same material used for the panel facings, used to connect two structural insulated panels. The strip (spline) fits into a groove cut into the vertical edges of the two structural insulated panels to be joined. Splines are used behind each facing of the structural insulated panels being connected as shown in Figure R610.8.

INTERNATIONAL CODE COUNCIL®
Copyright © 2019 ICC & NYSDOS. ALL RIGHTS RESERVED. Accessed by Lauren Gualdino (lgualdino@briarcliffmanor.org), (-) Order Number #100880972 on May 08, 2020 07:05 AM (PDT) pursuant to License Agreement with ICC & NYSDOS. No further reproduction, no

100880972

[MP] STACK. Any main vertical DWV line, including offsets, that extends one or more stories as directly as possible to its vent terminal.

[RB] STACK BOND. The placement of masonry units in a bond pattern is such that head joints in successive courses are vertically aligned. For the purpose of this code, requirements for stack bond shall apply to all masonry laid in other than running bond.

[MP] STACK VENT. The extension of soil or waste stack above the highest horizontal drain connected.

[RB] STAIR. A change in elevation, consisting of one or more risers.

[RB] STAIRWAY. One or more flights of stairs, either interior or exterior, with the necessary landings and connecting platforms to form a continuous and uninterrupted passage from one level to another within or attached to a building, porch or deck.

[RB] STAIRWAY, SPIRAL. A stairway with a plan view of closed circular form and uniform section-shaped treads radiating from a minimum-diameter circle.

[RE] STANDARD REFERENCE DESIGN. For the definition applicable in Chapter 11, see Section N1101.6.

[RB] STANDARD TRUSS. Any construction that does not permit the roof-ceiling insulation to achieve the required *R*-value over the *exterior walls*.

[MP] STATIONARY FUEL CELL POWER PLANT. A self-contained package or factory-matched packages that constitute an automatically-operated assembly of integrated systems for generating useful electrical energy and recoverable thermal energy that is permanently connected and fixed in place.

[MP] STORM SEWER, DRAIN. A pipe used for conveying rainwater, surface water, subsurface water and similar liquid waste.

[RB] STORY. That portion of a building included between the upper surface of a floor and the upper surface of the floor or roof next above.

[NY] STORY ABOVE GRADE PLANE. Any *story* having its finished floor surface entirely above *grade plane*, or in which the finished surface of the floor next above is any of the following:

1. More than 6 feet (1829 mm) *above grade plane*.
2. More than 6 feet (1829 mm) above the finished ground level for more than 50 percent of the total building perimeter.
3. More than 12 feet (3658 mm) above the finished ground level at any point.

[RB] STRUCTURAL COMPOSITE LUMBER. Structural members manufactured using wood elements bonded together with exterior adhesives.

Examples of structural composite lumber are:

Laminated strand lumber (LSL). A composite of wood strand elements with wood fibers primarily oriented along the length of the member, where the least dimension of the wood strand elements is 0.10 inch (2.54 mm) or less and their average lengths are not less than 150 times the least dimension of the wood strand elements.

Laminated veneer lumber (LVL). A composite of wood veneer elements with wood fibers primarily oriented along the length of the member, where the veneer element thicknesses are 0.25 inch (6.4 mm) or less.

Oriented strand lumber (OSL). A composite of wood strand elements with wood fibers primarily oriented along the length of the member, where the least dimension of the wood strand elements is 0.10 inch (2.54 mm) or less and their average lengths are not less than 75 times and less than 150 times the least dimension of the wood strand elements.

Parallel strand lumber (PSL). A composite of wood strand elements with wood fibers primarily oriented along the length of the member, where the least dimension of the wood strand elements is 0.25 inch (6.4 mm) or less and their average lengths are not less than 300 times the least dimension of the wood strand elements.

[RB] STRUCTURAL INSULATED PANEL (SIP). A structural sandwich panel that consists of a lightweight foam plastic core securely laminated between two thin, rigid wood structural panel facings.

[RB] STRUCTURE. That which is built or constructed.

[RB] SUBSOIL DRAIN. A drain that collects subsurface water or seepage water and conveys such water to a place of disposal.

[MP] SUMP. A tank or pit that receives sewage or waste, located below the normal *grade* of the gravity system and that must be emptied by mechanical means.

[MP] SUMP PUMP. A pump installed to empty a sump. These pumps are used for removing storm water only. The pump is selected for the specific head and volume of the load and is usually operated by level controllers.

[RB] SUNROOM. A one-story structure attached to a *dwelling* with a *glazing area* in excess of 40 percent of the gross area of the structure's *exterior walls* and roof.

For the definition applicable in Chapter 11, see Section N1101.6.

[MP] SUPPLY AIR. Air delivered to a *conditioned space* through ducts or plenums from the heat exchanger of a heating, cooling or ventilating system.

[MP] SUPPORTS. Devices for supporting, hanging and securing pipes, fixtures and *equipment*.

[MP] SWEEP. A drainage fitting designed to provide a change in direction of a drain pipe of less than the angle specified by the amount necessary to establish the desired slope of the line. Sweeps provide a longer turning radius than bends and a less turbulent flow pattern (see "Bend" and "Elbow").

[MP] TEMPERATURE- AND PRESSURE-RELIEF (T AND P) VALVE. A combination relief valve designed to function as both a temperature-relief and pressure-relief valve.

INTERNATIONAL CODE COUNCIL®
Copyright © 2019 ICC & NYSDOS. ALL RIGHTS RESERVED. Accessed by Lauren Gualdino (lgualdino@briarcliffmanor.org), (-) Order Number #100880972 on May 08, 2020 07:05 AM (PDT) pursuant to License Agreement with ICC & NYSDOS. No further reproduction, no

100880972

[MP] TEMPERATURE-RELIEF VALVE. A temperature-actuated valve designed to discharge automatically at the temperature at which it is set.

[RB] TERMITE-RESISTANT MATERIAL. Pressure-preservative-treated wood in accordance with the AWPA standards in Section R317.1, naturally durable termite-resistant wood, steel, concrete, masonry or other *approved* material.

[RE] THERMAL ISOLATION. For the definition applicable in Chapter 11, see Section N1101.6.

[RE] THERMAL RESISTANCE, *R*-VALUE. See "*R*-value."

[RE] THERMAL TRANSMITTANCE, *U*-FACTOR. See "*U*-factor."

[RE] THERMOSTAT. For the definition applicable in Chapter 11, see Section N1101.6.

[MP] THIRD-PARTY CERTIFICATION AGENCY. An approved agency operating a product or material certification system that incorporates initial product testing, assessment and surveillance of a manufacturer's quality control system.

[MP] THIRD-PARTY CERTIFIED. Certification obtained by the manufacturer indicating that the function and performance characteristics of a product or material have been determined by testing and ongoing surveillance by an approved third-party certification agency. Assertion of certification is in the form of identification in accordance with the requirements of the third-party certification agency.

[NY] TOWNHOUSE. A single-family dwelling unit constructed in a group of three or more attached units in which each unit (1) extends from the foundation to the roof, (2) has open space on at least two sides, and (3) has a separate *means of egress*.

[MP] TRAP. A fitting, either separate or built into a fixture, that provides a liquid seal to prevent the emission of sewer gases without materially affecting the flow of sewage or wastewater through it.

[MP] TRAP ARM. That portion of a *fixture drain* between a trap weir and the vent fitting.

[MP] TRAP PRIMER. A device or system of piping to maintain a water seal in a trap, typically installed where infrequent use of the trap would result in evaporation of the trap seal, such as floor drains.

[MP] TRAP SEAL. The trap seal is the maximum vertical depth of liquid that a trap will retain, measured between the crown weir and the top of the dip of the trap.

[RB] TRIM. Picture molds, chair rails, baseboards, handrails, door and window frames, and similar decorative or protective materials used in fixed applications.

[RB] TRUSS DESIGN DRAWING. The graphic depiction of an individual truss, that describes the design and physical characteristics of the truss.

[RB] TUBULAR DAYLIGHTING DEVICE (TDD). A nonoperable fenestration unit primarily designed to transmit daylight from a roof surface to an interior ceiling via a tubular conduit. The basic unit consists of an exterior glazed weathering surface, a light-transmitting tube with a reflective interior surface, and an interior-sealing device such as a translucent ceiling panel. The unit may be factory assembled, or field assembled from a manufactured kit.

[MP] TYPE L VENT. A *listed* and *labeled* vent conforming to UL 641 for venting oil-burning *appliances listed* for use with Type L vents or with gas *appliances listed* for use with Type B vents.

[RE] *U*-FACTOR (THERMAL TRANSMITTANCE). For the definition applicable in Chapter 11, see Section N1101.6.

[RB] UNDERLAYMENT. One or more layers of felt, sheathing paper, nonbituminous saturated felt, or other *approved* material over which a roof covering, with a slope of 2 to 12 (17-percent slope) or greater, is applied.

[NY] UNIFORM CODE. The New York State Uniform Fire Prevention and Building Code, adopted pursuant to Article 18 of the New York State Executive Law, as currently in effect and as hereafter amended from time to time.

[NY] UNVENTED ROOM HEATER. An unvented heating appliance designed for stationary installation and utilized to provide comfort heating. Such appliances provide radiant heat or convection heat by gravity or fan circulation directly from the heater and do not utilize ducts. A wall-mounted unvented room heater would be of the type designed for insertion in or attachment to a wall or partition. A wall-mounted unvented room heater does not incorporate concealed venting arrangements in its construction and discharges all products of combustion through the front into the room being heated. [Required by General Business Law (322.2).]

[MP] VACUUM BREAKER. A device that prevents backsiphonage of water by admitting atmospheric pressure through ports to the discharge side of the device.

[RB] VAPOR DIFFUSION PORT. A passageway for conveying water vapor from an unvented *attic* to the outside atmosphere.

[RB] VAPOR PERMEABLE. The property of having a moisture vapor permeance rating of 5 perms (2.9×10^{-10} kg/Pa • s • m^2) or greater, where tested in accordance with the desiccant method using Procedure A of ASTM E96. A vapor permeable material permits the passage of moisture vapor.

[RB] VAPOR RETARDER CLASS. A measure of the ability of a material or assembly to limit the amount of moisture that passes through that material or assembly. Vapor retarder class shall be defined using the desiccant method with Procedure A of ASTM E96 as follows:

Class I: ≤ 0.1 perm rating

Class II: > 0.1 to ≤ 1.0 perm rating

Class III: > 1.0 to ≤ 10 perm rating

[MP] VENT. A passageway for conveying flue gases from fuel-fired *appliances*, or their vent connectors, to the outside atmosphere.

[MP] VENT COLLAR. See "Flue collar."

[MP] VENT CONNECTOR. That portion of a venting system that connects the flue collar or draft hood of an *appliance* to a vent.

INTERNATIONAL CODE COUNCIL®
Copyright © 2019 ICC & NYSDOS. ALL RIGHTS RESERVED. Accessed by Lauren Gualdino (lgualdino@briarcliffmanor.org), (-) Order Number #100880972 on May 08, 2020 07:05 AM (PDT) pursuant to License Agreement with ICC & NYSDOS. No further reproduction, no

100880972

[MP] VENT DAMPER DEVICE, AUTOMATIC. A device intended for installation in the venting system, in the outlet of an individual, automatically operated fuel burning *appliance* and that is designed to open the venting system automatically where the *appliance* is in operation and to close off the venting system automatically where the *appliance* is in a standby or shutdown condition.

[MP] VENT GASES. Products of combustion from fuel-burning *appliances*, plus excess air and dilution air, in the venting system above the draft hood or draft regulator.

[MP] VENT STACK. A vertical vent pipe installed to provide circulation of air to and from the drainage system and that extends through one or more stories.

[MP] VENT SYSTEM. Piping installed to equalize pneumatic pressure in a drainage system to prevent trap seal loss or blowback due to siphonage or back pressure.

[RB] VENTILATION. The natural or mechanical process of supplying conditioned or unconditioned air to, or removing such air from, any space.

For the definition applicable in Chapter 11, see Section N1101.6.

[RE] VENTILATION AIR. For the definition applicable in Chapter 11, see Section N1101.6.

[MP] VENTING. Removal of combustion products to the outdoors.

[MP] VENTING SYSTEM. A continuous open passageway from the flue collar of an *appliance* to the outside atmosphere for the purpose of removing flue or vent gases. A venting system is usually composed of a vent or a chimney and vent connector, if used, assembled to form the open passageway.

[MP] VERTICAL PIPE. Any pipe or fitting that makes an angle of 45 degrees (0.79 rad) or more with the horizontal.

[RB] VINYL SIDING. A shaped material, made principally from rigid polyvinyl chloride (PVC), that is used to cover exterior walls of buildings.

[RE] VISIBLE TRANSMITTANCE (VT). For the definition applicable in Chapter 11, see Section N1101.6.

[RB] WALL, RETAINING. A wall not laterally supported at the top, that resists lateral soil load and other imposed loads.

[RB] WALLS. Walls shall be defined as follows:

Load-bearing wall. A wall supporting any vertical load in addition to its own weight.

Nonbearing wall. A wall which does not support vertical loads other than its own weight.

[MP] WASTE. Liquidborne waste that is free of fecal matter.

[MP] WASTE PIPE OR STACK. Piping that conveys only liquid sewage not containing fecal material.

[MP] WASTE RECEPTOR. A floor sink, standpipe, hub drain or a floor drain that receives the discharge of one or more indirect waste pipes.

[MP] WATER DISTRIBUTION SYSTEM. Piping that conveys water from the service to the plumbing fixtures, *appliances*, appurtenances, *equipment*, devices or other systems served, including fittings and control valves.

[MP] WATER HEATER. Any heating *appliance* or *equipment* that heats potable water and supplies such water to the potable hot water distribution system.

[MP] WATER MAIN. A water supply pipe for public use.

[MP] WATER OUTLET. A valved discharge opening, including a hose bibb, through which water is removed from the potable water system supplying water to a plumbing fixture or plumbing *appliance* that requires either an *air gap* or backflow prevention device for protection of the supply system.

[RB] WATER-RESISTIVE BARRIER. A material behind an *exterior wall* covering that is intended to resist liquid water that has penetrated behind the exterior covering from further intruding into the *exterior wall* assembly.

[MP] WATER SERVICE PIPE. The outside pipe from the water main or other source of potable water supply to the water distribution system inside the building, terminating at the service valve.

[MP] WATER SUPPLY SYSTEM. The water service pipe, the water-distributing pipes and the necessary connecting pipes, fittings, control valves and appurtenances in or adjacent to the building or premises.

[MP] WET VENT. A vent that receives the discharge of wastes from other fixtures.

[MP] WHOLE-HOUSE MECHANICAL VENTILATION SYSTEM. An exhaust system, supply system, or combination thereof that is designed to mechanically exchange indoor air for outdoor air where operating continuously or through a programmed intermittent schedule to satisfy the whole-house ventilation rate.

For the definition applicable in Chapter 11, see Section N1101.6.

[RB] WINDBORNE DEBRIS REGION. Areas within *hurricane-prone regions* located in accordance with one of the following:

1. Within 1 mile (1.61 km) of the coastal mean high-water line where the ultimate design wind speed, V_{ult}, is 130 mph (58 m/s) or greater.
2. In areas where the ultimate design wind speed, V_{ult}, is 140 mph (63.6 m/s) or greater; or Hawaii.

[RB] WINDER. A tread with nonparallel edges.

[RB] WOOD STRUCTURAL PANEL. A panel manufactured from veneers; or wood strands or wafers; bonded together with waterproof synthetic resins or other suitable bonding systems. Examples of wood structural panels are plywood, orientated strand board (OSB) or composite panels.

[RB] YARD. An open space, other than a court, unobstructed from the ground to the sky, except where specifically provided by this code, on the *lot* on which a building is situated.

[RE] ZONE. For the definition applicable in Chapter 11, see Section N1101.6.

INTERNATIONAL CODE COUNCIL®
Copyright © 2019 ICC & NYSDOS. ALL RIGHTS RESERVED. Accessed by Lauren Gualdino (lgualdino@briarcliffmanor.org), (-) Order Number #100880972 on May 08, 2020 07:05 AM (PDT) pursuant to License Agreement with ICC & NYSDOS. No further reproduction, no

100880972

Part III—Building Planning and Construction

CHAPTER 3

BUILDING PLANNING

SECTION R301
DESIGN CRITERIA

R301.1 Application. Buildings and structures, and parts thereof, shall be constructed to safely support all loads, including dead loads, live loads, roof loads, flood loads, snow loads, wind loads and seismic loads as prescribed by this code. The construction of buildings and structures in accordance with the provisions of this code shall result in a system that provides a complete load path that meets the requirements for the transfer of loads from their point of origin through the load-resisting elements to the foundation. Buildings and structures constructed as prescribed by this code are deemed to comply with the requirements of this section.

R301.1.1 Alternative provisions. As an alternative to the requirements in Section R301.1, the following standards are permitted subject to the limitations of this code and the limitations therein. Where engineered design is used in conjunction with these standards, the design shall comply with the *Building Code of New York State*.

1. AWC *Wood Frame Construction Manual* (WFCM).
2. AISI *Standard for Cold-Formed Steel Framing—Prescriptive Method for One- and Two-Family Dwellings* (AISI S230).
3. ICC *Standard on the Design and Construction of Log Structures* (ICC 400).

R301.1.2 Construction systems. The requirements of this code are based on platform and balloon-frame construction for light-frame buildings. The requirements for concrete and masonry buildings are based on a balloon framing system. Other framing systems must have equivalent detailing to ensure force transfer, continuity and compatible deformations.

R301.1.3 Engineered design. Where a building of otherwise conventional construction contains structural elements exceeding the limits of Section R301 or otherwise not conforming to this code, these elements shall be designed in accordance with accepted engineering practice. The extent of such design need only demonstrate compliance of nonconventional elements with other applicable provisions and shall be compatible with the performance of the conventional framed system. Engineered design in accordance with the *Building Code of New York State* is permitted for buildings and structures, and parts thereof, included in the scope of this code.

R301.2 Climatic and geographic design criteria. Buildings shall be constructed in accordance with the provisions of this code as limited by the provisions of this section. Additional criteria shall be established by the local *jurisdiction* and set forth in Table R301.2(1).

R301.2.1 Wind design criteria. Buildings and portions thereof shall be constructed in accordance with the wind provisions of this code using the ultimate design wind speed in Table R301.2(1) as determined from Figure R301.2(5)A. The structural provisions of this code for wind loads are not permitted where wind design is required as specified in Section R301.2.1.1. Where different construction methods and structural materials are used for various portions of a building, the applicable requirements of this section for each portion shall apply. Where not otherwise specified, the wind loads listed in Table R301.2(2) adjusted for height and exposure using Table R301.2(3) shall be used to determine design load performance requirements for wall coverings, curtain walls, roof coverings, exterior windows, skylights, garage doors and exterior doors. Asphalt shingles shall be designed for wind speeds in accordance with Section R905.2.4. A continuous load path shall be provided to transmit the applicable uplift forces in Section R802.11.1 from the roof assembly to the foundation.

R301.2.1.1 Wind limitations and wind design required. The wind provisions of this code shall not apply to the design of buildings where wind design is required in accordance with Figure R301.2(5)B.

Exceptions:

1. For concrete construction, the wind provisions of this code shall apply in accordance with the limitations of Sections R404 and R608.
2. For structural insulated panels, the wind provisions of this code shall apply in accordance with the limitations of Section R610.
3. For cold-formed steel light-frame construction, the wind provisions of this code shall apply in accordance with the limitations of Sections R505, R603 and R804.

In regions where wind design is required in accordance with Figure R301.2(5)B, the design of buildings for wind loads shall be in accordance with one or more of the following methods:

1. AWC *Wood Frame Construction Manual* (WFCM).
2. ICC *Standard for Residential Construction in High-Wind Regions* (ICC 600).
3. ASCE *Minimum Design Loads for Buildings and Other Structures* (ASCE 7).

INTERNATIONAL CODE COUNCIL®
Copyright © 2019 ICC & NYSDOS. ALL RIGHTS RESERVED. Accessed by Lauren Gualdino (lgualdino@briarcliffmanor.org), (-) Order Number #100880972 on May 08, 2020 07:05 AM (PDT) pursuant to License Agreement with ICC & NYSDOS. No further reproduction, no

100880972

4. AISI *Standard for Cold-Formed Steel Framing—Prescriptive Method For One- and Two-Family Dwellings* (AISI S230).
5. *Building Code of New York State.*

The elements of design not addressed by the methods in Items 1 through 5 shall be in accordance with the provisions of this code.

Where ASCE 7 or the *Building Code of New York State* is used for the design of the building, the wind speed map and exposure category requirements as specified in ASCE 7 and the *Building Code of New York State* shall be used.

R301.2.1.1.1 Sunrooms. *Sunrooms* shall comply with AAMA/NPEA/NSA 2100. For the purpose of applying the criteria of AAMA/NPEA/NSA 2100 based on the intended use, *sunrooms* shall be identified as one of the following categories by the permit applicant, design professional or the property owner or owner's agent in the construction documents. Component and cladding pressures shall be used for the design of elements that do not qualify as main windforce-resisting systems. Main windforce-resisting system pressures shall be used for the design of elements assigned to provide support and stability for the overall *sunroom*.

Category I: A thermally isolated *sunroom* with walls that are open or enclosed with insect screening or 0.5 mm (20 mil) maximum thickness plastic film. The space is nonhabitable and unconditioned.

Category II: A thermally isolated *sunroom* with enclosed walls. The openings are enclosed with translucent or transparent plastic or glass. The space is nonhabitable and unconditioned.

Category III: A thermally isolated *sunroom* with enclosed walls. The openings are enclosed with translucent or transparent plastic or glass. The sunroom fenestration complies with additional requirements for air infiltration resistance and water penetration resistance. The space is nonhabitable and unconditioned.

Category IV: A thermally isolated *sunroom* with enclosed walls. The sunroom is designed to be heated or cooled by a separate temperature control or system and is thermally isolated from the primary structure. The *sunroom* fenestration complies with additional requirements for water penetration resistance, air infiltration resistance and thermal performance. The space is nonhabitable and conditioned.

Category V: A *sunroom* with enclosed walls. The sunroom is designed to be heated or cooled and is open to the main structure. The *sunroom* fenestration complies with additional requirements for water penetration resistance, air infiltration resistance and thermal performance. The space is habitable and conditioned.

R301.2.1.2 Protection of openings. Exterior glazing in buildings located in windborne debris regions shall be protected from windborne debris. Glazed opening protection for windborne debris shall meet the requirements of the Large Missile Test of ASTM E1996 and ASTM E1886 as modified in Section 301.2.1.2.1. Garage door glazed opening protection for windborne debris shall meet the requirements of an *approved* impact-resisting standard or ANSI/DASMA 115.

Exception: Wood structural panels with a thickness of not less than $^{7}/_{16}$ inch (11 mm) and a span of not more than 8 feet (2438 mm) shall be permitted for opening protection. Panels shall be precut and attached to the framing surrounding the opening containing the product with the glazed opening. Panels shall be predrilled as required for the anchorage method and shall be secured with the attachment hardware provided. Attachments shall be designed to resist the component and cladding loads determined in accordance with either Table R301.2(2) or ASCE 7, with the permanent corrosion-resistant attachment hardware provided and anchors permanently installed on the building. Attachment in accordance with Table R301.2.1.2 is permitted for buildings with a *mean roof height* of 45 feet (13 728 mm) or less where the ultimate design wind speed, V_{ult}, is 180 mph (290 kph) or less.

R301.2.1.2.1 Application of ASTM E1996. The text of Section 2.2 of ASTM E1996 shall be substituted as follows:

2.2 ASCE Standard:

ASCE 7-10 American Society of Civil Engineers *Minimum Design Loads for Buildings and Other Structures*

The text of Section 6.2.2 of ASTM E1996 shall be substituted as follows:

6.2.2 Unless otherwise specified, select the wind zone based on the ultimate design wind speed, V_{ult}, as follows:

6.2.2.1 Wind Zone 1–130 mph ≤ ultimate design wind speed, V_{ult} < 140 mph.

6.2.2.2 Wind Zone 2–140 mph ≤ ultimate design wind speed, V_{ult} < 150 mph at greater than 1 mile (1.6 km) from the coastline. The coastline shall be measured from the mean high-water mark.

6.2.2.3 Wind Zone 3–150 mph (58 m/s) ≤ ultimate design wind speed, V_{ult} ≤ 170 mph (76 m/s), or 140 mph (54 m/s) ≤ ultimate design wind speed, V_{ult} ≤ 170 mph (76 m/s) and within 1 mile (1.6 km) of the coastline. The coastline shall be measured from the mean high-water mark.

6.2.2.4 Wind Zone 4–ultimate design wind speed, V_{ult} > 170 mph (76 m/s).

INTERNATIONAL CODE COUNCIL®
Copyright © 2019 ICC & NYSDOS. ALL RIGHTS RESERVED. Accessed by Lauren Gualdino (lgualdino@briarcliffmanor.org), (-) Order Number #100880972 on May 08, 2020 07:05 AM (PDT) pursuant to License Agreement with ICC & NYSDOS. No further reproduction, no

100880972

TABLE R301.2.1.2
WINDBORNE DEBRIS PROTECTION FASTENING SCHEDULE FOR WOOD STRUCTURAL PANELS[a, b, c, d]

FASTENER TYPE	FASTENER SPACING (inches)[a, b]		
	Panel span ≤ 4 feet	4 feet < panel span ≤ 6 feet	6 feet < panel span ≤ 8 feet
No. 8 wood-screw-based anchor with 2-inch embedment length	16	10	8
No. 10 wood-screw-based anchor with 2-inch embedment length	16	12	9
$^1/_4$-inch lag-screw-based anchor with 2-inch embedment length	16	16	16

For SI: 1 inch = 25.4 mm, 1 foot = 304.8 mm, 1 pound = 4.448 N, 1 mile per hour = 0.447 m/s.

a. This table is based on 180 mph ultimate design wind speeds, V_{ult}, and a 45-foot mean roof height.

b. Fasteners shall be installed at opposing ends of the wood structural panel. Fasteners shall be located not less than 1 inch from the edge of the panel.

c. Anchors shall penetrate through the exterior wall covering with an embedment length of not less than 2 inches into the building frame. Fasteners shall be located not less than $2^1/_2$ inches from the edge of concrete block or concrete.

d. Panels attached to masonry or masonry/stucco shall be attached using vibration-resistant anchors having an ultimate withdrawal capacity of not less than 1,500 pounds.

R301.2.1.3 Wind speed conversion. Where referenced documents are based on nominal design wind speeds and do not provide the means for conversion between ultimate design wind speeds and nominal design wind speeds, the ultimate design wind speeds, V_{ult}, of Figure R301.2(5)A shall be converted to nominal design wind speeds, V_{asd}, using Table R301.2.1.3.

R301.2.1.4 Exposure category. For each wind direction considered, an exposure category that adequately reflects the characteristics of ground surface irregularities shall be determined for the site at which the building or structure is to be constructed. For a site located in the transition zone between categories, the category resulting in the largest wind forces shall apply. Account shall be taken of variations in ground surface roughness that arise from natural topography and vegetation as well as from constructed features. For a site where multiple detached one- and two-family *dwellings*, *townhouses* or other structures are to be constructed as part of a subdivision or master-planned community, or are otherwise designated as a developed area by the authority having jurisdiction, the exposure category for an individual structure shall be based on the site conditions that will exist at the time when all adjacent structures on the site have been constructed, provided that their construction is expected to begin within 1 year of the start of construction for the structure for which the exposure category is determined. For any given wind direction, the exposure in which a specific building or other structure is sited shall be assessed as being one of the following categories:

1. Exposure B. Urban and suburban areas, wooded areas or other terrain with numerous closely spaced obstructions having the size of single-family *dwellings* or larger. Exposure B shall be assumed unless the site meets the definition of another type exposure.
2. Exposure C. Open terrain with scattered obstructions, including surface undulations or other irregularities, having heights generally less than 30 feet (9144 mm) extending more than 1,500 feet (457 m) from the building site in any quadrant. This exposure shall apply to any building located within Exposure B type terrain where the building is directly adjacent to open areas of Exposure C type terrain in any quadrant for a distance of more than 600 feet (183 m). This category includes flat, open country and grasslands.
3. Exposure D. Flat, unobstructed areas exposed to wind flowing over open water, smooth mud flats, salt flats and unbroken ice for a distance of not less than 5,000 feet (1524 m). This exposure shall apply only to those buildings and other structures exposed to the wind coming from over the unobstructed area. Exposure D extends downwind from the edge of the unobstructed area a distance of 600 feet (183 m) or 20 times the height of the building or structure, whichever is greater.

R301.2.1.5 Topographic wind effects. In areas designated in Table R301.2(1) as having local historical data documenting structural damage to buildings caused by wind speed-up at isolated hills, ridges and escarpments that are abrupt changes from the general topography of the area, topographic wind effects shall be considered in the design of the building in accordance with Section R301.2.1.5.1 or in accordance with the provisions of ASCE 7. See Figure R301.2.1.5.1(1) for topographic features for wind speed-up effect.

In these designated areas, topographic wind effects shall apply only to buildings sited on the top half of an isolated hill, ridge or escarpment where all of the following conditions exist:

1. The average slope of the top half of the hill, ridge or escarpment is 10 percent or greater.
2. The hill, ridge or escarpment is 60 feet (18 288 mm) or greater in height for Exposure B, 30 feet (9144 mm) or greater in height for Exposure C, and 15 feet (4572 mm) or greater in height for Exposure D.
3. The hill, ridge or escarpment is isolated or unobstructed by other topographic features of similar height in the upwind direction for a distance measured from its high point of 100 times its height or 2 miles (3.2 km), whichever is less. See Figure R301.2.1.5.1(3) for upwind obstruction.
4. The hill, ridge or escarpment protrudes by a factor of two or more above the height of other upwind topographic features located in any quadrant within a radius of 2 miles (3.2 km) measured from its high point.

INTERNATIONAL CODE COUNCIL®
Copyright © 2019 ICC & NYSDOS. ALL RIGHTS RESERVED. Accessed by Lauren Gualdino (lgualdino@briarcliffmanor.org), (-) Order Number #100880972 on May 08, 2020 07:05 AM (PDT) pursuant to License Agreement with ICC & NYSDOS. No further reproduction, no

TABLE R301.2(1)
CLIMATIC AND GEOGRAPHIC DESIGN CRITERIA

GROUND SNOW LOAD[o]	WIND DESIGN				SEISMIC DESIGN CATEGORY[f]	SUBJECT TO DAMAGE FROM			WINTER DESIGN TEMP[e]	ICE BARRIER UNDERLAYMENT REQUIRED[h]	FLOOD HAZARDS[g]	AIR FREEZING INDEX[i]	MEAN ANNUAL TEMP[j]
	Speed[d] (mph)	Topographic effects[k]	Special wind region[l]	Windborne debris zone[m]		Weathering[a]	Frost line depth[b]	Termite[c]					
—	—	—	—	—	—	—	—	—	—	—	—	—	—

MANUAL J DESIGN CRITERIA[n]							
Elevation	Latitude	Winter heating	Summer cooling	Altitude correction factor	Indoor design temperature	Design temperature cooling	Heating temperature difference
—	—	—	—	—	—	—	—
Cooling temperature difference	Wind velocity heating	Wind velocity cooling	Coincident wet bulb	Daily range	Winter humidity	Summer humidity	—
—	—	—	—	—	—	—	—

For SI: 1 pound per square foot = 0.0479 kPa, 1 mile per hour = 0.447 m/s.

a. Where weathering requires a higher strength concrete or grade of masonry than necessary to satisfy the structural requirements of this code, the frost line depth strength required for weathering shall govern. The weathering column shall be filled in with the weathering index, "negligible," "moderate" or "severe" for concrete as determined from Figure R301.2(4). The grade of masonry units shall be determined from ASTM C34, C55, C62, C73, C90, C129, C145, C216 or C652.

b. Where the frost line depth requires deeper footings than indicated in Figure R403.1(1), the frost line depth strength required for weathering shall govern. The jurisdiction shall fill in the frost line depth column with the minimum depth of footing below finish grade.

c. The jurisdiction shall fill in this part of the table to indicate the need for protection depending on whether there has been a history of local subterranean termite damage.

d. The jurisdiction shall fill in this part of the table with the wind speed from the basic wind speed map [Figure R301.2(5)A]. Wind exposure category shall be determined on a site-specific basis in accordance with Section R301.2.1.4.

e. The outdoor design dry-bulb temperature shall be selected from the columns of $97^{1}/_{2}$-percent values for winter from Appendix D of the *Plumbing Code of New York State*. Deviations from the Appendix D temperatures shall be permitted to reflect local climates or local weather experience as determined by the building official. [Also see Figure R301.2(1).]

f. The jurisdiction shall fill in this part of the table with the seismic design category determined from Section R301.2.2.1.

g. [NY] To establish flood hazard areas, each community regulated under Title 19, Part 1203 of the Official Compilation of Codes, Rules and Regulations of the State of New York (NYCRR) shall adopt a flood hazard map and supporting data. The flood hazard map shall include, at a minimum, special flood hazard areas as identified by the Federal Emergency Management Agency in the Flood Insurance Study for the community, as amended or revised with:

   i. The accompanying Flood Insurance Rate Map (FIRM),

   ii. Flood Boundary and Floodway Map (FBFM), and

   iii. Related supporting data along with any revisions thereto.

   The adopted flood hazard map and supporting data are hereby adopted by reference and declared to be part of this section.

h. In accordance with Sections R905.1.2, R905.4.3.1, R905.5.3.1, R905.6.3.1, R905.7.3.1 and R905.8.3.1, where there has been a history of local damage from the effects of ice damming, the jurisdiction shall fill in this part of the table with "YES." Otherwise, the jurisdiction shall fill in this part of the table with "NO."

i. The jurisdiction shall fill in this part of the table with the 100-year return period air freezing index (BF-days) from Figure R403.3(2) or from the 100-year (99 percent) value on the National Climatic Data Center data table "Air Freezing Index-USA Method (Base 32°F)."

j. The jurisdiction shall fill in this part of the table with the mean annual temperature from the National Climatic Data Center data table "Air Freezing Index-USA Method (Base 32°F)."

k. In accordance with Section R301.2.1.5, where there is local historical data documenting structural damage to buildings due to topographic wind speed-up effects, the jurisdiction shall fill in this part of the table with "YES." Otherwise, the jurisdiction shall indicate "NO" in this part of the table.

l. In accordance with Figure R301.2(5)A, where there is local historical data documenting unusual wind conditions, the jurisdiction shall fill in this part of the table with "YES" and identify any specific requirements. Otherwise, the jurisdiction shall indicate "NO" in this part of the table.

m. In accordance with Section R301.2.1.2 the jurisdiction shall indicate the wind-borne debris wind zone(s). Otherwise, the jurisdiction shall indicate "NO" in this part of the table.

n. The jurisdiction shall fill in these sections of the table to establish the design criteria using Table 1a or 1b from ACCA Manual J or established criteria determined by the jurisdiction.

o. [NY] The ground snow loads to be used in determining the design snow loads for roofs are given in Figure R301.2(6) for sites at elevations up to 1,000 feet. Sites at elevations above 1,000 feet shall have their ground snow load increased from the mapped value by 2 psf for every 1,000 feet above 1,000 feet.

Copyright © 2019 ICC & NYSDOS. ALL RIGHTS RESERVED. Accessed by Lauren Gualdino (lgualdino@briarcliffmanor.org). (-) Order Number #100880972 on May 08, 2020 07:05 AM (PDT) pursuant to License Agreement with ICC & NYSDOS. No further reproduction, no

100880972

100880972

TABLE R301.2(2)
COMPONENT AND CLADDING LOADS FOR A BUILDING WITH A MEAN ROOF HEIGHT OF 30 FEET LOCATED IN EXPOSURE B (ASD) (psf)[a, b, c, d, e]

	ZONE	EFFECTIVE WIND AREA (feet^2)	ULTIMATE DESIGN WIND SPEED, V_{ULT} (mph)																	
			110		115		120		130		140		150		160		170		180	
Roof 0 to 7 degrees	1	10	10.0	-13.0	10.0	-14.0	10.0	-15.0	10.0	-18.0	10.0	-21.0	9.9	-24.0	11.2	-27.0	12.6	-31.0	14.2	-35.0
	1	20	10.0	-12.0	10.0	-13.0	10.0	-15.0	10.0	-17.0	10.0	-20.0	9.2	-23.0	10.6	-26.0	11.9	-30.0	13.3	-34.1
	1	50	10.0	-12.0	10.0	-13.0	10.0	-14.0	10.0	-17.0	10.0	-19.0	8.5	-22.0	10.0	-26.0	10.8	-29.0	12.2	-32.9
	1	100	10.0	-11.0	10.0	-13.0	10.0	-14.0	10.0	-16.0	10.0	-19.0	7.8	-22.0	10.0	-25.0	10.0	-28.0	11.3	-32.0
	2	10	10.0	-21.0	10.0	-23.0	10.0	-26.0	10.0	-30.0	10.0	-35.0	9.9	-40.0	11.2	-46.0	12.6	-52.0	14.2	-58.7
	2	20	10.0	-19.0	10.0	-21.0	10.0	-23.0	10.0	-27.0	10.0	-31.0	9.2	-36.0	10.6	-41.0	11.9	-46.0	13.3	-52.4
	2	50	10.0	-16.0	10.0	-18.0	10.0	-19.0	10.0	-23.0	10.0	-26.0	8.5	-30.0	10.0	-34.0	10.8	-39.0	12.2	-44.1
	2	100	10.0	-14.0	10.0	-15.0	10.0	-16.0	10.0	-19.0	10.0	-22.0	7.8	-26.0	10.0	-30.0	10.0	-33.0	11.3	-37.9
	3	10	10.0	-33.0	10.0	-36.0	10.0	-39.0	10.0	-46.0	10.0	-53.0	9.9	-61.0	11.2	-69.0	12.6	-78.0	14.2	-88.3
	3	20	10.0	-27.0	10.0	-29.0	10.0	-32.0	10.0	-38.0	10.0	-44.0	9.2	-50.0	10.6	-57.0	11.9	-65.0	13.3	-73.1
	3	50	10.0	-19.0	10.0	-21.0	10.0	-23.0	10.0	-27.0	10.0	-32.0	8.5	-36.0	10.0	-41.0	10.8	-47.0	12.2	-53.1
	3	100	10.0	-14.0	10.0	-15.0	10.0	-16.0	10.0	-19.0	10.0	-22.0	7.8	-26.0	10.0	-30.0	10.0	-33.0	11.3	-37.9
Roof > 7 to 27 degrees	1	10	10.0	-11.0	10.0	-13.0	10.0	-14.0	10.5	-16.0	12.2	-19.0	14.0	-22.0	15.9	-25.0	17.9	-28.0	20.2	-32.0
	1	20	10.0	-11.0	10.0	-12.0	10.0	-13.0	10.0	-16.0	11.1	-18.0	12.8	-21.0	14.5	-24.0	16.4	-27.0	18.4	-31.1
	1	50	10.0	-11.0	10.0	-12.0	10.0	-13.0	10.0	-15.0	10.0	-18.0	11.1	-20.0	12.7	-23.0	14.3	-26.0	16.0	-29.9
	1	100	10.0	-10.0	10.0	-11.0	10.0	-12.0	10.0	-15.0	10.0	-17.0	9.9	-20.0	11.2	-22.0	12.6	-25.0	14.2	-29.0
	2	10	10.0	-20.0	10.0	-22.0	10.0	-24.0	10.5	-29.0	12.2	-33.0	14.0	-38.0	15.9	-44.0	17.9	-49.0	20.2	-55.8
	2	20	10.0	-19.0	10.0	-20.0	10.0	-22.0	10.0	-26.0	11.1	-31.0	12.8	-35.0	14.5	-40.0	16.4	-45.0	18.4	-51.2
	2	50	10.0	-16.0	10.0	-18.0	10.0	-20.0	10.0	-23.0	10.0	-27.0	11.1	-31.0	12.7	-35.0	14.3	-40.0	16.0	-45.4
	2	100	10.0	-15.0	10.0	-16.0	10.0	-18.0	10.0	-21.0	10.0	-24.0	9.9	-28.0	11.2	-32.0	12.6	-36.0	14.2	-40.9
	3	10	10.0	-30.0	10.0	-33.0	10.0	-36.0	10.5	-43.0	12.2	-49.0	14.0	-57.0	15.9	-65.0	17.9	-73.0	20.2	-82.4
	3	20	10.0	-28.0	10.0	-31.0	10.0	-34.0	10.0	-40.0	11.1	-46.0	12.8	-53.0	14.5	-60.0	16.4	-68.0	18.4	-77.0
	3	50	10.0	-26.0	10.0	-28.0	10.0	-31.0	10.0	-36.0	10.0	-42.0	11.1	-48.0	12.7	-55.0	14.3	-62.0	16.0	-69.9
	3	100	10.0	-24.0	10.0	-26.0	10.0	-28.0	10.0	-33.0	10.0	-39.0	9.9	-44.0	11.2	-51.0	12.6	-57.0	14.2	-64.6
Roof > 27 to 45 degrees	1	10	11.9	-13.0	13.1	-14.0	14.2	-15.0	16.7	-18.0	19.4	-21.0	22.2	-24.0	25.3	-27.0	28.5	-31.0	32.0	-35.0
	1	20	11.6	-12.0	12.7	-13.0	13.8	-14.0	16.2	-17.0	18.8	-20.0	21.6	-23.0	24.6	-26.0	27.7	-29.0	31.1	-33.2
	1	50	11.2	-11.0	12.2	-12.0	13.3	-13.0	15.6	-16.0	18.1	-18.0	20.8	-21.0	23.6	-24.0	26.7	-27.0	29.9	-30.8
	1	100	10.9	-10.0	11.9	-11.0	12.9	-12.0	15.1	-15.0	17.6	-17.0	20.2	-20.0	22.9	-22.0	25.9	-25.0	29.0	-29.0
	2	10	11.9	-15.0	13.1	-16.0	14.2	-18.0	16.7	-21.0	19.4	-24.0	22.2	-28.0	25.3	-32.0	28.5	-36.0	32.0	-40.9
	2	20	11.6	-14.0	12.7	-16.0	13.8	-17.0	16.2	-20.0	18.8	-23.0	21.6	-27.0	24.6	-30.0	27.7	-34.0	31.1	-39.1
	2	50	11.2	-13.0	12.2	-15.0	13.3	-16.0	15.6	-19.0	18.1	-22.0	20.8	-25.0	23.6	-29.0	26.7	-32.0	29.9	-36.8
	2	100	10.9	-13.0	11.9	-14.0	12.9	-15.0	15.1	-18.0	17.6	-21.0	20.2	-24.0	22.9	-27.0	25.9	-31.0	29.0	-35.0
	3	10	11.9	-15.0	13.1	-16.0	14.2	-18.0	16.7	-21.0	19.4	-24.0	22.2	-28.0	25.3	-32.0	28.5	-36.0	32.0	-40.9
	3	20	11.6	-14.0	12.7	-16.0	13.8	-17.0	16.2	-20.0	18.8	-23.0	21.6	-27.0	24.6	-30.0	27.7	-34.0	31.1	-39.1
	3	50	11.2	-13.0	12.2	-15.0	13.3	-16.0	15.6	-19.0	18.1	-22.0	20.8	-25.0	23.6	-29.0	26.7	-32.0	29.9	-36.8
	3	100	10.9	-13.0	11.9	-14.0	12.9	-15.0	15.1	-18.0	17.6	-21.0	20.2	-24.0	22.9	-27.0	25.9	-31.0	29.0	-35.0
Wall	4	10	13.1	-14.0	14.3	-15.0	15.5	-16.0	18.2	-19.0	21.2	-22.0	24.3	-26.0	27.7	-30.0	31.2	-33.0	35.0	-37.9
	4	20	12.5	-13.0	13.6	-14.0	14.8	-16.0	17.4	-19.0	20.2	-22.0	23.2	-25.0	26.4	-28.0	29.7	-32.0	33.4	-36.4
	4	50	11.7	-12.0	12.8	-14.0	13.9	-15.0	16.3	-17.0	19.0	-20.0	21.7	-23.0	24.7	-27.0	27.9	-30.0	31.3	-34.3
	4	100	11.1	-12.0	12.1	-13.0	13.2	-14.0	15.5	-17.0	18.0	-19.0	20.6	-22.0	23.5	-25.0	26.5	-29.0	29.8	32.7
	4	500	10.0	-10.0	10.6	-11.0	11.6	-12.0	13.6	-15.0	15.8	-17.0	18.1	-20.0	20.6	-22.0	23.2	-25.0	26.1	-29.0
	5	10	13.1	-17.0	14.3	-19.0	15.5	-20.0	18.2	-24.0	21.2	-28.0	24.3	-32.0	27.7	-37.0	31.2	-41.0	35.0	-46.8
	5	20	12.5	-16.0	13.6	-17.0	14.8	-19.0	17.4	-22.0	20.2	-26.0	23.2	-30.0	26.4	-34.0	29.7	-39.0	33.4	-43.7
	5	50	11.7	-14.0	12.8	-16.0	13.9	-17.0	16.3	-20.0	19.0	-23.0	21.7	-27.0	24.7	-31.0	27.9	-35.0	31.3	-39.5
	5	100	11.1	-13.0	12.1	-14.0	13.2	-16.0	15.5	-19.0	18.0	-22.0	20.6	-25.0	23.5	-28.0	26.5	-32.0	29.8	-36.4
	5	500	10.0	-10.0	10.6	-11.0	11.6	-12.0	13.6	-15.0	15.8	-17.0	18.1	-20.0	20.6	-22.0	23.2	-25.0	26.1	-29.0

For SI: 1 foot = 304.8 mm, 1 square foot = 0.0929 m^2, 1 mile per hour = 0.447 m/s, 1 pound per square foot = 0.0479 kPa.

a. The effective wind area shall be equal to the span length multiplied by an effective width. This width shall be permitted to be not less than one-third the span length. For cladding fasteners, the effective wind area shall not be greater than the area that is tributary to an individual fastener.

b. For effective areas between those given, the load shall be interpolated or the load associated with the lower effective area shall be used.

c. Table values shall be adjusted for height and exposure by multiplying by the adjustment coefficient in Table R301.2(3).

d. See Figure R301.2(8) for location of zones.

e. Plus and minus signs signify pressures acting toward and away from the building surfaces.

INTERNATIONAL CODE COUNCIL®
Copyright © 2019 ICC & NYSDOS. ALL RIGHTS RESERVED. Accessed by Lauren Gualdino (lgualdino@briarcliffmanor.org), (-) Order Number #100880972 on May 08, 2020 07:05 AM (PDT) pursuant to License Agreement with ICC & NYSDOS. No further reproduction, no

100880972

TABLE R301.2(3)
HEIGHT AND EXPOSURE ADJUSTMENT COEFFICIENTS FOR TABLE R301.2(2)

MEAN ROOF HEIGHT	EXPOSURE		
	B	C	D
15	1.00	1.21	1.47
20	1.00	1.29	1.55
25	1.00	1.35	1.61
30	1.00	1.40	1.66
35	1.05	1.45	1.70
40	1.09	1.49	1.74
45	1.12	1.53	1.78
50	1.16	1.56	1.81
55	1.19	1.59	1.84
60	1.22	1.62	1.87

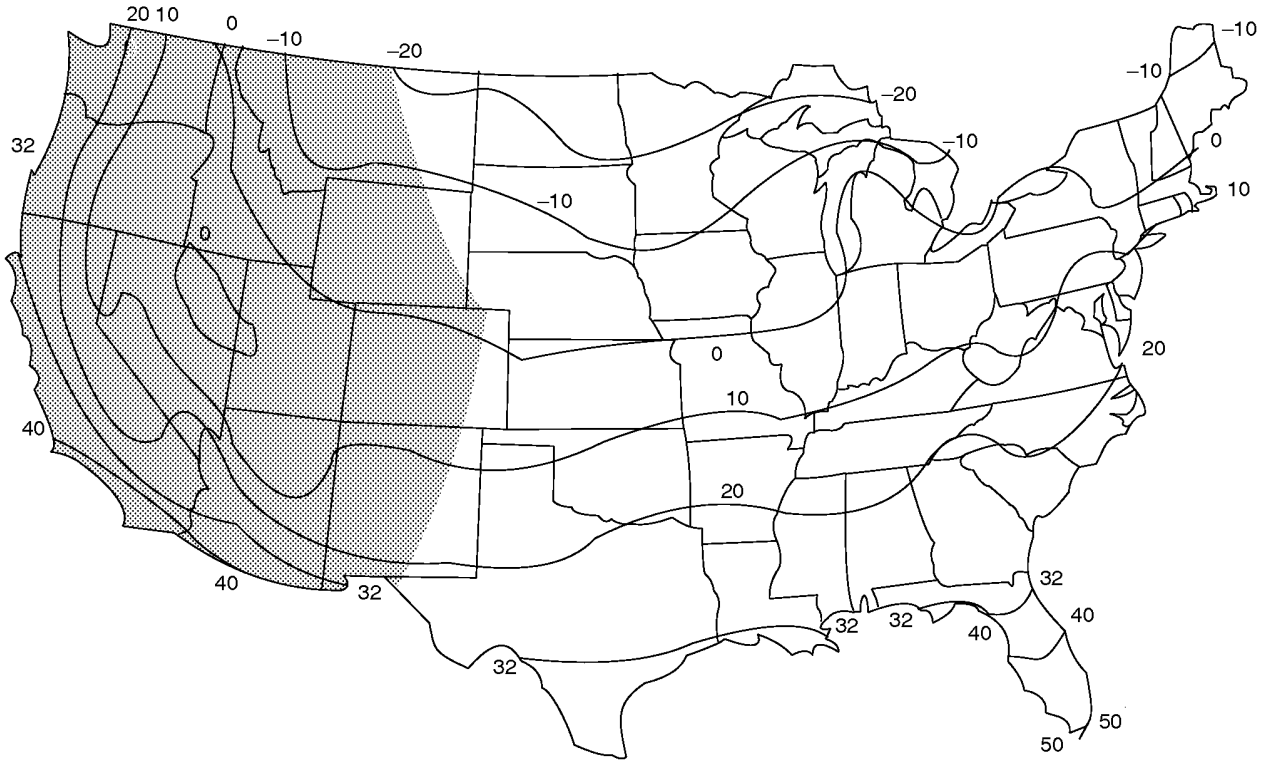

For SI: °C = [(°F)-32]/1.8.

FIGURE R301.2(1)
ISOLINES OF THE 97$^{1}/_{2}$-PERCENT WINTER (DECEMBER, JANUARY AND FEBRUARY) DESIGN TEMPERATURES (°F)

INTERNATIONAL CODE COUNCIL®
Copyright © 2019 ICC & NYSDOS. ALL RIGHTS RESERVED. Accessed by Lauren Gualdino (lgualdino@briarcliffmanor.org), (-) Order Number #100880972 on May 08, 2020 07:05 AM (PDT) pursuant to License Agreement with ICC & NYSDOS. No further reproduction, no

100880972

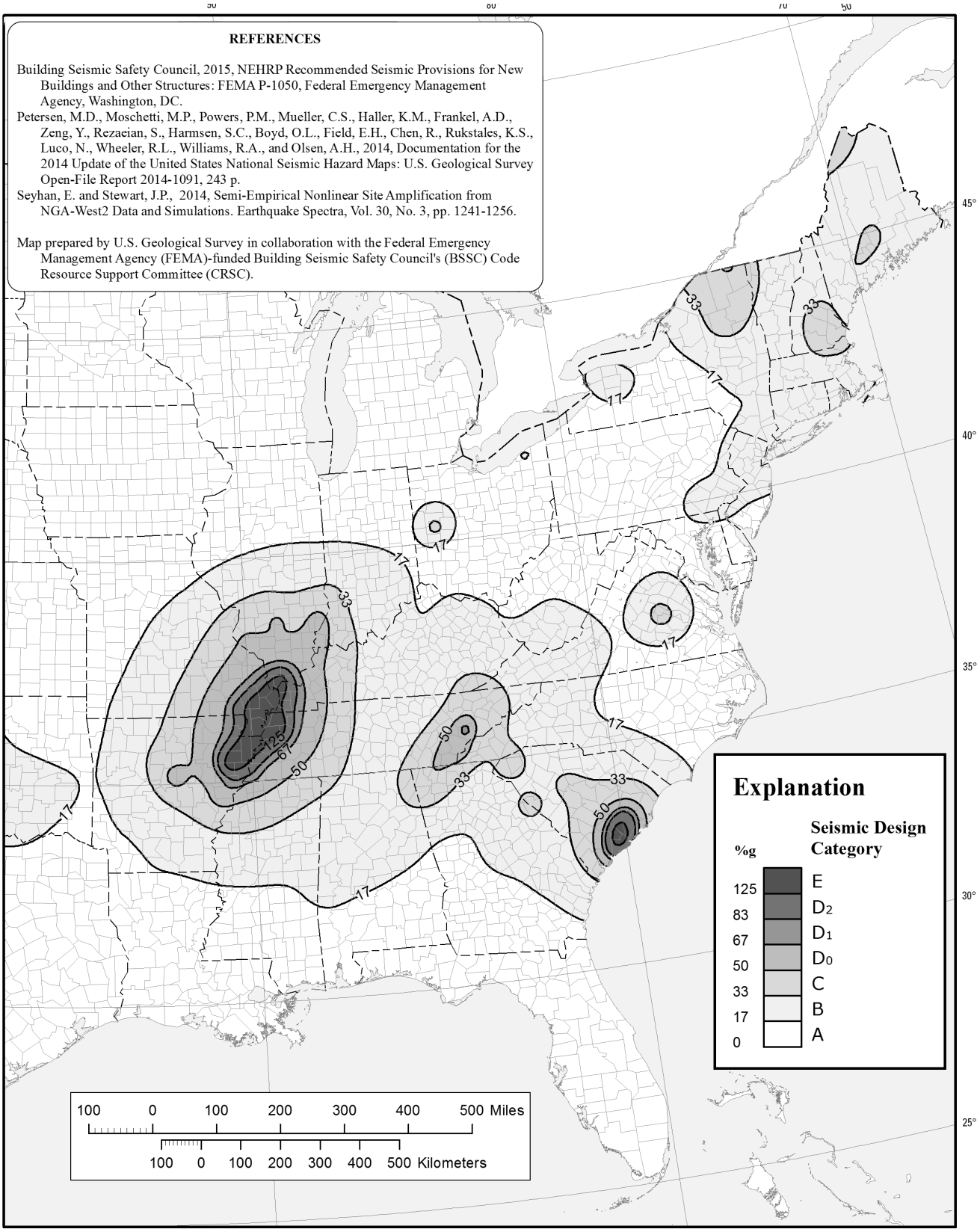

FIGURE R301.2(2)
SEISMIC DESIGN CATEGORIES

INTERNATIONAL CODE COUNCIL®
Copyright © 2019 ICC & NYSDOS. ALL RIGHTS RESERVED. Accessed by Lauren Gualdino (lgualdino@briarcliffmanor.org), (-) Order Number #100880972 on May 08, 2020 07:05 AM (PDT) pursuant to License Agreement with ICC & NYSDOS. No further reproduction, no

100880972

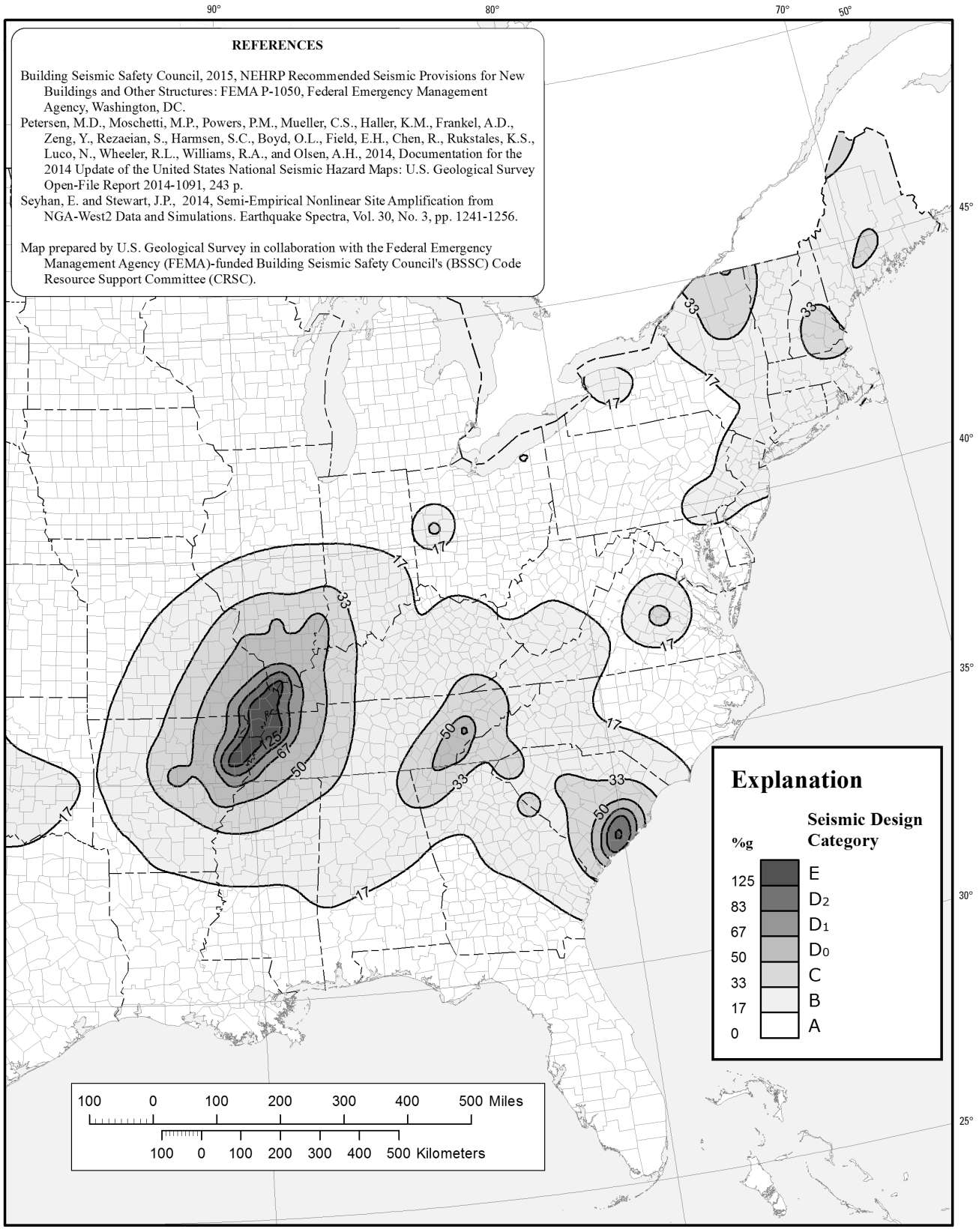

FIGURE R301.2(3)
ALTERNATE SEISMIC DESIGN CATEGORIES

INTERNATIONAL CODE COUNCIL®
Copyright © 2019 ICC & NYSDOS. ALL RIGHTS RESERVED. Accessed by Lauren Gualdino (lgualdino@briarcliffmanor.org), (-) Order Number #100880972 on May 08, 2020 07:05 AM (PDT) pursuant to License Agreement with ICC & NYSDOS. No further reproduction, no

100880972

FIGURE R301.2(4)
WEATHERING PROBABILITY MAP FOR CONCRETE[a, b]

a. Alaska and Hawaii are classified as severe and negligible, respectively.
b. Lines defining areas are approximate only. Local conditions may be more or less severe than indicated by region classification. A severe classification is where weather conditions result in significant snowfall combined with extended periods during which there is little or no natural thawing causing deicing salts to be used extensively.

INTERNATIONAL CODE COUNCIL®
Copyright © 2019 ICC & NYSDOS. ALL RIGHTS RESERVED. Accessed by Lauren Gualdino (lgualdino@briarcliffmanor.org), (-) Order Number #100880972 on May 08, 2020 07:05 AM (PDT) pursuant to License Agreement with ICC & NYSDOS. No further reproduction, no

100880972

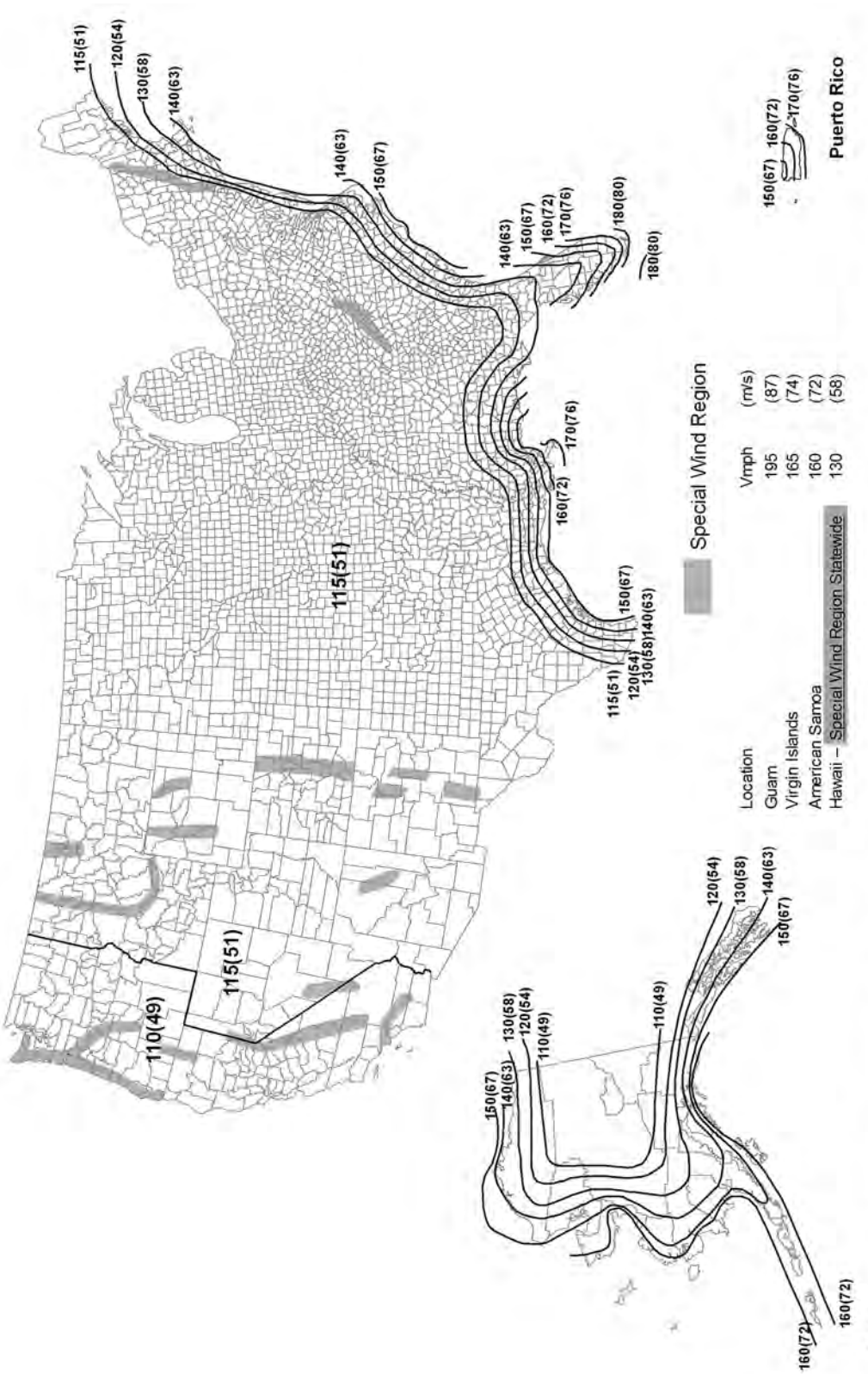

FIGURE R301.2(5)A
ULTIMATE DESIGN WIND SPEEDS

Notes:

1. Values are nominal design 3-second gust wind speeds in miles per hour (m/s) at 33 ft (10m) above ground for Exposure C category.
2. Linear interpolation between contours is permitted.
3. Islands and coastal areas outside the last contour shall use the last wind speed contour of the coastal area.
4. Mountainous terrain, gorges, ocean promontories, and special wind regions shall be examined for unusual wind conditions.
5. Wind speeds correspond to approximately a 7% probability of exceedance in 50 years (Annual Exceedance Probability = 0.00143, MRI = 700 Years).

INTERNATIONAL CODE COUNCIL®
Copyright © 2019 ICC & NYSDOS. ALL RIGHTS RESERVED. Accessed by Lauren Gualdino (lgualdino@briarcliffmanor.org), (-) Order Number #100880972 on May 08, 2020 07:05 AM (PDT) pursuant to License Agreement with ICC & NYSDOS. No further reproduction, no

100880972

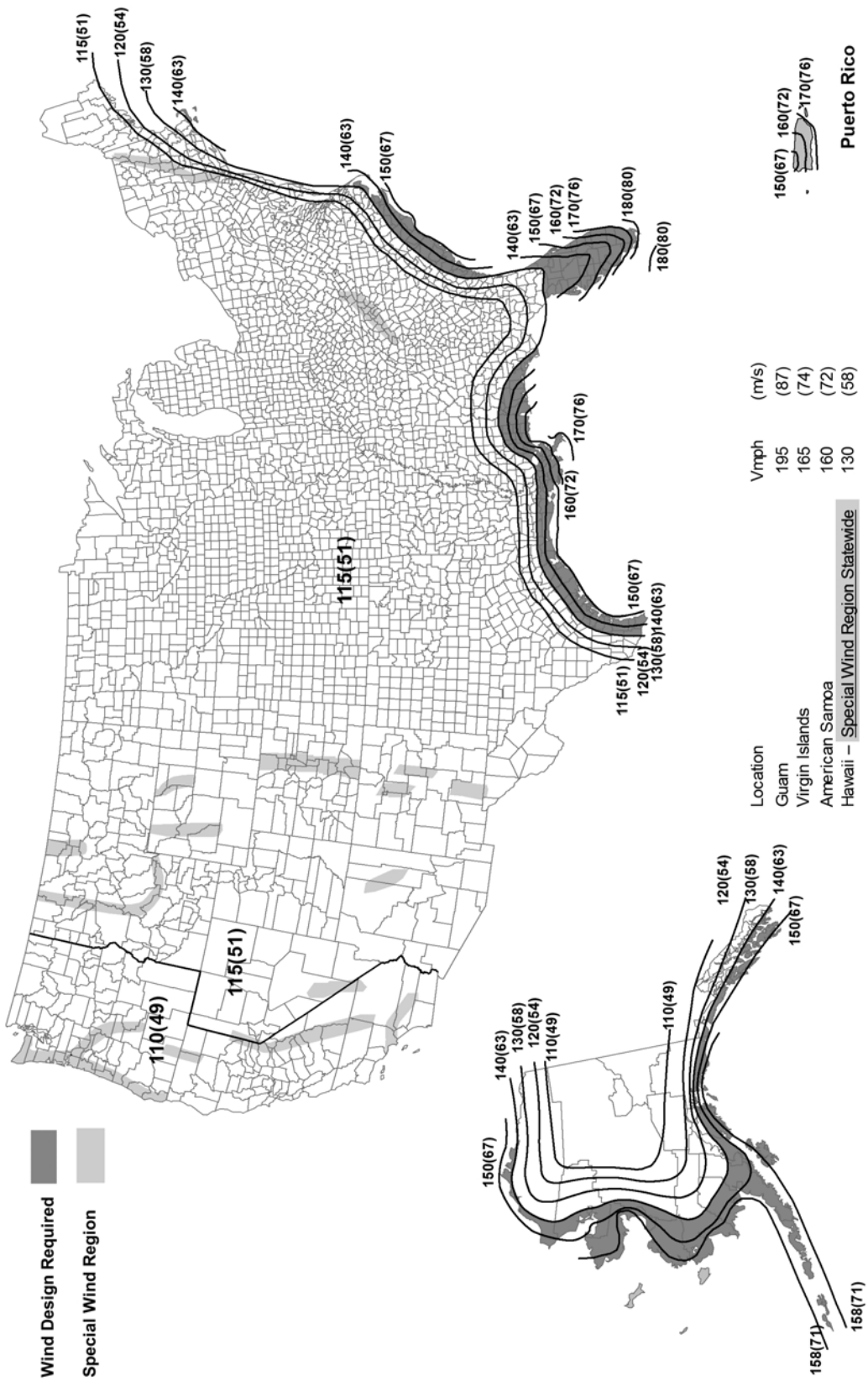

FIGURE R301.2(5)B
REGIONS WHERE WIND DESIGN IS REQUIRED

Notes:

1. Values are nominal design 3-second gust wind speeds in miles per hour (m/s) at 33 ft (10m) above ground for Exposure C category.
2. Linear interpolation between contours is permitted.
3. Islands and coastal areas outside the last contour shall use the last wind speed contour of the coastal area.
4. Mountainous terrain, gorges, ocean promontories, and special wind regions shall be examined for unusual wind conditions.
5. Wind speeds correspond to approximately a 7% probability of exceedance in 50 years (Annual Exceedance Probability = 0.00143, MRI = 700 Years).

INTERNATIONAL CODE COUNCIL®
Copyright © 2019 ICC & NYSDOS. ALL RIGHTS RESERVED. Accessed by Lauren Gualdino (lgualdino@briarcliffmanor.org), (-) Order Number #100880972 on May 08, 2020 07:05 AM (PDT) pursuant to License Agreement with ICC & NYSDOS. No further reproduction, no

100880972

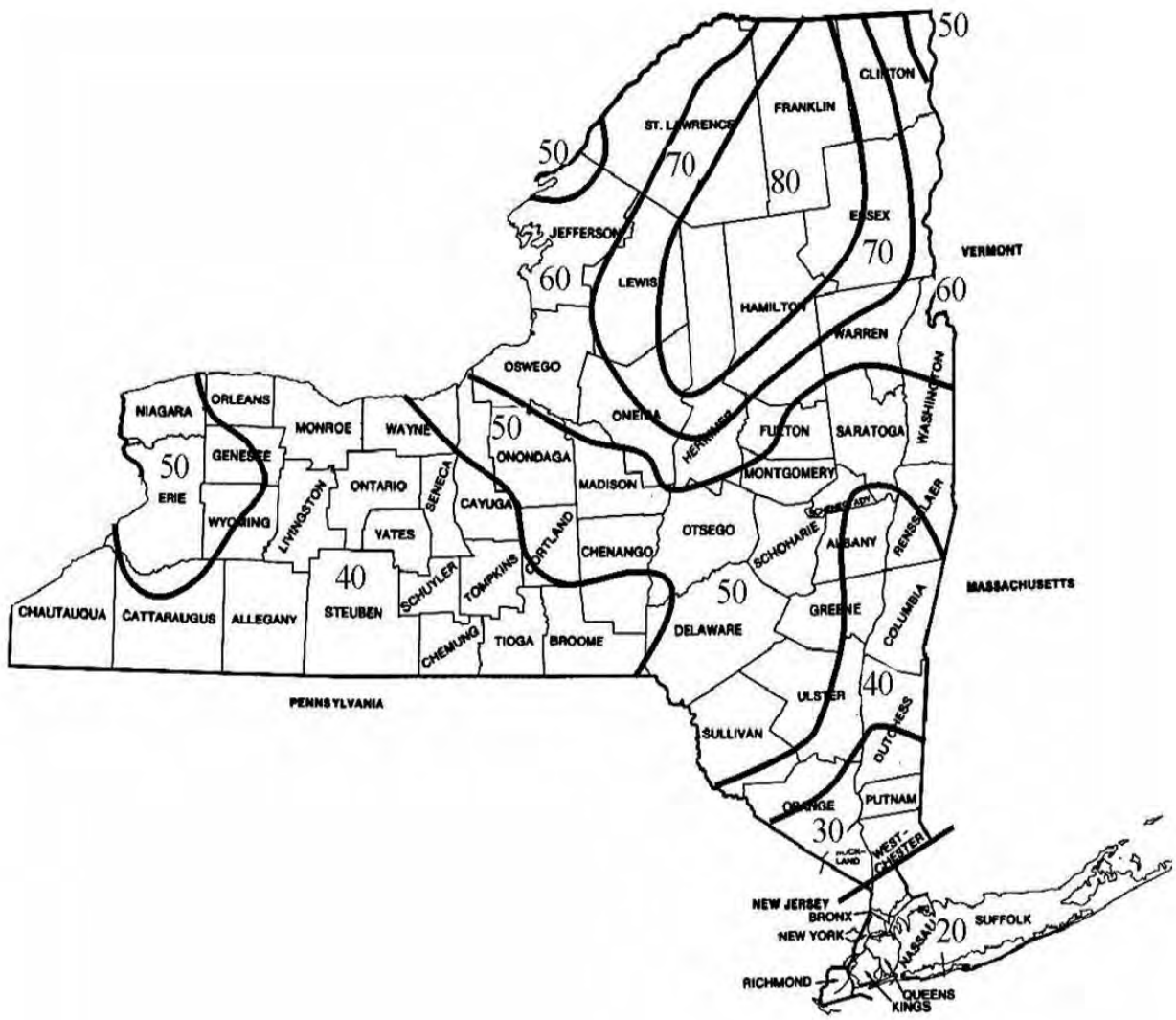

[NY] FIGURE R301.2(6)
GROUND SNOW LOADS, P_g, FOR NEW YORK STATE (lb/ft^2)

INTERNATIONAL CODE COUNCIL®
Copyright © 2019 ICC & NYSDOS. ALL RIGHTS RESERVED. Accessed by Lauren Gualdino (lgualdino@briarcliffmanor.org), (-) Order Number #100880972 on May 08, 2020 07:05 AM (PDT) pursuant to License Agreement with ICC & NYSDOS. No further reproduction, no

100880972

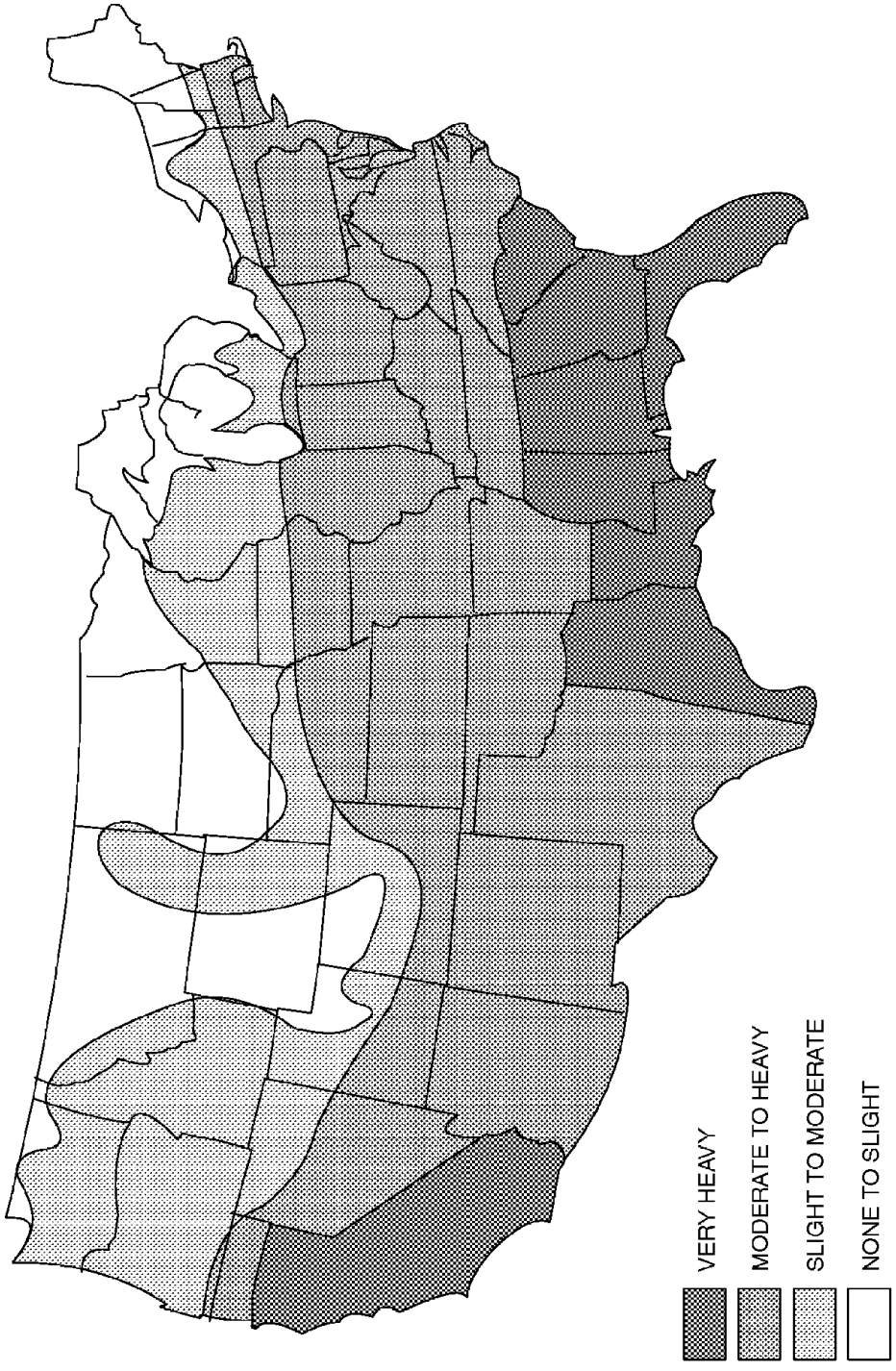

Note: Lines defining areas are approximate only. Local conditions may be more or less severe than indicated by the region classification.

FIGURE R301.2(7)
TERMITE INFESTATION PROBABILITY MAP

INTERNATIONAL CODE COUNCIL®
Copyright © 2019 ICC & NYSDOS. ALL RIGHTS RESERVED. Accessed by Lauren Gualdino (lgualdino@briarcliffmanor.org), (-) Order Number #100880972 on May 08, 2020 07:05 AM (PDT) pursuant to License Agreement with ICC & NYSDOS. No further reproduction, no

100880972

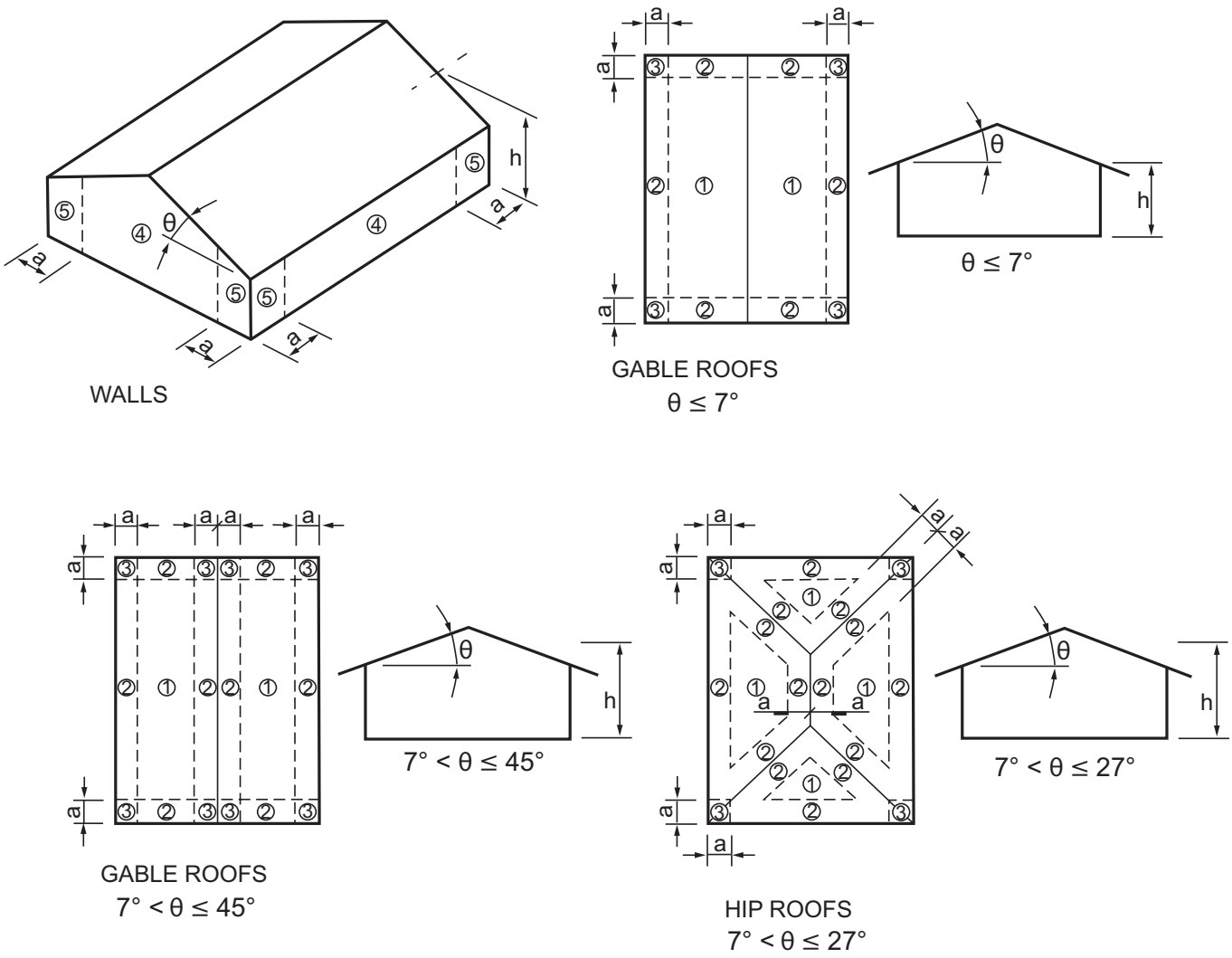

For SI: 1 foot = 304.8 mm, 1 degree = 0.0175 rad.
Note: a = 4 feet in all cases.

FIGURE R301.2(8)
COMPONENT AND CLADDING PRESSURE ZONES

TABLE R301.2.1.3
WIND SPEED CONVERSIONS[a]

V_{ult}	110	115	120	130	140	150	160	170	180	190	200
V_{asd}	85	89	93	101	108	116	124	132	139	147	155

For SI: 1 mile per hour = 0.447 m/s.
a. Linear interpolation is permitted.

INTERNATIONAL CODE COUNCIL®
Copyright © 2019 ICC & NYSDOS. ALL RIGHTS RESERVED. Accessed by Lauren Gualdino (lgualdino@briarcliffmanor.org), (-) Order Number #100880972 on May 08, 2020 07:05 AM (PDT) pursuant to License Agreement with ICC & NYSDOS. No further reproduction, no

100880972

R301.2.1.5.1 Simplified topographic wind speed-up method. As an alternative to the ASCE 7 topographic wind provisions, the provisions of Section R301.2.1.5.1 shall be permitted to be used to design for wind speed-up effects, where required by Section R301.2.1.5.

Structures located on the top half of isolated hills, ridges or escarpments meeting the conditions of Section R301.2.1.5 shall be designed for an increased basic wind speed as determined by Table R301.2.1.5.1. On the high side of an escarpment, the increased basic wind speed shall extend horizontally downwind from the edge of the escarpment 1.5 times the horizontal length of the upwind slope (1.5L) or 6 times the height of the escarpment (6H), whichever is greater. See Figure R301.2.1.5.1(2) for where wind speed increase is applied.

R301.2.2 Seismic provisions. Buildings in Seismic Design Categories C, D_0, D_1, and D_2 shall be constructed in accordance with the requirements of this section and other seismic requirements of this code. The seismic provisions of this code shall apply as follows:

1. *Townhouses* in Seismic Design Categories C, D_0, D_1 and D_2.
2. Detached one- and two-family *dwellings* in Seismic Design Categories, D_0, D_1 and D_2.

Buildings in Seismic Design Category E shall be designed to resist seismic loads in accordance with the *Building Code of New York State*, except where the seismic design category is reclassified to a lower seismic design category in accordance with Section R301.2.2.1. Components of buildings not required to be designed to resist seismic loads shall be constructed in accordance with the provisions of this code.

TABLE R301.2.1.5.1
ULTIMATE DESIGN WIND SPEED MODIFICATION FOR TOPOGRAPHIC WIND EFFECT[a, b]

ULTIMATE DESIGN WIND SPEED FROM FIGURE R301.2(5)A (mph)	AVERAGE SLOPE OF THE TOP HALF OF HILL, RIDGE OR ESCARPMENT (percent)						
	0.10	0.125	0.15	0.175	0.20	0.23	0.25
	Required ultimate design wind speed-up, modified for topographic wind speed-up (mph)						
110	132	137	142	147	152	158	162
115	138	143	148	154	159	165	169
120	144	149	155	160	166	172	176
130	156	162	168	174	179	NA	NA
140	168	174	181	NA	NA	NA	NA
150	180	NA	NA	NA	NA	NA	NA

For SI: 1 mile per hour = 0.447 m/s, 1 foot = 304.8 mm.

NA = Not Applicable.

a. Table applies to a feature height of 500 feet or less and dwellings sited a distance equal or greater than half the feature height.

b. Where the ultimate design wind speed as modified by Table R301.2.1.5.1 equals or exceeds 140 miles per hour, the building shall be considered as "wind design required" in accordance with Section R301.2.1.1.

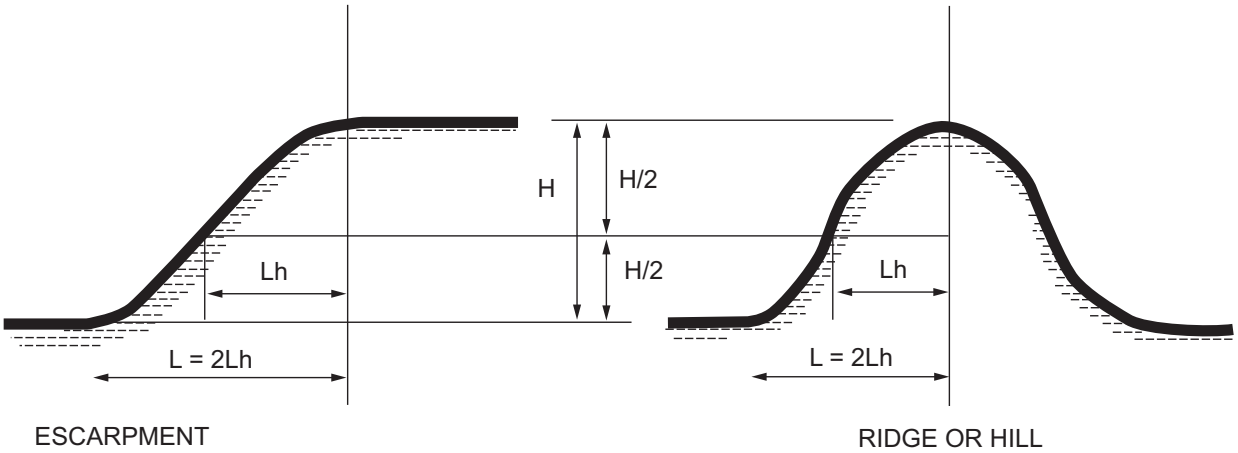

Note: H/2 determines the measurement point for Lh. L is twice Lh.

FIGURE R301.2.1.5.1(1)
TOPOGRAPHIC FEATURES FOR WIND SPEED-UP EFFECT

INTERNATIONAL CODE COUNCIL®
Copyright © 2019 ICC & NYSDOS. ALL RIGHTS RESERVED. Accessed by Lauren Gualdino (lgualdino@briarcliffmanor.org), (-) Order Number #100880972 on May 08, 2020 07:05 AM (PDT) pursuant to License Agreement with ICC & NYSDOS. No further reproduction, no

100880972

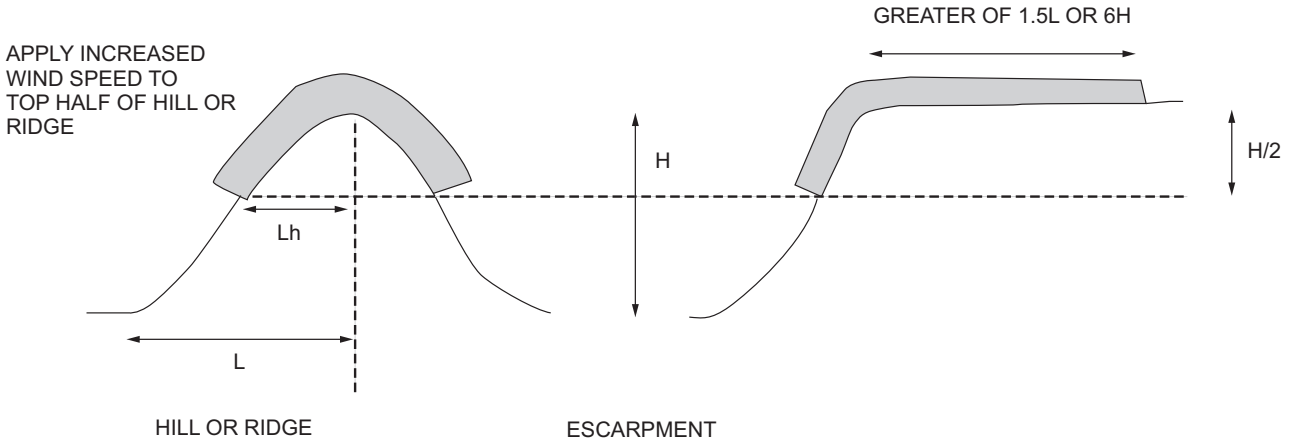

FIGURE R301.2.1.5.1(2)
ILLUSTRATION OF WHERE ON A TOPOGRAPHIC FEATURE, WIND SPEED INCREASE IS APPLIED

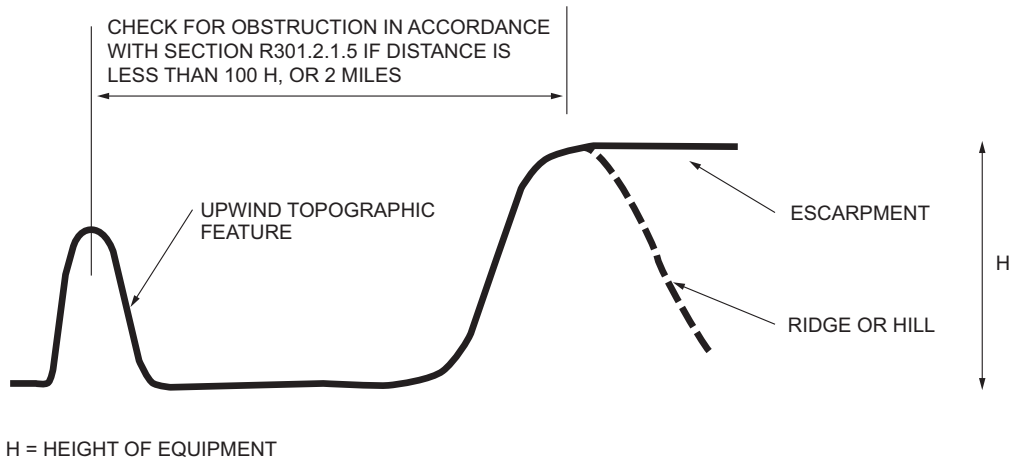

FIGURE R301.2.1.5.1(3)
UPWIND OBSTRUCTION

INTERNATIONAL CODE COUNCIL®
Copyright © 2019 ICC & NYSDOS. ALL RIGHTS RESERVED. Accessed by Lauren Gualdino (lgualdino@briarcliffmanor.org), (-) Order Number #100880972 on May 08, 2020 07:05 AM (PDT) pursuant to License Agreement with ICC & NYSDOS. No further reproduction, no

100880972

R301.2.2.1 Determination of seismic design category. Buildings shall be assigned a seismic design category in accordance with Figure R301.2(2).

R301.2.2.1.1 Alternate determination of seismic design category. The seismic design categories and corresponding short-period design spectral response accelerations, S_{DS}, shown in Figure R301.2(2), are based on soil Site Class D, used as an assumed default, as defined in Section 1613.2.2 of the *Building Code of New York State*. If soil conditions are determined by the building official to be Site Class A, B, or D, the seismic design category and short-period design spectral response accelerations, S_{DS}, for a site shall be allowed to be determined in accordance with Figure R301.2(3), or Section 1613.2 of the *Building Code of New York State*. The value of S_{DS} determined in accordance with Section 1613.2 of the *Building Code of New York State* is permitted to be used to set the seismic design category in accordance with Table R301.2.2.1.1, and to interpolate between values in Tables R602.10.3(3), R603.9.2(1) and other seismic design requirements of this code.

TABLE R301.2.2.1.1
SEISMIC DESIGN CATEGORY DETERMINATION

CALCULATED S_{DS}	SEISMIC DESIGN CATEGORY
$S_{DS} \le 0.17g$	A
$0.17g < S_{DS} \le 0.33g$	B
$0.33g < S_{DS} \le 0.50g$	C
$0.50g < S_{DS} \le 0.67g$	D_0
$0.67g < S_{DS} \le 0.83g$	D_1
$0.83g < S_{DS} \le 1.25g$	D_2
$1.25g < S_{DS}$	E

R301.2.2.1.2 Alternative determination of Seismic Design Category E. Buildings located in Seismic Design Category E in accordance with Figure R301.2(2), or Figure R301.2(3) where applicable, are permitted to be reclassified as being in Seismic Design Category D_2 provided that one of the following is done:

1. A more detailed evaluation of the seismic design category is made in accordance with the provisions and maps of the *Building Code of New York State*. Buildings located in Seismic Design Category E in accordance with Table R301.2.2.1.1, but located in Seismic Design Category D in accordance with the *Building Code of New York State*, shall be permitted to be designed using the Seismic Design Category D_2 requirements of this code.
2. Buildings located in Seismic Design Category E that conform to the following additional restrictions are permitted to be constructed in accordance with the provisions for Seismic Design Category D_2 of this code:
   2.1. All exterior shear wall lines or *braced wall panels* are in one plane vertically from the foundation to the uppermost *story*.
   2.2. Floors shall not cantilever past the *exterior walls*.
   2.3. The building is within the requirements of Section R301.2.2.2.6 for being considered as regular.

R301.2.2.2 Weights of materials. Average dead loads shall not exceed 15 pounds per square foot (720 Pa) for the combined roof and ceiling assemblies (on a horizontal projection) or 10 pounds per square foot (480 Pa) for floor assemblies, except as further limited by Section R301.2.2. Dead loads for walls above *grade* shall not exceed:

1. Fifteen pounds per square foot (720 Pa) for exterior light-frame wood walls.
2. Fourteen pounds per square foot (670 Pa) for exterior light-frame cold-formed steel walls.
3. Ten pounds per square foot (480 Pa) for interior light-frame wood walls.
4. Five pounds per square foot (240 Pa) for interior light-frame cold-formed steel walls.
5. Eighty pounds per square foot (3830 Pa) for 8-inch-thick (203 mm) masonry walls.
6. Eighty-five pounds per square foot (4070 Pa) for 6-inch-thick (152 mm) concrete walls.
7. Ten pounds per square foot (480 Pa) for SIP walls.

Exceptions:

1. Roof and ceiling dead loads not exceeding 25 pounds per square foot (1190 Pa) shall be permitted provided that the wall bracing amounts in Section R602.10.3 are increased in accordance with Table R602.10.3(4).
2. Light-frame walls with stone or masonry veneer shall be permitted in accordance with the provisions of Sections R702.1 and R703.
3. Fireplaces and chimneys shall be permitted in accordance with Chapter 10.

R301.2.2.3 Stone and masonry veneer. Anchored stone and masonry veneer shall comply with the requirements of Sections R702.1 and R703.

R301.2.2.4 Masonry construction. Masonry construction in Seismic Design Categories D_0 and D_1 shall comply with the requirements of Section R606.12.1. Masonry construction in Seismic Design Category D_2 shall comply with the requirements of Section R606.12.4.

INTERNATIONAL CODE COUNCIL®
Copyright © 2019 ICC & NYSDOS. ALL RIGHTS RESERVED. Accessed by Lauren Gualdino (lgualdino@briarcliffmanor.org), (-) Order Number #100880972 on May 08, 2020 07:05 AM (PDT) pursuant to License Agreement with ICC & NYSDOS. No further reproduction, no

100880972

R301.2.2.5 Concrete construction. Buildings with exterior above-*grade* concrete walls shall comply with PCA 100 or shall be designed in accordance with ACI 318.

Exception: Detached one- and two-family dwellings in Seismic Design Category C with exterior above-grade concrete walls are allowed to comply with the requirements of Section R608.

R301.2.2.6 Irregular buildings. The seismic provisions of this code shall not be used for structures, or portions thereof, located in Seismic Design Categories C, D_0, D_1 and D_2 and considered to be irregular in accordance with this section. A building or portion of a building shall be considered to be irregular where one or more of the conditions defined in Items 1 through 7 occur. Irregular structures, or irregular portions of structures, shall be designed in accordance with accepted engineering practice to the extent the irregular features affect the performance of the remaining structural system. Where the forces associated with the irregularity are resisted by a structural system designed in accordance with accepted engineering practice, the remainder of the building shall be permitted to be designed using the provisions of this code.

1. **Shear wall or braced wall offsets out of plane.** Conditions where exterior shear wall lines or *braced wall panels* are not in one plane vertically from the foundation to the uppermost story in which they are required.

   Exception: For wood light-frame construction, floors with cantilevers or setbacks not exceeding four times the nominal depth of the wood floor joists are permitted to support *braced wall panels* that are out of plane with *braced wall panels* below provided that all of the following are satisfied:

   1. Floor joists are nominal 2 inches by 10 inches (51 mm by 254 mm) or larger and spaced not more than 16 inches (406 mm) on center.
   2. The ratio of the back span to the cantilever is not less than 2 to 1.
   3. Floor joists at ends of *braced wall panels* are doubled.
   4. For wood-frame construction, a continuous rim joist is connected to ends of cantilever joists. Where spliced, the rim joists shall be spliced using a galvanized metal tie not less than 0.058 inch (1.5 mm) (16 gage) and $1^1/_2$ inches (38 mm) wide fastened with six 16d nails on each side of the splice; or a block of the same size as the rim joist and of sufficient length to fit securely between the joist space at which the splice occurs, fastened with eight 16d nails on each side of the splice.
   5. Gravity loads carried at the end of cantilevered joists are limited to uniform wall and roof loads and the reactions from headers having a span of 8 feet (2438 mm) or less.

2. **Lateral support of roofs and floors.** Conditions where a section of floor or roof is not laterally supported by shear walls or *braced wall lines* on all edges.

   Exception: Portions of floors that do not support shear walls, braced wall panels above, or roofs shall be permitted to extend not more than 6 feet (1829 mm) beyond a shear wall or *braced wall line*.

3. **Shear wall or braced wall offsets in plane.** Conditions where the end of a *braced wall panel* occurs over an opening in the wall below and extends more than 1 foot (305 mm) horizontally past the edge of the opening. This provision is applicable to shear walls and braced wall panels offset in plane and to braced wall panels offset out of plane in accordance with the exception to Item 1.

   Exception: For wood light-frame wall construction, one end of a *braced wall panel* shall be permitted to extend more than 1 foot (305 mm) over an opening not more than 8 feet (2438 mm) in width in the wall below provided that the opening includes a header in accordance with all of the following:

   1. The building width, loading condition and framing member species limitations of Table R602.7(1) shall apply.
   2. The header is composed of:
      2.1. Not less than one 2 × 12 or two 2 × 10 for an opening not more than 4 feet (1219 mm) wide.
      2.2. Not less than two 2 × 12 or three 2 × 10 for an opening not more than 6 feet (1829 mm) in width.
      2.3. Not less than three 2 × 12 or four 2 × 10 for an opening not more than 8 feet (2438 mm) in width.
   3. The entire length of the *braced wall panel* does not occur over an opening in the wall below.

4. **Floor and roof opening.** Conditions where an opening in a floor or roof exceeds the lesser of 12 feet (3658 mm) or 50 percent of the least floor or roof dimension.

5. **Floor level offset.** Conditions where portions of a floor level are vertically offset.

   Exceptions:

   1. Framing supported directly by continuous foundations at the perimeter of the building.

INTERNATIONAL CODE COUNCIL®
Copyright © 2019 ICC & NYSDOS. ALL RIGHTS RESERVED. Accessed by Lauren Gualdino (lgualdino@briarcliffmanor.org), (-) Order Number #100880972 on May 08, 2020 07:05 AM (PDT) pursuant to License Agreement with ICC & NYSDOS. No further reproduction, no

100880972

2. For wood light-frame construction, floors shall be permitted to be vertically offset where the floor framing is lapped or tied together as required by Section R502.6.1.

6. **Perpendicular shear wall and wall bracing.** Conditions where shear walls and *braced wall lines* do not occur in two perpendicular directions.

7. **Wall bracing in stories containing masonry or concrete construction.** Conditions where stories above *grade plane* are partially or completely braced by wood wall framing in accordance with Section R602 or cold-formed steel wall framing in accordance with Section R603 include masonry or concrete construction. Where this irregularity applies, the entire story shall be designed in accordance with accepted engineering practice.

   Exceptions: Fireplaces, chimneys and masonry veneer in accordance with this code.

R301.2.2.7 Height limitations. Wood-framed buildings shall be limited to three stories above *grade plane* or the limits given in Table R602.10.3(3). Cold-formed steel-framed buildings shall be limited to less than or equal to three stories above *grade plane* in accordance with AISI S230. Mezzanines as defined in Section R202 that comply with Section R325 shall not be considered as stories. Structural insulated panel buildings shall be limited to two stories above *grade plane*.

R301.2.2.8 Cold-formed steel framing in Seismic Design Categories D_0, D_1 and D_2. In Seismic Design Categories D_0, D_1 and D_2 in addition to the requirements of this code, cold-formed steel framing shall comply with the requirements of AISI S230.

R301.2.2.9 Masonry chimneys. In Seismic Design Categories D_0, D_1 and D_2, masonry chimneys shall be reinforced and anchored to the building in accordance with Sections R1003.3 and R1003.4.

R301.2.2.10 Anchorage of water heaters. In Seismic Design Categories D_0, D1 and D_2, water heaters shall be anchored against movement and overturning in accordance with Section M1307.2.

R301.2.3 Snow loads. Wood-framed construction, cold-formed, steel-framed construction and masonry and concrete construction, and structural insulated panel construction in regions with ground snow loads 70 pounds per square foot (3.35 kPa) or less, shall be in accordance with Chapters 5, 6 and 8. Buildings in regions with ground snow loads greater than 70 pounds per square foot (3.35 kPa) shall be designed in accordance with accepted engineering practice.

R301.2.4 Floodplain construction. Buildings and structures constructed in whole or in part in flood hazard areas (including A or V Zones) as established in Table R301.2(1), and substantial improvement and *repair* of substantial damage of buildings and structures in flood hazard areas, shall be designed and constructed in accordance with Section R322. Buildings and structures that are located in more than one flood hazard area shall comply with the provisions associated with the most restrictive flood hazard area. Buildings and structures located in whole or in part in identified floodways shall be designed and constructed in accordance with ASCE 24.

R301.2.4.1 Alternative provisions. As an alternative to the requirements in Section R322, ASCE 24 is permitted subject to the limitations of this code and the limitations therein.

R301.3 Story height. The wind and seismic provisions of this code shall apply to buildings with *story heights* not exceeding the following:

1. For wood wall framing, the *story height* shall not exceed 11 feet 7 inches (3531 mm) and the laterally unsupported bearing wall stud height permitted by Table R602.3(5).
2. For cold-formed steel wall framing, the *story height* shall be not more than 11 feet 7 inches (3531 mm) and the unsupported bearing wall stud height shall be not more than 10 feet (3048 mm).
3. For masonry walls, the *story height* shall be not more than 13 feet 7 inches (4140 mm) and the bearing wall clear height shall be not more than 12 feet (3658 mm).

   Exception: An additional 8 feet (2438 mm) of bearing wall clear height is permitted for gable end walls.
4. For insulating concrete form walls, the maximum story height shall not exceed 11 feet 7 inches (3531 mm) and the maximum unsupported wall height per *story* as permitted by Section R608 tables shall not exceed 10 feet (3048 mm).
5. For structural insulated panel (SIP) walls, the story height shall be not more than 11 feet 7 inches (3531 mm) and the bearing wall height per *story* as permitted by Section R610 tables shall not exceed 10 feet (3048 mm).

Individual walls or wall studs shall be permitted to exceed these limits as permitted by Chapter 6 provisions, provided that *story heights* are not exceeded. An engineered design shall be provided for the wall or wall framing members where the limits of Chapter 6 are exceeded. Where the *story height* limits of this section are exceeded, the design of the building, or the noncompliant portions thereof, to resist wind and seismic loads shall be in accordance with the *Building Code of New York State*.

R301.4 Dead load. The actual weights of materials and construction shall be used for determining dead load with consideration for the dead load of fixed service *equipment*.

R301.5 Live load. The minimum uniformly distributed live load shall be as provided in Table R301.5.

INTERNATIONAL CODE COUNCIL®
Copyright © 2019 ICC & NYSDOS. ALL RIGHTS RESERVED. Accessed by Lauren Gualdino (lgualdino@briarcliffmanor.org), (-) Order Number #100880972 on May 08, 2020 07:05 AM (PDT) pursuant to License Agreement with ICC & NYSDOS. No further reproduction, no

100880972

TABLE R301.5
MINIMUM UNIFORMLY DISTRIBUTED LIVE LOADS
(in pounds per square foot)

USE	LIVE LOAD
Uninhabitable attics without storage[b]	10
Uninhabitable attics with limited storage[b, g]	20
Habitable attics and attics served with fixed stairs	30
Balconies (exterior) and decks[e]	40
Fire escapes	40
Guards and handrails[d]	200[h]
Guard in-fill components[f]	50[h]
Passenger vehicle garages[a]	50[a]
Rooms other than sleeping rooms	40
Sleeping rooms	30
Stairs	40[c]

For SI: 1 pound per square foot = 0.0479 kPa, 1 square inch = 645 mm^2, 1 pound = 4.45 N.

a. Elevated garage floors shall be capable of supporting a 2,000-pound load applied over a 20-square-inch area.

b. Uninhabitable attics without storage are those where the clear height between joists and rafters is not more than 42 inches, or where there are not two or more adjacent trusses with web configurations capable of accommodating an assumed rectangle 42 inches in height by 24 inches in width, or greater, within the plane of the trusses. This live load need not be assumed to act concurrently with any other live load requirements.

c. Individual stair treads shall be designed for the uniformly distributed live load or a 300-pound concentrated load acting over an area of 4 square inches, whichever produces the greater stresses.

d. A single concentrated load applied in any direction at any point along the top.

e. See Section R507.1 for decks attached to exterior walls.

f. Guard in-fill components (all those except the handrail), balusters and panel fillers shall be designed to withstand a horizontally applied normal load of 50 pounds on an area equal to 1 square foot. This load need not be assumed to act concurrently with any other live load requirement.

g. Uninhabitable attics with limited storage are those where the clear height between joists and rafters is 42 inches or greater, or where there are two or more adjacent trusses with web configurations capable of accommodating an assumed rectangle 42 inches in height by 24 inches in width, or greater, within the plane of the trusses.

The live load need only be applied to those portions of the joists or truss bottom chords where all of the following conditions are met:

1. The attic area is accessed from an opening not less than 20 inches in width by 30 inches in length that is located where the clear height in the attic is not less than 30 inches.
2. The slopes of the joists or truss bottom chords are not greater than 2 inches vertical to 12 units horizontal.
3. Required insulation depth is less than the joist or truss bottom chord member depth.

The remaining portions of the joists or truss bottom chords shall be designed for a uniformly distributed concurrent live load of not less than 10 pounds per square foot.

h. Glazing used in handrail assemblies and guards shall be designed with a safety factor of 4. The safety factor shall be applied to each of the concentrated loads applied to the top of the rail, and to the load on the in-fill components. These loads shall be determined independent of one another, and loads are assumed not to occur with any other live load.

R301.6 Roof load. The roof shall be designed for the live load indicated in Table R301.6 or the snow load indicated in Table R301.2(1), whichever is greater.

TABLE R301.6
MINIMUM ROOF LIVE LOADS IN POUNDS-FORCE PER SQUARE FOOT OF HORIZONTAL PROJECTION

ROOF SLOPE	TRIBUTARY LOADED AREA IN SQUARE FEET FOR ANY STRUCTURAL MEMBER		
	0 to 200	201 to 600	Over 600
Flat or rise less than 4 inches per foot (1:3)	20	16	12
Rise 4 inches per foot (1:3) to less than 12 inches per foot (1:1)	16	14	12
Rise 12 inches per foot (1:1) and greater	12	12	12

For SI: 1 square foot = 0.0929 m^2, 1 pound per square foot = 0.0479 kPa, 1 inch per foot = 83.3 mm/m.

R301.7 Deflection. The allowable deflection of any structural member under the live load listed in Sections R301.5 and R301.6 or wind loads determined by Section R301.2.1 shall not exceed the values in Table R301.7.

TABLE R301.7
ALLOWABLE DEFLECTION OF STRUCTURAL MEMBERS[b, c]

STRUCTURAL MEMBER	ALLOWABLE DEFLECTION
Rafters having slopes greater than 3:12 with finished ceiling not attached to rafters	L/180
Interior walls and partitions	H/180
Floors	L/360
Ceilings with brittle finishes (including plaster and stucco)	L/360
Ceilings with flexible finishes (including gypsum board)	L/240
All other structural members	L/240
Exterior walls—wind loads[a] with plaster or stucco finish	H/360
Exterior walls—wind loads[a] with other brittle finishes	H/240
Exterior walls—wind loads[a] with flexible finishes	H/120[d]
Lintels supporting masonry veneer walls[c]	L/600

Note: L = span length, H = span height.

a. For the purpose of the determining deflection limits herein, the wind load shall be permitted to be taken as 0.7 times the component and cladding (ASD) loads obtained from Table R301.2(2).

b For cantilever members, L shall be taken as twice the length of the cantilever.

c. For aluminum structural members or panels used in roofs or walls of sunroom additions or patio covers, not supporting edge of glass or sandwich panels, the total load deflection shall not exceed L/60. For continuous aluminum structural members supporting edge of glass, the total load deflection shall not exceed L/175 for each glass lite or L/60 for the entire length of the member, whichever is more stringent. For sandwich panels used in roofs or walls of sunroom additions or patio covers, the total load deflection shall not exceed L/120.

d. Deflection for exterior walls with interior gypsum board finish shall be limited to an allowable deflection of H/180.

e. Refer to Section R703.8.2.

INTERNATIONAL CODE COUNCIL®
Copyright © 2019 ICC & NYSDOS. ALL RIGHTS RESERVED. Accessed by Lauren Gualdino (lgualdino@briarcliffmanor.org), (-) Order Number #100880972 on May 08, 2020 07:05 AM (PDT) pursuant to License Agreement with ICC & NYSDOS. No further reproduction, no

100880972

R301.8 Nominal sizes. For the purposes of this code, dimensions of lumber specified shall be deemed to be nominal dimensions unless specifically designated as actual dimensions.

SECTION R302
FIRE-RESISTANT CONSTRUCTION

R302.1 Exterior walls. Construction, projections, openings and penetrations of *exterior walls* of *dwellings* and accessory buildings shall comply with Table R302.1(1); or *dwellings* equipped throughout with an *automatic sprinkler system* installed in accordance with Section P2904 shall comply with Table R302.1(2).

Exceptions:

1. Walls, projections, openings or penetrations in walls perpendicular to the line used to determine the *fire separation distance*.
2. Walls of *individual dwelling units* and their *accessory structures* located on the same *lot*.
3. Detached tool sheds and storage sheds, playhouses and similar structures exempted from permits are not required to provide wall protection based on location on the *lot*. Projections beyond the *exterior wall* shall not extend over the *lot line*.
4. Detached garages accessory to a *dwelling* located within 2 feet (610 mm) of a *lot line* are permitted to have roof eave projections not exceeding 4 inches (102 mm).
5. Foundation vents installed in compliance with this code are permitted.

R302.2 Townhouses. Walls separating townhouse units shall be constructed in accordance with Section R302.2.1 or R302.2.2.

R302.2.1 Double walls. Each townhouse shall be separated by two 1-hour fire-resistance-rated wall assemblies tested in accordance with ASTM E119, UL 263 or Section 703.3 of the *Building Code of New York State.*

R302.2.2 Common walls. Common walls separating *townhouses* shall be assigned a fire-resistance rating in accordance with Item 1 or 2. The common wall shared by two *townhouses* shall be constructed without plumbing or mechanical equipment, ducts or vents in the cavity of the common wall. The wall shall be rated for fire exposure from both sides and shall extend to and be tight against exterior walls and the underside of the roof sheathing. Electrical installations shall be in accordance with Chapters 34 through 43. Penetrations of the membrane of common walls for electrical outlet boxes shall be in accordance with Section R302.4.

1. Where a fire sprinkler system in accordance with Section P2904 is provided, the common wall shall be not less than a 1-hour fire-resistance-rated wall assembly tested in accordance with ASTM E119, UL 263 or Section 703.3 of the *Building Code of New York State.*
2. Where a fire sprinkler system in accordance with Section P2904 is not provided, the common wall shall be not less than a 2-hour fire-resistance-rated wall assembly tested in accordance with ASTM E119, UL 263 or Section 703.3 of the *Building Code of New York State.*

TABLE R302.1(1)
EXTERIOR WALLS

EXTERIOR WALL ELEMENT		MINIMUM FIRE-RESISTANCE RATING	MINIMUM FIRE SEPARATION DISTANCE
Walls	Fire-resistance rated	1 hour—tested in accordance with ASTM E119, UL 263 or Section 703.3 of the *Building Code of New York State* with exposure from both sides	0 feet
	Not fire-resistance rated	0 hours	≥ 5 feet
Projections	Not allowed	NA	< 2 feet
	Fire-resistance rated	1 hour on the underside, or heavy timber, or fire-retardant-treated wood[a, b]	≥ 2 feet to < 5 feet
	Not fire-resistance rated	0 hours	≥ 5 feet
Openings in walls	Not allowed	NA	< 3 feet
	25% maximum of wall area	0 hours	3 feet
	Unlimited	0 hours	5 feet
Penetrations	All	Comply with Section R302.4	< 3 feet
		None required	3 feet

For SI: 1 foot = 304.8 mm.

NA = Not Applicable.

a. The fire-resistance rating shall be permitted to be reduced to 0 hours on the underside of the eave overhang if fireblocking is provided from the wall top plate to the underside of the roof sheathing.

b. The fire-resistance rating shall be permitted to be reduced to 0 hours on the underside of the rake overhang where gable vent openings are not installed.

INTERNATIONAL CODE COUNCIL®
Copyright © 2019 ICC & NYSDOS. ALL RIGHTS RESERVED. Accessed by Lauren Gualdino (lgualdino@briarcliffmanor.org), (-) Order Number #100880972 on May 08, 2020 07:05 AM (PDT) pursuant to License Agreement with ICC & NYSDOS. No further reproduction, no

100880972

TABLE R302.1(2)
EXTERIOR WALLS—DWELLINGS WITH FIRE SPRINKLERS

EXTERIOR WALL ELEMENT		MINIMUM FIRE-RESISTANCE RATING	MINIMUM FIRE SEPARATION DISTANCE
Walls	Fire-resistance rated	1 hour—tested in accordance with ASTM E119, UL 263 or Section 703.3 of the *Building Code of New York State* with exposure from the outside	0 feet
	Not fire-resistance rated	0 hours	3 feet[a]
Projections	Not allowed	NA	< 2 feet
	Fire-resistance rated	1 hour on the underside, or heavy timber, or fire-retardant-treated wood[b, c]	2 feet[a]
	Not fire-resistance rated	0 hours	3 feet
Openings in walls	Not allowed	NA	< 3 feet
	Unlimited	0 hours	3 feet[a]
Penetrations	All	Comply with Section R302.4	< 3 feet
		None required	3 feet[a]

For SI: 1 foot = 304.8 mm.

NA = Not Applicable.

a. For residential subdivisions where all dwellings are equipped throughout with an automatic sprinkler system installed in accordance with Section P2904, the fire separation distance for exterior walls not fire-resistance rated and for fire-resistance-rated projections shall be permitted to be reduced to 0 feet, and unlimited unprotected openings and penetrations shall be permitted, where the adjoining lot provides an open setback yard that is 6 feet or more in width on the opposite side of the property line.

b. The fire-resistance rating shall be permitted to be reduced to 0 hours on the underside of the eave overhang if fireblocking is provided from the wall top plate to the underside of the roof sheathing.

c. The fire-resistance rating shall be permitted to be reduced to 0 hours on the underside of the rake overhang where gable vent openings are not installed.

R302.2.3 Continuity. The fire-resistance-rated wall or assembly separating *townhouses* shall be continuous from the foundation to the underside of the roof sheathing, deck or slab. The fire-resistance rating shall extend the full length of the wall or assembly, including wall extensions through and separating attached enclosed *accessory structures*.

R302.2.4 Parapets for townhouses. Parapets constructed in accordance with Section R302.2.5 shall be constructed for *townhouses* as an extension of exterior walls or common walls in accordance with the following:

1. Where roof surfaces adjacent to the wall or walls are at the same elevation, the parapet shall extend not less than 30 inches (762 mm) above the roof surfaces.
2. Where roof surfaces adjacent to the wall or walls are at different elevations and the higher roof is not more than 30 inches (762 mm) above the lower roof, the parapet shall extend not less than 30 inches (762 mm) above the lower roof surface.

   Exception: A parapet is not required in the preceding two cases where the roof covering complies with a minimum Class C rating as tested in accordance with ASTM E108 or UL 790 and the roof decking or sheathing is of noncombustible materials or fire-retardant-treated wood for a distance of 4 feet (1219 mm) on each side of the wall or walls, or one layer of $^{5}/_{8}$-inch (15.9 mm) Type X gypsum board is installed directly beneath the roof decking or sheathing, supported by not less than nominal 2-inch (51 mm) ledgers attached to the sides of the roof framing members, for a distance of not less than 4 feet (1219 mm) on each side of the wall or walls and any openings or penetrations in the roof are not within 4 feet (1219 mm) of the common walls. Fire-retardant-treated wood shall meet the requirements of Sections R802.1.5 and R803.2.1.2.
3. A parapet is not required where roof surfaces adjacent to the wall or walls are at different elevations and the higher roof is more than 30 inches (762 mm) above the lower roof. The common wall construction from the lower roof to the underside of the higher roof deck shall have not less than a 1-hour fire-resistance rating. The wall shall be rated for exposure from both sides.

R302.2.5 Parapet construction. Parapets shall have the same fire-resistance rating as that required for the supporting wall or walls. On any side adjacent to a roof surface, the parapet shall have noncombustible faces for the uppermost 18 inches (457 mm), to include counterflashing and coping materials. Where the roof slopes toward a parapet at slopes greater than 2 units vertical in 12 units horizontal (16.7-percent slope), the parapet shall extend to the same height as any portion of the roof within a distance of 3 feet (914 mm), and the height shall be not less than 30 inches (762 mm).

R302.2.6 Structural independence. Each individual *townhouse* shall be structurally independent.

Exceptions:

1. Foundations supporting *exterior walls* or common walls.
2. Structural roof and wall sheathing from each unit fastened to the common wall framing.
3. Nonstructural wall and roof coverings.

INTERNATIONAL CODE COUNCIL®
Copyright © 2019 ICC & NYSDOS. ALL RIGHTS RESERVED. Accessed by Lauren Gualdino (lgualdino@briarcliffmanor.org), (-) Order Number #100880972 on May 08, 2020 07:05 AM (PDT) pursuant to License Agreement with ICC & NYSDOS. No further reproduction, no

100880972

4. Flashing at termination of roof covering over common wall.
5. *Townhouses* separated by a common wall as provided in Section R302.2.2, Item 1 or 2.

R302.3 Two-family dwellings. *Dwelling units* in two-family dwellings shall be separated from each other by wall and floor assemblies having not less than a 1-hour fire-resistance rating where tested in accordance with ASTM E119, UL 263 or Section 703.3 of the *Building Code of New York State.* Fire-resistance-rated floor/ceiling and wall assemblies shall extend to and be tight against the *exterior wall*, and wall assemblies shall extend from the foundation to the underside of the roof sheathing.

Exceptions:

1. A fire-resistance rating of $^1/_2$ hour shall be permitted in buildings equipped throughout with an automatic sprinkler system installed in accordance with NFPA 13.
2. Wall assemblies need not extend through *attic* spaces where the ceiling is protected by not less than $^5/_8$-inch (15.9 mm) Type X gypsum board, an *attic* draft stop constructed as specified in Section R302.12.1 is provided above and along the wall assembly separating the *dwellings* and the structural framing supporting the ceiling is protected by not less than $^1/_2$-inch (12.7 mm) gypsum board or equivalent.

R302.3.1 Supporting construction. Where floor assemblies are required to be fire-resistance rated by Section R302.3, the supporting construction of such assemblies shall have an equal or greater fire-resistance rating.

R302.4 Dwelling unit rated penetrations. Penetrations of wall or floor-ceiling assemblies required to be fire-resistance rated in accordance with Section R302.2 or R302.3 shall be protected in accordance with this section.

R302.4.1 Through penetrations. Through penetrations of fire-resistance-rated wall or floor assemblies shall comply with Section R302.4.1.1 or R302.4.1.2.

Exception: Where the penetrating items are steel, ferrous or copper pipes, tubes or conduits, the annular space shall be protected as follows:

1. In concrete or masonry wall or floor assemblies, concrete, grout or mortar shall be permitted where installed to the full thickness of the wall or floor assembly or the thickness required to maintain the fire-resistance rating, provided that both of the following are complied with:
   1.1. The nominal diameter of the penetrating item is not more than 6 inches (152 mm).
   1.2. The area of the opening through the wall does not exceed 144 square inches (92 900 mm^2).
2. The material used to fill the annular space shall prevent the passage of flame and hot gases sufficient to ignite cotton waste where subjected to ASTM E119 or UL 263 time temperature fire conditions under a positive pressure differential of not less than 0.01 inch of water (3 Pa) at the location of the penetration for the time period equivalent to the fire-resistance rating of the construction penetrated.

R302.4.1.1 Fire-resistance-rated assembly. Penetrations shall be installed as tested in the *approved* fire-resistance-rated assembly.

R302.4.1.2 Penetration firestop system. Penetrations shall be protected by an *approved* penetration firestop system installed as tested in accordance with ASTM E814 or UL 1479, with a positive pressure differential of not less than 0.01 inch of water (3 Pa) and shall have an F rating of not less than the required fire-resistance rating of the wall or floor-ceiling assembly penetrated.

R302.4.2 Membrane penetrations. Membrane penetrations shall comply with Section R302.4.1. Where walls are required to have a fire-resistance rating, recessed fixtures shall be installed so that the required fire-resistance rating will not be reduced.

Exceptions:

1. Membrane penetrations of not more than 2-hour fire-resistance-rated walls and partitions by steel electrical boxes that do not exceed 16 square inches (0.0103 m^2) in area provided that the aggregate area of the openings through the membrane does not exceed 100 square inches (0.0645 m^2) in any 100 square feet (9.29 m^2) of wall area. The annular space between the wall membrane and the box shall not exceed $^1/_8$ inch (3.1 mm). Such boxes on opposite sides of the wall shall be separated by one of the following:
   1.1. By a horizontal distance of not less than 24 inches (610 mm) where the wall or partition is constructed with individual noncommunicating stud cavities.
   1.2. By a horizontal distance of not less than the depth of the wall cavity where the wall cavity is filled with cellulose loosefill, rockwool or slag mineral wool insulation.
   1.3. By solid fireblocking in accordance with Section R302.11.
   1.4. By protecting both boxes with *listed* putty pads.
   1.5. By other *listed* materials and methods.
2. Membrane penetrations by *listed* electrical boxes of any materials provided that the boxes have been tested for use in fire-resistance-rated assemblies and are installed in accordance with the instructions included in the *listing*. The annular space between the wall membrane and the box shall not exceed $^1/_8$ inch (3.1 mm) unless *listed*

INTERNATIONAL CODE COUNCIL®
Copyright © 2019 ICC & NYSDOS. ALL RIGHTS RESERVED. Accessed by Lauren Gualdino (lgualdino@briarcliffmanor.org), (-) Order Number #100880972 on May 08, 2020 07:05 AM (PDT) pursuant to License Agreement with ICC & NYSDOS. No further reproduction, no

100880972

otherwise. Such boxes on opposite sides of the wall shall be separated by one of the following:

2.1. By the horizontal distance specified in the *listing* of the electrical boxes.

2.2. By solid fireblocking in accordance with Section R302.11.

2.3. By protecting both boxes with *listed* putty pads.

2.4. By other *listed* materials and methods.

3. The annular space created by the penetration of a fire sprinkler provided that it is covered by a metal escutcheon plate.

4. Ceiling membrane penetrations by *listed* luminaires or by luminaires protected with *listed* materials that have been tested for use in fire-resistance-rated assemblies and are installed in accordance with the instructions included in the *listing*.

R302.5 Dwelling-garage opening and penetration protection. Openings and penetrations through the walls or ceilings separating the *dwelling* from the garage shall be in accordance with Sections R302.5.1 through R302.5.3.

R302.5.1 Opening protection. Openings from a private garage directly into a room used for sleeping purposes shall not be permitted. Other openings between the garage and residence shall be equipped with solid wood doors not less than $1^3/_8$ inches (35 mm) in thickness, solid or honeycomb-core steel doors not less than $1^3/_8$ inches (35 mm) thick, or 20-minute fire-rated doors, equipped with a self-closing or automatic-closing device.

R302.5.2 Duct penetration. Ducts in the garage and ducts penetrating the walls or ceilings separating the *dwelling* from the garage shall be constructed of a minimum No. 26 gage (0.48 mm) sheet steel or other *approved* material and shall not have openings into the garage.

R302.5.3 Other penetrations. Penetrations through the separation required in Section R302.6 shall be protected as required by Section R302.11, Item 4.

R302.6 Dwelling-garage fire separation. The garage shall be separated as required by Table R302.6. Openings in garage walls shall comply with Section R302.5. Attachment of gypsum board shall comply with Table R702.3.5. The wall separation provisions of Table R302.6 shall not apply to garage walls that are perpendicular to the adjacent *dwelling unit* wall.

R302.7 Under-stair protection. Enclosed space under stairs that is *accessed* by a door or access panel shall have walls, under-stair surface and any soffits protected on the enclosed side with $^1/_2$-inch (12.7 mm) gypsum board.

R302.8 Foam plastics. For requirements for foam plastics, see Section R316.

R302.9 Flame spread index and smoke-developed index for wall and ceiling finishes. Flame spread and smoke-developed indices for wall and ceiling finishes shall be in accordance with Sections R302.9.1 through R302.9.4.

R302.9.1 Flame spread index. Wall and ceiling finishes shall have a flame spread index of not greater than 200.

Exception: Flame spread index requirements for finishes shall not apply to trim defined as picture molds, chair rails, baseboards and handrails; to doors and windows or their frames; or to materials that are less than $^1/_{28}$ inch (0.91 mm) in thickness cemented to the surface of walls or ceilings if these materials exhibit flame spread index values not greater than those of paper of this thickness cemented to a noncombustible backing.

R302.9.2 Smoke-developed index. Wall and ceiling finishes shall have a smoke-developed index of not greater than 450.

R302.9.3 Testing. Tests shall be made in accordance with ASTM E84 or UL 723.

R302.9.4 Alternative test method. As an alternative to having a flame spread index of not greater than 200 and a smoke-developed index of not greater than 450 where tested in accordance with ASTM E84 or UL 723, wall and ceiling finishes shall be permitted to be tested in accordance with NFPA 286. Materials tested in accordance with NFPA 286 shall meet the following criteria:

The interior finish shall comply with the following:

1. During the 40 kW exposure, flames shall not spread to the ceiling.
2. The flame shall not spread to the outer extremity of the sample on any wall or ceiling.
3. Flashover, as defined in NFPA 286, shall not occur.

TABLE R302.6
DWELLING-GARAGE SEPARATION

SEPARATION	MATERIAL
From the residence and attics	Not less than $^1/_2$-inch gypsum board or equivalent applied to the garage side
From habitable rooms above the garage	Not less than $^5/_8$-inch Type X gypsum board or equivalent
Structure(s) supporting floor/ceiling assemblies used for separation required by this section	Not less than $^1/_2$-inch gypsum board or equivalent
Garages located less than 3 feet from a dwelling unit on the same lot	Not less than $^1/_2$-inch gypsum board or equivalent applied to the interior side of exterior walls that are within this area

For SI: 1 inch = 25.4 mm, 1 foot = 304.8 mm.

INTERNATIONAL CODE COUNCIL®
Copyright © 2019 ICC & NYSDOS. ALL RIGHTS RESERVED. Accessed by Lauren Gualdino (lgualdino@briarcliffmanor.org), (-) Order Number #100880972 on May 08, 2020 07:05 AM (PDT) pursuant to License Agreement with ICC & NYSDOS. No further reproduction, no

100880972

4. The peak heat release rate throughout the test shall not exceed 800 kW.
5. The total smoke released throughout the test shall not exceed 1,000 m^2.

R302.10 Flame spread index and smoke-developed index for insulation. Flame spread and smoke-developed index for insulation shall be in accordance with Sections R302.10.1 through R302.10.5.

R302.10.1 Insulation. Insulating materials installed within floor-ceiling assemblies, roof-ceiling assemblies, wall assemblies, crawl spaces and *attics* shall comply with the requirements of this section. They shall exhibit a flame spread index not to exceed 25 and a smoke-developed index not to exceed 450 where tested in accordance with ASTM E84 or UL 723. Insulating materials, where tested in accordance with the requirements of this section, shall include facings, where used, such as vapor retarders, vapor permeable membranes and similar coverings.

Exceptions:

1. Where such materials are installed in concealed spaces, the flame spread index and smoke-developed index limitations do not apply to the facings, provided that the facing is installed in substantial contact with the unexposed surface of the ceiling, floor or wall finish.
2. Cellulose fiber loose-fill insulation that is not spray applied and that complies with the requirements of Section R302.10.3 shall not be required to meet the flame spread index requirements but shall be required to meet a smoke-developed index of not more than 450 where tested in accordance with CAN/ULC S102.2.
3. Foam plastic insulation shall comply with Section R316.

R302.10.2 Loose-fill insulation. Loose-fill insulation materials that cannot be mounted in the ASTM E84 or UL 723 apparatus without a screen or artificial supports shall comply with the flame spread and smoke-developed limits of Section R302.10.1 where tested in accordance with CAN/ULC S102.2.

Exception: Cellulosic fiber loose-fill insulation shall not be required to be tested in accordance with CAN/ULC S102.2, provided that such insulation complies with the requirements of Sections R302.10.1 and R302.10.3.

R302.10.3 Cellulosic fiber loose-fill insulation. Cellulosic fiber loose-fill insulation shall comply with CPSC 16 CFR, Parts 1209 and 1404. Each package of such insulating material shall be clearly *labeled* in accordance with CPSC 16 CFR, Parts 1209 and 1404.

R302.10.4 Exposed attic insulation. Exposed insulation materials installed on *attic* floors shall have a critical radiant flux of not less than 0.12 watt per square centimeter.

R302.10.5 Testing. Tests for critical radiant flux shall be made in accordance with ASTM E970.

R302.11 Fireblocking. In combustible construction, fireblocking shall be provided to cut off both vertical and horizontal concealed draft openings and to form an effective fire barrier between stories, and between a top *story* and the roof space.

Fireblocking shall be provided in wood-framed construction in the following locations:

1. In concealed spaces of stud walls and partitions, including furred spaces and parallel rows of studs or staggered studs, as follows:
   1.1. Vertically at the ceiling and floor levels.
   1.2. Horizontally at intervals not exceeding 10 feet (3048 mm).
2. At interconnections between concealed vertical and horizontal spaces such as occur at soffits, drop ceilings and cove ceilings.
3. In concealed spaces between stair stringers at the top and bottom of the run. Enclosed spaces under stairs shall comply with Section R302.7.
4. At openings around vents, pipes, ducts, cables and wires at ceiling and floor level, with an *approved* material to resist the free passage of flame and products of combustion. The material filling this annular space shall not be required to meet the ASTM E136 requirements.
5. For the fireblocking of chimneys and fireplaces, see Section R1003.19.
6. Fireblocking of cornices of a two-family *dwelling* is required at the line of *dwelling unit* separation.

R302.11.1 Fireblocking materials. Except as provided in Section R302.11, Item 4, fireblocking shall consist of the following materials.

1. Two-inch (51 mm) nominal lumber.
2. Two thicknesses of 1-inch (25.4 mm) nominal lumber with broken lap joints.
3. One thickness of $^{23}/_{32}$-inch (18.3 mm) wood structural panels with joints backed by $^{23}/_{32}$-inch (18.3 mm) wood structural panels.
4. One thickness of $^{3}/_{4}$-inch (19.1 mm) particleboard with joints backed by $^{3}/_{4}$-inch (19.1 mm) particleboard.
5. One-half-inch (12.7 mm) gypsum board.
6. One-quarter-inch (6.4 mm) cement-based millboard.
7. Batts or blankets of mineral wool or glass fiber or other *approved* materials installed in such a manner as to be securely retained in place.
8. Cellulose insulation installed as tested in accordance with ASTM E119 or UL 263, for the specific application.

R302.11.1.1 Batts or blankets of mineral or glass fiber. Batts or blankets of mineral or glass fiber or other *approved* nonrigid materials shall be permitted for compliance with the 10-foot (3048 mm) horizontal

INTERNATIONAL CODE COUNCIL®
Copyright © 2019 ICC & NYSDOS. ALL RIGHTS RESERVED. Accessed by Lauren Gualdino (lgualdino@briarcliffmanor.org), (-) Order Number #100880972 on May 08, 2020 07:05 AM (PDT) pursuant to License Agreement with ICC & NYSDOS. No further reproduction, no

100880972

fireblocking in walls constructed using parallel rows of studs or staggered studs.

R302.11.1.2 Unfaced fiberglass. Unfaced fiberglass batt insulation used as fireblocking shall fill the entire cross section of the wall cavity to a height of not less than 16 inches (406 mm) measured vertically. Where piping, conduit or similar obstructions are encountered, the insulation shall be packed tightly around the obstruction.

R302.11.1.3 Loose-fill insulation material. Loose-fill insulation material shall not be used as a fireblock unless specifically tested in the form and manner intended for use to demonstrate its ability to remain in place and to retard the spread of fire and hot gases.

R302.11.2 Fireblocking integrity. The integrity of fireblocks shall be maintained.

R302.12 Draftstopping. In combustible construction where there is usable space both above and below the concealed space of a floor-ceiling assembly, draftstops shall be installed so that the area of the concealed space does not exceed 1,000 square feet (92.9 m^2). Draftstopping shall divide the concealed space into approximately equal areas. Where the assembly is enclosed by a floor membrane above and a ceiling membrane below, draftstopping shall be provided in floor-ceiling assemblies under the following circumstances:

1. Ceiling is suspended under the floor framing.
2. Floor framing is constructed of truss-type open-web or perforated members.

R302.12.1 Materials. Draftstopping materials shall be not less than $^1/_2$-inch (12.7 mm) gypsum board, $^3/_8$-inch (9.5 mm) wood structural panels or other *approved* materials adequately supported. Draftstopping shall be installed parallel to the floor framing members unless otherwise *approved* by the *building official*. The integrity of the draftstops shall be maintained.

R302.13 Fire protection of floors. Floor assemblies that are not required elsewhere in this code to be fire-resistance rated, shall be provided with a $^1/_2$-inch (12.7 mm) gypsum wallboard membrane, $^5/_8$-inch (16 mm) wood structural panel membrane, or equivalent on the underside of the floor framing member. Penetrations or openings for ducts, vents, electrical outlets, lighting, devices, luminaires, wires, speakers, drainage, piping and similar openings or penetrations shall be permitted.

Exceptions:

1. Floor assemblies located directly over a space protected by an automatic sprinkler system in accordance with Section P2904, NFPA 13D, or other approved equivalent sprinkler system.
2. Floor assemblies located directly over a crawl space not intended for storage or for the installation of fuel-fired or electric-powered heating appliances.
3. Portions of floor assemblies shall be permitted to be unprotected where complying with the following:
   3.1. The aggregate area of the unprotected portions does not exceed 80 square feet (7.4 m^2) per story.
   3.2. Fireblocking in accordance with Section R302.11.1 is installed along the perimeter of the unprotected portion to separate the unprotected portion from the remainder of the floor assembly.
4. Wood floor assemblies using dimension lumber or structural composite lumber equal to or greater than 2-inch by 10-inch (50.8 mm by 254 mm) nominal dimension, or other approved floor assemblies demonstrating equivalent fire performance.

R302.14 Combustible insulation clearance. Combustible insulation shall be separated not less than 3 inches (76 mm) from recessed luminaires, fan motors and other heat-producing devices.

Exception: Where heat-producing devices are *listed* for lesser clearances, combustible insulation complying with 3the listing requirements shall be separated in accordance with the conditions stipulated in the listing.

Recessed luminaires installed in the *building thermal envelope* shall meet the requirements of Section N1102.4.5 of this code.

SECTION R303
LIGHT, VENTILATION AND HEATING

R303.1 Habitable rooms. Habitable rooms shall have an aggregate glazing area of not less than 8 percent of the floor area of such rooms. Natural *ventilation* shall be through windows, skylights, doors, louvers or other *approved* openings to the outdoor air. Such openings shall be provided with ready access or shall otherwise be readily controllable by the building occupants. The openable area to the outdoors shall be not less than 4 percent of the floor area being ventilated.

Exceptions:

1. The glazed areas need not be openable where the opening is not required by Section R310 and a whole-house mechanical *ventilation* system is installed in accordance with Section M1505.
2. The glazed areas need not be installed in rooms where Exception 1 is satisfied and artificial light is provided that is capable of producing an average illumination of 6 footcandles (65 lux) over the area of the room at a height of 30 inches (762 mm) above the floor level.
3. Use of sunroom and patio covers, as defined in Section R202, shall be permitted for natural *ventilation* if in excess of 40 percent of the exterior sunroom walls are open, or are enclosed only by insect screening.

INTERNATIONAL CODE COUNCIL®
Copyright © 2019 ICC & NYSDOS. ALL RIGHTS RESERVED. Accessed by Lauren Gualdino (lgualdino@briarcliffmanor.org), (-) Order Number #100880972 on May 08, 2020 07:05 AM (PDT) pursuant to License Agreement with ICC & NYSDOS. No further reproduction, no

100880972

R303.2 Adjoining rooms. For the purpose of determining light and *ventilation* requirements, rooms shall be considered to be a portion of an adjoining room where not less than one-half of the area of the common wall is open and unobstructed and provides an opening of not less than one-tenth of the floor area of the interior room and not less than 25 square feet (2.3 m^2).

Exception: Openings required for light or *ventilation* shall be permitted to open into a sunroom with thermal isolation or a patio cover, provided that there is an openable area between the adjoining room and the sunroom or patio cover of not less than one-tenth of the floor area of the interior room and not less than 20 square feet (2 m^2). The minimum openable area to the outdoors shall be based on the total floor area being ventilated.

R303.3 Bathrooms. Bathrooms, water closet compartments and other similar rooms shall be provided with aggregate glazing area in windows of not less than 3 square feet (0.3 m^2), one-half of which shall be openable.

Exception: The glazed areas shall not be required where artificial light and a local exhaust system are provided. The minimum local exhaust rates shall be determined in accordance with Section M1505. Exhaust air from the space shall be exhausted directly to the outdoors.

R303.4 Mechanical ventilation. Where the air infiltration rate of a *dwelling unit* is 5 air changes per hour or less where tested with a blower door at a pressure of 0.2 inch w.c (50 Pa) in accordance with Section N1102.4.1.2, the *dwelling unit* shall be provided with whole-house mechanical ventilation in accordance with Section M1505.4.

R303.5 Opening location. Outdoor intake and exhaust openings shall be located in accordance with Sections R303.5.1 and R303.5.2.

R303.5.1 Intake openings. Mechanical and gravity outdoor air intake openings shall be located not less than 10 feet (3048 mm) from any hazardous or noxious contaminant, such as vents, chimneys, plumbing vents, streets, alleys, parking lots and loading docks.

For the purpose of this section, the exhaust from *dwelling* unit toilet rooms, bathrooms and kitchens shall not be considered as hazardous or noxious.

Exceptions:

1. The 10-foot (3048 mm) separation is not required where the intake opening is located 3 feet (914 mm) or greater below the contaminant source.
2. Vents and chimneys serving fuel-burning appliances shall be terminated in accordance with the applicable provisions of Chapters 18 and 24.
3. Clothes dryer exhaust ducts shall be terminated in accordance with Section M1502.3.

R303.5.2 Exhaust openings. Exhaust air shall not be directed onto walkways.

R303.6 Outside opening protection. Air exhaust and intake openings that terminate outdoors shall be protected with corrosion-resistant screens, louvers or grilles having an opening size of not less than $^1/_4$ inch (6 mm) and a maximum opening size of $^1/_2$ inch (13 mm), in any dimension. Openings shall be protected against local weather conditions. Outdoor air exhaust and intake openings shall meet the provisions for *exterior wall* opening protectives in accordance with this code.

[NY] R303.7 Interior stairway illumination. Interior stairways shall be provided with an artificial light source to illuminate the landings and treads. The light source shall be capable of illuminating treads and landings to levels of not less than 1 foot-candle (11 lux) as measured at the center of treads and landings. There shall be a wall switch at each floor level to control the light source where the stairway has six or more risers.

Exceptions:

1. A switch is not required where remote, central or automatic control of lighting is provided.
2. Owner-occupied one-family dwellings not supplied with electrical power in accordance with Section E3401.2.1.

[NY] R303.8 Exterior stairway illumination. Exterior stairways shall be provided with an artificial light source located at the top landing of the stairway. Exterior stairways providing access to a *basement* from the outdoor *grade* level shall be provided with an artificial light source located at the bottom landing of the stairway.

Exception: Owner-occupied one-family dwellings not supplied with electrical power in accordance with Section E3401.2.1.

R303.9 Required glazed openings. Required glazed openings shall open directly onto a street or public alley, or a *yard* or court located on the same *lot* as the building.

Exceptions:

1. Required glazed openings that face into a roofed porch where the porch abuts a street, *yard* or court and the longer side of the porch is not less than 65 percent unobstructed and the ceiling height is not less than 7 feet (2134 mm).
2. Eave projections shall not be considered as obstructing the clear open space of a *yard* or court.
3. Required glazed openings that face into the area under a deck, balcony, bay or floor cantilever where a clear vertical space not less than 36 inches (914 mm) in height is provided.

R303.9.1 Sunroom additions. Required glazed openings shall be permitted to open into sunroom *additions* or patio covers that abut a street, *yard* or court if in excess of 40 percent of the exterior sunroom walls are open, or are enclosed only by insect screening, and the ceiling height of the sunroom is not less than 7 feet (2134 mm).

[NY] R303.10 Required heating. Where the winter design temperature in Table R301.2(1) is below 60°F (16°C), every *dwelling unit* intended to be occupied between September 15 and May 15 shall be provided with heating facilities capable of maintaining a room temperature of not less than 68°F (20°C) at a point 3 feet (914 mm) above the floor and 2 feet (610 mm) from exterior walls in habitable rooms at the

INTERNATIONAL CODE COUNCIL®
Copyright © 2019 ICC & NYSDOS. ALL RIGHTS RESERVED. Accessed by Lauren Gualdino (lgualdino@briarcliffmanor.org), (-) Order Number #100880972 on May 08, 2020 07:05 AM (PDT) pursuant to License Agreement with ICC & NYSDOS. No further reproduction, no

100880972

design temperature. The installation of one or more portable space heaters shall not be used to achieve compliance with this section.

Exception: Owner-occupied one-family dwellings subject to the approval of the *building official*.

SECTION R304
MINIMUM ROOM AREAS

R304.1 Minimum area. Habitable rooms shall have a floor area of not less than 70 square feet (6.5 m^2).

Exception: Kitchens.

R304.2 Minimum dimensions. Habitable rooms shall be not less than 7 feet (2134 mm) in any horizontal dimension.

Exception: Kitchens.

R304.3 Height effect on room area. Portions of a room with a sloping ceiling measuring less than 5 feet (1524 mm) or a furred ceiling measuring less than 7 feet (2134 mm) from the finished floor to the finished ceiling shall not be considered as contributing to the minimum required habitable area for that room.

SECTION R305
CEILING HEIGHT

R305.1 Minimum height. *Habitable space*, hallways and portions of *basements* containing these spaces shall have a ceiling height of not less than 7 feet (2134 mm). Bathrooms, toilet rooms and laundry rooms shall have a ceiling height of not less than 6 feet 8 inches (2032 mm).

Exceptions:

1. For rooms with sloped ceilings, the required floor area of the room shall have a ceiling height of not less than 5 feet (1524 mm) and not less than 50 percent of the required floor area shall have a ceiling height of not less than 7 feet (2134 mm).
2. The ceiling height above bathroom and toilet room fixtures shall be such that the fixture is capable of being used for its intended purpose. A shower or tub equipped with a showerhead shall have a ceiling height of not less than 6 feet 8 inches (2032 mm) above an area of not less than 30 inches (762 mm) by 30 inches (762 mm) at the showerhead.
3. Beams, girders, ducts or other obstructions in *basements* containing *habitable space* shall be permitted to project to within 6 feet 4 inches (1931 mm) of the finished floor.

R305.1.1 Basements. Portions of *basements* that do not contain *habitable space* or hallways shall have a ceiling height of not less than 6 feet 8 inches (2032 mm).

Exception: At beams, girders, ducts or other obstructions, the ceiling height shall be not less than 6 feet 4 inches (1931 mm) from the finished floor.

SECTION R306
SANITATION

[NY] R306.1 Toilet facilities. Every *dwelling* unit shall be provided with a water closet, lavatory, and a bathtub or shower.

Exception: Owner-occupied one-family dwellings subject to the approval of the *building official.*

[NY] R306.2 Kitchen. Each *dwelling* unit shall be provided with a kitchen area and every kitchen area shall be provided with a sink.

Exception: Owner-occupied one-family dwellings subject to the approval of the *building official*.

R306.3 Sewage disposal. Plumbing fixtures shall be connected to a sanitary sewer or to an *approved* private sewage disposal system.

R306.4 Water supply to fixtures. Plumbing fixtures shall be connected to an *approved* water supply. Kitchen sinks, lavatories, bathtubs, showers, bidets, laundry tubs and washing machine outlets shall be provided with hot and cold water.

SECTION R307
TOILET, BATH AND SHOWER SPACES

R307.1 Space required. Fixtures shall be spaced in accordance with Figure R307.1, and in accordance with the requirements of Section P2705.1.

R307.2 Bathtub and shower spaces. Bathtub and shower floors and walls above bathtubs with installed shower heads and in shower compartments shall be finished with a nonabsorbent surface. Such wall surfaces shall extend to a height of not less than 6 feet (1829 mm) above the floor.

SECTION R308
GLAZING

R308.1 Identification. Except as indicated in Section R308.1.1 each pane of glazing installed in hazardous locations as defined in Section R308.4 shall be provided with a manufacturer's designation specifying who applied the designation, the type of glass and the safety glazing standard with which it complies, and that is visible in the final installation. The designation shall be acid etched, sandblasted, ceramic-

INTERNATIONAL CODE COUNCIL®
Copyright © 2019 ICC & NYSDOS. ALL RIGHTS RESERVED. Accessed by Lauren Gualdino (lgualdino@briarcliffmanor.org), (-) Order Number #100880972 on May 08, 2020 07:05 AM (PDT) pursuant to License Agreement with ICC & NYSDOS. No further reproduction, no

100880972

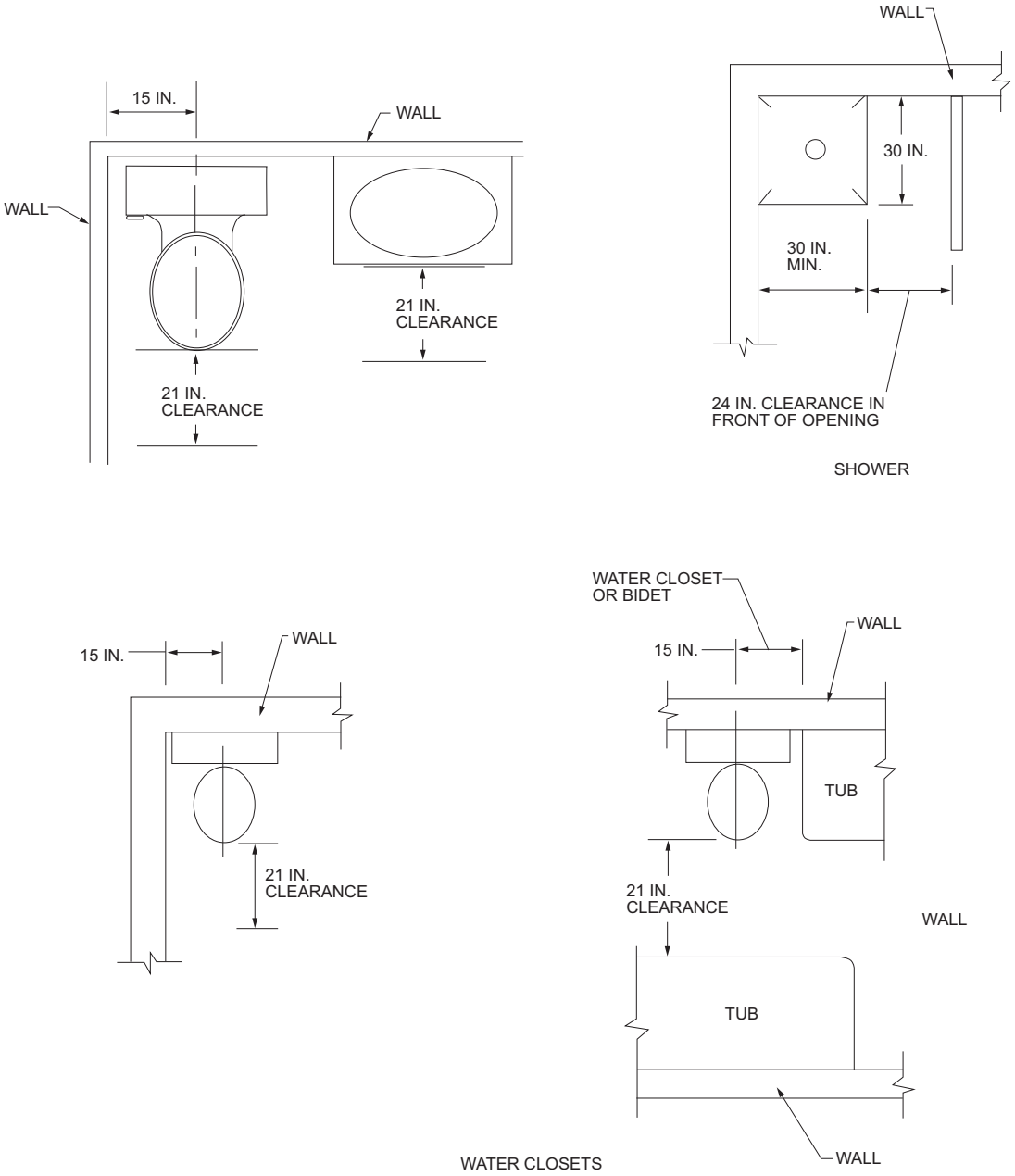

For SI: 1 inch = 25.4 mm.

FIGURE R307.1
MINIMUM FIXTURE CLEARANCES

fired, laser etched, embossed, or be of a type that once applied cannot be removed without being destroyed. A *label* shall be permitted in lieu of the manufacturer's designation.

Exceptions:

1. For other than tempered glass, manufacturer's designations are not required provided that the *building official* approves the use of a certificate, affidavit or other evidence confirming compliance with this code.
2. Tempered spandrel glass is permitted to be identified by the manufacturer with a removable paper designation.

R308.1.1 Identification of multiple assemblies. Multipane assemblies having individual panes not exceeding 1 square foot (0.09 m^2) in exposed area shall have not less than one pane in the assembly identified in accordance with Section R308.1. Other panes in the assembly shall be *labeled* "CPSC 16 CFR 1201" or "ANSI Z97.1" as appropriate.

INTERNATIONAL CODE COUNCIL®
Copyright © 2019 ICC & NYSDOS. ALL RIGHTS RESERVED. Accessed by Lauren Gualdino (lgualdino@briarcliffmanor.org), (-) Order Number #100880972 on May 08, 2020 07:05 AM (PDT) pursuant to License Agreement with ICC & NYSDOS. No further reproduction, no

100880972

R308.2 Louvered windows or jalousies. Regular, float, wired or patterned glass in jalousies and louvered windows shall be not less than nominal $^{3}/_{16}$ inch (5 mm) thick and not more than 48 inches (1219 mm) in length. Exposed glass edges shall be smooth.

R308.2.1 Wired glass prohibited. Wired glass with wire exposed on longitudinal edges shall not be used in jalousies or louvered windows.

R308.3 Human impact loads. Individual glazed areas, including glass mirrors in hazardous locations such as those indicated as defined in Section R308.4, shall pass the test requirements of Section R308.3.1.

Exceptions:

1. Louvered windows and jalousies shall comply with Section R308.2.
2. Mirrors and other glass panels mounted or hung on a surface that provides a continuous backing support.
3. Glass unit masonry complying with Section R607.

R308.3.1 Impact test. Where required by other sections of the code, glazing shall be tested in accordance with CPSC 16 CFR 1201. Glazing shall comply with the test criteria for Category II unless otherwise indicated in Table R308.3.1(1).

Exception: Glazing not in doors or enclosures for hot tubs, whirlpools, saunas, steam rooms, bathtubs and showers shall be permitted to be tested in accordance with ANSI Z97.1. Glazing shall comply with the test criteria for Class A unless otherwise indicated in Table R308.3.1(2).

R308.4 Hazardous locations. The locations specified in Sections R308.4.1 through R308.4.7 shall be considered to be specific hazardous locations for the purposes of glazing.

R308.4.1 Glazing in doors. Glazing in fixed and operable panels of swinging, sliding and bifold doors shall be considered to be a hazardous location.

Exceptions:

1. Glazed openings of a size through which a 3-inch-diameter (76 mm) sphere is unable to pass.
2. Decorative glazing.

R308.4.2 Glazing adjacent to doors. Glazing in an individual fixed or operable panel adjacent to a door shall be considered to be a hazardous location where the bottom exposed edge of the glazing is less than 60 inches (1524 mm) above the floor or walking surface and it meets either of the following conditions:

1. Where the glazing is within 24 inches (610 mm) of either side of the door in the plane of the door in a closed position.
2. Where the glazing is on a wall less than 180 degrees (3.14 rad) from the plane of the door in a closed position and within 24 inches (610 mm) of the hinge side of an in-swinging door.

Exceptions:

1. Decorative glazing.
2. Where there is an intervening wall or other permanent barrier between the door and the glazing.
3. Where access through the door is to a closet or storage area 3 feet (914 mm) or less in depth. Glazing in this application shall comply with Section R308.4.3.
4. Glazing that is adjacent to the fixed panel of patio doors.

TABLE R308.3.1(1)
MINIMUM CATEGORY CLASSIFICATION OF GLAZING USING CPSC 16 CFR 1201

EXPOSED SURFACE AREA OF ONE SIDE OF ONE LITE	GLAZING IN STORM OR COMBINATION DOORS (Category Class)	GLAZING IN DOORS (Category Class)	GLAZED PANELS REGULATED BY SECTION R308.4.3 (Category Class)	GLAZED PANELS REGULATED BY SECTION R308.4.2 (Category Class)	GLAZING IN DOORS AND ENCLOSURES REGULATED BY SECTION 308.4.5 (Category Class)	SLIDING GLASS DOORS PATIO TYPE (Category Class)
9 square feet or less	I	I	NR	I	II	II
More than 9 square feet	II	II	II	II	II	II

For SI: 1 square foot = 0.0929 m^2.
NR = No Requirement.

TABLE R308.3.1(2)
MINIMUM CATEGORY CLASSIFICATION OF GLAZING USING ANSI Z97.1

EXPOSED SURFACE AREA OF ONE SIDE OF ONE LITE	GLAZED PANELS REGULATED BY SECTION R308.4.3 (Category Class)	GLAZED PANELS REGULATED BY SECTION R308.4.2 (Category Class)	DOORS AND ENCLOSURES REGULATED BY SECTION R308.4.5[a] (Category Class)
9 square feet or less	No requirement	B	A
More than 9 square feet	A	A	A

For SI: 1 square foot = 0.0929 m^2.
a. Use is permitted only by the exception to Section R308.3.1.

INTERNATIONAL CODE COUNCIL®
Copyright © 2019 ICC & NYSDOS. ALL RIGHTS RESERVED. Accessed by Lauren Gualdino (lgualdino@briarcliffmanor.org), (-) Order Number #100880972 on May 08, 2020 07:05 AM (PDT) pursuant to License Agreement with ICC & NYSDOS. No further reproduction, no

100880972

R308.4.3 Glazing in windows. Glazing in an individual fixed or operable panel that meets all of the following conditions shall be considered to be a hazardous location:

1. The exposed area of an individual pane is larger than 9 square feet (0.836 m^2).
2. The bottom edge of the glazing is less than 18 inches (457 mm) above the floor.
3. The top edge of the glazing is more than 36 inches (914 mm) above the floor.
4. One or more walking surfaces are within 36 inches (914 mm), measured horizontally and in a straight line, of the glazing.

Exceptions:

1. Decorative glazing.
2. Where glazing is adjacent to a walking surface and a horizontal rail is installed 34 to 38 inches (864 to 965 mm) above the walking surface. The rail shall be capable of withstanding a horizontal load of 50 pounds per linear foot (730 N/m) without contacting the glass and have a cross-sectional height of not less than $1^1/_2$ inches (38 mm).
3. Outboard panes in insulating glass units and other multiple glazed panels where the bottom edge of the glass is 25 feet (7620 mm) or more above *grade*, a roof, walking surfaces or other horizontal [within 45 degrees (0.79 rad) of horizontal] surface adjacent to the glass exterior.

R308.4.4 Glazing in guards and railings. Glazing in *guards* and railings, including structural baluster panels and nonstructural in-fill panels, regardless of area or height above a walking surface shall be considered to be a hazardous location.

R308.4.4.1 Structural glass baluster panels. Guards with structural glass baluster panels shall be installed with an attached top rail or handrail. The top rail or handrail shall be supported by not less than three glass baluster panels, or shall be otherwise supported to remain in place should one glass baluster panel fail.

Exception: An attached top rail or handrail is not required where the glass baluster panels are laminated glass with two or more glass plies of equal thickness and of the same glass type.

R308.4.5 Glazing and wet surfaces. Glazing in walls, enclosures or fences containing or facing hot tubs, spas, whirlpools, saunas, steam rooms, bathtubs, showers and indoor or outdoor swimming pools where the bottom exposed edge of the glazing is less than 60 inches (1524 mm) measured vertically above any standing or walking surface shall be considered to be a hazardous location. This shall apply to single glazing and each pane in multiple glazing.

Exception: Glazing that is more than 60 inches (1524 mm), measured horizontally and in a straight line, from the water's edge of a bathtub, hot tub, spa, whirlpool or swimming pool or from the edge of a shower, sauna or steam room.

R308.4.6 Glazing adjacent to stairs and ramps. Glazing where the bottom exposed edge of the glazing is less than 36 inches (914 mm) above the plane of the adjacent walking surface of stairways, landings between flights of stairs and ramps shall be considered to be a hazardous location.

Exceptions:

1. Where glazing is adjacent to a walking surface and a horizontal rail is installed at 34 to 38 inches (864 to 965 mm) above the walking surface. The rail shall be capable of withstanding a horizontal load of 50 pounds per linear foot (730 N/m) without contacting the glass and have a cross-sectional height of not less than $1^1/_2$ inches (38 mm).
2. Glazing 36 inches (914 mm) or more measured horizontally from the walking surface.

R308.4.7 Glazing adjacent to the bottom stair landing. Glazing adjacent to the landing at the bottom of a stairway where the glazing is less than 36 inches (914 mm) above the landing and within a 60-inch (1524 mm) horizontal arc less than 180 degrees (3.14 rad) from the bottom tread nosing shall be considered to be a hazardous location. (See Figure R308.4.7.)

Exception: Where the glazing is protected by a *guard* complying with Section R312 and the plane of the glass is more than 18 inches (457 mm) from the *guard*.

R308.5 Site-built windows. Site-built windows shall comply with Section 2404 of the *Building Code of New York State.*

R308.6 Skylights and sloped glazing. Skylights and sloped glazing shall comply with the following sections.

R308.6.1 Definitions. The following terms are defined in Chapter 2:

SKYLIGHT, UNIT.

SKYLIGHTS AND SLOPED GLAZING.

TUBULAR DAYLIGHTING DEVICE (TDD).

R308.6.2 Materials. Glazing materials shall be limited to the following:

1. Laminated glass with not less than a 0.015-inch (0.38 mm) polyvinyl butyral interlayer for glass panes 16 square feet (1.5 m^2) or less in area located such that the highest point of the glass is not more than 12 feet (3658 mm) above a walking surface; for higher or larger sizes, the interlayer thickness shall be not less than 0.030 inch (0.76 mm).
2. Fully tempered glass.
3. Heat-strengthened glass.
4. Wired glass.
5. *Approved* rigid plastics.

R308.6.3 Screens, general. For fully tempered or heat-strengthened glass, a retaining screen meeting the require-

INTERNATIONAL CODE COUNCIL®
Copyright © 2019 ICC & NYSDOS. ALL RIGHTS RESERVED. Accessed by Lauren Gualdino (lgualdino@briarcliffmanor.org), (-) Order Number #100880972 on May 08, 2020 07:05 AM (PDT) pursuant to License Agreement with ICC & NYSDOS. No further reproduction, no

100880972

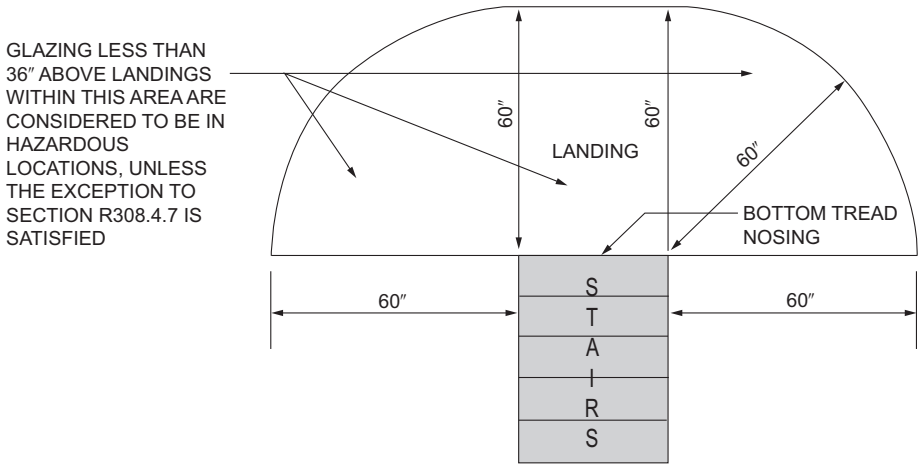

For SI: 1 inch = 25.4 mm.

FIGURE R308.4.7
HAZARDOUS GLAZING LOCATIONS AT BOTTOM STAIR LANDINGS

ments of Section R308.6.7 shall be installed below the glass, except for fully tempered glass that meets either condition listed in Section R308.6.5.

R308.6.4 Screens with multiple glazing. Where the inboard pane is fully tempered, heat-strengthened or wired glass, a retaining screen meeting the requirements of Section R308.6.7 shall be installed below the glass, except for either condition listed in Section R308.6.5. Other panes in the multiple glazing shall be of any type listed in Section R308.6.2.

R308.6.5 Screens not required. Screens shall not be required where fully tempered glass is used as single glazing or the inboard pane in multiple glazing and either of the following conditions are met:

1. The glass area is 16 square feet (1.49 m^2) or less; the highest point of glass is not more than 12 feet (3658 mm) above a walking surface; the nominal glass thickness is not more than $^3/_{16}$ inch (4.8 mm); and (for multiple glazing only) the other pane or panes are fully tempered, laminated or wired glass.
2. The glass area is greater than 16 square feet (1.49 m^2); the glass is sloped 30 degrees (0.52 rad) or less from vertical; and the highest point of glass is not more than 10 feet (3048 mm) above a walking surface.

R308.6.6 Glass in greenhouses. Any glazing material is permitted to be installed without screening in the sloped areas of greenhouses, provided that the greenhouse height at the ridge does not exceed 20 feet (6096 mm) above *grade*.

R308.6.7 Screen characteristics. The screen and its fastenings shall be capable of supporting twice the weight of the glazing, be firmly and substantially fastened to the framing members, and have a mesh opening of not more than 1 inch by 1 inch (25 mm by 25 mm).

R308.6.8 Curbs for skylights. Unit skylights installed in a roof with a pitch of less than three units vertical in 12 units horizontal (25-percent slope) shall be mounted on a curb extending not less than 4 inches (102 mm) above the plane of the roof, unless otherwise specified in the manufacturer's installation instructions.

R308.6.9 Testing and labeling. Unit skylights and tubular daylighting devices shall be tested by an *approved* independent laboratory, and bear a *label* identifying manufacturer, performance grade rating and *approved* inspection agency to indicate compliance with the requirements of AAMA/WDMA/CSA 101/I.S.2/A440.

R308.6.9.1 Comparative analysis for glass-glazed unit skylights. Structural wind load design pressures for glass-glazed unit skylights different than the size tested in accordance with Section R308.6.9 shall be permitted to be different than the design value of the tested unit where determined in accordance with one of the following comparative analysis methods:

1. Structural wind load design pressures for glass-glazed unit skylights smaller than the size tested in accordance with Section R308.6.9 shall be permitted to be higher than the design value of the tested unit provided that such higher pressures are determined by accepted engineering analysis. Components of the smaller unit shall be the same as those of the tested unit. Such calculated design pressures shall be validated by an additional test of the glass-glazed unit skylight having the highest allowable design pressure.
2. In accordance with WDMA I.S. 11.

SECTION R309
GARAGES AND CARPORTS

R309.1 Floor surface. Garage floor surfaces shall be of *approved* noncombustible material.

INTERNATIONAL CODE COUNCIL®
Copyright © 2019 ICC & NYSDOS. ALL RIGHTS RESERVED. Accessed by Lauren Gualdino (lgualdino@briarcliffmanor.org), (-) Order Number #100880972 on May 08, 2020 07:05 AM (PDT) pursuant to License Agreement with ICC & NYSDOS. No further reproduction, no

100880972

The area of floor used for parking of automobiles or other vehicles shall be sloped to facilitate the movement of liquids to a drain or toward the main vehicle entry doorway.

R309.2 Carports. Carports shall be open on not less than two sides. Carport floor surfaces shall be of *approved* noncombustible material. Carports not open on two or more sides shall be considered to be a garage and shall comply with the provisions of this section for garages.

The area of floor used for parking of automobiles or other vehicles shall be sloped to facilitate the movement of liquids to a drain or toward the main vehicle entry doorway.

Exception: Asphalt surfaces shall be permitted at ground level in carports.

R309.3 Flood hazard areas. For buildings located in flood hazard areas as established by Table R301.2(1), garage floors shall be one of the following:

1. Elevated to or above the design flood elevation as determined in accordance with Section R322.
2. Located below the design flood elevation provided that the floors are at or above *grade* on not less than one side, are used solely for parking, building access or storage, meet the requirements of Section R322 and are otherwise constructed in accordance with this code.

R309.4 Automatic garage door openers. Automatic garage door openers, if provided, shall be *listed* and *labeled* in accordance with UL 325.

R309.5 Fire sprinklers. Private garages shall be protected by fire sprinklers where the garage wall has been designed based on Table R302.1(2), Note a. Sprinklers in garages shall be connected to an automatic sprinkler system that complies with Section P2904. Garage sprinklers shall be residential sprinklers or quick-response sprinklers, designed to provide a density of 0.05 gpm/ft^2. Garage doors shall not be considered obstructions with respect to sprinkler placement.

SECTION R310
EMERGENCY ESCAPE AND RESCUE OPENINGS

R310.1 Emergency escape and rescue opening required. *Basements, habitable attics* and every sleeping room shall have not less than one operable emergency escape and rescue opening. Where *basements* contain one or more sleeping rooms, an emergency escape and rescue opening shall be required in each sleeping room. Emergency escape and rescue openings shall open directly into a public way, or to a *yard* or court that opens to a public way.

Exceptions:

1. Storm shelters and *basements* used only to house mechanical *equipment* not exceeding a total floor area of 200 square feet (18.58 m^2).
2. Where the *dwelling* or *townhouse* is equipped with an automatic sprinkler system installed in accordance with Section P2904, sleeping rooms in basements shall not be required to have emergency escape and rescue openings provided that the basement has one of the following:
   2.1. One means of egress complying with Section R311 and one emergency escape and rescue opening.
   2.2. Two means of egress complying with Section R311.

R310.1.1 Operational constraints and opening control devices. Emergency escape and rescue openings shall be operational from the inside of the room without the use of keys, tools or special knowledge. Window opening control devices on windows serving as a required emergency escape and rescue opening shall comply with ASTM F2090.

R310.2 Emergency escape and rescue openings. Emergency escape and rescue openings shall have minimum dimensions as specified in this section.

R310.2.1 Minimum opening area. Emergency escape and rescue openings shall have a net clear opening of not less than 5.7 square feet (0.530 m^2). The net clear opening dimensions required by this section shall be obtained by the normal operation of the emergency escape and rescue opening from the inside. The net clear height of the opening shall be not less than 24 inches (610 mm) and the net clear width shall be not less than 20 inches (508 mm).

Exception: *Grade floor openings* or *below-grade* openings shall have a net clear opening area of not less than 5 square feet (0.465 m^2).

R310.2.2 Window sill height. Where a window is provided as the emergency escape and rescue opening, it shall have a sill height of not more than 44 inches (1118 mm) above the floor; where the sill height is below *grade*, it shall be provided with a window well in accordance with Section R310.2.3.

R310.2.3 Window wells. The horizontal area of the window well shall be not less than 9 square feet (0.9 m^2), with a horizontal projection and width of not less than 36 inches (914 mm). The area of the window well shall allow the emergency escape and rescue opening to be fully opened.

Exception: The ladder or steps required by Section R310.2.3.1 shall be permitted to encroach not more than 6 inches (152 mm) into the required dimensions of the window well.

R310.2.3.1 Ladder and steps. Window wells with a vertical depth greater than 44 inches (1118 mm) shall be equipped with a permanently affixed ladder or steps usable with the window in the fully open position. Ladders or steps required by this section shall not be required to comply with Section R311.7. Ladders or rungs shall have an inside width of not less than 12 inches (305 mm), shall project not less than 3 inches (76 mm) from the wall and shall be spaced not more than 18 inches (457 mm) on center vertically for the full height of the window well.

INTERNATIONAL CODE COUNCIL®
Copyright © 2019 ICC & NYSDOS. ALL RIGHTS RESERVED. Accessed by Lauren Gualdino (lgualdino@briarcliffmanor.org), (-) Order Number #100880972 on May 08, 2020 07:05 AM (PDT) pursuant to License Agreement with ICC & NYSDOS. No further reproduction, no

100880972

R310.2.3.2 Drainage. Window wells shall be designed for proper drainage by connecting to the building's foundation drainage system required by Section R405.1 or by an approved alternative method.

Exception: A drainage system for window wells is not required where the foundation is on well-drained soil or sand-gravel mixture soils in accordance with the United Soil Classification System, Group I Soils, as detailed in Table R405.1.

R310.2.4 Emergency escape and rescue openings under decks and porches. Emergency escape and rescue openings installed under decks and porches shall be fully openable and provide a path not less than 36 inches (914 mm) in height to a *yard* or court.

R310.2.5 Replacement windows. Replacement windows installed in buildings meeting the scope of this code shall be exempt from the maximum sill height requirements of Section R310.2.2 and the requirements of Section R310.2.1, provided that the replacement window meets the following conditions:

1. The replacement window is the manufacturer's largest standard size window that will fit within the existing frame or existing rough opening. The replacement window is of the same operating style as the existing window or a style that provides for an equal or greater window opening area than the existing window.
2. The replacement window is not part of a change of occupancy.

R310.3 Emergency escape and rescue doors. Where a door is provided as the required emergency escape and rescue opening, it shall be a side-hinged door or a slider. Where the opening is below the adjacent grade, it shall be provided with an area well.

R310.3.1 Minimum door opening size. The minimum net clear height opening for any door that serves as an emergency and escape rescue opening shall be in accordance with Section R310.2.1.

R310.3.2 Area wells. Area wells shall have a width of not less than 36 inches (914 mm). The area well shall be sized to allow the emergency escape and rescue door to be fully opened.

R310.3.2.1 Ladder and steps. Area wells with a vertical depth greater than 44 inches (1118 mm) shall be equipped with a permanently affixed ladder or steps usable with the door in the fully open position. Ladders or steps required by this section shall not be required to comply with Section R311.7. Ladders or rungs shall have an inside width of not less than 12 inches (305 mm), shall project not less than 3 inches (76 mm) from the wall and shall be spaced not more than 18 inches (457 mm) on center vertically for the full height of the exterior stairwell.

R310.3.2.2 Drainage. Area wells shall be designed for proper drainage by connecting to the building's foundation drainage system required by Section R405.1 or by an *approved* alternative method.

Exception: A drainage system for area wells is not required where the foundation is on well-drained soil or sand-gravel mixture soils in accordance with the United Soil Classification System, Group I Soils, as detailed in Table R405.1.

R310.4 Bars, grilles, covers and screens. Where bars, grilles, covers, screens or similar devices are placed over emergency escape and rescue openings, area wells, or window wells, the minimum net clear opening size shall comply with Sections R310.2.1 through R310.2.3, and such devices shall be releasable or removable from the inside without the use of a key, tool, special knowledge or force greater than that required for the normal operation of the escape and rescue opening.

R310.5 Dwelling additions. Where *dwelling additions* contain sleeping rooms, an emergency escape and rescue opening shall be provided in each new sleeping room. Where *dwelling additions* have *basements*, an emergency escape and rescue opening shall be provided in the new *basement*.

Exceptions:

1. An emergency escape and rescue opening is not required in a new *basement* that contains a sleeping room with an emergency escape and rescue opening.
2. An emergency escape and rescue opening is not required in a new *basement* where there is an emergency escape and rescue opening in an existing *basement* that is *accessed* from the new *basement*.

[NY] R310.6 Alterations or repairs of existing basements. Alterations or repairs of existing basements shall conform with Appendix J of this code.

SECTION R311
MEANS OF EGRESS

R311.1 Means of egress. *Dwellings* shall be provided with a means of egress in accordance with this section. The means of egress shall provide a continuous and unobstructed path of vertical and horizontal egress travel from all portions of the *dwelling* to the required egress door without requiring travel through a garage. The required egress door shall open directly into a public way or to a *yard* or court that opens to a public way.

[NY] R311.1.1 Lodging house evacuation notice. In addition to, but not in limitation of, any other requirement of this code, a fire-safety notice shall be affixed to the occupied side of the entrance door of each sleeping unit or dwelling unit in lodging houses constructed pursuant to Exception 6 of Section R101.2 of this code. Such notice shall indicate all of the following:

1. Location of nearest exits and fire alarms;
2. Procedures to be followed when a fire or smoke detector gives warning; and
3. Procedures to be followed in the event of fire or smoke development.

INTERNATIONAL CODE COUNCIL®
Copyright © 2019 ICC & NYSDOS. ALL RIGHTS RESERVED. Accessed by Lauren Gualdino (lgualdino@briarcliffmanor.org), (-) Order Number #100880972 on May 08, 2020 07:05 AM (PDT) pursuant to License Agreement with ICC & NYSDOS. No further reproduction, no

100880972

R311.2 Egress door. Not less than one egress door shall be provided for each *dwelling* unit. The egress door shall be side-hinged, and shall provide a clear width of not less than 32 inches (813 mm) where measured between the face of the door and the stop, with the door open 90 degrees (1.57 rad). The clear height of the door opening shall be not less than 78 inches (1981 mm) in height measured from the top of the threshold to the bottom of the stop. Other doors shall not be required to comply with these minimum dimensions. Egress doors shall be readily openable from inside the *dwelling* without the use of a key or special knowledge or effort.

R311.3 Floors and landings at exterior doors. There shall be a landing or floor on each side of each exterior door. The width of each landing shall be not less than the door served. Landings shall have a dimension of not less than 36 inches (914 mm) measured in the direction of travel. The slope at exterior landings shall not exceed $^1/_4$ unit vertical in 12 units horizontal (2 percent).

Exception: Exterior balconies less than 60 square feet (5.6 m^2) and only *accessed* from a door are permitted to have a landing that is less than 36 inches (914 mm) measured in the direction of travel.

[NY] R311.3.1 Floor elevations at the required egress doors. Landings or finished floors at the required egress door shall be not more than $1^1/_2$ inches (38 mm) lower than the top of the threshold.

Exception: The landing or floor on the exterior side shall be not more than $8^1/_4$ inches (209 mm) below the top of the threshold provided that the door does not swing over the landing or floor.

Where exterior landings or floors serving the required egress door are not at *grade*, they shall be provided with access to *grade* by means of a ramp in accordance with Section R311.8 or a stairway in accordance with Section R311.7.

R311.3.2 Floor elevations at other exterior doors. Doors other than the required egress door shall be provided with landings or floors not more than $7^3/_4$ inches (196 mm) below the top of the threshold.

Exception: A top landing is not required where a stairway of not more than two risers is located on the exterior side of the door, provided that the door does not swing over the stairway.

R311.3.3 Storm and screen doors. Storm and screen doors shall be permitted to swing over exterior stairs and landings.

R311.4 Vertical egress. Egress from habitable levels including habitable attics and *basements* that are not provided with an egress door in accordance with Section R311.2 shall be by a ramp in accordance with Section R311.8 or a stairway in accordance with Section R311.7.

R311.5 Landing, deck, balcony and stair construction and attachment. Exterior landings, decks, balconies, stairs and similar facilities shall be positively anchored to the primary structure to resist both vertical and lateral forces or shall be designed to be self-supporting. Attachment shall not be accomplished by use of toenails or nails subject to withdrawal.

R311.6 Hallways. The width of a hallway shall be not less than 3 feet (914 mm).

R311.7 Stairways.

R311.7.1 Width. Stairways shall be not less than 36 inches (914 mm) in clear width at all points above the permitted handrail height and below the required headroom height. The clear width of stairways at and below the handrail height, including treads and landings, shall be not less than $31^1/_2$ inches (787 mm) where a handrail is installed on one side and 27 inches (698 mm) where handrails are installed on both sides.

Exception: The width of spiral stairways shall be in accordance with Section R311.7.10.1.

R311.7.2 Headroom. The headroom in stairways shall be not less than 6 feet 8 inches (2032 mm) measured vertically from the sloped line adjoining the tread nosing or from the floor surface of the landing or platform on that portion of the stairway.

Exceptions:

1. Where the nosings of treads at the side of a flight extend under the edge of a floor opening through which the stair passes, the floor opening shall not project horizontally into the required headroom more than $4^3/_4$ inches (121 mm).
2. The headroom for spiral stairways shall be in accordance with Section R311.7.10.1.

R311.7.3 Vertical rise. A flight of stairs shall not have a vertical rise larger than 151 inches (3835 mm) between floor levels or landings.

R311.7.4 Walkline. The walkline across winder treads and landings shall be concentric to the turn and parallel to the direction of travel entering and exiting the turn. The walkline shall be located 12 inches (305 mm) from the inside of the turn. The 12-inch (305 mm) dimension shall be measured from the widest point of the clear stair width at the walking surface. Where winders are adjacent within a flight, the point of the widest clear stair width of the adjacent winders shall be used.

R311.7.5 Stair treads and risers. Stair treads and risers shall meet the requirements of this section. For the purposes of this section, dimensions and dimensioned surfaces shall be exclusive of carpets, rugs or runners.

[NY] R311.7.5.1 Risers. The riser height shall be not more than $8^1/_4$ inches (209 mm). The riser shall be measured vertically between leading edges of the adjacent treads. The greatest riser height within any flight of stairs shall not exceed the smallest by more than $^3/_8$ inch (9.5 mm). Risers shall be vertical or sloped from the underside of the nosing of the tread above at an angle not more than 30 degrees (0.51 rad) from the vertical. At open risers, openings located more than 30 inches (762 mm), as

INTERNATIONAL CODE COUNCIL®
Copyright © 2019 ICC & NYSDOS. ALL RIGHTS RESERVED. Accessed by Lauren Gualdino (lgualdino@briarcliffmanor.org), (-) Order Number #100880972 on May 08, 2020 07:05 AM (PDT) pursuant to License Agreement with ICC & NYSDOS. No further reproduction, no

100880972

measured vertically, to the floor or grade below shall not permit the passage of a 4-inch-diameter (102 mm) sphere.

Exceptions:

1. The opening between adjacent treads is not limited on spiral stairways.
2. The riser height of spiral stairways shall be in accordance with Section R311.7.10.1.

[NY] R311.7.5.2 Treads. The tread depth shall be not less than 9 inches (229 mm). The tread depth shall be measured horizontally between the vertical planes of the foremost projection of adjacent treads and at a right angle to the tread's leading edge. The greatest tread depth within any flight of stairs shall not exceed the smallest by more than $^3/_8$ inch (9.5 mm).

R311.7.5.2.1 Winder treads. Winder treads shall have a tread depth of not less than 10 inches (254 mm) measured between the vertical planes of the foremost projection of adjacent treads at the intersections with the walkline. Winder treads shall have a tread depth of not less than 6 inches (152 mm) at any point within the clear width of the stair. Within any flight of stairs, the largest winder tread depth at the walkline shall not exceed the smallest winder tread by more than $^3/_8$ inch (9.5 mm). Consistently shaped winders at the walkline shall be allowed within the same flight of stairs as rectangular treads and shall not be required to be within $^3/_8$ inch (9.5 mm) of the rectangular tread depth.

Exception: The tread depth at spiral stairways shall be in accordance with Section R311.7.10.1.

R311.7.5.3 Nosings. Nosings at treads, landings and floors of stairways shall have a radius of curvature at the nosing not greater than $^9/_{16}$ inch (14 mm) or a bevel not greater than $^1/_2$ inch (12.7 mm). A nosing projection not less than $^3/_4$ inch (19 mm) and not more than $1^1/_4$ inches (32 mm) shall be provided on stairways. The greatest nosing projection shall not exceed the smallest nosing projection by more than $^3/_8$ inch (9.5 mm) within a stairway.

Exception: A nosing projection is not required where the tread depth is not less than 11 inches (279 mm).

R311.7.5.4 Exterior plastic composite stair treads. Plastic composite exterior stair treads shall comply with the provisions of this section and Section R507.2.2.

R311.7.6 Landings for stairways. There shall be a floor or landing at the top and bottom of each stairway. The width perpendicular to the direction of travel shall be not less than the width of the flight served. For landings of shapes other than square or rectangular, the depth at the walk line and the total area shall be not less than that of a quarter circle with a radius equal to the required landing width. Where the stairway has a straight run, the depth in the direction of travel shall be not less than 36 inches (914 mm).

Exception: A floor or landing is not required at the top of an interior flight of stairs, including stairs in an enclosed garage, provided that a door does not swing over the stairs.

R311.7.7 Stairway walking surface. The walking surface of treads and landings of stairways shall be sloped not steeper than one unit vertical in 48 inches horizontal (2-percent slope).

R311.7.8 Handrails. Handrails shall be provided on not less than one side of each flight of stairs with four or more risers.

R311.7.8.1 Height. Handrail height, measured vertically from the sloped plane adjoining the tread nosing, or finish surface of ramp slope, shall be not less than 34 inches (864 mm) and not more than 38 inches (965 mm).

Exceptions:

1. The use of a volute, turnout or starting easing shall be allowed over the lowest tread.
2. Where handrail fittings or bendings are used to provide continuous transition between flights, transitions at winder treads, the transition from handrail to *guard*, or used at the start of a flight, the handrail height at the fittings or bendings shall be permitted to exceed 38 inches (956 mm).

R311.7.8.2 Handrail projection. Handrails shall not project more than $4^1/_2$ inches (114 mm) on either side of the stairway.

Exception: Where nosings of landings, floors or passing flights project into the stairway reducing the clearance at passing handrails, handrails shall project not more than $6^1/_2$ inches (165 mm) into the stairway, provided that the stair width and handrail clearance are not reduced to less than that required.

R311.7.8.3 Handrail clearance. Handrails adjacent to a wall shall have a space of not less than $1^1/_2$ inches (38 mm) between the wall and the handrails.

R311.7.8.4 Continuity. Handrails shall be continuous for the full length of the flight, from a point directly above the top riser of the flight to a point directly above the lowest riser of the flight. Handrail ends shall be returned or shall terminate in newel posts or safety terminals.

Exceptions:

1. Handrail continuity shall be permitted to be interrupted by a newel post at a turn in a flight with winders, at a landing, or over the lowest tread.
2. A volute, turnout or starting easing shall be allowed to terminate over the lowest tread.

INTERNATIONAL CODE COUNCIL®
Copyright © 2019 ICC & NYSDOS. ALL RIGHTS RESERVED. Accessed by Lauren Gualdino (lgualdino@briarcliffmanor.org), (-) Order Number #100880972 on May 08, 2020 07:05 AM (PDT) pursuant to License Agreement with ICC & NYSDOS. No further reproduction, no

100880972

R311.7.8.5 Grip size. Required handrails shall be of one of the following types or provide equivalent graspability.

1. Type I. Handrails with a circular cross section shall have an outside diameter of not less than $1^1/_4$ inches (32 mm) and not greater than 2 inches (51 mm). If the handrail is not circular, it shall have a perimeter of not less than 4 inches (102 mm) and not greater than $6^1/_4$ inches (160 mm) and a cross section of not more than $2^1/_4$ inches (57 mm). Edges shall have a radius of not less than 0.01 inch (0.25 mm).
2. Type II. Handrails with a perimeter greater than $6^1/_4$ inches (160 mm) shall have a graspable finger recess area on both sides of the profile. The finger recess shall begin within $^3/_4$ inch (19 mm) measured vertically from the tallest portion of the profile and have a depth of not less than $^5/_{16}$ inch (8 mm) within $^7/_8$ inch (22 mm) below the widest portion of the profile. This required depth shall continue for not less than $^3/_8$ inch (10 mm) to a level that is not less than $1^3/_4$ inches (45 mm) below the tallest portion of the profile. The width of the handrail above the recess shall be not less than $1^1/_4$ inches (32 mm) and not more than $2^3/_4$ inches (70 mm). Edges shall have a radius of not less than 0.01 inch (0.25 mm).

R311.7.8.6 Exterior plastic composite handrails. Plastic composite exterior handrails shall comply with the requirements of Section R507.2.2.

R311.7.9 Illumination. Stairways shall be provided with illumination in accordance with Sections R303.7 and R303.8.

R311.7.10 Special stairways. Spiral stairways and bulkhead enclosure stairways shall comply with the requirements of Section R311.7 except as specified in Sections R311.7.10.1 and R311.7.10.2.

R311.7.10.1 Spiral stairways. The clear width at and below the handrails at spiral stairways shall be not less than 26 inches (660 mm) and the walkline radius shall be not greater than $24^1/_2$ inches (622 mm). Each tread shall have a depth of not less than $6^3/_4$ inches (171 mm) at the walkline. Treads shall be identical, and the rise shall be not more than $9^1/_2$ inches (241 mm). Headroom shall be not less than 6 feet 6 inches (1982 mm).

R311.7.10.2 Bulkhead enclosure stairways. Stairways serving bulkhead enclosures, not part of the required building egress, providing access from the outside *grade* level to the *basement* shall be exempt from the requirements of Sections R311.3 and R311.7 where the height from the *basement* finished floor level to *grade* adjacent to the stairway is not more than 8 feet (2438 mm) and the *grade* level opening to the stairway is covered by a bulkhead enclosure with hinged doors or other *approved* means.

R311.7.11 Alternating tread devices. Alternating tread devices shall not be used as an element of a means of egress. Alternating tread devices shall be permitted provided that a required means of egress stairway or ramp serves the same space at each adjoining level or where a means of egress is not required. The clear width at and below the handrails shall be not less than 20 inches (508 mm).

Exception: Alternating tread devices are allowed to be used as an element of a means of egress for lofts, mezzanines and similar areas of 200 gross square feet (18.6 m^2) or less where such devices do not provide exclusive access to a kitchen or bathroom.

R311.7.11.1 Treads of alternating tread devices. Alternating tread devices shall have a tread depth of not less than 5 inches (127 mm), a projected tread depth of not less than $8^1/_2$ inches (216 mm), a tread width of not less than 7 inches (178 mm) and a riser height of not more than $9^1/_2$ inches (241 mm). The tread depth shall be measured horizontally between the vertical planes of the foremost projections of adjacent treads. The riser height shall be measured vertically between the leading edges of adjacent treads. The riser height and tread depth provided shall result in an angle of ascent from the horizontal of between 50 and 70 degrees (0.87 and 1.22 rad). The initial tread of the device shall begin at the same elevation as the platform, landing or floor surface.

R311.7.11.2 Handrails of alternating tread devices. Handrails shall be provided on both sides of alternating tread devices and shall comply with Sections R311.7.8.2 to R311.7.8.6. Handrail height shall be uniform, not less than 30 inches (762 mm) and not more than 34 inches (864 mm).

R311.7.12 Ship's ladders. Ship's ladders shall not be used as an element of a means of egress. Ship's ladders shall be permitted provided that a required means of egress stairway or ramp serves the same space at each adjoining level or where a means of egress is not required. The clear width at and below the handrails shall be not less than 20 inches.

Exception: Ship's ladders are allowed to be used as an element of a means of egress for lofts, mezzanines and similar areas of 200 gross square feet (18.6 m^2) or less that do not provide exclusive access to a kitchen or bathroom.

R311.7.12.1 Treads of ship's ladders. Treads shall have a depth of not less than 5 inches (127 mm). The tread shall be projected such that the total of the tread depth plus the nosing projection is not less than $8^1/_2$ inches (216 mm). The riser height shall be not more than $9^1/_2$ inches (241 mm).

R311.7.12.2 Handrails of ship's ladders. Handrails shall be provided on both sides of ship's ladders and shall comply with Sections R311.7.8.2 to R311.7.8.6. Handrail height shall be uniform, not less than 30 inches (762 mm) and not more than 34 inches (864 mm).

R311.8 Ramps.

R311.8.1 Maximum slope. Ramps serving the egress door required by Section R311.2 shall have a slope of not more than 1 unit vertical in 12 units horizontal (8.3-per-

INTERNATIONAL CODE COUNCIL®
Copyright © 2019 ICC & NYSDOS. ALL RIGHTS RESERVED. Accessed by Lauren Gualdino (lgualdino@briarcliffmanor.org), (-) Order Number #100880972 on May 08, 2020 07:05 AM (PDT) pursuant to License Agreement with ICC & NYSDOS. No further reproduction, no

100880972

cent slope). Other ramps shall have a maximum slope of 1 unit vertical in 8 units horizontal (12.5 percent).

Exception: Where it is technically infeasible to comply because of site constraints, ramps shall have a slope of not more than 1 unit vertical in 8 units horizontal (12.5 percent).

R311.8.2 Landings required. There shall be a floor or landing at the top and bottom of each ramp, where doors open onto ramps, and where ramps change directions. The width of the landing perpendicular to the ramp slope shall be not less than 36 inches (914 mm).

R311.8.3 Handrails required. Handrails shall be provided on not less than one side of ramps exceeding a slope of one unit vertical in 12 units horizontal (8.33-percent slope).

R311.8.3.1 Height. Handrail height, measured above the finished surface of the ramp slope, shall be not less than 34 inches (864 mm) and not more than 38 inches (965 mm).

R311.8.3.2 Grip size. Handrails on ramps shall comply with Section R311.7.8.5.

R311.8.3.3 Continuity. Handrails where required on ramps shall be continuous for the full length of the ramp. Handrail ends shall be returned or shall terminate in newel posts or safety terminals. Handrails adjacent to a wall shall have a space of not less than $1^1/_2$ inches (38 mm) between the wall and the handrails.

SECTION R312
GUARDS AND WINDOW FALL PROTECTION

R312.1 Guards. *Guards* shall be provided in accordance with Sections R312.1.1 through R312.1.4.

R312.1.1 Where required. *Guards* shall be provided for those portions of open-sided walking surfaces, including stairs, ramps and landings, that are located more than 30 inches (762 mm) measured vertically to the floor or *grade* below at any point within 36 inches (914 mm) horizontally to the edge of the open side. Insect screening shall not be considered as a *guard*.

R312.1.2 Height. Required *guards* at open-sided walking surfaces, including stairs, porches, balconies or landings, shall be not less than 36 inches (914 mm) in height as measured vertically above the adjacent walking surface or the line connecting the *nosings*.

Exceptions:

1. *Guards* on the open sides of stairs shall have a height of not less than 34 inches (864 mm) measured vertically from a line connecting the *nosings*.
2. Where the top of the *guard* serves as a handrail on the open sides of stairs, the top of the *guard* shall be not less than 34 inches (864 mm) and not more than 38 inches (965 mm) as measured vertically from a line connecting the *nosings*.

R312.1.3 Opening limitations. Required *guards* shall not have openings from the walking surface to the required *guard* height that allow passage of a sphere 4 inches (102 mm) in diameter.

Exceptions:

1. The triangular openings at the open side of stair, formed by the riser, tread and bottom rail of a *guard*, shall not allow passage of a sphere 6 inches (153 mm) in diameter.
2. *Guards* on the open side of stairs shall not have openings that allow passage of a sphere $4^3/_8$ inches (111 mm) in diameter.

R312.1.4 Exterior plastic composite guards. Plastic composite exterior *guards* shall comply with the requirements of Section R317.4.

R312.2 Window fall protection. Window fall protection shall be provided in accordance with Sections R312.2.1 and R312.2.2.

R312.2.1 Window sills. In dwelling units, where the top of the sill of an operable window opening is located less than 24 inches (610 mm) above the finished floor and greater than 72 inches (1829 mm) above the finished *grade* or other surface below on the exterior of the building, the operable window shall comply with one of the following:

1. Operable window openings will not allow a 4-inch-diameter (102 mm) sphere to pass through where the openings are in their largest opened position.
2. Operable windows are provided with window fall prevention devices that comply with ASTM F2090.
3. Operable windows are provided with window opening control devices that comply with Section R312.2.2.

R312.2.2 Window opening control devices. Window opening control devices shall comply with ASTM F2090. The window opening control device, after operation to release the control device allowing the window to fully open, shall not reduce the net clear opening area of the window unit to less than the area required by Section R310.2.1.

SECTION R313
AUTOMATIC FIRE SPRINKLER SYSTEMS

[NY] R313.1 Townhouse automatic fire sprinkler systems. An automatic residential fire sprinkler system shall be installed in *townhouses* where such *townhouses* have a height of three *stories above grade plane*.

R313.1.1 Design and installation. Automatic residential fire sprinkler systems for *townhouses* shall be designed and installed in accordance with Section P2904 or NFPA 13D.

[NY] R313.2 One- and two-family dwellings automatic fire sprinkler systems. An automatic residential fire sprinkler system shall be installed in one- and two-family *dwellings* where such *dwellings* have a height of three *stories above grade plane*.

INTERNATIONAL CODE COUNCIL®
Copyright © 2019 ICC & NYSDOS. ALL RIGHTS RESERVED. Accessed by Lauren Gualdino (lgualdino@briarcliffmanor.org), (-) Order Number #100880972 on May 08, 2020 07:05 AM (PDT) pursuant to License Agreement with ICC & NYSDOS. No further reproduction, no

100880972

R313.2.1 Design and installation. Automatic residential fire sprinkler systems shall be designed and installed in accordance with Section P2904 or NFPA 13D.

SECTION R314
SMOKE ALARMS AND HEAT DETECTION

[NY] R314.1 General. Smoke alarms and heat detection shall comply with NFPA 72 and Section R314.

[NY] R314.1.1 Listings. Smoke alarms shall be *listed* in accordance with UL 217. Heat detection shall be *listed* in accordance with UL 521 or UL 539, as appropriate for the intended application. Combination smoke and carbon monoxide alarms shall be *listed* in accordance with UL 217 and UL 2034.

[NY] R314.2 Where required. Smoke alarms and heat detection shall be provided in accordance with this section.

[NY] R314.2.1 New construction. Smoke alarms shall be provided in *dwelling units*. Heat detection shall be provided in new attached garages.

[NY] R314.2.2 Smoke alarms in existing buildings. Existing dwellings undergoing repair, alteration, change of occupancy, addition or relocation shall be provided with smoke alarms as required by Appendix J.

[NY] R314.2.3 Attached garages. Heat detection rated for the ambient outdoor temperatures shall be installed in new garages that are attached to or located within new and existing dwellings. Heat detection shall be installed in a central location and in accordance with the manufacturer's instructions.

Exception: Heat detection shall not be required in dwellings without commercial power.

R314.3 Location. Smoke alarms shall be installed in the following locations:

1. In each sleeping room.
2. Outside each separate sleeping area in the immediate vicinity of the bedrooms.
3. On each additional *story* of the *dwelling*, including *basements* and *habitable attics* and not including crawl spaces and uninhabitable *attics*. In *dwellings* or *dwelling units* with split levels and without an intervening door between the adjacent levels, a smoke alarm installed on the upper level shall suffice for the adjacent lower level provided that the lower level is less than one full *story* below the upper level.
4. Smoke alarms shall be installed not less than 3 feet (914 mm) horizontally from the door or opening of a bathroom that contains a bathtub or shower unless this would prevent placement of a smoke alarm required by this section.

R314.3.1 Installation near cooking appliances. Smoke alarms shall not be installed in the following locations unless this would prevent placement of a smoke alarm in a location required by Section R314.3.

1. Ionization smoke alarms shall not be installed less than 20 feet (6096 mm) horizontally from a permanently installed cooking *appliance*.
2. Ionization smoke alarms with an alarm-silencing switch shall not be installed less than 10 feet (3048 mm) horizontally from a permanently installed cooking *appliance*.
3. Photoelectric smoke alarms shall not be installed less than 6 feet (1828 mm) horizontally from a permanently installed cooking *appliance*.

[NY] R314.4 Interconnection. Where more than one smoke alarm is required to be installed within an individual dwelling unit in accordance with Section R314.3, the alarm devices shall be interconnected in such a manner that the actuation of one alarm will activate all of the alarms in the individual *dwelling unit*. Physical interconnection of smoke alarms shall not be required where listed wireless alarms are installed and all alarms sound upon activation of one alarm.

Exception: Smoke alarms and alarms installed to satisfy Section R314.4.1 shall not be required to be interconnected to existing smoke alarms where such existing smoke alarms are not interconnected or where such new smoke alarm or alarm is not capable of being interconnected to the existing smoke alarms.

[NY] R314.4.1 Heat detection interconnection. Heat detection shall be connected to an alarm or smoke alarm that is installed in the dwelling unit. Alarms and smoke alarms that are installed for this purpose shall be located in a hallway, room or other location that will provide occupant notification.

R314.5 Combination alarms. Combination smoke and carbon monoxide alarms shall be permitted to be used in lieu of smoke alarms.

[NY] R314.6 Power source. Smoke alarms and heat detection shall receive their primary power from the building wiring where such wiring is served from a commercial source and, where primary power is interrupted, shall receive power from a battery. Wiring shall be permanent and without a disconnecting switch other than those required for overcurrent protection.

Exceptions:

1. Smoke alarms shall be permitted to be battery operated where installed in buildings without commercial power.
2. Smoke alarms installed in accordance with Section R314.2.2 shall be permitted to be battery powered.

R314.7 Fire alarm systems. Fire alarm systems shall be permitted to be used in lieu of smoke alarms and shall comply with Sections R314.7.1 through R314.7.4.

INTERNATIONAL CODE COUNCIL®
Copyright © 2019 ICC & NYSDOS. ALL RIGHTS RESERVED. Accessed by Lauren Gualdino (lgualdino@briarcliffmanor.org), (-) Order Number #100880972 on May 08, 2020 07:05 AM (PDT) pursuant to License Agreement with ICC & NYSDOS. No further reproduction, no

100880972

R314.7.1 General. Fire alarm systems shall comply with the provisions of this code and the household fire warning *equipment* provisions of NFPA 72. Smoke detectors shall be *listed* in accordance with UL 268.

R314.7.2 Location. Smoke detectors shall be installed in the locations specified in Section R314.3.

R314.7.3 Permanent fixture. Where a household fire alarm system is installed, it shall become a permanent fixture of the occupancy, owned by the homeowner.

R314.7.4 Combination detectors. Combination smoke and carbon monoxide detectors shall be permitted to be installed in fire alarm systems in lieu of smoke detectors, provided that they are *listed* in accordance with UL 268 and UL 2075.

[NY] R314.8 Portable smoke alarms in lodging houses. In addition to, but not in limitation of, any other requirement of this code, portable smoke alarms of both audible and visual design shall be provided in lodging houses. A minimum of one operational portable smoke alarm shall be provided. Such smoke alarms shall be in conformity with NFPA 72.

Exception: Portable smoke alarms shall not be required where any of the following applies:

1. Where audible/visual smoke alarms are hard wired.
2. Where audible/visual smoke alarms are incorporated into a fire alarm system such that visual notification is activated by the system.

[NY] R314.8.1 Signage. Where visible alarms are provided, proprietors shall post conspicuously at the main desk or other similar station a sign with letters at least 3 inches (76 mm) in height stating that sleeping accommodations with visible alarms for the deaf and hearing impaired are available.

Exception: Where all of the guestrooms are provided with visible alarm notification appliances.

SECTION R315
CARBON MONOXIDE ALARMS

[NY] R315.1 General. Carbon monoxide alarms shall be provided in accordance with Section 915 of the *Fire Code of New York State*.

SECTION R316
FOAM PLASTIC

R316.1 General. The provisions of this section shall govern the materials, design, application, construction and installation of foam plastic materials.

R316.2 Labeling and identification. Packages and containers of foam plastic insulation and foam plastic insulation components delivered to the job site shall bear the *label* of an *approved agency* showing the manufacturer's name, the product listing, product identification and information sufficient to determine that the end use will comply with the requirements.

R316.3 Surface burning characteristics. Unless otherwise allowed in Section R316.5, foam plastic, or foam plastic cores used as a component in manufactured assemblies, used in building construction shall have a flame spread index of not more than 75 and shall have a smoke-developed index of not more than 450 when tested in the maximum thickness and density intended for use in accordance with ASTM E84 or UL 723. Loose-fill-type foam plastic insulation shall be tested as board stock for the flame spread index and smoke-developed index.

Exception: Foam plastic insulation more than 4 inches (102 mm) thick shall have a flame spread index of not more than 75 and a smoke-developed index of not more than 450 where tested at a thickness of not more than 4 inches (102 mm), provided that the end use is *approved* in accordance with Section R316.6 using the thickness and density intended for use.

R316.4 Thermal barrier. Unless otherwise allowed in Section R316.5, foam plastic shall be separated from the interior of a building by an *approved* thermal barrier of not less than $^{1}/_{2}$-inch (12.7 mm) gypsum wallboard, $^{23}/_{32}$-inch (18.2 mm) wood structural panel or a material that is tested in accordance with and meets the acceptance criteria of both the Temperature Transmission Fire Test and the Integrity Fire Test of NFPA 275.

R316.5 Specific requirements. The following requirements shall apply to these uses of foam plastic unless specifically *approved* in accordance with Section R316.6 or by other sections of the code or the requirements of Sections R316.2 through R316.4 have been met.

R316.5.1 Masonry or concrete construction. The thermal barrier specified in Section R316.4 is not required in a masonry or concrete wall, floor or roof where the foam plastic insulation is separated from the interior of the building by not less than a 1-inch (25 mm) thickness of masonry or concrete.

R316.5.2 Roofing. The thermal barrier specified in Section R316.4 is not required where the foam plastic in a roof assembly or under a roof covering is installed in accordance with the code and the manufacturer's instructions and is separated from the interior of the building by tongue-and-groove wood planks or wood structural panel sheathing, in accordance with Section R803, that is not less than $^{15}/_{32}$ inch (11.9 mm) thick bonded with exterior glue, identified as Exposure 1 and with edges supported by blocking or tongue-and-groove joints or an equivalent material. The smoke-developed index for roof applications shall not be limited.

R316.5.3 Attics. The thermal barrier specified in Section R316.4 is not required where all of the following apply:

1. *Attic* access is required by Section R807.1.
2. The space is entered only for purposes of repairs or maintenance.

INTERNATIONAL CODE COUNCIL®
Copyright © 2019 ICC & NYSDOS. ALL RIGHTS RESERVED. Accessed by Lauren Gualdino (lgualdino@briarcliffmanor.org), (-) Order Number #100880972 on May 08, 2020 07:05 AM (PDT) pursuant to License Agreement with ICC & NYSDOS. No further reproduction, no

100880972

3. The foam plastic insulation has been tested in accordance with Section R316.6 or the foam plastic insulation is protected against ignition using one of the following ignition barrier materials:
    3.1. $1^1/_2$-inch-thick (38 mm) mineral fiber insulation.
    3.2. $^1/_4$-inch-thick (6.4 mm) wood structural panels.
    3.3. $^3/_8$-inch (9.5 mm) particleboard.
    3.4. $^1/_4$-inch (6.4 mm) hardboard.
    3.5. $^3/_8$-inch (9.5 mm) gypsum board.
    3.6. Corrosion-resistant steel having a base metal thickness of 0.016 inch (0.406 mm).
    3.7. $1^1/_2$-inch-thick (38 mm) cellulose insulation.
    3.8. $^1/_4$-inch (6.4 mm) fiber-cement panel, soffit or backer board.

The ignition barrier is not required where the foam plastic insulation has been tested in accordance with Section R316.6.

R316.5.4 Crawl spaces. The thermal barrier specified in Section R316.4 is not required where all of the following apply:

1. Crawl space access is required by Section R408.4.
2. Entry is made only for purposes of repairs or maintenance.
3. The foam plastic insulation has been tested in accordance with Section R316.6 or the foam plastic insulation is protected against ignition using one of the following ignition barrier materials:
    3.1. $1^1/_2$-inch-thick (38 mm) mineral fiber insulation.
    3.2. $^1/_4$-inch-thick (6.4 mm) wood structural panels.
    3.3. $^3/_8$-inch (9.5 mm) particleboard.
    3.4. $^1/_4$-inch (6.4 mm) hardboard.
    3.5. $^3/_8$-inch (9.5 mm) gypsum board.
    3.6. Corrosion-resistant steel having a base metal thickness of 0.016 inch (0.406 mm).
    3.7. $^1/_4$-inch (6.4 mm) fiber-cement panel, soffit or backer board.

R316.5.5 Foam-filled exterior doors. Foam-filled exterior doors are exempt from the requirements of Sections R316.3 and R316.4.

R316.5.6 Foam-filled garage doors. Foam-filled garage doors in attached or detached garages are exempt from the requirements of Sections R316.3 and R316.4.

R316.5.7 Foam backer board. The thermal barrier specified in Section R316.4 is not required where siding backer board foam plastic insulation has a thickness of not more than 0.5 inch (12.7 mm) and a potential heat of not more than 2000 Btu per square foot (22 720 kJ/m^2) when tested in accordance with NFPA 259 and it complies with one or more of the following:

1. The foam plastic insulation is separated from the interior of the building by not less than 2 inches (51 mm) of mineral fiber insulation.
2. The foam plastic insulation is installed over existing *exterior wall* finish in conjunction with re-siding.
3. The foam plastic insulation has been tested in accordance with Section R316.6.

R316.5.8 Re-siding. The thermal barrier specified in Section R316.4 is not required where the foam plastic insulation is installed over existing *exterior wall* finish in conjunction with re-siding provided that the foam plastic has a thickness of not more than 0.5 inch (12.7 mm) and a potential heat of not more than 2000 Btu per square foot (22 720 kJ/m^2) when tested in accordance with NFPA 259.

R316.5.9 Interior trim. The thermal barrier specified in Section R316.4 is not required for exposed foam plastic interior trim, provided that all of the following are met:

1. The density is not less than 20 pounds per cubic foot (320 kg/m^3).
2. The thickness of the trim is not more than 0.5 inch (12.7 mm) and the width is not more than 8 inches (204 mm).
3. The interior trim shall not constitute more than 10 percent of the aggregate wall and ceiling area of any room or space.
4. The flame spread index does not exceed 75 when tested in accordance with ASTM E84 or UL 723. The smoke-developed index is not limited.

R316.5.10 Interior finish. Foam plastics used as interior finishes shall comply with Section R316.6 and shall meet the flame spread index and smoke-developed index requirements of Sections R302.9.1 and R302.9.2.

R316.5.11 Sill plates and headers. Foam plastic be spray applied to sill plates and headers or installed in the perimeter joist space without the thermal barrier specified in Section R316.4 shall comply with all of the following:

1. The thickness of the foam plastic shall be not more than $3^1/_4$ inches (83 mm).
2. The density of the foam plastic shall be in the range of 0.5 to 2.0 pounds per cubic foot (8 to 32 kg/m^3).
3. The foam plastic shall have a flame spread index of 25 or less and an accompanying smoke-developed index of 450 or less when tested in accordance with ASTM E84 or UL 723.

R316.5.12 Sheathing. Foam plastic insulation used as sheathing shall comply with Section R316.3 and Section R316.4. Where the foam plastic sheathing is exposed to the *attic* space at a gable or kneewall, the provisions of Section R316.5.3 shall apply. Where foam plastic insulation is used as *exterior wall* sheathing on framed wall assemblies, it shall comply with Section R316.8.

INTERNATIONAL CODE COUNCIL®
Copyright © 2019 ICC & NYSDOS. ALL RIGHTS RESERVED. Accessed by Lauren Gualdino (lgualdino@briarcliffmanor.org), (-) Order Number #100880972 on May 08, 2020 07:05 AM (PDT) pursuant to License Agreement with ICC & NYSDOS. No further reproduction, no

100880972

R316.5.13 Floors. The thermal barrier specified in Section R316.4 is not required to be installed on the walking surface of a structural floor system that contains foam plastic insulation where the foam plastic is covered by not more than a nominal $^1/_2$-inch-thick (12.7 mm) wood structural panel or equivalent. The thermal barrier specified in Section R316.4 is required on the underside of the structural floor system that contains foam plastic insulation where the underside of the structural floor system is exposed to the interior of the building.

R316.6 Specific approval. Foam plastic not meeting the requirements of Sections R316.3 through R316.5 shall be specifically *approved* on the basis of one of the following *approved* tests: NFPA 286 with the acceptance criteria of Section R302.9.4, FM 4880, UL 1040 or UL 1715, or fire tests related to actual end-use configurations. Approval shall be based on the actual end-use configuration and shall be performed on the finished foam plastic assembly in the maximum thickness intended for use. Assemblies tested shall include seams, joints and other typical details used in the installation of the assembly and shall be tested in the manner intended for use.

R316.7 Termite damage. The use of foam plastics in areas of "very heavy" termite infestation probability shall be in accordance with Section R318.4.

R316.8 Wind resistance. Foam plastic insulation complying with ASTM C578 and ASTM C1289 and used as *exterior wall* sheathing on framed wall assemblies shall comply with SBCA FS 100 for wind pressure resistance unless installed directly over a sheathing material that is separately capable of resisting the wind load or otherwise exempted from the scope of SBCA FS 100.

SECTION R317
PROTECTION OF WOOD AND WOOD-BASED PRODUCTS AGAINST DECAY

R317.1 Location required. Protection of wood and wood-based products from decay shall be provided in the following locations by the use of naturally durable wood or wood that is preservative-treated in accordance with AWPA U1.

1. Wood joists or the bottom of a wood structural floor where closer than 18 inches (457 mm) or wood girders where closer than 12 inches (305 mm) to the exposed ground in crawl spaces or unexcavated area located within the periphery of the building foundation.
2. Wood framing members that rest on concrete or masonry exterior foundation walls and are less than 8 inches (203 mm) from the exposed ground.
3. Sills and sleepers on a concrete or masonry slab that is in direct contact with the ground unless separated from such slab by an impervious moisture barrier.
4. The ends of wood girders entering exterior masonry or concrete walls having clearances of less than $^1/_2$ inch (12.7 mm) on tops, sides and ends.
5. Wood siding, sheathing and wall framing on the exterior of a building having a clearance of less than 6 inches (152 mm) from the ground or less than 2 inches (51 mm) measured vertically from concrete steps, porch slabs, patio slabs and similar horizontal surfaces exposed to the weather.
6. Wood structural members supporting moisture-permeable floors or roofs that are exposed to the weather, such as concrete or masonry slabs, unless separated from such floors or roofs by an impervious moisture barrier.
7. Wood furring strips or other wood framing members attached directly to the interior of exterior masonry walls or concrete walls below *grade* except where an *approved* vapor retarder is applied between the wall and the furring strips or framing members.

R317.1.1 Field treatment. Field-cut ends, notches and drilled holes of preservative-treated wood shall be treated in the field in accordance with AWPA M4.

R317.1.2 Ground contact. All wood in contact with the ground, embedded in concrete in direct contact with the ground or embedded in concrete exposed to the weather that supports permanent structures intended for human occupancy shall be *approved* pressure-preservative-treated wood suitable for ground contact use, except that untreated wood used entirely below groundwater level or continuously submerged in fresh water shall not be required to be pressure-preservative treated.

R317.1.3 Geographical areas. In geographical areas where experience has demonstrated a specific need, *approved* naturally durable or pressure-preservative-treated wood shall be used for those portions of wood members that form the structural supports of buildings, balconies, porches or similar permanent building appurtenances where those members are exposed to the weather without adequate protection from a roof, eave, overhang or other covering that would prevent moisture or water accumulation on the surface or at joints between members. Depending on local experience, such members typically include:

1. Horizontal members such as girders, joists and decking.
2. Vertical members such as posts, poles and columns.
3. Both horizontal and vertical members.

R317.1.4 Wood columns. Wood columns shall be *approved* wood of natural decay resistance or *approved* pressure-preservative-treated wood.

Exceptions:

1. Columns exposed to the weather or in *basements* where supported by concrete piers or metal pedestals projecting 1 inch (25 mm) above a concrete floor or 6 inches (152 mm) above exposed earth and the earth is covered by an *approved* impervious moisture barrier.
2. Columns in enclosed crawl spaces or unexcavated areas located within the periphery of the building where supported by a concrete pier or metal pedestal at a height more than 8 inches (203 mm) from

INTERNATIONAL CODE COUNCIL®
Copyright © 2019 ICC & NYSDOS. ALL RIGHTS RESERVED. Accessed by Lauren Gualdino (lgualdino@briarcliffmanor.org), (-) Order Number #100880972 on May 08, 2020 07:05 AM (PDT) pursuant to License Agreement with ICC & NYSDOS. No further reproduction, no

100880972

exposed earth and the earth is covered by an impervious moisture barrier.

3. Deck posts supported by concrete piers or metal pedestals projecting not less than 1 inch (25 mm) above a concrete floor or 6 inches (152 mm) above exposed earth.

R317.1.5 Exposed glued-laminated timbers. The portions of glued-laminated timbers that form the structural supports of a building or other structure and are exposed to weather and not properly protected by a roof, eave or similar covering shall be pressure treated with preservative, or be manufactured from naturally durable or preservative-treated wood.

R317.2 Quality mark. Lumber and plywood required to be pressure-preservative treated in accordance with Section R318.1 shall bear the quality *mark* of an *approved* inspection agency that maintains continuing supervision, testing and inspection over the quality of the product and that has been *approved* by an accreditation body that complies with the requirements of the American Lumber Standard Committee treated wood program.

R317.2.1 Required information. The required quality *mark* on each piece of pressure-preservative-treated lumber or plywood shall contain the following information:

1. Identification of the treating plant.
2. Type of preservative.
3. The minimum preservative retention.
4. End use for which the product was treated.
5. Standard to which the product was treated.
6. Identity of the *approved* inspection agency.
7. The designation "Dry," if applicable.

Exception: Quality *mark*s on lumber less than 1 inch (25 mm) nominal thickness, or lumber less than nominal 1 inch by 5 inches (25 mm by 127 mm) or 2 inches by 4 inches (51 mm by 102 mm) or lumber 36 inches (914 mm) or less in length shall be applied by stamping the faces of exterior pieces or by end labeling not less than 25 percent of the pieces of a bundled unit.

R317.3 Fasteners and connectors in contact with preservative-treated and fire-retardant-treated wood. Fasteners, including nuts and washers, and connectors in contact with preservative-treated wood and fire-retardant-treated wood shall be in accordance with this section. The coating weights for zinc-coated fasteners shall be in accordance with ASTM A153. Stainless steel driven fasteners shall be in accordance with the material requirements of ASTM F1667.

R317.3.1 Fasteners for preservative-treated wood. Fasteners, including nuts and washers, for preservative-treated wood shall be of hot-dipped, zinc-coated galvanized steel, stainless steel, silicon bronze or copper. Staples shall be of stainless steel. Coating types and weights for connectors in contact with preservative-treated wood shall be in accordance with the connector manufacturer's recommendations. In the absence of manufacturer's recommendations, not less than ASTM A653 type G185 zinc-coated galvanized steel, or equivalent, shall be used.

Exceptions:

1. $^{1}/_{2}$-inch-diameter (12.7 mm) or greater steel bolts.
2. Fasteners other than nails, staples and timber rivets shall be permitted to be of mechanically deposited zinc-coated steel with coating weights in accordance with ASTM B695, Class 55 minimum.
3. Plain carbon steel fasteners in SBX/DOT and zinc borate preservative-treated wood in an interior, dry environment shall be permitted.

R317.3.2 Fastenings for wood foundations. Fastenings, including nuts and washers, for wood foundations shall be as required in AWC PWF.

R317.3.3 Fasteners for fire-retardant-treated wood used in exterior applications or wet or damp locations. Fasteners, including nuts and washers, for fire-retardant-treated wood used in exterior applications or wet or damp locations shall be of hot-dipped, zinc-coated galvanized steel, stainless steel, silicon bronze or copper. Fasteners other than nails, staples and timber rivets shall be permitted to be of mechanically deposited zinc-coated steel with coating weights in accordance with ASTM B695, Class 55 minimum.

R317.3.4 Fasteners for fire-retardant-treated wood used in interior applications. Fasteners, including nuts and washers, for fire-retardant-treated wood used in interior locations shall be in accordance with the manufacturer's recommendations. In the absence of the manufacturer's recommendations, Section R317.3.3 shall apply.

R317.4 Plastic composites. Plastic composite exterior deck boards, stair treads, guards and handrails containing wood, cellulosic or other biodegradable materials shall comply with the requirements of Section R507.2.2.

SECTION R318
PROTECTION AGAINST SUBTERRANEAN TERMITES

R318.1 Subterranean termite control methods. In areas subject to damage from termites as indicated by Table R301.2(1), protection shall be by one, or a combination, of the following methods:

1. Chemical termiticide treatment in accordance with Section R318.2.
2. Termite-baiting system installed and maintained in accordance with the *label*.
3. Pressure-preservative-treated wood in accordance with the provisions of Section R317.1.
4. Naturally durable termite-resistant wood.
5. Physical barriers in accordance with Section R318.3 and used in locations as specified in Section R317.1.
6. Cold-formed steel framing in accordance with Sections R505.2.1 and R603.2.1.

INTERNATIONAL CODE COUNCIL®
Copyright © 2019 ICC & NYSDOS. ALL RIGHTS RESERVED. Accessed by Lauren Gualdino (lgualdino@briarcliffmanor.org), (-) Order Number #100880972 on May 08, 2020 07:05 AM (PDT) pursuant to License Agreement with ICC & NYSDOS. No further reproduction, no

100880972

R318.1.1 Quality mark. Lumber and plywood required to be pressure-preservative treated in accordance with Section R318.1 shall bear the quality *mark* of an *approved* inspection agency that maintains continuing supervision, testing and inspection over the quality of the product and that has been *approved* by an accreditation body that complies with the requirements of the American Lumber Standard Committee treated wood program.

R318.1.2 Field treatment. Field-cut ends, notches and drilled holes of pressure-preservative-treated wood shall be retreated in the field in accordance with AWPA M4.

R318.2 Chemical termiticide treatment. Chemical termiticide treatment shall include soil treatment or field-applied wood treatment. The concentration, rate of application and method of treatment of the chemical termiticide shall be in strict accordance with the termiticide *label*.

R318.3 Barriers. *Approved* physical barriers, such as metal or plastic sheeting or collars specifically designed for termite prevention, shall be installed in a manner to prevent termites from entering the structure. Shields placed on top of an exterior foundation wall shall be used only if in combination with another method of protection.

R318.4 Foam plastic protection. In areas where the probability of termite infestation is "very heavy" as indicated in Figure R301.2(7), extruded and expanded polystyrene, polyisocyanurate and other foam plastics shall not be installed on the exterior face or under interior or exterior foundation walls or slab foundations located below *grade*. The clearance between foam plastics installed above *grade* and exposed earth shall be not less than 6 inches (152 mm).

Exceptions:

1. Buildings where the structural members of walls, floors, ceilings and roofs are entirely of noncombustible materials or pressure-preservative-treated wood.
2. Where in *addition* to the requirements of Section R318.1, an *approved* method of protecting the foam plastic and structure from subterranean termite damage is used.
3. On the interior side of *basement walls*.

SECTION R319
SITE ADDRESS

R319.1 Address identification. Buildings shall be provided with *approved* address identification. The address identification shall be legible and placed in a position that is visible from the street or road fronting the property. Address identification characters shall contrast with their background. Address numbers shall be Arabic numbers or alphabetical letters. Numbers shall not be spelled out. Each character shall be not less than 4 inches (102 mm) in height with a stroke width of not less than 0.5 inch (12.7 mm). Where required by the fire code official, address identification shall be provided in additional *approved* locations to facilitate emergency response. Where access is by means of a private road and the building address cannot be viewed from the public way, a monument, pole or other sign or means shall be used to identify the structure. Address identification shall be maintained.

SECTION R320
ACCESSIBILITY

R320.1 Scope. Where there are four or more *dwelling units* or sleeping units in a single structure, the provisions of Chapter 11 of the *Building Code of New York State* for Group R-3 shall apply.

[NY] R320.1.1 Guestrooms. A *dwelling* with guestrooms shall comply with the provisions of Chapter 11 of the *Building Code of New York State* for Group R-3. For the purpose of applying the requirements of Chapter 11 of the *Building Code of New York State*, guestrooms shall be considered to be sleeping units.

Exception: Owner-occupied lodging houses *and bed and breakfast dwellings* with five or fewer guestrooms constructed in accordance with this code are not required to be accessible.

SECTION R321
ELEVATORS AND PLATFORM LIFTS

R321.1 Elevators. Where provided, passenger elevators, limited-use and limited-application elevators or private residence elevators shall comply with ASME A17.1/CSA B44.

R321.2 Platform lifts. Where provided, platform lifts shall comply with ASME A18.1.

R321.3 Accessibility. Elevators or platform lifts that are part of an accessible route required by Chapter 11 of the *Building Code of New York State*, shall comply with ICC A117.1.

SECTION R322
FLOOD-RESISTANT CONSTRUCTION

R322.1 General. Buildings and structures constructed in whole or in part in flood hazard areas, including A or V Zones and Coastal A Zones, as established in Table R301.2(1), and substantial improvement and repair of substantial damage of buildings and structures in flood hazard areas, shall be designed and constructed in accordance with the provisions contained in this section. Buildings and structures that are located in more than one flood hazard area shall comply with the provisions associated with the most restrictive flood hazard area. Buildings and structures located in whole or in part in identified floodways shall be designed and constructed in accordance with ASCE 24.

[NY] R322.1.1 Alternative provisions. As an alternative to the requirements in Section R322, ASCE 24 is permitted subject to the limitations of this code and the limitations therein. When ASCE 24 is used as an alternative to the requirements of Section R322, all construction requirements and building elevation requirements based on the Design Flood Elevation (DFE) shall be interpreted to mean the DFE plus a freeboard of 2 feet (610 mm).

INTERNATIONAL CODE COUNCIL®
Copyright © 2019 ICC & NYSDOS. ALL RIGHTS RESERVED. Accessed by Lauren Gualdino (lgualdino@briarcliffmanor.org), (-) Order Number #100880972 on May 08, 2020 07:05 AM (PDT) pursuant to License Agreement with ICC & NYSDOS. No further reproduction, no

100880972

[NY] R322.1.1.1 Application of the design flood elevation. The design flood elevation (DFE) determined in accordance with Sections R322.1.4 and R322.1.4.1 shall be used when applying ASCE 24 and when determining the building design and construction requirements of this code.

R322.1.2 Structural systems. Structural systems of buildings and structures shall be designed, connected and anchored to resist flotation, collapse or permanent lateral movement due to structural loads and stresses from flooding equal to the design flood elevation.

R322.1.3 Flood-resistant construction. Buildings and structures erected in areas prone to flooding shall be constructed by methods and practices that minimize flood damage.

[NY] R322.1.4 Establishing the design flood elevation. At a minimum, the design flood elevation shall be the higher of the following:

1. The base flood elevation at the depth of peak elevation of flooding, including wave height, that has a 1-percent (100-year flood) or greater chance of being equaled or exceeded in any given year plus 2 feet (610 mm) of freeboard.
2. The elevation of the design flood associated with the area designated on a flood hazard map adopted by the community, or otherwise legally designated, plus 2 feet (610 mm) of freeboard.

[NY] R322.1.4.1 Determination of design flood elevations. If design flood elevations are not specified, the *building official* is authorized to require the applicant to comply with either of the following:

1. Obtain and reasonably use data available from a federal, state or other source and add 2 feet (610 mm) of freeboard.
2. Determine the design flood elevation in accordance with accepted hydrologic and hydraulic engineering practices used to define special flood hazard areas and add 2 feet (610 mm) of freeboard. Determinations shall be undertaken by a registered *design professional* who shall document that the technical methods used reflect currently accepted engineering practice. Studies, analyses and computations shall be submitted in sufficient detail to allow thorough review and *approval*.

[NY] R322.1.4.2 Determination of impacts. In riverine flood hazard areas where design flood elevations are specified but floodways have not been designated, the applicant shall demonstrate that the effect of the proposed buildings and structures on design flood elevations, including fill, when combined with other existing and anticipated flood hazard area encroachments, will not increase the design flood elevation more than 1 foot (305 mm) at any point within the *jurisdiction*. For the purpose of applying this section, the design flood elevation shall be the elevation established in accordance with Sections R322.1.4 and R322.1.4.1 but shall not include the application of freeboard.

R322.1.5 Lowest floor. The lowest floor shall be the lowest floor of the lowest enclosed area, including *basement*, and excluding any unfinished flood-resistant enclosure that is useable solely for vehicle parking, building access or limited storage provided that such enclosure is not built so as to render the building or structure in violation of this section.

R322.1.6 Protection of mechanical, plumbing and electrical systems. Electrical systems, *equipment* and components; heating, ventilating, air-conditioning; plumbing *appliances* and plumbing fixtures; *duct systems*; and other service *equipment* shall be located at or above the elevation required in Section R322.2 or R322.3. If replaced as part of a substantial improvement, electrical systems, *equipment* and components; heating, ventilating, air-conditioning and plumbing *appliances* and plumbing fixtures; *duct systems*; and other service *equipment* shall meet the requirements of this section. Systems, fixtures, and *equipment* and components shall not be mounted on or penetrate through walls intended to break away under flood loads.

Exception: Locating electrical systems, *equipment* and components; heating, ventilating, air-conditioning; plumbing *appliances* and plumbing fixtures; *duct systems*; and other service *equipment* is permitted below the elevation required in Section R322.2 or R322.3 provided that they are designed and installed to prevent water from entering or accumulating within the components and to resist hydrostatic and hydrodynamic loads and stresses, including the effects of buoyancy, during the occurrence of flooding to the design flood elevation in accordance with ASCE 24. Electrical wiring systems are permitted to be located below the required elevation provided that they conform to the provisions of the electrical part of this code for wet locations.

[NY] R322.1.7 Protection of water supply and sanitary sewage systems. New and replacement water supply systems shall be designed to minimize or eliminate infiltration of flood waters into the systems in accordance with the plumbing provisions of this code. New and replacement sanitary sewage systems shall be designed to minimize or eliminate infiltration of floodwaters into systems and discharges from systems into floodwaters in accordance with the plumbing provisions of this code.

R322.1.8 Flood-resistant materials. Building materials and installation methods used for flooring and interior and exterior walls and wall coverings below the elevation required in Section R322.2 or R322.3 shall be flood damage-resistant materials that conform to the provisions of FEMA TB-2.

R322.1.9 Manufactured homes. The bottom of the frame of new and replacement *manufactured homes* on foundations that conform to the requirements of Section R322.2 or R322.3, as applicable, shall be elevated to or above the elevations specified in Section R322.2 (flood hazard areas including A Zones) or R322.3 in coastal high-hazard areas

INTERNATIONAL CODE COUNCIL®
Copyright © 2019 ICC & NYSDOS. ALL RIGHTS RESERVED. Accessed by Lauren Gualdino (lgualdino@briarcliffmanor.org), (-) Order Number #100880972 on May 08, 2020 07:05 AM (PDT) pursuant to License Agreement with ICC & NYSDOS. No further reproduction, no

100880972

(V Zones and Coastal A Zones). The anchor and tie-down requirements of the applicable state or federal requirements shall apply. The foundation and anchorage of *manufactured homes* to be located in identified floodways shall be designed and constructed in accordance with ASCE 24.

R322.1.10 As-built elevation documentation. A registered *design professional* shall prepare and seal documentation of the elevations specified in Section R322.2 or R322.3.

[NY] R322.2 Flood hazard areas (including A Zones). Areas that have been determined to be prone to flooding and that are not subject to high-velocity wave action shall be designated as flood hazard areas. Flood hazard areas that have been delineated as subject to wave heights between $1^1/_2$ feet (457 mm) and 3 feet (914 mm) or otherwise designated by the jurisdiction shall be designated as Coastal A Zones and are subject to the requirements of Section R322.3. Buildings and structures constructed in whole or in part in flood hazard areas shall be designed and constructed in accordance with Sections R322.2.1 through R322.2.3.

[NY] R322.2.1 Elevation requirements.

1. Buildings and structures in flood hazard areas, including flood hazard areas designated as Coastal A Zones, shall have the lowest floors elevated to or above the base flood elevation plus 2 feet (610 mm), or the design flood elevation determined in accordance with Sections R322.1.4 through R322.1.4.1 whichever is higher.
2. In areas of shallow flooding (AO Zones), buildings and structures shall have the lowest floor (including *basement*) elevated to a height above the highest adjacent *grade* of not less than the depth number specified in feet (mm) on the FIRM plus 1 foot (305 mm), or not less than 3 feet (915 mm) if a depth number is not specified.
3. Basement floors that are below *grade* on all sides shall be elevated to or above base flood elevation plus 2 feet (610 mm), or the design flood elevation determined in accordance with Sections R322.1.4 through R322.1.4.1, whichever is higher.

Exception: Enclosed areas below the design flood elevation, including *basements* with floors that are not below *grade* on all sides, shall meet the requirements of Section R322.2.2.

R322.2.2 Enclosed area below design flood elevation. Enclosed areas, including crawl spaces, that are below the design flood elevation shall:

1. Be used solely for parking of vehicles, building access or storage.
2. Be provided with flood openings that meet the following criteria and are installed in accordance with Section R322.2.2.1:
   2.1. The total net area of nonengineered openings shall be not less than 1 square inch (645 mm^2) for each square foot (0.093 m^2) of enclosed area where the enclosed area is measured on the exterior of the enclosure walls, or the openings shall be designed as engineered openings and the *construction documents* shall include a statement by a registered *design professional* that the design of the openings will provide for equalization of hydrostatic flood forces on *exterior walls* by allowing for the automatic entry and exit of floodwaters as specified in Section 2.7.2.2 of ASCE 24.
   2.2. Openings shall be not less than 3 inches (76 mm) in any direction in the plane of the wall.
   2.3. The presence of louvers, blades, screens and faceplates or other covers and devices shall allow the automatic flow of floodwater into and out of the enclosed areas and shall be accounted for in the determination of the net open area.

R322.2.2.1 Installation of openings. The walls of enclosed areas shall have openings installed such that:

1. There shall be not less than two openings on different sides of each enclosed area; if a building has more than one enclosed area below the design flood elevation, each area shall have openings.
2. The bottom of each opening shall be not more than 1 foot (305 mm) above the higher of the final interior grade or floor and the finished exterior grade immediately under each opening.
3. Openings shall be permitted to be installed in doors and windows; doors and windows without installed openings do not meet the requirements of this section.

R322.2.3 Foundation design and construction. Foundation walls for buildings and structures erected in flood hazard areas shall meet the requirements of Chapter 4.

Exception: Unless designed in accordance with Section R404:

1. The unsupported height of 6-inch (152 mm) plain masonry walls shall be not more than 3 feet (914 mm).
2. The unsupported height of 8-inch (203 mm) plain masonry walls shall be not more than 4 feet (1219 mm).
3. The unsupported height of 8-inch (203 mm) reinforced masonry walls shall be not more than 8 feet (2438 mm).

For the purpose of this exception, unsupported height is the distance from the finished *grade* of the under-floor space to the top of the wall.

R322.2.4 Tanks. Underground tanks shall be anchored to prevent flotation, collapse and lateral movement under conditions of the base flood. Above-ground tanks shall be installed at or above the elevation required in Section R322.2.1 or shall be anchored to prevent flotation, collapse and lateral movement under conditions of the base flood.

INTERNATIONAL CODE COUNCIL®
Copyright © 2019 ICC & NYSDOS. ALL RIGHTS RESERVED. Accessed by Lauren Gualdino (lgualdino@briarcliffmanor.org), (-) Order Number #100880972 on May 08, 2020 07:05 AM (PDT) pursuant to License Agreement with ICC & NYSDOS. No further reproduction, no

100880972

R322.3 Coastal high-hazard areas (including V Zones and Coastal A Zones, where designated). Areas that have been determined to be subject to wave heights in excess of 3 feet (914 mm) or subject to high-velocity wave action or wave-induced erosion shall be designated as coastal high-hazard areas. Flood hazard areas that have been designated as subject to wave heights between $1^1/_2$ feet (457 mm) and 3 feet (914 mm) or otherwise designated by the jurisdiction shall be designated as Coastal A Zones. Buildings and structures constructed in whole or in part in coastal high-hazard areas and Coastal A Zones, where designated, shall be designed and constructed in accordance with Sections R322.3.1 through R322.3.10.

R322.3.1 Location and site preparation.

1. New buildings and buildings that are determined to be substantially improved pursuant to Section R105.2.2.1 shall be located landward of the reach of mean high tide.
2. For any alteration of sand dunes and mangrove stands, the *building official* shall require submission of an engineering analysis that demonstrates that the proposed *alteration* will not increase the potential for flood damage.

[NY] R322.3.2 Elevation requirements.

1. Buildings and structures erected within coastal high-hazard areas and Coastal A Zones, shall be elevated so that the bottom of the lowest horizontal structural members supporting the lowest floor, with the exception of piling, pile caps, columns, grade beams and bracing, is elevated to or above the base flood elevation plus 2 feet (610 mm) or the design flood elevation, as determined in accordance with Section R322.1.4 through R322.1.4.1, whichever is higher.
2. Basement floors that are below *grade* on all sides are prohibited.
3. The use of fill for structural support is prohibited.
4. Minor grading, and the placement of minor quantities of fill, shall be permitted for landscaping and for drainage purposes under and around buildings and for support of parking slabs, pool decks, patios and walkways.
5. Walls and partitions enclosing areas below the design flood elevation shall meet the requirements of Sections R322.3.5 and R322.3.6.

R322.3.3 Foundations. Buildings and structures erected in coastal high-hazard areas and Coastal A Zones shall be supported on pilings or columns and shall be adequately anchored to such pilings or columns. The space below the elevated building shall be either free of obstruction or, if enclosed with walls, the walls shall meet the requirements of Section R322.3.5. Pilings shall have adequate soil penetrations to resist the combined wave and wind loads (lateral and uplift). Water-loading values used shall be those associated with the design flood. Wind-loading values shall be those required by this code. Pile embedment shall include consideration of decreased resistance capacity caused by scour of soil strata surrounding the piling. Pile systems design and installation shall be certified in accordance with Section R322.3.9. Spread footing, mat, raft or other foundations that support columns shall not be permitted where soil investigations that are required in accordance with Section R401.4 indicate that soil material under the spread footing, mat, raft or other foundation is subject to scour or erosion from wave-velocity flow conditions. If permitted, spread footing, mat, raft or other foundations that support columns shall be designed in accordance with ASCE 24.

Exception: In Coastal A Zones, stem wall foundations supporting a floor system above and backfilled with soil or gravel to the underside of the floor system shall be permitted provided that the foundations are designed to account for wave action, debris impact, erosion and local scour. Where soils are susceptible to erosion and local scour, stem wall foundations shall have deep footings to account for the loss of soil.

R322.3.4 Concrete slabs. Concrete slabs used for parking, floors of enclosures, landings, decks, walkways, patios and similar uses that are located beneath structures, or slabs that are located such that if undermined or displaced during base flood conditions could cause structural damage to the building foundation, shall be designed and constructed in accordance with one of the following:

1. To be structurally independent of the foundation system of the structure, to not transfer flood loads to the main structure, and to be frangible and break away under flood conditions prior to base flood conditions. Slabs shall be a maximum of 4 inches (102 mm) thick, shall not have turned-down edges, shall not contain reinforcing, shall have isolation joints at pilings and columns, and shall have control or construction joints in both directions spaced not more than 4 feet (1219 mm) apart.
2. To be self-supporting, structural slabs capable of remaining intact and functional under base flood conditions, including erosion and local scour, and the main structure shall be capable of resisting any added flood loads and effects of local scour caused by the presence of the slabs.

R322.3.5 Walls below design flood elevation. Walls and partitions are permitted below the elevated floor, provided that such walls and partitions are not part of the structural support of the building or structure and:

1. Electrical, mechanical and plumbing system components are not to be mounted on or penetrate through walls that are designed to break away under flood loads; and
2. Are constructed with insect screening or open lattice; or
3. Are designed to break away or collapse without causing collapse, displacement or other structural damage to the elevated portion of the building or supporting foundation system. Such walls, framing and connections shall have a resistance of not less than 10 (479 Pa) and not more than 20 pounds per

INTERNATIONAL CODE COUNCIL®
Copyright © 2019 ICC & NYSDOS. ALL RIGHTS RESERVED. Accessed by Lauren Gualdino (lgualdino@briarcliffmanor.org), (-) Order Number #100880972 on May 08, 2020 07:05 AM (PDT) pursuant to License Agreement with ICC & NYSDOS. No further reproduction, no

100880972

square foot (958 Pa) as determined using allowable stress design; or

4. Where wind loading values of this code exceed 20 pounds per square foot (958 Pa), as determined using allowable stress design, the *construction documents* shall include documentation prepared and sealed by a registered *design professional* that:

   4.1. The walls and partitions below the design flood elevation have been designed to collapse from a water load less than that which would occur during the base flood.

   4.2. The elevated portion of the building and supporting foundation system have been designed to withstand the effects of wind and flood loads acting simultaneously on structural and nonstructural building components. Water-loading values used shall be those associated with the design flood. Wind-loading values shall be those required by this code.

5. Walls intended to break away under flood loads as specified in Item 3 or 4 have flood openings that meet the criteria in Section R322.2.2, Item 2.

R322.3.6 Enclosed areas below design flood elevation. Enclosed areas below the design flood elevation shall be used solely for parking of vehicles, building access or storage.

R322.3.6.1 Protection of building envelope. An exterior door that meets the requirements of Section R609 shall be installed at the top of stairs that provide access to the building and that are enclosed with walls designed to break away in accordance with Section R322.3.5.

R322.3.7 Stairways and ramps. Stairways and ramps that are located below the lowest floor elevations specified in Section R322.3.2 shall comply with one or more of the following:

1. Be designed and constructed with open or partially open risers and guards.
2. Stairways and ramps not part of the required means of egress shall be designed and constructed to break away during design flood conditions without causing damage to the building or structure, including foundation.
3. Be retractable, or able to be raised to or above the lowest floor elevation, provided that the ability to be retracted or raised prior to the onset of flooding is not contrary to the means of egress requirements of the code.
4. Be designed and constructed to resist flood loads and minimize transfer of flood loads to the building or structure, including foundation.

Areas below stairways and ramps shall not be enclosed with walls below the design flood elevation unless such walls are constructed in accordance with Section R322.3.5.

R322.3.8 Decks and porches. Attached decks and porches shall meet the elevation requirements of Section R322.3.2 and shall either meet the foundation requirements of this section or shall be cantilevered from or knee braced to the building or structure. Self-supporting decks and porches that are below the elevation required in Section R322.3.2 shall not be enclosed by solid, rigid walls, including walls designed to break away. Self-supporting decks and porches shall be designed and constructed to remain in place during base flood conditions or shall be frangible and break away under base flood conditions.

R322.3.9 Construction documents. The *construction documents* shall include documentation that is prepared and sealed by a registered *design professional* that the design and methods of construction to be used meet the applicable criteria of this section.

R322.3.10 Tanks. Underground tanks shall be anchored to prevent flotation, collapse and lateral movement under conditions of the base flood. Above-ground tanks shall be installed at or above the elevation required in Section R322.3.2. Where elevated on platforms, the platforms shall be cantilevered from or knee braced to the building or shall be supported on foundations that conform to the requirements of Section R322.3.

SECTION R323
STORM SHELTERS

R323.1 General. This section applies to storm shelters where constructed as separate detached buildings or where constructed as safe rooms within buildings for the purpose of providing refuge from storms that produce high winds, such as tornados and hurricanes. In addition to other applicable requirements in this code, storm shelters shall be constructed in accordance with ICC/NSSA-500.

SECTION 324
SOLAR ENERGY SYSTEMS

R324.1 General. Solar energy systems shall comply with the provisions of this section.

R324.2 Solar thermal systems. Solar thermal systems shall be designed and installed in accordance with Chapter 23 and the *Fire Code of New York State*.

R324.3 Photovoltaic systems. Photovoltaic systems shall be designed and installed in accordance with Sections R324.3.1 through R324.7.1, NFPA 70 and the manufacturer's installation instructions.

R324.3.1 Equipment listings. Photovoltaic panels and modules shall be listed and labeled in accordance with UL 1703. Inverters shall be *listed* and *labeled* in accordance with UL 1741. Systems connected to the utility grid shall use inverters *listed* for utility interaction.

R324.4 Rooftop-mounted photovoltaic systems. Rooftop-mounted *photovoltaic panel systems* installed on or above the roof covering shall be designed and installed in accordance with this section.

R324.4.1 Structural requirements. Rooftop-mounted *photovoltaic panel systems* shall be designed to structur-

INTERNATIONAL CODE COUNCIL®
Copyright © 2019 ICC & NYSDOS. ALL RIGHTS RESERVED. Accessed by Lauren Gualdino (lgualdino@briarcliffmanor.org), (-) Order Number #100880972 on May 08, 2020 07:05 AM (PDT) pursuant to License Agreement with ICC & NYSDOS. No further reproduction, no

100880972

ally support the system and withstand applicable gravity loads in accordance with Chapter 3. The roof on which these systems are installed shall be designed and constructed to support the loads imposed by such systems in accordance with Chapter 8.

R324.4.1.1 Roof load. Portions of roof structures not covered with *photovoltaic panel systems* shall be designed for dead loads and roof loads in accordance with Sections R301.4 and R301.6. Portions of roof structures covered with *photovoltaic panel systems* shall be designed for the following load cases:

1. Dead load (including *photovoltaic panel* weight) plus snow load in accordance with Table R301.2(1).
2. Dead load (excluding *photovoltaic panel* weight) plus roof live load or snow load, whichever is greater, in accordance with Section R301.6.

R324.4.1.2 Wind load. Rooftop-mounted *photovoltaic panel* or *module* systems and their supports shall be designed and installed to resist the component and cladding loads specified in Table R301.2(2), adjusted for height and exposure in accordance with Table R301.2(3).

R324.4.2 Fire classification. Rooftop-mounted *photovoltaic panel systems* shall have the same fire classification as the roof assembly required in Section R902.

R324.4.3 Roof penetrations. Roof penetrations shall be flashed and sealed in accordance with Chapter 9.

R324.5 Building-integrated photovoltaic systems. Building-integrated photovoltaic systems that serve as roof coverings shall be designed and installed in accordance with Section R905.

R324.5.1 Photovoltaic shingles. Photovoltaic shingles shall comply with Section R905.16.

R324.5.2 Fire classification. *Building-integrated photovoltaic systems* shall have a fire classification in accordance with Section R902.3.

R324.6 Roof access and pathways. Roof access, pathways and setback requirements shall be provided in accordance with Sections R324.6.1 through R324.6.2.1. Access and minimum spacing shall be required to provide emergency access to the roof, to provide pathways to specific areas of the roof, provide for smoke ventilation opportunity areas, and to provide emergency egress from the roof.

Exceptions:

1. Detached, nonhabitable structures, including but not limited to detached garages, parking shade structures, carports, solar trellises and similar structures, shall not be required to provide roof access.
2. Roof access, pathways and setbacks need not be provided where the *building official* has determined that rooftop operations will not be employed.
3. These requirements shall not apply to roofs with slopes of two units vertical in 12 units horizontal (17-percent slope) or less.

[NY] R324.6.1 Pathways. Not fewer than two pathways, on separate roof planes from lowest roof edge to ridge and not less than 36 inches (914 mm) wide, shall be provided on all buildings. Not fewer than one pathway shall be provided on the street or driveway side of the roof. For each roof plane with a photovoltaic array, a pathway not less than 36 inches wide (914 mm) shall be provided from the lowest roof edge to ridge on the same roof plane as the photovoltaic array, on an adjacent roof plane, or straddling the same and adjacent roof planes. Pathways shall be over areas capable of supporting fire fighters accessing the roof. Pathways shall be located in areas with minimal obstructions such as vent pipes, conduit, or mechanical equipment. Pathways on opposing roof slopes shall not be located along the same plane as the truss, rafter, or other such framing system that supports the pathway.

Exception: Access pathways shall not be required on roof slopes containing photovoltaic modules, panels, or an array where the opposing or adjacent roof slope is an *access roof*.

[NY] R324.6.2 Setback at ridge. Photovoltaic arrays shall not be located less than 18 inches (457 mm) from a horizontal ridge.

[NY] R324.6.2.1 Reserved.

R324.6.2.2 Emergency escape and rescue opening. Panels and modules installed on dwellings shall not be placed on the portion of a roof that is below an emergency escape and rescue opening. A pathway not less than 36 inches (914 mm) wide shall be provided to the emergency escape and rescue opening.

R324.7 Ground-mounted photovoltaic systems. Ground-mounted photovoltaic systems shall be designed and installed in accordance with Section R301.

R324.7.1 Fire separation distances. Ground-mounted photovoltaic systems shall be subject to the *fire separation distance* requirements determined by the local *jurisdiction*.

SECTION R325
MEZZANINES

R325.1 General. Mezzanines shall comply with Sections R325 through R325.5. *Habitable attics* shall comply with Section R325.6.

R325.2 Mezzanines. The clear height above and below mezzanine floor construction shall be not less than 7 feet (2134 mm).

R325.3 Area limitation. The aggregate area of a mezzanine or mezzanines shall be not greater than one-third of the floor area of the room or space in which they are located. The enclosed portion of a room shall not be included in a determination of the floor area of the room in which the *mezzanine* is located.

Exception: The aggregate area of a mezzanine located within a dwelling unit equipped with a fire sprinkler system in accordance with Section P2904 shall not be greater

INTERNATIONAL CODE COUNCIL®
Copyright © 2019 ICC & NYSDOS. ALL RIGHTS RESERVED. Accessed by Lauren Gualdino (lgualdino@briarcliffmanor.org), (-) Order Number #100880972 on May 08, 2020 07:05 AM (PDT) pursuant to License Agreement with ICC & NYSDOS. No further reproduction, no

100880972

than one-half of the floor area of the room, provided that the mezzanine meets all of the following requirements:

1. Except for enclosed closets and bathrooms, the mezzanine is open to the room in which such mezzanine is located.
2. The opening to the room is unobstructed except for walls not more than 42 inches (1067 mm) in height, columns and posts.
3. The exceptions to Section R325.5 are not applied.

R325.4 Means of egress. The means of egress for mezzanines shall comply with the applicable provisions of Section R311.

R325.5 Openness. Mezzanines shall be open and unobstructed to the room in which they are located except for walls not more than 36 inches (914 mm) in height, columns and posts.

Exceptions:

1. Mezzanines or portions thereof are not required to be open to the room in which they are located, provided that the aggregate floor area of the enclosed space is not greater than 10 percent of the mezzanine area.
2. In buildings that are not more than two stories above *grade plane* and equipped throughout with an automatic sprinkler system in accordance with Section R313, a mezzanine shall not be required to be open to the room in which the mezzanine is located.

[NY] R325.6 Habitable attic. A habitable attic shall be considered a story above grade plane.

SECTION R326
SWIMMING POOLS, SPAS AND HOT TUBS

[NY] R326.1 General. The provisions of this section shall control the design and construction as well as substantial modification of swimming pools, spas and hot tubs installed in or on the lot of dwellings regulated under this code, and detached one- and two-family dwellings classified as Group R-3 and constructed under the *Building Code of New York State*.

Exception: Communal pools for the shared use of multiple townhouse units shall be regulated by the *Building Code of New York State*.

[NY] R326.1.1 Compliance with other sections. Swimming pools, spas and hot tubs shall comply with this section and other applicable sections of this code. The requirements of this section and of the other applicable sections of this code shall be in addition to, and not in replacement of or substitution for, the requirements of other applicable federal, state and local laws and regulations, including, but not necessarily limited to the requirements of Section 8003 (Federal swimming pool and spa drain cover standard) of Title 15 of the United States Code (CPSC 15 USC 8003), where applicable.

[NY] R326.2 Definitions. For the purpose of these requirements, the terms used shall be defined as follows and as set forth in Chapter 2.

BARRIER, PERMANENT. A fence, the walls of a permanent structure, any other structure or combination thereof which completely surrounds the swimming pool and sufficiently obstructs access to the swimming pool.

BARRIER, TEMPORARY. An approved temporary fence, permanent fence, the walls of a permanent structure, any other structure, or any combination thereof that sufficiently prevents access to the swimming pool by any person not engaged in the installation or construction of the swimming pool during its installation or construction.

HOT TUB. See "Spa."

RESIDENTIAL. That which is situated on the premises of dwellings regulated under this code, and detached dwellings classified as R-3 and constructed under the *Building Code of New York State*.

SPA. A portable or nonportable structure intended for recreational or therapeutic bathing, in which all controls, water-heating and water-circulating equipment are an integral part of the product. Spas are shallow in depth and are not designed for swimming or diving.

SUBSTANTIAL DAMAGE. For the purpose of determining compliance with the pool alarm provisions of this section, damage of any origin sustained by a swimming pool, whereby the cost of restoring the swimming pool to its before-damaged condition would equal or exceed 50 percent of the market value of the swimming pool before the damage occurred.

SUBSTANTIAL MODIFICATION. For the purpose of determining compliance with the pool alarm provisions of this section, any repair, alteration, addition or improvement of a swimming pool, the cost of which equals or exceeds 50 percent of the market value of the swimming pool before the improvement or repair is started. If a swimming pool has sustained substantial damage, any repairs are considered substantial modification regardless of the actual repair work performed.

SUCTION OUTLET. A fitting, fitting assembly, cover/grate, sump, and related components that provide a localized low-pressure area for the transfer of water from a swimming pool.

SWIMMING POOL. Any structure, basin, chamber or tank which is intended for swimming, diving, recreational bathing or wading and which contains, is designed to contain, or is capable of containing water more than 24 inches (610 mm) deep at any point. This includes in-ground, above-ground and on-ground pools, indoor pools, hot tubs, spas, and wading pools.

SWIMMING POOL, INDOOR. A swimming pool which is totally contained within a structure and surrounded on all four sides by the walls of the enclosing structure.

SWIMMING POOL, OUTDOOR. Any swimming pool which is not an indoor pool.

[NY] R326.3 Compliance with other standards.

[NY] R326.3.1 In-ground pools. In-ground pools shall be designed and constructed in conformance with ANSI/

INTERNATIONAL CODE COUNCIL®
Copyright © 2019 ICC & NYSDOS. ALL RIGHTS RESERVED. Accessed by Lauren Gualdino (lgualdino@briarcliffmanor.org), (-) Order Number #100880972 on May 08, 2020 07:05 AM (PDT) pursuant to License Agreement with ICC & NYSDOS. No further reproduction, no

100880972

APSP/ICC 5 (American National Standard for Residential Inground Swimming Pools, 2011).

[NY] R326.3.2 Above-ground and on-ground pools. Above-ground and on-ground pools shall be designed and constructed in conformance with ANSI/APSP/ICC 4 (American National Standard for Aboveground/Onground Residential Swimming Pools, 2012).

[NY] R326.3.3 Permanently installed spas and hot tubs. Permanently installed spas and hot tubs shall be designed and constructed in conformance with ANSI/APSP/ICC 3 (American National Standard for Permanently Installed Residential Spas and Swim Spas, 2014).

[NY] R326.3.4 Portable spas and hot tubs. Portable spas and hot tubs shall be designed and constructed in conformance with ANSI/APSP/ICC 6 (American National Standard for Residential Portable Spas and Swim Spas, 2013).

[NY] R326.4 Barriers, application. The provisions of this section shall control the design of barriers for swimming pools, spas and hot tubs. These design controls are intended to provide protection against potential drowning and near-drowning by sufficiently preventing access to swimming pools, spas and hot tubs by persons outside the property, persons within the dwelling, and persons in other parts of the property not contained within the pool enclosure.

[NY] R326.4.1 Temporary barriers. An outdoor swimming pool shall be surrounded by a temporary barrier during installation or construction that shall remain in place until a permanent barrier in compliance with Section R326.4.2 is provided.

Exceptions:

1. Above-ground or on-ground pools where the pool structure constitutes a barrier in compliance with Section R326.4.2.9.
2. Spas or hot tubs with a safety cover which complies with ASTM F1346, provided that such safety cover is in place during the period of installation or construction of such hot tub or spa. The temporary removal of a safety cover as required to facilitate the installation or construction of a hot tub or spa during periods when at least one person engaged in the installation or construction is present is permitted.

[NY] R326.4.1.1 Height. The top of the temporary barrier shall be at least 48 inches (1219 mm) above grade measured on the side of the barrier which faces away from the swimming pool.

[NY] R326.4.1.2 Replacement by a permanent barrier. A temporary barrier shall be replaced by a complying permanent barrier within either of the following periods:

1. 90 days of the date of issuance of the building permit for the installation or construction of the swimming pool; or
2. 90 days of the date of commencement of the installation or construction of the swimming pool.

[NY] R326.4.1.2.1 Replacement extension. Subject to the approval of the *building official*, the time period for completion of the permanent barrier may be extended for good cause, including, but not limited to, adverse weather conditions delaying construction.

[NY] R326.4.2 Permanent barriers. Swimming pools shall be completely enclosed by a permanent barrier complying with Sections R326.4.2.1 through R326.4.2.6.

[NY] R326.4.2.1 Barrier height and clearances. The top of the barrier shall be no less than 48 inches (1219 mm) above grade measured on the side of the barrier that faces away from the swimming pool. The vertical clearance between grade and the bottom of the barrier shall be not greater than 2 inches (51 mm) measured on the side of the barrier that faces away from the swimming pool. Where the top of the pool structure is above grade, the barrier may be at ground level, or mounted on top of the pool structure. Where the barrier is mounted on top of the pool structure, the barrier shall comply with Sections R326.4.2.2 and R326.4.2.3.

[NY] R326.4.2.2 Solid barrier surfaces. Solid barriers which do not have openings shall not contain indentations or protrusions except for normal construction tolerances and tooled masonry joints.

[NY] R326.4.2.3 Closely spaced horizontal members. Where the barrier is composed of horizontal and vertical members and the distance between the tops of the horizontal members is less than 45 inches (1143 mm), the horizontal members shall be located on the swimming pool side of the fence. Spacing between vertical members shall not exceed $1^3/_4$ inches (44 mm) in width. Where there are decorative cutouts within vertical members, spacing within the cutouts shall be not greater than $1^3/_4$ inches (44 mm) in width.

[NY] R326.4.2.4 Widely spaced horizontal members. Where the barrier is composed of horizontal and vertical members and the distance between the tops of the horizontal members is 45 inches (1143 mm) or more, spacing between vertical members shall be not greater than 4 inches (102 mm). Where there are decorative cutouts within vertical members, spacing within the cutouts shall be not greater than $1^3/_4$ inches (44 mm) in width.

[NY] R326.4.2.5 Chain link dimensions. Maximum mesh size for chain link fences shall be a $2^1/_4$ inch (57 mm) square, unless the fence has vertical slats fastened at the top or the bottom which reduce the openings to not more than $1^3/_4$ inches (44 mm).

[NY] R326.4.2.6 Diagonal members. Where the barrier is composed of diagonal members, the maximum opening formed by the diagonal members shall be not greater than $1^3/_4$ inches (44 mm).

INTERNATIONAL CODE COUNCIL®
Copyright © 2019 ICC & NYSDOS. ALL RIGHTS RESERVED. Accessed by Lauren Gualdino (lgualdino@briarcliffmanor.org), (-) Order Number #100880972 on May 08, 2020 07:05 AM (PDT) pursuant to License Agreement with ICC & NYSDOS. No further reproduction, no

100880972

[NY] R326.4.2.7 Gates. Gates shall comply with the requirements of Sections R326.4.2.1 through R326.4.2.6, and with the following requirements:

[NY] R326.4.2.7.1 Self-closing and opening configuration. All gates shall be self-closing. In addition, if the gate is a pedestrian access gate, the gate shall open outward, away from the pool.

[NY] R326.4.2.7.2 Latching. All gates shall be self-latching, with the latch handle located within the enclosure (i.e., on the pool side of the enclosure) and at least 40 inches (1016 mm) above grade. In addition, if the latch handle is located less than 54 inches (1372 mm) from grade, the latch handle shall be located at least 3 inches (76 mm) below the top of the gate, and neither the gate nor the barrier shall have any opening greater than 0.5 inch (12.7 mm) within 18 inches (457 mm) of the latch handle.

[NY] R326.4.2.7.3 Locking. All gates shall be securely locked with a key, combination or other child-proof lock sufficient to prevent access to the swimming pool through such gate when the swimming pool is not in use or supervised.

[NY] R326.4.2.8 Dwelling wall as barrier. A wall or walls of a dwelling may serve as part of the barrier, provided that the wall or walls meet the applicable barrier requirements of Sections R326.4.2.1 through R326.4.2.6, and one of the following conditions shall be met:

1. a) Doors with direct access to the pool through that wall shall be equipped with an alarm that produces an audible warning when the door and/or its screen, if present, are opened. The alarm shall be listed in accordance with UL 2017. The audible alarm shall activate within 7 seconds and sound continuously for a minimum of 30 seconds after the door and/or its screen, if present, are opened and be capable of being heard throughout the house during normal household activities. The alarm shall automatically reset under all conditions. The alarm system shall be equipped with a manual means, such as touch pad or switch, to temporarily deactivate the alarm for a single opening. Deactivation shall last for not more than 15 seconds; and

   b) Operable windows in the wall or walls used as a barrier shall have a latching device located no less than 48 inches above the floor. Openings in operable windows shall not allow a 4-inch-diameter (102 mm) sphere to pass through the opening when the window is in its largest opened position; and

   c) Where the dwelling is wholly contained within the pool barrier or enclosure, alarms shall be provided at every door with direct access to the pool; or

2. Other approved means of protection, such as self-closing with self-latching devices, so long as the degree of protection afforded is not less than the protection afforded by Item 1 described above.

[NY] R326.4.2.8.1 Alarm deactivation switch location. Where an alarm is provided, the deactivation switch shall be located 54 inches (1372 mm) or more above the threshold of the door. In dwellings required to be Accessible units, Type A units, or Type B units, the deactivation switch shall be located 48 inches (1219 mm) above the threshold of the door.

[NY] R326.4.2.9 Pool structure as barrier. Where an above-ground pool structure is used as a barrier, or where the barrier is mounted on top of the pool structure, the structure shall be designed and constructed in compliance with ANSI/APSP/ICC 4 and meet the applicable barrier requirements of Sections R326.4.2.1 through R326.4.2.8. Where the means of access is a ladder or steps, one of the following conditions shall be met:

1. The ladder or steps shall be capable of being secured, locked or removed to prevent access. When the ladder or steps are secured, locked or removed, any opening created shall not allow the passage of a 4-inch-diameter (102 mm) sphere; or

2. The ladder or steps shall be surrounded by a barrier which meets the requirements of Sections R326.4.2.1 through R326.4.2.8.

[NY] R326.4.3 Indoor swimming pool. Walls surrounding an indoor swimming pool shall comply with Section R326.4.2.8.

[NY] R326.4.4 Prohibited locations. Barriers shall be located so as to prohibit permanent structures, equipment or similar objects from being used to climb the barrier.

[NY] R326.5 Entrapment protection for swimming pool and spa suction outlets. Suction outlets shall be designed to produce circulation throughout the pool or spa. Single-outlet systems, such as automatic vacuum cleaner systems, or multiple suction outlets, whether isolated by valves or otherwise, shall be protected against user entrapment.

[NY] R326.5.1 Compliance. Suction outlets shall be designed and installed in accordance with the requirements of CPSC 15 USC 8003 and ANSI/APSP/ICC 7, where applicable.

[NY] R326.6 Suction outlets. Suction outlets shall be designed to produce circulation throughout the pool or spa. Single-outlet systems, such as automatic vacuum cleaner systems, or multiple suction outlets, whether isolated by valves or otherwise, shall be protected against user entrapment.

[NY] R326.6.1 Compliance alternative. Suction outlets may be designed and installed in accordance with ANSI/APSP/ICC 7.

INTERNATIONAL CODE COUNCIL®
Copyright © 2019 ICC & NYSDOS. ALL RIGHTS RESERVED. Accessed by Lauren Gualdino (lgualdino@briarcliffmanor.org), (-) Order Number #100880972 on May 08, 2020 07:05 AM (PDT) pursuant to License Agreement with ICC & NYSDOS. No further reproduction, no

100880972

[NY] R326.6.2 Suction fittings. Pool and spa suction outlets shall have a cover that conforms to ANSI/ASME A112.19.8, or an 18 inch by 23 inch (457 mm by 584 mm) drain grate or larger, or an approved channel drain system.

Exception: Surface skimmers.

[NY] R326.6.3 Atmospheric vacuum relief system required. Pool and spa single- or multiple-outlet circulation systems shall be equipped with atmospheric vacuum relief should grate covers located therein become missing or broken. This vacuum relief system shall include at least one approved or engineered method of the type specified herein, as follows:

1. Safety vacuum release system conforming to ASME A112.19.17; or
2. An approved gravity drainage system.

[NY] R326.6.4 Dual drain separation. Single or multiple pump circulation systems have a minimum of two suction outlets of the approved type. A minimum horizontal or vertical distance of 3 feet (914 mm) shall separate the outlets. These suction outlets shall be piped so that water is drawn through them simultaneously through a vacuum-relief-protected line to the pump or pumps.

[NY] R326.6.5 Pool cleaner fittings. Where provided, vacuum or pressure cleaner fitting(s) shall be located in an accessible position(s) at least 6 inches (152 mm) and not more than 12 inches (305 mm) below the minimum operational water level or as an attachment to the skimmer(s).

[NY] R326.7 Swimming pool and spa alarms, applicability. A swimming pool or spa installed, constructed or substantially modified after December 14, 2006, shall be equipped with an approved pool alarm. Pool alarms shall comply with ASTM F2208 (Standard Specification for Pool Alarms), and shall be installed, used and maintained in accordance with the manufacturer's instructions and this section.

Exceptions:

1. A hot tub or spa equipped with a safety cover which complies with ASTM F1346.
2. A swimming pool (other than a hot tub or spa) equipped with an automatic power safety cover which complies with ASTM F1346.

[NY] R326.7.1 Multiple alarms. A pool alarm must be capable of detecting entry into the water at any point on the surface of the swimming pool. If necessary to provide detection capability at every point on the surface of the swimming pool, more than one pool alarm shall be provided.

[NY] R326.7.2 Alarm activation. Pool alarms shall activate upon detecting entry into the water and shall sound poolside and inside the dwelling.

[NY] R326.7.3 Prohibited alarms. The use of personal immersion alarms shall not be construed as compliance with this section.

[NY] SECTION R327
ENERGY STORAGE SYSTEMS

[NY] R327.1 General. *Energy storage systems* installed in *buildings or structures* that are subject to the provisions of this code shall be installed and maintained in accordance with Sections R327.2 through R327.11. The temporary use of an owner's or occupant's electric powered vehicle as an *energy storage system* shall be in accordance with Section R327.12.

Energy storage system installations exceeding the permitted aggregate ratings in Section R327.5 shall be installed in accordance with Section 1206.2 through 1206.17.7.7 of the *Fire Code of New York State.*

[NY] R327.2 Equipment listings. *Energy storage systems listed* and *labeled* solely for utility or commercial use shall not be used for residential applications.

Exceptions:

1. Where *approved,* repurposed unlisted battery systems from electric vehicles are allowed to be installed outdoors or in detached dedicated cabinets located not less than 5 feet (1524 mm) from exterior walls, property lines and public ways.
2. *Energy storage systems* less than 1 kWh (3.6 megajoules).

[NY] R327.3 Installation. *Energy storage systems* shall be installed in accordance with the manufacturer's instructions and their *listing.*

[NY] R327.3.1 Spacing. Individual units shall be separated from each other by at least 3 feet (914 mm) of spacing unless smaller separation distances are documented to be adequate based on large-scale fire testing complying with Section 1206.6 of the *Fire Code of New York State*.

[NY] R327.4 Location. *Energy storage systems* shall only be installed in the following locations:

1. Detached garages and detached *accessory* structures.
2. Attached garages separated from the *dwelling unit* living space and *sleeping units* in accordance with Section R302 of this code.
3. Outdoors on exterior walls located a minimum 3 feet (914 mm). from doors and windows.
4. Utility closets and storage or utility spaces within *dwelling units* and *sleeping units*

[NY] R327.5 Energy ratings. Individual *energy storage system* units shall have a maximum rating of 20 kWh. The aggregate rating shall not exceed:

1. 40 kWh within utility closets and storage or utility spaces.
2. 80 kWh in attached or detached garages and detached *accessory structures.*
3. 80 kWh on exterior walls.
4. 80 kWh outdoors on the ground.

INTERNATIONAL CODE COUNCIL®
Copyright © 2019 ICC & NYSDOS. ALL RIGHTS RESERVED. Accessed by Lauren Gualdino (lgualdino@briarcliffmanor.org), (-) Order Number #100880972 on May 08, 2020 07:05 AM (PDT) pursuant to License Agreement with ICC & NYSDOS. No further reproduction, no

100880972

[NY] R327.6 Electrical installation. *Energy storage systems* shall be installed in accordance with NFPA 70. Inverters shall be *listed* and *labeled* in accordance with UL 1741 or provided as part of the UL 9540 *listing*. Systems connected to the utility grid shall use inverters *listed* for utility interaction.

[NY] R327.7 Fire detection. Rooms and areas in which *energy storage systems* are installed shall be protected by smoke alarms in accordance with Section R314. A heat detector or heat alarm *listed* and interconnected to the smoke alarms shall be installed in locations where smoke alarms cannot be installed based on their *listing.*

[NY] R327.8 Fire-resistance rating. Rooms and areas containing energy storage systems shall be protected on the system side by no less than $^{5}/_{8}$-inch Type X gypsum board or equivalent, installed on the walls and ceiling of the room or area. Attached garages containing energy storage systems shall be protected on the system side by fire-resistant construction in accordance with Section R302.

[NY] R327.9 Protection from impact. *Energy storage systems* installed in a location subject to vehicle damage shall be protected by *approved* barriers.

[NY] R327.10 Ventilation. Indoor installations of *energy storage systems* that include batteries that produce hydrogen or other flammable gases during charging shall be provided with exhaust ventilation in accordance with Section 1206.13.1 of the *Fire Code of New York State*.

[NY] R327.11 Toxic and highly toxic gas. *Energy storage systems* that have the potential to release toxic or highly toxic gas during charging, discharging and normal use conditions shall not be installed within one- and two-family dwellings and *townhouses.*

[NY] R327.12 Electric vehicle use. The temporary use of an owner or occupant's electric powered vehicle to power a *dwelling unit or sleeping unit* while parked in an attached or detached garage or outside shall comply with the vehicle manufacturer's instructions and NFPA 70. The batteries on electric vehicles shall not contribute to the aggregate energy limitations in Section R327.5.

INTERNATIONAL CODE COUNCIL®
Copyright © 2019 ICC & NYSDOS. ALL RIGHTS RESERVED. Accessed by Lauren Gualdino (lgualdino@briarcliffmanor.org), (-) Order Number #100880972 on May 08, 2020 07:05 AM (PDT) pursuant to License Agreement with ICC & NYSDOS. No further reproduction, no

100880972

CHAPTER 4

FOUNDATIONS

SECTION R401
GENERAL

R401.1 Application. The provisions of this chapter shall control the design and construction of the foundation and foundation spaces for buildings. In addition to the provisions of this chapter, the design and construction of foundations in flood hazard areas as established by Table R301.2(1) shall meet the provisions of Section R322. Wood foundations shall be designed and installed in accordance with AWC PWF.

Exception: The provisions of this chapter shall be permitted to be used for wood foundations only in the following situations:

1. In buildings that have not more than two floors and a roof.
2. Where interior *basement* and foundation walls are constructed at intervals not exceeding 50 feet (15 240 mm).

Wood foundations in Seismic Design Category D_0, D_1 or D_2 shall be designed in accordance with accepted engineering practice.

R401.2 Requirements. Foundation construction shall be capable of accommodating all loads in accordance with Section R301 and of transmitting the resulting loads to the supporting soil. Fill soils that support footings and foundations shall be designed, installed and tested in accordance with accepted engineering practice.

R401.3 Drainage. Surface drainage shall be diverted to a storm sewer conveyance or other *approved* point of collection that does not create a hazard. *Lots* shall be graded to drain surface water away from foundation walls. The *grade* shall fall not fewer than 6 inches (152 mm) within the first 10 feet (3048 mm).

Exception: Where *lot lines*, walls, slopes or other physical barriers prohibit 6 inches (152 mm) of fall within 10 feet (3048 mm), drains or swales shall be constructed to ensure drainage away from the structure. Impervious surfaces within 10 feet (3048 mm) of the building foundation shall be sloped not less than 2 percent away from the building.

R401.4 Soil tests. Where quantifiable data created by accepted soil science methodologies indicate *expansive soils, compressible soils*, shifting soils or other questionable soil characteristics are likely to be present, the *building official* shall determine whether to require a soil test to determine the soil's characteristics at a particular location. This test shall be done by an *approved agency* using an *approved* method.

R401.4.1 Geotechnical evaluation. In lieu of a complete geotechnical evaluation, the load-bearing values in Table R401.4.1 shall be assumed.

TABLE R401.4.1
PRESUMPTIVE LOAD-BEARING VALUES OF FOUNDATION MATERIALS[a]

CLASS OF MATERIAL	LOAD-BEARING PRESSURE (pounds per square foot)
Crystalline bedrock	12,000
Sedimentary and foliated rock	4,000
Sandy gravel and/or gravel (GW and GP)	3,000
Sand, silty sand, clayey sand, silty gravel and clayey gravel (SW, SP, SM, SC, GM and GC)	2,000
Clay, sandy, silty clay, clayey silt, silt and sandy siltclay (CL, ML, MH and CH)	1,500[b]

For SI: 1 pound per square foot = 0.0479 kPa.

a. Where soil tests are required by Section R401.4, the allowable bearing capacities of the soil shall be part of the recommendations.

b. Where the building official determines that in-place soils with an allowable bearing capacity of less than 1,500 psf are likely to be present at the site, the allowable bearing capacity shall be determined by a soils investigation.

R401.4.2 Compressible or shifting soil. Instead of a complete geotechnical evaluation, where top or subsoils are compressible or shifting, they shall be removed to a depth and width sufficient to ensure stable moisture content in each active zone and shall not be used as fill or stabilized within each active zone by chemical, dewatering or presaturation.

SECTION R402
MATERIALS

R402.1 Wood foundations. Wood foundation systems shall be designed and installed in accordance with the provisions of this code.

R402.1.1 Fasteners. Fasteners used below *grade* to attach plywood to the exterior side of exterior *basement* or crawlspace wall studs, or fasteners used in knee wall construction, shall be of Type 304 or 316 stainless steel. Fasteners used above *grade* to attach plywood and all lumber-to-lumber fasteners except those used in knee wall construction shall be of Type 304 or 316 stainless steel, silicon bronze, copper, hot-dipped galvanized (zinc coated) steel nails, or hot-tumbled galvanized (zinc coated) steel nails. Electro-galvanized steel nails and galvanized (zinc coated) steel staples shall not be permitted.

R402.1.2 Wood treatment. Lumber and plywood shall be pressure-preservative treated and dried after treatment in accordance with AWPA U1 (Commodity Specification A, Special Requirement 4.2), and shall bear the *label* of an accredited agency. Where lumber or plywood is cut or drilled after treatment, the treated surface shall be field treated with copper naphthenate, the concentration of which shall contain not less than 2-percent copper metal,

INTERNATIONAL CODE COUNCIL®
Copyright © 2019 ICC & NYSDOS. ALL RIGHTS RESERVED. Accessed by Lauren Gualdino (lgualdino@briarcliffmanor.org), (-) Order Number #100880972 on May 08, 2020 07:05 AM (PDT) pursuant to License Agreement with ICC & NYSDOS. No further reproduction, no

100880972

by repeated brushing, dipping or soaking until the wood cannot absorb more preservative.

R402.2 Concrete. Concrete shall have a minimum specified compressive strength of f'_c, as shown in Table R402.2. Concrete subject to moderate or severe weathering as indicated in Table R301.2(1) shall be air entrained as specified in Table R402.2. The maximum weight of fly ash, other pozzolans, silica fume, slag or blended cements that is included in concrete mixtures for garage floor slabs and for exterior porches, carport slabs and steps that will be exposed to deicing chemicals shall not exceed the percentages of the total weight of cementitious materials specified in Section 19.3.3.4 of ACI 318. Materials used to produce concrete and testing thereof shall comply with the applicable standards listed in Chapters 19 and 20 of ACI 318 or ACI 332.

R402.2.1 Materials for concrete. Materials for concrete shall comply with the requirements of Section R608.5.1.

R402.3 Precast concrete. Precast concrete foundations shall be designed in accordance with Section R404.5 and shall be installed in accordance with the provisions of this code and the manufacturer's instructions.

R402.3.1 Precast concrete foundation materials. Materials used to produce precast concrete foundations shall meet the following requirements.

1. All concrete used in the manufacture of precast concrete foundations shall have a minimum compressive strength of 5,000 psi (34 470 kPa) at 28 days. Concrete exposed to a freezing and thawing environment shall be air entrained with a minimum total air content of 5 percent.
2. Structural reinforcing steel shall meet the requirements of ASTM A615, A706 or A996. The minimum yield strength of reinforcing steel shall be 40,000 psi (Grade 40) (276 MPa). Steel reinforcement for precast concrete foundation walls shall have a minimum concrete cover of $^3/_4$ inch (19.1 mm).
3. Panel-to-panel connections shall be made with Grade II steel fasteners.
4. The use of nonstructural fibers shall conform to ASTM C1116.
5. Grout used for bedding precast foundations placed on concrete footings shall meet ASTM C1107.

R402.4 Masonry. Masonry systems shall be designed and installed in accordance with this chapter and shall have a minimum specified compressive strength of 1,500 psi (10.3 MPa).

SECTION R403
FOOTINGS

R403.1 General. All exterior walls shall be supported on continuous solid or fully grouted masonry or concrete footings, crushed stone footings, wood foundations, or other *approved* structural systems that shall be of sufficient design to accommodate all loads according to Section R301 and to transmit the resulting loads to the soil within the limitations as determined from the character of the soil. Footings shall be supported on undisturbed natural soils or engineered fill. Concrete footing shall be designed and constructed in accordance with the provisions of Section R403 or in accordance with ACI 332.

R403.1.1 Minimum size. The minimum width, W, and thickness, T, for concrete footings shall be in accordance with Tables R403.1(1) through R403.1(3) and Figure R403.1(1) or R403.1.3, as applicable. The footing width shall be based on the load-bearing value of the soil in accordance with Table R401.4.1. Footing projections, P, shall be not less than 2 inches (51 mm) and shall not exceed the thickness of the footing. Footing thickness and projection for fireplaces shall be in accordance with Section R1001.2. The size of footings supporting piers and columns shall be based on the tributary load and allowable soil pressure in accordance with Table R401.4.1. Footings for wood foundations shall be in accordance with the details set forth in Section R403.2, and Figures R403.1(2) and R403.1(3). Footings for precast foundations shall be in accordance with the details set forth in Section R403.4, Table R403.4, and Figures R403.4(1) and R403.4(2).

TABLE R402.2
MINIMUM SPECIFIED COMPRESSIVE STRENGTH OF CONCRETE

TYPE OR LOCATION OF CONCRETE CONSTRUCTION	MINIMUM SPECIFIED COMPRESSIVE STRENGTH[a] (f'_c)		
	Weathering Potential[b]		
	Negligible	Moderate	Severe
Basement walls, foundations and other concrete not exposed to the weather	2,500	2,500	2,500[c]
Basement slabs and interior slabs on grade, except garage floor slabs	2,500	2,500	2,500[c]
Basement walls, foundation walls, exterior walls and other vertical concrete work exposed to the weather	2,500	3,000[d]	3,000[d]
Porches, carport slabs and steps exposed to the weather, and garage floor slabs	2,500	3,000[d, e, f]	3,500[d, e, f]

For SI: 1 pound per square inch = 6.895 kPa.

a. Strength at 28 days psi.

b. See Table R301.2(1) for weathering potential.

c. Concrete in these locations that is subject to freezing and thawing during construction shall be air-entrained concrete in accordance with Footnote d.

d. Concrete shall be air-entrained. Total air content (percent by volume of concrete) shall be not less than 5 percent or more than 7 percent.

e. See Section R402.2 for maximum cementitious materials content.

f. For garage floors with a steel-troweled finish, reduction of the total air content (percent by volume of concrete) to not less than 3 percent is permitted if the specified compressive strength of the concrete is increased to not less than 4,000 psi.

INTERNATIONAL CODE COUNCIL®
Copyright © 2019 ICC & NYSDOS. ALL RIGHTS RESERVED. Accessed by Lauren Gualdino (lgualdino@briarcliffmanor.org), (-) Order Number #100880972 on May 08, 2020 07:05 AM (PDT) pursuant to License Agreement with ICC & NYSDOS. No further reproduction, no

100880972

TABLE R403.1(1)
MINIMUM WIDTH AND THICKNESS FOR CONCRETE FOOTINGS FOR LIGHT-FRAME CONSTRUCTION (inches)[a, b]

SNOW LOAD OR ROOF LIVE LOAD	STORY AND TYPE OF STRUCTURE WITH LIGHT FRAME	LOAD-BEARING VALUE OF SOIL (psf)					
		1500	2000	2500	3000	3500	4000
20 psf	1 story—slab-on-grade	12 × 6	12 × 6	12 × 6	12 × 6	12 × 6	12 × 6
	1 story—with crawl space	12 × 6	12 × 6	12 × 6	12 × 6	12 × 6	12 × 6
	1 story—plus basement	18 × 6	14 × 6	12 × 6	12 × 6	12 × 6	12 × 6
	2 story—slab-on-grade	12 × 6	12 × 6	12 × 6	12 × 6	12 × 6	12 × 6
	2 story—with crawl space	16 × 6	12 × 6	12 × 6	12 × 6	12 × 6	12 × 6
	2 story—plus basement	22 × 6	16 × 6	13 × 6	12 × 6	12 × 6	12 × 6
	3 story—slab-on-grade	14 × 6	12 × 6	12 × 6	12 × 6	12 × 6	12 × 6
	3 story—with crawl space	19 × 6	14 × 6	12 × 6	12 × 6	12 × 6	12 × 6
	3 story—plus basement	25 × 8	19 × 6	15 × 6	13 × 6	12 × 6	12 × 6
30 psf	1 story—slab-on-grade	12 × 6	12 × 6	12 × 6	12 × 6	12 × 6	12 × 6
	1 story—with crawl space	13 × 6	12 × 6	12 × 6	12 × 6	12 × 6	12 × 6
	1 story—plus basement	19 × 6	14 × 6	12 × 6	12 × 6	12 × 6	12 × 6
	2 story—slab-on-grade	12 × 6	12 × 6	12 × 6	12 × 6	12 × 6	12 × 6
	2 story—with crawl space	17 × 6	13 × 6	12 × 6	12 × 6	12 × 6	12 × 6
	2 story—plus basement	23 × 6	17 × 6	14 × 6	12 × 6	12 × 6	12 × 6
	3 story—slab-on-grade	15 × 6	12 × 6	12 × 6	12 × 6	12 × 6	12 × 6
	3 story—with crawl space	20 × 6	15 × 6	12 × 6	12 × 6	12 × 6	12 × 6
	3 story—plus basement	26 × 8	20 × 6	16 × 6	13 × 6	12 × 6	12 × 6
50 psf	1 story—slab-on-grade	12 × 6	12 × 6	12 × 6	12 × 6	12 × 6	12 × 6
	1 story—with crawl space	16 × 6	12 × 6	12 × 6	12 × 6	12 × 6	12 × 6
	1 story—plus basement	21 × 6	16 × 6	13 × 6	12 × 6	12 × 6	12 × 6
	2 story—slab-on-grade	14 × 6	12 × 6	12 × 6	12 × 6	12 × 6	12 × 6
	2 story—with crawl space	19 × 6	14 × 6	12 × 6	12 × 6	12 × 6	12 × 6
	2 story—plus basement	25 × 7	19 × 6	15 × 6	12 × 6	12 × 6	12 × 6
	3 story—slab-on-grade	17 × 6	13 × 6	12 × 6	12 × 6	12 × 6	12 × 6
	3 story—with crawl space	22 × 6	17 × 6	13 × 6	12 × 6	12 × 6	12 × 6
	3 story—plus basement	28 × 9	21 × 6	17 × 6	14 × 6	12 × 6	12 × 6
70 psf	1 story—slab-on-grade	12 × 6	12 × 6	12 × 6	12 × 6	12 × 6	12 × 6
	1 story—with crawl space	18 × 6	13 × 6	12 × 6	12 × 6	12 × 6	12 × 6
	1 story—plus basement	24 × 7	18 × 6	14 × 6	12 × 6	12 × 6	12 × 6
	2 story—slab-on-grade	16 × 6	12 × 6	12 × 6	12 × 6	12 × 6	12 × 6
	2 story—with crawl space	21 × 6	16 × 6	13 × 6	12 × 6	12 × 6	12 × 6
	2 story—plus basement	27 × 9	20 × 6	16 × 6	14 × 6	12 × 6	12 × 6
	3 story—slab-on-grade	19 × 6	14 × 6	12 × 6	12 × 6	12 × 6	12 × 6
	3 story—with crawl space	25 × 7	18 × 6	15 × 6	12 × 6	12 × 6	12 × 6
	3 story—plus basement	30 × 10	23 × 6	18 × 6	15 × 6	13 × 6	12 × 6

For SI: 1 inch = 25.4 mm, 1 plf = 14.6 N/m, 1 pound per square foot = 47.9 N/m^2.

a. Interpolation allowed. Extrapolation is not allowed.

b. Based on 32-foot-wide house with load-bearing center wall that carries half of the tributary attic, and floor framing. For every 2 feet of adjustment to the width of the house, add or subtract 2 inches of footing width and 1 inch of footing thickness (but not less than 6 inches thick).

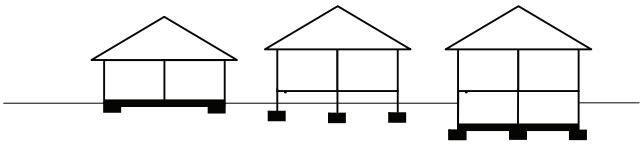

INTERNATIONAL CODE COUNCIL®
Copyright © 2019 ICC & NYSDOS. ALL RIGHTS RESERVED. Accessed by Lauren Gualdino (lgualdino@briarcliffmanor.org), (-) Order Number #100880972 on May 08, 2020 07:05 AM (PDT) pursuant to License Agreement with ICC & NYSDOS. No further reproduction, no

100880972

TABLE R403.1(2)
MINIMUM WIDTH AND THICKNESS FOR CONCRETE FOOTINGS FOR LIGHT-FRAME CONSTRUCTION WITH BRICK VENEER (inches)[a, b]

SNOW LOAD OR ROOF LIVE LOAD	STORY AND TYPE OF STRUCTURE WITH BRICK VENEER	LOAD-BEARING VALUE OF SOIL (psf)					
		1500	2000	2500	3000	3500	4000
20 psf	1 story—slab-on-grade	12 × 6	12 × 6	12 × 6	12 × 6	12 × 6	12 × 6
	1 story—with crawl space	15 × 6	12 × 6	12 × 6	12 × 6	12 × 6	12 × 6
	1 story—plus basement	21 × 6	15 × 6	12 × 6	12 × 6	12 × 6	12 × 6
	2 story—slab-on-grade	15 × 6	12 × 6	12 × 6	12 × 6	12 × 6	12 × 6
	2 story—with crawl space	20 × 6	15 × 6	12 × 6	12 × 6	12 × 6	12 × 6
	2 story—plus basement	26 × 8	20 × 6	16 × 6	13 × 6	12 × 6	12 × 6
	3 story—slab-on-grade	20 × 6	15 × 6	12 × 6	12 × 6	12 × 6	12 × 6
	3 story—with crawl space	26 × 8	19 × 6	15 × 6	13 × 6	12 × 6	12 × 6
	3 story—plus basement	32 × 11	24 × 7	19 × 6	16 × 6	14 × 6	12 × 6
30 psf	1 story—slab-on-grade	12 × 6	12 × 6	12 × 6	12 × 6	12 × 6	12 × 6
	1 story—with crawl space	16 × 6	12 × 6	12 × 6	12 × 6	12 × 6	12 × 6
	1 story—plus basement	22 × 6	16 × 6	13 × 6	12 × 6	12 × 6	12 × 6
	2 story—slab-on-grade	16 × 6	12 × 6	12 × 6	12 × 6	12 × 6	12 × 6
	2 story—with crawl space	22 × 6	16 × 6	13 × 6	12 × 6	12 × 6	12 × 6
	2 story—plus basement	27 × 9	21 × 6	16 × 6	14 × 6	12 × 6	12 × 6
	3 story—slab-on-grade	21 × 6	16 × 6	13 × 6	12 × 6	12 × 6	12 × 6
	3 story—with crawl space	27 × 8	20 × 6	16 × 6	13 × 6	12 × 6	12 × 6
	3 story—plus basement	33 × 11	24 × 7	20 × 6	16 × 6	14 × 6	12 × 6
50 psf	1 story—slab-on-grade	13 × 6	12 × 6	12 × 6	12 × 6	12 × 6	12 × 6
	1 story—with crawl space	18 × 6	14 × 6	12 × 6	12 × 6	12 × 6	12 × 6
	1 story—plus basement	24 × 7	18 × 6	14 × 6	12 × 6	12 × 6	12 × 6
	2 story—slab-on-grade	18 × 6	14 × 6	12 × 6	12 × 6	12 × 6	12 × 6
	2 story—with crawl space	24 × 7	18 × 6	14 × 6	12 × 6	12 × 6	12 × 6
	2 story—plus basement	29 × 10	22 × 6	18 × 6	15 × 6	13 × 6	12 × 6
	3 story—slab-on-grade	27 × 7	18 × 6	13 × 6	12 × 6	12 × 6	12 × 6
	3 story—with crawl space	29 × 9	22 × 6	17 × 6	14 × 6	12 × 6	12 × 6
	3 story—plus basement	35 × 12	26 × 8	21 × 6	17 × 6	15 × 6	13 × 6
70 psf	1 story—slab-on-grade	15 × 6	12 × 6	12 × 6	12 × 6	12 × 6	12 × 6
	1 story—with crawl space	20 × 6	15 × 6	12 × 6	12 × 6	12 × 6	12 × 6
	1 story—plus basement	26 × 8	20 × 6	16× 6	13 × 6	12 × 6	12 × 6
	2 story—slab-on grade	20 × 6	15 × 6	12 × 6	12 × 6	12 × 6	12 × 6
	2 story—with crawl space	26 × 8	19 × 6	15× 6	13 × 6	12 × 6	12 × 6
	2 story—plus basement	32 × 11	24 × 7	19 × 6	16 × 6	14 × 6	12 × 6
	3 story—slab-on-grade	26 × 8	19 × 6	15 × 6	13 × 6	12 × 6	12 × 6
	3 story—with crawl space	31 × 11	23 × 7	19 × 6	16 × 6	13 × 6	12 × 6
	3 story—plus basement	37 × 13	28 × 9	22 × 6	18 × 6	16 × 6	14 × 6

For SI: 1 inch = 25.4 mm, 1 plf = 14.6 N/m, 1 pound per square foot = 47.9 N/m^2.

a. Interpolation allowed. Extrapolation is not allowed.

b. Based on 32-foot-wide house with load-bearing center wall that carries half of the tributary attic, and floor framing. For every 2 feet of adjustment to the width of the house, add or subtract 2 inches of footing width and 1 inch of footing thickness (but not less than 6 inches thick).

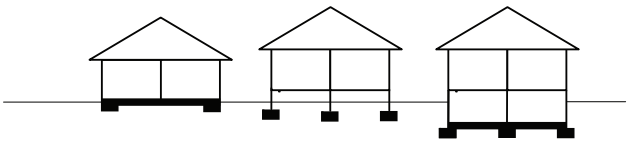

INTERNATIONAL CODE COUNCIL®
Copyright © 2019 ICC & NYSDOS. ALL RIGHTS RESERVED. Accessed by Lauren Gualdino (lgualdino@briarcliffmanor.org), (-) Order Number #100880972 on May 08, 2020 07:05 AM (PDT) pursuant to License Agreement with ICC & NYSDOS. No further reproduction, no

100880972

TABLE R403.1(3)
MINIMUM WIDTH AND THICKNESS FOR CONCRETE FOOTINGS WITH CAST-IN-PLACE CONCRETE OR FULLY GROUTED MASONRY WALL CONSTRUCTION (inches)[a, b]

SNOW LOAD OR ROOF LIVE LOAD	STORY AND TYPE OF STRUCTURE WITH CMU	LOAD-BEARING VALUE OF SOIL (psf)					
		1500	2000	2500	3000	3500	4000
20 psf	1 story—slab-on-grade	14 × 6	12 × 6	12 × 6	12 × 6	12 × 6	12 × 6
	1 story—with crawl space	19 × 6	14 × 6	12 × 6	12 × 6	12 × 6	12 × 6
	1 story—plus basement	25 × 8	19 × 6	15 × 6	13 × 6	12 × 6	12 × 6
	2 story—slab-on-grade	23 × 7	18 × 6	14 × 6	12 × 6	12 × 6	12 × 6
	2 story—with crawl space	29 × 9	22 × 6	17 × 6	14 × 6	12 × 6	12 × 6
	2 story—plus basement	35 × 12	26 × 8	21 × 6	17 × 6	15 × 6	13 × 6
	3 story—slab-on-grade	32× 11	24 × 7	19 × 6	16 × 6	14 × 6	12 × 6
	3 story—with crawl space	38 × 14	28 × 9	23 × 6	19 × 6	16 × 6	14 × 6
	3 story—plus basement	43 × 17	33 × 11	26 × 8	22 × 6	19 × 6	16 × 6
30 psf	1 story—slab-on-grade	15 × 6	12 × 6	12 × 6	12 × 6	12 × 6	12 × 6
	1 story—with crawl space	20 × 6	15 × 6	12 × 6	12 × 6	12 × 6	12 × 6
	1 story—plus basement	26 × 8	20 × 6	16 × 6	13 × 6	12 × 6	12 × 6
	2 story—slab-on-grade	24 × 7	18 × 6	15 × 6	12 × 6	12 × 6	12 × 6
	2 story—with crawl space	30 × 10	22 × 6	18 × 6	15 × 6	13 × 6	12 × 6
	2 story—plus basement	36 × 13	27 × 8	21 × 6	18 × 6	15 × 6	13 × 6
	3 story—slab-on-grade	33 × 12	25 × 7	20 × 6	17 × 6	14 × 6	12 × 6
	3 story—with crawl space	39 × 14	29 × 9	23 × 7	19 × 6	17 × 6	14 × 6
	3 story—plus basement	44 × 17	33 × 12	27× 8	22 × 6	19 × 6	17 × 6
50 psf	1 story—slab-on-grade	17 × 6	13 × 6	12 × 6	12 × 6	12 × 6	12 × 6
	1 story—with crawl space	22 × 6	17 × 6	13 × 6	12 × 6	12 × 6	12 × 6
	1 story—plus basement	28× 9	21 × 6	17 × 6	14 × 6	12 × 6	12 × 6
	2 story—slab-on-grade	27 × 8	20 × 6	16 × 6	13 × 6	12 × 6	12 × 6
	2 story—with crawl space	32 × 11	24 × 7	19 × 6	16 × 6	14 × 6	12 × 6
	2 story—plus basement	38 × 14	28 × 9	23 × 6	19 × 6	16 × 6	14 × 6
	3 story—slab-on-grade	35 × 13	27 × 8	21 × 6	18 × 6	15 × 6	13 × 6
	3 story—with crawl space	41 × 15	31 × 10	24 × 7	20 × 6	17 × 6	15 × 6
	3 story—plus basement	47 × 18	35 × 12	28 × 9	23 × 7	20 × 6	17 × 6
70 psf	1 story—slab-on-grade	19 × 6	14 × 6	12 × 6	12 × 6	12 × 6	12 × 6
	1 story—with crawl space	25 × 7	18 × 6	15 × 6	12 × 6	12 × 6	12 × 6
	1 story—plus basement	30 × 10	23 × 6	18 × 6	15 × 6	13 × 6	12 × 6
	2 story—slab-on-grade	29 × 9	22 × 6	17 × 6	14 × 6	12 × 6	12 × 6
	2 story—with crawl space	34 × 12	26 × 8	21 × 6	17 × 6	15 × 6	13 × 6
	2 story—plus basement	40 × 15	30 × 10	24 × 7	20 × 6	17 × 6	15 × 6
	3 story—slab-on-grade	38 × 14	28 × 9	23 × 6	19 × 6	16 × 6	14 × 6
	3 story—with crawl space	43 × 16	32 × 11	26 × 8	21 × 6	18 × 6	16 × 6
	3 story—plus basement	49 × 19	37 × 13	29 × 10	24 × 7	21 × 6	18 × 6

For SI: 1 inch = 25.4 mm, 1 plf = 14.6 N/m, 1 pound per square foot = 47.9 N/m^2.

a. Interpolation allowed. Extrapolation is not allowed.

b. Based on 32-foot-wide house with load-bearing center wall that carries half of the tributary attic, and floor framing. For every 2 feet of adjustment to the width of the house add or subtract 2 inches of footing width and 1 inch of footing thickness (but not less than 6 inches thick).

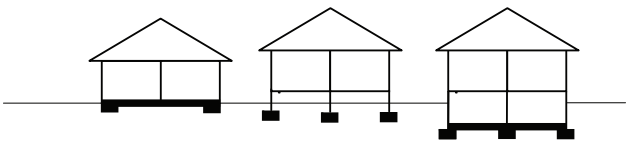

INTERNATIONAL CODE COUNCIL®
Copyright © 2019 ICC & NYSDOS. ALL RIGHTS RESERVED. Accessed by Lauren Gualdino (lgualdino@briarcliffmanor.org), (-) Order Number #100880972 on May 08, 2020 07:05 AM (PDT) pursuant to License Agreement with ICC & NYSDOS. No further reproduction, no

100880972

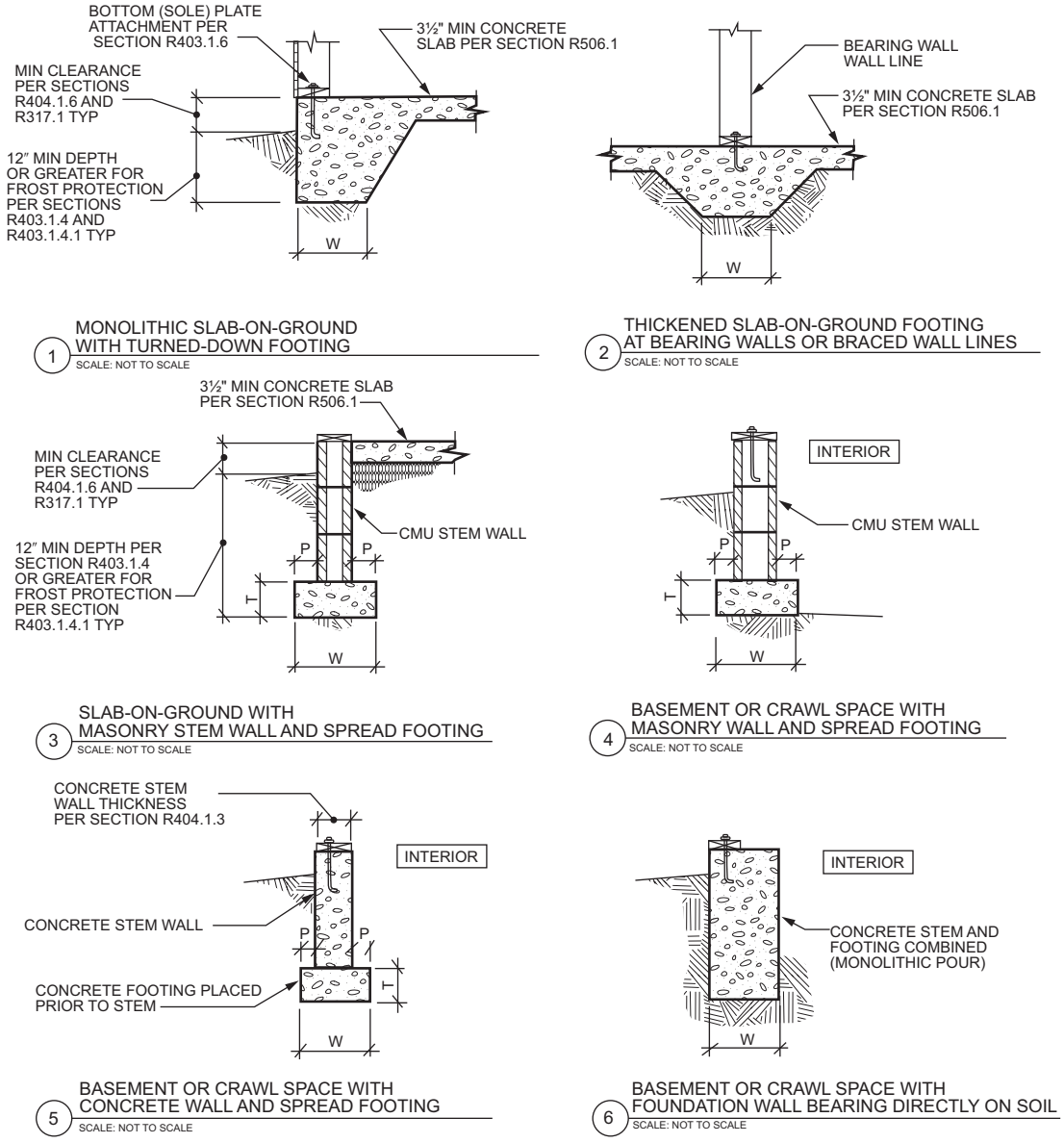

For SI: 1 inch = 25.4 mm.

W = Width of footing, T = Thickness of footing and P = Projection per Section R403.1.1

NOTES:

a. See Section R404.3 for sill requirements.
b. See Section R403.1.6 for sill attachment.
c. See Section R506.2.3 for vapor barrier requirements.
d. See Section R403.1 for base.
e. See Figure R403.1.3 for additional footing requirements for structures in SDC D_0, D_1 and D_2 and townhouses in SDC C.
f. See Section R408 for under-floor ventilation and access requirements.

FIGURE R403.1(1)
PLAIN CONCRETE FOOTINGS WITH MASONRY AND CONCRETE STEM WALLS IN SDC A, B AND C[a, b, c, d, e, f]

INTERNATIONAL CODE COUNCIL®
Copyright © 2019 ICC & NYSDOS. ALL RIGHTS RESERVED. Accessed by Lauren Gualdino (lgualdino@briarcliffmanor.org), (-) Order Number #100880972 on May 08, 2020 07:05 AM (PDT) pursuant to License Agreement with ICC & NYSDOS. No further reproduction, no

100880972

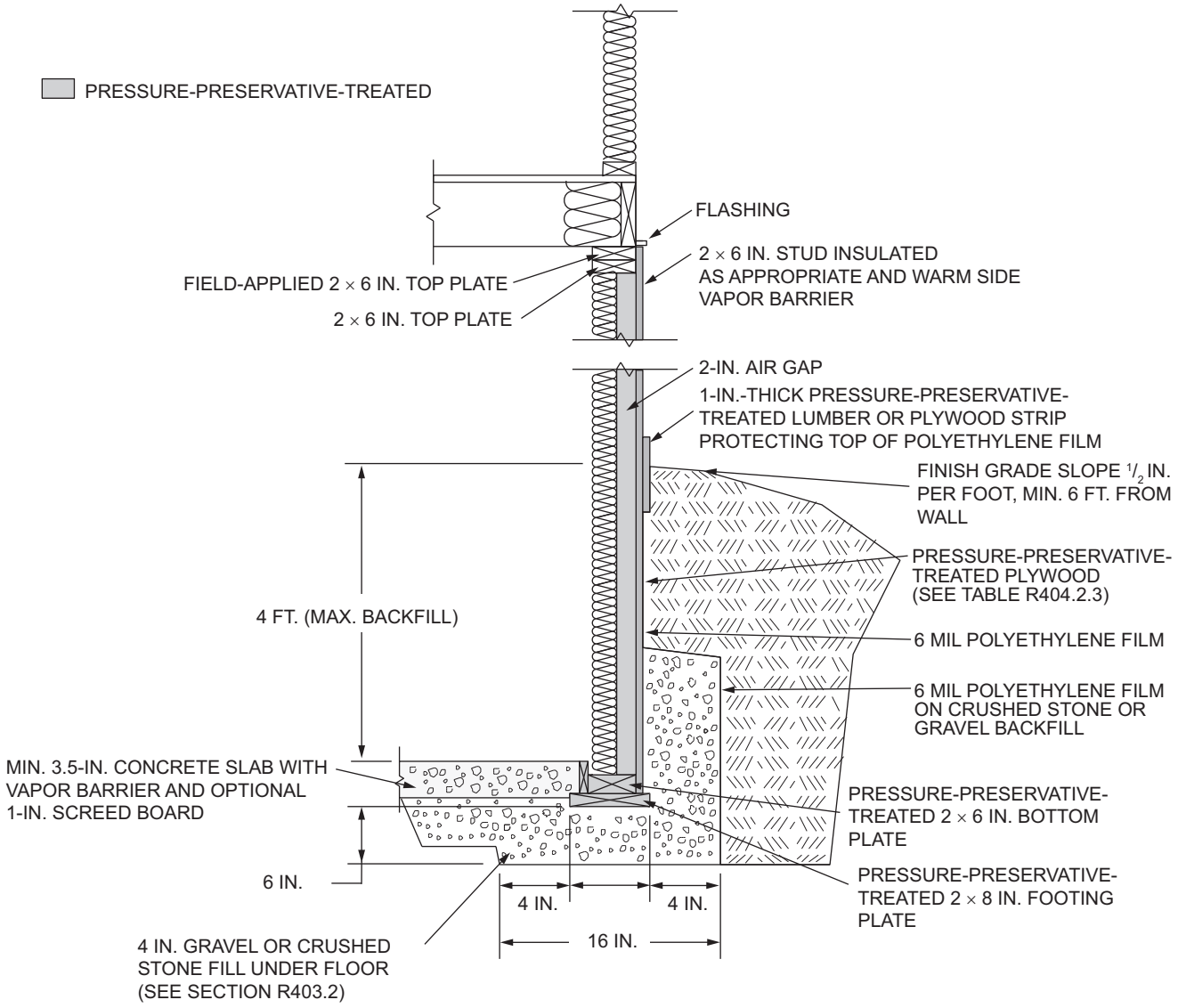

For SI: 1 inch = 25.4 mm, 1 foot = 304.8 mm, 1 mil = 0.0254.

FIGURE R403.1(2)
PERMANENT WOOD FOUNDATION BASEMENT WALL SECTION

INTERNATIONAL CODE COUNCIL®
Copyright © 2019 ICC & NYSDOS. ALL RIGHTS RESERVED. Accessed by Lauren Gualdino (lgualdino@briarcliffmanor.org), (-) Order Number #100880972 on May 08, 2020 07:05 AM (PDT) pursuant to License Agreement with ICC & NYSDOS. No further reproduction, no

100880972

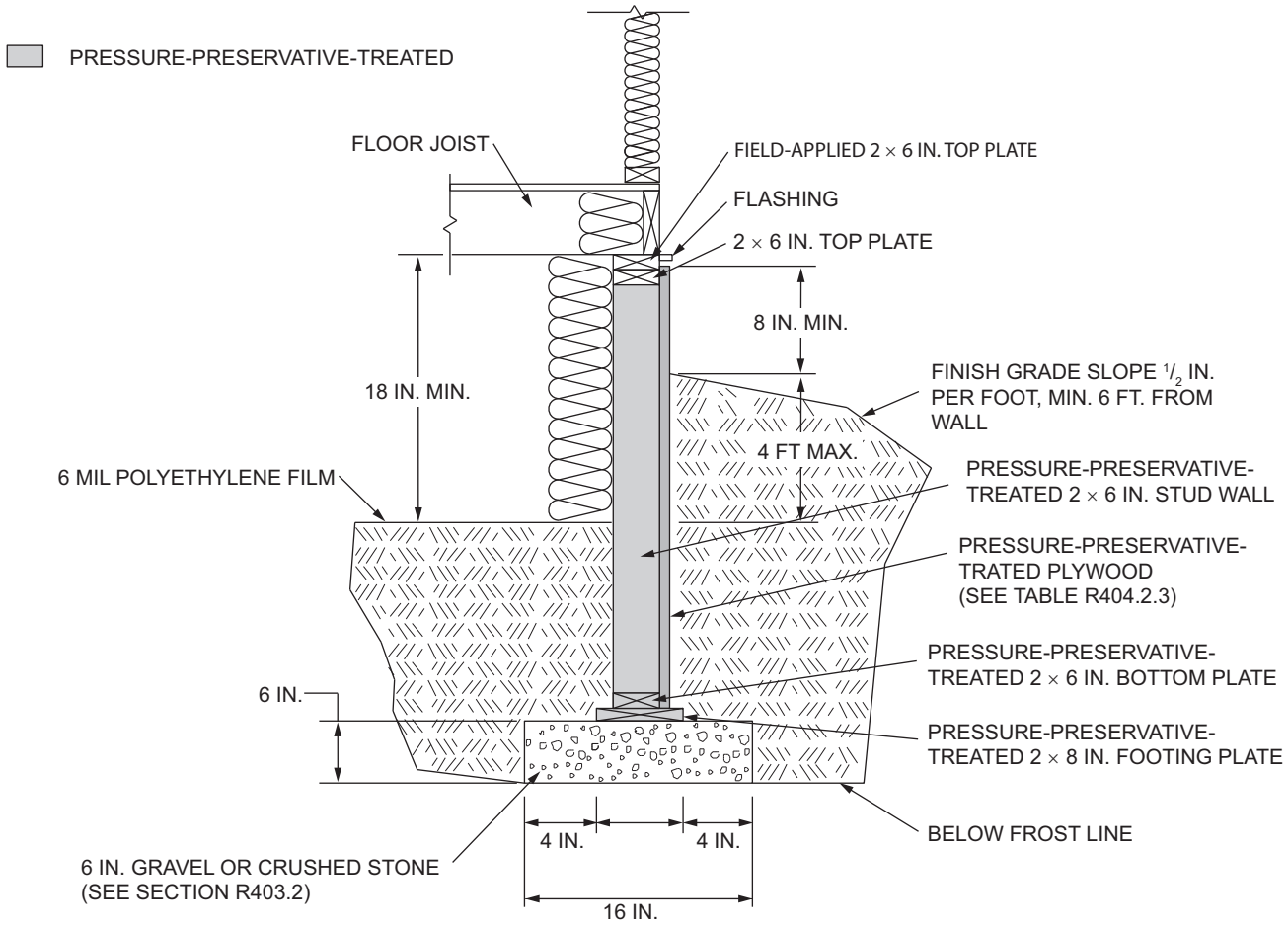

For SI: 1 inch = 25.4 mm, 1 foot = 304.8 mm, 1 mil = 0.0254 mm.

FIGURE R403.1(3)
PERMANENT WOOD FOUNDATION CRAWL SPACE SECTION

INTERNATIONAL CODE COUNCIL®
Copyright © 2019 ICC & NYSDOS. ALL RIGHTS RESERVED. Accessed by Lauren Gualdino (lgualdino@briarcliffmanor.org), (-) Order Number #100880972 on May 08, 2020 07:05 AM (PDT) pursuant to License Agreement with ICC & NYSDOS. No further reproduction, no

100880972

R403.1.2 Continuous footing in Seismic Design Categories D_0, D_1 and D_2. Exterior walls of buildings located in Seismic Design Categories D_0, D_1 and D_2 shall be supported by continuous solid or fully grouted masonry or concrete footings. Other footing materials or systems shall be designed in accordance with accepted engineering practice. Required interior *braced wall panels* in buildings located in Seismic Design Categories D_0, D_1 and D_2 with plan dimensions greater than 50 feet (15 240 mm) shall be supported by continuous solid or fully grouted masonry or concrete footings in accordance with Section R403.1.3.4, except for two-story buildings in Seismic Design Category D_2, in which all *braced wall panels*, interior and exterior, shall be supported on continuous foundations.

Exception: Two-story buildings shall be permitted to have interior *braced wall panels* supported on continuous foundations at intervals not exceeding 50 feet (15 240 mm) provided that:

1. The height of cripple walls does not exceed 4 feet (1219 mm).
2. First-floor braced wall panels are supported on doubled floor joists, continuous blocking or floor beams.
3. The distance between bracing lines does not exceed twice the building width measured parallel to the braced wall line.

R403.1.3 Footing and stem wall reinforcing in Seismic Design Categories D_0, D_1, and D_2. Concrete footings located in Seismic Design Categories D_0, D_1 and D_2, as established in Table R301.2(1), shall have minimum reinforcement in accordance with this section and Figure R403.1.3. Reinforcement shall be installed with support and cover in accordance with Section R403.1.3.5.

R403.1.3.1 Concrete stem walls with concrete footings. In Seismic Design Categories D_0, D_1 and D_2 where a construction joint is created between a concrete footing and a concrete stem wall, not fewer than one No. 4 vertical bar shall be installed at not more than 4 feet (1219 mm) on center. The vertical bar shall have a standard hook and extend to the bottom of the footing and shall have support and cover as specified in Section R403.1.3.5.3 and extend not less than 14 inches (357 mm) into the stem wall. Standard hooks shall comply with Section R608.5.4.5. Not fewer than one No. 4 horizontal bar shall be installed within 12 inches (305 mm) of the top of the stem wall and one No. 4 horizontal bar shall be located 3 to 4 inches (76 mm to 102 mm) from the bottom of the footing.

R403.1.3.2 Masonry stem walls with concrete footings. In Seismic Design Categories D_0, D_1 and D_2 where a masonry stem wall is supported on a concrete footing, not fewer than one No. 4 vertical bar shall be installed at not more than 4 feet (1219 mm) on center. The vertical bar shall have a standard hook and extend to the bottom of the footing and shall have support and cover as specified in Section R403.1.3.5.3 and extend not less than 14 inches (357 mm) into the stem wall. Standard hooks shall comply with Section R608.5.4.5. Not fewer than one No. 4 horizontal bar shall be installed within 12 inches (305 mm) of the top of the wall and one No. 4 horizontal bar shall be located 3 to 4 inches (76 mm to 102 mm) from the bottom of the footing. Masonry stem walls shall be solid grouted.

R403.1.3.3 Slabs-on-ground with turned-down footings. In Seismic Design Categories D_0, D_1 and D_2, slabs-on-ground cast monolithically with turned-down footings shall have not fewer than one No. 4 bar at the top and the bottom of the footing or one No. 5 bar or two No. 4 bars in the middle third of the footing depth.

Where the slab is not cast monolithically with the footing, No. 3 or larger vertical dowels with standard hooks on each end shall be installed at not more than 4 feet (1219 mm) on center in accordance with Figure R403.1.3, Detail 2. Standard hooks shall comply with Section R608.5.4.5.

R403.1.3.4 Interior bearing and braced wall panel footings in Seismic Design Categories D_0, D_1 and D_2. In Seismic Design Categories D_0, D_1 and D_2, interior footings supporting bearing walls or *braced wall panels*, and cast monolithically with a slab on *grade*, shall extend to a depth of not less than 12 inches (305 mm) below the top of the slab.

R403.1.3.5 Reinforcement. Footing and stem wall reinforcement shall comply with Sections R403.1.3.5.1 through R403.1.3.5.4.

R403.1.3.5.1 Steel reinforcement. Steel reinforcement shall comply with the requirements of ASTM A615, A706 or A996. ASTM A996 bars produced from rail steel shall be Type R. The minimum yield strength of reinforcing steel shall be 40,000 psi (Grade 40) (276 MPa).

R403.1.3.5.2 Location of reinforcement in wall. The center of vertical reinforcement in stem walls shall be located at the centerline of the wall. Horizontal and vertical reinforcement shall be located in footings and stem walls to provide the minimum cover required by Section R403.1.3.5.3.

R403.1.3.5.3 Support and cover. Reinforcement shall be secured in the proper location in the forms with tie wire or other bar support system to prevent displacement during the concrete placement operation. Steel reinforcement in concrete cast against the earth shall have a minimum cover of 3 inches (75 mm). Minimum cover for reinforcement in concrete cast in removable forms that will be exposed to the earth or weather shall be $1^1/_2$ inches (38 mm) for No. 5 bars and smaller, and 2 inches (50 mm) for No. 6 bars and larger. For concrete cast in removable forms that will not be exposed to the earth or weather, and for concrete cast in stay-in-place forms, minimum cover shall be $^3/_4$ inch (19 mm).

R403.1.3.5.4 Lap splices. Vertical and horizontal reinforcement shall be the longest lengths practical. Where splices are necessary in reinforcement, the length of lap splice shall be in accordance with

INTERNATIONAL CODE COUNCIL®
Copyright © 2019 ICC & NYSDOS. ALL RIGHTS RESERVED. Accessed by Lauren Gualdino (lgualdino@briarcliffmanor.org), (-) Order Number #100880972 on May 08, 2020 07:05 AM (PDT) pursuant to License Agreement with ICC & NYSDOS. No further reproduction, no

100880972

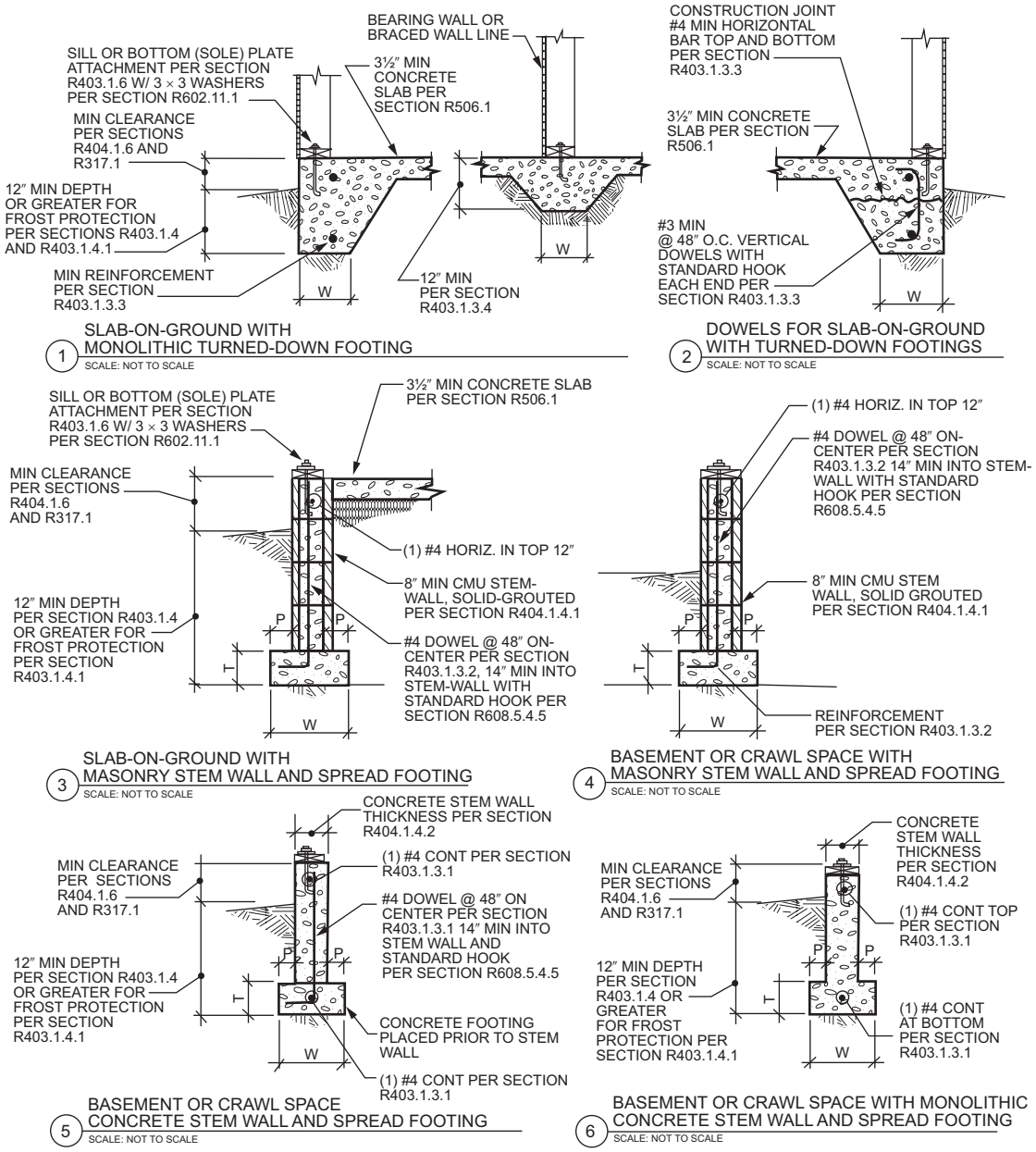

W = Width of footing, T = Thickness of footing and P = Projection per Section R403.1.1

NOTES:

a. See Section R404.3 for sill requirements.
b. See Section R403.1.6 for sill attachment.
c. See Section R506.2.3 for vapor barrier requirements.
d. See Section R403.1 for base.
e. See Section R408 for under-floor ventilation and access requirements.
f. See Section R403.1.3.5 for reinforcement requirements.

FIGURE R403.1.3
REINFORCED CONCRETE FOOTINGS AND MASONRY AND CONCRETE STEM WALLS IN SDC D_0, D_1 AND D_2[a, b, c, d, e, f,]

INTERNATIONAL CODE COUNCIL®
Copyright © 2019 ICC & NYSDOS. ALL RIGHTS RESERVED. Accessed by Lauren Gualdino (lgualdino@briarcliffmanor.org), (-) Order Number #100880972 on May 08, 2020 07:05 AM (PDT) pursuant to License Agreement with ICC & NYSDOS. No further reproduction, no

100880972

Table R608.5.4.(1) and Figure R608.5.4(1). The maximum gap between noncontact parallel bars at a lap splice shall not exceed the smaller of one-fifth the required lap length and 6 inches (152 mm) [see Figure R608.5.4(1)].

R403.1.3.6 Isolated concrete footings. In detached one- and two-family dwellings that are three stories or less in height and constructed with stud bearing walls, isolated plain concrete footings supporting columns or pedestals are permitted.

R403.1.4 Minimum depth. Exterior footings shall be placed not less than 12 inches (305 mm) below the undisturbed ground surface. Where applicable, the depth of footings shall also conform to Section R403.1.4.1.

R403.1.4.1 Frost protection. Except where otherwise protected from frost, foundation walls, piers and other permanent supports of buildings and structures shall be protected from frost by one or more of the following methods:

1. Extended below the frost line specified in Table R301.2.(1).
2. Constructed in accordance with Section R403.3.
3. Constructed in accordance with ASCE 32.
4. Erected on solid rock.

Footings shall not bear on frozen soil unless the frozen condition is permanent.

Exceptions:

1. Protection of free-standing *accessory structures* with an area of 600 square feet (56 m^2) or less, of light-frame construction, with an eave height of 10 feet (3048 mm) or less shall not be required.
2. Protection of free-standing *accessory structures* with an area of 400 square feet (37 m^2) or less, of other than light-frame construction, with an eave height of 10 feet (3048 mm) or less shall not be required.
3. Decks not supported by a dwelling need not be provided with footings that extend below the frost line.

R403.1.5 Slope. The top surface of footings shall be level. The bottom surface of footings shall not have a slope exceeding one unit vertical in 10 units horizontal (10-percent slope). Footings shall be stepped where it is necessary to change the elevation of the top surface of the footings or where the slope of the bottom surface of the footings will exceed one unit vertical in 10 units horizontal (10-percent slope).

R403.1.6 Foundation anchorage. Wood sill plates and wood walls supported directly on continuous foundations shall be anchored to the foundation in accordance with this section.

Cold-formed steel framing shall be anchored directly to the foundation or fastened to wood sill plates in accordance with Section R505.3.1 or R603.3.1, as applicable. Wood sill plates supporting cold-formed steel framing shall be anchored to the foundation in accordance with this section.

Wood sole plates at all exterior walls on monolithic slabs, wood sole plates of *braced wall panels* at building interiors on monolithic slabs and all wood sill plates shall be anchored to the foundation with minimum $^1/_2$-inch-diameter (12.7 mm) anchor bolts spaced not greater than 6 feet (1829 mm) on center or *approved* anchors or anchor straps spaced as required to provide equivalent anchorage to $^1/_2$-inch-diameter (12.7 mm) anchor bolts. Bolts shall extend not less than 7 inches (178 mm) into concrete or grouted cells of concrete masonry units. The bolts shall be located in the middle third of the width of the plate. A nut and washer shall be tightened on each anchor bolt. There shall be not fewer than two bolts per plate section with one bolt located not more than 12 inches (305 mm) or less than seven bolt diameters from each end of the plate section. Interior bearing wall sole plates on monolithic slab foundation that are not part of a *braced wall panel* shall be positively anchored with *approved* fasteners. Sill plates and sole plates shall be protected against decay and termites where required by Sections R317 and R318.

Exceptions:

1. Walls 24 inches (610 mm) total length or shorter connecting offset braced wall panels shall be anchored to the foundation with not fewer than one anchor bolt located in the center third of the plate section and shall be attached to adjacent braced wall panels at corners as shown in Item 9 of Table R602.3(1).
2. Connection of walls 12 inches (305 mm) total length or shorter connecting offset *braced wall panels* to the foundation without anchor bolts shall be permitted. The wall shall be attached to adjacent braced wall panels at corners as shown in Item 9 of Table R602.3(1).

R403.1.6.1 Foundation anchorage in Seismic Design Categories C, D_0, D_1 and D_2. In addition to the requirements of Section R403.1.6, the following requirements shall apply to wood light-frame structures in Seismic Design Categories D_0, D_1 and D_2 and wood light-frame townhouses in Seismic Design Category C.

1. Plate washers conforming to Section R602.11.1 shall be provided for all anchor bolts over the full length of required *braced wall lines* except where *approved* anchor straps are used. Properly sized cut washers shall be permitted for anchor bolts in wall lines not containing *braced wall panels*.
2. Interior braced wall plates shall have anchor bolts spaced at not more than 6 feet (1829 mm) on center and located within 12 inches (305 mm) of the ends of each plate section where supported on a continuous foundation.
3. Interior bearing wall sole plates shall have anchor bolts spaced at not more than 6 feet (1829 mm) on center and located within 12 inches (305 mm)

INTERNATIONAL CODE COUNCIL®
Copyright © 2019 ICC & NYSDOS. ALL RIGHTS RESERVED. Accessed by Lauren Gualdino (lgualdino@briarcliffmanor.org), (-) Order Number #100880972 on May 08, 2020 07:05 AM (PDT) pursuant to License Agreement with ICC & NYSDOS. No further reproduction, no

100880972

of the ends of each plate section where supported on a continuous foundation.

4. The maximum anchor bolt spacing shall be 4 feet (1219 mm) for buildings over two stories in height.
5. Stepped cripple walls shall conform to Section R602.11.2.
6. Where continuous wood foundations in accordance with Section R404.2 are used, the force transfer shall have a capacity equal to or greater than the connections required by Section R602.11.1 or the *braced wall panel* shall be connected to the wood foundations in accordance with the *braced wall panel*-to-floor fastening requirements of Table R602.3(1).

R403.1.7 Footings on or adjacent to slopes. The placement of buildings and structures on or adjacent to slopes steeper than one unit vertical in three units horizontal (33.3-percent slope) shall conform to Sections R403.1.7.1 through R403.1.7.4.

R403.1.7.1 Building clearances from ascending slopes. In general, buildings below slopes shall be set a sufficient distance from the slope to provide protection from slope drainage, erosion and shallow failures. Except as provided in Section R403.1.7.4 and Figure R403.1.7.1, the following criteria will be assumed to provide this protection. Where the existing slope is steeper than one unit vertical in one unit horizontal (100-percent slope), the toe of the slope shall be assumed to be at the intersection of a horizontal plane drawn from the top of the foundation and a plane drawn tangent to the slope at an angle of 45 degrees (0.79 rad) to the horizontal. Where a retaining wall is constructed at the toe of the slope, the height of the slope shall be measured from the top of the wall to the top of the slope.

R403.1.7.2 Footing setback from descending slope surfaces. Footings on or adjacent to slope surfaces shall be founded in material with an embedment and setback from the slope surface sufficient to provide vertical and lateral support for the footing without detrimental settlement. Except as provided for in Section R403.1.7.4 and Figure R403.1.7.1, the following setback is deemed adequate to meet the criteria. Where the slope is steeper than one unit vertical in one unit horizontal (100-percent slope), the required setback shall be measured from an imaginary plane 45 degrees (0.79 rad) to the horizontal, projected upward from the toe of the slope.

R403.1.7.3 Foundation elevation. On graded sites, the top of any exterior foundation shall extend above the elevation of the street gutter at point of discharge or the inlet of an *approved* drainage device not less than 12 inches (305 mm) plus 2 percent. Alternate elevations are permitted subject to the approval of the *building official*, provided that it can be demonstrated that required drainage to the point of discharge and away from the structure is provided at all locations on the site.

R403.1.7.4 Alternate setbacks and clearances. Alternate setbacks and clearances are permitted, subject to the approval of the *building official*. The *building official* is permitted to require an investigation and recommendation of a qualified engineer to demonstrate that the intent of this section has been satisfied. Such an investigation shall include consideration of material, height of slope, slope gradient, load intensity and erosion characteristics of slope material.

R403.1.8 Foundations on expansive soils. Foundation and floor slabs for buildings located on *expansive soils* shall be designed in accordance with Section 1808.6 of the *Building Code of New York State*.

Exception: Slab-on-ground and other foundation systems that have performed adequately in soil conditions similar to those encountered at the building site are permitted subject to the approval of the *building official*.

R403.1.8.1 Expansive soils classifications. Soils meeting all of the following provisions shall be considered to be expansive, except that tests to show compli-

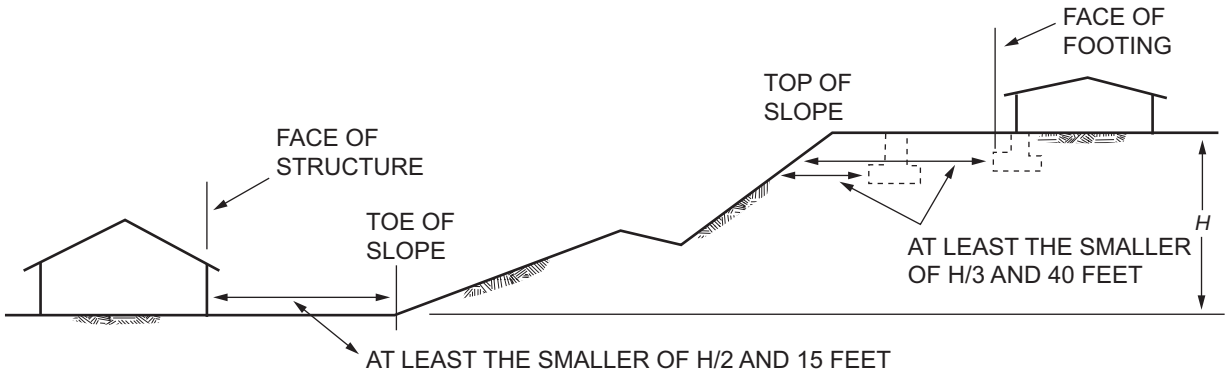

For SI: 1 foot = 304.8 mm.

FIGURE R403.1.7.1
FOUNDATION CLEARANCE FROM SLOPES

INTERNATIONAL CODE COUNCIL®
Copyright © 2019 ICC & NYSDOS. ALL RIGHTS RESERVED. Accessed by Lauren Gualdino (lgualdino@briarcliffmanor.org), (-) Order Number #100880972 on May 08, 2020 07:05 AM (PDT) pursuant to License Agreement with ICC & NYSDOS. No further reproduction, no

100880972

ance with Items 1, 2 and 3 shall not be required if the test prescribed in Item 4 is conducted:

1. Plasticity Index (PI) of 15 or greater, determined in accordance with ASTM D4318.
2. More than 10 percent of the soil particles pass a No. 200 sieve (75 μm), determined in accordance with ASTM D422.
3. More than 10 percent of the soil particles are less than 5 micrometers in size, determined in accordance with ASTM D422.
4. Expansion Index greater than 20, determined in accordance with ASTM D4829.

R403.2 Footings for wood foundations. Footings for wood foundations shall be in accordance with Figures R403.1(2) and R403.1(3). Gravel shall be washed and well graded. The maximum size stone shall not exceed $^{3}/_{4}$ inch (19.1 mm). Gravel shall be free from organic, clayey or silty soils. Sand shall be coarse, not smaller than $^{1}/_{16}$-inch (1.6 mm) grains and shall be free from organic, clayey or silty soils. Crushed stone shall have a maximum size of $^{1}/_{2}$ inch (12.7 mm).

R403.3 Frost-protected shallow foundations. For buildings where the monthly mean temperature of the building is maintained at not less than 64°F (18°C), footings are not required to extend below the frost line where protected from frost by insulation in accordance with Figure R403.3(1) and Table R403.3(1). Foundations protected from frost in accordance with Figure R403.3(1) and Table R403.3(1) shall not be used for unheated spaces such as porches, utility rooms, garages and carports, and shall not be attached to *basements* or *crawl spaces* that are not maintained at a minimum monthly mean temperature of 64°F (18°C).

Materials used below *grade* for the purpose of insulating footings against frost shall be *labeled* as complying with ASTM C578.

R403.3.1 Foundations adjoining frost-protected shallow foundations. Foundations that adjoin frost-protected shallow foundations shall be protected from frost in accordance with Section R403.1.4.

R403.3.1.1 Attachment to unheated slab-on-ground structure. Vertical wall insulation and horizontal insulation of frost-protected shallow foundations that adjoin a slab-on-ground foundation that does not have a monthly mean temperature maintained at not less than 64°F (18°C) shall be in accordance with Figure R403.3(3) and Table R403.3(1). Vertical wall insulation shall extend between the frost-protected shallow foundation and the adjoining slab foundation. Required horizontal insulation shall be continuous under the adjoining slab foundation and through any foundation walls adjoining the frost- protected shallow foundation. Where insulation passes through a foundation wall, it shall be either of a type complying with this section and having bearing capacity equal to or greater than the structural loads imposed by the building, or the building shall be designed and constructed using beams, lintels, cantilevers or other means of transferring building loads such that the structural loads of the building do not bear on the insulation.

R403.3.1.2 Attachment to heated structure. Where a frost-protected shallow foundation abuts a structure that has a monthly mean temperature maintained at not less than 64°F (18°C), horizontal insulation and vertical wall insulation shall not be required between the frost-protected shallow foundation and the adjoining structure. Where the frost-protected shallow foundation abuts the heated structure, the horizontal insulation and vertical wall insulation shall extend along the adjoining foundation in accordance with Figure R403.3(4) a distance of not less than Dimension A in Table R403.3(1).

Exception: Where the frost-protected shallow foundation abuts the heated structure to form an inside corner, vertical insulation extending along the adjoining foundation is not required.

R403.3.2 Protection of horizontal insulation below ground. Horizontal insulation placed less than 12 inches (305 mm) below the ground surface or that portion of horizontal insulation extending outward more than 24 inches (610 mm) from the foundation edge shall be protected against damage by use of a concrete slab or asphalt paving on the ground surface directly above the insulation or by cementitious board, plywood rated for below-ground use, or other *approved* materials placed below ground, directly above the top surface of the insulation.

R403.3.3 Drainage. Final *grade* shall be sloped in accordance with Section R401.3. In other than Group I Soils, as detailed in Table R405.1, gravel or crushed stone beneath horizontal insulation below ground shall drain to daylight or into an *approved* sewer system.

R403.3.4 Termite protection. The use of foam plastic in areas of "very heavy" termite infestation probability shall be in accordance with Section R318.4.

R403.4 Footings for precast concrete foundations. Footings for precast concrete foundations shall comply with Section R403.4.

R403.4.1 Crushed stone footings. Clean crushed stone shall be free from organic, clayey or silty soils. Crushed stone shall be angular in nature and meet ASTM C33, with the maximum size stone not to exceed $^{1}/_{2}$ inch (12.7 mm) and the minimum stone size not to be smaller than $^{1}/_{16}$ inch (1.6 mm). Crushed stone footings for precast foundations shall be installed in accordance with Figure R403.4(1) and Table R403.4. Crushed stone footings shall be consolidated using a vibratory plate in not greater than 8-inch (203 mm) lifts. Crushed stone footings shall be limited to Seismic Design Categories A, B and C.

R403.4.2 Concrete footings. Concrete footings shall be installed in accordance with Section R403.1 and Figure R403.4(2).

INTERNATIONAL CODE COUNCIL®
Copyright © 2019 ICC & NYSDOS. ALL RIGHTS RESERVED. Accessed by Lauren Gualdino (lgualdino@briarcliffmanor.org), (-) Order Number #100880972 on May 08, 2020 07:05 AM (PDT) pursuant to License Agreement with ICC & NYSDOS. No further reproduction, no

100880972

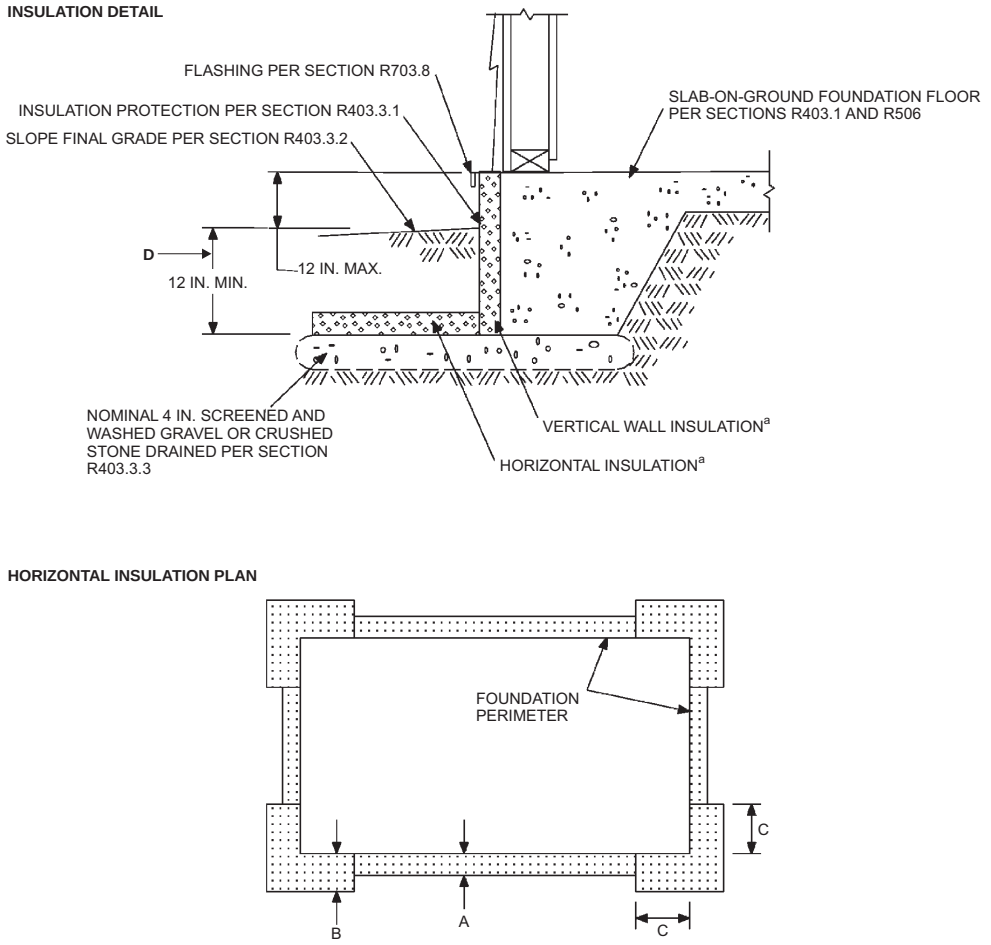

For SI: 1 inch = 25.4 mm.

a. See Table R403.3(1) for required dimensions and *R*-values for vertical and horizontal insulation and minimum footing depth.

FIGURE R403.3(1)
INSULATION PLACEMENT FOR FROST-PROTECTED FOOTINGS IN HEATED BUILDINGS

TABLE R403.3(1)
MINIMUM FOOTING DEPTH AND INSULATION REQUIREMENTS FOR FROST-PROTECTED FOOTINGS IN HEATED BUILDINGS[a]

AIR FREEZING INDEX (°F-days)[b]	MINIMUM FOOTING DEPTH, D (inches)	VERTICAL INSULATION R-VALUE[c, d]	HORIZONTAL INSULATION R-VALUE[c, e]		HORIZONTAL INSULATION DIMENSIONS PER FIGURE R403.3(1) (inches)		
			Along walls	At corners	A	B	C
1,500 or less	12	4.5	Not required	Not required	Not required	Not required	Not required
2,000	14	5.6	Not required	Not required	Not required	Not required	Not required
2,500	16	6.7	1.7	4.9	12	24	40
3,000	16	7.8	6.5	8.6	12	24	40
3,500	16	9.0	8.0	11.2	24	30	60
4,000	16	10.1	10.5	13.1	24	36	60

For SI: 1 inch = 25.4 mm, °C = [(°F) - 32]/1.8.

a. Insulation requirements are for protection against frost damage in heated buildings. Greater values could be required to meet energy conservation standards.

b. See Figure R403.3(2) or Table R403.3(2) for Air Freezing Index values.

c. Insulation materials shall provide the stated minimum *R*-values under long-term exposure to moist, below-ground conditions in freezing climates. The following *R*-values shall be used to determine insulation thicknesses required for this application: Type II expanded polystyrene (EPS)-3.2 R per inch for vertical insulation and 2.6 R per inch for horizontal insulation; Type IX expanded polystyrene (EPS)-3.4 R per inch for vertical insulation and 2.8 R per inch for horizontal insulation; Types IV, V, VI, VII, and X extruded polystyrene (XPS)-4.5 R per inch for vertical insulation and 4.0 R per inch for horizontal insulation.

d. Vertical insulation shall be expanded polystyrene insulation or extruded polystyrene insulation.

e. Horizontal insulation shall be expanded polystyrene insulation or extruded polystyrene insulation.

INTERNATIONAL CODE COUNCIL®
Copyright © 2019 ICC & NYSDOS. ALL RIGHTS RESERVED. Accessed by Lauren Gualdino (lgualdino@briarcliffmanor.org), (-) Order Number #100880972 on May 08, 2020 07:05 AM (PDT) pursuant to License Agreement with ICC & NYSDOS. No further reproduction, no

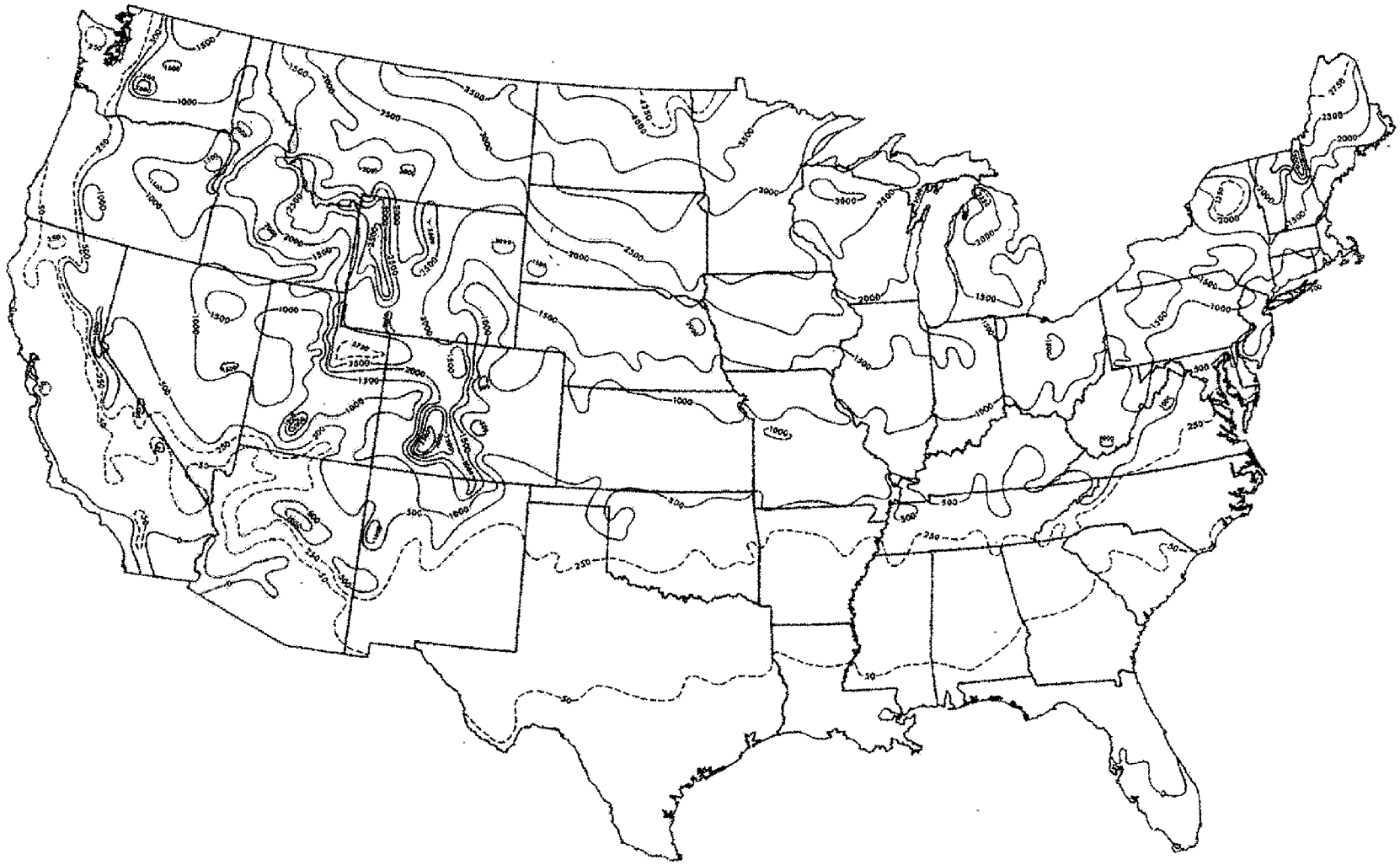

For SI: °C = [(°F) -32]/1.8.

Note: The air-freezing index is defined as cumulative degree days below 32°F. It is used as a measure of the combined magnitude and duration of air temperature below freezing. The index was computed over a 12-month period (July-June) for each of the 3,044 stations used in the above analysis. Dates from the 1951-80 period were fitted to a Weibull probability distribution to produce an estimate of the 100-year return period.

FIGURE R403.3(2)
AIR-FREEZING INDEX AN ESTIMATE OF THE 100-YEAR RETURN PERIOD

Copyright © 2019 ICC & NYSDOS. ALL RIGHTS RESERVED. Accessed by Lauren Gualdino (lgualdino@briarcliffmanor.org). (-) Order Number #100880972 on May 08, 2020 07:05 AM (PDT) pursuant to License Agreement with ICC & NYSDOS. No further reproduction, no
100880972

100880972

[NY]TABLE R403.3(2)
AIR-FREEZING INDEX FOR NY LOCATIONS BY COUNTY

STATE	AIR-FREEZING INDEX					
	1500 or less	2000	2500	3000	3500	4000
New York	Albany, Bronx, Cayuga, Columbia, Cortland, Dutchess, Genessee, Kings, Livingston, Monroe, Nassau, New York, Niagara, Onondaga, Ontario, Orange, Orleans, Putnam, Queens, Richmond, Rockland, Seneca, Suffolk, Wayne, Westchester, Yates	All counties not listed	Clinton, Essex, Franklin, Hamilton, Herkimer, Jefferson, Lewis, St. Lawrence, Warren	—	—	—

INTERNATIONAL CODE COUNCIL®
Copyright © 2019 ICC & NYSDOS. ALL RIGHTS RESERVED. Accessed by Lauren Gualdino (lgualdino@briarcliffmanor.org), (-) Order Number #100880972 on May 08, 2020 07:05 AM (PDT) pursuant to License Agreement with ICC & NYSDOS. No further reproduction, no

100880972

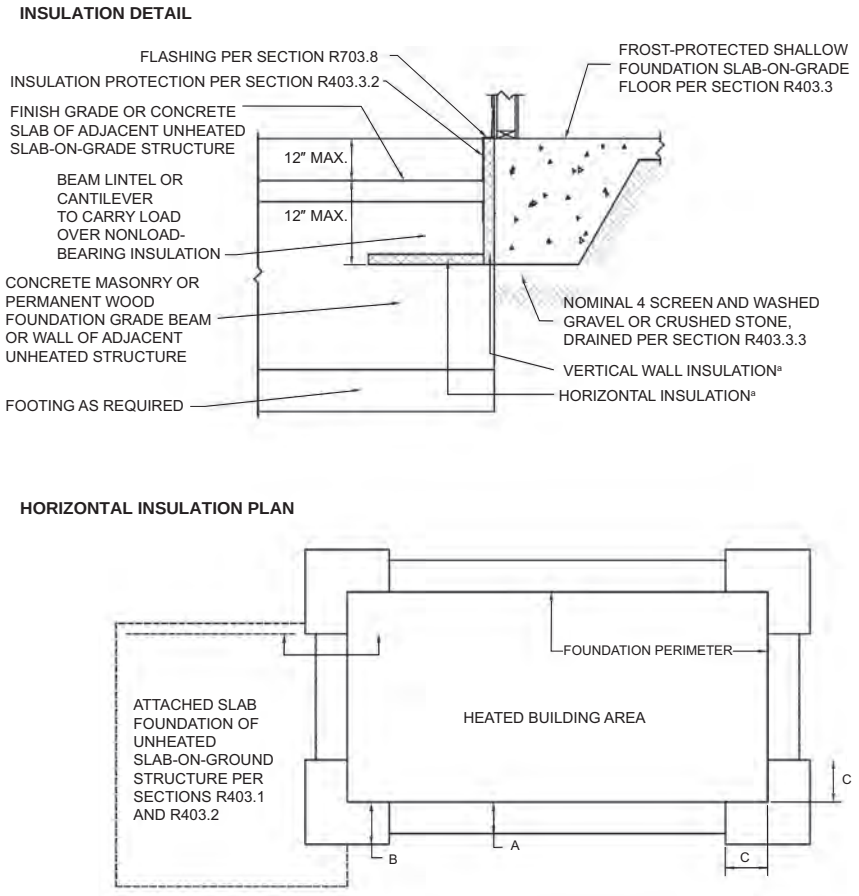

For SI: 1 inch = 25.4 mm.

a. See Table R403.3(1) for required dimensions and *R*-values for vertical and horizontal insulation.

FIGURE R403.3(3)
INSULATION PLACEMENT FOR FROST-PROTECTED FOOTINGS ADJACENT TO UNHEATED SLAB-ON-GROUND STRUCTURE

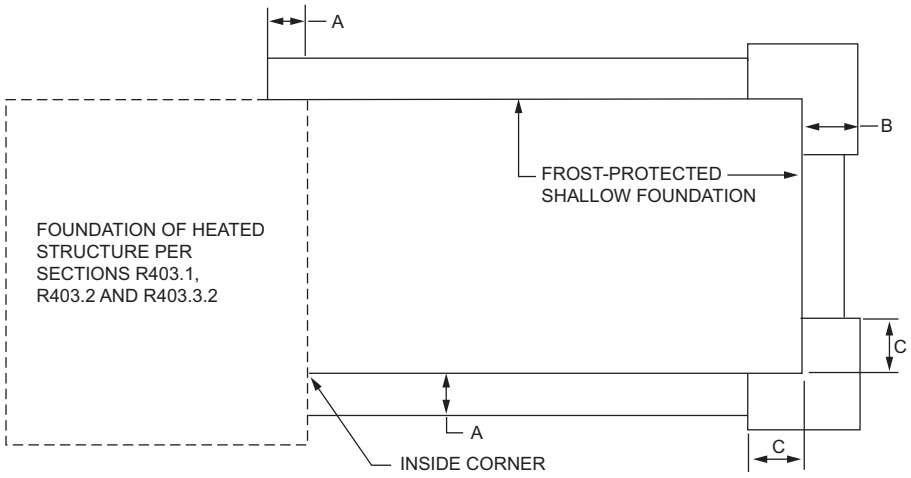

FIGURE R403.3(4)
INSULATION PLACEMENT FOR FROST-PROTECTED FOOTINGS ADJACENT TO HEATED STRUCTURE

INTERNATIONAL CODE COUNCIL®
Copyright © 2019 ICC & NYSDOS. ALL RIGHTS RESERVED. Accessed by Lauren Gualdino (lgualdino@briarcliffmanor.org), (-) Order Number #100880972 on May 08, 2020 07:05 AM (PDT) pursuant to License Agreement with ICC & NYSDOS. No further reproduction, no

TABLE R403.4
MINIMUM DEPTH (D) AND WIDTH (W) OF CRUSHED STONE FOOTINGS[a, b] (inches)

NUMBER OF STORIES	UNIFORM WALL LOAD	DEPTH (D) AND WIDTH (W)	LOAD-BEARING VALUE OF SOIL (psf)																	
			1500			2000			2500			3000			3500			4000		
			MH, CH, CL, ML[c]			SC, GC, SM, GM, SP, SW[c]						GP, GW[c]								
			Wall width (inches)			Wall width (inches)			Wall width (inches)			Wall width (inches)			Wall width (inches)			Wall width (inches)		
			8	10	12	8	10	12	8	10	12	8	10	12	8	10	12	8	10	12
Conventional light-frame construction																				
1-story	1100 plf	D	4	4	4	4	4	4	4	4	4	4	4	4	4	4	4	4	4	4
		W	13	15	17	13	15	17	13	15	17	13	15	17	13	15	17	13	15	17
2-story	1800 plf	D	6	4	4	4	4	4	4	4	4	4	4	4	4	4	4	4	4	4
		W	15	15	17	13	15	17	13	15	17	13	15	17	13	15	17	13	15	17
3-story	2900 plf	D	14	12	10	9	7	5	6	4	4	4	4	4	4	4	4	4	4	4
		W	25	24	24	19	19	18	15	15	17	13	15	17	13	15	17	13	15	17
4-inch brick veneer over light-frame or 8-inch hollow concrete masonry																				
1-story	1500 plf	D	4	4	4	4	4	4	4	4	4	4	4	4	4	4	4	4	4	4
		W	13	15	17	13	15	17	13	15	17	13	15	17	13	15	17	13	15	17
2-story	2700 plf	D	12	11	9	8	6	4	5	4	4	4	4	4	4	4	4	4	4	4
		W	22	23	23	18	17	17	14	15	17	13	15	17	13	15	17	13	15	17
3-story	4000 plf	D	21	20	18	14	13	11	10	8	7	7	6	4	5	4	4	4	4	4
		W	33	34	33	25	26	25	20	20	21	17	17	17	14	15	17	13	15	17
8-inch solid or fully grouted masonry																				
1-story	2000 plf	D	7	6	4	4	4	4	4	4	4	4	4	4	4	4	4	4	4	4
		W	17	17	17	13	15	17	13	15	17	13	15	17	13	15	17	13	15	17
2-story	3600 plf	D	19	17	15	12	11	9	9	7	5	6	4	4	4	4	4	4	4	4
		W	30	30	30	22	23	23	19	19	18	15	15	17	13	15	17	13	15	17
3-story	5300 plf	D	30	29	27	21	19	18	16	14	12	12	10	8	9	8	6	7	6	4
		W	43	44	44	33	32	33	27	27	26	22	22	22	19	20	19	17	17	17

For SI: 1 inch = 25.4 mm, 1 plf = 14.6 N/m, 1 pound per square foot = 47.9 N/m^2.

a. Linear interpolation of stone depth between wall widths is permitted within each Load-Bearing Value of Soil (psf).

b. Crushed stone must be consolidated in 8-inch lifts with a plate vibrator.

c. Soil classes are in accordance with the Unified Soil Classification System. Refer to Table R4045.1.

Copyright © 2019 ICC & NYSDOS. ALL RIGHTS RESERVED. Accessed by Lauren Gualdino (lgualdino@briarcliffmanor.org). (-) Order Number #100880972 on May 08, 2020 07:05 AM (PDT) pursuant to License Agreement with ICC & NYSDOS. No further reproduction, no

100880972

100880972

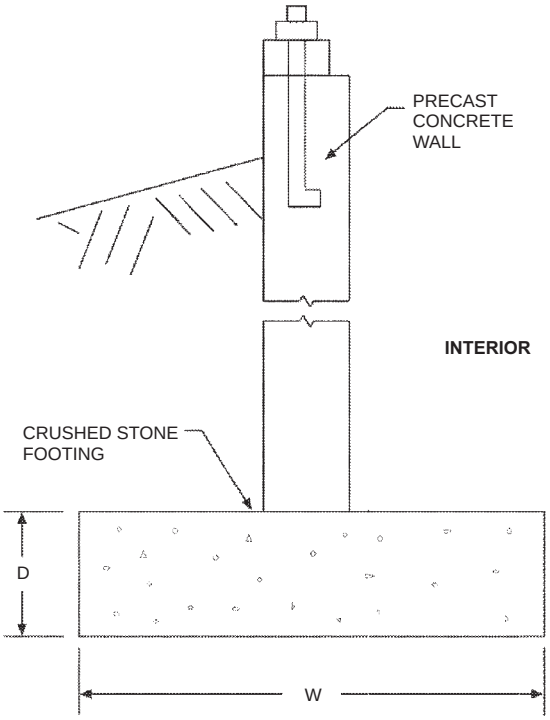

FIGURE R403.4(1)
BASEMENT OR CRAWL SPACE WITH PRECAST FOUNDATION WALL BEARING ON CRUSHED STONE

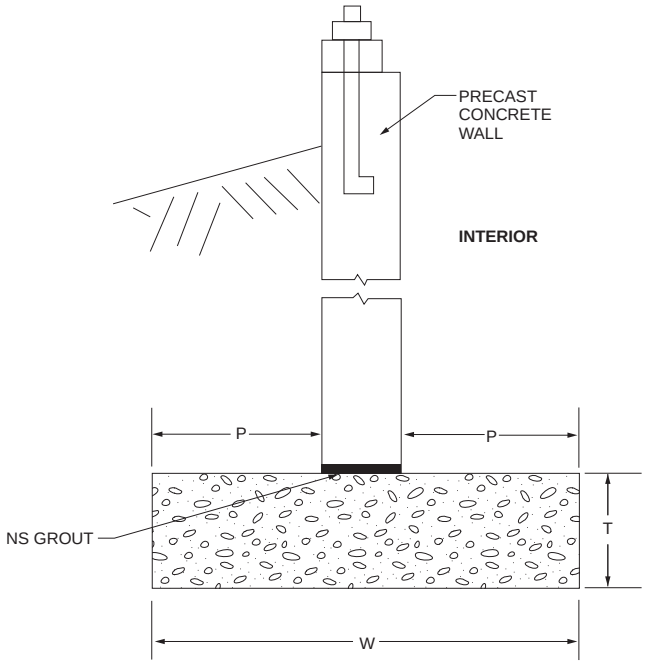

FIGURE R403.4(2)
BASEMENT OR CRAWL SPACE WITH PRECAST FOUNDATION WALL ON SPREAD FOOTING

SECTION R404
FOUNDATION AND RETAINING WALLS

R404.1 Concrete and masonry foundation walls. Concrete foundation walls shall be selected and constructed in accordance with the provisions of Section R404.1.3. Masonry foundation walls shall be selected and constructed in accordance with the provisions of Section R404.1.2.

R404.1.1 Design required. Concrete or masonry foundation walls shall be designed in accordance with accepted engineering practice where either of the following conditions exists:

1. Walls are subject to hydrostatic pressure from ground water.
2. Walls supporting more than 48 inches (1219 mm) of unbalanced backfill that do not have permanent lateral support at the top or bottom.

R404.1.2 Design of masonry foundation walls. Masonry foundation walls shall be designed and constructed in accordance with the provisions of this section or in accordance with the provisions of TMS 402. Where TMS 402 or the provisions of this section are used to design masonry foundation walls, project drawings, typical details and specifications are not required to bear the seal of the architect or engineer responsible for design, unless otherwise required by the state law of the jurisdiction having authority.

R404.1.2.1 Masonry foundation walls. Concrete masonry and clay masonry foundation walls shall be constructed as set forth in Table R404.1.1(1), R404.1.1(2), R404.1.1(3) or R404.1.1(4) and shall comply with applicable provisions of Section R606. In buildings assigned to Seismic Design Categories D_0, D_1 and D_2, concrete masonry and clay masonry foundation walls shall also comply with Section R404.1.4.1. Rubble stone masonry foundation walls shall be constructed in accordance with Sections R404.1.8 and R606.4.2. Rubble stone masonry walls shall not be used in Seismic Design Categories D_0, D_1 and D_2.

R404.1.3 Concrete foundation walls. Concrete foundation walls that support light-frame walls shall be designed and constructed in accordance with the provisions of this section, ACI 318, ACI 332 or PCA 100. Concrete foundation walls that support above-grade concrete walls that are within the applicability limits of Section R608.2 shall be designed and constructed in accordance with the provisions of this section, ACI 318, ACI 332 or PCA 100. Concrete foundation walls that support above-grade concrete walls that are not within the applicability limits of Section R608.2 shall be designed and constructed in accordance with the provisions of ACI 318, ACI 332 or PCA 100. Where ACI 318, ACI 332, PCA 100 or the provisions of this section are used to design concrete foundation walls, project drawings, typical details and specifications are not required to bear the seal of the architect or engineer responsible for design, unless otherwise required by the state law of the *jurisdiction* having authority.

INTERNATIONAL CODE COUNCIL®
Copyright © 2019 ICC & NYSDOS. ALL RIGHTS RESERVED. Accessed by Lauren Gualdino (lgualdino@briarcliffmanor.org), (-) Order Number #100880972 on May 08, 2020 07:05 AM (PDT) pursuant to License Agreement with ICC & NYSDOS. No further reproduction, no

100880972

TABLE R404.1.1(1)
PLAIN MASONRY FOUNDATION WALLS[f]

MAXIMUM WALL HEIGHT (feet)	MAXIMUM UNBALANCED BACKFILL HEIGHT[c] (feet)	PLAIN MASONRY[a] MINIMUM NOMINAL WALL THICKNESS (inches)		
		Soil classes[b]		
		GW, GP, SW and SP	GM, GC, SM, SM-SC and ML	SC, MH, ML-CL and inorganic CL
5	4 5	6 solid[d] or 8 6 solid[d] or 8	6 solid[d] or 8 8	6 solid[d] or 8 10
6	4 5 6	6 solid[d] or 8 6 solid[d] or 8 8	6 solid[d] or 8 8 10	6 solid[d] or 8 10 12
7	4 5 6 7	6 solid[d] or 8 6 solid[d] or 8 10 12	8 10 12 10 solid[d]	8 10 10 solid[d] 12 solid[d]
8	4 5 6 7 8	6 solid[d] or 8 6 solid[d] or 8 10 12 10 grout[d]	6 solid[d] or 8 10 12 12 solid[d] 12 grout[d]	8 12 12 solid[d] Footnote e Footnote e
9	4 5 6 7 8 9	6 grout[d] or 8 solid[d] or 12 6 grout[d] or 10 solid[d] 8 grout[d] or 12 solid[d] 10 grout[d] 10 grout[d] 12 grout	6 grout[d] or 8 solid[d] 8 grout[d] or 12 solid[d] 10 grout[d] 10 grout[d] 12 grout Footnote e	8 grout[d] or 10 solid[d] 8 grout[d] 10 grout[d] 12 grout Footnote e Footnote e

For SI: 1 inch = 25.4 mm, 1 foot = 304.8 mm, 1 pound per square inch = 6.895 Pa.

a. Mortar shall be Type M or S and masonry shall be laid in running bond. Ungrouted hollow masonry units are permitted except where otherwise indicated.

b. Soil classes are in accordance with the Unified Soil Classification System. Refer to Table R405.1.

c. Unbalanced backfill height is the difference in height between the exterior finish ground level and the lower of the top of the concrete footing that supports the foundation wall or the interior finish ground level. Where an interior concrete slab-on-grade is provided and is in contact with the interior surface of the foundation wall, measurement of the unbalanced backfill height from the exterior finish ground level to the top of the interior concrete slab is permitted.

d. Solid indicates solid masonry unit; grout indicates grouted hollow units.

e. Wall construction shall be in accordance with either Table R404.1.1(2), Table R404.1.1(3), Table R404.1.1(4), or a design shall be provided.

f. The use of this table shall be prohibited for soil classifications not shown.

INTERNATIONAL CODE COUNCIL®
Copyright © 2019 ICC & NYSDOS. ALL RIGHTS RESERVED. Accessed by Lauren Gualdino (lgualdino@briarcliffmanor.org), (-) Order Number #100880972 on May 08, 2020 07:05 AM (PDT) pursuant to License Agreement with ICC & NYSDOS. No further reproduction, no

100880972

TABLE R404.1.1(2)
8-INCH MASONRY FOUNDATION WALLS WITH REINFORCING WHERE d ≥ 5 INCHES[a, c, f]

WALL HEIGHT	HEIGHT OF UNBALANCED BACKFILL[e]	MINIMUM VERTICAL REINFORCEMENT AND SPACING (INCHES)[b, c]		
		Soil classes and lateral soil load[d] (psf per foot below grade)		
		GW, GP, SW and SP soils 30	GM, GC, SM, SM-SC and ML soils 45	SC, ML-CL and inorganic CL soils 60
6 feet 8 inches	4 feet (or less)	#4 at 48	#4 at 48	#4 at 48
	5 feet	#4 at 48	#4 at 48	#4 at 48
	6 feet 8 inches	#4 at 48	#5 at 48	#6 at 48
7 feet 4 inches	4 feet (or less)	#4 at 48	#4 at 48	#4 at 48
	5 feet	#4 at 48	#4 at 48	#4 at 48
	6 feet	#4 at 48	#5 at 48	#5 at 48
	7 feet 4 inches	#5 at 48	#6 at 48	#6 at 40
8 feet	4 feet (or less)	#4 at 48	#4 at 48	#4 at 48
	5 feet	#4 at 48	#4 at 48	#4 at 48
	6 feet	#4 at 48	#5 at 48	#5 at 48
	7 feet	#5 at 48	#6 at 48	#6 at 40
	8 feet	#5 at 48	#6 at 48	#6 at 32
8 feet 8 inches	4 feet (or less)	#4 at 48	#4 at 48	#4 at 48
	5 feet	#4 at 48	#4 at 48	#5 at 48
	6 feet	#4 at 48	#5 at 48	#6 at 48
	7 feet	#5 at 48	#6 at 48	#6 at 40
	8 feet 8 inches	#6 at 48	#6 at 32	#6 at 24
9 feet 4 inches	4 feet (or less)	#4 at 48	#4 at 48	#4 at 48
	5 feet	#4 at 48	#4 at 48	#5 at 48
	6 feet	#4 at 48	#5 at 48	#6 at 48
	7 feet	#5 at 48	#6 at 48	#6 at 40
	8 feet	#6 at 48	#6 at 40	#6 at 24
	9 feet 4 inches	#6 at 40	#6 at 24	#6 at 16
10 feet	4 feet (or less)	#4 at 48	#4 at 48	#4 at 48
	5 feet	#4 at 48	#4 at 48	#5 at 48
	6 feet	#4 at 48	#5 at 48	#6 at 48
	7 feet	#5 at 48	#6 at 48	#6 at 32
	8 feet	#6 at 48	#6 at 32	#6 at 24
	9 feet	#6 at 40	#6 at 24	#6 at 16
	10 feet	#6 at 32	#6 at 16	#6 at 16

For SI: 1 inch = 25.4 mm, 1 foot = 304.8 mm, 1 pound per square foot per foot = 0.157 kPa/mm.

a. Mortar shall be Type M or S and masonry shall be laid in running bond.

b. Alternative reinforcing bar sizes and spacings having an equivalent cross-sectional area of reinforcement per lineal foot of wall shall be permitted provided the spacing of the reinforcement does not exceed 72 inches in Seismic Design Categories A, B and C, and 48 inches in Seismic Design Categories D_0, D_1 and D_2.

c. Vertical reinforcement shall be Grade 60 minimum. The distance, *d*, from the face of the soil side of the wall to the center of vertical reinforcement shall be not less than 5 inches.

d. Soil classes are in accordance with the Unified Soil Classification System and design lateral soil loads are for moist conditions without hydrostatic pressure. Refer to Table R405.1.

e. Unbalanced backfill height is the difference in height between the exterior finish ground level and the lower of the top of the concrete footing that supports the foundation wall or the interior finish ground level. Where an interior concrete slab-on-grade is provided and is in contact with the interior surface of the foundation wall, measurement of the unbalanced backfill height from the exterior finish ground level to the top of the interior concrete slab is permitted.

f. The use of this table shall be prohibited for soil classifications not shown.

INTERNATIONAL CODE COUNCIL®
Copyright © 2019 ICC & NYSDOS. ALL RIGHTS RESERVED. Accessed by Lauren Gualdino (lgualdino@briarcliffmanor.org), (-) Order Number #100880972 on May 08, 2020 07:05 AM (PDT) pursuant to License Agreement with ICC & NYSDOS. No further reproduction, no

100880972

TABLE R404.1.1(3)
10-INCH MASONRY FOUNDATION WALLS WITH REINFORCING WHERE d ≥ 6.75 INCHES[a, c, f]

WALL HEIGHT	HEIGHT OF UNBALANCED BACKFILL[e]	MINIMUM VERTICAL REINFORCEMENT AND SPACING (INCHES)[b, c]		
		Soil classes and later soil load[d] (psf per foot below grade)		
		GW, GP, SW and SP soils 30	GM, GC, SM, SM-SC and ML soils 45	SC, ML-CL and inorganic CL soils 60
6 feet 8 inches	4 feet (or less)	#4 at 56	#4 at 56	#4 at 56
	5 feet	#4 at 56	#4 at 56	#4 at 56
	6 feet 8 inches	#4 at 56	#5 at 56	#5 at 56
7 feet 4 inches	4 feet (or less)	#4 at 56	#4 at 56	#4 at 56
	5 feet	#4 at 56	#4 at 56	#4 at 56
	6 feet	#4 at 56	#4 at 56	#5 at 56
	7 feet 4 inches	#4 at 56	#5 at 56	#6 at 56
8 feet	4 feet (or less)	#4 at 56	#4 at 56	#4 at 56
	5 feet	#4 at 56	#4 at 56	#4 at 56
	6 feet	#4 at 56	#4 at 56	#5 at 56
	7 feet	#4 at 56	#5 at 56	#6 at 56
	8 feet	#5 at 56	#6 at 56	#6 at 48
8 feet 8 inches	4 feet (or less)	#4 at 56	#4 at 56	#4 at 56
	5 feet	#4 at 56	#4 at 56	#4 at 56
	6 feet	#4 at 56	#4 at 56	#5 at 56
	7 feet	#4 at 56	#5 at 56	#6 at 56
	8 feet 8 inches	#5 at 56	#6 at 48	#6 at 32
9 feet 4 inches	4 feet (or less)	#4 at 56	#4 at 56	#4 at 56
	5 feet	#4 at 56	#4 at 56	#4 at 56
	6 feet	#4 at 56	#5 at 56	#5 at 56
	7 feet	#4 at 56	#5 at 56	#6 at 56
	8 feet	#5 at 56	#6 at 56	#6 at 40
	9 feet 4 inches	#6 at 56	#6 at 40	#6 at 24
10 feet	4 feet (or less)	#4 at 56	#4 at 56	#4 at 56
	5 feet	#4 at 56	#4 at 56	#4 at 56
	6 feet	#4 at 56	#5 at 56	#5 at 56
	7 feet	#5 at 56	#6 at 56	#6 at 48
	8 feet	#5 at 56	#6 at 48	#6 at 40
	9 feet	#6 at 56	#6 at 40	#6 at 24
	10 feet	#6 at 48	#6 at 32	#6 at 24

For SI: 1 inch = 25.4 mm, 1 foot = 304.8 mm, 1 pound per square foot per foot = 0.157 kPa/mm.

a. Mortar shall be Type M or S and masonry shall be laid in running bond.

b. Alternative reinforcing bar sizes and spacings having an equivalent cross-sectional area of reinforcement per lineal foot of wall shall be permitted provided the spacing of the reinforcement does not exceed 72 inches in Seismic Design Categories A, B and C, and 48 inches in Seismic Design Categories D_0, D_1 and D_2.

c. Vertical reinforcement shall be Grade 60 minimum. The distance, *d*, from the face of the soil side of the wall to the center of vertical reinforcement shall be not less than 6.75 inches.

d. Soil classes are in accordance with the Unified Soil Classification System and design lateral soil loads are for moist conditions without hydrostatic pressure. Refer to Table R405.1.

e. Unbalanced backfill height is the difference in height between the exterior finish ground level and the lower of the top of the concrete footing that supports the foundation wall or the interior finish ground level. Where an interior concrete slab-on-grade is provided and is in contact with the interior surface of the foundation wall, measurement of the unbalanced backfill height from the exterior finish ground level to the top of the interior concrete slab is permitted.

f. The use of this table shall be prohibited for soil classifications not shown.

INTERNATIONAL CODE COUNCIL®
Copyright © 2019 ICC & NYSDOS. ALL RIGHTS RESERVED. Accessed by Lauren Gualdino (lgualdino@briarcliffmanor.org), (-) Order Number #100880972 on May 08, 2020 07:05 AM (PDT) pursuant to License Agreement with ICC & NYSDOS. No further reproduction, no

100880972

TABLE R404.1.1(4)
12-INCH MASONRY FOUNDATION WALLS WITH REINFORCING WHERE d ≥ 8.75 INCHES[a, c, f]

WALL HEIGHT	HEIGHT OF UNBALANCED BACKFILL[e]	MINIMUM VERTICAL REINFORCEMENT AND SPACING (INCHES)[b, c]		
		Soil classes and lateral soil load[d] (psf per foot below grade)		
		GW, GP, SW and SP soils 30	GM, GC, SM, SM-SC and ML soils 45	SC, ML-CL and inorganic CL soils 60
6 feet 8 inches	4 feet (or less)	#4 at 72	#4 at 72	#4 at 72
	5 feet	#4 at 72	#4 at 72	#4 at 72
	6 feet 8 inches	#4 at 72	#4 at 72	#5 at 72
7 feet 4 inches	4 feet (or less)	#4 at 72	#4 at 72	#4 at 72
	5 feet	#4 at 72	#4 at 72	#4 at 72
	6 feet	#4 at 72	#4 at 72	#5 at 72
	7 feet 4 inches	#4 at 72	#5 at 72	#6 at 72
8 feet	4 feet (or less)	#4 at 72	#4 at 72	#4 at 72
	5 feet	#4 at 72	#4 at 72	#4 at 72
	6 feet	#4 at 72	#4 at 72	#5 at 72
	7 feet	#4 at 72	#5 at 72	#6 at 72
	8 feet	#5 at 72	#6 at 72	#6 at 64
8 feet 8 inches	4 feet (or less)	#4 at 72	#4 at 72	#4 at 72
	5 feet	#4 at 72	#4 at 72	#4 at 72
	6 feet	#4 at 72	#4 at 72	#5 at 72
	7 feet	#4 at 72	#5 at 72	#6 at 72
	8 feet 8 inches	#5 at 72	#7 at 72	#6 at 48
9 feet 4 inches	4 feet (or less)	#4 at 72	#4 at 72	#4 at 72
	5 feet	#4 at 72	#4 at 72	#4 at 72
	6 feet	#4 at 72	#5 at 72	#5 at 72
	7 feet	#4 at 72	#5 at 72	#6 at 72
	8 feet	#5 at 72	#6 at 72	#6 at 56
	9 feet 4 inches	#6 at 72	#6 at 48	#6 at 40
10 feet	4 feet (or less)	#4 at 72	#4 at 72	#4 at 72
	5 feet	#4 at 72	#4 at 72	#4 at 72
	6 feet	#4 at 72	#5 at 72	#5 at 72
	7 feet	#4 at 72	#6 at 72	#6 at 72
	8 feet	#5 at 72	#6 at 72	#6 at 48
	9 feet	#6 at 72	#6 at 56	#6 at 40
	10 feet	#6 at 64	#6 at 40	#6 at 32

For SI: 1 inch = 25.4 mm, 1 foot = 304.8 mm, 1 pound per square foot per foot = 0.157 kPa/mm.

a. Mortar shall be Type M or S and masonry shall be laid in running bond.

b. Alternative reinforcing bar sizes and spacings having an equivalent cross-sectional area of reinforcement per lineal foot of wall shall be permitted provided the spacing of the reinforcement does not exceed 72 inches in Seismic Design Categories A, B and C, and 48 inches in Seismic Design Categories D_0, D_1 and D_2.

c. Vertical reinforcement shall be Grade 60 minimum. The distance, *d*, from the face of the soil side of the wall to the center of vertical reinforcement shall be not less than 8.75 inches.

d. Soil classes are in accordance with the Unified Soil Classification System and design lateral soil loads are for moist conditions without hydrostatic pressure. Refer to Table R405.1.

e. Unbalanced backfill height is the difference in height between the exterior finish ground level and the lower of the top of the concrete footing that supports the foundation wall or the interior finish ground levels. Where an interior concrete slab-on-grade is provided and in contact with the interior surface of the foundation wall, measurement of the unbalanced backfill height is permitted to be measured from the exterior finish ground level to the top of the interior concrete slab is permitted.

f. The use of this table shall be prohibited for soil classifications not shown.

INTERNATIONAL CODE COUNCIL®
Copyright © 2019 ICC & NYSDOS. ALL RIGHTS RESERVED. Accessed by Lauren Gualdino (lgualdino@briarcliffmanor.org), (-) Order Number #100880972 on May 08, 2020 07:05 AM (PDT) pursuant to License Agreement with ICC & NYSDOS. No further reproduction, no

100880972

TABLE R404.1.2(1)
MINIMUM HORIZONTAL REINFORCEMENT FOR CONCRETE BASEMENT WALLS[a, b]

MAXIMUM UNSUPPORTED HEIGHT OF BASEMENT WALL (feet)	LOCATION OF HORIZONTAL REINFORCEMENT
≤ 8	One No. 4 bar within 12 inches of the top of the wall story and one No. 4 bar near mid-height of the wall story.
> 8	One No. 4 bar within 12 inches of the top of the wall story and one No. 4 bar near third points in the wall story.

For SI: 1 inch = 25.4 mm, 1 foot = 304.8 mm, 1 pound per square inch = 6.895 kPa.

a. Horizontal reinforcement requirements are for reinforcing bars with a minimum yield strength of 40,000 psi and concrete with a minimum concrete compressive strength of 2,500 psi.

b. See Section R404.1.3.2 for minimum reinforcement required for foundation walls supporting above-grade concrete walls.

TABLE R404.1.2(2)
MINIMUM VERTICAL REINFORCEMENT FOR 6-INCH NOMINAL FLAT CONCRETE BASEMENT WALLS[b, c, d, e, g, h, i, j, k]

MAXIMUM UNSUPPORTED WALL HEIGHT (feet)	MAXIMUM UNBALANCED BACKFILL HEIGHT[f] (feet)	MINIMUM VERTICAL REINFORCEMENT-BAR SIZE AND SPACING (inches)		
		Soil classes[a] and design lateral soil (psf per foot of depth)		
		GW, GP, SW, SP 30	GM, GC, SM, SM-SC and ML 45	SC, ML-CL and inorganic CL 60
8	4	NR	NR	NR
	5	NR	6 @ 39	6 @ 48
	6	5 @ 39	6 @ 48	6 @ 35
	7	6 @ 48	6 @ 34	6 @ 25
	8	6 @ 39	6 @ 25	6 @ 18
9	4	NR	NR	NR
	5	NR	5 @ 37	6 @ 48
	6	5 @ 36	6 @ 44	6 @ 32
	7	6 @ 47	6 @ 30	6 @ 22
	8	6 @ 34	6 @ 22	6 @ 16
	9	6 @ 27	6 @ 17	DR
10	4	NR	NR	NR
	5	NR	5 @ 35	6 @ 48
	6	6 @ 48	6 @ 41	6 @ 30
	7	6 @ 43	6 @ 28	6 @ 20
	8	6 @ 31	6 @ 20	DR
	9	6 @ 24	6 @ 15	DR
	10	6 @ 19	DR	DR

For SI: 1 inch = 25.4 mm; 1 foot = 304.8 mm; 1 pound per square foot per foot = 0.1571 kPa^2/m, 1 pound per square inch = 6.895 kPa.

NR = Not Required.

DR = Design Required.

a. Soil classes are in accordance with the Unified Soil Classification System. Refer to Table R405.1.

b. Table values are based on reinforcing bars with a minimum yield strength of 60,000 psi concrete with a minimum specified compressive strength of 2,500 psi and vertical reinforcement being located at the centerline of the wall. See Section R404.1.3.3.7.2.

c. Vertical reinforcement with a yield strength of less than 60,000 psi and bars of a different size than specified in the table are permitted in accordance with Section R404.1.3.3.7.6 and Table R404.1.2(9).

d. Deflection criterion is $L/240$, where L is the height of the basement wall in inches.

e. Interpolation is not permitted.

f. Where walls will retain 4 feet or more of unbalanced backfill, they shall be laterally supported at the top and bottom before backfilling.

g. NR indicates vertical wall reinforcement is not required, except for 6-inch-nominal walls formed with stay-in-place forming systems in which case vertical reinforcement shall be No. 4@48 inches on center.

h. See Section R404.1.3.2 for minimum reinforcement required for basement walls supporting above-grade concrete walls.

i. See Table R608.3 for tolerance from nominal thickness permitted for flat walls.

j. DR means design is required in accordance with the applicable building code, or in the absence of a code, in accordance with ACI 318.

k. The use of this table shall be prohibited for soil classifications not shown.

INTERNATIONAL CODE COUNCIL®
Copyright © 2019 ICC & NYSDOS. ALL RIGHTS RESERVED. Accessed by Lauren Gualdino (lgualdino@briarcliffmanor.org), (-) Order Number #100880972 on May 08, 2020 07:05 AM (PDT) pursuant to License Agreement with ICC & NYSDOS. No further reproduction, no

100880972

TABLE R404.1.2(3)
MINIMUM VERTICAL REINFORCEMENT FOR 8-INCH (203 mm) NOMINAL FLAT CONCRETE BASEMENT WALLS[b, c, d, e, f, h, i, j]

MAXIMUM UNSUPPORTED WALL HEIGHT (feet)	MAXIMUM UNBALANCED BACKFILL HEIGHT[g] (feet)	MINIMUM VERTICAL REINFORCEMENT-BAR SIZE AND SPACING (inches)		
		Soil classes[a] and design lateral soil (psf per foot of depth)		
		GW, GP, SW, SP 30	GM, GC, SM, SM-SC and ML 45	SC, ML-CL and inorganic CL 60
8	4	NR	NR	NR
	5	NR	NR	NR
	6	NR	NR	6 @ 37
	7	NR	6 @ 36	6 @ 35
	8	6 @ 41	6 @ 35	6 @ 26
9	4	NR	NR	NR
	5	NR	NR	NR
	6	NR	NR	6 @ 35
	7	NR	6 @ 35	6 @ 32
	8	6 @ 36	6 @ 32	6 @ 23
	9	6 @ 35	6 @ 25	6 @ 18
10	4	NR	NR	NR
	5	NR	NR	NR
	6	NR	NR	6 @ 35
	7	NR	6 @ 35	6 @ 29
	8	6 @ 35	6 @ 29	6 @ 21
	9	6 @ 34	6 @ 22	6 @ 16
	10	6 @ 27	6 @ 17	6 @ 13

For SI: 1 inch = 25.4 mm; 1 foot = 304.8 mm; 1 pound per square foot per foot = 0.1571 kPa^2/m, 1 pound per square inch = 6.895 kPa.

NR = Not Required.

a. Soil classes are in accordance with the Unified Soil Classification System. Refer to Table R405.1.

b. Table values are based on reinforcing bars with a minimum yield strength of 60,000 psi, concrete with a minimum specified compressive strength of 2,500 psi and vertical reinforcement being located at the centerline of the wall. See Section R404.1.3.3.7.2.

c. Vertical reinforcement with a yield strength of less than 60,000 psi and bars of a different size than specified in the table are permitted in accordance with Section R404.1.3.3.7.6 and Table R404.1.2(9).

d. NR indicates vertical reinforcement is not required.

e. Deflection criterion is *L*/240, where *L* is the height of the basement wall in inches.

f. Interpolation is not permitted.

g. Where walls will retain 4 feet or more of unbalanced backfill, they shall be laterally supported at the top and bottom before backfilling.

h. See Section R404.1.3.2 for minimum reinforcement required for basement walls supporting above-grade concrete walls.

i. See Table R608.3 for tolerance from nominal thickness permitted for flat walls.

j. The use of this table shall be prohibited for soil classifications not shown.

INTERNATIONAL CODE COUNCIL®
Copyright © 2019 ICC & NYSDOS. ALL RIGHTS RESERVED. Accessed by Lauren Gualdino (lgualdino@briarcliffmanor.org), (-) Order Number #100880972 on May 08, 2020 07:05 AM (PDT) pursuant to License Agreement with ICC & NYSDOS. No further reproduction, no

100880972

TABLE R404.1.2(4)
MINIMUM VERTICAL REINFORCEMENT FOR 10-INCH NOMINAL FLAT CONCRETE BASEMENT WALLS[b, c, d, e, f, h, i, j]

MAXIMUM UNSUPPORTED WALL HEIGHT (feet)	MAXIMUM UNBALANCED BACKFILL HEIGHT[g] (feet)	MINIMUM VERTICAL REINFORCEMENT-BAR SIZE AND SPACING (inches)		
		Soil classes[a] and design lateral soil (psf per foot of depth)		
		GW, GP, SW, SP 30	GM, GC, SM, SM-SC and ML 45	SC, ML-CL and inorganic CL 60
8	4	NR	NR	NR
	5	NR	NR	NR
	6	NR	NR	NR
	7	NR	NR	NR
	8	6 @ 48	6 @ 35	6 @ 28
9	4	NR	NR	NR
	5	NR	NR	NR
	6	NR	NR	NR
	7	NR	NR	6 @ 31
	8	NR	6 @ 31	6 @ 28
	9	6 @ 37	6 @ 28	6 @ 24
10	4	NR	NR	NR
	5	NR	NR	NR
	6	NR	NR	NR
	7	NR	NR	6 @ 28
	8	NR	6 @ 28	6 @ 28
	9	6 @ 33	6 @ 28	6 @ 21
	10	6 @ 28	6 @ 23	6 @ 17

For SI: 1 inch = 25.4 mm; 1 foot = 304.8 mm; 1 pound per square foot per foot = 0.1571 kPa^2/m, 1 pound per square inch = 6.895 kPa.

NR = Not Required.

a. Soil classes are in accordance with the Unified Soil Classification System. Refer to Table R405.1.

b. Table values are based on reinforcing bars with a minimum yield strength of 60,000 psi concrete with a minimum specified compressive strength of 2,500 psi and vertical reinforcement being located at the centerline of the wall. See Section R404.1.3.3.7.2.

c. Vertical reinforcement with a yield strength of less than 60,000 psi and bars of a different size than specified in the table are permitted in accordance with Section R404.1.3.3.7.6 and Table R404.1.2(9).

d. NR indicates vertical reinforcement is not required.

e. Deflection criterion is *L*/240, where *L* is the height of the basement wall in inches.

f. Interpolation is not permitted.

g. Where walls will retain 4 feet or more of unbalanced backfill, they shall be laterally supported at the top and bottom before backfilling.

h. See Section R404.1.3.2 for minimum reinforcement required for basement walls supporting above-grade concrete walls.

i. See Table R608.3 for tolerance from nominal thickness permitted for flat walls.

j. The use of this table shall be prohibited for soil classifications not shown.

INTERNATIONAL CODE COUNCIL®
Copyright © 2019 ICC & NYSDOS. ALL RIGHTS RESERVED. Accessed by Lauren Gualdino (lgualdino@briarcliffmanor.org), (-) Order Number #100880972 on May 08, 2020 07:05 AM (PDT) pursuant to License Agreement with ICC & NYSDOS. No further reproduction, no

100880972

TABLE R404.1.2(5)
MINIMUM VERTICAL WALL REINFORCEMENT FOR 6-INCH WAFFLE-GRID BASEMENT WALLS[b, c, d, e, g, h, i, j]

MAXIMUM UNSUPPORTED WALL HEIGHT (feet)	MAXIMUM UNBALANCED BACKFILL HEIGHT[f] (feet)	MINIMUM VERTICAL REINFORCEMENT-BAR SIZE AND SPACING (inches)		
		Soil classes[a] and design lateral soil (psf per foot of depth)		
		GW, GP, SW, SP 30	GM, GC, SM, SM-SC and ML 45	SC, ML-CL and inorganic CL 60
8	4	4 @ 48	4 @ 46	6 @ 39
	5	4 @ 45	5 @ 46	6 @ 47
	6	5 @ 45	6 @ 40	DR
	7	6 @ 44	DR	DR
	8	6 @ 32	DR	DR
9	4	4 @ 48	4 @ 46	4 @ 37
	5	4 @ 42	5 @ 43	6 @ 44
	6	5 @ 41	6 @ 37	DR
	7	6 @ 39	DR	DR
	> 8	DR[i]	DR	DR
10	4	4 @ 48	4 @ 46	4 @ 35
	5	4 @ 40	5 @ 40	6 @ 41
	6	5 @ 38	6 @ 34	DR
	7	6 @ 36	DR	DR
	> 8	DR	DR	DR

For SI: 1 inch = 25.4 mm; 1 foot = 304.8 mm; 1 pound per square foot per foot = 0.1571 kPa^2/m, 1 pound per square inch = 6.895 kPa.

DR = Design Required.

a. Soil classes are in accordance with the Unified Soil Classification System. Refer to Table R405.1.

b. Table values are based on reinforcing bars with a minimum yield strength of 60,000 psi concrete with a minimum specified compressive strength of 2,500 psi and vertical reinforcement being located at the centerline of the wall. See Section R404.1.3.3.7.2.

c. Maximum spacings shown are the values calculated for the specified bar size. Where the bar used is Grade 60 and the size specified in the table, the actual spacing in the wall shall not exceed a whole-number multiple of 12 inches (12, 24, 36 and 48) that is less than or equal to the tabulated spacing. Vertical reinforcement with a yield strength of less than 60,000 psi and bars of a different size than specified in the table are permitted in accordance with Section R404.1.3.3.7.6 and Table R404.1.2(9).

d. Deflection criterion is *L*/240, where *L* is the height of the basement wall in inches.

e. Interpolation is not permitted.

f. Where walls will retain 4 feet or more of unbalanced backfill, they shall be laterally supported at the top and bottom before backfilling.

g. See Section R404.1.3.2 for minimum reinforcement required for basement walls supporting above-grade concrete walls.

h. See Table R608.3 for thicknesses and dimensions of waffle-grid walls.

i. DR means design is required in accordance with the applicable building code, or in the absence of a code, in accordance with ACI 318.

j. The use of this table shall be prohibited for soil classifications not shown.

INTERNATIONAL CODE COUNCIL®
Copyright © 2019 ICC & NYSDOS. ALL RIGHTS RESERVED. Accessed by Lauren Gualdino (lgualdino@briarcliffmanor.org), (-) Order Number #100880972 on May 08, 2020 07:05 AM (PDT) pursuant to License Agreement with ICC & NYSDOS. No further reproduction, no

100880972

TABLE R404.1.2(6)
MINIMUM VERTICAL REINFORCEMENT FOR 8-INCH WAFFLE-GRID BASEMENT WALLS[b, c, d, e, f, h, i, j, k]

MAXIMUM UNSUPPORTED WALL HEIGHT (feet)	MAXIMUM UNBALANCED BACKFILL HEIGHT[g] (feet)	MINIMUM VERTICAL REINFORCEMENT-BAR SIZE AND SPACING (inches)		
		Soil classes[a] and design lateral soil (psf per foot of depth)		
		GW, GP, SW, SP 30	GM, GC, SM, SM-SC and ML 45	SC, ML-CL and inorganic CL 60
8	4	NR	NR	NR
	5	NR	5 @ 48	5 @ 46
	6	5 @ 48	5 @ 43	6 @ 45
	7	5 @ 46	6 @ 43	6 @ 31
	8	6 @ 48	6 @ 32	6 @ 23
9	4	NR	NR	NR
	5	NR	5 @ 47	5 @ 46
	6	5 @ 46	5 @ 39	6 @ 41
	7	5 @ 42	6 @ 38	6 @ 28
	8	6 @ 44	6 @ 28	6 @ 20
	9	6 @ 34	6 @ 21	DR
10	4	NR	NR	NR
	5	NR	5 @ 46	5 @ 44
	6	5 @ 46	5 @ 37	6 @ 38
	7	5 @ 38	6 @ 35	6 @ 25
	8	6 @ 39	6 @ 25	DR
	9	6 @ 30	DR	DR
	10	6 @ 24	DR	DR

For SI: 1 inch = 25.4 mm; 1 foot = 304.8 mm; 1 pound per square foot per foot = 0.1571 kPa^2/m, 1 pound per square inch = 6.895 kPa.

NR = Not Required.

DR = Design Required.

a. Soil classes are in accordance with the Unified Soil Classification System. Refer to Table R405.1.

b. Table values are based on reinforcing bars with a minimum yield strength of 60,000 psi concrete with a minimum specified compressive strength of 2,500 psi and vertical reinforcement being located at the centerline of the wall. See Section R404.1.3.3.7.2.

c. Maximum spacings shown are the values calculated for the specified bar size. Where the bar used is Grade 60 (420 MPa) and the size specified in the table, the actual spacing in the wall shall not exceed a whole-number multiple of 12 inches (12, 24, 36 and 48) that is less than or equal to the tabulated spacing. Vertical reinforcement with a yield strength of less than 60,000 psi and bars of a different size than specified in the table are permitted in accordance with Section R404.1.3.3.7.6 and Table R404.1.2(9).

d. NR indicates vertical reinforcement is not required.

e. Deflection criterion is *L*/240, where *L* is the height of the basement wall in inches.

f. Interpolation shall not be permitted.

g. Where walls will retain 4 feet or more of unbalanced backfill, they shall be laterally supported at the top and bottom before backfilling.

h. See Section R404.1.3.2 for minimum reinforcement required for basement walls supporting above-grade concrete walls.

i. See Table R608.3 for thicknesses and dimensions of waffle-grid walls.

j. DR means design is required in accordance with the applicable building code, or in the absence of a code, in accordance with ACI 318.

k. The use of this table shall be prohibited for soil classifications not shown.

INTERNATIONAL CODE COUNCIL®
Copyright © 2019 ICC & NYSDOS. ALL RIGHTS RESERVED. Accessed by Lauren Gualdino (lgualdino@briarcliffmanor.org), (-) Order Number #100880972 on May 08, 2020 07:05 AM (PDT) pursuant to License Agreement with ICC & NYSDOS. No further reproduction, no

100880972

TABLE R404.1.2(7)
MINIMUM VERTICAL REINFORCEMENT FOR 6-INCH (152 mm) SCREEN-GRID BASEMENT WALLS[b, c, d, e, g, h, i, j]

MAXIMUM UNSUPPORTED WALL HEIGHT (feet)	MAXIMUM UNBALANCED BACKFILL HEIGHT[f] (feet)	MINIMUM VERTICAL REINFORCEMENT-BAR SIZE AND SPACING (inches)		
		Soil classes[a] and design lateral soil (psf per foot of depth)		
		GW, GP, SW, SP 30	GM, GC, SM, SM-SC and ML 45	SC, ML-CL and inorganic CL 60
8	4	4 @ 48	4 @ 48	5 @ 43
	5	4 @ 48	5 @ 48	5 @ 37
	6	5 @ 48	6 @ 45	6 @ 32
	7	6 @ 48	DR	DR
	8	6 @ 36	DR	DR
9	4	4 @ 48	4 @ 48	4 @ 41
	5	4 @ 48	5 @ 48	6 @ 48
	6	5 @ 45	6 @ 41	DR
	7	6 @ 43	DR	DR
	> 8	DR	DR	DR
10	4	4 @ 48	4 @ 48	4 @ 39
	5	4 @ 44	5 @ 44	6 @ 46
	6	5 @ 42	6 @ 38	DR
	7	6 @ 40	DR	DR
	> 8	DR	DR	DR

For SI: 1 inch = 25.4 mm; 1 foot = 304.8 mm; 1 pound per square foot per foot = 0.1571 kPa^2/m, 1 pound per square inch = 6.895 kPa.

DR = Design Required.

a. Soil classes are in accordance with the Unified Soil Classification System. Refer to Table R405.1.

b. Table values are based on reinforcing bars with a minimum yield strength of 60,000 psi, concrete with a minimum specified compressive strength of 2,500 psi and vertical reinforcement being located at the centerline of the wall. See Section R404.1.3.3.7.2.

c. Maximum spacings shown are the values calculated for the specified bar size. Where the bar used is Grade 60 and the size specified in the table, the actual spacing in the wall shall not exceed a whole-number multiple of 12 inches (12, 24, 36 and 48) that is less than or equal to the tabulated spacing. Vertical reinforcement with a yield strength of less than 60,000 psi and bars of a different size than specified in the table are permitted in accordance with Section R404.1.3.3.7.6 and Table R404.1.2(9).

d. Deflection criterion is *L*/240, where *L* is the height of the basement wall in inches.

e. Interpolation is not permitted.

f. Where walls will retain 4 feet or more of unbalanced backfill, they shall be laterally supported at the top and bottom before backfilling.

g. See Sections R404.1.3.2 for minimum reinforcement required for basement walls supporting above-grade concrete walls.

h. See Table R608.3 for thicknesses and dimensions of screen-grid walls.

i. DR means design is required in accordance with the applicable building code, or in the absence of a code, in accordance with ACI 318.

j. The use of this table shall be prohibited for soil classifications not shown.

INTERNATIONAL CODE COUNCIL®
Copyright © 2019 ICC & NYSDOS. ALL RIGHTS RESERVED. Accessed by Lauren Gualdino (lgualdino@briarcliffmanor.org), (-) Order Number #100880972 on May 08, 2020 07:05 AM (PDT) pursuant to License Agreement with ICC & NYSDOS. No further reproduction, no

TABLE R404.1.2(8)
MINIMUM VERTICAL REINFORCEMENT FOR 6-, 8-, 10- AND 12-INCH NOMINAL FLAT BASEMENT WALLS[b, c, d, e, f, h, i, k, n, o]

MAXIMUM WALL HEIGHT (feet)	MAXIMUM UNBALANCED BACKFILL HEIGHT[g] (feet)	MINIMUM VERTICAL REINFORCEMENT-BAR SIZE AND SPACING (inches)											
		Soil classes[a] and design lateral soil (psf per foot of depth)											
		GW, GP, SW, SP 30				GM, GC, SM, SM-SC and ML 45				SC, ML-CL and inorganic CL 60			
		Minimum nominal wall thickness (inches)											
		6	8	10	12	6	8	10	12	6	8	10	12
5	4	NR	NR	NR	NR	NR	NR	NR	NR	NR	NR	NR	NR
	5	NR	NR	NR	NR	NR	NR	NR	NR	NR	NR	NR	NR
6	4	NR	NR	NR	NR	NR	NR	NR	NR	NR	NR	NR	NR
	5	NR	NR	NR	NR	NR	NR[l]	NR	NR	4 @ 35	NR[l]	NR	NR
	6	NR	NR	NR	NR	5 @ 48	NR	NR	NR	5 @ 36	NR	NR	NR
7	4	NR	NR	NR	NR	NR	NR	NR	NR	NR	NR	NR	NR
	5	NR	NR	NR	NR	NR	NR	NR	NR	5 @ 47	NR	NR	NR
	6	NR	NR	NR	NR	5 @ 42	NR	NR	NR	6 @ 43	5 @ 48	NR[l]	NR
	7	5 @ 46	NR	NR	NR	6 @ 42	5 @ 46	NR[l]	NR	6 @ 34	6 @ 48	NR	NR
8	4	NR	NR	NR	NR	NR	NR	NR	NR	NR	NR	NR	NR
	5	NR	NR	NR	NR	4 @ 38	NR[l]	NR	NR	5 @ 43	NR	NR	NR
	6	4 @ 37	NR[l]	NR	NR	5 @ 37	NR	NR	NR	6 @ 37	5 @ 43	NR[l]	NR
	7	5 @ 40	NR	NR	NR	6 @ 37	5 @ 41	NR[l]	NR	6 @ 34	6 @ 43	NR	NR
	8	6 @ 43	5 @ 47	NR[l]	NR	6 @ 34	6 @ 43	NR	NR	6 @ 27	6 @ 32	6 @ 44	NR
9	4	NR	NR	NR	NR	NR	NR	NR	NR	NR	NR	NR	NR
	5	NR	NR	NR	NR	4 @ 35	NR[l]	NR	NR	5 @ 40	NR	NR	NR
	6	4 @ 34	NR[l]	NR	NR	6 @ 48	NR	NR	NR	6 @ 36	6 @ 39	NR[l]	NR
	7	5 @ 36	NR	NR	NR	6 @ 34	5 @ 37	NR	NR	6 @ 33	6 @ 38	5 @ 37	NR[l]
	8	6 @ 38	5 @ 41	NR[l]	NR	6 @ 33	6 @ 38	5 @ 37	NR[l]	6 @ 24	6 @ 29	6 @ 39	4 @ 48[m]
	9	6 @ 34	6 @ 46	NR	NR	6 @ 26	6 @ 30	6 @ 41	NR	6 @ 19	6 @ 23	6 @ 30	6 @ 39
10	4	NR	NR	NR	NR	NR	NR	NR	NR	NR	NR	NR	NR
	5	NR	NR	NR	NR	4 @ 33	NR[l]	NR	NR	5 @ 38	NR	NR	NR
	6	5 @ 48	NR[l]	NR	NR	6 @ 45	NR	NR	NR	6 @ 34	5 @ 37	NR	NR
	7	6 @ 47	NR	NR	NR	6 @ 34	6 @ 48	NR	NR	6 @ 30	6 @ 35	6 @ 48	NR[l]
	8	6 @ 34	5 @ 38	NR	NR	6 @ 30	6 @ 34	6 @ 47	NR[l]	6 @ 22	6 @ 26	6 @ 35	6 @ 45[m]
	9	6 @ 34	6 @ 41	4 @ 48	NR[l]	6 @ 23	6 @ 27	6 @ 35	4 @ 48[m]	DR	6 @ 22	6 @ 27	6 @ 34
	10	6 @ 28	6 @ 33	6 @ 45	NR	DR[j]	6 @ 23	6 @ 29	6 @ 38	DR	6 @ 22	6 @ 22	6 @ 28

For SI: 1 inch = 25.4 mm; 1 foot = 304.8 mm; 1 pound per square foot per foot = 0.1571 kPa^2/m, 1 pound per square inch = 6.895 kPa.

NR = Not Required.

DR = Design Required.

a. Soil classes are in accordance with the Unified Soil Classification System. Refer to Table R405.1.

b. Table values are based on reinforcing bars with a minimum yield strength of 60,000 psi.

c. Vertical reinforcement with a yield strength of less than 60,000 psi and bars of a different size than specified in the table are permitted in accordance with Section R404.1.3.3.7.6 and Table R404.1.2(9).

d. NR indicates vertical wall reinforcement is not required, except for 6-inch nominal walls formed with stay-in-place forming systems in which case vertical reinforcement shall be No. 4@48 inches on center.

e. Allowable deflection criterion is $L/240$, where L is the unsupported height of the basement wall in inches.

f. Interpolation is not permitted.

g. Where walls will retain 4 feet or more of unbalanced backfill, they shall be laterally supported at the top and bottom before backfilling.

h. Vertical reinforcement shall be located to provide a cover of $1^1/_4$ inches measured from the inside face of the wall. The center of the steel shall not vary from the specified location by more than the greater of 10 percent of the wall thickness or $^3/_8$ inch.

i. Concrete cover for reinforcement measured from the inside face of the wall shall be not less than $^3/_4$ inch. Concrete cover for reinforcement measured from the outside face of the wall shall be not less than $1^1/_2$ inches for No. 5 bars and smaller, and not less than 2 inches for larger bars.

j. DR means design is required in accordance with the applicable building code, or in the absence of a code, in accordance with ACI 318.

k. Concrete shall have a specified compressive strength, f'_c, of not less than 2,500 psi at 28 days, unless a higher strength is required by Footnote l or m.

l. The minimum thickness is permitted to be reduced 2 inches, provided that the minimum specified compressive strength of concrete, f'_c, is 4,000 psi.

m. A plain concrete wall with a minimum nominal thickness of 12 inches is permitted, provided that the minimum specified compressive strength of concrete, f'_c, is 3,500 psi.

n. See Table R608.3 for tolerance from nominal thickness permitted for flat walls.

o. The use of this table shall be prohibited for soil classifications not shown.

INTERNATIONAL CODE COUNCIL®
Copyright © 2019 ICC & NYSDOS. ALL RIGHTS RESERVED. Accessed by Lauren Gualdino (lgualdino@briarcliffmanor.org), (-) Order Number #100880972 on May 08, 2020 07:05 AM (PDT) pursuant to License Agreement with ICC & NYSDOS. No further reproduction, no

100880972

TABLE R404.1.2(9)
MINIMUM SPACING FOR ALTERNATE BAR SIZE AND ALTERNATE GRADE OF STEEL[a, b, c]

BAR SPACING FROM APPLICABLE TABLE IN SECTION R404.1.3.2 (inches)	BAR SIZE FROM APPLICABLE TABLE IN SECTION R404.1.3.2															
	#4					#5					#6					
	Alternate bar size and alternate grade of steel desired															
	Grade 60		Grade 40			Grade 60		Grade 40			Grade 60		Grade 40			
	#5	#6	#4	#5	#6	#4	#6	#4	#5	#6	#4	#5	#4	#5	#6	
	Maximum spacing for alternate bar size and alternate grade of steel (inches)															
8	12	18	5	8	12	5	11	3	5	8	4	6	2	4	5	
9	14	20	6	9	13	6	13	4	6	9	4	6	3	4	6	
10	16	22	7	10	15	6	14	4	7	9	5	7	3	5	7	
11	17	24	7	11	16	7	16	5	7	10	5	8	3	5	7	
12	19	26	8	12	18	8	17	5	8	11	5	8	4	6	8	
13	20	29	9	13	19	8	18	6	9	12	6	9	4	6	9	
14	22	31	9	14	21	9	20	6	9	13	6	10	4	7	9	
15	23	33	10	16	22	10	21	6	10	14	7	11	5	7	10	
16	25	35	11	17	23	10	23	7	11	15	7	11	5	8	11	
17	26	37	11	18	25	11	24	7	11	16	8	12	5	8	11	
18	28	40	12	19	26	12	26	8	12	17	8	13	5	8	12	
19	29	42	13	20	28	12	27	8	13	18	9	13	6	9	13	
20	31	44	13	21	29	13	28	9	13	19	9	14	6	9	13	
21	33	46	14	22	31	14	30	9	14	20	10	15	6	10	14	
22	34	48	15	23	32	14	31	9	15	21	10	16	7	10	15	
23	36	48	15	24	34	15	33	10	15	22	10	16	7	11	15	
24	37	48	16	25	35	15	34	10	16	23	11	17	7	11	16	
25	39	48	17	26	37	16	35	11	17	24	11	18	8	12	17	
26	40	48	17	27	38	17	37	11	17	25	12	18	8	12	17	
27	42	48	18	28	40	17	38	12	18	26	12	19	8	13	18	
28	43	48	19	29	41	18	40	12	19	26	13	20	8	13	19	
29	45	48	19	30	43	19	41	12	19	27	13	20	9	14	19	
30	47	48	20	31	44	19	43	13	20	28	14	21	9	14	20	
31	48	48	21	32	45	20	44	13	21	29	14	22	9	15	21	
32	48	48	21	33	47	21	45	14	21	30	15	23	10	15	21	
33	48	48	22	34	48	21	47	14	22	31	15	23	10	16	22	
34	48	48	23	35	48	22	48	15	23	32	15	24	10	16	23	
35	48	48	23	36	48	23	48	15	23	33	16	25	11	16	23	
36	48	48	24	37	48	23	48	15	24	34	16	25	11	17	24	
37	48	48	25	38	48	24	48	16	25	35	17	26	11	17	25	
38	48	48	25	39	48	25	48	16	25	36	17	27	12	18	25	
39	48	48	26	40	48	25	48	17	26	37	18	27	12	18	26	
40	48	48	27	41	48	26	48	17	27	38	18	28	12	19	27	
41	48	48	27	42	48	26	48	18	27	39	19	29	12	19	27	
42	48	48	28	43	48	27	48	18	28	40	19	30	13	20	28	
43	48	48	29	44	48	28	48	18	29	41	20	30	13	20	29	
44	48	48	29	45	48	28	48	19	29	42	20	31	13	21	29	
45	48	48	30	47	48	29	48	19	30	43	20	32	14	21	30	
46	48	48	31	48	48	30	48	20	31	44	21	32	14	22	31	
47	48	48	31	48	48	30	48	20	31	44	21	33	14	22	31	
48	48	48	32	48	48	31	48	21	32	45	22	34	15	23	32	

For SI: 1 inch = 25.4 mm, 1 pound per square inch = 6.895 kPa.

a. This table is for use with tables in Section R404.1.3.2 that specify the minimum bar size and maximum spacing of vertical wall reinforcement for foundation walls and above-grade walls. Reinforcement specified in tables in Section R404.1.3.2 is based on Grade 60 steel reinforcement.

b. Bar spacing shall not exceed 48 inches on center and shall be not less than one-half the nominal wall thickness.

c. For Grade 50 steel bars (ASTM A996, Type R), use spacing for Grade 40 bars or interpolate between Grades 40 and 60.

INTERNATIONAL CODE COUNCIL®
Copyright © 2019 ICC & NYSDOS. ALL RIGHTS RESERVED. Accessed by Lauren Gualdino (lgualdino@briarcliffmanor.org), (-) Order Number #100880972 on May 08, 2020 07:05 AM (PDT) pursuant to License Agreement with ICC & NYSDOS. No further reproduction, no

100880972

R404.1.3.1 Concrete cross section. Concrete walls constructed in accordance with this code shall comply with the shapes and minimum concrete cross-sectional dimensions required by Table R608.3. Other types of forming systems resulting in concrete walls not in compliance with this section and Table R608.3 shall be designed in accordance with ACI 318.

R404.1.3.2 Reinforcement for foundation walls. Concrete foundation walls shall be laterally supported at the top and bottom. Horizontal reinforcement shall be provided in accordance with Table R404.1.2(1). Vertical reinforcement shall be provided in accordance with Table R404.1.2(2), R404.1.2(3), R404.1.2(4), R404.1.2(5), R404.1.2(6), R404.1.2(7) or R404.1.2(8). Vertical reinforcement for flat *basement* walls retaining 4 feet (1219 mm) or more of unbalanced backfill is permitted to be determined in accordance with Table R404.1.2(9). For *basement* walls supporting above-grade concrete walls, vertical reinforcement shall be the greater of that required by Tables R404.1.2(2) through R404.1.2(8) or by Section R608.6 for the above-grade wall. In buildings assigned to Seismic Design Category D_0, D_1 or D_2, concrete foundation walls shall also comply with Section R404.1.4.2.

R404.1.3.2.1 Concrete foundation stem walls supporting above-grade concrete walls. Foundation stem walls that support above-grade concrete walls shall be designed and constructed in accordance with this section.

1. Stem walls not laterally supported at top. Concrete stem walls that are not monolithic with slabs-on-ground or are not otherwise laterally supported by slabs-on-ground shall comply with this section. Where unbalanced backfill retained by the stem wall is less than or equal to 18 inches (457 mm), the stem wall and above-grade wall it supports shall be provided with vertical reinforcement in accordance with Section R608.6 and Table R608.6(1), R608.6(2) or R608.6(3) for above-grade walls. Where unbalanced backfill retained by the stem wall is greater than 18 inches (457 mm), the stem wall and above-grade wall it supports shall be provided with vertical reinforcement in accordance with Section R608.6 and Table R608.6(4).
2. Stem walls laterally supported at top. Concrete stem walls that are monolithic with slabs-on-ground or are otherwise laterally supported by slabs-on-ground shall be vertically reinforced in accordance with Section R608.6 and Table R608.6(1), R608.6(2) or R608.6(3) for above-grade walls. Where the unbalanced backfill retained by the stem wall is greater than 18 inches (457 mm), the connection between the stem wall and the slab-on-ground, and the portion of the slab-on-ground providing lateral support for the wall shall be designed in accordance with PCA 100 or with accepted engineering practice. Where the unbalanced backfill retained by the stem wall is greater than 18 inches (457 mm), the minimum nominal thickness of the wall shall be 6 inches (152 mm).

R404.1.3.2.2 Concrete foundation stem walls supporting light-frame above-grade walls. Concrete foundation stem walls that support light-frame above-grade walls shall be designed and constructed in accordance with this section.

1. Stem walls not laterally supported at top. Concrete stem walls that are not monolithic with slabs-on-ground or are not otherwise laterally supported by slabs-on-ground and retain 48 inches (1219 mm) or less of unbalanced fill, measured from the top of the wall, shall be constructed in accordance with Section R404.1.3. Foundation stem walls that retain more than 48 inches (1219 mm) of unbalanced fill, measured from the top of the wall, shall be designed in accordance with Sections R404.1.4 and R404.4.
2. Stem walls laterally supported at top. Concrete stem walls that are monolithic with slabs-on-ground or are otherwise laterally supported by slabs-on-ground shall be constructed in accordance with Section R404.1.3. Where the unbalanced backfill retained by the stem wall is greater than 48 inches (1219 mm), the connection between the stem wall and the slab-on-ground, and the portion of the slab-on-ground providing lateral support for the wall, shall be designed in accordance with PCA 100 or in accordance with accepted engineering practice.

R404.1.3.3 Concrete, materials for concrete, and forms. Materials used in concrete, the concrete itself and forms shall conform to requirements of this section or ACI 318.

R404.1.3.3.1 Compressive strength. The minimum specified compressive strength of concrete, f'_c, shall comply with Section R402.2 and shall be not less than 2,500 psi (17.2 MPa) at 28 days in buildings assigned to Seismic Design Category A, B or C and 3000 psi (20.5 MPa) in buildings assigned to Seismic Design Category D_0, D_1 or D_2.

R404.1.3.3.2 Concrete mixing and delivery. Mixing and delivery of concrete shall comply with ASTM C94 or ASTM C685.

R404.1.3.3.3 Maximum aggregate size. The nominal maximum size of coarse aggregate shall not exceed one-fifth the narrowest distance between sides of forms, or three-fourths the clear spacing between reinforcing bars or between a bar and the side of the form.

Exception: Where *approved*, these limitations shall not apply where removable forms are used and workability and methods of consolidation permit concrete to be placed without honeycombs or voids.

INTERNATIONAL CODE COUNCIL®
Copyright © 2019 ICC & NYSDOS. ALL RIGHTS RESERVED. Accessed by Lauren Gualdino (lgualdino@briarcliffmanor.org), (-) Order Number #100880972 on May 08, 2020 07:05 AM (PDT) pursuant to License Agreement with ICC & NYSDOS. No further reproduction, no

100880972

R404.1.3.3.4 Proportioning and slump of concrete. Proportions of materials for concrete shall be established to provide workability and consistency to permit concrete to be worked readily into forms and around reinforcement under conditions of placement to be employed, without segregation or excessive bleeding. Slump of concrete placed in removable forms shall not exceed 6 inches (152 mm).

Exception: Where *approved*, the slump is permitted to exceed 6 inches (152 mm) for concrete mixtures that are resistant to segregation, and are in accordance with the form manufacturer's recommendations.

Slump of concrete placed in stay-in-place forms shall exceed 6 inches (152 mm). Slump of concrete shall be determined in accordance with ASTM C143.

R404.1.3.3.5 Consolidation of concrete. Concrete shall be consolidated by suitable means during placement and shall be worked around embedded items and reinforcement and into corners of forms. Where stay-in-place forms are used, concrete shall be consolidated by internal vibration.

Exception: Where *approved* for concrete to be placed in stay-in-place forms, self-consolidating concrete mixtures with slumps equal to or greater than 8 inches (203 mm) that are specifically designed for placement without internal vibration need not be internally vibrated.

R404.1.3.3.6 Form materials and form ties. Forms shall be made of wood, steel, aluminum, plastic, a composite of cement and foam insulation, a composite of cement and wood chips, or other *approved* material suitable for supporting and containing concrete. Forms shall provide sufficient strength to contain concrete during the concrete placement operation.

Form ties shall be steel, solid plastic, foam plastic, a composite of cement and wood chips, a composite of cement and foam plastic, or other suitable material capable of resisting the forces created by fluid pressure of fresh concrete.

R404.1.3.3.6.1 Stay-in-place forms. Stay-in-place concrete forms shall comply with this section.

1. Surface burning characteristics. The flame-spread index and smoke-developed index of forming material, other than foam plastic, left exposed on the interior shall comply with Section R302. The surface burning characteristics of foam plastic used in insulating concrete forms shall comply with Section R316.3.
2. Interior covering. Stay-in-place forms constructed of rigid foam plastic shall be protected on the interior of the building as required by Section R316. Where gypsum board is used to protect the foam plastic, it shall be installed with a mechanical fastening system. Use of adhesives in addition to mechanical fasteners is permitted.
3. Exterior wall covering. Stay-in-place forms constructed of rigid foam plastics shall be protected from sunlight and physical damage by the application of an approved exterior wall covering complying with this code. Exterior surfaces of other stay-in-place forming systems shall be protected in accordance with this code.
4. Termite protection. In areas where the probability of termite infestation is "very heavy" as indicated by Table R301.2(1) or Figure R301.2(7), foam plastic insulation shall be permitted below grade on foundation walls in accordance with Section R318.4.
5. Flat ICF wall system forms shall conform to ASTM E2634.

R404.1.3.3.7 Reinforcement.

R404.1.3.3.7.1 Steel reinforcement. Steel reinforcement shall comply with the requirements of ASTM A615, A706, or A996. ASTM A996 bars produced from rail steel shall be Type R. In buildings assigned to Seismic Design Category A, B or C, the minimum yield strength of reinforcing steel shall be 40,000 psi (Grade 40) (276 MPa). In buildings assigned to Seismic Design Category D_0, D_1 or D_2, reinforcing steel shall comply with the requirements of ASTM A706 for low-alloy steel with a minimum yield strength of 60,000 psi (Grade 60) (414 MPa).

R404.1.3.3.7.2 Location of reinforcement in wall. The center of vertical reinforcement in *basement* walls determined from Tables R404.1.2(2) through R404.1.2(7) shall be located at the centerline of the wall. Vertical reinforcement in *basement* walls determined from Table R404.1.2(8) shall be located to provide a maximum cover of $1^1/_4$ inches (32 mm) measured from the inside face of the wall. Regardless of the table used to determine vertical wall reinforcement, the center of the steel shall not vary from the specified location by more than the greater of 10 percent of the wall thickness and $^3/_8$ inch (10 mm). Horizontal and vertical reinforcement shall be located in foundation walls to provide the minimum cover required by Section R404.1.3.3.7.4.

R404.1.3.3.7.3 Wall openings. Vertical wall reinforcement required by Section R404.1.3.2 that is interrupted by wall openings shall have additional vertical reinforcement of the same size placed within 12 inches (305 mm) of each side of the opening.

INTERNATIONAL CODE COUNCIL®
Copyright © 2019 ICC & NYSDOS. ALL RIGHTS RESERVED. Accessed by Lauren Gualdino (lgualdino@briarcliffmanor.org), (-) Order Number #100880972 on May 08, 2020 07:05 AM (PDT) pursuant to License Agreement with ICC & NYSDOS. No further reproduction, no

100880972

R404.1.3.3.7.4 Support and cover. Reinforcement shall be secured in the proper location in the forms with tie wire or other bar support system to prevent displacement during the concrete placement operation. Steel reinforcement in concrete cast against the earth shall have a minimum cover of 3 inches (75 mm). Minimum cover for reinforcement in concrete cast in removable forms that will be exposed to the earth or weather shall be $1^1/_2$ inches (38 mm) for No. 5 bars and smaller, and 2 inches (50 mm) for No. 6 bars and larger. For concrete cast in removable forms that will not be exposed to the earth or weather, and for concrete cast in stay-in-place forms, minimum cover shall be $^3/_4$ inch (19 mm). The minus tolerance for cover shall not exceed the smaller of one-third the required cover or $^3/_8$ inch (10 mm).

R404.1.3.3.7.5 Lap splices. Vertical and horizontal wall reinforcement shall be the longest lengths practical. Where splices are necessary in reinforcement, the length of lap splice shall be in accordance with Table R608.5.4.(1) and Figure R608.5.4(1). The maximum gap between noncontact parallel bars at a lap splice shall not exceed the smaller of one-fifth the required lap length and 6 inches (152 mm) [See Figure R608.5.4(1)].

R404.1.3.3.7.6 Alternate grade of reinforcement and spacing. Where tables in Section R404.1.3.2 specify vertical wall reinforcement based on minimum bar size and maximum spacing, which are based on Grade 60 (414 MPa) steel reinforcement, different size bars or bars made from a different grade of steel are permitted provided that an equivalent area of steel per linear foot of wall is provided. Use of Table R404.1.2(9) is permitted to determine the maximum bar spacing for different bar sizes than specified in the tables or bars made from a different grade of steel. Bars shall not be spaced less than one-half the wall thickness, or more than 48 inches (1219 mm) on center.

R404.1.3.3.7.7 Standard hooks. Where reinforcement is required by this code to terminate with a standard hook, the hook shall comply with Section R608.5.4.5 and Figure R608.5.4(3).

R404.1.3.3.7.8 Construction joint reinforcement. Construction joints in foundation walls shall be made and located to not impair the strength of the wall. Construction joints in plain concrete walls, including walls required to have not less than No. 4 bars at 48 inches (1219 mm) on center by Sections R404.1.3.2 and R404.1.4.2, shall be located at points of lateral support, and not fewer than one No. 4 bar shall extend across the construction joint at a spacing not to exceed 24 inches (610 mm) on center. Construction joint reinforcement shall have not less than 12 inches (305 mm) embedment on both sides of the joint. Construction joints in reinforced concrete walls shall be located in the middle third of the span between lateral supports, or located and constructed as required for joints in plain concrete walls.

Exception: Use of vertical wall reinforcement required by this code is permitted in lieu of construction joint reinforcement provided that the spacing does not exceed 24 inches (610 mm), or the combination of wall reinforcement and No. 4 bars described in this section does not exceed 24 inches (610 mm).

R404.1.3.3.8 Exterior wall coverings. Requirements for installation of masonry veneer, stucco and other wall coverings on the exterior of concrete walls and other construction details not covered in this section shall comply with the requirements of this code.

R404.1.3.4 Requirements for Seismic Design Category C. Concrete foundation walls supporting above-grade concrete walls in townhouses assigned to Seismic Design Category C shall comply with ACI 318, ACI 332 or PCA 100 (see Section R404.1.3).

R404.1.4 Seismic Design Category D_0, D_1 or D_2.

R404.1.4.1 Masonry foundation walls. In buildings assigned to Seismic Design Category D_0, D_1 or D_2, as established in Table R301.2(1), masonry foundation walls shall comply with this section. In addition to the requirements of Table R404.1.1(1), plain masonry foundation walls shall comply with the following:

1. Wall height shall not exceed 8 feet (2438 mm).
2. Unbalanced backfill height shall not exceed 4 feet (1219 mm).
3. Minimum nominal thickness for plain masonry foundation walls shall be 8 inches (203 mm).
4. Masonry stem walls shall have a minimum vertical reinforcement of one No. 4 (No. 13) bar located not greater than 4 feet (1219 mm) on center in grouted cells. Vertical reinforcement shall be tied to the horizontal reinforcement in the footings.

Foundation walls, supporting more than 4 feet (1219 mm) of unbalanced backfill or exceeding 8 feet (2438 mm) in height shall be constructed in accordance with Table R404.1.1(2), R404.1.1(3) or R404.1.1(4). Masonry foundation walls shall have two No. 4 (No. 13) horizontal bars located in the upper 12 inches (305 mm) of the wall.

R404.1.4.2 Concrete foundation walls. In buildings assigned to Seismic Design Category D_0, D_1 or D_2, as established in Table R301.2(1), concrete foundation walls that support light-frame walls shall comply with this section, and concrete foundation walls that support above-grade concrete walls shall comply with ACI 318, ACI 332 or PCA 100 (see Section R404.1.3). In addition to the horizontal reinforcement required by Table

INTERNATIONAL CODE COUNCIL®
Copyright © 2019 ICC & NYSDOS. ALL RIGHTS RESERVED. Accessed by Lauren Gualdino (lgualdino@briarcliffmanor.org), (-) Order Number #100880972 on May 08, 2020 07:05 AM (PDT) pursuant to License Agreement with ICC & NYSDOS. No further reproduction, no

100880972

R404.1.2(1), plain concrete walls supporting light-frame walls shall comply with the following.

1. Wall height shall not exceed 8 feet (2438 mm).
2. Unbalanced backfill height shall not exceed 4 feet (1219 mm).
3. Minimum thickness for plain concrete foundation walls shall be 7.5 inches (191 mm) except that 6 inches (152 mm) is permitted where the maximum wall height is 4 feet, 6 inches (1372 mm).

Foundation walls less than 7.5 inches (191 mm) in thickness, supporting more than 4 feet (1219 mm) of unbalanced backfill or exceeding 8 feet (2438 mm) in height shall be provided with horizontal reinforcement in accordance with Table R404.1.2(1), and vertical reinforcement in accordance with Table R404.1.2(2), R404.1.2(3), R404.1.2(4), R404.1.2(5), R404.1.2(6), R404.1.2(7) or R404.1.2(8). Where Tables R404.1.2(2) through R404.1.2(8) permit plain concrete walls, not less than No. 4 (No. 13) vertical bars at a spacing not exceeding 48 inches (1219 mm) shall be provided.

R404.1.5 Foundation wall thickness based on walls supported. The thickness of masonry or concrete foundation walls shall be not less than that required by Section R404.1.5.1 or R404.1.5.2, respectively.

R404.1.5.1 Masonry wall thickness. Masonry foundation walls shall be not less than the thickness of the wall supported, except that masonry foundation walls of not less than 8-inch (203 mm) nominal thickness shall be permitted under brick veneered frame walls and under 10-inch-wide (254 mm) cavity walls where the total height of the wall supported, including gables, is not more than 20 feet (6096 mm), provided that the requirements of Section R404.1.1 are met.

R404.1.5.2 Concrete wall thickness. The thickness of concrete foundation walls shall be equal to or greater than the thickness of the wall in the *story* above. Concrete foundation walls with corbels, brackets or other projections built into the wall for support of masonry veneer or other purposes are not within the scope of the tables in this section.

Where a concrete foundation wall is reduced in thickness to provide a shelf for the support of masonry veneer, the reduced thickness shall be equal to or greater than the thickness of the wall in the *story* above. Vertical reinforcement for the foundation wall shall be based on Table R404.1.2(8) and located in the wall as required by Section R404.1.3.3.7.2 where that table is used. Vertical reinforcement shall be based on the thickness of the thinner portion of the wall.

Exception: Where the height of the reduced thickness portion measured to the underside of the floor assembly or sill plate above is less than or equal to 24 inches (610 mm) and the reduction in thickness does not exceed 4 inches (102 mm), the vertical reinforcement is permitted to be based on the thicker portion of the wall.

R404.1.5.3 Pier and curtain wall foundations. Use of pier and curtain wall foundations shall be permitted to support light-frame construction not more than two stories in height, provided that the following requirements are met:

1. All load-bearing walls shall be placed on continuous concrete footings placed integrally with the exterior wall footings.
2. The minimum actual thickness of a load-bearing masonry wall shall be not less than 4 inches (102 mm) nominal or $3^3/_8$ inches (92 mm) actual thickness, and shall be bonded integrally with piers spaced in accordance with Section R606.6.4.
3. Piers shall be constructed in accordance with Sections R606.7 and R606.7.1, and shall be bonded into the load-bearing masonry wall in accordance with Section R606.13.1 or R606.13.1.1.
4. The maximum height of a 4-inch (102 mm) load-bearing masonry foundation wall supporting wood-frame walls and floors shall be not more than 4 feet (1219 mm).
5. Anchorage shall be in accordance with Section R403.1.6, Figure R404.1.5(1), or as specified by engineered design accepted by the *building official*.
6. The unbalanced fill for 4-inch (102 mm) foundation walls shall not exceed 24 inches (610 mm) for solid masonry or 12 inches (305 mm) for hollow masonry.
7. In Seismic Design Categories D_0, D_1 and D_2, prescriptive reinforcement shall be provided in the horizontal and vertical direction. Provide minimum horizontal joint reinforcement of two No. 9 gage wires spaced not less than 6 inches (152 mm) or one $^1/_4$-inch-diameter (6.4 mm) wire at 10 inches (254 mm) on center vertically. Provide minimum vertical reinforcement of one No. 4 bar at 48 inches (1220 mm) on center horizontally grouted in place.

R404.1.6 Height above finished grade. Concrete and masonry foundation walls shall extend above the finished *grade* adjacent to the foundation at all points not less than 4 inches (102 mm) where masonry veneer is used and not less than 6 inches (152 mm) elsewhere.

R404.1.7 Backfill placement. Backfill shall not be placed against the wall until the wall has sufficient strength and has been anchored to the floor above, or has been sufficiently braced to prevent damage by the backfill.

Exception: Bracing is not required for walls supporting less than 4 feet (1219 mm) of unbalanced backfill.

R404.1.8 Rubble stone masonry. Rubble stone masonry foundation walls shall have a minimum thickness of 16 inches (406 mm), shall not support an unbalanced backfill exceeding 8 feet (2438 mm) in height, shall not support a soil pressure greater than 30 pounds per square foot per foot (4.71 kPa/m), and shall not be constructed in Seismic

INTERNATIONAL CODE COUNCIL®
Copyright © 2019 ICC & NYSDOS. ALL RIGHTS RESERVED. Accessed by Lauren Gualdino (lgualdino@briarcliffmanor.org), (-) Order Number #100880972 on May 08, 2020 07:05 AM (PDT) pursuant to License Agreement with ICC & NYSDOS. No further reproduction, no

100880972

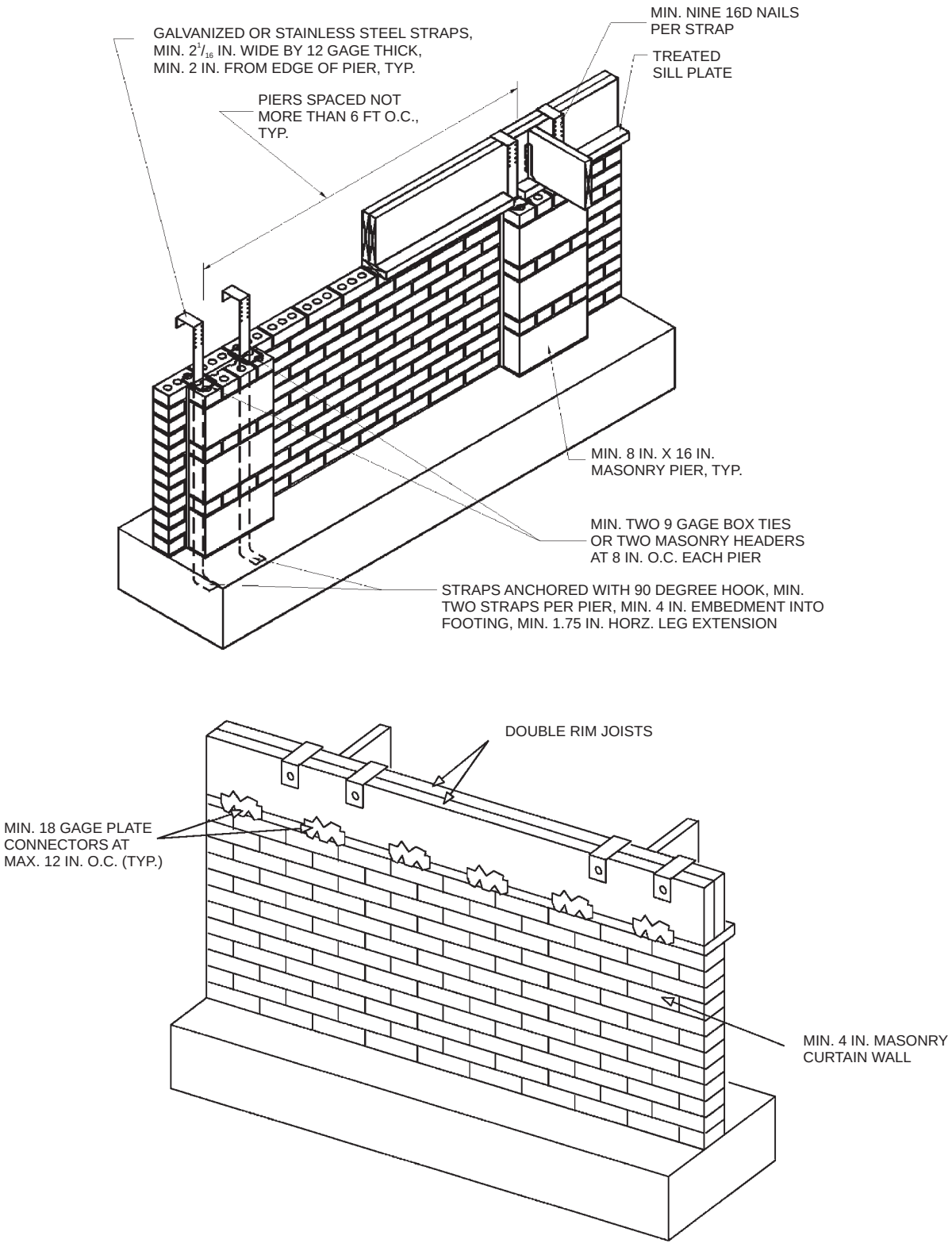

For SI: 1 inch = 25.4 mm, 1 foot = 304.8 mm, 1 degree = 0.0175 rad.

FIGURE R404.1.5(1)
FOUNDATION WALL CLAY MASONRY CURTAIN WALL WITH CONCRETE MASONRY PIERS

INTERNATIONAL CODE COUNCIL®
Copyright © 2019 ICC & NYSDOS. ALL RIGHTS RESERVED. Accessed by Lauren Gualdino (lgualdino@briarcliffmanor.org), (-) Order Number #100880972 on May 08, 2020 07:05 AM (PDT) pursuant to License Agreement with ICC & NYSDOS. No further reproduction, no

100880972

Design Categories D_0, D_1, D_2 or townhouses in Seismic Design Category C, as established in Figure R301.2(2).

R404.1.9 Isolated masonry piers. Isolated masonry piers shall be constructed in accordance with this section and the general masonry construction requirements of Section R606. Hollow masonry piers shall have a minimum nominal thickness of 8 inches (203 mm), with a nominal height not exceeding four times the nominal thickness and a nominal length not exceeding three times the nominal thickness. Where hollow masonry units are solidly filled with concrete or grout, piers shall be permitted to have a nominal height not exceeding ten times the nominal thickness. Footings for isolated masonry piers shall be sized in accordance with Section R403.1.1.

R404.1.9.1 Pier cap. Hollow masonry piers shall be capped with 4 inches (102 mm) of solid masonry or concrete, a masonry cap block, or shall have cavities of the top course filled with concrete or grout. Where required, termite protection for the pier cap shall be provided in accordance with Section R318.

R404.1.9.2 Masonry piers supporting floor girders. Masonry piers supporting wood girders sized in accordance with Tables R602.7(1) and R602.7(2) shall be permitted in accordance with this section. Piers supporting girders for interior bearing walls shall have a minimum nominal dimension of 12 inches (305 mm) and a maximum height of 10 feet (3048 mm) from top of footing to bottom of sill plate or girder. Piers supporting girders for exterior bearing walls shall have a minimum nominal dimension of 12 inches (305 mm) and a maximum height of 4 feet (1220 mm) from top of footing to bottom of sill plate or girder. Girders and sill plates shall be anchored to the pier or footing in accordance with Section R403.1.6 or Figure R404.1.5(1). Floor girder bearing shall be in accordance with Section R502.6.

R404.1.9.3 Masonry piers supporting braced wall panels. Masonry piers supporting *braced wall panels* shall be designed in accordance with accepted engineering practice.

R404.1.9.4 Seismic design of masonry piers. Masonry piers in *dwellings* located in Seismic Design Category D_0, D_1 or D_2, and townhouses in Seismic Design Category C, shall be designed in accordance with accepted engineering practice.

R404.1.9.5 Masonry piers in flood hazard areas. Masonry piers for *dwellings* in flood hazard areas shall be designed in accordance with Section R322.

R404.2 Wood foundation walls. Wood foundation walls shall be constructed in accordance with the provisions of Sections R404.2.1 through R404.2.6 and with the details shown in Figures R403.1(2) and R403.1(3).

[NY] R404.2.1 Identification. Load-bearing lumber shall be identified by the grade *mark* of a lumber grading or inspection agency that has been *approved* by an accreditation body that complies with DOC PS 20. In lieu of a grade *mark*, a certificate of inspection issued by a lumber grading or inspection agency meeting the requirements of this section shall be accepted. Wood structural panels shall conform to DOC PS 1 or DOC PS 2 and shall be identified by a grade *mark* or certificate of inspection issued by an *approved agency*.

Exception: Dimension lumber which is neither identified by a grade mark nor issued a certificate of inspection by a lumber grading or inspection agency may be used for load-bearing purposes under the following conditions when authorized by the authority having jurisdiction:

1. The producing mill shall sell or provide the lumber directly to the ultimate consumer or the consumer's contract builder for use in an approved structure.
2. The producing mill shall certify in writing to the consumer or contract builder on a form to be produced by the authority having jurisdiction that the quality and safe working stresses of such lumber are equal to or exceed No. 2 grade of the species in accordance with the conditions set forth in DOC PS 20. Such certification shall be filed as part of the building permit application.

R404.2.2 Stud size. The studs used in foundation walls shall be 2-inch by 6-inch (51 mm by 152 mm) members. Where spaced 16 inches (406 mm) on center, a wood species with an F_b value of not less than 1,250 pounds per square inch (8619 kPa) as listed in ANSI AWC NDS shall be used. Where spaced 12 inches (305 mm) on center, an F_b of not less than 875 psi (6033 kPa) shall be required.

R404.2.3 Height of backfill. For wood foundations that are not designed and installed in accordance with AWC PWF, the height of backfill against a foundation wall shall not exceed 4 feet (1219 mm). Where the height of fill is more than 12 inches (305 mm) above the interior *grade* of a *crawl space* or floor of a *basement*, the thickness of the plywood sheathing shall meet the requirements of Table R404.2.3.

R404.2.4 Backfilling. Wood foundation walls shall not be backfilled until the basement floor and first floor have been constructed or the walls have been braced. For *crawl space* construction, backfill or bracing shall be installed on the interior of the walls prior to placing backfill on the exterior.

R404.2.5 Drainage and dampproofing. Wood foundation basements shall be drained and dampproofed in accordance with Sections R405 and R406, respectively.

R404.2.6 Fastening. Wood structural panel foundation wall sheathing shall be attached to framing in accordance with Table R602.3(1) and Section R402.1.1.

R404.3 Wood sill plates. Wood sill plates shall be not less than 2-inch by 4-inch (51 mm by 102 mm) nominal lumber. Sill plate anchorage shall be in accordance with Sections R403.1.6 and R602.11.

INTERNATIONAL CODE COUNCIL®
Copyright © 2019 ICC & NYSDOS. ALL RIGHTS RESERVED. Accessed by Lauren Gualdino (lgualdino@briarcliffmanor.org), (-) Order Number #100880972 on May 08, 2020 07:05 AM (PDT) pursuant to License Agreement with ICC & NYSDOS. No further reproduction, no

100880972

TABLE R404.2.3
PLYWOOD GRADE AND THICKNESS FOR WOOD FOUNDATION CONSTRUCTION (30 pcf equivalent-fluid weight soil pressure)

HEIGHT OF FILL (inches)	STUD SPACING (inches)	FACE GRAIN ACROSS STUDS			FACE GRAIN PARALLEL TO STUDS		
		Grade[a]	Minimum thickness (inches)	Span rating	Grade[a]	Minimum thickness (inches)[b, c]	Span rating
24	12	B	15/32	32/16	A	15/32	32/16
					B	15/32[c]	32/16
	16	B	15/32	32/16	A	15/32[c]	32/16
					B	19/32[c] (4, 5 ply)	40/20
36	12	B	15/32	32/16	A	15/32	32/16
					B	15/32[c] (4, 5 ply)	32/16
					B	19/32 (4, 5 ply)	40/20
	16	B	15/32[c]	32/16	A	19/32	40/20
					B	23/32	48/24
48	12	B	15/32	32/16	A	15/32[c]	32/16
					B	19/32[c] (4, 5 ply)	40/20
	16	B	19/32	40/20	A	19/32[c]	40/20
					A	23/32	48/24

For SI: 1 inch = 25.4 mm, 1 foot = 304.8 mm, 1 pound per cubic foot = 0.1572 kN/m^3.

a. Plywood shall be of the following minimum grades in accordance with DOC PS 1 or DOC PS 2:
   1. DOC PS 1 Plywood grades marked:
      1.1. Structural I C-D (Exposure 1).
      1.2. C-D (Exposure 1).
   2. DOC PS 2 Plywood grades marked:
      2.1. Structural I Sheathing (Exposure 1).
      2.2. Sheathing (Exposure 1).
   3. Where a major portion of the wall is exposed above ground and a better appearance is desired, the following plywood grades marked exterior are suitable:
      3.1. Structural I A-C, Structural I B-C or Structural I C-C (Plugged) in accordance with DOC PS 1.
      3.2. A-C Group 1, B-C Group 1, C-C (Plugged) Group 1 or MDO Group 1 in accordance with DOC PS 1.
      3.3. Single Floor in accordance with DOC PS 1 or DOC PS 2.

b. Minimum thickness 15/32 inch, except crawl space sheathing shall have not less than 3/8 inch for face grain across studs 16 inches on center and maximum 2-foot depth of unequal fill.

c. For this fill height, thickness and grade combination, panels that are continuous over less than three spans (across less than three stud spacings) require blocking 16 inches above the bottom plate. Offset adjacent blocks and fasten through studs with two 16d corrosion-resistant nails at each end.

R404.4 Retaining walls. Retaining walls that are not laterally supported at the top and that retain in excess of 48 inches (1219 mm) of unbalanced fill, or retaining walls exceeding 24 inches (610 mm) in height that resist lateral loads in addition to soil, shall be designed in accordance with accepted engineering practice to ensure stability against overturning, sliding, excessive foundation pressure and water uplift. Retaining walls shall be designed for a safety factor of 1.5 against lateral sliding and overturning. This section shall not apply to foundation walls supporting buildings.

R404.5 Precast concrete foundation walls.

R404.5.1 Design. Precast concrete foundation walls shall be designed in accordance with accepted engineering practice. The design and manufacture of precast concrete foundation wall panels shall comply with the materials requirements of Section R402.3 or ACI 318. The panel design drawings shall be prepared by a registered design professional where required by the statutes of the *jurisdiction* in which the project is to be constructed in accordance with Section R106.1.

R404.5.2 Precast concrete foundation design drawings. Precast concrete foundation wall design drawings shall be submitted to the *building official* and *approved* prior to installation. Drawings shall include, at a minimum, the following information:

1. Design loading as applicable.
2. Footing design and material.
3. Concentrated loads and their points of application.
4. Soil bearing capacity.
5. Maximum allowable total uniform load.
6. Seismic design category.
7. Basic wind speed.

R404.5.3 Identification. Precast concrete foundation wall panels shall be identified by a certificate of inspection *label* issued by an *approved* third-party inspection agency.

INTERNATIONAL CODE COUNCIL®
Copyright © 2019 ICC & NYSDOS. ALL RIGHTS RESERVED. Accessed by Lauren Gualdino (lgualdino@briarcliffmanor.org), (-) Order Number #100880972 on May 08, 2020 07:05 AM (PDT) pursuant to License Agreement with ICC & NYSDOS. No further reproduction, no

100880972

SECTION R405
FOUNDATION DRAINAGE

R405.1 Concrete or masonry foundations. Drains shall be provided around concrete or masonry foundations that retain earth and enclose habitable or usable spaces located below *grade*. Drainage tiles, gravel or crushed stone drains, perforated pipe or other *approved* systems or materials shall be installed at or below the top of the footing or below the bottom of the slab and shall discharge by gravity or mechanical means into an *approved* drainage system. Gravel or crushed stone drains shall extend not less than 1 foot (305 mm) beyond the outside edge of the footing and 6 inches (152 mm) above the top of the footing and be covered with an *approved* filter membrane material. The top of open joints of drain tiles shall be protected with strips of building paper. Except where otherwise recommended by the drain manufacturer, perforated drains shall be surrounded with an *approved* filter membrane or the filter membrane shall cover the washed gravel or crushed rock covering the drain. Drainage tiles or perforated pipe shall be placed on not less than 2 inches (51 mm) of washed gravel or crushed rock not less than one sieve size larger than the tile joint opening or perforation and covered with not less than 6 inches (152 mm) of the same material.

Exception: A drainage system is not required where the foundation is installed on well-drained ground or sand-gravel mixture soils according to the Unified Soil Classification System, Group I soils, as detailed in Table R405.1.

R405.1.1 Precast concrete foundation. Precast concrete walls that retain earth and enclose habitable or useable space located below-*grade* that rest on crushed stone footings shall have a perforated drainage pipe installed below the base of the wall on either the interior or exterior side of the wall, not less than 1 foot (305 mm) beyond the edge of the wall. If the exterior drainage pipe is used, an *approved* filter membrane material shall cover the pipe. The drainage system shall discharge into an *approved* sewer system or to daylight.

R405.2 Wood foundations. Wood foundations enclosing habitable or usable spaces located below *grade* shall be adequately drained in accordance with Sections R405.2.1 through R405.2.3.

R405.2.1 Base. A porous layer of gravel, crushed stone or coarse sand shall be placed to a minimum thickness of 4 inches (102 mm) under the basement floor. Provision shall be made for automatic draining of this layer and the gravel or crushed stone wall footings.

R405.2.2 Vapor retarder. A 6-mil-thick (0.15 mm) polyethylene vapor retarder shall be applied over the porous layer with the basement floor constructed over the polyethylene.

TABLE R405.1
PROPERTIES OF SOILS CLASSIFIED ACCORDING TO THE UNIFIED SOIL CLASSIFICATION SYSTEM

SOIL GROUP	UNIFIED SOIL CLASSIFICATION SYSTEM SYMBOL	SOIL DESCRIPTION	DRAINAGE CHARACTERISTICS[a]	FROST HEAVE POTENTIAL	VOLUME CHANGE POTENTIAL EXPANSION[b]
Group I	GW	Well-graded gravels, gravel sand mixtures, little or no fines	Good	Low	Low
	GP	Poorly graded gravels or gravel sand mixtures, little or no fines	Good	Low	Low
	SW	Well-graded sands, gravelly sands, little or no fines	Good	Low	Low
	SP	Poorly graded sands or gravelly sands, little or no fines	Good	Low	Low
	GM	Silty gravels, gravel-sand-silt mixtures	Good	Medium	Low
	SM	Silty sand, sand-silt mixtures	Good	Medium	Low
Group II	GC	Clayey gravels, gravel-sand-clay mixtures	Medium	Medium	Low
	SC	Clayey sands, sand-clay mixture	Medium	Medium	Low
	ML	Inorganic silts and very fine sands, rock flour, silty or clayey fine sands or clayey silts with slight plasticity	Medium	High	Low
	CL	Inorganic clays of low to medium plasticity, gravelly clays, sandy clays, silty clays, lean clays	Medium	Medium	Medium to Low
Group III	CH	Inorganic clays of high plasticity, fat clays	Poor	Medium	High
	MH	Inorganic silts, micaceous or diatomaceous fine sandy or silty soils, elastic silts	Poor	High	High
Group IV	OL	Organic silts and organic silty clays of low plasticity	Poor	Medium	Medium
	OH	Organic clays of medium to high plasticity, organic silts	Unsatisfactory	Medium	High
	Pt	Peat and other highly organic soils	Unsatisfactory	Medium	High

For SI: 1 inch = 25.4 mm.

a. The percolation rate for good drainage is over 4 inches per hour, medium drainage is 2 inches to 4 inches per hour, and poor is less than 2 inches per hour.

b. Soils with a low potential expansion typically have a plasticity index (PI) of 0 to 15, soils with a medium potential expansion have a PI of 10 to 35 and soils with a high potential expansion have a PI greater than 20.

INTERNATIONAL CODE COUNCIL®
Copyright © 2019 ICC & NYSDOS. ALL RIGHTS RESERVED. Accessed by Lauren Gualdino (lgualdino@briarcliffmanor.org), (-) Order Number #100880972 on May 08, 2020 07:05 AM (PDT) pursuant to License Agreement with ICC & NYSDOS. No further reproduction, no

100880972

R405.2.3 Drainage system. In other than Group I soils, a sump shall be provided to drain the porous layer and footings. The sump shall be not less than 24 inches (610 mm) in diameter or 20 inches square (0.0129 m^2), shall extend not less than 24 inches (610 mm) below the bottom of the basement floor and shall be capable of positive gravity or mechanical drainage to remove any accumulated water. The drainage system shall discharge into an *approved* sewer system or to daylight.

SECTION R406
FOUNDATION WATERPROOFING AND DAMPPROOFING

R406.1 Concrete and masonry foundation dampproofing. Except where required by Section R406.2 to be waterproofed, foundation walls that retain earth and enclose interior spaces and floors below *grade* shall be dampproofed from the higher of (a) the top of the footing or (b) 6 inches (152 mm) below the top of the basement floor, to the finished grade. Masonry walls shall have not less than $^3/_8$-inch (9.5 mm) Portland cement parging applied to the exterior of the wall. The parging shall be dampproofed in accordance with one of the following:

1. Bituminous coating.
2. Three pounds per square yard (1.63 kg/m^2) of acrylic modified cement.
3. One-eighth-inch (3.2 mm) coat of surface-bonding cement complying with ASTM C887.
4. Any material permitted for waterproofing in Section R406.2.
5. Other *approved* methods or materials.

Exception: Parging of unit masonry walls is not required where a material is approved for direct application to the masonry.

Concrete walls shall be dampproofed by applying any one of the listed dampproofing materials or any one of the waterproofing materials listed in Section R406.2 to the exterior of the wall.

R406.2 Concrete and masonry foundation waterproofing. In areas where a high water table or other severe soil-water conditions are known to exist, exterior foundation walls that retain earth and enclose interior spaces and floors below *grade* shall be waterproofed from the higher of (a) the top of the footing or (b) 6 inches (152 mm) below the top of the basement floor, to the finished *grade*. Walls shall be waterproofed in accordance with one of the following:

1. Two-ply hot-mopped felts.
2. Fifty-five-pound (25 kg) roll roofing.
3. Six-mil (0.15 mm) polyvinyl chloride.
4. Six-mil (0.15 mm) polyethylene.
5. Forty-mil (1 mm) polymer-modified asphalt.
6. Sixty-mil (1.5 mm) flexible polymer cement.
7. One-eighth-inch (3 mm) cement-based, fiber-reinforced, waterproof coating.
8. Sixty-mil (1.5 mm) solvent-free liquid-applied synthetic rubber.

All joints in membrane waterproofing shall be lapped and sealed with an adhesive compatible with the membrane.

Exception: Organic-solvent-based products such as hydrocarbons, chlorinated hydrocarbons, ketones and esters shall not be used for ICF walls with expanded polystyrene form material. Use of plastic roofing cements, acrylic coatings, latex coatings, mortars and pargings to seal ICF walls is permitted. Cold-setting asphalt or hot asphalt shall conform to Type C of ASTM D449. Hot asphalt shall be applied at a temperature of less than 200°F (93°C).

R406.3 Dampproofing for wood foundations. Wood foundations enclosing habitable or usable spaces located below *grade* shall be dampproofed in accordance with Sections R406.3.1 through R406.3.4.

R406.3.1 Panel joint sealed. Plywood panel joints in the foundation walls shall be sealed full length with a caulking compound capable of producing a moistureproof seal under the conditions of temperature and moisture content at which it will be applied and used.

R406.3.2 Below-grade moisture barrier. A 6-mil-thick (0.15 mm) polyethylene film shall be applied over the below-*grade* portion of exterior foundation walls prior to backfilling. Joints in the polyethylene film shall be lapped 6 inches (152 mm) and sealed with adhesive. The top edge of the polyethylene film shall be bonded to the sheathing to form a seal. Film areas at *grade* level shall be protected from mechanical damage and exposure by a pressure-preservative treated lumber or plywood strip attached to the wall several inches above finished *grade* level and extending approximately 9 inches (229 mm) below *grade*. The joint between the strip and the wall shall be caulked full length prior to fastening the strip to the wall. Where approved, other coverings appropriate to the architectural treatment shall be permitted to be used. The polyethylene film shall extend down to the bottom of the wood footing plate but shall not overlap or extend into the gravel or crushed stone footing.

R406.3.3 Porous fill. The space between the excavation and the foundation wall shall be backfilled with the same material used for footings, up to a height of 1 foot (305 mm) above the footing for well-drained sites, or one-half the total backfill height for poorly drained sites. The porous fill shall be covered with strips of 30-pound (13.6 kg) asphalt paper or 6-mil (0.15 mm) polyethylene to permit water seepage while avoiding infiltration of fine soils.

R406.3.4 Backfill. The remainder of the excavated area shall be backfilled with the same type of soil as was removed during the excavation.

R406.4 Precast concrete foundation system dampproofing. Except where required by Section R406.2 to be waterproofed, precast concrete foundation walls enclosing habitable or useable spaces located below *grade* shall be dampproofed in accordance with Section R406.1.

R406.4.1 Panel joints sealed. Precast concrete foundation panel joints shall be sealed full height with a sealant meet-

INTERNATIONAL CODE COUNCIL®
Copyright © 2019 ICC & NYSDOS. ALL RIGHTS RESERVED. Accessed by Lauren Gualdino (lgualdino@briarcliffmanor.org), (-) Order Number #100880972 on May 08, 2020 07:05 AM (PDT) pursuant to License Agreement with ICC & NYSDOS. No further reproduction, no

100880972

ing ASTM C920, Type S or M, *Grade* NS, Class 25, Use NT, M or A. Joint sealant shall be installed in accordance with the manufacturer's instructions.

SECTION R407
COLUMNS

R407.1 Wood column protection. Wood columns shall be protected against decay as set forth in Section R317.

R407.2 Steel column protection. All surfaces (inside and outside) of steel columns shall be given a shop coat of rust-inhibitive paint, except for corrosion-resistant steel and steel treated with coatings to provide corrosion resistance.

R407.3 Structural requirements. The columns shall be restrained to prevent lateral displacement at the bottom end. Wood columns shall be not less in nominal size than 4 inches by 4 inches (102 mm by 102 mm). Steel columns shall be not less than 3-inch-diameter (76 mm) Schedule 40 pipe manufactured in accordance with ASTM A53 Grade B or *approved* equivalent.

Exception: In Seismic Design Categories A, B and C, columns not more than 48 inches (1219 mm) in height on a pier or footing are exempt from the bottom end lateral displacement requirement within under-floor areas enclosed by a continuous foundation.

SECTION R408
UNDER-FLOOR SPACE

R408.1 Ventilation. The under-floor space between the bottom of the floor joists and the earth under any building (except space occupied by a *basement*) shall have ventilation openings through foundation walls or exterior walls. The minimum net area of ventilation openings shall be not less than 1 square foot (0.0929 m^2) for each 150 square feet (14 m^2) of under-floor space area, unless the ground surface is covered by a Class 1 vapor retarder material. Where a Class 1 vapor retarder material is used, the minimum net area of ventilation openings shall be not less than 1 square foot (0.0929 m^2) for each 1,500 square feet (140 m^2) of under-floor space area. One such ventilating opening shall be within 3 feet (914 mm) of each corner of the building.

R408.2 Openings for under-floor ventilation. The minimum net area of ventilation openings shall be not less than 1 square foot (0.0929 m^2) for each 150 square feet (14 m^2) of under-floor area. One ventilation opening shall be within 3 feet (915 mm) of each corner of the building. Ventilation openings shall be covered for their height and width with any of the following materials provided that the least dimension of the covering shall not exceed $^1/_4$ inch (6.4 mm):

1. Perforated sheet metal plates not less than 0.070 inch (1.8 mm) thick.
2. Expanded sheet metal plates not less than 0.047 inch (1.2 mm) thick.
3. Cast-iron grill or grating.
4. Extruded load-bearing brick vents.
5. Hardware cloth of 0.035 inch (0.89 mm) wire or heavier.
6. Corrosion-resistant wire mesh, with the least dimension being $^1/_8$ inch (3.2 mm) thick.

Exception: The total area of ventilation openings shall be permitted to be reduced to $^1/_{1,500}$ of the under-floor area where the ground surface is covered with an *approved* Class I vapor retarder material and the required openings are placed to provide cross ventilation of the space. The installation of operable louvers shall not be prohibited.

R408.3 Unvented crawl space. Ventilation openings in under-floor spaces specified in Sections R408.1 and R408.2 shall not be required where the following items are provided:

1. Exposed earth is covered with a continuous Class I vapor retarder. Joints of the vapor retarder shall overlap by 6 inches (152 mm) and shall be sealed or taped. The edges of the vapor retarder shall extend not less than 6 inches (152 mm) up the stem wall and shall be attached and sealed to the stem wall or insulation.
2. One of the following is provided for the under-floor space:
    2.1. Continuously operated mechanical exhaust ventilation at a rate equal to 1 cubic foot per minute (0.47 L/s) for each 50 square feet (4.7 m^2) of *crawl space* floor area, including an air pathway to the common area (such as a duct or transfer grille), and perimeter walls insulated in accordance with Section N1102.2.11 of this code.
    2.2. *Conditioned air* supply sized to deliver at a rate equal to 1 cubic foot per minute (0.47 L/s) for each 50 square feet (4.7 m^2) of under-floor area, including a return air pathway to the common area (such as a duct or transfer grille), and perimeter walls insulated in accordance with Section N1102.2.11 of this code.
    2.3. Plenum in existing structures complying with Section M1601.5, if under-floor space is used as a plenum.
    2.4. Dehumidification sized to provide 70 pints (33 liters) of moisture removal per day for every 1,000 square feet (93 m^2) of *crawl space* floor area.

R408.4 Access. Access shall be provided to all under-floor spaces. Access openings through the floor shall be not smaller than 18 inches by 24 inches (457 mm by 610 mm). Openings through a perimeter wall shall be not less than 16 inches by 24 inches (407 mm by 610 mm). Where any portion of the through-wall access is below *grade*, an areaway not less than 16 inches by 24 inches (407 mm by 610 mm) shall be provided. The bottom of the areaway shall be below the threshold of the access opening. Through wall access openings shall not be located under a door to the residence. See Section M1305.1.4 for access requirements where mechanical *equipment* is located under floors.

INTERNATIONAL CODE COUNCIL®
Copyright © 2019 ICC & NYSDOS. ALL RIGHTS RESERVED. Accessed by Lauren Gualdino (lgualdino@briarcliffmanor.org), (-) Order Number #100880972 on May 08, 2020 07:05 AM (PDT) pursuant to License Agreement with ICC & NYSDOS. No further reproduction, no

100880972

R408.5 Removal of debris. The under-floor *grade* shall be cleaned of all vegetation and organic material. Wood forms used for placing concrete shall be removed before a building is occupied or used for any purpose. Construction materials shall be removed before a building is occupied or used for any purpose.

R408.6 Finished grade. The finished *grade* of under-floor surface shall be permitted to be located at the bottom of the footings; however, where there is evidence that the groundwater table can rise to within 6 inches (152 mm) of the finished floor at the building perimeter or where there is evidence that the surface water does not readily drain from the building site, the *grade* in the under-floor space shall be as high as the outside finished *grade*, unless an *approved* drainage system is provided.

R408.7 Flood resistance. For buildings located in flood hazard areas as established in Table R301.2(1):

1. Walls enclosing the under-floor space shall be provided with flood openings in accordance with Section R322.2.2.
2. The finished ground level of the under-floor space shall be equal to or higher than the outside finished ground level on at least one side.

   Exception: Under-floor spaces that meet the requirements of FEMA TB 11-1.

INTERNATIONAL CODE COUNCIL®
Copyright © 2019 ICC & NYSDOS. ALL RIGHTS RESERVED. Accessed by Lauren Gualdino (lgualdino@briarcliffmanor.org), (-) Order Number #100880972 on May 08, 2020 07:05 AM (PDT) pursuant to License Agreement with ICC & NYSDOS. No further reproduction, no

100880972

CHAPTER 5

FLOORS

SECTION R501
GENERAL

R501.1 Application. The provisions of this chapter shall control the design and construction of the floors for buildings, including the floors of *attic* spaces used to house mechanical or plumbing fixtures and *equipment*.

R501.2 Requirements. Floor construction shall be capable of accommodating all loads in accordance with Section R301 and of transmitting the resulting loads to the supporting structural elements.

SECTION R502
WOOD FLOOR FRAMING

R502.1 General. Wood and wood-based products used for load-supporting purposes shall conform to the applicable provisions of this section.

[NY] R502.1.1 Sawn lumber. Sawn lumber shall be identified by a grade *mark* of an accredited lumber grading or inspection agency and have design values certified by an accreditation body that complies with DOC PS 20. In lieu of a grade *mark*, a certificate of inspection issued by a lumber grading or inspection agency meeting the requirements of this section shall be accepted.

Exception: Dimension lumber which is neither identified by a grade mark nor issued a certificate of inspection by a lumber grading or inspection agency may be used for load-bearing purposes under the following conditions when authorized by the authority having jurisdiction:

1. The producing mill shall sell or provide the lumber directly to the ultimate consumer or the consumer's contract builder for use in an approved structure.
2. The producing mill shall certify in writing to the consumer or contract builder on a form to be produced by the authority having jurisdiction that the quality and safe working stresses of such lumber are equal to or exceed No. 2 grade of the species in accordance with the conditions set forth in DOC PS 20. Such certification shall be filed as part of the building permit application.

R502.1.1.1 Preservative-treated lumber. Preservative treated dimension lumber shall be identified as required by Section R317.2.

R502.1.1.2 End-jointed lumber. *Approved* end-jointed lumber identified by a grade *mark* conforming to Section R502.1.1 shall be permitted to be used interchangeably with solid-sawn members of the same species and grade. End-jointed lumber used in an assembly required elsewhere in this code to have a fire-resistance rating shall have the designation "Heat-Resistant Adhesive" or "HRA" included in its grade mark.

R502.1.2 Prefabricated wood I-joists. Structural capacities and design provisions for prefabricated wood I-joists shall be established and monitored in accordance with ASTM D5055.

R502.1.3 Structural glued laminated timbers. Glued laminated timbers shall be manufactured and identified as required in ANSI A190.1, ANSI 117 and ASTM D3737.

R502.1.4 Structural log members. Structural log members shall comply with the provisions of ICC 400.

R502.1.5 Structural composite lumber. Structural capacities for structural composite lumber shall be established and monitored in accordance with ASTM D5456.

R502.1.6 Cross-laminated timber. Cross-laminated timber shall be manufactured and identified as required by ANSI/APA PRG 320.

R502.1.7 Engineered wood rim board. Engineered wood rim boards shall conform to ANSI/APA PRR 410 or shall be evaluated in accordance with ASTM D7672. Structural capacities shall be in accordance with ANSI/APA PRR 410 or established in accordance with ASTM D7672. Rim boards conforming to ANSI/APA PRR 410 shall be marked in accordance with that standard.

R502.2 Design and construction. Floors shall be designed and constructed in accordance with the provisions of this chapter, Figure R502.2 and Sections R317 and R318 or in accordance with ANSI AWC NDS.

R502.2.1 Framing at braced wall lines. A load path for lateral forces shall be provided between floor framing and *braced wall panels* located above or below a floor, as specified in Section R602.10.8.

R502.2.2 Blocking and subflooring. Blocking for fastening panel edges or fixtures shall be not less than utility grade lumber. Subflooring shall be not less than utility grade lumber, No. 4 common grade boards or wood structural panels as specified in Section R503.2. Fireblocking shall be of any grade lumber.

R502.3 Allowable joist spans. Spans for floor joists shall be in accordance with Tables R502.3.1(1) and R502.3.1(2). For other grades and species and for other loading conditions, refer to the AWC STJR.

R502.3.1 Sleeping areas and attic joists. Table R502.3.1(1) shall be used to determine the maximum allowable span of floor joists that support sleeping areas and *attics* that are accessed by means of a fixed stairway in accordance with Section R311.7 provided that the design

INTERNATIONAL CODE COUNCIL®
Copyright © 2019 ICC & NYSDOS. ALL RIGHTS RESERVED. Accessed by Lauren Gualdino (lgualdino@briarcliffmanor.org), (-) Order Number #100880972 on May 08, 2020 07:05 AM (PDT) pursuant to License Agreement with ICC & NYSDOS. No further reproduction, no

100880972

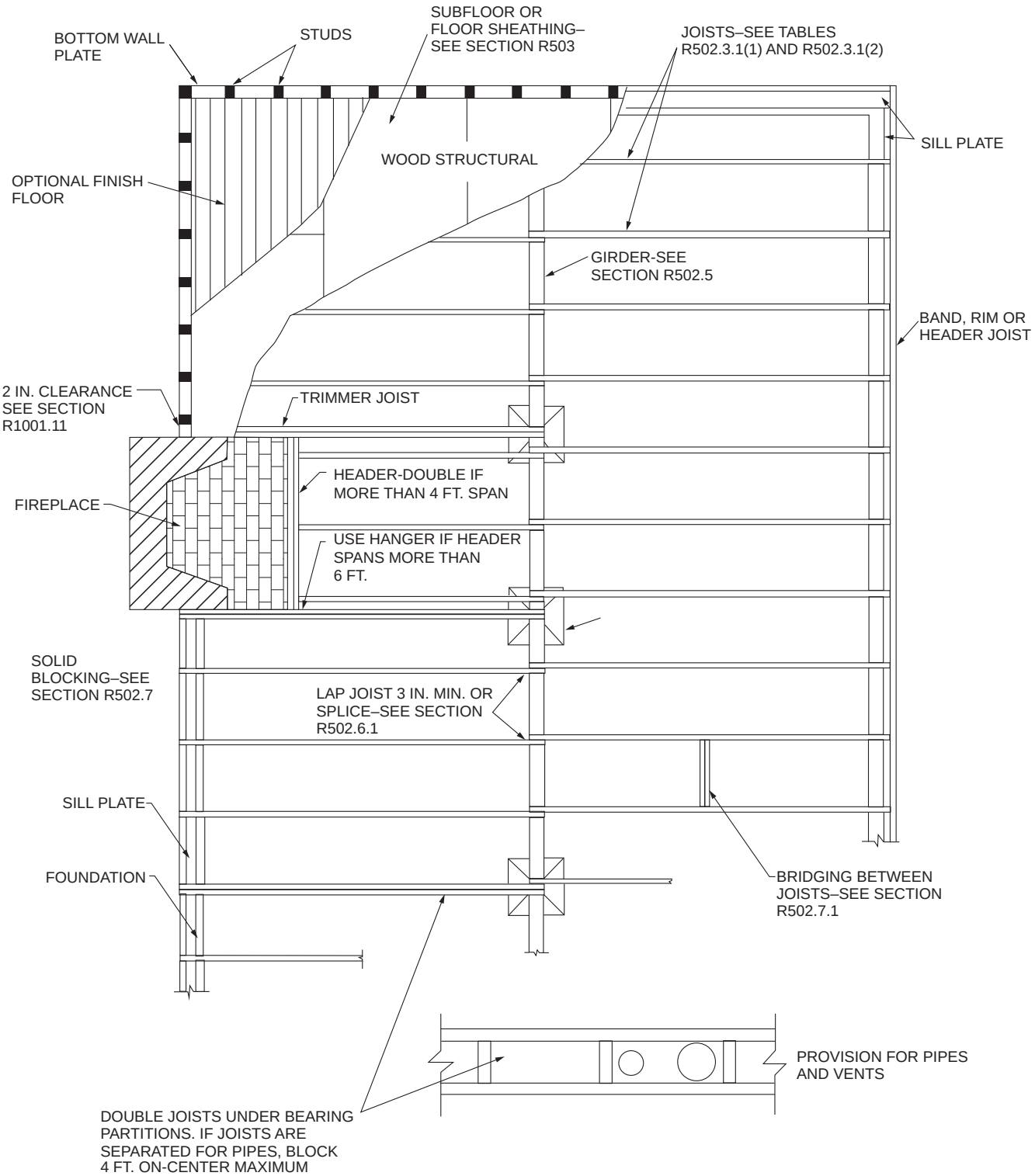

For SI: 1 inch = 25.4 mm, 1 foot = 304.8 mm.

FIGURE R502.2
FLOOR CONSTRUCTION

INTERNATIONAL CODE COUNCIL®
Copyright © 2019 ICC & NYSDOS. ALL RIGHTS RESERVED. Accessed by Lauren Gualdino (lgualdino@briarcliffmanor.org), (-) Order Number #100880972 on May 08, 2020 07:05 AM (PDT) pursuant to License Agreement with ICC & NYSDOS. No further reproduction, no

100880972

TABLE R502.3.1(1)
FLOOR JOIST SPANS FOR COMMON LUMBER SPECIES
(Residential sleeping areas, live load = 30 psf, L/Δ = 360)[a]

JOIST SPACING (inches)	SPECIES AND GRADE		DEAD LOAD = 10 psf				DEAD LOAD = 20 psf			
			2 × 6	2 × 8	2 × 10	2 × 12	2 × 6	2 × 8	2 × 10	2 × 12
			Maximum floor joist spans							
			(ft. - in.)	(ft. - in.)	(ft. - in.)	(ft. - in.)	(ft. - in.)	(ft. - in.)	(ft. - in.)	(ft. - in.)
12	Douglas fir-larch	SS	12-6	16-6	21-0	25-7	12-6	16-6	21-0	25-7
	Douglas fir-larch	#1	12-0	15-10	20-3	24-8	12-0	15-7	19-0	22-0
	Douglas fir-larch	#2	11-10	15-7	19-10	23-4	11-8	14-9	18-0	20-11
	Douglas fir-larch	#3	9-11	12-7	15-5	17-10	8-11	11-3	13-9	16-0
	Hem-fir	SS	11-10	15-7	19-10	24-2	11-10	15-7	19-10	24-2
	Hem-fir	#1	11-7	15-3	19-5	23-7	11-7	15-3	18-9	21-9
	Hem-fir	#2	11-0	14-6	18-6	22-6	11-0	14-4	17-6	20-4
	Hem-fir	#3	9-8	12-4	15-0	17-5	8-8	11-0	13-5	15-7
	Southern pine	SS	12-3	16-2	20-8	25-1	12-3	16-2	20-8	25-1
	Southern pine	#1	11-10	15-7	19-10	24-2	11-10	15-7	18-7	22-0
	Southern pine	#2	11-3	14-11	18-1	21-4	10-9	13-8	16-2	19-1
	Southern pine	#3	9-2	11-6	14-0	16-6	8-2	10-3	12-6	14-9
	Spruce-pine-fir	SS	11-7	15-3	19-5	23-7	11-7	15-3	19-5	23-7
	Spruce-pine-fir	#1	11-3	14-11	19-0	23-0	11-3	14-7	17-9	20-7
	Spruce-pine-fir	#2	11-3	14-11	19-0	23-0	11-3	14-7	17-9	20-7
	Spruce-pine-fir	#3	9-8	12-4	15-0	17-5	8-8	11-0	13-5	15-7
16	Douglas fir-larch	SS	11-4	15-0	19-1	23-3	11-4	15-0	19-1	23-3
	Douglas fir-larch	#1	10-11	14-5	18-5	21-4	10-8	13-6	16-5	19-1
	Douglas fir-larch	#2	10-9	14-2	17-5	20-3	10-1	12-9	15-7	18-1
	Douglas fir-larch	#3	8-7	10-11	13-4	15-5	7-8	9-9	11-11	13-10
	Hem-fir	SS	10-9	14-2	18-0	21-11	10-9	14-2	18-0	21-11
	Hem-fir	#1	10-6	13-10	17-8	21-1	10-6	13-4	16-3	18-10
	Hem-fir	#2	10-0	13-2	16-10	19-8	9-10	12-5	15-2	17-7
	Hem-fir	#3	8-5	10-8	13-0	15-1	7-6	9-6	11-8	13-6
	Southern pine	SS	11-2	14-8	18-9	22-10	11-2	14-8	18-9	22-10
	Southern pine	#1	10-9	14-2	18-0	21-4	10-9	13-9	16-1	19-1
	Southern pine	#2	10-3	13-3	15-8	18-6	9-4	11-10	14-0	16-6
	Southern pine	#3	7-11	10-0	11-1	14-4	7-1	8-11	10-10	12-10
	Spruce-pine-fir	SS	10-6	13-10	17-8	21-6	10-6	13-10	17-8	21-4
	Spruce-pine-fir	#1	10-3	13-6	17-2	19-11	9-11	12-7	15-5	17-10
	Spruce-pine-fir	#2	10-3	13-6	17-2	19-11	9-11	12-7	15-5	17-10
	Spruce-pine-fir	#3	8-5	10-8	13-0	15-1	7-6	9-6	11-8	13-6

(continued)

INTERNATIONAL CODE COUNCIL®
Copyright © 2019 ICC & NYSDOS. ALL RIGHTS RESERVED. Accessed by Lauren Gualdino (lgualdino@briarcliffmanor.org), (-) Order Number #100880972 on May 08, 2020 07:05 AM (PDT) pursuant to License Agreement with ICC & NYSDOS. No further reproduction, no

100880972

TABLE R502.3.1(1)—continued
FLOOR JOIST SPANS FOR COMMON LUMBER SPECIES
(Residential sleeping areas, live load = 30 psf, L/Δ = 360)[a]

JOIST SPACING (inches)	SPECIES AND GRADE		DEAD LOAD = 10 psf				DEAD LOAD = 20 psf			
			2 × 6	2 × 8	2 × 10	2 × 12	2 × 6	2 × 8	2 × 10	2 × 12
			Maximum floor joist spans							
			(ft.- in.)	(ft. - in.)	(ft. - in.)	(ft. - in.)	(ft. - in.)	(ft. - in.)	(ft. - in.)	(ft. - in.)
19.2	Douglas fir-larch	SS	10-8	14-1	18-0	21-10	10-8	14-1	18-0	21-4
	Douglas fir-larch	#1	10-4	13-7	16-9	19-6	9-8	12-4	15-0	17-5
	Douglas fir-larch	#2	10-1	13-0	15-11	18-6	9-3	11-8	14-3	16-6
	Douglas fir-larch	#3	7-10	10-0	12-2	14-1	7-0	8-11	10-11	12-7
	Hem-fir	SS	10-1	13-4	17-0	20-8	10-1	13-4	17-0	20-7
	Hem-fir	#1	9-10	13-0	16-7	19-3	9-7	12-2	14-10	17-2
	Hem-fir	#2	9-5	12-5	15-6	17-1	8-11	11-4	13-10	16-1
	Hem-fir	#3	7-8	9-9	11-10	13-9	6-10	8-8	10-7	12-4
	Southern pine	SS	10-6	13-10	17-8	21-6	10-6	13-10	17-8	21-6
	Southern pine	#1	10-1	13-4	16-5	19-6	9-11	12-7	14-8	17-5
	Southern pine	#2	9-6	12-1	14-4	16-10	8-6	10-10	12-10	15-1
	Southern pine	#3	7-3	9-1	11-0	13-1	6-5	8-2	9-10	11-8
	Spruce-pine-fir	SS	9-10	13-0	16-7	20-2	9-10	13-0	16-7	19-6
	Spruce-pine-fir	#1	9-8	12-9	15-8	18-3	9-1	11-6	14-1	16-3
	Spruce-pine-fir	#2	9-8	12-9	15-8	18-3	9-1	11-6	14-1	16-3
	Spruce-pine-fir	#3	7-8	9-9	11-10	13-9	6-10	8-8	10-7	12-4
24	Douglas fir-larch	SS	9-11	13-1	16-8	20-3	9-11	13-1	16-5	19-1
	Douglas fir-larch	#1	9-7	12-4	15-0	17-5	8-8	11-0	13-5	15-7
	Douglas fir-larch	#2	9-3	11-8	14-3	16-6	8-3	10-5	12-9	14-9
	Douglas fir-larch	#3	7-0	8-11	10-11	12-7	6-3	8-0	9-9	11-3
	Hem-fir	SS	9-4	12-4	15-9	19-2	9-4	12-4	15-9	18-5
	Hem-fir	#1	9-2	12-1	14-10	17-2	8-7	10-10	13-3	15-5
	Hem-fir	#2	8-9	11-4	13-10	16-1	8-0	10-2	12-5	14-4
	Hem-fir	#3	6-10	8-8	10-7	12-4	6-2	7-9	9-6	11-0
	Southern pine	SS	9-9	12-10	16-5	19-11	9-9	12-10	16-5	19-8
	Southern pine	#1	9-4	12-4	14-8	17-5	8-10	11-3	13-1	15-7
	Southern pine	#2	8-6	10-10	12-10	15-1	7-7	9-8	11-5	13-6
	Southern pine	#3	6-5	8-2	9-10	11-8	5-9	7-3	8-10	10-5
	Spruce-pine-fir	SS	9-2	12-1	15-5	18-9	9-2	12-1	15-0	17-5
	Spruce-pine-fir	#1	8-11	11-6	14-1	16-3	8-1	10-3	12-7	14-7
	Spruce-pine-fir	#2	8-11	11-6	14-1	16-3	8-1	10-3	12-7	14-7
	Spruce-pine-fir	#3	6-10	8-8	10-7	12-4	6-2	7-9	9-6	11-0

For SI: 1 inch = 25.4 mm, 1 foot = 304.8 mm, 1 pound per square foot = 0.0479 kPa.

Note: Check sources for availability of lumber in lengths greater than 20 feet.

a. Dead load limits for townhouses in Seismic Design Category C and all structures in Seismic Design Categories D_0, D_1 and D_2 shall be determined in accordance with Section R301.2.2.2.

INTERNATIONAL CODE COUNCIL®
Copyright © 2019 ICC & NYSDOS. ALL RIGHTS RESERVED. Accessed by Lauren Gualdino (lgualdino@briarcliffmanor.org), (-) Order Number #100880972 on May 08, 2020 07:05 AM (PDT) pursuant to License Agreement with ICC & NYSDOS. No further reproduction, no

100880972

TABLE R502.3.1(2)
FLOOR JOIST SPANS FOR COMMON LUMBER SPECIES
(Residential living areas, live load = 40 psf, L/Δ = 360)[b]

JOIST SPACING (inches)	SPECIES AND GRADE		DEAD LOAD = 10 psf				DEAD LOAD = 20 psf			
			2 × 6	2 × 8	2 × 10	2 × 12	2 × 6	2 × 8	2 × 10	2 × 12
			Maximum floor joist spans							
			(ft. - in.)	(ft. - in.)	(ft. - in.)	(ft. - in.)	(ft. - in.)	(ft. - in.)	(ft. - in.)	(ft. - in.)
12	Douglas fir-larch	SS	11-4	15-0	19-1	23-3	11-4	15-0	19-1	23-3
	Douglas fir-larch	#1	10-11	14-5	18-5	22-0	10-11	14-2	17-4	20-1
	Douglas fir-larch	#2	10-9	14-2	18-0	20-11	10-8	13-6	16-5	19-1
	Douglas fir-larch	#3	8-11	11-3	13-9	16-0	8-1	10-3	12-7	14-7
	Hem-fir	SS	10-9	14-2	18-0	21-11	10-9	14-2	18-0	21-11
	Hem-fir	#1	10-6	13-10	17-8	21-6	10-6	13-10	17-1	19-10
	Hem-fir	#2	10-0	13-2	16-10	20-4	10-0	13-1	16-0	18-6
	Hem-fir	#3	8-8	11-0	13-5	15-7	7-11	10-0	12-3	14-3
	Southern pine	SS	11-2	14-8	18-9	22-10	11-2	14-8	18-9	22-10
	Southern pine	#1	10-9	14-2	18-0	21-11	10-9	14-2	16-11	20-1
	Southern pine	#2	10-3	13-6	16-2	19-1	9-10	12-6	14-9	17-5
	Southern pine	#3	8-2	10-3	12-6	14-9	7-5	9-5	11-5	13-6
	Spruce-pine-fir	SS	10-6	13-10	17-8	21-6	10-6	13-10	17-8	21-6
	Spruce-pine-fir	#1	10-3	13-6	17-3	20-7	10-3	13-3	16-3	18-10
	Spruce-pine-fir	#2	10-3	13-6	17-3	20-7	10-3	13-3	16-3	18-10
	Spruce-pine-fir	#3	8-8	11-0	13-5	15-7	7-11	10-0	12-3	14-3
16	Douglas fir-larch	SS	10-4	13-7	17-4	21-1	10-4	13-7	17-4	21-1
	Douglas fir-larch	#1	9-11	13-1	16-5	19-1	9-8	12-4	15-0	17-5
	Douglas fir-larch	#2	9-9	12-9	15-7	18-1	9-3	11-8	14-3	16-6
	Douglas fir-larch	#3	7-8	9-9	11-11	13-10	7-0	8-11	10-11	12-7
	Hem-fir	SS	9-9	12-10	16-5	19-11	9-9	12-10	16-5	19-11
	Hem-fir	#1	9-6	12-7	16-0	18-10	9-6	12-2	14-10	17-2
	Hem-fir	#2	9-1	12-0	15-2	17-7	8-11	11-4	13-10	16-1
	Hem-fir	#3	7-6	9-6	11-8	13-6	6-10	8-8	10-7	12-4
	Southern pine	SS	10-2	13-4	17-0	20-9	10-2	13-4	17-0	20-9
	Southern pine	#1	9-9	12-10	16-1	19-1	9-9	12-7	14-8	17-5
	Southern pine	#2	9-4	11-10	14-0	16-6	8-6	10-10	12-10	15-1
	Southern pine	#3	7-1	8-11	10-10	12-10	6-5	8-2	9-10	11-8
	Spruce-pine-fir	SS	9-6	12-7	16-0	19-6	9-6	12-7	16-0	19-6
	Spruce-pine-fir	#1	9-4	12-3	15-5	17-10	9-1	11-6	14-1	16-3
	Spruce-pine-fir	#2	9-4	12-3	15-5	17-10	9-1	11-6	14-1	16-3
	Spruce-pine-fir	#3	7-6	9-6	11-8	13-6	6-10	8-8	10-7	12-4

(continued)

INTERNATIONAL CODE COUNCIL®
Copyright © 2019 ICC & NYSDOS. ALL RIGHTS RESERVED. Accessed by Lauren Gualdino (lgualdino@briarcliffmanor.org), (-) Order Number #100880972 on May 08, 2020 07:05 AM (PDT) pursuant to License Agreement with ICC & NYSDOS. No further reproduction, no

100880972

TABLE R502.3.1(2)—continued
FLOOR JOIST SPANS FOR COMMON LUMBER SPECIES
(Residential living areas, live load = 40 psf, L/Δ = 360)[b]

JOIST SPACING (inches)	SPECIES AND GRADE		DEAD LOAD = 10 psf				DEAD LOAD = 20 psf			
			2 × 6	2 × 8	2 × 10	2 × 12	2 × 6	2 × 8	2 × 10	2 × 12
			Maximum floor joist spans							
			(ft. - in.)	(ft. - in.)	(ft. - in.)	(ft. - in.)	(ft. - in.)	(ft. - in.)	(ft. - in.)	(ft. - in.)
19.2	Douglas fir-larch	SS	9-8	12-10	16-4	19-10	9-8	12-10	16-4	19-6
	Douglas fir-larch	#1	9-4	12-4	15-0	17-5	8-10	11-3	13-8	15-11
	Douglas fir-larch	#2	9-2	11-8	14-3	16-6	8-5	10-8	13-0	15-1
	Douglas fir-larch	#3	7-0	8-11	10-11	12-7	6-5	8-2	9-11	11-6
	Hem-fir	SS	9-2	12-1	15-5	18-9	9-2	12-1	15-5	18-9
	Hem-fir	#1	9-0	11-10	14-10	17-2	8-9	11-1	13-6	15-8
	Hem-fir	#2	8-7	11-3	13-10	16-1	8-2	10-4	12-8	14-8
	Hem-fir	#3	6-10	8-8	10-7	12-4	6-3	7-11	9-8	11-3
	Southern pine	SS	9-6	12-7	16-0	19-6	9-6	12-7	16-0	19-6
	Southern pine	#1	9-2	12-1	14-8	17-5	9-0	11-5	13-5	15-11
	Southern pine	#2	8-6	10-10	12-10	15-1	7-9	9-10	11-8	13-9
	Southern pine	#3	6-5	8-2	9-10	11-8	5-11	7-5	9-0	10-8
	Spruce-pine-fir	SS	9-0	11-10	15-1	18-4	9-0	11-10	15-1	17-9
	Spruce-pine-fir	#1	8-9	11-6	14-1	16-3	8-3	10-6	12-10	14-10
	Spruce-pine-fir	#2	8-9	11-6	14-1	16-3	8-3	10-6	12-10	14-10
	Spruce-pine-fir	#3	6-10	8-8	10-7	12-4	6-3	7-11	9-8	11-3
24	Douglas fir-larch	SS	9-0	11-11	15-2	18-5	9-0	11-11	15-0	17-5
	Douglas fir-larch	#1	8-8	11-0	13-5	15-7	7-11	10-0	12-3	14-3
	Douglas fir-larch	#2	8-3	10-5	12-9	14-9	7-6	9-6	11-8	13-6
	Douglas fir-larch	#3	6-3	8-0	9-9	11-3	5-9	7-3	8-11	10-4
	Hem-fir	SS	8-6	11-3	14-4	17-5	8-6	11-3	14-4	16-10[a]
	Hem-fir	#1	8-4	10-10	13-3	15-5	7-10	9-11	12-1	14-0
	Hem-fir	#2	7-11	10-2	12-5	14-4	7-4	9-3	11-4	13-1
	Hem-fir	#3	6-2	7-9	9-6	11-0	5-7	7-1	8-8	10-1
	Southern pine	SS	8-10	11-8	14-11	18-1	8-10	11-8	14-11	18-0
	Southern pine	#1	8-6	11-3	13-1	15-7	8-1	10-3	12-0	14-3
	Southern pine	#2	7-7	9-8	11-5	13-6	7-0	8-10	10-5	12-4
	Southern pine	#3	5-9	7-3	8-10	10-5	5-3	6-8	8-1	9-6
	Spruce-pine-fir	SS	8-4	11-0	14-0	17-0	8-4	11-0	13-8	15-11
	Spruce-pine-fir	#1	8-1	10-3	12-7	14-7	7-5	9-5	11-6	13-4
	Spruce-pine-fir	#2	8-1	10-3	12-7	14-7	7-5	9-5	11-6	13-4
	Spruce-pine-fir	#3	6-2	7-9	9-6	11-0	5-7	7-1	8-8	10-1

For SI: 1 inch = 25.4 mm, 1 foot = 304.8 mm, 1 pound per square foot = 0.0479 kPa.

Note: Check sources for availability of lumber in lengths greater than 20 feet.

a. End bearing length shall be increased to 2 inches.

b. Dead load limits for townhouses in Seismic Design Category C and all structures in Seismic Design Categories D_0, D_1, and D_2 shall be determined in accordance with Section R301.2.2.2.

INTERNATIONAL CODE COUNCIL®
Copyright © 2019 ICC & NYSDOS. ALL RIGHTS RESERVED. Accessed by Lauren Gualdino (lgualdino@briarcliffmanor.org), (-) Order Number #100880972 on May 08, 2020 07:05 AM (PDT) pursuant to License Agreement with ICC & NYSDOS. No further reproduction, no

100880972

live load does not exceed 30 pounds per square foot (1.44 kPa) and the design dead load does not exceed 20 pounds per square foot (0.96 kPa). The allowable span of ceiling joists that support *attics* used for limited storage or no storage shall be determined in accordance with Section R802.5.

R502.3.2 Other floor joists. Table R502.3.1(2) shall be used to determine the maximum allowable span of floor joists that support other areas of the building, other than sleeping rooms and *attics*, provided that the design live load does not exceed 40 pounds per square foot (1.92 kPa) and the design dead load does not exceed 20 pounds per square foot (0.96 kPa).

R502.3.3 Floor cantilevers. Floor cantilever spans shall not exceed the nominal depth of the wood floor joist. Floor cantilevers constructed in accordance with Table R502.3.3(1) shall be permitted where supporting a light-frame bearing wall and roof only. Floor cantilevers supporting an exterior balcony are permitted to be constructed in accordance with Table R502.3.3(2).

R502.4 Joists under bearing partitions. Joists under parallel bearing partitions shall be of adequate size to support the load. Double joists, sized to adequately support the load, that are separated to permit the installation of piping or vents shall be full-depth solid blocked with lumber not less than 2 inches (51 mm) in nominal thickness spaced not more than 4 feet (1219 mm) on center. Bearing partitions perpendicular to joists shall not be offset from supporting girders, walls or partitions more than the joist depth unless such joists are of sufficient size to carry the additional load.

R502.5 Allowable girder and header spans. The allowable spans of girders and headers fabricated of dimension lumber shall not exceed the values set forth in Tables R602.7(1), R602.7(2) and R602.7(3).

R502.6 Bearing. The ends of each joist, beam or girder shall have not less than $1^1/_2$ inches (38 mm) of bearing on wood or metal, have not less than 3 inches of bearing (76 mm) on masonry or concrete or be supported by *approved* joist hangers. Alternatively, the ends of joists shall be supported on a 1-inch by 4-inch (25 mm by 102 mm) ribbon strip and shall be nailed to the adjacent stud. The bearing on masonry or concrete shall be direct, or a sill plate of 2-inch-minimum (51 mm) nominal thickness shall be provided under the joist, beam or girder. The sill plate shall provide a minimum nominal bearing area of 48 square inches (30 865 mm^2).

R502.6.1 Floor systems. Joists framing from opposite sides over a bearing support shall lap not less than 3 inches (76 mm) and shall be nailed together with a minimum three 10d face nails. A wood or metal splice with strength equal to or greater than that provided by the nailed lap is permitted.

R502.6.2 Joist framing. Joists framing into the side of a wood girder shall be supported by *approved* framing anchors or on ledger strips not less than nominal 2 inches by 2 inches (51 mm by 51 mm).

R502.7 Lateral restraint at supports. Joists shall be supported laterally at the ends by full-depth solid blocking not less than 2 inches (51 mm) nominal in thickness; or by attachment to a full-depth header, band or rim joist, or to an adjoining stud or shall be otherwise provided with lateral support to prevent rotation.

Exceptions:

1. Trusses, structural composite lumber, structural glued-laminated members and I-joists shall be supported laterally as required by the manufacturer's recommendations.
2. In Seismic Design Categories D_0, D_1 and D_2, lateral restraint shall be provided at each intermediate support.

R502.7.1 Bridging. Joists exceeding a nominal 2 inches by 12 inches (51 mm by 305 mm) shall be supported laterally by solid blocking, diagonal bridging (wood or metal), or a continuous 1-inch by 3-inch (25 mm by 76 mm) strip nailed across the bottom of joists perpendicular to joists at intervals not exceeding 8 feet (2438 mm).

Exception: Trusses, structural composite lumber, structural glued-laminated members and I-joists shall be supported laterally as required by the manufacturer's recommendations.

R502.8 Cutting, drilling and notching. Structural floor members shall not be cut, bored or notched in excess of the limitations specified in this section. See Figure R502.8.

R502.8.1 Sawn lumber. Notches in solid lumber joists, rafters and beams shall not exceed one-sixth of the depth of the member, shall not be longer than one-third of the depth of the member and shall not be located in the middle one-third of the span. Notches at the ends of the member shall not exceed one-fourth the depth of the member. The tension side of members 4 inches (102 mm) or greater in nominal thickness shall not be notched except at the ends of the members. The diameter of holes bored or cut into members shall not exceed one-third the depth of the member. Holes shall not be closer than 2 inches (51 mm) to the top or bottom of the member, or to any other hole located in the member. Where the member is notched, the hole shall not be closer than 2 inches (51 mm) to the notch.

R502.8.2 Engineered wood products. Cuts, notches and holes bored in trusses, structural composite lumber, structural glue-laminated members, cross-laminated timber members or I-joists are prohibited except where permitted by the manufacturer's recommendations or where the effects of such alterations are specifically considered in the design of the member by a *registered design professional*.

R502.9 Fastening. Floor framing shall be nailed in accordance with Table R602.3(1). Where posts and beam or girder construction is used to support floor framing, positive connections shall be provided to ensure against uplift and lateral displacement.

R502.10 Framing of openings. Openings in floor framing shall be framed with header and trimmer joists. Where the header joist span does not exceed 4 feet (1219 mm), the header joist shall be a single member the same size as the floor joist. Single trimmer joists shall be used to carry a single header joist that is located within 3 feet (914 mm) of the trimmer joist bearing. Where the header joist span exceeds 4

INTERNATIONAL CODE COUNCIL®
Copyright © 2019 ICC & NYSDOS. ALL RIGHTS RESERVED. Accessed by Lauren Gualdino (lgualdino@briarcliffmanor.org), (-) Order Number #100880972 on May 08, 2020 07:05 AM (PDT) pursuant to License Agreement with ICC & NYSDOS. No further reproduction, no

TABLE R502.3.3(1)
CANTILEVER SPANS FOR FLOOR JOISTS SUPPORTING LIGHT-FRAME EXTERIOR BEARING WALL AND ROOF ONLY[a, b, c, f, g, h]
(Floor Live Load ≤ 40 psf, Roof Live Load ≤ 20 psf)

MEMBER & SPACING	MAXIMUM CANTILEVER SPAN (uplift force at backspan support in lbs.)[d, e]											
	Ground Snow Load											
	≤ 20 psf			30 psf			50 psf			70 psf		
	Roof Width			Roof Width			Roof Width			Roof Width		
	24 ft	32 ft	40 ft	24 ft	32 ft	40 ft	24 ft	32 ft	40 ft	24 ft	32 ft	40 ft
2 × 8 @ 12″	20″ (177)	15″ (227)	—	18″ (209)	—	—	—	—	—	—	—	—
2 × 10 @ 16″	29″ (228)	21″ (297)	16″ (364)	26″ (271)	18″ (354)	—	20″ (375)	—	—	—	—	—
2 × 10 @ 12″	36″ (166)	26″ (219)	20″ (270)	34″ (198)	22″ (263)	16″ (324)	26″ (277)	—	—	19″ (356)	—	—
2 × 12 @ 16″	—	32″ (287)	25″ (356)	36″ (263)	29″ (345)	21″ (428)	29″ (367)	20″ (484)	—	23″ (471)	—	—
2 × 12 @ 12″	—	42″ (209)	31″ (263)	—	37″ (253)	27″ (317)	36″ (271)	27″ (358)	17″ (447)	31″ (348)	19″ (462)	—
2 × 12 @ 8″	—	48″ (136)	45″ (169)	—	48″ (164)	38″ (206)	—	40″ (233)	26″ (294)	36″ (230)	29″ (304)	18″ (379)

For SI: 1 inch = 25.4 mm, 1 foot = 304.8 mm, 1 pound per square foot = 0.0479 kPa.

a. Tabulated values are for clear-span roof supported solely by exterior bearing walls.
b. Spans are based on No. 2 Grade lumber of Douglas fir-larch, hem-fir, and spruce-pine-fir for repetitive (three or more) members. No.1 or better shall be used for Southern pine.
c. Ratio of backspan to cantilever span shall be not less than 3:1.
d. Connections capable of resisting the indicated uplift force shall be provided at the backspan support.
e. Uplift force is for a backspan to cantilever span ratio of 3:1. Tabulated uplift values are permitted to be reduced by multiplying by a factor equal to 3 divided by the actual backspan ratio provided (3/backspan ratio).
f. See Section R301.2.2.6, Item 1, for additional limitations on cantilevered floor joists for detached one- and two-family dwellings in Seismic Design Category D_0, D_1, or D_2 and townhouses in Seismic Design Category C, D_0, D_1 or D_2.
g. A full-depth rim joist shall be provided at the unsupported end of the cantilever joists. Solid blocking shall be provided at the supported end. Where the cantilever length is 24 inches or less and the building is assigned to Seismic Design Category A, B or C, solid blocking at the support for the cantilever shall not be required.
h. Linear interpolation shall be permitted for building widths and ground snow loads other than shown.

TABLE R502.3.3(2)
CANTILEVER SPANS FOR FLOOR JOISTS SUPPORTING EXTERIOR BALCONY[a, b, e, f]

MEMBER SIZE	SPACING	MAXIMUM CANTILEVER SPAN (uplift force at backspan support in lbs.)[c, d]		
		Ground Snow Load		
		≤ 30 psf	50 psf	70 psf
2 × 8	12″	42″ (139)	39″ (156)	34″ (165)
2 × 8	16″	36″ (151)	34″ (171)	29″ (180)
2 × 10	12″	61″ (164)	57″ (189)	49″ (201)
2 × 10	16″	53″ (180)	49″ (208)	42″ (220)
2 × 10	24″	43″ (212)	40″ (241)	34″ (255)
2 × 12	16″	72″ (228)	67″ (260)	57″ (268)
2 × 12	24″	58″ (279)	54″ (319)	47″ (330)

For SI: 1 inch = 25.4 mm, 1 pound per square foot = 0.0479 kPa.

a. Spans are based on No. 2 Grade lumber of Douglas fir-larch, hem-fir, and spruce-pine-fir for repetitive (three or more) members. No.1 or better shall be used for Southern pine.
b. Ratio of backspan to cantilever span shall be not less than 2:1.
c. Connections capable of resisting the indicated uplift force shall be provided at the backspan support.
d. Uplift force is for a backspan to cantilever span ratio of 2:1. Tabulated uplift values are permitted to be reduced by multiplying by a factor equal to 2 divided by the actual backspan ratio provided (2/backspan ratio).
e. A full-depth rim joist shall be provided at the unsupported end of the cantilever joists. Solid blocking shall be provided at the supported end. Where the cantilever length is 24 inches or less and the building is assigned to Seismic Design Category A, B or C, solid blocking at the support for the cantilever shall not be required.
f. Linear interpolation shall be permitted for ground snow loads other than shown.

INTERNATIONAL CODE COUNCIL®
Copyright © 2019 ICC & NYSDOS. ALL RIGHTS RESERVED. Accessed by Lauren Gualdino (lgualdino@briarcliffmanor.org), (-) Order Number #100880972 on May 08, 2020 07:05 AM (PDT) pursuant to License Agreement with ICC & NYSDOS. No further reproduction, no

100880972

feet (1219 mm), the trimmer joists and the header joist shall be doubled and of sufficient cross section to support the floor joists framing into the header.

R502.11 Wood trusses.

R502.11.1 Design. Wood trusses shall be designed in accordance with *approved* engineering practice. The design and manufacture of metal-plate-connected wood trusses shall comply with ANSI/TPI 1. The truss design drawings shall be prepared by a registered professional where required by the statutes of the *jurisdiction* in which the project is to be constructed in accordance with Section R106.1.

R502.11.2 Bracing. Trusses shall be braced to prevent rotation and provide lateral stability in accordance with the requirements specified in the *construction documents* for the building and on the individual truss design drawings. In the absence of specific bracing requirements, trusses shall be braced in accordance with accepted industry practices, such as, the SBCA *Building Component Safety Information (BCSI) Guide to Good Practice for Handling, Installing & Bracing of Metal Plate Connected Wood Trusses*.

R502.11.3 Alterations to trusses. Truss members and components shall not be cut, notched, spliced or otherwise altered in any way without the approval of a registered *design professional*. *Alterations* resulting in the addition of load that exceeds the design load for the truss, shall not be permitted without verification that the truss is capable of supporting the additional loading.

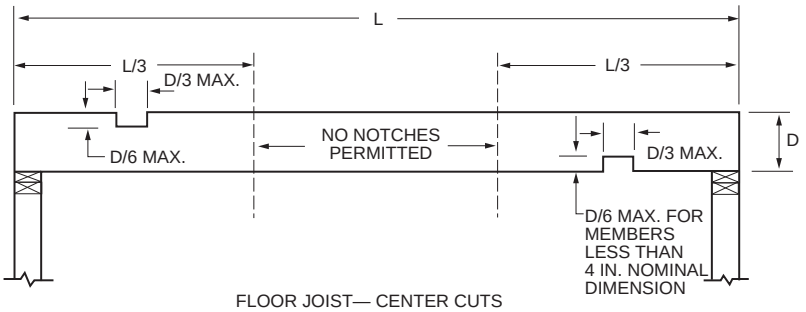

FLOOR JOIST— CENTER CUTS

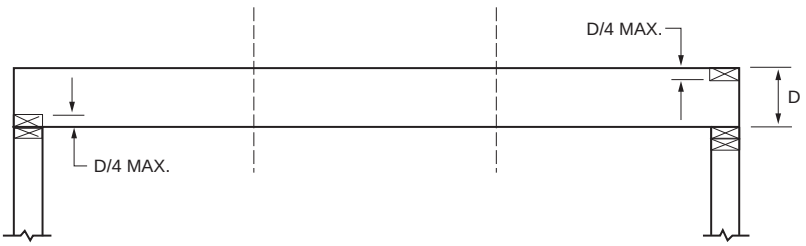

FLOOR JOIST— END CUTS

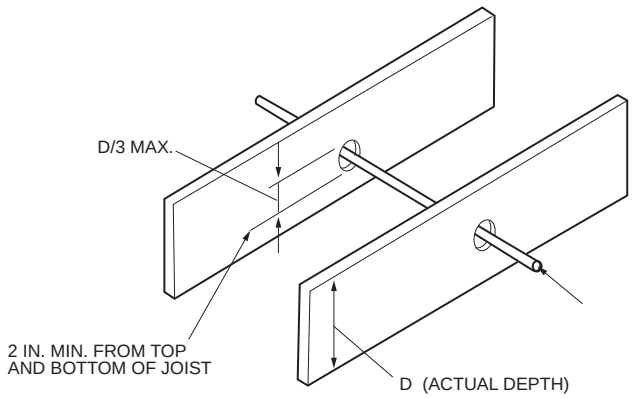

For SI: 1 inch = 25.4 mm.

FIGURE R502.8
CUTTING, NOTCHING AND DRILLING

INTERNATIONAL CODE COUNCIL®
Copyright © 2019 ICC & NYSDOS. ALL RIGHTS RESERVED. Accessed by Lauren Gualdino (lgualdino@briarcliffmanor.org), (-) Order Number #100880972 on May 08, 2020 07:05 AM (PDT) pursuant to License Agreement with ICC & NYSDOS. No further reproduction, no

100880972

R502.11.4 Truss design drawings. Truss design drawings, prepared in compliance with Section R502.11.1, shall be submitted to the *building official* and *approved* prior to installation. Truss design drawings shall be provided with the shipment of trusses delivered to the job site. Truss design drawings shall include, at a minimum, the information specified as follows:

1. Slope or depth, span and spacing.
2. Location of all joints.
3. Required bearing widths.
4. Design loads as applicable:
   - 4.1. Top chord live load.
   - 4.2. Top chord dead load.
   - 4.3. Bottom chord live load.
   - 4.4. Bottom chord dead load.
   - 4.5. Concentrated loads and their points of application.
   - 4.6. Controlling wind and earthquake loads.
5. Adjustments to lumber and joint connector design values for conditions of use.
6. Each reaction force and direction.
7. Joint connector type and description, such as size, thickness or gage, and the dimensioned location of each joint connector except where symmetrically located relative to the joint interface.
8. Lumber size, species and grade for each member.
9. Connection requirements for:
   - 9.1. Truss-to-girder-truss.
   - 9.2. Truss ply-to-ply.
   - 9.3. Field splices.
10. Calculated deflection ratio, maximum description for live and total load, or both.
11. Maximum axial compression forces in the truss members to enable the building designer to design the size, connections and anchorage of the permanent continuous lateral bracing. Forces shall be shown on the truss drawing or on supplemental documents.
12. Required permanent truss member bracing location.

R502.12 Draftstopping required. Draftstopping shall be provided in accordance with Section R302.12.

R502.13 Fireblocking required. Fireblocking shall be provided in accordance with Section R302.11.

SECTION R503
FLOOR SHEATHING

R503.1 Lumber sheathing. Maximum allowable spans for lumber used as floor sheathing shall conform to Tables R503.1, R503.2.1.1(1) and R503.2.1.1(2).

TABLE R503.1
MINIMUM THICKNESS OF LUMBER FLOOR SHEATHING

JOIST OR BEAM SPACING (inches)	MINIMUM NET THICKNESS	
	Perpendicular to joist	Diagonal to joist
24	$^{11}/_{16}$	$^{3}/_{4}$
16	$^{5}/_{8}$	$^{5}/_{8}$
48[a]	$1^{1}/_{2}$ T & G	N/A
54[b]		
60[c]		

For SI: 1 inch = 25.4 mm, 1 pound per square inch = 6.895 kPa.
N/A = Not Applicable.

a. For this support spacing, lumber sheathing shall have a minimum F_b of 675 and minimum E of 1,100,000 (see ANSI AWC NDS).
b. For this support spacing, lumber sheathing shall have a minimum F_b of 765 and minimum E of 1,400,000 (see ANSI AWC NDS).
c. For this support spacing, lumber sheathing shall have a minimum F_b of 855 and minimum E of 1,700,000 (see ANSI AWC NDS).

R503.1.1 End joints. End joints in lumber used as subflooring shall occur over supports unless end-matched lumber is used, in which case each piece shall bear on not less than two joists. Subflooring shall be permitted to be omitted where joist spacing does not exceed 16 inches (406 mm) and a 1-inch (25 mm) nominal tongue-and-groove wood strip flooring is applied perpendicular to the joists.

R503.2 Wood structural panel sheathing.

R503.2.1 Identification and grade. Wood structural panel sheathing used for structural purposes shall conform to CSA O325, CSA O437 DOC PS 1 or DOC PS 2. Panels shall be identified for grade, bond classification and Performance Category by a grade mark or certificate of inspection issued by an approved agency. The Performance Category value shall be used as the "nominal panel thickness" or "panel thickness" wherever referenced in this code.

R503.2.1.1 Subfloor and combined subfloor underlayment. Where used as subflooring or combination subfloor underlayment, wood structural panels shall be of one of the grades specified in Table R503.2.1.1(1). Where sanded plywood is used as combination subfloor underlayment, the grade, bond classification, and Performance Category shall be as specified in Table R503.2.1.1(2).

TABLE R503.2.1.1(2)
ALLOWABLE SPANS FOR SANDED PLYWOOD COMBINATION SUBFLOOR UNDERLAYMENT[a]

IDENTIFICATION	SPACING OF JOISTS (inches)		
	16	20	24
Species group[b]	—	—	—
1	$^{1}/_{2}$	$^{5}/_{8}$	$^{3}/_{4}$
2, 3	$^{5}/_{8}$	$^{3}/_{4}$	$^{7}/_{8}$
4	$^{3}/_{4}$	$^{7}/_{8}$	1

For SI: 1 inch = 25.4 mm, 1 pound per square foot = 0.0479 kPa.

a. Plywood continuous over two or more spans and face grain perpendicular to supports. Unsupported edges shall be tongue-and-groove or blocked except where nominal $^{1}/_{4}$-inch-thick wood panel-type underlayment, fiber-cement underlayment or $^{3}/_{4}$-inch wood finish floor is used. Fiber-cement underlayment shall comply with ASTM C1288 or ISO 8336 Category C. Allowable uniform live load at maximum span based on deflection of $^{1}/_{360}$ of span is 100 psf.
b. Applicable to all grades of sanded exterior-type plywood.

INTERNATIONAL CODE COUNCIL®
Copyright © 2019 ICC & NYSDOS. ALL RIGHTS RESERVED. Accessed by Lauren Gualdino (lgualdino@briarcliffmanor.org), (-) Order Number #100880972 on May 08, 2020 07:05 AM (PDT) pursuant to License Agreement with ICC & NYSDOS. No further reproduction, no

100880972

TABLE R503.2.1.1(1)
ALLOWABLE SPANS AND LOADS FOR WOOD STRUCTURAL PANELS FOR ROOF AND SUBFLOOR SHEATHING AND COMBINATION SUBFLOOR UNDERLAYMENT[a, b, c]

SPAN RATING	MINIMUM NOMINAL PANEL THICKNESS (inch)	ALLOWABLE LIVE LOAD (psf)[h, l]		MAXIMUM SPAN (inches)		LOAD (pounds per square foot, at maximum span)		MAXIMUM SPAN (inches)
		SPAN @ 16″ o.c.	SPAN @ 24″ o.c.	With edge support[d]	Without edge support	Total load	Live load	
Sheathing[e]				Roof[f]				Subfloor[j]
16/0	3/8	30	—	16	16	40	30	0
20/0	3/8	50	—	20	20	40	30	0
24/0	3/8	100	30	24	20[g]	40	30	0
24/16	7/16	100	40	24	24	50	40	16
32/16	15/32, 1/2	180	70	32	28	40	30	16[h]
40/20	19/32, 5/8	305	130	40	32	40	30	20[h, i]
48/24	23/32, 3/4	—	175	48	36	45	35	24
60/32	7/8	—	305	60	48	45	35	32
Underlayment, C-C plugged, single floor[e]				Roof[f]				Combination subfloor underlayment[k]
16 o.c.	19/32, 5/8	100	40	24	24	50	40	16[i]
20 o.c.	19/32, 5/8	150	60	32	32	40	30	20[i, j]
24 o.c.	23/32, 3/4	240	100	48	36	35	25	24
32 o.c.	7/8	—	185	48	40	50	40	32
48 o.c.	1 3/32, 1 1/8	—	290	60	48	50	40	48

For SI: 1 inch = 25.4 mm, 1 pound per square foot = 0.0479 kPa.

a. The allowable total loads were determined using a dead load of 10 psf. If the dead load exceeds 10 psf, then the live load shall be reduced accordingly.

b. Panels continuous over two or more spans with long dimension (strength axis) perpendicular to supports. Spans shall be limited to values shown because of possible effect of concentrated loads.

c. Applies to panels 24 inches or wider.

d. Lumber blocking, panel edge clips (one midway between each support, except two equally spaced between supports where span is 48 inches), tongue-and-groove panel edges, or other approved type of edge support.

e. Includes Structural I panels in these grades.

f. Uniform load deflection limitation: 1/180 of span under live load plus dead load, 1/240 of span under live load only.

g. Maximum span 24 inches for 15/32- and 1/2-inch panels.

h. Maximum span 24 inches where 3/4-inch wood finish flooring is installed at right angles to joists.

i. Maximum span 24 inches where 1.5 inches of lightweight concrete or approved cellular concrete is placed over the subfloor.

j. Unsupported edges shall have tongue-and-groove joints or shall be supported with blocking unless minimum nominal 1/4-inch-thick wood panel-type underlayment, fiber-cement underlayment with end and edge joints offset not less than 2 inches or 1 1/2 inches of lightweight concrete or approved cellular concrete is placed over the subfloor, or 3/4-inch wood finish flooring is installed at right angles to the supports. Fiber-cement underlayment shall comply with ASTM C1288 or ISO 8336 Category C. Allowable uniform live load at maximum span, based on deflection of 1/360 of span, is 100 psf.

k. Unsupported edges shall have tongue-and-groove joints or shall be supported by blocking unless nominal 1/4-inch-thick wood panel-type underlayment, fiber-cement underlayment with end and edge joints offset not less than 2 inches or 3/4-inch wood finish flooring is installed at right angles to the supports. Fiber-cement underlayment shall comply with ASTM C1288 or ISO 8336 Category C. Allowable uniform live load at maximum span, based on deflection of 1/360 of span, is 100 psf, except panels with a span rating of 48 on center are limited to 65 psf total uniform load at maximum span.

l. Allowable live load values at spans of 16 inches on center and 24 inches on center taken from reference standard APA E30, APA Engineered Wood Construction Guide. Refer to reference standard for allowable spans not listed in the table.

R503.2.2 Allowable spans. The maximum allowable span for wood structural panels used as subfloor or combination subfloor underlayment shall be as set forth in Table R503.2.1.1(1), or APA E30. The maximum span for sanded plywood combination subfloor underlayment shall be as set forth in Table R503.2.1.1(2).

R503.2.3 Installation. Wood structural panels used as subfloor or combination subfloor underlayment shall be attached to wood framing in accordance with Table R602.3(1) and shall be attached to cold-formed steel framing in accordance with Table R505.3.1(2).

R503.3 Particleboard.

R503.3.1 Identification and grade. Particleboard shall conform to ANSI A208.1 and shall be so identified by a grade *mark* or certificate of inspection issued by an *approved agency*.

R503.3.2 Floor underlayment. Particleboard floor underlayment shall conform to Type PBU and shall be not less than 1/4 inch (6.4 mm) in thickness.

R503.3.3 Installation. Particleboard underlayment shall be installed in accordance with the recommendations of the manufacturer and attached to framing in accordance with Table R602.3(1).

INTERNATIONAL CODE COUNCIL®
Copyright © 2019 ICC & NYSDOS. ALL RIGHTS RESERVED. Accessed by Lauren Gualdino (lgualdino@briarcliffmanor.org), (-) Order Number #100880972 on May 08, 2020 07:05 AM (PDT) pursuant to License Agreement with ICC & NYSDOS. No further reproduction, no

100880972

SECTION R504
PRESSURE PRESERVATIVE-TREATED WOOD FLOORS (ON GROUND)

R504.1 General. Pressure preservative-treated wood *basement* floors and floors on ground shall be designed to withstand axial forces and bending moments resulting from lateral soil pressures at the base of the exterior walls and floor live and dead loads. Floor framing shall be designed to meet joist deflection requirements in accordance with Section R301.

R504.1.1 Unbalanced soil loads. Unless special provision is made to resist sliding caused by unbalanced lateral soil loads, wood *basement* floors shall be limited to applications where the differential depth of fill on opposite exterior foundation walls is 2 feet (610 mm) or less.

R504.1.2 Construction. Joists in wood *basement* floors shall bear tightly against the narrow face of studs in the foundation wall or directly against a band joist that bears on the studs. Plywood subfloor shall be continuous over lapped joists or over butt joints between in-line joists. Sufficient blocking shall be provided between joists to transfer lateral forces at the base of the end walls into the floor system.

R504.1.3 Uplift and buckling. Where required, resistance to uplift or restraint against buckling shall be provided by interior bearing walls or properly designed stub walls anchored in the supporting soil below.

R504.2 Site preparation. The area within the foundation walls shall have all vegetation, topsoil and foreign material removed, and any fill material that is added shall be free of vegetation and foreign material. The fill shall be compacted to ensure uniform support of the pressure preservative-treated wood floor sleepers.

R504.2.1 Base. A minimum 4-inch-thick (102 mm) granular base of gravel having a maximum size of $^3/_4$ inch (19.1 mm) or crushed stone having a maximum size of $^1/_2$ inch (12.7 mm) shall be placed over the compacted earth.

R504.2.2 Moisture barrier. Polyethylene sheeting of minimum 6-mil (0.15 mm) thickness shall be placed over the granular base. Joints shall be lapped 6 inches (152 mm) and left unsealed. The polyethylene membrane shall be placed over the pressure preservative-treated wood sleepers and shall not extend beneath the footing plates of the exterior walls.

R504.3 Materials. Framing materials, including sleepers, joists, blocking and plywood subflooring, shall be pressure-preservative treated and dried after treatment in accordance with AWPA U1 (Commodity Specification A, Special Requirement 4.2), and shall bear the *label* of an accredited agency.

SECTION R505
COLD-FORMED STEEL FLOOR FRAMING

R505.1 Cold-formed steel floor framing. Elements shall be straight and free of any defects that would significantly affect structural performance. Cold-formed steel floor framing members shall be in accordance with the requirements of this section.

R505.1.1 Applicability limits. The provisions of this section shall control the construction of cold-formed steel floor framing for buildings not greater than 60 feet (18 288 mm) in length perpendicular to the joist span, not greater than 40 feet (12 192 mm) in width parallel to the joist span and less than or equal to three stories above grade plane. Cold-formed steel floor framing constructed in accordance with the provisions of this section shall be limited to sites where the ultimate design wind speed is less than 140 miles per hour (63 m/s), Exposure Category B or C, and the ground snow load is less than or equal to 70 pounds per square foot (3.35 kPa).

R505.1.2 In-line framing. Where supported by cold-formed steel-framed walls in accordance with Section R603, cold-formed steel floor framing shall be constructed with floor joists located in-line with load-bearing studs located below the joists in accordance with Figure R505.1.2 and the tolerances specified as follows:

1. The maximum tolerance shall be $^3/_4$ inch (19.1 mm) between the centerline of the horizontal framing member and the centerline of the vertical framing member.
2. Where the centerline of the horizontal framing member and bearing stiffener are located to one side of the centerline of the vertical framing member, the maximum tolerance shall be $^1/_8$ inch (3 mm) between the web of the horizontal framing member and the edge of the vertical framing member.

R505.1.3 Floor trusses. Cold-formed steel trusses shall be designed, braced and installed in accordance with AISI S240. In the absence of specific bracing requirements, trusses shall be braced in accordance with accepted industry practices, such as the SBCA *Cold-Formed Steel Building Component Safety Information (CFSBCSI), Guide to Good Practice for Handling, Installing & Bracing of Cold-Formed Steel Trusses*. Truss members shall not be notched, cut or altered in any manner without an *approved* design.

R505.2 Structural framing. Load-bearing cold-formed steel floor framing members shall be in accordance with this section.

R505.2.1 Material. Load-bearing cold-formed steel framing members shall be cold formed to shape from structural quality sheet steel complying with the requirements of ASTM A1003: Structural Grades 33 Type H and 50 Type H.

R505.2.2 Corrosion protection. Load-bearing cold-formed steel framing shall have a metallic coating complying with ASTM A1003 and one of the following:

1. Not less than G 60 in accordance with ASTM A653.
2. Not less than AZ 50 in accordance with ASTM A792.

R505.2.3 Dimension, thickness and material grade. Load-bearing cold-formed steel floor framing members shall comply with Figure R505.2.3(1) and with the dimensional and thickness requirements specified in Table R505.2.3. Additionally, all C-shaped sections shall have a

INTERNATIONAL CODE COUNCIL®
Copyright © 2019 ICC & NYSDOS. ALL RIGHTS RESERVED. Accessed by Lauren Gualdino (lgualdino@briarcliffmanor.org), (-) Order Number #100880972 on May 08, 2020 07:05 AM (PDT) pursuant to License Agreement with ICC & NYSDOS. No further reproduction, no

100880972

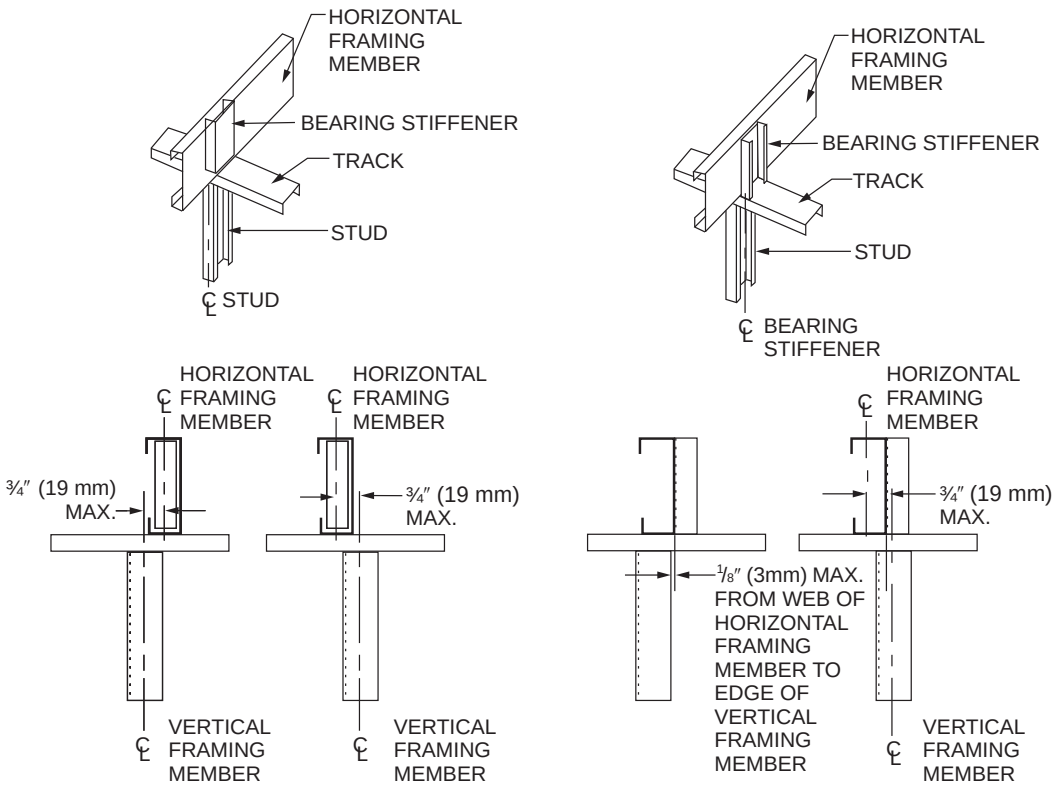

For SI: 1 inch = 25.4 mm.

FIGURE R505.1.2
IN-LINE FRAMING

minimum flange width of 1.625 inches (41 mm) and a maximum flange width of 2 inches (51 mm). The minimum lip size for C-shaped sections shall be $^1/_2$ inch (12.7 mm). Track sections shall comply with Figure R505.2.3(2) and shall have a minimum flange width of $1^1/_4$ inch (32 mm). Minimum Grade 33 ksi steel shall be used wherever 33 mil and 43 mil thicknesses are specified. Minimum Grade 50 ksi steel shall be used wherever 54 and 68 mil thicknesses are specified.

R505.2.4 Identification. Load-bearing cold-formed steel framing members shall have a legible *label*, stencil, stamp or embossment with the following information as a minimum:

1. Manufacturer's identification.
2. Minimum base steel thickness in inches (mm).
3. Minimum coating designation.
4. Minimum yield strength, in kips per square inch (ksi) (MPa).

R505.2.5 Fastening. Screws for steel-to-steel connections shall be installed with a minimum edge distance and center-to-center spacing of $^1/_2$ inch (12.7 mm), shall be self-drilling tapping, and shall conform to ASTM C1513. Floor sheathing shall be attached to cold-formed steel joists with minimum No. 8 self-drilling tapping screws that conform to ASTM C1513. Screws attaching floor sheathing to cold-formed steel joists shall have a minimum head diameter of 0.292 inch (7.4 mm) with countersunk heads and shall be installed with a minimum edge distance of $^3/_8$ inch (9.5 mm). Gypsum board ceilings shall be attached to cold-formed steel joists with minimum No. 6 screws conforming to ASTM C954 or ASTM C1513 with a bugle-head style and shall be installed in accordance with Section R702. For all connections, screws shall extend through the steel not fewer than three exposed threads. Fasteners shall have a rust-inhibitive coating suitable for the installation in which they are being used, or be manufactured from material not susceptible to corrosion.

R505.2.6 Web holes, web hole reinforcing and web hole patching. Web holes, web hole reinforcing, and web hole patching shall be in accordance with this section.

R505.2.6.1 Web holes. Web holes in floor joists shall comply with all of the following conditions:

1. Holes shall conform to Figure R505.2.6.1.
2. Holes shall be permitted only along the centerline of the web of the framing member.

INTERNATIONAL CODE COUNCIL®
Copyright © 2019 ICC & NYSDOS. ALL RIGHTS RESERVED. Accessed by Lauren Gualdino (lgualdino@briarcliffmanor.org), (-) Order Number #100880972 on May 08, 2020 07:05 AM (PDT) pursuant to License Agreement with ICC & NYSDOS. No further reproduction, no

100880972

TABLE R505.2.3
COLD-FORMED STEEL JOIST SIZES AND THICKNESS

MEMBER DESIGNATION[a]	WEB DEPTH (inches)	MINIMUM BASE STEEL THICKNESS mil (inches)
550S162-t	5.5	33 (0.0329), 43 (0.0428), 54 (0.0538), 68 (0.0677)
800S162-t	8	33 (0.0329), 43 (0.0428), 54 (0.0538), 68 (0.0677)
1000S162-t	10	43 (0.0428), 54 (0.0538), 68 (0.0677)
1200S162-t	12	43 (0.0428), 54 (0.0538), 68 (0.0677)

For SI: 1 inch = 25.4 mm, 1 mil = 0.0254 mm.

a. The member designation is defined by the first number representing the member depth in 0.01 inch, the letter "S" representing a stud or joist member, the second number representing the flange width in 0.01 inch, and the letter "t" shall be a number representing the minimum base metal thickness in mils.

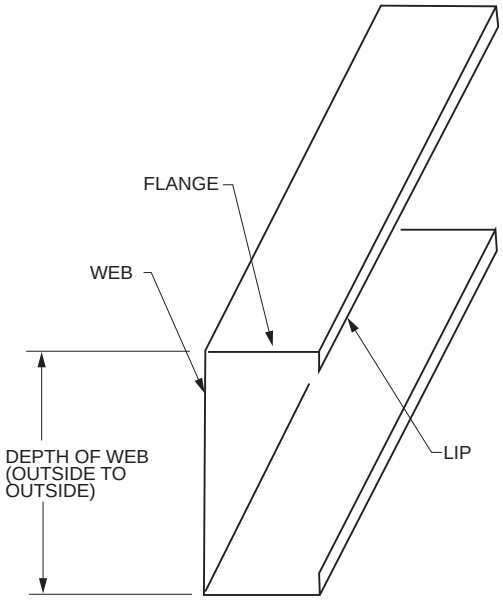

FIGURE R505.2.3(1)
C-SHAPED SECTION

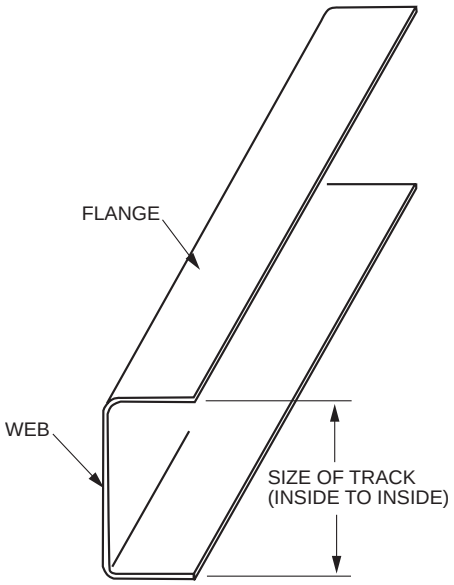

FIGURE R505.2.3(2)
TRACK SECTION

3. Holes shall have a center-to-center spacing of not less than 24 inches (610 mm).
4. Holes shall have a web hole width not greater than 0.5 times the member depth, or $2^1/_2$ inches (64.5 mm).
5. Holes shall have a web hole length not exceeding $4^1/_2$ inches (114 mm).
6. Holes shall have a minimum distance between the edge of the bearing surface and the edge of the web hole of not less than 10 inches (254 mm).

Framing members with web holes not conforming to these requirements shall be reinforced in accordance with Section R505.2.6.2, patched in accordance with Section R505.2.6.3 or designed in accordance with accepted engineering practices.

R505.2.6.2 Web hole reinforcing. Reinforcement of web holes in floor joists not conforming to the requirements of Section R505.2.6.1 shall be permitted if the hole is located fully within the center 40 percent of the span and the depth and length of the hole does not exceed 65 percent of the flat width of the web. The reinforcing shall be a steel plate or C-shaped section with a hole that does not exceed the web hole size limitations of Section R505.2.6.1 for the member being reinforced. The steel reinforcing shall be not thinner than the thickness of the receiving member and shall extend not less than 1 inch (25 mm) beyond all edges of the hole. The steel reinforcing shall be fastened to the web of the receiving member with No. 8 screws spaced not more than 1 inch (25 mm) center-to-center along the edges of the patch with minimum edge distance of $^1/_2$ inch (12.7 mm).

INTERNATIONAL CODE COUNCIL®
Copyright © 2019 ICC & NYSDOS. ALL RIGHTS RESERVED. Accessed by Lauren Gualdino (lgualdino@briarcliffmanor.org), (-) Order Number #100880972 on May 08, 2020 07:05 AM (PDT) pursuant to License Agreement with ICC & NYSDOS. No further reproduction, no

100880972

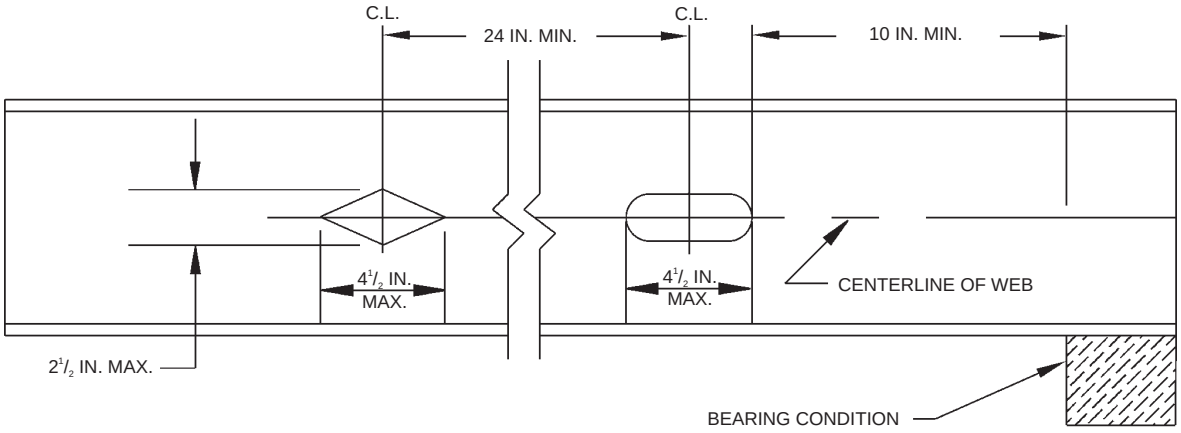

For SI: 1 inch = 25.4 mm.

FIGURE R505.2.6.1
FLOOR JOIST WEB HOLES

R505.2.6.3 Hole patching. Patching of web holes in floor joists not conforming to the requirements in Section R505.2.6.1 shall be permitted in accordance with either of the following methods:

1. Framing members shall be replaced or designed in accordance with accepted engineering practices where web holes exceed the following size limits:
   1.1. The depth of the hole, measured across the web, exceeds 70 percent of the flat width of the web.
   1.2. The length of the hole, measured along the web, exceeds 10 inches (254 mm) or the depth of the web, whichever is greater.
2. Web holes not exceeding the dimensional requirements in Section R505.2.6.3, Item 1, shall be patched with a solid steel plate, stud section or track section in accordance with Figure R505.2.6.3. The steel patch shall, as a minimum, be of the same thickness as the receiving member and shall extend not less than 1 inch (25 mm) beyond all edges of the hole. The steel patch shall be fastened to the web of the receiving member with No. 8 screws spaced not more than 1 inch (25 mm) center-to-center along the edges of the patch with minimum edge distance of $^1/_2$ inch (12.7 mm).

R505.3 Floor construction. Cold-formed steel floors shall be constructed in accordance with this section.

R505.3.1 Floor-to-foundation or load-bearing wall connections. Cold-formed steel-framed floors shall be anchored to foundations, wood sills or load-bearing walls in accordance with Table R505.3.1(1) and Figure R505.3.1(1), R505.3.1(2), R505.3.1(3), R505.3.1(4), R505.3.1(5) or R505.3.1(6). Anchor bolts shall be located not more than 12 inches (305 mm) from corners or the termination of bottom tracks. Continuous cold-formed steel joists supported by interior load-bearing walls shall be constructed in accordance with Figure R505.3.1(7). Lapped cold-formed steel joists shall be constructed in accordance with Figure R505.3.1(8). End floor joists constructed on foundation walls parallel to the joist span shall be doubled unless a C-shaped bearing stiffener, sized in accordance with Section R505.3.4, is installed web-to-web with the floor joist beneath each supported wall stud, as shown in Figure R505.3.1(9). Fastening of cold-formed steel joists to other framing members shall be in accordance with Section R505.2.5 and Table R505.3.1(2).

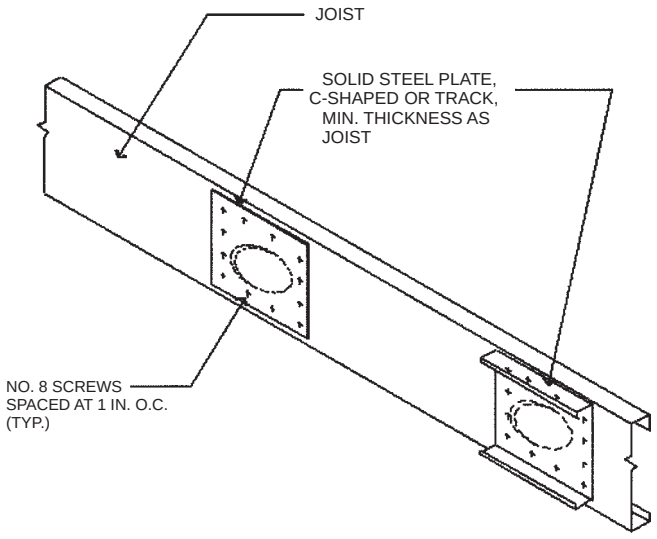

For SI: 1 inch = 25.4 mm.

FIGURE R505.2.6.3
FLOOR JOIST WEB HOLE PATCH

INTERNATIONAL CODE COUNCIL®
Copyright © 2019 ICC & NYSDOS. ALL RIGHTS RESERVED. Accessed by Lauren Gualdino (lgualdino@briarcliffmanor.org), (-) Order Number #100880972 on May 08, 2020 07:05 AM (PDT) pursuant to License Agreement with ICC & NYSDOS. No further reproduction, no

100880972

R505.3.2 Minimum floor joist sizes. Floor joist size and thickness shall be determined in accordance with the limits set forth in Table R505.3.2 for single or continuous spans. Where continuous joist members are used, the interior bearing supports shall be located within 2 feet (610 mm) of midspan of the cold-formed steel joists, and the individual spans shall not exceed the spans in Table R505.3.2. Floor joists shall have a bearing support length of not less than $1^1/_2$ inches (38 mm) for exterior wall supports and $3^1/_2$ inches (89 mm) for interior wall supports. Tracks shall be not less than 33 mils (0.84 mm) thick except where used as part of a floor header or trimmer in accordance with Section R505.3.8. Bearing stiffeners shall be installed in accordance with Section R505.3.4.

R505.3.3 Joist bracing and blocking. Joist bracing and blocking shall be in accordance with this section.

R505.3.3.1 Joist top flange bracing. The top flanges of cold-formed steel joists shall be laterally braced by the application of floor sheathing fastened to the joists in accordance with Section R505.2.5 and Table R505.3.1(2).

R505.3.3.2 Joist bottom flange bracing/blocking. Floor joists with spans that exceed 12 feet (3658 mm) shall have the bottom flanges laterally braced in accordance with one of the following:

1. Gypsum board installed with minimum No. 6 screws in accordance with Section R702.
2. Continuous steel straps installed in accordance with Figure R505.3.3.2(1). Steel straps shall be spaced at not greater than 12 feet (3658 mm) on center and shall be not less than $1^1/_2$ inches (38 mm) in width and 33 mils (0.84 mm) in thickness. Straps shall be fastened to the bottom flange of each joist with one No. 8 screw, fastened to blocking with two No. 8 screws, and fastened at each end (of strap) with two No. 8 screws. Blocking in accordance with Figure R505.3.3.2(1) or R505.3.3.2(2) shall be installed between joists at each end of the continuous strapping and at a maximum spacing of 12 feet (3658 mm) measured along the continuous strapping (perpendicular to the joist run). Blocking shall also be located at the termination of all straps. As an alternative to blocking at the ends, anchoring the strap to a stable building component with two No. 8 screws shall be permitted.

R505.3.3.3 Blocking at interior bearing supports. Blocking is not required for continuous back-to-back floor joists at bearing supports. Blocking shall be installed between every other joist for single continuous floor joists across bearing supports in accordance with Figure R505.3.1(7). Blocking shall consist of C-shaped or track section with a minimum thickness of 33 mils (0.84 mm). Blocking shall be fastened to each adjacent joist through a 33-mil (0.84 mm) clip angle, bent web of blocking or flanges of web stiffeners with two No. 8 screws on each side. The minimum depth of the blocking shall be equal to the depth of the joist minus 2 inches (51 mm). The minimum length of the angle shall be equal to the depth of the joist minus 2 inches (51 mm).

R505.3.3.4 Blocking at cantilevers. Blocking shall be installed between every other joist over cantilever bearing supports in accordance with Figure R505.3.1(4), R505.3.1(5) or R505.3.1(6). Blocking shall consist of C-shaped or track section with minimum thickness of 33 mils (0.84 mm). Blocking shall be fastened to each

TABLE R505.3.1(1)
FLOOR-TO-FOUNDATION OR BEARING WALL CONNECTION REQUIREMENTS[a, b]

FRAMING CONDITION	BASIC ULTIMATE WIND SPEED (mph) AND EXPOSURE	
	110 mph Exposure Category C or less than 139 mph Exposure Category B	Less than 139 mph Exposure Category C
Floor joist to wall track of exterior wall in accordance with Figure R505.3.1(1)	2-No. 8 screws	3-No. 8 screws
Rim track or end joist to load-bearing wall top track in accordance with Figure R505.3.1(1)	1-No. 8 screw at 24 inches o.c.	1-No. 8 screw at 24 inches o.c.
Rim track or end joist to wood sill in accordance with Figure R505.3.1(2)	Steel plate spaced at 4 feet o.c. with 4-No. 8 screws and 4-10d or 6-8d common nails	Steel plate spaced at 2 feet o.c. with 4-No. 8 screws and 4-10d or 6-8d common nails
Rim track or end joist to foundation in accordance with Figure R505.3.1(3)	$^1/_2$-inch minimum diameter anchor bolt and clip angle spaced at 6 feet o.c. with 8-No. 8 screws	$^1/_2$-inch minimum diameter anchor bolt and clip angle spaced at 4 feet o.c. with 8-No. 8 screws
Cantilevered joist to foundation in accordance with Figure R505.3.1(4)	$^1/_2$-inch minimum diameter anchor bolt and clip angle spaced at 6 feet o.c. with 8-No. 8 screws	$^1/_2$-inch minimum diameter anchor bolt and clip angle spaced at 4 feet o.c. with 8-No. 8 screws
Cantilevered joist to wood sill in accordance with Figure R505.3.1(5)	Steel plate spaced at 4 feet o.c. with 4-No. 8 screws and 4-10d or 6-8d common nails	Steel plate spaced at 2 feet o.c. with 4-No. 8 screws and 4-10d or 6-8d common nails
Cantilevered joist to exterior load-bearing wall track in accordance with Figure R505.3.1(6)	2-No. 8 screws	3-No. 8 screws

For SI: 1 inch = 25.4 mm, 1 pound per square foot = 0.0479 kPa, 1 mile per hour = 0.447 m/s, 1 foot = 304.8 mm.

a. Anchor bolts are to be located not more than 12 inches from corners or the termination of bottom tracks such as at door openings or corners. Bolts extend not less than 15 inches into masonry or 7 inches into concrete. Anchor bolts connecting cold-formed steel framing to the foundation structure are to be installed so that the distance from the center of the bolt hole to the edge of the connected member is not less than one and one-half bolt diameters.

b. All screw sizes shown are minimum.

INTERNATIONAL CODE COUNCIL®
Copyright © 2019 ICC & NYSDOS. ALL RIGHTS RESERVED. Accessed by Lauren Gualdino (lgualdino@briarcliffmanor.org), (-) Order Number #100880972 on May 08, 2020 07:05 AM (PDT) pursuant to License Agreement with ICC & NYSDOS. No further reproduction, no

100880972

TABLE R505.3.1(2)
FLOOR FASTENING SCHEDULE[a]

DESCRIPTION OF BUILDING ELEMENTS	NUMBER AND SIZE OF FASTENERS	SPACING OF FASTENERS
Floor joist to track of an interior load-bearing wall in accordance with Figures R505.3.1(7) and R505.3.1(8)	2 No. 8 screws	Each joist
Floor joist to track at end of joist	2 No. 8 screws	One per flange or two per bearing stiffener
Subfloor to floor joists	No. 8 screws	6 in. o.c. on edges and 12 in. o.c. at intermediate supports

For SI: 1 inch = 25.4 mm.
a. All screw sizes shown are minimum.

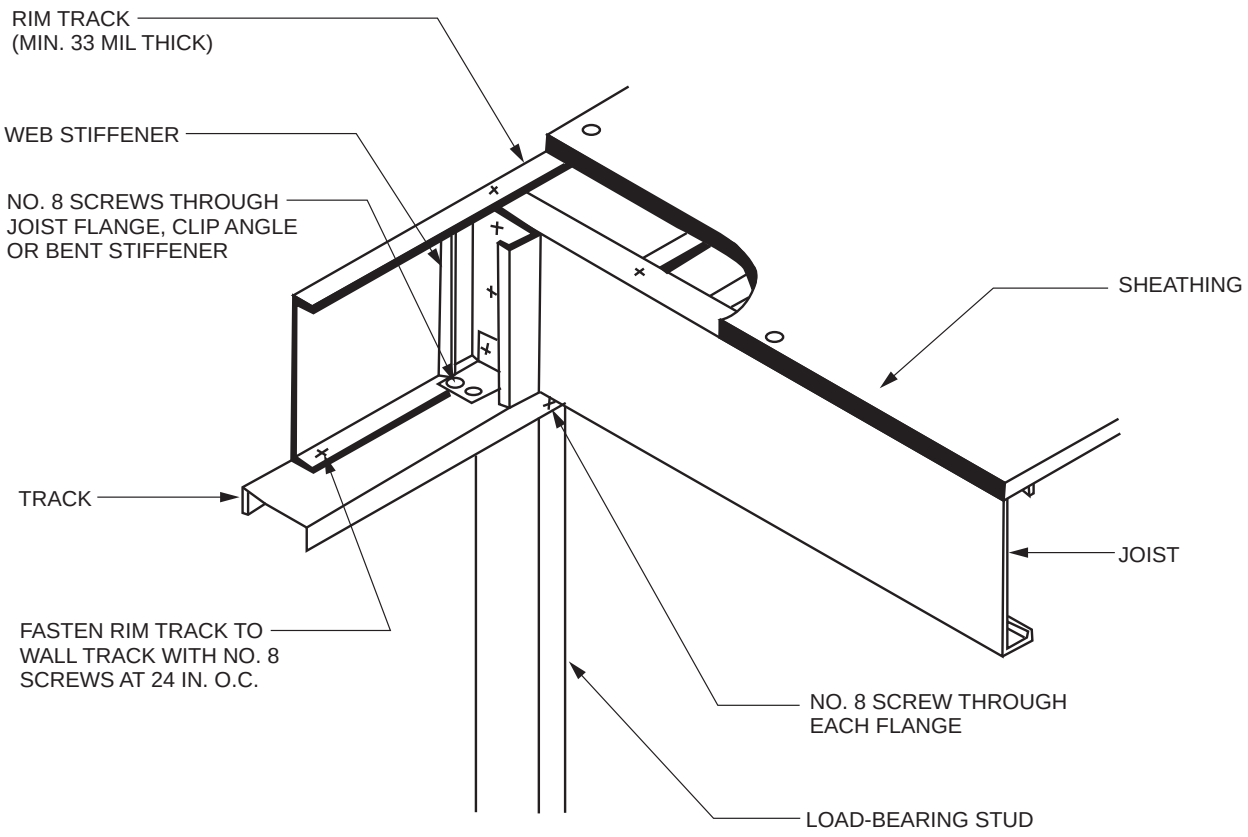

For SI: 1 mil = 0.0254 mm, 1 inch = 25.4 mm.

FIGURE R505.3.1(1)
FLOOR-TO-EXTERIOR LOAD-BEARING WALL STUD CONNECTION

INTERNATIONAL CODE COUNCIL®
Copyright © 2019 ICC & NYSDOS. ALL RIGHTS RESERVED. Accessed by Lauren Gualdino (lgualdino@briarcliffmanor.org), (-) Order Number #100880972 on May 08, 2020 07:05 AM (PDT) pursuant to License Agreement with ICC & NYSDOS. No further reproduction, no

100880972

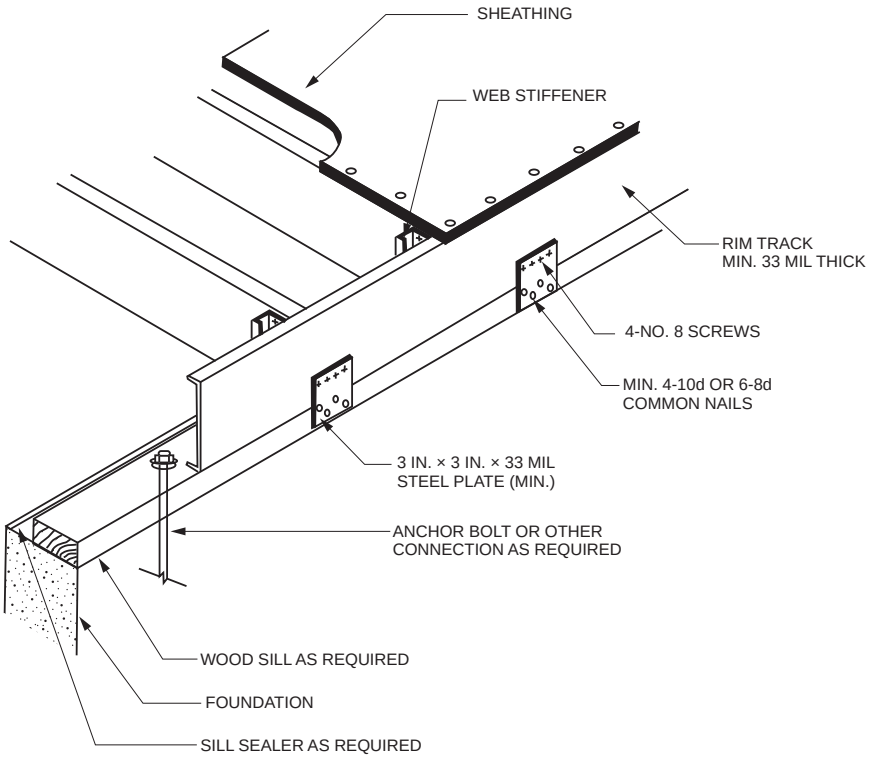

For SI: 1 mil = 0.0254 mm, 1 inch = 25.4 mm.

FIGURE R505.3.1(2)
FLOOR-TO-WOOD-SILL CONNECTION

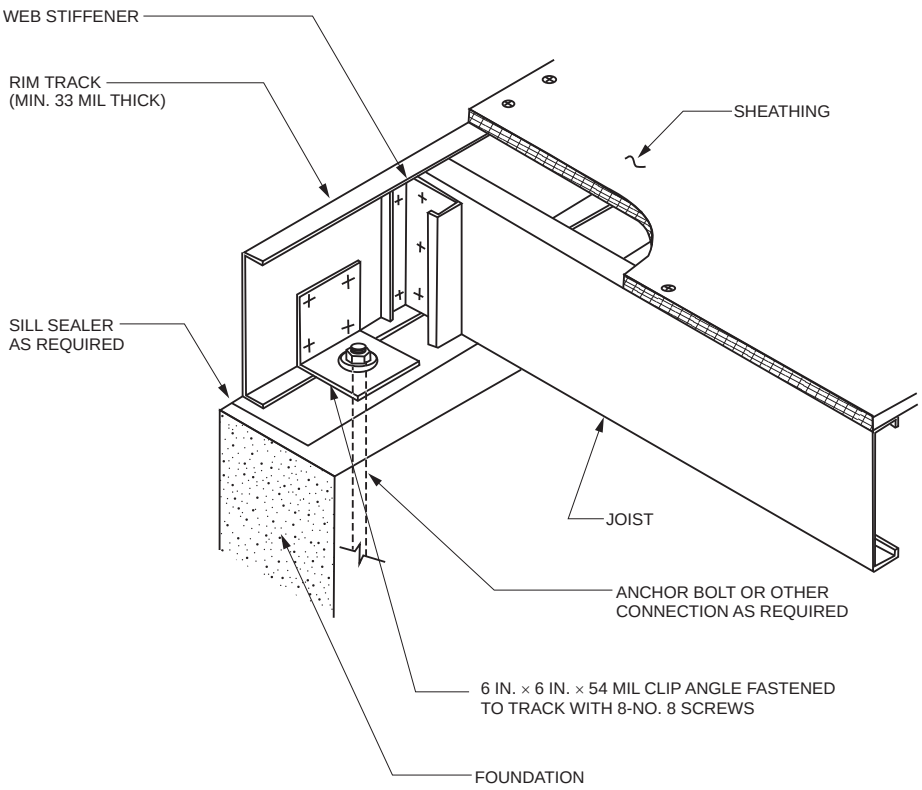

For SI: 1 mil = 0.0254 mm, 1 inch = 25.4 mm.

FIGURE R505.3.1(3)
FLOOR-TO-FOUNDATION CONNECTION

INTERNATIONAL CODE COUNCIL®
Copyright © 2019 ICC & NYSDOS. ALL RIGHTS RESERVED. Accessed by Lauren Gualdino (lgualdino@briarcliffmanor.org), (-) Order Number #100880972 on May 08, 2020 07:05 AM (PDT) pursuant to License Agreement with ICC & NYSDOS. No further reproduction, no

100880972

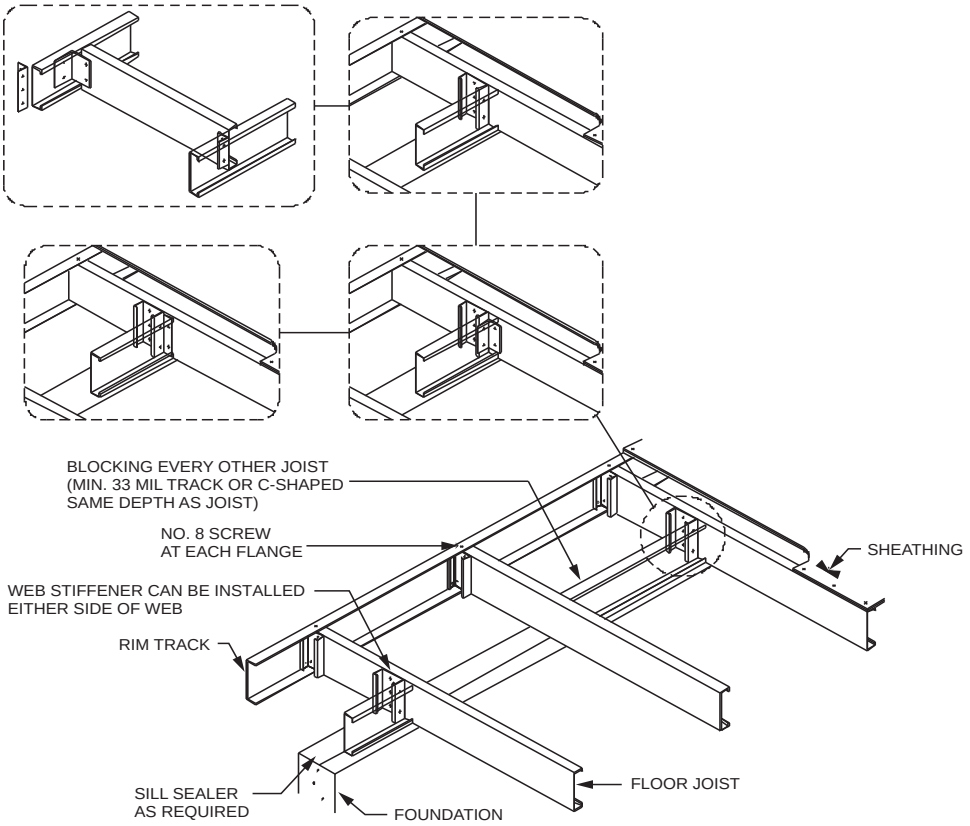

For SI: 1 mil = 0.0254 mm.

FIGURE R505.3.1(4)
CANTILEVERED FLOOR-TO-FOUNDATION CONNECTION

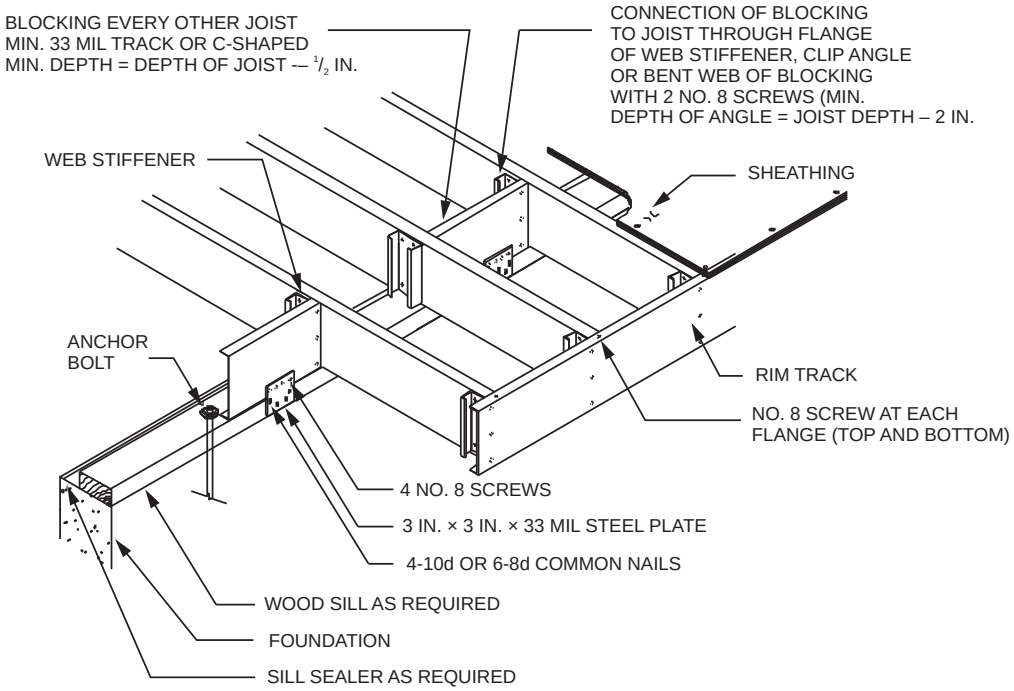

For SI: 1 mil = 0.0254 mm, 1 inch = 25.4 mm.

FIGURE R505.3.1(5)
CANTILEVERED FLOOR-TO-WOOD-SILL CONNECTION

INTERNATIONAL CODE COUNCIL®
Copyright © 2019 ICC & NYSDOS. ALL RIGHTS RESERVED. Accessed by Lauren Gualdino (lgualdino@briarcliffmanor.org), (-) Order Number #100880972 on May 08, 2020 07:05 AM (PDT) pursuant to License Agreement with ICC & NYSDOS. No further reproduction, no

100880972

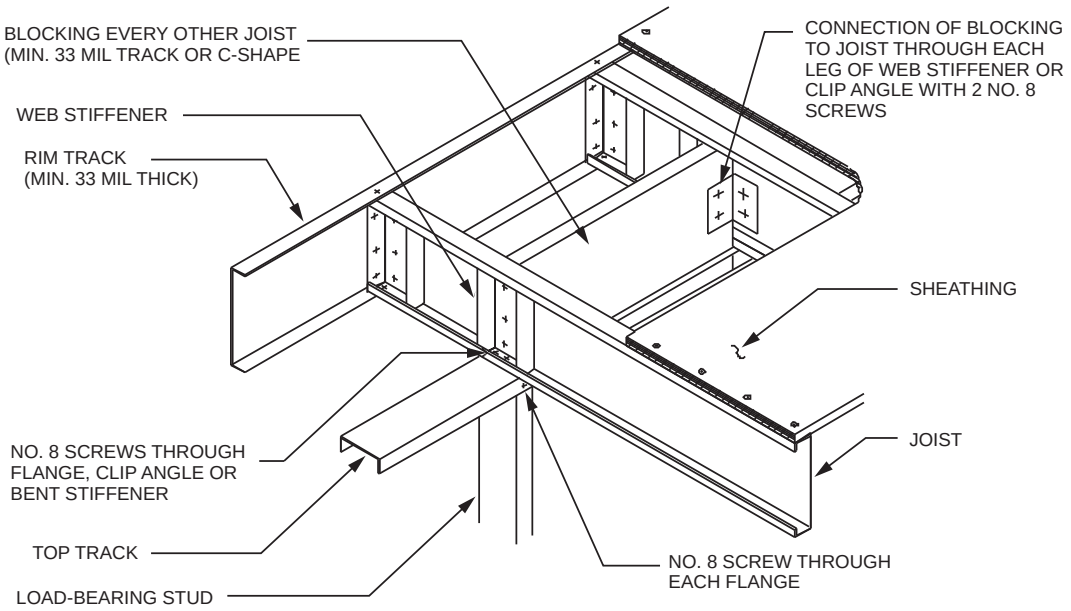

For SI: 1 mil = 0.0254 mm.

FIGURE R505.3.1(6)
CANTILEVERED FLOOR TO EXTERIOR LOAD-BEARING WALL CONNECTION

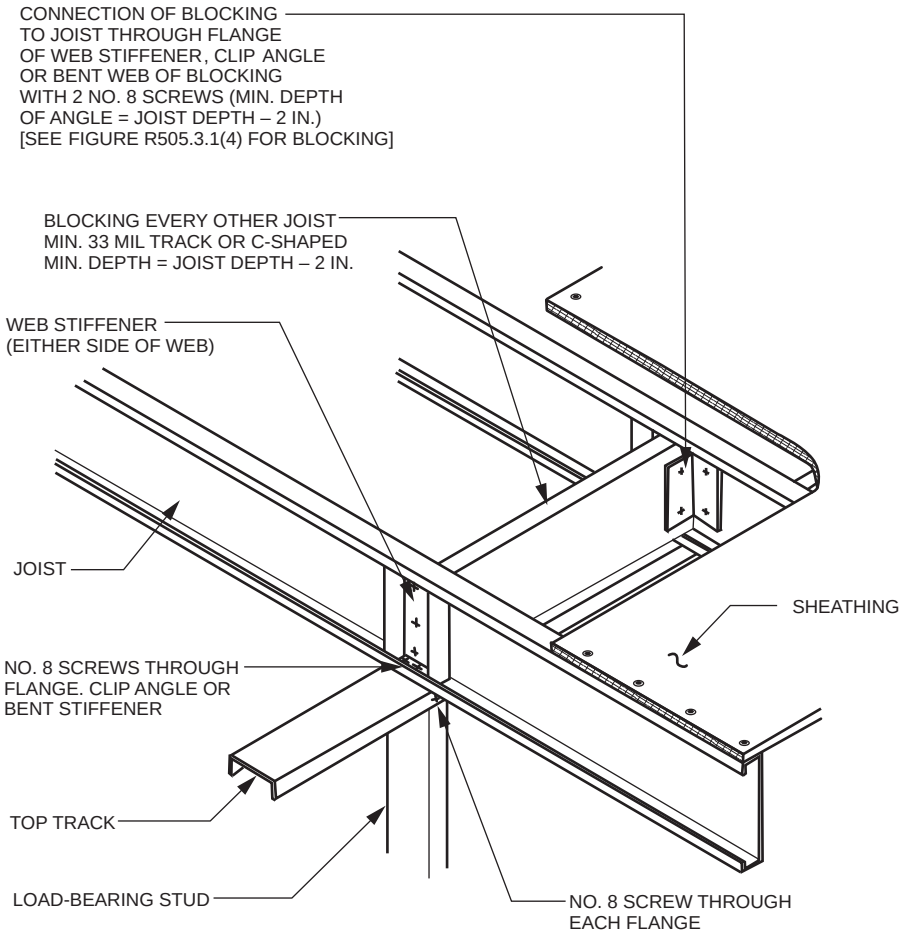

For SI: 1 mil = 0.0254 mm, 1 inch = 25.4 mm.

FIGURE R505.3.1(7)
CONTINUOUS SPAN JOIST SUPPORTED ON INTERIOR LOAD-BEARING WALL

INTERNATIONAL CODE COUNCIL®
Copyright © 2019 ICC & NYSDOS. ALL RIGHTS RESERVED. Accessed by Lauren Gualdino (lgualdino@briarcliffmanor.org), (-) Order Number #100880972 on May 08, 2020 07:05 AM (PDT) pursuant to License Agreement with ICC & NYSDOS. No further reproduction, no

100880972

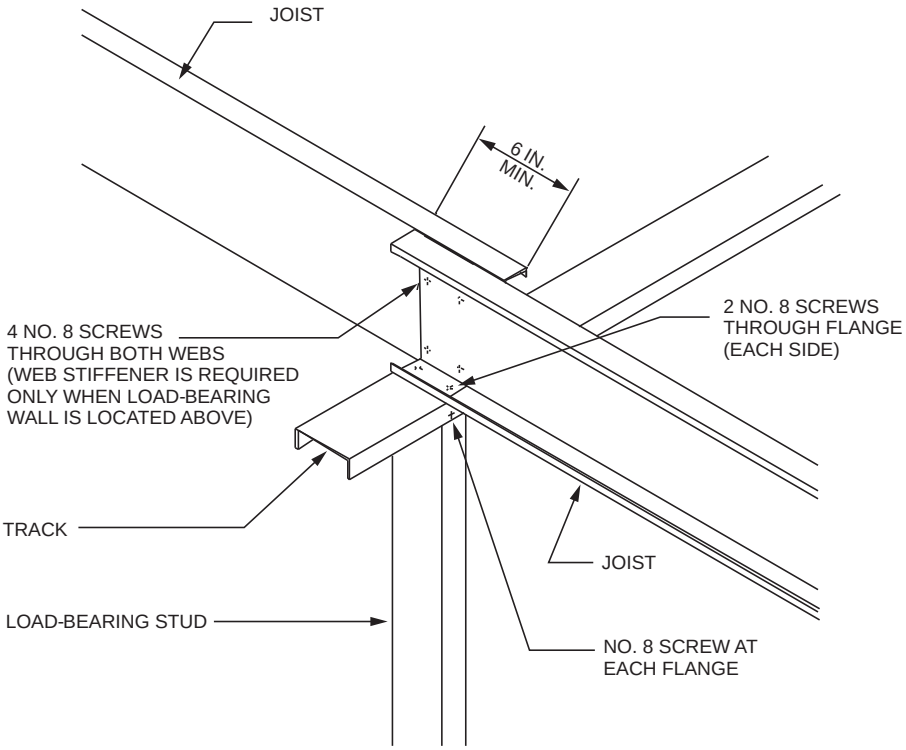

For SI: 1 inch = 25.4 mm.

FIGURE R505.3.1(8)
LAPPED JOISTS SUPPORTED ON INTERIOR LOAD-BEARING WALL

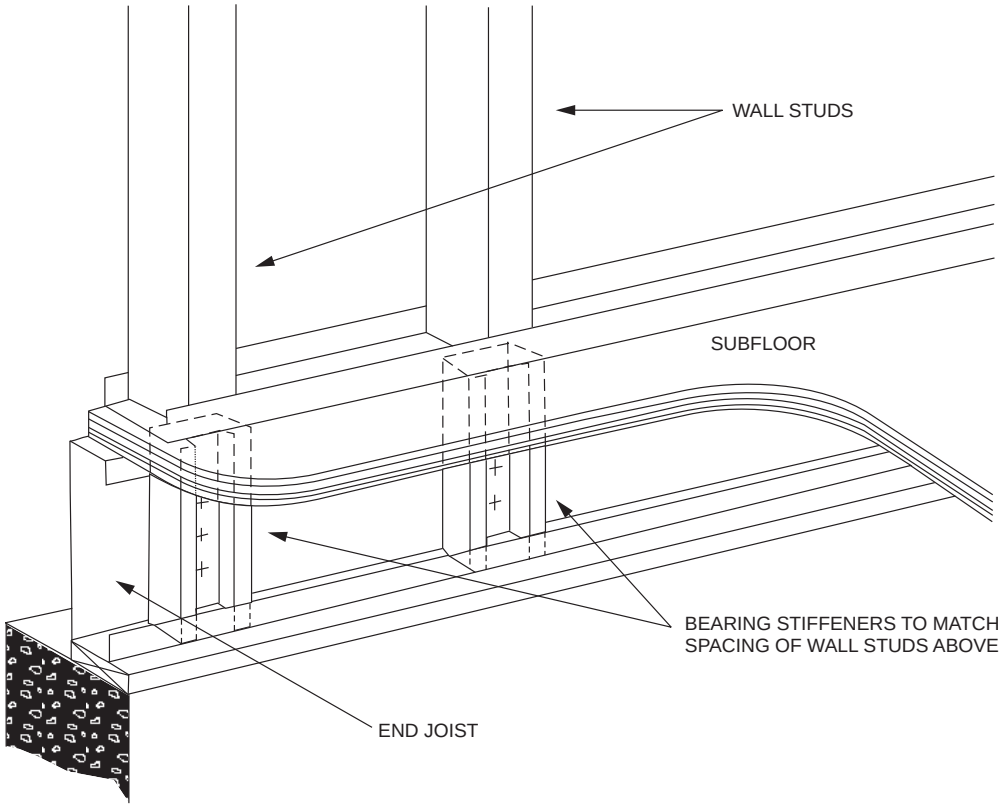

FIGURE R505.3.1(9)
BEARING STIFFENERS FOR END JOISTS

INTERNATIONAL CODE COUNCIL®
Copyright © 2019 ICC & NYSDOS. ALL RIGHTS RESERVED. Accessed by Lauren Gualdino (lgualdino@briarcliffmanor.org), (-) Order Number #100880972 on May 08, 2020 07:05 AM (PDT) pursuant to License Agreement with ICC & NYSDOS. No further reproduction, no

100880972

TABLE R505.3.2
ALLOWABLE SPANS FOR COLD-FORMED STEEL JOISTS—SINGLE OR CONTINUOUS SPANS[a, b, c, d, e, f]

JOIST DESIGNATION	30 PSF LIVE LOAD				40 PSF LIVE LOAD			
	Spacing (inches)				Spacing (inches)			
	12	16	19.2	24	12	16	19.2	24
550S162-33	11′-8″	10′-4″	9′-5″	8′-5″	10′-7″	9′-2″	8′-5″	7′-6″
550S162-43	12′-8″	11′-6″	10′-8″	10′-5″	11′-6″	10′-4″	9′-10″	9′-3″
550S162-54	13′-7″	12′-4″	11′-7″	10′-9″	12′-4″	11′-3″	10′-7″	9′-10″
550S162-68	14′-7″	13′-3″	12′-6″	11′-7″	13′-3″	12′-0″	11′-4″	10′-6″
800S162-33	14′-6″	12′-6″	11′-5″	10′-3″	12′-10″	11′-1″	10′-2″	9′-1″
800S162-43	17′-0″	15′-1″	13′-9″	12′-4″	15′-5″	13′-5″	12′-3″	10′-11″
800S162-54	18′-3″	16′-7″	15′-8″	14′-6″	16′-7″	15′-1″	14′-2″	13′-2″
800S162-68	19′-9″	17′-11″	16′-11″	15′-8″	17′-11″	16′-3″	15′-4″	14′-3″
1000S162-43	19′-4″	16′-9″	15′-3″	13′-8″	17′-2″	14′-10″	13′-7″	12′-2″
1000S162-54	21′-9″	19′-9″	18′-7″	17′-3″	19′-9″	18′-0″	16′-11″	15′-8″
1000S162-68	23′-7″	21′-5″	20′-2″	18′-9″	21′-5″	19′-6″	18′-4″	17′-0″
1200S162-54	25′-1″	22′-10″	21′-6″	19′-9″	22′-10″	20′-9″	19′-6″	17′-6″
1200S162-68	27′-3″	24′-9″	23′-4″	21′-8″	24′-9″	22′-6″	21′-2″	19′-8″

For SI: 1 inch = 25.4 mm, 1 foot = 304.8 mm, 1 pound per square foot = 0.0479 kPa, 1 mil = 0.0254 mm.

a. Deflection criteria: *L*/480 for live loads, *L*/240 for total loads.
b. Floor dead load = 10 psf.
c. Table provides the maximum clear span in feet and inches.
d. Bearing stiffeners are to be installed at all support points and concentrated loads.
e. Minimum Grade 33 ksi steel shall be used for 33 mil and 43 mil thickness. Minimum Grade 50 ksi steel shall be used for 54 and 68 mil thickness.
f. Table R505.3.2 is not applicable for 800S162-33 and 1000S162-43 continuous joist members.

adjacent joist through bent web of blocking, 33 mil clip angle or flange of web stiffener with two No. 8 screws at each end. The depth of the blocking shall be equal to the depth of the joist. The minimum length of the angle shall be equal to the depth of the joist minus 2 inches (51 mm). Blocking shall be fastened through the floor sheathing and to the support with three No. 8 screws (top and bottom).

R505.3.4 Bearing stiffeners. Bearing stiffeners shall be installed at each joist bearing location in accordance with this section, except for joists lapped over an interior support not carrying a load-bearing wall above. Floor joists supporting jamb studs with multiple members shall have two bearing stiffeners in accordance with Figure R505.3.4(1). Bearing stiffeners shall be fabricated from a C-shaped, track or clip angle member in accordance with the one of following:

1. C-shaped bearing stiffeners:
    1.1. Where the joist is not carrying a load-bearing wall above, the bearing stiffener shall be a minimum 33 mil (0.84 mm) thickness.
    1.2. Where the joist is carrying a load-bearing wall above, the bearing stiffener shall be not less than the same designation thickness as the wall stud above.
2. Track bearing stiffeners:
    2.1. Where the joist is not carrying a load-bearing wall above, the bearing stiffener shall be a minimum 43 mil (1.09 mm) thickness.
    2.2. Where the joist is carrying a load-bearing wall above, the bearing stiffener shall be not less than one designation thickness greater than the wall stud above.

The minimum length of a bearing stiffener shall be the depth of member being stiffened minus $^3/_8$ inch (9.5 mm). Each bearing stiffener shall be fastened to the web of the member it is stiffening as shown in Figure R505.3.4(2).

R505.3.5 Cutting and notching. Flanges and lips of load-bearing cold-formed steel floor framing members shall not be cut or notched.

R505.3.6 Floor cantilevers. Floor cantilevers for the top floor of a two- or three-story building or the first floor of a one-story building shall not exceed 24 inches (610 mm). Cantilevers, not exceeding 24 inches (610 mm) and supporting two stories and roof (first floor of a two-story building), shall be permitted provided that all cantilevered joists are doubled (nested or back-to-back). The doubled cantilevered joists shall extend not less than 6 feet (1829 mm) toward the inside and shall be fastened with not less than two No. 8 screws spaced at 24 inches (610 mm) on center through the webs (for back-to-back) or flanges (for nested joists).

INTERNATIONAL CODE COUNCIL®
Copyright © 2019 ICC & NYSDOS. ALL RIGHTS RESERVED. Accessed by Lauren Gualdino (lgualdino@briarcliffmanor.org), (-) Order Number #100880972 on May 08, 2020 07:05 AM (PDT) pursuant to License Agreement with ICC & NYSDOS. No further reproduction, no

100880972

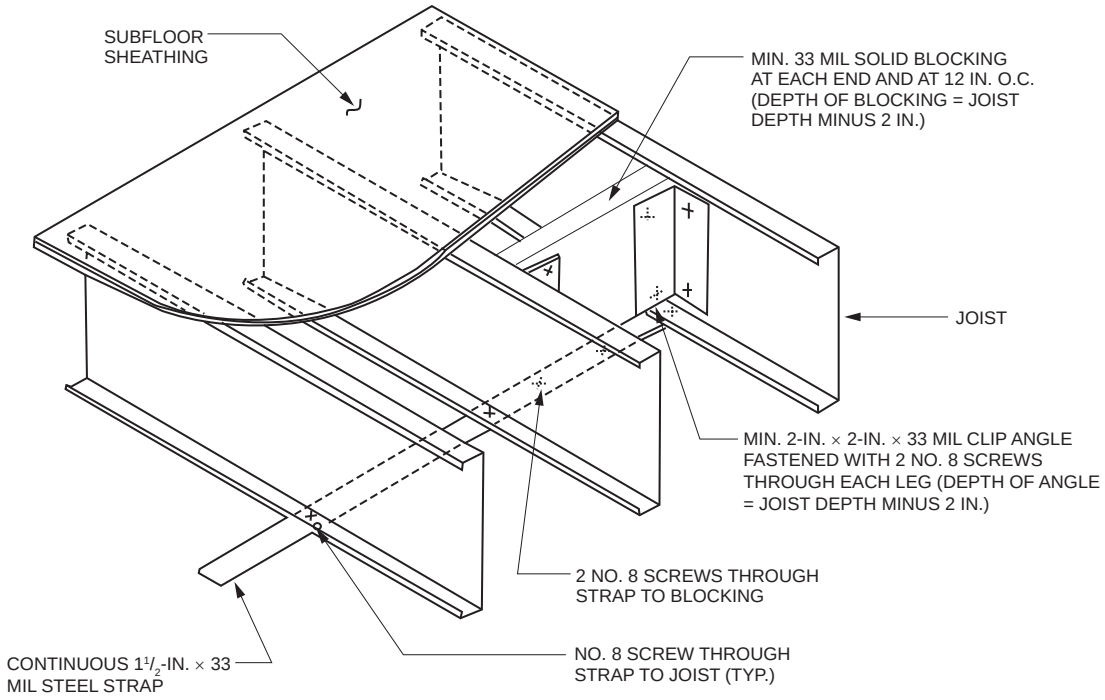

For SI: 1 mil = 0.0254, 1 inch = 25.4 mm.

FIGURE R505.3.3.2(1)
JOIST BLOCKING (SOLID)

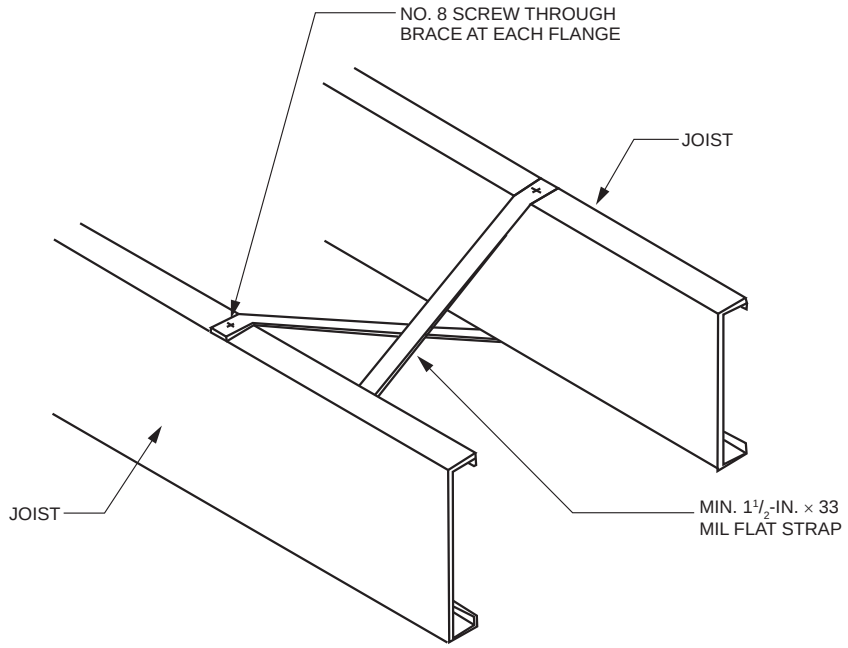

For SI: 1 mil = 0.0254, 1 inch = 25.4 mm.

FIGURE R505.3.3.2(2)
JOIST BLOCKING (STRAP)

INTERNATIONAL CODE COUNCIL®
Copyright © 2019 ICC & NYSDOS. ALL RIGHTS RESERVED. Accessed by Lauren Gualdino (lgualdino@briarcliffmanor.org), (-) Order Number #100880972 on May 08, 2020 07:05 AM (PDT) pursuant to License Agreement with ICC & NYSDOS. No further reproduction, no

100880972

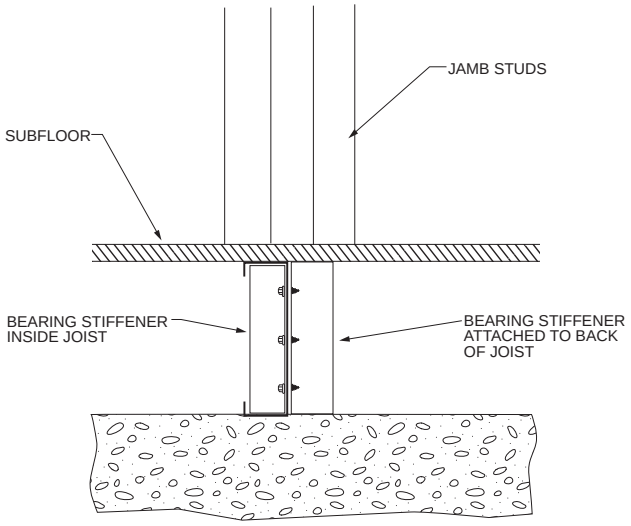

FIGURE R505.3.4(1)
BEARING STIFFENERS UNDER JAMB STUDS

R505.3.7 Splicing. Joists and other structural members shall not be spliced without an *approved* design. Splicing of tracks shall conform to Figure R505.3.7.

R505.3.8 Framing of floor openings. Openings in floors shall be framed with header and trimmer joists. Header joist spans shall not exceed 6 feet (1829 mm) or 8 feet (2438 mm) in length in accordance with Figure R505.3.8(1) or R505.3.8(2), respectively. Header and trimmer joists shall be fabricated from joist and track members, having a minimum size and thickness at least equivalent to the adjacent floor joists, and shall be installed in accordance with Figures R505.3.8(1), R505.3.8(2), R505.3.8(3) and R505.3.8(4). Each header joist shall be connected to trimmer joists with four 2-inch by 2-inch (51-mm by 51-mm) clip angles. Each clip angle shall be fastened to both the header and trimmer joists with four No. 8 screws, evenly spaced, through each leg of the clip angle. The clip angles shall have a thickness not less than that of the floor joist. Each track section for a built-up header or trimmer joist shall extend the full length of the joist (continuous).

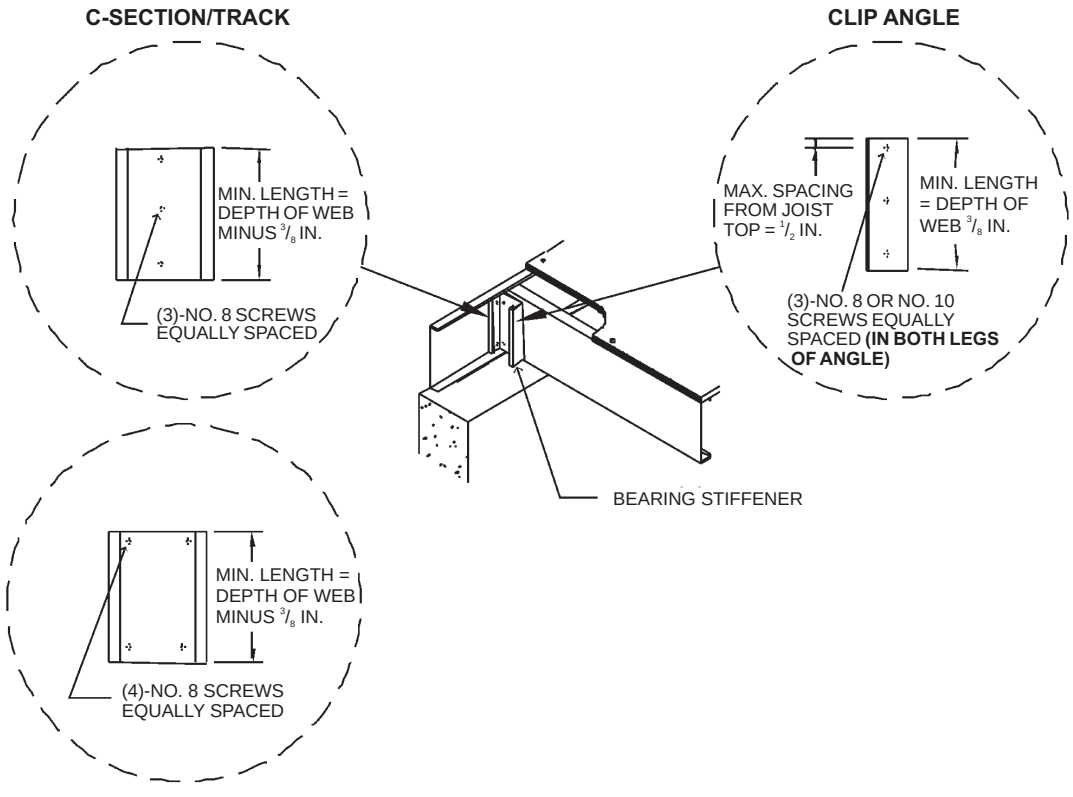

For SI: 1 inch = 25.4 mm.

FIGURE R505.3.4(2)
BEARING STIFFENER

INTERNATIONAL CODE COUNCIL®
Copyright © 2019 ICC & NYSDOS. ALL RIGHTS RESERVED. Accessed by Lauren Gualdino (lgualdino@briarcliffmanor.org), (-) Order Number #100880972 on May 08, 2020 07:05 AM (PDT) pursuant to License Agreement with ICC & NYSDOS. No further reproduction, no

100880972

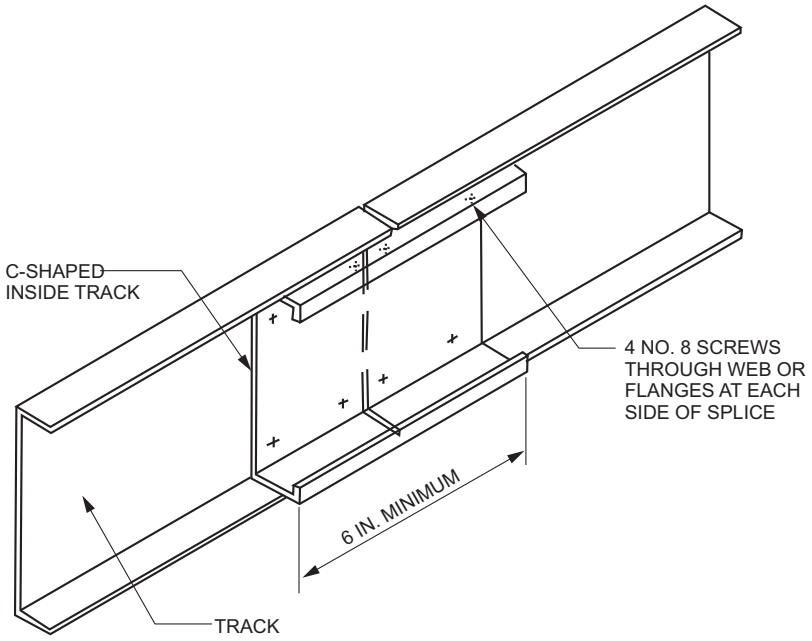

For SI: 1 inch = 25.4 mm.

FIGURE R505.3.7
TRACK SPLICE

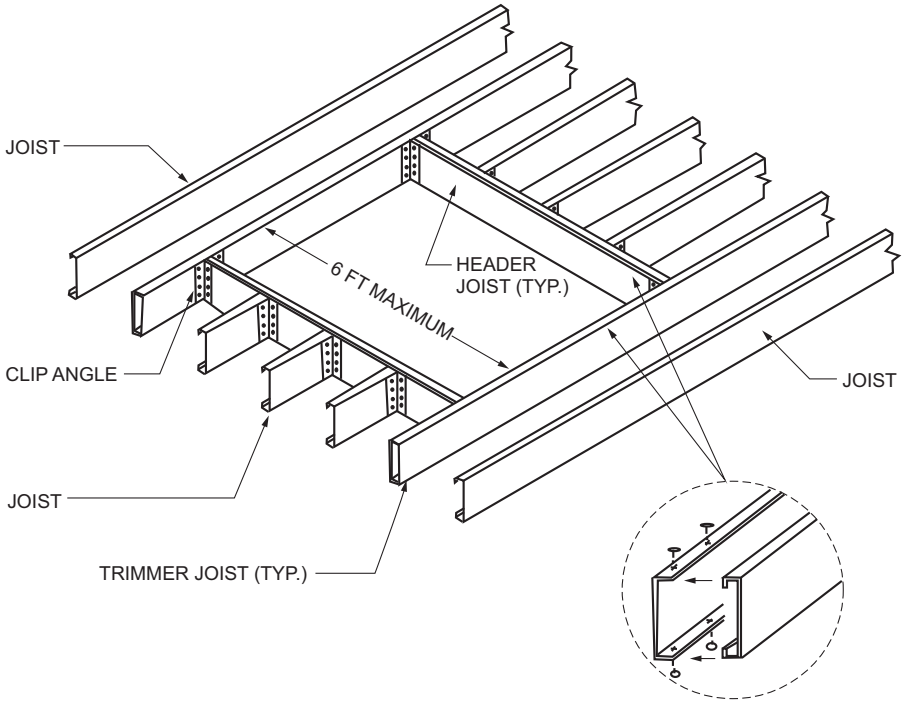

For SI: 1 foot = 304.8 mm.

FIGURE R505.3.8(1)
COLD-FORMED STEEL FLOOR CONSTRUCTION—6-FOOT FLOOR OPENING

INTERNATIONAL CODE COUNCIL®
Copyright © 2019 ICC & NYSDOS. ALL RIGHTS RESERVED. Accessed by Lauren Gualdino (lgualdino@briarcliffmanor.org), (-) Order Number #100880972 on May 08, 2020 07:05 AM (PDT) pursuant to License Agreement with ICC & NYSDOS. No further reproduction, no

100880972

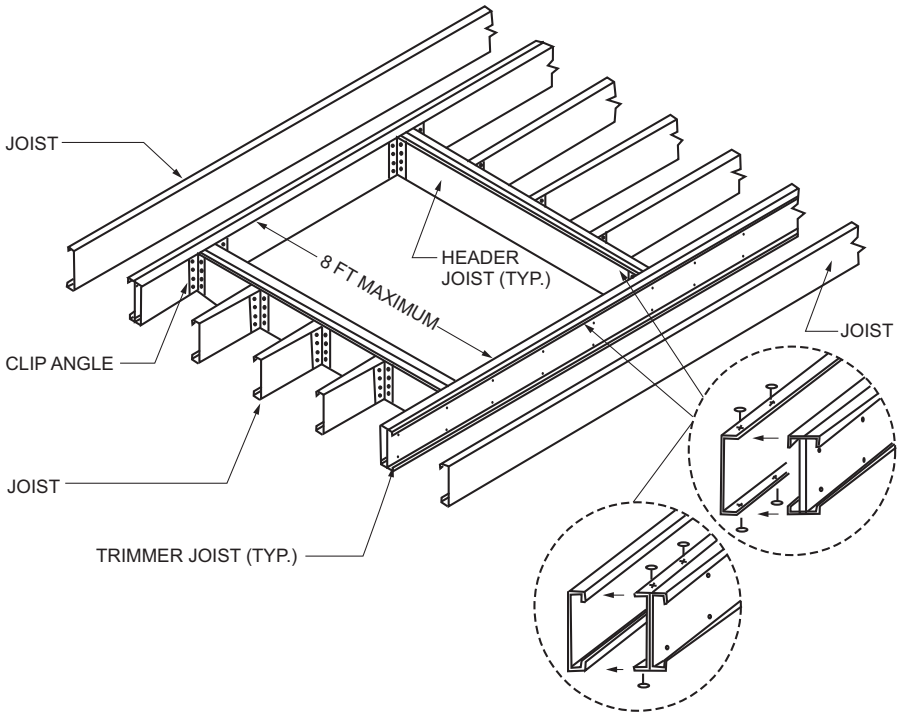

For SI: 1 foot = 304.8 mm.

FIGURE R505.3.8(2)
COLD-FORMED STEEL FLOOR CONSTRUCTION—8-FOOT FLOOR OPENING

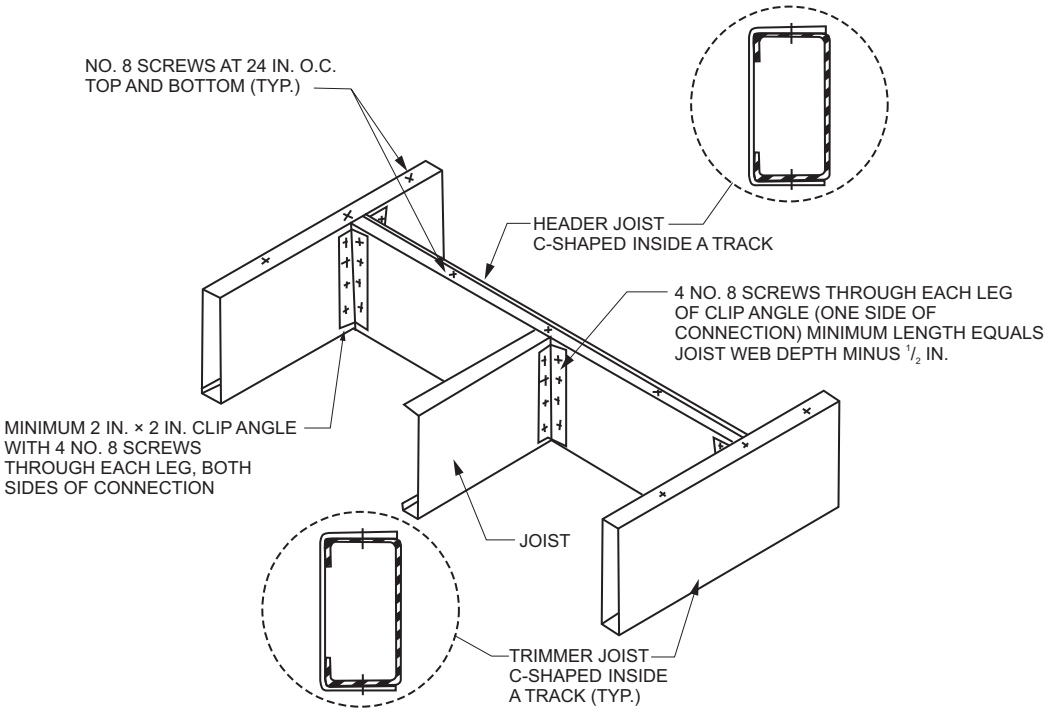

For SI: 1 inch = 25.4 mm, 1 foot = 304.8 mm.

FIGURE R505.3.8(3)
COLD-FORMED STEEL FLOOR CONSTRUCTION: FLOOR HEADER TO TRIMMER CONNECTION—6-FOOT OPENING

INTERNATIONAL CODE COUNCIL®
Copyright © 2019 ICC & NYSDOS. ALL RIGHTS RESERVED. Accessed by Lauren Gualdino (lgualdino@briarcliffmanor.org), (-) Order Number #100880972 on May 08, 2020 07:05 AM (PDT) pursuant to License Agreement with ICC & NYSDOS. No further reproduction, no

100880972

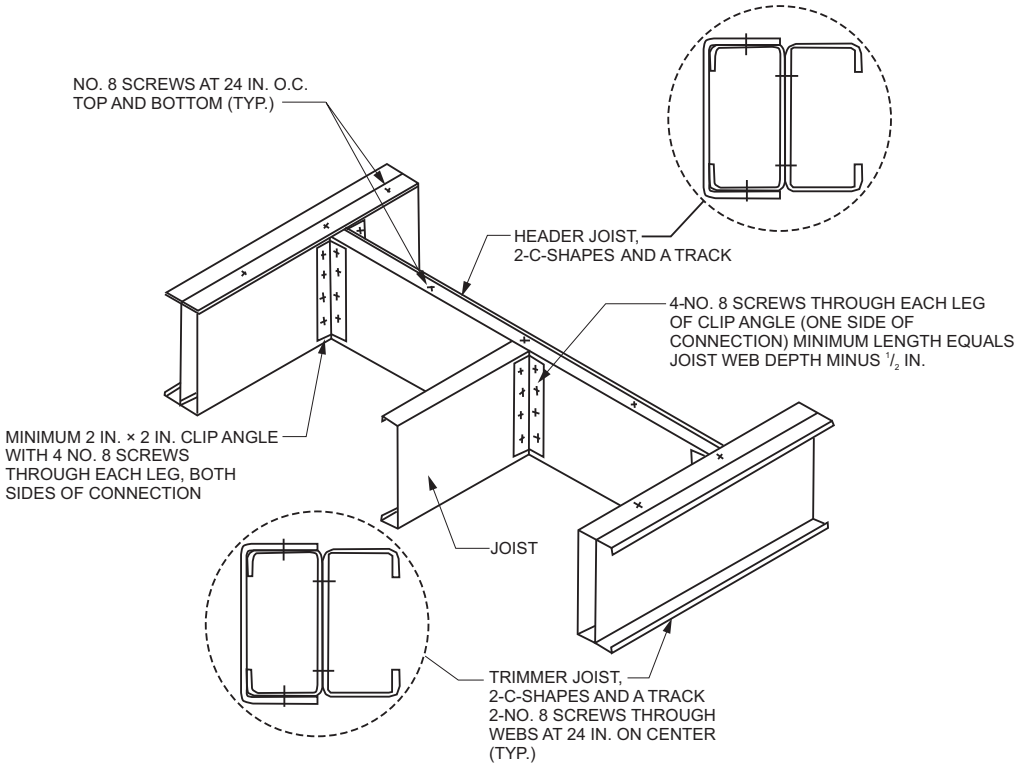

For SI: 1 inch = 25.4 mm, 1 foot = 304.8 mm.

FIGURE R505.3.8(4)
COLD-FORMED STEEL FLOOR CONSTRUCTION: FLOOR HEADER TO TRIMMER CONNECTION—8-FOOT OPENING

SECTION R506
CONCRETE FLOORS (ON GROUND)

R506.1 General. Concrete slab-on-ground floors shall be designed and constructed in accordance with the provisions of this section or ACI 332. Floors shall be a minimum $3^1/_2$ inches (89 mm) thick (for expansive soils, see Section R403.1.8). The specified compressive strength of concrete shall be as set forth in Section R402.2.

R506.2 Site preparation. The area within the foundation walls shall have all vegetation, top soil and foreign material removed.

R506.2.1 Fill. Fill material shall be free of vegetation and foreign material. The fill shall be compacted to ensure uniform support of the slab, and except where *approved*, the fill depths shall not exceed 24 inches (610 mm) for clean sand or gravel and 8 inches (203 mm) for earth.

R506.2.2 Base. A 4-inch-thick (102 mm) base course consisting of clean graded sand, gravel, crushed stone, crushed concrete or crushed blast-furnace slag passing a 2-inch (51 mm) sieve shall be placed on the prepared subgrade where the slab is below *grade*.

Exception: A base course is not required where the concrete slab is installed on well-drained or sand-gravel mixture soils classified as Group I according to the United Soil Classification System in accordance with Table R405.1.

R506.2.3 Vapor retarder. A 6-mil (0.006 inch; 152 μm) polyethylene or *approved* vapor retarder with joints lapped not less than 6 inches (152 mm) shall be placed between the concrete floor slab and the base course or the prepared subgrade where a base course does not exist.

Exception: The vapor retarder is not required for the following:

1. Garages, utility buildings and other unheated *accessory structures*.
2. For unheated storage rooms having an area of less than 70 square feet (6.5 m^2) and carports.
3. Driveways, walks, patios and other flatwork not likely to be enclosed and heated at a later date.
4. Where *approved* by the *building official*, based on local site conditions.

R506.2.4 Reinforcement support. Where provided in slabs-on-ground, reinforcement shall be supported to remain in place from the center to upper one-third of the slab for the duration of the concrete placement.

SECTION R507
EXTERIOR DECKS

R507.1 Decks. Wood-framed decks shall be in accordance with this section. For decks using materials and conditions not prescribed in this section, refer to Section R301.

INTERNATIONAL CODE COUNCIL®
Copyright © 2019 ICC & NYSDOS. ALL RIGHTS RESERVED. Accessed by Lauren Gualdino (lgualdino@briarcliffmanor.org), (-) Order Number #100880972 on May 08, 2020 07:05 AM (PDT) pursuant to License Agreement with ICC & NYSDOS. No further reproduction, no

100880972

R507.2 Materials. Materials used for the construction of decks shall comply with this section.

R507.2.1 Wood materials. Wood materials shall be No. 2 grade or better lumber, preservative-treated in accordance with Section R317, or *approved*, naturally durable lumber, and termite protected where required in accordance with Section R318. Where design in accordance with Section R301 is provided, wood structural members shall be designed using the wet service factor defined in AWC NDS. Cuts, notches and drilled holes of preservative-treated wood members shall be treated in accordance with Section R317.1.1. All preservative-treated wood products in contact with the ground shall be labeled for such usage.

R507.2.1.1 Engineered wood products. Engineered wood products shall be in accordance with Section R502.

R507.2.2 Plastic composite deck boards, stair treads, guards, or handrails. Plastic composite exterior deck boards, stair treads, guards and handrails shall comply with the requirements of ASTM D7032 and this section.

R507.2.2.1 Labeling. Plastic composite deck boards and stair treads, or their packaging, shall bear a label that indicates compliance with ASTM D7032 and includes the allowable load and maximum allowable span determined in accordance with ASTM D7032. Plastic or composite handrails and guards, or their packaging, shall bear a label that indicates compliance with ASTM D7032 and includes the maximum allowable span determined in accordance with ASTM D7032.

R507.2.2.2 Flame spread index. Plastic composite deck boards, stair treads, guards, and handrails shall exhibit a flame spread index not exceeding 200 when tested in accordance with ASTM E84 or UL 723 with the test specimen remaining in place during the test.

Exception: Plastic composites determined to be noncombustible.

R507.2.2.3 Decay resistance. Plastic composite deck boards, stair treads, guards and handrails containing wood, cellulosic or other biodegradable materials shall be decay resistant in accordance with ASTM D7032.

R507.2.2.4 Termite resistance. Where required by Section 318, plastic composite deck boards, stair treads, guards and handrails containing wood, cellulosic or other biodegradable materials shall be termite resistant in accordance with ASTM D7032.

R507.2.2.5 Installation of plastic composites. Plastic composite deck boards, stair treads, guards and handrails shall be installed in accordance with this code and the manufacturer's instructions.

R507.2.3 Fasteners and connectors. Metal fasteners and connectors used for all decks shall be in accordance with Section R317.3 and Table R507.2.3.

R507.2.4 Flashing. Flashing shall be corrosion-resistant metal of nominal thickness not less than 0.019 inch (0.48 mm) or *approved* nonmetallic material that is compatible with the substrate of the structure and the decking materials.

R507.2.5 Alternate materials. Alternative materials, including glass and metals, shall be permitted.

R507.3 Footings. Decks shall be supported on concrete footings or other approved structural systems designed to accommodate all loads in accordance with Section R301. Deck footings shall be sized to carry the imposed loads from the deck structure to the ground as shown in Figure R507.3. The footing depth shall be in accordance with Section R403.1.4.

Exception: Free-standing decks consisting of joists directly supported on grade over their entire length.

R507.3.1 Minimum size. The minimum size of concrete footings shall be in accordance with Table R507.3.1, based on the tributary area and allowable soil-bearing pressure in accordance with Table R401.4.1.

TABLE R507.2.3
FASTENER AND CONNECTOR SPECIFICATIONS FOR DECKS[a, b]

ITEM	MATERIAL	MINIMUM FINISH/COATING	ALTERNATE FINISH/COATING[e]
Nails and timber rivets	In accordance with ASTM F1667	Hot-dipped galvanized per ASTM A153	Stainless steel, silicon bronze or copper
Bolts[c] Lag screws[d] (including nuts and washers)	In accordance with ASTM A307 (bolts), ASTM A563 (nuts), ASTM F844 (washers)	Hot-dipped galvanized per ASTM A153, Class C (Class D for $^3/_8$-inch diameter and less) or mechanically galvanized per ASTM B695, Class 55 or 410 stainless steel	Stainless steel, silicon bronze or copper
Metal connectors	Per manufacturer's specification	ASTM A653 type G185 zinc coated galvanized steel or post hot-dipped galvanized per ASTM A123 providing a minimum average coating weight of 2.0 oz./ft^2 (total both sides)	Stainless steel

For SI: 1 inch = 25.4 mm, 1 foot = 304.8 mm.

a. Equivalent materials, coatings and finishes shall be permitted.

b. Fasteners and connectors exposed to salt water or located within 300 feet of a salt water shoreline shall be stainless steel.

c. Holes for bolts shall be drilled a minimum $^1/_{32}$ inch and a maximum $^1/_{16}$ inch larger than the bolt.

d. Lag screws $^1/_2$ inch and larger shall be predrilled to avoid wood splitting per the National Design Specification (NDS) for Wood Construction.

e. Stainless-steel-driven fasteners shall be in accordance with ASTM F1667.

INTERNATIONAL CODE COUNCIL®
Copyright © 2019 ICC & NYSDOS. ALL RIGHTS RESERVED. Accessed by Lauren Gualdino (lgualdino@briarcliffmanor.org), (-) Order Number #100880972 on May 08, 2020 07:05 AM (PDT) pursuant to License Agreement with ICC & NYSDOS. No further reproduction, no

100880972

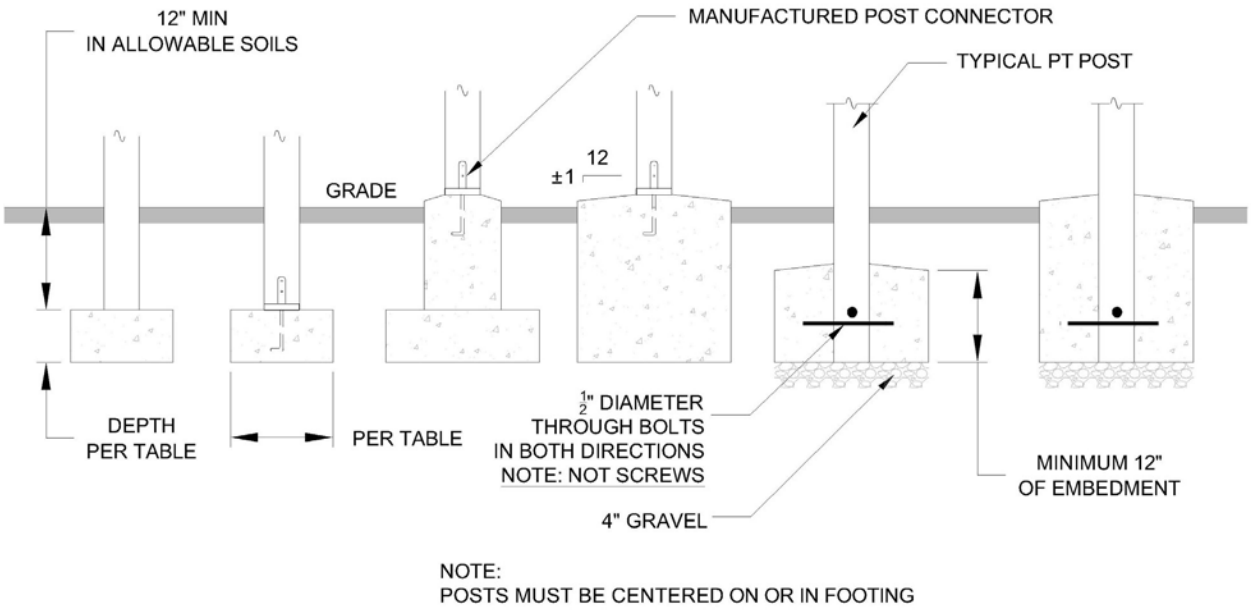

For SI: 1 inch = 25.4 mm.

FIGURE R507.3
DECK POSTS TO DECK FOOTING CONNECTION

R507.3.2 Minimum depth. Deck footings shall extend below the frost line specified in Table R301.2(1) in accordance with Section R403.1.4.1.

Exceptions:

1. Free-standing decks that meet all of the following criteria:
   - 1.1. The joists bear directly on precast concrete pier blocks at grade without support by beams or posts.
   - 1.2. The area of the deck does not exceed 200 square feet (18.9 m^2).
   - 1.3. The walking surface is not more than 20 inches (616 mm) above grade at any point within 36 inches (914 mm) measured horizontally from the edge.
2. Free-standing decks need not be provided with footings that extend below the frost line.

R507.4 Deck posts. For single-level wood-framed decks with beams sized in accordance with Table R507.5, deck post size shall be in accordance with Table R507.4.

TABLE R507.4
DECK POST HEIGHT[a]

DECK POST SIZE	MAXIMUM HEIGHT[a, b] (feet-inches)
4 × 4	6-9[c]
4 × 6	8
6 × 6	14
8 × 8	14

For SI: 1 inch = 25.4 mm, 1 foot = 304.8 mm, 1 pound per square foot = 0.0479 kPa.

a. Measured to the underside of the beam.

b. Based on 40 psf live load.

c. The maximum permitted height is 8 feet for one-ply and two-ply beams. The maximum permitted height for three-ply beams on post cap is 6 feet 9 inches.

R507.4.1 Deck post to deck footing connection. Where posts bear on concrete footings in accordance with Section R403 and Figure R507.4.1, lateral restraint shall be provided by manufactured connectors or a minimum post embedment of 12 inches (305 mm) in surrounding soils or concrete piers. Other footing systems shall be permitted.

Exception: Where expansive, compressible, shifting or other questionable soils are present, surrounding soils shall not be relied on for lateral support.

R507.5 Deck beams. Maximum allowable spans for wood deck beams, as shown in Figure R507.5, shall be in accordance with Table R507.5. Beam plies shall be fastened with two rows of 10d (3-inch × 0.128-inch) nails minimum at 16 inches (406 mm) on center along each edge. Beams shall be permitted to cantilever at each end up to one-fourth of the allowable beam span. Deck beams of other materials shall be permitted where designed in accordance with accepted engineering practices.

INTERNATIONAL CODE COUNCIL®
Copyright © 2019 ICC & NYSDOS. ALL RIGHTS RESERVED. Accessed by Lauren Gualdino (lgualdino@briarcliffmanor.org), (-) Order Number #100880972 on May 08, 2020 07:05 AM (PDT) pursuant to License Agreement with ICC & NYSDOS. No further reproduction, no

TABLE R507.3.1
MINIMUM FOOTING SIZE FOR DECKS

LIVE OR GROUND SNOW LOAD[b] (psf)	TRIBUTARY AREA (sq. ft.)	LOAD BEARING VALUE OF SOILS [a, c, d] (psf)											
		1500[e]			2000[e]			2500[e]			≥ 3000[e]		
		Side of a square footing (inches)	Diameter of a round footing (inches)	Thickness (inches)	Side of a square footing (inches)	Diameter of a round footing (inches)	Thickness (inches)	Side of a square footing (inches)	Diameter of a round footing (inches)	Thickness (inches)	Side of a square footing (inches)	Diameter of a round footing (inches)	Thickness (inches)
40	20	12	14	6	12	14	6	12	14	6	12	14	6
	40	14	16	6	12	14	6	12	14	6	12	14	6
	60	17	19	6	15	17	6	13	15	6	12	14	6
	80	20	22	7	17	19	6	15	17	6	14	16	6
	100	22	25	8	19	21	6	17	19	6	15	17	6
	120	24	27	9	21	23	7	19	21	6	17	19	6
	140	26	29	10	22	25	8	20	23	7	18	21	6
	160	28	31	11	24	27	9	21	24	8	20	22	7
50	20	12	14	6	12	14	6	12	14	6	12	14	6
	40	15	17	6	13	15	6	12	14	6	12	14	6
	60	19	21	6	16	18	6	14	16	6	13	15	6
	80	21	24	8	19	21	6	17	19	6	15	17	6
	100	24	27	9	21	23	7	19	21	6	17	19	6
	120	26	30	10	23	26	8	20	23	7	19	21	6
	140	28	32	11	25	28	9	22	25	8	20	23	7
	160	30	34	12	26	30	10	24	27	9	21	24	8
60	20	12	14	6	12	14	6	12	14	6	12	14	6
	40	16	19	6	14	16	6	13	14	6	12	14	6
	60	20	23	7	17	20	6	16	18	6	14	16	6
	80	23	26	9	20	23	7	18	20	6	16	19	6
	100	26	29	10	22	25	8	20	23	7	18	21	6
	120	28	32	11	25	28	9	22	25	8	20	23	7
	140	31	35	12	27	30	10	24	27	9	22	24	8
	160	33	37	13	28	32	11	25	29	10	23	26	9
70	20	12	14	6	12	14	6	12	14	6	12	14	6
	40	18	20	6	15	17	6	14	15	6	12	14	6
	60	21	24	8	19	21	6	17	19	6	15	17	6
	80	25	28	9	21	24	8	19	22	7	18	20	6
	100	28	31	11	24	27	9	21	24	8	20	22	7
	120	30	34	12	26	30	10	24	27	9	21	24	8
	140	33	37	13	28	32	11	25	29	10	23	26	9
	160	35	40	15	30	34	12	27	31	11	25	28	9

For SI: 1 inch = 25.4 mm, 1 square foot = 0.0929 m^2, 1 pound per square foot = 0.0479 kPa.

a. Interpolation permitted, extrapolation not permitted.

b. Based on highest load case: Dead + Live or Dead + Snow.

c. Assumes minimum square footing to be 12 inches x 12 inches x 6 inches for 6 x 6 post.

d. If the support is a brick or CMU pier, the footing shall have a minimum 2-inch projection on all sides.

e. Area, in square feet, of deck surface supported by post and footings.

Copyright © 2019 ICC & NYSDOS. ALL RIGHTS RESERVED. Accessed by Lauren Gualdino (lgualdino@briarcliffmanor.org). (-) Order Number #100880972 on May 08, 2020 07:05 AM (PDT) pursuant to License Agreement with ICC & NYSDOS. No further reproduction, no

100880972

100880972

R507.5.1 Deck beam bearing. The ends of beams shall have not less than $1^1/_2$ inches (38 mm) of bearing on wood or metal and not less than 3 inches (76 mm) of bearing on concrete or masonry for the entire width of the beam. Where multiple-span beams bear on intermediate posts, each ply must have full bearing on the post in accordance with Figures R507.5.1(1) and R507.5.1(2).

R507.5.2 Deck beam connection to supports. Deck beams shall be attached to supports in a manner capable of transferring vertical loads and resisting horizontal displacement. Deck beam connections to wood posts shall be in accordance with Figures R507.5.1(1) and R507.5.1(2). Manufactured post-to-beam connectors shall be sized for the post and beam sizes. Bolts shall have washers under the head and nut.

R507.6 Deck joists. Maximum allowable spans for wood deck joists, as shown in Figure R507.6, shall be in accordance with Table R507.6. The maximum joist spacing shall be limited by the decking materials in accordance with Table R507.7. The maximum joist cantilever shall be limited to one-fourth of the joist span or the maximum cantilever length specified in Table R507.6, whichever is less.

R507.6.1 Deck joist bearing. The ends of joists shall have not less than $1^1/_2$ inches (38 mm) of bearing on wood or metal and not less than 3 inches (76 mm) of bearing on concrete or masonry over its entire width. Joists bearing on top of a multiple-ply beam or ledger shall be fastened in accordance with Table R602.3(1). Joists bearing on top of a single-ply beam or ledger shall be attached by a mechanical connector. Joist framing into the side of a beam or ledger board shall be supported by approved joist hangers.

R507.6.2 Deck joist lateral restraint. Joist ends and bearing locations shall be provided with lateral resistance to prevent rotation. Where lateral restraint is provided by joist hangers or blocking between joists, their depth shall equal not less than 60 percent of the joist depth. Where lateral restraint is provided by rim joists, they shall be secured to the end of each joist with not fewer than three 10d (3-inch by 0.128-inch) (76 mm by 3.3 mm) nails or three No. 10x 3-inch (76 mm) long wood screws.

R507.7 Decking. Maximum allowable spacing for joists supporting decking shall be in accordance with Table R507.7. Wood decking shall be attached to each supporting member with not less than two 8d threaded nails or two No. 8 wood screws. Other approved decking or fastener systems shall be installed in accordance with the manufacturer's installation requirements.

R507.8 Vertical and lateral supports. Where supported by attachment to an exterior wall, decks shall be positively anchored to the primary structure and designed for both vertical and lateral loads. Such attachment shall not be accomplished by the use of toenails or nails subject to withdrawal. For decks with cantilevered framing members, connection to exterior walls or other framing members shall be designed and constructed to resist uplift resulting from the full live load specified in Table R301.5 acting on the cantilevered portion of the deck. Where positive connection to the primary building structure cannot be verified during inspection, decks shall be self-supporting.

R507.9 Vertical and lateral supports at band joist. Vertical and lateral supports for decks shall comply with this section.

R507.9.1 Vertical supports. Vertical loads shall be transferred to band joists with ledgers in accordance with this section.

R507.9.1.1 Ledger details. Deck ledgers shall be a minimum 2-inch by 8-inch (51 mm by 203 mm) nominal, pressure-preservative-treated Southern pine, incised pressure-preservative-treated hem-fir, or approved, naturally durable, No. 2 grade or better lumber. Deck ledgers shall not support concentrated loads from beams or girders. Deck ledgers shall not be supported on stone or masonry veneer.

R507.9.1.2 Band joist details. Band joists supporting a ledger shall be a minimum 2-inch-nominal (51 mm), solid-sawn, spruce-pine-fir or better lumber or a minimum 1-inch by $9^1/_2$-inch (25 mm × 241 mm) dimensional, Douglas fir or better, laminated veneer lumber. Band joists shall bear fully on the primary structure capable of supporting all required loads.

R507.9.1.3 Ledger to band joist details. Fasteners used in deck ledger connections in accordance with Table R507.9.1.3(1) shall be hot-dipped galvanized or stainless steel and shall be installed in accordance with Table R507.9.1.3(2) and Figures R507.9.1.3(1) and R507.9.1.3(2).

R507.9.1.4 Alternate ledger details. Alternate framing configurations supporting a ledger constructed to meet the load requirements of Section R301.5 shall be permitted.

R507.9.2 Lateral connection. Lateral loads shall be transferred to the ground or to a structure capable of transmitting them to the ground. Where the lateral load connection is provided in accordance with Figure R507.9.2(1), hold-down tension devices shall be installed in not less than two locations per deck, within 24 inches (610 mm) of each end of the deck. Each device shall have an allowable stress design capacity of not less than 1,500 pounds (6672 N). Where the lateral load connections are provided in accordance with Figure R507.9.2(2), the hold-down tension devices shall be installed in not less than four locations per deck, and each device shall have an allowable stress design capacity of not less than 750 pounds (3336 N).

INTERNATIONAL CODE COUNCIL®
Copyright © 2019 ICC & NYSDOS. ALL RIGHTS RESERVED. Accessed by Lauren Gualdino (lgualdino@briarcliffmanor.org), (-) Order Number #100880972 on May 08, 2020 07:05 AM (PDT) pursuant to License Agreement with ICC & NYSDOS. No further reproduction, no

100880972

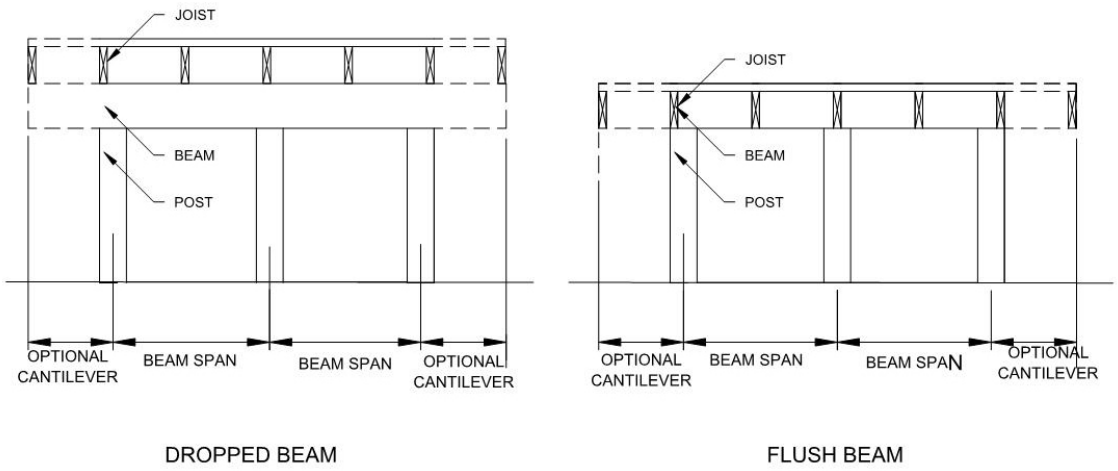

FIGURE R507.5
TYPICAL DECK JOIST SPANS

TABLE R507.5
DECK BEAM SPAN LENGTHS[a, b, g] (feet - inches)

SPECIES[c]	SIZE[d]	DECK JOIST SPAN LESS THAN OR EQUAL TO: (feet)						
		6	8	10	12	14	16	18
Southern pine	1 – 2 × 6	4-11	4-0	3-7	3-3	3-0	2-10	2-8
	1 – 2 × 8	5-11	5-1	4-7	4-2	2-10	3-7	3-5
	1 – 2 × 10	7-0	6-0	5-5	4-11	4-7	4-3	4-0
	1 – 2 × 12	8-3	7-1	6-4	5-10	5-5	5-0	4-9
	2 – 2 × 6	6-11	5-11	5-4	4-10	4-6	4-3	4-0
	2 – 2 × 8	8-9	7-7	6-9	6-2	5-9	5-4	5-0
	2 – 2 × 10	10-4	9-0	8-0	7-4	6-9	6-4	6-0
	2 – 2 × 12	12-2	10-7	9-5	8-7	8-0	7-6	7-0
	3 – 2 × 6	8-2	7-5	6-8	6-1	5-8	5-3	5-0
	3 – 2 × 8	10-10	9-6	8-6	7-9	7-2	6-8	6-4
	3 – 2 × 10	13-0	11-3	10-0	9-2	8-6	7-11	7-6
	3 – 2 × 12	15-3	13-3	11-10	10-9	10-0	9-4	8-10
Douglas fir-larch[e], hem-fir[e], spruce-pine-fir[e], redwood, western cedars, ponderosa pine[f], red pine[f]	3 × 6 or 2 – 2 x 6	5-5	4-8	4-2	3-10	3-6	3-1	2-9
	3 × 8 or 2 – 2 × 8	6-10	5-11	5-4	4-10	4-6	4-1	3-8
	3 × 10 or 2 – 2 × 10	8-4	7-3	6-6	5-11	5-6	5-1	4-8
	3 × 12 or 2 – 2 × 12	9-8	8-5	7-6	6-10	6-4	5-11	5-7
	4 × 6	6-5	5-6	4-11	4-6	4-2	3-11	3-8
	4 × 8	8-5	7-3	6-6	5-11	5-6	5-2	4-10
	4 × 10	9-11	8-7	7-8	7-0	6-6	6-1	5-8
	4 × 12	11-5	9-11	8-10	8-1	7-6	7-0	6-7
	3 – 2 × 6	7-4	6-8	6-0	5-6	5-1	4-9	4-6
	3 – 2 × 8	9-8	8-6	7-7	6-11	6-5	6-0	5-8
	3 – 2 × 10	12-0	10-5	9-4	8-6	7-10	7-4	6-11
	3 – 2 × 12	13-11	12-1	10-9	9-10	9-1	8-6	8-1

For SI: 1 inch = 25.4 mm, 1 foot = 304.8 mm, 1 pound per square foot = 0.0479 kPa, 1 pound = 0.454 kg.

a. Ground snow load, live load = 40 psf, dead load = 10 psf, L/Δ = 360 at main span, L/Δ = 180 at cantilever with a 220-pound point load applied at the end.
b. Beams supporting deck joists from one side only.
c. No. 2 grade, wet service factor.
d. Beam depth shall be greater than or equal to depth of joists with a flush beam condition.
e. Includes incising factor.
f. Northern species. Incising factor not included.
g. Beam cantilevers are limited to the adjacent beam's span divided by 4.

INTERNATIONAL CODE COUNCIL®
Copyright © 2019 ICC & NYSDOS. ALL RIGHTS RESERVED. Accessed by Lauren Gualdino (lgualdino@briarcliffmanor.org), (-) Order Number #100880972 on May 08, 2020 07:05 AM (PDT) pursuant to License Agreement with ICC & NYSDOS. No further reproduction, no

100880972

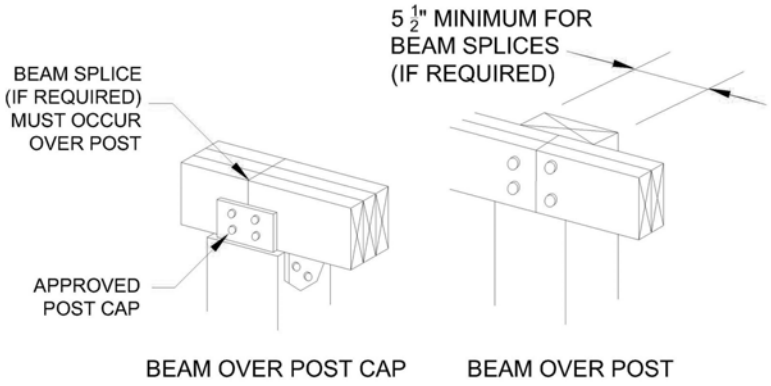

For SI: 1 inch = 25.4 mm.

FIGURE R507.5.1(1)
DECK BEAM TO DECK POST

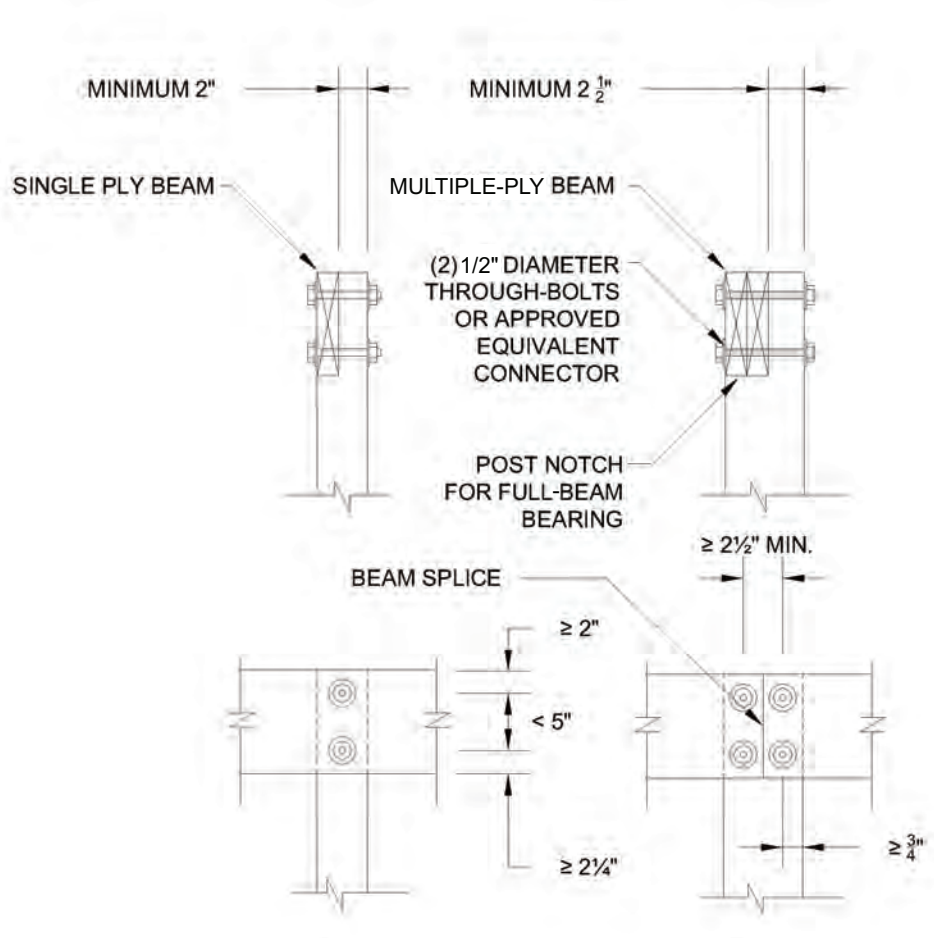

For SI: 1 inch = 25.4 mm.

FIGURE R507.5.1(2)
NOTCHED POST-TO-BEAM CONNECTION

INTERNATIONAL CODE COUNCIL®
Copyright © 2019 ICC & NYSDOS. ALL RIGHTS RESERVED. Accessed by Lauren Gualdino (lgualdino@briarcliffmanor.org), (-) Order Number #100880972 on May 08, 2020 07:05 AM (PDT) pursuant to License Agreement with ICC & NYSDOS. No further reproduction, no

100880972

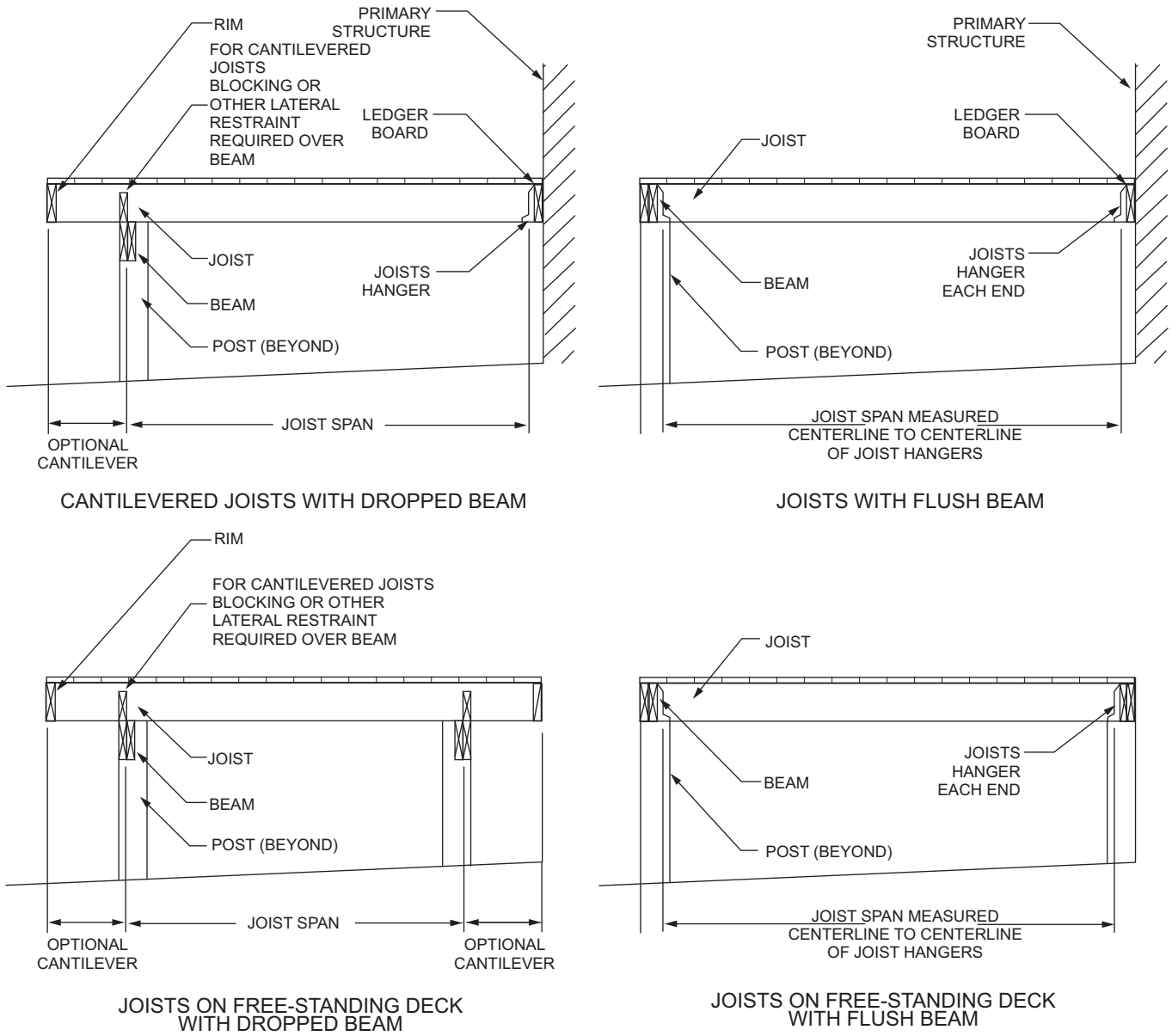

FIGURE R507.6
TYPICAL DECK JOIST SPANS

INTERNATIONAL CODE COUNCIL®
Copyright © 2019 ICC & NYSDOS. ALL RIGHTS RESERVED. Accessed by Lauren Gualdino (lgualdino@briarcliffmanor.org), (-) Order Number #100880972 on May 08, 2020 07:05 AM (PDT) pursuant to License Agreement with ICC & NYSDOS. No further reproduction, no

100880972

TABLE R507.6
DECK JOIST SPANS FOR COMMON LUMBER SPECIES (ft. - in.)

SPECIES[a]	SIZE	ALLOWABLE JOIST SPAN[b]			MAXIMUM CANTILEVER[c, f]		
		SPACING OF DECK JOISTS (inches)			SPACING OF DECK JOISTS WITH CANTILEVERS[c] (inches)		
		12	16	24	12	16	24
Southern pine	2 × 6	9-11	9-0	7-7	1-3	1-4	1-6
	2 × 8	13-1	11-10	9-8	2-1	2-3	2-5
	2 × 10	16-2	14-0	11-5	3-4	3-6	2-10
	2 × 12	18-0	16-6	13-6	4-6	4-2	3-4
Douglas fir-larch[d], hem-fir[d] spruce-pine-fir[d],	2 × 6	9-6	8-8	7-2	1-2	1-3	1-5
	2 × 8	12-6	11-1	9-1	1-11	2-1	2-3
	2 × 10	15-8	13-7	11-1	3-1	3-5	2-9
	2 × 12	18-0	15-9	12-10	4-6	3-11	3-3
Redwood, western cedars, ponderosa pine[e], red pine[e]	2 × 6	8-10	8-0	7-0	1-0	1-1	1-2
	2 × 8	11-8	10-7	8-8	1-8	1-10	2-0
	2 × 10	14-11	13-0	10-7	2-8	2-10	2-8
	2 × 12	17-5	15-1	12-4	3-10	3-9	3-1

For SI: 1 inch = 25.4 mm, 1 foot = 304.8 mm, 1 pound per square foot = 0.0479 kPa, 1 pound = 0.454 kg.

a. No. 2 grade with wet service factor.

b. Ground snow load, live load = 40 psf, dead load = 10 psf, L/Δ = 360.

c. Ground snow load, live load = 40 psf, dead load = 10 psf, L/Δ = 360 at main span, L/Δ = 180 at cantilever with a 220-pound point load applied to end.

d. Includes incising factor.

e. Northern species with no incising factor.

f. Cantilevered spans not exceeding the nominal depth of the joist are permitted.

TABLE R507.7
MAXIMUM JOIST SPACING FOR DECKING

DECKING MATERIAL TYPE AND NOMINAL SIZE	MAXIMUM ON-CENTER JOIST SPACING	
	Decking perpendicular to joist	Decking diagonal to joist[a]
$1^1/_4$-inch-thick wood	16 inches	12 inches
2-inch-thick wood	24 inches	16 inches
Plastic composite	In accordance with Section R507.2	In accordance with Section R507.2

For SI: 1 inch = 25.4 mm, 1 foot = 304.8 mm, 1 degree = 0.01745 rad.

a. Maximum angle of 45 degrees from perpendicular for wood deck boards.

INTERNATIONAL CODE COUNCIL®
Copyright © 2019 ICC & NYSDOS. ALL RIGHTS RESERVED. Accessed by Lauren Gualdino (lgualdino@briarcliffmanor.org), (-) Order Number #100880972 on May 08, 2020 07:05 AM (PDT) pursuant to License Agreement with ICC & NYSDOS. No further reproduction, no

100880972

TABLE R507.9.1.3(1)
DECK LEDGER CONNECTION TO BAND JOIST[a, b]
(Deck live load = 40 psf, deck dead load = 10 psf, snow load ≤ 40 psf)

CONNECTION DETAILS	JOIST SPAN						
	6′ and less	6′1″ to 8′	8′1″ to 10′	10′1″ to 12′	12′1″ to 14′	14′1″ to 16′	16′1″ to 18′
	On-center spacing of fasteners						
1/2-inch diameter lag screw with 1/2-inch maximum sheathing[c, d]	30	23	18	15	13	11	10
1/2-inch diameter bolt with 1/2-inch maximum sheathing[d]	36	36	34	29	24	21	19
1/2-inch diameter bolt with 1-inch maximum sheathing[e]	36	36	29	24	21	18	16

For SI: 1 inch = 25.4 mm, 1 foot = 304.8 mm, 1 pound per square foot = 0.0479 kPa.

a. Ledgers shall be flashed in accordance with Section R703.4 to prevent water from contacting the house band joist.

b. Snow load shall not be assumed to act concurrently with live load.

c. The tip of the lag screw shall fully extend beyond the inside face of the band joist.

d. Sheathing shall be wood structural panel or solid sawn lumber.

e. Sheathing shall be permitted to be wood structural panel, gypsum board, fiberboard, lumber or foam sheathing. Up to 1/2-inch thickness of stacked washers shall be permitted to substitute for up to 1/2 inch of allowable sheathing thickness where combined with wood structural panel or lumber sheathing.

TABLE R507.9.1.3(2)
PLACEMENT OF LAG SCREWS AND BOLTS IN DECK LEDGERS AND BAND JOISTS

MINIMUM END AND EDGE DISTANCES AND SPACING BETWEEN ROWS				
	TOP EDGE	BOTTOM EDGE	ENDS	ROW SPACING
Ledger[a]	2 inches[d]	3/4 inch	2 inches[b]	1 5/8 inches[b]
Band Joist[c]	3/4 inch	2 inches	2 inches[b]	1 5/8 inches[b]

For SI: 1 inch = 25.4 mm.

a. Lag screws or bolts shall be staggered from the top to the bottom along the horizontal run of the deck ledger in accordance with Figure R507.9.1.3(1).

b. Maximum 5 inches.

c. For engineered rim joists, the manufacturer's recommendations shall govern.

d. The minimum distance from bottom row of lag screws or bolts to the top edge of the ledger shall be in accordance with Figure R507.9.1.3(1).

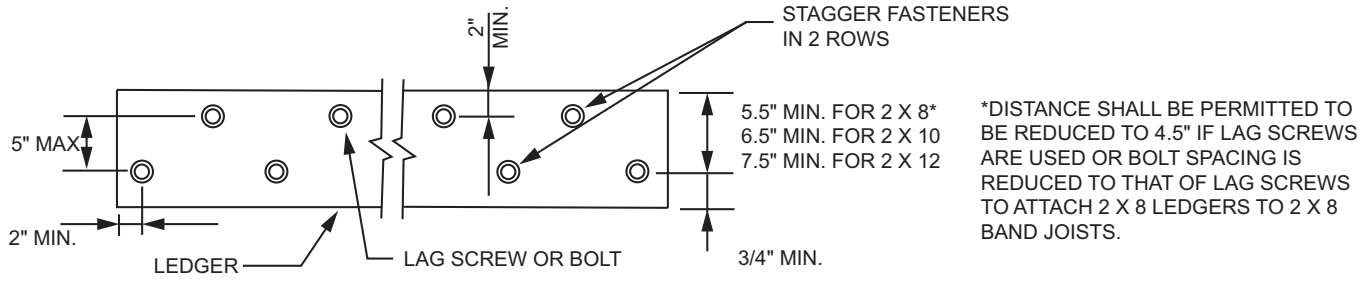

For SI: 1 inch = 25.4 mm.

FIGURE R507.9.1.3(1)
PLACEMENT OF LAG SCREWS AND BOLTS IN LEDGERS

INTERNATIONAL CODE COUNCIL®
Copyright © 2019 ICC & NYSDOS. ALL RIGHTS RESERVED. Accessed by Lauren Gualdino (lgualdino@briarcliffmanor.org), (-) Order Number #100880972 on May 08, 2020 07:05 AM (PDT) pursuant to License Agreement with ICC & NYSDOS. No further reproduction, no

100880972

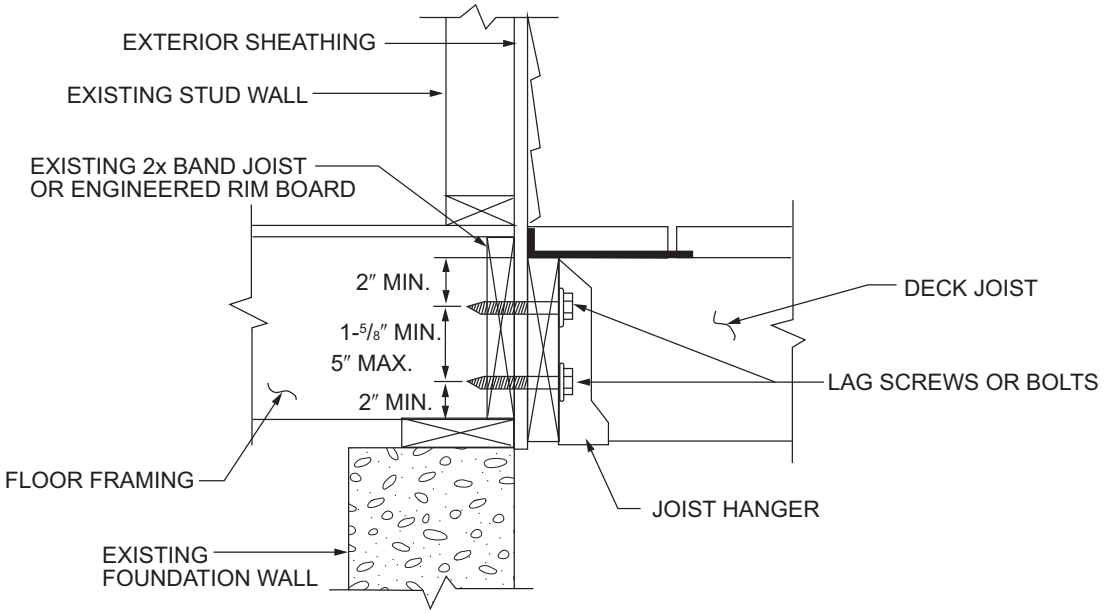

For SI: 1 inch = 25.4 mm.

FIGURE R507.9.1.3(2)
PLACEMENT OF LAG SCREWS AND BOLTS IN BAND JOISTS

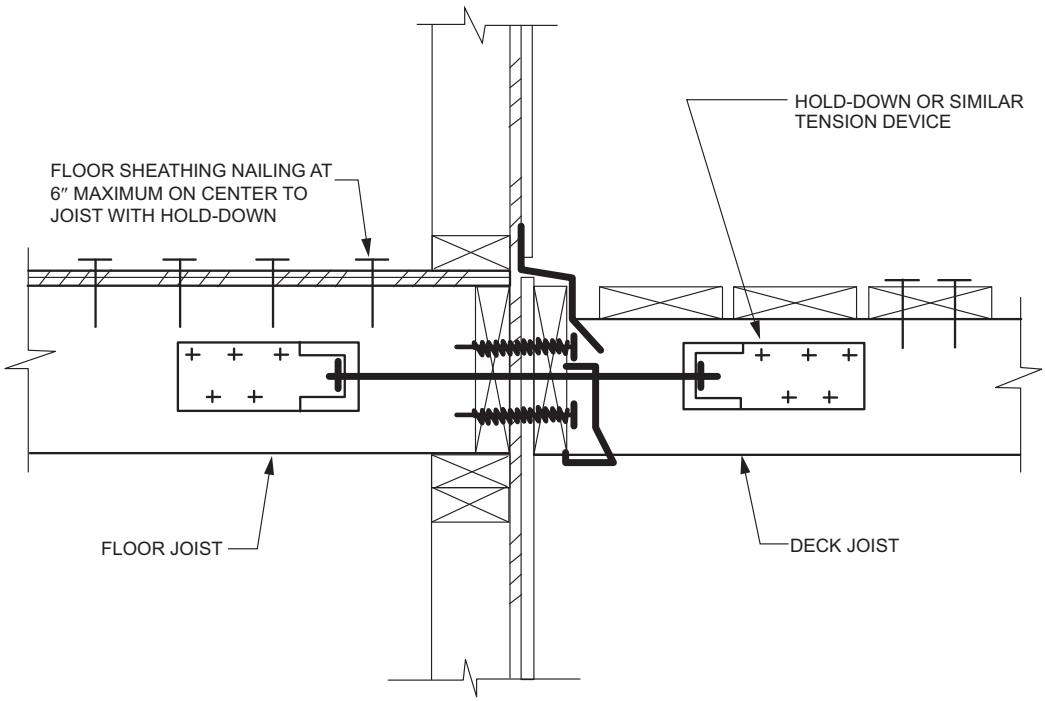

For SI: 1 inch = 25.4 mm.

FIGURE R507.9.2(1)
DECK ATTACHMENT FOR LATERAL LOADS

INTERNATIONAL CODE COUNCIL®
Copyright © 2019 ICC & NYSDOS. ALL RIGHTS RESERVED. Accessed by Lauren Gualdino (lgualdino@briarcliffmanor.org), (-) Order Number #100880972 on May 08, 2020 07:05 AM (PDT) pursuant to License Agreement with ICC & NYSDOS. No further reproduction, no

100880972

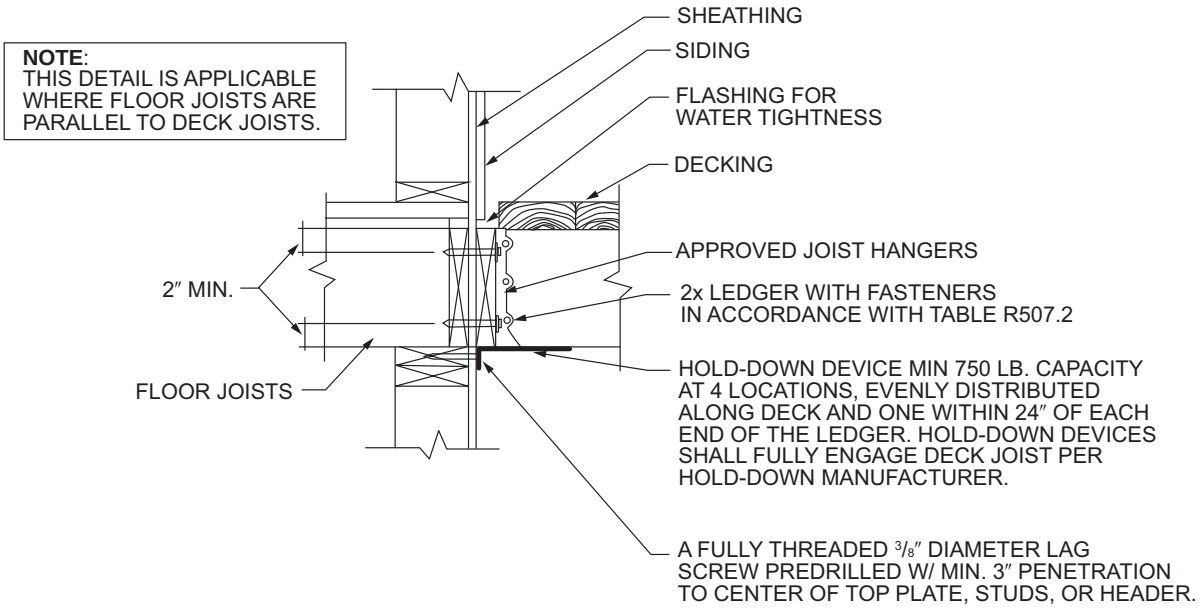

For SI: 1 inch = 25.4 mm, 1 foot = 304.8 mm.

FIGURE R507.9.2(2)
DECK ATTACHMENT FOR LATERAL LOADS

INTERNATIONAL CODE COUNCIL®
Copyright © 2019 ICC & NYSDOS. ALL RIGHTS RESERVED. Accessed by Lauren Gualdino (lgualdino@briarcliffmanor.org), (-) Order Number #100880972 on May 08, 2020 07:05 AM (PDT) pursuant to License Agreement with ICC & NYSDOS. No further reproduction, no

100880972

CHAPTER 6
WALL CONSTRUCTION

SECTION R601
GENERAL

R601.1 Application. The provisions of this chapter shall control the design and construction of walls and partitions for buildings.

R601.2 Requirements. Wall construction shall be capable of accommodating all loads imposed in accordance with Section R301 and of transmitting the resulting loads to the supporting structural elements.

R601.2.1 Compressible floor-covering materials. Compressible floor-covering materials that compress more than $^{1}/_{32}$ inch (0.8 mm) when subjected to 50 pounds (23 kg) applied over 1 inch square (645 mm) of material and are greater than $^{1}/_{8}$ inch (3.2 mm) in thickness in the uncompressed state shall not extend beneath walls, partitions or columns, which are fastened to the floor.

SECTION R602
WOOD WALL FRAMING

R602.1 General. Wood and wood-based products used for load-supporting purposes shall conform to the applicable provisions of this section.

[NY] R602.1.1 Sawn lumber. Sawn lumber shall be identified by a grade mark of an accredited lumber grading or inspection agency and have design values certified by an accreditation body that complies with DOC PS 20. In lieu of a grade mark, a certification of inspection issued by a lumber grading or inspection agency meeting the requirements of this section shall be accepted.

Exception: Dimension lumber which is neither identified by a grade mark nor issued a certificate of inspection by a lumber grading or inspection agency may be used for load-bearing purposes under the following conditions when authorized by the authority having jurisdiction:

1. The producing mill shall sell or provide the lumber directly to the ultimate consumer or the consumer's contract builder for use in an approved structure.
2. The producing mill shall certify in writing to the consumer or contract builder on a form to be produced by the authority having jurisdiction that the quality and safe working stresses of such lumber are equal to or exceed No. 2 grade of the species in accordance with the conditions set forth in DOC PS 20. Such certification shall be filed as part of the building permit application.

R602.1.2 End-jointed lumber. Approved end-jointed lumber identified by a grade mark conforming to Section R602.1 shall be permitted to be used interchangeably with solid-sawn members of the same species and grade. End-jointed lumber used in an assembly required elsewhere in this code to have a fire-resistance rating shall have the designation "Heat Resistant Adhesive" or "HRA" included in its grade mark.

R602.1.3 Structural glued-laminated timbers. Glued-laminated timbers shall be manufactured and identified as required in ANSI A190.1, ANSI 117 and ASTM D3737.

R602.1.4 Structural log members. Structural log members shall comply with the provisions of ICC 400.

R602.1.5 Structural composite lumber. Structural capacities for structural composite lumber shall be established and monitored in accordance with ASTM D5456.

R602.1.6 Cross-laminated timber. Cross-laminated timber shall be manufactured and identified as required by ANSI/APA PRG 320.

R602.1.7 Engineered wood rim board. Engineered wood rim boards shall conform to ANSI/APA PRR 410 or shall be evaluated in accordance with ASTM D7672. Structural capacities shall be in accordance with either ANSI/APA PRR 410 or established in accordance with ASTM D7672. Rim boards conforming to ANSI/APA PRR 410 shall be marked in accordance with that standard.

R602.1.8 Wood structural panels. Wood structural panel sheathing shall conform to DOC PS 1, DOC PS 2 or, when manufactured in Canada, CSA O325 or CSA O437. Panels shall be identified for grade, bond classification, and performance category by a grade mark or certificate of inspection issued by an approved agency.

R602.1.9 Particleboard. Particleboard shall conform to ANSI A208.1. Particleboard shall be identified by the grade mark or certificate of inspection issued by an approved agency.

R602.1.10 Fiberboard. Fiberboard shall conform to ASTM C208. Fiberboard sheathing, where used structurally, shall be identified by an approved agency as conforming to ASTM C208.

R602.1.11 Structural insulated panels. *Structural insulated panels* shall be manufactured and identified in accordance with ANSI/APA PRS 610.1.

R602.2 Grade. Studs shall be a minimum No. 3, standard or stud grade lumber.

Exception: Bearing studs not supporting floors and nonbearing studs shall be permitted to be utility grade lumber, provided that the studs are spaced in accordance with Table R602.3(5).

INTERNATIONAL CODE COUNCIL®
Copyright © 2019 ICC & NYSDOS. ALL RIGHTS RESERVED. Accessed by Lauren Gualdino (lgualdino@briarcliffmanor.org), (-) Order Number #100880972 on May 08, 2020 07:05 AM (PDT) pursuant to License Agreement with ICC & NYSDOS. No further reproduction, no

100880972

R602.3 Design and construction. Exterior walls of wood-frame construction shall be designed and constructed in accordance with the provisions of this chapter and Figures R602.3(1) and R602.3(2), or in accordance with AWC NDS. Components of exterior walls shall be fastened in accordance with Tables R602.3(1) through R602.3(4). Wall sheathing shall be fastened directly to framing members and, where placed on the exterior side of an exterior wall, shall be capable of resisting the wind pressures listed in Table R301.2(2) adjusted for height and exposure using Table R301.2(3) and shall conform to the requirements of Table R602.3(3). Wall sheathing used only for exterior wall covering purposes shall comply with Section R703.

Studs shall be continuous from support at the sole plate to a support at the top plate to resist loads perpendicular to the wall. The support shall be a foundation or floor, ceiling or roof diaphragm or shall be designed in accordance with accepted engineering practice.

Exception: Jack studs, trimmer studs and cripple studs at openings in walls that comply with Tables R602.7(1) and R602.7(2).

R602.3.1 Stud size, height and spacing. The size, height and spacing of studs shall be in accordance with Table R602.3(5).

Exceptions:

1. Utility grade studs shall not be spaced more than 16 inches (406 mm) on center, shall not support more than a roof and ceiling, and shall not exceed 8 feet (2438 mm) in height for exterior walls and load-bearing walls or 10 feet (3048 mm) for interior nonload-bearing walls.
2. Where snow loads are less than or equal to 25 pounds per square foot (1.2 kPa), and the ultimate design wind speed is less than or equal to 130 mph (58.1 m/s), 2-inch by 6-inch (38 mm by 140 mm) studs supporting a roof load with not more than 6 feet (1829 mm) of tributary length shall have a maximum height of 18 feet (5486 mm) where spaced at 16 inches (406 mm) on center, or 20 feet (6096 mm) where spaced at 12 inches (305 mm) on center. Studs shall be No. 2 grade lumber or better.
3. Exterior load-bearing studs not exceeding 12 feet (3658 mm) in height provided in accordance with Table R602.3(6). The minimum number of full-height studs adjacent to openings shall be in accordance with Section R602.7.5. The building shall be located in Exposure B, the roof live load shall not exceed 20 psf (0.96 kPa), and the ground snow load shall not exceed 30 psf (1.4 kPa). Studs and plates shall be No. 2 grade lumber or better.

R602.3.2 Top plate. Wood stud walls shall be capped with a double top plate installed to provide overlapping at corners and intersections with bearing partitions. End joints in top plates shall be offset not less than 24 inches (610 mm). Joints in plates need not occur over studs. Plates shall be not less than 2-inches (51 mm) nominal thickness and have a width not less than the width of the studs.

Exception: A single top plate used as an alternative to a double top plate shall comply with the following:

1. The single top plate shall be tied at corners, intersecting walls, and at in-line splices in straight wall lines in accordance with Table R602.3.2.
2. The rafters or joists shall be centered over the studs with a tolerance of not more than 1 inch (25 mm).
3. Omission of the top plate is permitted over headers where the headers are adequately tied to adjacent wall sections in accordance with Table R602.3.2.

R602.3.3 Bearing studs. Where joists, trusses or rafters are spaced more than 16 inches (406 mm) on center and the bearing studs below are spaced 24 inches (610 mm) on center, such members shall bear within 5 inches (127 mm) of the studs beneath.

Exceptions:

1. The top plates are two 2-inch by 6-inch (38 mm by 140 mm) or two 3-inch by 4-inch (64 mm by 89 mm) members.
2. A third top plate is installed.
3. Solid blocking equal in size to the studs is installed to reinforce the double top plate.

R602.3.4 Bottom (sole) plate. Studs shall have full bearing on a nominal 2-by (51 mm) or larger plate or sill having a width not less than to the width of the studs.

R602.3.5 Braced wall panel uplift load path. Braced wall panels located at exterior walls that support roof rafters or trusses (including stories below top story) shall have the framing members connected in accordance with one of the following:

1. Fastening in accordance with Table R602.3(1) where:
   1.1. The ultimate design wind speed does not exceed 115 mph (51 m/s), the wind exposure category is B, the roof pitch is 5:12 or greater, and the roof span is 32 feet (9754 mm) or less.
   1.2. The net uplift value at the top of a wall does not exceed 100 plf (146 N/mm). The net uplift value shall be determined in accordance with Section R802.11 and shall be permitted to be reduced by 60 plf (86 N/mm) for each full wall above.
2. Where the net uplift value at the top of a wall exceeds 100 plf (146 N/mm), installing approved uplift framing connectors to provide a continuous load path from the top of the wall to the foundation or to a point where the uplift force is 100 plf (146 N/mm) or less. The net uplift value shall be as determined in Item 1.2.
3. Wall sheathing and fasteners designed to resist combined uplift and shear forces in accordance with accepted engineering practice.

INTERNATIONAL CODE COUNCIL®
Copyright © 2019 ICC & NYSDOS. ALL RIGHTS RESERVED. Accessed by Lauren Gualdino (lgualdino@briarcliffmanor.org), (-) Order Number #100880972 on May 08, 2020 07:05 AM (PDT) pursuant to License Agreement with ICC & NYSDOS. No further reproduction, no

100880972

TABLE R602.3(1)
FASTENING SCHEDULE

ITEM	DESCRIPTION OF BUILDING ELEMENTS	NUMBER AND TYPE OF FASTENER[a, b, c]	SPACING AND LOCATION
		Roof	
1	Blocking between ceiling joists or rafters to top plate	4-8d box ($2^1/_2$″ × 0.113″) or 3-8d common ($2^1/_2$″ × 0.131″); or 3-10d box (3″ × 0.128″); or 3-3″ × 0.131″ nails	Toe nail
2	Ceiling joists to top plate	4-8d box ($2^1/_2$″ × 0.113″); or 3-8d common ($2^1/_2$″ × 0.131″); or 3-10d box (3″ × 0.128″); or 3-3″ × 0.131″ nails	Per joist, toe nail
3	Ceiling joist not attached to parallel rafter, laps over partitions (see Section R802.5.2 and Table R802.5.2)	4-10d box (3″ × 0.128″); or 3-16d common ($3^1/_2$″ × 0.162″); or 4-3″ × 0.131″ nails	Face nail
4	Ceiling joist attached to parallel rafter (heel joint) (see Section R802.5.2 and Table R802.5.2)	Table R802.5.2	Face nail
5	Collar tie to rafter, face nail or $1^1/_4$″ × 20 ga. ridge strap to rafter	4-10d box (3″ × 0.128″); or 3-10d common (3″ × 0.148″); or 4-3″ × 0.131″ nails	Face nail each rafter
6	Rafter or roof truss to plate	3-16d box nails ($3^1/_2$″ × 0.135″); or 3-10d common nails (3″ × 0.148″); or 4-10d box (3″ × 0.128″); or 4-3″ × 0.131″ nails	2 toe nails on one side and 1 toe nail on opposite side of each rafter or truss[i]
7	Roof rafters to ridge, valley or hip rafters or roof rafter to minimum 2″ ridge beam	4-16d ($3^1/_2$″ × 0.135″); or 3-10d common (3″ × 0.148″); or 4-10d box (3″ × 0.128″); or 4-3″ × 0.131″ nails	Toe nail
		3-16d box $3^1/_2$″ × 0.135″); or 2-16d common ($3^1/_2$″ × 0.162″); or 3-10d box (3″ × 0.128″); or 3-3″ × 0.131″ nails	End nail
		Wall	
8	Stud to stud (not at braced wall panels)	16d common ($3^1/_2$″ × 0.162″)	24″ o.c. face nail
		10d box (3″ × 0.128″); or 3″ × 0.131″ nails	16″ o.c. face nail
9	Stud to stud and abutting studs at intersecting wall corners (at braced wall panels)	16d box ($3^1/_2$″ × 0.135″); or 3″ × 0.131″ nails	12″ o.c. face nail
		16d common ($3^1/_2$″ × 0.162″)	16″ o.c. face nail
10	Built-up header (2″ to 2″ header with $^1/_2$″ spacer)	16d common ($3^1/_2$″ × 0.162″)	16″ o.c. each edge face nail
		16d box ($3^1/_2$″ × 0.135″)	12″ o.c. each edge face nail
11	Continuous header to stud	5-8d box ($2^1/_2$″ × 0.113″); or 4-8d common ($2^1/_2$″ × 0.131″); or 4-10d box (3″ × 0.128″)	Toe nail
12	Top plate to top plate	16d common ($3^1/_2$″ × 0.162″)	16″ o.c. face nail
		10d box (3″ × 0.128″); or 3″ × 0.131″ nails	12″ o.c. face nail
13	Double top plate splice	8-16d common ($3^1/_2$″ × 0.162″); or 12-16d box ($3^1/_2$″ × 0.135″); or 12-10d box (3″ × 0.128″); or 12-3″ × 0.131″ nails	Face nail on each side of end joint (minimum 24″ lap splice length each side of end joint)

(continued)

INTERNATIONAL CODE COUNCIL®
Copyright © 2019 ICC & NYSDOS. ALL RIGHTS RESERVED. Accessed by Lauren Gualdino (lgualdino@briarcliffmanor.org), (-) Order Number #100880972 on May 08, 2020 07:05 AM (PDT) pursuant to License Agreement with ICC & NYSDOS. No further reproduction, no

100880972

TABLE R602.3(1)—continued
FASTENING SCHEDULE

ITEM	DESCRIPTION OF BUILDING ELEMENTS	NUMBER AND TYPE OF FASTENER[a, b, c]	SPACING AND LOCATION
14	Bottom plate to joist, rim joist, band joist or blocking (not at braced wall panels)	16d common ($3^1/_2$″ × 0.162″)	16″ o.c. face nail
		16d box ($3^1/_2$″ × 0.135″); or 3″ × 0.131″ nails	12″ o.c. face nail
15	Bottom plate to joist, rim joist, band joist or blocking (at braced wall panel)	3-16d box ($3^1/_2$″ × 0.135″); or 2-16d common ($3^1/_2$″ × 0.162″); or 4-3″ × 0.131″ nails	3 each 16″ o.c. face nail 2 each 16″ o.c. face nail 4 each 16″ o.c. face nail
16	Top or bottom plate to stud	4-8d box ($2^1/_2$″ × 0.113″); or 3-16d box ($3^1/_2$″ × 0.135″); or 4-8d common ($2^1/_2$″ × 0.131″); or 4-10d box (3″ × 0.128″); or 4-3″ × 0.131″ nails	Toe nail
		3-16d box ($3^1/_2$″ × 0.135″); or 2-16d common ($3^1/_2$″ × 0.162″); or 3-10d box (3″ × 0.128″); or 3-3″ × 0.131″ nails	End nail
17	Top plates, laps at corners and intersections	3-10d box (3″ × 0.128″); or 2-16d common ($3^1/_2$″ × 0.162″); or 3-3″ × 0.131″ nails	Face nail
18	1″ brace to each stud and plate	3-8d box ($2^1/_2$″ × 0.113″); or 2-8d common ($2^1/_2$″ × 0.131″); or 2-10d box (3″ × 0.128″); or 2 staples $1^3/_4$″	Face nail
19	1″ × 6″ sheathing to each bearing	3-8d box ($2^1/_2$″ × 0.113″); or 2-8d common ($2^1/_2$″ × 0.131″); or 2-10d box (3″ × 0.128″); or 2 staples, 1″ crown, 16 ga., $1^3/_4$″ long	Face nail
20	1″ × 8″ and wider sheathing to each bearing	3-8d box ($2^1/_2$″ × 0.113″); or 3-8d common ($2^1/_2$″ × 0.131″); or 3-10d box (3″ × 0.128″); or 3 staples, 1″ crown, 16 ga., $1^3/_4$″ long	Face nail
		Wider than 1″ × 8″ 4-8d box ($2^1/_2$″ × 0.113″); or 3-8d common ($2^1/_2$″ × 0.131″); or 3-10d box (3″ × 0.128″); or 4 staples, 1″ crown, 16 ga., $1^3/_4$″ long	
Floor			
21	Joist to sill, top plate or girder	4-8d box ($2^1/_2$″ × 0.113″); or 3-8d common ($2^1/_2$″ × 0.131″); or 3-10d box (3″ × 0.128″); or 3-3″ × 0.131″ nails	Toe nail
22	Rim joist, band joist or blocking to sill or top plate (roof applications also)	8d box ($2^1/_2$″ × 0.113″)	4″ o.c. toe nail
		8d common ($2^1/_2$″ × 0.131″); or 10d box (3″ × 0.128″); or 3″ × 0.131″ nails	6″ o.c. toe nail
23	1″ × 6″ subfloor or less to each joist	3-8d box ($2^1/_2$″ × 0.113″); or 2-8d common ($2^1/_2$″ × 0.131″); or 3-10d box (3″ × 0.128″); or 2 staples, 1″ crown, 16 ga., $1^3/_4$″ long	Face nail

(continued)

INTERNATIONAL CODE COUNCIL®
Copyright © 2019 ICC & NYSDOS. ALL RIGHTS RESERVED. Accessed by Lauren Gualdino (lgualdino@briarcliffmanor.org), (-) Order Number #100880972 on May 08, 2020 07:05 AM (PDT) pursuant to License Agreement with ICC & NYSDOS. No further reproduction, no

100880972

TABLE R602.3(1)
FASTENING SCHEDULE—continued

ITEM	DESCRIPTION OF BUILDING ELEMENTS	NUMBER AND TYPE OF FASTENER[a, b, c]	SPACING AND LOCATION	
		Floor		
24	2″ subfloor to joist or girder	3-16d box (3 1/2″ × 0.135″); or 2-16d common (3 1/2″ × 0.162″)	Blind and face nail	
25	2″ planks (plank & beam—floor & roof)	3-16d box (3 1/2″ × 0.135″); or 2-16d common (3 1/2″ × 0.162″)	At each bearing, face nail	
26	Band or rim joist to joist	3-16d common (3 1/2″ × 0.162″) 4-10 box (3″ × 0.128″), or 4-3″ × 0.131″ nails; or 4-3″ × 14 ga. staples, 7/16″ crown	End nail	
27	Built-up girders and beams, 2-inch lumber layers	20d common (4″ × 0.192″); or	Nail each layer as follows: 32″ o.c. at top and bottom and staggered.	
		10d box (3″ × 0.128″); or 3″ × 0.131″ nails	24″ o.c. face nail at top and bottom staggered on opposite sides	
		And: 2-20d common (4″ × 0.192″); or 3-10d box (3″ × 0.128″); or 3-3″ × 0.131″ nails	Face nail at ends and at each splice	
28	Ledger strip supporting joists or rafters	4-16d box (3 1/2″ × 0.135″); or 3-16d common (3 1/2″ × 0.162″); or 4-10d box (3″ × 0.128″); or 4-3″ × 0.131″ nails	At each joist or rafter, face nail	
29	Bridging or blocking to joist	2-10d box (3″ × 0.128″), or 2-8d common (2 1/2″ × 0.131″; or 2-3″ × 0.131″) nails	Each end, toe nail	
ITEM	DESCRIPTION OF BUILDING ELEMENTS	NUMBER AND TYPE OF FASTENER[a, b, c]	SPACING OF FASTENERS	
			Edges (inches)[h]	Intermediate supports[c, e] (inches)
		Wood structural panels, subfloor, roof and interior wall sheathing to framing and particleboard wall sheathing to framing [see Table R602.3(3) for wood structural panel *exterior* wall sheathing to wall framing]		
30	3/8″ – 1/2″	6d common (2″ × 0.113″) nail (subfloor, wall)[i] 8d common (2 1/2″ × 0.131″) nail (roof); or RSRS-01 (2 3/8″ × 0.113") nail (roof)[j]	6	12[f]
31	19/32″ – 1″	8d common nail (2 1/2″ × 0.131″); or RSRS-01; (2 3/8″ × 0.113") nail (roof)[j]	6	12[f]
32	1 1/8″ – 1 1/4″	10d common (3″ × 0.148″) nail; or 8d (2 1/2″ × 0.131″) deformed nail	6	12
		Other wall sheathing[g]		
33	1/2″ structural cellulosic fiberboard sheathing	1 1/2″ galvanized roofing nail, 7/16″ head diameter, or 1 1/4″ long 16 ga. staple with 7/16″ or 1″ crown	3	6
34	25/32″ structural cellulosic fiberboard sheathing	1 3/4″ galvanized roofing nail, 7/16″ head diameter, or 1 1/2″ long 16 ga. staple with 7/16″ or 1″ crown	3	6
35	1/2″ gypsum sheathing[d]	1 1/2″ galvanized roofing nail; staple galvanized, 1 1/2″ long; 1 1/4″ screws, Type W or S	7	7
36	5/8″ gypsum sheathing[d]	1 3/4″ galvanized roofing nail; staple galvanized, 1 5/8″ long; 1 5/8″ screws, Type W or S	7	7
		Wood structural panels, combination subfloor underlayment to framing		
37	3/4″ and less	6d deformed (2″ × 0.120″) nail; or 8d common (2 1/2″ × 0.131″) nail	6	12
38	7/8″ – 1″	8d common (2 1/2″ × 0.131″) nail; or 8d deformed (2 1/2″ × 0.120″) nail	6	12
39	1 1/8″ – 1 1/4″	10d common (3″ × 0.148″) nail; or 8d deformed (2 1/2″ × 0.120″) nail	6	12

For SI: 1 inch = 25.4 mm, 1 foot = 304.8 mm, 1 mile per hour = 0.447 m/s; 1 ksi = 6.895 MPa.

(continued)

INTERNATIONAL CODE COUNCIL®
Copyright © 2019 ICC & NYSDOS. ALL RIGHTS RESERVED. Accessed by Lauren Gualdino (lgualdino@briarcliffmanor.org), (-) Order Number #100880972 on May 08, 2020 07:05 AM (PDT) pursuant to License Agreement with ICC & NYSDOS. No further reproduction, no

100880972

TABLE R602.3(1)—continued
FASTENING SCHEDULE

a. Nails are smooth-common, box or deformed shanks except where otherwise stated. Nails used for framing and sheathing connections shall have minimum average bending yield strengths as shown: 80 ksi for shank diameter of 0.192 inch (20d common nail), 90 ksi for shank diameters larger than 0.142 inch but not larger than 0.177 inch, and 100 ksi for shank diameters of 0.142 inch or less.
b. Staples are 16 gage wire and have a minimum $^{7}/_{16}$-inch on diameter crown width.
c. Nails shall be spaced at not more than 6 inches on center at all supports where spans are 48 inches or greater.
d. Four-foot by 8-foot or 4-foot by 9-foot panels shall be applied vertically.
e. Spacing of fasteners not included in this table shall be based on Table R602.3(2).
f. For wood structural panel roof sheathing attached to gable end roof framing and to intermediate supports within 48 inches of roof edges and ridges, nails shall be spaced at 6 inches on center where the ultimate design wind speed is less than 130 mph and shall be spaced 4 inches on center where the ultimate design wind speed is 130 mph or greater but less than 140 mph.
g. Gypsum sheathing shall conform to ASTM C1396 and shall be installed in accordance with GA 253. Fiberboard sheathing shall conform to ASTM C208.
h. Spacing of fasteners on floor sheathing panel edges applies to panel edges supported by framing members and required blocking and at floor perimeters only. Spacing of fasteners on roof sheathing panel edges applies to panel edges supported by framing members and required blocking. Blocking of roof or floor sheathing panel edges perpendicular to the framing members need not be provided except as required by other provisions of this code. Floor perimeter shall be supported by framing members or solid blocking.
i. Where a rafter is fastened to an adjacent parallel ceiling joist in accordance with this schedule, provide two toe nails on one side of the rafter and toe nails from the ceiling joist to top plate in accordance with this schedule. The toe nail on the opposite side of the rafter shall not be required.
j. RSRS-01 is a Roof Sheathing Ring Shank nail meeting the specifications in ASTM F1667.

R602.4 Interior load-bearing walls. Interior load-bearing walls shall be constructed, framed and fireblocked as specified for exterior walls.

R602.5 Interior nonbearing walls. Interior nonbearing walls shall be permitted to be constructed with 2-inch by 3-inch (51 mm by 76 mm) studs spaced 24 inches (610 mm) on center or, where not part of a *braced wall line*, 2-inch by 4-inch (51 mm by 102 mm) flat studs spaced at 16 inches (406 mm) on center. Interior nonbearing walls shall be capped with not less than a single top plate. Interior nonbearing walls shall be fireblocked in accordance with Section R602.8.

R602.6 Drilling and notching of studs. Drilling and notching of studs shall be in accordance with the following:

1. Notching. Any stud in an exterior wall or bearing partition shall be permitted to be cut or notched to a depth not exceeding 25 percent of its width. Studs in nonbearing partitions shall be permitted to be notched to a depth not to exceed 40 percent of a single stud width.
2. Drilling. Any stud shall be permitted to be bored or drilled, provided that the diameter of the resulting hole is not more than 60 percent of the stud width, the edge of the hole is not more than $^{5}/_{8}$ inch (16 mm) to the edge of the stud, and the hole is not located in the same section as a cut or notch. Studs located in exterior walls or bearing partitions drilled over 40 percent and up to 60 percent shall be doubled with not more than two successive doubled studs bored. See Figures R602.6(1) and R602.6(2).

   Exception: Use of *approved* stud shoes is permitted where they are installed in accordance with the manufacturer's recommendations.

R602.6.1 Drilling and notching of top plate. Where piping or ductwork is placed in or partly in an exterior wall or interior load-bearing wall, necessitating cutting, drilling or notching of the top plate by more than 50 percent of its width, a galvanized metal tie not less than 0.054 inch thick (1.37 mm) (16 ga) and $1^{1}/_{2}$ inches (38 mm) wide shall be fastened across and to the plate at each side of the opening with not less than eight 10d (0.148 inch diameter) nails having a minimum length of $1^{1}/_{2}$ inches (38 mm) at each side or equivalent. The metal tie must extend not less than 6 inches past the opening. See Figure R602.6.1.

Exception: Where the entire side of the wall with the notch or cut is covered by wood structural panel sheathing.

R602.7 Headers. For header spans, see Tables R602.7(1), R602.7(2) and R602.7(3).

R602.7.1 Single member headers. Single headers shall be framed with a single flat 2-inch-nominal (51 mm) member or wall plate not less in width than the wall studs on the top and bottom of the header in accordance with Figures R602.7.1(1) and R602.7.1(2) and face nailed to the top and bottom of the header with 10d box nails (3 inches × 0.128 inches) spaced 12 inches on center.

R602.7.2 Rim board headers. Rim board header size, material and span shall be in accordance with Table R602.7(1). Rim board headers shall be constructed in accordance with Figure R602.7.2 and shall be supported at each end by full-height studs. The number of full-height studs at each end shall be not less than the number of studs displaced by half of the header span based on the maximum stud spacing in accordance with Table R602.3(5). Rim board headers supporting concentrated loads shall be designed in accordance with accepted engineering practice.

R602.7.3 Wood structural panel box headers. Wood structural panel box headers shall be constructed in accordance with Figure R602.7.3 and Table R602.7.3.

R602.7.4 Nonbearing walls. Load-bearing headers are not required in interior or exterior nonbearing walls. A single flat 2-inch by 4-inch (51 mm by 102 mm) member shall be permitted to be used as a header in interior or exterior nonbearing walls for openings up to 8 feet (2438 mm) in width if the vertical distance to the parallel nailing surface above is not more than 24 inches (610 mm). For such nonbearing headers, cripples or blocking are not required above the header.

INTERNATIONAL CODE COUNCIL®
Copyright © 2019 ICC & NYSDOS. ALL RIGHTS RESERVED. Accessed by Lauren Gualdino (lgualdino@briarcliffmanor.org), (-) Order Number #100880972 on May 08, 2020 07:05 AM (PDT) pursuant to License Agreement with ICC & NYSDOS. No further reproduction, no

100880972

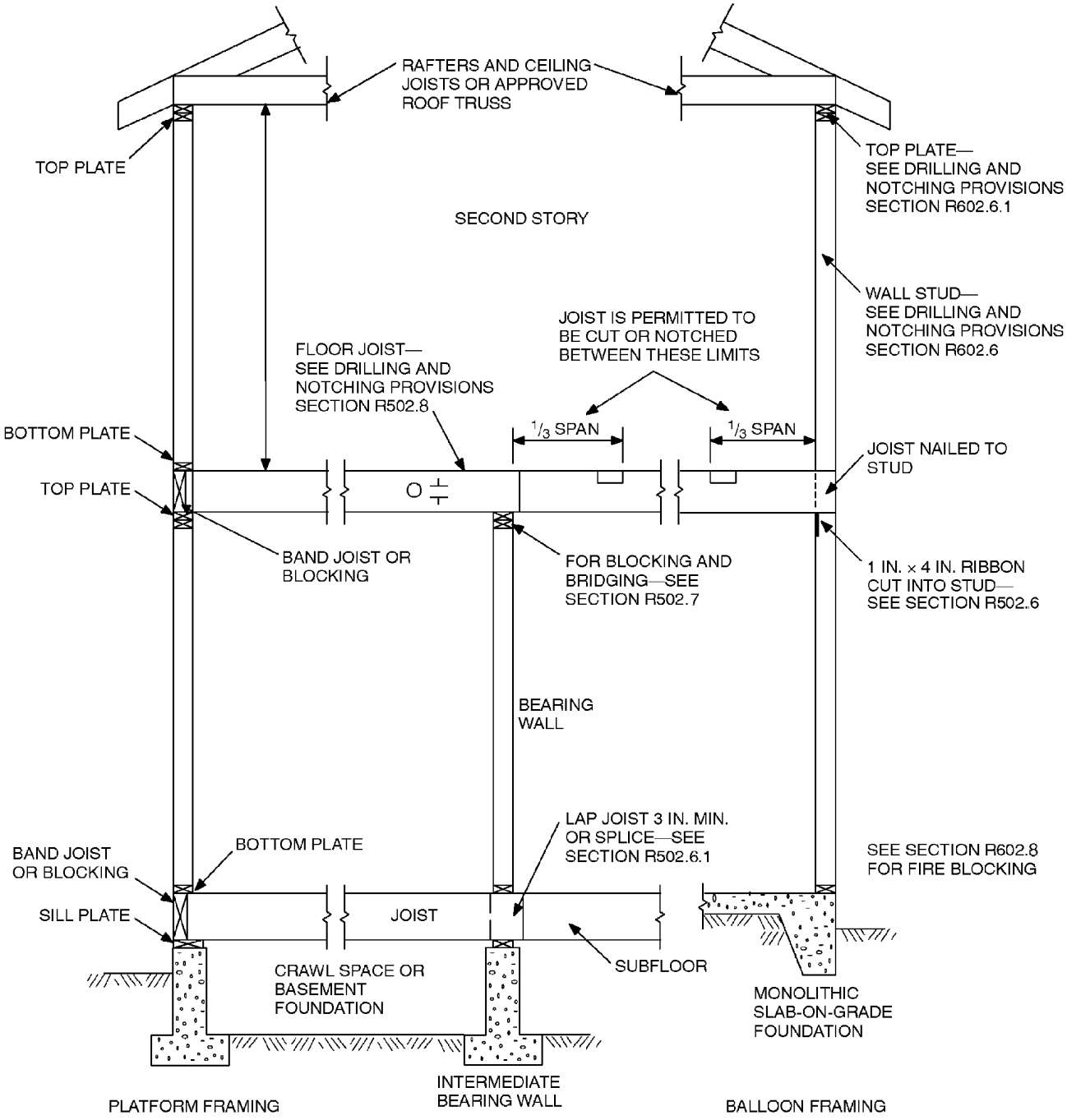

For SI: 1 inch = 25.4 mm, 1 foot = 304.8 mm.

FIGURE R602.3(1)
TYPICAL WALL, FLOOR AND ROOF FRAMING

INTERNATIONAL CODE COUNCIL®
Copyright © 2019 ICC & NYSDOS. ALL RIGHTS RESERVED. Accessed by Lauren Gualdino (lgualdino@briarcliffmanor.org), (-) Order Number #100880972 on May 08, 2020 07:05 AM (PDT) pursuant to License Agreement with ICC & NYSDOS. No further reproduction, no

100880972

TABLE R602.3(2)
ALTERNATE ATTACHMENTS TO TABLE R602.3(1)

NOMINAL MATERIAL THICKNESS (inches)	DESCRIPTION[a, b] OF FASTENER AND LENGTH (inches)	SPACING[c] OF FASTENERS	
		Edges (inches)	Intermediate supports (inches)
Wood structural panels subfloor, roof[g] and wall sheathing to framing and particleboard wall sheathing to framing[f]			
Up to 1/2	Staple 15 ga. 1 3/4	4	8
	0.097 - 0.099 Nail 2 1/4	3	6
	Staple 16 ga. 1 3/4	3	6
19/32 and 5/8	0.113 Nail 2	3	6
	Staple 15 and 16 ga. 2	4	8
	0.097 - 0.099 Nail 2 1/4	4	8
23/32 and 3/4	Staple 14 ga. 2	4	8
	Staple 15 ga. 1 3/4	3	6
	0.097 - 0.099 Nail 2 1/4	4	8
	Staple 16 ga. 2	4	8
1	Staple 14 ga. 2 1/4	4	8
	0.113 Nail 2 1/4	3	6
	Staple 15 ga. 2 1/4	4	8
	0.097 - 0.099 Nail 2 1/2	4	8
NOMINAL MATERIAL THICKNESS (inches)	**DESCRIPTION[a, b] OF FASTENER AND LENGTH (inches)**	**SPACING[c] OF FASTENERS**	
		Edges (inches)	**Body of panel[d] (inches)**
Floor underlayment; plywood-hardboard-particleboard[f]-fiber-cement[h]			
Fiber-cement			
1/4	3d, corrosion-resistant, ring shank nails (finished flooring other than tile)	3	6
	Staple 18 ga., 7/8 long, 1/4 crown (finished flooring other than tile)	3	6
	1 1/4 long × .121 shank × .375 head diameter corrosion-resistant (galvanized or stainless steel) roofing nails (for tile finish)	8	8
	1 1/4 long, No. 8 × .375 head diameter, ribbed wafer-head screws (for tile finish)	8	8
Plywood			
1/4 and 5/16	1 1/4 ring or screw shank nail-minimum 12 1/2 ga. (0.099″) shank diameter	3	6
	Staple 18 ga., 7/8, 3/16 crown width	2	5
11/32, 3/8, 15/32, and 1/2	1 1/4 ring or screw shank nail-minimum 12 1/2 ga. (0.099″) shank diameter	6	8[e]
19/32, 5/8, 23/32 and 3/4	1 1/2 ring or screw shank nail-minimum 12 1/2 ga. (0.099″) shank diameter	6	8
	Staple 16 ga. 1 1/2	6	8
Hardboard[f]			
0.200	1 1/2 long ring-grooved underlayment nail	6	6
	4d cement-coated sinker nail	6	6
	Staple 18 ga., 7/8 long (plastic coated)	3	6
Particleboard			
1/4	4d ring-grooved underlayment nail	3	6
	Staple 18 ga., 7/8 long, 3/16 crown	3	6
3/8	6d ring-grooved underlayment nail	6	10
	Staple 16 ga., 1 1/8 long, 3/8 crown	3	6
1/2, 5/8	6d ring-grooved underlayment nail	6	10
	Staple 16 ga., 1 5/8 long, 3/8 crown	3	6

(continued)

INTERNATIONAL CODE COUNCIL®
Copyright © 2019 ICC & NYSDOS. ALL RIGHTS RESERVED. Accessed by Lauren Gualdino (lgualdino@briarcliffmanor.org), (-) Order Number #100880972 on May 08, 2020 07:05 AM (PDT) pursuant to License Agreement with ICC & NYSDOS. No further reproduction, no

100880972

TABLE R602.3(2)—continued
ALTERNATE ATTACHMENTS TO TABLE R602.3(1)

For SI: 1 inch = 25.4 mm.

a. Nail is a general description and shall be permitted to be T-head, modified round head or round head.
b. Staples shall have a minimum crown width of $^{7}/_{16}$-inch on diameter except as noted.
c. Nails or staples shall be spaced at not more than 6 inches on center at all supports where spans are 48 inches or greater. Nails or staples shall be spaced at not more than 12 inches on center at intermediate supports for floors.
d. Fasteners shall be placed in a grid pattern throughout the body of the panel.
e. For 5-ply panels, intermediate nails shall be spaced not more than 12 inches on center each way.
f. Hardboard underlayment shall conform to CPA/ANSI A135.4
g. Specified alternate attachments for roof sheathing shall be permitted where the ultimate design wind speed is less than 130 mph. Fasteners attaching wood structural panel roof sheathing to gable end wall framing shall be installed using the spacing listed for panel edges.
h. Fiber-cement underlayment shall conform to ASTM C1288 or ISO 8336, Category C.

TABLE R602.3(3)
REQUIREMENTS FOR WOOD STRUCTURAL PANEL WALL SHEATHING USED TO RESIST WIND PRESSURES[a, b, c]

MINIMUM NAIL		MINIMUM WOOD STRUCTURAL PANEL SPAN RATING	MINIMUM NOMINAL PANEL THICKNESS (inches)	MAXIMUM WALL STUD SPACING (inches)	PANEL NAIL SPACING		ULTIMATE DESIGN WIND SPEED V_{ult} (mph)		
Size	Penetration (inches)				Edges (inches o.c.)	Field (inches o.c.)	Wind exposure category		
							B	C	D
6d Common (2.0″ × 0.113″)	1.5	24/0	$^{3}/_{8}$	16	6	12	140	115	110
8d Common (2.5″ × 0.131″)	1.75	24/16	$^{7}/_{16}$	16	6	12	170	140	135
				24	6	12	140	115	110

For SI: 1 inch = 25.4 mm, 1 mile per hour = 0.447 m/s.

a. Panel strength axis parallel or perpendicular to supports. Three-ply plywood sheathing with studs spaced more than 16 inches on center shall be applied with panel strength axis perpendicular to supports.
b. Table is based on wind pressures acting toward and away from building surfaces in accordance with Section R301.2. Lateral bracing requirements shall be in accordance with Section R602.10.
c. Wood structural panels with span ratings of Wall-16 or Wall-24 shall be permitted as an alternate to panels with a 24/0 span rating. Plywood siding rated 16 o.c. or 24 o.c. shall be permitted as an alternate to panels with a 24/16 span rating. Wall-16 and Plywood siding 16 o.c. shall be used with studs spaced not more than 16 inches on center.

TABLE R602.3(4)
ALLOWABLE SPANS FOR PARTICLEBOARD WALL SHEATHING[a]

THICKNESS (inch)	GRADE	STUD SPACING (inches)	
		Where siding is nailed to studs	Where siding is nailed to sheathing
$^{3}/_{8}$	M-1 Exterior glue	16	—
$^{1}/_{2}$	M-2 Exterior glue	16	16

For SI: 1 inch = 25.4 mm.

a. Wall sheathing not exposed to the weather. If the panels are applied horizontally, the end joints of the panel shall be offset so that four panel corners will not meet. Panel edges must be supported. Leave a $^{1}/_{16}$-inch gap between panels and nail not less than $^{3}/_{8}$ inch from panel edges.

INTERNATIONAL CODE COUNCIL®
Copyright © 2019 ICC & NYSDOS. ALL RIGHTS RESERVED. Accessed by Lauren Gualdino (lgualdino@briarcliffmanor.org), (-) Order Number #100880972 on May 08, 2020 07:05 AM (PDT) pursuant to License Agreement with ICC & NYSDOS. No further reproduction, no

100880972

TABLE R602.3(5)
SIZE, HEIGHT AND SPACING OF WOOD STUDS[a]

STUD SIZE (inches)	BEARING WALLS					NONBEARING WALLS	
	Laterally unsupported stud height[a] (feet)	Maximum spacing where supporting a roof-ceiling assembly or a habitable attic assembly, only (inches)	Maximum spacing where supporting one floor, plus a roof-ceiling assembly or a habitable attic assembly (inches)	Maximum spacing where supporting two floors, plus a roof-ceiling assembly or a habitable attic assembly (inches)	Maximum spacing where supporting one floor height[a] (inches)	Laterally unsupported stud height[a] (feet)	Maximum spacing (inches)
		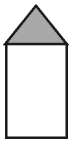	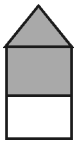		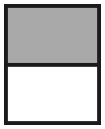		
2 × 3[b]	—	—	—	—	—	10	16
2 × 4	10	24[c]	16[c]	—	24	14	24
3 × 4	10	24	24	16	24	14	24
2 × 5	10	24	24	—	24	16	24
2 × 6	10	24	24	16	24	20	24

For SI: 1 inch = 25.4 mm, 1 foot = 304.8 mm.

a. Listed heights are distances between points of lateral support placed perpendicular to the plane of the wall. Bearing walls shall be sheathed on not less than one side or bridging shall be installed not greater than 4 feet apart measured vertically from either end of the stud. Increases in unsupported height are permitted where in compliance with Exception 2 of Section R602.3.1 or designed in accordance with accepted engineering practice.

b. Shall not be used in exterior walls.

c. A habitable attic assembly supported by 2 × 4 studs is limited to a roof span of 32 feet. Where the roof span exceeds 32 feet, the wall studs shall be increased to 2 × 6 or the studs shall be designed in accordance with accepted engineering practice.

TABLE R602.3(6)
ALTERNATE WOOD BEARING WALL STUD SIZE, HEIGHT AND SPACING

STUD HEIGHT	SUPPORTING	STUD SPACING[a]	ULTIMATE DESIGN WIND SPEED					
			115 mph		130 mph[b]		140 mph[b]	
			Maximum roof/floor span[c]		Maximum roof/floor span[c]		Maximum roof/floor span[c]	
			12 ft.	24 ft.	12 ft.	24 ft.	12 ft.	24 ft.
11 ft.	Roof Only	12 in.	2 × 4	2 × 4	2 × 4	2 × 4	2 × 4	2 × 4
		16 in.	2 × 4	2 × 4	2 × 4	2 × 6	2 × 4	2 × 6
		24 in.	2 × 6	2 × 6	2 × 6	2 × 6	2 × 6	2 × 6
	Roof and One Floor	12 in.	2 × 4	2 × 6	2 × 4	2 × 6	2 × 4	2 × 6
		16 in.	2 × 6	2 × 6	2 × 6	2 × 6	2 × 6	2 × 6
		24 in.	2 × 6	2 × 6	2 × 6	2 × 6	2 × 6	2 × 6
12 ft.	Roof Only	12 in	2 × 4	2 × 4	2 × 4	2 × 6	2 × 4	2 × 6
		16 in.	2 × 4	2 × 6	2 × 6	2 × 6	2 × 6	2 × 6
		24 in.	2 × 6	2 × 6	2 × 6	2 × 6	2 × 6	2 × 6
	Roof and One Floor	12 in	2 × 4	2 × 6	2 × 6	2 × 6	2 × 6	2 × 6
		16 in.	2 × 6	2 × 6	2 × 6	2 × 6	2 × 6	2 × 6
		24 in.	2 × 6	2 × 6	2 × 6	2 × 6	2 × 6	DR

For SI: 1 inch = 25.4mm, 1 foot = 304.8 mm, 1 mph = 0.447 m/s, 1 pound = 4.448 N.

DR = Design Required.

a. Wall studs not exceeding 16 inches on center shall be sheathed with minimum $^1/_2$-inch gypsum board on the interior and $^3/_8$-inch wood structural panel sheathing on the exterior. Wood structural panel sheathing shall be attached with 8d (2.5" x 0.131") nails not greater than 6 inches on center along panel edges and 12 inches on center at intermediate supports, and all panel joints shall occur over studs or blocking.

b. Where the ultimate design wind speed exceeds 115 mph, studs shall be attached to top and bottom plates with connectors having a minimum 300-pound lateral capacity.

c. The maximum span is applicable to both single- and multiple-span roof and floor conditions. The roof assembly shall not contain a habitable attic.

INTERNATIONAL CODE COUNCIL®
Copyright © 2019 ICC & NYSDOS. ALL RIGHTS RESERVED. Accessed by Lauren Gualdino (lgualdino@briarcliffmanor.org), (-) Order Number #100880972 on May 08, 2020 07:05 AM (PDT) pursuant to License Agreement with ICC & NYSDOS. No further reproduction, no

100880972

TABLE R602.3.2
SINGLE TOP-PLATE SPLICE CONNECTION DETAILS

CONDITION	TOP-PLATE SPLICE LOCATION			
	Corners and intersecting walls		Butt joints in straight walls	
	Splice plate size	Minimum nails each side of joint	Splice plate size	Minimum nails each side of joint
Structures in SDC A-C; and in SDC D_0, D_1 and D_2 with braced wall line spacing less than 25 feet	3″ × 6″ × 0.036″ galvanized steel plate or equivalent	(6) 8d box ($2^1/_2$″ × 0.113″) nails	3″ × 12″ × 0.036″ galvanized steel plate or equivalent	(12) 8d box ($2^1/_2$″ × 0.113″) nails
Structures in SDC D_0, D_1 and D_2, with braced wall line spacing greater than or equal to 25 feet	3″ × 8″ by 0.036″ galvanized steel plate or equivalent	(9) 8d box ($2^1/_2$″ × 0.113″) nails	3″ × 16″ × 0.036″ galvanized steel plate or equivalent	(18) 8d box ($2^1/_2$″ × 0.113″) nails

For SI: 1 inch = 25.4 mm, 1 foot = 304.8 mm.

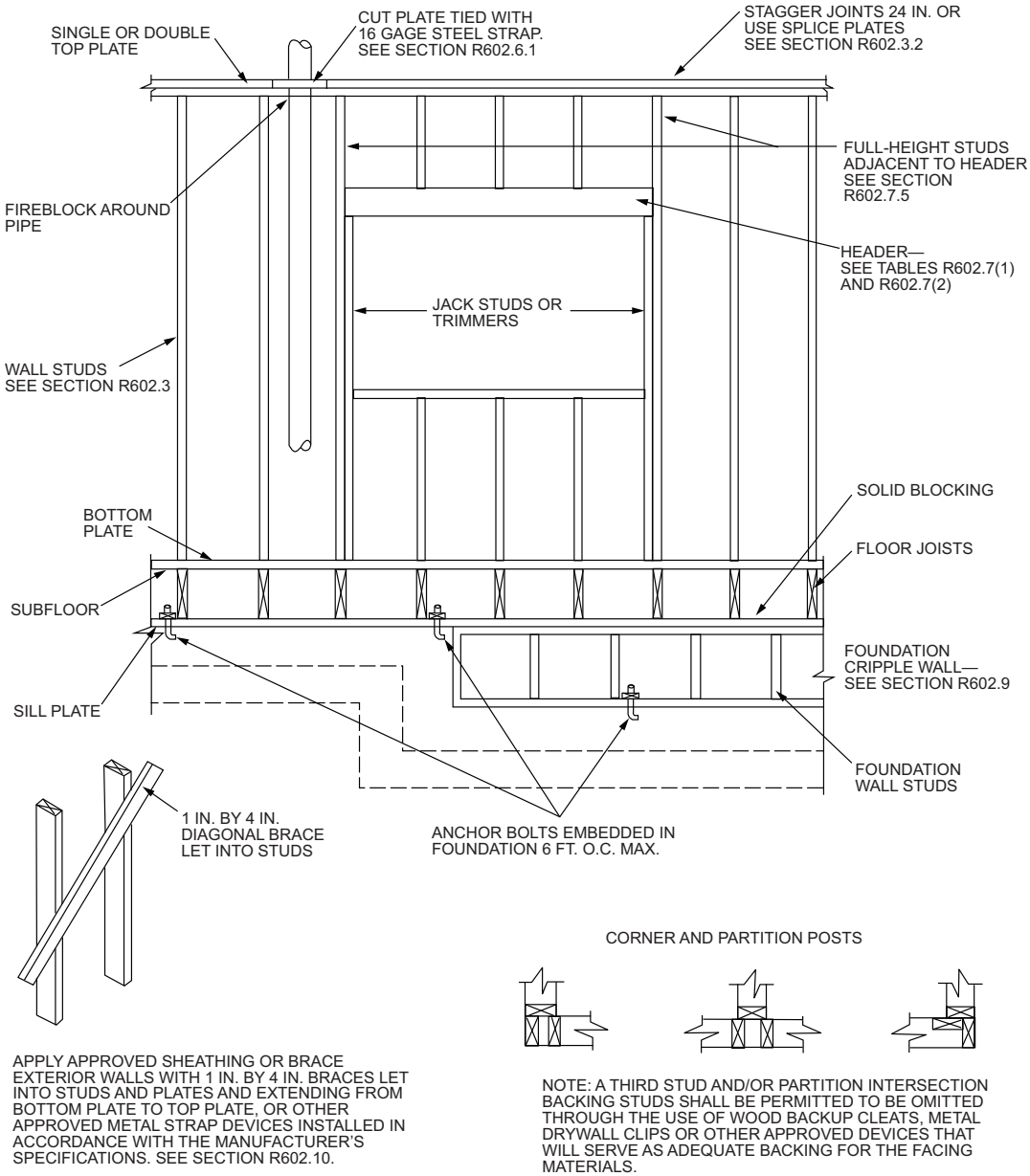

For SI: 1 inch = 25.4 mm, 1 foot = 304.8 mm.

FIGURE R602.3(2)
FRAMING DETAILS

INTERNATIONAL CODE COUNCIL®
Copyright © 2019 ICC & NYSDOS. ALL RIGHTS RESERVED. Accessed by Lauren Gualdino (lgualdino@briarcliffmanor.org), (-) Order Number #100880972 on May 08, 2020 07:05 AM (PDT) pursuant to License Agreement with ICC & NYSDOS. No further reproduction, no

100880972

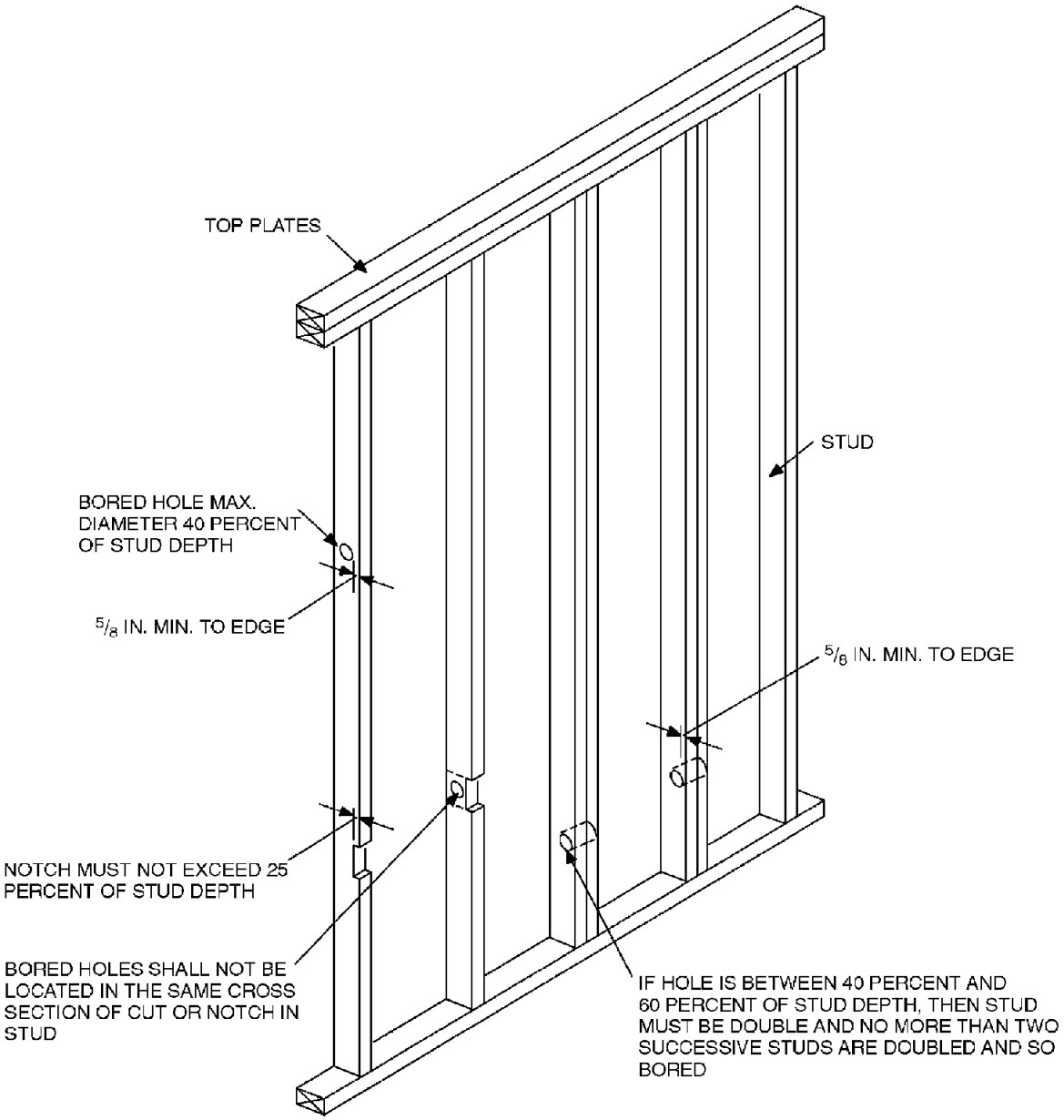

For SI: 1 inch = 25.4 mm.
Note: Condition for exterior and bearing walls.

FIGURE R602.6(1)
NOTCHING AND BORED HOLE LIMITATIONS FOR EXTERIOR WALLS AND BEARING WALLS

INTERNATIONAL CODE COUNCIL®
Copyright © 2019 ICC & NYSDOS. ALL RIGHTS RESERVED. Accessed by Lauren Gualdino (lgualdino@briarcliffmanor.org), (-) Order Number #100880972 on May 08, 2020 07:05 AM (PDT) pursuant to License Agreement with ICC & NYSDOS. No further reproduction, no

100880972

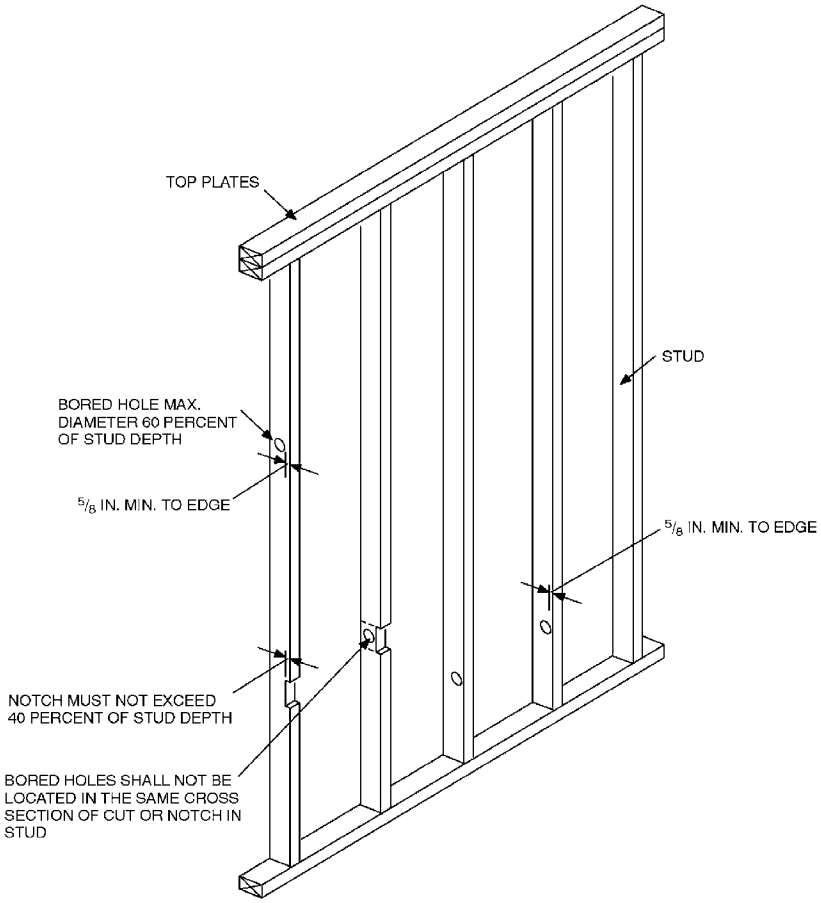

For SI: 1 inch = 25.4 mm.

FIGURE R602.6(2)
NOTCHING AND BORED HOLE LIMITATIONS FOR INTERIOR NONBEARING WALLS

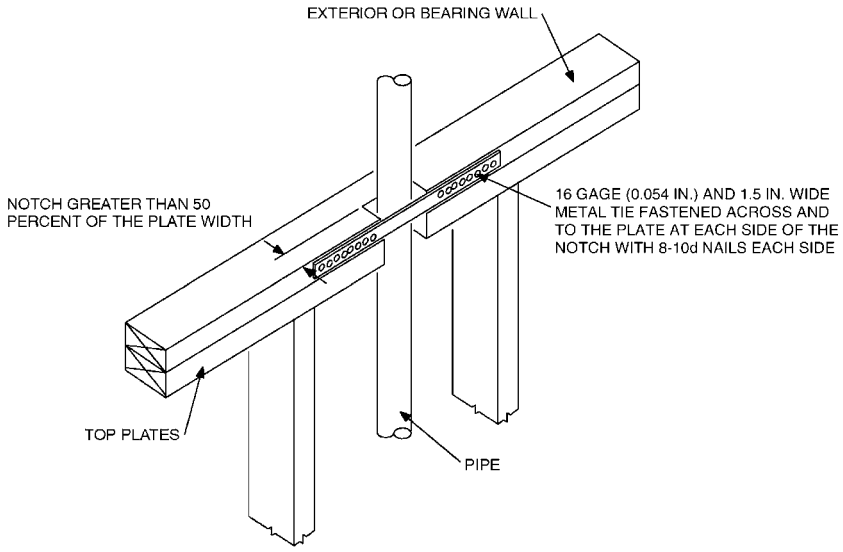

For SI: 1 inch = 25.4 mm.

FIGURE R602.6.1
TOP PLATE FRAMING TO ACCOMMODATE PIPING

INTERNATIONAL CODE COUNCIL®
Copyright © 2019 ICC & NYSDOS. ALL RIGHTS RESERVED. Accessed by Lauren Gualdino (lgualdino@briarcliffmanor.org), (-) Order Number #100880972 on May 08, 2020 07:05 AM (PDT) pursuant to License Agreement with ICC & NYSDOS. No further reproduction, no

100880972

TABLE R602.7(1)
GIRDER SPANS[a] AND HEADER SPANS[a] FOR EXTERIOR BEARING WALLS
(Maximum spans for Douglas fir-larch, hem-fir, Southern pine and spruce-pine-fir[b] and required number of jack studs)

GIRDERS AND HEADERS SUPPORTING	SIZE	GROUND SNOW LOAD (psf)[e]																	
		30						50						70					
		Building width[c] (feet)																	
		12		24		36		12		24		36		12		24		36	
		Span[f]	NJ[d]	Span[f]	NJ[d]	Span[f]	NJ[d]	Span[f]	NJ[d]	Span[f]	NJ[d]	Span[f]	NJ[d]	Span[f]	NJ[d]	Span[f]	NJ[d]	Span[f]	NJ[d]
Roof and ceiling 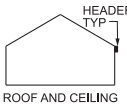	1-2 × 6	4-0	1	3-1	2	2-7	2	3-5	1	2-8	2	2-3	2	3-0	2	2-4	2	2-0	2
	1-2 × 8	5-1	2	3-11	2	3-3	2	4-4	2	3-4	2	2-10	2	3-10	2	3-0	2	2-6	3
	1-2 × 10	6-0	2	4-8	2	3-11	2	5-2	2	4-0	2	3-4	3	4-7	2	3-6	3	3-0	3
	1-2 × 12	7-1	2	5-5	2	4-7	3	6-1	2	4-8	3	3-11	3	5-5	2	4-2	3	3-6	3
	2-2 × 4	4-0	1	3-1	1	2-7	1	3-5	1	2-7	1	2-2	1	3-0	1	2-4	1	2-0	1
	2-2 × 6	6-0	1	4-7	1	3-10	1	5-1	1	3-11	1	3-3	2	4-6	1	3-6	2	2-11	2
	2-2 × 8	7-7	1	5-9	1	4-10	2	6-5	1	5-0	2	4-2	2	5-9	1	4-5	2	3-9	2
	2-2 × 10	9-0	1	6-10	2	5-9	2	7-8	2	5-11	2	4-11	2	6-9	2	5-3	2	4-5	2
	2-2 × 12	10-7	2	8-1	2	6-10	2	9-0	2	6-11	2	5-10	2	8-0	2	6-2	2	5-2	3
	3-2 × 8	9-5	1	7-3	1	6-1	1	8-1	1	6-3	1	5-3	2	7-2	1	5-6	2	4-8	2
	3-2 × 10	11-3	1	8-7	1	7-3	2	9-7	1	7-4	2	6-2	2	8-6	1	6-7	2	5-6	2
	3-2 × 12	13-2	1	10-1	2	8-6	2	11-3	2	8-8	2	7-4	2	10-0	2	7-9	2	6-6	2
	4-2 × 8	10-11	1	8-4	1	7-0	1	9-4	1	7-2	1	6-0	1	8-3	1	6-4	1	5-4	2
	4-2 × 10	12-11	1	9-11	1	8-4	1	11-1	1	8-6	1	7-2	2	9-10	1	7-7	2	6-4	2
	4-2 × 12	15-3	1	11-8	1	9-10	2	13-0	1	10-0	2	8-5	2	11-7	1	8-11	2	7-6	2
Roof, ceiling and one center-bearing floor 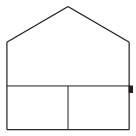	1-2 × 6	3-3	1	2-7	2	2-2	2	3-0	2	2-4	2	2-0	2	2-9	2	2-2	2	1-10	2
	1-2 × 8	4-1	2	3-3	2	2-9	2	3-9	2	3-0	2	2-6	3	3-6	2	2-9	2	2-4	3
	1-2 × 10	4-11	2	3-10	2	3-3	3	4-6	2	3-6	3	3-0	3	4-1	2	3-3	3	2-9	3
	1-2 × 12	5-9	2	4-6	3	3-10	3	5-3	2	4-2	3	3-6	3	4-10	3	3-10	3	3-3	4
	2-2 × 4	3-3	1	2-6	1	2-2	1	3-0	1	2-4	1	2-0	1	2-8	1	2-2	1	1-10	1
	2-2 × 6	4-10	1	3-9	1	3-3	2	4-5	1	3-6	2	3-0	2	4-1	1	3-3	2	2-9	2
	2-2 × 8	6-1	1	4-10	2	4-1	2	5-7	2	4-5	2	3-9	2	5-2	2	4-1	2	3-6	2
	2-2 × 10	7-3	2	5-8	2	4-10	2	6-8	2	5-3	2	4-5	2	6-1	2	4-10	2	4-1	2
	2-2 × 12	8-6	2	6-8	2	5-8	2	7-10	2	6-2	2	5-3	3	7-2	2	5-8	2	4-10	3
	3-2 × 8	7-8	1	6-0	1	5-1	2	7-0	1	5-6	2	4-8	2	6-5	1	5-1	2	4-4	2
	3-2 × 10	9-1	1	7-2	2	6-1	2	8-4	1	6-7	2	5-7	2	7-8	2	6-1	2	5-2	2
	3-2 × 12	10-8	2	8-5	2	7-2	2	9-10	2	7-8	2	6-7	2	9-0	2	7-1	2	6-1	2
	4-2 × 8	8-10	1	6-11	1	5-11	1	8-1	1	6-4	1	5-5	2	7-5	1	5-11	1	5-0	2
	4-2 × 10	10-6	1	8-3	2	7-0	2	9-8	1	7-7	2	6-5	2	8-10	1	7-0	2	6-0	2
	4-2 × 12	12-4	1	9-8	2	8-3	2	11-4	2	8-11	2	7-7	2	10-4	2	8-3	2	7-0	2
Roof, ceiling and one clear-span floor 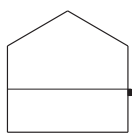	1-2 × 6	2-11	2	2-3	2	1-11	2	2-9	2	2-1	2	1-9	2	2-7	2	2-0	2	1-8	2
	1-2 × 8	3-9	2	2-10	2	2-5	3	3-6	2	2-8	2	2-3	3	3-3	2	2-6	3	2 -2	3
	1-2 × 10	4-5	2	3-5	3	2-10	3	4-2	2	3-2	3	2-8	3	3-11	2	3-0	3	2-6	3
	1-2 × 12	5-2	2	4-0	3	3-4	3	4-10	3	3-9	3	3-2	4	4-7	3	3-6	3	3-0	4
	2-2 × 4	2-11	1	2-3	1	1-10	1	2-9	1	2-1	1	1-9	1	2-7	1	2-0	1	1-8	1
	2-2 × 6	4-4	1	3-4	2	2-10	2	4-1	1	3-2	2	2-8	2	3-10	1	3-0	2	2-6	2
	2-2 × 8	5-6	2	4-3	2	3-7	2	5-2	2	4-0	2	3-4	2	4-10	2	3-9	2	3-2	2
	2-2 × 10	6-7	2	5-0	2	4-2	2	6-1	2	4-9	2	4-0	2	5-9	2	4-5	2	3-9	3
	2-2 × 12	7-9	2	5-11	2	4-11	3	7-2	2	5-7	2	4-8	3	6-9	2	5-3	3	4-5	3
	3-2 × 8	6-11	1	5-3	2	4-5	2	6-5	1	5-0	2	4-2	2	6-1	1	4-8	2	4-0	2
	3-2 × 10	8-3	2	6-3	2	5-3	2	7-8	2	5-11	2	5-0	2	7-3	2	5-7	2	4-8	2
	3-2 × 12	9-8	2	7-5	2	6-2	2	9-0	2	7-0	2	5-10	2	8-6	2	6-7	2	5-6	3
	4-2 × 8	8-0	1	6-1	1	5-1	2	7-5	1	5-9	2	4-10	2	7-0	1	5-5	2	4-7	2
	4-2 × 10	9-6	1	7-3	2	6-1	2	8-10	1	6-10	2	5-9	2	8-4	1	6-5	2	5-5	2
	4-2 × 12	11-2	2	8-6	2	7-2	2	10-5	2	8-0	2	6-9	2	9-10	2	7-7	2	6-5	2

(continued)

INTERNATIONAL CODE COUNCIL®
Copyright © 2019 ICC & NYSDOS. ALL RIGHTS RESERVED. Accessed by Lauren Gualdino (lgualdino@briarcliffmanor.org), (-) Order Number #100880972 on May 08, 2020 07:05 AM (PDT) pursuant to License Agreement with ICC & NYSDOS. No further reproduction, no

100880972

TABLE R602.7(1)—continued
GIRDER SPANS[a] AND HEADER SPANS[a] FOR EXTERIOR BEARING WALLS
(Maximum spans for Douglas fir-larch, hem-fir, Southern pine and spruce-pine-fir[b] and required number of jack studs)

GIRDERS AND HEADERS SUPPORTING	SIZE	GROUND SNOW LOAD (psf)[e]																	
		30						50						70					
		Building width[c] (feet)																	
		12		24		36		12		24		36		12		24		36	
		Span[f]	NJ[d]	Span[f]	NJ[d]	Span[f]	NJ[d]	Span[f]	NJ[d]	Span[f]	NJ[d]	Span[f]	NJ[d]	Span[f]	NJ[d]	Span[f]	NJ[d]	Span[f]	NJ[d]
Roof, ceiling and two center-bearing floors 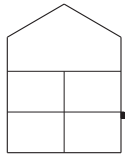 ROOF, CEILING AND TWO FLOORS (CENTER BEARING)	1-2 × 6	2-8	2	2-1	2	1-10	2	2-7	2	2-0	2	1-9	2	2-5	2	1-11	2	1-8	2
	1-2 × 8	3-5	2	2-8	2	2-4	3	3-3	2	2-7	2	2-2	3	3-1	2	2-5	3	2-1	3
	1-2 × 10	4-0	2	3-2	3	2-9	3	3-10	2	3-1	3	2-7	3	3-8	2	2-11	3	2-5	3
	1-2 × 12	4-9	3	3-9	3	3-2	4	4-6	3	3-7	3	3-1	4	4-3	3	3-5	3	2-11	4
	2-2 × 4	2-8	1	2-1	1	1-9	1	2-6	1	2-0	1	1-8	1	2-5	1	1-11	1	1-7	1
	2-2 × 6	4-0	1	3-2	2	2-8	2	3-9	1	3-0	2	2-7	2	3-7	1	2-10	2	2-5	2
	2-2 × 8	5-0	2	4-0	2	3-5	2	4-10	2	3-10	2	3-3	2	4-7	2	3-7	2	3-1	2
	2-2 × 10	6-0	2	4-9	2	4-0	2	5-8	2	4-6	2	3-10	3	5-5	2	4-3	2	3-8	3
	2-2 × 12	7-0	2	5-7	2	4-9	3	6-8	2	5-4	3	4-6	3	6-4	2	5-0	3	4-3	3
	3-2 × 8	6-4	1	5-0	2	4-3	2	6-0	1	4-9	2	4-1	2	5-8	2	4-6	2	3-10	2
	3-2 × 10	7-6	2	5-11	2	5-1	2	7-1	2	5-8	2	4-10	2	6-9	2	5-4	2	4-7	2
	3-2 × 12	8-10	2	7-0	2	5-11	2	8-5	2	6-8	2	5-8	3	8-0	2	6-4	2	5-4	3
	4-2 × 8	7-3	1	5-9	1	4-11	2	6-11	1	5-6	2	4-8	2	6-7	1	5-2	2	4-5	2
	4-2 × 10	8-8	1	6-10	2	5-10	2	8-3	2	6-6	2	5-7	2	7-10	2	6-2	2	5-3	2
	4-2 × 12	10-2	2	8-1	2	6-10	2	9-8	2	7-8	2	6-7	2	9-2	2	7-3	2	6-2	2
Roof, ceiling, and two clear-span floors 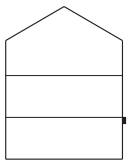 ROOF, CEILING AND TWO FLOORS (CLEAR SPAN)	1-2 × 6	2-3	2	1-9	2	1-5	2	2-3	2	1-9	2	1-5	3	2-2	2	1-8	2	1-5	3
	1-2 × 8	2-10	2	2-2	3	1-10	3	2-10	2	2-2	3	1-10	3	2-9	2	2-1	3	1-10	3
	1-2 × 10	3-4	2	2-7	3	2-2	3	3-4	3	2-7	3	2-2	4	3-3	3	2-6	3	2-2	4
	1-2 × 12	4-0	3	3-0	3	2-7	4	4-0	3	3-0	4	2-7	4	3-10	3	3-0	4	2-6	4
	2-2 × 4	2-3	1	1-8	1	1-4	1	2-3	1	1-8	1	1-4	1	2-2	1	1-8	1	1-4	2
	2-2 × 6	3-4	1	2-6	2	2-2	2	3-4	2	2-6	2	2-2	2	3-3	2	2-6	2	2-1	2
	2-2 × 8	4-3	2	3-3	2	2-8	2	4-3	2	3-3	2	2-8	2	4-1	2	3-2	2	2-8	3
	2-2 × 10	5-0	2	3-10	2	3-2	3	5-0	2	3-10	2	3-2	3	4-10	2	3-9	3	3-2	3
	2-2 × 12	5-11	2	4-6	3	3-9	3	5-11	2	4-6	3	3-9	3	5-8	2	4-5	3	3-9	3
	3-2 × 8	5-3	1	4-0	2	3-5	2	5-3	2	4-0	2	3-5	2	5-1	2	3-11	2	3-4	2
	3-2 × 10	6-3	2	4-9	2	4-0	2	6-3	2	4-9	2	4-0	2	6-1	2	4-8	2	4-0	3
	3-2 × 12	7-5	2	5-8	2	4-9	3	7-5	2	5-8	2	4-9	3	7-2	2	5-6	3	4-8	3
	4-2 × 8	6-1	1	4-8	2	3-11	2	6-1	1	4-8	2	3-11	2	5-11	1	4-7	2	3-10	2
	4-2 × 10	7-3	2	5-6	2	4-8	2	7-3	2	5-6	2	4-8	2	7-0	2	5-5	2	4-7	2
	4-2 × 12	8-6	2	6-6	2	5-6	2	8-6	2	6-6	2	5-6	2	8-3	2	6-4	2	5-4	3

For SI: 1 inch = 25.4 mm, 1 pound per square foot = 0.0479 kPa.

a. Spans are given in feet and inches.

b. Spans are based on minimum design properties for No. 2 grade lumber of Douglas fir-larch, hem-fir, Southern pine, and spruce-pine-fir.

c. Building width is measured perpendicular to the ridge. For widths between those shown, spans are permitted to be interpolated.

d. NJ = Number of jack studs required to support each end. Where the number of required jack studs equals one, the header is permitted to be supported by an approved framing anchor attached to the full-height wall stud and to the header.

e. Use 30 psf ground snow load for cases in which ground snow load is less than 30 psf and the roof live load is equal to or less than 20 psf.

f. Spans are calculated assuming the top of the header or girder is laterally braced by perpendicular framing. Where the top of the header or girder is not laterally braced (for example, cripple studs bearing on the header), tabulated spans for headers consisting of 2 × 8, 2 × 10, or 2 × 12 sizes shall be multiplied by 0.70 or the header or girder shall be designed.

INTERNATIONAL CODE COUNCIL®
Copyright © 2019 ICC & NYSDOS. ALL RIGHTS RESERVED. Accessed by Lauren Gualdino (lgualdino@briarcliffmanor.org), (-) Order Number #100880972 on May 08, 2020 07:05 AM (PDT) pursuant to License Agreement with ICC & NYSDOS. No further reproduction, no

100880972

TABLE R602.7(2)
GIRDER SPANS[a] AND HEADER SPANS[a] FOR INTERIOR BEARING WALLS
(Maximum spans for Douglas fir-larch, hem-fir, southern pine and spruce-pine-fir[b] and required number of jack studs)

HEADERS AND GIRDERS SUPPORTING	SIZE	BUILDING Width[c] (feet)					
		12		24		36	
		Span[e]	NJ[d]	Span[e]	NJ[d]	Span[e]	NJ[d]
One floor only	2-2 × 4	4-1	1	2-10	1	2-4	1
	2-2 × 6	6-1	1	4-4	1	3-6	1
	2-2 × 8	7-9	1	5-5	1	4-5	2
	2-2 × 10	9-2	1	6-6	2	5-3	2
	2-2 × 12	10-9	1	7-7	2	6-3	2
	3-2 × 8	9-8	1	6-10	1	5-7	1
	3-2 × 10	11-5	1	8-1	1	6-7	2
	3-2 × 12	13-6	1	9-6	2	7-9	2
	4-2 × 8	11-2	1	7-11	1	6-5	1
	4-2 × 10	13-3	1	9-4	1	7-8	1
	4-2 × 12	15-7	1	11-0	1	9-0	2
Two floors	2-2 × 4	2-7	1	1-11	1	1-7	1
	2-2 × 6	3-11	1	2-11	2	2-5	2
	2-2 × 8	5-0	1	3-8	2	3-1	2
	2-2 × 10	5-11	2	4-4	2	3-7	2
	2-2 × 12	6-11	2	5-2	2	4-3	3
	3-2 × 8	6-3	1	4-7	2	3-10	2
	3-2 × 10	7-5	1	5-6	2	4-6	2
	3-2 × 12	8-8	2	6-5	2	5-4	2
	4-2 × 8	7-2	1	5-4	1	4-5	2
	4-2 × 10	8-6	1	6-4	2	5-3	2
	4-2 × 12	10-1	1	7-5	2	6-2	2

For SI: 1 inch = 25.4 mm, 1 foot = 304.8 mm.

a. Spans are given in feet and inches.

b. Spans are based on minimum design properties for No. 2 grade lumber of Douglas fir-larch, hem-fir, Southern pine, and spruce-pine-fir.

c. Building width is measured perpendicular to the ridge. For widths between those shown, spans are permitted to be interpolated.

d. NJ = Number of jack studs required to support each end. Where the number of required jack studs equals one, the header is permitted to be supported by an approved framing anchor attached to the full-height wall stud and to the header.

e. Spans are calculated assuming the top of the header or girder is laterally braced by perpendicular framing. Where the top of the header or girder is not laterally braced (for example, cripple studs bearing on the header), tabulated spans for headers consisting of 2 × 8, 2 × 10, or 2 × 12 sizes shall be multiplied by 0.70 or the header or girder shall be designed.

TABLE R602.7(3)
GIRDER AND HEADER SPANS[a] FOR OPEN PORCHES
(Maximum span for Douglas fir-larch, hem-fir, Southern pine and spruce-pine-fir[b])

SIZE	SUPPORTING ROOF						SUPPORTING FLOOR	
	GROUND SNOW LOAD (psf)							
	30		50		70			
	DEPTH OF PORCH[c] (feet)							
	8	14	8	14	8	14	8	14
2-2 × 6	7-6	5-8	6-2	4-8	5-4	4-0	6-4	4-9
2-2 × 8	10-1	7-7	8-3	6-2	7-1	5-4	8-5	6-4
2-2 × 10	12-4	9-4	10-1	7-7	8-9	6-7	10-4	7-9
2-2 × 12	14-4	10-10	11-8	8-10	10-1	7-8	11-11	9-0

For SI: 1 inch = 25.4 mm, 1 foot = 304.8 mm, 1 pound per square foot = 0.0479 kPa.

a. Spans are given in feet and inches.

b. Tabulated values assume No. 2 grade lumber, wet service and incising for refractory species. Use 30 psf ground snow load for cases in which ground snow load is less than 30 psf and the roof live load is equal to or less than 20 psf.

c. Porch depth is measured horizontally from building face to centerline of the header. For depths between those shown, spans are permitted to be interpolated.

INTERNATIONAL CODE COUNCIL®
Copyright © 2019 ICC & NYSDOS. ALL RIGHTS RESERVED. Accessed by Lauren Gualdino (lgualdino@briarcliffmanor.org), (-) Order Number #100880972 on May 08, 2020 07:05 AM (PDT) pursuant to License Agreement with ICC & NYSDOS. No further reproduction, no

100880972

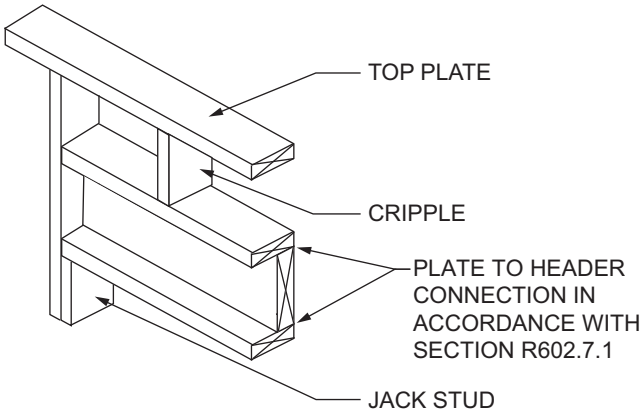

FIGURE R602.7.1(1)
SINGLE-MEMBER HEADER IN EXTERIOR BEARING WALL

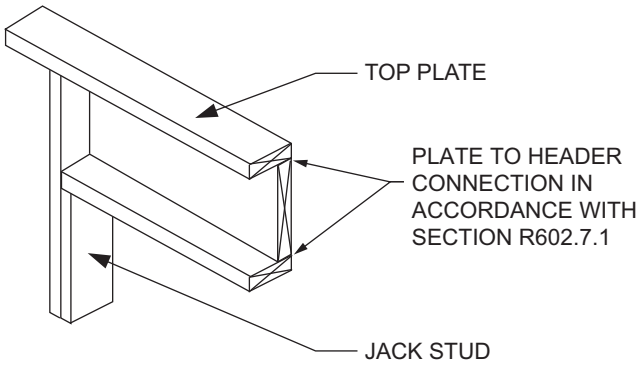

FIGURE R602.7.1(2)
ALTERNATIVE SINGLE-MEMBER HEADER WITHOUT CRIPPLE

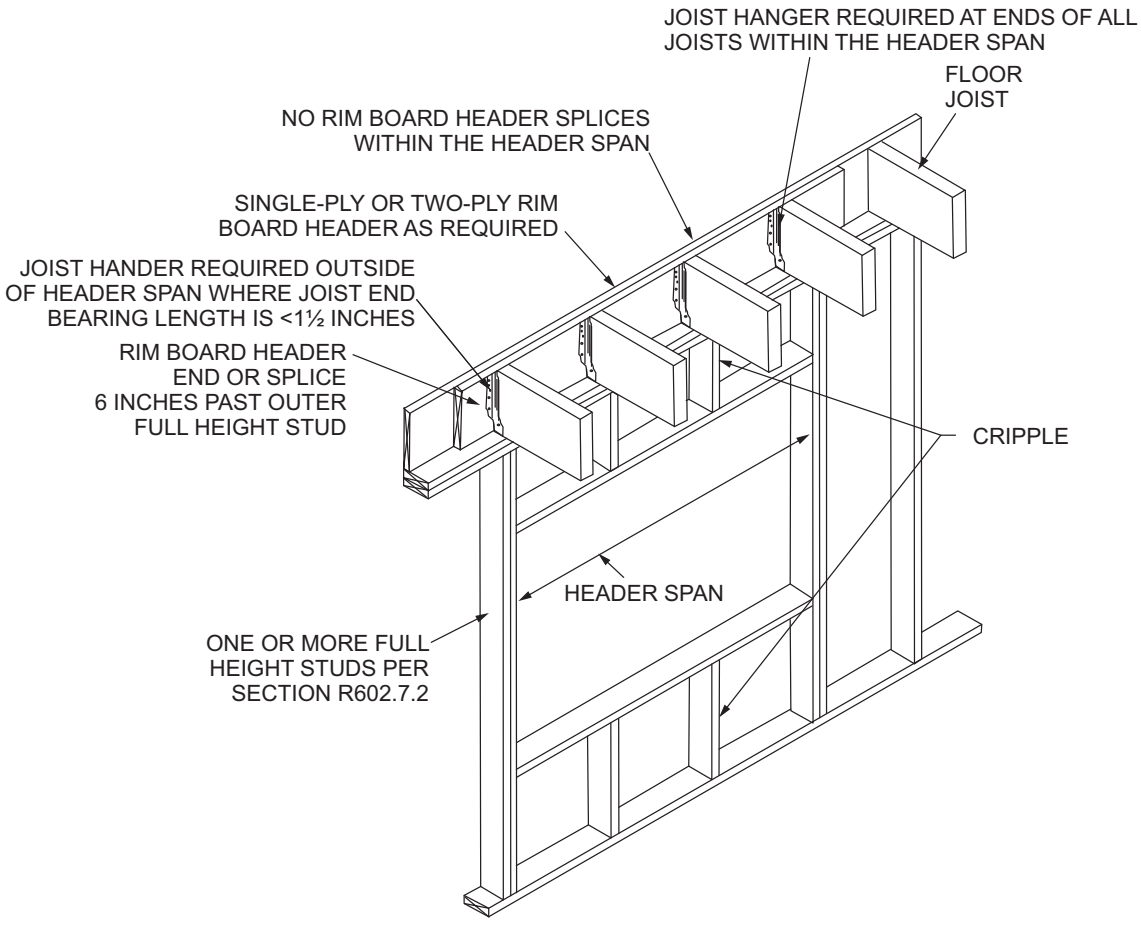

For SI: 25.4 mm = 1 inch.

FIGURE R602.7.2
RIM BOARD HEADER CONSTRUCTION

INTERNATIONAL CODE COUNCIL®
Copyright © 2019 ICC & NYSDOS. ALL RIGHTS RESERVED. Accessed by Lauren Gualdino (lgualdino@briarcliffmanor.org), (-) Order Number #100880972 on May 08, 2020 07:05 AM (PDT) pursuant to License Agreement with ICC & NYSDOS. No further reproduction, no

100880972

TABLE R602.7.3
MAXIMUM SPANS FOR WOOD STRUCTURAL PANEL BOX HEADERS[a]

HEADER CONSTRUCTION[b]	HEADER DEPTH (inches)	HOUSE DEPTH (feet)				
		24	26	28	30	32
Wood structural panel–one side	9 15	4 5	4 5	3 4	3 3	— 3
Wood structural panel–both sides	9 15	7 8	5 8	5 7	4 7	3 6

For SI: 1 inch = 25.4 mm, 1 foot = 304.8 mm.

a. Spans are based on single story with clear-span trussed roof or two story with floor and roof supported by interior-bearing walls.

b. See Figure R602.7.3 for construction details.

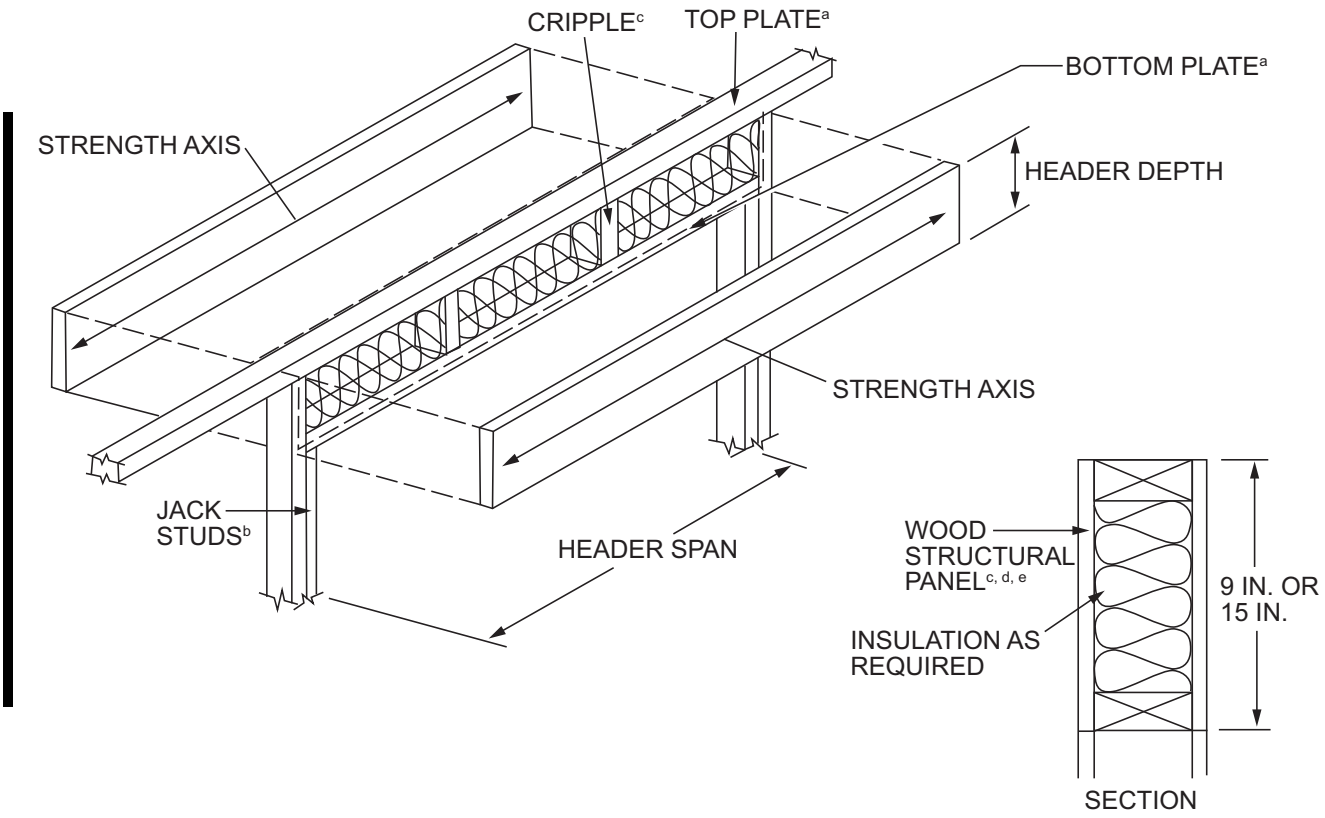

For SI: 1 inch = 25.4 mm, 1 foot = 304.8 mm.

NOTES:

a. The top and bottom plates shall be continuous at header location.

b. Jack studs shall be used for spans over 4 feet.

c. Cripple spacing shall be the same as for studs.

d. Wood structural panel faces shall be single pieces of $^{15}/_{32}$-inch-thick Exposure 1 (exterior glue) or thicker, installed on the interior or exterior or both sides o the header.

e. Wood structural panel faces shall be nailed to framing and cripples with 8d common or galvanized box nails spaced 3 inches on center, staggering alternat nails $^{1}/_{2}$ inch. Galvanized nails shall be hot-dipped or tumbled.

FIGURE R602.7.3
TYPICAL WOOD STRUCTURAL PANEL BOX HEADER CONSTRUCTION

INTERNATIONAL CODE COUNCIL®
Copyright © 2019 ICC & NYSDOS. ALL RIGHTS RESERVED. Accessed by Lauren Gualdino (lgualdino@briarcliffmanor.org), (-) Order Number #100880972 on May 08, 2020 07:05 AM (PDT) pursuant to License Agreement with ICC & NYSDOS. No further reproduction, no

100880972

R602.7.5 Supports for headers. Headers shall be supported on each end with one or more jack studs or with approved framing anchors in accordance with Table R602.7(1) or R602.7(2). The full-height stud adjacent to each end of the header shall be end nailed to each end of the header with four-16d nails (3.5 inches × 0.135 inches). The minimum number of full-height studs at each end of a header shall be in accordance with Table R602.7.5.

TABLE R602.7.5
MINIMUM NUMBER OF FULL-HEIGHT STUDS AT EACH END OF HEADERS IN EXTERIOR WALLS[a]

MAXIMUM HEADER SPAN (feet)	ULTIMATE DESIGN WIND SPEED AND EXPOSURE CATEGORY	
	< 140 mph, Exposure B or < 130 mph, Exposure C	≤ 115 mph, Exposure B[b]
4	1	1
6	2	1
8	2	1
10	3	2
12	3	2
14	3	2
16	4	2
18	4	2

For SI: 1 foot = 304.8 mm, 1 mile per hour = 0.447 m/s.

a. For header spans between those given, use the minimum number of full-height studs associated with the larger header span.

b. The tabulated minimum number of full-height studs is applicable where jack studs are provided to support the header at each end in accordance with Table R602.7(1). Where a framing anchor is used to support the header in lieu of a jack stud in accordance with Note d of Table R602.7(1), the minimum number of full-height studs at each end of a header shall be in accordance with requirements for wind speed < 140 mph, Exposure B.

R602.8 Fireblocking required. Fireblocking shall be provided in accordance with Section R302.11.

R602.9 Cripple walls. Foundation cripple walls shall be framed of studs not smaller than the studding above. Where exceeding 4 feet (1219 mm) in height, such walls shall be framed of studs having the size required for an additional *story*.

Cripple walls with a stud height less than 14 inches (356 mm) shall be continuously sheathed on one side with wood structural panels fastened to both the top and bottom plates in accordance with Table R602.3(1), or the cripple walls shall be constructed of solid blocking.

Cripple walls shall be supported on continuous foundations.

[NY] R602.10 Wall bracing. Buildings shall be braced in accordance with this section or, when applicable, Section R602.12. Where a building, or portion thereof, does not comply with one or more of the bracing requirements in this section, those portions shall be designed and constructed in accordance with Section R301.1.

For buildings braced in accordance with this section, pertinent information shall be provided on the construction documents, with additional documentation as required by the building official. At a minimum, the following information shall be included:

1. The location of braced wall lines.
2. The spacing of braced wall lines, including any offset of the braced wall panel line.
3. The braced wall line end conditions.
4. The location and length of braced wall panels.
5. The braced wall panel uplift load.
6. The construction method for braced wall panels, including connections to floor framing and foundations.

R602.10.1 Braced wall lines. For the purpose of determining the amount and location of bracing required in each story level of a building, *braced wall lines* shall be designated as straight lines in the building plan placed in accordance with this section.

R602.10.1.1 Length of a braced wall line. The length of a *braced wall line* shall be the distance between its ends. The end of a *braced wall line* shall be the intersection with a perpendicular *braced wall line*, an angled *braced wall line* as permitted in Section R602.10.1.4 or an exterior wall as shown in Figure R602.10.1.1.

R602.10.1.2 Offsets along a braced wall line. Exterior walls parallel to a *braced wall line* shall be offset not more than 4 feet (1219 mm) from the designated *braced wall line* location as shown in Figure R602.10.1.1. Interior walls used as bracing shall be offset not more than 4 feet (1219 mm) from a *braced wall line* through the interior of the building as shown in Figure R602.10.1.1.

R602.10.1.3 Spacing of braced wall lines. The spacing between parallel *braced wall lines* shall be in accordance with Table R602.10.1.3. Intermediate *braced wall lines* through the interior of the building shall be permitted.

R602.10.1.4 Angled walls. Any portion of a wall along a *braced wall line* shall be permitted to angle out of plane for a maximum diagonal length of 8 feet (2438 mm). Where the angled wall occurs at a corner, the length of the *braced wall line* shall be measured from the projected corner as shown in Figure R602.10.1.4. Where the diagonal length is greater than 8 feet (2438 mm), it shall be considered to be a separate *braced wall line* and shall be braced in accordance with Section R602.10.1.

R602.10.2 Braced wall panels. *Braced wall panel*s shall be full-height sections of wall that shall not have vertical or horizontal offsets. *Braced wall panel*s shall be constructed and placed along a *braced wall line* in accordance with this section and the bracing methods specified in Section R602.10.4.

R602.10.2.1 Braced wall panel uplift load path. The bracing lengths in Table R602.10.3(1) apply only when uplift loads are resisted in accordance with Section R602.3.5.

R602.10.2.2 Locations of braced wall panels. A *braced wall panel* shall begin within 10 feet (3810 mm) from each end of a *braced wall line* as determined in Section R602.10.1.1. The distance between adjacent edges of *braced wall panel*s along a *braced wall line*

INTERNATIONAL CODE COUNCIL®
Copyright © 2019 ICC & NYSDOS. ALL RIGHTS RESERVED. Accessed by Lauren Gualdino (lgualdino@briarcliffmanor.org), (-) Order Number #100880972 on May 08, 2020 07:05 AM (PDT) pursuant to License Agreement with ICC & NYSDOS. No further reproduction, no

100880972

shall be not greater than 20 feet (6096 mm) as shown in Figure R602.10.2.2.

R602.10.2.2.1 Location of braced wall panels in Seismic Design Categories D_0, D_1 and D_2. Braced wall panels shall be located at each end of a braced wall line.

Exception: Braced wall panels constructed of Method WSP or BV-WSP and continuous sheathing methods as specified in Section R602.10.4 shall be permitted to begin not more than 10 feet (3048 mm) from each end of a braced wall line provided that each end complies with one of the following:

1. A minimum 24-inch-wide (610 mm) panel for Methods WSP, CS-WSP, CS-G and CS-PF is applied to each side of the building corner as shown in End Condition 4 of Figure R602.10.7.
2. The end of each braced wall panel closest to the end of the braced wall line shall have an 1,800 lb (8 kN) hold-down device fastened to the stud at the edge of the braced wall panel closest to the corner and to the foundation or framing below as shown in End Condition 5 of Figure R602.10.7.

R602.10.2.3 Minimum number of braced wall panels. *Braced wall lines* with a length of 16 feet (4877 mm) or less shall have not less than two *braced wall panel*s of any length or one *braced wall panel* equal to 48 inches (1219 mm) or more. *Braced wall lines* greater than 16 feet (4877 mm) shall have not less than two *braced wall panel*s.

R602.10.3 Required length of bracing. The required length of bracing along each *braced wall line* shall be determined as follows:

1. All buildings in Seismic Design Categories A and B shall use Table R602.10.3(1) and the applicable adjustment factors in Table R602.10.3(2).
2. Detached buildings in Seismic Design Category C shall use Table R602.10.3(1) and the applicable adjustment factors in Table R602.10.3(2).
3. Townhouses in Seismic Design Category C shall use the greater value determined from Table R602.10.3(1) or R602.10.3(3) and the applicable adjustment factors in Table R602.10.3(2) or R602.10.3(4), respectively.
4. All buildings in Seismic Design Categories D_0, D_1 and D_2 shall use the greater value determined from Table R602.10.3(1) or R602.10.3(3) and the applicable adjustment factors in Table R602.10.3(2) or R602.10.3(4), respectively.

Only *braced wall panel*s parallel to the *braced wall line* shall contribute toward the required length of bracing of that *braced wall line*. *Braced wall panel*s along an angled wall meeting the minimum length requirements of Tables R602.10.5 and R602.10.5.2 shall be permitted to contribute its projected length toward the minimum required length of bracing for the *braced wall line* as shown in Figure R602.10.1.4. Any *braced wall panel* on an angled wall at the end of a *braced wall line* shall contribute its projected length for only one of the *braced wall lines* at the projected corner.

Exception: The length of wall bracing for dwellings in Seismic Design Categories D_0, D_1 and D_2 with stone or masonry veneer installed in accordance with Section R703.8 and exceeding the first-story height shall be in accordance with Section R602.10.6.5.

R602.10.4 Construction methods for braced wall panels. Intermittent and continuously sheathed *braced wall panel*s shall be constructed in accordance with this section and the methods listed in Table R602.10.4.

R602.10.4.1 Mixing methods. Mixing of bracing methods shall be permitted as follows:

1. Mixing intermittent bracing and continuous sheathing methods from story to story shall be permitted.
2. Mixing intermittent bracing methods from *braced wall line* to *braced wall line* within a story shall be permitted. In regions within Seismic Design Categories A, B and C where the ultimate design wind speed is less than or equal to 130 mph (58m/s), mixing of intermittent bracing and continuous sheathing methods from braced wall line to braced wall line within a story shall be permitted.
3. Mixing intermittent bracing methods along a *braced wall line* shall be permitted in Seismic Design Categories A and B, and detached dwellings in Seismic Design Category C, provided that the length of required bracing in accordance with Table R602.10.3(1) or R602.10.3(3) is the highest value of all intermittent bracing methods used.
4. Mixing of continuous sheathing methods CS-WSP, CS-G and CS-PF along a *braced wall line* shall be permitted. Intermittent methods ABW, PFH and PFG shall be permitted to be used along a *braced wall line* with continuous sheathed methods, provided that the length of required bracing for that braced wall line is determined in accordance with Table R602.10.3(1) or R602.10.3(3) using the highest value of the bracing methods used.
5. In Seismic Design Categories A and B, and for detached one- and two-family dwellings in Seismic Design Category C, mixing of intermittent bracing methods along the interior portion of a *braced wall line* with continuous sheathing methods CS-WSP, CS-G and CS-PF along the exterior portion of the same braced wall line shall be permitted. The length of required bracing shall be the highest value of all intermittent bracing methods used in accordance with Table R602.10.3(1) or R602.10.3(3) as adjusted by Tables R602.10.3(2) and R602.10.3(4), respectively. The

INTERNATIONAL CODE COUNCIL®
Copyright © 2019 ICC & NYSDOS. ALL RIGHTS RESERVED. Accessed by Lauren Gualdino (lgualdino@briarcliffmanor.org), (-) Order Number #100880972 on May 08, 2020 07:05 AM (PDT) pursuant to License Agreement with ICC & NYSDOS. No further reproduction, no

100880972

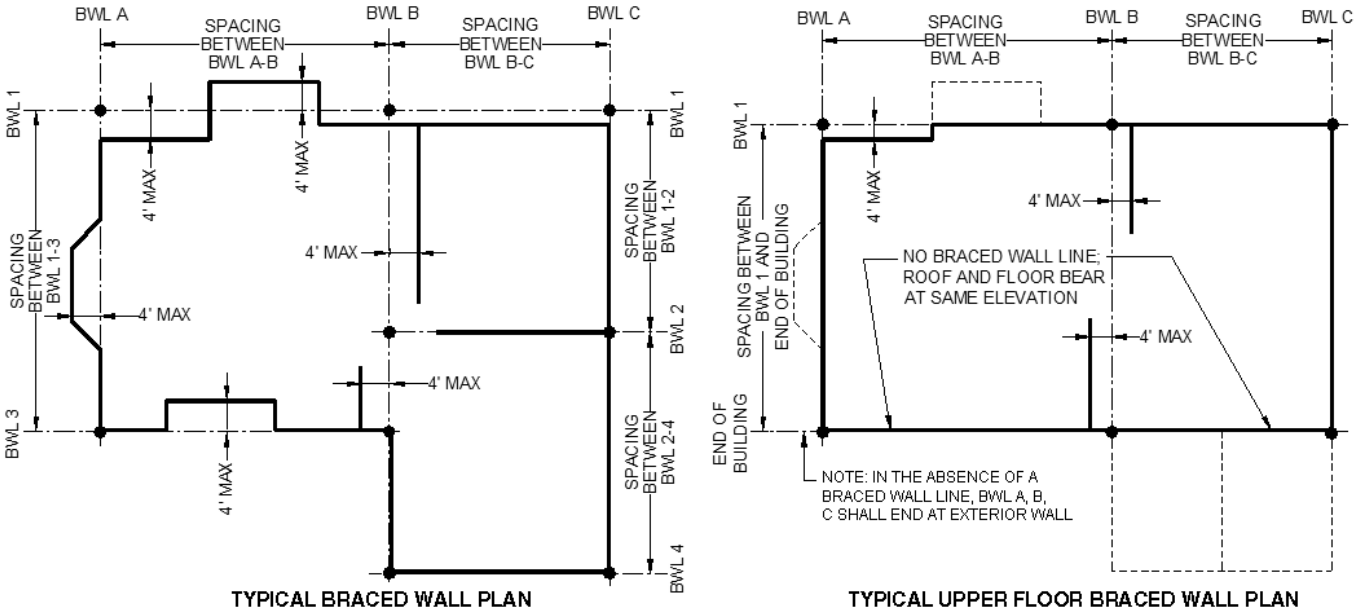

For SI: 1 foot = 304.8 mm.

FIGURE R602.10.1.1
BRACED WALL LINES

TABLE R602.10.1.3
BRACED WALL LINE SPACING

APPLICATION	CONDITION	BUILDING TYPE	BRACED WALL LINE SPACING CRITERIA	
			Maximum Spacing	Exception to Maximum Spacing
Wind bracing	Ultimate design wind speed 100 mph to < 140 mph	Detached, townhouse	60 feet	None
Seismic bracing	SDC A – C	Detached	Use wind bracing	
	SDC A – B	Townhouse	Use wind bracing	
	SDC C	Townhouse	35 feet	Up to 50 feet when length of required bracing per Table R602.10.3(3) is adjusted in accordance with Table R602.10.3(4).
	SDC D_0, D_1, D_2	Detached, townhouses, one- and two-story only	25 feet	Up to 35 feet to allow for a single room not to exceed 900 square feet. Spacing of all other braced wall lines shall not exceed 25 feet.
	SDC D_0, D_1, D_2	Detached, townhouse	25 feet	Up to 35 feet when length of required bracing per Table R602.10.3(3) is adjusted in accordance with Table R602.10.3(4).

For SI: 1 foot = 304.8 mm, 1 square foot = 0.0929 m^2, 1 mile per hour = 0.447 m/s.

INTERNATIONAL CODE COUNCIL®
Copyright © 2019 ICC & NYSDOS. ALL RIGHTS RESERVED. Accessed by Lauren Gualdino (lgualdino@briarcliffmanor.org), (-) Order Number #100880972 on May 08, 2020 07:05 AM (PDT) pursuant to License Agreement with ICC & NYSDOS. No further reproduction, no

100880972

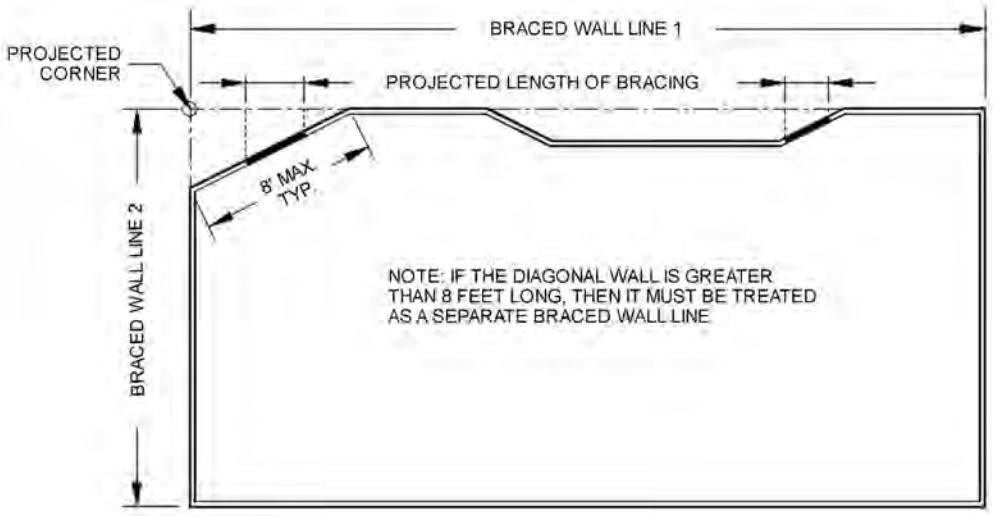

For SI: 1 foot = 304.8 mm.

FIGURE R602.10.1.4
ANGLED WALLS

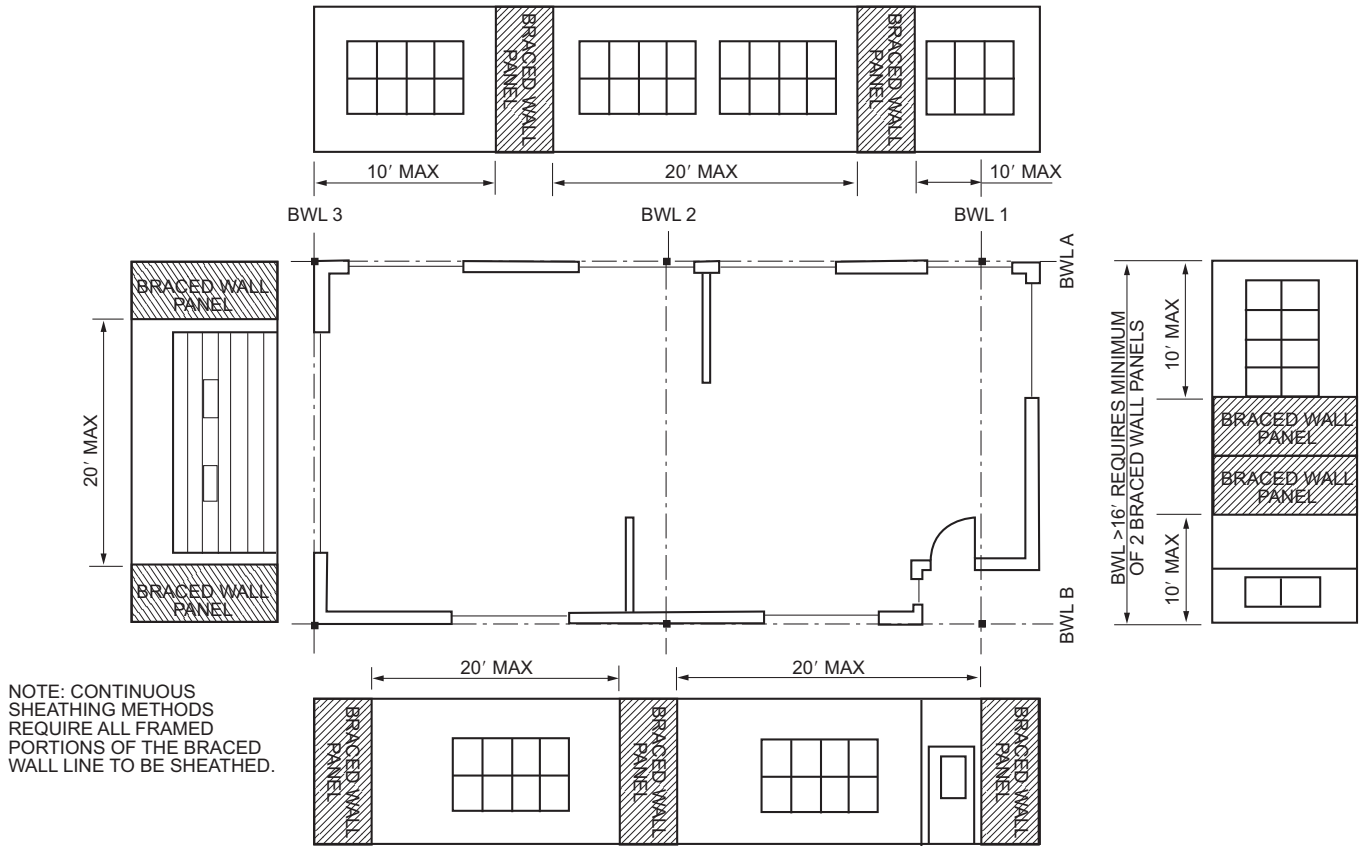

For SI: 1 foot = 304.8 mm.

FIGURE R602.10.2.2
LOCATION OF BRACED WALL PANELS

INTERNATIONAL CODE COUNCIL®
Copyright © 2019 ICC & NYSDOS. ALL RIGHTS RESERVED. Accessed by Lauren Gualdino (lgualdino@briarcliffmanor.org), (-) Order Number #100880972 on May 08, 2020 07:05 AM (PDT) pursuant to License Agreement with ICC & NYSDOS. No further reproduction, no

100880972

requirements of Section R602.10.7 shall apply to each end of the continuously sheathed portion of the braced wall line.

R602.10.4.2 Continuous sheathing methods. Continuous sheathing methods require structural panel sheathing to be used on all sheathable surfaces on one side of a *braced wall line* including areas above and below openings and gable end walls and shall meet the requirements of Section R602.10.7.

R602.10.4.3 Braced wall panel interior finish material. *Braced wall panel*s shall have gypsum wall board installed on the side of the wall opposite the bracing material. Gypsum wall board shall be not less than $^1/_2$ inch (12.7 mm) in thickness and be fastened with nails or screws in accordance with Table R602.3(1) for exterior sheathing or Table R702.3.5 for interior gypsum wall board. Spacing of fasteners at panel edges for gypsum wall board opposite Method LIB bracing shall not exceed 8 inches (203 mm). Interior finish material shall not be glued in Seismic Design Categories D_0, D_1 and D_2.

Exceptions:

1. Interior finish material is not required opposite wall panels that are braced in accordance with Methods GB, BV-WSP, ABW, PFH, PFG and CS-PF, unless otherwise required by Section R302.6.
2. An approved interior finish material with an in-plane shear resistance equivalent to gypsum board shall be permitted to be substituted, unless otherwise required by Section R302.6.
3. Except for Method LIB, gypsum wall board is permitted to be omitted provided that the required length of bracing in Tables R602.10.3(1) and R602.10.3(3) is multiplied by the appropriate adjustment factor in Tables R602.10.3(2) and R602.10.3(4), respectively, unless otherwise required by Section R302.6.

R602.10.4.4 Panel joints. Vertical joints of panel sheathing shall occur over and be fastened to common studs. Horizontal joints of panel sheathing in *braced wall panels* shall occur over and be fastened to common blocking of a thickness of $1^1/_2$ inches (38 mm) or greater.

Exceptions:

1. For methods WSP and CS-WSP, blocking of horizontal joints is permitted to be omitted when adjustment factor No. 8 of Table R602.10.3(2) or No. 9 of Table R602.10.3(4) is applied.
2. Vertical joints of panel sheathing shall be permitted to occur over double studs, where adjoining panel edges are attached to separate studs with the required panel edge fastening schedule, and the adjacent studs are attached together with two rows of 10d box nails [3 inches by 0.128 inch (76.2 mm by 3.25 mm)] at 10 inches o.c. (254 mm).
3. Blocking at horizontal joints shall not be required in wall segments that are not counted as *braced wall panels.*
4. Where Method GB panels are installed horizontally, blocking of horizontal joints is not required.

R602.10.5 Minimum length of a braced wall panel. The minimum length of a *braced wall panel* shall comply with Table R602.10.5. For Methods CS-WSP and CS-SFB, the minimum panel length shall be based on the adjacent clear opening height in accordance with Table R602.10.5 and Figure R602.10.5. Where a panel has an opening on either side of differing heights, the taller opening height shall be used to determine the panel length.

R602.10.5.1 Contributing length. For purposes of computing the required length of bracing in Tables R602.10.3(1) and R602.10.3(3), the contributing length of each *braced wall panel* shall be as specified in Table R602.10.5.

R602.10.5.2 Partial credit. For Methods DWB, WSP, SFB, PBS, PCP and HPS in Seismic Design Categories A, B and C, panels between 36 inches and 48 inches (914 mm and 1219 mm) in length shall be considered a *braced wall panel* and shall be permitted to partially contribute toward the required length of bracing in Tables R602.10.3(1) and R602.10.3(3), and the contributing length shall be determined from Table R602.10.5.2.

R602.10.6 Construction of Methods ABW, PFH, PFG, CS-PF and BV-WSP. Methods ABW, PFH, PFG, CS-PF and BV-WSP shall be constructed as specified in Sections R602.10.6.1 through R602.10.6.5.

R602.10.6.1 Method ABW: Alternate braced wall panels. Method ABW *braced wall panel*s shall be constructed in accordance with Figure R602.10.6.1. The hold-down force shall be in accordance with Table R602.10.6.1.

R602.10.6.2 Method PFH: Portal frame with hold-downs. Method PFH *braced wall panel*s shall be constructed in accordance with Figure R602.10.6.2.

R602.10.6.3 Method PFG: Portal frame at garage door openings in Seismic Design Categories A, B and C. Where supporting a roof or one story and a roof, a Method PFG *braced wall panel* constructed in accordance with Figure R602.10.6.3 shall be permitted on either side of garage door openings.

INTERNATIONAL CODE COUNCIL®
Copyright © 2019 ICC & NYSDOS. ALL RIGHTS RESERVED. Accessed by Lauren Gualdino (lgualdino@briarcliffmanor.org), (-) Order Number #100880972 on May 08, 2020 07:05 AM (PDT) pursuant to License Agreement with ICC & NYSDOS. No further reproduction, no

100880972

TABLE R602.10.3(1)
BRACING REQUIREMENTS BASED ON WIND SPEED

• EXPOSURE CATEGORY B • 30-FOOT MEAN ROOF HEIGHT • 10-FOOT WALL HEIGHT • 2 BRACED WALL LINES			MINIMUM TOTAL LENGTH (FEET) OF BRACED WALL PANELS REQUIRED ALONG EACH BRACED WALL LINE[a]			
Ultimate Design Wind Speed (mph)	**Story Location**	**Braced Wall Line Spacing[c] (feet)**	**Method LIB[b]**	**Method GB**	**Methods DWB, WSP, SFB, PBS, PCP, HPS, BV-WSP, ABW, PFH, PFC, CS-SFB**	**Methods CS-WSP, CS-G, CS-PF**
≤ 110	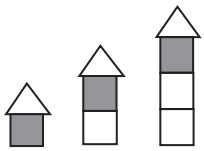	10	3.5	3.5	2.0	1.5
		20	6.0	6.0	3.5	3.0
		30	8.5	8.5	5.0	4.5
		40	11.5	11.5	6.5	5.5
		50	14.0	14.0	8.0	7.0
		60	16.5	16.5	9.5	8.0
	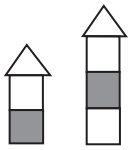	10	6.5	6.5	3.5	3.0
		20	11.5	11.5	6.5	5.5
		30	16.5	16.5	9.5	8.0
		40	21.5	21.5	12.5	10.5
		50	26.5	26.5	15.5	13.0
		60	31.5	31.5	18.0	15.5
	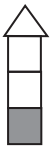	10	NP	9.5	5.5	4.5
		20	NP	17.0	10.0	8.5
		30	NP	24.5	14.0	12.0
		40	NP	32.0	18.5	15.5
		50	NP	39.5	22.5	19.0
		60	NP	46.5	26.5	23.0
≤ 115	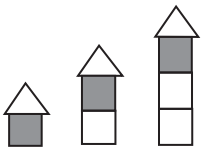	10	3.5	3.5	2.0	2.0
		20	6.5	6.5	3.5	3.5
		30	9.5	9.5	5.5	4.5
		40	12.5	12.5	7.0	6.0
		50	15.0	15.0	9.0	7.5
		60	18.0	18.0	10.5	9.0
		10	7.0	7.0	4.0	3.5
		20	12.5	12.5	7.5	6.5
		30	18.0	18.0	10.5	9.0
		40	23.5	23.5	13.5	11.5
		50	29.0	29.0	16.5	14.0
		60	34.5	34.5	20.0	17.0
		10	NP	10.0	6.0	5.0
		20	NP	18.5	11.0	9.0
		30	NP	27.0	15.5	13.0
		40	NP	35.0	20.0	17.0
		50	NP	43.0	24.5	21.0
		60	NP	51.0	29.0	25.0

(continued)

INTERNATIONAL CODE COUNCIL®
Copyright © 2019 ICC & NYSDOS. ALL RIGHTS RESERVED. Accessed by Lauren Gualdino (lgualdino@briarcliffmanor.org), (-) Order Number #100880972 on May 08, 2020 07:05 AM (PDT) pursuant to License Agreement with ICC & NYSDOS. No further reproduction, no

100880972

TABLE R602.10.3(1)—continued
BRACING REQUIREMENTS BASED ON WIND SPEED

• EXPOSURE CATEGORY B • 30-FOOT MEAN ROOF HEIGHT • 10-FOOT WALL HEIGHT • 2 BRACED WALL LINES			MINIMUM TOTAL LENGTH (FEET) OF BRACED WALL PANELS REQUIRED ALONG EACH BRACED WALL LINE[a]			
Ultimate Design Wind Speed (mph)	**Story Location**	**Braced Wall Line Spacing[c] (feet)**	**Method LIB[b]**	**Method GB**	**Methods DWB, WSP, SFB, PBS, PCP, HPS, BV-WSP, ABW, PFH, PFG, CS-SFB**	**Methods CS-WSP, CS-G, CS-PF**
≤ 120	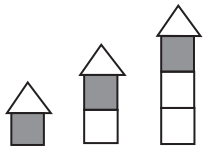	10	4.0	4.0	2.5	2.0
		20	7.0	7.0	4.0	3.5
		30	10.5	10.5	6.0	5.0
		40	13.5	13.5	8.0	6.5
		50	16.5	16.5	9.5	8.0
		60	19.5	19.5	11.5	9.5
	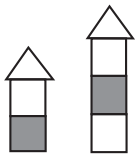	10	7.5	7.5	4.5	3.5
		20	14.0	14.0	8.0	7.0
		30	20.0	20.0	11.5	9.5
		40	25.5	25.5	15.0	12.5
		50	31.5	31.5	18.0	15.5
		60	37.5	37.5	21.5	18.5
	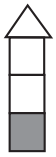	10	NP	11.0	6.5	5.5
		20	NP	20.5	11.5	10.0
		30	NP	29.0	17.0	14.5
		40	NP	38.0	22.0	18.5
		50	NP	47.0	27.0	23.0
		60	NP	55.5	32.0	27.0
≤ 130	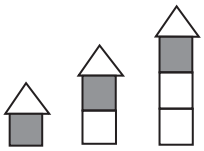	10	4.5	4.5	2.5	2.5
		20	8.5	8.5	5.0	4.0
		30	12.0	12.0	7.0	6.0
		40	15.5	15.5	9.0	7.5
		50	19.5	19.5	11.0	9.5
		60	23.0	23.0	13.0	11.0
	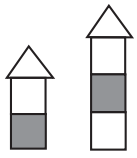	10	8.5	8.5	5.0	4.5
		20	16.0	16.0	9.5	8.0
		30	23.0	23.0	13.5	11.5
		40	30.0	30.0	17.5	15.0
		50	37.0	37.0	21.5	18.0
		60	44.0	44.0	25.0	21.5
	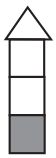	10	NP	13.0	7.5	6.5
		20	NP	24.0	13.5	11.5
		30	NP	34.5	19.5	17.0
		40	NP	44.5	25.5	22.0
		50	NP	55.0	31.5	26.5
		60	NP	65.0	37.5	31.5

(continued)

INTERNATIONAL CODE COUNCIL®
Copyright © 2019 ICC & NYSDOS. ALL RIGHTS RESERVED. Accessed by Lauren Gualdino (lgualdino@briarcliffmanor.org), (-) Order Number #100880972 on May 08, 2020 07:05 AM (PDT) pursuant to License Agreement with ICC & NYSDOS. No further reproduction, no

100880972

TABLE R602.10.3(1)—continued
BRACING REQUIREMENTS BASED ON WIND SPEED

• EXPOSURE CATEGORY B • 30-FOOT MEAN ROOF HEIGHT • 10-FOOT WALL HEIGHT • 2 BRACED WALL LINES			MINIMUM TOTAL LENGTH (FEET) OF BRACED WALL PANELS REQUIRED ALONG EACH BRACED WALL LINE[a]			
Ultimate Design Wind Speed (mph)	**Story Location**	**Braced Wall Line Spacing[c] (feet)**	**Method LIB[b]**	**Method GB**	**Methods DWB, WSP, SFB, PBS, PCP, HPS, BV-WSP, ABW, PFH, PFG, CS-SFB**	**Methods CS-WSP, CS-G, CS-PF**
< 140	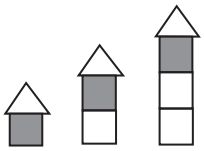	10	5.5	5.5	3.0	2.5
		20	10.0	10.0	5.5	5.0
		30	14.0	14.0	8.0	7.0
		40	18.0	18.0	10.5	9.0
		50	22.5	22.5	13.0	11.0
		60	26.5	26.5	15.0	13.0
	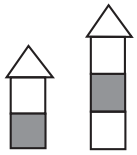	10	10.0	10.0	6.0	5.0
		20	18.5	18.5	11.0	9.0
		30	27.0	27.0	15.5	13.0
		40	35.0	35.0	20.0	17.0
		50	43.0	43.0	24.5	21.0
		60	51.0	51.0	29.0	25.0
	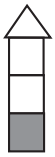	10	NP	15.0	8.5	7.5
		20	NP	27.5	16.0	13.5
		30	NP	39.5	23.0	19.5
		40	NP	51.5	29.5	25.0
		50	NP	63.5	36.5	31.0
		60	NP	75.5	43.0	36.5

For SI: 1 inch = 25.4 mm, 1 foot = 304.8 mm, 1 mile per hour = 0.447 m/s.

NP = Not Permitted.

a. Linear interpolation shall be permitted.

b. Method LIB shall have gypsum board fastened to not less than one side with nails or screws in accordance with Table R602.3(1) for exterior sheathing or Table R702.3.5 for interior gypsum board. Spacing of fasteners at panel edges shall not exceed 8 inches.

c. Where three or more parallel braced wall lines are present and the distances between adjacent braced wall lines are different, the average dimension shall be permitted to be used for braced wall line spacing.

INTERNATIONAL CODE COUNCIL®
Copyright © 2019 ICC & NYSDOS. ALL RIGHTS RESERVED. Accessed by Lauren Gualdino (lgualdino@briarcliffmanor.org), (-) Order Number #100880972 on May 08, 2020 07:05 AM (PDT) pursuant to License Agreement with ICC & NYSDOS. No further reproduction, no

100880972

TABLE R602.10.3(2)
WIND ADJUSTMENT FACTORS TO THE REQUIRED LENGTH OF WALL BRACING

ITEM NUMBER	ADJUSTMENT BASED ON	STORY/SUPPORTING	CONDITION	ADJUSTMENT FACTOR[a, b] [multiply length from Table R602.10.3(1) by this factor]	APPLICABLE METHODS
1	Exposure category[d]	One-story structure	B	1.00	All methods
			C	1.20	
			D	1.50	
		Two-story structure	B	1.00	
			C	1.30	
			D	1.60	
		Three-story structure	B	1.00	
			C	1.40	
			D	1.70	
2	Roof eave-to-ridge height	Roof only	≤ 5 feet	0.70	
			10 feet	1.00	
			15 feet	1.30	
			20 feet	1.60	
		Roof + 1 floor	≤ 5 feet	0.85	
			10 feet	1.00	
			15 feet	1.15	
			20 feet	1.30	
		Roof + 2 floors	≤ 5 feet	0.90	
			10 feet	1.00	
			15 feet	1.10	
			20 feet	Not permitted	
3	Story height (Section R301.3)	Any story	8 feet	0.90	
			9 feet	0.95	
			10 feet	1.00	
			11 feet	1.05	
			12 feet	1.10	
4	Number of braced wall lines (per plan direction)[c]	Any story	2	1.00	
			3	1.30	
			4	1.45	
			≥ 5	1.60	
5	Additional 800-pound hold-down device	Top story only	Fastened to the end studs of each braced wall panel and to the foundation or framing below	0.80	DWB, WSP, SFB, PBS, PCP, HPS
6	Interior gypsum board finish (or equivalent)	Any story	Omitted from inside face of braced wall panels	1.40	DWB, WSP, SFB, PBS, PCP, HPS, CS-WSP, CS-G, CS-SFB
7	Gypsum board fastening	Any story	4 inches o.c. at panel edges, including top and bottom plates, and all horizontal joints blocked	0.7	GB
8	Horizontal blocking	Any story	Horizontal block is omitted	2.0	WSP, CS-WSP

For SI: 1 inch = 25.4 mm, 1 foot = 304.8 mm, 1 pound = 4.48 N.

a. Linear interpolation shall be permitted.

b. The total adjustment factor is the product of all applicable adjustment factors.

c. The adjustment factor is permitted to be 1.0 when determining bracing amounts for intermediate braced wall lines provided the bracing amounts on adjacent braced wall lines are based on a spacing and number that neglects the intermediate braced wall line.

d. The same adjustment factor shall be applied to all braced wall lines on all floors of the structure, based on the worst-case exposure category.

INTERNATIONAL CODE COUNCIL®
Copyright © 2019 ICC & NYSDOS. ALL RIGHTS RESERVED. Accessed by Lauren Gualdino (lgualdino@briarcliffmanor.org), (-) Order Number #100880972 on May 08, 2020 07:05 AM (PDT) pursuant to License Agreement with ICC & NYSDOS. No further reproduction, no

100880972

TABLE R602.10.3(3)
BRACING REQUIREMENTS BASED ON SEISMIC DESIGN CATEGORY

• SOIL CLASS D[b] • WALL HEIGHT = 10 FEET • 10 PSF FLOOR DEAD LOAD • 15 PSF ROOF/CEILING DEAD LOAD • BRACED WALL LINE SPACING ≤ 25 FEET			MINIMUM TOTAL LENGTH (FEET) OF BRACED WALL PANELS REQUIRED ALONG EACH BRACED WALL LINE[a, f]				
Seismic Design Category	**Story Location**	**Braced Wall Line Length (feet)[c]**	**Method LIB[d]**	**Method GB**	**Methods DWB, SFB, PBS, PCP, HPS, CS-SFB[e]**	**Method WSP**	**Methods CS-WSP, CS-G, CS-PF**
C (townhouses only)	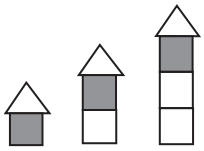	10	2.5	2.5	2.5	1.6	1.4
		20	5.0	5.0	5.0	3.2	2.7
		30	7.5	7.5	7.5	4.8	4.1
		40	10.0	10.0	10.0	6.4	5.4
		50	12.5	12.5	12.5	8.0	6.8
	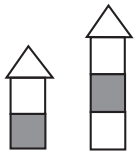	10	NP	4.5	4.5	3.0	2.6
		20	NP	9.0	9.0	6.0	5.1
		30	NP	13.5	13.5	9.0	7.7
		40	NP	18.0	18.0	12.0	10.2
		50	NP	22.5	22.5	15.0	12.8
		10	NP	6.0	6.0	4.5	3.8
		20	NP	12.0	12.0	9.0	7.7
		30	NP	18.0	18.0	13.5	11.5
		40	NP	24.0	24.0	18.0	15.3
		50	NP	30.0	30.0	22.5	19.1
D_0	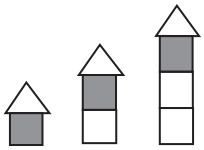	10	NP	2.8	2.8	1.8	1.6
		20	NP	5.5	5.5	3.6	3.1
		30	NP	8.3	8.3	5.4	4.6
		40	NP	11.0	11.0	7.2	6.1
		50	NP	13.8	13.8	9.0	7.7
	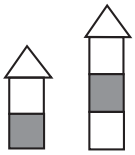	10	NP	5.3	5.3	3.8	3.2
		20	NP	10.5	10.5	7.5	6.4
		30	NP	15.8	15.8	11.3	9.6
		40	NP	21.0	21.0	15.0	12.8
		50	NP	26.3	26.3	18.8	16.0
	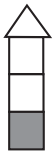	10	NP	7.3	7.3	5.3	4.5
		20	NP	14.5	14.5	10.5	9.0
		30	NP	21.8	21.8	15.8	13.4
		40	NP	29.0	29.0	21.0	17.9
		50	NP	36.3	36.3	26.3	22.3

(continued)

INTERNATIONAL CODE COUNCIL®
Copyright © 2019 ICC & NYSDOS. ALL RIGHTS RESERVED. Accessed by Lauren Gualdino (lgualdino@briarcliffmanor.org), (-) Order Number #100880972 on May 08, 2020 07:05 AM (PDT) pursuant to License Agreement with ICC & NYSDOS. No further reproduction, no

100880972

TABLE R602.10.3(3)—continued
BRACING REQUIREMENTS BASED ON SEISMIC DESIGN CATEGORY

• SOIL CLASS D[b] • WALL HEIGHT = 10 FEET • 10 PSF FLOOR DEAD LOAD • 15 PSF ROOF/CEILING DEAD LOAD • BRACED WALL LINE SPACING ≤ 25 FEET			MINIMUM TOTAL LENGTH (FEET) OF BRACED WALL PANELS REQUIRED ALONG EACH BRACED WALL LINE[a, f]				
Seismic Design Category	**Story Location**	**Braced Wall Line Length (feet)[c]**	**Method LIB[d]**	**Method GB**	**Methods DWB, SFB, PBS, PCP, HPS, CS-SFB[e]**	**Method WSP**	**Methods CS-WSP, CS-G, CS-PF**
D_1	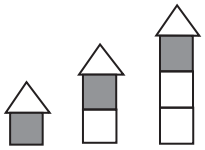	10	NP	3.0	3.0	2.0	1.7
		20	NP	6.0	6.0	4.0	3.4
		30	NP	9.0	9.0	6.0	5.1
		40	NP	12.0	12.0	8.0	6.8
		50	NP	15.0	15.0	10.0	8.5
	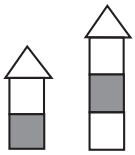	10	NP	6.0	6.0	4.5	3.8
		20	NP	12.0	12.0	9.0	7.7
		30	NP	18.0	18.0	13.5	11.5
		40	NP	24.0	24.0	18.0	15.3
		50	NP	30.0	30.0	22.5	19.1
	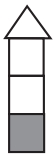	10	NP	8.5	8.5	6.0	5.1
		20	NP	17.0	17.0	12.0	10.2
		30	NP	25.5	25.5	18.0	15.3
		40	NP	34.0	34.0	24.0	20.4
		50	NP	42.5	42.5	30.0	25.5
D_2	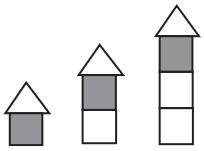	10	NP	4.0	4.0	2.5	2.1
		20	NP	8.0	8.0	5.0	4.3
		30	NP	12.0	12.0	7.5	6.4
		40	NP	16.0	16.0	10.0	8.5
		50	NP	20.0	20.0	12.5	10.6
	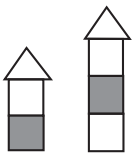	10	NP	7.5	7.5	5.5	4.7
		20	NP	15.0	15.0	11.0	9.4
		30	NP	22.5	22.5	16.5	14.0
		40	NP	30.0	30.0	22.0	18.7
		50	NP	37.5	37.5	27.5	23.4
	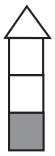	10	NP	NP	NP	NP	NP
		20	NP	NP	NP	NP	NP
		30	NP	NP	NP	NP	NP
		40	NP	NP	NP	NP	NP
		50	NP	NP	NP	NP	NP
	Cripple wall below one- or two-story dwelling	10	NP	NP	NP	7.5	6.4
		20	NP	NP	NP	15.0	12.8
		30	NP	NP	NP	22.5	19.1
		40	NP	NP	NP	30.0	25.5
		50	NP	NP	NP	37.5	31.9

For SI: 1 inch = 25.4 mm, 1 foot = 304.8 mm, 1 pound per square foot = 0.0479 kPa.

NP = Not Permitted.

a. Linear interpolation shall be permitted.

b. Wall bracing lengths are based on a soil site class "D." Interpolation of bracing length between the S_{ds} values associated with the seismic design categories shall be permitted when a site-specific S_{ds} value is determined in accordance with Section 1613.2 of the *Building Code of New York State*.

c. Where the braced wall line length is greater than 50 feet, braced wall lines shall be permitted to be divided into shorter segments having lengths of 50 feet or less, and the amount of bracing within each segment shall be in accordance with this table.

d. Method LIB shall have gypsum board fastened to not less than one side with nails or screws in accordance with Table R602.3(1) for exterior sheathing or Table R702.3.5 for interior gypsum board. Spacing of fasteners at panel edges shall not exceed 8 inches.

e. Methods PFG and CS-SFB do not apply in Seismic Design Categories D_0, D_1 and D_2.

f. Where more than one bracing method is used, mixing methods shall be in accordance with Section R602.10.4.1.

INTERNATIONAL CODE COUNCIL®
Copyright © 2019 ICC & NYSDOS. ALL RIGHTS RESERVED. Accessed by Lauren Gualdino (lgualdino@briarcliffmanor.org), (-) Order Number #100880972 on May 08, 2020 07:05 AM (PDT) pursuant to License Agreement with ICC & NYSDOS. No further reproduction, no

TABLE R602.10.3(4)
SEISMIC ADJUSTMENT FACTORS TO THE REQUIRED LENGTH OF WALL BRACING

ITEM NUMBER	ADJUSTMENT BASED ON	STORY	CONDITION	ADJUSTMENT FACTOR[a, b] [Multiply length from Table R602.10.3(3) by this factor]	APPLICABLE METHODS
1	Story height (Section 301.3)	Any story	≤ 10 feet	1.0	All methods
			> 10 feet and ≤ 12 feet	1.2	
2	Braced wall line spacing, townhouses in SDC C	Any story	≤ 35 feet	1.0	
			> 35 feet and ≤ 50 feet	1.43	
3	Braced wall line spacing, in SDC D_0, D_1, D_2[c]	Any story	> 25 feet and ≤ 30 feet	1.2	
			> 30 feet and ≤ 35 feet	1.4	
4	Wall dead load	Any story	> 8 psf and < 15 psf	1.0	
			< 8 psf	0.85	
5	Roof/ceiling dead load for wall supporting	1-, 2- or 3-story building	≤15 psf	1.0	
		2- or 3-story building	> 15 psf and ≤ 25 psf	1.1	
		1-story building or top story	> 15 psf and ≤ 25 psf	1.2	
6	Walls with stone or masonry veneer, townhouses in SDC C[d, e]		1.0		All methods
			1.5		
			1.5		
7	Walls with stone or masonry veneer, detached one- and two-family dwellings in SDC D_0 – D_2[d, f]	Any story	See Table R602.10.6.5		BV-WSP
8	Walls with stone or masonry veneer, detached one- and two-family dwellings in SDC D_0 – D_2[d, f]	First and second story of two-story dwelling	See Table R602.10.6.5	1.2	WSP, CS-WSP
9	Interior gypsum board finish (or equivalent)	Any story	Omitted from inside face of braced wall panels	1.5	DWB, WSP, SFB, PBS, PCP, HPS, CS-WSP, CS-G, CS-SFB
10	Horizontal blocking	Any story	Horizontal blocking omitted	2.0	WSP, CS-WSP

For SI: 1 foot = 304.8 mm, 1 pound per square foot = 0.0479 kPa.

a. Linear interpolation shall be permitted.

b. The total length of bracing required for a given wall line is the product of all applicable adjustment factors.

c. The length-to-width ratio for the floor/roof diaphragm shall not exceed 3:1.

d. Applies to stone or masonry veneer exceeding the first story height.

e. The adjustment factor for stone or masonry veneer shall be applied to all exterior braced wall lines and all braced wall lines on the interior of the building, backing or perpendicular to and laterally supporting veneered walls.

f. See Section R602.10.6.5 for requirements where stone or masonry veneer does not exceed the first-story height.

INTERNATIONAL CODE COUNCIL®
Copyright © 2019 ICC & NYSDOS. ALL RIGHTS RESERVED. Accessed by Lauren Gualdino (lgualdino@briarcliffmanor.org), (-) Order Number #100880972 on May 08, 2020 07:05 AM (PDT) pursuant to License Agreement with ICC & NYSDOS. No further reproduction, no

100880972

TABLE R602.10.4
BRACING METHODS

METHODS, MATERIAL		MINIMUM THICKNESS	FIGURE	CONNECTION CRITERIA[a]	
				Fasteners	Spacing
Intermittent Bracing Methods	**LIB** Let-in-bracing	1 × 4 wood or approved metal straps at 45° to 60° angles for maximum 16″ stud spacing		Wood: 2-8d common nails or 3-8d ($2^1/_2$″ long x 0.113″ dia.) nails	Wood: per stud and top and bottom plates
				Metal strap: per manufacturer	Metal: per manufacturer
	DWB Diagonal wood boards	$^3/_4$″ (1″ nominal) for maximum 24″ stud spacing	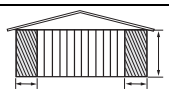	2-8d ($2^1/_2$″ long × 0.113″ dia.) nails or 2 - $1^3/_4$″ long staples	Per stud
	WSP Wood structural panel (See Section R604)	$^3/_8$″	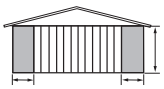	Exterior sheathing per Table R602.3(3)	6″ edges 12″ field
				Interior sheathing per Table R602.3(1) or R602.3(2)	Varies by fastener
	BV-WSP[e] Wood structural panels with stone or masonry veneer (See Section R602.10.6.5)	$^7/_{16}$″	See Figure R602.10.6.5	8d common ($2^1/_2$″ × 0.131) nails	4″ at panel edges 12″ at intermediate supports 4″ at braced wall panel end posts
	SFB Structural fiberboard sheathing	$^1/_2$″ or $^{25}/_{32}$″ for maximum 16″ stud spacing	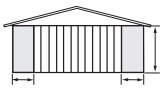	$1^1/_2$″ long × 0.12″ dia. (for $^1/_2$″ thick sheathing) $1^3/_4$″ long × 0.12″ dia. (for $^{25}/_{32}$″ thick sheathing) galvanized roofing nails	3″ edges 6″ field
	GB Gypsum board	$^1/_2$″	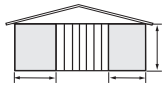	Nails or screws per Table R602.3(1) for exterior locations	For all braced wall panel locations: 7″ edges (including top and bottom plates) 7″ field
				Nails or screws per Table R702.3.5 for interior locations	
	PBS Particleboard sheathing (See Section R605)	$^3/_8$″ or $^1/_2$″ for maximum 16″ stud spacing		For $^3/_8$″, 6d common (2″ long × 0.113″ dia.) nails For $^1/_2$″, 8d common ($2^1/_2$″ long × 0.131″ dia.) nails	3″ edges 6″ field
	PCP Portland cement plaster	See Section R703.7 for maximum 16″ stud spacing		$1^1/_2$″ long, 11 gage, $^7/_{16}$″ dia. head nails or $^7/_8$″ long, 16 gage staples	6″ o.c. on all framing members
	HPS Hardboard panel siding	$^7/_{16}$″ for maximum 16″ stud spacing	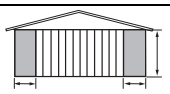	0.092″ dia., 0.225″ dia. head nails with length to accommodate $1^1/_2$″ penetration into studs	4″ edges 8″ field
	ABW Alternate braced wall	$^3/_8$″	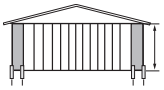	See Section R602.10.6.1	See Section R602.10.6.1

(continued)

INTERNATIONAL CODE COUNCIL®
Copyright © 2019 ICC & NYSDOS. ALL RIGHTS RESERVED. Accessed by Lauren Gualdino (lgualdino@briarcliffmanor.org), (-) Order Number #100880972 on May 08, 2020 07:05 AM (PDT) pursuant to License Agreement with ICC & NYSDOS. No further reproduction, no

100880972

TABLE R602.10.4—continued
BRACING METHODS

METHODS, MATERIAL		MINIMUM THICKNESS	FIGURE	CONNECTION CRITERIA[a]	
				Fasteners	Spacing
Intermittent Bracing Methods	**PFH** Portal frame with hold-downs	$^3/_8$″	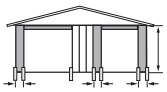	See Section R602.10.6.2	See Section R602.10.6.2
	PFG Portal frame at garage	$^7/_{16}$″	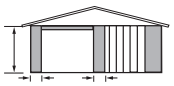	See Section R602.10.6.3	See Section R602.10.6.3
Continuous Sheathing Methods	**CS-WSP** Continuously sheathed wood structural panel	$^3/_8$″	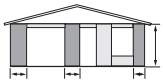	Exterior sheathing per Table R602.3(3)	6″ edges 12″ field
				Interior sheathing per Table R602.3(1) or R602.3(2)	Varies by fastener
	CS-G[b, c] Continuously sheathed wood structural panel adjacent to garage openings	$^3/_8$″	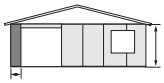	See Method CS-WSP	See Method CS-WSP
	CS-PF Continuously sheathed portal frame	$^7/_{16}$″	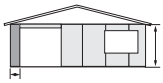	See Section R602.10.6.4	See Section R602.10.6.4
	CS-SFB[d] Continuously sheathed structural fiberboard	$^1/_2$″ or $^{25}/_{32}$″ for maximum 16" stud spacing	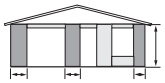	$1^1/_2$″ long × 0.12″ dia. (for $^1/_2$″ thick sheathing) $1^3/_4$″ long × 0.12″ dia. (for $^{25}/_{32}$″ thick sheathing) galvanized roofing nails	3″ edges 6″ field

For SI: 1 inch = 25.4 mm, 1 foot = 304.8 mm, 1 degree = 0.0175 rad, 1 pound per square foot = 47.8 N/m^2, 1 mile per hour = 0.447 m/s.

a. Adhesive attachment of wall sheathing, including Method GB, shall not be permitted in Seismic Design Categories C, D_0, D_1 and D_2.

b. Applies to panels next to garage door opening where supporting gable end wall or roof load only. Shall only be used on one wall of the garage. In Seismic Design Categories D_0, D_1 and D_2, roof covering dead load shall not exceed 3 psf.

c. Garage openings adjacent to a Method CS-G panel shall be provided with a header in accordance with Table R602.7(1). A full-height clear opening shall not be permitted adjacent to a Method CS-G panel.

d. Method CS-SFB does not apply in Seismic Design Categories D_0, D_1 and D_2.

e. Method applies to detached one- and two-family dwellings in Seismic Design Categories D_0 through D_2 only.

INTERNATIONAL CODE COUNCIL®
Copyright © 2019 ICC & NYSDOS. ALL RIGHTS RESERVED. Accessed by Lauren Gualdino (lgualdino@briarcliffmanor.org), (-) Order Number #100880972 on May 08, 2020 07:05 AM (PDT) pursuant to License Agreement with ICC & NYSDOS. No further reproduction, no

100880972

TABLE R602.10.5
MINIMUM LENGTH OF BRACED WALL PANELS

METHOD (See Table R602.10.4)		MINIMUM LENGTH[a] (inches)					CONTRIBUTING LENGTH (inches)
		Wall Height					
		8 feet	9 feet	10 feet	11 feet	12 feet	
DWB, WSP, SFB, PBS, PCP, HPS, BV-WSP		48	48	48	53	58	Actual[b]
GB		48	48	48	53	58	Double sided = Actual Single sided = 0.5 × Actual
LIB		55	62	69	NP	NP	Actual[b]
ABW	SDC A, B and C, ultimate design wind speed < 140 mph	28	32	34	38	42	48
	SDC D_0, D_1 and D_2, ultimate design wind speed < 140 mph	32	32	34	NP	NP	
CS-G		24	27	30	33	36	Actual[b]
CS-WSP, CS-SFB	Adjacent clear opening height (inches)						
	≤ 64	24	27	30	33	36	Actual[b]
	68	26	27	30	33	36	
	72	27	27	30	33	36	
	76	30	29	30	33	36	
	80	32	30	30	33	36	
	84	35	32	32	33	36	
	88	38	35	33	33	36	
	92	43	37	35	35	36	
	96	48	41	38	36	36	
	100	—	44	40	38	38	
	104	—	49	43	40	39	
	108	—	54	46	43	41	
	112	—	—	50	45	43	
	116	—	—	55	48	45	
	120	—	—	60	52	48	
	124	—	—	—	56	51	
	128	—	—	—	61	54	
	132	—	—	—	66	58	
	136	—	—	—	—	62	
	140	—	—	—	—	66	
	144	—	—	—	—	72	
METHOD (See Table R602.10.4)		Portal header height					
		8 feet	9 feet	10 feet	11 feet	12 feet	
PFH	Supporting roof only	16	16	16	Note c	Note c	48
	Supporting one story and roof	24	24	24	Note c	Note c	
PFG		24	27	30	Note d	Note d	1.5 × Actual[b]
CS-PF	SDC A, B and C	16	18	20	Note e	Note e	1.5 × Actual[b]
	SDC D_0, D_1 and D_2	16	18	20	Note e	Note e	Actual[b]

For SI: 1 inch = 25.4 mm, 1 foot = 304.8 mm, 1 mile per hour = 0.447 m/s.
NP = Not Permitted.

a. Linear interpolation shall be permitted.

b. Use the actual length where it is greater than or equal to the minimum length.

c. Maximum header height for PFH is 10 feet in accordance with Figure R602.10.6.2, but wall height shall be permitted to be increased to 12 feet with pony wall.

d. Maximum header height for PFG is 10 feet in accordance with Figure R602.10.6.3, but wall height shall be permitted to be increased to 12 feet with pony wall.

e. Maximum header height for CS-PF is 10 feet in accordance with Figure R602.10.6.4, but wall height shall be permitted to be increased to 12 feet with pony wall.

INTERNATIONAL CODE COUNCIL®
Copyright © 2019 ICC & NYSDOS. ALL RIGHTS RESERVED. Accessed by Lauren Gualdino (lgualdino@briarcliffmanor.org), (-) Order Number #100880972 on May 08, 2020 07:05 AM (PDT) pursuant to License Agreement with ICC & NYSDOS. No further reproduction, no

100880972

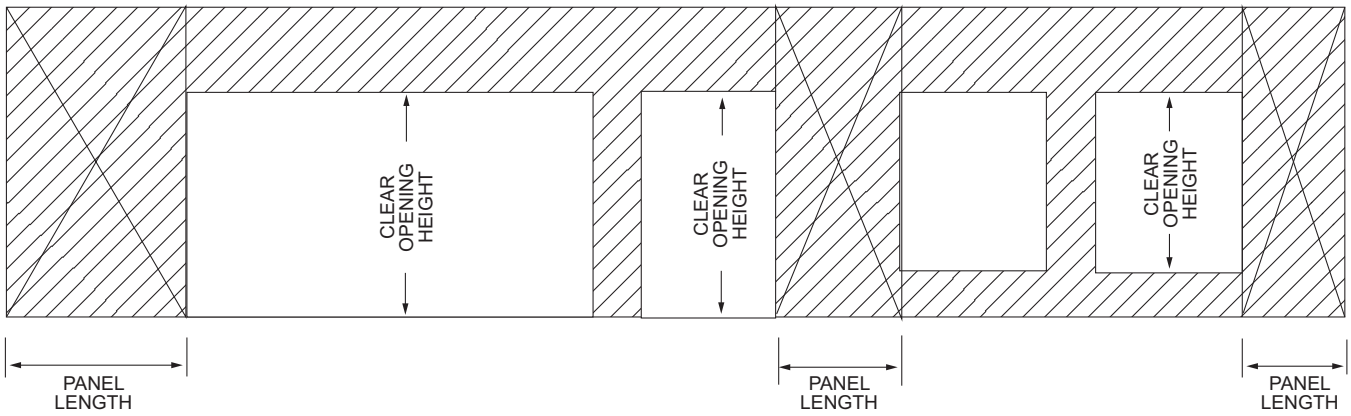

FIGURE R602.10.5
BRACED WALL PANELS WITH CONTINUOUS SHEATHING

TABLE R602.10.5.2
PARTIAL CREDIT FOR BRACED WALL PANELS LESS THAN 48 INCHES IN ACTUAL LENGTH

ACTUAL LENGTH OF BRACED WALL PANEL (inches)	CONTRIBUTING LENGTH OF BRACED WALL PANEL (inches)[a]	
	8-foot Wall Height	9-foot Wall Height
48	48	48
42	36	36
36	27	NA

For SI: 1 inch = 25.4 mm, 1 foot = 304.8 mm.
NA = Not Applicable.
a. Linear interpolation shall be permitted.

TABLE R602.10.6.1
MINIMUM HOLD-DOWN FORCES FOR METHOD ABW BRACED WALL PANELS

SEISMIC DESIGN CATEGORY AND WIND SPEED	SUPPORTING/STORY	HOLD-DOWN FORCE (pounds)				
		Height of Braced Wall Panel				
		8 feet	9 feet	10 feet	11 feet	12 feet
SDC A, B and C Ultimate design wind speed < 140 mph	One story	1,800	1,800	1,800	2,000	2,200
	First of two stories	3,000	3,000	3,000	3,300	3,600
SDC D_0, D_1 and D_2 Ultimate design wind speed <140 mph	One story	1,800	1,800	1,800	NP	NP
	First of two stories	3,000	3,000	3,000	NP	NP

For SI: 1 inch = 25.4 mm, 1 foot = 304.8 mm, 1 pound = 4.45 N, 1 mile per hour = 0.447 m/s.
NP = Not Permitted.

INTERNATIONAL CODE COUNCIL®
Copyright © 2019 ICC & NYSDOS. ALL RIGHTS RESERVED. Accessed by Lauren Gualdino (lgualdino@briarcliffmanor.org), (-) Order Number #100880972 on May 08, 2020 07:05 AM (PDT) pursuant to License Agreement with ICC & NYSDOS. No further reproduction, no

100880972

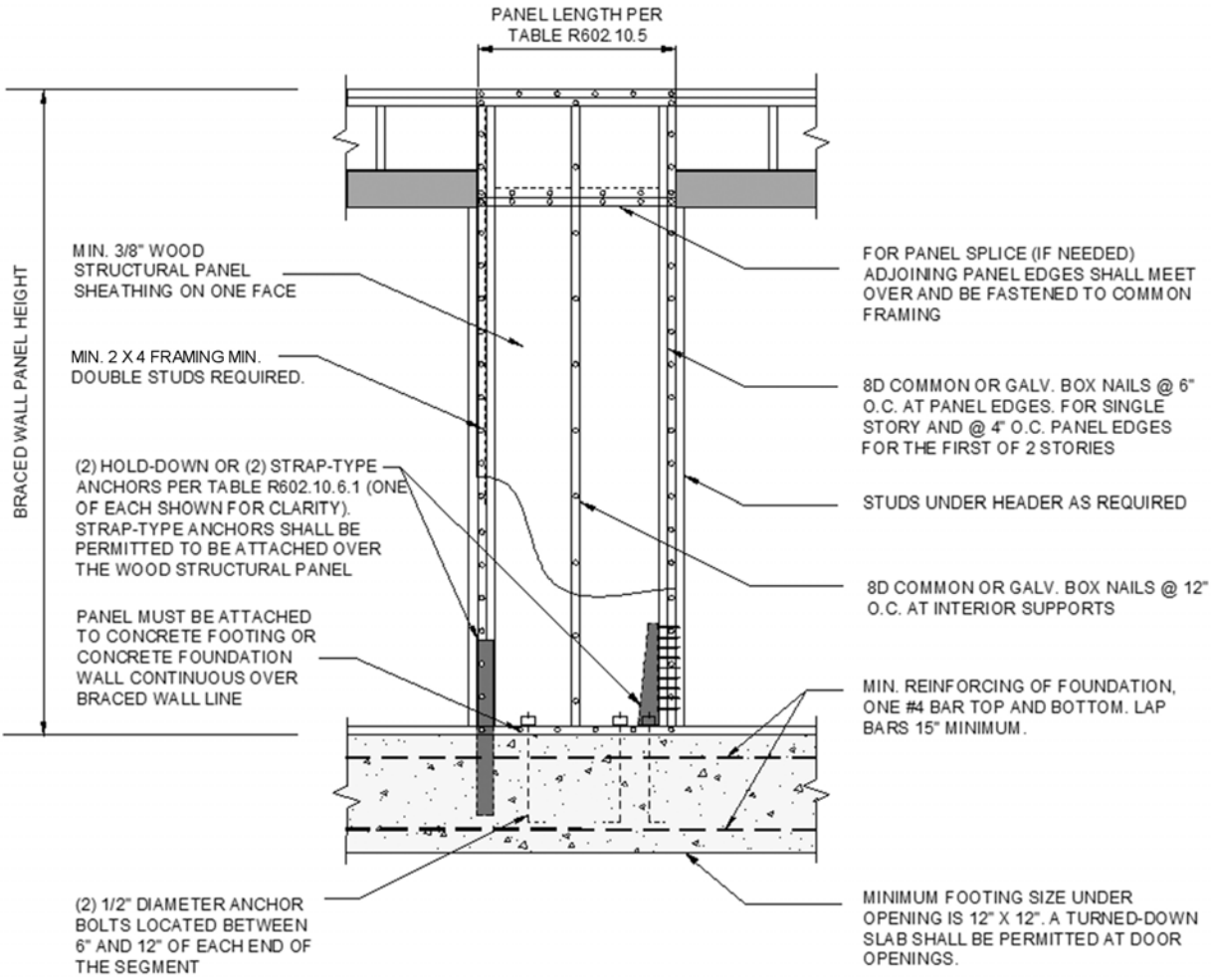

For SI: 1 inch = 25.4 mm.

FIGURE R602.10.6.1
METHOD ABW—ALTERNATE BRACED WALL PANEL

INTERNATIONAL CODE COUNCIL®
Copyright © 2019 ICC & NYSDOS. ALL RIGHTS RESERVED. Accessed by Lauren Gualdino (lgualdino@briarcliffmanor.org), (-) Order Number #100880972 on May 08, 2020 07:05 AM (PDT) pursuant to License Agreement with ICC & NYSDOS. No further reproduction, no

100880972

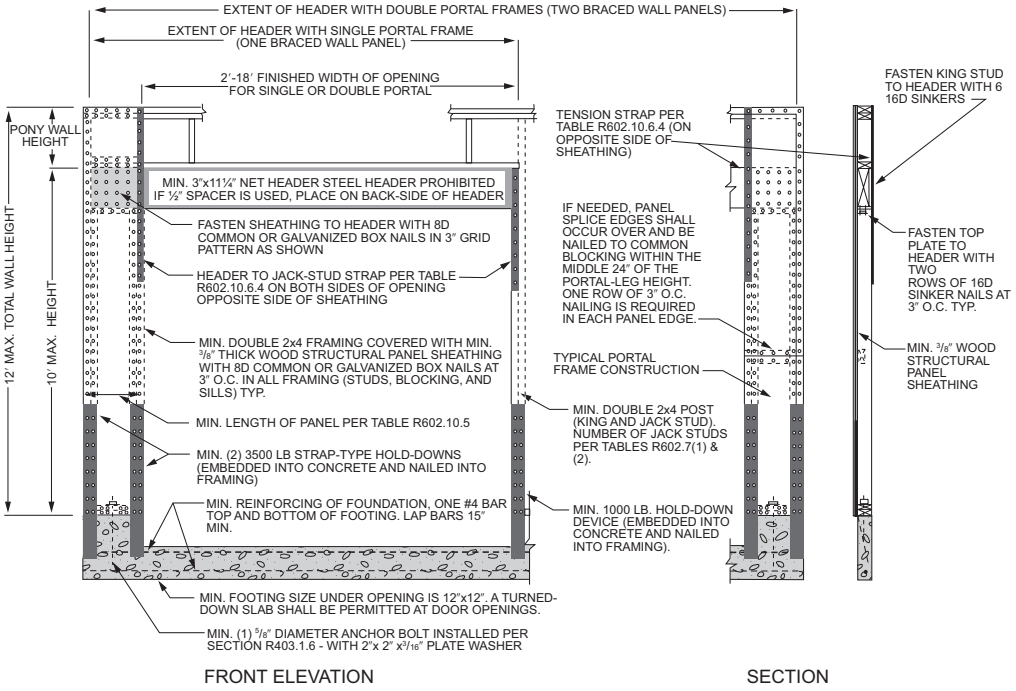

For SI: 1 inch = 25.4 mm, 1 foot = 304.8 mm.

FIGURE R602.10.6.2
METHOD PFH—PORTAL FRAME WITH HOLD-DOWNS

R602.10.6.4 Method CS-PF: Continuously sheathed portal frame. Continuously sheathed portal frame *braced wall panel*s shall be constructed in accordance with Figure R602.10.6.4 and Table R602.10.6.4. The number of continuously sheathed portal frame panels in a single *braced wall line* shall not exceed four.

R602.10.6.5 Wall bracing for dwellings with stone and masonry veneer in Seismic Design Categories D_0, D_1 and D_2. Where stone and masonry veneer are installed in accordance with Section R703.8, wall bracing on exterior *braced wall lines* and *braced wall lines* on the interior of the building, backing or perpendicular to and laterally supporting veneered walls shall comply with this section.

Where dwellings in Seismic Design Categories D_0, D_1 and D_2 have stone or masonry veneer installed in accordance with Section R703.8, and the veneer does not exceed the first-story height, wall bracing shall be in accordance with Section R602.10.3.

Where detached one- or two-family dwellings in Seismic Design Categories D_0, D_1 and D_2 have stone or masonry veneer installed in accordance with Section R703.8, and the veneer exceeds the first-*story height*, wall bracing at exterior *braced wall lines* and *braced wall lines* on the interior of the building shall be constructed using Method BV-WSP in accordance with this section and Figure R602.10.6.5. Cripple walls shall not be permitted, and required interior *braced wall lines* shall be supported on continuous foundations.

Where detached one- or two-family *dwellings* in Seismic Design Categories D_0, D_1 and D_2 have exterior veneer installed in accordance with Section R703.8 and are braced in accordance with Method WSP or CS-WSP, veneer shall be permitted in the second story in accordance with Item 1 or 2, provided that the *dwelling* does not extend more than two stories above grade plane, the veneer does not exceed 5 inches (127 mm) in thickness, the height of veneer on gable-end walls does not extend more than 8 feet (2438 mm) above the bearing wall top plate elevation, and the total length of *braced wall panel* specified by Table R602.10.3(3) is multiplied by 1.2 for each first- and second-story *braced wall line.*

1. The total area of the veneer on the second-story exterior walls shall be permitted to extend up to 25 percent of the occupied second floor area.
2. The veneer on the second-story exterior walls shall be permitted to cover one side of the *dwelling*, including walls on bay windows and similar appurtenances within the one dwelling side.

Townhouses in Seismic Design Categories D_0, D_1 and D_2 with stone or masonry veneer exceeding the first-story height shall be designed in accordance with accepted engineering practice.

R602.10.6.5.1 Length of bracing. The length of bracing along each *braced wall line* shall be the greater of that required by the ultimate design wind speed and *braced wall line* spacing in accordance with Table R602.10.3(1) as adjusted by the factors in

INTERNATIONAL CODE COUNCIL®
Copyright © 2019 ICC & NYSDOS. ALL RIGHTS RESERVED. Accessed by Lauren Gualdino (lgualdino@briarcliffmanor.org), (-) Order Number #100880972 on May 08, 2020 07:05 AM (PDT) pursuant to License Agreement with ICC & NYSDOS. No further reproduction, no

100880972

Table R602.10.3(2) or the seismic design category and *braced wall line* length in accordance with Table R602.10.6.5. Angled walls shall be permitted to be counted in accordance with Section R602.10.1.4, and *braced wall panel* location shall be in accordance with Section R602.10.2.2. Spacing between *braced wall lines* shall be in accordance with Table R602.10.1.3. The seismic adjustment factors in Table R602.10.3(4) shall not be applied to the length of bracing determined using Table R602.10.6.5, except that the bracing amount increase for *braced wall line* spacing greater than 25 feet (7620 mm) in accordance with Table R602.10.1.3 shall be required. The minimum total length of bracing in a *braced wall line,* after all adjustments have been taken, shall be not less than 48 inches (1219 mm) total.

R602.10.7 Ends of braced wall lines with continuous sheathing. Each end of a *braced wall line* with continuous sheathing shall have one of the conditions shown in Figure R602.10.7.

R602.10.8 Braced wall panel connections. *Braced wall panel*s shall be connected to floor framing or foundations as follows:

1. Where joists are perpendicular to a *braced wall panel* above or below, a rim joist, band joist or blocking shall be provided along the entire length of the *braced wall panel* in accordance with Figure R602.10.8(1). Fastening of top and bottom wall plates to framing, rim joist, band joist or blocking shall be in accordance with Table R602.3(1).
2. Where joists are parallel to a *braced wall panel* above or below, a rim joist, end joist or other parallel framing member shall be provided directly above and below the *braced wall panel* in accordance with Figure R602.10.8(2). Where a parallel framing member cannot be located directly above and below the panel, full-depth blocking at 16-inch (406 mm) spacing shall be provided between the parallel framing members to each side of the *braced wall panel* in accordance with Figure R602.10.8(2). Fastening of blocking and wall plates shall be in accordance with Table R602.3(1) and Figure R602.10.8(2).
3. Connections of *braced wall panel*s to concrete or masonry shall be in accordance with Section R403.1.6.

R602.10.8.1 Braced wall panel connections for Seismic Design Categories D_0, D_1 and D_2. *Braced wall panel*s shall be fastened to required foundations in accordance with Section R602.11.1, and top plate lap splices shall be face-nailed with not less than eight 16d nails on each side of the splice.

R602.10.8.2 Connections to roof framing. Top plates of exterior *braced wall panels* shall be attached to rafters or roof trusses above in accordance with Table R602.3(1) and this section. Where required by this section, blocking between rafters or roof trusses shall be attached to top plates of *braced wall panels* and to rafters and roof trusses in accordance with Table R602.3(1). A continuous band, rim or header joist or roof truss parallel to the *braced wall panels* shall be permitted to replace the blocking required by this section. Blocking shall not be required over openings in continuously sheathed *braced wall lines*. In addition to the requirements of this section, lateral support shall be provided for rafters and ceiling joists in accordance with Section R802.8 and for trusses in accordance with Section R802.10.3. Roof ventilation shall be provided in accordance with Section R806.1.

1. For Seismic Design Categories A, B and C where the distance from the top of the braced wall panel to the top of the rafters or roof trusses above is $9^1/_4$ inches (235 mm) or less, blocking between rafters or roof trusses shall not be required. Where the distance from the top of the braced wall panel to the top of the rafters or roof trusses above is between $9^1/_4$ inches (235 mm) and $15^1/_4$ inches (387 mm), blocking between rafters or roof trusses shall be provided above the braced wall panel in accordance with Figure R602.10.8.2(1).

   Exception: Where the outside edge of truss vertical web members aligns with the outside face of the wall studs below, wood structural panel sheathing extending above the top plate as shown in Figure R602.10.8.2(3) shall be permitted to be fastened to each truss web with three-8d nails ($2^1/_2$ inches × 0.131 inch) and blocking between the trusses shall not be required.
2. For Seismic Design Categories D_0, D_1 and D_2, where the distance from the top of the braced wall panel to the top of the rafters or roof trusses is $15^1/_4$ inches (387 mm) or less, blocking between rafters or roof trusses shall be provided above the braced wall panel in accordance with Figure R602.10.8.2(1).
3. Where the distance from the top of the braced wall panel to the top of rafters or roof trusses exceeds $15^1/_4$ inches (387 mm), the top plates of the braced wall panel shall be connected to perpendicular rafters or roof trusses above in accordance with one or more of the following methods:
   - 3.1. Soffit blocking panels constructed in accordance with Figure R602.10.8.2(2).
   - 3.2. Vertical blocking panels constructed in accordance with Figure R602.10.8.2(3).
   - 3.3. Blocking panels provided by the roof truss manufacturer and designed in accordance with Section R802.
   - 3.4. Blocking, blocking panels or other methods of lateral load transfer designed in accordance with the AWC WFCM or accepted engineering practice.

INTERNATIONAL CODE COUNCIL®
Copyright © 2019 ICC & NYSDOS. ALL RIGHTS RESERVED. Accessed by Lauren Gualdino (lgualdino@briarcliffmanor.org), (-) Order Number #100880972 on May 08, 2020 07:05 AM (PDT) pursuant to License Agreement with ICC & NYSDOS. No further reproduction, no

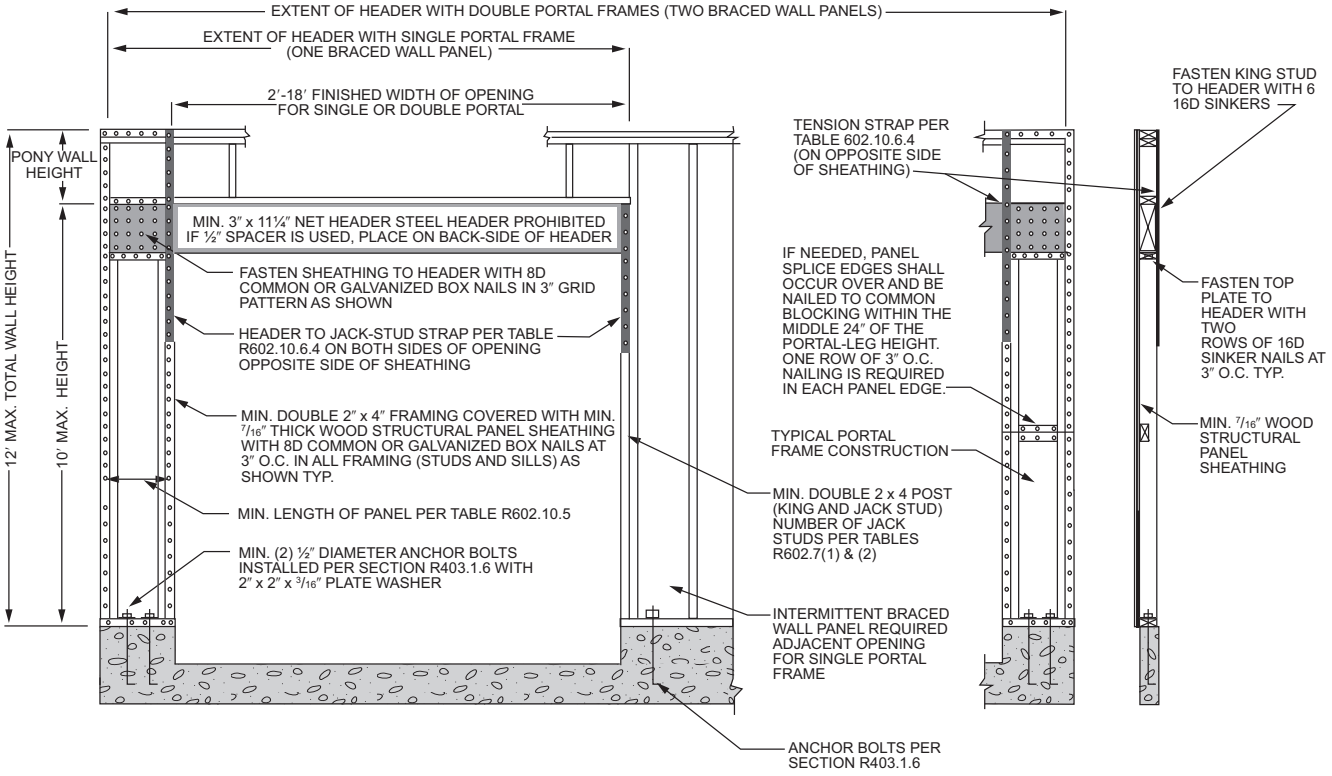

For SI: 1 inch = 25.4 mm, 1 foot = 304.8 mm.

FIGURE R602.10.6.3
METHOD PFG—PORTAL FRAME AT GARAGE DOOR OPENINGS IN SEISMIC DESIGN CATEGORIES A, B AND C

INTERNATIONAL CODE COUNCIL®
Copyright © 2019 ICC & NYSDOS. ALL RIGHTS RESERVED. Accessed by Lauren Gualdino (lgualdino@briarcliffmanor.org), (-) Order Number #100880972 on May 08, 2020 07:05 AM (PDT) pursuant to License Agreement with ICC & NYSDOS. No further reproduction, no

100880972

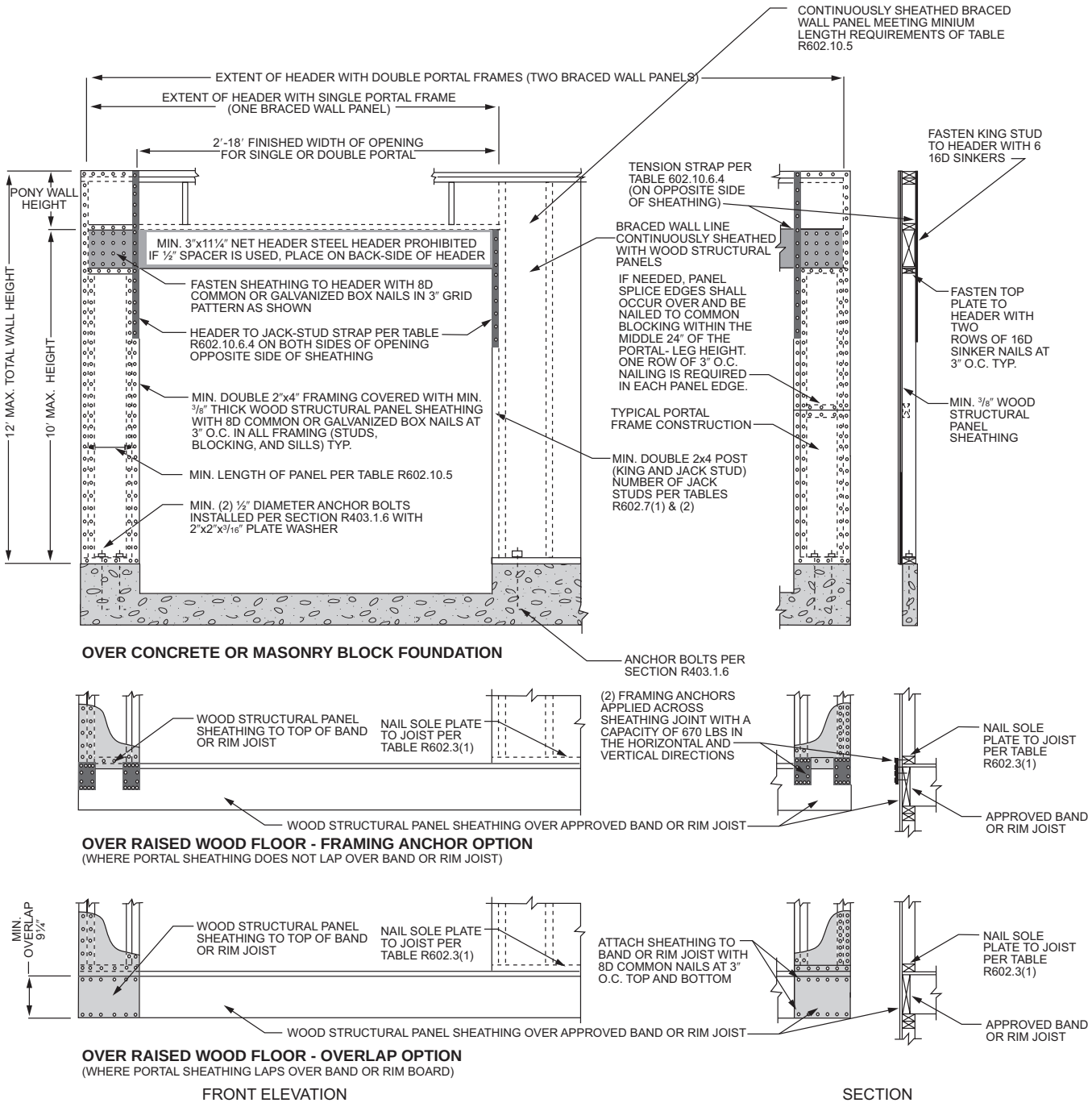

For SI: 1 inch = 25.4 mm, 1 foot = 304.8 mm.

FIGURE R602.10.6.4
METHOD CS-PF—CONTINUOUSLY SHEATHED PORTAL FRAME PANEL CONSTRUCTION

INTERNATIONAL CODE COUNCIL®
Copyright © 2019 ICC & NYSDOS. ALL RIGHTS RESERVED. Accessed by Lauren Gualdino (lgualdino@briarcliffmanor.org), (-) Order Number #100880972 on May 08, 2020 07:05 AM (PDT) pursuant to License Agreement with ICC & NYSDOS. No further reproduction, no

100880972

TABLE R602.10.6.4
TENSION STRAP CAPACITY FOR RESISTING WIND PRESSURES PERPENDICULAR TO METHODS PFH, PFG AND CS-PF BRACED WALL PANELS[a]

MINIMUM WALL STUD FRAMING NOMINAL SIZE AND GRADE	MAXIMUM PONY WALL HEIGHT (feet)	MAXIMUM TOTAL WALL HEIGHT (feet)	MAXIMUM OPENING WIDTH (feet)	TENSION STRAP CAPACITY REQUIRED (pounds)[a]					
				Ultimate Design Wind Speed V_{ult} (mph)					
				110	115	130	110	115	130
				Exposure B			Exposure C		
2 × 4 No. 2 Grade	0	10	18	1,000	1,000	1,000	1,000	1,000	1,050
	1	10	9	1,000	1,000	1,000	1,000	1,000	1,750
			16	1,000	1,025	2,050	2,075	2,500	3,950
			18	1,000	1,275	2,375	2,400	2,850	DR
	2	10	9	1,000	1,000	1,475	1,500	1,875	3,125
			16	1,775	2,175	3,525	3,550	4,125	DR
			18	2,075	2,500	3,950	3,975	DR	DR
	2	12	9	1,150	1,500	2,650	2,675	3,175	DR
			16	2,875	3,375	DR	DR	DR	DR
			18	3,425	3,975	DR	DR	DR	DR
	4	12	9	2,275	2,750	DR	DR	DR	DR
			12	3,225	3,775	DR	DR	DR	DR
2 × 6 Stud Grade	2	12	9	1,000	1,000	1,700	1,700	2,025	3,050
			16	1,825	2,150	3,225	3,225	3,675	DR
			18	2,200	2,550	3,725	3,750	DR	DR
	4	12	9	1,450	1,750	2,700	2,725	3,125	DR
			16	2,050	2,400	DR	DR	DR	DR
			18	3,350	3,800	DR	DR	DR	DR

For SI: 1 inch = 25.4 mm, 1 foot = 304.8 mm, 1 mile per hour = 0.447 m/s.
DR = Design Required.
a. Straps shall be installed in accordance with manufacturer's recommendations.

INTERNATIONAL CODE COUNCIL®
Copyright © 2019 ICC & NYSDOS. ALL RIGHTS RESERVED. Accessed by Lauren Gualdino (lgualdino@briarcliffmanor.org), (-) Order Number #100880972 on May 08, 2020 07:05 AM (PDT) pursuant to License Agreement with ICC & NYSDOS. No further reproduction, no

100880972

TABLE R602.10.6.5
METHOD BV-WSP WALL BRACING REQUIREMENTS

SEISMIC DESIGN CATEGORY	STORY	BRACED WALL LINE LENGTH (FEET)					SINGLE-STORY HOLD-DOWN FORCE (pounds)[a]	CUMULATIVE HOLD-DOWN FORCE (pounds)[b]
		10	20	30	40	50		
		Minimum Total Length (feet) of Braced Wall Panels Required Along each Braced Wall Line						
D_0	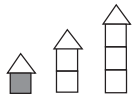	4.0	7.0	10.5	14.0	17.5	NA	—
		4.0	7.0	10.5	14.0	17.5	1900	—
		4.5	9.0	13.5	18.0	22.5	3500	5400
		6.0	12.0	18.0	24.0	30.0	3500	8900
D_1	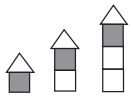	4.5	9.0	13.5	18.0	22.5	2100	—
		4.5	9.0	13.5	18.0	22.5	3700	5800
		6.0	12.0	18.0	24.0	30.0	3700	9500
D_2	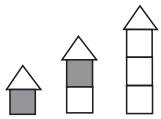	5.5	11.0	16.5	22.0	27.5	2300	—
		5.5	11.0	16.5	22.0	27.5	3900	6200
	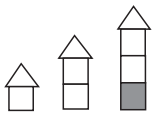	NP	NP	NP	NP	NP	NA	NA

For SI: 1 inch = 25.4 mm, 1 foot = 304.8 mm, 1 pound per square foot = 0.479 kPa, 1 pound-force = 4.448 N.

NP = Not Permitted.

NA = Not Applicable.

a. Hold-down force is minimum allowable stress design load for connector providing uplift tie from wall framing at end of braced wall panel at the noted story to wall framing at end of braced wall panel at the story below, or to foundation or foundation wall. Use single-story hold-down force where edges of braced wall panels do not align; a continuous load path to the foundation shall be maintained.

b. Where hold-down connectors from stories above align with stories below, use cumulative hold-down force to size middle- and bottom-story hold-down connectors.

INTERNATIONAL CODE COUNCIL®
Copyright © 2019 ICC & NYSDOS. ALL RIGHTS RESERVED. Accessed by Lauren Gualdino (lgualdino@briarcliffmanor.org), (-) Order Number #100880972 on May 08, 2020 07:05 AM (PDT) pursuant to License Agreement with ICC & NYSDOS. No further reproduction, no

100880972

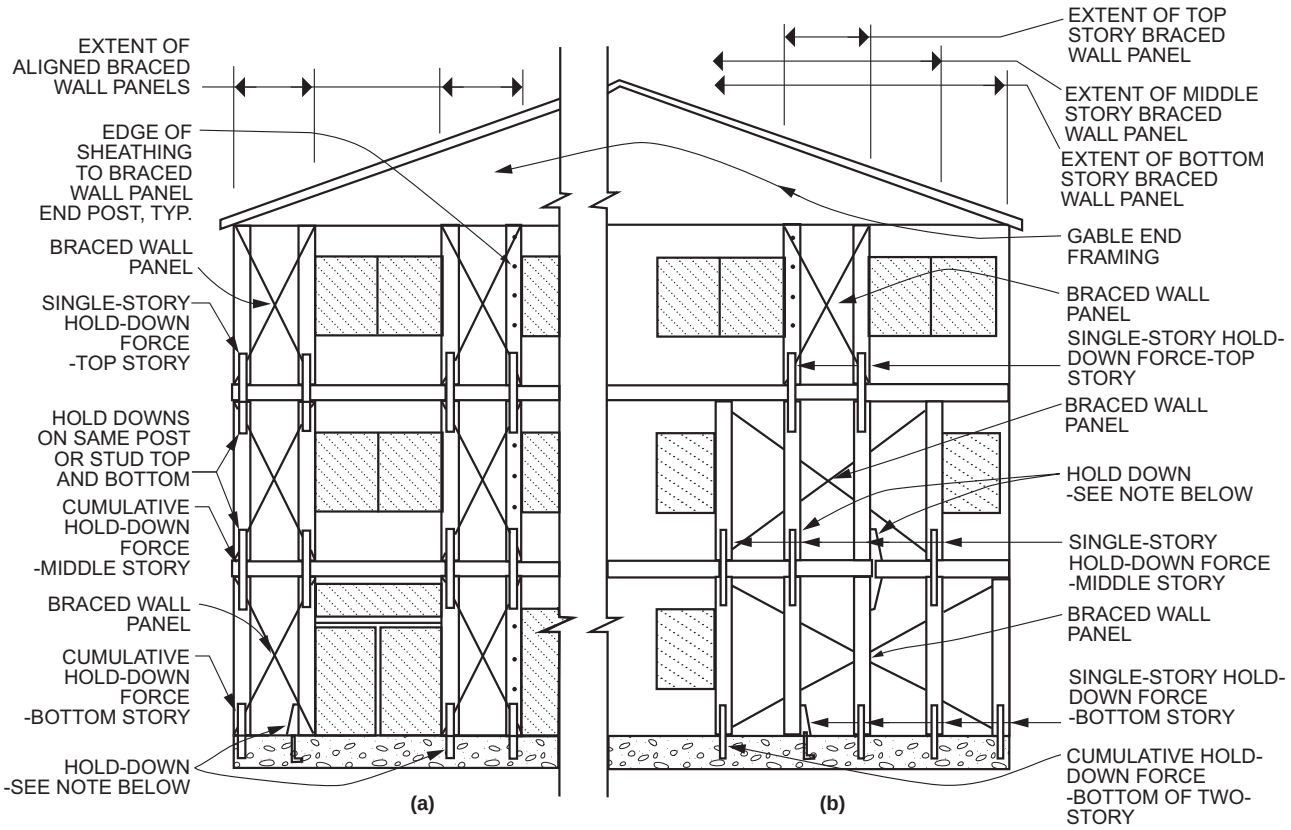

(a) Braced wall panels stacked (aligned story to story). Use cumulative hold-down force.

(b) Braced wall panels mixed stacked and not stacked. Use hold-down force as noted.

Note: Hold downs should be strap ties, tension ties, or other approved hold-down devices and shall be installed in accordance with the manufacturer's instructions.

FIGURE R602.10.6.5
METHOD BV-WSP—WALL BRACING FOR DWELLINGS WITH STONE AND MASONRY VENEER IN SEISMIC DESIGN CATEGORIES D_0, D_1 and D_2

INTERNATIONAL CODE COUNCIL®
Copyright © 2019 ICC & NYSDOS. ALL RIGHTS RESERVED. Accessed by Lauren Gualdino (lgualdino@briarcliffmanor.org), (-) Order Number #100880972 on May 08, 2020 07:05 AM (PDT) pursuant to License Agreement with ICC & NYSDOS. No further reproduction, no

100880972

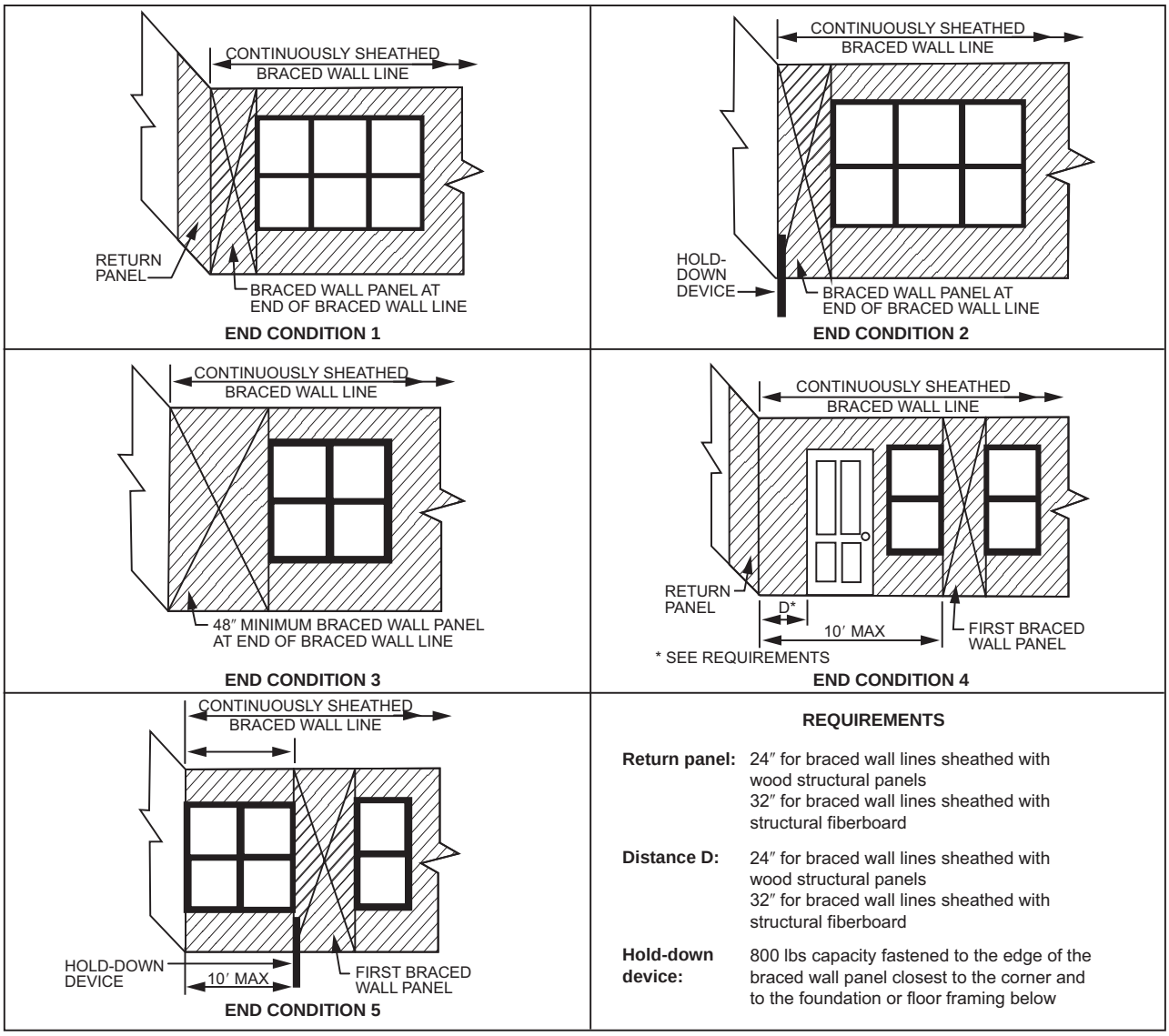

For SI: 1 inch = 25.4 mm, 1 foot = 304.8 mm, 1 pound = 4.45 N.

FIGURE R602.10.7
END CONDITIONS FOR BRACED WALL LINES WITH CONTINUOUS SHEATHING

R602.10.9 Braced wall panel support. *Braced wall panel* support shall be provided as follows:

1. Cantilevered floor joists complying with Section R502.3.3 shall be permitted to support *braced wall panel*s.
2. Raised floor system post or pier foundations supporting *braced wall panel*s shall be designed in accordance with accepted engineering practice.
3. Masonry stem walls with a length of 48 inches (1219 mm) or less supporting *braced wall panel*s shall be reinforced in accordance with Figure R602.10.9. Masonry stem walls with a length greater than 48 inches (1219 mm) supporting *braced wall panel*s shall be constructed in accordance with Section R403.1 Methods ABW and PFH shall not be permitted to attach to masonry stem walls.
4. Concrete stem walls with a length of 48 inches (1219 mm) or less, greater than 12 inches (305 mm) tall and less than 6 inches (152 mm) thick shall have reinforcement sized and located in accordance with Figure R602.10.9.

INTERNATIONAL CODE COUNCIL®
Copyright © 2019 ICC & NYSDOS. ALL RIGHTS RESERVED. Accessed by Lauren Gualdino (lgualdino@briarcliffmanor.org), (-) Order Number #100880972 on May 08, 2020 07:05 AM (PDT) pursuant to License Agreement with ICC & NYSDOS. No further reproduction, no

100880972

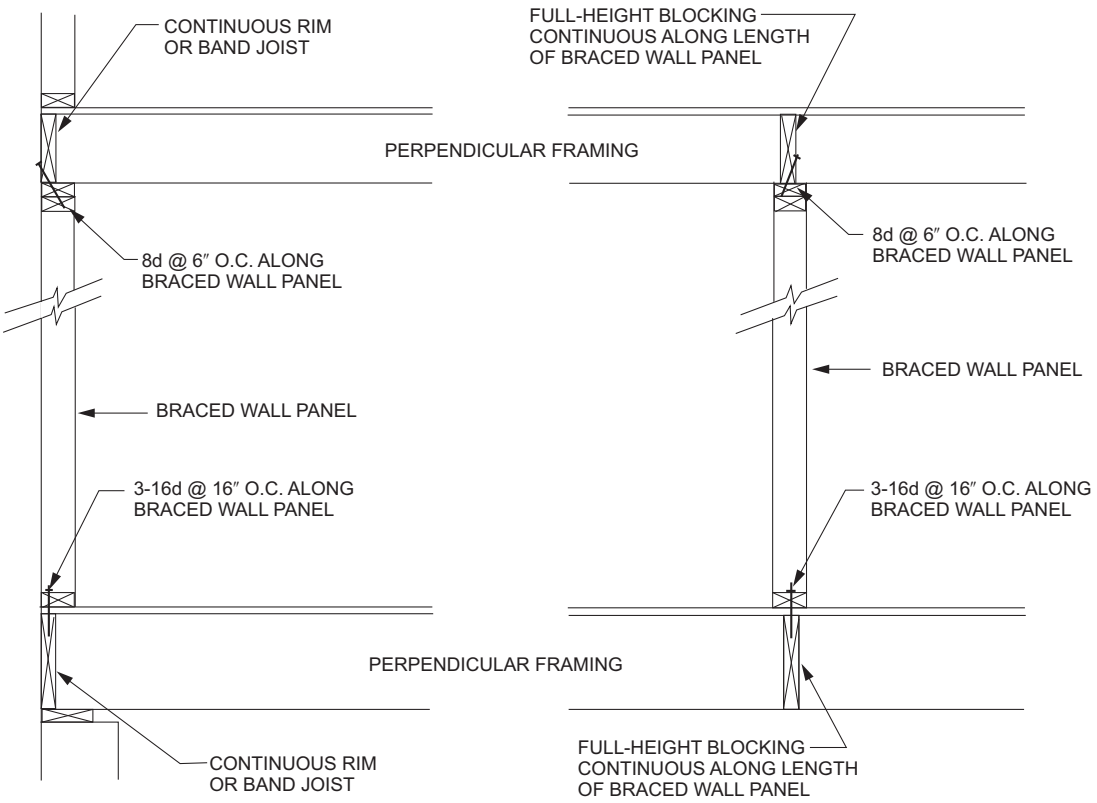

For SI: 1 inch = 25.4 mm.

FIGURE R602.10.8(1)
BRACED WALL PANEL CONNECTION WHEN PERPENDICULAR TO FLOOR/CEILING FRAMING

R602.10.9.1 Braced wall panel support for Seismic Design Categories D_0, D_1 and D_2. In Seismic Design Categories D_0, D_1 and D_2, braced wall panel footings shall be as specified in Section R403.1.2.

R602.10.10 Cripple wall bracing. Cripple walls shall be constructed in accordance with Section R602.9 and braced in accordance with this section. Cripple walls shall be braced with the length and method of bracing used for the wall above in accordance with Tables R602.10.3(1) and R602.10.3(3), and the applicable adjustment factors in Table R602.10.3(2) or R602.10.3(4), respectively, except that the length of cripple wall bracing shall be multiplied by a factor of 1.15. Where gypsum wall board is not used on the inside of the cripple wall bracing, the length adjustments for the elimination of the gypsum wallboard, or equivalent, shall be applied as directed in Tables R602.10.3(2) and R602.10.3(4) to the length of cripple wall bracing required. This adjustment shall be taken in addition to the 1.15 increase.

R602.10.10.1 Cripple wall bracing for Seismic Design Categories D_0 and D_1 and townhouses in Seismic Design Category C. In addition to the requirements in Section R602.10.10, the distance between adjacent edges of *braced wall panel*s for cripple walls along a *braced wall line* shall be 14 feet (4267 mm) maximum.

Where *braced wall lines* at interior walls are not supported on a continuous foundation below, the adjacent parallel cripple walls, where provided, shall be braced with Method WSP or Method CS-WSP in accordance with Section R602.10.4. The length of bracing required in accordance with Table R602.10.3(3) for the cripple walls shall be multiplied by 1.5. Where the cripple walls do not have sufficient length to provide the required bracing, the spacing of panel edge fasteners shall be reduced to 4 inches (102 mm) on center and the required bracing length adjusted by 0.7. If the required length can still not be provided, the cripple wall shall be designed in accordance with accepted engineering practice.

R602.10.10.2 Cripple wall bracing for Seismic Design Category D_2. In Seismic Design Category D_2, cripple walls shall be braced in accordance with Tables R602.10.3(3) and R602.10.3(4).

R602.10.10.3 Redesignation of cripple walls. Where all cripple wall segments along a *braced wall line* do not exceed 48 inches (1219 mm) in height, the cripple walls shall be permitted to be redesignated as a first-*story* wall for purposes of determining wall bracing requirements. Where any cripple wall segment in a *braced wall line* exceeds 48 inches (1219 mm) in

INTERNATIONAL CODE COUNCIL®
Copyright © 2019 ICC & NYSDOS. ALL RIGHTS RESERVED. Accessed by Lauren Gualdino (lgualdino@briarcliffmanor.org), (-) Order Number #100880972 on May 08, 2020 07:05 AM (PDT) pursuant to License Agreement with ICC & NYSDOS. No further reproduction, no

100880972

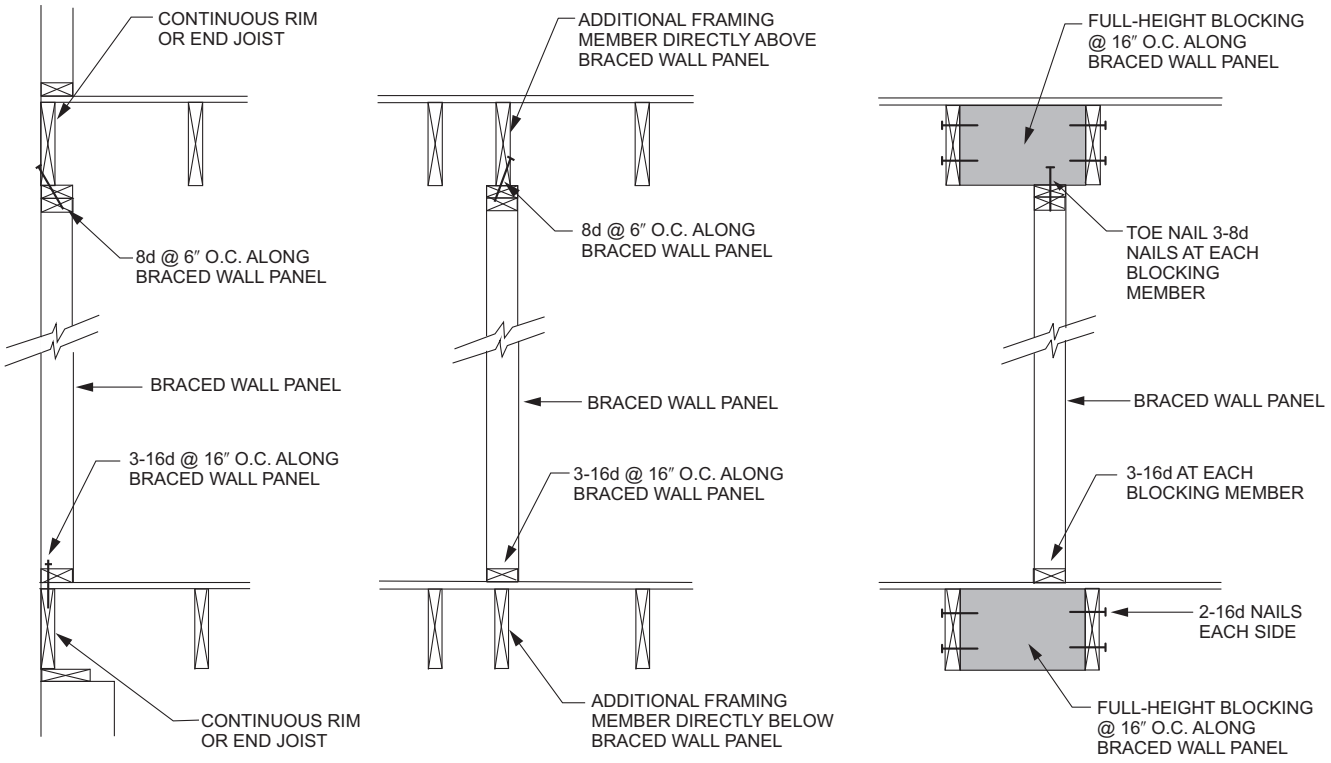

For SI: 1 inch = 25.4 mm.

FIGURE R602.10.8(2)
BRACED WALL PANEL CONNECTION WHEN PARALLEL TO FLOOR/CEILING FRAMING

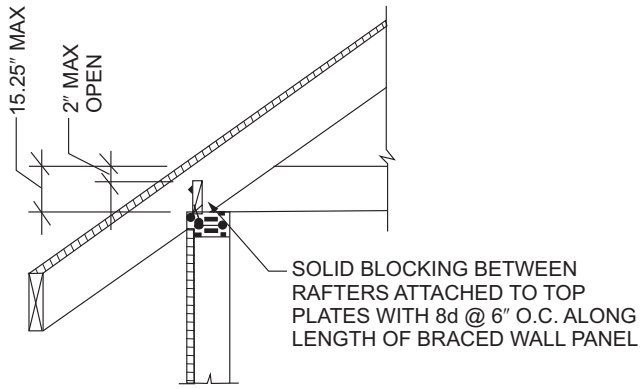

For SI: 1 inch = 25.4 mm.

FIGURE R602.10.8.2(1)
BRACED WALL PANEL CONNECTION
TO PERPENDICULAR RAFTERS

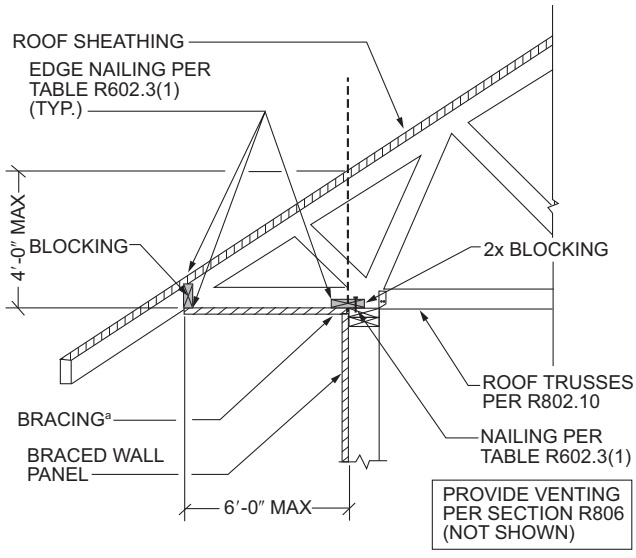

For SI: 1 inch = 25.4 mm, 1 foot = 304.8 mm.
a. Methods of bracing shall be as described in Section R602.10.4.

FIGURE R602.10.8.2(2)
BRACED WALL PANEL CONNECTION OPTION TO
PERPENDICULAR RAFTERS OR ROOF TRUSSES

INTERNATIONAL CODE COUNCIL®
Copyright © 2019 ICC & NYSDOS. ALL RIGHTS RESERVED. Accessed by Lauren Gualdino (lgualdino@briarcliffmanor.org), (-) Order Number #100880972 on May 08, 2020 07:05 AM (PDT) pursuant to License Agreement with ICC & NYSDOS. No further reproduction, no

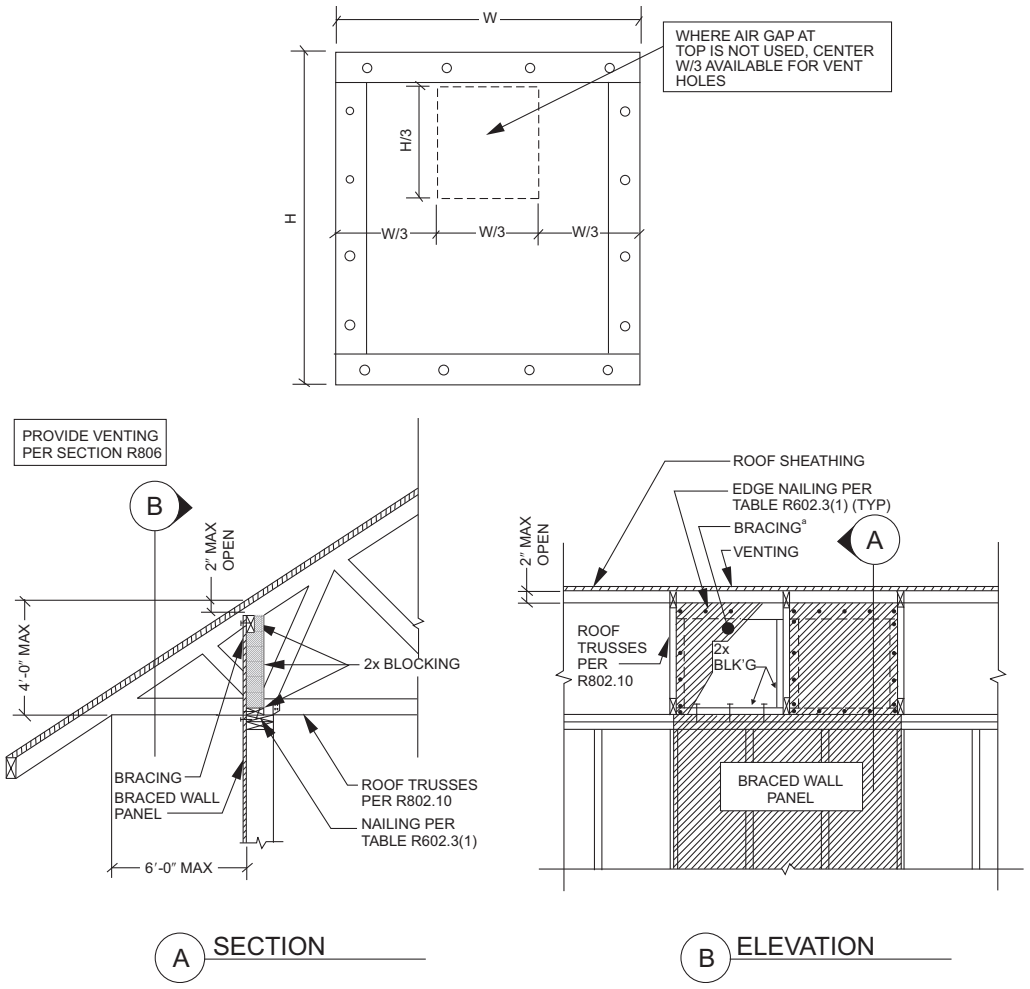

For SI: 1 inch = 25.4 mm, 1 foot =304.8 mm

a. Methods of bracing shall be as described in Section R602.10.4.

FIGURE R602.10.8.2(3)
BRACED WALL PANEL CONNECTION OPTION TO PERPENDICULAR RAFTERS OR ROOF TRUSSES

INTERNATIONAL CODE COUNCIL®
Copyright © 2019 ICC & NYSDOS. ALL RIGHTS RESERVED. Accessed by Lauren Gualdino (lgualdino@briarcliffmanor.org), (-) Order Number #100880972 on May 08, 2020 07:05 AM (PDT) pursuant to License Agreement with ICC & NYSDOS. No further reproduction, no

100880972

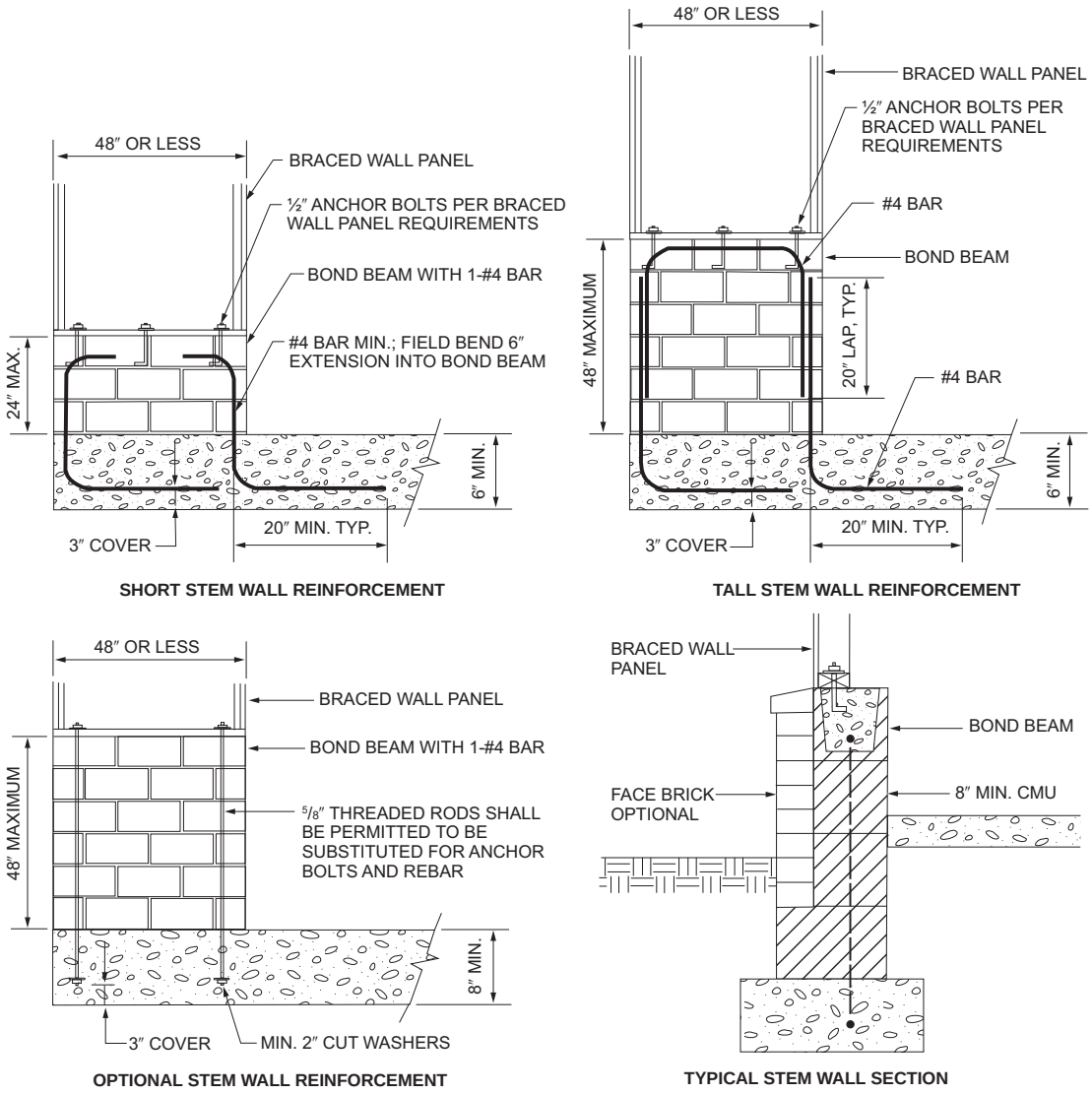

For SI: 1 inch = 25.4 mm.

FIGURE R602.10.9
MASONRY STEM WALLS SUPPORTING BRACED WALL PANELS

height, the entire cripple wall shall be counted as an additional *story*. If the cripple walls are redesignated, the stories above the redesignated *story* shall be counted as the second and third stories, respectively.

R602.11 Wall anchorage. *Braced wall line* sills shall be anchored to concrete or masonry foundations in accordance with Sections R403.1.6 and R602.11.1.

R602.11.1 Wall anchorage for all buildings in Seismic Design Categories D_0, D_1 and D_2 and townhouses in Seismic Design Category C. Plate washers, not less than 0.229 inch by 3 inches by 3 inches (5.8 mm by 76 mm by 76 mm) in size, shall be provided between the foundation sill plate and the nut except where *approved* anchor straps are used. The hole in the plate washer is permitted to be diagonally slotted with a width of up to $^3/_{16}$ inch (5 mm) larger than the bolt diameter and a slot length not to exceed $1^3/_4$ inches (44 mm), provided a standard cut washer is placed between the plate washer and the nut.

R602.11.2 Stepped foundations in Seismic Design Categories D_0, D_1 and D_2. In all buildings located in Seismic Design Categories D_0, D_1 or D_2, where the height of a required *braced wall line* that extends from foundation to floor above varies more than 4 feet (1219 mm), the *braced wall line* shall be constructed in accordance with the following:

1. Where the lowest floor framing rests directly on a sill bolted to a foundation not less than 8 feet (2440 mm) in length along a line of bracing, the line shall

INTERNATIONAL CODE COUNCIL®
Copyright © 2019 ICC & NYSDOS. ALL RIGHTS RESERVED. Accessed by Lauren Gualdino (lgualdino@briarcliffmanor.org), (-) Order Number #100880972 on May 08, 2020 07:05 AM (PDT) pursuant to License Agreement with ICC & NYSDOS. No further reproduction, no

100880972

be considered as braced. The double plate of the cripple stud wall beyond the segment of footing that extends to the lowest framed floor shall be spliced by extending the upper top plate not less than 4 feet (1219 mm) along the foundation. Anchor bolts shall be located not more than 1 foot and 3 feet (305 and 914 mm) from the step in the foundation. See Figure R602.11.2.

2. Where cripple walls occur between the top of the foundation and the lowest floor framing, the bracing requirements of Sections R602.10.10, R602.10.10.1 and R602.10.10.2 shall apply.
3. Where only the bottom of the foundation is stepped and the lowest floor framing rests directly on a sill bolted to the foundations, the requirements of Sections R403.1.6 and R602.11.1 shall apply.

R602.12 Simplified wall bracing. Buildings meeting all of the following conditions shall be permitted to be braced in accordance with this section as an alternative to the requirements of Section R602.10. The entire building shall be braced in accordance with this section; the use of other bracing provisions of Section R602.10, except as specified herein, shall not be permitted.

1. There shall be not more than three stories above the top of a concrete or masonry foundation or basement wall. Permanent wood foundations shall not be permitted.
2. Floors shall not cantilever more than 24 inches (607 mm) beyond the foundation or bearing wall below.
3. Wall height shall not be greater than 10 feet (3048 mm).
4. The building shall have a roof eave-to-ridge height of 15 feet (4572 mm) or less.
5. Exterior walls shall have gypsum board with a minimum thickness of $^1/_2$ inch (12.7 mm) installed on the interior side fastened in accordance with Table R702.3.5.
6. The structure shall be located where the ultimate design wind speed is less than or equal to 130 mph (58 m/s), and the exposure category is B or C.
7. The structure shall be located in Seismic Design Category A, B or C for detached one- and two-family dwellings or Seismic Design Category A or B for townhouses.
8. Cripple walls shall not be permitted in three-story buildings.

R602.12.1 Circumscribed rectangle. The bracing required for each building shall be determined by circumscribing a rectangle around the entire building on each floor as shown in Figure R602.12.1. The rectangle shall surround all enclosed offsets and projections such as sunrooms and attached garages. Open structures, such as carports and decks, shall be permitted to be excluded. The rectangle shall not have a side greater than 60 feet (18 288 mm), and the ratio between the long side and short side shall be not greater than 3:1.

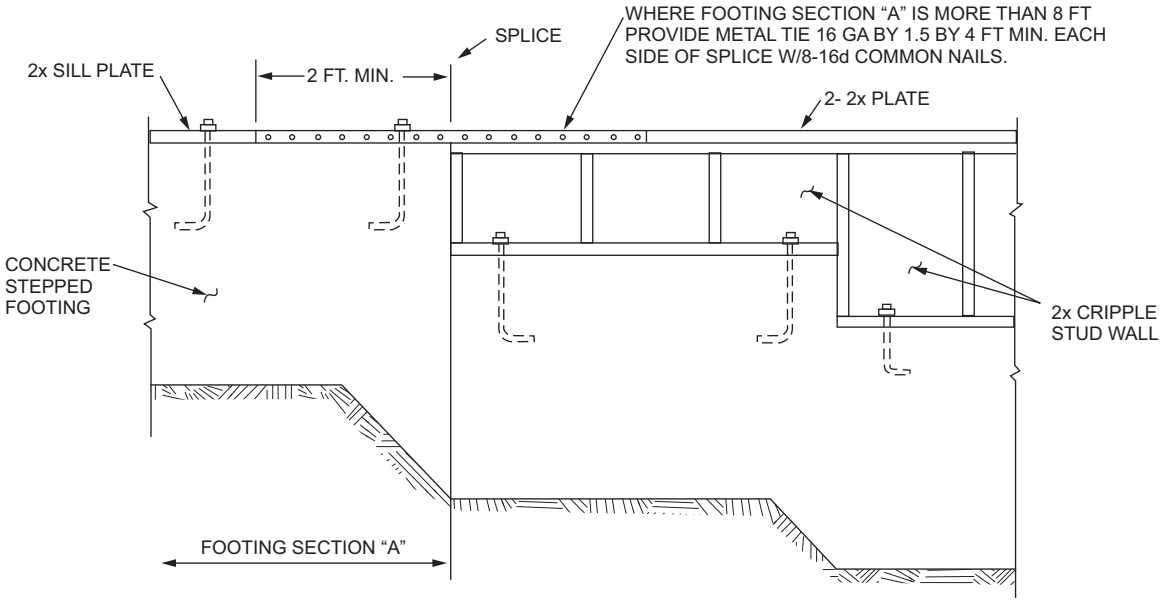

For SI: 1 inch = 25.4 mm, 1 foot = 304.8 mm.
Note: Where footing Section "A" is less than 8 feet long in a 25-foot-long wall, install bracing at cripple stud wall.

FIGURE R602.11.2
STEPPED FOUNDATION CONSTRUCTION

INTERNATIONAL CODE COUNCIL®
Copyright © 2019 ICC & NYSDOS. ALL RIGHTS RESERVED. Accessed by Lauren Gualdino (lgualdino@briarcliffmanor.org), (-) Order Number #100880972 on May 08, 2020 07:05 AM (PDT) pursuant to License Agreement with ICC & NYSDOS. No further reproduction, no

100880972

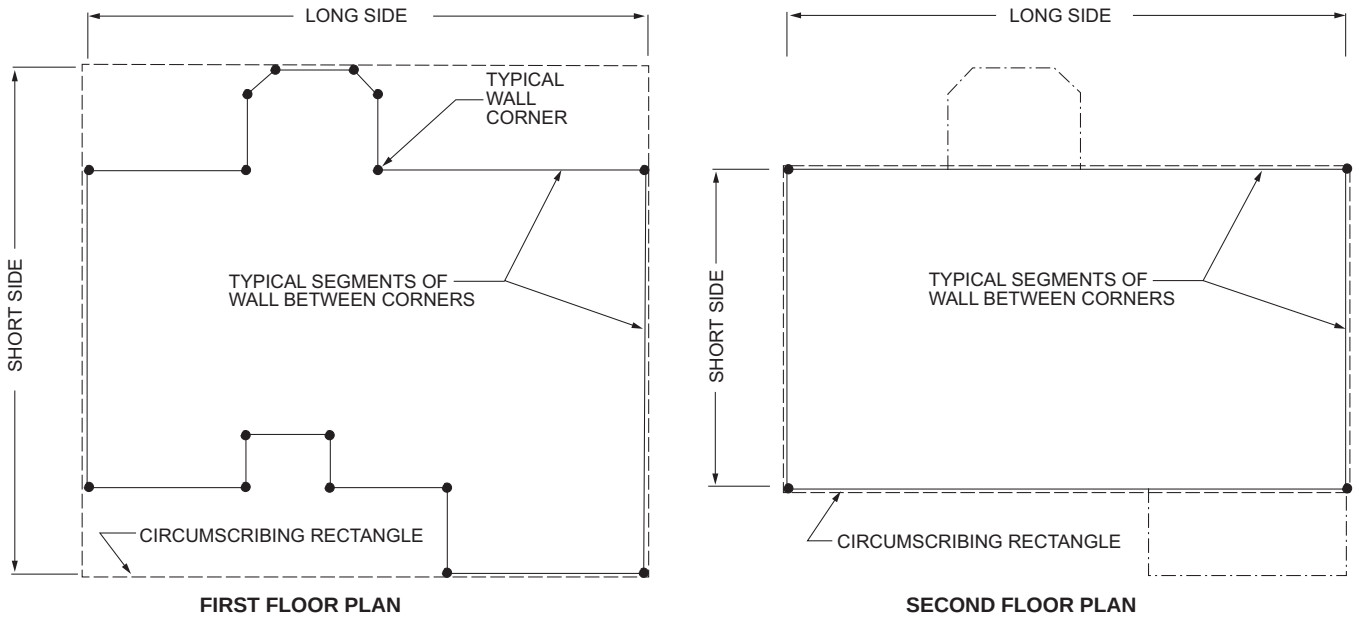

FIGURE R602.12.1
RECTANGLE CIRCUMSCRIBING AN ENCLOSED BUILDING

R602.12.2 Sheathing materials. The following sheathing materials installed on the exterior side of exterior walls shall be used to construct a bracing unit as defined in Section R602.12.3. Mixing materials is prohibited.

1. Wood structural panels with a minimum thickness of $^{3}/_{8}$ inch (9.5 mm) fastened in accordance with Table R602.3(3).
2. Structural fiberboard sheathing with a minimum thickness of $^{1}/_{2}$ inch (12.7 mm) fastened in accordance with Table R602.3(1).

R602.12.3 Bracing unit. A bracing unit shall be a full-height sheathed segment of the exterior wall without openings or vertical or horizontal offsets and a minimum length as specified herein. Interior walls shall not contribute toward the amount of required bracing. Mixing of Items 1 and 2 is prohibited on the same story.

1. Where all framed portions of all exterior walls are sheathed in accordance with Section R602.12.2, including wall areas between bracing units, above and below openings and on gable end walls, the minimum length of a bracing unit shall be 3 feet (914 mm).
2. Where the exterior walls are braced with sheathing panels in accordance with Section R602.12.2 and areas between bracing units are covered with other materials, the minimum length of a bracing unit shall be 4 feet (1219 mm).

R602.12.3.1 Multiple bracing units. Segments of wall compliant with Section R602.12.3 and longer than the minimum bracing unit length shall be considered as multiple bracing units. The number of bracing units shall be determined by dividing the wall segment length by the minimum bracing unit length. Full-height sheathed segments of wall narrower than the minimum bracing unit length shall not contribute toward a bracing unit except as specified in Section R602.12.6.

R602.12.4 Number of bracing units. Each side of the circumscribed rectangle, as shown in Figure R602.12.1, shall have, at a minimum, the number of bracing units in accordance with Table R602.12.4 placed on the parallel exterior walls facing the side of the rectangle. Bracing units shall then be placed using the distribution requirements specified in Section R602.12.5.

R602.12.5 Distribution of bracing units. The placement of bracing units on exterior walls shall meet all of the following requirements as shown in Figure R602.12.5.

1. A bracing unit shall begin not more than 12 feet (3658 mm) from any wall corner.
2. The distance between adjacent edges of bracing units shall be not greater than 20 feet (6096 mm).
3. Segments of wall greater than 8 feet (2438 mm) in length shall have not less than one bracing unit.

R602.12.6 Narrow panels. The bracing methods referenced in Section R602.10 and specified in Sections R602.12.6.1 through R602.12.6.3 shall be permitted where using simplified wall bracing.

R602.12.6.1 Method CS-G. *Braced wall panels* constructed as Method CS-G in accordance with Tables R602.10.4 and R602.10.5 shall be permitted for one-story garages where all framed portions of all exterior walls are sheathed with wood structural panels. Each CS-G panel shall be equivalent to 0.5 of a bracing unit. Segments of wall that include a Method CS-G panel shall meet the requirements of Section R602.10.4.2.

INTERNATIONAL CODE COUNCIL®
Copyright © 2019 ICC & NYSDOS. ALL RIGHTS RESERVED. Accessed by Lauren Gualdino (lgualdino@briarcliffmanor.org), (-) Order Number #100880972 on May 08, 2020 07:05 AM (PDT) pursuant to License Agreement with ICC & NYSDOS. No further reproduction, no

100880972

TABLE R602.12.4
MINIMUM NUMBER OF BRACING UNITS ON EACH SIDE OF THE CIRCUMSCRIBED RECTANGLE

ULTIMATE DESIGN WIND SPEED (mph)	STORY LEVEL	EAVE-TO-RIDGE HEIGHT (feet)	MINIMUM NUMBER OF BRACING UNITS ON EACH LONG SIDE[a, b, d]						MINIMUM NUMBER OF BRACING UNITS ON EACH SHORT SIDE[a, b, d]					
			Length of short side (feet)[c]						Length of long side (feet)[c]					
			10	20	30	40	50	60	10	20	30	40	50	60
115		10	1	2	2	2	3	3	1	2	2	2	3	3
			2	3	3	4	5	6	2	3	3	4	5	6
			2	3	4	6	7	8	2	3	4	6	7	8
		15	1	2	3	3	4	4	1	2	3	3	4	4
			2	3	4	5	6	7	2	3	4	5	6	7
			2	4	5	6	7	9	2	4	5	6	7	9
130		10	1	2	2	3	3	4	1	2	2	3	3	4
			2	3	4	5	6	7	2	3	4	5	6	7
			2	4	5	7	8	10	2	4	5	7	8	10
		15	2	3	3	4	4	6	2	3	3	4	4	6
			3	4	6	7	8	10	3	4	6	7	8	10
			3	6	7	10	11	13	3	6	7	10	11	13

For SI: 1 inch = 25.4 mm, 1 foot = 304.8 mm, 1 mile per hour = 0.447m/s.

a. Interpolation shall not be permitted.

b. Cripple walls or wood-framed basement walls in a walk-out condition shall be designated as the first story and the stories above shall be redesignated as the second and third stories, respectively, and shall be prohibited in a three-story structure.

c. Actual lengths of the sides of the circumscribed rectangle shall be rounded to the next highest unit of 10 when using this table.

d. For Exposure Category C, multiply bracing units by a factor of 1.20 for a one-story building, 1.30 for a two-story building and 1.40 for a three-story building.

INTERNATIONAL CODE COUNCIL®
Copyright © 2019 ICC & NYSDOS. ALL RIGHTS RESERVED. Accessed by Lauren Gualdino (lgualdino@briarcliffmanor.org), (-) Order Number #100880972 on May 08, 2020 07:05 AM (PDT) pursuant to License Agreement with ICC & NYSDOS. No further reproduction, no

100880972

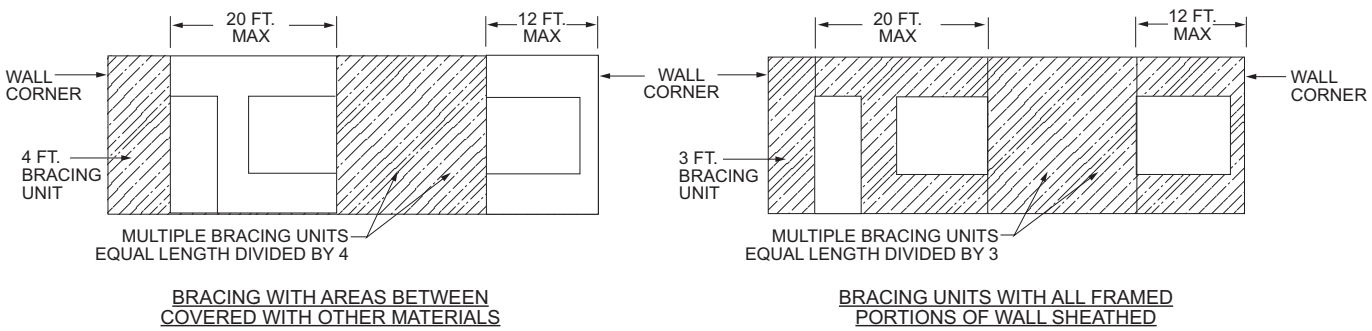

For SI: 1 foot = 304.8 mm.

FIGURE R602.12.5
BRACING UNIT DISTRIBUTION

R602.12.6.2 Method CS-PF. Braced wall panels constructed as Method CS-PF in accordance with Section R602.10.6.4 shall be permitted where all framed portions of all exterior walls are sheathed with wood structural panels. Each CS-PF panel shall equal 0.75 bracing units. Not more than four CS-PF panels shall be permitted on all segments of walls parallel to each side of the circumscribed rectangle. Segments of wall that include a Method CS-PF panel shall meet the requirements of Section R602.10.4.2.

R602.12.6.3 Methods ABW, PFH and PFG. Braced wall panels constructed as Method ABW, PFH and PFG shall be permitted where bracing units are constructed using wood structural panels applied either continuously or intermittently. Each ABW and PFH panel shall equal one bracing unit and each PFG panel shall be equal to 0.75 bracing unit.

R602.12.7 Lateral support. For bracing units located along the eaves, the vertical distance from the outside edge of the top wall plate to the roof sheathing above shall not exceed 9.25 inches (235 mm) at the location of a bracing unit unless lateral support is provided in accordance with Section R602.10.8.2.

R602.12.8 Stem walls. Masonry stem walls with a height and length of 48 inches (1219 mm) or less supporting a bracing unit or a Method CS-G, CS-PF or PFG *braced wall panel* shall be constructed in accordance with Figure R602.10.9. Concrete stem walls with a length of 48 inches (1219 mm) or less, greater than 12 inches (305 mm) tall and less than 6 inches (152 mm) thick shall be reinforced sized and located in accordance with Figure R602.10.9.

SECTION R603
COLD-FORMED STEEL WALL FRAMING

R603.1 General. Elements shall be straight and free of any defects that would significantly affect structural performance. Cold-formed steel wall framing members shall be in accordance with the requirements of this section.

R603.1.1 Applicability limits. The provisions of this section shall control the construction of exterior cold-formed steel wall framing and interior load-bearing cold-formed steel wall framing for buildings not more than 60 feet (18 288 mm) long perpendicular to the joist or truss span, not more than 40 feet (12 192 mm) wide parallel to the joist or truss span, and less than or equal to three stories above grade plane. Exterior walls installed in accordance with the provisions of this section shall be considered as load-bearing walls. Cold-formed steel walls constructed in accordance with the provisions of this section shall be limited to sites where the ultimate design wind speed is less than 140 miles per hour (63 m/s), Exposure Category B or C, and the ground snow load is less than or equal to 70 pounds per square foot (3.35 kPa).

R603.1.2 In-line framing. Load-bearing cold-formed steel studs constructed in accordance with Section R603 shall be located in-line with joists, trusses and rafters in accordance with Figure R603.1.2 and the tolerances specified as follows:

1. The maximum tolerance shall be $^{3}/_{4}$ inch (19 mm) between the centerline of the horizontal framing member and the centerline of the vertical framing member.
2. Where the centerline of the horizontal framing member and bearing stiffener is located to one side of the centerline of the vertical framing member, the maximum tolerance shall be $^{1}/_{8}$ inch (3 mm) between the web of the horizontal framing member and the edge of the vertical framing member.

R603.2 Structural framing. Load-bearing cold-formed steel wall framing members shall be in accordance with this section.

R603.2.1 Material. Load-bearing cold-formed steel framing members shall be cold formed to shape from structural-quality sheet steel complying with the requirements of ASTM A1003: Structural Grades 33 Type H and 50 Type H.

R603.2.2 Corrosion protection. Load-bearing cold-formed steel framing shall have a metallic coating complying with ASTM A1003 and one of the following:

1. Not less than G 60 in accordance with ASTM A653.
2. Not less than AZ 50 in accordance with ASTM A792.

INTERNATIONAL CODE COUNCIL®
Copyright © 2019 ICC & NYSDOS. ALL RIGHTS RESERVED. Accessed by Lauren Gualdino (lgualdino@briarcliffmanor.org), (-) Order Number #100880972 on May 08, 2020 07:05 AM (PDT) pursuant to License Agreement with ICC & NYSDOS. No further reproduction, no

100880972

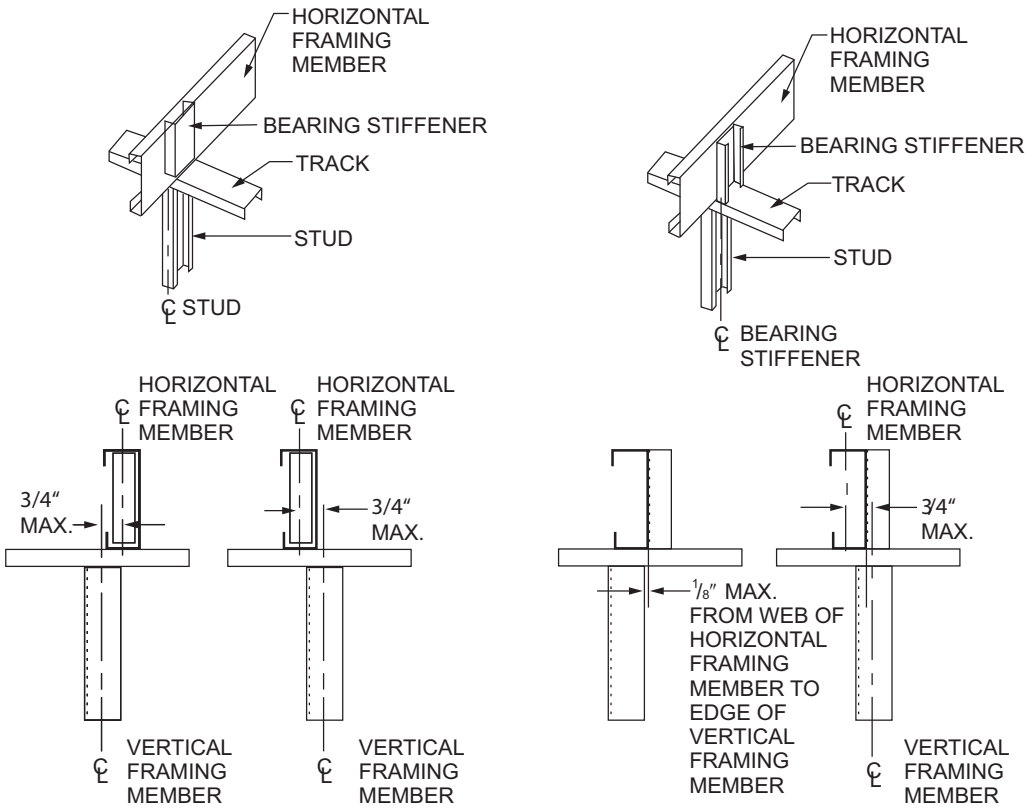

For SI: 1 inch = 25.4 mm,

FIGURE R603.1.2
IN-LINE FRAMING

R603.2.3 Dimension, thickness and material grade. Load-bearing cold-formed steel wall framing members shall comply with Figure R603.2.3(1) and with the dimensional and thickness requirements specified in Table R603.2.3. Additionally, C-shaped sections shall have a minimum flange width of $1^5/_8$ inches (41 mm) and a maximum flange width of 2 inches (51 mm). The minimum lip size for C-shaped sections shall be $^1/_2$ inch (12.7 mm). Track sections shall comply with Figure R603.2.3(2) and shall have a minimum flange width of $1^1/_4$ inches (32 mm). Minimum Grade 33 ksi steel shall be used wherever 33 mil and 43 mil thicknesses are specified. Minimum Grade 50 ksi steel shall be used wherever 54 and 68 mil thicknesses are specified.

R603.2.4 Identification. Load-bearing cold-formed steel framing members shall have a legible label, stencil, stamp or embossment with the following information as a minimum:

1. Manufacturer's identification.
2. Minimum base steel thickness in inches (mm).
3. Minimum coating designation.
4. Minimum yield strength, in kips per square inch (ksi) (MPa).

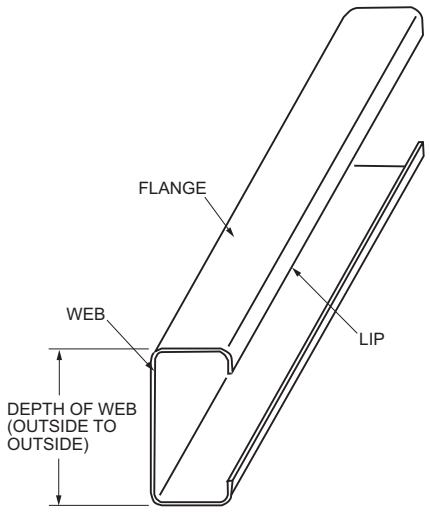

FIGURE R603.2.3(1)
C-SHAPED SECTION

INTERNATIONAL CODE COUNCIL®
Copyright © 2019 ICC & NYSDOS. ALL RIGHTS RESERVED. Accessed by Lauren Gualdino (lgualdino@briarcliffmanor.org), (-) Order Number #100880972 on May 08, 2020 07:05 AM (PDT) pursuant to License Agreement with ICC & NYSDOS. No further reproduction, no

100880972

R603.2.5 Fastening. Screws for steel-to-steel connections shall be installed with a minimum edge distance and center-to-center spacing of $^1/_2$ inch (12.7 mm), shall be self-drilling tapping and shall conform to ASTM C1513. Structural sheathing shall be attached to cold-formed steel studs with minimum No. 8 self-drilling tapping screws that conform to ASTM C1513. Screws for attaching structural sheathing to cold-formed steel wall framing shall have a minimum head diameter of 0.292 inch (7.4 mm) with countersunk heads and shall be installed with a minimum edge distance of $^3/_8$ inch (9.5 mm). Gypsum board shall be attached to cold-formed steel wall framing with minimum No. 6 screws conforming to ASTM C954 or ASTM C1513 with a bugle-head style and shall be installed in accordance with Section R702. For connections, screws shall extend through the steel not fewer than three exposed threads. Fasteners shall have rust-inhibitive coating suitable for the installation in which they are being used, or be manufactured from material not susceptible to corrosion.

R603.2.6 Web holes, web hole reinforcing and web hole patching. Web holes, web hole reinforcing and web hole patching shall be in accordance with this section.

R603.2.6.1 Web holes. Web holes in wall studs and other structural members shall comply with all of the following conditions:

1. Holes shall conform to Figure R603.2.6.1.
2. Holes shall be permitted only along the centerline of the web of the framing member.
3. Holes shall have a center-to-center spacing of not less than 24 inches (610 mm).
4. Holes shall have a web hole width not greater than 0.5 times the member depth, or $1^1/_2$ inches (38 mm).
5. Holes shall have a web hole length not exceeding $4^1/_2$ inches (114 mm).
6. Holes shall have a minimum distance between the edge of the bearing surface and the edge of the web hole of not less than 10 inches (254 mm).

Framing members with web holes not conforming to the above requirements shall be reinforced in accordance with Section R603.2.6.2, patched in accordance with Section R603.2.6.3 or designed in accordance with accepted engineering practice.

R603.2.6.2 Web hole reinforcing. Web holes in gable endwall studs not conforming to the requirements of Section R603.2.6.1 shall be permitted to be reinforced if the hole is located fully within the center 40 percent of the span and the depth and length of the hole does not exceed 65 percent of the flat width of the web. The reinforcing shall be a steel plate or C-shaped section with a

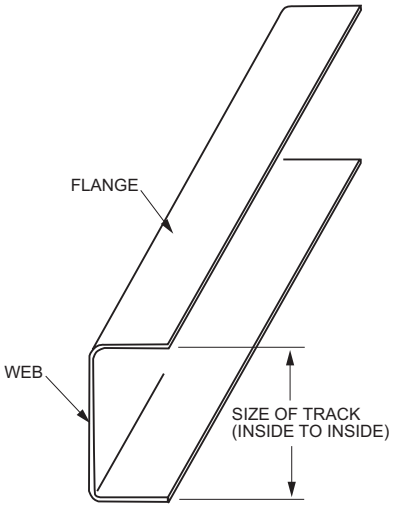

FIGURE R603.2.3(2)
TRACK SECTION

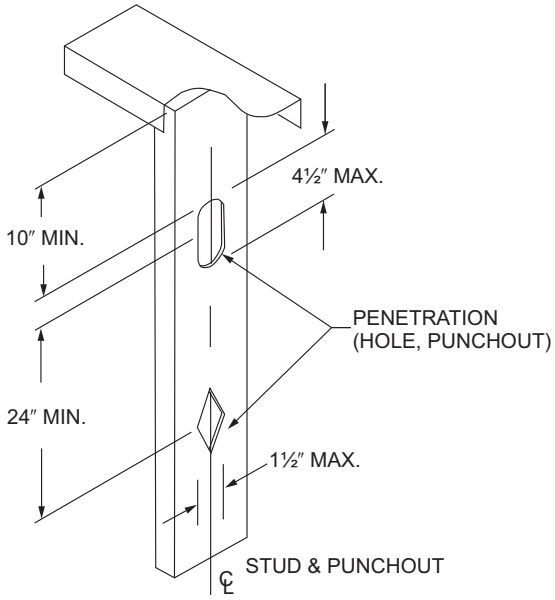

For SI: 1 inch = 25.4 mm.

FIGURE R603.2.6.1
WALL STUD WEB HOLES

TABLE R603.2.3
LOAD-BEARING COLD-FORMED STEEL STUD SIZES AND THICKNESSES

MEMBER DESIGNATION[a]	WEB DEPTH (inches)	MINIMUM BASE STEEL THICKNESS mil (inches)
350S162-t	3.5	33 (0.0329), 43 (0.0428), 54 (0.0538)
550S162-t	5.5	33 (0.0329), 43 (0.0428), 54 (0.0538), 68 (0.0677)

For SI: 1 inch = 25.4 mm; 1 mil = 0.0254 mm.

a. The member designation is defined by the first number representing the member depth in hundredths of an inch, "S" representing a stud or joist member, the second number representing the flange width in hundredths of an inch, and the letter "t" shall be a number representing the minimum base metal thickness in mils.

INTERNATIONAL CODE COUNCIL®
Copyright © 2019 ICC & NYSDOS. ALL RIGHTS RESERVED. Accessed by Lauren Gualdino (lgualdino@briarcliffmanor.org), (-) Order Number #100880972 on May 08, 2020 07:05 AM (PDT) pursuant to License Agreement with ICC & NYSDOS. No further reproduction, no

100880972

hole that does not exceed the web hole size limitations of Section R603.2.6.1 for the member being reinforced. The steel reinforcing shall be the same thickness as the receiving member and shall extend not less than 1 inch (25 mm) beyond all edges of the hole. The steel reinforcing shall be fastened to the web of the receiving member with No. 8 screws spaced not more than 1 inch (25 mm) center-to-center along the edges of the patch with minimum edge distance of $^1/_2$ inch (12.7 mm).

R603.2.6.3 Hole patching. Web holes in wall studs and other structural members not conforming to the requirements in Section R603.2.6.1 shall be permitted to be patched in accordance with either of the following methods:

1. Framing members shall be replaced or designed in accordance with accepted engineering practice where web holes exceed the following size limits:
    1.1. The depth of the hole, measured across the web, exceeds 70 percent of the flat width of the web.
    1.2. The length of the hole measured along the web exceeds 10 inches (254 mm) or the depth of the web, whichever is greater.
2. Web holes not exceeding the dimensional requirements in Section R603.2.6.3, Item 1, shall be patched with a solid steel plate, stud section or track section in accordance with Figure R603.2.6.3. The steel patch shall, as a minimum, be the same thickness as the receiving member and shall extend not less than 1 inch (25 mm) beyond all edges of the hole. The steel patch shall be fastened to the web of the receiving member with No. 8 screws spaced not more than 1 inch (25 mm) center-to-center along the edges of the patch with a minimum edge distance of $^1/_2$ inch (12.7 mm).

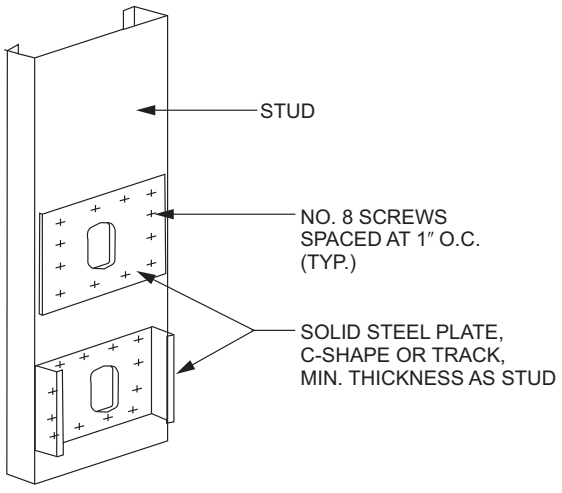

For SI: 1 inch = 25.4 mm.

FIGURE R603.2.6.3
WALL STUD WEB HOLE PATCH

R603.3 Wall construction. Exterior cold-formed steel framed walls and interior load-bearing cold-formed steel framed walls shall be constructed in accordance with the provisions of this section.

R603.3.1 Wall to foundation or floor connection. Cold-formed steel framed walls shall be anchored to foundations or floors in accordance with Table R603.3.1 and Figure R603.3.1(1), R603.3.1(2), R603.3.1(3) or R603.3.1(4). Anchor bolts shall be located not more than 12 inches (305 mm) from corners or the termination of bottom tracks. Anchor bolts shall extend not less than 15 inches (381 mm) into masonry or 7 inches (178 mm) into concrete. Foundation anchor straps shall be permitted, in lieu of anchor bolts, if spaced as required to provide equivalent anchorage to the required anchor bolts and installed in accordance with manufacturer's requirements.

R603.3.1.1 Gable endwalls. Gable endwalls with heights greater than 10 feet (3048 mm) shall be anchored to foundations or floors in accordance with Table R603.3.1.1(1) or R603.3.1.1(2).

R603.3.2 Minimum stud sizes. Cold-formed steel walls shall be constructed in accordance with Figure R603.3.1(1), R603.3.1(2) or R603.3.1(3), as applicable. Exterior wall stud size and thickness shall be determined in accordance with the limits set forth in Tables R603.3.2(2) through R603.3.2(16). Interior load-bearing wall stud size and thickness shall be determined in accordance with the limits set forth in Tables R603.3.2(2) through R603.3.2(16) based on an ultimate design wind speed of 115 miles per hour (51 m/s), Exposure Category B, and the building width, stud spacing and snow load, as appropriate. Fastening requirements shall be in accordance with Section R603.2.5 and Table R603.3.2(1). Top and bottom tracks shall have the same minimum thickness as the wall studs.

Exterior wall studs shall be permitted to be reduced to the next thinner size, as shown in Tables R603.3.2(2) through R603.3.2(16), but not less than 33 mils (0.84 mm), where both of the following conditions exist:

1. Minimum of $^1/_2$-inch (12.7 mm) gypsum board is installed and fastened on the interior surface in accordance with Section R702.
2. Wood structural sheathing panels of minimum $^7/_{16}$-inch-thick (11.1 mm) oriented strand board or $^{15}/_{32}$-inch-thick (12 mm) plywood are installed and fastened in accordance with Section R603.9.1 and Table R603.3.2(1) on the outside surface.

Interior load-bearing walls shall be permitted to be reduced to the next thinner size, as shown in Tables R603.3.2(2) through R603.3.2(16), but not less than 33 mils (0.84 mm), where not less than $^1/_2$-inch (12.7 mm) gypsum board is installed and fastened in accordance with Section R702 on both sides of the wall. The tabulated stud thickness for load-bearing walls shall be used where the attic load is 10 pounds per square foot (480 Pa) or less. A limited attic storage load of 20 pounds per square foot (960 Pa) shall be permitted provided that the next higher snow load column is used to select the stud size from Tables R603.3.2(2) through R603.3.2(16).

INTERNATIONAL CODE COUNCIL®
Copyright © 2019 ICC & NYSDOS. ALL RIGHTS RESERVED. Accessed by Lauren Gualdino (lgualdino@briarcliffmanor.org), (-) Order Number #100880972 on May 08, 2020 07:05 AM (PDT) pursuant to License Agreement with ICC & NYSDOS. No further reproduction, no

100880972

TABLE R603.3.1
WALL TO FOUNDATION OR FLOOR CONNECTION REQUIREMENTS[a, b]

FRAMING CONDITION			ULTIMATE WIND SPEED AND EXPOSURE CATEGORY (mph)					
			115 B	120 B	130 B or 115 C	< 140 B or 120 C	130 C	< 140 C
Wall bottom track to floor per Figure R603.3.1(1)			1-No. 8 screw at 12″ o.c.	1-No. 8 screw at 8″ o.c.	2-No. 8 screws at 8″ o.c.	2-No. 8 screws at 6″ o.c.	3-No. 8 screws at 8″ o.c.	3-No. 8 screws at 6″ o.c.
Wall bottom track to foundation per Figure R603.3.1(2)[d]			1/2″ minimum diameter anchor bolt at 6′ o.c.	1/2″ minimum diameter anchor bolt at 6′ o.c.	1/2″ minimum diameter anchor bolt at 4′ o.c.	1/2″ minimum diameter anchor bolt at 4′ o.c.	1/2″ minimum diameter anchor bolt at 3′-4″ o.c.	1/2″ minimum diameter anchor bolt at 2′-8″ o.c.
Wall bottom track to wood sill per Figure R603.3.1(3)			Steel plate spaced at 4′ o.c., with 4-No. 8 screws and 4-10d or 6-8d common nails	Steel plate spaced at 4′ o.c., with 4-No. 8 screws and 4-10d or 6-8d common nails	Steel plate spaced at 3′ o.c., with 4-No. 8 screws and 4-10d or 6-8d common nails	Steel plate spaced at 3′ o.c., with 4-No. 8 screws and 4-10d or 6-8d common nails	Steel plate spaced at 2′ o.c., with 4-No. 8 screws and 4-10d or 6-8d common nails	Steel plate spaced at 1′-4″ o.c., with 4-No. 8 screws and 4-10d or 6-8d common nails
Wind uplift connector strength (lbs)[c, e]	Stud Spacing (inches)	Roof Span (feet)						
	16	24	NR	NR	NR	NR	NR	NR
		28	NR	NR	NR	NR	NR	339
		32	NR	NR	NR	NR	NR	382
		36	NR	NR	NR	NR	333	426
		40	NR	NR	NR	NR	368	470
	24	24	NR	NR	NR	NR	343	443
		28	NR	NR	NR	NR	395	508
		32	NR	NR	NR	330	447	573
		36	NR	NR	NR	371	500	639
		40	NR	NR	345	411	552	704

For SI: 1 inch = 25.4 mm, 1 mile per hour = 0.447 m/s, 1 foot = 304.8 mm, 1 pound = 4.45 N.

a. Anchor bolts are to be located not more than 12 inches from corners or the termination of bottom tracks, such as at door openings or corners. Bolts are to extend not less than 15 inches into masonry or 7 inches into concrete.

b. All screw sizes shown are minimum.

c. NR = Uplift connector not required.

d. Foundation anchor straps are permitted in place of anchor bolts, if spaced as required to provide equivalent anchorage to the required anchor bolts and installed in accordance with manufacturer's requirements.

e. See Figure R603.3.1(4) for details.

For two-story buildings, the tabulated stud thickness for walls supporting one floor, roof and ceiling shall be used where the second-floor live load is 30 pounds per square foot (1440 Pa). Second-floor live loads of 40 psf (1920 Pa) shall be permitted provided that the next higher snow load column is used to select the stud size from Tables R603.3.2(2) through R603.3.2(11).

For three-story buildings, the tabulated stud thickness for walls supporting one or two floors, roof and ceiling shall be used where the third-floor live load is 30 pounds per square foot (1440 Pa). Third-floor live loads of 40 pounds per square foot (1920 Pa) shall be permitted provided that the next higher snow load column is used to select the stud size from Tables R603.3.2(12) through R603.3.2(16).

R603.3.2.1 Gable endwalls. The size and thickness of gable endwall studs with heights less than or equal to 10 feet (3048 mm) shall be permitted in accordance with the limits set forth in Table R603.3.2.1(1). The size and thickness of gable endwall studs with heights greater than 10 feet (3048 mm) shall be determined in accordance with the limits set forth in Table R603.3.2.1(2).

R603.3.3 Stud bracing. The flanges of cold-formed steel studs shall be laterally braced in accordance with one of the following:

1. Gypsum board on both sides, structural sheathing on both sides, or gypsum board on one side and structural sheathing on the other side of load-bearing walls with gypsum board installed with minimum No. 6 screws in accordance with Section R702 and structural sheathing installed in accordance with Section R603.9 and Table R603.3.2(1).
2. Horizontal steel straps fastened in accordance with Figure R603.3.3(1) on both sides at mid-height for 8-foot (2438 mm) walls, and at one-third points for 9-foot and 10-foot (2743 mm and 3048 mm) walls.

INTERNATIONAL CODE COUNCIL®
Copyright © 2019 ICC & NYSDOS. ALL RIGHTS RESERVED. Accessed by Lauren Gualdino (lgualdino@briarcliffmanor.org), (-) Order Number #100880972 on May 08, 2020 07:05 AM (PDT) pursuant to License Agreement with ICC & NYSDOS. No further reproduction, no

100880972

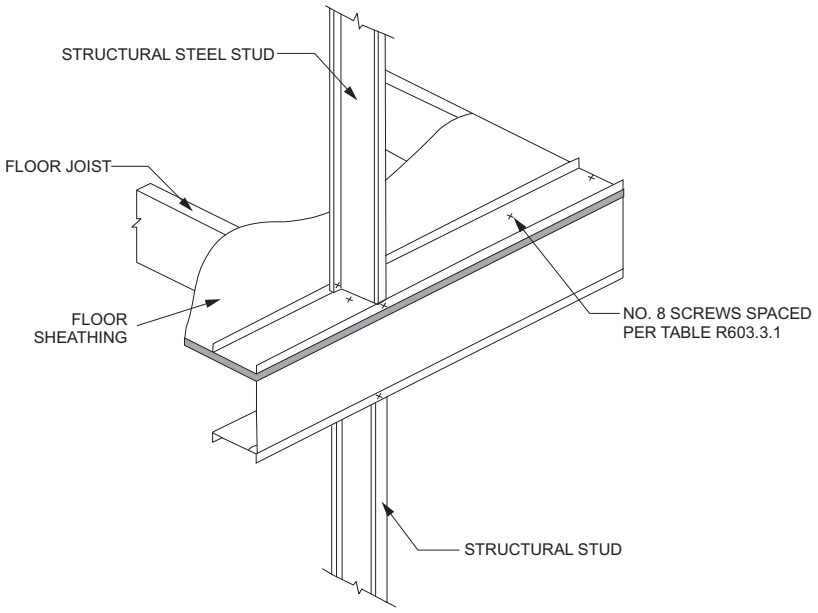

FIGURE R603.3.1(1)
WALL TO FLOOR CONNECTION

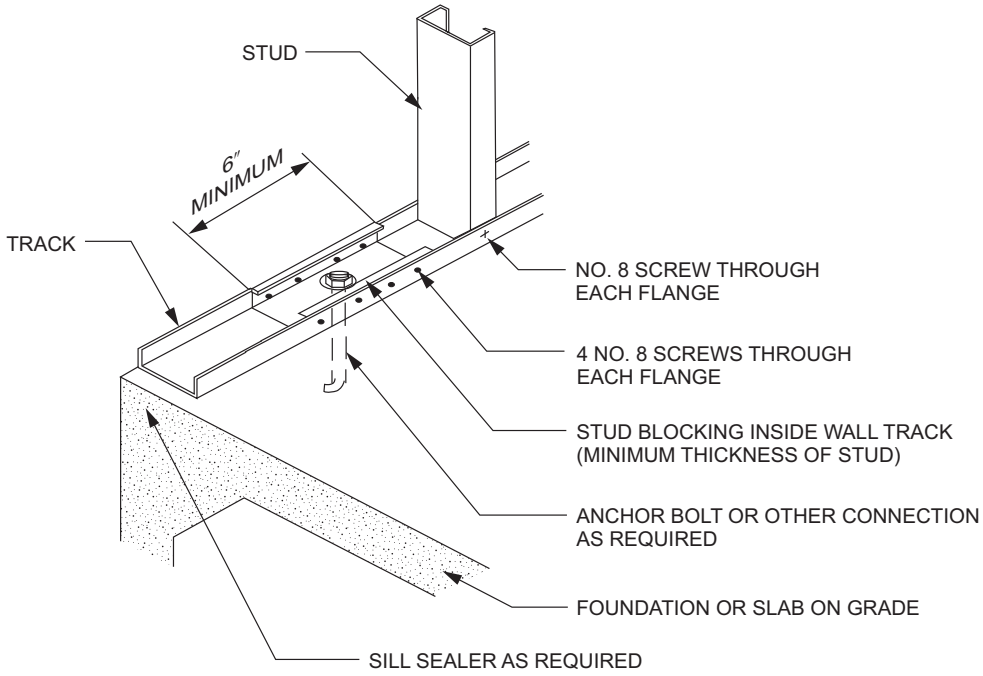

For SI: 1 inch = 25.4 mm.

FIGURE R603.3.1(2)
WALL TO FOUNDATION CONNECTION

INTERNATIONAL CODE COUNCIL®
Copyright © 2019 ICC & NYSDOS. ALL RIGHTS RESERVED. Accessed by Lauren Gualdino (lgualdino@briarcliffmanor.org), (-) Order Number #100880972 on May 08, 2020 07:05 AM (PDT) pursuant to License Agreement with ICC & NYSDOS. No further reproduction, no

100880972

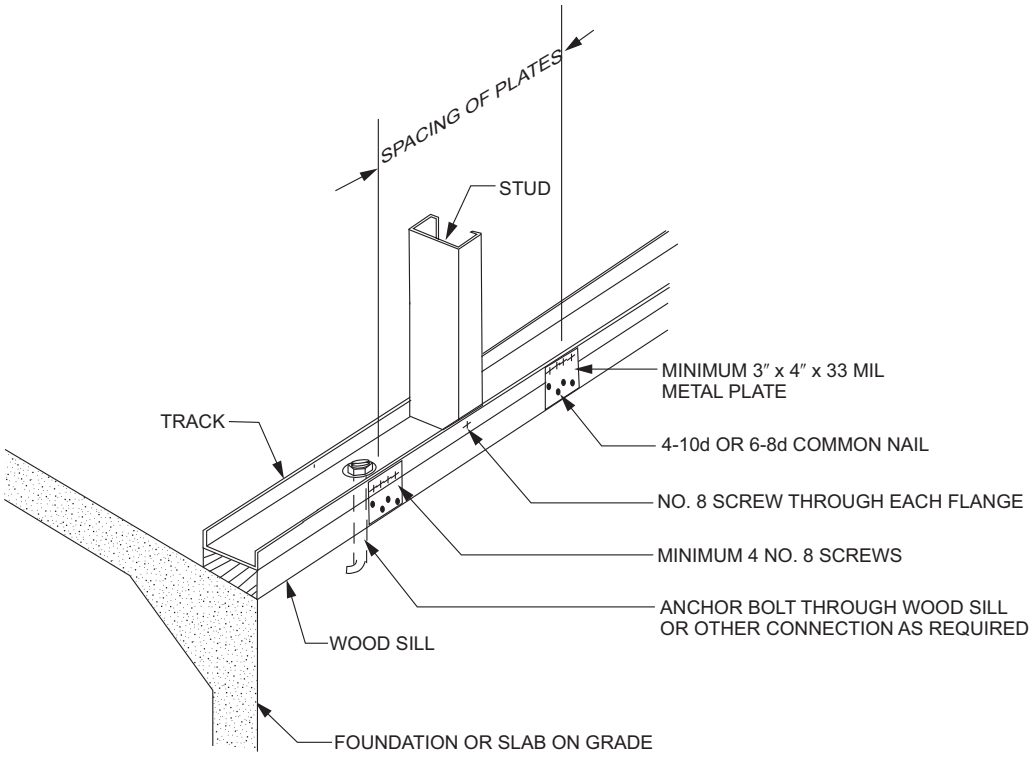

For SI: 1 mil = 0.0254 mm, 1 inch = 25.4 mm.

FIGURE R603.3.1(3)
WALL TO WOOD SILL CONNECTION

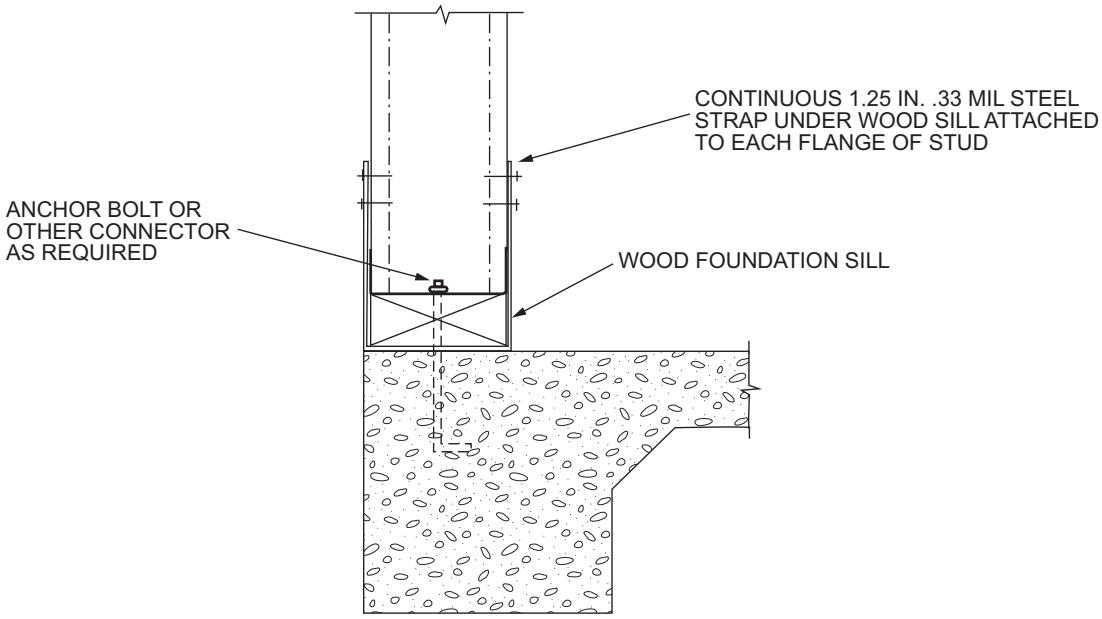

For SI: 1 mil = 0.0254 mm, 1 inch = 25.4 mm.

FIGURE R603.3.1(4)
WIND UPLIFT CONNECTOR

INTERNATIONAL CODE COUNCIL®
Copyright © 2019 ICC & NYSDOS. ALL RIGHTS RESERVED. Accessed by Lauren Gualdino (lgualdino@briarcliffmanor.org), (-) Order Number #100880972 on May 08, 2020 07:05 AM (PDT) pursuant to License Agreement with ICC & NYSDOS. No further reproduction, no

100880972

TABLE R603.3.1.1(1)
GABLE ENDWALL TO FLOOR CONNECTION REQUIREMENTS[a, b, c]

ULTIMATE WIND SPEED (mph)		WALL BOTTOM TRACK TO FLOOR JOIST OR TRACK CONNECTION		
Exposure Category		Stud height, *h* (feet)		
B	C	10 < *h* ≤ 14	14 < *h* ≤ 18	18 < *h* ≤ 22
115	—	1-No. 8 screw @ 12″ o.c.	1-No. 8 screw @ 12″ o.c.	1-No. 8 screw @ 12″ o.c.
120	—	1-No. 8 screw @ 12″ o.c.	1-No. 8 screw @ 12″ o.c.	1-No. 8 screw @ 12″ o.c.
130	115	1-No. 8 screw @ 12″ o.c.	1-No. 8 screw @ 12″ o.c.	2-No. 8 screws @ 12″ o.c.
< 140	120	1-No. 8 screw @ 12″ o.c.	1-No. 8 screw @ 12″ o.c.	2-No. 8 screws @ 12″ o.c.
—	130	2-No. 8 screws @ 12″ o.c.	1-No. 8 screw @ 8″ o.c.	2-No. 8 screws @ 8″ o.c.
—	< 140	2-No. 8 screws @ 12″ o.c.	1-No. 8 screw @ 8″ o.c.	2-No. 8 screws @ 8″ o.c.

For SI: 1 inch = 25.4 mm, 1 mile per hour = 0.447 m/s, 1 foot = 304.8 mm.

a. Refer to Table R603.3.1.1(2) for gable endwall bottom track to foundation connections.

b. Where attachment is not given, special design is required.

c. Stud height, *h*, is measured from wall bottom track to wall top track or brace connection height.

TABLE R603.3.1.1(2)
GABLE ENDWALL BOTTOM TRACK TO FOUNDATION CONNECTION REQUIREMENTS[a, b, c]

ULTIMATE WIND SPEED (mph)		MINIMUM SPACING FOR $^1/_2$-INCH-DIAMETER ANCHOR BOLTS[d]		
Exposure Category		Stud height, *h* (feet)		
B	C	10 < *h* ≤ 14	14 < *h* ≤ 18	18 < *h* ≤ 22
115	—	6′- 0″ o.c.	6′- 0″ o.c.	6′- 0″ o.c.
120	—	6′- 0″ o.c.	5′- 7″ o.c.	6′- 0″ o.c.
130	115	5′- 0″ o.c.	6′- 0″ o.c.	6′- 0″ o.c.
< 140	120	6′- 0″ o.c.	5′- 6″ o.c.	6′- 0″ o.c.
—	130	5′- 3″ o.c.	6′- 0″ o.c.	6′- 0″ o.c.
—	< 140	3′- 0″ o.c.	3′- 0″ o.c.	3′- 0″ o.c.

For SI: 1 inch = 25.4 mm, 1 mile per hour = 0.447 m/s, 1 foot = 304.8 mm.

a. Refer to Table R603.3.1.1(1) for gable endwall bottom track to floor joist or track connection connections.

b. Where attachment is not given, special design is required.

c. Stud height, *h*, is measured from wall bottom track to wall top track or brace connection height.

d. Foundation anchor straps are permitted in place of anchor bolts if spaced as required to provide equivalent anchorage to the required anchor bolts and installed in accordance with manufacturer's requirements.

TABLE R603.3.2(1)
WALL FASTENING SCHEDULE[a]

DESCRIPTION OF BUILDING ELEMENT	NUMBER AND SIZE OF FASTENERS[a]	SPACING OF FASTENERS
Wall stud to top or bottom track	2-No. 8 screws	Each end of stud, one per flange
Structural sheathing to wall studs	No. 8 screws[b]	6″ o.c. on edges and 12″ o.c. at intermediate supports
$^1/_2$″ gypsum board to framing	No. 6 screws	12″ o.c.

For SI: 1 inch = 25.4 mm.

a. All screw sizes shown are minimum.

b. Screws for attachment of structural sheathing panels are to be bugle-head, flat-head, or similar head styles with a minimum head diameter of 0.29 inch.

INTERNATIONAL CODE COUNCIL®
Copyright © 2019 ICC & NYSDOS. ALL RIGHTS RESERVED. Accessed by Lauren Gualdino (lgualdino@briarcliffmanor.org), (-) Order Number #100880972 on May 08, 2020 07:05 AM (PDT) pursuant to License Agreement with ICC & NYSDOS. No further reproduction, no

100880972

TABLE R603.3.2(2)
24-FOOT-WIDE BUILDING SUPPORTING ROOF AND CEILING ONLY[a, b, c, d]

ULTIMATE WIND SPEED AND EXPOSURE CATEGORY (mph)		MEMBER SIZE	STUD SPACING (inches)	MINIMUM STUD THICKNESS (mils)											
				8-foot Studs				9-foot Studs				10-foot Studs			
				Ground Snow Load (psf)											
Exp. B	Exp. C			20	30	50	70	20	30	50	70	20	30	50	70
115	—	350S162	16	33	33	33	33	33	33	33	33	33	33	33	33
			24	33	33	33	43	33	33	33	43	33	33	43	43
		550S162	16	33	33	33	33	33	33	33	33	33	33	33	33
			24	33	33	33	33	33	33	33	33	33	33	33	43
120	—	350S162	16	33	33	33	33	33	33	33	33	33	33	33	33
			24	33	33	33	43	33	33	33	43	43	43	43	43
		550S162	16	33	33	33	33	33	33	33	33	33	33	33	33
			24	33	33	33	43	33	33	33	33	33	33	33	43
130	115	350S162	16	33	33	33	33	33	33	33	33	33	33	33	33
			24	33	33	43	43	43	43	43	43	43	43	43	54
		550S162	16	33	33	33	33	33	33	33	33	33	33	33	33
			24	33	33	33	43	33	33	33	43	33	33	33	43
< 140	120	350S162	16	33	33	33	33	33	33	33	33	33	33	33	43
			24	33	33	43	43	43	43	43	43	54	54	54	54
		550S162	16	33	33	33	33	33	33	33	33	33	33	33	33
			24	33	33	33	43	33	33	33	43	43	43	43	43
—	130	350S162	16	33	33	33	33	33	33	33	33	43	43	43	43
			24	43	43	43	43	54	54	54	54	54	54	54	54
		550S162	16	33	33	33	33	33	33	33	33	33	33	33	33
			24	33	33	33	43	43	43	43	43	43	43	43	43
—	< 140	350S 162	16	33	33	33	33	43	43	43	43	43	43	43	43
			24	43	43	43	54	54	54	54	54	54	54	54	54
		550S 162	16	33	33	33	33	33	33	33	33	33	33	33	33
			24	43	43	43	43	43	43	43	43	43	43	43	43

For SI: 1 inch = 25.4 mm, 1 foot = 304.8 mm, 1 mil = 0.0254 mm, 1 mile per hour = 0.447 m/s, 1 pound per square foot = 0.0479 kPa, 1 ksi = 1,000 psi = 6.895 MPa.

a. Deflection criterion: *L*/240.

b. Design load assumptions:
Second-floor dead load is 10 psf.
Second-floor live load is 30 psf.
Roof/ceiling dead load is 12 psf.
Attic live load is 10 psf.

c. Building width is in the direction of horizontal framing members supported by the wall studs.

d. Minimum Grade 33 ksi steel shall be used for 33 mil and 43 mil thicknesses. Minimum Grade 50 ksi steel shall be used for 54 and 68 mil thicknesses.

INTERNATIONAL CODE COUNCIL®
Copyright © 2019 ICC & NYSDOS. ALL RIGHTS RESERVED. Accessed by Lauren Gualdino (lgualdino@briarcliffmanor.org), (-) Order Number #100880972 on May 08, 2020 07:05 AM (PDT) pursuant to License Agreement with ICC & NYSDOS. No further reproduction, no

100880972

TABLE R603.3.2(3)
28-FOOT-WIDE BUILDING SUPPORTING ROOF AND CEILING ONLY[a, b, c, d]

ULTIMATE WIND SPEED AND EXPOSURE CATEGORY (mph)		MEMBER SIZE	STUD SPACING (inches)	MINIMUM STUD THICKNESS (mils)											
				8-foot Studs				9-foot Studs				10-foot Studs			
				Ground Snow Load (psf)											
Exp. B	Exp. C			20	30	50	70	20	30	50	70	20	30	50	70
115	—	350S162	16	33	33	33	33	33	33	33	33	33	33	33	33
			24	33	33	43	43	33	33	43	43	33	33	43	54
		550S162	16	33	33	33	33	33	33	33	33	33	33	33	33
			24	33	33	33	43	33	33	33	43	33	33	33	43
120	—	350S162	16	33	33	33	33	33	33	33	33	33	33	33	33
			24	33	33	43	43	33	33	43	43	43	43	43	54
		550S162	16	33	33	33	33	33	33	33	33	33	33	33	33
			24	33	33	33	43	33	33	33	43	33	33	33	43
130	115	350S162	16	33	33	33	33	33	33	33	33	33	33	33	43
			24	33	33	43	54	43	43	43	54	43	43	43	54
		550S162	16	33	33	33	33	33	33	33	33	33	33	33	33
			24	33	33	33	43	33	33	33	43	33	33	33	43
< 140	120	350S162	16	33	33	33	33	33	33	33	33	33	33	33	43
			24	33	33	43	54	43	43	43	54	54	54	54	54
		550S162	16	33	33	33	33	33	33	33	33	33	33	33	33
			24	33	33	33	43	33	33	33	43	43	43	43	43
—	130	350S162	16	33	33	33	33	33	33	33	43	43	43	43	43
			24	43	43	43	54	54	54	54	54	54	54	54	54
		550S162	16	33	33	33	33	33	33	33	33	33	33	33	33
			24	33	33	33	43	43	43	43	43	43	43	43	43
—	< 140	350S 162	16	33	33	33	43	43	43	43	43	43	43	43	43
			24	43	43	43	54	54	54	54	54	54	54	54	54
		550S162	16	33	33	33	33	33	33	33	33	33	33	33	33
			24	43	43	43	43	43	43	43	43	43	43	43	43

For SI: 1 inch = 25.4 mm, 1 foot = 304.8 mm, 1 mil = 0.0254 mm, 1 mile per hour = 0.447 m/s, 1 pound per square foot = 0.0479 kPa, 1 ksi = 1,000 psi = 6.895 MPa.

a. Deflection criterion: *L*/240.

b. Design load assumptions:
Second-floor dead load is 10 psf.
Second-floor live load is 30 psf.
Roof/ceiling dead load is 12 psf.
Attic live load is 10 psf.

c. Building width is in the direction of horizontal framing members supported by the wall studs.

d. Minimum Grade 33 ksi steel shall be used for 33 mil and 43 mil thicknesses. Minimum Grade 50 ksi steel shall be used for 54 and 68 mil thicknesses.

INTERNATIONAL CODE COUNCIL®
Copyright © 2019 ICC & NYSDOS. ALL RIGHTS RESERVED. Accessed by Lauren Gualdino (lgualdino@briarcliffmanor.org), (-) Order Number #100880972 on May 08, 2020 07:05 AM (PDT) pursuant to License Agreement with ICC & NYSDOS. No further reproduction, no

100880972

TABLE R603.3.2(4)
32-FOOT-WIDE BUILDING SUPPORTING ROOF AND CEILING ONLY[a, b, c, d]

ULTIMATE WIND SPEED AND EXPOSURE CATEGORY (mph)		MEMBER SIZE	STUD SPACING (inches)	MINIMUM STUD THICKNESS (mils)											
				8-foot Studs				9-foot Studs				10-foot Studs			
				Ground Snow Load (psf)											
Exp. B	Exp. C			20	30	50	70	20	30	50	70	20	30	50	70
115	—	350S162	16	33	33	33	33	33	33	33	33	33	33	33	43
			24	33	33	43	54	33	33	43	54	43	43	43	54
		550S162	16	33	33	33	33	33	33	33	33	33	33	33	33
			24	33	33	33	43	33	33	33	43	33	33	33	43
120	—	350S162	16	33	33	33	33	33	33	33	33	33	33	33	43
			24	33	33	43	54	33	33	43	54	43	43	43	54
		550S162	16	33	33	33	33	33	33	33	33	33	33	33	33
			24	33	33	33	43	33	33	33	43	33	33	43	43
130	115	350S162	16	33	33	33	43	33	33	33	43	33	33	33	43
			24	33	33	43	54	43	43	43	54	43	43	54	54
		550S162	16	33	33	33	33	33	33	33	33	33	33	33	33
			24	33	33	43	43	33	33	33	43	33	33	43	43
< 140	120	350S162	16	33	33	33	43	33	33	33	43	33	33	33	43
			24	33	33	43	54	43	43	43	54	54	54	54	54
		550S162	16	33	33	33	33	33	33	33	33	33	33	33	33
			24	33	33	43	43	33	33	33	43	43	43	43	43
—	130	350S162	16	33	33	33	43	33	33	33	43	43	43	43	43
			24	43	43	43	54	54	54	54	54	54	54	54	54
		550S162	16	33	33	33	33	33	33	33	33	33	33	33	33
			24	33	33	43	43	43	43	43	43	43	43	43	43
—	< 140	350S162	16	33	33	33	43	43	43	43	43	43	43	43	43
			24	43	43	54	54	54	54	54	54	54	54	54	54
		550S162	16	33	33	33	33	33	33	33	33	33	33	33	33
			24	43	43	43	43	43	43	43	43	43	43	43	43

For SI: 1 inch = 25.4 mm, 1 foot = 304.8 mm, 1 mil = 0.0254 mm, 1 mile per hour = 0.447 m/s, 1 pound per square foot = 0.0479 kPa, 1 ksi = 1,000 psi = 6.895 MPa.

a. Deflection criterion: *L*/240.

b. Design load assumptions:
Second-floor dead load is 10 psf.
Second-floor live load is 30 psf.
Roof/ceiling dead load is 12 psf.
Attic live load is 10 psf.

c. Building width is in the direction of horizontal framing members supported by the wall studs.

d. Minimum Grade 33 ksi steel shall be used for 33 mil and 43 mil thicknesses. Minimum Grade 50 ksi steel shall be used for 54 and 68 mil thicknesses.

INTERNATIONAL CODE COUNCIL®
Copyright © 2019 ICC & NYSDOS. ALL RIGHTS RESERVED. Accessed by Lauren Gualdino (lgualdino@briarcliffmanor.org), (-) Order Number #100880972 on May 08, 2020 07:05 AM (PDT) pursuant to License Agreement with ICC & NYSDOS. No further reproduction, no

100880972

TABLE R603.3.2(5)
36-FOOT-WIDE BUILDING SUPPORTING ROOF AND CEILING ONLY[a, b, c, d]

ULTIMATE WIND SPEED AND EXPOSURE CATEORY (mph)		MEMBER SIZE	STUD SPACING (inches)	MINIMUM STUD THICKNESS (mils)											
				8-foot Studs				9-foot Studs				10-foot Studs			
				Ground Snow Load (psf)											
Exp. B	Exp. C			20	30	50	70	20	30	50	70	20	30	50	70
115	—	350S162	16	33	33	33	43	33	33	33	43	33	33	33	43
			24	33	33	43	54	33	33	43	54	43	43	54	54
		550S162	16	33	33	33	33	33	33	33	33	33	33	33	33
			24	33	33	43	43	33	33	43	43	33	33	43	43
120	—	350S162	16	33	33	33	43	33	33	33	43	33	33	33	43
			24	33	33	43	54	33	33	43	54	43	43	54	54
		550S162	16	33	33	33	33	33	33	33	33	33	33	33	33
			24	33	33	43	43	33	33	43	43	33	33	43	43
130	115	350S162	16	33	33	33	43	33	33	33	43	33	33	43	43
			24	33	43	43	54	43	43	43	54	43	43	54	54
		550S162	16	33	33	33	33	33	33	33	33	33	33	33	33
			24	33	33	43	43	33	33	43	43	33	33	43	43
< 140	120	350S162	16	33	33	33	43	33	33	33	33	33	33	43	43
			24	43	43	43	54	43	43	43	54	54	54	54	54
		550S162	16	33	33	33	33	33	33	33	33	33	33	33	33
			24	33	33	43	43	33	33	43	43	43	43	43	54
—	130	350S162	16	33	33	33	43	33	33	33	43	43	43	43	43
			24	43	43	54	54	54	54	54	54	54	54	54	54
		550S162	16	33	33	33	33	33	33	33	33	33	33	33	43
			24	33	33	43	54	43	43	43	43	43	43	43	54
—	< 140	350S162	16	33	33	33	43	43	43	43	43	43	43	43	54
			24	43	43	54	54	54	54	54	54	54	54	54	68
		550S162	16	33	33	33	33	33	33	33	33	33	33	33	43
			24	43	43	43	54	43	43	43	43	43	43	43	54

For SI: 1 inch = 25.4 mm, 1 foot = 304.8 mm, 1 mil = 0.0254 mm, 1 mile per hour = 0.447 m/s, 1 pound per square foot = 0.0479 kPa, 1 ksi = 1,000 psi = 6.895 MPa.

a. Deflection criterion: *L*/240.

b. Design load assumptions:
Second-floor dead load is 10 psf.
Second-floor live load is 30 psf.
Roof/ceiling dead load is 12 psf.
Attic live load is 10 psf.

c. Building width is in the direction of horizontal framing members supported by the wall studs.

d. Minimum Grade 33 ksi steel shall be used for 33 mil and 43 mil thicknesses. Minimum Grade 50 ksi steel shall be used for 54 and 68 mil thicknesses.

INTERNATIONAL CODE COUNCIL®
Copyright © 2019 ICC & NYSDOS. ALL RIGHTS RESERVED. Accessed by Lauren Gualdino (lgualdino@briarcliffmanor.org), (-) Order Number #100880972 on May 08, 2020 07:05 AM (PDT) pursuant to License Agreement with ICC & NYSDOS. No further reproduction, no

100880972

TABLE R603.3.2(6)
40-FOOT-WIDE BUILDING SUPPORTING ROOF AND CEILING ONLY[a, b, c, d]

ULTIMATE WIND SPEED AND EXPOSURE CATEGORY (mph)		MEMBER SIZE	STUD SPACING (inches)	MINIMUM STUD THICKNESS (mils)											
				8-foot Studs				9-foot Studs				10-foot Studs			
				Ground Snow Load (psf)											
Exp. B	Exp. C			20	30	50	70	20	30	50	70	20	30	50	70
115	—	350S162	16	33	33	33	43	33	33	33	43	33	33	43	43
			24	33	33	43	54	33	43	43	54	43	43	54	54
		550S162	16	33	33	33	43	33	33	33	33	33	33	33	33
			24	33	33	43	54	33	33	43	43	33	33	43	54
120	—	350S162	16	33	33	33	43	33	33	33	43	33	33	43	43
			24	33	43	43	54	33	43	43	54	43	43	54	54
		550S162	16	33	33	33	43	33	33	33	33	33	33	33	43
			24	33	33	43	54	33	33	43	43	33	33	43	54
130	115	350S162	16	33	33	33	43	33	33	33	43	33	33	43	43
			24	43	43	54	54	43	43	54	54	43	54	54	54
		550S162	16	33	33	33	43	33	33	33	33	33	33	33	43
			24	33	33	43	54	33	33	43	54	33	33	43	54
< 140	120	350S162	16	33	33	33	43	33	33	33	43	33	33	43	43
			24	43	43	54	54	43	43	54	54	54	54	54	54
		550S162	16	33	33	33	43	33	33	33	33	33	33	33	43
			24	33	33	43	54	33	33	43	54	43	43	43	54
—	130	350S162	16	33	33	43	43	33	33	43	43	43	43	43	54
			24	43	43	54	54	54	54	54	54	54	54	54	68
		550S162	16	33	33	33	43	33	33	33	43	33	33	33	43
			24	33	33	43	54	43	43	43	54	43	43	43	54
—	< 140	350S162	16	33	33	43	43	43	43	43	43	43	43	43	54
			24	43	43	54	54	54	54	54	54	54	54	54	68
		550S162	16	33	33	33	43	33	33	33	43	33	33	33	43
			24	43	43	43	54	43	43	43	54	43	43	43	54

For SI: 1 inch = 25.4 mm, 1 foot = 304.8 mm, 1 mil = 0.0254 mm, 1 mile per hour = 0.447 m/s, 1 pound per square foot = 0.0479 kPa, 1 ksi = 1,000 psi = 6.895 MPa.

a. Deflection criterion: *L*/240.

b. Design load assumptions:
Second-floor dead load is 10 psf.
Second-floor live load is 30 psf.
Roof/ceiling dead load is 12 psf.
Attic live load is 10 psf.

c. Building width is in the direction of horizontal framing members supported by the wall studs.

d. Minimum Grade 33 ksi steel shall be used for 33 mil and 43 mil thicknesses. Minimum Grade 50 ksi steel shall be used for 54 and 68 mil thicknesses.

INTERNATIONAL CODE COUNCIL®
Copyright © 2019 ICC & NYSDOS. ALL RIGHTS RESERVED. Accessed by Lauren Gualdino (lgualdino@briarcliffmanor.org), (-) Order Number #100880972 on May 08, 2020 07:05 AM (PDT) pursuant to License Agreement with ICC & NYSDOS. No further reproduction, no

100880972

TABLE R603.3.2(7)
24-FOOT-WIDE BUILDING SUPPORTING ONE FLOOR, ROOF AND CEILING[a, b, c, d]

ULTIMATE WIND SPEED AND EXPOSURE CATEGORY (mph)		MEMBER SIZE	STUD SPACING (inches)	MINIMUM STUD THICKNESS (mils)											
				8-foot Studs				9-foot Studs				10-foot Studs			
				Ground Snow Load (psf)											
Exp. B	Exp. C			20	30	50	70	20	30	50	70	20	30	50	70
115	—	350S162	16	33	33	33	33	33	33	33	33	33	33	33	43
			24	33	33	43	43	43	43	43	43	43	43	43	54
		550S162	16	33	33	33	33	33	33	33	33	33	33	33	33
			24	33	33	33	43	33	33	33	43	33	33	33	43
120	—	350S162	16	33	33	33	33	33	33	33	33	33	33	33	43
			24	43	43	43	43	43	43	43	43	43	43	54	54
		550S162	16	33	33	33	33	33	33	33	33	33	33	33	33
			24	33	33	33	43	33	33	33	43	33	33	33	43
130	115	350S162	16	33	33	33	43	33	33	33	43	43	43	43	43
			24	43	43	43	54	43	43	54	54	54	54	54	54
		550S162	16	33	33	33	33	33	33	33	33	33	33	33	33
			24	33	33	33	43	33	33	33	43	33	33	43	43
< 140	120	350S162	16	33	33	33	43	33	33	43	43	43	43	43	43
			24	43	43	43	54	43	54	54	54	54	54	54	54
		550S162	16	33	33	33	33	33	33	33	33	33	33	33	33
			24	33	33	43	43	33	33	33	43	43	43	43	43
—	130	350S162	16	33	33	33	43	43	43	43	43	43	43	43	54
			24	43	43	54	54	54	54	54	54	54	54	54	54
		550S162	16	33	33	33	33	33	33	33	33	33	33	33	33
			24	33	33	43	43	43	43	43	43	43	43	43	43
—	< 140	350S162	16	43	43	43	43	43	43	43	43	54	54	54	54
			24	54	54	54	54	54	54	54	54	54	54	54	54
		550S162	16	33	33	33	33	33	33	33	33	33	33	33	33
			24	43	43	43	43	43	43	43	43	43	43	43	43

For SI: 1 inch = 25.4 mm, 1 foot = 304.8 mm, 1 mil = 0.0254 mm, 1 mile per hour = 0.447 m/s, 1 pound per square foot = 0.0479 kPa, 1 ksi = 1,000 psi = 6.895 MPa.

a. Deflection criterion: *L*/240.

b. Design load assumptions:
Second-floor dead load is 10 psf.
Second-floor live load is 30 psf.
Roof/ceiling dead load is 12 psf.
Attic live load is 10 psf.

c. Building width is in the direction of horizontal framing members supported by the wall studs.

d. Minimum Grade 33 ksi steel shall be used for 33 mil and 43 mil thicknesses. Minimum Grade 50 ksi steel shall be used for 54 and 68 mil thicknesses.

INTERNATIONAL CODE COUNCIL®
Copyright © 2019 ICC & NYSDOS. ALL RIGHTS RESERVED. Accessed by Lauren Gualdino (lgualdino@briarcliffmanor.org), (-) Order Number #100880972 on May 08, 2020 07:05 AM (PDT) pursuant to License Agreement with ICC & NYSDOS. No further reproduction, no

100880972

TABLE R603.3.2(8)
28-FOOT-WIDE BUILDING SUPPORTING ONE FLOOR, ROOF AND CEILING[a, b, c, d]

ULTIMATE WIND SPEED AND EXPOSURE CATEGORY (mph)		MEMBER SIZE	STUD SPACING (inches)	MINIMUM STUD THICKNESS (mils)											
				8-foot Studs				9-foot Studs				10-foot Studs			
				Ground Snow Load (psf)											
Exp. B	Exp. C			20	30	50	70	20	30	50	70	20	30	50	70
115	—	350S162	16	33	33	33	43	33	33	33	43	33	33	43	43
			24	43	43	43	54	43	43	43	54	43	43	54	54
		550S162	16	33	33	33	33	33	33	33	33	33	33	33	33
			24	33	33	43	43	33	33	43	43	33	33	43	43
120	—	350S162	16	33	33	33	43	33	33	33	43	33	33	43	43
			24	43	43	43	54	43	43	43	54	54	54	54	54
		550S162	16	33	33	33	33	33	33	33	33	33	33	33	33
			24	33	33	43	43	33	33	43	43	33	33	43	43
130	115	350S162	16	33	33	33	43	33	33	43	43	43	43	43	43
			24	43	43	43	54	43	54	54	54	54	54	54	54
		550S162	16	33	33	33	33	33	33	33	33	33	33	33	33
			24	33	33	43	43	33	33	43	43	43	43	43	43
< 140	120	350S162	16	33	33	33	43	43	43	43	43	43	43	43	43
			24	43	43	54	54	54	54	54	54	54	54	54	54
		550S162	16	33	33	33	33	33	33	33	33	33	33	33	33
			24	33	33	43	43	33	33	43	43	43	43	43	43
—	130	350S162	16	33	33	43	43	43	43	43	43	43	43	54	54
			24	54	54	54	54	54	54	54	54	54	54	54	54
		550S162	16	33	33	33	33	33	33	33	33	33	33	33	43
			24	33	33	43	43	43	43	43	43	43	43	43	43
—	< 140	350S162	16	43	43	43	43	43	43	43	43	54	54	54	54
			24	54	54	54	54	54	54	54	54	54	54	54	54
		550S162	16	33	33	33	33	33	33	33	33	33	33	33	43
			24	43	43	43	43	43	43	43	43	43	43	43	54

For SI: 1 inch = 25.4 mm, 1 foot = 304.8 mm, 1 mil = 0.0254 mm, 1 mile per hour = 0.447 m/s, 1 pound per square foot = 0.0479 kPa, 1 ksi = 1,000 psi = 6.895 MPa.

a. Deflection criterion: *L*/240.

b. Design load assumptions:
Second-floor dead load is 10 psf.
Second-floor live load is 30 psf.
Roof/ceiling dead load is 12 psf.
Attic live load is 10 psf.

c. Building width is in the direction of horizontal framing members supported by the wall studs.

d. Minimum Grade 33 ksi steel shall be used for 33 mil and 43 mil thicknesses. Minimum Grade 50 ksi steel shall be used for 54 and 68 mil thicknesses.

INTERNATIONAL CODE COUNCIL®
Copyright © 2019 ICC & NYSDOS. ALL RIGHTS RESERVED. Accessed by Lauren Gualdino (lgualdino@briarcliffmanor.org), (-) Order Number #100880972 on May 08, 2020 07:05 AM (PDT) pursuant to License Agreement with ICC & NYSDOS. No further reproduction, no

100880972

TABLE R603.3.2(9)
32-FOOT-WIDE BUILDING SUPPORTING ONE FLOOR, ROOF AND CEILING[a, b, c, d]

ULTIMATE WIND SPEED AND EXPOSURE CATEGORY (mph)		MEMBER SIZE	STUD SPACING (inches)	MINIMUM STUD THICKNESS (mils)											
				8-foot Studs				9-foot Studs				10-foot Studs			
				Ground Snow Load (psf)											
Exp. B	Exp. C			20	30	50	70	20	30	50	70	20	30	50	70
115	—	350S162	16	33	33	33	43	33	33	33	43	33	43	43	43
			24	43	43	43	54	43	43	43	54	54	54	54	54
		550S162	16	33	33	33	43	33	33	33	33	33	33	33	43
			24	33	43	43	54	33	33	43	43	33	33	43	43
120	—	350S162	16	33	33	33	43	33	33	33	43	43	43	43	43
			24	43	43	43	54	43	43	43	54	54	54	54	54
		550S162	16	33	33	33	43	33	33	33	33	33	33	33	43
			24	33	43	43	54	33	33	43	43	33	33	43	54
130	115	350S162	16	33	33	43	43	43	43	43	43	43	43	43	43
			24	43	43	54	54	54	54	54	54	54	54	54	54
		550S162	16	33	33	33	43	33	33	33	33	33	33	33	43
			24	33	43	43	54	33	33	43	43	43	43	43	54
< 140	120	350S162	16	33	33	43	43	43	43	43	43	43	43	43	54
			24	43	54	54	54	54	54	54	54	54	54	54	54
		550S162	16	33	33	33	43	33	33	33	43	33	33	33	43
			24	33	43	43	54	33	43	43	43	43	43	43	54
—	130	350S162	16	43	43	43	43	43	43	43	43	43	54	54	54
			24	54	54	54	54	54	54	54	54	54	54	54	54
		550S162	16	33	33	33	43	33	33	33	43	33	33	33	43
			24	43	43	43	54	43	43	43	54	43	43	43	54
—	< 140	350S162	16	43	43	43	43	43	43	43	54	54	54	54	54
			24	54	54	54	54	54	54	54	54	54	54	54	68
		550S162	16	33	33	33	43	33	33	33	43	33	33	33	43
			24	43	43	43	54	43	43	43	54	43	43	43	54

For SI: 1 inch = 25.4 mm, 1 foot = 304.8 mm, 1 mil = 0.0254 mm, 1 mile per hour = 0.447 m/s, 1 pound per square foot = 0.0479 kPa, 1 ksi = 1,000 psi = 6.895 MPa.

a. Deflection criterion: *L*/240.

b. Design load assumptions:
Second-floor dead load is 10 psf.
Second-floor live load is 30 psf.
Roof/ceiling dead load is 12 psf.
Attic live load is 10 psf.

c. Building width is in the direction of horizontal framing members supported by the wall studs.

d. Minimum Grade 33 ksi steel shall be used for 33 mil and 43 mil thicknesses. Minimum Grade 50 ksi steel shall be used for 54 and 68 mil thicknesses.

INTERNATIONAL CODE COUNCIL®
Copyright © 2019 ICC & NYSDOS. ALL RIGHTS RESERVED. Accessed by Lauren Gualdino (lgualdino@briarcliffmanor.org), (-) Order Number #100880972 on May 08, 2020 07:05 AM (PDT) pursuant to License Agreement with ICC & NYSDOS. No further reproduction, no

100880972

TABLE R603.3.2(10)
36-FOOT-WIDE BUILDING SUPPORTING ONE FLOOR, ROOF AND CEILING[a, b, c, d]

ULTIMATE WIND SPEED AND EXPOSURE CATEGORY (mph)		MEMBER SIZE	STUD SPACING (inches)	MINIMUM STUD THICKNESS (mils)											
				8-foot Studs				9-foot Studs				10-foot Studs			
				Ground Snow Load (psf)											
Exp. B	Exp. C			20	30	50	70	20	30	50	70	20	30	50	70
115	—	350S162	16	33	33	43	43	33	33	43	43	43	43	43	43
			24	43	43	54	54	43	43	54	54	54	54	54	54
		550S162	16	33	33	33	43	33	33	33	43	33	33	33	43
			24	43	43	43	54	43	43	43	54	43	43	43	54
120	—	350S162	16	33	33	43	43	33	33	43	43	43	43	43	43
			24	43	43	54	54	43	43	54	54	54	54	54	54
		550S162	16	33	33	33	43	33	33	33	43	33	33	33	43
			24	43	43	43	54	43	43	43	54	43	43	43	54
130	115	350S162	16	33	33	43	43	43	43	43	43	43	43	43	54
			24	43	54	54	54	54	54	54	54	54	54	54	68
		550S162	16	33	33	33	43	33	33	33	43	33	33	33	43
			24	43	43	43	54	43	43	43	54	43	43	43	54
< 140	120	350S162	16	43	43	43	43	43	43	43	43	43	43	54	54
			24	54	54	54	54	54	54	54	54	54	54	54	68
		550S162	16	33	33	33	43	33	33	33	43	33	33	33	43
			24	43	43	43	54	43	43	43	54	43	43	43	54
—	130	350S162	16	43	43	43	43	43	43	43	43	54	54	54	54
			24	54	54	54	54	54	54	54	54	54	54	54	68
		550S162	16	33	33	33	43	33	33	33	43	33	33	33	43
			24	43	43	43	54	43	43	43	54	43	43	43	54
—	< 140	350S162	16	43	43	43	54	43	43	54	54	54	54	54	54
			24	54	54	54	54	54	54	54	54	54	54	54	68
		550S162	16	33	33	33	43	33	33	33	43	33	33	43	43
			24	43	43	43	54	43	43	43	54	43	43	54	54

For SI: 1 inch = 25.4 mm, 1 foot = 304.8 mm, 1 mil = 0.0254 mm, 1 mile per hour = 0.447 m/s, 1 pound per square foot = 0.0479 kPa, 1 ksi = 1,000 psi = 6.895 MPa.

a. Deflection criterion: *L*/240.

b. Design load assumptions:
Second-floor dead load is 10 psf.
Second-floor live load is 30 psf.
Roof/ceiling dead load is 12 psf.
Attic live load is 10 psf.

c. Building width is in the direction of horizontal framing members supported by the wall studs.

d. Minimum Grade 33 ksi steel shall be used for 33 mil and 43 mil thicknesses. Minimum Grade 50 ksi steel shall be used for 54 and 68 mil thicknesses.

INTERNATIONAL CODE COUNCIL®
Copyright © 2019 ICC & NYSDOS. ALL RIGHTS RESERVED. Accessed by Lauren Gualdino (lgualdino@briarcliffmanor.org), (-) Order Number #100880972 on May 08, 2020 07:05 AM (PDT) pursuant to License Agreement with ICC & NYSDOS. No further reproduction, no

100880972

TABLE R603.3.2(11)
40-FOOT-WIDE BUILDING SUPPORTING ONE FLOOR, ROOF AND CEILING[a, b, c, d]

ULTIMATE WIND SPEED AND EXPOSURE CATEGORY (mph)		MEMBER SIZE	STUD SPACING (inches)	MINIMUM STUD THICKNESS (mils)											
				8-foot Studs				9-foot Studs				10-foot Studs			
				Ground Snow Load (psf)											
Exp. B	Exp. C			20	30	50	70	20	30	50	70	20	30	50	70
115	—	350S162	16	33	33	43	43	33	33	43	43	43	43	43	54
			24	43	43	54	54	43	43	54	54	54	54	54	68
		550S162	16	33	33	33	43	33	33	33	43	33	33	33	43
			24	43	43	54	54	43	43	43	54	43	43	43	54
120	—	350S162	16	33	33	43	43	33	33	43	43	43	43	43	54
			24	43	43	54	54	54	54	54	54	54	54	54	68
		550S162	16	33	33	33	43	33	33	33	43	33	33	33	43
			24	43	43	54	54	43	43	43	54	43	43	43	54
130	115	350S162	16	43	43	43	54	43	43	43	43	43	43	54	54
			24	54	54	54	54	54	54	54	54	54	54	54	68
		550S162	16	33	33	43	43	33	33	33	43	33	33	43	43
			24	43	43	54	54	43	43	43	54	43	43	54	54
< 140	120	350S162	16	43	43	43	54	43	43	43	54	43	43	54	54
			24	54	54	54	54	54	54	54	54	54	54	54	68
		550S162	16	33	33	43	43	33	33	33	43	33	33	43	43
			24	43	43	54	54	43	43	43	54	43	43	54	54
—	130	350S162	16	43	43	43	54	43	43	43	54	54	54	54	54
			24	54	54	54	68	54	54	54	54	54	54	68	68
		550S162	16	33	33	43	43	33	33	33	43	33	33	43	43
			24	43	43	54	54	43	43	43	54	43	43	54	54
—	< 140	350S162	16	43	43	43	54	43	43	54	54	54	54	54	54
			24	54	54	54	68	54	54	54	68	54	54	68	68
		550S162	16	33	33	43	43	33	33	43	43	33	43	43	43
			24	43	43	54	54	43	43	43	54	43	43	54	54

For SI: 1 inch = 25.4 mm, 1 foot = 304.8 mm, 1 mil = 0.0254 mm, 1 mile per hour = 0.447 m/s, 1 pound per square foot = 0.0479 kPa, 1 ksi = 1,000 psi = 6.895 MPa.

a. Deflection criterion: *L*/240.

b. Design load assumptions:
Second-floor dead load is 10 psf.
Second-floor live load is 30 psf.
Roof/ceiling dead load is 12 psf.
Attic live load is 10 psf.

c. Building width is in the direction of horizontal framing members supported by the wall studs.

d. Minimum Grade 33 ksi steel shall be used for 33 mil and 43 mil thicknesses. Minimum Grade 50 ksi steel shall be used for 54 and 68 mil thicknesses.

INTERNATIONAL CODE COUNCIL®
Copyright © 2019 ICC & NYSDOS. ALL RIGHTS RESERVED. Accessed by Lauren Gualdino (lgualdino@briarcliffmanor.org), (-) Order Number #100880972 on May 08, 2020 07:05 AM (PDT) pursuant to License Agreement with ICC & NYSDOS. No further reproduction, no

100880972

TABLE R603.3.2(12)
24-FOOT-WIDE BUILDING SUPPORTING TWO FLOORS, ROOF AND CEILING[a, b, c, d]

ULTIMATE WIND SPEED AND EXPOSURE CATEGORY (mph)		MEMBER SIZE	STUD SPACING (inches)	MINIMUM STUD THICKNESS (mils)											
				8-foot Studs				9-foot Studs				10-foot Studs			
				Ground Snow Load (psf)											
Exp. B	Exp. C			20	30	50	70	20	30	50	70	20	30	50	70
115	—	350S162	16	43	43	43	43	33	33	33	43	43	43	43	43
			24	54	54	54	54	54	54	54	54	54	54	54	54
		550S162	16	33	33	43	43	33	33	33	33	33	33	33	43
			24	43	43	54	54	43	43	43	43	43	43	43	54
120	—	350S162	16	43	43	43	43	33	33	43	43	43	43	43	43
			24	54	54	54	54	54	54	54	54	54	54	54	54
		550S162	16	33	33	43	43	33	33	33	33	33	33	33	43
			24	43	43	54	54	43	43	43	43	43	43	43	54
130	115	350S162	16	43	43	43	43	43	43	43	43	43	43	43	54
			24	54	54	54	54	54	54	54	54	54	54	54	54
		550S162	16	33	33	43	43	33	33	33	33	33	33	33	43
			24	43	43	54	54	43	43	43	43	43	43	43	54
< 140	120	350S162	16	43	43	43	43	43	43	43	43	43	43	54	54
			24	54	54	54	54	54	54	54	54	54	54	54	54
		550S162	16	33	33	43	43	33	33	33	33	33	33	33	43
			24	43	43	54	54	43	43	43	43	43	43	43	54
—	130	350S162	16	43	43	43	43	43	43	43	43	54	54	54	54
			24	54	54	54	54	54	54	54	54	54	54	68	68
		550S162	16	33	33	43	43	33	33	33	33	33	33	33	43
			24	43	43	54	54	43	43	43	43	43	43	43	54
—	< 140	350S162	16	43	43	43	43	43	43	54	54	54	54	54	54
			24	54	54	54	54	54	54	54	54	54	54	68	68
		550S162	16	33	33	43	43	33	33	33	33	33	33	43	43
			24	43	43	54	54	43	43	43	43	54	54	54	54

For SI: 1 inch = 25.4 mm, 1 foot = 304.8 mm, 1 mil = 0.0254 mm, 1 mile per hour = 0.447 m/s, 1 pound per square foot = 0.0479 kPa, 1 ksi = 1,000 psi = 6.895 MPa.

a. Deflection criterion: *L*/240.

b. Design load assumptions:
Top- and middle-floor dead load is 10 psf.
Top-floor live load is 30 psf.
Middle-floor live load is 40 psf.
Roof/ceiling dead load is 12 psf.
Attic live load is 10 psf.

c. Building width is in the direction of horizontal framing members supported by the wall studs.

d. Minimum Grade 33 ksi steel shall be used for 33 mil and 43 mil thicknesses. Minimum Grade 50 ksi steel shall be used for 54 and 68 mil thicknesses.

INTERNATIONAL CODE COUNCIL®
Copyright © 2019 ICC & NYSDOS. ALL RIGHTS RESERVED. Accessed by Lauren Gualdino (lgualdino@briarcliffmanor.org), (-) Order Number #100880972 on May 08, 2020 07:05 AM (PDT) pursuant to License Agreement with ICC & NYSDOS. No further reproduction, no

100880972

TABLE R603.3.2(13)
28-FOOT-WIDE BUILDING SUPPORTING TWO FLOORS, ROOF AND CEILING[a, b, c, d]

ULTIMATE WIND SPEED AND EXPOSURE CATEGORY (mph)		MEMBER SIZE	STUD SPACING (inches)	MINIMUM STUD THICKNESS (mils)											
				8-foot Studs				9-foot Studs				10-foot Studs			
				Ground Snow Load (psf)											
Exp. B	Exp. C			20	30	50	70	20	30	50	70	20	30	50	70
115	—	350S162	16	43	43	43	43	43	43	43	43	43	43	43	43
			24	54	54	54	54	54	54	54	54	54	54	54	54
		550S162	16	43	43	43	43	43	43	43	43	43	43	43	43
			24	54	54	54	54	54	54	54	54	54	54	54	54
120	—	350S162	16	43	43	43	43	43	43	43	43	43	43	43	43
			24	54	54	54	54	54	54	54	54	54	54	54	54
		550S162	16	43	43	43	43	43	43	43	43	43	43	43	43
			24	54	54	54	54	54	54	54	54	54	54	54	54
130	115	350S162	16	43	43	43	43	43	43	43	43	43	43	54	54
			24	54	54	54	54	54	54	54	54	54	54	54	68
		550S162	16	43	43	43	43	43	43	43	43	43	43	43	43
			24	54	54	54	54	54	54	54	54	54	54	54	54
< 140	120	350S162	16	43	43	43	43	43	43	43	43	54	54	54	54
			24	54	54	54	54	54	54	54	54	54	54	68	68
		550S162	16	43	43	43	43	43	43	43	43	43	43	43	43
			24	54	54	54	54	54	54	54	54	54	54	54	54
—	130	350S162	16	43	43	43	43	43	43	43	54	54	54	54	54
			24	54	54	54	54	54	54	54	54	68	68	68	68
		550S162	16	43	43	43	43	43	43	43	43	43	43	43	43
			24	54	54	54	54	54	54	54	54	54	54	54	54
—	< 140	350S162	16	43	43	43	54	54	54	54	54	54	54	54	54
			24	54	54	54	54	54	54	54	68	68	68	68	68
		550S162	16	43	43	43	43	43	43	43	43	43	43	43	43
			24	54	54	54	54	54	54	54	54	54	54	54	54

For SI: 1 inch = 25.4 mm, 1 foot = 304.8 mm, 1 mil = 0.0254 mm, 1 mile per hour = 0.447 m/s, 1 pound per square foot = 0.0479 kPa, 1 ksi = 1,000 psi = 6.895 MPa.

a. Deflection criterion: *L*/240.

b. Design load assumptions:
Top- and middle-floor dead load is 10 psf.
Top-floor live load is 30 psf.
Middle-floor live load is 40 psf.
Roof/ceiling dead load is 12 psf.
Attic live load is 10 psf.

c. Building width is in the direction of horizontal framing members supported by the wall studs.

d. Minimum Grade 33 ksi steel shall be used for 33 mil and 43 mil thicknesses. Minimum Grade 50 ksi steel shall be used for 54 and 68 mil thicknesses.

INTERNATIONAL CODE COUNCIL®
Copyright © 2019 ICC & NYSDOS. ALL RIGHTS RESERVED. Accessed by Lauren Gualdino (lgualdino@briarcliffmanor.org), (-) Order Number #100880972 on May 08, 2020 07:05 AM (PDT) pursuant to License Agreement with ICC & NYSDOS. No further reproduction, no

100880972

TABLE R603.3.2(14)
32-FOOT-WIDE BUILDING SUPPORTING TWO FLOORS, ROOF AND CEILING[a, b, c, d]

ULTIMATE WIND SPEED AND EXPOSURE CATEGORY (mph)		MEMBER SIZE	STUD SPACING (inches)	MINIMUM STUD THICKNESS (mils)											
				8-foot Studs				9-foot Studs				10-foot Studs			
				Ground Snow Load (psf)											
Exp. B	Exp. C			20	30	50	70	20	30	50	70	20	30	50	70
115	—	350S162	16	43	43	43	54	43	43	43	43	43	43	43	54
			24	54	54	54	68	54	54	54	54	54	54	54	68
		550S162	16	43	43	43	43	43	43	43	43	43	43	43	43
			24	54	54	54	54	54	54	54	54	54	54	54	54
120	—	350S162	16	43	43	43	54	43	43	43	43	43	43	43	54
			24	54	54	54	68	54	54	54	54	54	54	54	68
		550S162	16	43	43	43	43	43	43	43	43	43	43	43	43
			24	54	54	54	54	54	54	54	54	54	54	54	54
130	115	350S162	16	43	43	43	54	43	43	43	43	54	54	54	54
			24	54	54	54	68	54	54	54	54	54	68	68	68
		550S162	16	43	43	43	43	43	43	43	43	43	43	43	43
			24	54	54	54	54	54	54	54	54	54	54	54	54
< 140	120	350S162	16	43	43	43	54	43	43	43	54	54	54	54	54
			24	54	54	54	68	54	54	54	54	68	68	68	68
		550S162	16	43	43	43	43	43	43	43	43	43	43	43	43
			24	54	54	54	54	54	54	54	54	54	54	54	54
—	130	350S162	16	43	43	43	54	43	54	54	54	54	54	54	54
			24	54	54	54	68	54	54	54	68	68	68	68	68
		550S162	16	43	43	43	43	43	43	43	43	43	43	43	43
			24	54	54	54	54	54	54	54	54	54	54	54	54
—	< 140	350S162	16	43	43	54	54	54	54	54	54	54	54	54	54
			24	54	54	54	68	54	68	68	68	68	68	68	68
		550S162	16	43	43	43	43	43	43	43	43	43	43	43	43
			24	54	54	54	54	54	54	54	54	54	54	54	54

For SI: 1 inch = 25.4 mm, 1 foot = 304.8 mm, 1 mil = 0.0254 mm, 1 mile per hour = 0.447 m/s, 1 pound per square foot = 0.0479 kPa, 1 ksi = 1,000 psi = 6.895 MPa.

a. Deflection criterion: *L*/240.

b. Design load assumptions:
   Top- and middle-floor dead load is 10 psf.
   Top-floor live load is 30 psf.
   Middle-floor live load is 40 psf.
   Roof/ceiling dead load is 12 psf.
   Attic live load is 10 psf.

c. Building width is in the direction of horizontal framing members supported by the wall studs.

d. Minimum Grade 33 ksi steel shall be used for 33 mil and 43 mil thicknesses. Minimum Grade 50 ksi steel shall be used for 54 and 68 mil thicknesses.

INTERNATIONAL CODE COUNCIL®
Copyright © 2019 ICC & NYSDOS. ALL RIGHTS RESERVED. Accessed by Lauren Gualdino (lgualdino@briarcliffmanor.org), (-) Order Number #100880972 on May 08, 2020 07:05 AM (PDT) pursuant to License Agreement with ICC & NYSDOS. No further reproduction, no

100880972

TABLE R603.3.2(15)
36-FOOT-WIDE BUILDING SUPPORTING TWO FLOORS, ROOF AND CEILING[a, b, c, d]

ULTIMATE WIND SPEED AND EXPOSURE CATEGORY (mph)		MEMBER SIZE	STUD SPACING (inches)	MINIMUM STUD THICKNESS (mils)											
				8-foot Studs				9-foot Studs				10-foot Studs			
				Ground Snow Load (psf)											
Exp. B	Exp. C			20	30	50	70	20	30	50	70	20	30	50	70
115	—	350S162	16	54	54	54	54	43	43	43	54	54	54	54	54
			24	68	68	68	68	54	54	54	68	68	68	68	68
		550S162	16	43	43	43	54	43	43	43	43	43	43	43	43
			24	54	54	54	54	54	54	54	54	54	54	54	54
120	—	350S162	16	54	54	54	54	43	43	43	54	54	54	54	54
			24	68	68	68	68	54	54	54	68	68	68	68	68
		550S162	16	43	43	43	54	43	43	43	43	43	43	43	43
			24	54	54	54	54	54	54	54	54	54	54	54	54
130	115	350S162	16	54	54	54	54	43	43	43	54	54	54	54	54
			24	68	68	68	68	54	54	54	68	68	68	68	68
		550S162	16	43	43	43	54	43	43	43	43	43	43	43	43
			24	54	54	54	54	54	54	54	54	54	54	54	54
< 140	120	350S162	16	54	54	54	54	43	43	54	54	54	54	54	54
			24	68	68	68	68	54	54	54	68	68	68	68	68
		550S162	16	43	43	43	54	43	43	43	43	43	43	43	43
			24	54	54	54	54	54	54	54	54	54	54	54	54
—	130	350S162	16	54	54	54	54	54	54	54	54	54	54	54	54
			24	68	68	68	68	54	54	68	68	68	68	68	68
		550S162	16	43	43	43	54	43	43	43	43	43	43	43	43
			24	54	54	54	54	54	54	54	54	54	54	54	54
—	< 140	350S162	16	54	54	54	54	54	54	54	54	54	54	54	54
			24	68	68	68	68	68	68	68	68	68	68	68	68
		550S162	16	43	43	43	54	43	43	43	43	43	43	43	43
			24	54	54	54	54	54	54	54	54	54	54	54	54

For SI: 1 inch = 25.4 mm, 1 foot = 304.8 mm, 1 mil = 0.0254 mm, 1 mile per hour = 0.447 m/s, 1 pound per square foot = 0.0479 kPa, 1 ksi = 1,000 psi = 6.895 MPa.

a. Deflection criterion: *L*/240.

b. Design load assumptions:
Top- and middle-floor dead load is 10 psf.
Top-floor live load is 30 psf.
Middle-floor live load is 40 psf.
Roof/ceiling dead load is 12 psf.
Attic live load is 10 psf.

c. Building width is in the direction of horizontal framing members supported by the wall studs.

d. Minimum Grade 33 ksi steel shall be used for 33 mil and 43 mil thicknesses. Minimum Grade 50 ksi steel shall be used for 54 and 68 mil thicknesses.

INTERNATIONAL CODE COUNCIL®
Copyright © 2019 ICC & NYSDOS. ALL RIGHTS RESERVED. Accessed by Lauren Gualdino (lgualdino@briarcliffmanor.org), (-) Order Number #100880972 on May 08, 2020 07:05 AM (PDT) pursuant to License Agreement with ICC & NYSDOS. No further reproduction, no

100880972

TABLE R603.3.2.1(1)
ALL BUILDING WIDTHS GABLE ENDWALLS 8, 9 OR 10 FEET IN HEIGHT[a, b, c, d]

ULTIMATE WIND SPEED AND EXPOSURE CATEGORY (mph)		MEMBER SIZE	STUD SPACING (inches)	MINIMUM STUD THICKNESS (mils)		
Exp. B	Exp. C			8-foot Studs	9-foot Studs	10-foot Studs
115	—	350S162	16	33	33	33
			24	33	33	33
		550S162	16	33	33	33
			24	33	33	33
120	—	350S162	16	33	33	33
			24	33	33	43
		550S162	16	33	33	33
			24	33	33	33
130	115	350S162	16	33	33	33
			24	33	43	43
		550S162	16	33	33	33
			24	33	33	33
< 140	120	350S162	16	33	33	43
			24	33	43	54
		550S162	16	33	33	33
			24	33	33	33
—	130	350S162	16	33	33	43
			24	43	43	54
		550S162	16	33	33	33
			24	33	43	43
—	< 140	350S162	16	33	43	43
			24	43	54	54
		550S162	16	33	33	33
			24	43	43	43

For SI: 1 inch = 25.4 mm, 1 foot = 304.8 mm, 1 mil = 0.0254 mm, 1 mile per hour = 0.447 m/s, 1 pound per square foot = 0.0479 kPa, 1 ksi = 1,000 psi = 6.895 MPa.

a. Deflection criterion *L*/240.

b. Design load assumptions:
Ground snow load is 70 psf.
Roof/ceiling dead load is 12 psf.
Floor dead load is 10 psf.
Floor live load is 40 psf.
Attic dead load is 10 psf.

c. Building width is in the direction of horizontal framing members supported by the wall studs.

d. Minimum Grade 33 ksi steel shall be used for 33 mil and 43 mil thicknesses. Minimum Grade 50 ksi steel shall be used for 54 and 68 mil thicknesses.

INTERNATIONAL CODE COUNCIL®
Copyright © 2019 ICC & NYSDOS. ALL RIGHTS RESERVED. Accessed by Lauren Gualdino (lgualdino@briarcliffmanor.org), (-) Order Number #100880972 on May 08, 2020 07:05 AM (PDT) pursuant to License Agreement with ICC & NYSDOS. No further reproduction, no

100880972

TABLE R603.3.2.1(2)
ALL BUILDING WIDTHS GABLE ENDWALLS OVER 10 FEET IN HEIGHT[a, b, c, d]

ULTIMATE WIND SPEED AND EXPOSURE CATEGORY (mph)		MEMBER SIZE	STUD SPACING (inches)	MINIMUM STUD THICKNESS (mils)					
				Stud Height, *h* (feet)					
Exp. B	Exp. C			10 < *h* ≤ 12	12 < *h* ≤ 14	14 < *h* ≤ 16	16 < *h* ≤ 18	18 < *h* ≤ 20	20 < *h* ≤ 22
115	—	350S162	16	33	43	68	97	—	—
			24	43	68	—	—	—	—
		550S162	16	33	33	33	43	43	54
			24	33	43	43	54	68	97
120	—	350S162	16	43	54	97	—	—	—
			24	54	97	—	—	—	—
		550S162	16	33	33	43	43	54	68
			24	33	43	54	54	68	97
130	115	350S162	16	43	54	97	—	—	—
			24	54	97	—	—	—	—
		550S162	16	33	33	43	54	54	97
			24	43	43	54	68	97	97
< 140	120	350S162	16	43	68	—	—	—	—
			24	68	—	—	—	—	—
		550S162	16	33	43	43	54	68	97
			24	43	54	54	68	97	—
—	130	350S162	16	54	97	—	—	—	—
			24	97	—	—	—	—	—
		550S162	16	33	43	54	68	97	—
			24	43	54	54	97	—	—
—	< 140	350S162	16	54	97	—	—	—	—
			24	97	—	—	—	—	—
		550S162	16	43	43	54	97	97	—
			24	54	54	68	—	—	—

For SI: 1 inch = 25.4 mm, 1 foot = 304.8 mm, 1 mil = 0.0254 mm, 1 mile per hour = 0.447 m/s, 1 pound per square foot = 0.0479 kPa, 1 ksi = 1,000 psi = 6.895 MPa.

a. Deflection criterion *L*/240.

b. Design load assumptions:
Ground snow load is 70 psf.
Roof/ceiling dead load is 12 psf.
Floor dead load is 10 psf.
Floor live load is 40 psf.
Attic dead load is 10 psf.

c. Building width is in the direction of horizontal framing members supported by the wall studs.

d. Minimum Grade 33 ksi steel shall be used for 33 mil and 43 mil thicknesses. Minimum Grade 50 ksi steel shall be used for 54 and 68 mil thicknesses.

INTERNATIONAL CODE COUNCIL®
Copyright © 2019 ICC & NYSDOS. ALL RIGHTS RESERVED. Accessed by Lauren Gualdino (lgualdino@briarcliffmanor.org), (-) Order Number #100880972 on May 08, 2020 07:05 AM (PDT) pursuant to License Agreement with ICC & NYSDOS. No further reproduction, no

100880972

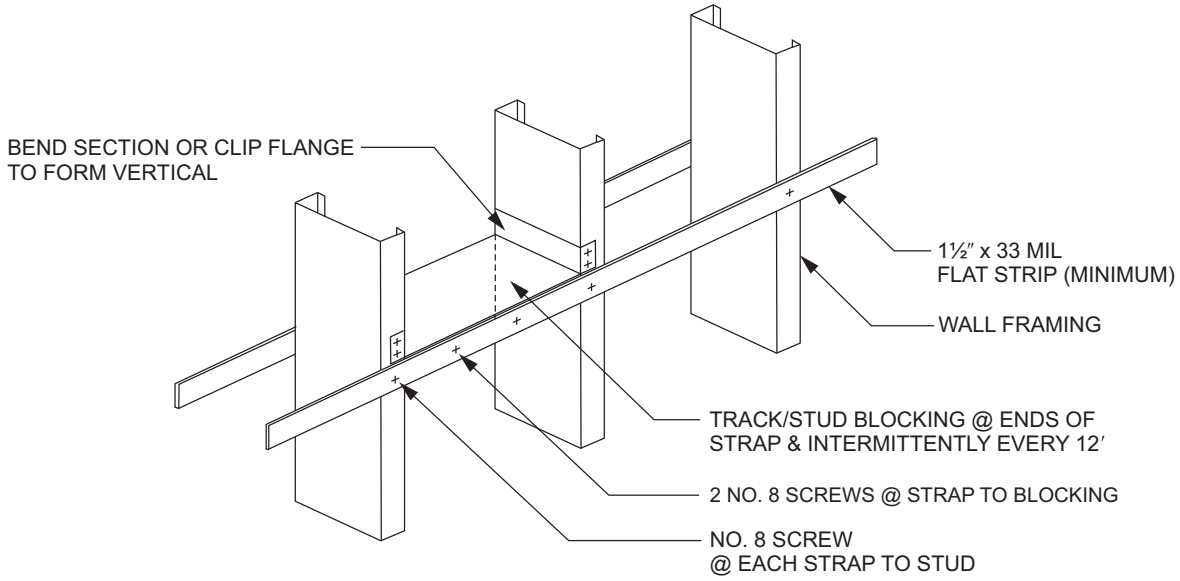

For SI: 1 mil = 0.0254 mm, 1 inch = 25.4 mm, 1 foot = 304.8 mm.

FIGURE R603.3.3(1)
STUD BRACING WITH STRAPPING ONLY

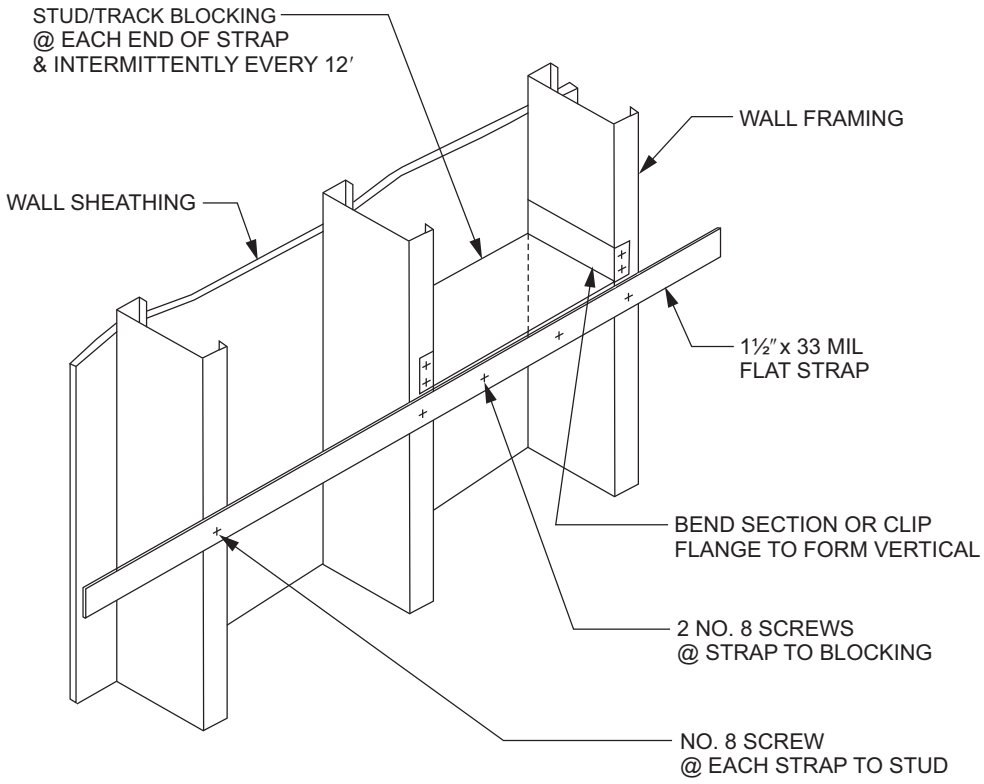

For SI: 1 mil = 0.0254 mm, 1 inch = 25.4 mm, 1 foot = 304.8 mm.

FIGURE R603.3.3(2)
STUD BRACING WITH STRAPPING AND SHEATHING MATERIAL

INTERNATIONAL CODE COUNCIL®
Copyright © 2019 ICC & NYSDOS. ALL RIGHTS RESERVED. Accessed by Lauren Gualdino (lgualdino@briarcliffmanor.org), (-) Order Number #100880972 on May 08, 2020 07:05 AM (PDT) pursuant to License Agreement with ICC & NYSDOS. No further reproduction, no

100880972

Horizontal steel straps shall be not less than $1^1/_2$ inches in width and 33 mils in thickness (38 mm by 0.84 mm). Straps shall be attached to the flanges of studs with one No. 8 screw. In-line blocking shall be installed between studs at the termination of straps and at 12-foot (3658 mm) intervals along the strap. Straps shall be fastened to the blocking with two No. 8 screws.

3. Sheathing on one side and strapping on the other side fastened in accordance with Figure R603.3.3(2). Sheathing shall be installed in accordance with Item 1. Steel straps shall be installed in accordance with Item 2.

R603.3.4 Cutting and notching. Flanges and lips of cold-formed steel studs and headers shall not be cut or notched.

R603.3.5 Splicing. Steel studs and other structural members shall not be spliced without an *approved* design. Tracks shall be spliced in accordance with Figure R603.3.5.

R603.4 Corner framing. In exterior walls, corner studs and the top tracks shall be installed in accordance with Figure R603.4.

R603.5 Exterior wall covering. The method of attachment of exterior wall covering materials to cold-formed steel stud wall framing shall conform to the manufacturer's installation instructions.

R603.6 Headers. Headers shall be installed above all wall openings in exterior walls and interior load-bearing walls. Box beam headers and back-to-back headers each shall be formed from two equal sized C-shaped members in accordance with Figures R603.6(1) and R603.6(2), respectively, and Tables R603.6(1) through R603.6(6). L-shaped headers shall be permitted to be constructed in accordance with AISI S230. Alternately, headers shall be permitted to be designed and constructed in accordance with AISI S240.

R603.6.1 Headers in gable endwalls. Box beam and back-to-back headers in gable endwalls shall be permitted to be constructed in accordance with Section R603.6 or with the header directly above the opening in accordance with Figures R603.6.1(1) and R603.6.1(2) and the following provisions:

1. Two 362S162-33 for openings less than or equal to 4 feet (1219 mm).
2. Two 600S162-43 for openings greater than 4 feet (1219 mm) but less than or equal to 6 feet (1829 mm).
3. Two 800S162-54 for openings greater than 6 feet (1829 mm) but less than or equal to 9 feet (2743 mm).

R603.7 Jack and king studs. The number of jack and king studs installed on each side of a header shall comply with Table R603.7(1). King, jack and cripple studs shall be of the same dimension and thickness as the adjacent wall studs. Headers shall be connected to king studs in accordance with Table R603.7(2) and the following provisions:

1. For box beam headers, one-half of the total number of required screws shall be applied to the header and one-half to the king stud by use of C-shaped or track member in accordance with Figure R603.6(1). The track or C-shaped sections shall extend the depth of the header minus $^1/_2$ inch (12.7 mm) and shall have a minimum thickness not less than that of the wall studs.
2. For back-to-back headers, one-half the total number of screws shall be applied to the header and one-half to the king stud by use of a minimum 2-inch by 2-inch (51 mm by 51 mm) clip angle in accordance with Figure R603.6(2). The clip angle shall extend the depth of the header minus $^1/_2$ inch (12.7 mm) and shall have a minimum thickness not less than that of the wall studs. Jack and king studs shall be interconnected with structural sheathing in accordance with Figures R603.6(1) and R603.6(2).

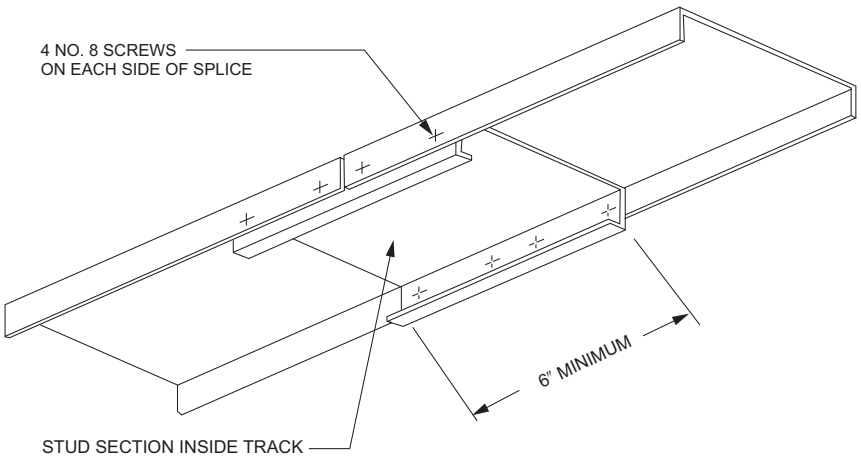

For SI: 1 inch = 25.4 mm.

FIGURE R603.3.5
TRACK SPLICE

INTERNATIONAL CODE COUNCIL®
Copyright © 2019 ICC & NYSDOS. ALL RIGHTS RESERVED. Accessed by Lauren Gualdino (lgualdino@briarcliffmanor.org), (-) Order Number #100880972 on May 08, 2020 07:05 AM (PDT) pursuant to License Agreement with ICC & NYSDOS. No further reproduction, no

100880972

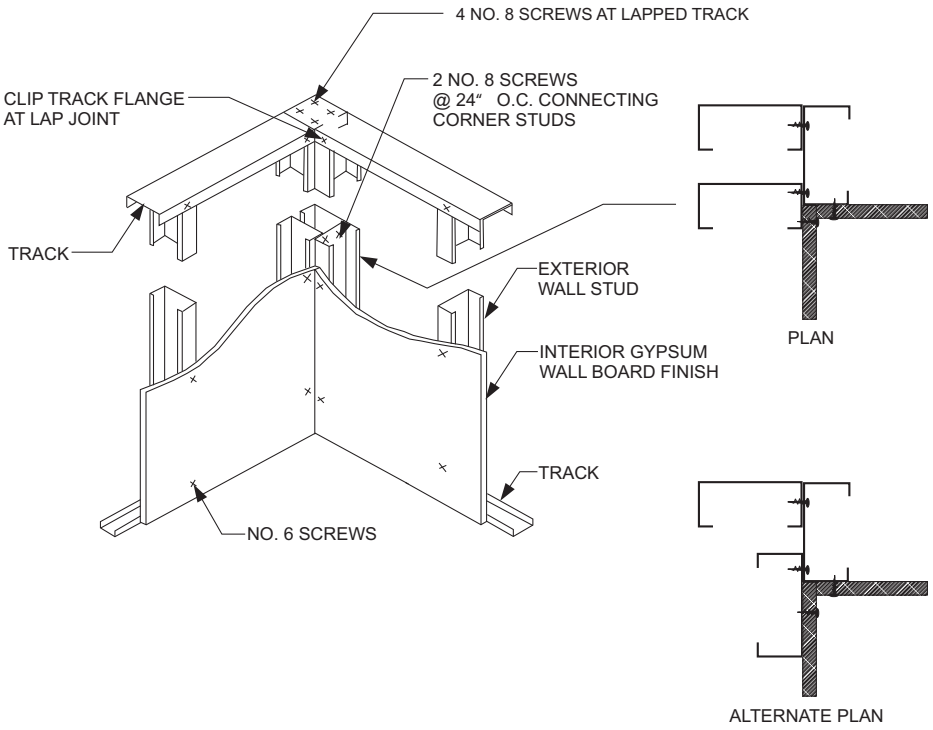

For SI: 1 inch = 25.4 mm.

FIGURE R603.4
CORNER FRAMING

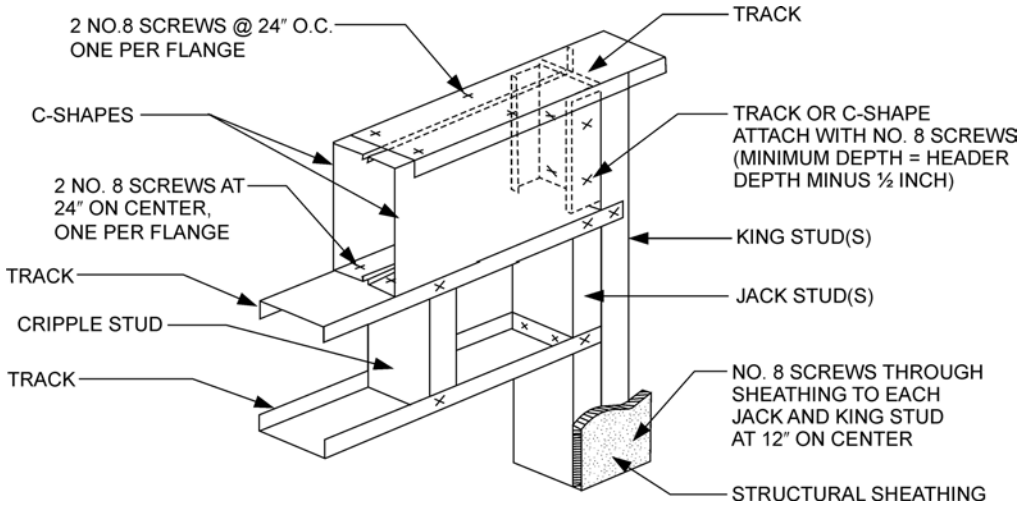

For SI: 1 inch = 25.4 mm.

FIGURE R603.6(1)
BOX BEAM HEADER

INTERNATIONAL CODE COUNCIL®
Copyright © 2019 ICC & NYSDOS. ALL RIGHTS RESERVED. Accessed by Lauren Gualdino (lgualdino@briarcliffmanor.org), (-) Order Number #100880972 on May 08, 2020 07:05 AM (PDT) pursuant to License Agreement with ICC & NYSDOS. No further reproduction, no

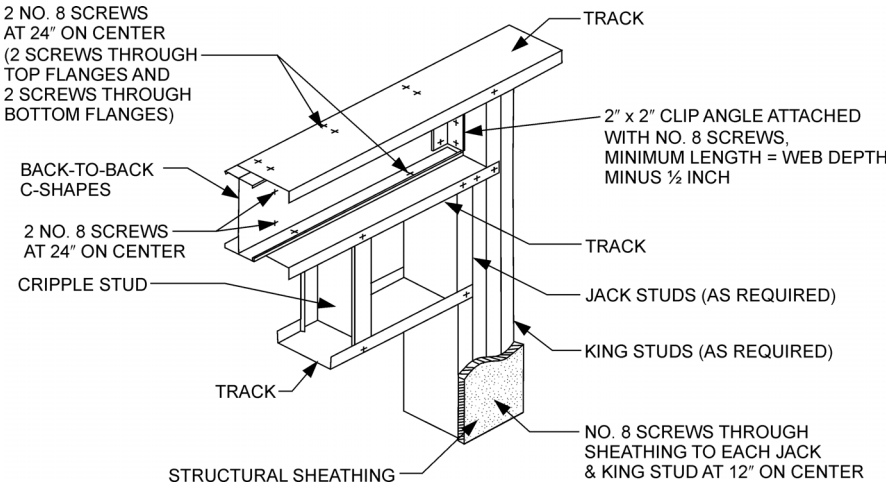

For SI: 1 inch = 25.4 mm.

FIGURE R603.6(2)
BACK-TO-BACK HEADER

TABLE R603.6(1)
BOX-BEAM AND BACK-TO-BACK HEADER SPANS
Headers Supporting Roof and Ceiling Only[a, b, d]

MEMBER DESIGNATION	GROUND SNOW LOAD (20 psf)					GROUND SNOW LOAD (30 psf)				
	Building width[c] (feet)					Building width[c] (feet)				
	24	28	32	36	40	24	28	32	36	40
2-350S162-33	3′-3″	2′-8″	2′-2″	—	—	2′-8″	2′-2″	—	—	—
2-350S162-43	4′-2″	3′-9″	3′-4″	2′-11″	2′-7″	3′-9″	3′-4″	2′-11″	2′-7″	2′-2″
2-350S162-54	6′-2″	5′-10″	5′-8″	5′-3″	4′-10″	5′-11″	5′-8″	5′-2″	4′-10″	4′-6″
2-350S162-68	6′-7″	6′-3″	6′-0″	5′-10″	5′-8″	6′-4″	6′-1″	5′-10″	5′-8″	5′-6″
2-550S162-33	4′-8″	4′-0″	3′-6″	3′-0″	2′-6″	4′-1″	3′-6″	3′-0″	2′-6″	—
2-550S162-43	6′-0″	5′-4″	4′-10″	4′-4″	3′-11″	5′-5″	4′-10″	4′-4″	3′-10″	3′-5″
2-550S162-54	8′-9″	8′-5″	8′-1″	7′-9″	7′-3″	8′-6″	8′-1″	7′-8″	7′-2″	6′-8″
2-550S162-68	9′-5″	9′-0″	8′-8″	8′-4″	8′-1″	9′-1″	8′-8″	8′-4″	8′-1″	7′-10″
2-800S162-33	4′-5″	3′-11″	3′-5″	3′-1″	2′-10″	3′-11″	3′-6″	3′-1″	2′-9″	2′-3″
2-800S162-43	7′-3″	6′-7″	5′-11″	5′-4″	4′-10″	6′-7″	5′-11″	5′-4″	4′-9″	4′-3″
2-800S162-54	10′-10″	10′-2″	9′-7″	9′-0″	8′-5″	10′-2″	9′-7″	8′-11″	8′-4″	7′-9″
2-800S162-68	12′-8″	11′-10″	11′-2″	10′-7″	10′-1″	11′-11″	11′-2″	10′-7″	10′-0″	9′-6″
2-1000S162-43	7′-10″	6′-10″	6′-1″	5′-6″	5′-0″	6′-11″	6′-1″	5′-5″	4′-11″	4′-6″
2-1000S162-54	12′-3″	11′-5″	10′-9″	10′-2″	9′-6″	11′-6″	10′-9″	10′-1″	9′-5″	8′-9″
2-1000S162-68	14′-5″	13′-5″	12′-8″	12′-0″	11′-6″	13′-6″	12′-8″	12′-0″	11′-5″	10′-10″
2-1200S162-54	12′-11″	11′-3″	10′-0″	9′-0″	8′-2″	11′-5″	10′-0″	9′-0″	8′-1″	7′-4″
2-1200S162-68	15′-11″	14′-10″	14′-0″	13′-4″	12′-8″	15′-0″	14′-0″	13′-3″	12′-7″	11′-11″

For SI: 1 mil = 0.0254 mm, 1 inch = 25.4 mm, 1 foot = 304.8 mm, 1 pound per square foot = 0.0479 kPa, 1 pound per square inch = 6.895 kPa, 1 ksi = 1,000 psi = 6.895 MPa.

a. Deflection criteria: *L*/360 for live loads, *L*/240 for total loads.

b. Design load assumptions:
Roof/ceiling dead load is 12 psf.
Attic dead load is 10 psf.

c. Building width is in the direction of horizontal framing members supported by the header.

d. Minimum Grade 33 ksi steel shall be used for 33 mil and 43 mil thicknesses. Minimum Grade 50 ksi steel shall be used for 54 and 68 mil thicknesses.

INTERNATIONAL CODE COUNCIL®
Copyright © 2019 ICC & NYSDOS. ALL RIGHTS RESERVED. Accessed by Lauren Gualdino (lgualdino@briarcliffmanor.org), (-) Order Number #100880972 on May 08, 2020 07:05 AM (PDT) pursuant to License Agreement with ICC & NYSDOS. No further reproduction, no

100880972

TABLE R603.6(2)
BOX-BEAM AND BACK-TO-BACK HEADER SPANS
Headers Supporting Roof and Ceiling Only[a, b, d]

MEMBER DESIGNATION	GROUND SNOW LOAD (50 psf)					GROUND SNOW LOAD (70 psf)				
	Building width[c] (feet)					Building width[c] (feet)				
	24	28	32	36	40	24	28	32	36	40
2-350S162-33	—	—	—	—	—	—	—	—	—	—
2-350S162-43	2′-4″	—	—	—	—	—	—	—	—	—
2-350S162-54	4′-8″	4′-2″	3′-9″	3′-5″	3′-1″	3′-7″	3′-2″	2′-9″	2′-5″	2′-0″
2-350S162-68	5′-7″	5′-2″	4′-9″	4′-4″	3′-11″	4′-7″	4′-1″	3′-7″	3′-2″	2′-10″
2-550S162-33	2′-2″	—	—	—	—	—	—	—	—	—
2-550S162-43	3′-8″	3′-1″	2′-6″	—	—	2′-3″	—	—	—	—
2-550S162-54	6′-11″	6′-3″	5′-9″	5′-3″	4′-9″	5′-6″	4′-11″	4′-5″	3′-11″	3′-5″
2-550S162-68	8′-0″	7′-6″	6′-11″	6′-5″	5′-11″	6′-9″	6′-1″	5′-6″	5′-0″	4′-7″
2-800S162-33	2′-7″	—	—	—	—	—	—	—	—	—
2-800S162-43	4′-6″	3′-9″	3′-1″	2′-5″	—	2′-10″	—	—	—	—
2-800S162-54	8′-0″	7′-3″	6′-8″	6′-1″	5′-7″	6′-5″	5′-9″	5′-1″	4′-7″	4′-0″
2-800S162-68	9′-9″	9′-0″	8′-3″	7′-8″	7′-1″	8′-0″	7′-3″	6′-7″	6′-0″	5′-6″
2-1000S162-43	4′-8″	4′-1″	3′-6″	2′-9″	—	3′-3″	2′-2″	—	—	—
2-1000S162-54	9′-1″	8′-2″	7′-3″	6′-7″	6′-0″	7′-0″	6′-2″	5′-6″	5′-0″	4′-6″
2-1000S162-68	11′-1″	10′-2″	9′-5″	8′-8″	8′-1″	9′-1″	8′-3″	7′-6″	6′-10″	6′-3″
2-1200S162-54	7′-8″	6′-9″	6′-1″	5′-6″	5′-0″	5′-10″	5′-1″	4′-7″	4′-1″	3′-9″
2-1200S162-68	12′-3″	11′-3″	10′-4″	9′-7″	8′-11″	10′-1″	9′-1″	8′-3″	7′-6″	6′-10″

For SI: 1 mil = 0.0254 mm, 1 inch = 25.4 mm, 1 foot = 304.8 mm, 1 pound per square foot = 0.0479 kPa, 1 pound per square inch = 6.895 kPa, 1 ksi = 1,000 psi = 6.895 MPa.

a. Deflection criteria: *L*/360 for live loads, *L*/240 for total loads.

b. Design load assumptions:
Roof/ceiling dead load is 12 psf.
Attic dead load is 10 psf.

c. Building width is in the direction of horizontal framing members supported by the header.

d. Minimum Grade 33 ksi steel shall be used for 33 mil and 43 mil thicknesses. Minimum Grade 50 ksi steel shall be used for 54 and 68 mil thicknesses.

INTERNATIONAL CODE COUNCIL®
Copyright © 2019 ICC & NYSDOS. ALL RIGHTS RESERVED. Accessed by Lauren Gualdino (lgualdino@briarcliffmanor.org), (-) Order Number #100880972 on May 08, 2020 07:05 AM (PDT) pursuant to License Agreement with ICC & NYSDOS. No further reproduction, no

100880972

TABLE R603.6(3)
BOX-BEAM AND BACK-TO-BACK HEADER SPANS
Headers Supporting One Floor, Roof and Ceiling[a, b, d]

MEMBER DESIGNATION	GROUND SNOW LOAD (20 psf)					GROUND SNOW LOAD (30 psf)				
	Building width[c] (feet)					Building width[c] (feet)				
	24	28	32	36	40	24	28	32	36	40
2-350S162-33	—	—	—	—	—	—	—	—	—	—
2-350S162-43	2′-2″	—	—	—	—	2′-1″	—	—	—	—
2-350S162-54	4′-4″	3′-10″	3′-5″	3′-1″	2′-9″	4′-3″	2′-9″	3′-4″	3′-0″	2′-8″
2-350S162-68	5′-0″	4′-9″	4′-7″	4′-2″	3′-9″	4′-11″	4′-8″	4′-6″	4′-1″	3′-9″
2-550S162-33	—	—	—	—	—	—	—	—	—	—
2-550S162-43	3′-5″	2′-9″	2′-1″	—	—	3′-3″	2′-7″	—	—	—
2-550S162-54	6′-6″	5′-10″	5′-3″	4′-9″	4′-4″	6′-4″	5′-9″	5′-2″	4′-8″	4′-3″
2-550S162-68	7′-2″	6′-10″	6′-5″	5′-11″	5′-6″	7′-0″	6′-9″	6′-4″	5′-10″	5′-4″
2-800S162-33	2′-1″	—	—	—	—	—	—	—	—	—
2-800S162-43	4′-2″	3′-4″	2′-7″	—	—	4′-0″	3′-3″	2′-5″	—	—
2-800S162-54	7′-6″	6′-9″	6′-2″	5′-7″	5′-0″	7′-5″	6′-8″	6′-0″	5′-5″	4′-11″
2-800S162-68	9′-3″	8′-5″	7′-8″	7′-1″	6′-6″	9′-1″	8′-3″	7′-7″	7′-0″	6′-5″
2-1000S162-43	4′-4″	3′-9″	2′-11″	—	—	4′-3″	3′-8″	2′-9″	—	—
2-1000S162-54	8′-6″	7′-6″	6′-8″	6′-0″	5′-5″	8′-4″	7′-4″	6′-6″	5′-10″	5′-4″
2-1000S162-68	10′-6″	9′-7″	8′-9″	8′-0″	7′-5″	10′-4″	9′-5″	8′-7″	7′-11″	7′-3″
2-1200S162-54	7′-1″	6′-2″	5′-6″	5′-0″	4′-6″	6′-11″	6′-1″	5′-5″	4′-10″	4′-5″
2-1200S162-68	11′-7″	10′-7″	9′-8″	8′-11″	8′-2″	11′-5″	10′-5″	9′-6″	8′-9″	8′-0″

For SI: 1 inch = 25.4 mm, 1 foot = 304.8 mm, 1 pound per square foot = 0.0479 kPa, 1 pound per square inch = 6.895 kPa.

a. Deflection criteria: *L*/360 for live loads, *L*/240 for total loads.

b. Design load assumptions:
   Second-floor dead load is 10 psf.
   Roof/ceiling dead load is 12 psf.
   Second-floor live load is 30 psf.
   Attic dead load is 10 psf.

c. Building width is in the direction of horizontal framing members supported by the header.

d. Minimum Grade 33 ksi steel shall be used for 33 mil and 43 mil thicknesses. Minimum Grade 50 ksi steel shall be used for 54 and 68 mil thicknesses.

INTERNATIONAL CODE COUNCIL®
Copyright © 2019 ICC & NYSDOS. ALL RIGHTS RESERVED. Accessed by Lauren Gualdino (lgualdino@briarcliffmanor.org), (-) Order Number #100880972 on May 08, 2020 07:05 AM (PDT) pursuant to License Agreement with ICC & NYSDOS. No further reproduction, no

100880972

TABLE R603.6(4)
BOX-BEAM AND BACK-TO-BACK HEADER SPANS
Headers Supporting One Floor, Roof and Ceiling[a, b, d]

MEMBER DESIGNATION	GROUND SNOW LOAD (50 psf)					GROUND SNOW LOAD (70 psf)				
	Building width[c] (feet)					Building width[c] (feet)				
	24	28	32	36	40	24	28	32	36	40
2-350S162-33	—	—	—	—	—	—	—	—	—	—
2-350S162-43	—	—	—	—	—	—	—	—	—	—
2-350S162-54	3′-5″	3′-0″	2′-7″	2′-2″	—	2′-8″	2′-2″	—	—	—
2-350S162-68	4′-6″	4′-1″	3′-8″	3′-3″	2′-11″	3′-9″	3′-3″	2′-10″	2′-5″	2′-1″
2-550S162-33	—	—	—	—	—	—	—	—	—	—
2-550S162-43	2′-0″	—	—	—	—	—	—	—	—	—
2-550S162-54	5′-3″	3′-8″	4′-1″	3′-8″	3′-2″	4′-3″	3′-8″	3′-1″	2′-7″	2′-0″
2-550S162-68	6′-5″	5′-10″	5′-3″	4′-9″	4′-4″	5′-5″	4′-9″	4′-3″	3′-9″	3′-4″
2-800S162-33	—	—	—	—	—	—	—	—	—	—
2-800S162-43	2′-6″	—	—	—	—	—	—	—	—	—
2-800S162-54	6′-1″	5′-5″	4′-10″	4′-3″	3′-9″	4′-11″	4′-3″	3′-8″	3′-0″	2′-5″
2-800S162-68	7′-8″	6′-11″	6′-3″	5′-9″	5′-2″	6′-5″	5′-9″	5′-1″	4′-6″	4′-0″
2-1000S162-43	2′-10″	—	—	—	—	—	—	—	—	—
2-1000S162-54	6′-7″	5′-10″	5′-3″	4′-9″	4′-3″	5′-4″	4′-9″	4′-1″	3′-5″	2′-9″
2-1000S162-68	8′-8″	7′-10″	7′-2″	6′-6″	5′-11″	7′-4″	6′-6″	5′-9″	5′-1″	4′-6″
2-1200S162-54	5′-6″	4′-10″	4′-4″	3′-11″	3′-7″	4′-5″	3′-11″	3′-6″	3′-2″	2′-11″
2-1200S162-68	9′-7″	8′-8″	7′-11″	7′-2″	6′-6″	8′-1″	7′-2″	6′-4″	5′-8″	5′-0″

For SI: 1 mil = 0.0254 mm, 1 inch = 25.4 mm, 1 foot = 304.8 mm, 1 pound per square foot = 0.0479 kPa, 1 pound per square inch = 6.895 kPa, 1 ksi = 1,000 psi = 6.895 MPa.

a. Deflection criteria: *L*/360 for live loads, *L*/240 for total loads.

b. Design load assumptions:
Second-floor dead load is 10 psf.
Roof/ceiling dead load is 12 psf.
Second-floor live load is 30 psf.
Attic dead load is 10 psf.

c. Building width is in the direction of horizontal framing members supported by the header.

d. Minimum Grade 33 ksi steel shall be used for 33 mil and 43 mil thicknesses. Minimum Grade 50 ksi steel shall be used for 54 and 68 mil thicknesses.

INTERNATIONAL CODE COUNCIL®
Copyright © 2019 ICC & NYSDOS. ALL RIGHTS RESERVED. Accessed by Lauren Gualdino (lgualdino@briarcliffmanor.org), (-) Order Number #100880972 on May 08, 2020 07:05 AM (PDT) pursuant to License Agreement with ICC & NYSDOS. No further reproduction, no

100880972

TABLE R603.6(5)
BOX-BEAM AND BACK-TO-BACK HEADER SPANS
Headers Supporting Two Floors, Roof and Ceiling[a, b, d]

MEMBER DESIGNATION	GROUND SNOW LOAD (20 psf)					GROUND SNOW LOAD (30 psf)				
	Building width[c] (feet)					Building width[c] (feet)				
	24	28	32	36	40	24	28	32	36	40
2-350S162-33	—	—	—	—	—	—	—	—	—	—
2-350S162-43	—	—	—	—	—	—	—	—	—	—
2-350S162-54	2′-5″	—	—	—	—	2′-4″	—	—	—	—
2-350S162-68	3′-6″	3′-0″	2′-6″	2′-1″	—	3′-5″	2′-11″	2′-6″	2′-0″	—
2-550S162-33	—	—	—	—	—	—	—	—	—	—
2-550S162-43	—	—	—	—	—	—	—	—	—	—
2-550S162-54	3′-11″	3′-3″	2′-8″	2′-0″	—	3′-10″	3′-3″	2′-7″	—	—
2-550S162-68	5′-1″	4′-5″	3′-10″	3′-3″	2′-9″	5′-0″	4′-4″	3′-9″	3′-3″	2′-9″
2-800S162-33	—	—	—	—	—	—	—	—	—	—
2-800S162-43	—	—	—	—	—	—	—	—	—	—
2-800S162-54	4′-7″	3′-10″	3′-1″	2′-5″	—	4′-6″	3′-9″	3′-0″	2′-4″	—
2-800S162-68	6′-0″	5′-3″	4′-7″	3′-11″	3′-4″	6′-0″	5′-2″	4′-6″	3′-11″	3′-3″
2-1000S162-43	—	—	—	—	—	—	—	—	—	—
2-1000S162-54	5′-0″	4′-4″	3′-6″	2′-9″	—	4′-11″	4′-3″	3′-5″	2′-7″	—
2-1000S162-68	6′-10″	6′-0″	5′-3″	4′-6″	3′-10″	6′-9″	5′-11″	5′-2″	4′-5″	3′-9″
2-1200S162-54	4′-2″	3′-7″	3′-3″	2′-11″	—	4′-1″	3′-7″	3′-2″	2′-10″	—
2-1200S162-68	7′-7″	6′-7″	5′-9″	5′-0″	4′-2″	7′-6″	6′-6″	5′-8″	4′-10″	4′-1″

For SI: 1 mil = 0.0254 mm, 1 inch = 25.4 mm, 1 foot = 304.8 mm, 1 pound per square foot = 0.0479 kPa, 1 pound per square inch = 6.895 kPa, 1 ksi = 1,000 psi = 6.895 MPa.

a. Deflection criteria: *L*/360 for live loads, *L*/240 for total loads.

b. Design load assumptions:
Second-floor dead load is 10 psf.
Roof/ceiling dead load is 12 psf.
Second-floor live load is 40 psf
Third-floor live load is 30 psf.
Attic live load is 10 psf.

c. Building width is in the direction of horizontal framing members supported by the header.

d. Minimum Grade 33 ksi steel shall be used for 33 mil and 43 mil thicknesses. Minimum Grade 50 ksi steel shall be used for 54 and 68 mil thicknesses.

INTERNATIONAL CODE COUNCIL®
Copyright © 2019 ICC & NYSDOS. ALL RIGHTS RESERVED. Accessed by Lauren Gualdino (lgualdino@briarcliffmanor.org), (-) Order Number #100880972 on May 08, 2020 07:05 AM (PDT) pursuant to License Agreement with ICC & NYSDOS. No further reproduction, no

100880972

TABLE R603.6(6)
BOX-BEAM AND BACK-TO-BACK HEADER SPANS
Headers Supporting Two Floors, Roof and Ceiling[a, b, d]

MEMBER DESIGNATION	GROUND SNOW LOAD (50 psf)					GROUND SNOW LOAD (70 psf)				
	Building width[c] (feet)					Building width[c] (feet)				
	24	28	32	36	40	24	28	32	36	40
2-350S162-33	—	—	—	—	—	—	—	—	—	—
2-350S162-43	—	—	—	—	—	—	—	—	—	—
2-350S162-54	2′-2″	—	—	—	—	—	—	—	—	—
2-350S162-68	3′-3″	2′-9″	2′-3″	—	—	2′-11″	2′-5″	—	—	—
2-550S162-33	—	—	—	—	—	—	—	—	—	—
2-550S162-43	—	—	—	—	—	—	—	—	—	—
2-550S162-54	3′-7″	2′-11″	2′-3″	—	—	3′-3″	2′-7″	—	—	—
2-550S162-68	4′-9″	2′-1″	3′-6″	3′-0″	2′-5″	4′-4″	3′-9″	3′-2″	2′-8″	2′-1″
2-800S162-33	—	—	—	—	—	—	—	—	—	—
2-800S162-43	—	—	—	—	—	—	—	—	—	—
2-800S162-54	4′-3″	3′-5″	2′-8″	—	—	3′-9″	3′-0″	2′-3″	—	—
2-800S162-68	5′-8″	4′-11″	4′-2″	3′-7″	2′-11″	5′-3″	4′-6″	3′-10″	3′-3″	2′-7″
2-1000S162-43	—	—	—	—	—	—	—	—	—	—
2-1000S162-54	4′-8″	3′-11″	3′-1″	2′-2″	—	4′-3″	3′-5″	2′-7″	—	—
2-1000S162-68	6′-5″	5′-7″	4′-9″	4′-1″	3′-4″	5′-11″	5′-1″	4′-5″	3′-8″	2′-11″
2-1200S162-54	3′-11″	3′-5″	3′-0″	2′-4″	—	3′-7″	3′-2″	2′-10″	—	—
2-1200S162-68	7′-1″	6′-2″	5′-3″	4′-6″	3′-8″	6′-6″	5′-8″	4′-10″	4′-0″	3′-3″

For SI: 1 mil = 0.0254 mm, 1 inch = 25.4 mm, 1 foot = 304.8 mm, 1 pound per square foot = 0.0479 kPa, 1 pound per square inch = 6.895 kPa, 1 ksi = 1,000 psi = 6.895 MPa.

a. Deflection criteria: *L*/360 for live loads, *L*/240 for total loads.

b. Design load assumptions:
Second-floor dead load is 10 psf.
Roof/ceiling dead load is 12 psf.
Second-floor live load is 40 psf
Third-floor live load is 30 psf.
Attic live load is 10 psf.

c. Building width is in the direction of horizontal framing members supported by the header.

d. Minimum Grade 33 ksi steel shall be used for 33 mil and 43 mil thicknesses. Minimum Grade 50 ksi steel shall be used for 54 and 68 mil thicknesses.

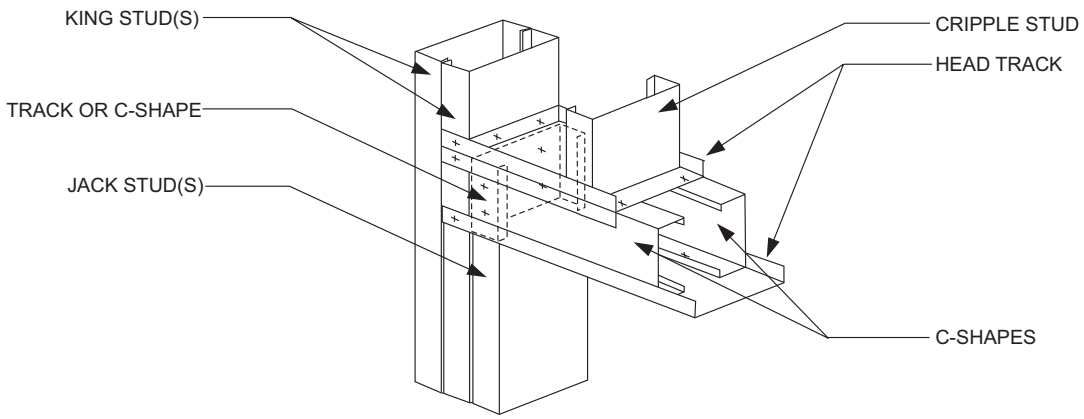

FIGURE R603.6.1(1)
BOX BEAM HEADER IN GABLE ENDWALL

INTERNATIONAL CODE COUNCIL®
Copyright © 2019 ICC & NYSDOS. ALL RIGHTS RESERVED. Accessed by Lauren Gualdino (lgualdino@briarcliffmanor.org), (-) Order Number #100880972 on May 08, 2020 07:05 AM (PDT) pursuant to License Agreement with ICC & NYSDOS. No further reproduction, no

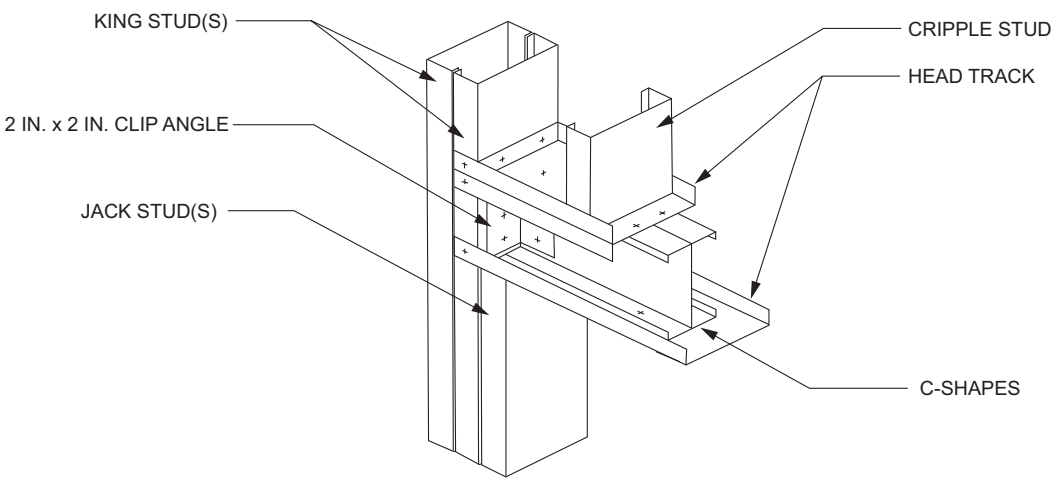

For SI: 1 inch = 25.4 mm.

FIGURE R603.6.1(2)
BACK-TO-BACK HEADER IN GABLE ENDWALL

TABLE R603.7(1)
TOTAL NUMBER OF JACK AND KING STUDS REQUIRED AT EACH END OF AN OPENING

SIZE OF OPENING (feet-inches)	24-INCH O.C. STUD SPACING		16-INCH O.C. STUD SPACING	
	No. of jack studs	No. of king studs	No. of jack studs	No. of king studs
Up to 3′-6″	1	1	1	1
> 3′-6″ to 5′-0″	1	2	1	2
> 5′-0″ to 5′-6″	1	2	2	2
> 5′-6″ to 8′-0″	1	2	2	2
> 8′-0″ to 10′-6″	2	2	2	3
> 10′-6″ to 12′-0″	2	2	3	3
> 12′-0″ to 13′-0″	2	3	3	3
> 13′-0″ to 14′-0″	2	3	3	4
> 14′-0″ to 16′-0″	2	3	3	4
> 16′-0″ to 18′-0″	3	3	4	4

For SI: 1 inch = 25.4 mm, 1 foot = 304.8 mm.

TABLE R603.7(2)
HEADER TO KING STUD CONNECTION REQUIREMENTS[a, b, c, d]

HEADER SPAN (feet)	ULTIMATE WIND SPEED (mph), EXPOSURE CATEGORY					
	115 B	120 B	130 B 115 C	<140 B 120 C	130 C	<140 C
≤ 4	4-No. 8 screws	4-No. 8 screws	4-No. 8 screws	4-No. 8 screws	6-No. 8 screws	6-No. 8 screws
> 4 to 8	4-No. 8 screws	4-No. 8 screws	4-No. 8 screws	6-No. 8 screws	8-No. 8 screws	8-No. 8 screws
> 8 to 12	4-No. 8 screws	6-No. 8 screws	6-No. 8 screws	8-No. 8 screws	10-No. 8 screws	12-No. 8 screws
> 12 to 16	4-No. 8 screws	6-No. 8 screws	8-No. 8 screws	10-No. 8 screws	12-No. 8 screws	14-No. 8 screws

For SI: 1 inch = 25.4 mm, 1 foot = 304.8 mm, 1 mile per hour = 0.447 m/s, 1 pound = 4.448 N.

a. All screw sizes shown are minimum.

b. For headers located on the first floor of a two-story building or the first or second floor of a three-story building, the total number of screws is permitted to be reduced by 2 screws, but the total number of screws shall be not less than four.

c. For roof slopes of 6:12 or greater, the required number of screws shall be permitted to be reduced by half, but the total number of screws shall be not less than four.

d. Screws can be replaced by an uplift connector that has a capacity of the number of screws multiplied by 164 pounds.

INTERNATIONAL CODE COUNCIL®
Copyright © 2019 ICC & NYSDOS. ALL RIGHTS RESERVED. Accessed by Lauren Gualdino (lgualdino@briarcliffmanor.org), (-) Order Number #100880972 on May 08, 2020 07:05 AM (PDT) pursuant to License Agreement with ICC & NYSDOS. No further reproduction, no

100880972

R603.8 Head and sill track. Head track spans above door and window openings and sill track spans beneath window openings shall comply with Table R603.8. For openings less than 4 feet (1219 mm) in height that have both a head track and a sill track, multiplying the spans by 1.75 shall be permitted in Table R603.8. For openings less than or equal to 6 feet (1829 mm) in height that have both a head track and a sill track, multiplying the spans in Table R603.8 by 1.50 shall be permitted.

R603.9 Structural sheathing. Structural sheathing shall be installed in accordance with Figure R603.9 and this section on all sheathable exterior wall surfaces, including areas above and below openings.

R603.9.1 Sheathing materials. Structural sheathing panels shall consist of minimum $^{7}/_{16}$-inch-thick (11 mm) oriented strand board or $^{15}/_{32}$-inch-thick (12 mm) plywood.

R603.9.2 Determination of minimum length of full-height sheathing. The minimum length of full-height sheathing on each *braced wall line* shall be determined by multiplying the length of the *braced wall line* by the percentage obtained from Table R603.9.2(1) and by the plan aspect-ratio adjustment factors obtained from Table R603.9.2(2). The minimum length of full-height sheathing shall be not less than 20 percent of the *braced wall line* length.

To be considered full-height sheathing, structural sheathing shall extend from the bottom to the top of the wall without interruption by openings. Only sheathed, full-height wall sections, uninterrupted by openings, which are not less than 48 inches (1219 mm) wide, shall be counted toward meeting the minimum percentages in Table R603.9.2(1). In addition, structural sheathing shall comply with all of the following requirements:

1. Be installed with the long dimension parallel to the stud framing and shall cover the full vertical height of wall from the bottom of the bottom track to the top of the top track of each *story*. Installing the long dimension perpendicular to the stud framing or using shorter segments shall be permitted provided that the horizontal joint is blocked as described in Item 2.
2. Be blocked where the long dimension is installed perpendicular to the stud framing. Blocking shall be not less than 33 mil (0.84 mm) thickness. Each horizontal structural sheathing panel shall be fastened with No. 8 screws spaced at 6 inches (152 mm) on center to the blocking at the joint.
3. Be applied to each end (corners) of each of the exterior walls with a minimum 48-inch-wide (1219 mm) panel.

Exception: Where stone or masonry veneer is installed, the required length of full-height sheathing and overturning anchorage required shall be determined in accordance with Section R603.9.5.

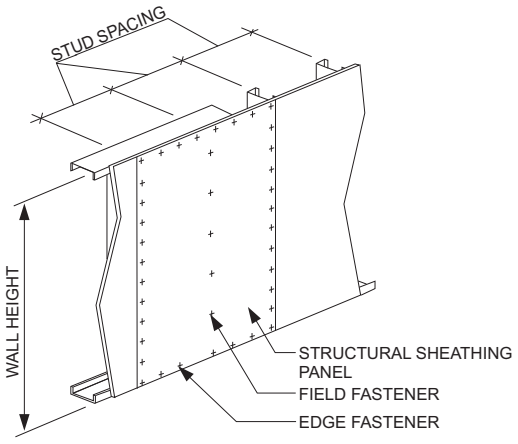

FIGURE R603.9
STRUCTURAL SHEATHING FASTENING PATTERN

TABLE R603.8
HEAD AND SILL TRACK SPAN

ULTIMATE WIND SPEED AND EXPOSURE CATEGORY (mph)		ALLOWABLE HEAD AND SILL TRACK SPAN[a, b, c] (feet-inches)					
		TRACK DESIGNATION[d]					
B	C	350T125-33	350T125-43	350T125-54	550T125-33	550T125-43	550T125-54
115	—	5′-9″	6′-9″	9′-3″	7′-3″	9′-1″	12′-5″
120	—	5′-6″	6′-6″	8′-11″	7′-0″	8′-9″	11′-11″
130	115	4′-10″	5′-9″	7′-10″	6′-2″	7′-8″	10′-6″
< 140	120	4′-8″	5′-6″	7′-6″	5′-11″	7′-4″	10′-1″
—	130	4′-3″	5′-1″	6′-11″	5′-6″	6′-9″	9′-4″
—	< 140	4′-0″	4′-9″	6′-5″	5′-1″	6′-4″	8′-8″

For SI: 1 mil = 0.0254 mm, 1 inch = 25.4 mm, 1 foot = 304.8 mm, 1 mile per hour = 0.447 m/s, 1 ksi = 1,000 psi = 6.895 MPa.

a. Deflection limit: *L*/240.

b. Head and sill track spans are based on components and cladding wind pressures and 48-inch tributary span.

c. For openings less than 4 feet in height that have both a head track and sill track, the spans are permitted to be multiplied by 1.75. For openings less than or equal to 6 feet in height that have both a head track and a sill track, the spans are permitted to be multiplied by a factor of 1.5.

d. Minimum Grade 33 ksi steel shall be used for 33 mil and 43 mil thicknesses. Minimum Grade 50 ksi steel shall be used for 54 and 68 mil thicknesses.

INTERNATIONAL CODE COUNCIL®
Copyright © 2019 ICC & NYSDOS. ALL RIGHTS RESERVED. Accessed by Lauren Gualdino (lgualdino@briarcliffmanor.org), (-) Order Number #100880972 on May 08, 2020 07:05 AM (PDT) pursuant to License Agreement with ICC & NYSDOS. No further reproduction, no

100880972

R603.9.2.1 Full height sheathing. The minimum percentage of full-height structural sheathing shall be multiplied by 1.10 for 9-foot-high (2743 mm) walls and multiplied by 1.20 for 10-foot-high (3048 mm) walls.

R603.9.2.2 Full-height sheathing in lowest story. In the lowest *story* of a *dwelling*, multiplying the percentage of full-height sheathing required in Table R603.9.2(1) by 0.6 shall be permitted where hold-down anchors are provided in accordance with Section R603.9.4.2.

R603.9.3 Structural sheathing fastening. Edges and interior areas of structural sheathing panels shall be fastened to framing members and tracks in accordance with Figure R603.9 and Table R603.3.2(1). Screws for attachment of structural sheathing panels shall be bugle-head, flat-head, or similar head style with a minimum head diameter of 0.29 inch (8 mm).

For continuously sheathed *braced wall lines* using wood structural panels installed with No. 8 screws spaced 4 inches (102 mm) on center at all panel edges and 12 inches (304.8 mm) on center on intermediate framing members, the following shall apply:

1. Multiplying the percentages of full-height sheathing in Table R603.9.2(1) by 0.72 shall be permitted.
2. For bottom track attached to foundations or framing below, the bottom track anchor or screw connection spacing in Tables R505.3.1(1) and R603.3.1 shall be multiplied by two-thirds.

R603.9.4 Uplift connection requirements. Uplift connections shall be provided in accordance with this section.

R603.9.4.1 Ultimate design wind speeds greater than 130 mph. Where ultimate design wind speeds exceed 130 miles per hour (58 m/s), Exposure Category C walls shall be provided with direct uplift connections in accordance with AISI S230, Section E13.3, and AISI S230, Section F8.2, as required for 140 miles per hour (63 m/s), Exposure Category C.

TABLE R603.9.2(1)
MINIMUM PERCENTAGE OF FULL-HEIGHT STRUCTURAL SHEATHING ON EXTERIOR WALLS[a, b]

WALL SUPPORTING	ROOF SLOPE	ULTIMATE WIND SPEED AND EXPOSURE (mph)					
		115 B	120 B	130 B / 115 C	< 140 B / 120 C	< 130 C	< 140 C
Roof and ceiling only (one story or top floor of two- or three-story building)	3:12	9	11	11	13	17	20
	6:12	13	15	17	22	28	35
	9:12	23	27	29	33	53	59
	12:12	32	39	40	44	70	76
One story, roof and ceiling (first floor of a two-story building or second floor of a three-story building)	3:12	26	32	34	39	53	67
	6:12	27	33	34	44	61	75
	9:12	38	45	46	61	78	92
	12:12	43	53	57	72	106	116
Two stories, roof and ceiling (first floor of a three-story building)	3:12	43	53	57	64	89	113
	6:12	41	51	51	67	95	114
	9:12	53	63	63	89	104	126
	12:12	54	67	74	100	142	157

For SI: 1 mph = 0.447 m/s.

a. Linear interpolation is permitted.

b. For hip-roofed homes the minimum percentage of full-height sheathing, based on wind, is permitted to be multiplied by a factor of 0.95 for roof slopes not exceeding 7:12 and a factor of 0.9 for roof slopes greater than 7:12.

TABLE R603.9.2(2)
FULL-HEIGHT SHEATHING LENGTH ADJUSTMENT FACTORS

PLAN ASPECT RATIO	LENGTH ADJUSTMENT FACTORS	
	Short wall	Long wall
1:1	1.0	1.0
1.5:1	1.5	0.67
2:1	2.0	0.50
3:1	3.0	0.33
4:1	4.0	0.25

INTERNATIONAL CODE COUNCIL®
Copyright © 2019 ICC & NYSDOS. ALL RIGHTS RESERVED. Accessed by Lauren Gualdino (lgualdino@briarcliffmanor.org), (-) Order Number #100880972 on May 08, 2020 07:05 AM (PDT) pursuant to License Agreement with ICC & NYSDOS. No further reproduction, no

100880972

R603.9.4.2 Hold-down anchor. Where the percentage of full-height sheathing is adjusted in accordance with Section R603.9.2.2, a hold-down anchor, with a strength of 4,300 pounds (19 kN), shall be provided at each end of each full-height sheathed wall section used to meet the minimum percent sheathing requirements of Section R603.9.2. Hold-down anchors shall be attached to back-to-back studs; structural sheathing panels shall have edge fastening to the studs, in accordance with Section R603.9.3 and AISI S230, Table E11-1.

A single hold-down anchor, installed in accordance with Figure R603.9.4.2, shall be permitted at the corners of buildings.

R603.9.5 Structural sheathing for stone and masonry veneer. Where stone and masonry veneer are installed in accordance with Section R703.8, the length of full-height sheathing for exterior and interior wall lines backing or perpendicular to and laterally supporting walls with veneer shall comply with this section.

R603.9.5.1 Seismic Design Category C. In Seismic Design Category C, the length of structural sheathing for walls supporting one *story*, roof and ceiling shall be the greater of the amounts required by Section R603.9.2, except Section R603.9.2.2 shall be permitted.

R603.9.5.2 Seismic Design Categories D_0, D_1 and D_2. In Seismic Design Categories D_0, D_1 and D_2, the required length of structural sheathing and overturning anchorage shall be determined in accordance with Tables R603.9.5(1), R603.9.5(2), R603.9.5(3), and R603.9.5(4). Overturning anchorage shall be installed on the doubled studs at the end of each full-height wall segment.

SECTION R604
WOOD STRUCTURAL PANELS

R604.1 Identification and grade. Wood structural panels shall conform to DOC PS 1, DOC PS 2 or ANSI/APA PRP 210, CSA O325 or CSA O437. Panels shall be identified by a grade mark or certificate of inspection issued by an *approved* agency.

R604.2 Allowable spans. The maximum allowable spans for wood structural panel wall sheathing shall not exceed the values set forth in Table R602.3(3).

R604.3 Installation. Wood structural panel wall sheathing shall be attached to framing in accordance with Table R602.3(1) or R602.3(3).

SECTION R605
PARTICLEBOARD

R605.1 Identification and grade. Particleboard shall conform to ANSI A208.1 and shall be so identified by a grade mark or certificate of inspection issued by an *approved* agency. Particleboard shall comply with the grades specified in Table R602.3(4).

SECTION R606
GENERAL MASONRY CONSTRUCTION

R606.1 General. Masonry construction shall be designed and constructed in accordance with the provisions of this section, TMS 402, TMS 403, or TMS 404.

R606.1.1 Professional registration not required. Where the empirical design provisions of Appendix A of TMS 402, the provisions of TMS 403, or the provisions of this section are used to design masonry, project drawings, typical details and specifications are not required to bear the seal of the architect or engineer responsible for design, unless otherwise required by the state law of the *jurisdiction* having authority.

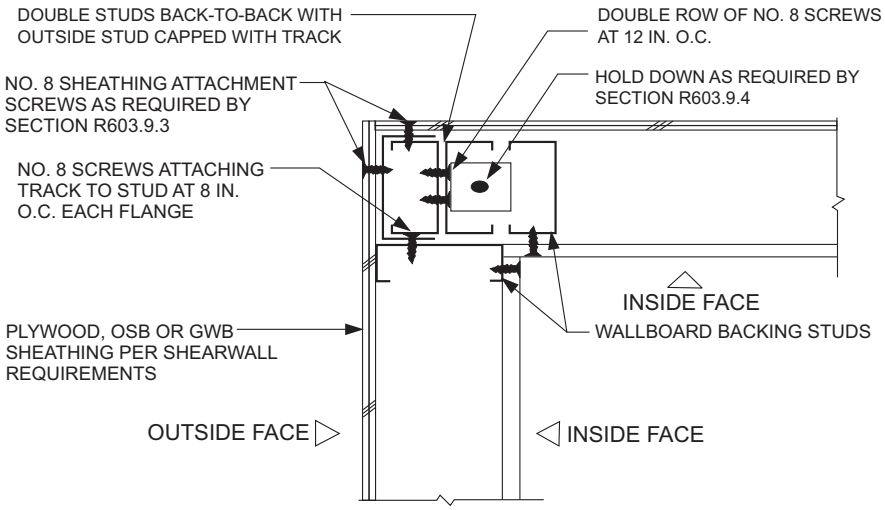

For SI: 1 inch = 25.4 mm.

FIGURE R603.9.4.2
CORNER STUD HOLD-DOWN DETAIL

INTERNATIONAL CODE COUNCIL®
Copyright © 2019 ICC & NYSDOS. ALL RIGHTS RESERVED. Accessed by Lauren Gualdino (lgualdino@briarcliffmanor.org), (-) Order Number #100880972 on May 08, 2020 07:05 AM (PDT) pursuant to License Agreement with ICC & NYSDOS. No further reproduction, no

100880972

TABLE R603.9.5(1)
REQUIRED LENGTH OF FULL-HEIGHT SHEATHING AND ASSOCIATED OVERTURNING ANCHORAGE FOR WALLS SUPPORTING WALLS WITH STONE OR MASONRY VENEER AND USING 33-MIL COLD-FORMED STEEL FRAMING AND 6-INCH SCREW SPACING ON THE PERIMETER OF EACH PANEL OF STRUCTURAL SHEATHING

SEISMIC DESIGN CATEGORY	STORY	BRACED WALL LINE LENGTH (feet)						SINGLE-STORY HOLD-DOWN FORCE (pounds)	CUMULATIVE HOLD-DOWN FORCE (pounds)
		10	20	30	40	50	60		
		Minimum total length of braced wall panels required along each braced wall line (feet)							
D_0		3.3	4.7	6.1	7.4	8.8	10.2	3,360	—
		5.3	8.7	12.1	15.4	18.8	22.2	3,360	6,720
		7.3	12.7	18.0	23.4	28.8	34.2	3,360	10,080
D_1		4.1	5.8	7.5	9.2	10.9	12.7	3,360	—
		6.6	10.7	14.9	19.1	23.3	27.5	3,360	6,720
		9.0	15.7	22.4	29.0	35.7	42.2	3,360	10,080
D_2		5.7	8.2	10.6	13.0	15.4	17.8	3,360	—
	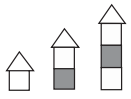	9.2	15.1	21.1	27.0	32.9	38.8	3,360	6,720
	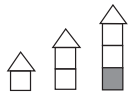	12.7	22.1	31.5	40.9	50.3	59.7	3,360	10,080

For SI: 1 mil = 0.0254 mm, 1 inch = 25.4 mm, 1 foot = 304.8 mm, 1 pound-force = 4.448 N.

INTERNATIONAL CODE COUNCIL®
Copyright © 2019 ICC & NYSDOS. ALL RIGHTS RESERVED. Accessed by Lauren Gualdino (lgualdino@briarcliffmanor.org), (-) Order Number #100880972 on May 08, 2020 07:05 AM (PDT) pursuant to License Agreement with ICC & NYSDOS. No further reproduction, no

100880972

TABLE R603.9.5(2)
REQUIRED LENGTH OF FULL-HEIGHT SHEATHING AND ASSOCIATED OVERTURNING ANCHORAGE FOR WALLS SUPPORTING WALLS WITH STONE OR MASONRY VENEER AND USING 43-MIL COLD-FORMED STEEL FRAMING AND 6-INCH SCREW SPACING ON THE PERIMETER OF EACH PANEL OF STRUCTURAL SHEATHING

SEISMIC DESIGN CATEGORY	STORY	BRACED WALL LINE LENGTH (feet)						SINGLE-STORY HOLD-DOWN FORCE (pounds)	CUMULATIVE HOLD-DOWN FORCE (pounds)
		10	20	30	40	50	60		
		Minimum total length of braced wall panels required along each braced wall line (feet)							
D_0	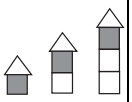	2.8	4.0	5.1	6.3	7.5	8.7	3,960	—
		4.5	7.4	10.2	13.1	16.0	18.8	3,960	7,920
		6.2	10.7	15.3	19.9	24.4	29.0	3,960	11, 880
D_1		3.5	4.9	6.4	7.8	9.3	10.7	3,960	—
		5.6	9.1	12.7	16.2	19.8	23.3	3,960	7,920
		7.7	13.3	19.0	24.6	30.3	35.9	3,960	11, 880
D_2		4.9	6.9	9.0	11.0	13.1	15.1	3,960	—
		7.8	12.9	17.9	22.9	27.9	32.9	3,960	7,920
		10.8	18.8	26.7	34.7	42.7	50.7	3,960	11, 880

For SI: 1 mil = 0.0254 mm, 1 inch = 25.4 mm, 1 foot = 304.8 mm, 1 pound-force = 4.448 N.

INTERNATIONAL CODE COUNCIL®
Copyright © 2019 ICC & NYSDOS. ALL RIGHTS RESERVED. Accessed by Lauren Gualdino (lgualdino@briarcliffmanor.org), (-) Order Number #100880972 on May 08, 2020 07:05 AM (PDT) pursuant to License Agreement with ICC & NYSDOS. No further reproduction, no

100880972

TABLE R603.9.5(3)
REQUIRED LENGTH OF FULL-HEIGHT SHEATHING AND ASSOCIATED OVERTURNING ANCHORAGE FOR WALLS SUPPORTING WALLS WITH STONE OR MASONRY VENEER AND USING 33-MIL COLD-FORMED STEEL FRAMING AND 4-INCH SCREW SPACING ON THE PERIMETER OF EACH PANEL OF STRUCTURAL SHEATHING

SEISMIC DESIGN CATEGORY	STORY	BRACED WALL LINE LENGTH (feet)						SINGLE-STORY HOLD-DOWN FORCE (pounds)	CUMULATIVE HOLD-DOWN FORCE (pounds)
		10	20	30	40	50	60		
		Minimum total length of braced wall panels required along each braced wall line (feet)							
D_0		2.5	3.6	4.6	5.7	6.8	7.8	4,392	—
		4.0	6.6	9.2	11.8	14.4	17.0	4,392	8,784
	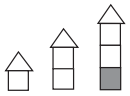	5.6	9.7	13.8	17.9	22.0	26.2	4,392	13,176
D_1		3.1	4.4	5.7	7.1	8.4	9.7	4,392	—
		5.0	8.2	11.4	14.6	17.8	21.0	4,392	8,784
	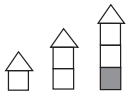	6.9	12.0	17.1	22.2	27.3	32.4	4,392	13,176
D_2		4.4	6.2	8.1	10.0	11.8	13.7	4,392	—
	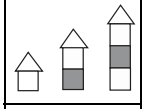	7.1	11.6	16.1	20.6	25.1	29.7	4,392	8,784
	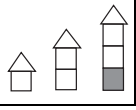	9.7	16.9	24.1	31.3	38.5	45.7	4,392	13,176

For SI: 1 mil = 0.0254 mm, 1 inch = 25.4 mm, 1 foot = 304.8 mm, 1 pound-force = 4.448 N.

INTERNATIONAL CODE COUNCIL®
Copyright © 2019 ICC & NYSDOS. ALL RIGHTS RESERVED. Accessed by Lauren Gualdino (lgualdino@briarcliffmanor.org), (-) Order Number #100880972 on May 08, 2020 07:05 AM (PDT) pursuant to License Agreement with ICC & NYSDOS. No further reproduction, no

100880972

TABLE R603.9.5(4)
REQUIRED LENGTH OF FULL-HEIGHT SHEATHING AND ASSOCIATED OVERTURNING ANCHORAGE FOR WALLS SUPPORTING WALLS WITH STONE OR MASONRY VENEER AND USING 43-MIL COLD-FORMED STEEL FRAMING AND 4-INCH SCREW SPACING ON THE PERIMETER OF EACH PANEL OF STRUCTURAL SHEATHING

SEISMIC DESIGN CATEGORY	STORY	BRACED WALL LINE LENGTH (feet)						SINGLE-STORY HOLD-DOWN FORCE (pounds)	CUMULATIVE HOLD-DOWN FORCE (pounds)
		10	20	30	40	50	60		
		Minimum total length of braced wall panels required along each braced wall line (feet)							
D_0		1.9	2.7	3.4	4.2	5.0	5.8	5,928	—
		3.0	4.9	6.8	8.8	10.7	12.6	5,928	11,856
D_1		2.3	3.3	4.3	5.2	6.2	7.2	5,928	—
		3.7	6.1	8.5	10.8	13.2	15.6	5,928	11,856
D_2		3.3	4.6	6.0	7.4	8.7	10.1	5,928	—
		5.2	8.6	11.9	15.3	18.6	22.0	5,928	11,856

For SI: 1 mil = 0.0254 mm, 1 inch = 25.4 mm, 1 foot = 304.8 mm, 1 pound-force = 4.448 N.

R606.2 Masonry construction materials.

R606.2.1 Concrete masonry units. Concrete masonry units shall conform to the following standards: ASTM C55 for concrete brick; ASTM C73 for calcium silicate face brick; ASTM C90 for load-bearing concrete masonry units; ASTM C744 for prefaced concrete and calcium silicate masonry units; or ASTM C1634 for concrete facing brick.

R606.2.2 Clay or shale masonry units. Clay or shale masonry units shall conform to the following standards: ASTM C34 for structural clay *load-bearing wall* tile; ASTM C56 for structural clay nonload-bearing wall tile; ASTM C62 for building brick (solid masonry units made from clay or shale); ASTM C126 for ceramic-glazed structural clay facing tile, facing brick and solid masonry units; ASTM C212 for structural clay facing tile; ASTM C216 for facing brick (solid masonry units made from clay or shale); ASTM C652 for hollow brick (hollow masonry units made from clay or shale); ASTM C1088 for solid units of thin veneer brick; or ASTM C1405 for glazed brick (single-fired solid brick units).

Exception: Structural clay tile for nonstructural use in fireproofing of structural members and in wall furring shall not be required to meet the compressive strength specifications. The fire-resistance rating shall be determined in accordance with ASTM E119 or UL 263 and shall comply with the requirements of Section R302.

R606.2.3 AAC masonry. AAC masonry units shall conform to ASTM C1691 and ASTM C1693 for the strength class specified.

R606.2.4 Stone masonry units. Stone masonry units shall conform to the following standards: ASTM C503 for marble building stone (exterior); ASTM C568 for limestone building stone; ASTM C615 for granite building stone; ASTM C616 for sandstone building stone; or ASTM C629 for slate building stone.

R606.2.5 Architectural cast stone. Architectural cast stone shall conform to ASTM C1364.

R606.2.6 Adhered manufactured stone masonry veneer units. Adhered manufactured stone masonry veneer units shall conform to ASTM C1670.

R606.2.7 Second-hand units. Second-hand masonry units shall not be reused unless they conform to the requirements of new units. The units shall be of whole, sound materials and free from cracks and other defects that will interfere with proper laying or use. Old mortar shall be cleaned from the unit before reuse.

R606.2.8 Mortar. Except for mortars listed in Sections R606.2.9, R606.2.10 and R606.2.11, mortar for use in masonry construction shall meet the proportion specifications of Table R606.2.8 or the property specifications of ASTM C270. The type of mortar shall be in accordance with Sections R606.2.8.1, R606.2.8.2 and R606.2.8.3.

INTERNATIONAL CODE COUNCIL®
Copyright © 2019 ICC & NYSDOS. ALL RIGHTS RESERVED. Accessed by Lauren Gualdino (lgualdino@briarcliffmanor.org), (-) Order Number #100880972 on May 08, 2020 07:05 AM (PDT) pursuant to License Agreement with ICC & NYSDOS. No further reproduction, no

100880972

R606.2.8.1 Foundation walls. Mortar for masonry foundation walls constructed as set forth in Tables R404.1.1(1) through R404.1.1(4) shall be Type M or S mortar.

R606.2.8.2 Masonry in Seismic Design Categories A, B and C. Mortar for masonry serving as the lateral force-resisting system in Seismic Design Categories A, B and C shall be Type M, S or N mortar.

R606.2.8.3 Masonry in Seismic Design Categories D_0, D_1 and D_2. Mortar for masonry serving as the lateral-force-resisting system in Seismic Design Categories D_0, D_1 and D_2 shall be Type M or S Portland cement-lime or mortar cement.

R606.2.9 Surface-bonding mortar. Surface-bonding mortar shall comply with ASTM C887. Surface bonding of concrete masonry units shall comply with ASTM C946.

R606.2.10 Mortar for AAC masonry. Thin-bed mortar for AAC masonry shall comply with Article 2.1 C.1 of TMS 602. Mortar used for the leveling courses of AAC masonry shall comply with Article 2.1 C.2 of TMS 602.

R606.2.11 Mortar for adhered masonry veneer. Mortar for use with adhered masonry veneer shall conform to ASTM C270 Type S or Type N or shall comply with ANSI A118.4 for latex-modified Portland cement mortar.

R606.2.12 Grout. Grout shall consist of cementitious material and aggregate in accordance with ASTM C476 or the proportion specifications of Table R606.2.12. Type M or Type S mortar to which sufficient water has been added to produce pouring consistency shall be permitted to be used as grout.

TABLE R606.2.8
MORTAR PROPORTIONS[a, b]

MORTAR	TYPE	PROPORTIONS BY VOLUME (cementitious materials)								Aggregate ratio (measured in damp, loose conditions)
		Portland cement or blended cement	Mortar cement			Masonry cement			Hydrated lime[c] or lime putty	
			M	S	N	M	S	N		
Cement-lime	M	1	—	—	—	—	—	—	1/4	Not less than 2 1/4 and not more than 3 times the sum of separate volumes of lime, if used, and cement
	S	1	—	—	—	—	—	—	over 1/4 to 1/2	
	N	1	—	—	—	—	—	—	over 1/2 to 1 1/4	
	O	1	—	—	—	—	—	—	over 1 1/4 to 2 1/2	
Mortar cement	M	1	—	—	1	—	—	—	—	
	M	—	1	—	—	—	—	—		
	S	1/2	—	—	1	—	—	—		
	S	—	—	1	—	—	—	—		
	N	—	—	—	1	—	—	—		
	O	—	—	—	1	—	—	—		
Masonry cement	M	1	—	—	—	—	—	1	—	
	M	—	—	—	—	1	—	—		
	S	1/2	—	—	—	—	—	1		
	S	—	—	—	—	—	1	—		
	N	—	—	—	—	—	—	1		
	O	—	—	—	—	—	—	1		

For SI: 1 cubic foot = 0.0283 m^3, 1 pound = 0.454 kg.

a. For the purpose of these specifications, the weight of 1 cubic foot of the respective materials shall be considered to be as follows:

Portland cement	94 pounds	Masonry cement	Weight printed on bag
Mortar cement	Weight printed on bag	Hydrated lime	40 pounds
Lime putty (Quicklime)	80 pounds	Sand, damp and loose	80 pounds of dry sand

b. Two air-entraining materials shall not be combined in mortar.

c. Hydrated lime conforming to the requirements of ASTM C207.

TABLE R606.2.12
GROUT PROPORTIONS BY VOLUME FOR MASONRY CONSTRUCTION

TYPE	PORTLAND CEMENT OR BLENDED CEMENT SLAG CEMENT	HYDRATED LIME OR LIME PUTTY	AGGREGATE MEASURED IN A DAMP, LOOSE CONDITION	
			Fine	Coarse
Fine	1	0 to 1/10	2 1/4 to 3 times the sum of the volume of the cementitious materials	—
Coarse	1	0 to 1/10	2 1/4 to 3 times the sum of the volume of the cementitious materials	1 to 2 times the sum of the volumes of the cementitious materials

INTERNATIONAL CODE COUNCIL®
Copyright © 2019 ICC & NYSDOS. ALL RIGHTS RESERVED. Accessed by Lauren Gualdino (lgualdino@briarcliffmanor.org), (-) Order Number #100880972 on May 08, 2020 07:05 AM (PDT) pursuant to License Agreement with ICC & NYSDOS. No further reproduction, no

100880972

R606.2.13 Metal reinforcement and accessories. Metal reinforcement and accessories shall conform to Article 2.4 of TMS 602.

R606.3 Construction requirements.

R606.3.1 Bed and head joints. Unless otherwise required or indicated on the project drawings, head and bed joints shall be $^3/_8$ inch (9.5 mm) thick, except that the thickness of the bed joint of the starting course placed over foundations shall be not less than $^1/_4$ inch (6.4 mm) and not more than $^3/_4$ inch (19.1 mm). Mortar joint thickness for load-bearing masonry shall be within the following tolerances from the specified dimensions:

1. Bed joint: + $^1/_8$ inch (3.2 mm).
2. Head joint: - $^1/_4$ inch (6.4 mm), + $^3/_8$ inch (9.5 mm).
3. Collar joints: - $^1/_4$ inch (6.4 mm), + $^3/_8$ inch (9.5 mm).

R606.3.2 Masonry unit placement. The mortar shall be sufficiently plastic and units shall be placed with sufficient pressure to extrude mortar from the joint and produce a tight joint. Deep furrowing of bed joints that produces voids shall not be permitted. Any units disturbed to the extent that initial bond is broken after initial placement shall be removed and relaid in fresh mortar. Surfaces to be in contact with mortar shall be clean and free of deleterious materials.

R606.3.2.1 Solid masonry. *Solid masonry* units shall be laid with full head and bed joints and all interior vertical joints that are designed to receive mortar shall be filled.

R606.3.2.2 Hollow masonry. For hollow masonry units, head and bed joints shall be filled solidly with mortar for a distance in from the face of the unit not less than the thickness of the face shell.

R606.3.3 Installation of wall ties. The installation of wall ties shall be as follows:

1. The ends of wall ties shall be embedded in mortar joints. Wall ties shall have not less than $^5/_8$-inch (15.9 mm) mortar coverage from the exposed face.
2. Wall ties shall not be bent after being embedded in grout or mortar.
3. For solid masonry units, solid grouted hollow units, or hollow units in anchored masonry veneer, wall ties shall be embedded in mortar bed not less than $1^1/_2$ inches (38 mm).
4. For hollow masonry units in other than anchored masonry veneer, wall ties shall engage outer face shells by not less than $^1/_2$ inch (13 mm).

R606.3.4 Protection for reinforcement. Bars shall be completely embedded in mortar or grout. Joint reinforcement embedded in horizontal mortar joints shall not have less than $^5/_8$-inch (15.9 mm) mortar coverage from the exposed face. Other reinforcement shall have a minimum coverage of one bar diameter over all bars, but not less than $^3/_4$ inch (19 mm), except where exposed to weather or soil, in which case the minimum coverage shall be 2 inches (51 mm).

R606.3.4.1 Corrosion protection. Minimum corrosion protection of joint reinforcement, anchor ties and wire fabric for use in masonry wall construction shall conform to Table R606.3.4.1.

TABLE R606.3.4.1
MINIMUM CORROSION PROTECTION

MASONRY METAL ACCESSORY	STANDARD
Joint reinforcement, interior walls	ASTM A641, Class 1
Wire ties or anchors in exterior walls completely embedded in mortar or grout	ASTM A641, Class 3
Wire ties or anchors in exterior walls not completely embedded in mortar or grout	ASTM A153, Class B-2
Joint reinforcement in exterior walls or interior walls exposed to moist environment	ASTM A153, Class B-2
Sheet metal ties or anchors exposed to weather	ASTM A153, Class B-2
Sheet metal ties or anchors completely embedded in mortar or grout	ASTM A653, Coating Designation G60
Stainless steel hardware for any exposure	ASTM A167, Type 304

R606.3.5 Grouting requirements.

R606.3.5.1 Grout placement. Grout shall be a plastic mix suitable for pumping without segregation of the constituents and shall be mixed thoroughly. Grout shall be placed by pumping or by an approved alternate method and shall be placed before any initial set occurs and not more than $1^1/_2$ hours after water has been added. Grout shall be consolidated by puddling or mechanical vibrating during placing and reconsolidated after excess moisture has been absorbed but before plasticity is lost. Grout shall not be pumped through aluminum pipes.

Maximum pour heights and the minimum dimensions of spaces provided for grout placement shall conform to Table R606.3.5.1. Grout shall be poured in lifts with a maximum height of 8 feet (2438 mm). Where a total grout pour exceeds 8 feet (2438 mm) in height, the grout shall be placed in lifts not exceeding 64 inches (1626 mm) and special inspection during grouting shall be required. If the work is stopped for 1 hour or longer, the horizontal construction joints shall be formed by stopping all tiers at the same elevation and with the grout 1 inch (25 mm) below the top.

R606.3.5.2 Cleanouts. Provisions shall be made for cleaning the space to be grouted. Mortar that projects more than $^1/_2$ inch (12.7 mm) into the grout space and any other foreign matter shall be removed from the grout space prior to inspection and grouting. Where required by the building official, cleanouts shall be provided in the bottom course of masonry for each grout pour where the grout pour height exceeds 64 inches (1626 mm). In solid grouted masonry, cleanouts shall be spaced horizontally not more than 32 inches (813 mm) on center. The cleanouts shall be sealed before grouting and after inspection.

INTERNATIONAL CODE COUNCIL®
Copyright © 2019 ICC & NYSDOS. ALL RIGHTS RESERVED. Accessed by Lauren Gualdino (lgualdino@briarcliffmanor.org), (-) Order Number #100880972 on May 08, 2020 07:05 AM (PDT) pursuant to License Agreement with ICC & NYSDOS. No further reproduction, no

100880972

TABLE R606.3.5.1
GROUT SPACE DIMENSIONS AND POUR HEIGHTS

GROUT TYPE	GROUT POUR MAXIMUM HEIGHT (feet)	MINIMUM WIDTH OF GROUT SPACES[a, b] (inches)	MINIMUM GROUT[b, c] SPACE DIMENSIONS FOR GROUTING CELLS OF HOLLOW UNITS (inches × inches)
Fine	1	0.75	1.5 × 2
	5	2	2 × 3
	12	2.5	2.5 × 3
	24	3	3 × 3
Coarse	1	1.5	1.5 × 3
	5	2	2.5 × 3
	12	2.5	3 × 3
	24	3	3 × 4

For SI: 1 inch = 25.4 mm, 1 foot = 304.8 mm.

a. For grouting between masonry wythes.

b. Grout space dimension is the clear dimension between any masonry protrusion and shall be increased by the horizontal projection of the diameters of the horizontal bars within the cross section of the grout space.

c. Area of vertical reinforcement shall not exceed 6 percent of the area of the grout space.

R606.3.5.3 Construction. Requirements for grouted masonry construction shall be as follows:

1. Masonry shall be built to preserve the unobstructed vertical continuity of the cells or spaces to be filled. In partially grouted construction, cross webs forming cells to be filled shall be full-bedded in mortar to prevent leakage of grout. Head and end joints shall be solidly filled with mortar for a distance in from the face of the wall or unit not less than the thickness of the longitudinal face shells.
2. Vertical reinforcement shall be held in position at top and bottom and at intervals not exceeding 200 diameters of the reinforcement.
3. Cells containing reinforcement shall be filled solidly with grout.
4. The thickness of grout or mortar between masonry units and reinforcement shall be not less than $^1/_4$ inch (6.4 mm), except that $^1/_4$-inch (6.4 mm) bars shall be permitted to be laid in horizontal mortar joints not less than $^1/_2$ inch (12.7 mm) thick, and steel wire reinforcement shall be permitted to be laid in horizontal mortar joints not less than twice the thickness of the wire diameter.

R606.3.6 Grouted multiple-wythe masonry. Grouted multiple-wythe masonry shall conform to all the requirements specified in Section R606.3.5 and the requirements of this section.

R606.3.6.1 Bonding of backup wythe. Where all interior vertical spaces are filled with grout in multiple-wythe construction, masonry headers shall not be permitted. Metal wall ties shall be used in accordance with Section R606.13.2 to prevent spreading of the wythes and to maintain the vertical alignment of the wall. Wall ties shall be installed in accordance with Section R606.13.2 where the backup wythe in multiple-wythe construction is fully grouted.

R606.3.6.2 Grout barriers. Vertical grout barriers or dams shall be built of *solid masonry* across the grout space the entire height of the wall to control the flow of the grout horizontally. Grout barriers shall be not more than 25 feet (7620 mm) apart. The grouting of any section of a wall between control barriers shall be completed in one day without interruptions greater than 1 hour.

R606.3.7 Masonry bonding pattern. Masonry laid in running and stack bond shall conform to Sections R606.3.7.1 and R606.3.7.2.

R606.3.7.1 Masonry laid in running bond. In each wythe of masonry laid in running bond, head joints in successive courses shall be offset by not less than one-fourth the unit length, or the masonry walls shall be reinforced longitudinally as required in Section R606.3.7.2.

R606.3.7.2 Masonry laid in stack bond. Where unit masonry is laid with less head joint offset than in Section R606.3.7.1, the minimum area of horizontal reinforcement placed in mortar bed joints or in bond beams spaced not more than 48 inches (1219 mm) apart shall be 0.0007 times the vertical cross-sectional area of the wall.

R606.4 Thickness of masonry. The nominal thickness of masonry walls shall conform to the requirements of Sections R606.4.1 through R606.4.4.

R606.4.1 Minimum thickness. The minimum thickness of masonry bearing walls more than one story high shall be 8 inches (203 mm). *Solid masonry* walls of one-story dwellings and garages shall be not less than 6 inches (152 mm) in thickness where not greater than 9 feet (2743 mm) in height, provided that where gable construction is used, an additional 6 feet (1829 mm) is permitted to the peak of the gable. Masonry walls shall be laterally supported in either the horizontal or vertical direction at intervals as required by Section R606.6.4.

R606.4.2 Rubble stone masonry wall. The minimum thickness of rough, random or coursed rubble stone masonry walls shall be 16 inches (406 mm).

INTERNATIONAL CODE COUNCIL®
Copyright © 2019 ICC & NYSDOS. ALL RIGHTS RESERVED. Accessed by Lauren Gualdino (lgualdino@briarcliffmanor.org), (-) Order Number #100880972 on May 08, 2020 07:05 AM (PDT) pursuant to License Agreement with ICC & NYSDOS. No further reproduction, no

100880972

R606.4.3 Change in thickness. Where walls of masonry of hollow units or masonry-bonded hollow walls are decreased in thickness, a course of solid masonry or masonry units filled with mortar or grout shall be constructed between the wall below and the thinner wall above, or special units or construction shall be used to transmit the loads from face shells or wythes above to those below.

R606.4.4 Parapet walls. Unreinforced solid masonry parapet walls shall be not less than 8 inches (203 mm) thick and their height shall not exceed four times their thickness. Unreinforced hollow unit masonry parapet walls shall be not less than 8 inches (203 mm) thick, and their height shall not exceed three times their thickness. Masonry parapet walls in areas subject to wind loads of 30 pounds per square foot (1.44 kPa) located in Seismic Design Category D_0, D_1 or D_2, or on townhouses in Seismic Design Category C shall be reinforced in accordance with Section R606.12.

R606.5 Corbeled masonry. Corbeled masonry shall be in accordance with Sections R606.5.1 through R606.5.3.

R606.5.1 Units. *Solid masonry* units or masonry units filled with mortar or grout shall be used for corbeling.

R606.5.2 Corbel projection. The maximum projection of one unit shall not exceed one-half the height of the unit or one-third the thickness at right angles to the wall. The maximum corbeled projection beyond the face of the wall shall not exceed:

1. One-half of the wall thickness for multiple-wythe walls bonded by mortar or grout and wall ties or masonry headers.
2. One-half the wythe thickness for single wythe walls, masonry-bonded hollow walls, multiple-wythe walls with open collar joints and veneer walls.

R606.5.3 Corbeled masonry supporting floor or roof-framing members. Where corbeled masonry is used to support floor or roof-framing members, the top course of the corbel shall be a header course or the top course bed joint shall have ties to the vertical wall.

R606.6 Support conditions. Bearing and support conditions shall be in accordance with Sections R606.6.1 through R606.6.4.

R606.6.1 Bearing on support. Each masonry wythe shall be supported by not less than two-thirds of the wythe thickness.

R606.6.2 Support at foundation. Cavity wall or masonry veneer construction shall be permitted to be supported on an 8-inch (203 mm) foundation wall, provided the 8-inch (203 mm) wall is corbeled to the width of the wall system above with masonry constructed of solid masonry units or masonry units filled with mortar or grout. The total horizontal projection of the corbel shall not exceed 2 inches (51 mm) with individual corbels projecting not more than one-third the thickness of the unit or one-half the height of the unit. The hollow space behind the corbeled masonry shall be filled with mortar or grout.

R606.6.3 Beam supports. Beams, girders or other concentrated loads supported by a wall or column shall have a bearing of not less than 3 inches (76 mm) in length measured parallel to the beam on *solid masonry* not less than 4 inches (102 mm) in thickness, or on a metal bearing plate of adequate design and dimensions to distribute the load safely, or on a continuous reinforced masonry member projecting not less than 4 inches (102 mm) from the face of the wall.

R606.6.3.1 Joist bearing. Joists shall have a bearing of not less than $1^1/_2$ inches (38 mm), except as provided in Section R606.6.3, and shall be supported in accordance with Figure R606.11(1).

R606.6.4 Lateral support. Masonry walls shall be laterally supported in either the horizontal or the vertical direction. The maximum spacing between lateral supports shall not exceed the distances in Table R606.6.4. Lateral support shall be provided by cross walls, pilasters, buttresses or structural frame members where the limiting distance is taken horizontally, or by floors or roofs where the limiting distance is taken vertically.

TABLE R606.6.4
SPACING OF LATERAL SUPPORT FOR MASONRY WALLS

CONSTRUCTION	MAXIMUM WALL LENGTH TO THICKNESS OR WALL HEIGHT TO THICKNESS[a, b]
Bearing walls:	
Solid or solid grouted	20
All other	18
Nonbearing walls:	
Exterior	18
Interior	36

For SI: 1 foot = 304.8 mm.

a. Except for cavity walls and cantilevered walls, the thickness of a wall shall be its nominal thickness measured perpendicular to the face of the wall. For cavity walls, the thickness shall be determined as the sum of the nominal thicknesses of the individual wythes. For cantilever walls, except for parapets, the ratio of height to nominal thickness shall not exceed 6 for solid masonry, or 4 for hollow masonry. For parapets, see Section R606.4.4.

b. An additional unsupported height of 6 feet is permitted for gable end walls.

R606.6.4.1 Horizontal lateral support. Lateral support in the horizontal direction provided by intersecting masonry walls shall be provided by one of the methods in Section R606.6.4.1.1 or R606.6.4.1.2.

R606.6.4.1.1 Bonding pattern. Fifty percent of the units at the intersection shall be laid in an overlapping masonry bonding pattern, with alternate units having a bearing of not less than 3 inches (76 mm) on the unit below.

R606.6.4.1.2 Metal reinforcement. Interior nonload-bearing walls shall be anchored at their intersections, at vertical intervals of not more than 16 inches (406 mm) with joint reinforcement of not less than 9 gage [0.148 inch (4 mm)], or $^1/_4$-inch (6 mm) galvanized mesh hardware cloth. Intersecting masonry walls, other than interior nonload-bearing walls, shall be anchored at vertical intervals of not more than 8 inches (203 mm) with joint reinforcement of not less than 9 gage (4 mm) and shall extend not less than 30 inches (762 mm) in each direction at the intersection. Other metal ties, joint reinforcement or anchors, if used, shall be spaced to provide equivalent area of anchorage to that required by this section.

INTERNATIONAL CODE COUNCIL®
Copyright © 2019 ICC & NYSDOS. ALL RIGHTS RESERVED. Accessed by Lauren Gualdino (lgualdino@briarcliffmanor.org), (-) Order Number #100880972 on May 08, 2020 07:05 AM (PDT) pursuant to License Agreement with ICC & NYSDOS. No further reproduction, no

100880972

R606.6.4.2 Vertical lateral support. Vertical lateral support of masonry walls in Seismic Design Category A, B or C shall be provided in accordance with one of the methods in Section R606.6.4.2.1 or R606.6.4.2.2.

R606.6.4.2.1 Roof structures. Masonry walls shall be anchored to roof structures with metal strap anchors spaced in accordance with the manufacturer's instructions, $^1/_2$-inch (13 mm) bolts spaced not more than 6 feet (1829 mm) on center, or other *approved* anchors. Anchors shall be embedded not less than 16 inches (406 mm) into the masonry, or be hooked or welded to bond beam reinforcement placed not less than 6 inches (152 mm) from the top of the wall.

R606.6.4.2.2 Floor diaphragms. Masonry walls shall be anchored to floor *diaphragm* framing by metal strap anchors spaced in accordance with the manufacturer's instructions, $^1/_2$-inch-diameter (13 mm) bolts spaced at intervals not to exceed 6 feet (1829 mm) and installed as shown in Figure R606.11(1), or by other *approved* methods.

R606.7 Piers. The unsupported height of masonry piers shall not exceed 10 times their least dimension. Where structural clay tile or hollow concrete masonry units are used for isolated piers to support beams and girders, the cellular spaces shall be filled solidly with grout or Type M or S mortar, except that unfilled hollow piers shall be permitted to be used if their unsupported height is not more than four times their least dimension. Where hollow masonry units are solidly filled with grout or Type M, S or N mortar, the allowable compressive stress shall be permitted to be increased as provided in Table R606.9.

R606.7.1 Pier cap. Hollow piers shall be capped with 4 inches (102 mm) of *solid masonry* or concrete, a masonry cap block, or shall have cavities of the top course filled with concrete or grout.

R606.8 Chases. Chases and recesses in masonry walls shall not be deeper than one-third the wall thickness. The maximum length of a horizontal chase or horizontal projection shall not exceed 4 feet (1219 mm) and shall have not less than 8 inches (203 mm) of masonry in back of the chases and recesses and between adjacent chases or recesses and the jambs of openings. Chases and recesses in masonry walls shall be designed and constructed so as not to reduce the required strength or required fire resistance of the wall and shall not be permitted within the required area of a pier. Masonry directly above chases or recesses wider than 12 inches (305 mm) shall be supported on noncombustible lintels.

R606.9 Allowable stresses. Allowable compressive stresses in masonry shall not exceed the values prescribed in Table R606.9. In determining the stresses in masonry, the effects of all loads and conditions of loading and the influence of all forces affecting the design and strength of the several parts shall be taken into account.

R606.9.1 Combined units. In walls or other structural members composed of different kinds or grades of units, materials or mortars, the maximum stress shall not exceed the allowable stress for the weakest of the combination of units, materials and mortars of which the member is composed. The net thickness of any facing unit that is used to resist stress shall be not less than $1^1/_2$ inches (38 mm).

R606.10 Lintels. Masonry over openings shall be supported by steel lintels, reinforced concrete or masonry lintels or masonry arches, designed to support load imposed.

TABLE R606.9
ALLOWABLE COMPRESSIVE STRESSES FOR EMPIRICAL DESIGN OF MASONRY

CONSTRUCTION; COMPRESSIVE STRENGTH OF UNIT, GROSS AREA	ALLOWABLE COMPRESSIVE STRESSES[a] GROSS CROSS-SECTIONAL AREA[b]	
	Type M or S mortar	Type N mortar
Solid masonry of brick and other solid units of clay or shale; sand-lime or concrete brick:		
8,000 + psi	350	300
4,500 psi	225	200
2,500 psi	160	140
1,500 psi	115	100
Grouted[c] masonry, of clay or shale; sand-lime or concrete:		
4,500 + psi	225	200
2,500 psi	160	140
1,500 psi	115	100
Solid masonry of solid concrete masonry units:		
3,000 + psi	225	200
2,000 psi	160	140
1,200 psi	115	100
Masonry of hollow load-bearing units:		
2,000 + psi	140	120
1,500 psi	115	100
1,000 psi	75	70
700 psi	60	55
Hollow walls (cavity or masonry bonded[d]) solid units:		
2,500 + psi	160	140
1,500 psi	115	100
Hollow units	75	70
Stone ashlar masonry:		
Granite	720	640
Limestone or marble	450	400
Sandstone or cast stone	360	320
Rubble stone masonry:		
Coarse, rough or random	120	100

For SI: 1 pound per square inch = 6.895 kPa.

a. Linear interpolation shall be used for determining allowable stresses for masonry units having compressive strengths that are intermediate between those given in the table.

b. Gross cross-sectional area shall be calculated on the actual rather than nominal dimensions.

c. See Section R606.13.

d. Where floor and roof loads are carried on one wythe, the gross cross-sectional area is that of the wythe under load; if both wythes are loaded, the gross cross-sectional area is that of the wall minus the area of the cavity between the wythes. Walls bonded with metal ties shall be considered as cavity walls unless the collar joints are filled with mortar or grout.

INTERNATIONAL CODE COUNCIL®
Copyright © 2019 ICC & NYSDOS. ALL RIGHTS RESERVED. Accessed by Lauren Gualdino (lgualdino@briarcliffmanor.org), (-) Order Number #100880972 on May 08, 2020 07:05 AM (PDT) pursuant to License Agreement with ICC & NYSDOS. No further reproduction, no

100880972

R606.11 Anchorage. Masonry walls shall be anchored to floor and roof systems in accordance with the details shown in Figure R606.11(1), R606.11(2) or R606.11(3). Footings shall be permitted to be considered as points of lateral support.

R606.12 Seismic requirements. The seismic requirements of this section shall apply to the design of masonry and the construction of masonry building elements located in Seismic Design Category D_0, D_1 or D_2. Townhouses in Seismic Design Category C shall comply with the requirements of Section R606.12.2. These requirements shall not apply to glass unit masonry conforming to Section R610, anchored masonry veneer conforming to Section R703.8 or adhered masonry veneer conforming to Section R703.12.

R606.12.1 General. Masonry structures and masonry elements shall comply with the requirements of Sections R606.12.2 through R606.12.4 based on the seismic design category established in Table R301.2(2). Masonry structures and masonry elements shall comply with the requirements of Section R606.12 and Figures R606.11(1), R606.11(2) and R606.11(3) or shall be designed in accordance with TMS 402 or TMS 403.

R606.12.1.1 Floor and roof diaphragm construction. Floor and roof *diaphragms* shall be constructed of wood structural panels attached to wood framing in accordance with Table R602.3(1) or to cold-formed steel floor framing in accordance with Table R505.3.1(2) or to cold-formed steel roof framing in accordance with Table R804.3. Additionally, sheathing panel edges perpendicular to framing members shall be backed by blocking, and sheathing shall be connected to the blocking with fasteners at the edge spacing. For Seismic Design Categories C, D_0, D_1 and D_2, where the width-to-thickness dimension of the *diaphragm* exceeds 2-to-1, edge spacing of fasteners shall be 4 inches (102 mm) on center.

R606.12.2 Seismic Design Category C. Townhouses located in Seismic Design Category C shall comply with the requirements of this section.

R606.12.2.1 Minimum length of wall without openings. Table R606.12.2.1 shall be used to determine the minimum required solid wall length without openings at each masonry exterior wall. The provided percentage of solid wall length shall include only those wall segments that are 3 feet (914 mm) or longer. The maximum clear distance between wall segments included in determining the solid wall length shall not exceed 18 feet (5486 mm). Shear wall segments required to meet the minimum wall length shall be in accordance with Section R606.12.2.2.3.

R606.12.2.2 Design of elements not part of the lateral force-resisting system.

R606.12.2.2.1 Load-bearing frames or columns. Elements not part of the lateral force-resisting system shall be analyzed to determine their effect on the response of the system. The frames or columns shall be adequate for vertical load-carrying capacity and induced moment caused by the design *story* drift.

R606.12.2.2.2 Masonry partition walls. Masonry partition walls, masonry screen walls and other masonry elements that are not designed to resist vertical or lateral loads, other than those induced by their own weight, shall be isolated from the structure so that vertical and lateral forces are not imparted to these elements. Isolation joints and connectors between these elements and the structure shall be designed to accommodate the design *story* drift.

R606.12.2.2.3 Reinforcement requirements for masonry elements. Masonry elements listed in Section R606.12.2.2.2 shall be reinforced in either the horizontal or vertical direction as shown in Figure R606.11(2) and in accordance with the following:

1. Horizontal reinforcement. Horizontal joint reinforcement shall consist of not less than two longitudinal W1.7 wires spaced not more than 16 inches (406 mm) for walls greater than 4 inches (102 mm) in width and not less than one longitudinal W1.7 wire spaced not more than 16 inches (406 mm) for walls not exceeding 4 inches (102 mm) in width; or not less than one No. 4 bar spaced not more than 48 inches (1219 mm). Where two longitudinal wires of joint reinforcement are used, the space between these wires shall be the widest that the mortar joint will accommodate. Horizontal reinforcement shall be provided within 16 inches (406 mm) of the top and bottom of these masonry elements.
2. Vertical reinforcement. Vertical reinforcement shall consist of not less than one No. 4 bar spaced not more than 48 inches (1219 mm). Vertical reinforcement shall be located within 16 inches (406 mm) of the ends of masonry walls.

R606.12.2.3 Design of elements part of the lateral force-resisting system.

R606.12.2.3.1 Connections to masonry shear walls. Connectors shall be provided to transfer forces between masonry walls and horizontal elements in accordance with the requirements of Section 4.1.4 of TMS 402. Connectors shall be designed to transfer horizontal design forces acting either perpendicular or parallel to the wall, but not less than 200 pounds per linear foot (2919 N/m) of wall. The maximum spacing between connectors shall be 4 feet (1219 mm). Such anchorage mechanisms shall not induce tension stresses perpendicular to grain in ledgers or nailers.

R606.12.2.3.2 Connections to masonry columns. Connectors shall be provided to transfer forces between masonry columns and horizontal elements in accordance with the requirements of Section 4.1.4 of TMS 402. Where anchor bolts are used to connect horizontal elements to the tops of columns, the bolts shall be placed within lateral ties. Lateral ties shall enclose both the vertical bars in the column and the anchor bolts. There shall be not less than two No. 4 lateral ties provided in the top 5 inches (127 mm) of the column.

INTERNATIONAL CODE COUNCIL®
Copyright © 2019 ICC & NYSDOS. ALL RIGHTS RESERVED. Accessed by Lauren Gualdino (lgualdino@briarcliffmanor.org), (-) Order Number #100880972 on May 08, 2020 07:05 AM (PDT) pursuant to License Agreement with ICC & NYSDOS. No further reproduction, no

100880972

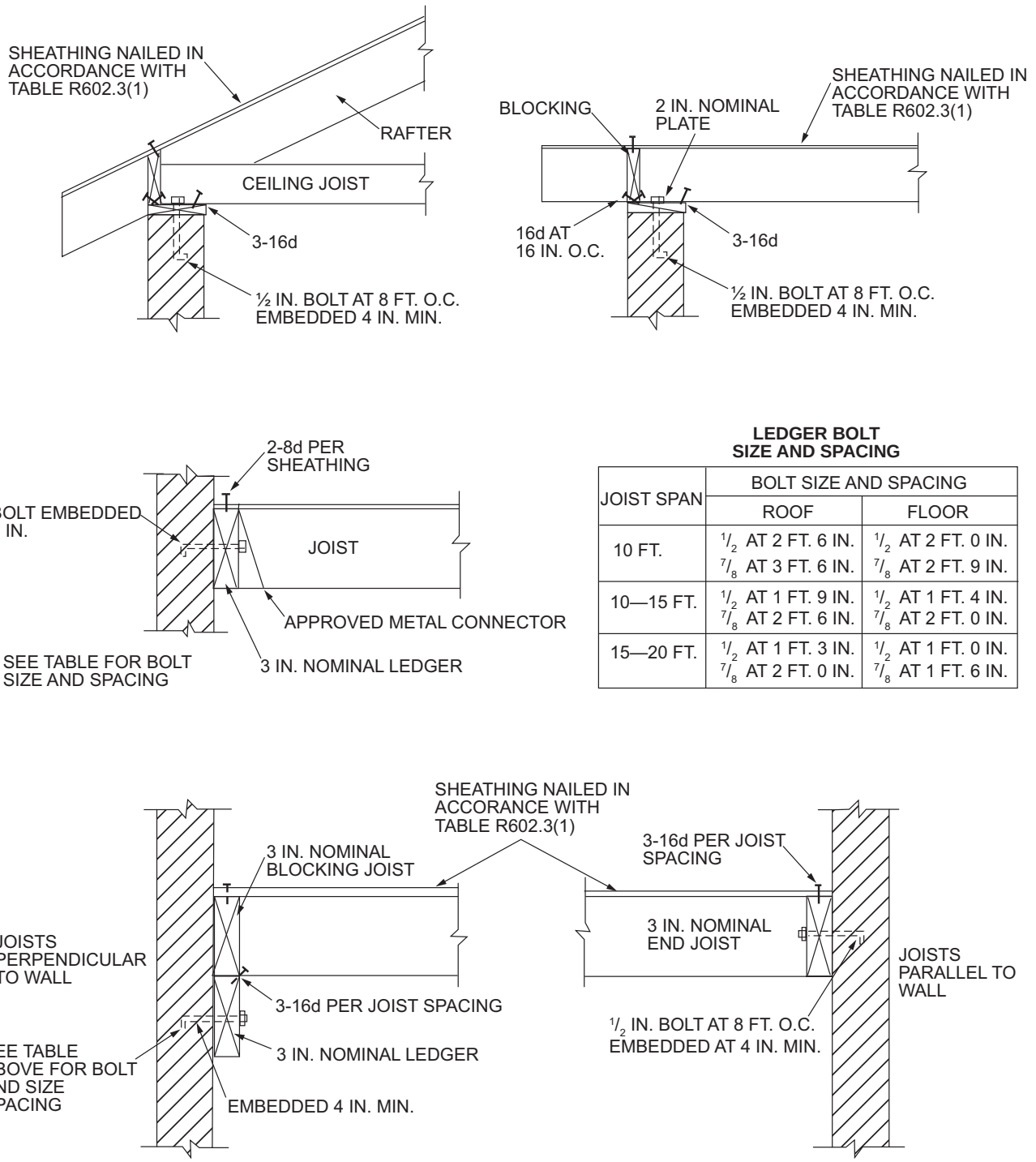

LEDGER BOLT SIZE AND SPACING

JOIST SPAN	BOLT SIZE AND SPACING	
	ROOF	FLOOR
10 FT.	1/2 AT 2 FT. 6 IN. 7/8 AT 3 FT. 6 IN.	1/2 AT 2 FT. 0 IN. 7/8 AT 2 FT. 9 IN.
10—15 FT.	1/2 AT 1 FT. 9 IN. 7/8 AT 2 FT. 6 IN.	1/2 AT 1 FT. 4 IN. 7/8 AT 2 FT. 0 IN.
15—20 FT.	1/2 AT 1 FT. 3 IN. 7/8 AT 2 FT. 0 IN.	1/2 AT 1 FT. 0 IN. 7/8 AT 1 FT. 6 IN.

For SI: 1 inch = 25.4 mm, 1 foot = 304.8 mm, 1 pound per square foot = 0.0479 kPa.
Note: Where bolts are located in hollow masonry, the cells in the courses receiving the bolt shall be grouted solid.

FIGURE R606.11(1)
ANCHORAGE REQUIREMENTS FOR MASONRY WALLS LOCATED IN SEISMIC DESIGN CATEGORY A, B OR C AND WHERE WIND LOADS ARE LESS THAN 30 PSF

INTERNATIONAL CODE COUNCIL®
Copyright © 2019 ICC & NYSDOS. ALL RIGHTS RESERVED. Accessed by Lauren Gualdino (lgualdino@briarcliffmanor.org), (-) Order Number #100880972 on May 08, 2020 07:05 AM (PDT) pursuant to License Agreement with ICC & NYSDOS. No further reproduction, no

100880972

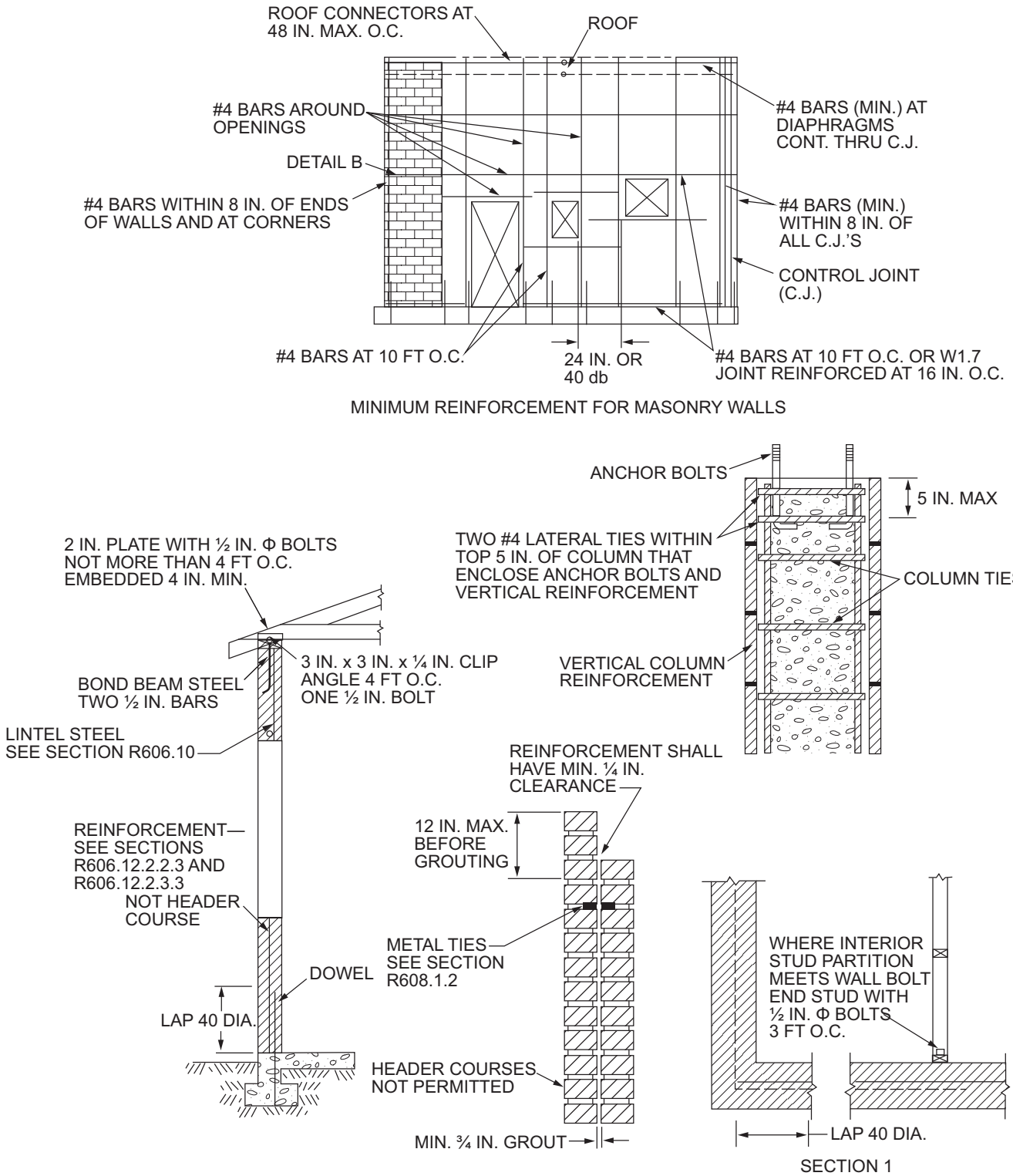

For SI: 1 inch = 25.4 mm, 1 foot = 304.8 mm.

FIGURE R606.11(2)
REQUIREMENTS FOR REINFORCED GROUTED MASONRY CONSTRUCTION IN SEISMIC DESIGN CATEGORY C

INTERNATIONAL CODE COUNCIL®
Copyright © 2019 ICC & NYSDOS. ALL RIGHTS RESERVED. Accessed by Lauren Gualdino (lgualdino@briarcliffmanor.org), (-) Order Number #100880972 on May 08, 2020 07:05 AM (PDT) pursuant to License Agreement with ICC & NYSDOS. No further reproduction, no

100880972

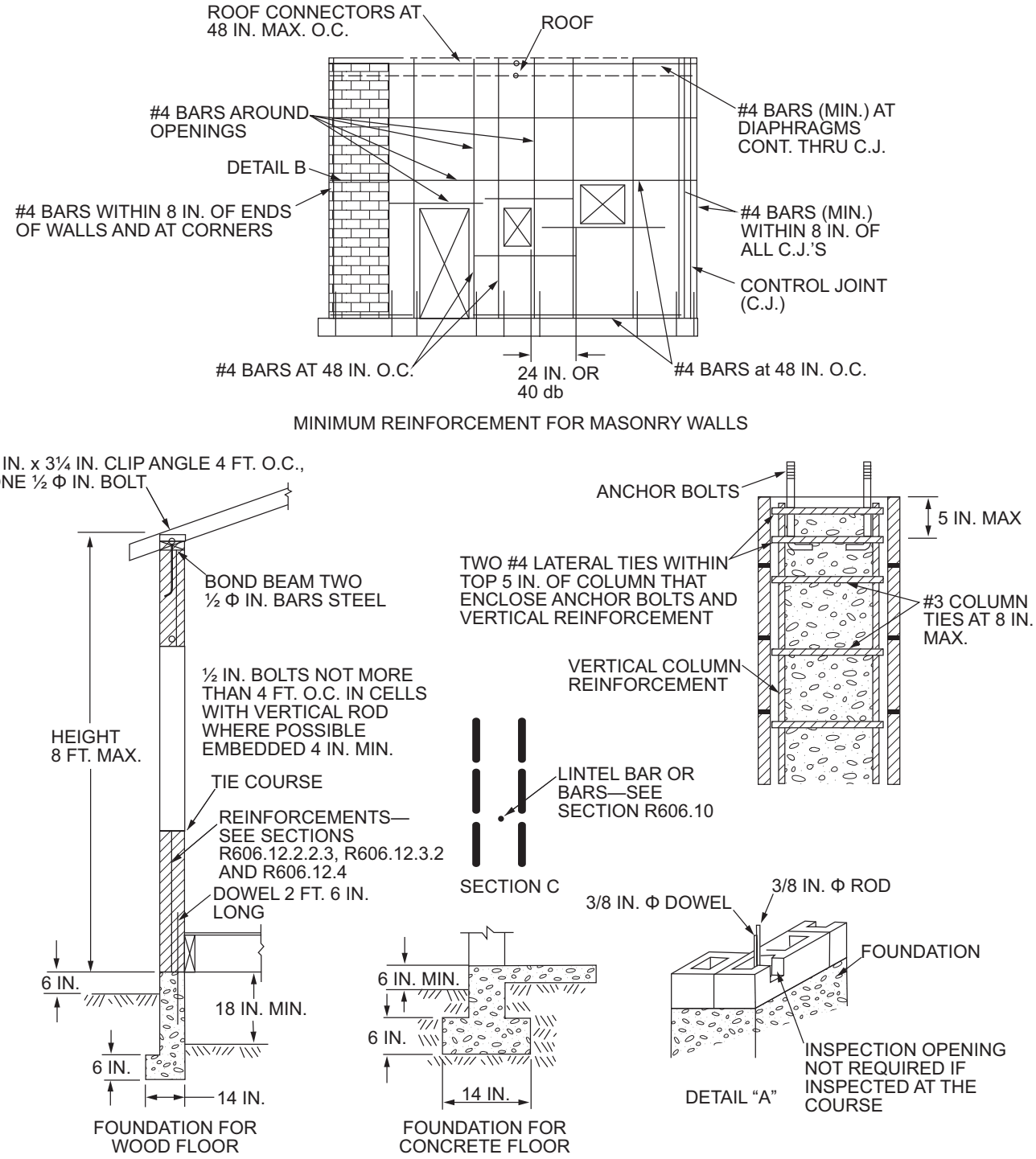

For SI: 1 inch = 25.4 mm, 1 foot = 304.8 mm.

Note: A full bed joint must be provided. Cells containing vertical bars are to be filled to the top of wall and provide inspection opening as shown on detail "A." Horizontal bars are to be laid as shown on detail "B." Lintel bars are to be laid as shown on Section C.

FIGURE R606.11(3)
REQUIREMENTS FOR REINFORCED MASONRY CONSTRUCTION IN SEISMIC DESIGN CATEGORY D_0, D_1 OR D_2

INTERNATIONAL CODE COUNCIL®
Copyright © 2019 ICC & NYSDOS. ALL RIGHTS RESERVED. Accessed by Lauren Gualdino (lgualdino@briarcliffmanor.org), (-) Order Number #100880972 on May 08, 2020 07:05 AM (PDT) pursuant to License Agreement with ICC & NYSDOS. No further reproduction, no

100880972

R606.12.2.3.3 Minimum reinforcement requirements for masonry shear walls. Vertical reinforcement of not less than one No. 4 bar shall be provided at corners, within 16 inches (406 mm) of each side of openings, within 8 inches (203 mm) of each side of movement joints, within 8 inches (203 mm) of the ends of walls, and at a maximum spacing of 10 feet (3048 mm).

Horizontal joint reinforcement shall consist of not less than two wires of W1.7 spaced not more than 16 inches (406 mm); or bond beam reinforcement of not less than one No. 4 bar spaced not more than 10 feet (3048 mm) shall be provided. Horizontal reinforcement shall be provided at the bottom and top of wall openings and shall extend not less than 24 inches (610 mm) nor less than 40 bar diameters past the opening; continuously at structurally connected roof and floor levels; and within 16 inches (406 mm) of the top of walls.

R606.12.3 Seismic Design Category D_0 or D_1. Structures in Seismic Design Category D_0 or D_1 shall comply with the requirements of Seismic Design Category C and the additional requirements of this section. AAC masonry shall not be used for the design of masonry elements that are part of the lateral force-resisting system.

R606.12.3.1 Design requirements. Masonry elements other than those covered by Section R606.12.2.2.2 shall be designed in accordance with the requirements of Chapters 1 through 7 and Sections 8.1 and 8.3 of TMS 402, ACI 530/ASCE 5 and shall meet the minimum reinforcement requirements contained in Sections R606.12.3.2 and R606.12.3.2.1. Otherwise, masonry shall be designed in accordance with TMS 403.

Exception: Masonry walls limited to one *story* in height and 9 feet (2743 mm) between lateral supports need not be designed provided they comply with the minimum reinforcement requirements of Sections R606.12.3.2 and R606.12.3.2.1.

R606.12.3.2 Minimum reinforcement requirements for masonry walls. Masonry walls other than those covered by Section R606.12.2.2.3 shall be reinforced in both the vertical and horizontal direction. The sum of the cross-sectional area of horizontal and vertical reinforcement shall be not less than 0.002 times the gross cross-sectional area of the wall, and the minimum cross-sectional area in each direction shall be not less than 0.0007 times the gross cross-sectional area of the wall. Reinforcement shall be uniformly distributed. Table R606.12.3.2 shows the minimum reinforcing bar sizes required for varying thicknesses of masonry walls. The maximum spacing of reinforcement shall be 48 inches (1219 mm) provided that the walls are solid grouted and constructed of hollow open-end units, hollow units laid with full head joints or two wythes of solid units. The maximum spacing of reinforcement shall be 24 inches (610 mm) for all other masonry.

R606.12.3.2.1 Shear wall reinforcement requirements. The maximum spacing of vertical and horizontal reinforcement shall be the smaller of one-third the length of the shear wall, one-third the height of the shear wall, or 48 inches (1219 mm). The minimum cross-sectional area of vertical reinforcement shall be one-third of the required shear reinforce-

TABLE R606.12.2.1
MINIMUM SOLID WALL LENGTH ALONG EXTERIOR WALL LINES

SESIMIC DESIGN CATEGORY	MINIMUM SOLID WALL LENGTH (percent)[a]		
	One story or top story of two story	Wall supporting light-framed second story and roof	Wall supporting masonry second story and roof
Townhouses in C	20	25	35
D_0 or D_1	25	NP	NP
D_2	30	NP	NP

NP = Not Permitted, except with design in accordance with the *Building Code of New York State*.

a. For all walls, the minimum required length of solid walls shall be based on the table percent multiplied by the dimension, parallel to the wall direction under consideration, of a rectangle inscribing the overall building plan.

TABLE R606.12.3.2
MINIMUM DISTRIBUTED WALL REINFORCEMENT FOR BUILDINGS ASSIGNED TO SEISMIC DESIGN CATEGORY D_0 or D_1

NOMINAL WALL THICKNESS (inches)	MINIMUM SUM OF THE VERTICAL AND HORIZONTAL REINFORCEMENT AREAS[a] (square inches per foot)	MINIMUM REINFORCEMENT AS DISTRIBUTED IN BOTH HORIZONTAL AND VERTICAL DIRECTIONS[b] (square inches per foot)	MINUMUM BAR SIZE FOR REINFORCEMENT SPACED AT 48 INCHES
6	0.135	0.047	#4
8	0.183	0.064	#5
10	0.231	0.081	#6
12	0.279	0.098	#6

For SI: 1 inch = 25.4 mm, 1 foot = 304.8 mm, 1 square inch per foot = 2064 mm^2/m.

a. Based on the minimum reinforcing ratio of 0.002 times the gross cross-sectional area of the wall.

b. Based on the minimum reinforcing ratio each direction of 0.0007 times the gross cross-sectional area of the wall.

INTERNATIONAL CODE COUNCIL®
Copyright © 2019 ICC & NYSDOS. ALL RIGHTS RESERVED. Accessed by Lauren Gualdino (lgualdino@briarcliffmanor.org), (-) Order Number #100880972 on May 08, 2020 07:05 AM (PDT) pursuant to License Agreement with ICC & NYSDOS. No further reproduction, no

100880972

ment. Shear reinforcement shall be anchored around vertical reinforcing bars with a standard hook.

R606.12.3.3 Minimum reinforcement for masonry columns. Lateral ties in masonry columns shall be spaced not more than 8 inches (203 mm) on center and shall be not less than $^3/_8$-inch (9.5 mm) diameter. Lateral ties shall be embedded in grout.

R606.12.3.4 Material restrictions. Type N mortar or masonry cement shall not be used as part of the lateral force-resisting system.

R606.12.3.5 Lateral tie anchorage. Standard hooks for lateral tie anchorage shall be either a 135-degree (2.4 rad) standard hook or a 180-degree (3.2 rad) standard hook.

R606.12.4 Seismic Design Category D_2. Structures in Seismic Design Category D_2 shall comply with the requirements of Seismic Design Category D_1 and to the additional requirements of this section.

R606.12.4.1 Design of elements not part of the lateral force-resisting system. Stack bond masonry that is not part of the lateral force-resisting system shall have a horizontal cross-sectional area of reinforcement of not less than 0.0015 times the gross cross-sectional area of masonry. Table R606.12.4.1 shows minimum reinforcing bar sizes for masonry walls. The maximum spacing of horizontal reinforcement shall be 24 inches (610 mm). These elements shall be solidly grouted and shall be constructed of hollow open-end units or two wythes of solid units.

TABLE R606.12.4.1
MINIMUM REINFORCING FOR STACKED BONDED MASONRY WALLS IN SEISMIC DESIGN CATEGORY D_2

NOMINAL WALL THICKNESS (inches)	MINIMUM BAR SIZE SPACED AT 24 INCHES
6	#4
8	#5
10	#5
12	#6

For SI: 1 inch = 25.4 mm.

R606.12.4.2 Design of elements part of the lateral force-resisting system. Stack bond masonry that is part of the lateral force-resisting system shall have a horizontal cross-sectional area of reinforcement of not less than 0.0025 times the gross cross-sectional area of masonry. Table R606.12.4.2 shows minimum reinforcing bar sizes for masonry walls. The maximum spacing of horizontal reinforcement shall be 16 inches (406 mm). These elements shall be solidly grouted and shall be constructed of hollow open-end units or two wythes of solid units.

TABLE R606.12.4.2
MINIMUM REINFORCING FOR STACKED BONDED MASONRY WALLS IN SEISMIC DESIGN CATEGORY D_2

NOMINAL WALL THICKNESS (inches)	MINIMUM BAR SIZE SPACED AT 16 INCHES
6	#4
8	#5
10	#5
12	#6

For SI: 1 inch = 25.4 mm.

R606.13 Multiple-wythe masonry. The facing and backing of multiple-wythe masonry walls shall be bonded in accordance with Section R606.13.1, R606.13.2 or R606.13.3. In cavity walls, neither the facing nor the backing shall be less than 3 inches (76 mm) nominal in thickness and the cavity shall be not more than 4 inches (102 mm) nominal in width. The backing shall not be less than the thickness of the facing.

Exception: Cavities shall be permitted to exceed the 4-inch (102 mm) nominal dimension provided that tie size and tie spacing have been established by calculation.

R606.13.1 Bonding with masonry headers. Bonding with solid or hollow masonry headers shall comply with Sections R606.13.1.1 and R606.13.1.2.

R606.13.1.1 Solid units. Where the facing and backing (adjacent wythes) of *solid masonry* construction are bonded by means of masonry headers, not less than 4 percent of the wall surface of each face shall be composed of headers extending not less than 3 inches (76 mm) into the backing. The distance between adjacent full-length headers shall not exceed 24 inches (610 mm) either vertically or horizontally. In walls in which a single header does not extend through the wall, headers from the opposite sides shall overlap not less than 3 inches (76 mm), or headers from opposite sides shall be covered with another header course overlapping the header below not less than 3 inches (76 mm).

R606.13.1.2 Hollow units. Where two or more hollow units are used to make up the thickness of a wall, the stretcher courses shall be bonded at vertical intervals not exceeding 34 inches (864 mm) by lapping not less than 3 inches (76 mm) over the unit below, or by lapping at vertical intervals not exceeding 17 inches (432 mm) with units that are not less than 50 percent thicker than the units below.

R606.13.2 Bonding with wall ties or joint reinforcement. Bonding with wall ties or joint reinforcement shall comply with Section R606.13.2.3.

R606.13.2.1 Bonding with wall ties. Bonding with wall ties, except as required by Section R607, where the facing and backing (adjacent wythes) of masonry walls are bonded with $^3/_{16}$-inch-diameter (5 mm) wall ties embedded in the horizontal mortar joints, there shall be not less than one metal tie for each $4^1/_2$ square feet (0.418 m^2) of wall area. Ties in alternate courses shall be staggered. The maximum vertical distance between ties shall not exceed 24 inches (610 mm), and the maximum horizontal distance shall not exceed 36 inches (914 mm). Rods or ties bent to rectangular shape shall be used with hollow masonry units laid with the cells vertical. In other walls, the ends of ties shall be bent to 90-degree (0.79 rad) angles to provide hooks not less than 2 inches (51 mm) long. Additional bonding ties shall be provided at all openings, spaced not more than 3 feet (914 mm) apart around the perimeter and within 12 inches (305 mm) of the opening.

R606.13.2.2 Bonding with adjustable wall ties. Where the facing and backing (adjacent wythes) of masonry are bonded with adjustable wall ties, there shall be not less

INTERNATIONAL CODE COUNCIL®
Copyright © 2019 ICC & NYSDOS. ALL RIGHTS RESERVED. Accessed by Lauren Gualdino (lgualdino@briarcliffmanor.org), (-) Order Number #100880972 on May 08, 2020 07:05 AM (PDT) pursuant to License Agreement with ICC & NYSDOS. No further reproduction, no

100880972

than one tie for each 2.67 square feet (0.248 m^2) of wall area. Neither the vertical nor the horizontal spacing of the adjustable wall ties shall exceed 24 inches (610 mm). The maximum vertical offset of bed joints from one wythe to the other shall be 1.25 inches (32 mm). The maximum clearance between connecting parts of the ties shall be $^1/_{16}$ inch (2 mm). Where pintle legs are used, ties shall have not less than two $^3/_{16}$-inch-diameter (5 mm) legs.

R606.13.2.3 Bonding with prefabricated joint reinforcement. Where the facing and backing (adjacent wythes) of masonry are bonded with prefabricated joint reinforcement, there shall be not less than one cross wire serving as a tie for each 2.67 square feet (0.248 m^2) of wall area. The vertical spacing of the joint reinforcement shall not exceed 16 inches (406 mm). Cross wires on prefabricated joint reinforcement shall not be smaller than No. 9 gage. The longitudinal wires shall be embedded in the mortar.

R606.13.3 Bonding with natural or cast stone. Bonding with natural and cast stone shall conform to Sections R606.13.3.1 and R606.13.3.2.

R606.13.3.1 Ashlar masonry. In ashlar masonry, bonder units, uniformly distributed, shall be provided to the extent of not less than 10 percent of the wall area. Such bonder units shall extend not less than 4 inches (102 mm) into the backing wall.

R606.13.3.2 Rubble stone masonry. Rubble stone masonry 24 inches (610 mm) or less in thickness shall have bonder units with a maximum spacing of 3 feet (914 mm) vertically and 3 feet (914 mm) horizontally, and if the masonry is of greater thickness than 24 inches (610 mm), shall have one bonder unit for each 6 square feet (0.557 m^2) of wall surface on both sides.

R606.14 Anchored and adhered masonry veneer.

R606.14.1 Anchored veneer. Anchored masonry veneer installed over a backing of wood or cold-formed steel shall meet the requirements of Section R703.8.

R606.14.2 Adhered veneer. Adhered masonry veneer shall be installed in accordance with the requirements of Section R703.12.

SECTION R607
GLASS UNIT MASONRY

R607.1 General. Panels of glass unit masonry located in load-bearing and nonload-bearing exterior and interior walls shall be constructed in accordance with this section.

R607.2 Materials. Hollow glass units shall be partially evacuated and have a minimum average glass face thickness of $^3/_{16}$ inch (5 mm). The surface of units in contact with mortar shall be treated with a polyvinyl butyral coating or latex-based paint. The use of reclaimed units is prohibited.

R607.3 Units. Hollow or solid glass block units shall be standard or thin units.

R607.3.1 Standard units. The specified thickness of standard units shall be not less than $3^7/_8$ inches (98 mm).

R607.3.2 Thin units. The specified thickness of thin units shall be not less than $3^1/_8$ inches (79 mm) for hollow units and not less than 3 inches (76 mm) for solid units.

R607.4 Isolated panels. Isolated panels of glass unit masonry shall conform to the requirements of this section.

R607.4.1 Exterior standard-unit panels. The maximum area of each individual standard-unit panel shall be 144 square feet (13.4 m^2) where the design wind pressure is 20 pounds per square foot (958 Pa). The maximum area of such panels subjected to design wind pressures other than 20 pounds per square foot (958 Pa) shall be in accordance with Figure R607.4.1. The maximum panel dimension between structural supports shall be 25 feet (7620 mm) in width or 20 feet (6096 mm) in height.

R607.4.2 Exterior thin-unit panels. The maximum area of each individual thin-unit panel shall be 85 square feet (7.9 m^2). The maximum dimension between structural supports shall be 15 feet (4572 mm) in width or 10 feet (3048 mm) in height. Thin units shall not be used in applications where the design wind pressure as stated in Table R301.2(2) exceeds 20 pounds per square foot (958 Pa).

R607.4.3 Interior panels. The maximum area of each individual standard-unit panel shall be 250 square feet (23.2 m^2). The maximum area of each thin-unit panel shall be 150 square feet (13.9 m^2). The maximum dimension between structural supports shall be 25 feet (7620 mm) in width or 20 feet (6096 mm) in height.

R607.4.4 Curved panels. The width of curved panels shall conform to the requirements of Sections R607.4.1, R607.4.2 and R607.4.3, except additional structural supports shall be provided at locations where a curved section joins a straight section, and at inflection points in multiple-curve walls.

R607.5 Panel support. Glass unit masonry panels shall conform to the support requirements of this section.

R607.5.1 Deflection. The maximum total deflection of structural members that support glass unit masonry shall not exceed $^l/_{600}$.

R607.5.2 Lateral support. Glass unit masonry panels shall be laterally supported along the top and sides of the panel. Lateral supports for glass unit masonry panels shall be designed to resist not less than 200 pounds per lineal feet (2918 N/m) of panel, or the actual applied loads, whichever is greater. Except for single-unit panels, lateral support shall be provided by panel anchors along the top and sides spaced not greater than 16 inches (406 mm) on center or by channel-type restraints. Single-unit panels shall be supported by channel-type restraints.

Exceptions:

1. Lateral support is not required at the top of panels that are one unit wide.
2. Lateral support is not required at the sides of panels that are one unit high.

INTERNATIONAL CODE COUNCIL®
Copyright © 2019 ICC & NYSDOS. ALL RIGHTS RESERVED. Accessed by Lauren Gualdino (lgualdino@briarcliffmanor.org), (-) Order Number #100880972 on May 08, 2020 07:05 AM (PDT) pursuant to License Agreement with ICC & NYSDOS. No further reproduction, no

100880972

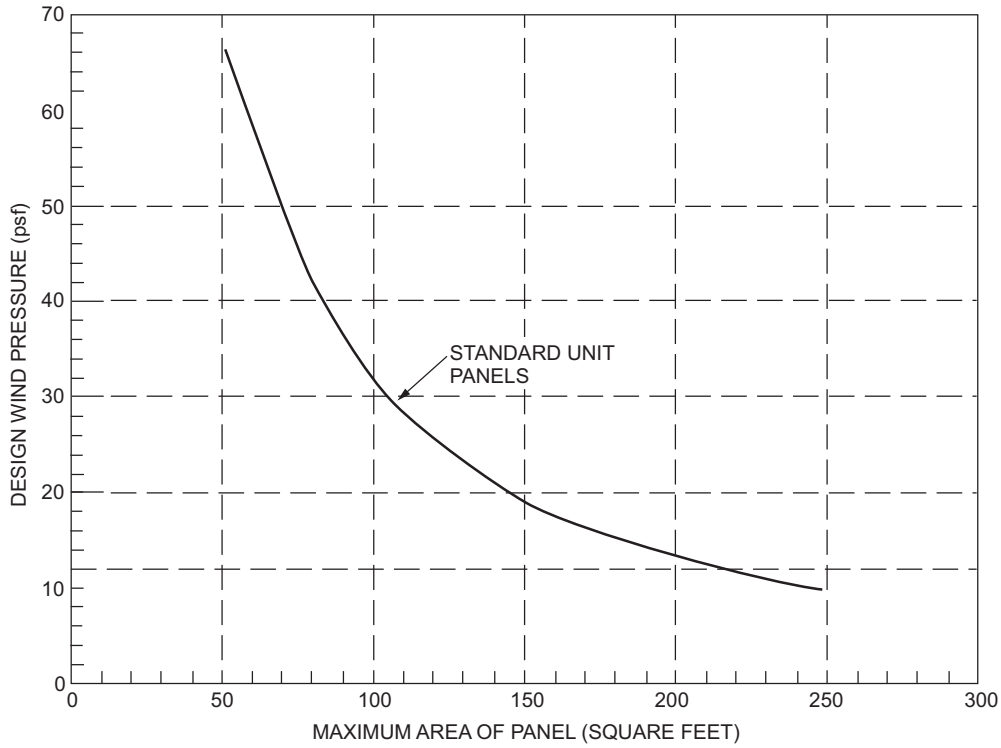

For SI: 1 square foot = 0.0929 m^2, 1 pound per square foot = 0.0479 kPa.

FIGURE R607.4.1
GLASS UNIT MASONRY DESIGN WIND LOAD RESISTANCE

R607.5.2.1 Panel anchor restraints. Panel anchors shall be spaced not greater than 16 inches (406 mm) on center in both jambs and across the head. Panel anchors shall be embedded not less than 12 inches (305 mm) and shall be provided with two fasteners so as to resist the loads specified in Section R607.5.2.

R607.5.2.2 Channel-type restraints. Glass unit masonry panels shall be recessed not less than 1 inch (25 mm) within channels and chases. Channel-type restraints shall be oversized to accommodate expansion material in the opening, packing and sealant between the framing restraints, and the glass unit masonry perimeter units.

R607.6 Sills. Before the bedding of glass units, the sill area shall be covered with a water-base asphaltic emulsion coating. The coating shall be not less than $^1/_8$ inch (3 mm) thick.

R607.7 Expansion joints. Glass unit masonry panels shall be provided with expansion joints along the top and sides at all structural supports. Expansion joints shall be not less than $^3/_8$ inch (10 mm) in thickness and shall have sufficient thickness to accommodate displacements of the supporting structure. Expansion joints shall be entirely free of mortar and other debris and shall be filled with resilient material.

R607.8 Mortar. Glass unit masonry shall be laid with Type S or N mortar. Mortar shall not be retempered after initial set. Mortar unused within $1^1/_2$ hours after initial mixing shall be discarded.

R607.9 Reinforcement. Glass unit masonry panels shall have horizontal joint reinforcement spaced not greater than 16 inches (406 mm) on center located in the mortar bed joint. Horizontal joint reinforcement shall extend the entire length of the panel but shall not extend across expansion joints. Longitudinal wires shall be lapped not less than 6 inches (152 mm) at splices. Joint reinforcement shall be placed in the bed joint immediately below and above openings in the panel. The reinforcement shall have not less than two parallel longitudinal wires of size W1.7 or greater, and have welded cross wires of size W1.7 or greater.

R607.10 Placement. Glass units shall be placed so head and bed joints are filled solidly. Mortar shall not be furrowed. Head and bed joints of glass unit masonry shall be $^1/_4$ inch (6.4 mm) thick, except that vertical joint thickness of radial panels shall be not less than $^1/_8$ inch (3 mm) or greater than $^5/_8$ inch (16 mm). The bed joint thickness tolerance shall be minus $^1/_{16}$ inch (1.6 mm) and plus $^1/_8$ inch (3 mm). The head joint thickness tolerance shall be plus or minus $^1/_8$ inch (3 mm).

SECTION R608
EXTERIOR CONCRETE WALL CONSTRUCTION

R608.1 General. Exterior concrete walls shall be designed and constructed in accordance with the provisions of this section or in accordance with the provisions of PCA 100 or ACI 318. Where PCA 100, ACI 318 or the provisions of this section are used to design concrete walls, project drawings, typical details

INTERNATIONAL CODE COUNCIL®
Copyright © 2019 ICC & NYSDOS. ALL RIGHTS RESERVED. Accessed by Lauren Gualdino (lgualdino@briarcliffmanor.org), (-) Order Number #100880972 on May 08, 2020 07:05 AM (PDT) pursuant to License Agreement with ICC & NYSDOS. No further reproduction, no

100880972

and specifications are not required to bear the seal of the architect or engineer responsible for design, unless otherwise required by the state law of the jurisdiction having authority.

R608.1.1 Interior construction. These provisions are based on the assumption that interior walls and partitions, both load-bearing and nonload-bearing, floors and roof/ceiling assemblies are constructed of *light-framed construction* complying with the limitations of this code and the additional limitations of Section R608.2. Design and construction of light-framed assemblies shall be in accordance with the applicable provisions of this code. Where second-story exterior walls are of *light-framed construction*, they shall be designed and constructed as required by this code.

Aspects of concrete construction not specifically addressed by this code, including interior concrete walls, shall comply with ACI 318.

R608.1.2 Other concrete walls. Exterior concrete walls constructed in accordance with this code shall comply with the shapes and minimum concrete cross-sectional dimensions of Table R608.3. Other types of forming systems resulting in concrete walls not in compliance with this section shall be designed in accordance with ACI 318.

R608.2 Applicability limits. The provisions of this section shall apply to the construction of exterior concrete walls for buildings not greater than 60 feet (18 288 mm) in plan dimensions, floors with clear spans not greater than 32 feet (9754 mm) and roofs with clear spans not greater than 40 feet (12 192 mm). Buildings shall not exceed 35 feet (10 668 mm) in mean roof height or two stories in height above grade. Floor/ceiling dead loads shall not exceed 10 pounds per square foot (479 Pa), roof/ceiling dead loads shall not exceed 15 pounds per square foot (718 Pa) and *attic* live loads shall not exceed 20 pounds per square foot (958 Pa). Roof overhangs shall not exceed 2 feet (610 mm) of horizontal projection beyond the exterior wall and the dead load of the overhangs shall not exceed 8 pounds per square foot (383 Pa).

Walls constructed in accordance with the provisions of this section shall be limited to buildings subjected to a maximum design wind speed of 160 mph (72 m/s) Exposure B, 136 mph (61 m/s) Exposure C and 125 mph (56 m/s) Exposure D. Walls constructed in accordance with the provisions of this section shall be limited to detached one- and two-family *dwellings* and townhouses assigned to Seismic Design Category A or B, and detached one- and two-family *dwellings* assigned to Seismic Design Category C.

Buildings that are not within the scope of this section shall be designed in accordance with PCA 100 or ACI 318.

R608.3 Concrete wall systems. Concrete walls constructed in accordance with these provisions shall comply with the shapes and minimum concrete cross-sectional dimensions of Table R608.3.

R608.3.1 Flat wall systems. Flat concrete wall systems shall comply with Table R608.3 and Figure R608.3(1) and have a minimum nominal thickness of 4 inches (102 mm).

R608.3.2 Waffle-grid wall systems. Waffle-grid wall systems shall comply with Table R608.3 and Figure R608.3(2) and shall have a minimum nominal thickness of 6 inches (152 mm) for the horizontal and vertical concrete

TABLE R608.3
DIMENSIONAL REQUIREMENTS FOR WALLS[a]

WALL TYPE AND NOMINAL THICKNESS	MAXIMUM WALL WEIGHT[b] (psf)	MINIMUM WIDTH, W, OF VERTICAL CORES (inches)	MINIMUM THICKNESS, T, OF VERTICAL CORES (inches)	MAXIMUM SPACING OF VERTICAL CORES (inches)	MAXIMUM SPACING OF HORIZONTAL CORES (inches)	MINIMUM WEB THICKNESS (inches)
4″ Flat[c]	50	NA	NA	NA	NA	NA
6″ Flat[c]	75	NA	NA	NA	NA	NA
8″ Flat[c]	100	NA	NA	NA	NA	NA
10″ Flat[c]	125	NA	NA	NA	NA	NA
6″ Waffle-grid	56	8[d]	5.5[d]	12	16	2
8″ Waffle-grid	76	8[e]	8[e]	12	16	2
6″ Screen-grid	53	6.25[f]	6.25[f]	12	12	NA

For SI: 1 inch = 25.4 mm; 1 pound per square foot = 0.0479 kPa, 1 pound per cubic foot = 2402.77 kg/m^3, 1 square inch = 645.16 mm^2, 1 inch^4 = 42 cm^4.

NA = Not Applicable.

a. Width "W," thickness "T," spacing and web thickness, refer to Figures R608.3(2) and R608.3(3).

b. Wall weight is based on a unit weight of concrete of 150 pcf. For flat walls the weight is based on the nominal thickness. The tabulated values do not include any allowance for interior and exterior finishes.

c. Nominal wall thickness. The actual as-built thickness of a flat wall shall not be more than $^1/_2$ inch less or more than $^1/_4$ inch more than the nominal dimension indicated.

d. Vertical core is assumed to be elliptical-shaped. Another shape of core is permitted provided the minimum thickness is 5 inches, the moment of inertia, *I*, about the centerline of the wall (ignoring the web) is not less than 65 inch^4, and the area, *A*, is not less than 31.25 square inches. The width used to calculate *A* and *I* shall not exceed 8 inches.

e. Vertical core is assumed to be circular. Another shape of core is permitted provided the minimum thickness is 7 inches, the moment of inertia, *I*, about the centerline of the wall (ignoring the web) is not less than 200 inch^4, and the area, *A*, is not less than 49 square inches. The width used to calculate *A* and *I* shall not exceed 8 inches.

f. Vertical core is assumed to be circular. Another shape of core is permitted provided the minimum thickness is 5.5 inches, the moment of inertia, *I*, about the centerline of the wall is not less than 76 inch^4, and the area, *A*, is not less than 30.25 square inches. The width used to calculate *A* and *I* shall not exceed 6.25 inches.

INTERNATIONAL CODE COUNCIL®
Copyright © 2019 ICC & NYSDOS. ALL RIGHTS RESERVED. Accessed by Lauren Gualdino (lgualdino@briarcliffmanor.org), (-) Order Number #100880972 on May 08, 2020 07:05 AM (PDT) pursuant to License Agreement with ICC & NYSDOS. No further reproduction, no

100880972

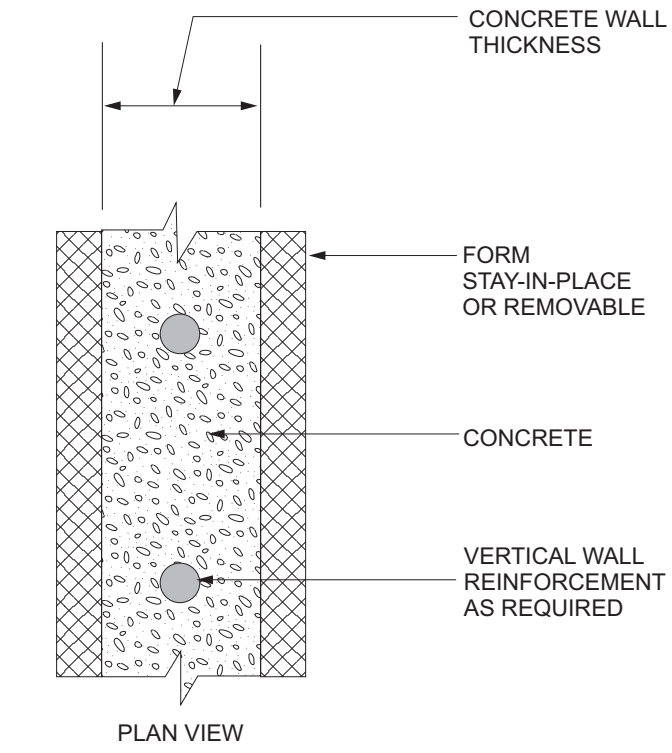

FIGURE R608.3(1)
FLAT WALL SYSTEM

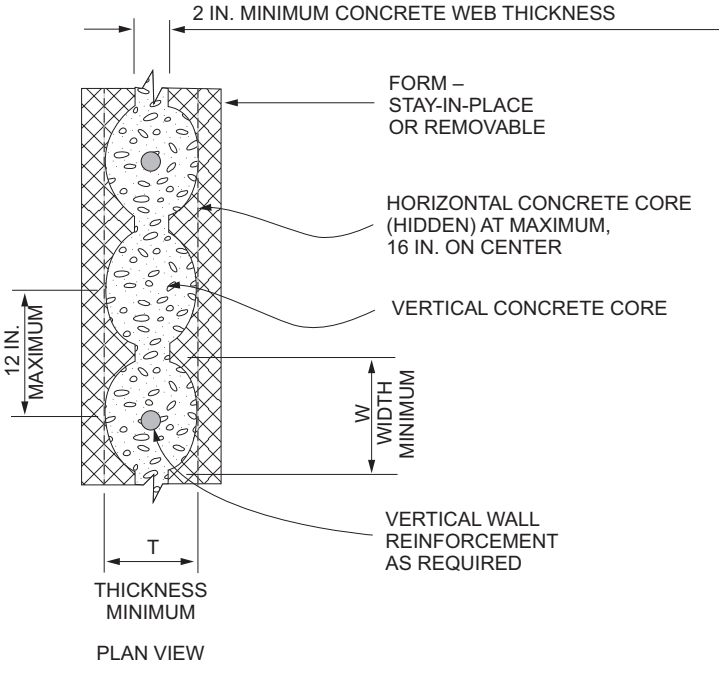

For SI: 1 inch = 25.4 mm.

FIGURE R608.3(2)
WAFFLE-GRID WALL SYSTEM

INTERNATIONAL CODE COUNCIL®
Copyright © 2019 ICC & NYSDOS. ALL RIGHTS RESERVED. Accessed by Lauren Gualdino (lgualdino@briarcliffmanor.org), (-) Order Number #100880972 on May 08, 2020 07:05 AM (PDT) pursuant to License Agreement with ICC & NYSDOS. No further reproduction, no

100880972

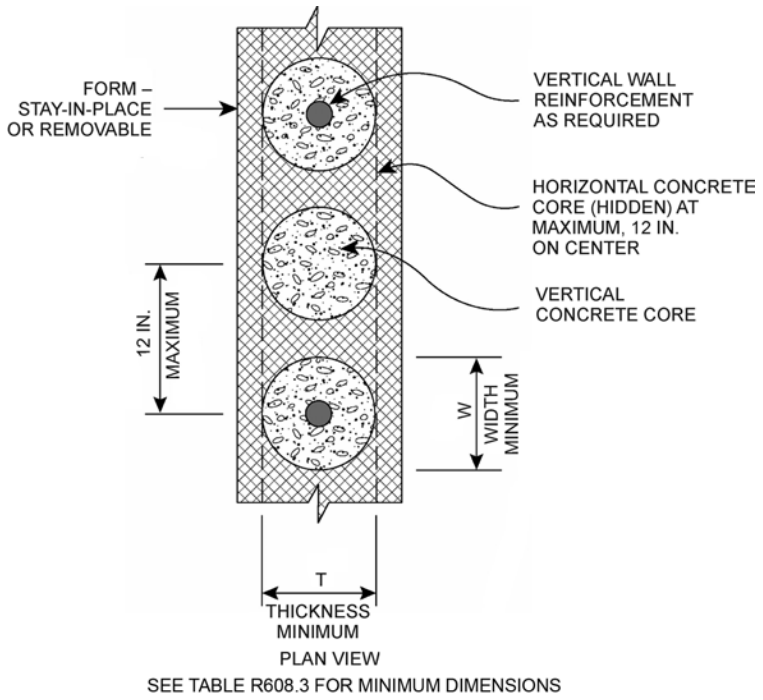

For SI: 1 inch = 25.4 mm.

FIGURE R608.3(3)
SCREEN-GRID WALL SYSTEM

members (cores). The core and web dimensions shall comply with Table R608. 3. The maximum weight of waffle-grid walls shall comply with Table R608.3.

R608.3.3 Screen-grid wall systems. Screen-grid wall systems shall comply with Table R608.3 and Figure R608.3(3) and shall have a minimum nominal thickness of 6 inches (152 mm) for the horizontal and vertical concrete members (cores). The core dimensions shall comply with Table R608.3. The maximum weight of screen-grid walls shall comply with Table R608.3.

R608.4 Stay-in-place forms. Stay-in-place concrete forms shall comply with this section.

R608.4.1 Surface burning characteristics. The flame spread index and smoke-developed index of forming material, other than foam plastic, left exposed on the interior shall comply with Section R302.9. The surface burning characteristics of foam plastic used in insulating concrete forms shall comply with Section R316.3.

R608.4.2 Interior covering. Stay-in-place forms constructed of rigid foam plastic shall be protected on the interior of the building as required by Sections R316.4 and R702.3.4. Where gypsum board is used to protect the foam plastic, it shall be installed with a mechanical fastening system. Use of adhesives is permitted in addition to mechanical fasteners.

R608.4.3 Exterior wall covering. Stay-in-place forms constructed of rigid foam plastics shall be protected from sunlight and physical damage by the application of an *approved* exterior wall covering complying with this code. Exterior surfaces of other stay-in-place forming systems shall be protected in accordance with this code.

Requirements for installation of masonry veneer, stucco and other finishes on the exterior of concrete walls and other construction details not covered in this section shall comply with the requirements of this code.

R608.4.4 Flat ICF wall systems. Flat ICF wall system forms shall conform to ASTM E2634.

R608.5 Materials. Materials used in the construction of concrete walls shall comply with this section.

R608.5.1 Concrete and materials for concrete. Materials used in concrete, and the concrete itself, shall conform to requirements of this section, PCA 100 or ACI 318.

R608.5.1.1 Cements. The following standards as referenced in Chapter 44 shall be permitted to be used.

1. ASTM C150
2. ASTM C595
3. ASTM C1157

R608.5.1.2 Concrete mixing and delivery. Mixing and delivery of concrete shall comply with ASTM C94 or ASTM C685.

INTERNATIONAL CODE COUNCIL®
Copyright © 2019 ICC & NYSDOS. ALL RIGHTS RESERVED. Accessed by Lauren Gualdino (lgualdino@briarcliffmanor.org), (-) Order Number #100880972 on May 08, 2020 07:05 AM (PDT) pursuant to License Agreement with ICC & NYSDOS. No further reproduction, no

100880972

R608.5.1.3 Maximum aggregate size. The nominal maximum size of coarse aggregate shall not exceed one-fifth the narrowest distance between sides of forms, or three-fourths the clear spacing between reinforcing bars or between a bar and the side of the form.

Exception: When *approved*, these limitations shall not apply where removable forms are used and workability and methods of consolidation permit concrete to be placed without honeycombs or voids.

R608.5.1.4 Proportioning and slump of concrete. Proportions of materials for concrete shall be established to provide workability and consistency to permit concrete to be worked readily into forms and around reinforcement under conditions of placement to be employed, without segregation or excessive bleeding. Slump of concrete placed in removable forms shall not exceed 6 inches (152 mm).

Exception: When *approved*, the slump is permitted to exceed 6 inches (152 mm) for concrete mixtures that are resistant to segregation, and are in accordance with the form manufacturer's recommendations.

Slump of concrete placed in stay-in-place forms shall exceed 6 inches (152 mm). Slump of concrete shall be determined in accordance with ASTM C143.

R608.5.1.5 Compressive strength. The minimum specified compressive strength of concrete, f'_c, shall comply with Section R402.2 and shall be not less than 2,500 pounds per square inch (17.2 MPa) at 28 days.

R608.5.1.6 Consolidation of concrete. Concrete shall be consolidated by suitable means during placement and shall be worked around embedded items and reinforcement and into corners of forms. Where stay-in-place forms are used, concrete shall be consolidated by internal vibration.

Exception: When *approved*, self-consolidating concrete mixtures with slumps equal to or greater than 8 inches (203 mm) that are specifically designed for placement without internal vibration need not be internally vibrated.

R608.5.2 Steel reinforcement and anchor bolts.

R608.5.2.1 Steel reinforcement. Steel reinforcement shall comply with ASTM A615, ASTM A706, or ASTM A996. ASTM A996 bars produced from rail steel shall be Type R.

R608.5.2.2 Anchor bolts. Anchor bolts for use with connection details in accordance with Figures R608.9(1) through R608.9(12) shall be bolts with heads complying with ASTM A307 or ASTM F1554. ASTM A307 bolts shall be Grade A with heads. ASTM F1554 bolts shall be Grade 36 minimum. Instead of bolts with heads, it is permissible to use rods with threads on both ends fabricated from steel complying with ASTM A36. The threaded end of the rod to be embedded in the concrete shall be provided with a hex or square nut.

R608.5.2.3 Sheet steel angles and tension tie straps. Angles and tension tie straps for use with connection details in accordance with Figures R608.9(1) through R608.9(12) shall be fabricated from sheet steel complying with ASTM A653 SS, ASTM A792 SS, or ASTM A875 SS. The steel shall be minimum Grade 33 unless a higher grade is required by the applicable figure.

R608.5.3 Form materials and form ties. Forms shall be made of wood, steel, aluminum, plastic, a composite of cement and foam insulation, a composite of cement and wood chips, or other *approved* material suitable for supporting and containing concrete. Forms shall provide sufficient strength to contain concrete during the concrete placement operation.

Form ties shall be steel, solid plastic, foam plastic, a composite of cement and wood chips, a composite of cement and foam plastic, or other suitable material capable of resisting the forces created by fluid pressure of fresh concrete.

R608.5.4 Reinforcement installation details.

R608.5.4.1 Support and cover. Reinforcement shall be secured in the proper location in the forms with tie wire or other bar support system such that displacement will not occur during the concrete placement operation. Steel reinforcement in concrete cast against the earth shall have a minimum cover of 3 inches (76 mm). Minimum cover for reinforcement in concrete cast in removable forms that will be exposed to the earth or weather shall be $1^1/_2$ inches (38 mm) for No. 5 bars and smaller, and 2 inches (50 mm) for No. 6 bars and larger. For concrete cast in removable forms that will not be exposed to the earth or weather, and for concrete cast in stay-in-place forms, minimum cover shall be $^3/_4$ inch (19 mm). The minus tolerance for cover shall not exceed the smaller of one-third the required cover and $^3/_8$ inch (10 mm). See Section R608.5.4.4 for cover requirements for hooks of bars developed in tension.

R608.5.4.2 Location of reinforcement in walls. For location of reinforcement in foundation walls and above-grade walls, see Sections R404.1.3.3.7.2 and R608.6.5, respectively.

R608.5.4.3 Lap splices. Vertical and horizontal wall reinforcement required by Sections R608.6 and R608.7 shall be the longest lengths practical. Where splices are necessary in reinforcement, the length of lap splices shall be in accordance with Table R608.5.4(1) and Figure R608.5.4(1). The maximum gap between noncontact parallel bars at a lap splice shall not exceed the smaller of one-fifth the required lap length and 6 inches (152 mm). See Figure R608.5.4(1).

R608.5.4.4 Development of bars in tension. Where bars are required to be developed in tension by other provisions of this code, development lengths and cover for hooks and bar extensions shall comply with Table R608.5.4(1) and Figure R608.5.4(2). The development lengths shown in Table R608.5.4(1) shall apply to bundled bars in lintels installed in accordance with Section R608.8.2.2.

INTERNATIONAL CODE COUNCIL®
Copyright © 2019 ICC & NYSDOS. ALL RIGHTS RESERVED. Accessed by Lauren Gualdino (lgualdino@briarcliffmanor.org), (-) Order Number #100880972 on May 08, 2020 07:05 AM (PDT) pursuant to License Agreement with ICC & NYSDOS. No further reproduction, no

100880972

TABLE R608.5.4(1)
LAP SPLICE AND TENSION DEVELOPMENT LENGTHS

	BAR SIZE NO.	YIELD STRENGTH OF STEEL, f_y- psi (MPa)	
		40,000 (280)	60,000 (420)
		Splice length or tension development length (inches)	
Lap splice length-tension	4	20	30
	5	25	38
	6	30	45
Tension development length for straight bar	4	15	23
	5	19	28
	6	23	34
Tension development length for:	4	6	9
a.90-degree and 180-degree standard hooks with not less than $2^1/_2$ inches of side cover perpendicular to plane of hook, and	5	7	11
b.90-degree standard hooks with not less than 2 inches of cover on the bar extension beyond the hook.	6	8	13
Tension development length for bar with 90-degree or 180-degree standard hook having less cover than required in Items a and b.	4	8	12
	5	10	15
	6	12	18

For SI: 1 inch = 25.4 mm, 1 degree = 0.0175 rad, 1 pound per square inch = 6.895 kPa.

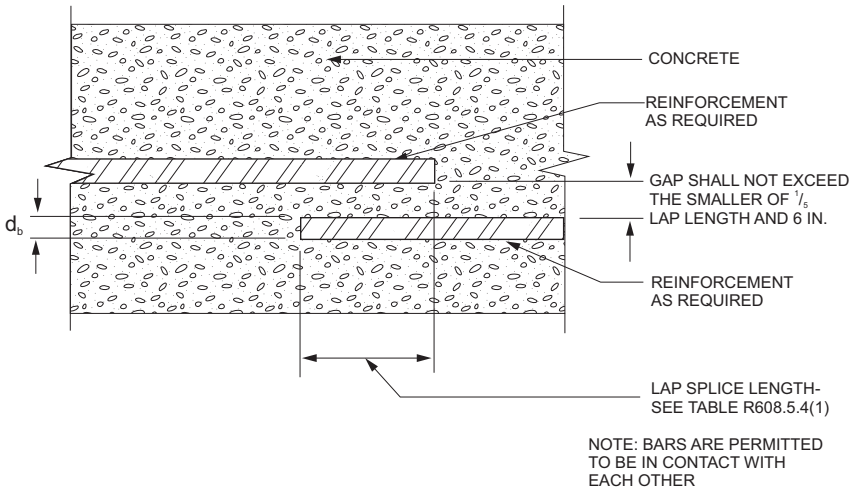

For SI: 1 inch = 25.4 mm.

FIGURE R608.5.4(1)
LAP SPLICES

INTERNATIONAL CODE COUNCIL®
Copyright © 2019 ICC & NYSDOS. ALL RIGHTS RESERVED. Accessed by Lauren Gualdino (lgualdino@briarcliffmanor.org), (-) Order Number #100880972 on May 08, 2020 07:05 AM (PDT) pursuant to License Agreement with ICC & NYSDOS. No further reproduction, no

100880972

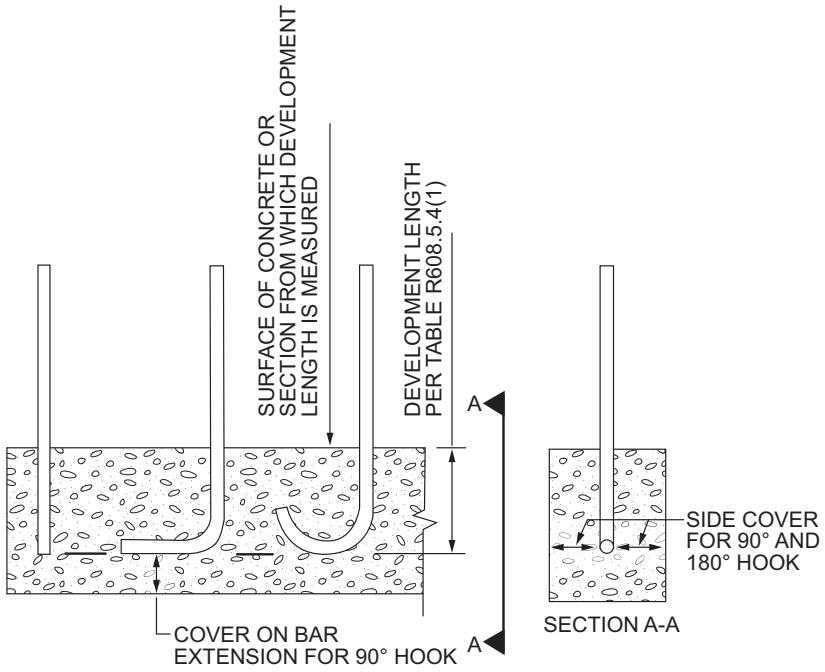

For SI: 1 degree = 0.0175 rad.

FIGURE R608.5.4(2)
DEVELOPMENT LENGTH AND COVER FOR HOOKS AND BAR EXTENSION

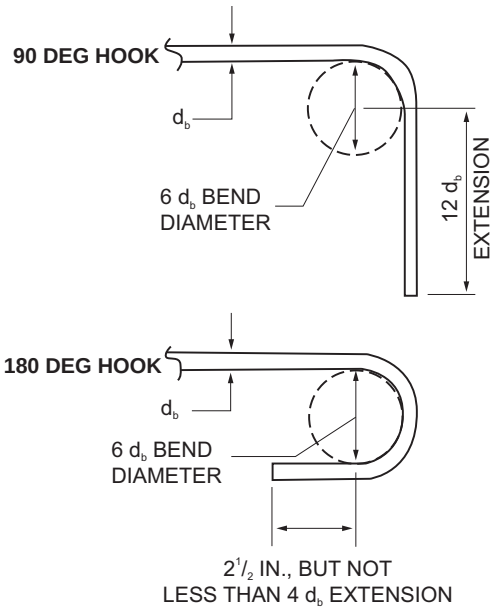

HOOKS FOR REINFORCEMENT IN WALLS AND FOUNDATIONS

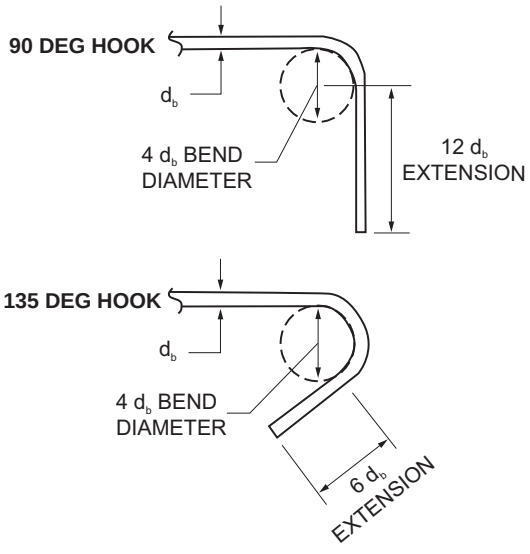

HOOKS FOR STIRRUPS IN LINTELS

For SI: 1 inch = 25.4 mm, 1 degree = 0.0175 rad.

FIGURE R608.5.4(3)
STANDARD HOOKS

INTERNATIONAL CODE COUNCIL®
Copyright © 2019 ICC & NYSDOS. ALL RIGHTS RESERVED. Accessed by Lauren Gualdino (lgualdino@briarcliffmanor.org), (-) Order Number #100880972 on May 08, 2020 07:05 AM (PDT) pursuant to License Agreement with ICC & NYSDOS. No further reproduction, no

100880972

TABLE R608.5.4(2)
MAXIMUM SPACING FOR ALTERNATIVE BAR SIZE AND ALTERNATIVE GRADE OF STEEL[a, b, c]

BAR SPACING FROM APPLICABLE TABLE IN SECTION R608.6 (inches)	BAR SIZE FROM APPLICABLE TABLE IN SECTION R608.6														
	#4					#5					#6				
	Alternate bar size and alternate grade of steel desired														
	Grade 60		Grade 40			Grade 60		Grade 40			Grade 60		Grade 40		
	#5	#6	#4	#5	#6	#4	#6	#4	#5	#6	#4	#5	#4	#5	#6
	Maximum spacing for alternate bar size and alternate grade of steel (inches)														
8	12	18	5	8	12	5	11	3	5	8	4	6	2	4	5
9	14	20	6	9	13	6	13	4	6	9	4	6	3	4	6
10	16	22	7	10	15	6	14	4	7	9	5	7	3	5	7
11	17	24	7	11	16	7	16	5	7	10	5	8	3	5	7
12	19	26	8	12	18	8	17	5	8	11	5	8	4	6	8
13	20	29	9	13	19	8	18	6	9	12	6	9	4	6	9
14	22	31	9	14	21	9	20	6	9	13	6	10	4	7	9
15	23	33	10	16	22	10	21	6	10	14	7	11	5	7	10
16	25	35	11	17	23	10	23	7	11	15	7	11	5	8	11
17	26	37	11	18	25	11	24	7	11	16	8	12	5	8	11
18	28	40	12	19	26	12	26	8	12	17	8	13	5	8	12
19	29	42	13	20	28	12	27	8	13	18	9	13	6	9	13
20	31	44	13	21	29	13	28	9	13	19	9	14	6	9	13
21	33	46	14	22	31	14	30	9	14	20	10	15	6	10	14
22	34	48	15	23	32	14	31	9	15	21	10	16	7	10	15
23	36	48	15	24	34	15	33	10	15	22	10	16	7	11	15
24	37	48	16	25	35	15	34	10	16	23	11	17	7	11	16
25	39	48	17	26	37	16	35	11	17	24	11	18	8	12	17
26	40	48	17	27	38	17	37	11	17	25	12	18	8	12	17
27	42	48	18	28	40	17	38	12	18	26	12	19	8	13	18
28	43	48	19	29	41	18	40	12	19	26	13	20	8	13	19
29	45	48	19	30	43	19	41	12	19	27	13	20	9	14	19
30	47	48	20	31	44	19	43	13	20	28	14	21	9	14	20
31	48	48	21	32	45	20	44	13	21	29	14	22	9	15	21
32	48	48	21	33	47	21	45	14	21	30	15	23	10	15	21
33	48	48	22	34	48	21	47	14	22	31	15	23	10	16	22
34	48	48	23	35	48	22	48	15	23	32	15	24	10	16	23
35	48	48	23	36	48	23	48	15	23	33	16	25	11	16	23
36	48	48	24	37	48	23	48	15	24	34	16	25	11	17	24
37	48	48	25	38	48	24	48	16	25	35	17	26	11	17	25
38	48	48	25	39	48	25	48	16	25	36	17	27	12	18	25
39	48	48	26	40	48	25	48	17	26	37	18	27	12	18	26
40	48	48	27	41	48	26	48	17	27	38	18	28	12	19	27
41	48	48	27	42	48	26	48	18	27	39	19	29	12	19	27
42	48	48	28	43	48	27	48	18	28	40	19	30	13	20	28
43	48	48	29	44	48	28	48	18	29	41	20	30	13	20	29
44	48	48	29	45	48	28	48	19	29	42	20	31	13	21	29
45	48	48	30	47	48	29	48	19	30	43	20	32	14	21	30
46	48	48	31	48	48	30	48	20	31	44	21	32	14	22	31
47	48	48	31	48	48	30	48	20	31	44	21	33	14	22	31
48	48	48	32	48	48	31	48	21	32	45	22	34	15	23	32

For SI: 1 inch = 25.4 mm.

a. This table is for use with tables in Section R608.6 that specify the minimum bar size and maximum spacing of vertical wall reinforcement for foundation walls and above-grade walls. Reinforcement specified in tables in Section R608.6 is based on Grade 60 (420 MPa) steel reinforcement.

b. Bar spacing shall not exceed 48 inches on center and shall be not less than one-half the nominal wall thickness.

c. For Grade 50 (350 MPa) steel bars (ASTM A996, Type R), use spacing for Grade 40 (280 MPa) bars or interpolate between Grade 40 (280 MPa) and Grade 60 (420 MPa).

INTERNATIONAL CODE COUNCIL®
Copyright © 2019 ICC & NYSDOS. ALL RIGHTS RESERVED. Accessed by Lauren Gualdino (lgualdino@briarcliffmanor.org), (-) Order Number #100880972 on May 08, 2020 07:05 AM (PDT) pursuant to License Agreement with ICC & NYSDOS. No further reproduction, no

100880972

R608.5.4.5 Standard hooks. Where reinforcement is required by this code to terminate with a standard hook, the hook shall comply with Figure R608.5.4(3).

R608.5.4.6 Webs of waffle-grid walls. Reinforcement, including stirrups, shall not be placed in webs of waffle-grid walls, including lintels. Webs are permitted to have form ties.

R608.5.4.7 Alternate grade of reinforcement and spacing. Where tables in Sections R404.1.3 and R608.6 specify vertical wall reinforcement based on minimum bar size and maximum spacing, which are based on Grade 60 (420 MPa) steel reinforcement, different size bars or bars made from a different grade of steel are permitted provided an equivalent area of steel per linear foot of wall is provided. Use of Table R608.5.4(2) is permitted to determine the maximum bar spacing for different bar sizes than specified in the tables and bars made from a different grade of steel. Bars shall not be spaced less than one-half the wall thickness, or more than 48 inches (1219 mm) on center.

R608.5.5 Construction joints in walls. Construction joints shall be made and located to not impair the strength of the wall. Construction joints in plain concrete walls, including walls required to have not less than No. 4 bars at 48 inches (1219 mm) on center by Section R608.6, shall be located at points of lateral support, and not less than one No. 4 bar shall extend across the construction joint at a spacing not to exceed 24 inches (610 mm) on center. Construction joint reinforcement shall have not less than 12 inches (305 mm) of embedment on both sides of the joint. Construction joints in reinforced concrete walls shall be located in the middle third of the span between lateral supports, or located and constructed as required for joints in plain concrete walls.

Exception: Vertical wall reinforcement required by this code is permitted to be used in lieu of construction joint reinforcement, provided the spacing does not exceed 24 inches (610 mm), or the combination of wall reinforcement and No. 4 bars described in Section R608.5.5 does not exceed 24 inches (610 mm).

R608.6 Above-grade wall requirements.

R608.6.1 General. The minimum thickness of load-bearing and nonload-bearing above-grade walls and reinforcement shall be as set forth in the appropriate table in this section based on the type of wall form to be used. The wall shall be designed in accordance with ACI 318 where the wall or building is not within the limitations of Section R608.2, where design is required by the tables in this section or where the wall is not within the scope of the tables in this section.

Above-grade concrete walls shall be constructed in accordance with this section and Figure R608.6(1), R608.6(2), R608.6(3) or R608.6(4). Above-grade concrete walls that are continuous with stem walls and not laterally supported by the slab-on-ground shall be designed and constructed in accordance with this section. Concrete walls shall be supported on continuous foundation walls or slabs-on-ground that are monolithic with the footing in accordance with Section R403. The minimum length of solid wall without openings shall be in accordance with Section R608.7. Reinforcement around openings, including lintels, shall be in accordance with Section R608.8. Lateral support for above-grade walls in the out-of-plane direction shall be provided by connections to the floor framing system, if applicable, and to ceiling and roof framing systems in accordance with Section R608.9. The wall thickness shall be equal to or greater than the thickness of the wall in the *story* above.

R608.6.2 Wall reinforcement for wind. Vertical wall reinforcement for resistance to out-of-plane wind forces shall be determined from Table R608.6(1), R608.6(2), R608.6(3) or R608.6(4). For the design of nonload-bearing walls, in Tables R608.6(1), R608.6(2) and R608.6(3) use the appropriate column labeled "Top." (see Sections R608.7.2.2.2 and R608.7.2.2.3). There shall be a vertical bar at corners of exterior walls. Unless more horizontal reinforcement is required by Section R608.7.2.2.1, the minimum horizontal reinforcement shall be four No. 4 bars [Grade 40 (280 MPa)] placed as follows: top bar within 12 inches (305 mm) of the top of the wall, bottom bar within 12 inches (305 mm) of the finish floor and one bar each at approximately one-third and two-thirds of the wall height.

R608.6.3 Continuity of wall reinforcement between stories. Vertical reinforcement required by this section shall be continuous between elements providing lateral support for the wall. Reinforcement in the wall of the *story* above shall be continuous with the reinforcement in the wall of the *story* below, or the foundation wall, if applicable. Lap splices, where required, shall comply with Section R608.5.4.3 and Figure R608.5.4(1). Where the above-grade wall is supported by a monolithic slab-on-ground and footing, dowel bars with a size and spacing to match the vertical above-grade concrete wall reinforcement shall be embedded in the monolithic slab-on-ground and footing the distance required to develop the dowel bar in tension in accordance with Section R608.5.4.4 and Figure R608.5.4(2) and lap-spliced with the above-grade wall reinforcement in accordance with Section R608.5.4.3 and Figure R608.5.4(1).

Where a construction joint in the wall is located below the level of the floor and less than the distance required to develop the bar in tension, the distance required to develop the bar in tension shall be measured from the top of the concrete below the joint. See Section R608.5.5.

Exception: Where reinforcement in the wall above cannot be made continuous with the reinforcement in the wall below, the bottom of the reinforcement in the wall above shall be terminated in accordance with one of the following:

1. Extend below the top of the floor the distance required to develop the bar in tension in accordance with Section R608.5.4.4 and Figure R608.5.4(2).
2. Lap-spliced in accordance with Section R608.5.4.3 and Figure R608.5.4(1) with a dowel

INTERNATIONAL CODE COUNCIL®
Copyright © 2019 ICC & NYSDOS. ALL RIGHTS RESERVED. Accessed by Lauren Gualdino (lgualdino@briarcliffmanor.org), (-) Order Number #100880972 on May 08, 2020 07:05 AM (PDT) pursuant to License Agreement with ICC & NYSDOS. No further reproduction, no

100880972

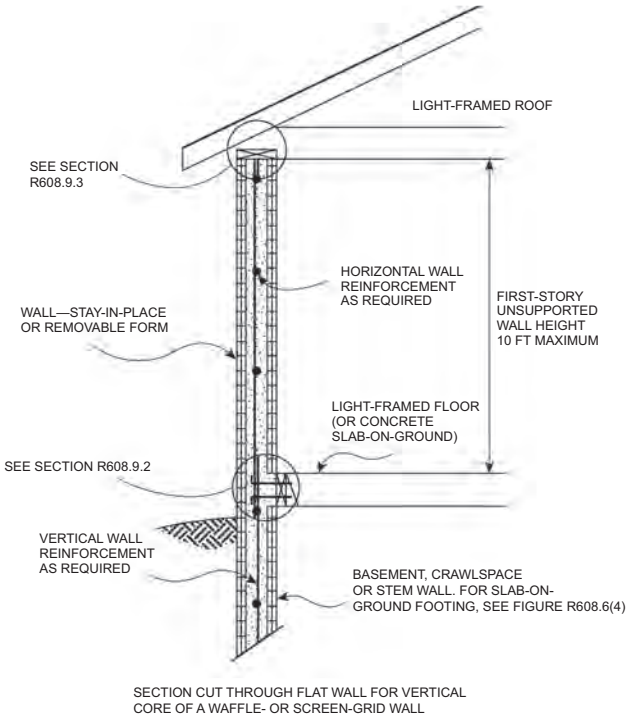

For SI: 1 foot = 304.8 mm.

FIGURE R608.6(1)
ABOVE-GRADE CONCRETE WALL CONSTRUCTION ONE STORY

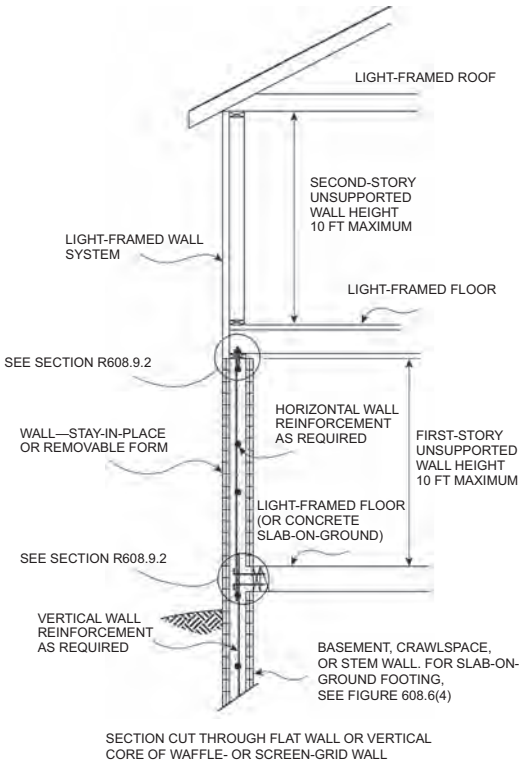

For SI: 1 foot = 304.8 mm.

FIGURE R608.6(2)
ABOVE-GRADE CONCRETE WALL CONSTRUCTION CONCRETE FIRST STORY AND LIGHT-FRAMED SECOND STORY

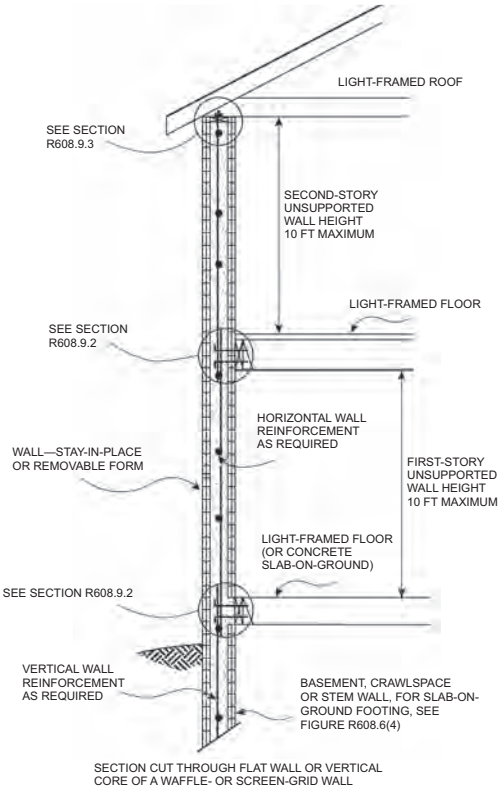

For SI: 1 foot = 304.8 mm.

FIGURE R608.6(3)
ABOVE-GRADE CONCRETE WALL CONSTRUCTION TWO-STORY

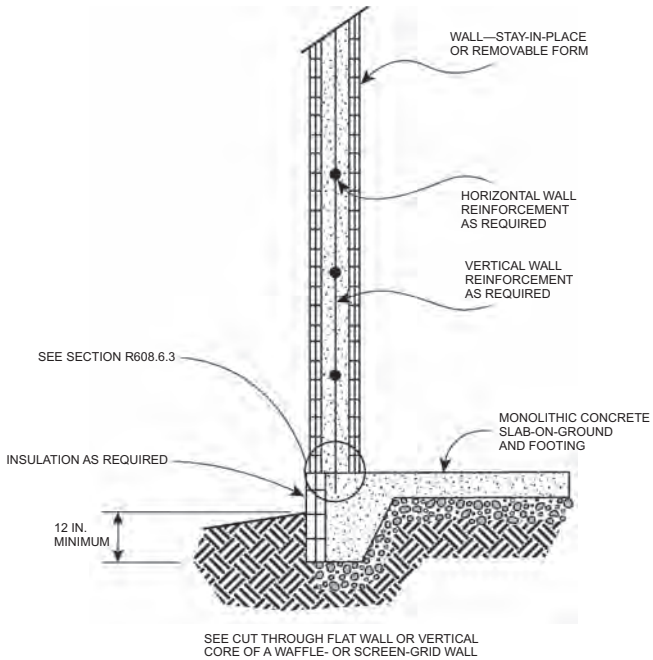

For SI: 1 inch = 25.4 mm.

FIGURE R608.6(4)
ABOVE-GRADE CONCRETE WALL SUPPORTED ON MONOLITHIC SLAB-ON-GROUND FOOTING

INTERNATIONAL CODE COUNCIL®
Copyright © 2019 ICC & NYSDOS. ALL RIGHTS RESERVED. Accessed by Lauren Gualdino (lgualdino@briarcliffmanor.org), (-) Order Number #100880972 on May 08, 2020 07:05 AM (PDT) pursuant to License Agreement with ICC & NYSDOS. No further reproduction, no

100880972

TABLE R608.6(1)
MINIMUM VERTICAL REINFORCEMENT FOR FLAT ABOVE-GRADE WALLS[a, b, c, d, e]

MAXIMUM WIND SPEED (mph)			MAXIMUM UNSUPPORTED WALL HEIGHT PER STORY (feet)	MINIMUM VERTICAL REINFORCEMENT-BAR SIZE AND SPACING (inches)[f, g]							
				Nominal[h] wall thickness (inches)							
Exposure Category				4		6		8		10	
B	C	D		Top[i]	Side[i]	Top[i]	Side[i]	Top[i]	Side[i]	Top[i]	Side[i]
115			8	4@48	4@48	4@48	4@48	4@48	4@48	4@48	4@48
			9	4@48	4@39	4@48	4@48	4@48	4@48	4@48	4@48
			10	4@41	4@34	4@48	4@48	4@48	4@48	4@48	4@48
120			8	4@48	4@43	4@48	4@48	4@48	4@48	4@48	4@48
			9	4@48	4@36	4@48	4@48	4@48	4@48	4@48	4@48
			10	4@37	4@34	4@48	4@48	4@48	4@48	4@48	4@48
130	110		8	4@48	4@38	4@48	4@48	4@48	4@48	4@48	4@48
			9	4@39	4@34	4@48	4@48	4@48	4@48	4@48	4@48
			10	4@34	4@34	4@48	4@48	4@48	4@48	4@48	4@48
140	119	110	8	4@43	4@34	4@48	4@48	4@48	4@48	4@48	4@48
			9	4@34	4@34	4@48	4@48	4@48	4@48	4@48	4@48
			10	4@34	4@31	4@48	4@48	4@48	4@48	4@48	4@48
150	127	117	8	4@37	4@34	4@48	4@48	4@48	4@48	4@48	4@48
			9	4@34	4@33	4@48	4@48	4@48	4@48	4@48	4@48
			10	4@31	4@27	4@48	4@48	4@48	4@48	4@48	4@48
160	136	125	8	4@34	4@34	4@48	4@48	4@48	4@48	4@48	4@48
			9	4@34	4@29	4@48	4@48	4@48	4@48	4@48	4@48
			10	4@27	4@24	4@48	4@48	4@48	4@48	4@48	4@48

For SI: 1 inch = 25.4 mm, 1 foot = 304.8 mm, 1 mile per hour = 0.447 m/s, 1 pound per square inch = 1.895 kPa, 1 square foot = 0.0929 m^2.

a. Table is based on ASCE 7 components and cladding wind pressures for an enclosed building using a mean roof height of 35 feet, interior wall area 4, an effective wind area of 10 square feet, topographic factor, K_{zt}, equal to 1.0, and Risk Category II.

b. Table is based on concrete with a minimum specified compressive strength of 2,500 psi.

c. See Section R608.6.5 for location of reinforcement in wall.

d. Deflection criterion is $L/240$, where L is the unsupported height of the wall in inches.

e. Interpolation is not permitted.

f. Where No. 4 reinforcing bars at a spacing of 48 inches are specified in the table as indicated by shaded cells, use of bars with a minimum yield strength of 40,000 psi or 60,000 psi is permitted.

g. Other than for No. 4 bars spaced at 48 inches on center, table values are based on reinforcing bars with a minimum yield strength of 60,000 psi. Vertical reinforcement with a yield strength of less than 60,000 psi or bars of a different size than specified in the table are permitted in accordance with Section R608.5.4.7 and Table R608.5.4(2).

h. See Table R608.3 for tolerances on nominal thicknesses.

i. "Top" means gravity load from roof or floor construction bears on top of wall. "Side" means gravity load from floor construction is transferred to wall from a wood ledger or cold-formed steel track bolted to side of wall. For nonload-bearing walls where floor framing members span parallel to the wall, use of the "Top" bearing condition is permitted.

INTERNATIONAL CODE COUNCIL®
Copyright © 2019 ICC & NYSDOS. ALL RIGHTS RESERVED. Accessed by Lauren Gualdino (lgualdino@briarcliffmanor.org), (-) Order Number #100880972 on May 08, 2020 07:05 AM (PDT) pursuant to License Agreement with ICC & NYSDOS. No further reproduction, no

100880972

TABLE R608.6(2)
MINIMUM VERTICAL REINFORCEMENT FOR WAFFLE-GRID ABOVE-GRADE WALLS[a, b, c, d, e]

MAXIMUM WIND SPEED (mph)			MAXIMUM UNSUPPORTED WALL HEIGHT PER STORY (feet)	MINIMUM VERTICAL REINFORCEMENT-BAR SIZE AND SPACING (inches)[f, g]			
				Nominal[h] wall thickness (inches)			
Exposure Category				6		8	
B	C	D		Top[i]	Side[i]	Top[i]	Side[i]
115			8	4@48	4@48	4@48	4@48
			9	4@48	5@43	4@48	4@48
			10	5@47	5@37	4@48	4@48
120			8	4@48	5@48	4@48	4@48
			9	4@48	5@40	4@48	4@48
			10	5@43	5@37	4@48	4@48
130	110		8	4@48	5@42	4@48	4@48
			9	5@45	5@37	4@48	4@48
			10	5@37	5@37	4@48	4@48
140	119	110	8	4@48	5@38	4@48	4@48
			9	5@39	5@37	4@48	4@48
			10	5@37	5@35	4@48	4@48
150	127	117	8	5@43	5@37	4@48	4@48
			9	5@37	5@37	4@48	4@48
			10	5@36	6@44	4@48	4@48
160	136	125	8	5@38	5@37	4@48	4@48
			9	5@37	6@47	4@48	4@48
			10	6@45	6@39	4@48	6@46

For SI: 1 inch = 25.4 mm, 1 foot = 304.8 mm, 1 mile per hour = 0.447 m/s, 1 pound per square inch = 6.895 kPa, 1 square foot = 0.0929 m^2.

a. Table is based on ASCE 7 components and cladding wind pressures for an enclosed building using a mean roof height of 35 feet, interior wall area 4, an effective wind area of 10 square feet, topographic factor, K_{zt}, equal to 1.0, and Risk Category II.

b. Table is based on concrete with a minimum specified compressive strength of 2,500 psi.

c. See Section R608.6.5 for location of reinforcement in wall.

d. Deflection criterion is $L/240$, where L is the unsupported height of the wall in inches.

e. Interpolation is not permitted.

f. Where No. 4 reinforcing bars at a spacing of 48 inches are specified in the table as indicated by shaded cells, use of bars with a minimum yield strength of 40,000 psi or 60,000 psi is permitted.

g. Other than for No. 4 bars spaced at 48 inches on center, table values are based on reinforcing bars with a minimum yield strength of 60,000 psi. Maximum spacings shown are the values calculated for the specified bar size. Where the bar used is Grade 60 and the size specified in the table, the actual spacing in the wall shall not exceed a whole-number multiple of 12 inches such as, 12, 24, 36 and 48, that is less than or equal to the tabulated spacing. Vertical reinforcement with a yield strength of less than 60,000 psi or bars of a different size than specified in the table are permitted in accordance with Section R608.5.4.7 and Table R608.5.4(2).

h. See Table R608.3 for minimum core dimensions and maximum spacing of horizontal and vertical cores.

i. "Top" means gravity load from roof or floor construction bears on top of wall. "Side" means gravity load from floor construction is transferred to wall from a wood ledger or cold-formed steel track bolted to side of wall. For nonload-bearing walls and where floor framing members span parallel to the wall, the "top" bearing condition is permitted to be used.

INTERNATIONAL CODE COUNCIL®
Copyright © 2019 ICC & NYSDOS. ALL RIGHTS RESERVED. Accessed by Lauren Gualdino (lgualdino@briarcliffmanor.org), (-) Order Number #100880972 on May 08, 2020 07:05 AM (PDT) pursuant to License Agreement with ICC & NYSDOS. No further reproduction, no

100880972

TABLE R608.6(3)
MINIMUM VERTICAL REINFORCEMENT FOR 6-INCH SCREEN-GRID ABOVE-GRADE WALLS[a, b, c, d, e]

MAXIMUM WIND SPEED (mph)			MAXIMUM UNSUPPORTED WALL HEIGHT PER STORY (feet)	MINIMUM VERTICAL REINFORCEMENT-BAR SIZE AND SPACING (inches)[f, g]	
				Nominal[h] wall thickness (inches)	
Exposure Category				6	
B	C	D		Top[i]	Side[i]
115			8	4@48	4@48
			9	4@48	5@41
			10	4@48	6@48
120			8	4@48	4@48
			9	4@48	5@38
			10	5@42	6@48
130	110		8	4@48	5@41
			9	5@44	6@48
			10	5@35	6@48
140	119	110	8	4@48	5@36
			9	5@38	6@48
			10	6@48	6@48
150	127	117	8	5@42	6@48
			9	6@48	6@48
			10	6@48	6@42
160	136	125	8	5@37	6@48
			9	6@48	6@45
			10	6@44	6@38

For SI: 1 inch = 25.4 mm, 1 foot = 304.8 mm, 1 mile per hour = 0.447 m/s, 1 pound per square inch = 6.895 kPa, 1 square foot = 0.0929 m^2.

a. Table is based on ASCE 7 components and cladding wind pressures for an enclosed building using a mean roof height of 35 feet, interior wall area 4, an effective wind area of 10 square feet, topographic factor, K_{zt}, equal to 1.0, and Risk Category II.

b. Table is based on concrete with a minimum specified compressive strength of 2,500 psi.

c. See Section R608.6.5 for location of reinforcement in wall.

d. Deflection criterion is $L/240$, where L is the unsupported height of the wall in inches.

e. Interpolation is not permitted.

f. Where No. 4 reinforcing bars at a spacing of 48 inches are specified in the table as indicated by shaded cells, use of bars with a minimum yield strength of 40,000 psi or 60,000 psi is permitted.

g. Other than for No. 4 bars spaced at 48 inches on center, table values are based on reinforcing bars with a minimum yield strength of 60,000 psi. Maximum spacings shown are the values calculated for the specified bar size. Where the bar used is Grade 60 and the size specified in the table, the actual spacing in the wall shall not exceed a whole-number multiple of 12 inches such as, 12, 24, 36 and 48, that is less than or equal to the tabulated spacing. Vertical reinforcement with a yield strength of less than 60,000 psi or bars of a different size than specified in the table are permitted in accordance with Section R608.5.4.7 and Table R608.5.4(2).

h. See Table R608.3 for minimum core dimensions and maximum spacing of horizontal and vertical cores.

i. "Top" means gravity load from roof or floor construction bears on top of wall. "Side" means gravity load from floor construction is transferred to wall from a wood ledger or cold-formed steel track bolted to side of wall. For nonload-bearing wall and where floor framing members span parallel to the wall, use of the "Top" bearing condition is permitted.

INTERNATIONAL CODE COUNCIL®
Copyright © 2019 ICC & NYSDOS. ALL RIGHTS RESERVED. Accessed by Lauren Gualdino (lgualdino@briarcliffmanor.org), (-) Order Number #100880972 on May 08, 2020 07:05 AM (PDT) pursuant to License Agreement with ICC & NYSDOS. No further reproduction, no

100880972

TABLE R608.6(4)
MINIMUM VERTICAL REINFORCEMENT FOR FLAT, WAFFLE- AND SCREEN-GRID ABOVE-GRADE WALLS DESIGNED CONTINUOUS WITH FOUNDATION STEM WALLS[a, b, c, d, e, k]

MAXIMUM WIND SPEED (mph)			HEIGHT OF STEM WALL[h, i] (feet)	MAXIMUM DESIGN LATERAL SOIL LOAD (psf/ft)	MAXIMUM UNSUPPORTED HEIGHT OF ABOVE-GRADE WALL (feet)	MINIMUM VERTICAL REINFORCEMENT-BAR SIZE AND SPACING (inches)[f, g]						
						Wall type and nominal thickness[j] (inches)						
Exposure Category						Flat				Waffle		Screen
B	C	D				4	6	8	10	6	8	6
115			3	30	8	4@30	4@48	4@48	4@48	4@22	4@26	4@21
					10	4@23	5@43	4@48	4@48	4@17	4@20	4@16
				60	10	4@19	5@37	4@48	4@48	4@14	4@17	4@14
			6	30	10	DR	5@21	6@35	4@48	DR	4@10	DR
				60	10	DR	5@12	6@25	6@28	DR	DR	DR
120			3	30	8	4@28	4@48	4@48	4@48	4@21	4@48	4@20
					10	4@22	5@41	4@48	4@48	4@16	4@19	4@15
				60	10	4@18	5@35	4@48	4@48	4@14	4@17	4@13
			6	30	10	DR	5@21	6@35	4@48	DR	4@10	DR
				60	10	DR	5@12	6@25	6@28	DR	DR	DR
130	110		3	30	8	4@25	4@48	4@48	4@48	4@18	4@22	4@18
					10	4@19	5@36	4@48	4@48	4@14	4@17	4@13
			6	60	10	4@16	5@34	4@48	4@48	4@12	4@17	4@12
				30	10	DR	5@19	6@35	4@48	DR	4@9	DR
				60	10	DR	5@12	6@24	6@28	DR	DR	DR
140	119	110	3	30	8	4@22	5@42	4@48	4@48	4@16	4@20	4@16
					10	4@17	5@34	4@48	4@48	4@21	4@17	4@12
				60	10	4@15	5@34	4@48	4@48	4@11	4@17	4@10
			6	30	10	DR	5@18	6@35	6@35	DR	4@48	DR
				60	10	DR	5@11	6@23	6@28	DR	DR	DR
150	127	117	3	30	8	4@20	5@37	4@48	4@48	4@15	4@18	4@14
					10	4@15	5@34	4@48	4@48	4@11	4@17	4@11
				60	10	4@13	5@34	4@48	4@48	4@10	4@16	4@9
			6	30	10	DR	5@17	6@33	6@32	DR	4@8	DR
				60	10	DR	DR	6@22	6@28	DR	DR	DR
160	136	125	3	30	8	4@18	5@34	4@48	4@48	4@13	4@17	4@13
					10	4@13	5@34	4@48	4@48	4@10	4@16	4@9
				60	10	4@11	5@31	6@45	4@48	4@9	4@14	4@8
			6	30	10	DR	5@15	6@31	6@30	DR	4@7	DR
				60	10	DR	DR	6@21	6@27	DR	DR	DR

For SI: 1 inch = 25.4 mm, 1 foot = 304.8 mm, 1 mile per hour = 0.447 m/s, 1 pound per square inch = 6.895 kPa, 1 square foot = 0.0929 m^2.

DR = Design Required.

a. Table is based on ASCE 7 components and cladding wind pressures for an enclosed building using a mean roof height of 35 feet, interior wall area 4, an effective wind area of 10 square feet, topographic factor, K_{zt}, equal to 1.0, and Risk Category II.

b. Table is based on concrete with a minimum specified compressive strength of 2,500 psi.

c. See Section R608.6.5 for location of reinforcement in wall.

d. Deflection criterion is $L/240$, where L is the height of the wall in inches from the exterior finish ground level to the top of the above-grade wall.

e. Interpolation is not permitted. For intermediate values of basic wind speed, heights of stem wall and above-grade wall, and design lateral soil load, use next higher value.

f. Where No. 4 reinforcing bars at a spacing of 48 inches are specified in the table as indicated by shaded cells, use of bars with a minimum yield strength of 40,000 psi or 60,000 psi is permitted.

g. Other than for No. 4 bars spaced at 48 inches on center, table values are based on reinforcing bars with a minimum yield strength of 60,000 psi. Maximum spacings shown are the values calculated for the specified bar size. In waffle and screen-grid walls where the bar used is Grade 60 and the size specified in the table, the actual spacing in the wall shall not exceed a whole-number multiple of 12 inches such as, 12, 24, 36 and 48, that is less than or equal to the tabulated spacing. Vertical reinforcement with a yield strength of less than 60,000 psi and bars of a different size than specified in the table are permitted in accordance with Section R608.5.4.7 and Table R608.5.4(2).

h. Height of stem wall is the distance from the exterior finish ground level to the top of the slab-on-ground.

i. Where the distance from the exterior finish ground level to the top of the slab-on-ground is equal to or greater than 4 feet, the stem wall shall be laterally supported at the top and bottom before backfilling. Where the wall is designed and constructed to be continuous with the above-grade wall, temporary supports bracing the top of the stem wall shall remain in place until the above-grade wall is laterally supported at the top by floor or roof construction.

j. See Table R608.3 for tolerances on nominal thicknesses, and minimum core dimensions and maximum spacing of horizontal and vertical cores for waffle- and screen-grid walls.

k. Tabulated values are applicable to construction where gravity loads bear on top of wall, and conditions where gravity loads from floor construction are transferred to wall from a wood ledger or cold-formed steel track bolted to side of wall. See Tables R608.6(1), R608.6(2) and R608.6(3).

INTERNATIONAL CODE COUNCIL®
Copyright © 2019 ICC & NYSDOS. ALL RIGHTS RESERVED. Accessed by Lauren Gualdino (lgualdino@briarcliffmanor.org), (-) Order Number #100880972 on May 08, 2020 07:05 AM (PDT) pursuant to License Agreement with ICC & NYSDOS. No further reproduction, no

100880972

bar that extends into the wall below the distance required to develop the bar in tension in accordance with Section R608.5.4.4 and Figure R608.5.4(2).

R608.6.4 Termination of reinforcement. Where indicated in Items 1 through 3, vertical wall reinforcement in the top-most *story* with concrete walls shall be terminated with a 90-degree (1.57 rad) standard hook complying with Section R608.5.4.5 and Figure R608.5.4(3).

1. Vertical bars adjacent to door and window openings required by Section R608.8.1.2.
2. Vertical bars at the ends of required solid wall segments (see Section R608.7.2.2.2).
3. Vertical bars (other than end bars, see Item 2) used as shear reinforcement in required solid wall segments where the reduction factor for design strength, R_3, used is based on the wall having horizontal and vertical shear reinforcement (see Section R608.7.2.2.3).

The bar extension of the hook shall be oriented parallel to the horizontal wall reinforcement and be within 4 inches (102 mm) of the top of the wall.

Horizontal reinforcement shall be continuous around the building corners by bending one of the bars and lap-splicing it with the bar in the other wall in accordance with Section R608.5.4.3 and Figure R608.5.4(1).

In required solid wall segments where the reduction factor for design strength, R_3, is based on the wall having horizontal and vertical shear reinforcement in accordance with Section R608.7.2.2.1, horizontal wall reinforcement shall be terminated with a standard hook complying with Section R608.5.4.5 and Figure R608.5.4(3) or in a lap-splice, except at corners where the reinforcement shall be continuous as required.

Exception: In lieu of bending horizontal reinforcement at corners, separate bent reinforcing bars shall be permitted provided that the bent bar is lap-spliced with the horizontal reinforcement in both walls in accordance with Section R608.5.4.3 and Figure R608.5.4(1).

R608.6.5 Location of reinforcement in wall. Except for vertical reinforcement at the ends of required solid wall segments, which shall be located as required by Section R608.7.2.2.2, the location of the vertical reinforcement shall not vary from the center of the wall by more than the greater of 10 percent of the wall thickness and $^3/_8$-inch (10 mm). Horizontal and vertical reinforcement shall be located to provide not less than the minimum cover required by Section R608.5.4.1.

R608.7 Solid walls for resistance to lateral forces.

R608.7.1 Length of solid wall. Each exterior wall line in each *story* shall have a total length of solid wall required by Section R608.7.1.1. A solid wall is a section of flat, waffle-grid or screen-grid wall, extending the full *story height* without openings or penetrations, except those permitted by Section R608.7.2. Solid wall segments that contribute to the total length of solid wall shall comply with Section R608.7.2.

R608.7.1.1 Length of solid wall for wind. Buildings shall have solid walls in each exterior endwall line (the side of a building that is parallel to the span of the roof or floor framing) and sidewall line (the side of a building that is perpendicular to the span of the roof or floor framing) to resist lateral in-plane wind forces. The site-appropriate basic wind speed and exposure category shall be used in Tables R608.7(1A) through (1C) to determine the unreduced total length, *UR*, of solid wall required in each exterior endwall line and sidewall line. For buildings with a mean roof height of less than 35 feet (10 668 mm), the unreduced values determined from Tables R608.7(1A) though (1C) are permitted to be reduced by multiplying by the applicable factor, R_1, from Table R608.7(2); however, reduced values shall be not less than the minimum values in Tables R608.7(1A) through (1C). Where the floor-to-ceiling height of a *story* is less than 10 feet (3048 mm), the unreduced values determined from Tables R608.7(1A) through (1C), including minimum values, are permitted to be reduced by multiplying by the applicable factor, R_2, from Table R608.7(3). To account for different design strengths than assumed in determining the values in Tables R608.7(1A) through (1C), the unreduced lengths determined from Tables R608.7(1A) through (1C), including minimum values, are permitted to be reduced by multiplying by the applicable factor, R_3, from Table R608.7(4). The reductions permitted by Tables R608.7(2), R608.7(3) and R608.7(4) are cumulative.

The total length of solid wall segments, *TL*, in a wall line that comply with the minimum length requirements of Section R608.7.2.1 [see Figure R608.7(1)] shall be equal to or greater than the product of the unreduced length of solid wall from Tables R608.7(1A) through (1C), *UR* and the applicable reduction factors, if any, from Tables R608.7(2), R608.7(3) and R608.7(4) as indicated by Equation R6-1.

$$TL \geq R_1 \times R_2 \times R_3 \times UR \qquad \textbf{(Equation R6-1)}$$

where:

TL = Total length of solid wall segments in a wall line that comply with Section R608.7.2.1 [see Figure R608.7(1)].

R_1 = 1.0 or reduction factor for mean roof height from Table R608.7(2).

R_2 = 1.0 or reduction factor for floor-to-ceiling wall height from Table R608.7(3).

R_3 = 1.0 or reduction factor for design strength from Table R608.7(4).

UR = Unreduced length of solid wall from Tables R608.7(1A) through (1C).

The total length of solid wall in a wall line, *TL*, shall be not less than that provided by two solid wall segments complying with the minimum length requirements of Section R608.7.2.1.

INTERNATIONAL CODE COUNCIL®
Copyright © 2019 ICC & NYSDOS. ALL RIGHTS RESERVED. Accessed by Lauren Gualdino (lgualdino@briarcliffmanor.org), (-) Order Number #100880972 on May 08, 2020 07:05 AM (PDT) pursuant to License Agreement with ICC & NYSDOS. No further reproduction, no

100880972

TABLE R608.7(1A)
UNREDUCED LENGTH, *UR*, OF SOLID WALL REQUIRED IN EACH EXTERIOR ENDWALL FOR WIND PERPENDICULAR TO RIDGE ONE STORY OR TOP STORY OF TWO STORY[a, c, d, e, f, g]

SIDEWALL LENGTH (feet)	ENDWALL LENGTH (feet)	ROOF SLOPE	UNREDUCED LENGTH, *UR*, OF SOLID WALL REQUIRED IN ENDWALLS FOR WIND PERPENDICULAR TO RIDGE (feet)						
			Basic Wind Speed (mph) Exposure						
			115B	120B	130B	140B	150B	160B	Minimum[b]
			—	—	110C	119C	127C	136C	
			—	—	—	110D	117D	125D	
15	15	< 1:12	1.03	1.12	1.32	1.53	1.76	2.00	0.92
		5:12	1.43	1.56	1.83	2.12	2.43	2.77	1.15
		7:12	2.00	2.18	2.56	2.97	3.41	3.88	1.25
		12:12	3.20	3.48	4.09	4.74	5.44	6.19	1.54
	30	< 1:12	1.03	1.12	1.32	1.53	1.76	2.00	0.98
		5:12	1.43	1.56	1.83	2.12	2.43	2.77	1.43
		7:12	2.78	3.03	3.56	4.13	4.74	5.39	1.64
		12:12	5.17	5.63	6.61	7.67	8.80	10.01	2.21
	45	< 1:12	1.03	1.12	1.32	1.53	1.76	2.00	1.04
		5:12	1.43	1.56	1.83	2.12	2.43	2.77	1.72
		7:12	3.57	3.88	4.56	5.28	6.07	6.90	2.03
		12:12	7.15	7.78	9.13	10.59	12.16	13.84	2.89
	60	< 1:12	1.03	1.12	1.32	1.53	1.76	2.00	1.09
		5:12	1.43	1.56	1.83	2.12	2.43	2.77	2.01
		7:12	4.35	4.73	5.55	6.44	7.39	8.41	2.42
		12:12	9.12	9.93	11.66	13.52	15.52	17.66	3.57
30	15	< 1:12	1.84	2.01	2.35	2.73	3.13	3.57	1.82
		5:12	2.56	2.78	3.27	3.79	4.35	4.95	2.23
		7:12	3.61	3.93	4.61	5.34	6.13	6.98	2.42
		12:12	5.61	6.10	7.16	8.31	9.54	10.85	2.93
	30	< 1:12	1.84	2.01	2.35	2.73	3.13	3.57	1.93
		5:12	2.56	2.78	3.27	3.79	4.35	4.95	2.75
		7:12	4.92	5.35	6.28	7.29	8.37	9.52	3.12
		12:12	8.92	9.71	11.39	13.22	15.17	17.26	4.14
	45	< 1:12	1.84	2.01	2.35	2.73	3.13	3.57	2.03
		5:12	2.56	2.78	3.27	3.79	4.35	4.95	3.26
		7:12	6.23	6.78	7.96	9.23	10.60	12.06	3.82
		12:12	12.23	13.31	15.63	18.12	20.80	23.67	5.36
	60	< 1:12	1.84	2.01	2.35	2.73	3.13	3.57	2.14
		5:12	2.56	2.78	3.27	3.79	4.35	4.95	3.78
		7:12	7.54	8.21	9.64	11.17	12.83	14.60	4.52
		12:12	15.54	16.92	19.86	23.03	26.44	30.08	6.57

(continued)

INTERNATIONAL CODE COUNCIL®
Copyright © 2019 ICC & NYSDOS. ALL RIGHTS RESERVED. Accessed by Lauren Gualdino (lgualdino@briarcliffmanor.org), (-) Order Number #100880972 on May 08, 2020 07:05 AM (PDT) pursuant to License Agreement with ICC & NYSDOS. No further reproduction, no

100880972

TABLE R608.7(1A)—continued
UNREDUCED LENGTH, *UR*, OF SOLID WALL REQUIRED IN EACH EXTERIOR ENDWALL FOR WIND PERPENDICULAR TO RIDGE ONE STORY OR TOP STORY OF TWO STORY[a, c, d, e, f, g]

SIDEWALL LENGTH (feet)	ENDWALL LENGTH (feet)	ROOF SLOPE	UNREDUCED LENGTH, *UR*, OF SOLID WALL REQUIRED IN ENDWALLS FOR WIND PERPENDICULAR TO RIDGE (feet)						
			Basic Wind Speed (mph) Exposure						
			115B	120B	130B	140B	150B	160B	Minimum[b]
			—	—	110C	119C	127C	136C	
			—	—	—	110D	117D	125D	
60	15	< 1:12	3.42	3.72	4.36	5.06	5.81	6.61	3.63
		5:12	4.75	5.17	6.06	7.03	8.07	9.19	4.40
		7:12	6.76	7.36	8.64	10.02	11.51	13.09	4.75
		12:12	10.35	11.27	13.23	15.34	17.61	20.04	5.71
	30	< 1:12	3.42	3.72	4.36	5.06	5.81	6.61	3.83
		5:12	4.75	5.17	6.06	7.03	8.07	9.19	5.37
		7:12	9.12	9.93	11.66	13.52	15.52	17.66	6.07
		12:12	16.30	17.75	20.83	24.16	27.73	31.55	8.00
	45	< 1:12	3.55	3.87	4.54	5.27	6.05	6.88	4.03
		5:12	4.94	5.37	6.31	7.31	8.40	9.55	6.34
		7:12	11.71	12.75	14.97	17.36	19.93	22.67	7.39
		12:12	22.70	24.71	29.00	33.64	38.62	43.94	10.29
	60	< 1:12	3.68	4.01	4.71	5.46	6.27	7.13	4.23
		5:12	5.11	5.57	6.54	7.58	8.70	9.90	7.31
		7:12	14.38	15.66	18.37	21.31	24.46	27.83	8.71
		12:12	29.30	31.90	37.44	43.42	49.85	56.72	12.57

For SI: 1 inch = 25.4 mm, 1 foot = 304.8 mm, 1 mile per hour = 0.447 m/s, 1 pound-force per linear foot = 0.146 kN/m, 1 pound per square foot = 47.88 Pa.

a. Tabulated lengths were derived by calculating design wind pressures in accordance with Figure 28.4-1 of ASCE 7 for a building with a mean roof height of 35 feet, topographic factor, K_{zt}, equal to 1.0, and Risk Category II. For wind perpendicular to the ridge, the effects of a 2-foot overhang on each endwall are included. The design pressures were used to calculate forces to be resisted by solid wall segments in each. The forces to be resisted by each wall line were then divided by the default design strength of 840 pounds per linear foot of length to determine the unreduced length, *UR*, of solid wall length required in each endwall. The actual mean roof height of the building shall not exceed the least horizontal dimension of the building.

b. Tabulated lengths in the "minimum" column are based on the requirement of Section 28.4.4 of ASCE 7 that the main windforce-resisting system be designed for a minimum pressure of 16 psf multiplied by the wall area of the building and 8 psf multiplied by the roof area of the building projected onto a vertical plane normal to the assumed wind direction. Tabulated lengths in shaded cells are less than the "minimum" value. Where the minimum controls, it is permitted to be reduced in accordance with Notes c, d and e. See Section R608.7.1.1.

c. For buildings with a mean roof height of less than 35 feet, tabulated lengths are permitted to be reduced by multiplying by the appropriate factor, R_1, from Table R608.7(2). The reduced length shall be not less than the "minimum" value shown in the table.

d. Tabulated lengths for "one story or top story of two story" are based on a floor-to-ceiling height of 10 feet. Tabulated lengths for "first story of two story" are based on floor-to-ceiling heights of 10 feet each for the first and second story. For floor-to-ceiling heights less than assumed, use the lengths in this table or Table R608.7 (1B) or (1C), or multiply the value in the table by the reduction factor, R_2, from Table R608.7(3).

e. Tabulated lengths are based on the default design shear strength of 840 pounds per linear foot of solid wall segment. The tabulated lengths are permitted to be reduced by multiplying by the applicable reduction factor for design strength, R_3, from Table R608.7(4).

f. The reduction factors, R_1, R_2 and R_3, in Tables R608.7(2), R608.7(3), and R608.7(4), respectively, are permitted to be compounded, subject to the limitations of Note b. However, the minimum number and minimum length of solid wall segments in each wall line shall comply with Sections R608.7.1 and R608.7.2.1, respectively.

g. For intermediate values of sidewall length, endwall length, roof slope and basic wind speed, use the next higher value, or determine by interpolation.

INTERNATIONAL CODE COUNCIL®
Copyright © 2019 ICC & NYSDOS. ALL RIGHTS RESERVED. Accessed by Lauren Gualdino (lgualdino@briarcliffmanor.org), (-) Order Number #100880972 on May 08, 2020 07:05 AM (PDT) pursuant to License Agreement with ICC & NYSDOS. No further reproduction, no

100880972

TABLE R608.7(1B)
UNREDUCED LENGTH, *UR*, OF SOLID WALL REQUIRED IN EACH EXTERIOR ENDWALL FOR WIND PERPENDICULAR TO RIDGE FIRST STORY OF TWO STORY[a, c, d, e, f, g]

SIDEWALL LENGTH (feet)	ENDWALL LENGTH (feet)	ROOF SLOPE	UNREDUCED LENGTH, *UR*, OF SOLID WALL REQUIRED IN ENDWALLS FOR WIND PERPENDICULAR TO RIDGE (feet)						
			Basic Wind Speed (mph) Exposure						
			115B	120B	130B	140B	150B	160B	Minimum[b]
			—	—	110C	119C	127C	136C	
			—	—	—	110D	117D	125D	
15	15	< 1:12	2.98	3.25	3.81	4.42	5.07	5.77	2.54
		5:12	4.13	4.50	5.28	6.12	7.03	8.00	2.76
		7:12	4.31	4.70	5.51	6.39	7.34	8.35	2.87
		12:12	5.51	6.00	7.04	8.16	9.37	10.66	3.15
	30	< 1:12	2.98	3.25	3.81	4.42	5.07	5.77	2.59
		5:12	4.13	4.50	5.28	6.12	7.03	8.00	3.05
		7:12	5.09	5.55	6.51	7.55	8.67	9.86	3.26
		12:12	7.48	8.15	9.56	11.09	12.73	14.49	3.83
	45	< 1:12	2.98	3.25	3.81	4.42	5.07	5.77	2.65
		5:12	4.13	4.50	5.28	6.12	7.03	8.00	3.34
		7:12	5.88	6.40	7.51	8.71	10.00	11.37	3.65
		12:12	9.46	10.30	12.09	14.02	16.09	18.31	4.51
	60	< 1:12	2.98	3.25	3.81	4.42	5.07	5.77	2.71
		5:12	4.13	4.50	5.28	6.12	7.03	8.00	3.63
		7:12	6.66	7.25	8.51	9.87	11.32	12.89	4.04
		12:12	11.43	12.45	14.61	16.94	19.45	22.13	5.19
30	15	< 1:12	5.32	5.79	6.80	7.89	9.05	10.30	5.06
		5:12	7.39	8.04	9.44	10.95	12.57	14.30	5.47
		7:12	7.94	8.65	10.15	11.77	13.51	15.37	5.65
		12:12	9.94	10.82	12.70	14.73	16.91	19.24	6.17
	30	< 1:12	5.32	5.79	6.80	7.89	9.05	10.30	5.16
		5:12	7.39	8.04	9.44	10.95	12.57	14.30	5.98
		7:12	9.25	10.07	11.82	13.71	15.74	17.91	6.35
		12:12	13.25	14.43	16.93	19.64	22.54	25.65	7.38
	45	< 1:12	5.32	5.79	6.80	7.89	9.05	10.30	5.27
		5:12	7.39	8.04	9.44	10.95	12.57	14.30	6.50
		7:12	10.56	11.50	13.50	15.65	17.97	20.45	7.06
		12:12	16.56	18.03	21.16	24.55	28.18	32.06	8.60
	60	< 1:12	5.32	5.79	6.80	7.89	9.05	10.30	5.38
		5:12	7.39	8.04	9.44	10.95	12.57	14.30	7.01
		7:12	11.87	12.93	15.17	17.60	20.20	22.98	7.76
		12:12	19.87	21.64	25.40	29.45	33.81	38.47	9.81

(continued)

INTERNATIONAL CODE COUNCIL®
Copyright © 2019 ICC & NYSDOS. ALL RIGHTS RESERVED. Accessed by Lauren Gualdino (lgualdino@briarcliffmanor.org), (-) Order Number #100880972 on May 08, 2020 07:05 AM (PDT) pursuant to License Agreement with ICC & NYSDOS. No further reproduction, no

100880972

TABLE R608.7(1B)—continued
UNREDUCED LENGTH, *UR*, OF SOLID WALL REQUIRED IN EACH EXTERIOR ENDWALL FOR WIND PERPENDICULAR TO RIDGE FIRST STORY OF TWO STORY[a, c, d, e, f, g]

SIDEWALL LENGTH (feet)	ENDWALL LENGTH (feet)	ROOF SLOPE	UNREDUCED LENGTH, *UR*, OF SOLID WALL REQUIRED IN ENDWALLS FOR WIND PERPENDICULAR TO RIDGE (feet)						
			Basic Wind Speed (mph) Exposure						
			115B	120B	130B	140B	150B	160B	Minimum[b]
			—	—	110C	119C	127C	136C	
			—	—	—	110D	117D	125D	
60	15	< 1:12	9.87	10.74	12.61	14.62	16.79	19.10	10.10
		5:12	13.71	14.93	17.52	20.32	23.33	26.54	10.87
		7:12	15.08	16.42	19.27	22.35	25.66	29.20	11.22
		12:12	18.67	20.33	23.86	27.67	31.77	36.14	12.19
	30	< 1:12	9.87	10.74	12.61	14.62	16.79	19.10	10.30
		5:12	13.71	14.93	17.52	20.32	23.33	26.54	11.85
		7:12	17.44	18.99	22.29	25.85	29.67	33.76	12.54
		12:12	24.62	26.81	31.46	36.49	41.89	47.66	14.48
	45	< 1:12	10.27	11.18	13.12	15.21	17.47	19.87	10.50
		5:12	14.26	15.52	18.22	21.13	24.26	27.60	12.82
		7:12	20.21	22.01	25.83	29.95	34.39	39.12	13.86
		12:12	31.20	33.97	39.87	46.23	53.07	60.39	16.76
	60	< 1:12	10.64	11.59	13.60	15.77	18.11	20.60	10.70
		5:12	14.77	16.09	18.88	21.90	25.14	28.60	13.79
		7:12	23.05	25.09	29.45	34.15	39.21	44.61	15.18
		12:12	37.97	41.34	48.52	56.27	64.60	73.49	19.05

For SI: 1 inch = 25.4 mm, 1 foot = 304.8 mm, 1 mile per hour = 0.447 m/s, 1 pound force per linear foot = 0.146 kN/m, 1 pound per square foot = 47.88 Pa.

a. Tabulated lengths were derived by calculating design wind pressures in accordance with Figure 28.4-1 of ASCE 7 for a building with a mean roof height of 35 feet, topographic factor, $K_{zt,}$ equal to 1.0, and Risk Category II. For wind perpendicular to the ridge, the effects of a 2-foot overhang on each endwall are included. The design pressures were used to calculate forces to be resisted by solid wall segments in each endwall. The forces to be resisted by each wall line were then divided by the default design strength of 840 pounds per linear foot of length to determine the unreduced length, *UR*, of solid wall length required in each endwall. The actual mean roof height of the building shall not exceed the least horizontal dimension of the building.

b. Tabulated lengths in the "minimum" column are based on the requirement of Section 28.4.4 of ASCE 7 that the main windforce-resisting system be designed for a minimum pressure of 1016 psf multiplied by the wall area of the building and 8 psf multiplied by the roof area of the building projected onto a vertical plane normal to the assumed wind direction. Tabulated lengths in shaded cells are less than the "minimum" value. Where the minimum controls, it is permitted to be reduced in accordance with Notes c, d and e. See Section R608.7.1.1.

c. For buildings with a mean roof height of less than 35 feet, tabulated lengths are permitted to be reduced by multiplying by the appropriate factor, R_1, from Table R608.7(2). The reduced length shall be not less than the "minimum" value shown in the table.

d. Tabulated lengths for "one story or top story of two story" are based on a floor-to-ceiling height of 10 feet. Tabulated lengths for "first story of two story" are based on floor-to-ceiling heights of 10 feet each for the first and second story. For floor-to-ceiling heights less than assumed, use the lengths in this table or Table R608.7(1A) or (1C), or multiply the value in the table by the reduction factor, R_2, from Table R608.7(3).

e. Tabulated lengths are based on the default design shear strength of 840 pounds per linear foot of solid wall segment. The tabulated lengths are permitted to be reduced by multiplying by the applicable reduction factor for design strength, R_3, from Table R608.7(4).

f. The reduction factors, R_1, R_2 and R_3, in Tables R608.7(2), R608.7(3), and R608.7(4), respectively, are permitted to be compounded, subject to the limitations of Note b. However, the minimum number and minimum length of solid wall segments in each wall line shall comply with Sections R608.7.1 and R608.7.2.1, respectively.

g. For intermediate values of sidewall length, endwall length, roof slope and basic wind speed, use the next higher value, or determine by interpolation.

INTERNATIONAL CODE COUNCIL®
Copyright © 2019 ICC & NYSDOS. ALL RIGHTS RESERVED. Accessed by Lauren Gualdino (lgualdino@briarcliffmanor.org), (-) Order Number #100880972 on May 08, 2020 07:05 AM (PDT) pursuant to License Agreement with ICC & NYSDOS. No further reproduction, no

100880972

TABLE R608.7(1C)
UNREDUCED LENGTH, *UR*, OF SOLID WALL REQUIRED IN EACH EXTERIOR SIDEWALL FOR WIND PARALLEL TO RIDGE[a, c, d, e, f, g]

SIDEWALL LENGTH (feet)	ENDWALL LENGTH (feet)	ROOF SLOPE	UNREDUCED LENGTH, *UR*, OF SOLID WALL REQUIRED IN SIDEWALLS FOR WIND PARALLEL TO RIDGE (feet)						
			Basic Wind Speed (mph) Exposure						
			115B	120B	130B	140B	150B	160B	Minimum[b]
			—	—	110C	119C	127C	136C	
			—	—	—	110D	117D	125D	
			One story or top story of two story						
< 30	15	< 1:12	1.08	1.18	1.39	161	1.84	2.10	0.90
		5:12	1.29	1.40	1.65	1.91	2.19	2.49	1.08
		7:12	1.38	1.50	1.76	2.04	2.35	2.67	1.17
		12:12	1.63	1.78	2.09	2.42	2.78	3.16	1.39
	30	< 1:12	2.02	2.20	2.59	3.00	3.44	3.92	1.90
		5:12	2.73	2.97	3.48	4.04	4.64	5.28	2.62
		7:12	3.05	3.32	3.89	4.51	5.18	5.89	2.95
		12:12	3.93	4.27	5.02	5.82	6.68	7.60	3.86
	45	< 1:12	3.03	3.30	3.87	4.49	5.15	5.86	2.99
		5:12	4.55	4.96	5.82	6.75	7.74	8.81	4.62
		7:12	5.24	5.71	6.70	7.77	8.92	10.15	5.36
		12:12	7.16	7.79	9.14	10.61	12.17	13.85	7.39
	60	< 1:12	4.11	4.47	5.25	6.09	6.99	7.96	4.18
		5:12	6.78	7.39	8.67	10.05	11.54	13.13	7.07
		7:12	8.00	8.71	10.22	11.85	13.61	15.48	8.38
		12:12	11.35	12.36	14.51	16.82	19.31	21.97	12.00
60	45	< 1:12	3.17	3.46	4.06	4.70	5.40	6.14	2.99
		5:12	4.75	5.18	6.07	7.04	8.09	9.20	4.62
		7:12	5.47	5.96	6.99	8.11	9.31	10.59	5.36
		12:12	7.45	8.11	9.52	11.04	12.68	14.43	7.39
	60	< 1:12	4.41	4.81	5.64	6.54	7.51	8.54	4.18
		5:12	7.22	7.86	9.23	10.70	12.29	13.98	7.07
		7:12	8.50	9.25	10.86	12.59	14.46	16.45	8.38
		12:12	12.02	13.09	15.36	17.81	20.45	23.27	12.00

(continued)

INTERNATIONAL CODE COUNCIL®
Copyright © 2019 ICC & NYSDOS. ALL RIGHTS RESERVED. Accessed by Lauren Gualdino (lgualdino@briarcliffmanor.org), (-) Order Number #100880972 on May 08, 2020 07:05 AM (PDT) pursuant to License Agreement with ICC & NYSDOS. No further reproduction, no

100880972

TABLE R608.7(1C)—continued
UNREDUCED LENGTH, *UR*, OF SOLID WALL REQUIRED IN EACH EXTERIOR SIDEWALL FOR WIND PARALLEL TO RIDGE[a, c, d, e, f, g]

SIDEWALL LENGTH (feet)	ENDWALL LENGTH (feet)	ROOF SLOPE	UNREDUCED LENGTH, *UR*, OF SOLID WALL REQUIRED IN SIDEWALLS FOR WIND PARALLEL TO RIDGE (feet)						
			Basic Wind Speed Exposure (mph)						
			115B	120B	130B	140B	150B	160B	Minimum[b]
			—	—	110C	119C	127C	136C	
			—	—	—	110D	117D	125D	
			First story of two story						
< 30	15	< 1:12	3.03	3.30	3.88	4.49	5.16	5.87	2.52
		5:12	3.24	3.52	4.14	4.80	5.51	6.26	2.70
		7:12	3.33	3.62	4.25	4.93	5.66	6.44	2.79
		12:12	3.58	3.90	4.58	5.31	6.10	6.94	3.01
	30	< 1:12	5.50	5.99	7.03	8.16	9.36	10.65	5.14
		5:12	6.21	6.76	7.93	9.20	10.56	12.01	5.86
		7:12	6.52	7.10	8.34	9.67	11.10	12.63	6.19
		12:12	7.41	8.06	9.46	10.97	12.60	14.33	7.10
	45	< 1:12	8.00	8.71	10.22	11.85	13.61	15.48	7.85
		5:12	9.52	10.37	12.17	14.11	16.20	18.43	9.48
		7:12	10.21	11.12	13.05	15.14	17.38	19.77	10.21
		12:12	12.13	13.20	15.50	17.97	20.63	23.47	12.25
	60	< 1:12	10.56	11.50	13.50	15.65	17.97	20.44	10.65
		5:12	13.24	14.41	16.91	19.62	22.52	25.62	13.54
		7:12	14.45	15.73	18.46	21.41	24.58	27.97	14.85
		12:12	17.80	19.38	22.75	26.38	30.29	34.46	18.48
60	45	< 1:12	8.39	9.14	10.72	12.44	14.28	16.25	7.85
		5:12	9.97	10.86	12.74	14.78	16.97	19.30	9.48
		7:12	10.69	11.64	13.66	15.84	18.19	20.69	10.21
		12:12	12.67	13.80	16.19	18.78	21.56	24.53	12.25
	60	< 1:12	11.37	12.38	14.53	16.85	19.35	22.01	10.65
		5:12	14.18	15.44	18.12	21.02	24.13	27.45	13.54
		7:12	15.46	16.83	19.75	22.91	26.29	29.92	14.85
		12:12	18.98	20.66	24.25	28.13	32.29	36.74	18.48

For SI: 1 inch = 25.4 mm, 1 foot = 304.8 mm, 1 mile per hour = 0.447 m/s, 1 pound-force per linear foot = 0.146 kN/m, 1 pound per square foot = 47.88 Pa.

a. Tabulated lengths were derived by calculating design wind pressures in accordance with Figure 28.4-1 of ASCE 7 for a building with a mean roof height of 35 feet, topographic factor, K_{zt}, equal to 1.0, and Risk Category II. The design pressures were used to calculate forces to be resisted by solid wall segments in each sidewall. The forces to be resisted by each wall line were then divided by the default design strength of 840 pounds per linear foot of length to determine the unreduced length, *UR*, of solid wall length required in each sidewall. The actual mean roof height of the building shall not exceed the least horizontal dimension of the building.

b. Tabulated lengths in the "minimum" column are based on the requirement of Section 28.4.4 of ASCE 7 that the main windforce-resisting system be designed for a minimum pressure of 16 psf multiplied by the wall area of the building and 8 psf multiplied by the roof area of the building projected onto a vertical plane normal to the assumed wind direction. Tabulated lengths in shaded cells are less than the "minimum" value. Where the minimum controls, it is permitted to be reduced in accordance with Notes c, d and e. See Section R608.7.1.1.

c. For buildings with a mean roof height of less than 35 feet, tabulated lengths are permitted to be reduced by multiplying by the appropriate factor, R_1, from Table R608.7(2). The reduced length shall be not less than the "minimum" value shown in the table.

d. Tabulated lengths for "one story or top story of two story" are based on a floor-to-ceiling height of 10 feet. Tabulated lengths for "first story of two story" are based on floor-to-ceiling heights of 10 feet each for the first and second story. For floor-to-ceiling heights less than assumed, use the lengths in this table or Table R608.7(1A) or (1B), or multiply the value in the table by the reduction factor, R_2, from Table R608.7(3).

e. Tabulated lengths are based on the default design shear strength of 840 pounds per linear foot of solid wall segment. The tabulated lengths are permitted to be reduced by multiplying by the applicable reduction factor for design strength, R_3, from Table R608.7(4).

f. The reduction factors, R_1, R_2 and R_3, in Tables R608.7(2), R608.7(3), and R608.7(4), respectively, are permitted to be compounded, subject to the limitations of Note b. However, the minimum number and minimum length of solid walls segments in each wall line shall comply with Sections R608.7.1 and R608.7.2.1, respectively.

g. For intermediate values of sidewall length, endwall length, roof slope and basic wind speed, use the next higher value, or determine by interpolation.

INTERNATIONAL CODE COUNCIL®
Copyright © 2019 ICC & NYSDOS. ALL RIGHTS RESERVED. Accessed by Lauren Gualdino (lgualdino@briarcliffmanor.org), (-) Order Number #100880972 on May 08, 2020 07:05 AM (PDT) pursuant to License Agreement with ICC & NYSDOS. No further reproduction, no

100880972

TABLE R608.7(2)
REDUCTION FACTOR, R_1, FOR BUILDINGS WITH MEAN ROOF HEIGHT LESS THAN 35 FEET[a]

MEAN ROOF HEIGHT[b, c] (feet)	REDUCTION FACTOR R_1, FOR MEAN ROOF HEIGHT		
	Exposure category		
	B	C	D
< 15	0.96	0.84	0.87
20	0.96	0.89	0.91
25	0.96	0.93	0.94
30	0.96	0.97	0.98
35	1.00	1.00	1.00

For SI: 1 foot = 304.8 mm, 1 degree = 0.0175 rad.

a. See Section R608.7.1.1 and Note c to Table R608.7(1A) for application of reduction factors in this table. This reduction is not permitted for "minimum" values.

b. For intermediate values of mean roof height, use the factor for the next greater height, or determine by interpolation.

c. Mean roof height is the average of the roof eave height and height of the highest point on the roof surface, except that for roof slopes of less than or equal to $2^1/_8$:12 (10 degrees), the mean roof height is permitted to be taken as the roof eave height.

TABLE R608.7(3)
REDUCTION FACTOR, R_2, FOR FLOOR-TO-CEILING WALL HEIGHTS LESS THAN 10 FEET[a, b]

STORY UNDER CONSIDERATION	FLOOR-TO-CEILING HEIGHT[c] (feet)	ENDWALL LENGTH (feet)	ROOF SLOPE	REDUCTION FACTOR, R_2
Endwalls—for wind perpendicular to ridge				
One story or top story of two story	8	15	< 5:12	0.83
			7:12	0.90
			12:12	0.94
		60	< 5:12	0.83
			7:12	0.95
			12:12	0.98
First story of two story	16 combined first and second story	15	< 5:12	0.83
			7:12	0.86
			12:12	0.89
		60	< 5:12	0.83
			7:12	0.91
			12:12	0.95
Sidewalls—for wind parallel to ridge				
One story or top story of two story	8	15	< 1:12	0.84
			5:12	0.87
			7:12	0.88
			12:12	0.89
		60	< 1:12	0.86
			5:12	0.92
			7:12	0.93
			12:12	0.95
First story of two story	16 combined first and second story	15	< 1:12	0.83
			5:12	0.84
			7:12	0.85
			12:12	0.86
		60	< 1:12	0.84
			5:12	0.87
			7:12	0.88
			12:12	0.90

For SI: 1 foot = 304.8 mm.

a. See Section R608.7.1.1 and Note d to Table R608.7(1A) for application of reduction factors in this table.

b. For intermediate values of endwall length and roof slope, use the next higher value or determine by interpolation.

c. Tabulated values in Table R608.7(1A) and (1C) for "one story or top story of two story" are based on a floor-to-ceiling height of 10 feet. Tabulated values in Table R608.7(1B) and (1C) for "first story of two story" are based on floor-to-ceiling heights of 10 feet each for the first and second story. For floor-to-ceiling heights between those shown in this table and those assumed in Table R608.7(1A), (1B) or (1C), use the solid wall lengths in Table R608.7(1A), (1B) or (1C), or determine the reduction factor by interpolating between 1.0 and the factor shown in this table.

INTERNATIONAL CODE COUNCIL®
Copyright © 2019 ICC & NYSDOS. ALL RIGHTS RESERVED. Accessed by Lauren Gualdino (lgualdino@briarcliffmanor.org), (-) Order Number #100880972 on May 08, 2020 07:05 AM (PDT) pursuant to License Agreement with ICC & NYSDOS. No further reproduction, no

100880972

TABLE R608.7(4)
REDUCTION FACTOR FOR DESIGN STRENGTH, R_3, FOR FLAT, WAFFLE- AND SCREEN-GRID WALLS[a, c]

NOMINAL THICKNESS OF WALL (inches)	VERTICAL BARS AT EACH END OF SOLID WALL SEGMENT		VERTICAL REINFORCEMENT LAYOUT DETAIL [see Figure R608.7(2)]	REDUCTION FACTOR, R_3, FOR LENGTH OF SOLID WALL			
				Horizontal and vertical shear reinforcement provided			
				No		Yes[d]	
	Number of bars	Bar size		40,000[b]	60,000[b]	40,000[b]	60,000[b]
Flat walls							
4	2	4	1	0.74	0.61	0.74	0.50
	3	4	2	0.61	0.61	0.52	0.27
	2	5	1	0.61	0.61	0.48	0.25
	3	5	2	0.61	0.61	0.26	0.18
6	2	4	3	0.70	0.48	0.70	0.48
	3	4	4	0.49	0.38	0.49	0.33
	2	5	3	0.46	0.38	0.46	0.31
	3	5	4	0.38	0.38	0.32	0.16
8	2	4	3	0.70	0.47	0.70	0.47
	3	4	5	0.47	0.32	0.47	0.32
	2	5	3	0.45	0.31	0.45	0.31
	4	4	6	0.36	0.28	0.36	0.25
	3	5	5	0.31	0.28	0.31	0.16
	4	5	6	0.28	0.28	0.24	0.12
10	2	4	3	0.70	0.47	0.70	0.47
	2	5	3	0.45	0.30	0.45	0.30
	4	4	7	0.36	0.25	0.36	0.25
	6	4	8	0.25	0.22	0.25	0.13
	4	5	7	0.24	0.22	0.24	0.12
	6	5	8	0.22	0.22	0.12	0.08
Waffle-grid walls[e]							
6	2	4	3	0.78	0.78	0.70	0.48
	3	4	4	0.78	0.78	0.49	0.25
	2	5	3	0.78	0.78	0.46	0.23
	3	5	4	0.78	0.78	0.24	0.16
8	2	4	3	0.78	0.78	0.70	0.47
	3	4	5	0.78	0.78	0.47	0.24
	2	5	3	0.78	0.78	0.45	0.23
	4	4	6	0.78	0.78	0.36	0.18
	3	5	5	0.78	0.78	0.23	0.16
	4	5	6	0.78	0.78	0.18	0.13
Screen-grid walls[e]							
6	2	4	3	0.93	0.93	0.70	0.48
	3	4	4	0.93	0.93	0.49	0.25
	2	5	3	0.93	0.93	0.46	0.23
	3	5	4	0.93	0.93	0.24	0.16

For SI: 1 inch = 25.4 mm, 1,000 pounds per square inch = 6.895 MPa.

a. See Note e to Table R608.7(1A) for application of adjustment factors in this table.

b. Yield strength in pounds per square inch of vertical wall reinforcement at ends of solid wall segments.

c. Values are based on concrete with a specified compressive strength, f'_c, of 2,500 psi. Where concrete with f'_c of not less than 3,000 psi is used, values in shaded cells are permitted to be decreased by multiplying by 0.91.

d. Horizontal and vertical shear reinforcement shall be provided in accordance with Section R608.7.2.2.

e. Each end of each solid wall segment shall have rectangular flanges. In the through-the-wall dimension, the flange shall be not less than $5^1/_2$ inches for 6-inch-nominal waffle- and screen-grid walls, and not less than $7^1/_2$ inches for 8-inch-nominal waffle-grid walls. In the in-plane dimension, flanges shall be long enough to accommodate the vertical reinforcement required by the layout detail selected from Figure R608.7(2) and provide the cover required by Section R608.5.4.1. If necessary to achieve the required dimensions, form material shall be removed or use of flat wall forms is permitted.

INTERNATIONAL CODE COUNCIL®
Copyright © 2019 ICC & NYSDOS. ALL RIGHTS RESERVED. Accessed by Lauren Gualdino (lgualdino@briarcliffmanor.org), (-) Order Number #100880972 on May 08, 2020 07:05 AM (PDT) pursuant to License Agreement with ICC & NYSDOS. No further reproduction, no

100880972

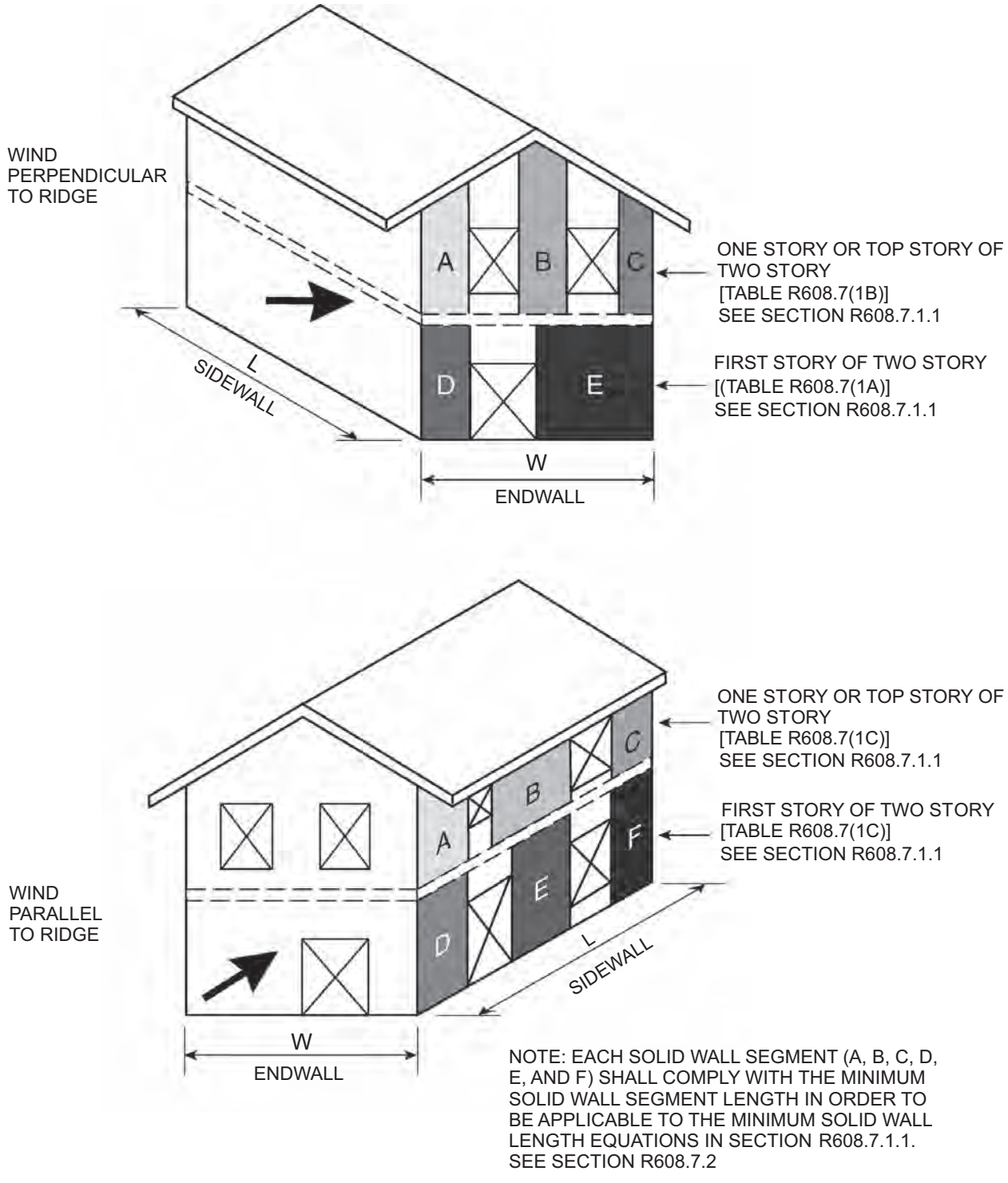

FIGURE R608.7(1)
MINIMUM SOLID WALL LENGTH

INTERNATIONAL CODE COUNCIL®
Copyright © 2019 ICC & NYSDOS. ALL RIGHTS RESERVED. Accessed by Lauren Gualdino (lgualdino@briarcliffmanor.org), (-) Order Number #100880972 on May 08, 2020 07:05 AM (PDT) pursuant to License Agreement with ICC & NYSDOS. No further reproduction, no

100880972

DETAIL NO.	NOM. WALL THICKNESS, IN.	REINFORCEMENT LAYOUT AT ENDS OF SOLID WALL SEGMENTS	NOTES
1	4	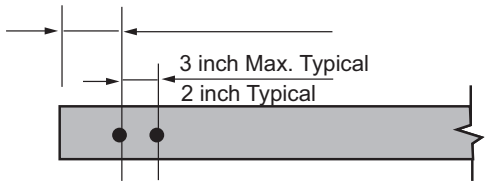	For SI: 1 inch = 25.4 mm. 1. See Table R608.7(4) for use of details.
2	4		2. Minimum length of solid wall segment and size and grade of reinforcement in each end of each solid wall segment shall be determined from Table R608.7(4).
3	6 8 10		3.. For minimum cover requirements, see Section R608.5.4.1.
4	6		4.. For details 3 - 8 where two or more bars are in the same row parallel to the end of the segment, place bars so that corner bars are as close to the sides of the wall segments as minimum cover requirements of Section R608.5.4.1 will permit.
5	8	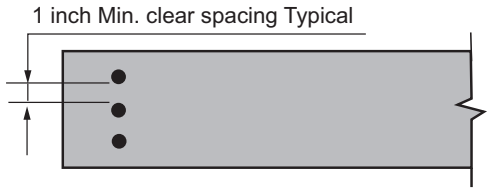	
6	8		5.. For waffle- and screen-grid walls, each end of each solid wall segment shall have rectangular flanges. In the through-the-wall dimension, the flange shall be not less than 5½ inches for 6-inch nominal waffle- and screen-grid forms, and not less than 7½ inches for 8-inch nominal waffle-grid forms. In the in-plane dimension, flanges shall be long enough to accommodate the vertical reinforcement required by the layout detail selected and provide the cover required by Section R608.5.4.1. If necessary to achieve the required dimensions, form material shall be removed or flat wall forms are permitted. See Table R608.7(4), Note e.
7	10		
8	10	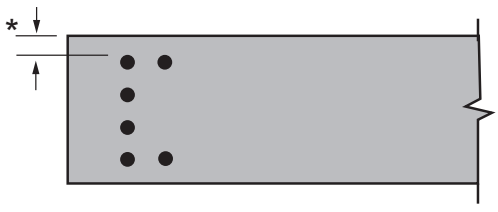 * For minimum cover see Section R608.5.4.1	

FIGURE R608.7(2)
VERTICAL REINFORCEMENT LAYOUT DETAIL

INTERNATIONAL CODE COUNCIL®
Copyright © 2019 ICC & NYSDOS. ALL RIGHTS RESERVED. Accessed by Lauren Gualdino (lgualdino@briarcliffmanor.org), (-) Order Number #100880972 on May 08, 2020 07:05 AM (PDT) pursuant to License Agreement with ICC & NYSDOS. No further reproduction, no

100880972

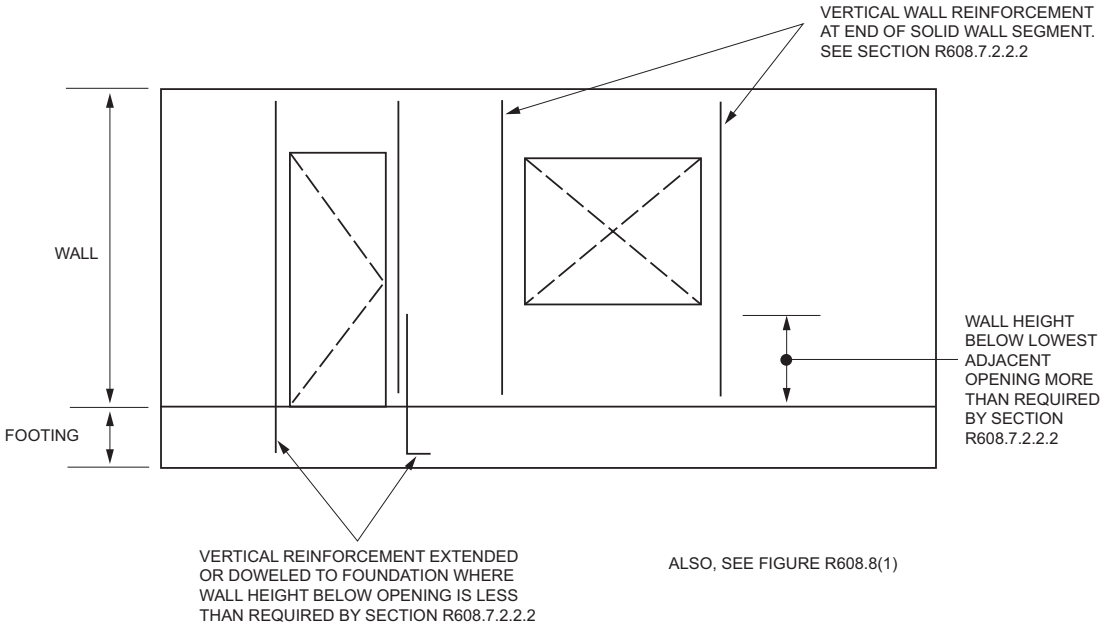

FIGURE R608.7(3)
VERTICAL WALL REINFORCEMENT ADJACENT TO WALL OPENINGS

To facilitate determining the required wall thickness, wall type, number and *grade* of vertical bars at each end of each solid wall segment, and whether shear reinforcement is required, use of Equation R6-2 is permitted.

$$R \le \frac{TL}{R_1 \times R_2 \times UR} \qquad \textbf{(Equation R6-2)}$$

After determining the maximum permitted value of the reduction factor for design strength, R_3, in accordance with Equation R6-2, select a wall type from Table R608.7(4) with R_3 less than or equal to the value calculated.

R608.7.2 Solid wall segments. Solid wall segments that contribute to the required length of solid wall shall comply with this section. Reinforcement shall be provided in accordance with Section R608.7.2.2 and Table R608.7(4). Solid wall segments shall extend the full story-height without openings, other than openings for the utilities and other building services passing through the wall. In flat walls and waffle-grid walls, such openings shall have an area of less than 30 square inches (19 355 mm^2) without any dimension exceeding $6^1/_4$ inches (159 mm), and shall not be located within 6 inches (152 mm) of the side edges of the solid wall segment. In screen-grid walls, such openings shall be located in the portion of the solid wall segment between horizontal and vertical cores of concrete and opening size and location are not restricted provided there is not any concrete removed.

R608.7.2.1 Minimum length of solid wall segment and maximum spacing. Only solid wall segments equal to or greater than 24 inches (610 mm) in length shall be included in the total length of solid wall required by Section R608.7.1. In addition, not more than two solid wall segments equal to or greater than 24 inches (610 mm) in length and less than 48 inches (1219 mm) in length shall be included in the required total length of solid wall. The maximum clear opening width shall be 18 feet (5486 mm). See Figure R608.7(1).

R608.7.2.2 Reinforcement in solid wall segments.

R608.7.2.2.1 Horizontal shear reinforcement. Where reduction factors for design strength, R_3, from Table R608.7(4) based on horizontal and vertical shear reinforcement being provided are used, solid wall segments shall have horizontal reinforcement consisting of minimum No. 4 bars. Horizontal shear reinforcement shall be the same grade of steel required for the vertical reinforcement at the ends of solid wall segments by Section R608.7.2.2.2.

The spacing of horizontal reinforcement shall not exceed the smaller of one-half the length of the solid wall segment, minus 2 inches (51 mm), and 18 inches (457 mm). Horizontal shear reinforcement shall terminate in accordance with Section R608.6.4.

R608.7.2.2.2 Vertical reinforcement. Vertical reinforcement applicable to the reduction factor(s) for design strength, R_3, from Table R608.7(4) that is used, shall be located at each end of each solid wall segment in accordance with the applicable detail in Figure R608.7(2). The No. 4 vertical bar required on each side of an opening by Section R608.8.1.2 is permitted to be used as reinforcement at the ends of solid wall segments where installed in accordance with the applicable detail in Figure R608.7(2). There shall be not less than two No. 4 bars at each end of solid wall segments located as required by the applicable detail in Figure R608.7(2). One of the bars at

INTERNATIONAL CODE COUNCIL®
Copyright © 2019 ICC & NYSDOS. ALL RIGHTS RESERVED. Accessed by Lauren Gualdino (lgualdino@briarcliffmanor.org), (-) Order Number #100880972 on May 08, 2020 07:05 AM (PDT) pursuant to License Agreement with ICC & NYSDOS. No further reproduction, no

100880972

each end of solid wall segments shall be deemed to meet the requirements for vertical wall reinforcement required by Section R608.6.

The vertical wall reinforcement at each end of each solid wall segment shall be developed below the bottom of the adjacent wall opening [see Figure R608.7(3)] by one of the following methods:

1. Where the wall height below the bottom of the adjacent opening is equal to or greater than 22 inches (559 mm) for No. 4 or 28 inches (711 mm) for No. 5 vertical wall reinforcement, reinforcement around openings in accordance with Section R608.8.1 shall be sufficient.
2. Where the wall height below the bottom of the adjacent opening is less than required by Item 1, the vertical wall reinforcement adjacent to the opening shall extend into the footing far enough to develop the bar in tension in accordance with Section R608.5.4.4 and Figure R608.5.4(2), or shall be lap-spliced with a dowel that is embedded in the footing far enough to develop the dowel-bar in tension.

R608.7.2.2.3 Vertical shear reinforcement. Where reduction factors for design strength, R_3, from Table R608.7(4) based on horizontal and vertical shear reinforcement being provided are used, solid wall segments shall have vertical reinforcement consisting of minimum No. 4 bars. Vertical shear reinforcement shall be the same grade of steel required by Section R608.7.2.2.2 for the vertical reinforcement at the ends of solid wall segments. The spacing of vertical reinforcement throughout the length of the segment shall not exceed the smaller of one third the length of the segment, and 18 inches (457 mm). Vertical shear reinforcement shall be continuous between stories in accordance with Section R608.6.3, and shall terminate in accordance with Section R608.6.4. Vertical shear reinforcement required by this section is permitted to be used for vertical reinforcement required by Table R608.6(1), R608.6(2), R608.6(3) or R608.6(4), whichever is applicable.

R608.7.2.3 Solid wall segments at corners. At all interior and exterior corners of exterior walls, a solid wall segment shall extend the full height of each wall *story*. The segment shall have the length required to develop the horizontal reinforcement above and below the adjacent opening in tension in accordance with Section R608.5.4.4. For an exterior corner, the limiting dimension is measured on the outside of the wall, and for an interior corner the limiting dimension is measured on the inside of the wall. See Section R608.8.1. The length of a segment contributing to the required length of solid wall shall comply with Section R608.7.2.1.

The end of a solid wall segment complying with the minimum length requirements of Section R608.7.2.1 shall be located not more than 6 feet (1829 mm) from each corner.

R608.8 Requirements for lintels and reinforcement around openings.

R608.8.1 Reinforcement around openings. Reinforcement shall be provided around openings in walls equal to or greater than 2 feet (610 mm) in width in accordance with this section and Figure R608.8(1), in addition to the minimum wall reinforcement required by Sections R404.1.3, R608.6 and R608.7. Vertical wall reinforcement required by this section is permitted to be used as reinforcement at the ends of solid wall segments required by Section R608.7.2.2.2 provided it is located in accordance with Section R608.8.1.2. Wall openings shall have a minimum depth of concrete over the width of the opening of 8 inches (203 mm) in flat walls and waffle-grid walls, and 12 inches (305 mm) in screen-grid walls. Wall openings in waffle-grid and screen-grid walls shall be located such that not less than one-half of a vertical core occurs along each side of the opening.

R608.8.1.1 Horizontal reinforcement. Lintels complying with Section R608.8.2 shall be provided above wall openings equal to or greater than 2 feet (610 mm) in width.

Openings equal to or greater than 2 feet (610 mm) in width shall have not less than one No. 4 bar placed within 12 inches (305 mm) of the bottom of the opening. See Figure R608.8(1).

Horizontal reinforcement placed above and below an opening shall extend beyond the edges of the opening the dimension required to develop the bar in tension in accordance with Section R608.5.4.4.

Exception: Continuous horizontal wall reinforcement placed within 12 inches (305 mm) of the top of the wall *story* as required in Sections R404.1.3.2 and R608.6.2 is permitted in lieu of top or bottom lintel reinforcement required by Section R608.8.2 provided that the continuous horizontal wall reinforcement meets the location requirements specified in Figures R608.8(2), R608.8(3), and R608.8(4) and the size requirements specified in Tables R608.8(2) through R608.8(10).

R608.8.1.2 Vertical reinforcement. Not less than one No. 4 bar [Grade 40 (280 MPa)] shall be provided on each side of openings equal to or greater than 2 feet (610 mm) in width. The vertical reinforcement required by this section shall extend the full height of the wall story and shall be located within 12 inches (305 mm) of each side of the opening. The vertical reinforcement required on each side of an opening by this section is permitted to serve as reinforcement at the ends of solid wall segments in accordance with Section R608.7.2.2.2, provided it is located as required by the applicable detail in Figure R608.7(2). Where the vertical reinforcement required by this section is used to satisfy the requirements of Section R608.7.2.2.2 in waffle- and screen-grid walls, a concrete flange shall be created at the ends of the solid wall segments in accordance with Table R608.7(4), Note e. In the top-most story, the reinforcement shall terminate in accordance with Section R608.6.4.

INTERNATIONAL CODE COUNCIL®
Copyright © 2019 ICC & NYSDOS. ALL RIGHTS RESERVED. Accessed by Lauren Gualdino (lgualdino@briarcliffmanor.org), (-) Order Number #100880972 on May 08, 2020 07:05 AM (PDT) pursuant to License Agreement with ICC & NYSDOS. No further reproduction, no

100880972

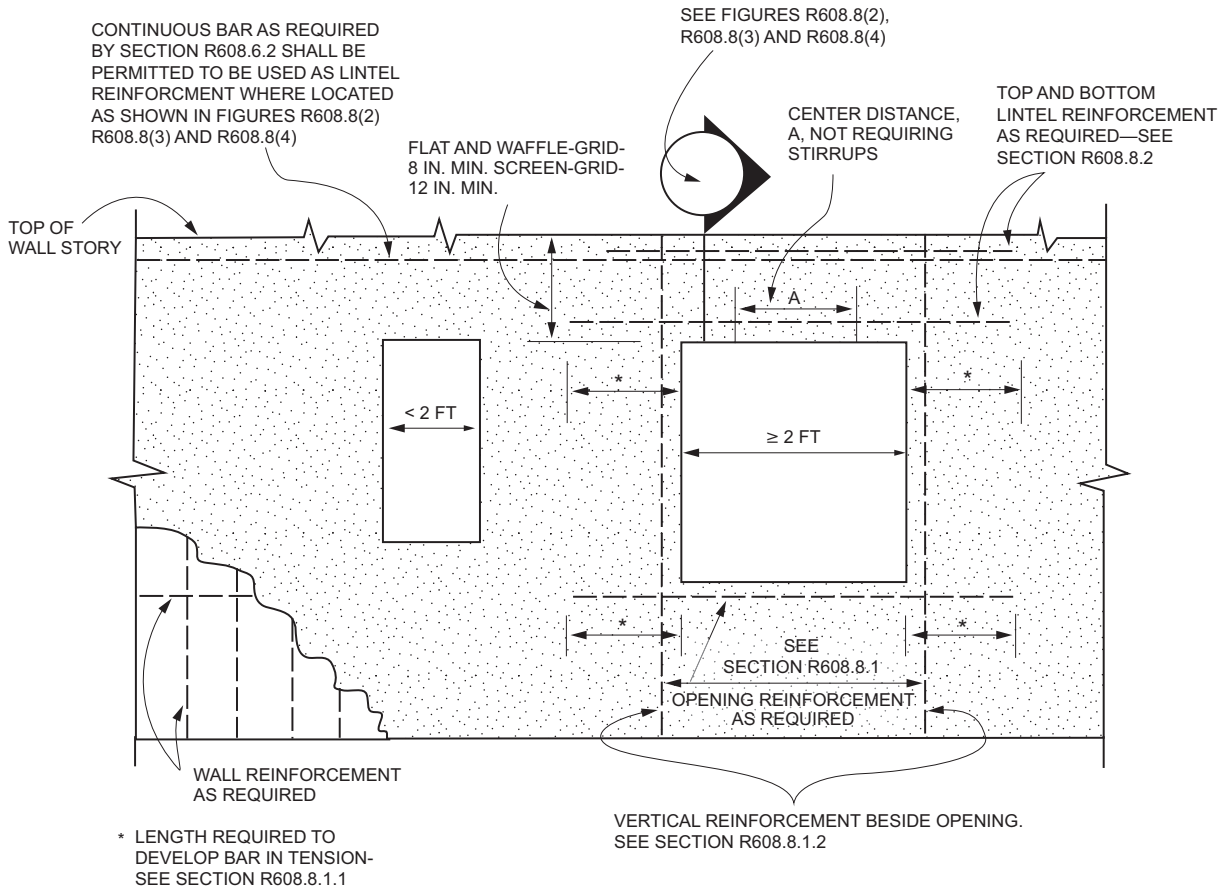

ELEVATION OF WALL

For SI: 1 inch = 25.4 mm, 1 foot = 304.8 mm.

FIGURE R608.8(1)
REINFORCEMENT OF OPENINGS

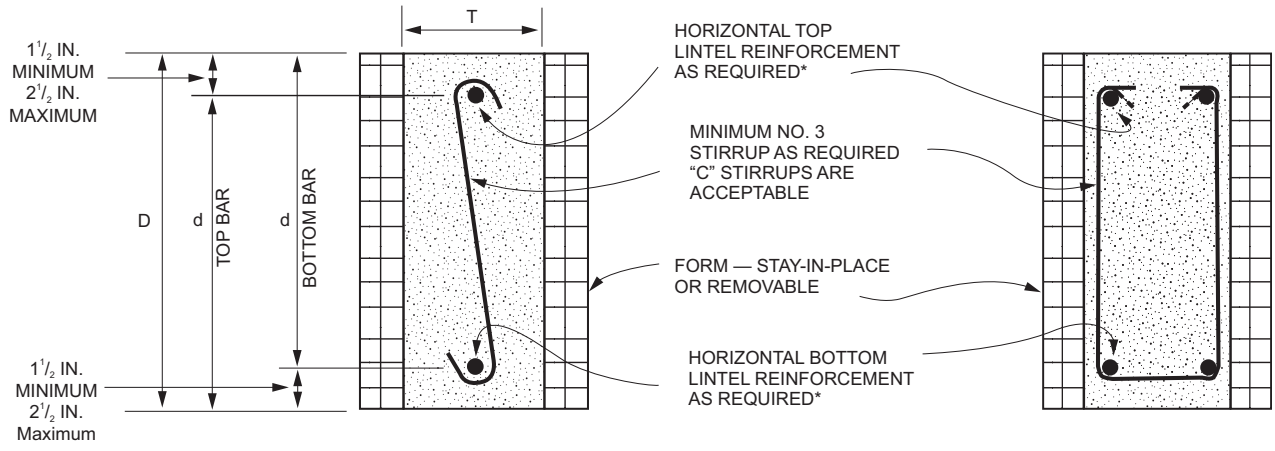

* FOR BUNDLED BARS, SEE SECTION R608.8.2.2.
SECTION CUT THROUGH FLAT WALL LINTEL

For SI: 1 inch = 25.4 mm.

FIGURE R608.8(2)
LINTEL FOR FLAT WALLS

INTERNATIONAL CODE COUNCIL®
Copyright © 2019 ICC & NYSDOS. ALL RIGHTS RESERVED. Accessed by Lauren Gualdino (lgualdino@briarcliffmanor.org), (-) Order Number #100880972 on May 08, 2020 07:05 AM (PDT) pursuant to License Agreement with ICC & NYSDOS. No further reproduction, no

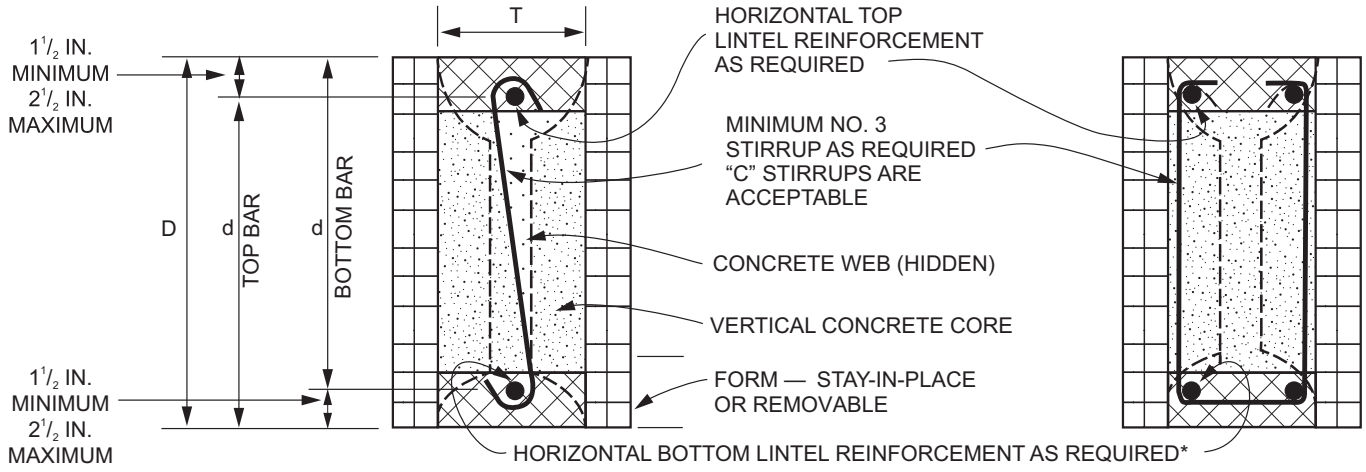

(a) SINGLE FORM HEIGHT SECTION CUT THROUGH VERTICAL CORE OF A WAFFLE-GRID LINTEL

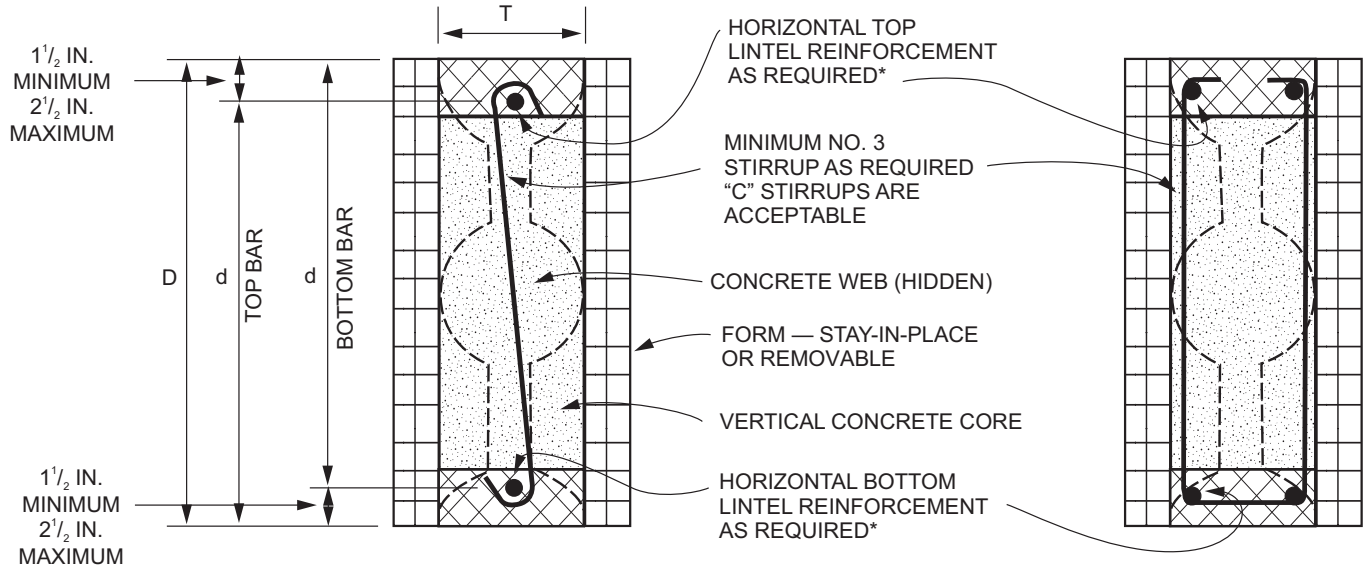

(b) DOUBLE FORM HEIGHT SECTION CUT THROUGH VERTICAL CORE OF A WAFFLE-GRID LINTEL

*FOR BUNDLED BARS, SEE SECTION R608.8.2.2.

NOTE: CROSS HATCHING REPRESENTS THE AREA IN WHICH FORM MATERIAL SHALL BE REMOVED, IF NECESSARY, TO CREATE FLANGES CONTINUOUS THE LENGTH OF THE LINTEL. FLANGES SHALL HAVE A MINIMUM THICKNESS OF 3 IN., AND A MINIMUM WIDTH OF 5 IN. AND 7 IN. IN 6 IN. NOMINAL AND 8 IN. NOMINAL WAFFLE-GRID WALLS, RESPECTIVELY. SEE NOTE a TO TABLES R608.8(6) AND R608.8(10).

For SI: 1 inch = 25.4 mm.

FIGURE R608.8(3)
LINTELS FOR WAFFLE-GRID WALLS

INTERNATIONAL CODE COUNCIL®
Copyright © 2019 ICC & NYSDOS. ALL RIGHTS RESERVED. Accessed by Lauren Gualdino (lgualdino@briarcliffmanor.org), (-) Order Number #100880972 on May 08, 2020 07:05 AM (PDT) pursuant to License Agreement with ICC & NYSDOS. No further reproduction, no

100880972

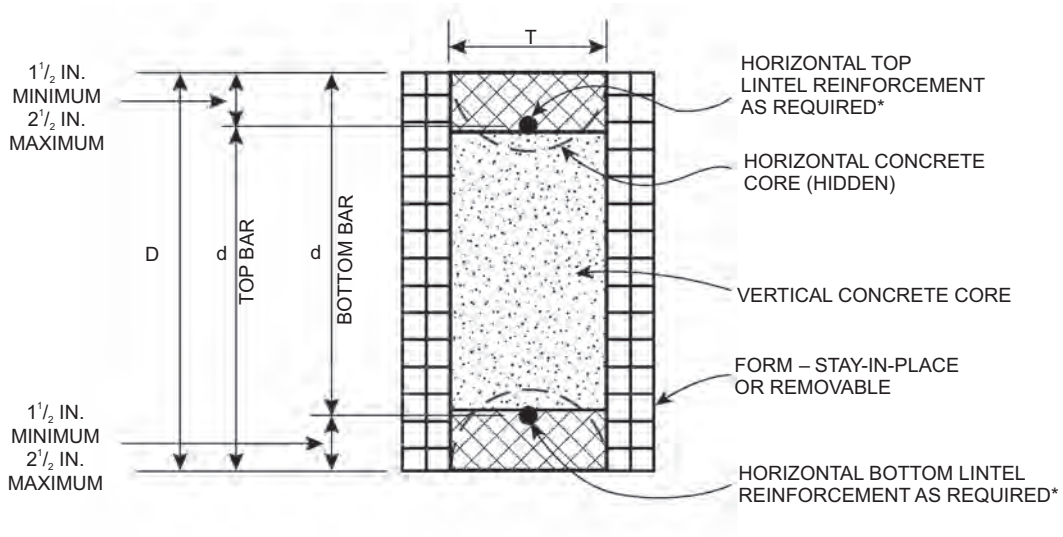

(a) SINGLE FORM HEIGHT SECTION CUT THROUGH VERTICAL CORE OF A SCREEN-GRID LINTEL

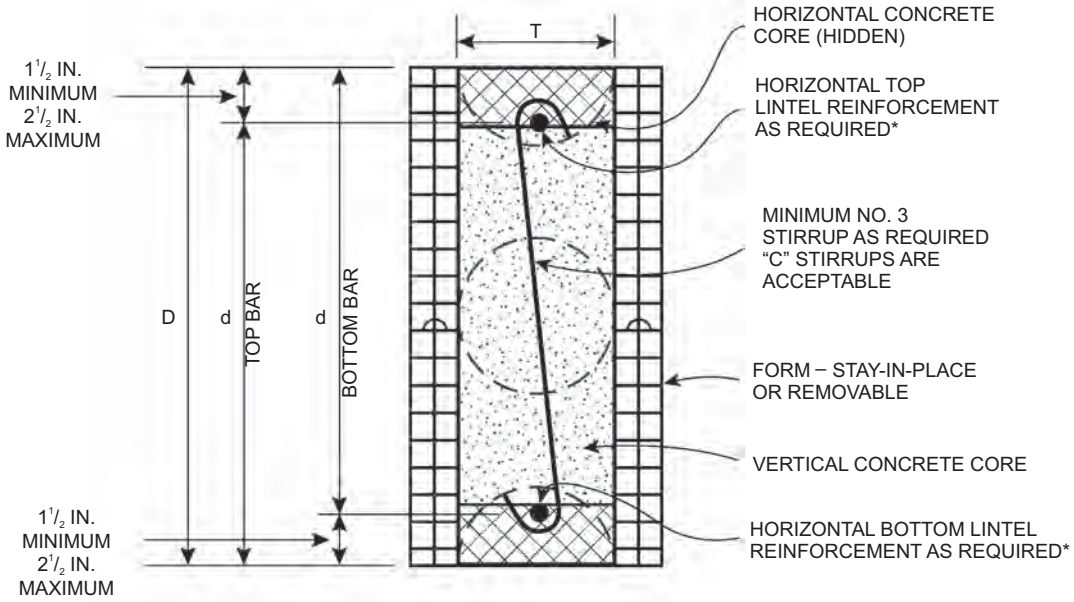

(b) DOUBLE FORM HEIGHT SECTION CUT THROUGH VERTICAL CORE OF A SCREEN-GRID LINTEL

*FOR BUNDLED BARS, SEE SECTION R608.8.2.2

NOTE: CROSS HATCHING REPRESENTS THE AREA IN WHICH FORM MATERIAL SHALL BE REMOVED, IF NECESSARY, TO CREATE FLANGES CONTINUOUS THE LENGTH OF THE LINTEL. FLANGES SHALL HAVE A MINIMUM THICKNESS OF 2.5 IN. AND A MINIMUM WIDTH OF 5 IN. SEE NOTE a TO TABLES R608.8(8) AND R608.8(10).

For SI: 1 inch = 25.4 mm.

FIGURE R608.8(4)
LINTELS FOR SCREEN-GRID WALLS

INTERNATIONAL CODE COUNCIL®
Copyright © 2019 ICC & NYSDOS. ALL RIGHTS RESERVED. Accessed by Lauren Gualdino (lgualdino@briarcliffmanor.org), (-) Order Number #100880972 on May 08, 2020 07:05 AM (PDT) pursuant to License Agreement with ICC & NYSDOS. No further reproduction, no

100880972

TABLE R608.8(1)
LINTEL DESIGN LOADING CONDITIONS[a, b, d]

DESCRIPTION OF LOADS AND OPENINGS ABOVE INFLUENCING DESIGN OF LINTEL			DESIGN LOAD CONDITION[c]
Opening in wall of top story of two-story building, or first story of one-story building			
Wall supporting loads from roof, including attic floor, if applicable, and	Top of lintel equal to or less than W/2 below top of wall		2
	Top of lintel greater than W/2 below top of wall		NLB
Wall not supporting loads from roof or attic floor			NLB
Opening in wall of first story of two-story building where wall immediately above is of concrete construction, or opening in basement wall of one-story building where wall immediately above is of concrete construction			
LB ledger board mounted to side of wall with bottom of ledger less than or equal to W/2 above top of lintel, and	Top of lintel greater than W/2 below bottom of opening in story above		1
	Top of lintel less than or equal to W/2 below bottom of opening in story above, and	Opening is entirely within the footprint of the opening in the story above	1
		Opening is partially within the footprint of the opening in the story above	4
LB ledger board mounted to side of wall with bottom of ledger more than W/2 above top of lintel			NLB
NLB ledger board mounted to side of wall with bottom of ledger less than or equal to W/2 above top of lintel, or no ledger board, and	Top of lintel greater than W/2 below bottom of opening in story above		NLB
	Top of lintel less than or equal to W/2 below bottom of opening in story above, and	Opening is entirely within the footprint of the opening in the story above	NLB
		Opening is partially within the footprint of the opening in the story above	1
Opening in basement wall of two-story building where walls of two stories above are of concrete construction			
LB ledger board mounted to side of wall with bottom of ledger less than or equal to W/2 above top of lintel, and	Top of lintel greater than W/2 below bottom of opening in story above		1
	Top of lintel less than or equal to W/2 below bottom of opening in story above, and	Opening is entirely within the footprint of the opening in the story above	1
		Opening is partially within the footprint of the opening in the story above	5
LB ledger board mounted to side of wall with bottom of ledger more than W/2 above top of lintel			NLB
NLB ledger board mounted to side of wall with bottom of ledger less than or equal to W/2 above top of lintel, or no ledger board, and	Top of lintel greater than W/2 below bottom of opening in story above		NLB
	Top of lintel less than or equal to W/2 below bottom of opening in story above, and	Opening is entirely within the footprint of the opening in the story above	NLB
		Opening is partially within the footprint of the opening in the story above	1
Opening in wall of first story of two-story building where wall immediately above is of light-framed construction, or opening in basement wall of one-story building where wall immediately above is of light-framed construction			
Wall supporting loads from roof, second floor and top-story wall of light-framed construction, and	Top of lintel equal to or less than W/2 below top of wall		3
	Top of lintel greater than W/2 below top of wall		NLB
Wall not supporting loads from roof or second floor			NLB

a. LB means load bearing, NLB means nonload bearing, and W means width of opening.
b. Footprint is the area of the wall below an opening in the story above, bounded by the bottom of the opening and vertical lines extending downward from the edges of the opening.
c. For design loading condition "NLB" see Tables R608.8(9) and R608.8(10). For all other design loading conditions, see Tables R608.8(2) through R608.8(8).
d. An NLB ledger board is a ledger attached to a wall that is parallel to the span of the floor, roof or ceiling framing that supports the edge of the floor, ceiling or roof.

INTERNATIONAL CODE COUNCIL®
Copyright © 2019 ICC & NYSDOS. ALL RIGHTS RESERVED. Accessed by Lauren Gualdino (lgualdino@briarcliffmanor.org), (-) Order Number #100880972 on May 08, 2020 07:05 AM (PDT) pursuant to License Agreement with ICC & NYSDOS. No further reproduction, no

100880972

TABLE R608.8(2)
MAXIMUM ALLOWABLE CLEAR SPANS FOR 4-INCH-NOMINAL THICK FLAT LINTELS IN LOAD-BEARING WALLS[a, b, c, d, e, f, m]
ROOF CLEAR SPAN 40 FEET AND FLOOR CLEAR SPAN 32 FEET

LINTEL DEPTH, D[g] (inches)	NUMBER OF BARS AND BAR SIZE IN TOP AND BOTTOM OF LINTEL	STEEL YIELD STRENGTH[h], f_y (psi)	DESIGN LOADING CONDITION DETERMINED FROM TABLE R608.8(1)								
			1	2		3		4		5	
			Maximum ground snow load (psf)								
			—	30	70	30	70	30	70	30	70
			Maximum clear span of lintel (feet - inches)								
8	Span without stirrups[i, j]		3-2	3-4	2-4	2-6	2-2	2-1	2-0	2-0	2-0
	1-#4	40,000	5-2	5-5	4-1	4-3	3-10	3-7	3-4	2-9	2-9
		60,000	6-2	6-5	4-11	5-1	4-6	4-2	3-8	2-11	2-10
	1-#5	40,000	6-3	6-7	5-0	5-2	4-6	4-2	3-8	2-11	2-10
		60,000	DR	DR	DR	DR	DR	DR	DR	DR	DR
	Center distance A[k, l]		1-1	1-2	0-8	0-9	0-7	0-6	0-5	0-4	0-4
12	Span without stirrups[i, j]		3-4	3-7	2-9	2-11	2-8	2-6	2-5	2-2	2-2
	1-#4	40,000	6-7	7-0	5-4	5-7	5-0	4-9	4-4	3-8	3-7
		60,000	7-11	8-6	6-6	6-9	6-0	5-9	5-3	4-5	4-4
	1-#5	40,000	8-1	8-8	6-7	6-10	6-2	5-10	5-4	4-6	4-5
		60,000	9-8	10-4	7-11	8-2	7-4	6-11	6-2	4-10	4-8
	2-#4 1-#6	40,000	9-1	9-8	7-4	7-8	6-10	6-6	6-0	4-10	4-8
		60,000	DR	DR	DR	DR	DR	DR	DR	DR	DR
	Center distance A[k, l]		1-8	1-11	1-1	1-3	1-0	0-11	0-9	0-6	0-6
16	Span without stirrups[i, j]		4-7	5-0	3-11	4-0	3-8	3-7	3-4	3-1	3-0
	1-#4	40,000	6-8	7-3	5-6	5-9	5-2	4-11	4-6	3-10	3-8
		60,000	9-3	10-1	7-9	8-0	7-2	6-10	6-3	5-4	5-2
	1-#4	40,000	9-6	10-4	7-10	8-2	7-4	6-11	6-5	5-5	5-3
		60,000	11-5	12-5	9-6	9-10	8-10	8-4	7-9	6-6	6-4
	2-#4 1-#6	40,000	10-7	11-7	8-10	9-2	8-3	7-9	7-2	6-1	5-11
		60,000	12-9	13-10	10-7	11-0	9-10	9-4	8-7	6-9	6-6
	2-#5	40,000	13-0	14-1	10-9	11-2	9-11	9-2	8-2	6-6	6-3
		60,000	DR	DR	DR	DR	DR	DR	DR	DR	DR
	Center distance A[k, l]		2-3	2-8	1-7	1-8	1-4	1-3	1-0	0-9	0-8
20	Span without stirrups A[i, j]		5-9	6-5	5-0	5-2	4-9	4-7	4-4	3-11	3-11
	1-#4	40,000	7-5	8-2	6-3	6-6	5-10	5-7	5-1	4-4	4-2
		60,000	9-0	10-0	7-8	7-11	7-1	6-9	6-3	5-3	5-1
	1-#5	40,000	9-2	10-2	7-9	8-1	7-3	6-11	6-4	5-4	5-2
		60,000	12-9	14-2	10-10	11-3	10-1	9-7	8-10	7-5	7-3
	2-#4 1-#6	40,000	11-10	13-2	10-1	10-5	9-4	8-11	8-2	6-11	6-9
		60,000	14-4	15-10	12-1	12-7	11-3	10-9	9-11	8-4	8-1
	2-#5	40,000	14-7	16-2	12-4	12-9	11-4	10-6	9-5	7-7	7-3
		60,000	17-5	19-2	14-9	15-3	13-5	12-4	11-0	8-8	8-4
	2-#6	40,000	16-4	18-11	12-7	13-3	11-4	10-6	9-5	7-7	7-3
		60,000	DR	DR	DR	DR	DR	DR	DR	DR	DR
	Center distance A[k, l]		2-9	3-5	2-0	2-2	1-9	1-7	1-4	0-11	0-11

(continued)

INTERNATIONAL CODE COUNCIL®
Copyright © 2019 ICC & NYSDOS. ALL RIGHTS RESERVED. Accessed by Lauren Gualdino (lgualdino@briarcliffmanor.org), (-) Order Number #100880972 on May 08, 2020 07:05 AM (PDT) pursuant to License Agreement with ICC & NYSDOS. No further reproduction, no

100880972

TABLE R608.8(2)—continued
MAXIMUM ALLOWABLE CLEAR SPANS FOR 4-INCH-NOMINAL THICK FLAT LINTELS IN LOAD-BEARING WALLS[a, b, c, d, e, f, m]
ROOF CLEAR SPAN 40 FEET AND FLOOR CLEAR SPAN 32 FEET

LINTEL DEPTH, D [g] (inches)	NUMBER OF BARS AND BAR SIZE IN TOP AND BOTTOM OF LINTEL	STEEL YIELD STRENGTH[h], f_y (psi)	DESIGN LOADING CONDITION DETERMINED FROM TABLE R608.8(1)								
			1	2		3		4		5	
			Maximum ground snow load (psf)								
			—	30	70	30	70	30	70	30	70
			Maximum clear span of lintel (feet - inches)								
24	Span without stirrups[i, j]		6-11	7-9	6-1	6-3	5-9	5-7	5-3	4-9	4-8
	1-#4	40,000	8-0	9-0	6-11	7-2	6-5	6-2	5-8	4-9	4-8
		60,000	9-9	11-0	8-5	8-9	7-10	7-6	6-11	5-10	5-8
	1-#5	40,000	10-0	11-3	8-7	8-11	8-0	7-7	7-0	5-11	5-9
		60,000	13-11	15-8	12-0	12-5	11-2	10-7	9-10	8-3	8-0
	2-#4 1-#6	40,000	12-11	14-6	11-2	11-6	10-5	9-10	9-1	7-8	7-5
		60,000	15-7	17-7	13-6	13-11	12-7	11-11	11-0	9-3	9-0
	2-#5	40,000	15-11	17-11	13-7	14-3	12-8	11-9	10-8	8-7	8-4
		60,000	19-1	21-6	16-5	17-1	15-1	14-0	12-6	9-11	9-7
	2-#6	40,000	17-7	21-1	14-1	14-10	12-8	11-9	10-8	8-7	8-4
		60,000	DR	DR	DR	DR	DR	DR	DR	DR	DR
	Center distance A[k, l]		3-3	4-1	2-5	2-7	2-1	1-11	1-7	1-2	1-1

For SI: 1 inch = 25.4 mm, 1 foot = 304.8 mm, 1 pound per square inch = 6.895 kPa, 1 pound per square foot = 0.0479 kPa, Grade 40 = 280 MPa, Grade 60 = 420 MPa.

a. See Table R608.3 for tolerances permitted from nominal thickness.

b. Table values are based on concrete with a minimum specified compressive strength of 2,500 psi. See Note j.

c. Table values are based on uniform loading. See Section R608.8.2 for lintels supporting concentrated loads.

d. Deflection criterion is $L/240$, where L is the clear span of the lintel in inches, or $^1/_2$-inch, whichever is less.

e. Linear interpolation is permitted between ground snow loads and between lintel depths.

f. DR indicates design required.

g. Lintel depth, D, is permitted to include the available height of wall located directly above the lintel, provided that the increased lintel depth spans the entire length of the lintel.

h. Stirrups shall be fabricated from reinforcing bars with the same yield strength as that used for the main longitudinal reinforcement.

i. Allowable clear span without stirrups applicable to all lintels of the same depth, D. Top and bottom reinforcement for lintels without stirrups shall be not less than the least amount of reinforcement required for a lintel of the same depth and loading condition with stirrups. All other spans require stirrups spaced at not more than $d/2$.

j. Where concrete with a minimum specified compressive strength of 3,000 psi is used, clear spans for lintels without stirrups shall be permitted to be multiplied by 1.05. If the increased span exceeds the allowable clear span for a lintel of the same depth and loading condition with stirrups, the top and bottom reinforcement shall be equal to or greater than that required for a lintel of the same depth and loading condition that has an allowable clear span that is equal to or greater than that of the lintel without stirrups that has been increased.

k. Center distance, A, is the center portion of the clear span where stirrups are not required. This is applicable to all longitudinal bar sizes and steel yield strengths.

l. Where concrete with a minimum specified compressive strength of 3,000 psi is used, center distance, A, shall be permitted to be multiplied by 1.10.

m. The maximum clear opening width between two solid wall segments shall be 18 feet. See Section R608.7.2.1. Lintel clear spans in the table greater than 18 feet are shown for interpolation and information only.

INTERNATIONAL CODE COUNCIL®
Copyright © 2019 ICC & NYSDOS. ALL RIGHTS RESERVED. Accessed by Lauren Gualdino (lgualdino@briarcliffmanor.org), (-) Order Number #100880972 on May 08, 2020 07:05 AM (PDT) pursuant to License Agreement with ICC & NYSDOS. No further reproduction, no

100880972

TABLE R608.8(3)
MAXIMUM ALLOWABLE CLEAR SPANS FOR 6-INCH-NOMINAL THICK FLAT LINTELS IN LOAD-BEARING WALLS[a, b, c, d, e, f, m]
ROOF CLEAR SPAN 40 FEET AND FLOOR CLEAR SPAN 32 FEET

LINTEL DEPTH, D [g] (inches)	NUMBER OF BARS AND BAR SIZE IN TOP AND BOTTOM OF LINTEL	STEEL YIELD STRENGTH[h], f_y (psi)	DESIGN LOADING CONDITION DETERMINED FROM TABLE R608.8(1)								
			1	2		3		4		5	
			Maximum ground snow load (psf)								
			—	30	70	30	70	30	70	30	70
			Maximum clear span of lintel (feet - inches)								
8	Span without stirrups[i, j]		4-2	4-8	3-1	3-3	2-10	2-6	2-3	2-0	2-0
	1-#4	40,000	5-1	5-5	4-2	4-3	3-10	3-6	3-3	2-8	2-7
		60,000	6-2	6-7	5-0	5-2	4-8	4-2	3-11	3-3	3-2
	1-#5	40,000	6-3	6-8	5-1	5-3	4-9	4-3	4-0	3-3	3-2
		60,000	7-6	8-0	6-1	6-4	5-8	5-1	4-9	3-8	3-6
	2-#4 1-#6	40,000	7-0	7-6	5-8	5-11	5-3	4-9	4-5	3-8	3-6
		60,000	DR	DR	DR	DR	DR	DR	DR	DR	DR
	Center distance A[k, l]		1-7	1-10	1-1	1-2	0-11	0-9	0-8	0-5	0-5
12	Span without stirrups[i, j]		4-2	4-8	3-5	3-6	3-2	2-11	2-9	2-5	2-4
	1-#4	40,000	5-7	6-1	4-8	4-10	4-4	3-11	3-8	3-0	2-11
		60,000	7-9	8-6	6-6	6-9	6-1	5-6	5-1	4-3	4-1
	1-#5	40,000	7-11	8-8	6-8	6-11	6-2	5-7	5-2	4-4	4-2
		60,000	9-7	10-6	8-0	8-4	7-6	6-9	6-3	5-2	5-1
	2-#4 1-#6	40,000	8-11	9-9	7-6	7-9	6-11	6-3	5-10	4-10	4-8
		60,000	10-8	11-9	8-12	9-4	8-4	7-6	7-0	5-10	5-8
	2-#5	40,000	10-11	12-0	9-2	9-6	8-6	7-8	7-2	5-6	5-3
		60,000	12-11	14-3	10-10	11-3	10-1	9-0	8-1	6-1	5-10
	2-#6	40,000	12-9	14-0	10-8	11-1	9-7	8-1	7-3	5-6	5-3
		60,000	DR	DR	DR	DR	DR	DR	DR	DR	DR
	Center distance A[k, l]		2-6	3-0	1-9	1-10	1-6	1-3	1-1	0-9	0-8
16	Span without stirrups[i, j]		5-7	6-5	4-9	4-11	4-5	4-0	3-10	3-4	3-4
	1-#4	40,000	6-5	7-2	5-6	5-9	5-2	4-8	4-4	3-7	3-6
		60,000	7-10	8-9	6-9	7-0	6-3	5-8	5-3	4-4	4-3
	1-#5	40,000	7-11	8-11	6-10	7-1	6-5	5-9	5-4	4-5	4-4
		60,000	11-1	12-6	9-7	9-11	8-11	8-0	7-6	6-2	6-0
	2-#4 1-#6	40,000	10-3	11-7	8-10	9-2	8-3	7-6	6-11	5-9	5-7
		60,000	12-5	14-0	10-9	11-1	10-0	9-0	8-5	7-0	6-9
	2-#5	40,000	12-8	14-3	10-11	11-4	10-2	9-2	8-7	6-9	6-6
		60,000	15-2	17-1	13-1	13-7	12-3	11-0	10-3	7-11	7-7
	2-#6	40,000	14-11	16-9	12-8	13-4	11-4	9-8	8-8	6-9	6-6
		60,000	DR	DR	DR	DR	DR	DR	DR	DR	DR
	Center distance A[k, l]		3-3	4-1	2-5	2-7	2-1	1-9	1-6	1-0	1-0

(continued)

INTERNATIONAL CODE COUNCIL®
Copyright © 2019 ICC & NYSDOS. ALL RIGHTS RESERVED. Accessed by Lauren Gualdino (lgualdino@briarcliffmanor.org), (-) Order Number #100880972 on May 08, 2020 07:05 AM (PDT) pursuant to License Agreement with ICC & NYSDOS. No further reproduction, no

100880972

TABLE R608.8(3)—continued
MAXIMUM ALLOWABLE CLEAR SPANS FOR 6-INCH-NOMINAL THICK FLAT LINTELS IN LOAD-BEARING WALLS[a, b, c, d, e, f, m]
ROOF CLEAR SPAN 40 FEET AND FLOOR CLEAR SPAN 32 FEET

LINTEL DEPTH, D[g] (inches)	NUMBER OF BARS AND BAR SIZE IN TOP AND BOTTOM OF LINTEL	STEEL YIELD STRENGTH[h], f_y (psi)	DESIGN LOADING CONDITION DETERMINED FROM TABLE R608.8(1)								
			1	2		3		4		5	
			Maximum ground snow load (psf)								
			—	30	70	30	70	30	70	30	70
			Maximum clear span of lintel (feet - inches)								
20	Span without stirrups[i, j]		6-11	8-2	6-1	6-3	5-8	5-2	4-11	4-4	4-3
	1-#5	40,000	8-9	10-1	7-9	8-0	7-3	6-6	6-1	5-1	4-11
		60,000	10-8	12-3	9-5	9-9	8-10	8-0	7-5	6-2	6-0
	2-#4 1-#6	40,000	9-11	11-4	8-9	9-1	8-2	7-4	6-10	5-8	5-7
		60,000	13-9	15-10	12-2	12-8	11-5	10-3	9-7	7-11	7-9
	2-#5	40,000	14-0	16-2	12-5	12-11	11-7	10-6	9-9	7-11	7-8
		60,000	16-11	19-6	15-0	15-6	14-0	12-7	11-9	9-1	8-9
	2-#6	40,000	16-7	19-1	14-7	15-3	13-1	11-3	10-2	7-11	7-8
		60,000	19-11	22-10	17-4	18-3	15-6	13-2	11-10	9-1	8-9
	Center distance A[k, l]		3-11	5-2	3-1	3-3	2-8	2-2	1-11	1-4	1-3
24	Span without stirrups[i, j]		8-2	9-10	7-4	7-8	6-11	6-4	5-11	5-3	5-2
	1-#5	40,000	9-5	11-1	8-7	8-10	8-0	7-3	6-9	5-7	5-5
		60,000	11-6	13-6	10-5	10-9	9-9	8-9	8-2	6-10	6-8
	2-#4 1-#6	40,000	10-8	12-6	9-8	10-0	9-0	8-2	7-7	6-4	6-2
		60,000	12-11	15-2	11-9	12-2	11-0	9-11	9-3	7-8	7-6
	2-#5	40,000	15-2	17-9	13-9	14-3	12-10	11-7	10-10	9-0	8-9
		60,000	18-4	21-6	16-7	17-3	15-6	14-0	13-1	10-4	10-0
	2-#6	40,000	18-0	21-1	16-4	16-11	14-10	12-9	11-8	9-2	8-11
		60,000	21-7	25-4	19-2	20-4	17-2	14-9	13-4	10-4	10-0
	Center distance A[k, l]		4-6	6-2	3-8	4-0	3-3	2-8	2-3	1-7	1-6

For SI: 1 inch = 25.4 mm, 1 foot = 304.8 mm, 1 pound per square inch = 6.895 kPa, 1 pound per square foot = 0.0479 kPa, Grade 40 = 280 MPa, Grade 60 = 420 MPa.

a. See Table R608.3 for tolerances permitted from nominal thickness.

b. Table values are based on concrete with a minimum specified compressive strength of 2,500 psi. See Note j.

c. Table values are based on uniform loading. See Section R608.8.2 for lintels supporting concentrated loads.

d. Deflection criterion is $L/240$, where L is the clear span of the lintel in inches, or $^1/_2$ inch, whichever is less.

e. Linear interpolation is permitted between ground snow loads and between lintel depths.

f. DR indicates design required.

g. Lintel depth, D, is permitted to include the available height of wall located directly above the lintel, provided that the increased lintel depth spans the entire length of the lintel.

h. Stirrups shall be fabricated from reinforcing bars with the same yield strength as that used for the main longitudinal reinforcement.

i. Allowable clear span without stirrups applicable to all lintels of the same depth, D. Top and bottom reinforcement for lintels without stirrups shall be not less than the least amount of reinforcement required for a lintel of the same depth and loading condition with stirrups. All other spans require stirrups spaced at not more than $d/2$.

j. Where concrete with a minimum specified compressive strength of 3,000 psi is used, clear spans for lintels without stirrups shall be permitted to be multiplied by 1.05. If the increased span exceeds the allowable clear span for a lintel of the same depth and loading condition with stirrups, the top and bottom reinforcement shall be equal to or greater than that required for a lintel of the same depth and loading condition that has an allowable clear span that is equal to or greater than that of the lintel without stirrups that has been increased.

k. Center distance, A, is the center portion of the clear span where stirrups are not required. This is applicable to all longitudinal bar sizes and steel yield strengths.

l. Where concrete with a minimum specified compressive strength of 3,000 psi is used, center distance, A, shall be permitted to be multiplied by 1.10.

m. The maximum clear opening width between two solid wall segments shall be 18 feet. See Section R608.7.2.1. Lintel clear spans in the table greater than 18 feet are shown for interpolation and information only.

INTERNATIONAL CODE COUNCIL®
Copyright © 2019 ICC & NYSDOS. ALL RIGHTS RESERVED. Accessed by Lauren Gualdino (lgualdino@briarcliffmanor.org), (-) Order Number #100880972 on May 08, 2020 07:05 AM (PDT) pursuant to License Agreement with ICC & NYSDOS. No further reproduction, no

100880972

TABLE R608.8(4)
MAXIMUM ALLOWABLE CLEAR SPANS FOR 8-INCH-NOMINAL THICK FLAT LINTELS IN LOAD-BEARING WALLS[a, b, c, d, e, f, m]
ROOF CLEAR SPAN 40 FEET AND FLOOR CLEAR SPAN 32 FEET

LINTEL DEPTH, D[g] (inches)	NUMBER OF BARS AND BAR SIZE IN TOP AND BOTTOM OF LINTEL	STEEL YIELD STRENGTH[h], f_y (psi)	DESIGN LOADING CONDITION DETERMINED FROM TABLE R608.8(1)								
			1	2		3		4		5	
			Maximum ground snow load (psf)								
			—	30	70	30	70	30	70	30	70
			Maximum clear span of lintel (feet - inches)								
8	Span without stirrups[i, j]		4-4	4-9	3-7	3-9	3-4	2-10	2-7	2-1	2-0
	1-#4	40,000	4-4	4-9	3-7	3-9	3-4	2-11	2-9	2-3	2-2
		60,000	6-1	6-7	5-0	5-3	4-8	4-0	3-9	3-1	3-0
	1-#5	40,000	6-2	6-9	5-2	5-4	4-9	4-1	3-10	3-2	3-1
		60,000	7-5	8-1	6-2	6-5	5-9	4-11	4-7	3-9	3-8
	2-#4 1-#6	40,000	6-11	7-6	5-9	6-0	5-4	4-7	4-4	3-6	3-5
		60,000	8-3	9-0	6-11	7-2	6-5	5-6	5-2	4-2	4-1
	2-#5	40,000	8-5	9-2	7-0	7-3	6-6	5-7	5-3	4-2	4-0
		60,000	DR	DR	DR	DR	DR	DR	DR	DR	DR
	Center distance A[k, l]		2-1	2-6	1-5	1-6	1-3	0-11	0-10	0-6	0-6
12	Span without stirrups[i, j]		4-10	5-8	4-0	4-2	3-9	3-2	3-0	2-7	2-6
	1-#4	40,000	5-5	6-1	4-8	4-10	4-4	3-9	3-6	2-10	2-10
		60,000	6-7	7-5	5-8	5-11	5-4	4-7	4-3	3-6	3-5
	1-#5	40,000	6-9	7-7	5-9	6-0	5-5	4-8	4-4	3-7	3-6
		60,000	9-4	10-6	8-1	8-4	7-6	6-6	6-1	5-0	4-10
	2-#4 1-#6	40,000	8-8	9-9	7-6	7-9	7-0	6-0	5-8	4-7	4-6
		60,000	10-6	11-9	9-1	9-5	8-5	7-3	6-10	5-7	5-5
	2-#5	40,000	10-8	12-0	9-3	9-7	8-7	7-5	6-11	5-6	5-4
		60,000	12-10	14-5	11-1	11-6	10-4	8-11	8-4	6-7	6-4
	2-#6	40,000	12-7	14-2	10-10	11-3	10-2	8-3	7-6	5-6	5-4
		60,000	DR	DR	DR	DR	DR	DR	DR	DR	DR
	Center distance A[k, l]		3-2	4-0	2-4	2-6	2-0	1-6	1-4	0-11	0-10
16	Span without stirrups[i, j]		6-5	7-9	5-7	5-10	5-2	4-5	4-2	3-7	3-6
	1-#4	40,000	6-2	7-1	5-6	5-8	5-1	4-5	4-2	3-5	3-4
		60,000	7-6	8-8	6-8	6-11	6-3	5-5	5-1	4-2	4-0
	1-#5	40,000	7-8	8-10	6-10	7-1	6-4	5-6	5-2	4-3	4-1
		60,000	9-4	10-9	8-4	8-7	7-9	6-8	6-3	5-2	5-0
	2-#4 1-#6	40,000	8-8	10-0	7-8	8-0	7-2	6-2	5-10	4-9	4-8
		60,000	12-0	13-11	10-9	11-2	10-0	8-8	8-1	6-8	6-6
	2-#5	40,000	12-3	14-2	11-0	11-4	10-3	8-10	8-3	6-9	6-7
		60,000	14-10	17-2	13-3	13-8	12-4	10-8	10-0	7-11	7-8
	2-#6	40,000	14-6	16-10	13-0	13-5	12-1	10-1	9-2	6-11	6-8
		60,000	17-5	20-2	15-7	16-1	14-6	11-10	10-8	7-11	7-8
	Center distance A[k, l]		4-1	5-5	3-3	3-6	2-10	2-1	1-10	1-3	1-2

(continued)

INTERNATIONAL CODE COUNCIL®
Copyright © 2019 ICC & NYSDOS. ALL RIGHTS RESERVED. Accessed by Lauren Gualdino (lgualdino@briarcliffmanor.org), (-) Order Number #100880972 on May 08, 2020 07:05 AM (PDT) pursuant to License Agreement with ICC & NYSDOS. No further reproduction, no

100880972

TABLE R608.8(4)—continued
MAXIMUM ALLOWABLE CLEAR SPANS FOR 8-INCH-NOMINAL THICK FLAT LINTELS IN LOAD-BEARING WALLS[a, b, c, d, e, f, m]
ROOF CLEAR SPAN 40 FEET AND FLOOR CLEAR SPAN 32 FEET

LINTEL DEPTH, D[g] (inches)	NUMBER OF BARS AND BAR SIZE IN TOP AND BOTTOM OF LINTEL	STEEL YIELD STRENGTH[h], f_y (psi)	DESIGN LOADING CONDITION DETERMINED FROM TABLE R608.8(1)								
			1	2		3		4		5	
			Maximum ground snow load (psf)								
			—	30	70	30	70	30	70	30	70
			Maximum clear span of lintel (feet - inches)								
20	Span without stirrups[i, j]		7-10	9-10	7-1	7-5	6-7	5-8	5-4	4-7	4-6
	1-#5	40,000	8-4	9-11	7-8	8-0	7-2	6-3	5-10	4-9	4-8
		60,000	10-2	12-1	9-5	9-9	8-9	7-7	7-1	5-10	5-8
	2-#4 1-#6	40,000	9-5	11-3	8-8	9-0	8-1	7-0	6-7	5-5	5-3
		60,000	11-6	13-8	10-7	11-0	9-11	8-7	8-0	6-7	6-5
	2-#5	40,000	11-9	13-11	10-10	11-2	10-1	8-9	8-2	6-8	6-7
		60,000	16-4	19-5	15-0	15-7	14-0	12-2	11-4	9-3	9-0
	2-#6	40,000	16-0	19-0	14-9	15-3	13-9	11-10	10-10	8-3	8-0
		60,000	19-3	22-11	17-9	18-5	16-7	13-7	12-4	9-3	9-0
	Center distance A[k, l]		4-10	6-10	4-1	4-5	3-7	2-8	2-4	1-7	1-6
24	Span without stirrups[i, j]		9-2	11-9	8-7	8-11	8-0	6-11	6-6	5-7	5-6
	1-#5	40,000	8-11	10-10	8-6	8-9	7-11	6-10	6-5	5-3	5-2
		60,000	10-11	13-3	10-4	10-8	9-8	8-4	7-10	6-5	6-3
	2-#4 1-#6	40,000	10-1	12-3	9-7	9-11	8-11	7-9	7-3	6-0	5-10
		60,000	12-3	15-0	11-8	12-1	10-11	9-5	8-10	7-3	7-1
	2-#5	40,000	12-6	15-3	11-11	12-4	11-1	9-7	9-0	7-5	7-3
		60,000	17-6	21-3	16-7	17-2	15-6	13-5	12-7	10-4	10-1
	2-#6	40,000	17-2	20-11	16-3	16-10	15-3	13-2	12-4	9-7	9-4
		60,000	20-9	25-3	19-8	20-4	18-5	15-4	14-0	10-7	10-3
	Center distance A[k, l]		5-6	8-1	4-11	5-3	4-4	3-3	2-10	1-11	1-10

For SI: 1 inch = 25.4 mm, 1 foot = 304.8 mm, 1 pound per square inch = 6.895 kPa,
1 pound per square foot = 0.0479 kPa, Grade 40 = 280 MPa; Grade 60 = 420 MPa.

Note: Top and bottom reinforcement for lintels without stirrups, as shown in shaded cells, shall be equal to or greater than that required for lintel of the same depth and loading condition that has an allowable clear span that is equal to or greater than that of the lintel without stirrups.

a. See Table R608.3 for tolerances permitted from nominal thickness.
b. Table values are based on concrete with a minimum specified compressive strength of 2,500 psi. See Note j.
c. Table values are based on uniform loading. See Section R608.8.2 for lintels supporting concentrated loads.
d. Deflection criterion is $L/240$, where L is the clear span of the lintel in inches, or $^1/_2$ inch, whichever is less.
e. Linear interpolation is permitted between ground snow loads and between lintel depths.
f. DR indicates design required.
g. Lintel depth, D, is permitted to include the available height of wall located directly above the lintel, provided that the increased lintel depth spans the entire length of the lintel.
h. Stirrups shall be fabricated from reinforcing bars with the same yield strength as that used for the main longitudinal reinforcement.
i. Allowable clear span without stirrups applicable to all lintels of the same depth, D. Top and bottom reinforcement for lintels without stirrups shall be not less than the least amount of reinforcement required for a lintel of the same depth and loading condition with stirrups. All other spans require stirrups spaced at not more than $d/2$.
j. Where concrete with a minimum specified compressive strength of 3,000 psi is used, clear spans for lintels without stirrups shall be permitted to be multiplied by 1.05. If the increased span exceeds the allowable clear span for a lintel of the same depth and loading condition with stirrups, the top and bottom reinforcement shall be equal to or greater than that required for a lintel of the same depth and loading condition that has an allowable clear span that is equal to or greater than that of the lintel without stirrups that has been increased.
k. Center distance, A, is the center portion of the clear span where stirrups are not required. This is applicable to all longitudinal bar sizes and steel yield strengths.
l. Where concrete with a minimum specified compressive strength of 3,000 psi is used, center distance, A, shall be permitted to be multiplied by 1.10.
m. The maximum clear opening width between two solid wall segments shall be 18 feet. See Section R608.7.2.1. Lintel clear spans in the table greater than 18 feet are shown for interpolation and information only.

INTERNATIONAL CODE COUNCIL®
Copyright © 2019 ICC & NYSDOS. ALL RIGHTS RESERVED. Accessed by Lauren Gualdino (lgualdino@briarcliffmanor.org), (-) Order Number #100880972 on May 08, 2020 07:05 AM (PDT) pursuant to License Agreement with ICC & NYSDOS. No further reproduction, no

100880972

TABLE R608.8(5)
MAXIMUM ALLOWABLE CLEAR SPANS FOR 10-INCH-NOMINAL THICK FLAT LINTELS IN LOAD-BEARING WALLS[a, b, c, d, e, f, m]
ROOF CLEAR SPAN 40 FEET AND FLOOR CLEAR SPAN 32 FEET

LINTEL DEPTH, D[g] (inches)	NUMBER OF BARS AND BAR SIZE IN TOP AND BOTTOM OF LINTEL	STEEL YIELD STRENGTH[h], f_y (psi)	DESIGN LOADING CONDITION DETERMINED FROM TABLE R608.8(1)								
			1	2		3		4		5	
			Maximum ground snow load (psf)								
			—	30	70	30	70	30	70	30	70
			Maximum clear span of lintel (feet - inches)								
8	Span without stirrups[i, j]		6-0	7-2	4-7	4-10	4-1	3-1	2-11	2-3	2-2
	1-#4	40,000	4-3	4-9	3-7	3-9	3-4	2-9	2-7	2-1	2-1
		60,000	5-11	6-7	5-0	5-3	4-8	3-10	3-8	2-11	2-11
	1-#5	40,000	6-1	6-9	5-2	5-4	4-9	3-11	3-9	3-0	2-11
		60,000	7-4	8-1	6-3	6-5	5-9	4-9	4-6	3-7	3-7
	2-#4 1-#6	40,000	6-10	7-6	5-9	6-0	5-5	4-5	4-2	3-4	3-4
		60,000	8-2	9-1	6-11	7-2	6-6	5-4	5-0	4-1	4-0
	2-#5	40,000	8-4	9-3	7-1	7-4	6-7	5-5	5-1	4-1	4-0
		60,000	9-11	11-0	8-5	8-9	7-10	6-6	6-1	4-8	4-6
	2-#6	40,000	9-9	10-10	8-3	8-7	7-9	6-4	5-10	4-1	4-0
		60,000	DR	DR	DR	DR	DR	DR	DR	DR	DR
	Center distance A[k, l]		2-6	3-1	1-10	1-11	1-7	1-1	0-11	0-7	0-7
12	Span without stirrups[i, j]		5-5	6-7	4-7	4-10	4-3	3-5	3-3	2-8	2-8
	1-#4	40,000	5-3	6-0	4-8	4-10	4-4	3-7	3-4	2-9	2-8
		60,000	6-5	7-4	5-8	5-10	5-3	4-4	4-1	3-4	3-3
	1-#5	40,000	6-6	7-6	5-9	6-0	5-5	4-5	4-2	3-5	3-4
		60,000	7-11	9-1	7-0	7-3	6-7	5-5	5-1	4-2	4-0
	2-#4 1-#6	40,000	7-4	8-5	6-6	6-9	6-1	5-0	4-9	3-10	3-9
		60,000	10-3	11-9	9-1	9-5	8-6	7-0	6-7	5-4	5-3
	2-#5	40,000	10-5	12-0	9-3	9-7	8-8	7-2	6-9	5-5	5-4
		60,000	12-7	14-5	11-2	11-6	10-5	8-7	8-1	6-6	6-4
	2-#6	40,000	12-4	14-2	10-11	11-4	10-2	8-5	7-8	5-7	5-5
		60,000	14-9	17-0	13-1	13-6	12-2	10-0	9-1	6-6	6-4
	Center distance A[k, l]		3-9	4-11	2-11	3-2	2-7	1-9	1-7	1-0	1-0
16	Span without stirrups[i, j]		7-1	9-0	6-4	6-8	5-10	4-9	4-6	3-9	3-8
	1-#4	40,000	5-11	7-0	5-5	5-8	5-1	4-3	4-0	3-3	3-2
		60,000	7-3	8-7	6-8	6-11	6-3	5-2	4-10	3-11	3-10
	1-#5	40,000	7-4	8-9	6-9	7-0	6-4	5-3	4-11	4-0	3-11
		60,000	9-0	10-8	8-3	8-7	7-9	6-5	6-0	4-11	4-9
	2-#4 1-#6	40,000	8-4	9-11	7-8	7-11	7-2	5-11	5-7	4-6	4-5
		60,000	10-2	12-0	9-4	9-8	8-9	7-3	6-10	5-6	5-5
	2-#5	40,000	10-4	12-3	9-6	9-10	8-11	7-4	6-11	5-8	5-6
		60,000	14-4	17-1	13-3	13-8	12-4	10-3	9-8	7-10	7-8
	2-#6	40,000	14-1	16-9	13-0	13-5	12-2	10-1	9-6	7-0	6-10
		60,000	17-0	20-2	15-8	16-2	14-7	12-0	10-11	8-0	7-9
	Center distance A[k, l]		4-9	6-8	4-0	4-4	3-6	2-5	2-2	1-5	1-4

(continued)

INTERNATIONAL CODE COUNCIL®
Copyright © 2019 ICC & NYSDOS. ALL RIGHTS RESERVED. Accessed by Lauren Gualdino (lgualdino@briarcliffmanor.org), (-) Order Number #100880972 on May 08, 2020 07:05 AM (PDT) pursuant to License Agreement with ICC & NYSDOS. No further reproduction, no

100880972

TABLE R608.8(5)—continued
MAXIMUM ALLOWABLE CLEAR SPANS FOR 10-INCH-NOMINAL THICK FLAT LINTELS IN LOAD-BEARING WALLS[a, b, c, d, e, f, m]
ROOF CLEAR SPAN 40 FEET AND FLOOR CLEAR SPAN 32 FEET

LINTEL DEPTH, D[g] (inches)	NUMBER OF BARS AND BAR SIZE IN TOP AND BOTTOM OF LINTEL	STEEL YIELD STRENGTH[h], f_y (psi)	DESIGN LOADING CONDITION DETERMINED FROM TABLE R608.8(1)								
			1	2		3		4		5	
			Maximum ground snow load (psf)								
			—	30	70	30	70	30	70	30	70
			Maximum clear span of lintel (feet - inches)								
20	Span without stirrups[i, j]		8-7	11-4	8-1	8-5	7-5	6-1	5-9	4-10	4-9
	1-#4	40,000	6-5	7-10	6-2	6-4	5-9	4-9	4-6	3-8	3-7
		60,000	7-10	9-7	7-6	7-9	7-0	5-10	5-6	4-5	4-4
	1-#5	40,000	8-0	9-9	7-8	7-11	7-2	5-11	5-7	4-6	4-5
		60,000	9-9	11-11	9-4	9-8	8-9	7-3	6-10	5-6	5-5
	2-#4 1-#6	40,000	9-0	11-1	8-8	8-11	8-1	6-9	6-4	5-2	5-0
		60,000	11-0	13-6	10-6	10-11	9-10	8-2	7-9	6-3	6-2
	2-#5	40,000	11-3	13-9	10-9	11-1	10-0	8-4	7-10	6-5	6-3
		60,000	15-8	19-2	15-0	15-6	14-0	11-8	11-0	8-11	8-9
	2-#6	40,000	15-5	18-10	14-8	15-2	13-9	11-5	10-9	8-6	8-3
		60,000	18-7	22-9	17-9	18-5	16-7	13-10	12-9	9-5	9-2
	Center distance A[k, l]		5-7	8-4	5-1	5-5	4-5	3-1	2-9	1-10	1-9
24	Span without stirrups[i, j]		9-11	13-7	9-9	10-2	9-0	7-5	7-0	5-10	5-9
	1-#5	40,000	8-6	10-8	8-5	8-8	7-10	6-6	6-2	5-0	4-11
		60,000	10-5	13-0	10-3	10-7	9-7	8-0	7-6	6-1	6-0
	2-#4 1-#6	40,000	9-7	12-1	9-6	9-9	8-10	7-5	7-0	5-8	5-6
		60,000	11-9	14-9	11-7	11-11	10-10	9-0	8-6	6-11	6-9
	2-#5	40,000	12-0	15-0	11-9	12-2	11-0	9-2	8-8	7-1	6-11
		60,000	14-7	18-3	14-4	14-10	13-5	11-2	10-7	8-7	8-5
	2-#6	40,000	14-3	17-11	14-1	14-7	13-2	11-0	10-4	8-5	8-3
		60,000	19-11	25-0	19-7	20-3	18-4	15-3	14-5	10-10	10-7
	Center distance A[k, l]		6-3	9-11	6-1	6-6	5-4	3-9	3-4	2-2	2-1

For SI: 1 inch = 25.4 mm, 1 foot = 304.8 mm, 1 pound per square inch = 6.895 kPa,
1 pound per square foot = 0.0479 kPa, Grade 40 = 280 MPa, Grade 60 = 420 MPa.

Note: Top and bottom reinforcement for lintels without stirrups, as shown in shaded cells, shall be equal to or greater than that required for lintel of the same depth and loading condition that has an allowable clear span that is equal to or greater than that of the lintel without stirrups.

a. See Table R608.3 for tolerances permitted from nominal thickness.

b. Table values are based on concrete with a minimum specified compressive strength of 2,500 psi. See Note j.

c. Table values are based on uniform loading. See Section R608.8.2 for lintels supporting concentrated loads.

d. Deflection criterion is $L/240$, where L is the clear span of the lintel in inches, or $^1/_2$ inch, whichever is less.

e. Linear interpolation is permitted between ground snow loads and between lintel depths.

f. DR indicates design required.

g. Lintel depth, D, is permitted to include the available height of wall located directly above the lintel, provided that the increased lintel depth spans the entire length of the lintel.

h. Stirrups shall be fabricated from reinforcing bars with the same yield strength as that used for the main longitudinal reinforcement.

i. Allowable clear span without stirrups applicable to all lintels of the same depth, D. Top and bottom reinforcement for lintels without stirrups shall be not less than the least amount of reinforcement required for a lintel of the same depth and loading condition with stirrups. All other spans require stirrups spaced at not more than $d/2$.

j. Where concrete with a minimum specified compressive strength of 3,000 psi is used, clear spans for lintels without stirrups shall be permitted to be multiplied by 1.05. If the increased span exceeds the allowable clear span for a lintel of the same depth and loading condition with stirrups, the top and bottom reinforcement shall be equal to or greater than that required for a lintel of the same depth and loading condition that has an allowable clear span that is equal to or greater than that of the lintel without stirrups that has been increased.

k. Center distance, A, is the center portion of the clear span where stirrups are not required. This is applicable to all longitudinal bar sizes and steel yield strengths.

l. Where concrete with a minimum specified compressive strength of 3,000 psi is used, center distance, A, shall be permitted to be multiplied by 1.10.

m. The maximum clear opening width between two solid wall segments shall be 18 feet. See Section R608.7.2.1. Lintel clear spans in the table greater than 18 feet are shown for interpolation and information only.

INTERNATIONAL CODE COUNCIL®
Copyright © 2019 ICC & NYSDOS. ALL RIGHTS RESERVED. Accessed by Lauren Gualdino (lgualdino@briarcliffmanor.org), (-) Order Number #100880972 on May 08, 2020 07:05 AM (PDT) pursuant to License Agreement with ICC & NYSDOS. No further reproduction, no

100880972

TABLE R608.8(6)
MAXIMUM ALLOWABLE CLEAR SPANS FOR 6-INCH-THICK WAFFLE-GRID LINTELS IN LOAD-BEARING WALLS[a, b, c, d, e, f, o]
MAXIMUM ROOF CLEAR SPAN 40 FEET AND MAXIMUM FLOOR SPAN 32 FEET

LINTEL DEPTH, D[g] (inches)	NUMBER OF BARS AND BAR SIZE IN TOP AND BOTTOM OF LINTEL	STEEL YIELD STRENGTH[h], f_y (psi)	DESIGN LOADING CONDITION DETERMINED FROM TABLE R608.8(1)								
			1	2		3		4		5	
			Maximum ground snow load (psf)								
			—	30	70	30	70	30	70	30	70
			Maximum clear span of lintel (feet - inches)								
8[i]	Span without stirrups[k, l]		2-7	2-9	2-0	2-1	2-0	2-0	2-0	2-0	2-0
	1-#4	40,000	5-2	5-5	4-0	4-3	3-7	3-3	2-11	2-4	2-3
		60,000	5-9	6-3	4-0	4-3	3-7	3-3	2-11	2-4	2-3
	1-#5	40,000	5-9	6-3	4-0	4-3	3-7	3-3	2-11	2-4	2-3
		60,000	5-9	6-3	4-0	4-3	3-7	3-3	2-11	2-4	2-3
	2-#4 1-#6	40,000	5-9	6-3	4-0	4-3	3-7	3-3	2-11	2-4	2-3
		60,000	DR	DR	DR	DR	DR	DR	DR	DR	DR
	Center distance A[m, n]		0-9	0-10	0-6	0-6	0-5	0-5	0-4	STL	STL
12[i]	Span without stirrups[k, l]		2-11	3-1	2-6	2-7	2-5	2-4	2-3	2-1	2-0
	1-#4	40,000	5-9	6-2	4-8	4-10	4-4	4-1	3-9	3-2	3-1
		60,000	8-0	8-7	6-6	6-9	6-0	5-5	4-11	3-11	3-10
	1-#5	40,000	8-1	8-9	6-8	6-11	6-0	5-5	4-11	3-11	3-10
		60,000	9-1	10-3	6-8	7-0	6-0	5-5	4-11	3-11	3-10
	2-#4 1-#6	40,000	9-1	9-9	6-8	7-0	6-0	5-5	4-11	3-11	3-10
	Center distance A[m, n]		1-3	1-5	0-10	0-11	0-9	0-8	0-6	STL	STL
	Span without stirrups[k, l]		4-0	4-4	3-6	3-7	3-4	3-3	3-1	2-10	2-10
16[i]	1-#4	40,000	6-7	7-3	5-6	5-9	5-2	4-10	4-6	3-9	3-8
		60,000	8-0	8-10	6-9	7-0	6-3	5-11	5-5	4-7	4-5
	1-#5	40,000	8-2	9-0	6-11	7-2	6-5	6-0	5-7	4-8	4-6
		60,000	11-5	12-6	9-3	9-9	8-4	7-7	6-10	5-6	5-4
	2-#4 1-#6	40,000	10-7	11-7	8-11	9-3	8-3	7-7	6-10	5-6	5-4
		60,000	12-2	14-0	9-3	9-9	8-4	7-7	6-10	5-6	5-4
	2-#5	40,000	12-2	14-2	9-3	9-9	8-4	7-7	6-10	5-6	5-4
		60,000	DR	DR	DR	DR	DR	DR	DR	DR	DR
	Center distance A[m, n]		1-8	2-0	1-2	1-3	1-0	0-11	0-9	STL	STL
20[i]	Span without stirrups[k, l]		5-0	5-6	4-6	4-7	4-3	4-1	4-0	3-8	3-8
	1-#4	40,000	7-2	8-2	6-3	6-6	5-10	5-6	5-1	4-3	4-2
		60,000	8-11	9-11	7-8	7-11	7-1	6-8	6-2	5-2	5-0
	1-#5	40,000	9-1	10-2	7-9	8-1	7-3	6-10	6-4	5-4	5-2
		60,000	12-8	14-2	10-11	11-3	10-2	9-6	8-9	7-1	6-10
	2-#4 1-#6	40,000	10-3	11-5	8-9	9-1	8-2	7-8	7-1	6-0	5-10
		60,000	14-3	15-11	11-9	12-5	10-8	9-9	8-9	7-1	6-10
	2-#5	40,000	14-6	16-3	11-6	12-1	10-4	9-6	8-6	6-11	6-8
		60,000	DR	DR	DR	DR	DR	DR	DR	DR	DR
	Center distance A[m, n]		2-0	2-6	1-6	1-7	1-3	1-1	1-0	STL	STL

(continued)

INTERNATIONAL CODE COUNCIL®
Copyright © 2019 ICC & NYSDOS. ALL RIGHTS RESERVED. Accessed by Lauren Gualdino (lgualdino@briarcliffmanor.org), (-) Order Number #100880972 on May 08, 2020 07:05 AM (PDT) pursuant to License Agreement with ICC & NYSDOS. No further reproduction, no

100880972

TABLE R608.8(6)—continued
MAXIMUM ALLOWABLE CLEAR SPANS FOR 6-INCH-THICK WAFFLE-GRID LINTELS IN LOAD-BEARING WALLS[a, b, c, d, e, f, o]
MAXIMUM ROOF CLEAR SPAN 40 FEET AND MAXIMUM FLOOR SPAN 32 FEET

LINTEL DEPTH, *D*[g] (inches)	NUMBER OF BARS AND BAR SIZE IN TOP AND BOTTOM OF LINTEL	STEEL YIELD STRENGTH[h], f_y (psi)	DESIGN LOADING CONDITION DETERMINED FROM TABLE R608.8(1)								
			1	2		3		4		5	
			Maximum ground snow load (psf)								
			—	30	70	30	70	30	70	30	70
			Maximum clear span of lintel (feet - inches)								
24w[j]	Span without stirrups[k, l]		6-0	6-8	5-5	5-7	5-3	5-0	4-10	4-6	4-5
	1-#4	40,000	7-11	9-0	6-11	7-2	6-5	6-0	5-7	4-8	4-7
		60,000	9-8	10-11	8-5	8-9	7-10	7-4	6-10	5-9	5-7
	1-#5	40,000	9-10	11-2	8-7	8-11	8-0	7-6	7-0	5-10	5-8
		60,000	12-0	13-7	10-6	10-10	9-9	9-2	8-6	7-2	6-11
	2-#4 1-#6	40,000	11-1	12-7	9-8	10-1	9-1	8-6	7-10	6-7	6-5
		60,000	15-6	17-7	13-6	14-0	12-8	11-10	10-8	8-7	8-4
	2-#5	40,000	15-6	17-11	12-8	13-4	11-6	10-7	9-7	7-10	7-7
		60,000	DR	DR	DR	DR	DR	DR	DR	DR	DR
	Center distance *A*[m, n]		2-4	3-0	1-9	1-11	1-6	1-4	1-2	STL	STL

For SI: 1 inch = 25.4 mm, 1 foot = 304.8 mm, 1 pound per square inch = 6.895 kPa,
1 pound per square foot = 0.0479 kPa, Grade 40 = 280 MPa, Grade 60 = 420 MPa.

a. Where lintels are formed with waffle-grid forms, form material shall be removed, if necessary, to create top and bottom flanges of the lintel that are not less than 3 inches in depth (in the vertical direction), are not less than 5 inches in width for 6-inch-nominal waffle-grid forms and not less than 7 inches in width for 8-inch-nominal waffle-grid forms. See Figure R608.8(3). Flat form lintels shall be permitted in place of waffle-grid lintels. See Tables R608.8(2) through R608.8(5).

b. See Table R608.3 for tolerances permitted from nominal thicknesses and minimum dimensions and spacing of cores.

c. Table values are based on concrete with a minimum specified compressive strength of 2,500 psi. See Notes l and n. Table values are based on uniform loading. See Section R608.8.2 for lintels supporting concentrated loads.

d. Deflection criterion is $L/240$, where L is the clear span of the lintel in inches, or $^1/_2$ inch, whichever is less.

e. Linear interpolation is permitted between ground snow loads.

f. DR indicates design required. STL indicates stirrups required throughout lintel.

g. Lintel depth, *D*, is permitted to include the available height of wall located directly above the lintel, provided that the increased lintel depth spans the entire length of the lintel.

h. Stirrups shall be fabricated from reinforcing bars with the same yield strength as that used for the main longitudinal reinforcement.

i. Lintels less than 24 inches in depth with stirrups shall be formed from flat-wall forms [see Tables R608.8(2) through R608.8(5)], or, if necessary, form material shall be removed from waffle-grid forms so as to provide the required cover for stirrups. Allowable spans for lintels formed with flat-wall forms shall be determined from Tables R608.8(2) through R608.8(5).

j. Where stirrups are required for 24-inch-deep lintels, the spacing shall not exceed 12 inches on center.

k. Allowable clear span without stirrups applicable to all lintels of the same depth, *D*. Top and bottom reinforcement for lintels without stirrups shall be not less than the least amount of reinforcement required for a lintel of the same depth and loading condition with stirrups. All other spans require stirrups spaced at not more than *d/2*.

l. Where concrete with a minimum specified compressive strength of 3,000 psi is used, clear spans for lintels without stirrups shall be permitted to be multiplied by 1.05. If the increased span exceeds the allowable clear span for a lintel of the same depth and loading condition with stirrups, the top and bottom reinforcement shall be equal to or greater than that required for a lintel of the same depth and loading condition that has an allowable clear span that is equal to or greater than that of the lintel without stirrups that has been increased.

m. Center distance, *A*, is the center portion of the span where stirrups are not required. This is applicable to all longitudinal bar sizes and steel yield strengths.

n. Where concrete with a minimum specified compressive strength of 3,000 psi is used, center distance, *A*, shall be permitted to be multiplied by 1.10.

o. The maximum clear opening width between two solid wall segments shall be 18 feet. See Section R608.7.2.1. Lintel spans in the table greater than 18 feet are shown for interpolation and information only.

INTERNATIONAL CODE COUNCIL®
Copyright © 2019 ICC & NYSDOS. ALL RIGHTS RESERVED. Accessed by Lauren Gualdino (lgualdino@briarcliffmanor.org), (-) Order Number #100880972 on May 08, 2020 07:05 AM (PDT) pursuant to License Agreement with ICC & NYSDOS. No further reproduction, no

100880972

TABLE R608.8(7)
MAXIMUM ALLOWABLE CLEAR SPANS FOR 8-INCH-THICK WAFFLE-GRID LINTELS IN LOAD-BEARING WALLS[a, b, c, d, e, f, o]
MAXIMUM ROOF CLEAR SPAN 40 FEET AND MAXIMUM FLOOR CLEAR SPAN 32 FEET

LINTEL DEPTH, D[g] (inches)	NUMBER OF BARS AND BAR SIZE IN TOP AND BOTTOM OF LINTEL	STEEL YIELD STRENGTH[h], f_y (psi)	DESIGN LOADING CONDITION DETERMINED FROM TABLE R608.8(1)								
			1	2		3		4		5	
			Maximum ground snow load (psf)								
			—	30	70	30	70	30	70	30	70
			Maximum clear span of lintel (feet - inches)								
8[i]	Span without stirrups[k, l]		2-6	2-9	2-0	2-1	2-0	2-0	2-0	2-0	2-0
	1-#4	40,000	4-5	4-9	3-7	3-9	3-4	3-0	2-10	2-3	2-2
		60,000	5-6	6-2	4-0	4-3	3-7	3-1	2-10	2-3	2-2
	1-#5	40,000	5-6	6-2	4-0	4-3	3-7	3-1	2-10	2-3	2-2
	Center distance A[m, n]		0-9	0-10	0-6	0-6	0-5	0-4	0-4	STL	STL
12[i]	Span without stirrups[k, l]		2-10	3-1	2-6	2-7	2-5	2-3	2-2	2-0	2-0
	1-#4	40,000	5-7	6-1	4-8	4-10	4-4	3-11	3-8	3-0	2-11
		60,000	6-9	7-5	5-8	5-11	5-4	4-9	4-5	3-8	3-7
	1-#5	40,000	6-11	7-7	5-10	6-0	5-5	4-10	4-6	3-9	3-7
		60,000	8-8	10-1	6-7	7-0	5-11	5-2	4-8	3-9	3-7
	2-#4 1-#6	40,000	8-8	9-10	6-7	7-0	5-11	5-2	4-8	3-9	3-7
		60,000	8-8	10-1	6-7	7-0	5-11	5-2	4-8	3-9	3-7
	Center distance A[m, n]		1-2	1-5	0-10	0-11	0-9	0-7	0-6	STL	STL
16[i]	Span without stirrups[k, l]		3-10	4-3	3-6	3-7	3-4	3-2	3-0	2-10	2-9
	1-#4	40,000	6-5	7-2	5-6	5-9	5-2	4-8	4-4	3-7	3-6
		60,000	7-9	8-9	6-9	7-0	6-3	5-8	5-3	4-4	4-3
	1-#5	40,000	7-11	8-11	6-10	7-1	6-5	5-9	5-4	4-5	4-4
		60,000	9-8	10-11	8-4	8-8	7-10	7-0	6-6	5-2	5-1
	2-#4 1-#6	40,000	9-0	10-1	7-9	8-0	7-3	6-6	6-1	5-0	4-11
		60,000	11-5	13-10	9-2	9-8	8-3	7-2	6-6	5-2	5-1
	Center distance A[m, n]		1-6	1-11	1-2	1-3	1-0	0-10	0-8	STL	STL
20[i]	Span without stirrups[k, l]		4-10	5-5	4-5	4-7	4-3	4-0	3-11	3-7	3-7
	1-#4	40,000	7-0	8-1	6-3	6-5	5-10	5-3	4-11	4-1	3-11
		60,000	8-7	9-10	7-7	7-10	7-1	6-5	6-0	4-11	4-10
	1-#5	40,000	8-9	10-1	7-9	8-0	7-3	6-6	6-1	5-1	4-11
		60,000	10-8	12-3	9-6	9-10	8-10	8-0	7-5	6-2	6-0
	2-#4 1-#6	40,000	9-10	11-4	8-9	9-1	8-2	7-4	6-10	5-8	5-7
		60,000	12-0	13-10	10-8	11-0	9-11	9-0	8-4	6-8	6-6
	2-#5	40,000	12-3	14-1	10-10	11-3	10-2	8-11	8-1	6-6	6-4
		60,000	14-0	17-6	11-8	12-3	10-6	9-1	8-4	6-8	6-6
	Center distance A[m, n]		1-10	2-5	1-5	1-7	1-3	1-0	0-11	STL	STL

(continued)

INTERNATIONAL CODE COUNCIL®
Copyright © 2019 ICC & NYSDOS. ALL RIGHTS RESERVED. Accessed by Lauren Gualdino (lgualdino@briarcliffmanor.org), (-) Order Number #100880972 on May 08, 2020 07:05 AM (PDT) pursuant to License Agreement with ICC & NYSDOS. No further reproduction, no

100880972

TABLE R608.8(7)—continued
MAXIMUM ALLOWABLE CLEAR SPANS FOR 8-INCH-THICK WAFFLE-GRID LINTELS IN LOAD-BEARING WALLS[a, b, c, d, e, f, o]
MAXIMUM ROOF CLEAR SPAN 40 FEET AND MAXIMUM FLOOR CLEAR SPAN 32 FEET

LINTEL DEPTH, D[g] (inches)	NUMBER OF BARS AND BAR SIZE IN TOP AND BOTTOM OF LINTEL	STEEL YIELD STRENGTH[h], f_y (psi)	DESIGN LOADING CONDITION DETERMINED FROM TABLE R608.8(1)								
			1	2		3		4		5	
			Maximum ground snow load (psf)								
			—	30	70	30	70	30	70	30	70
			Maximum clear span of lintel (feet - inches)								
24[j]	Span without stirrups[k, l]		5-9	6-7	5-5	5-6	5-2	4-11	4-9	4-5	4-4
	1-#4	40,000	7-6	8-10	6-10	7-1	6-5	5-9	5-5	4-6	4-4
		60,000	9-2	10-9	8-4	8-8	7-10	7-1	6-7	5-6	5-4
	1-#5	40,000	9-5	11-0	8-6	8-10	8-0	7-2	6-8	5-7	5-5
		60,000	11-5	13-5	10-5	10-9	9-9	8-9	8-2	6-10	6-8
	2-#4 1-#6	40,000	10-7	12-5	9-8	10-0	9-0	8-1	7-7	6-3	6-2
		60,000	12-11	15-2	11-9	12-2	11-0	9-11	9-3	7-8	7-6
	2-#5	40,000	13-2	15-6	12-0	12-5	11-2	9-11	9-2	7-5	7-3
		60,000	16-3	21-0	14-1	14-10	12-9	11-1	10-1	8-1	7-11
	2-#6	40,000	14-4	18-5	12-6	13-2	11-5	9-11	9-2	7-5	7-3
	Center distance A[m, n]		2-1	2-11	1-9	1-10	1-6	1-3	1-1	STL	STL

For SI: 1 inch = 25.4 mm, 1 foot = 304.8 mm, 1 pound per square inch = 6.895 kPa,
1 pound per square foot = 0.0479 kPa, Grade 40 = 280 MPa, Grade 60 = 420 MPa.

a. Where lintels are formed with waffle-grid forms, form material shall be removed, if necessary, to create top and bottom flanges of the lintel that are not less than 3 inches in depth (in the vertical direction), are not less than 5 inches in width for 6-inch-nominal waffle-grid forms and not less than 7 inches in width for 8-inch-nominal waffle-grid forms. See Figure R608.8(3). Flat-form lintels shall be permitted in lieu of waffle-grid lintels. See Tables R608.8(2) through R608.8(5).

b. See Table R608.3 for tolerances permitted from nominal thicknesses and minimum dimensions and spacing of cores.

c. Table values are based on concrete with a minimum specified compressive strength of 2,500 psi. See Notes l and n. Table values are based on uniform loading. See Section R608.8.2 for lintels supporting concentrated loads.

d. Deflection criterion is $L/240$, where L is the clear span of the lintel in inches, or $^1/_2$ inch, whichever is less.

e. Linear interpolation is permitted between ground snow loads.

f. STL indicates stirrups required throughout lintel.

g. Lintel depth, D, is permitted to include the available height of wall located directly above the lintel, provided that the increased lintel depth spans the entire length of the lintel.

h. Stirrups shall be fabricated from reinforcing bars with the same yield strength as that used for the main longitudinal reinforcement.

i. Lintels less than 24 inches in depth with stirrups shall be formed from flat-wall forms [see Tables R608.8(2) through R608.8(5)], or, if necessary, form material shall be removed from waffle-grid forms so as to provide the required cover for stirrups. Allowable spans for lintels formed with flat-wall forms shall be determined from Tables R608.8(2) through R608.8(5).

j. Where stirrups are required for 24-inch-deep lintels, the spacing shall not exceed 12 inches on center.

k. Allowable clear span without stirrups applicable to all lintels of the same depth, D. Top and bottom reinforcement for lintels without stirrups shall be not less than the least amount of reinforcement required for a lintel of the same depth and loading condition with stirrups. All other spans require stirrups spaced at not more than $d/2$.

l. Where concrete with a minimum specified compressive strength of 3,000 psi is used, clear spans for lintels without stirrups shall be permitted to be multiplied by 1.05. If the increased span exceeds the allowable clear span for a lintel of the same depth and loading condition with stirrups, the top and bottom reinforcement shall be equal to or greater than that required for a lintel of the same depth and loading condition that has an allowable clear span that is equal to or greater than that of the lintel without stirrups that has been increased.

m. Center distance, A, is the center portion of the span where stirrups are not required. This is applicable to all longitudinal bar sizes and steel yield strengths.

n. Where concrete with a minimum specified compressive strength of 3,000 psi is used, center distance, A, shall be permitted to be multiplied by 1.10.

o. The maximum clear opening width between two solid wall segments shall be 18 feet. See Section R608.7.2.1. Lintel spans in the table greater than 18 feet are shown for interpolation and information only.

INTERNATIONAL CODE COUNCIL®
Copyright © 2019 ICC & NYSDOS. ALL RIGHTS RESERVED. Accessed by Lauren Gualdino (lgualdino@briarcliffmanor.org), (-) Order Number #100880972 on May 08, 2020 07:05 AM (PDT) pursuant to License Agreement with ICC & NYSDOS. No further reproduction, no

100880972

TABLE R608.8(8)
MAXIMUM ALLOWABLE CLEAR SPANS FOR 6-INCH-THICK SCREEN-GRID LINTELS IN LOAD-BEARING WALLS[a, b, c, d, e, f, p]
ROOF CLEAR SPAN 40 FEET AND FLOOR CLEAR SPAN 32 FEET

LINTEL DEPTH, D[g] (inches)	NUMBER OF BARS AND BAR SIZE IN TOP AND BOTTOM OF LINTEL	STEEL YIELD STRENGTH[h], f_y (psi)	DESIGN LOADING CONDITION DETERMINED FROM TABLE R608.8(1)								
			1	2		3		4		5	
			Maximum ground snow load (psf)								
			—	30	70	30	70	30	70	30	70
			Maximum clear span of lintel (feet - inches)								
12[i, j]	Span without stirrups		2-9	2-11	2-4	2-5	2-3	2-3	2-2	2-0	2-0
16[i, j]	Span without stirrups		3-9	4-0	3-4	3-5	3-2	3-1	3-0	2-9	2-9
20[i, j]	Span without stirrups		4-9	5-1	4-3	4-4	4-1	4-0	3-10	3-7	3-7
24[k]	Span without stirrups[l, m]		5-8	6-3	5-2	5-3	5-0	4-10	4-8	4-4	4-4
	1-#4	40,000	7-11	9-0	6-11	7-2	6-5	6-1	5-8	4-9	4-7
		60,000	9-9	11-0	8-5	8-9	7-10	7-5	6-10	5-9	5-7
	1-#5	40,000	9-11	11-2	8-7	8-11	8-0	7-7	7-0	5-11	5-9
		60,000	12-1	13-8	10-6	10-10	9-9	9-3	8-6	7-2	7-0
	2-#4 1-#6	40,000	11-2	12-8	9-9	10-1	9-1	8-7	7-11	6-8	6-6
		60,000	15-7	17-7	12-8	13-4	11-6	10-8	9-8	7-11	7-8
	2-#5	40,000	14-11	18-0	12-2	12-10	11-1	10-3	9-4	7-8	7-5
		60,000	DR	DR	DR	DR	DR	DR	DR	DR	DR
	Center distance A[n, o]		2-0	2-6	1-6	1-7	1-4	1-2	1-0	STL	STL

For SI: 1 inch = 25.4 mm, 1 foot = 304.8 mm, 1 pound per square inch = 6.895 kPa,
1 pound per square foot = 0.0479 kPa, Grade 40 = 280 MPa, Grade 60 = 420 MPa.

a. Where lintels are formed with screen-grid forms, form material shall be removed if necessary to create top and bottom flanges of the lintel that are not less than 5 inches in width and not less than 2.5 inches in depth (in the vertical direction). See Figure R608.8(4). Flat-form lintels shall be permitted in lieu of screen-grid lintels. See Tables R608.8(2) through R608.8(5).

b. See Table R608.3 for tolerances permitted from nominal thickness and minimum dimensions and spacings of cores.

c. Table values are based on concrete with a minimum specified compressive strength of 2,500 psi. See Notes m and o. Table values are based on uniform loading. See Section R608.7.2.1 for lintels supporting concentrated loads.

d. Deflection criterion is $L/240$, where L is the clear span of the lintel in inches, or $^1/_2$ inch, whichever is less.

e. Linear interpolation is permitted between ground snow loads.

f. DR indicates design required. STL indicates stirrups required throughout lintel.

g. Lintel depth, D, is permitted to include the available height of wall located directly above the lintel, provided that the increased lintel depth spans the entire length of the lintel.

h. Stirrups shall be fabricated from reinforcing bars with the same yield strength as that used for the main longitudinal reinforcement.

i. Stirrups are not required for lintels less than 24 inches in depth fabricated from screen-grid forms. Top and bottom reinforcement shall consist of a No. 4 bar having a yield strength of 40,000 psi or 60,000 psi.

j. Lintels between 12 and 24 inches in depth with stirrups shall be formed from flat-wall forms [see Tables R608.8(2) through R608.8(5)], or form material shall be removed from screen-grid forms to provide a concrete section comparable to that required for a flat wall. Allowable spans for flat lintels with stirrups shall be determined from Tables R608.8(2) through R608.8(5).

k. Where stirrups are required for 24-inch-deep lintels, the spacing shall not exceed 12 inches on center.

l. Allowable clear span without stirrups applicable to all lintels of the same depth, D. Top and bottom reinforcement for lintels without stirrups shall be not less than the least amount of reinforcement required for a lintel of the same depth and loading condition with stirrups. All other spans require stirrups spaced at not more than 12 inches.

m. Where concrete with a minimum specified compressive strength of 3,000 psi is used, clear spans for lintels without stirrups shall be permitted to be multiplied by 1.05. If the increased span exceeds the allowable clear span for a lintel of the same depth and loading condition with stirrups, the top and bottom reinforcement shall be equal to or greater than that required for a lintel of the same depth and loading condition that has an allowable clear span that is equal to or greater than that of the lintel without stirrups that has been increased.

n. Center distance, A, is the center portion of the span where stirrups are not required. This is applicable to all longitudinal bar sizes and steel yield strengths.

o. Where concrete with a minimum specified compressive strength of 3,000 psi is used, center distance, A, shall be permitted to be multiplied by 1.10.

p. The maximum clear opening width between two solid wall segments shall be 18 feet. See Section R608.7.2.1. Lintel spans in the table greater than 18 feet are shown for interpolation and information only.

INTERNATIONAL CODE COUNCIL®
Copyright © 2019 ICC & NYSDOS. ALL RIGHTS RESERVED. Accessed by Lauren Gualdino (lgualdino@briarcliffmanor.org), (-) Order Number #100880972 on May 08, 2020 07:05 AM (PDT) pursuant to License Agreement with ICC & NYSDOS. No further reproduction, no

100880972

TABLE R608.8(9)
MAXIMUM ALLOWABLE CLEAR SPANS FOR FLAT LINTELS WITHOUT STIRRUPS IN NONLOAD-BEARING WALLS[a, b, c, d, e, g]

LINTEL DEPTH, D [f] (inches)	NUMBER OF BARS AND BAR SIZE	STEEL YIELD STRENGTH, f_y (psi)	NOMINAL WALL THICKNESS (inches)							
			4		6		8		10	
			Lintel Supporting							
			Concrete Wall	Light-framed Gable	Concrete Wall	Light-framed Gable	Concrete Wall	Light-framed Gable	Concrete Wall	Light-framed Gable
			Maximum Clear Span of Lintel (feet - inches)							
8	1-#4	40,000	10-11	11-5	9-7	11-2	7-10	9-5	7-3	9-2
		60,000	12-5	11-7	10-11	13-5	9-11	13-2	9-3	12-10
	1-#5	40,000	12-7	11-7	11-1	13-8	10-1	13-5	9-4	13-1
		60,000	DR	DR	12-7	16-4	11-6	14-7	10-9	14-6
	2-#4 1-#6	40,000	DR	DR	12-0	15-3	10-11	15-0	10-2	14-8
		60,000	DR	DR	DR	DR	12-2	15-3	11-7	15-3
	2-#5	40,000	DR	DR	DR	DR	12-7	16-7	11-9	16-7
		60,000	DR	DR	DR	DR	DR	DR	13-3	16-7
	2-#6	40,000	DR	DR	DR	DR	DR	DR	13-2	17-8
		60,000	DR	DR	DR	DR	DR	DR	DR	DR
12	1-#4	40,000	11-5	9-10	10-6	12-0	9-6	11-6	8-9	11-1
		60,000	11-5	9-10	11-8	13-3	10-11	14-0	10-1	13-6
	1-#5	40,000	11-5	9-10	11-8	13-3	11-1	14-4	10-3	13-9
		60,000	11-5	9-10	11-8	13-3	11-10	16-0	11-9	16-9
	2-#4 1-#6	40,000	DR	DR	11-8	13-3	11-10	16-0	11-2	15-6
		60,000	DR	DR	11-8	13-3	11-10	16-0	11-11	18-4
	2-#5	40,000	DR	DR	11-8	13-3	11-10	16-0	11-11	18-4
		60,000	DR	DR	11-8	13-3	11-10	16-0	11-11	18-4
16	1-#4	40,000	13-6	13-0	11-10	13-8	10-7	12-11	9-11	12-4
		60,000	13-6	13-0	13-8	16-7	12-4	15-9	11-5	15-0
	1-#5	40,000	13-6	13-0	13-10	17-0	12-6	16-1	11-7	15-4
		60,000	13-6	13-0	13-10	17-1	14-0	19-7	13-4	18-8
	2-#4 1-#6	40,000	13-6	13-0	13-10	17-1	13-8	18-2	12-8	17-4
		60,000	13-6	13-0	13-10	17-1	14-0	20-3	14-1	—
	2-#5	40,000	13-6	13-0	13-10	17-1	14-0	20-3	14-1	—
		60,000	DR	DR	13-10	17-1	14-0	20-3	14-1	—
20	1-#4	40,000	14-11	15-10	13-0	14-10	11-9	13-11	10-10	13-2
		60,000	15-3	15-10	14-11	18-1	13-6	17-0	12-6	16-2
	1-#5	40,000	15-3	15-10	15-2	18-6	13-9	17-5	12-8	16-6
		60,000	15-3	15-10	15-8	20-5	15-9	—	14-7	20-1
	2-#4 1-#6	40,000	15-3	15-10	15-8	20-5	14-11	—	13-10	—
		60,000	15-3	15-10	15-8	20-5	15-10	—	15-11	—
	2-#5	40,000	15-3	15-10	15-8	20-5	15-10	—	15-11	—
		60,000	15-3	15-10	15-8	20-5	15-10	—	15-11	—

(continued)

INTERNATIONAL CODE COUNCIL®
Copyright © 2019 ICC & NYSDOS. ALL RIGHTS RESERVED. Accessed by Lauren Gualdino (lgualdino@briarcliffmanor.org), (-) Order Number #100880972 on May 08, 2020 07:05 AM (PDT) pursuant to License Agreement with ICC & NYSDOS. No further reproduction, no

100880972

TABLE R608.8(9)—continued
MAXIMUM ALLOWABLE CLEAR SPANS FOR FLAT LINTELS WITHOUT STIRRUPS IN NONLOAD-BEARING WALLS[a, b, c, d, e, g]

LINTEL DEPTH, *D* [f] (inches)	NUMBER OF BARS AND BAR SIZE	STEEL YIELD STRENGTH, f_y (psi)	NOMINAL WALL THICKNESS (inches)							
			4		6		8		10	
			Lintel Supporting							
			Concrete Wall	Light-framed Gable	Concrete Wall	Light-framed Gable	Concrete Wall	Light-framed Gable	Concrete Wall	Light-framed Gable
			Maximum Clear Span of Lintel (feet - inches)							
24	1-#4	40,000	16-1	17-1	13-11	15-10	12-7	14-9	11-8	13-10
		60,000	16-11	18-5	16-1	19-3	14-6	18-0	13-5	17-0
	1-#5	40,000	16-11	18-5	16-3	19-8	14-9	18-5	13-8	17-4
		60,000	16-11	18-5	17-4	—	17-0	—	15-8	—
	2-#4 1-#6	40,000	16-11	18-5	17-4	—	16-1	—	14-10	—
		60,000	16-11	18-5	17-4	—	17-6	—	17-1	—
	2-#5	40,000	16-11	18-5	17-4	—	17-6	—	17-4	—
		60,000	16-11	18-5	17-4	—	17-6	—	17-8	—

For SI: 1 inch = 25.4 mm, 1 foot = 304.8 mm, 1 pound per square inch = 6.895 kPa, Grade 40 = 280 MPa, Grade 60 = 420 MPa.

DR = Design Required.

a. See Table R608.3 for tolerances permitted from nominal thickness.

b. Table values are based on concrete with a minimum specified compressive strength of 2,500 psi. See Note e.

c. Deflection criterion is $L/240$, where L is the clear span of the lintel in inches, or $^1/_2$ inch, whichever is less.

d. Linear interpolation between lintels depths, *D*, is permitted provided the two cells being used to interpolate are shaded.

e. Where concrete with a minimum specified compressive strength of 3,000 psi is used, spans in cells that are shaded shall be permitted to be multiplied by 1.05.

f. Lintel depth, *D*, is permitted to include the available height of wall located directly above the lintel, provided that the increased lintel depth spans the entire length of the lintel.

g. The maximum clear opening width between two solid wall segments shall be 18 feet. See Section R608.7.2.1. Lintel spans in the table greater than 18 feet are shown for interpolation and information purposes only.

TABLE R608.8(10)
MAXIMUM ALLOWABLE CLEAR SPANS FOR WAFFLE-GRID AND SCREEN-GRID LINTELS WITHOUT STIRRUPS IN NONLOAD-BEARING WALLS[c, d, e, f, g]

LINTEL DEPTH[h], *D* (inches)	FORM TYPE AND NOMINAL WALL THICKNESS (inches)					
	6-inch Waffle-grid[a]		8-inch Waffle-grid[a]		6-inch Screen-grid[b]	
	Lintel supporting					
	Concrete Wall	Light-framed Gable	Concrete Wall	Light-framed Gable	Concrete Wall	Light-framed Gable
	Maximum Clear Span of Lintel (feet - inches)					
8	10-3	8-8	8-8	8-3	—	—
12	9-2	7-6	7-10	7-1	8-8	6-9
16	10-11	10-0	9-4	9-3	—	—
20	12-5	12-2	10-7	11-2	—	—
24	13-9	14-2	11-10	12-11	13-0	12-9

For SI: 1 inch = 25.4 mm, 1 foot = 304.8 mm, Grade 40 = 280 MPa, Grade 60 = 420 MPa.

a. Where lintels are formed with waffle-grid forms, form material shall be removed, if necessary, to create top and bottom flanges of the lintel that are not less than 3 inches in depth (in the vertical direction), are not less than 5 inches in width for 6-inch waffle-grid forms and not less than 7 inches in width for 8-inch waffle-grid forms. See Figure R608.8(3). Flat-form lintels shall be permitted in lieu of waffle-grid lintels. See Tables R608.8(2) through R608.8(5).

b. Where lintels are formed with screen-grid forms, form material shall be removed if necessary to create top and bottom flanges of the lintel that are not less than 5 inches in width and not less than 2.5 inches in depth (in the vertical direction). See Figure R608.8(4). Flat-form lintels shall be permitted in lieu of screen-grid lintels. See Tables R608.8(2) through R608.8(5).

c. See Table R608.3 for tolerances permitted from nominal thickness and minimum dimensions and spacing of cores.

d. Table values are based on concrete with a minimum specified compressive strength of 2,500 psi. See Note g.

e. Deflection criterion is $L/240$, where L is the clear span of the lintel in inches, or $^1/_2$ inch, whichever is less.

f. Top and bottom reinforcement shall consist of a No. 4 bar having a minimum yield strength of 40,000 psi.

g. Where concrete with a minimum specified compressive strength of 3,000 psi is used, spans in shaded cells shall be permitted to be multiplied by 1.05.

h. Lintel depth, *D*, is permitted to include the available height of wall located directly above the lintel, provided that the increased lintel depth spans the entire length of the lintel.

INTERNATIONAL CODE COUNCIL®
Copyright © 2019 ICC & NYSDOS. ALL RIGHTS RESERVED. Accessed by Lauren Gualdino (lgualdino@briarcliffmanor.org), (-) Order Number #100880972 on May 08, 2020 07:05 AM (PDT) pursuant to License Agreement with ICC & NYSDOS. No further reproduction, no

100880972

R608.8.2 Lintels. Lintels shall be provided over all openings equal to or greater than 2 feet (610 mm) in width. Lintels with uniform loading shall conform to Sections R608.8.2.1 and R608.8.2.2, or Section R608.8.2.3. Lintels supporting concentrated loads, such as from roof or floor beams or girders, shall be designed in accordance with ACI 318.

R608.8.2.1 Lintels designed for gravity load-bearing conditions. Where a lintel will be subjected to gravity load conditions 1 through 5 of Table R608.8(1), the clear span of the lintel shall not exceed that permitted by Tables R608.8(2) through R608.8(8). The maximum clear span of lintels with and without stirrups in flat walls shall be determined in accordance with Tables R608.8(2) through R608.8(5), and constructed in accordance with Figure R608.8(2). The maximum clear span of lintels with and without stirrups in waffle-grid walls shall be determined in accordance with Tables R608.8(6) and R608.8(7), and constructed in accordance with Figure R608.8(3). The maximum clear span of lintels with and without stirrups in screen-grid walls shall be determined in accordance with Table R608.8(8), and constructed in accordance with Figure R608.8(4).

Where required by the applicable table, No. 3 stirrups shall be installed in lintels at a maximum spacing of *d/2* where *d* equals the depth of the lintel, *D*, less the cover of the concrete as shown in Figures R608.8(2) through R608.8(4). The smaller value of *d* computed for the top and bottom bar shall be used to determine the maximum stirrup spacing. Where stirrups are required in a lintel with a single bar or two bundled bars in the top and bottom, they shall be fabricated like the letter "c" or "s" with 135-degree (2.36 rad) standard hooks at each end that comply with Section R608.5.4.5 and Figure R608.5.4(3) and installed as shown in Figures R608.8(2) through R608.8(4). Where two bars are required in the top and bottom of the lintel and the bars are not bundled, the bars shall be separated by not less than 1 inch (25 mm). The free end of the stirrups shall be fabricated with 90- or 135-degree (1.57 or 2.36 rad) standard hooks that comply with Section R608.5.4.5 and Figure R608.5.4(3) and installed as shown in Figures R608.8(2) and R608.8(3). For flat, waffle-grid and screen-grid lintels, stirrups are not required in the center distance, *A*, portion of spans in accordance with Figure R608.8(1) and Tables R608.8(2) through R608.8(8). See Section R608.8.2.2, Item 5, for requirement for stirrups through out lintels with bundled bars.

R608.8.2.2 Bundled bars in lintels. It is permitted to bundle two bars in contact with each other in lintels if all of the following are observed:

1. Bars equal to or less than No. 6 are bundled.
2. Where the wall thickness is not sufficient to provide not less than 3 inches (76 mm) of clear space beside bars (total on both sides) oriented horizontally in a bundle, the bundled bars shall be oriented in a vertical plane.
3. Where vertically oriented bundled bars terminate with standard hooks to develop the bars in tension beyond the support (see Section R608.5.4.4), the hook extensions shall be staggered to provide not less than 1 inch (25 mm) clear spacing between the extensions.
4. Bundled bars shall not be lap spliced within the lintel span and the length on each end of the lintel that is required to develop the bars in tension.
5. Bundled bars shall be enclosed within stirrups throughout the length of the lintel. Stirrups and the installation thereof shall comply with Section R608.8.2.1.

R608.8.2.3 Lintels without stirrups designed for nonload-bearing conditions. The maximum clear span of lintels without stirrups designed for nonload-bearing conditions of Table R608.8(1).1 shall be determined in accordance with this section. The maximum clear span of lintels without stirrups in flat walls shall be determined in accordance with Table R608.8(9), and the maximum clear span of lintels without stirrups in walls of waffle-grid or screen-grid construction shall be determined in accordance with Table R608.8(10).

R608.9 Requirements for connections–general. Concrete walls shall be connected to footings, floors, ceilings and roofs in accordance with this section.

R608.9.1 Connections between concrete walls and light-framed floor, ceiling and roof systems. Connections between concrete walls and light-framed floor, ceiling and roof systems using the prescriptive details of Figures R608.9(1) through R608.9(12) shall comply with this section and Sections R608.9.2 and R608.9.3.

R608.9.1.1 Anchor bolts. Anchor bolts used to connect light-framed floor, ceiling and roof systems to concrete walls in accordance with Figures R608.9(1) through R608.9(12) shall have heads, or shall be rods with threads on both ends with a hex or square nut on the end embedded in the concrete. Bolts and threaded rods shall comply with Section R608.5.2.2. Anchor bolts with J- or L-hooks shall not be used where the connection details in these figures are used.

R608.9.1.2 Removal of stay-in-place form material at bolts. Holes in stay-in-place forms for installing bolts for attaching face-mounted wood ledger boards to the wall shall be not less than 4 inches (102 mm) in diameter for forms not greater than $1^1/_2$ inches (38 mm) in thickness, and increased 1 inch (25 mm) in diameter for each $^1/_2$-inch (12.7 mm) increase in form thickness. Holes in stay-in-place forms for installing bolts for attaching face-mounted cold-formed steel tracks to the wall shall be not less than 4 inches (102 mm) square. The wood ledger board or steel track shall be in direct contact with the concrete at each bolt location.

Exception: A vapor retarder or other material less than or equal to $^1/_{16}$ inch (1.6 mm) in thickness is permitted to be installed between the wood ledger or cold-formed track and the concrete.

INTERNATIONAL CODE COUNCIL®
Copyright © 2019 ICC & NYSDOS. ALL RIGHTS RESERVED. Accessed by Lauren Gualdino (lgualdino@briarcliffmanor.org), (-) Order Number #100880972 on May 08, 2020 07:05 AM (PDT) pursuant to License Agreement with ICC & NYSDOS. No further reproduction, no

100880972

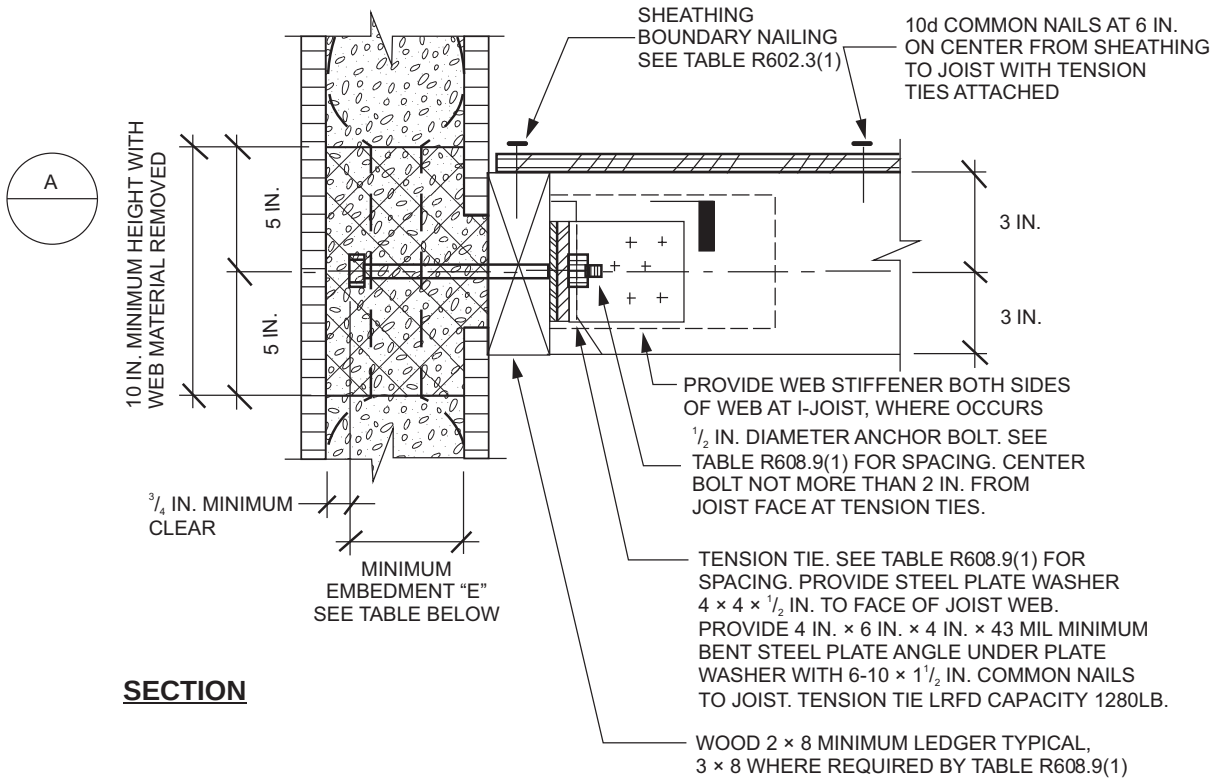

SECTION

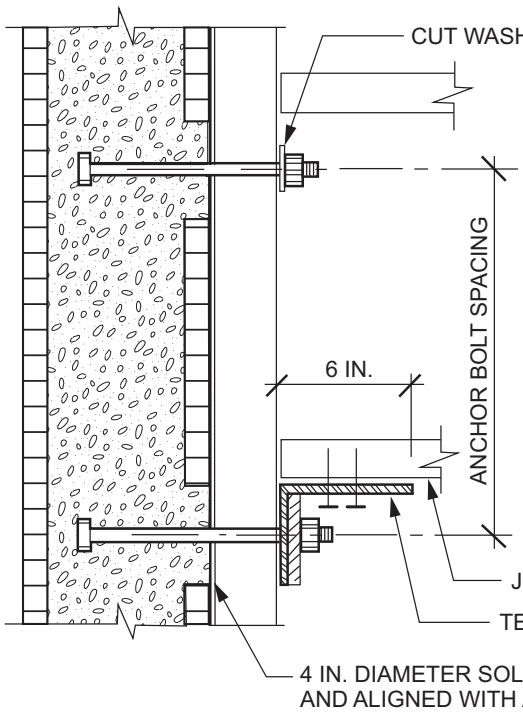

E (in)	wall type
2 3/4 in.	4 in. flat
4 3/4 in.	6 in. flat 6 in. waffle-grid 6 in. screen-grid
6 3/4 in.	8 in. flat 10 in. flat 8 in. waffle-grid

DETAIL A – PLAN VIEW

For SI: 1 mil = 0.0254 mm, 1 inch = 25.4 mm, 1 pound-force = 4.448 N.

FIGURE R608.9(1)
WOOD-FRAMED FLOOR TO SIDE OF CONCRETE WALL, FRAMING PERPENDICULAR

INTERNATIONAL CODE COUNCIL®
Copyright © 2019 ICC & NYSDOS. ALL RIGHTS RESERVED. Accessed by Lauren Gualdino (lgualdino@briarcliffmanor.org), (-) Order Number #100880972 on May 08, 2020 07:05 AM (PDT) pursuant to License Agreement with ICC & NYSDOS. No further reproduction, no

100880972

TABLE R608.9(1)
WOOD-FRAMED FLOOR TO SIDE OF CONCRETE WALL, FRAMING PERPENDICULAR[a, b]

ANCHOR BOLT SPACING (inches)	TENSION TIE SPACING (inches)	BASIC WIND SPEED (mph)					
		115B	120B	130B	140B	150B	160B
		—	—	110C	119C	127C	136C
		—	—	—	110D	117D	125D
12	12						
12	24						
12	36						
12	48						
16	16						
16	32						
16	48						
19.2	19.2						
19.2	38.4						

For SI: 1 inch = 25.4 mm, 1 mile per hour = 0.447 m/s.

a. This table is for use with the detail in Figure R608.9(1). Use of this detail is permitted where a cell is not shaded and prohibited where shaded.

b. Wall design per other provisions of Section R608 is required.

INTERNATIONAL CODE COUNCIL®
Copyright © 2019 ICC & NYSDOS. ALL RIGHTS RESERVED. Accessed by Lauren Gualdino (lgualdino@briarcliffmanor.org), (-) Order Number #100880972 on May 08, 2020 07:05 AM (PDT) pursuant to License Agreement with ICC & NYSDOS. No further reproduction, no

100880972

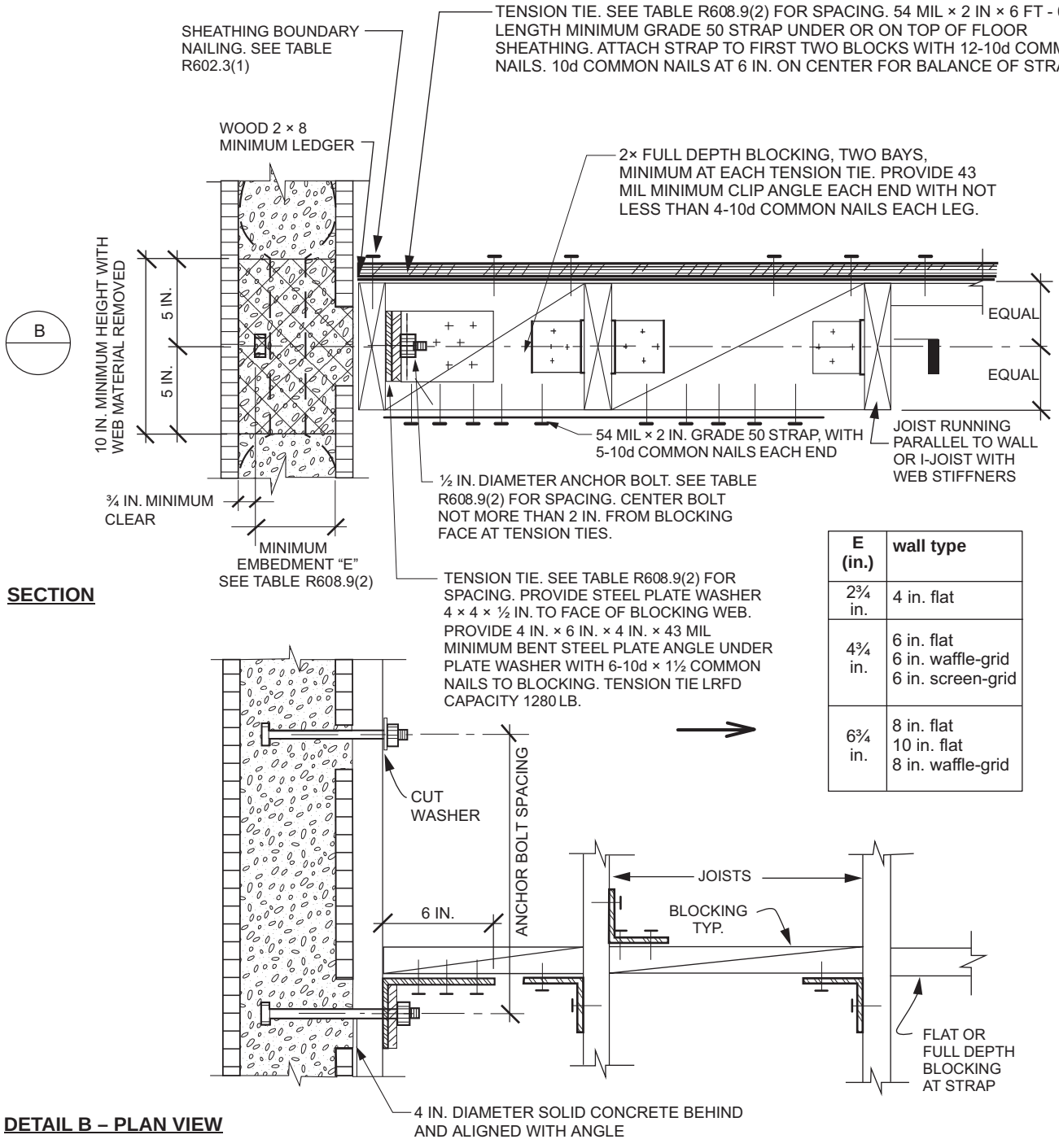

E (in.)	wall type
2¾ in.	4 in. flat
4¾ in.	6 in. flat 6 in. waffle-grid 6 in. screen-grid
6¾ in.	8 in. flat 10 in. flat 8 in. waffle-grid

For SI: 1 mil = 0.0254 mm, 1 inch = 25.4 mm, 1 foot = 304.8 mm, 1 pound-force = 4.448 N.

FIGURE R608.9(2)
WOOD-FRAMED FLOOR TO SIDE OF CONCRETE WALL, FRAMING PARALLEL

INTERNATIONAL CODE COUNCIL®
Copyright © 2019 ICC & NYSDOS. ALL RIGHTS RESERVED. Accessed by Lauren Gualdino (lgualdino@briarcliffmanor.org), (-) Order Number #100880972 on May 08, 2020 07:05 AM (PDT) pursuant to License Agreement with ICC & NYSDOS. No further reproduction, no

100880972

TABLE R608.9(2)
WOOD-FRAMED FLOOR TO SIDE OF CONCRETE WALL, FRAMING PARALLEL[a, b]

ANCHOR BOLT SPACING (inches)	TENSION TIE SPACING (inches)	BASIC WIND SPEED (mph) AND WIND EXPOSURE CATEGORY					
		115B	120B	130B	140B	150B	160B
		—	—	110C	119C	127C	136C
		—	—	—	110D	117D	125D
12	12						
12	24						
12	36						
12	48						
16	16						
16	32						
16	48						
19.2	19.2						
19.2	38.4						
24	24						
24	48						

For SI: 1 inch = 25.4 mm, 1 mile per hour = 0.447 m/s.

a. This table is for use with the detail in Figure R608.9(2). Use of this detail is permitted where a cell is not shaded and prohibited where shaded.

b. Wall design per other provisions of Section R608 is required.

INTERNATIONAL CODE COUNCIL®
Copyright © 2019 ICC & NYSDOS. ALL RIGHTS RESERVED. Accessed by Lauren Gualdino (lgualdino@briarcliffmanor.org), (-) Order Number #100880972 on May 08, 2020 07:05 AM (PDT) pursuant to License Agreement with ICC & NYSDOS. No further reproduction, no

100880972

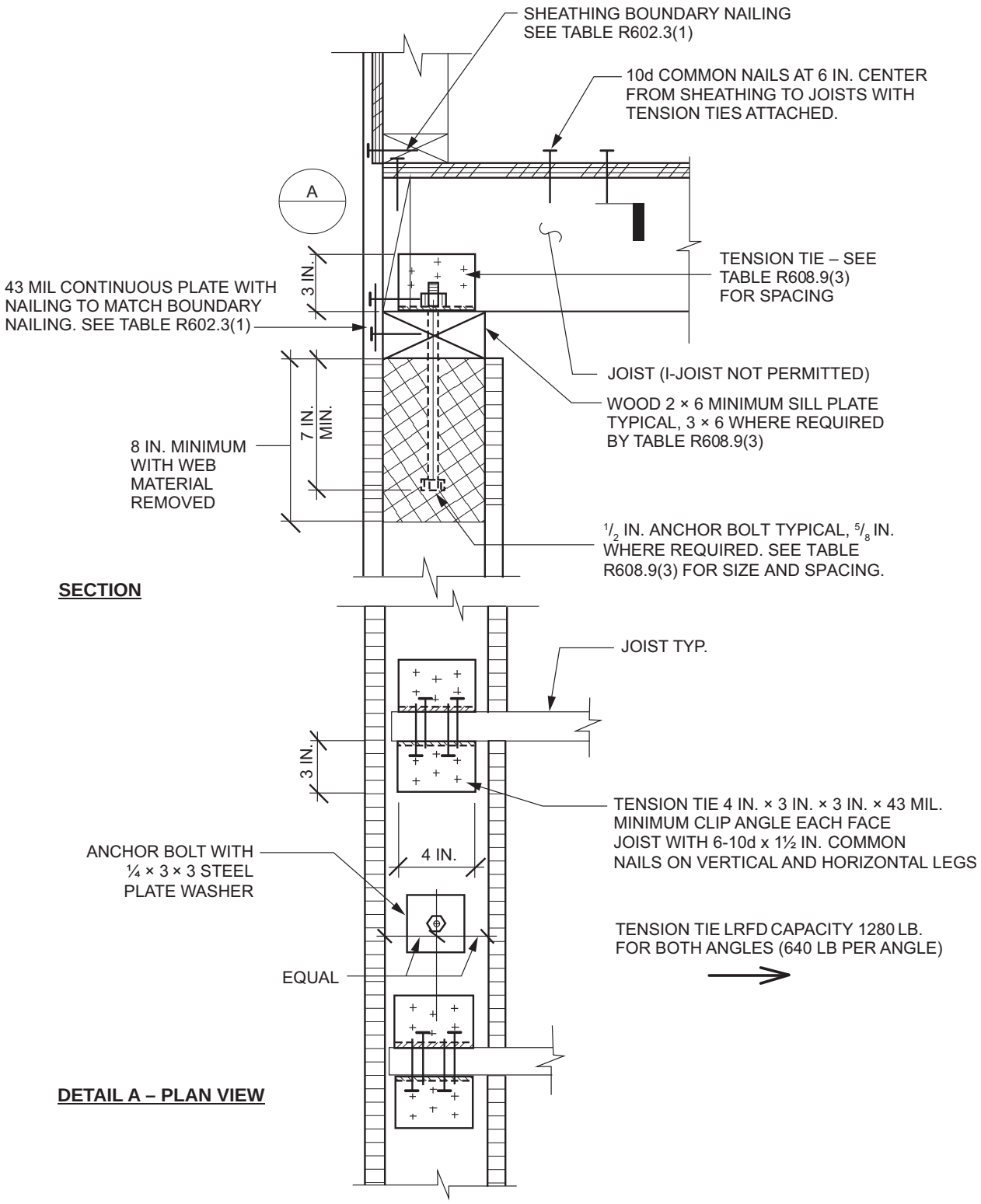

For SI: 1 mil = 0.0254 mm, 1 inch = 25.4 mm, 1 pound-force = 4.448 N.

FIGURE R608.9(3)
WOOD-FRAMED FLOOR TO TOP OF CONCRETE WALL FRAMING, PERPENDICULAR

INTERNATIONAL CODE COUNCIL®
Copyright © 2019 ICC & NYSDOS. ALL RIGHTS RESERVED. Accessed by Lauren Gualdino (lgualdino@briarcliffmanor.org), (-) Order Number #100880972 on May 08, 2020 07:05 AM (PDT) pursuant to License Agreement with ICC & NYSDOS. No further reproduction, no

100880972

TABLE R608.9(3)
WOOD-FRAMED FLOOR TO TOP OF CONCRETE WALL, FRAMING PERPENDICULAR[a, b, c, d, e]

ANCHOR BOLT SPACING (inches)	TENSION TIE SPACING (inches)	BASIC WIND SPEED (mph) AND WIND EXPOSURE CATEGORY					
		115B	120B	130B	140B	150B	160B
		—	—	110C	119C	127C	136C
		—	—	—	110D	117D	125D
12	12						6
12	24					6	6
12	36					6	6
12	48				6	6	6
16	16					6	6A
16	32				6	6	6A
16	48			6	6	6	6A
19.2	19.2				6A	6A	6B
19.2	38.4			6	6A	6A	6B
24	24			6A	6B	6B	6B
24	48		6	6A	6B	6B	8B

For SI: 1 inch = 25.4 mm, 1 mile per hour = 0.447 m/s.

a. This table is for use with the detail in Figure R608.9(3). Use of this detail is permitted where cell is not shaded.

b. Wall design per other provisions in Section R608 is required.

c. For wind design, minimum 4-inch-nominal wall is permitted in unshaded cells that do not contain a number.

d. Numbers 6 and 8 indicate minimum permitted nominal wall thickness in inches necessary to develop required strength (capacity) of connection. As a minimum, this nominal thickness shall occur in the portion of the wall indicated by the cross hatching in Figure R608.9(3). For the remainder of the wall, see Note b.

e. Letter "A" indicates that a minimum nominal 3 × 6 sill plate is required. Letter "B" indicates that a $^{5}/_{8}$-inch-diameter anchor bolt and a minimum nominal 3 × 6 sill plate are required.

INTERNATIONAL CODE COUNCIL®
Copyright © 2019 ICC & NYSDOS. ALL RIGHTS RESERVED. Accessed by Lauren Gualdino (lgualdino@briarcliffmanor.org), (-) Order Number #100880972 on May 08, 2020 07:05 AM (PDT) pursuant to License Agreement with ICC & NYSDOS. No further reproduction, no

100880972

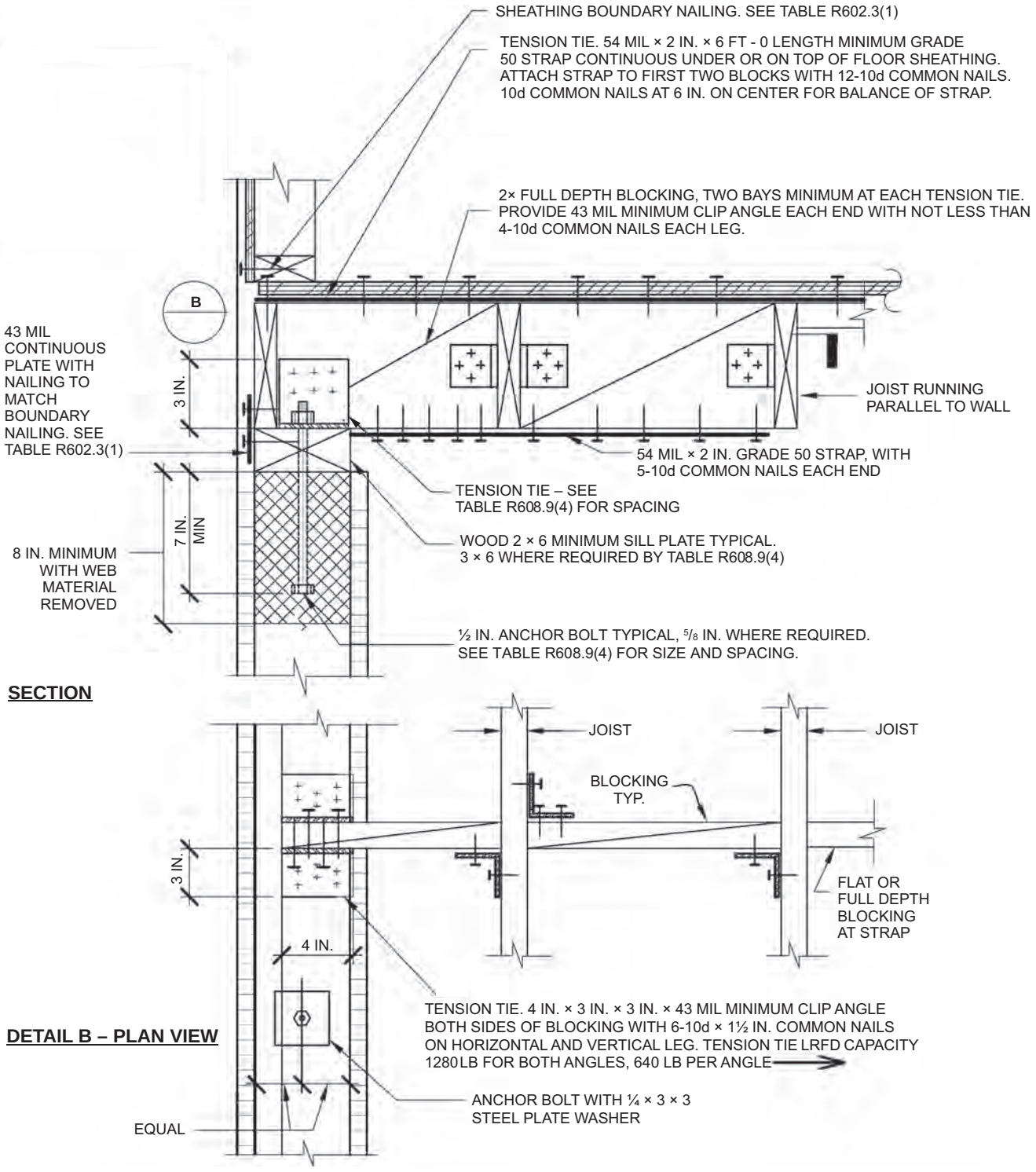

For SI: 1 mil = 0.0254 mm, 1 inch = 25.4 mm, 1 foot = 304.8 mm, 1 pound-force = 4.448 N.

FIGURE R608.9(4)
WOOD-FRAMED FLOOR TO TOP OF CONCRETE WALL, FRAMING PARALLEL

INTERNATIONAL CODE COUNCIL®
Copyright © 2019 ICC & NYSDOS. ALL RIGHTS RESERVED. Accessed by Lauren Gualdino (lgualdino@briarcliffmanor.org), (-) Order Number #100880972 on May 08, 2020 07:05 AM (PDT) pursuant to License Agreement with ICC & NYSDOS. No further reproduction, no

100880972

TABLE R608.9(4)
WOOD-FRAMED FLOOR TO TOP OF CONCRETE WALL, FRAMING PARALLEL[a, b, c, d, e]

ANCHOR BOLT SPACING (inches)	TENSION TIE SPACING (inches)	BASIC WIND SPEED (mph) AND WIND EXPOSURE CATEGORY					
		115B	120B	130B	140B	150B	160B
		—	—	110C	119C	127C	136C
		—	—	—	110D	117D	125D
12	12						6
12	24					6	6
12	36					6	6
12	48				6	6	6
16	16					6	6A
16	32				6	6	6A
16	48			6	6	6	6A
19.2	19.2				6A	6A	6B
19.2	38.4			6	6A	6A	6B
24	24			6A	6B	6B	6B
24	48		6	6A	6B	6B	8B

For SI: 1 inch = 25.4 mm, 1 mile per hour = 0.447 m/s.

a. This table is for use with the detail in Figure R608.9(4). Use of this detail is permitted where a cell is not shaded.

b. Wall design per other provisions of Section R608 is required.

c. For wind design, minimum 4-inch-nominal wall is permitted in unshaded cells that do not contain a number.

d. Numbers 6 and 8 indicate minimum permitted nominal wall thickness in inches necessary to develop required strength (capacity) of connection. As a minimum, this nominal thickness shall occur in the portion of the wall indicated by the cross hatching in Figure R608.9(4). For the remainder of the wall, see Note b.

e. Letter “A” indicates that a minimum nominal 3 × 6 sill plate is required. Letter “B” indicates that a $^{5}/_{8}$-inch-diameter anchor bolt and a minimum nominal 3 × 6 sill plate are required.

INTERNATIONAL CODE COUNCIL®
Copyright © 2019 ICC & NYSDOS. ALL RIGHTS RESERVED. Accessed by Lauren Gualdino (lgualdino@briarcliffmanor.org), (-) Order Number #100880972 on May 08, 2020 07:05 AM (PDT) pursuant to License Agreement with ICC & NYSDOS. No further reproduction, no

100880972

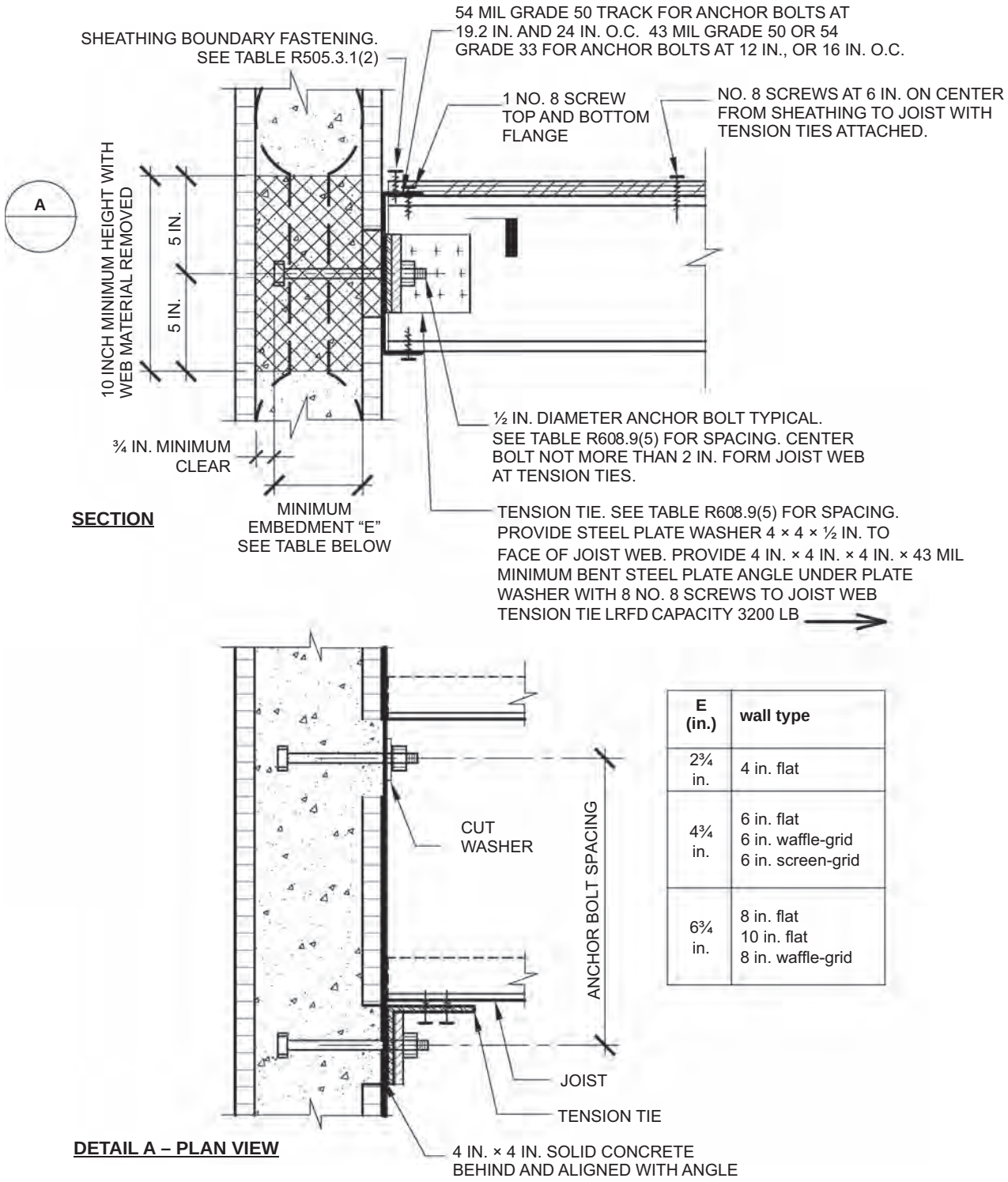

E (in.)	wall type
2¾ in.	4 in. flat
4¾ in.	6 in. flat 6 in. waffle-grid 6 in. screen-grid
6¾ in.	8 in. flat 10 in. flat 8 in. waffle-grid

For SI: 1 mil = 0.0254 mm, 1 inch = 25.4 mm, 1 pound-force = 4.448 N.

FIGURE R608.9(5)
COLD-FORMED STEEL FLOOR TO SIDE OF CONCRETE WALL, FRAMING PERPENDICULAR

INTERNATIONAL CODE COUNCIL®
Copyright © 2019 ICC & NYSDOS. ALL RIGHTS RESERVED. Accessed by Lauren Gualdino (lgualdino@briarcliffmanor.org), (-) Order Number #100880972 on May 08, 2020 07:05 AM (PDT) pursuant to License Agreement with ICC & NYSDOS. No further reproduction, no

100880972

TABLE R608.9(5)
COLD-FORMED STEEL-FRAMED FLOOR TO SIDE OF CONCRETE WALL, FRAMING PERPENDICULAR[a, b, c]

ANCHOR BOLT SPACING (inches)	TENSION TIE SPACING (inches)	BASIC WIND SPEED (mph) AND WIND EXPOSURE CATEGORY					
		115B	120B	130B	140B	150B	160B
		—	—	110C	119C	127C	136C
		—	—	—	110D	117D	125D
12	12						
12	24						
12	36						
12	48						
16	16						
16	32						
16	48						
19.2	19.2						
19.2	38.4						
24	24						
24	48						

For SI: 1 inch = 25.4 mm, 1 mile per hour = 0.4470 m/s.

a. This table is for use with the detail in Figure R608.9(5). Use of this detail is permitted where a cell is not shaded.

b. Wall design per other provisions of Section R608 is required.

c. For wind design, minimum 4-inch-nominal wall is permitted in unshaded cells that do not contain a number.

INTERNATIONAL CODE COUNCIL®
Copyright © 2019 ICC & NYSDOS. ALL RIGHTS RESERVED. Accessed by Lauren Gualdino (lgualdino@briarcliffmanor.org), (-) Order Number #100880972 on May 08, 2020 07:05 AM (PDT) pursuant to License Agreement with ICC & NYSDOS. No further reproduction, no

100880972

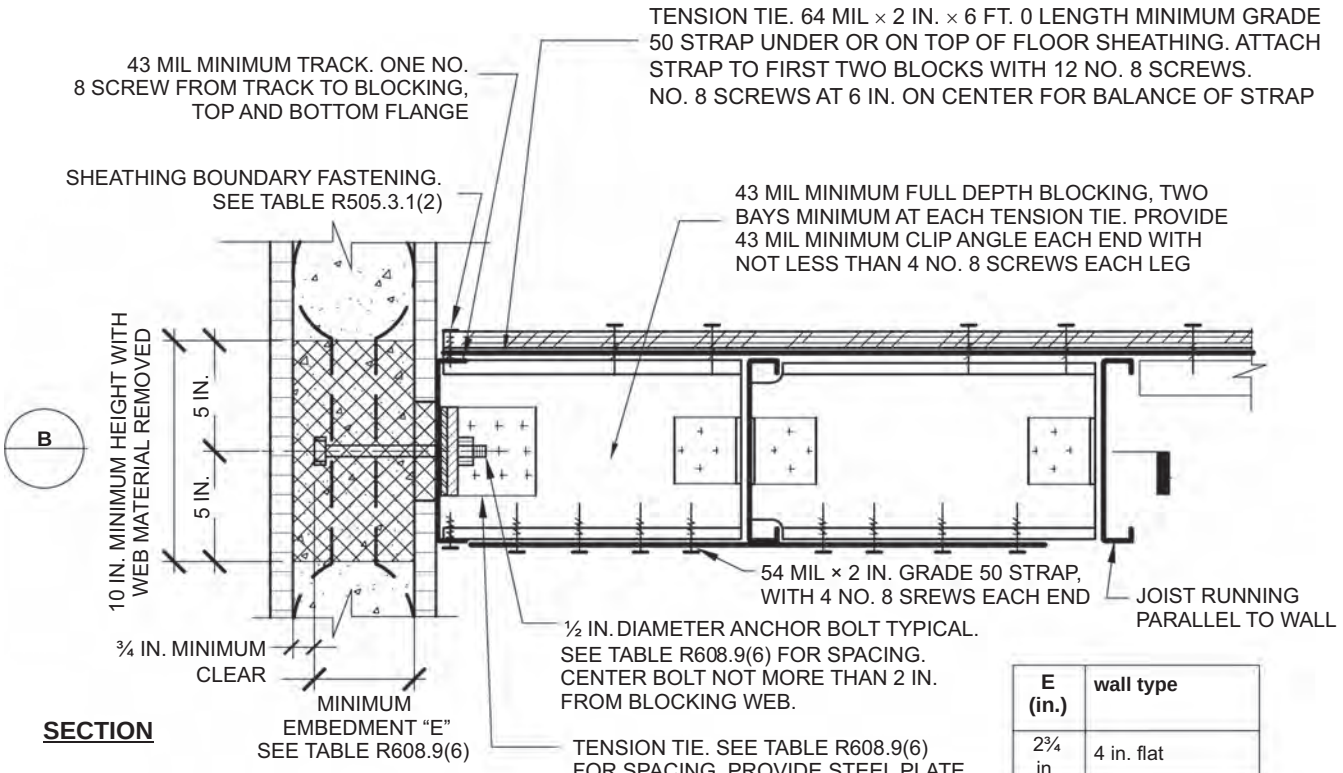

SECTION

E (in.)	wall type
2¾ in.	4 in. flat
4¾ in.	6 in. flat 6 in. waffle-grid 6 in. screen-grid
6¾ in.	8 in. flat 10 in. flat 8 in. waffle-grid

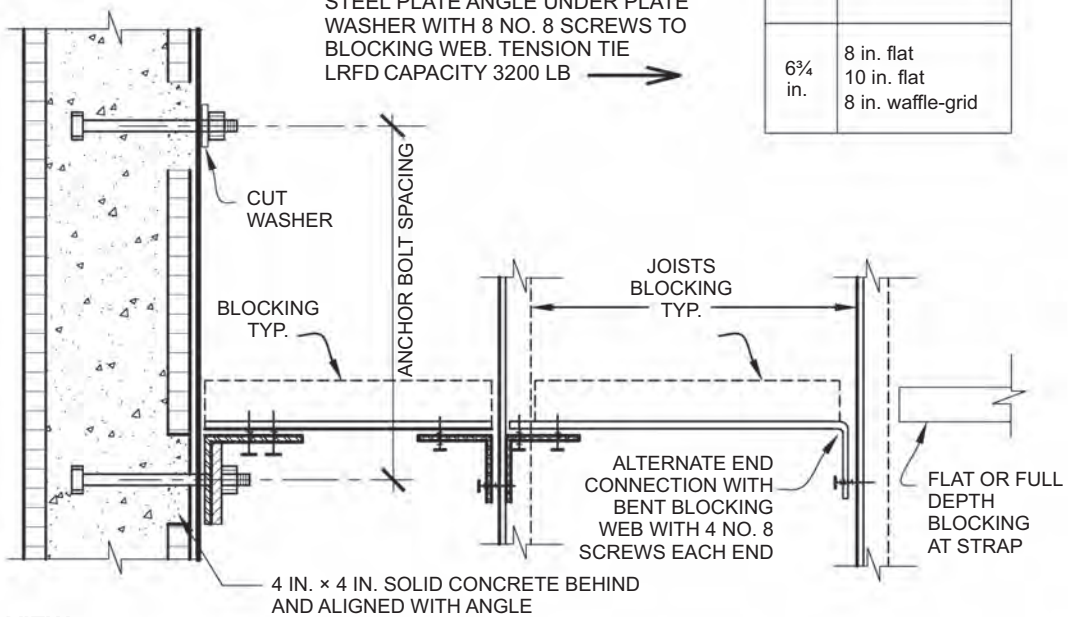

DETAIL B – PLAN VIEW

For SI: 1 mil = 0.0254 mm, 1 inch = 25.4 mm, 1 pound-force = 4.448 N.

FIGURE R608.9(6)
COLD-FORMED STEEL FLOOR TO SIDE OF CONCRETE WALL, FRAMING PARALLEL

INTERNATIONAL CODE COUNCIL®
Copyright © 2019 ICC & NYSDOS. ALL RIGHTS RESERVED. Accessed by Lauren Gualdino (lgualdino@briarcliffmanor.org), (-) Order Number #100880972 on May 08, 2020 07:05 AM (PDT) pursuant to License Agreement with ICC & NYSDOS. No further reproduction, no

TABLE R608.9(6)
COLD-FORMED STEEL-FRAMED FLOOR TO SIDE OF CONCRETE WALL, FRAMING PARALLEL[a, b, c]

ANCHOR BOLT SPACING (inches)	TENSION TIE SPACING (inches)	BASIC WIND SPEED (mph) AND WIND EXPOSURE CATEGORY					
		115B	120B	130B	140B	150B	160B
		—	—	110C	119C	127C	136C
		—	—	—	110D	117D	125D
12	12						
12	24						
12	36						
12	48						
16	16						
16	32						
16	48						
19.2	19.2						
19.2	38.4						
24	24						
24	48						

For SI: 1 inch = 25.4 mm, 1 mile per hour = 0.447 m/s.

a. This table is for use with the detail in Figure R608.9(6). Use of this detail is permitted where a cell is not shaded.

b. Wall design per other provisions of Section R608 is required.

c. For wind design, minimum 4-inch-nominal wall is permitted in unshaded cells that do not contain a number.

INTERNATIONAL CODE COUNCIL®
Copyright © 2019 ICC & NYSDOS. ALL RIGHTS RESERVED. Accessed by Lauren Gualdino (lgualdino@briarcliffmanor.org), (-) Order Number #100880972 on May 08, 2020 07:05 AM (PDT) pursuant to License Agreement with ICC & NYSDOS. No further reproduction, no

100880972

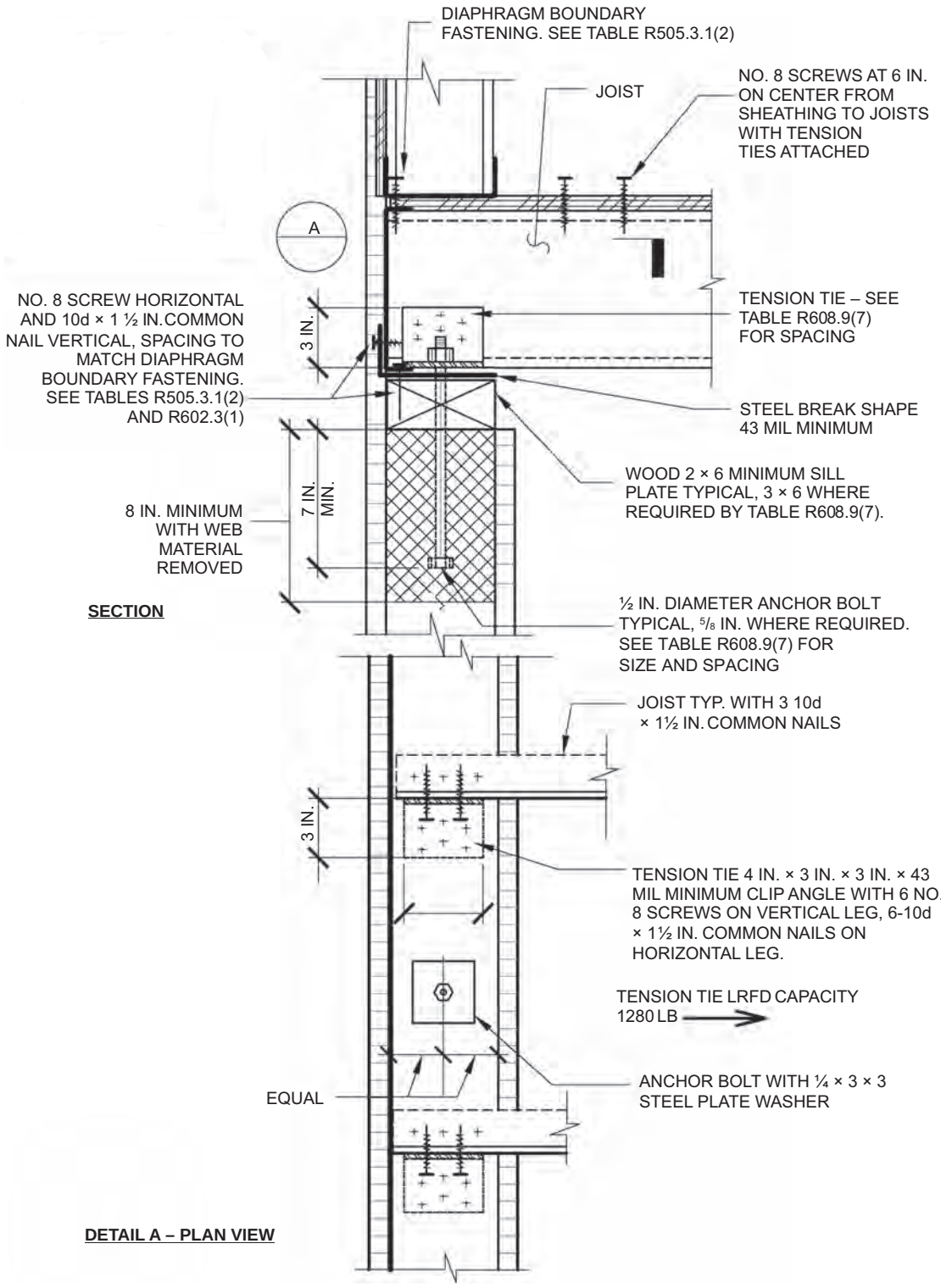

For SI: 1 mil = 0.0254 mm, 1 inch = 25.4 mm, 1 pound-force = 4.448 N.

FIGURE R608.9(7)
COLD-FORMED STEEL FLOOR TO TOP OF CONCRETE WALL, FRAMING PERPENDICULAR

INTERNATIONAL CODE COUNCIL®
Copyright © 2019 ICC & NYSDOS. ALL RIGHTS RESERVED. Accessed by Lauren Gualdino (lgualdino@briarcliffmanor.org), (-) Order Number #100880972 on May 08, 2020 07:05 AM (PDT) pursuant to License Agreement with ICC & NYSDOS. No further reproduction, no

100880972

TABLE R608.9(7)
COLD-FORMED STEEL-FRAMED FLOOR TO TOP OF CONCRETE WALL, FRAMING PERPENDICULAR[a, b, c, d, e]

ANCHOR BOLT SPACING (inches)	TENSION TIE SPACING (inches)	BASIC WIND SPEED AND WIND EXPOSURE CATEGORY (mph)					
		115B	120B	130B	140B	150B	160B
		—	—	110C	119C	127C	136C
		—	—	—	110D	117D	125D
12	12						6
12	24					6	6
16	16					6	6A
16	32				6	6	6A
19.2	19.2				6A	6A	6B
19.2	38.4			6	6A	6A	6B
24	24			6A	6B	6B	6B

For SI: 1 inch = 25.4 mm, 1 mile per hour = 0.447 m/s.

a. This table is for use with the detail in Figure R608.9(7). Use of this detail is permitted where a cell is not shaded.

b. Wall design per other provisions of Section R608 is required.

c. For wind design, minimum 4-inch-nominal wall is permitted in unshaded cells that do not contain a number.

d. Number 6 indicates minimum permitted nominal wall thickness in inches necessary to develop required strength (capacity) of connection. As a minimum, this nominal thickness shall occur in the portion of the wall indicated by the cross hatching in Figure R608.9(7). For the remainder of the wall, see Note b.

e. Letter "A" indicates that a minimum nominal 3 × 6 sill plate is required. Letter "B" indicates that a $^{5}/_{8}$-inch-diameter anchor bolt and a minimum nominal 3 × 6 sill plate are required.

INTERNATIONAL CODE COUNCIL®
Copyright © 2019 ICC & NYSDOS. ALL RIGHTS RESERVED. Accessed by Lauren Gualdino (lgualdino@briarcliffmanor.org), (-) Order Number #100880972 on May 08, 2020 07:05 AM (PDT) pursuant to License Agreement with ICC & NYSDOS. No further reproduction, no

100880972

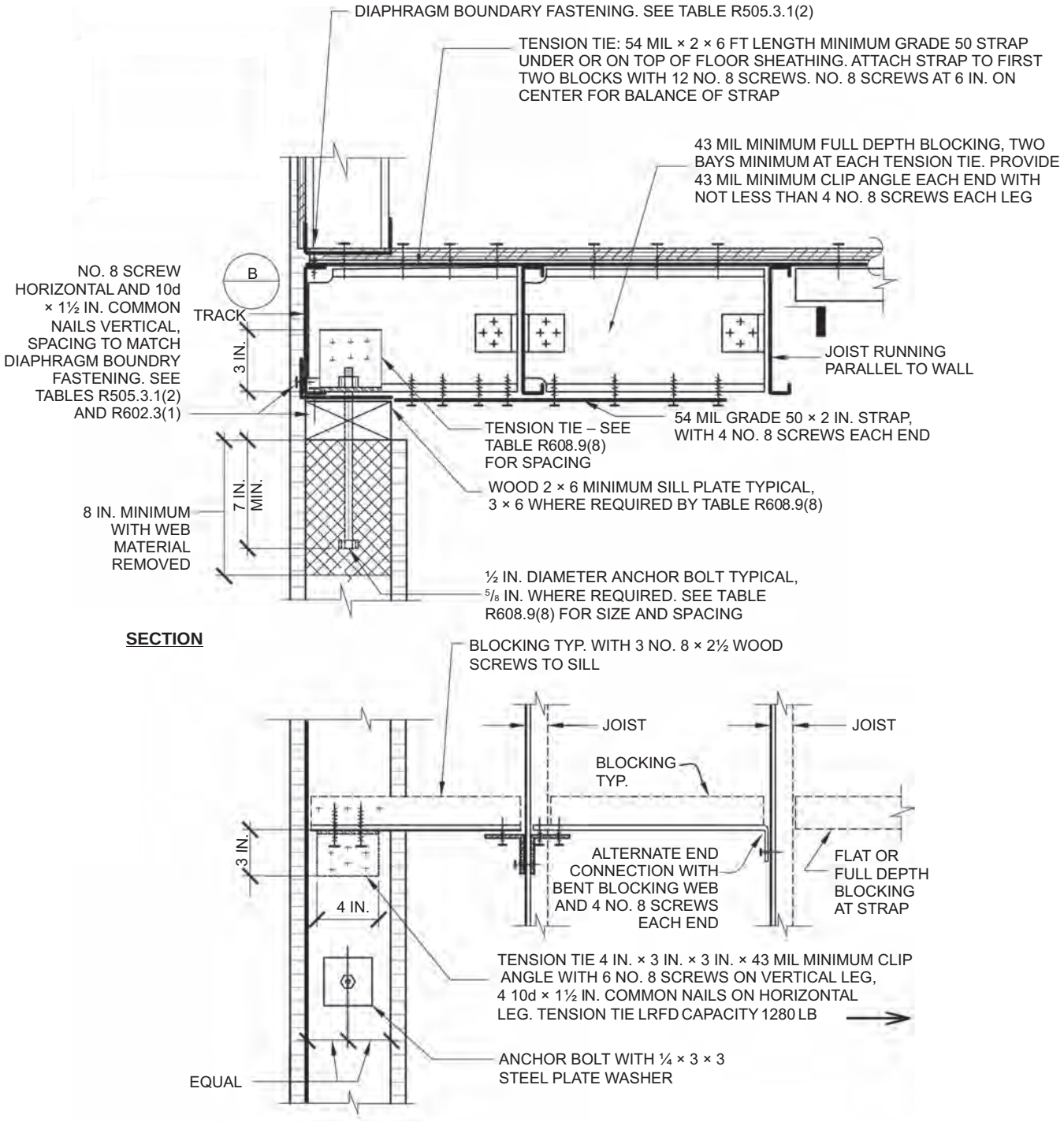

For SI: 1 mil = 0.0254 mm, 1 inch = 25.4 mm, 1 pound-force = 4.448 N.

FIGURE R608.9(8)
COLD-FORMED STEEL FLOOR TO TOP OF CONCRETE WALL, FRAMING PARALLEL

INTERNATIONAL CODE COUNCIL®
Copyright © 2019 ICC & NYSDOS. ALL RIGHTS RESERVED. Accessed by Lauren Gualdino (lgualdino@briarcliffmanor.org), (-) Order Number #100880972 on May 08, 2020 07:05 AM (PDT) pursuant to License Agreement with ICC & NYSDOS. No further reproduction, no

100880972

TABLE R608.9(8)
COLD-FORMED STEEL-FRAMED FLOOR TO TOP OF CONCRETE WALL, FRAMING PARALLEL[a, b, c, d, e]

ANCHOR BOLT SPACING (inches)	TENSION TIE SPACING (inches)	BASIC WIND SPEED AND WIND EXPOSURE CATEGORY (mph)					
		115B	120B	130B	140B	150B	160B
		—	—	110C	119C	127C	136C
		—	—	—	110D	117D	125D
12	12						6
12	24					6	6
16	16					6	6A
16	32				6	6	6A
19.2	19.2				6A	6A	6B
19.2	38.4			6	6A	6A	6B
24	24			6A	6B	6B	6B

For SI: 1 inch = 25.4 mm, 1 mile per hour = 0.447 m/s.

a. This table is for use with the detail in Figure R608.9(8). Use of this detail is permitted where a cell is not shaded.

b. Wall design per other provisions of Section R608 is required.

c. For wind design, minimum 4-inch-nominal wall is permitted in unshaded cells that do not contain a number.

d. Number 6 indicates minimum permitted nominal wall thickness in inches necessary to develop required strength (capacity) of connection. As a minimum, this nominal thickness shall occur in the portion of the wall indicated by the cross hatching in Figure R608.9(8). For the remainder of the wall, see Note b.

e. Letter “A” indicates that a minimum nominal 3 × 6 sill plate is required. Letter “B” indicates that a $^{5}/_{8}$-inch-diameter anchor bolt and a minimum nominal 3 × 6 sill plate are required.

INTERNATIONAL CODE COUNCIL®
Copyright © 2019 ICC & NYSDOS. ALL RIGHTS RESERVED. Accessed by Lauren Gualdino (lgualdino@briarcliffmanor.org), (-) Order Number #100880972 on May 08, 2020 07:05 AM (PDT) pursuant to License Agreement with ICC & NYSDOS. No further reproduction, no

100880972

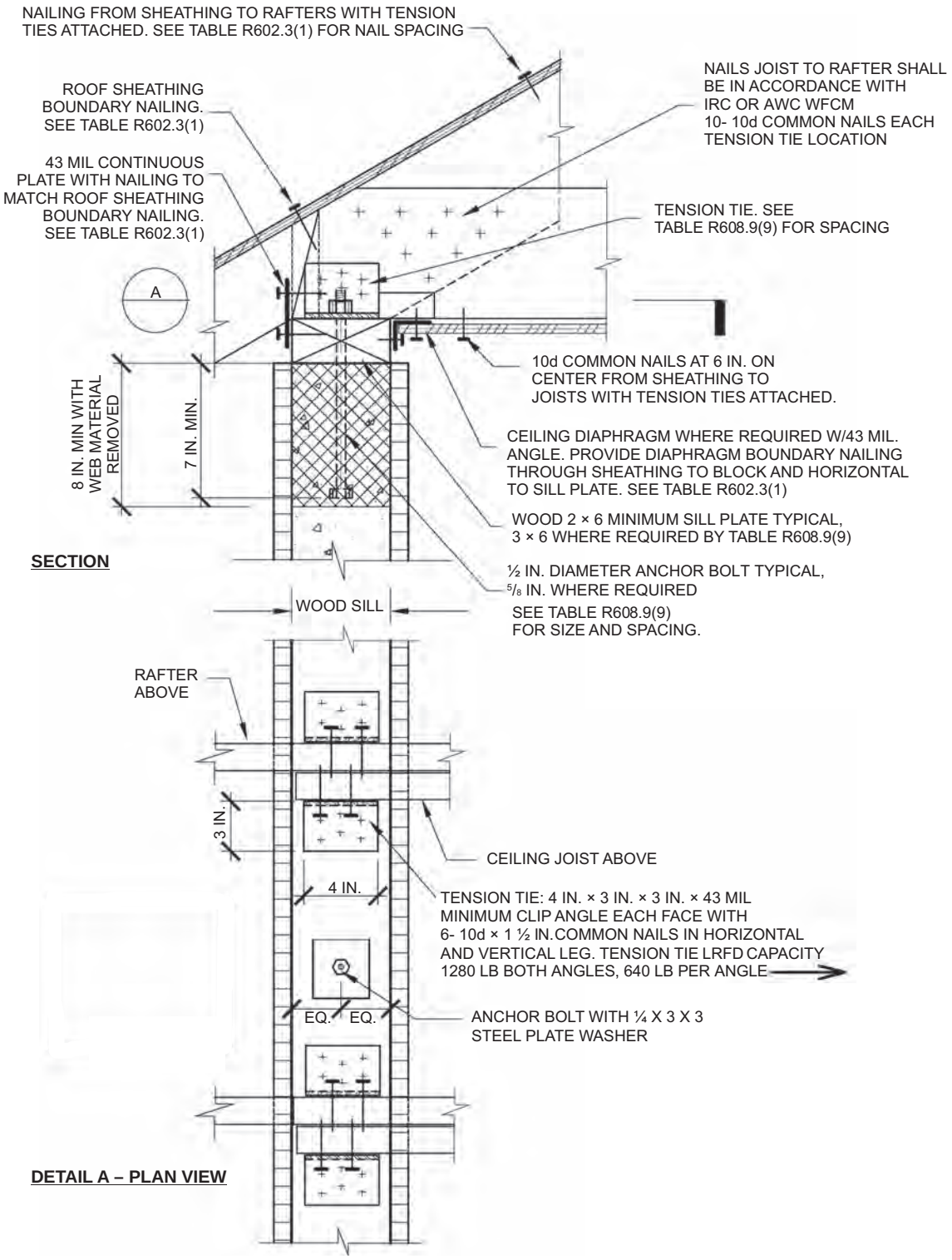

For SI: 1 mil = 0.0254 mm, 1 inch = 25.4 mm, 1 pound-force = 4.448 N.

FIGURE R608.9(9)
WOOD-FRAMED ROOF TO TOP OF CONCRETE WALL, FRAMING PERPENDICULAR

INTERNATIONAL CODE COUNCIL®
Copyright © 2019 ICC & NYSDOS. ALL RIGHTS RESERVED. Accessed by Lauren Gualdino (lgualdino@briarcliffmanor.org), (-) Order Number #100880972 on May 08, 2020 07:05 AM (PDT) pursuant to License Agreement with ICC & NYSDOS. No further reproduction, no

100880972

TABLE R608.9(9)
WOOD-FRAMED ROOF TO TOP OF CONCRETE WALL, FRAMING PERPENDICULAR[a, b, c, d, e]

ANCHOR BOLT SPACING (inches)	TENSION TIE SPACING (inches)	BASIC WIND SPEED (mph) AND WIND EXPOSURE CATEGORY					
		115B	120B	130B	140B	150B	160B
		—	—	110C	119C	127C	136C
		—	—	—	110D	117D	125D
12	12						6
12	24						6
12	36					6	6
12	48				6	6	6
16	16					6	6
16	32					6	6
16	48				6	6	6
19.2	19.2					6	6
19.2	38.4				6	6	
24	24				6		
24	48			6	8B		

For SI: 1 inch = 25.4 mm, 1 mile per hour = 0.447 m/s.

a. This table is for use with the detail in Figure R608.9(9). Use of this detail is permitted where a cell is not shaded, and prohibited where shaded.

b. Wall design per other provisions of Section R608 is required.

c. For wind design, minimum 4-inch-nominal wall is permitted in unshaded cells that do not contain a number.

d. Numbers 6 and 8 indicate minimum permitted nominal wall thickness in inches necessary to develop required strength (capacity) of connection. As a minimum, this nominal thickness shall occur in the portion of the wall indicated by the cross hatching in Figure R608.9(9). For the remainder of the wall, see Note b.

e. Letter "B" indicates that a $^{5}/_{8}$-inch-diameter anchor bolt and a minimum nominal 3 × 6 sill plate are required.

INTERNATIONAL CODE COUNCIL®
Copyright © 2019 ICC & NYSDOS. ALL RIGHTS RESERVED. Accessed by Lauren Gualdino (lgualdino@briarcliffmanor.org), (-) Order Number #100880972 on May 08, 2020 07:05 AM (PDT) pursuant to License Agreement with ICC & NYSDOS. No further reproduction, no

100880972

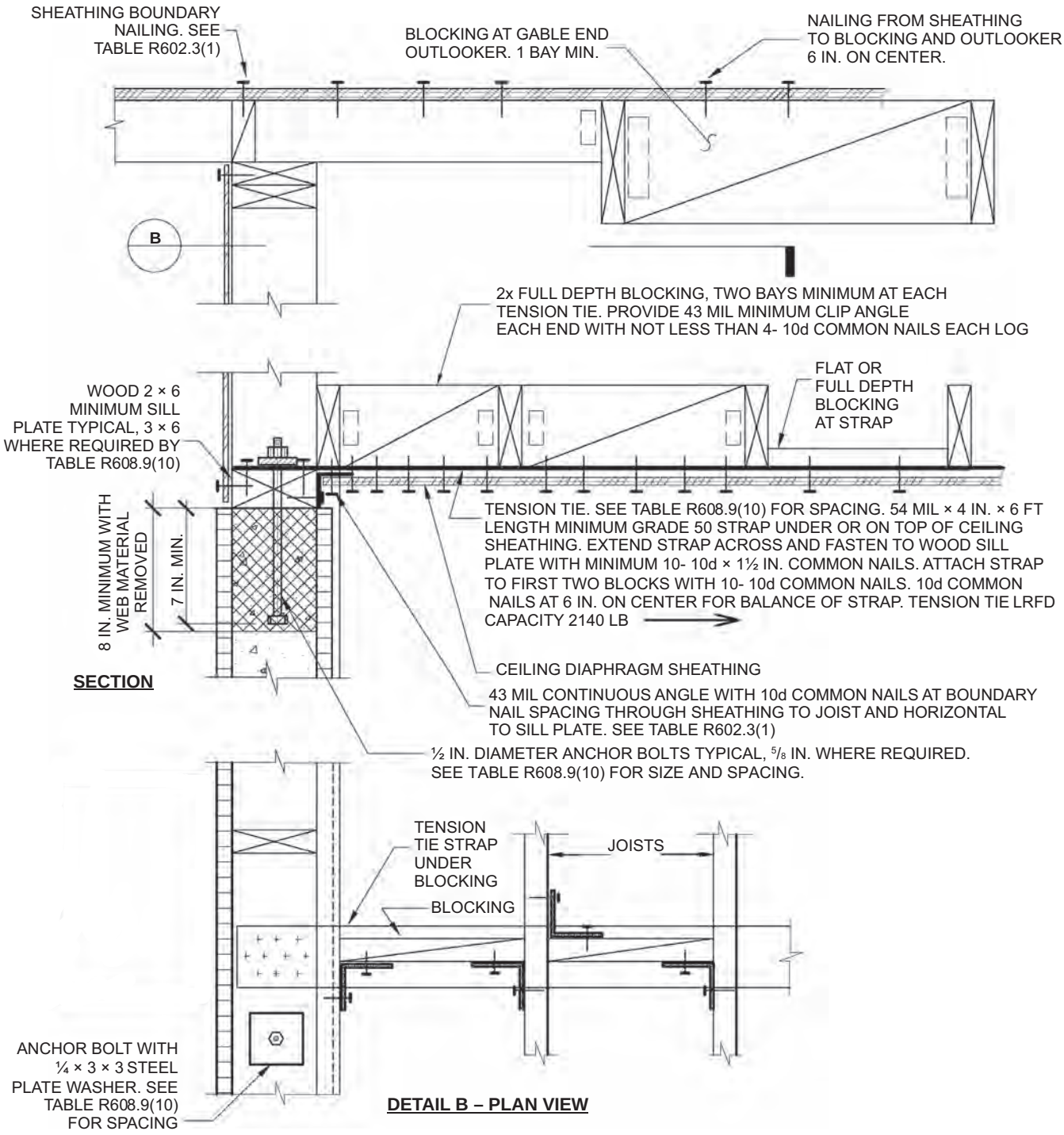

For SI: 1 mil = 0.0254 mm, 1 inch = 25.4 mm, 1 pound-force = 4.448 N.

FIGURE R608.9(10)
WOOD-FRAMED ROOF TO TOP OF CONCRETE WALL, FRAMING PARALLEL

INTERNATIONAL CODE COUNCIL®
Copyright © 2019 ICC & NYSDOS. ALL RIGHTS RESERVED. Accessed by Lauren Gualdino (lgualdino@briarcliffmanor.org), (-) Order Number #100880972 on May 08, 2020 07:05 AM (PDT) pursuant to License Agreement with ICC & NYSDOS. No further reproduction, no

100880972

TABLE R608.9(10)
WOOD-FRAMED ROOF TO TOP OF CONCRETE WALL, FRAMING PARALLEL[a, b, c, d, e]

ANCHOR BOLT SPACING (inches)	TENSION TIE SPACING (inches)	BASIC WIND SPEED (mph) AND WIND EXPOSURE CATEGORY					
		115B	120B	130B	140B	150B	160B
		—	—	110C	119C	127C	136C
		—	—	—	110D	117D	125D
12	12						6
12	24						6
12	36					6	6
12	48				6	6	6
16	16					6	6
16	32					6	6
16	48				6	6	6
19.2	19.2					6	6
19.2	38.4				6	6	
24	24				6		
24	48			6	8B		

For SI: 1 inch = 25.4 mm, 1 mile per hour = 0.447 m/s.

a. This table is for use with the detail in Figure R608.9(10). Use of this detail is permitted where a cell is not shaded, and prohibited where shaded.

b. Wall design per other provisions of Section R608 is required.

c. For wind design, minimum 4-inch-nominal wall is permitted in cells that do not contain a number.

d. Numbers 6 and 8 indicate minimum permitted nominal wall thickness in inches necessary to develop required strength (capacity) of connection. As a minimum, this nominal thickness shall occur in the portion of the wall indicated by the cross hatching in Figure R608.9(10). For the remainder of the wall, see Note b.

e. Letter "B" indicates that a $^{5}/_{8}$-inch-diameter anchor bolt and a minimum nominal 3 × 6 sill plate are required.

INTERNATIONAL CODE COUNCIL®
Copyright © 2019 ICC & NYSDOS. ALL RIGHTS RESERVED. Accessed by Lauren Gualdino (lgualdino@briarcliffmanor.org), (-) Order Number #100880972 on May 08, 2020 07:05 AM (PDT) pursuant to License Agreement with ICC & NYSDOS. No further reproduction, no

100880972

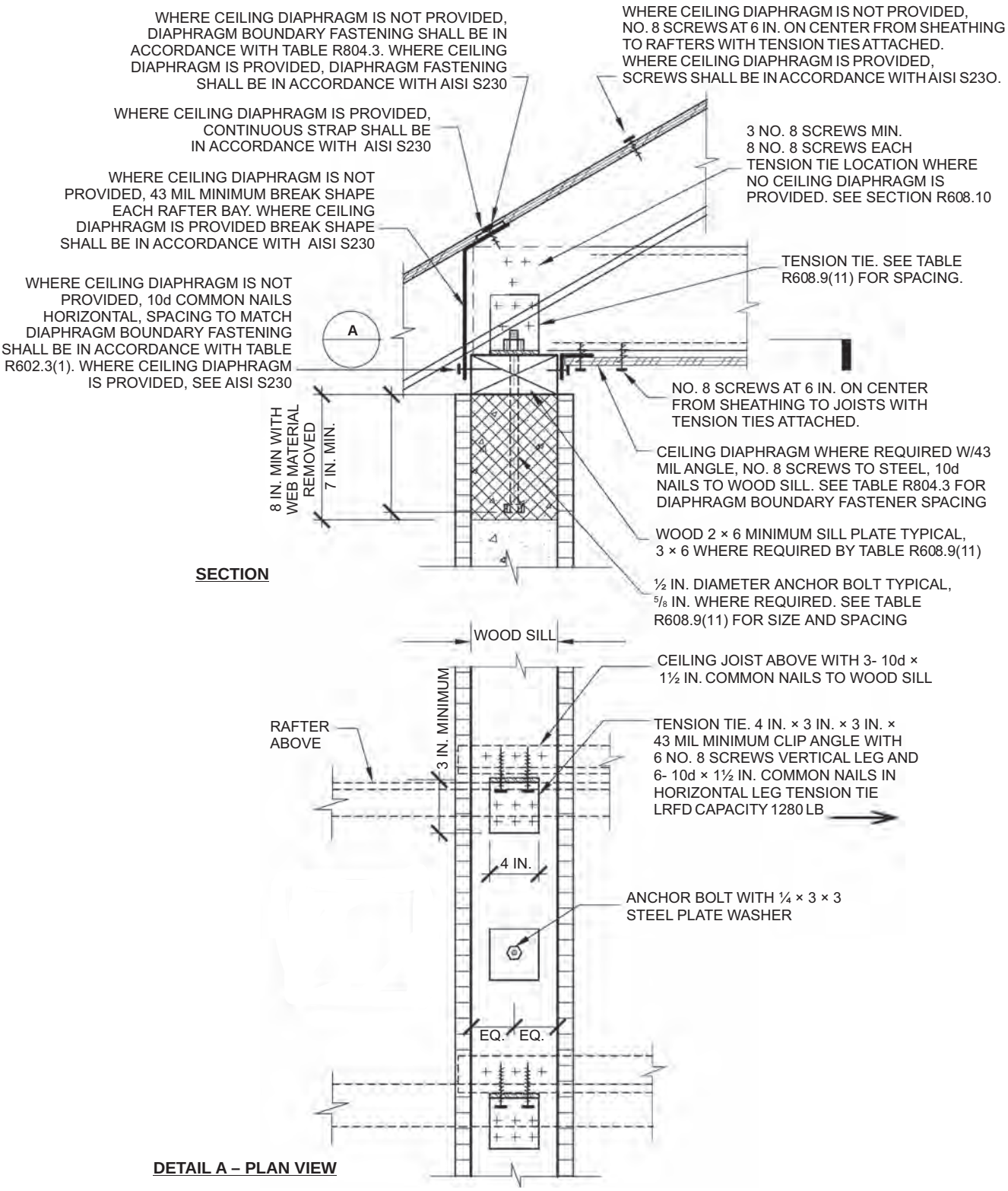

For SI: 1 mil = 0.0254 mm, 1 inch = 25.4 mm, 1 foot = 304.8 mm, 1 pound-force = 4.448 N.

FIGURE R608.9(11)
COLD-FORMED STEEL ROOF TO TOP OF CONCRETE WALL, FRAMING PERPENDICULAR

INTERNATIONAL CODE COUNCIL®
Copyright © 2019 ICC & NYSDOS. ALL RIGHTS RESERVED. Accessed by Lauren Gualdino (lgualdino@briarcliffmanor.org), (-) Order Number #100880972 on May 08, 2020 07:05 AM (PDT) pursuant to License Agreement with ICC & NYSDOS. No further reproduction, no

100880972

TABLE R608.9(11)
WOOD-FRAMED ROOF TO TOP OF CONCRETE WALL, FRAMING PERPENDICULAR[a, b, c, d, e]

ANCHOR BOLT SPACING (inches)	TENSION TIE SPACING (inches)	BASIC WIND SPEED (mph) AND WIND EXPOSURE CATEGORY					
		115B	120B	130B	140B	150B	160B
		—	—	110C	119C	127C	136C
		—	—	—	110D	117D	125D
12	12						6
12	24						6
16	16					6	6
16	32					6	6
19.2	19.2					6	6
19.2	38.4				6	6	6
24	24				6	6A	6B

For SI: 1 inch = 25.4 mm, 1 mile per hour = 0.447 m/s.

a. This table is for use with the detail in Figure R608.9(11). Use of this detail is permitted where a cell is not shaded.

b. Wall design per other provisions of Section R608 is required.

c. For wind design, minimum 4-inch-nominal wall is permitted in unshaded cells that do not contain a number.

d. Number 6 indicates minimum permitted nominal wall thickness in inches necessary to develop required strength (capacity) of connection. As a minimum, this nominal thickness shall occur in the portion of the wall indicated by the cross hatching in Figure R608.9(11). For the remainder of the wall, see Note b.

e. Letter “A” indicates that a minimum nominal 3 × 6 sill plate is required. Letter “B” indicates that a $^{5}/_{8}$-inch-diameter anchor bolt and a minimum nominal 3 × 6 sill plate are required.

INTERNATIONAL CODE COUNCIL®
Copyright © 2019 ICC & NYSDOS. ALL RIGHTS RESERVED. Accessed by Lauren Gualdino (lgualdino@briarcliffmanor.org), (-) Order Number #100880972 on May 08, 2020 07:05 AM (PDT) pursuant to License Agreement with ICC & NYSDOS. No further reproduction, no

100880972

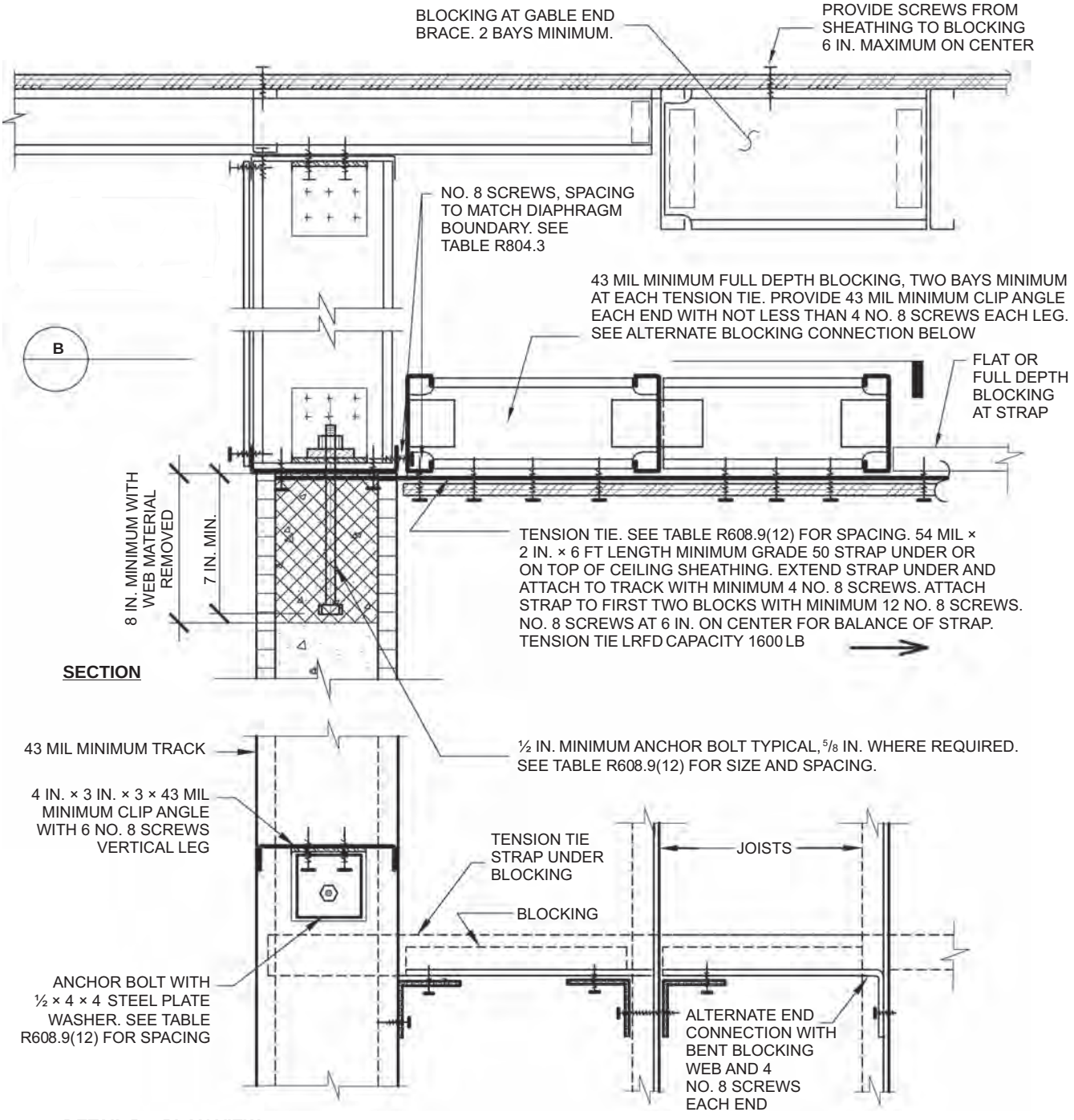

For SI: 1 mil = 0.0254 mm, 1 inch = 25.4 mm, 1 pound-force = 4.448 N.

FIGURE R608.9(12)
COLD-FORMED STEEL ROOF TO TOP OF CONCRETE WALL, FRAMING PARALLEL

INTERNATIONAL CODE COUNCIL®
Copyright © 2019 ICC & NYSDOS. ALL RIGHTS RESERVED. Accessed by Lauren Gualdino (lgualdino@briarcliffmanor.org), (-) Order Number #100880972 on May 08, 2020 07:05 AM (PDT) pursuant to License Agreement with ICC & NYSDOS. No further reproduction, no

100880972

TABLE R608.9(12)
COLD-FORMED STEEL ROOF TO TOP OF CONCRETE WALL, FRAMING PARALLEL[a, b, c, d, e]

ANCHOR BOLT SPACING (inches)	TENSION TIE SPACING (inches)	BASIC WIND SPEED (mph) AND WIND EXPOSURE CATEGORY					
		115B	120B	130B	140B	150B	160B
		—	—	110C	119C	127C	136C
		—	—	—	110D	117D	125D
12	12						6
12	24						6
16	16					6	6
16	32					6	6
19.2	19.2					6	6
19.2	38.4				6	6	6
24	24				6	6	6B

For SI: 1 inch = 25.4 mm, 1 mile per hour = 0.447 m/s.

a. This table is for use with the detail in Figure R608.9(12). Use of this detail is permitted where a cell is not shaded.

b. Wall design per other provisions of Section R608 is required.

c. For wind design, minimum 4-inch-nominal wall is permitted in cells that do not contain a number.

d. Number 6 indicates minimum permitted nominal wall thickness in inches necessary to develop required strength (capacity) of connection. As a minimum, this nominal thickness shall occur in the portion of the wall indicated by the cross hatching in Figure R608.9(12). For the remainder of the wall, see Note b.

e. Letter “B” indicates that a $^{5}/_{8}$-inch-diameter anchor bolt is required.

INTERNATIONAL CODE COUNCIL®
Copyright © 2019 ICC & NYSDOS. ALL RIGHTS RESERVED. Accessed by Lauren Gualdino (lgualdino@briarcliffmanor.org), (-) Order Number #100880972 on May 08, 2020 07:05 AM (PDT) pursuant to License Agreement with ICC & NYSDOS. No further reproduction, no

100880972

R608.9.2 Connections between concrete walls and light-framed floor systems. Connections between concrete walls and light-framed floor systems shall be in accordance with one of the following:

1. For floor systems of wood-framed construction, the provisions of Section R608.9.1 and the prescriptive details of Figures R608.9(1) through R608.9(4), where permitted by the tables accompanying those figures. Portions of connections of wood-framed floor systems not noted in the figures shall be in accordance with Section R502, or AWC WFCM, if applicable. Wood framing members shall be of a species having a specific gravity equal to or greater than 0.42.
2. For floor systems of cold-formed steel construction, the provisions of Section R608.9.1 and the prescriptive details of Figures R608.9(5) through R608.9(8), where permitted by the tables accompanying those figures. Portions of connections of cold-formed steel-framed floor systems not noted in the figures shall be in accordance with Section R505, or AISI S230, if applicable.
3. Proprietary connectors selected to resist loads and load combinations in accordance with Appendix A (ASD) or Appendix B (LRFD) of PCA 100.
4. An engineered design using loads and load combinations in accordance with Appendix A (ASD) or Appendix B (LRFD) of PCA 100.
5. An engineered design using loads and material design provisions in accordance with this code, or in accordance with ASCE 7, ACI 318, and AWC NDS for wood-framed construction or AISI S100 for cold-formed steel frame construction.

R608.9.3 Connections between concrete walls and light-framed ceiling and roof systems. Connections between concrete walls and light-framed ceiling and roof systems shall be in accordance with one of the following:

1. For ceiling and roof systems of wood-framed construction, the provisions of Section R608.9.1 and the prescriptive details of Figures R608.9(9) and R608.9(10), where permitted by the tables accompanying those figures. Portions of connections of wood-framed ceiling and roof systems not noted in the figures shall be in accordance with Section R802, or AWC WFCM, if applicable. Wood framing members shall be of a species having a specific gravity equal to or greater than 0.42.
2. For ceiling and roof systems of cold-formed steel construction, the provisions of Section R608.9.1 and the prescriptive details of Figures R608.9(11) and R608.9(12), where permitted by the tables accompanying those figures. Portions of connections of cold-formed-steel framed ceiling and roof systems not noted in the figures shall be in accordance with Section R804, or AISI S230, if applicable.
3. Proprietary connectors selected to resist loads and load combinations in accordance with Appendix A (ASD) or Appendix B (LRFD) of PCA 100.
4. An engineered design using loads and load combinations in accordance with Appendix A (ASD) or Appendix B (LRFD) of PCA 100.
5. An engineered design using loads and material design provisions in accordance with this code, or in accordance with ASCE 7, ACI 318, and AWC NDS for wood-framed construction or AISI S100 for cold-formed steel-framed construction.

R608.10 Floor, roof and ceiling diaphragms. Floors and roofs in buildings with exterior walls of concrete shall be designed and constructed as diaphragms. Where gable-end walls occur, ceilings shall be designed and constructed as diaphragms. The design and construction of floors, roofs and ceilings of wood framing or cold-formed-steel framing serving as diaphragms shall comply with the applicable requirements of this code, or AWC WFCM or AISI S230, if applicable. Wood framing members shall be of a species having a specific gravity equal to or greater than 0.42.

SECTION R609
EXTERIOR WINDOWS AND DOORS

R609.1 General. This section prescribes performance and construction requirements for exterior windows and doors installed in walls. Windows and doors shall be installed and flashed in accordance with the fenestration manufacturer's written instructions. Window and door openings shall be flashed in accordance with Section R703.4. Written installation instructions shall be provided by the fenestration manufacturer for each window or door.

R609.2 Performance. Exterior windows and doors shall be capable of resisting the design wind loads specified in Table R301.2(2) adjusted for height and exposure in accordance with Table R301.2(3) or determined in accordance with ASCE 7 using the allowable stress design load combinations of ASCE 7. For exterior windows and doors tested in accordance with Sections R609.3 and R609.5, required design wind pressures determined from ASCE 7 using the ultimate strength design (USD) are permitted to be multiplied by 0.6. Design wind loads for exterior glazing not part of a labeled assembly shall be permitted to be determined in accordance with Chapter 24 of the *Building Code of New York State*. Design wind loads for exterior glazing not part of a labeled assembly shall be permitted to be determined in accordance with Chapter 24 of the *Building Code of New York State*.

R609.3 Testing and labeling. Exterior windows and sliding doors shall be tested by an *approved* independent laboratory, and bear a *label* identifying manufacturer, performance characteristics and *approved* inspection agency to indicate compliance with AAMA/WDMA/CSA 101/I.S.2/A440. Exterior side-hinged doors shall be tested and *labeled* as conforming to AAMA/WDMA/CSA 101/I.S.2/A440 or AMD 100, or comply with Section R609.5.

Exception: Decorative glazed openings.

INTERNATIONAL CODE COUNCIL®
Copyright © 2019 ICC & NYSDOS. ALL RIGHTS RESERVED. Accessed by Lauren Gualdino (lgualdino@briarcliffmanor.org), (-) Order Number #100880972 on May 08, 2020 07:05 AM (PDT) pursuant to License Agreement with ICC & NYSDOS. No further reproduction, no

100880972

R609.3.1 Comparative analysis. Structural wind load design pressures for window and door units different than the size tested in accordance with Section R609.3 shall be permitted to be different than the design value of the tested unit where determined in accordance with one of the following comparative analysis methods:

1. Structural wind load design pressures for window and door units smaller than the size tested in accordance with Section R609.3 shall be permitted to be higher than the design value of the tested unit provided such higher pressures are determined by accepted engineering analysis. Components of the smaller unit shall be the same as those of the tested unit. Where such calculated design pressures are used, they shall be validated by an additional test of the window or door unit having the highest allowable design pressure.
2. In accordance with WDMA I.S.11.

R609.4 Garage doors. Garage doors shall be tested in accordance with either ASTM E330 or ANSI/DASMA 108, and shall meet the acceptance criteria of ANSI/DASMA 108.

R609.5 Other exterior window and door assemblies. Exterior windows and door assemblies not included within the scope of Section R609.3 or R609.4 shall be tested in accordance with ASTM E330. Glass in assemblies covered by this section shall comply with Section R308.5.

R609.6 Windborne debris protection. Protection of exterior windows, glass doors and doors with glass in buildings located in windborne debris regions shall be in accordance with Section R301.2.1.2.

R609.6.1 Fenestration testing and labeling. *Fenestration* shall be tested by an *approved* independent laboratory, listed by an *approved* entity, and bear a *label* identifying the manufacturer, performance characteristics and an *approved* inspection agency to indicate compliance with the requirements of the following specification(s):

1. ASTM E1886 and ASTM E1996; or
2. AAMA 506.

R609.6.2 Impact protective systems-testing and labeling. *Impact protective systems* shall be tested for impact resistance by an *approved* independent laboratory for compliance with ASTM E1886 and ASTM E1996. *Impact protective systems* shall be tested for design wind pressure by an *approved* independent laboratory for compliance with ASTM E330. Required design wind pressures shall be determined in accordance with Table R301.2(2), adjusted for height and exposure in accordance with Table R301.2(3) or determined in accordance with ASCE 7. For the purposes of this section, design wind pressures determined in accordance with ASCE 7 are permitted to be multiplied by 0.6.

Impact protective systems bear a *label* identifying the manufacturer, performance characteristics and an *approved* inspection agency. *Impact protective systems* shall have a permanent *label* providing traceability to the manufacturer, product designation and performance characteristics. The permanent *label* shall be acid etched, sand blasted, ceramic fired, laser etched, embossed or of a type that, once applied, cannot be removed without being destroyed.

R609.7 Anchorage methods. The methods cited in this section apply only to anchorage of window and glass door assemblies to the main force-resisting system.

R609.7.1 Anchoring requirements. Window and glass door assemblies shall be anchored in accordance with the published manufacturer's recommendations to achieve the design pressure specified. Substitute anchoring systems used for substrates not specified by the fenestration manufacturer shall provide equal or greater anchoring performance as demonstrated by accepted engineering practice.

R609.7.2 Anchorage details. Products shall be anchored in accordance with the minimum requirements illustrated in Figures R609.7.2(1), R609.7.2(2), R609.7.2(3), R609.7.2(4), R609.7.2(5), R609.7.2(6), R609.7.2(7) and R609.7.2(8).

R609.7.2.1 Masonry, concrete or other structural substrate. Where the wood shim or buck thickness is less than $1^1/_2$ inches (38 mm), window and glass door assemblies shall be anchored through the jamb, or by jamb clip and anchors shall be embedded directly into the masonry, concrete or other substantial substrate material. Anchors shall adequately transfer load from the window or door frame into the rough opening substrate [see Figures R609.7.2(1) and R609.7.2(2)].

Where the wood shim or buck thickness is $1^1/_2$ inches (38 mm) or more, the buck is securely fastened to the masonry, concrete or other substantial substrate, and the buck extends beyond the interior face of the window or door frame, window and glass door assemblies shall be anchored through the jamb, or by jamb clip, or through the flange to the secured wood buck. Anchors shall be embedded into the secured wood buck to adequately transfer load from the window or door frame assembly [see Figures R609.7.2(3), R609.7.2(4) and R609.7.2(5)].

R609.7.2.2 Wood or other approved framing material. Where the framing material is wood or other *approved* framing material, window and glass door assemblies shall be anchored through the frame, or by frame clip, or through the flange. Anchors shall be embedded into the frame construction to adequately transfer load [see Figures R609.7.2(6), R609.7.2(7) and R609.7.2(8)].

R609.8 Mullions. Mullions shall be tested by an *approved* testing laboratory in accordance with AAMA 450, or be engineered in accordance with accepted engineering practice. Mullions tested as stand-alone units or qualified by engineering shall use performance criteria cited in Sections R609.8.1, R609.8.2 and R609.8.3. Mullions qualified by an actual test of an entire assembly shall comply with Sections R609.8.1 and R609.8.3.

INTERNATIONAL CODE COUNCIL®
Copyright © 2019 ICC & NYSDOS. ALL RIGHTS RESERVED. Accessed by Lauren Gualdino (lgualdino@briarcliffmanor.org), (-) Order Number #100880972 on May 08, 2020 07:05 AM (PDT) pursuant to License Agreement with ICC & NYSDOS. No further reproduction, no

100880972

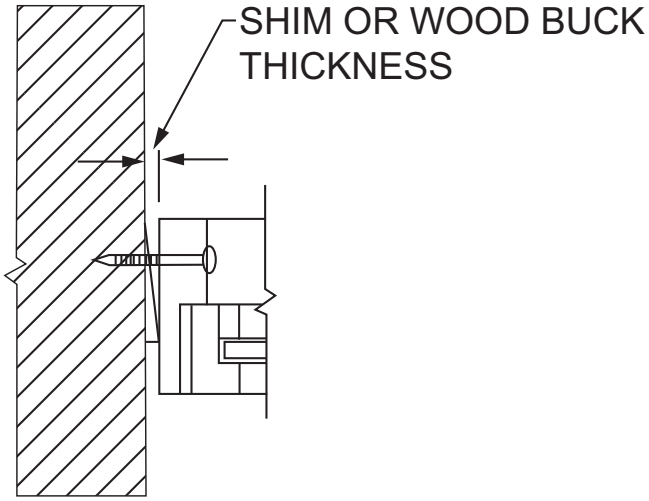

FIGURE R609.7.2(1)
THROUGH THE FRAME

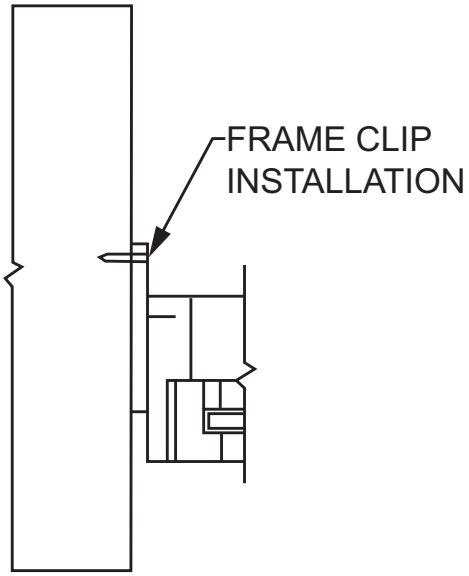

FIGURE R609.7.2(2)
FRAME CLIP

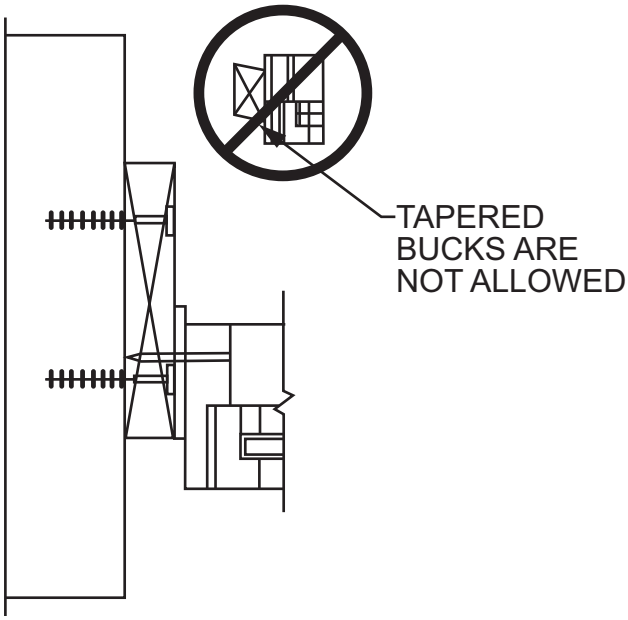

FIGURE R609.7.2(3)
THROUGH THE FRAME

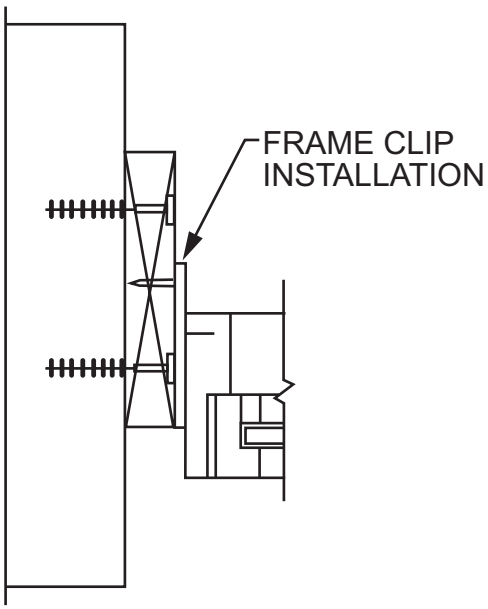

FIGURE R609.7.2(4)
FRAME CLIP

INTERNATIONAL CODE COUNCIL®
Copyright © 2019 ICC & NYSDOS. ALL RIGHTS RESERVED. Accessed by Lauren Gualdino (lgualdino@briarcliffmanor.org), (-) Order Number #100880972 on May 08, 2020 07:05 AM (PDT) pursuant to License Agreement with ICC & NYSDOS. No further reproduction, no

100880972

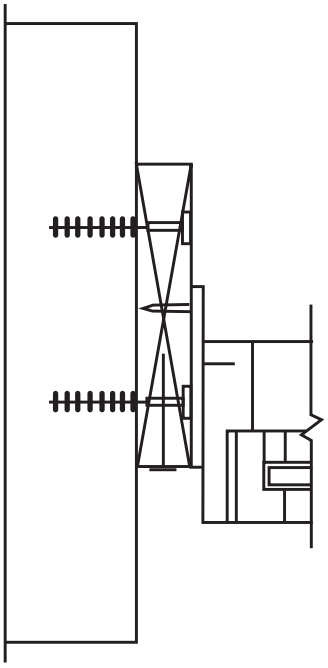

FIGURE R609.7.2(5)
THROUGH THE FLANGE

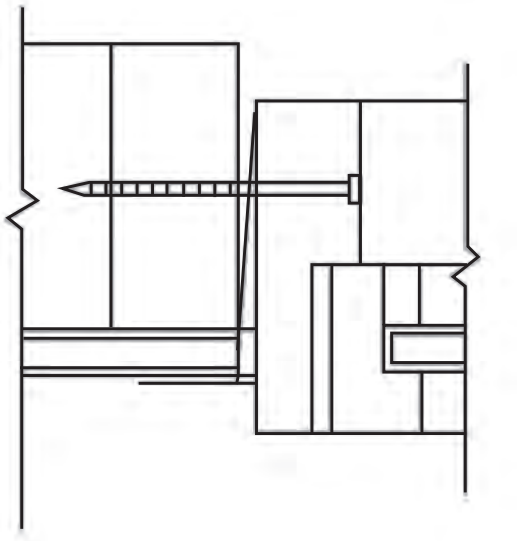

FIGURE R609.7.2(6)
THROUGH THE FLANGE

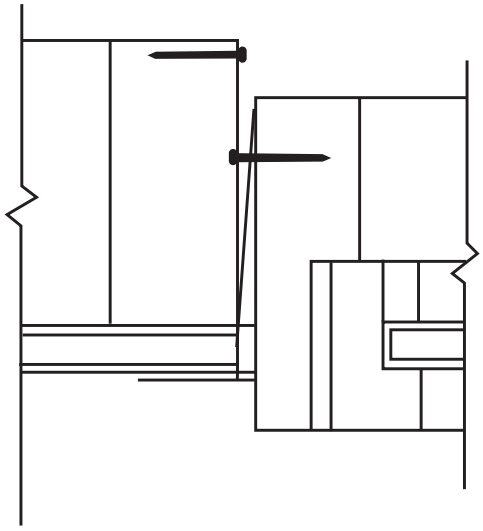

FIGURE R609.7.2(7)
FRAME CLIP

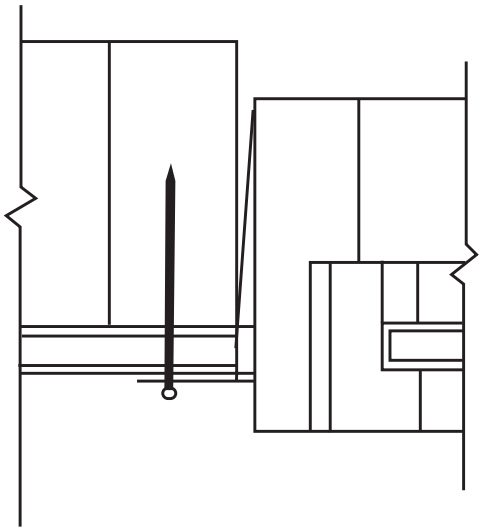

FIGURE R609.7.2(8)
THROUGH THE FLANGE

INTERNATIONAL CODE COUNCIL®
Copyright © 2019 ICC & NYSDOS. ALL RIGHTS RESERVED. Accessed by Lauren Gualdino (lgualdino@briarcliffmanor.org), (-) Order Number #100880972 on May 08, 2020 07:05 AM (PDT) pursuant to License Agreement with ICC & NYSDOS. No further reproduction, no

100880972

R609.8.1 Load transfer. Mullions shall be designed to transfer the design pressure loads applied by the window and door assemblies to the rough opening substrate.

R609.8.2 Deflection. Mullions shall be capable of resisting the design pressure loads applied by the window and door assemblies to be supported without deflecting more than $L/175$, where L is the span of the mullion in inches.

R609.8.3 Structural safety factor. Mullions shall be capable of resisting a load of 1.5 times the design pressureloads applied by the window and door assemblies to be supported without exceeding the appropriate material stress levels. If tested by an *approved* laboratory, the 1.5 times the design pressure load shall be sustained for 10 seconds, and the permanent deformation shall not exceed 0.4 percent of the mullion span after the 1.5 times design pressure load is removed.

SECTION R610
STRUCTURAL INSULATED PANEL WALL CONSTRUCTION

R610.1 General. Structural insulated panel (SIP) walls shall be designed in accordance with the provisions of this section. Where the provisions of this section are used to design structural insulated panel walls, project drawings, typical details and specifications are not required to bear the seal of the architect or engineer responsible for design, unless otherwise required by the state law of the *jurisdiction* having authority.

R610.2 Applicability limits. The provisions of this section shall control the construction of exterior structural insulated panel walls and interior load-bearing structural insulated panel walls for buildings not greater than 60 feet (18 288 mm) in length perpendicular to the joist or truss span, not greater than 40 feet (12 192 mm) in width parallel to the joist or truss span and not greater than two stories in height with each wall not greater than 10 feet (3048 mm) high. Exterior walls installed in accordance with the provisions of this section shall be considered as load-bearing walls. Structural insulated panel walls constructed in accordance with the provisions of this section shall be limited to sites where the ultimate design wind speed (V_{ult}) is not greater than 155 miles per hour (69 m/s) in Exposure B or 140 miles per hour (63 m/s) in Exposure C, the ground snow load is not greater than 70 pounds per square foot (3.35 kPa), and the seismic design category is A, B or C.

R610.3 Materials. SIPs shall comply with the requirements of ANSI/APA PRS 610.1.

R610.3.1 Lumber. The minimum lumber framing material used for SIPs prescribed in this document is NLGA graded No. 2 Spruce-pine-fir. Substitution of other wood species/grades that meet or exceed the mechanical properties and specific gravity of No. 2 Spruce-pine-fir shall be permitted.

R610.3.2 SIP screws. Screws used for the erection of SIPs as specified in Section R610.5 shall be fabricated from steel, shall be provided by the SIP manufacturer and shall be sized to penetrate the wood member to which the assembly is being attached by not less than 1 inch (25 mm). The screws shall be corrosion resistant and have a minimum shank diameter of 0.188 inch (4.7 mm) and a minimum head diameter of 0.620 inch (15.5 mm).

R610.3.3 Nails. Nails specified in Section R610 shall be common or galvanized box unless otherwise stated.

R610.4 SIP wall panels. SIPs shall comply with Figure R610.4 and shall have minimum panel thickness in accordance with Tables R610.5(1) and R610.5(2) for above-grade walls. SIPs shall be identified by grade mark or certificate of inspection issued by an *approved* agency in accordance with ANSI/APA PRS 610.1.

R610.5 Wall construction. Exterior walls of SIP construction shall be designed and constructed in accordance with the provisions of this section and Tables R610.5(1) and R610.5(2) and Figures R610.5(1) through R610.5(5). SIP walls shall be fastened to other wood building components in accordance with Tables R602.3(1) through R602.3(4).

Framing shall be attached in accordance with Table R602.3(1) unless otherwise provided for in Section R610.

R610.5.1 Top plate connection. SIP walls shall be capped with a double top plate installed to provide overlapping at corner, intersections and splines in accordance with Figure R610.5.1. The double top plates shall be made up of a single 2-by (nominal 2-inch) top plate having a width equal to the width of the panel core, and shall be recessed into the SIP below. Over this top plate a cap plate shall be placed. The cap plate width shall match the SIP thickness and overlap the facers on both sides of the panel. End joints in top plates shall be offset not less than 24 inches (610 mm).

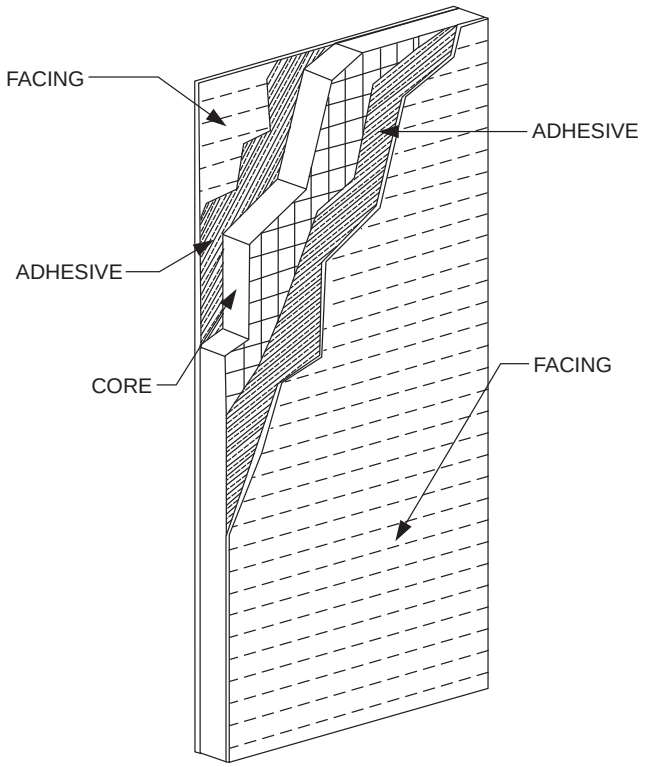

FIGURE R610.4
SIP WALL PANEL

INTERNATIONAL CODE COUNCIL®
Copyright © 2019 ICC & NYSDOS. ALL RIGHTS RESERVED. Accessed by Lauren Gualdino (lgualdino@briarcliffmanor.org), (-) Order Number #100880972 on May 08, 2020 07:05 AM (PDT) pursuant to License Agreement with ICC & NYSDOS. No further reproduction, no

100880972

TABLE R610.5(1)
MINIMUM THICKNESS FOR SIP WALL SUPPORTING SIP OR LIGHT-FRAME ROOF ONLY (inches)[a]

BUILDING WIDTH (ft)																	
ULTIMATE DESIGN WIND SPEED V_{ult} (mph)		SNOW LOAD (psf)	24			28			32			36			40		
Exp. B	Exp. C		Wall Height (feet)			Wall Height (feet)			Wall Height (feet)			Wall Height (feet)			Wall Height (feet)		
			8	9	10	8	9	10	8	9	10	8	9	10	8	9	10
110	—	20	4.5	4.5	4.5	4.5	4.5	4.5	4.5	4.5	4.5	4.5	4.5	4.5	4.5	4.5	4.5
		30	4.5	4.5	4.5	4.5	4.5	4.5	4.5	4.5	4.5	4.5	4.5	4.5	4.5	4.5	4.5
		50	4.5	4.5	4.5	4.5	4.5	4.5	4.5	4.5	4.5	4.5	4.5	4.5	4.5	4.5	4.5
		70	4.5	4.5	4.5	4.5	4.5	4.5	4.5	4.5	4.5	4.5	4.5	6.5	4.5	4.5	6.5
115	—	20	4.5	4.5	4.5	4.5	4.5	4.5	4.5	4.5	4.5	4.5	4.5	4.5	4.5	4.5	4.5
		30	4.5	4.5	4.5	4.5	4.5	4.5	4.5	4.5	4.5	4.5	4.5	4.5	4.5	4.5	4.5
		50	4.5	4.5	4.5	4.5	4.5	4.5	4.5	4.5	4.5	4.5	4.5	4.5	4.5	4.5	6.5
		70	4.5	4.5	4.5	4.5	4.5	4.5	4.5	4.5	6.5	4.5	4.5	DR	4.5	4.5	DR
130	110	20	4.5	4.5	6.5	4.5	4.5	6.5	4.5	4.5	6.5	4.5	4.5	DR	4.5	4.5	DR
		30	4.5	4.5	6.5	4.5	4.5	6.5	4.5	4.5	DR	4.5	4.5	DR	4.5	4.5	DR
		50	4.5	4.5	DR	4.5	4.5	DR	4.5	4.5	DR	4.5	6.5	DR	4.5	DR	DR
		70	4.5	4.5	DR	4.5	DR	DR	4.5	DR	DR	4.5	DR	DR	DR	DR	DR
140	120	20	4.5	6.5	DR	4.5	6.5	DR	4.5	DR	DR	4.5	DR	DR	4.5	DR	DR
		30	4.5	6.5	DR	4.5	DR	DR	4.5	DR	DR	4.5	DR	DR	4.5	DR	DR
		50	4.5	DR	DR	4.5	DR	DR	DR	DR	DR	DR	DR	DR	DR	DR	DR
		70	4.5	DR	DR	DR	DR	DR	DR	DR	DR	DR	DR	DR	DR	DR	DR

For SI: 1 inch = 25.4 mm, 1 foot = 304.8 mm, 1 pound per square foot = 0.0479 kPa, 1 mile per hour = 0.447 m/s.

DR = Design Required.

a. Design assumptions:

Maximum deflection criteria: *L*/240.

Maximum roof dead load: 10 psf.

Maximum roof live load: 70 psf.

Maximum ceiling dead load: 5 psf.

Maximum ceiling live load: 20 psf.

Wind loads based on Table R301.2 (2).

Strength axis of facing material applied vertically.

INTERNATIONAL CODE COUNCIL®
Copyright © 2019 ICC & NYSDOS. ALL RIGHTS RESERVED. Accessed by Lauren Gualdino (lgualdino@briarcliffmanor.org), (-) Order Number #100880972 on May 08, 2020 07:05 AM (PDT) pursuant to License Agreement with ICC & NYSDOS. No further reproduction, no

100880972

TABLE R610.5(2)
MINIMUM THICKNESS FOR SIP WALL SUPPORTING SIP OR LIGHT-FRAME ONE STORY AND ROOF ONLY (inches)[a]

BUILDING WIDTH (ft)																	
ULTIMATE DESIGN WIND SPEED V_{ult} (mph)		SNOW LOAD (psf)	24			28			32			36			40		
Exp. B	Exp. C		Wall Height (feet)			Wall Height (feet)			Wall Height (feet)			Wall Height (feet)			Wall Height (feet)		
			8	9	10	8	9	10	8	9	10	8	9	10	8	9	10
110	—	20	4.5	4.5	4.5	4.5	4.5	4.5	4.5	4.5	6.5	4.5	4.5	DR	4.5	4.5	DR
		30	4.5	4.5	4.5	4.5	4.5	4.5	4.5	4.5	6.5	4.5	4.5	DR	4.5	6.5	DR
		50	4.5	4.5	4.5	4.5	4.5	6.5	4.5	4.5	DR	4.5	DR	DR	DR	DR	DR
		70	4.5	4.5	6.5	4.5	4.5	DR	4.5	DR	DR	DR	DR	DR	DR	DR	DR
115	—	20	4.5	4.5	4.5	4.5	4.5	6.5	4.5	4.5	DR	4.5	4.5	DR	4.5	DR	DR
		30	4.5	4.5	4.5	4.5	4.5	6.5	4.5	4.5	DR	4.5	6.5	DR	4.5	DR	DR
		50	4.5	4.5	6.5	4.5	4.5	DR	4.5	DR	DR	4.5	DR	DR	DR	DR	DR
		70	4.5	4.5	DR	4.5	DR	DR	DR	DR	DR	DR	DR	DR	DR	DR	DR
120	—	20	4.5	4.5	6.5	4.5	4.5	DR	4.5	4.5	DR	4.5	DR	DR	4.5	DR	DR
		30	4.5	4.5	DR	4.5	4.5	DR	4.5	6.5	DR	4.5	DR	DR	DR	DR	DR
		50	4.5	4.5	DR	4.5	DR	DR	4.5	DR	DR	DR	DR	DR	DR	DR	DR
		70	4.5	DR	DR	4.5	DR	DR	DR	DR	DR	DR	DR	DR	DR	DR	DR
130	110	20	4.5	6.5	DR	4.5	DR	DR	4.5	DR	DR	DR	DR	DR	DR	DR	DR
		30	4.5	DR	DR	4.5	DR	DR	DR	DR	DR	DR	DR	DR	DR	DR	DR
		50	4.5	DR	DR	DR	DR	DR	DR	DR	DR	DR	DR	DR	DR	DR	DR
		70	DR	DR	DR	DR	DR	DR	DR	DR	DR	DR	DR	DR	DR	DR	DR

For SI: 1 Inch = 25.4 mm, 1 foot = 304.8 mm, 1 pound per square foot = 0.0479 kPa, 1 mile per hour = 0.447 m/s.
DR = Design Required.
a. Design assumptions:
Maximum deflection criteria: *L*/240.
Maximum roof dead load: 10 psf.
Maximum roof live load: 70 psf.
Maximum ceiling dead load: 5 psf.
Maximum ceiling live load: 20 psf.
Maximum second-floor dead load: 10 psf.
Maximum second-floor live load: 30 psf.
Maximum second-floor dead load from walls: 10 psf.
Maximum first-floor dead load: 10 psf.
Maximum first-floor live load: 40 psf.
Wind loads based on Table R301.2 (2).
Strength axis of facing material applied vertically.

INTERNATIONAL CODE COUNCIL®
Copyright © 2019 ICC & NYSDOS. ALL RIGHTS RESERVED. Accessed by Lauren Gualdino (lgualdino@briarcliffmanor.org), (-) Order Number #100880972 on May 08, 2020 07:05 AM (PDT) pursuant to License Agreement with ICC & NYSDOS. No further reproduction, no

100880972

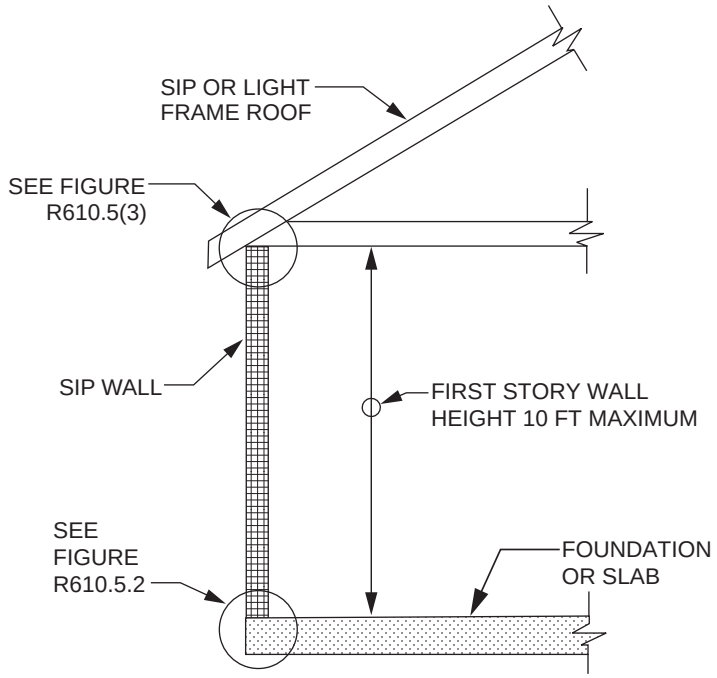

For SI: 1 foot = 304.8 mm.

Note: Figure illustrates SIP-specific attachment requirements. Other connections shall be made in accordance with Tables R602.3(1) and (2), as appropriate.

FIGURE R610.5(1)
MAXIMUM ALLOWABLE HEIGHT OF SIP WALLS

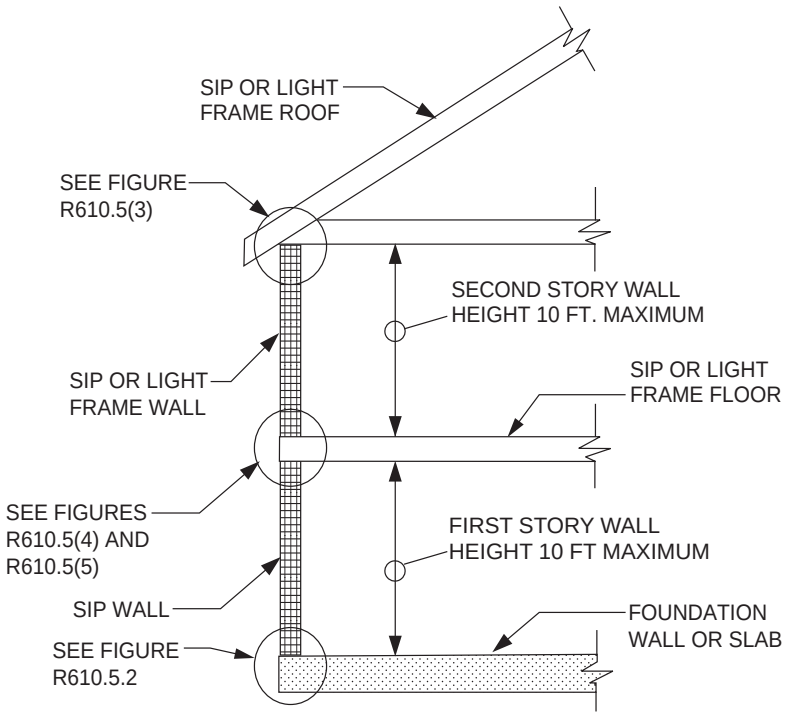

For SI: 1 foot = 304.8 mm.

Note: Figure illustrates SIP-specific attachment requirements. Other connections shall be made in accordance with Tables R602.3(1) and (2), as appropriate.

FIGURE R610.5(2)
MAXIMUM ALLOWABLE HEIGHT OF SIP WALLS

INTERNATIONAL CODE COUNCIL®
Copyright © 2019 ICC & NYSDOS. ALL RIGHTS RESERVED. Accessed by Lauren Gualdino (lgualdino@briarcliffmanor.org), (-) Order Number #100880972 on May 08, 2020 07:05 AM (PDT) pursuant to License Agreement with ICC & NYSDOS. No further reproduction, no

100880972

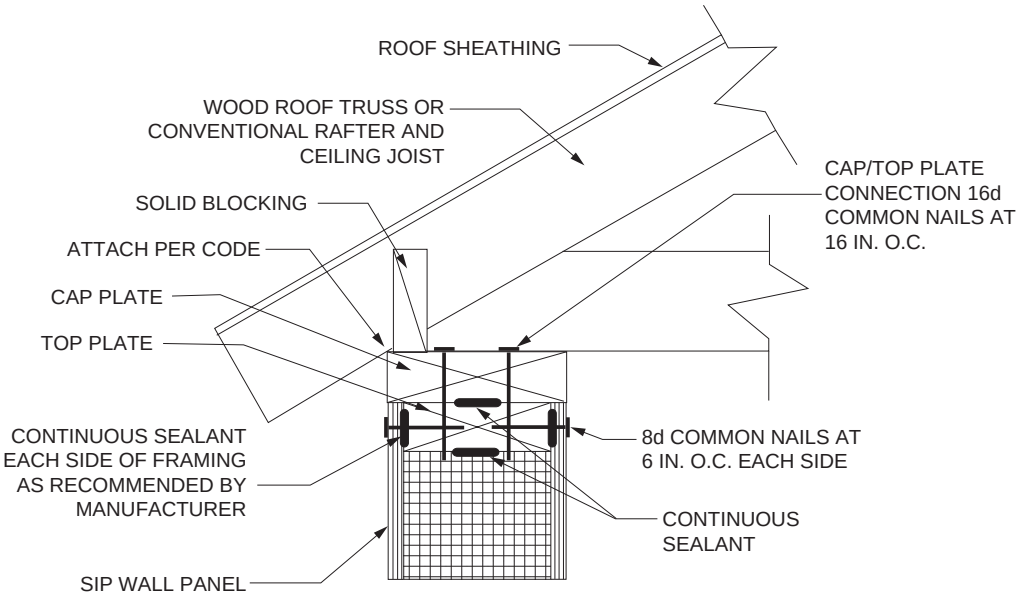

For SI: 1 inch = 25.4 mm.

Note: Figure illustrates SIP-specific attachment requirements. Other connections shall be made in accordance with Tables R602.3(1) and (2), as appropriate.

FIGURE R610.5(3)
TRUSSED ROOF TO TOP PLATE CONNECTION

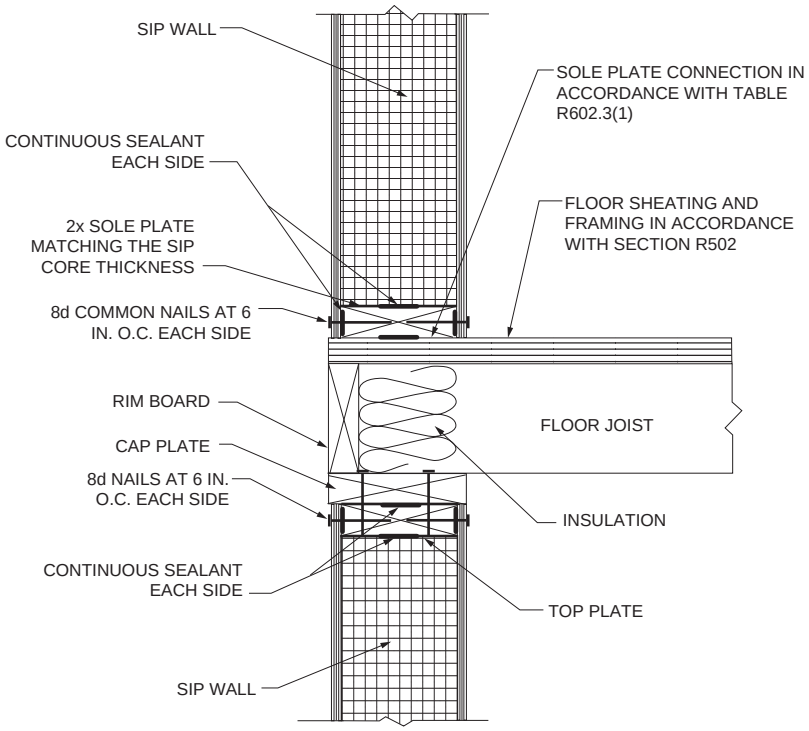

For SI: 1 inch = 25.4 mm.

Note: Figure illustrates SIP-specific attachment requirements. Other connections shall be made in accordance with Tables R602.3(1) and (2), as appropriate.

FIGURE R610.5(4)
SIP WALL-TO-WALL PLATFORM FRAME CONNECTION

INTERNATIONAL CODE COUNCIL®
Copyright © 2019 ICC & NYSDOS. ALL RIGHTS RESERVED. Accessed by Lauren Gualdino (lgualdino@briarcliffmanor.org), (-) Order Number #100880972 on May 08, 2020 07:05 AM (PDT) pursuant to License Agreement with ICC & NYSDOS. No further reproduction, no

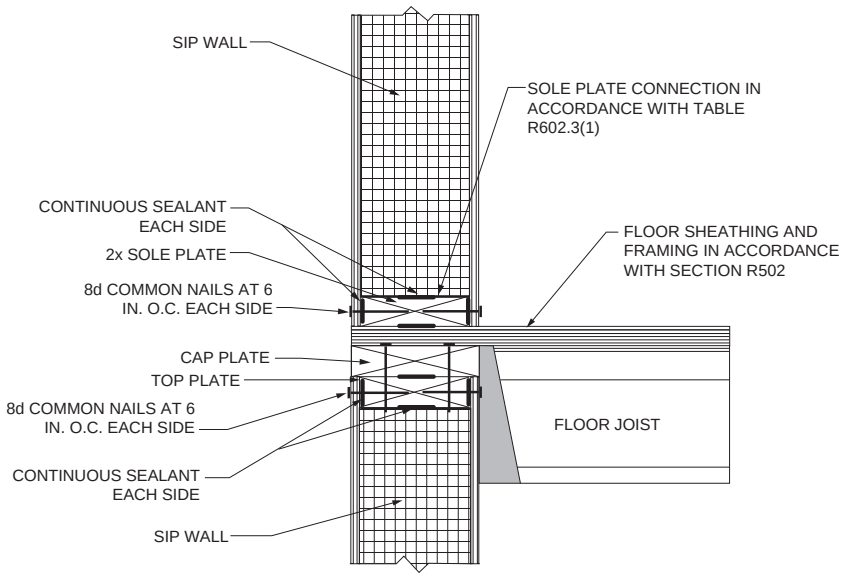

For SI: 1 inch = 25.4 mm.

Note: Figure illustrates SIP-specific attachment requirements. Other connections shall be made in accordance with Tables R602.3(1) and (2), as appropriate.

FIGURE R610.5(5)
SIP WALL-TO-WALL HANGING FLOOR FRAME CONNECTION
(I-Joist floor shown for Illustration only)

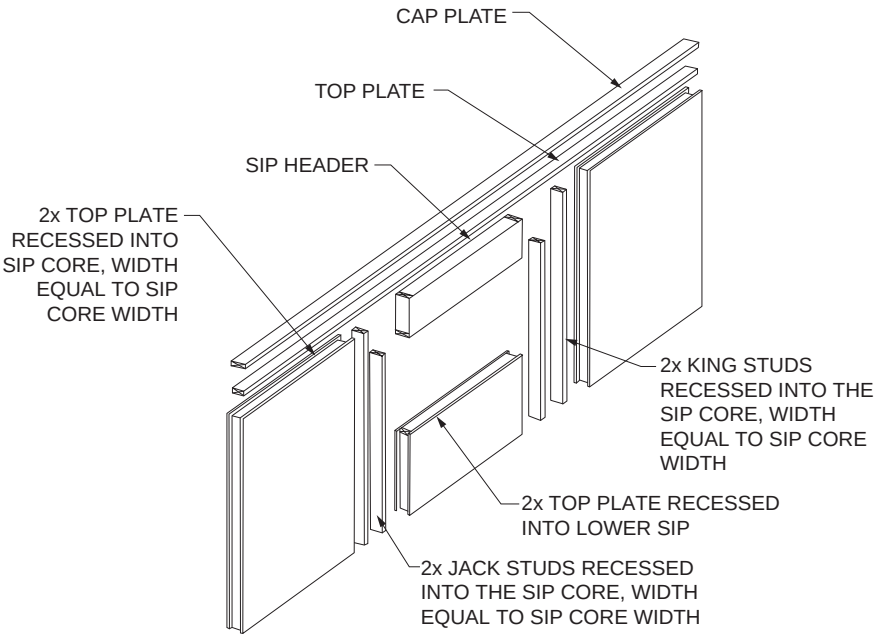

For SI: 1 inch = 25.4 mm.

Notes:

1. Top plates shall be continuous over header.
2. Lower 2x top plate shall have a width equal to the SIP core width and shall be recessed into the top edge of the panel. Cap plate shall be placed over the recessed top plate and shall have a width equal to the SIPs width.
3. SIP facing surfaces shall be nailed to framing and cripples with 8d common or galvanized box nails spaced 6 inches on center.

FIGURE R610.5.1
SIP WALL FRAMING CONFIGURATION

INTERNATIONAL CODE COUNCIL®
Copyright © 2019 ICC & NYSDOS. ALL RIGHTS RESERVED. Accessed by Lauren Gualdino (lgualdino@briarcliffmanor.org), (-) Order Number #100880972 on May 08, 2020 07:05 AM (PDT) pursuant to License Agreement with ICC & NYSDOS. No further reproduction, no

100880972

R610.5.2 Bottom (sole) plate connection. SIP walls shall have full bearing on a sole plate having a width equal to the nominal width of the foam core. Where SIP walls are supported directly on continuous foundations, the wall wood sill plate shall be anchored to the foundation in accordance with Figure R610.5.2 and Section R403.1.

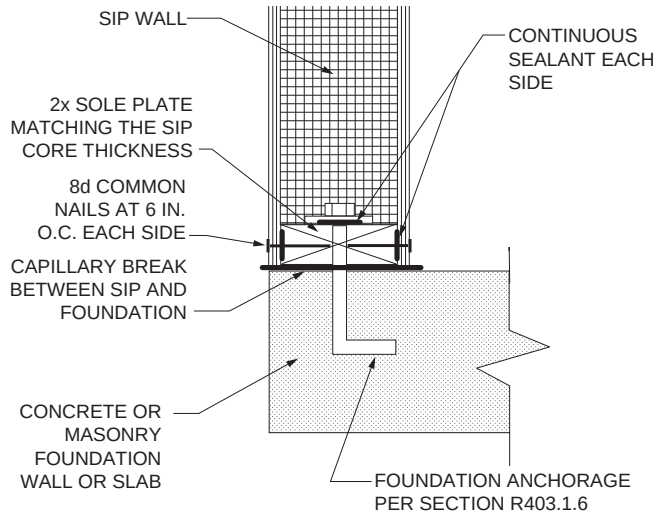

For SI: 1 inch = 25.4 mm, 1 foot = 304.8 mm.

FIGURE R610.5.2
SIP WALL TO CONCRETE SLAB FOR FOUNDATION WALL ATTACHMENT

R610.5.3 Panel-to-panel connection. SIPs shall be connected at vertical in-plane joints in accordance with Figure R610.8 or by other *approved* methods.

R610.5.4 Corner framing. Corner framing of SIP walls shall be constructed in accordance with Figure R610.5.4.

R610.5.5 Wall bracing. SIP walls shall be braced in accordance with Section R602.10. SIP walls shall be considered continuous wood structural panel sheathing (bracing Method CS-WSP) for purposes of computing required bracing. SIP walls shall meet the requirements of Section R602.10.4.2 except that SIP corners shall be fabricated as shown in Figure R610.8. Where SIP walls are used for wall bracing, the SIP bottom plate shall be attached to wood framing below in accordance with Table R602.3(1).

R610.5.6 Thermal barrier. SIP walls shall be separated from the interior of a building by an *approved* thermal barrier in accordance with Section R316.4.

R610.6 Interior load-bearing walls. Interior load-bearing walls shall be constructed as specified for exterior walls.

R610.7 Drilling and notching. The maximum vertical chase penetration in SIPs shall have a maximum side dimension of 2 inches (51 mm) centered in the panel. Vertical chases shall have a minimum spacing of 24 inches (610 mm) on center. Not more than two horizontal chases shall be permitted in each wall panel, one at 14 inches (360 mm) plus or minus 2 inches (51 mm) from the bottom of the panel and one at 48 inches (1220 mm) plus or minus 2 inches (51 mm) from the bottom edge of the SIP's panel. Additional penetrations are permitted where justified by analysis.

R610.8 Headers. SIP headers shall be designed and constructed in accordance with Table R610.8 and Figure R610.5.1. SIP headers shall be continuous sections without splines. Headers shall be not less than $11^{7}/_{8}$ inches (302 mm) deep. Headers longer than 4 feet (1219 mm) shall be constructed in accordance with Section R602.7. The strength axis of the factors on the header shall be oriented horizontally.

R610.8.1 Wood structural panel box headers. Wood structural panel box headers shall be allowed where SIP headers are not applicable. Wood structural panel box headers shall be constructed in accordance with Figure R602.7.3 and Table R602.7.3.

INTERNATIONAL CODE COUNCIL®
Copyright © 2019 ICC & NYSDOS. ALL RIGHTS RESERVED. Accessed by Lauren Gualdino (lgualdino@briarcliffmanor.org), (-) Order Number #100880972 on May 08, 2020 07:05 AM (PDT) pursuant to License Agreement with ICC & NYSDOS. No further reproduction, no

100880972

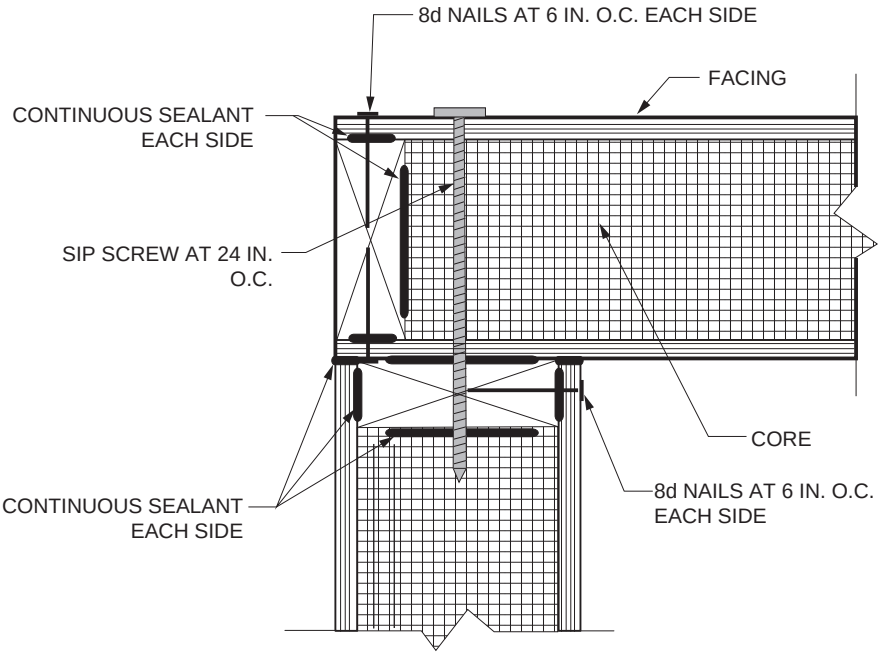

For SI: 1 inch = 25.4 mm.

FIGURE R610.5.4
SIP CORNER FRAMING DETAIL

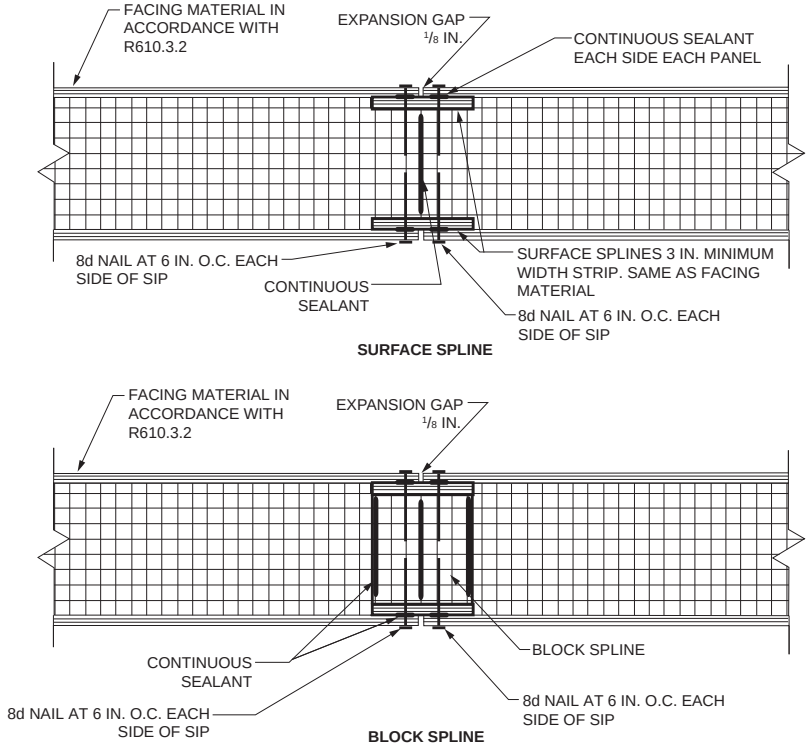

For SI: 1 inch = 25.4 mm.

FIGURE R610.8
TYPICAL SIP WALL PANEL-TO-PANEL CONNECTION DETAILS

INTERNATIONAL CODE COUNCIL®
Copyright © 2019 ICC & NYSDOS. ALL RIGHTS RESERVED. Accessed by Lauren Gualdino (lgualdino@briarcliffmanor.org), (-) Order Number #100880972 on May 08, 2020 07:05 AM (PDT) pursuant to License Agreement with ICC & NYSDOS. No further reproduction, no

100880972

TABLE R610.8
MAXIMUM SPANS FOR $11^{7}/_{8}$-INCH OR DEEPER SIP HEADERS (feet)[a, c, d]

LOAD CONDITION	SNOW LOAD (psf)	BUILDING[b] width (feet)				
		24	28	32	36	40
Supporting roof only	20	4	4	4	4	2
	30	4	4	4	2	2
	50	2	2	2	2	2
	70	2	2	2	DR	DR
Supporting roof and one-story	20	2	2	DR	DR	DR
	30	2	2	DR	DR	DR
	50	2	DR	DR	DR	DR
	70	DR	DR	DR	DR	DR

For SI: 1 inch = 25.4 mm, 1 foot = 304.8 mm, 1 pound per square foot = 0.0479 kPa.
DR = Design Required.
a. Design assumptions:
Maximum deflection criterion: *L*/240.
Maximum roof dead load: 10 psf.
Maximum ceiling load: 5 psf.
Maximum ceiling live load: 20 psf
Maximum second-floor live load: 30 psf.
Maximum second-floor dead load: 10 psf.
Maximum second-floor dead load from walls: 10 psf.
Maximum first floor dead load: 10 psf.
Wind loads based on Table R301.2(2).
Strength axis of facing material applied horizontally.
b. Building width is in the direction of horizontal framing members supported by the header.
c. The table provides for roof slopes between 3:12 and 12:12.
d. The maximum roof overhang is 24 inches (610 mm).

INTERNATIONAL CODE COUNCIL®
Copyright © 2019 ICC & NYSDOS. ALL RIGHTS RESERVED. Accessed by Lauren Gualdino (lgualdino@briarcliffmanor.org), (-) Order Number #100880972 on May 08, 2020 07:05 AM (PDT) pursuant to License Agreement with ICC & NYSDOS. No further reproduction, no

100880972

INTERNATIONAL CODE COUNCIL®
Copyright © 2019 ICC & NYSDOS. ALL RIGHTS RESERVED. Accessed by Lauren Gualdino (lgualdino@briarcliffmanor.org), (-) Order Number #100880972 on May 08, 2020 07:05 AM (PDT) pursuant to License Agreement with ICC & NYSDOS. No further reproduction, no

100880972

CHAPTER 7
WALL COVERING

SECTION R701
GENERAL

R701.1 Application. The provisions of this chapter shall control the design and construction of the interior and exterior wall covering for buildings.

R701.2 Installation. Products sensitive to adverse weather shall not be installed until adequate weather protection for the installation is provided. Exterior sheathing shall be dry before applying exterior cover.

SECTION R702
INTERIOR COVERING

R702.1 General. Interior coverings or wall finishes shall be installed in accordance with this chapter and Table R702.1(1), Table R702.1(2), Table R702.1(3) and Table R702.3.5. Interior masonry veneer shall comply with the requirements of Section R703.7.1 for support and Section R703.7.4 for anchorage, except an airspace is not required. Interior finishes and materials shall conform to the flame spread and smoke-development requirements of Section R302.9.

R702.2 Interior plaster.

R702.2.1 Gypsum plaster. Gypsum plaster materials shall conform to ASTM C5, C22, C28, C35, C59, C61, C587, C631, C847, C933, C1032 and C1047, and shall be installed or applied in compliance with ASTM C841, C842 and C843. Gypsum lath or gypsum base for veneer plaster shall conform to ASTM C1396 and shall be installed in compliance with ASTM C844. Plaster shall be not less than three coats where applied over metal lath and not less than two coats where applied over other bases permitted by this section, except that veneer plaster shall be applied in one coat not to exceed $^3/_{16}$ inch (4.76 mm) thickness, provided the total thickness is in accordance with Table R702.1(1).

R702.2.2 Cement plaster. Cement plaster materials shall conform to ASTM C91 (Type M, S or N), C150 (Types I, II and III), C595 [Types IP, I (PM), IS and I (SM), C847, C897, C933, C1032, C1047 and C1328, and shall be installed or applied in compliance with ASTM C926 and C1063. Gypsum lath shall conform to ASTM C1396. Plaster shall be not less than three coats where applied over metal lath and not less than two coats where applied over other bases permitted by this section.

R702.2.2.1 Application. Each coat shall be kept in a moist condition for not less than 24 hours prior to application of the next coat.

Exception: Applications installed in accordance with ASTM C926.

R702.2.2.2 Curing. The finish coat for two-coat cement plaster shall not be applied sooner than 48 hours after application of the first coat. For three-coat cement plaster, the second coat shall not be applied sooner than 24 hours after application of the first coat. The finish coat for three-coat cement plaster shall not be applied sooner than 48 hours after application of the second coat.

TABLE R702.1(1)
THICKNESS OF PLASTER

PLASTER BASE	FINISHED THICKNESS OF PLASTER FROM FACE OF LATH, MASONRY, CONCRETE (inches)	
	Gypsum Plaster	Cement Plaster
Expanded metal lath	$^5/_8$, minimum[a]	$^5/_8$, minimum[a]
Wire lath	$^5/_8$, minimum[a]	$^3/_4$, minimum (interior)[b] $^7/_8$, minimum (exterior)[b]
Gypsum lath[g]	$^1/_2$, minimum	$^3/_4$, minimum (interior)[b]
Masonry walls[c]	$^1/_2$, minimum	$^1/_2$, minimum
Monolithic concrete walls[c, d]	$^5/_8$, maximum	$^7/_8$, maximum
Monolithic concrete ceilings[c, d]	$^3/_8$, maximum[e]	$^1/_2$, maximum
Gypsum veneer base[f, g]	$^1/_{16}$, minimum	$^3/_4$, minimum (interior)[b]
Gypsum sheathing[g]	—	$^3/_4$, minimum (interior)[b] $^7/_8$, minimum (exterior)[b]

For SI: 1 inch = 25.4 mm.

a. Where measured from back plane of expanded metal lath, exclusive of ribs, or self-furring lath, plaster thickness shall be $^3/_4$ inch minimum.
b. Where measured from face of support or backing.
c. Because masonry and concrete surfaces vary in plane, thickness of plaster need not be uniform.
d. Where applied over a liquid bonding agent, finish coat shall be permitted to be applied directly to concrete surface.
e. Approved acoustical plaster shall be permitted to be applied directly to concrete or over base coat plaster, beyond the maximum plaster thickness shown.
f. Attachment shall be in accordance with Table R702.3.5.
g. Where gypsum board is used as a base for cement plaster, a water-resistive barrier complying with Section R703.2 shall be provided.

INTERNATIONAL CODE COUNCIL®
Copyright © 2019 ICC & NYSDOS. ALL RIGHTS RESERVED. Accessed by Lauren Gualdino (lgualdino@briarcliffmanor.org), (-) Order Number #100880972 on May 08, 2020 07:05 AM (PDT) pursuant to License Agreement with ICC & NYSDOS. No further reproduction, no

100880972

TABLE R702.1(2)
GYPSUM PLASTER PROPORTIONS[a]

NUMBER	COAT	PLASTER BASE OR LATH	MAXIMUM VOLUME AGGREGATE PER 100 POUNDS NEAT PLASTER[b] (cubic feet)	
			Damp Loose Sand[a]	Perlite or Vermiculite[c]
Two-coat work	Base coat	Gypsum lath	2.5	2
	Base coat	Masonry	3	3
Three-coat work	First coat	Lath	2[d]	2
	Second coat	Lath	3[d]	2[e]
	First and second coats	Masonry	3	3

For SI: 1 inch = 25.4 mm, 1 cubic foot = 0.0283 m^3, 1 pound = 0.454 kg.

a. Wood-fibered gypsum plaster shall be mixed in the proportions of 100 pounds of gypsum to not more than 1 cubic foot of sand where applied on masonry or concrete.

b. Where determining the amount of aggregate in set plaster, a tolerance of 10 percent shall be allowed.

c. Combinations of sand and lightweight aggregate shall be permitted to be used, provided the volume and weight relationship of the combined aggregate to gypsum plaster is maintained.

d. If used for both first and second coats, the volume of aggregate shall be permitted to be 2.5 cubic feet.

e. Where plaster is 1 inch or more in total thickness, the proportions for the second coat may be increased to 3 cubic feet.

TABLE R702.1(3)
CEMENT PLASTER PROPORTIONS, PARTS BY VOLUME

COAT	CEMENT PLASTER TYPE	CEMENTITIOUS MATERIALS				VOLUME OF AGGREGATE PER SUM OF SEPARATE VOLUMES OF CEMENTITIOUS MATERIALS[b]
		Portland Cement Type I, II or III; Blended Hydraulic Cement Type IP, I (S < 70), IL, or IT (S < 70); or Hydraulic Cement Type GU, HE, MS, HS or MH	Plastic Cement	Masonry Cement Type M, S or N	Lime	
First	Portland or blended	1	—	—	$^3/_4$ - $1^1/_2$[a]	$2^1/_2$ - 4
	Masonry	—		1	—	$2^1/_2$ - 4
	Plastic	—	1	—	—	$2^1/_2$ - 4
Second	Portland or blended	1	—	—	$^3/_4$ - $1^1/_2$	3 - 5
	Masonry	—		1	—	3 - 5
	Plastic	—	1	—	—	3 - 5
Finish	Portland or blended	1	—	—	$1^1/_2$ - 2	$1^1/_2$ - 3
	Masonry	—	—	1	—	$1^1/_2$ - 3
	Plastic	—	1		—	$1^1/_2$ - 3

For SI: 1 inch = 25.4 mm, 1 pound = 0.454 kg.

a. Lime by volume of 0 to $^3/_4$ shall be used where the plaster will be placed over low-absorption surfaces such as dense clay tile or brick.

b. The same or greater sand proportion shall be used in the second coat than used in the first coat.

R702.2.3 Support. Support spacing for gypsum or metal lath on walls or ceilings shall not exceed 16 inches (406 mm) for $^3/_8$-inch-thick (9.5 mm) or 24 inches (610 mm) for $^1/_2$-inch-thick (12.7 mm) plain gypsum lath. Gypsum lath shall be installed at right angles to support framing with end joints in adjacent courses staggered by not less than one framing space.

R702.3 Gypsum board and gypsum panel products.

R702.3.1 Materials. Gypsum board and gypsum panel product materials and accessories shall conform to ASTM C22, C475, C514, C1002, C1047, C1177, C1178, C1278, C1396, C1658 or C1766 and shall be installed in accordance with the provisions of this section. Adhesives for the installation of gypsum board and gypsum panel products shall conform to ASTM C557.

R702.3.1.1 Adhesives. Expandable foam adhesives for the installation of gypsum board and gypsum panel products shall conform to ASTM C6464. Other adhesives for the installation of gypsum board and gypsum panel products shall conform to ASTM C557. Supports and fasteners used to attach gypsum board and gypsum panel products shall comply with Table R702.3.5 or other approved method.

INTERNATIONAL CODE COUNCIL®
Copyright © 2019 ICC & NYSDOS. ALL RIGHTS RESERVED. Accessed by Lauren Gualdino (lgualdino@briarcliffmanor.org), (-) Order Number #100880972 on May 08, 2020 07:05 AM (PDT) pursuant to License Agreement with ICC & NYSDOS. No further reproduction, no

100880972

R702.3.2 Wood framing. Wood framing supporting gypsum board and gypsum panel products shall be not less than 2 inches (51 mm) nominal thickness in the least dimension except that wood furring strips not less than 1-inch by 2-inch (25 mm by 51 mm) nominal dimension shall be permitted to be used over solid backing or framing spaced not more than 24 inches (610 mm) on center.

R702.3.3 Cold-formed steel framing. Cold-formed steel framing supporting gypsum board and gypsum panel products shall be not less than $1^1/_4$ inches (32 mm) wide in the least dimension. Nonload-bearing cold-formed steel framing shall comply with AISI S220. Load-bearing cold-formed steel framing shall comply with AISI S240.

R702.3.4 Insulating concrete form walls. Foam plastics for insulating concrete form walls constructed in accordance with Sections R404.1.2 and R608 on the interior of *habitable spaces* shall be protected in accordance with Section R316.4. Use of adhesives in conjunction with mechanical fasteners is permitted. Adhesives used for interior and exterior finishes shall be compatible with the insulating form materials.

R702.3.5 Application. Supports and fasteners used to attach gypsum board and gypsum panel products shall comply with Table R702.3.5. Gypsum sheathing shall be attached to exterior walls in accordance with Table R602.3(1). Gypsum board and gypsum panel products shall be applied at right angles or parallel to framing members. All edges and ends of gypsum board and gypsum panel products shall occur on the framing members, except those edges and ends that are perpendicular to the framing members. Interior gypsum board shall not be installed where it is directly exposed to the weather or to water.

R702.3.5.1 Screw fastening. Screws for attaching gypsum board and gypsum panel products to wood framing shall be Type W or Type S in accordance with ASTM C1002 and shall penetrate the wood not less than $^5/_8$ inch (15.9 mm). Gypsum board and gypsum panel products shall be attached to cold-formed steel framing with minimum No. 6 screws. Screws for attaching gypsum board and gypsum panel products to cold-formed steel framing less than 0.033 inch (1 mm) thick shall be Type S in accordance with ASTM C1002 or bugle head style in accordance with ASTM C1513 and shall penetrate the steel not less than $^3/_8$ inch (9.5 mm). Screws for attaching gypsum board and gypsum panel products to cold-formed steel framing 0.033 inch to 0.112 inch (1 mm to 3 mm) thick shall be in accordance with ASTM C954 or bugle head style in accordance with ASTM C1513. Screws for attaching gypsum board and gypsum panel products to structural insulated panels shall penetrate the wood structural panel facing not less than $^7/_{16}$ inch (11.1 mm).

R702.3.6 Horizontal gypsum board diaphragm ceilings. Gypsum board and gypsum panel products shall be permitted on wood joists to create a horizontal *diaphragm* in accordance with Table R702.3.6. Gypsum board and gypsum panel products shall be installed perpendicular to ceiling framing members. End joints of adjacent courses of board and panels shall not occur on the same joist. The maximum allowable *diaphragm* proportions shall be $1^1/_2$:1 between shear resisting elements. Rotation or cantilever conditions shall not be permitted. Gypsum board or gypsum panel products shall not be used in *diaphragm* ceilings to resist lateral forces imposed by masonry or concrete construction. Perimeter edges shall be blocked using wood members not less than 2-inch by 6-inch (51 mm by 152 mm) nominal dimension. Blocking material shall be installed flat over the top plate of the wall to provide a nailing surface not less than 2 inches (51 mm) in width for the attachment of the gypsum board or gypsum panel product.

R702.3.7 Water-resistant gypsum backing board. Gypsum board used as the base or backer for adhesive application of ceramic tile or other required nonabsorbent finish material shall conform to ASTM C1178, C1278 or C1396. Use of water-resistant gypsum backing board shall be permitted on ceilings. Water-resistant gypsum board shall not be installed over a Class I or II vapor retarder in a shower or tub compartment. Cut or exposed edges, including those at wall intersections, shall be sealed as recommended by the manufacturer.

R702.3.7.1 Limitations. Water-resistant gypsum backing board shall not be used where there will be direct exposure to water, or in areas subject to continuous high humidity.

R702.4 Ceramic tile.

R702.4.1 General. Ceramic tile surfaces shall be installed in accordance with ANSI A108.1, A108.4, A108.5, A108.6, A108.11, A118.1, A118.3, A136.1 and A137.1.

R702.4.2 Backer boards. Materials used as backers for wall tile in tub and shower areas and wall panels in shower areas shall be of materials listed in Table R702.4.2, and installed in accordance with the manufacturer's recommendations.

INTERNATIONAL CODE COUNCIL®
Copyright © 2019 ICC & NYSDOS. ALL RIGHTS RESERVED. Accessed by Lauren Gualdino (lgualdino@briarcliffmanor.org), (-) Order Number #100880972 on May 08, 2020 07:05 AM (PDT) pursuant to License Agreement with ICC & NYSDOS. No further reproduction, no

100880972

TABLE R702.3.5
MINIMUM THICKNESS AND APPLICATION OF GYPSUM BOARD AND GYPSUM PANEL PRODUCTS

THICKNESS OF GYPSUM BOARD OR GYPSUM PANEL PRODUCTS (inches)	APPLICATION	ORIENTATION OF GYPSUM BOARD OR GYPSUM PANEL PRODUCTS TO FRAMING	MAXIMUM SPACING OF FRAMING MEMBERS (inches o.c.)	MAXIMUM SPACING OF FASTENERS (inches)		SIZE OF NAILS FOR APPLICATION TO WOOD FRAMING[c]
				Nails[a]	Screws[b]	
Application without adhesive						
3/8	Ceiling[d]	Perpendicular	16	7	12	13 gage, 1 1/4″ long, 19/64″ head; 0.098″ diameter, 1 1/4″ long, annular-ringed; or 4d cooler nail, 0.080″ diameter, 1 3/8″ long, 7/32″ head.
	Wall	Either direction	16	8	16	
1/2	Ceiling	Either direction	16	7	12	13 gage, 1 3/8″ long, 19/64″ head; 0.098″ diameter, 1 1/4″ long, annular-ringed; 5d cooler nail, 0.086″ diameter, 1 5/8″ long, 15/64″ head; or gypsum board nail, 0.086″ diameter, 1 5/8″ long, 9/32″ head.
	Ceiling[d]	Perpendicular	24	7	12	
	Wall	Either direction	24	8	12	
	Wall	Either direction	16	8	16	
5/8	Ceiling	Either direction	16	7	12	13 gage, 1 5/8″ long, 19/64″ head; 0.098″ diameter, 1 3/8″ long, annular-ringed; 6d cooler nail, 0.092″ diameter, 1 7/8″ long, 1/4″ head; or gypsum board nail, 0.0915″ diameter, 1 7/8″ long, 19/64″ head.
	Ceiling	Perpendicular	24	7	12	
	Type X at garage ceiling beneath habitable rooms	Perpendicular	24	6	6	1 7/8″ long 6d coated nails or equivalent drywall screws. Screws shall comply with Section R702.3.5.1
	Wall	Either direction	24	8	12	13 gage, 1 5/8″ long, 19/64″ head; 0.098″ diameter, 1 3/8″ long, annular-ringed; 6d cooler nail, 0.092″ diameter, 1 7/8″ long, 1/4″ head; or gypsum board nail, 0.0915″ diameter, 1 7/8″ long, 19/64″ head.
	Wall	Either direction	16	8	16	
Application with adhesive						
3/8	Ceiling[d]	Perpendicular	16	16	16	Same as above for 3/8″ gypsum board and gypsum panel products.
	Wall	Either direction	16	16	24	
1/2 or 5/8	Ceiling	Either direction	16	16	16	Same as above for 1/2″ and 5/8″ gypsum board and gypsum panel products, respectively.
	Ceiling[d]	Perpendicular	24	12	16	
	Wall	Either direction	24	16	24	
Two 3/8 layers	Ceiling	Perpendicular	16	16	16	Base ply nailed as above for 1/2″ gypsum board and gypsum panel products; face ply installed with adhesive.
	Wall	Either direction	24	24	24	

For SI: 1 inch = 25.4 mm.

a. For application without adhesive, a pair of nails spaced not less than 2 inches apart or more than 2 1/2 inches apart shall be permitted to be used with the pair of nails spaced 12 inches on center.

b. Screws shall be in accordance with Section R702.3.5.1. Screws for attaching gypsum board or gypsum panel products to structural insulated panels shall penetrate the wood structural panel facing not less than 7/16 inch.

c. Where cold-formed steel framing is used with a clinching design to receive nails by two edges of metal, the nails shall be not less than 5/8 inch longer than the gypsum board or gypsum panel product thickness and shall have ringed shanks. Where the cold-formed steel framing has a nailing groove formed to receive the nails, the nails shall have barbed shanks or be 5d, 13 1/2 gage, 1 5/8 inches long, 15/64-inch head for 1/2-inch gypsum board or gypsum panel product; and 6d, 13 gage, 1 7/8 inches long, 15/64-inch head for 5/8-inch gypsum board or gypsum panel product.

d. Three-eighths-inch-thick single-ply gypsum board or gypsum panel product shall not be used on a ceiling where a water-based textured finish is to be applied, or where it will be required to support insulation above a ceiling. On ceiling applications to receive a water-based texture material, either hand or spray applied, the gypsum board or gypsum panel product shall be applied perpendicular to framing. Where applying a water-based texture material, the minimum gypsum board thickness shall be increased from 3/8 inch to 1/2 inch for 16-inch on center framing, and from 1/2 inch to 5/8 inch for 24-inch on center framing or 1/2-inch sag-resistant gypsum ceiling board shall be used.

INTERNATIONAL CODE COUNCIL®
Copyright © 2019 ICC & NYSDOS. ALL RIGHTS RESERVED. Accessed by Lauren Gualdino (lgualdino@briarcliffmanor.org), (-) Order Number #100880972 on May 08, 2020 07:05 AM (PDT) pursuant to License Agreement with ICC & NYSDOS. No further reproduction, no

100880972

TABLE R702.3.6
SHEAR CAPACITY FOR HORIZONTAL WOOD-FRAMED GYPSUM BOARD DIAPHRAGM CEILING ASSEMBLIES

MATERIAL	THICKNESS OF MATERIAL (min.) (inch)	SPACING OF FRAMING MEMBERS (max.) (inch)	SHEAR VALUE[a, b] (plf of ceiling)	MINIMUM FASTENER SIZE[c, d]
Gypsum board or gypsum panel product	$^1/_2$	16 o.c.	90	5d cooler or wallboard nail; $1^5/_8$-inch long; 0.086-inch shank; $^{15}/_{64}$-inch head
Gypsum board or gypsum panel product	$^1/_2$	24 o.c.	70	5d cooler or wallboard nail; $1^5/_8$-inch long; 0.086-inch shank; $^{15}/_{64}$-inch head

For SI: 1 inch = 25.4 mm, 1 pound per linear foot = 1.488 kg/m.

a. Values are not cumulative with other horizontal diaphragm values and are for short-term loading caused by wind or seismic loading. Values shall be reduced 25 percent for normal loading.

b. Values shall be reduced 50 percent in Seismic Design Categories D_0, D_1, D_2 and E.

c. $1^1/_4$-inch, No. 6 Type S or W screws shall be permitted to be substituted for the listed nails.

d. Fasteners shall be spaced not more than 7 inches on center at all supports, including perimeter blocking, and not less than $^3/_8$ inch from the edges and ends of the gypsum board.

TABLE R702.4.2
BACKER BOARD MATERIALS

MATERIAL	STANDARD
Glass mat gypsum backing panel	ASTM C1178
Fiber-reinforced gypsum panels	ASTM C1278
Nonasbestos fiber-cement backer board	ASTM C1288 or ISO 8336, Category C
Nonasbestos fiber mat-reinforced cementitious backer units	ASTM C1325

R702.5 Other finishes. Wood veneer paneling and hardboard paneling shall be placed on wood or cold-formed steel framing spaced not more than 16 inches (406 mm) on center. Wood veneer and hard board paneling less than $^1/_4$-inch (6 mm) nominal thickness shall not have less than a $^3/_8$-inch (10 mm) gypsum board or gypsum panel product backer. Wood veneer paneling not less than $^1/_4$-inch (6 mm) nominal thickness shall conform to ANSI/HPVA HP-1. Hardboard paneling shall conform to CPA/ANSI A135.5.

R702.6 Wood shakes and shingles. Wood shakes and shingles shall conform to CSSB *Grading Rules for Wood Shakes and Shingles* and shall be permitted to be installed directly to the studs with maximum 24 inches (610 mm) on-center spacing.

R702.6.1 Attachment. Nails, staples or glue are permitted for attaching shakes or shingles to the wall, and attachment of the shakes or shingles directly to the surface shall be permitted provided the fasteners are appropriate for the type of wall surface material. Where nails or staples are used, two fasteners shall be provided and shall be placed so that they are covered by the course above.

R702.6.2 Furring strips. Where furring strips are used, they shall be 1 inch by 2 inches or 1 inch by 3 inches (25 mm by 51 mm or 25 mm by 76 mm), spaced a distance on center equal to the desired exposure, and shall be attached to the wall by nailing through other wall material into the studs.

R702.7 Vapor retarders. Class I or II vapor retarders are required on the interior side of frame walls in Climate Zones 5, 6, 7, 8 and Marine 4.

Exceptions:

1. Basement walls.
2. Below-grade portion of any wall.
3. Construction where moisture or its freezing will not damage the materials.

R702.7.1 Class III vapor retarders. Class III vapor retarders shall be permitted where any one of the conditions in Table R702.7.1 is met.

TABLE R702.7.1
CLASS III VAPOR RETARDERS

CLIMATE ZONE	CLASS III VAPOR RETARDERS PERMITTED FOR:[a]
Marine 4	Vented cladding over wood structural panels. Vented cladding over fiberboard. Vented cladding over gypsum. Continuous insulation with *R*-value ≥ 2.5 over 2 × 4 wall. Continuous insulation with *R*-value ≥ 3.75 over 2 × 6 wall.
5	Vented cladding over wood structural panels. Vented cladding over fiberboard. Vented cladding over gypsum. Continuous insulation with *R*-value ≥ 5 over 2 × 4 wall. Continuous insulation with *R*-value ≥ 7.5 over 2 × 6 wall.
6	Vented cladding over fiberboard. Vented cladding over gypsum. Continuous insulation with *R*-value ≥ 7.5 over 2 × 4 wall. Continuous insulation with *R*-value ≥ 11.25 over 2 × 6 wall.
7 and 8	Continuous insulation with *R*-value ≥ 10 over 2 × 4 wall. Continuous insulation with *R*-value ≥ 15 over 2 × 6 wall.

For SI: 1 pound per cubic foot = 16 kg/m^3.

a. Spray foam with a maximum permeance of 1.5 perms at the installed thickness, applied to the interior cavity side of wood structural panels, fiberboard, insulating sheathing or gypsum is deemed to meet the continuous insulation requirement where the spray foam *R*-value meets or exceeds the specified continuous insulation *R*-value.

R702.7.2 Material vapor retarder class. The *vapor retarder class* shall be based on the manufacturer's certified testing or a tested assembly.

The following shall be deemed to meet the class specified:

1. Class I: Sheet polyethylene, on perforated aluminum foil.
2. Class II: Kraft-faced fiberglass batts.
3. Class III: Latex or enamel paint.

INTERNATIONAL CODE COUNCIL®
Copyright © 2019 ICC & NYSDOS. ALL RIGHTS RESERVED. Accessed by Lauren Gualdino (lgualdino@briarcliffmanor.org), (-) Order Number #100880972 on May 08, 2020 07:05 AM (PDT) pursuant to License Agreement with ICC & NYSDOS. No further reproduction, no

100880972

R702.7.3 Minimum clear airspaces and vented openings for vented cladding. For the purposes of this section, vented cladding shall include the following minimum clear airspaces. Other openings with the equivalent vent area shall be permitted.

1. Vinyl polypropylene or horizontal aluminum siding applied over a weather-resistive barrier as specified in Table R703.3(1).
2. Brick veneer with a clear airspace as specified in Table R703.8.4.
3. Other approved vented claddings.

SECTION R703
EXTERIOR COVERING

R703.1 General. Exterior walls shall provide the building with a weather-resistant exterior wall envelope. The exterior wall envelope shall include flashing as described in Section R703.4.

Exception: Log walls designed and constructed in accordance with the provisions of ICC 400.

R703.1.1 Water resistance. The exterior wall envelope shall be designed and constructed in a manner that prevents the accumulation of water within the wall assembly by providing a water-resistant barrier behind the exterior cladding as required by Section R703.2 and a means of draining to the exterior water that penetrates the exterior cladding.

Exceptions:

1. A weather-resistant exterior wall envelope shall not be required over concrete or masonry walls designed in accordance with Chapter 6 and flashed in accordance with Section R703.4 or R703.8.
2. Compliance with the requirements for a means of drainage, and the requirements of Sections R703.2 and R703.4, shall not be required for an exterior wall envelope that has been demonstrated to resist wind-driven rain through testing of the exterior wall envelope, including joints, penetrations and intersections with dissimilar materials, in accordance with ASTM E331 under the following conditions:
    2.1. Exterior wall envelope test assemblies shall include at least one opening, one control joint, one wall/eave interface and one wall sill. All tested openings and penetrations shall be representative of the intended end-use configuration.
    2.2. Exterior wall envelope test assemblies shall be at least 4 feet by 8 feet (1219 mm by 2438 mm) in size.
    2.3. Exterior wall assemblies shall be tested at a minimum differential pressure of 6.24 pounds per square foot (299 Pa).
    2.4. Exterior wall envelope assemblies shall be subjected to the minimum test exposure for a minimum of 2 hours.

    The exterior wall envelope design shall be considered to resist wind-driven rain where the results of testing indicate that water did not penetrate control joints in the exterior wall envelope, joints at the perimeter of openings penetration or intersections of terminations with dissimilar materials.

R703.1.2 Wind resistance. Wall coverings, backing materials and their attachments shall be capable of resisting wind loads in accordance with Tables R301.2(2) and R301.2(3). Wind-pressure resistance of the siding, soffit and backing materials shall be determined by ASTM E330 or other applicable standard test methods. Where wind-pressure resistance is determined by design analysis, data from approved design standards and analysis conforming to generally accepted engineering practice shall be used to evaluate the siding, soffit and backing material and its fastening. All applicable failure modes including bending rupture of siding, fastener withdrawal and fastener head pull-through shall be considered in the testing or design analysis. Where the wall covering, soffit and backing material resist wind load as an assembly, use of the design capacity of the assembly shall be permitted.

R703.2 Water-resistive barrier. One layer of No. 15 asphalt felt, free from holes and breaks, complying with ASTM D226 for Type 1 felt or other approved water-resistive barrier shall be applied over studs or sheathing of all exterior walls. No.15 asphalt felt shall be applied horizontally, with the upper layer lapped over the lower layer not less than 2 inches (51 mm). Where joints occur, felt shall be lapped not less than 6 inches (152 mm). Other *approved* materials shall be installed in accordance with the *water-resistive barrier* manufacturer's installation instructions. The No. 15 asphalt felt or other approved *water-resistive barrier* material shall be continuous to the top of walls and terminated at penetrations and building appendages in a manner to meet the requirements of the exterior wall envelope as described in Section R703.1.

R703.3 Wall covering nominal thickness and attachments. The nominal thickness and attachment of exterior wall coverings shall be in accordance with Table R703.3(1), the wall covering material requirements of this section, and the wall covering manufacturer's installation instructions. Cladding attachment over foam sheathing shall comply with the additional requirements and limitations of Sections R703.15 through R703.17. Nominal material thicknesses in Table R703.3(1) are based on a maximum stud spacing of 16 inches (406 mm) on center. Where specified by the siding manufacturer's instructions and supported by a test report or other documentation, attachment to studs with greater spacing is permitted. Fasteners for exterior wall coverings attached to wood framing shall be in accordance with Section R703.3.3 and Table R703.3(1). Exterior wall coverings shall be attached to cold-formed steel light frame construction in accordance with the cladding manufacturer's installation instructions, the requirements of Table R703.3(1) using screw fasteners substituted for the nails specified in accordance with Table R703.3(2), or an approved design.

INTERNATIONAL CODE COUNCIL®
Copyright © 2019 ICC & NYSDOS. ALL RIGHTS RESERVED. Accessed by Lauren Gualdino (lgualdino@briarcliffmanor.org), (-) Order Number #100880972 on May 08, 2020 07:05 AM (PDT) pursuant to License Agreement with ICC & NYSDOS. No further reproduction, no

100880972

TABLE R703.3(1)
SIDING MINIMUM ATTACHMENT AND MINIMUM THICKNESS

SIDING MATERIAL		NOMINAL THICKNESS (inches)	JOINT TREATMENT	TYPE OF SUPPORTS FOR THE SIDING MATERIAL AND FASTENERS					
				Wood or wood structural panel sheathing into stud	Fiberboard sheathing into stud	Gypsum sheathing into stud	Foam plastic sheathing into stud[l]	Direct to studs	Number or spacing of fasteners
Anchored veneer: brick, concrete, masonry or stone (see Section R703.8)		2	Section R703.8	Section R703.8					
Adhered veneer: concrete, stone or masonry (see Section R703.12)		—	Section R703.12	Section R703.12					
Fiber cement siding	Panel siding (see Section R703.10.1)	5/16	Section R703.10.1	6d common (2″ × 0.113″)	6d common (2″ × 0.113″)	6d common (2″ × 0.113″)	6d common (2″ × 0.113″)	4d common (1 1/2″ × 0.099″)	6″ panel edges 12″ inter. sup.
	Lap siding (see Section R703.10.2)	5/16	Section R703.10.2	6d common (2″ × 0.113″)	6d common (2″ × 0.113″)	6d common (2″ × 0.113″)	6d common (2″ × 0.113″)	6d common (2″ × 0.113″) or 11 gage roofing nail	Note f
Hardboard panel siding (see Section R703.5)		7/16	—	0.120″ nail (shank) with 0.225″ head	0.120″ nail (shank) with 0.225″ head	0.120″ nail (shank) with 0.225″ head	0.120″ nail (shank) with 0.225″ head	0.120″ nail (shank) with 0.225″ head	6″ panel edges 12″ inter. sup.[d]
Hardboard lap siding (see Section R703.5)		7/16	Note e	0.099″ nail (shank) with 0.240″ head	0.099″ nail (shank) with 0.240″ head	0.099″ nail (shank) with 0.240″ head	0.099″ nail (shank) with 0.240″ head	0.099″ nail (shank) with 0.240″ head	Same as stud spacing 2 per bearing
Horizontal aluminum[a]	Without insulation	0.019[b]	Lap	Siding nail 1 1/2″ × 0.120″	Siding nail 2″ × 0.120″	Siding nail 2″ × 0.120″	Siding nail[h] 1 1/2″ × 0.120″	Not allowed	Same as stud spacing
		0.024	Lap	Siding nail 1 1/2″ × 0.120″	Siding nail 2″ × 0.120″	Siding nail 2″ × 0.120″	Siding nail[h] 1 1/2″ × 0.120″	Not allowed	
	With insulation	0.019	Lap	Siding nail 1 1/2″ × 0.120″	Siding nail 2 1/2″ × 0.120″	Siding nail 2 1/2″ × 0.120″	Siding nail[h] 1 1/2″ × 0.120″	Siding nail 1 1/2″ × 0.120″	
Insulated vinyl siding[j]		0.035 (vinyl siding layer only)	Lap	0.120 nail (shank) with a 0.313 head or 16-gage crown[h, i]	0.120 nail (shank) with a 0.313 head or 16-gage crown[h]	0.120 nail (shank) with a 0.313 head or 16-gage crown[h]	0.120 nail (shank) with a 0.313 head Section R703.11.2	Not allowed	16 inches on center or specified by manufacturer instructions, test report or other sections of this code
Particleboard panels		3/8	—	6d box nail (2″ × 0.099″)	6d box nail (2″ × 0.099″)	6d box nail (2″ × 0.099″)	6d box nail (2″ × 0.099″)	Not allowed	6″ panel edges 12″ inter. sup.
		1/2	—	6d box nail (2″ × 0.099″)	6d box nail (2″ × 0.099″)	6d box nail (2″ × 0.099″)	6d box nail (2″ × 0.099″)	6d box nail (2″ × 0.099″)	
		5/8	—	6d box nail (2″ × 0.099″)	8d box nail (2 1/2″ × 0.113″)	8d box nail (2 1/2″ × 0.113″)	6d box nail (2″ × 0.099″)	6d box nail (2″ × 0.099″)	
Polypropylene siding[k]		Not applicable	Lap	Section 703.14.1	Section 703.14.1	Section 703.14.1	Section 703.14.1	Not allowed	As specified by the manufacturer instructions, test report or other sections of this code

(continued)

INTERNATIONAL CODE COUNCIL®
Copyright © 2019 ICC & NYSDOS. ALL RIGHTS RESERVED. Accessed by Lauren Gualdino (lgualdino@briarcliffmanor.org), (-) Order Number #100880972 on May 08, 2020 07:05 AM (PDT) pursuant to License Agreement with ICC & NYSDOS. No further reproduction, no

100880972

TABLE R703.3(1)—continued
SIDING MINIMUM ATTACHMENT AND MINIMUM THICKNESS

SIDING MATERIAL		NOMINAL THICKNESS (inches)	JOINT TREATMENT	TYPE OF SUPPORTS FOR THE SIDING MATERIAL AND FASTENERS					
				Wood or wood structural panel sheathing into stud	Fiberboard sheathing into stud	Gypsum sheathing into stud	Foam plastic sheathing into stud[l]	Direct to studs	Number or spacing of fasteners
Steel[c]		29 ga.	Lap	Siding nail ($1^3/_4$″ × 0.113″) Staple–$1^3/_4$″	Siding nail ($2^3/_4$″ × 0.113″) Staple–$2^1/_2$″	Siding nail ($2^1/_2$″ × 0.113″) Staple–$2^1/_4$″	Siding nail ($1^3/_4$″ x 0.113″) Staple–$1^3/_4$″	Not allowed	Same as stud spacing
Vinyl siding (see Section R703.11)		0.035	Lap	0.120″ nail (shank) with a 0.313″ head or 16-gage staple with $^3/_8$- to $^1/_2$-inch crown[h, i]	0.120″ nail (shank) with a 0.313″ head or 16-gage staple with $^3/_8$- to $^1/_2$-inch crown[h]	0.120″ nail (shank) with a 0.313″ head or 16- gage staple with $^3/_8$- to $^1/_2$-inch crown[h]	0.120″ nail (shank) with a 0.313 head Section R703.11.2	Not allowed	16 inches on center or as specified by the manufacturer instructions or test report
Wood siding (see Section R703.5)	Wood rustic, drop	$^3/_8$ min.	Lap	6d box or siding nail (2″ × 0.099″)	6d box or siding nail (2″ × 0.099″)	6d box or siding nail (2″ × 0.099″)	6d box or siding nail (2″ × 0.099″)	8d box or siding nail ($2^1/_2$″ × 0.113″) Staple–2″	Face nailing up to 6″ widths, 1 nail per bearing; 8″ widths and over, 2 nails per bearing
	Shiplap	$^{19}/_{32}$ average	Lap						
	Bevel	$^7/_{16}$							
	Butt tip	$^3/_{16}$	Lap						
Wood structural panel ANSI/APA PRP-210 siding (exterior grade) (see Section R703.5)		$^3/_8 – ^1/_2$	Note e	2″ × 0.099″ siding nail	$2^1/_2$″ × 0.113″ siding nail	$2^1/_2$″ × 0.113″ siding nail	$2^1/_2$″ × 0.113″ siding nail	2″ × 0.099″ siding nail	6″ panel edges 12″ inter. sup.
Wood structural panel lap siding (see Section R703.5)		$^3/_8 – ^1/_2$	Note e Note g	2″ × 0.099″ siding nail	$2^1/_2$″ × 0.113″ siding nail	$2^1/_2$″ × 0.113″ siding nail	$2^1/_2$″ × 0.113″ siding nail	2″ × 0.099″ siding nail	8″ along bottom edge

For SI: 1 inch = 25.4 mm.

a. Aluminum nails shall be used to attach aluminum siding.

b. Aluminum (0.019 inch) shall be unbacked only where the maximum panel width is 10 inches and the maximum flat area is 8 inches. The tolerance for aluminum siding shall be +0.002 inch of the nominal dimension.

c. Shall be of approved type.

d. Where used to resist shear forces, the spacing must be 4 inches at panel edges and 8 inches on interior supports.

e. Vertical end joints shall occur at studs and shall be covered with a joint cover or shall be caulked.

f. Face nailing: one 6d common nail through the overlapping planks at each stud. Concealed nailing: one 11-gage $1^1/_2$-inch-long galv. roofing nail through the top edge of each plank at each stud in accordance with the manufacturer's installation instructions.

g. Vertical joints, if staggered, shall be permitted to be away from studs if applied over wood structural panel sheathing.

h. Minimum fastener length must be sufficient to penetrate sheathing other nailable substrate and framing a total of a minimum of $1^1/_4$ inches or in accordance with the manufacturer's installation instructions.

i. Where specified by the manufacturer's instructions and supported by a test report, fasteners are permitted to penetrate into or fully through nailable sheathing or other nailable substrate of minimum thickness specified by the instructions or test report, without penetrating into framing.

j. Insulated vinyl siding shall comply with ASTM D7793.

k. Polypropylene siding shall comply with ASTM D7254.

l. Cladding attachment over foam sheathing shall comply with the additional requirements and limitations of Sections R703.15, R703.16 and R703.17.

INTERNATIONAL CODE COUNCIL®
Copyright © 2019 ICC & NYSDOS. ALL RIGHTS RESERVED. Accessed by Lauren Gualdino (lgualdino@briarcliffmanor.org), (-) Order Number #100880972 on May 08, 2020 07:05 AM (PDT) pursuant to License Agreement with ICC & NYSDOS. No further reproduction, no

100880972

TABLE R703.3(2)
SCREW FASTENER SUBSTITUTION FOR SIDING ATTACHMENT TO COLD-FORMED STEEL LIGHT FRAME CONSTRUCTION[a, b, c, d, e]

NAIL DIAMETER PER TABLE R703.3(1)	MINIMUM SCREW FASTENER SIZE
0.099″	No. 6
0.113″	No. 7
0.120″	No. 8

For SI: 1 inch = 25.4 mm

a. Screws shall comply with ASTM C1513 and shall penetrate a minimum of three threads through minimum 33 mil (20 gage) cold-formed steel frame construction.

b. Screw head diameter shall be not less than the nail head diameter required by Table R703.3(1).

c. Number and spacing of screw fasteners shall comply with Table R703.3(1).

d. Pan head, hex washer head, modified truss head or other screw head types with a flat attachment surface under the head shall be used for vinyl siding attachment.

e. Aluminum siding shall not be fastened directly to cold-formed steel light frame construction.

R703.3.1 Soffit installation. Soffits shall comply with Section R703.3.1.1, Section R703.3.1.2 or the manufacturer's installation instructions.

R703.3.1.1 Wood structural panel soffit. The minimum nominal thickness for wood structural panel soffits shall be $^3/_8$ inch (9.5 mm) and shall be fastened to framing or nailing strips with 2-inch by 0.099-inch (51 mm × 2.5 mm) nails. Fasteners shall be in spaced not less than 6 inches (152 mm) on center at panel edges and 12 inches (305 mm) on center at intermediate supports.

R703.3.1.2 Vinyl soffit panels. Soffit panels shall be fastened at fascia and wall ends and to intermediate nailing strips as necessary to ensure that there is no unsupported span greater than 16 inches (406 mm), or as specified by the manufacturer's instructions.

R703.3.2 Wind limitations. Where the design wind pressure exceeds 30 psf or where the limits of Table R703.3.2 are exceeded, the attachment of wall coverings and soffits shall be designed to resist the component and cladding loads specified in Table R301.2(2) for walls, adjusted for height and exposure in accordance with Table R301.2(3). For the determination of wall covering and soffit attachment, component and cladding loads shall be determined using an effective wind area of 10 square feet (0.93 m^2).

TABLE R703.3.2
LIMITS FOR ATTACHMENT PER TABLE R703.3(1)

MAXIMUM MEAN ROOF HEIGHT			
Ultimate Wind Speed (mph 3-second gust)	Exposure		
	B	C	D
115	NL	50′	20′
120	NL	30′	DR
130	60′	15′	DR
140	35′	DR	DR

For SI: 1 foot = 304.8 mm, 1 mile per hour = 0.447 m/s.
NL = Not Limited by Table R703.3.2, DR = Design Required.

R703.3.3 Fasteners. Exterior wall coverings and roof overhang soffits shall be securely fastened with aluminum, galvanized, stainless steel or rust-preventative coated nails or staples in accordance with Table R703.3(1) or with other approved corrosion-resistant fasteners in accordance with the wall covering manufacturer's installation instructions. Nails and staples shall comply with ASTM F1667. Nails shall be T-head, modified round head, or round head with smooth or deformed shanks. Staples shall have a minimum crown width of $^7/_{16}$ inch (11.1 mm) outside diameter and be manufactured of minimum 16-gage wire. Where fiberboard, gypsum, or foam plastic sheathing backing is used, nails or staples shall be driven into the studs. Where wood or wood structural panel sheathing is used, fasteners shall be driven into studs unless otherwise permitted to be driven into sheathing in accordance with either the siding manufacturer's installation instructions or Table R703.3.3.

R703.3.4 Minimum fastener length and penetration. Fasteners shall have the greater of the minimum length specified in Table R703.3(1) or as required to provide a minimum penetration into framing as follows:

1. Fasteners for horizontal aluminum siding, steel siding, particleboard panel siding, wood structural panel siding in accordance with ANSI/APA-PRP 210, fiber-cement panel siding and fiber-cement lap siding installed over foam plastic sheathing shall penetrate not less than $1^1/_2$ inches (38 mm) into framing or shall be in accordance with the manufacturer's installation instructions.
2. Fasteners for hardboard panel and lap siding shall penetrate not less than $1^1/_2$ inches (38 mm) into framing.

TABLE R703.3.3
OPTIONAL SIDING ATTACHMENT SCHEDULE FOR FASTENERS WHERE NO STUD PENETRATION NECESSARY

APPLICATION	NUMBER AND TYPE OF FASTENER	SPACING OF FASTENERS[b]
Exterior wall covering (weighing 3 psf or less) attachment to wood structural panel sheathing, either direct or over foam sheathing a maximum of 2 inches thick.[a] Note: Does not apply to vertical siding.	Ring shank roofing nail (0.120″ min. dia.)	12″ o.c.
	Ring shank nail (0.148″ min. dia.)	15″ o.c.
	No. 6 screw (0.138″ min. dia.)	12″ o.c.
	No. 8 screw (0.164″ min. dia.)	16″ o.c.

For SI: 1 inch = 25.4 mm, 1 pound per square foot = 0.479 kPa.

a. Fastener length shall be sufficient to penetrate the back side of the wood structural panel sheathing by at least $^1/_4$ inch. The wood structural panel sheathing shall be not less than $^7/_{16}$ inch in thickness.

b. Spacing of fasteners is per 12 inches of siding width. For other siding widths, multiply "Spacing of Fasteners" above by a factor of 12/s, where "s" is the siding width in inches. Fastener spacing shall never be greater than the manufacturer's minimum recommendations.

INTERNATIONAL CODE COUNCIL®
Copyright © 2019 ICC & NYSDOS. ALL RIGHTS RESERVED. Accessed by Lauren Gualdino (lgualdino@briarcliffmanor.org), (-) Order Number #100880972 on May 08, 2020 07:05 AM (PDT) pursuant to License Agreement with ICC & NYSDOS. No further reproduction, no

100880972

3. Fasteners for vinyl siding and insulated vinyl siding installed over wood or wood structural panel sheathing shall penetrate not less than $1^1/_4$ inches (32 mm) into sheathing and framing combined. Vinyl siding and insulated vinyl siding shall be permitted to be installed with fasteners penetrating into or through wood or wood structural sheathing of minimum thickness as specified by the manufacturer's instructions or test report, with or without penetration into the framing. Where the fastener penetrates fully through the sheathing, the end of the fastener shall extend not less than $^1/_4$ inch (6.4 mm) beyond the opposite face of the sheathing. Fasteners for vinyl siding and insulated vinyl siding installed over foam plastic sheathing shall be in accordance with Section R703.11.2. Fasteners for vinyl siding and insulated vinyl siding installed over fiberboard or gypsum sheathing shall penetrate not less than $1^1/_4$ inches (32 mm) into framing.
4. Fasteners for vertical or horizontal wood siding shall penetrate not less than $1^1/_2$ inches (38 mm) into studs, studs and wood sheathing combined, or blocking.
5. Fasteners for siding material installed over foam plastic sheathing shall have sufficient length to accommodate foam plastic sheathing thickness and to penetrate framing or sheathing and framing combined, as specified in Items 1 through 4.

R703.4 Flashing. Approved corrosion-resistant flashing shall be applied shingle-fashion in a manner to prevent entry of water into the wall cavity or penetration of water to the building structural framing components. Self-adhered membranes used as flashing shall comply with AAMA 711. Fluid-applied membranes used as flashing in exterior walls shall comply with AAMA 714. The flashing shall extend to the surface of the exterior wall finish. Approved corrosion-resistant flashings shall be installed at the following locations:

1. Exterior window and door openings. Flashing at exterior window and door openings shall extend to the surface of the exterior wall finish or to the water-resistive barrier complying with Section 703.2 for subsequent drainage. Mechanically attached flexible flashings shall comply with AAMA 712. Flashing at exterior window and door openings shall be installed in accordance with one or more of the following:
    1.1. The fenestration manufacturer's installation and flashing instructions, or for applications not addressed in the fenestration manufacturer's instructions, in accordance with the flashing manufacturer's instructions. Where flashing instructions or details are not provided, pan flashing shall be installed at the sill of exterior window and door openings. Pan flashing shall be sealed or sloped in such a manner as to direct water to the surface of the exterior wall finish or to the water-resistive barrier for subsequent drainage. Openings using pan flashing shall incorporate flashing or protection at the head and sides.
    1.2. In accordance with the flashing design or method of a registered design professional.
    1.3. In accordance with other approved methods.
2. At the intersection of chimneys or other masonry construction with frame or stucco walls, with projecting lips on both sides under stucco copings.
3. Under and at the ends of masonry, wood or metal copings and sills.
4. Continuously above all projecting wood trim.
5. Where exterior porches, decks or stairs attach to a wall or floor assembly of wood-frame construction.
6. At wall and roof intersections.
7. At built-in gutters.

R703.5 Wood, hardboard and wood structural panel siding. Wood, hardboard, and wood structural panel siding shall be installed in accordance with this section and Table R703.3(1). Hardboard siding shall comply with CPA/ANSI A135.6. Hardboard siding used as architectural trim shall comply with CPA/ANSI A 135.7.

R703.5.1 Vertical wood siding. Wood siding applied vertically shall be nailed to horizontal nailing strips or blocking set not more than 24 inches (610 mm) on center.

R703.5.2 Panel siding. Three-eighths-inch (9.5 mm) wood structural panel siding shall not be applied directly to studs spaced more than 16 inches (406 mm) on center where long dimension is parallel to studs. Wood structural panel siding $^7/_{16}$ inch (11.1 mm) or thinner shall not be applied directly to studs spaced more than 24 inches (610 mm) on center. The stud spacing shall not exceed the panel span rating provided by the manufacturer unless the panels are installed with the face grain perpendicular to the studs or over sheathing approved for that stud spacing.

Joints in wood, hardboard or wood structural panel siding shall be made as follows unless otherwise approved. Vertical joints in panel siding shall occur over framing members, unless wood or wood structural panel sheathing is used, and shall be shiplapped or covered with a batten. Horizontal joints in panel siding shall be lapped not less than 1 inch (25 mm) or shall be shiplapped or flashed with Z-flashing and occur over solid blocking, wood or wood structural panel sheathing.

R703.5.3 Horizontal wood siding. Horizontal lap siding shall be installed in accordance with the manufacturer's recommendations. Where there are no recommendations the siding shall be lapped not less than 1 inch (25 mm), or $^1/_2$ inch (12.7 mm) if rabbeted, and shall have the ends caulked, covered with a batten or sealed and installed over a strip of flashing.

R703.6 Wood shakes and shingles. Wood shakes and shingles shall conform to CSSB.

R703.6.1 Application. Wood shakes or shingles shall be applied either single course or double course over nominal $^1/_2$-inch (12.7 mm) wood-based sheathing or to furring strips over $^1/_2$-inch (12.7 mm) nominal nonwood sheathing. A water-resistive barrier shall be provided over all sheathing,

INTERNATIONAL CODE COUNCIL®
Copyright © 2019 ICC & NYSDOS. ALL RIGHTS RESERVED. Accessed by Lauren Gualdino (lgualdino@briarcliffmanor.org), (-) Order Number #100880972 on May 08, 2020 07:05 AM (PDT) pursuant to License Agreement with ICC & NYSDOS. No further reproduction, no

100880972

with horizontal overlaps in the membrane of not less than 2 inches (51 mm) and vertical overlaps of not less than 6 inches (152 mm). Where horizontal furring strips are used, they shall be 1 inch by 3 inches or 1 inch by 4 inches (25 mm by 76 mm or 25 mm by 102 mm) and shall be fastened to the studs with minimum 7d or 8d box nails and shall be spaced a distance on center equal to the actual weather exposure of the shakes or shingles, not to exceed the maximum exposure specified in Table R703.6.1. When installing shakes or shingles over a nonpermeable water-resistive barrier, furring strips shall be placed first vertically over the barrier and in addition, horizontal furring strips shall be fastened to the vertical furring strips prior to attaching the shakes or shingles to the horizontal furring strips. The spacing between adjacent shingles to allow for expansion shall be $^1/_8$ inch (3.2 mm) to $^1/_4$ inch (6.4 mm) apart, and between adjacent shakes shall be $^3/_8$ inch (9.5 mm) to $^1/_2$ inch (12.7 mm) apart. The offset spacing between joints in adjacent courses shall be not less than $1^1/_2$ inches (38 mm).

TABLE R703.6.1
MAXIMUM WEATHER EXPOSURE FOR WOOD SHAKES AND SHINGLES ON EXTERIOR WALLS[a, b, c]
(Dimensions are in inches)

LENGTH	EXPOSURE FOR SINGLE COURSE	EXPOSURE FOR DOUBLE COURSE
Shingles[a]		
16	7	12[b]
18	8	14[c]
24	$10^1/_2$	16[d]
Shakes[a]		
18	8	14
24	$10^1/_2$	18

For SI: 1 inch = 25.4 mm.

a. Dimensions given are for No. 1 grade.

b. A maximum 9-inch exposure is permitted for No. 2 grade.

c. A maximum 10-inch exposure is permitted for No. 2 grade.

d. A maximum 14-inch exposure is permitted for No. 2 grade.

R703.6.2 Weather exposure. The maximum weather exposure for shakes and shingles shall not exceed that specified in Table 703.6.1.

R703.6.3 Attachment. Wood shakes or shingles shall be installed according to this chapter and the manufacturer's instructions. Each shake or shingle shall be held in place by two stainless steel Type 304, Type 316 or hot-dipped zinc-coated galvanized corrosion-resistant box nails in accordance with Table R703.6.3(1) or R703.6.3(2). The hot-dipped zinc-coated galvanizing shall be in compliance with ASTM A153, 1.0 ounce per square foot. Alternatively, 16-gage stainless steel Type 304 or Type 316 staples with crown widths $^7/_{16}$ inch (11 mm) minimum, $^3/_4$ inch (19 mm) maximum, shall be used and the crown of the staple shall be placed parallel with the butt of the shake or the shingle. In single-course application, the fasteners shall be concealed by the course above and shall be driven approximately 1 inch (25 mm) above the butt line of the succeeding course and $^3/_4$ inch (19 mm) from the edge. In double-course applications, the exposed shake or shingle shall be face-nailed with two fasteners, driven approximately 2 inches (51 mm) above the butt line and $^3/_4$ inch (19 mm) from each edge. Fasteners installed within 15 miles (24 km) of salt water coastal areas shall be stainless steel Type 316. Fasteners for fire-retardant-treated shakes or shingles in accordance with Section R902 or pressure-impregnated-preservative-treated shakes or shingles in accordance with AWPA U1 shall be stainless steel Type 316. The fasteners shall penetrate the sheathing or furring strips by not less than $^1/_2$ inch (13 mm) and shall not be overdriven. Fasteners for untreated (natural) and treated products shall comply with ASTM F1667.

R703.6.4 Bottom courses. The bottom courses shall be doubled.

R703.7 Exterior plaster (stucco). Installation of exterior plaster shall be in compliance with ASTM C926, ASTM C1063 and the provisions of this code.

R703.7.1 Lath. Lath and lath attachments shall be of corrosion-resistant materials. Expanded metal or woven wire lath shall be attached with $1^1/_2$-inch-long (38 mm), 11-gage nails having a $^7/_{16}$-inch (11.1 mm) head, or $^7/_8$-inch-long (22.2 mm), 16-gage staples, spaced not more than 6 inches (152 mm) or as otherwise approved.

Exception: Lath is not required over masonry, cast-in-place concrete, precast concrete or stone substrates prepared in accordance with ASTM C1063.

R703.7.2 Plaster. Plastering with cement plaster shall be in accordance with ASTM C926. Cement materials shall be in accordance with one of the following:

1. Masonry cement conforming to ASTM C91 Type M, S or N.
2. Portland cement conforming to ASTM C150 Type I, II, or III.
3. Blended hydraulic cement conforming to ASTM C595 Type IP, IS (< 70), IL, or IT (S < 70).
4. Hydraulic cement conforming to ASTM C1157 Type GU, HE, MS, HS, or MH.
5. Plastic (stucco) cement conforming to ASTM C1328.

Plaster shall be not less than three coats where applied over metal lath or wire lath and shall be not less than two coats where applied over masonry, concrete, pressure-preservative-treated wood or decay-resistant wood as specified in Section R317.1 or gypsum backing. If the plaster surface is completely covered by veneer or other facing material or is completely concealed, plaster application need be only two coats, provided the total thickness is as set forth in Table R702.1(1).

On wood-frame construction with an on-grade floor slab system, exterior plaster shall be applied to cover, but not extend below, lath, paper and screed.

The proportion of aggregate to cementitious materials shall be as set forth in Table R702.1(3).

R703.7.2.1 Weep screeds. A minimum 0.019-inch (0.5 mm) (No. 26 galvanized sheet gage), corrosion-resistant weep screed or plastic weep screed, with a minimum vertical attachment flange of $3^1/_2$ inches (89 mm),

INTERNATIONAL CODE COUNCIL®
Copyright © 2019 ICC & NYSDOS. ALL RIGHTS RESERVED. Accessed by Lauren Gualdino (lgualdino@briarcliffmanor.org), (-) Order Number #100880972 on May 08, 2020 07:05 AM (PDT) pursuant to License Agreement with ICC & NYSDOS. No further reproduction, no

100880972

TABLE R703.6.3(1)
SINGLE-COURSE SIDEWALL FASTENERS

SINGLE-COURSE SIDEWALL FASTENERS			
Product type	**Nail type and minimum length (inches)**	**Minimum head diameter (inches)**	**Minimum shank thickness (inches)**
R & R and sanded shingles			
16″ and 18″ shingles	3d box $1^1/_4$	0.19	0.08
24″ shingles	4d box $1^1/_2$	0.19	0.08
Grooved shingles			
16″ and 18″ shingles	3d box $1^1/_4$	0.19	0.08
24″ shingles	4d box $1^1/_2$	0.19	0.08
Split and sawn shakes			
18″ straight-split shakes	5d box $1^3/_4$	0.19	0.08
18″ and 24″ handsplit shakes	6d box 2	0.19	0.0915
24″ tapersplit shakes	5d box $1^3/_4$	0.19	0.08
18″ and 24″ tapersawn shakes	6d box 2	0.19	0.0915

For SI: 1 inch = 25.4 mm.

TABLE R703.6.3(2)
DOUBLE-COURSE SIDEWALL FASTENERS

DOUBLE-COURSE SIDEWALL FASTENERS			
Product type	**Nail type and minimum length (inches)**	**Minimum head diameter (inches)**	**Minimum shank thickness (inches)**
R & R and sanded shingles			
16,″ 8″ and 24″ shingles	5d box $1^3/_4$ or same size casing nails	0.19	0.08
Grooved shingles			
16,″ 18″ and 24″shingles	5d box $1^3/_4$	0.19	0.08
Split and sawn shakes			
18″ straight-split shakes	7d box $2^1/_4$ or 8d $2^1/_2$	0.19	0.099
18″ and 24″ handsplit shakes	7d box $2^1/_4$ or 8d $2^1/_2$	0.19	0.099
24″ tapersplit shakes	7d box $2^1/_4$ or 8d $2^1/_2$	0.19	0.099
18″ and 24″ tapersawn shakes	7d box $2^1/_4$ or 8d $2^1/_2$	0.19	0.099

For SI: 1 inch = 25.4 mm.

shall be provided at or below the foundation plate line on exterior stud walls in accordance with ASTM C926. The weep screed shall be placed not less than 4 inches (102 mm) above the earth or 2 inches (51 mm) above paved areas and shall be of a type that will allow trapped water to drain to the exterior of the building. The weather-resistant barrier shall lap the attachment flange. The exterior lath shall cover and terminate on the attachment flange of the weep screed.

R703.7.3 Water-resistive barriers. Water-resistive barriers shall be installed as required in Section R703.2 and, where applied over wood-based sheathing, shall include a water-resistive, vapor-permeable barrier with a performance at least equivalent to two layers of Grade D paper. The individual layers shall be installed independently such that each layer provides a separate continuous plane and any flashing, installed in accordance with Section R703.4 and intended to drain to the *water-resistive barrier*, is directed between the layers.

Exception: Where the *water-resistive barrier* that is applied over wood-based sheathing has a water resistance equal to or greater than that of 60-minute Grade D paper and is separated from the stucco by an intervening, substantially nonwater-absorbing layer or designed drainage space.

R703.7.4 Application. Each coat shall be kept in a moist condition for at least 48 hours prior to application of the next coat.

Exception: Applications installed in accordance with ASTM C926.

R703.7.5 Curing. The finish coat for two-coat cement plaster shall not be applied sooner than seven days after application of the first coat. For three-coat cement plaster, the second coat shall not be applied sooner than 48 hours after application of the first coat. The finish coat for three-coat cement plaster shall not be applied sooner than seven days after application of the second coat.

R703.8 Anchored stone and masonry veneer, general. Anchored stone and masonry veneer shall be installed in accordance with this chapter, Table R703.3(1) and Figure R703.8. These veneers installed over a backing of wood or

INTERNATIONAL CODE COUNCIL®
Copyright © 2019 ICC & NYSDOS. ALL RIGHTS RESERVED. Accessed by Lauren Gualdino (lgualdino@briarcliffmanor.org), (-) Order Number #100880972 on May 08, 2020 07:05 AM (PDT) pursuant to License Agreement with ICC & NYSDOS. No further reproduction, no

100880972

cold-formed steel shall be limited to the first story above grade plane and shall not exceed 5 inches (127 mm) in thickness. See Section R602.10 for wall bracing requirements for masonry veneer for wood-framed construction and Section R603.9.5 for wall bracing requirements for masonry veneer for cold-formed steel construction.

Exceptions:

1. For buildings in Seismic Design Categories A, B and C, exterior stone or masonry veneer, as specified in Table R703.8(1), with a backing of wood or steel framing shall be permitted to the height specified in Table R703.8(1) above a noncombustible foundation.
2. For detached one- or two-family dwellings in Seismic Design Categories D_0, D_1 and D_2, exterior stone or masonry veneer, as specified in Table R703.8(2), with a backing of wood framing shall be permitted to the height specified in Table R703.8(2) above a noncombustible foundation.

R703.8.1 Interior veneer support. Veneers used as interior wall finishes shall be permitted to be supported on wood or cold-formed steel floors that are designed to support the loads imposed.

R703.8.2 Exterior veneer support. Except in Seismic Design Categories D_0, D_1 and D_2, exterior masonry veneers having an installed weight of 40 pounds per square foot (195 kg/m^2) or less shall be permitted to be supported on wood or cold-formed steel construction. Where masonry veneer supported by wood or cold-formed steel construction adjoins masonry veneer supported by the foundation, there shall be a movement joint between the veneer supported by the wood or cold-formed steel construction and the veneer supported by the foundation. The wood or cold-formed steel construction supporting the masonry veneer shall be designed to limit the deflection to $^1/_{600}$ of the span for the supporting members. The design of the wood or cold-formed steel construction shall consider the weight of the veneer and any other loads.

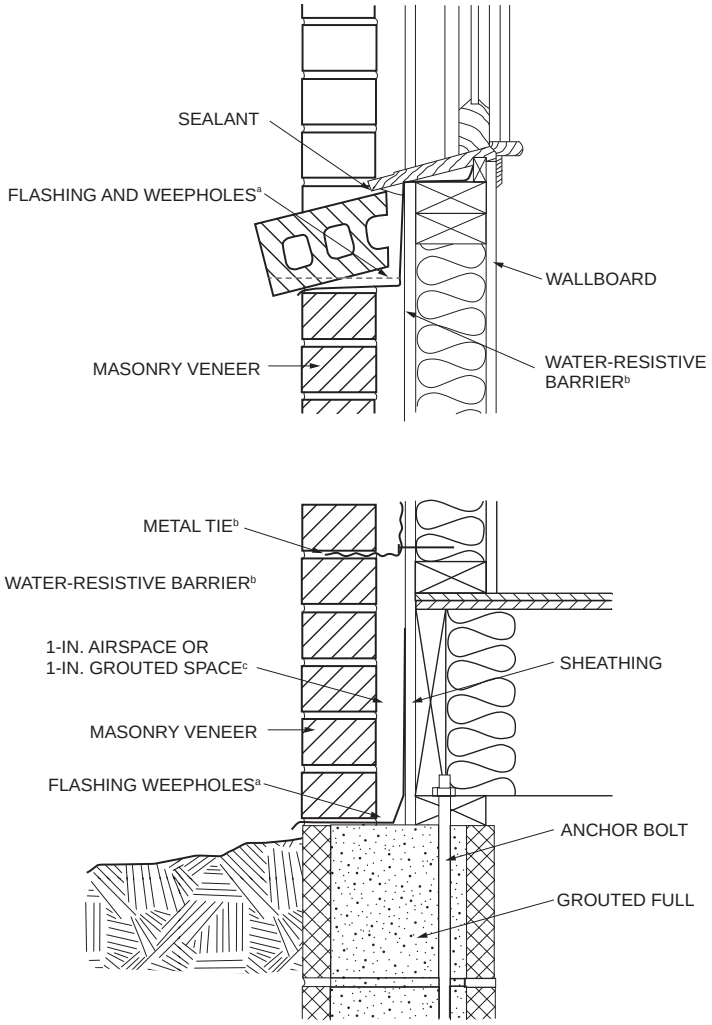

For SI: 1 inch = 24.5 mm.

FIGURE R703.8
TYPICAL MASONRY VENEER WALL DETAILS[e]

(continued)

INTERNATIONAL CODE COUNCIL®
Copyright © 2019 ICC & NYSDOS. ALL RIGHTS RESERVED. Accessed by Lauren Gualdino (lgualdino@briarcliffmanor.org), (-) Order Number #100880972 on May 08, 2020 07:05 AM (PDT) pursuant to License Agreement with ICC & NYSDOS. No further reproduction, no

100880972

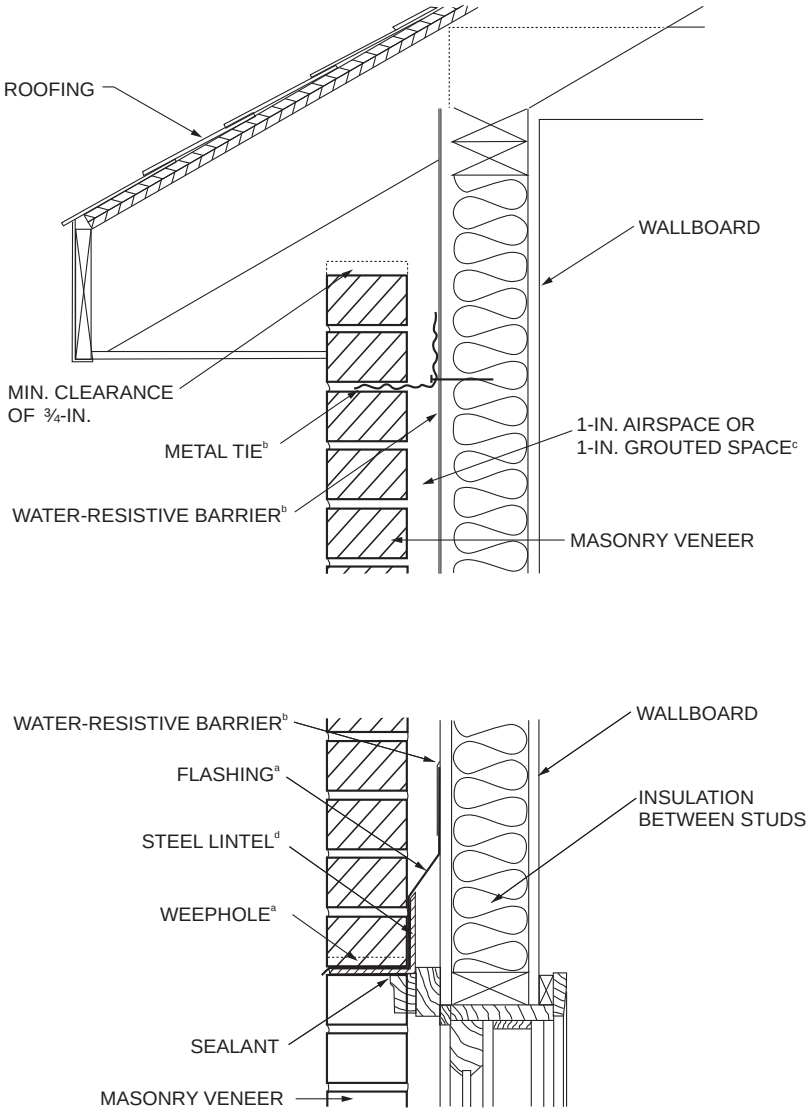

For SI: 1 inch = 25.4 mm.

a. See Sections R703.4, R703.8.5 and R703.8.6.
b. See Sections R703.2 and R703.8.4.
c. See Table R703.8.4 and Section R703.8.4.2.
d. See Section R703.8.3.
e. Figure R703.8 illustrates typical construction details for a masonry veneer wall. For the actual mandatory requirements of this code, see the indicated sections of text. Other details of masonry veneer wall construction shall be permitted provided the requirements of the indicated sections of text are met.

FIGURE R703.8—continued
TYPICAL MASONRY VENEER WALL DETAILS[e]

R703.8.2.1 Support by steel angle. A minimum 6-inch by 4-inch by $^{5}/_{16}$-inch (152 mm by 102 mm by 8 mm) steel angle, with the long leg placed vertically, shall be anchored to double 2-inch by 4-inch (51 mm by 102 mm) wood studs or double 350S162 cold-formed steel studs at a maximum on-center spacing of 16 inches (406 mm). Anchorage of the steel angle at every double stud spacing shall be not less than two $^{7}/_{16}$-inch-diameter (11 mm) by 4-inch (102 mm) lag screws for wood construction or two $^{7}/_{16}$-inch (11.1 mm) bolts with washers for cold-formed steel construction. The steel angle shall have a minimum clearance to underlying construction of $^{1}/_{16}$ inch (1.6 mm). Not less than two-thirds the width of the masonry veneer thickness shall bear on the steel angle. Flashing and weep holes shall be located in the masonry veneer in accordance with Figure R703.8.2.1. The maximum height of masonry veneer above the steel angle support shall be 12 feet 8 inches (3861 mm). The

INTERNATIONAL CODE COUNCIL®
Copyright © 2019 ICC & NYSDOS. ALL RIGHTS RESERVED. Accessed by Lauren Gualdino (lgualdino@briarcliffmanor.org), (-) Order Number #100880972 on May 08, 2020 07:05 AM (PDT) pursuant to License Agreement with ICC & NYSDOS. No further reproduction, no

100880972

TABLE R703.8(1)
STONE OR MASONRY VENEER LIMITATIONS AND REQUIREMENTS, WOOD OR STEEL FRAMING, SEISMIC DESIGN CATEGORIES A, B AND C

SEISMIC DESIGN CATEGORY	NUMBER OF WOOD- OR STEEL-FRAMED STORIES	MAXIMUM HEIGHT OF VENEER ABOVE NONCOMBUSTIBLE FOUNDATION[a] (feet)	MAXIMUM NOMINAL THICKNESS OF VENEER (inches)	MAXIMUM WEIGHT OF VENEER (psf)[b]	WOOD- OR STEEL-FRAMED STORY
A or B	Steel: 1 or 2 Wood: 1, 2 or 3	30	5	50	all
C	1	30	5	50	1 only
	2	30	5	50	top
					bottom
	Wood only: 3	30	5	50	top
					middle
					bottom

For SI: 1 inch = 25.4 mm, 1 foot = 304.8 mm, 1 pound per square foot = 0.479 kPa.

a. An additional 8 feet is permitted for gable end walls. See also story height limitations of Section R301.3.

b. Maximum weight is installed weight and includes weight of mortar, grout, lath and other materials used for installation. Where veneer is placed on both faces of a wall, the combined weight shall not exceed that specified in this table.

TABLE R703.8(2)
STONE OR MASONRY VENEER LIMITATIONS AND REQUIREMENTS, ONE- AND TWO-FAMILY DETACHED DWELLINGS, SEISMIC DESIGN CATEGORIES D_0, D_1 AND D_2

SEISMIC DESIGN CATEGORY	NUMBER OF WOOD-FRAMED STORIES[a]	MAXIMUM HEIGHT OF VENEER ABOVE NONCOMBUSTIBLE FOUNDATION OR FOUNDATION WALL (feet)	MAXIMUM NOMINAL THICKNESS OF VENEER (inches)	MAXIMUM WEIGHT OF VENEER (psf)[b]
D_0	1	20[c]	4	40
	2	20[c]	4	40
	3	30[d]	4	40
D_1	1	20[c]	4	40
	2	20[c]	4	40
	3	20[c]	4	40
D_2	1	20[c]	3	30
	2	20[c]	3	30

For SI: 1 inch = 25.4 mm, 1 foot = 304.8 mm, 1 pound per square foot = 0.479 kPa, 1 pound-force = 4.448 N.

a. Cripple walls are not permitted in Seismic Design Categories D_0, D_1 and D_2.

b. Maximum weight is installed weight and includes weight of mortar, grout and lath, and other materials used for installation.

c. The veneer shall not exceed 20 feet in height above a noncombustible foundation, with an additional 8 feet permitted for gable end walls, or 30 feet in height with an additional 8 feet for gable end walls where the lower 10 feet have a backing of concrete or masonry wall. See story height limitations of Section R301.3.

d. The veneer shall not exceed 30 feet in height above a noncombustible foundation, with an additional 8 feet permitted for gable end walls. See story height limitations of Section R301.3.

airspace separating the masonry veneer from the wood backing shall be in accordance with Sections R703.8.4 and R703.8.4.2. The method of support for the masonry veneer on wood construction shall be constructed in accordance with Figure R703.8.2.1.

The maximum slope of the roof construction without stops shall be 7:12. Roof construction with slopes greater than 7:12 but not more than 12:12 shall have stops of a minimum 3-inch by 3-inch by $^1/_4$-inch (76 mm by 76 mm by 6.4 mm) steel plate welded to the angle at 24 inches (610 mm) on center along the angle or as *approve*d by the *building official*.

R703.8.2.2 Support by roof construction. A steel angle shall be placed directly on top of the roof construction. The roof supporting construction for the steel angle shall consist of not fewer than three 2-inch by 6-inch (51 mm by 152 mm) wood members for wood construction or three 550S162 cold-formed steel members for cold-formed steel light frame construction. A wood member abutting the vertical wall stud construction shall be anchored with not fewer than three $^5/_8$-inch (15.9 mm) diameter by 5-inch (127 mm) lag screws to every wood stud spacing. Each additional wood roof member shall be anchored by the use of two 10d nails at every wood stud spacing. A cold-formed steel member abutting the vertical wall stud shall be anchored with not fewer than nine No. 8 screws to every cold-formed steel stud. Each additional cold-formed steel roof member shall be anchored to the adjoining roof member using two No. 8 screws at every stud spacing. Not less than two-thirds

INTERNATIONAL CODE COUNCIL®
Copyright © 2019 ICC & NYSDOS. ALL RIGHTS RESERVED. Accessed by Lauren Gualdino (lgualdino@briarcliffmanor.org), (-) Order Number #100880972 on May 08, 2020 07:05 AM (PDT) pursuant to License Agreement with ICC & NYSDOS. No further reproduction, no

100880972

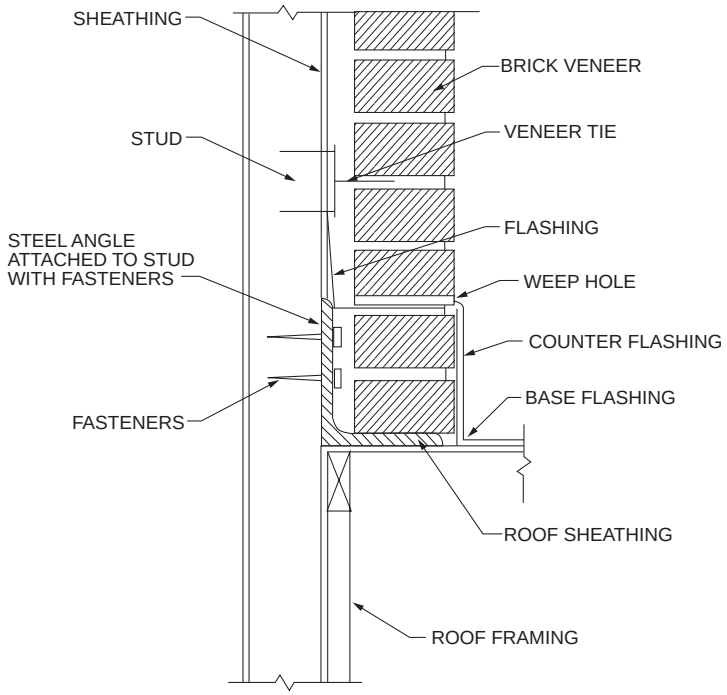

FIGURE R703.8.2.1
EXTERIOR MASONRY VENEER SUPPORT BY STEEL ANGLES

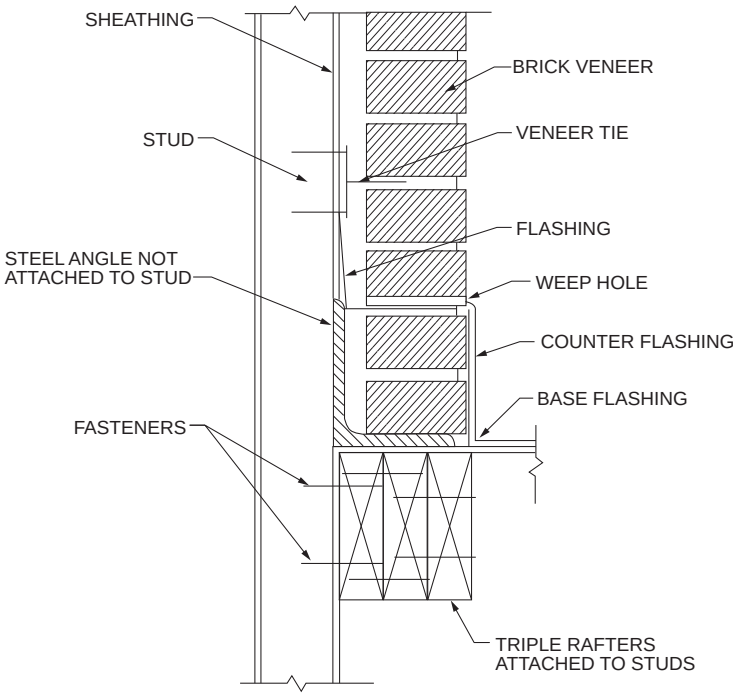

FIGURE R703.8.2.2
EXTERIOR MASONRY VENEER SUPPORT BY ROOF MEMBERS

INTERNATIONAL CODE COUNCIL®
Copyright © 2019 ICC & NYSDOS. ALL RIGHTS RESERVED. Accessed by Lauren Gualdino (lgualdino@briarcliffmanor.org), (-) Order Number #100880972 on May 08, 2020 07:05 AM (PDT) pursuant to License Agreement with ICC & NYSDOS. No further reproduction, no

100880972

the width of the masonry veneer thickness shall bear on the steel angle. Flashing and weep holes shall be located in the masonry veneer wythe in accordance with Figure R703.8.2.2. The maximum height of the masonry veneer above the steel angle support shall be 12 feet 8 inches (3861 mm). The airspace separating the masonry veneer from the wood backing shall be in accordance with Sections R703.8.4 and R703.8.4.2. The support for the masonry veneer shall be constructed in accordance with Figure R703.8.2.2.

The maximum slope of the roof construction without stops shall be 7:12. Roof construction with slopes greater than 7:12 but not more than 12:12 shall have stops of a minimum 3-inch by 3-inch by $^1/_4$-inch (76 mm by 76 mm by 6.4 mm) steel plate welded to the angle at 24 inches (610 mm) on center along the angle or as *approved* by the *building official*.

R703.8.3 Lintels. Masonry veneer shall not support any vertical load other than the dead load of the veneer above. Veneer above openings shall be supported on lintels of noncombustible materials. The lintels shall have a length of bearing not less than 4 inches (102 mm). Steel lintels shall be shop coated with a rust-inhibitive paint, except for lintels made of corrosion-resistant steel or steel treated with coatings to provide corrosion resistance. Construction of openings shall comply with either Section R703.8.3.1 or 703.8.3.2.

R703.8.3.1 Allowable span. The allowable span shall not exceed the values set forth in Table R703.8.3.1.

R703.8.3.2 Maximum span. The allowable span shall not exceed 18 feet 3 inches (5562 mm) and shall be constructed to comply with Figure R703.8.3.2 and the following:

1. Provide a minimum length of 18 inches (457 mm) of masonry veneer on each side of opening as shown in Figure R703.8.3.2.
2. Provide a minimum 5-inch by $3^1/_2$-inch by $^5/_{16}$-inch (127 mm by 89 mm by 7.9 mm) steel angle above the opening and shore for a minimum of 7 days after installation.
3. Provide double-wire joint reinforcement extending 12 inches (305 mm) beyond each side of the opening. Lap splices of joint reinforcement not less than 12 inches (305 mm). Comply with one of the following:
   3.1. Double-wire joint reinforcement shall be $^3/_{16}$-inch (4.8 mm) diameter and shall be placed in the first two bed joints above the opening.
   3.2. Double-wire joint reinforcement shall be 9 gauge (0.144 inch or 3.66 mm diameter) and shall be placed in the first three bed joints above the opening.
4. Provide the height of masonry veneer above opening, in accordance with Table R703.8.3.2.

TABLE R703.8.3.2
HEIGHT OF MASONRY VENEER ABOVE OPENING

MINIMUM HEIGHT OF MASONRY VENEER ABOVE OPENING (INCH)	MAXIMUM HEIGHT OF MASONRY VENEER ABOVE OPENING (FEET)
13	< 5
24	5 to < 12
60	12 to height above support allowed by Section R703.8

For SI: 1 inch = 25.4 mm, 1 foot = 304.8 mm.

R703.8.4 Anchorage. Masonry veneer shall be anchored to the supporting wall studs with corrosion-resistant metal ties embedded in mortar or grout and extending into the veneer a minimum of $1^1/_2$ inches (38 mm), with not less than $^5/_8$-inch (15.9 mm) mortar or grout cover to outside face. Masonry veneer shall conform to Table R703.8.4(1). For masonry veneer tie attachment through insulating sheathing not greater than 2 inches (51 mm) in thickness to not less than 7/16 performance category wood structural panel, see Table R703.8.4(2).

R703.8.4.1 Size and spacing. Veneer ties, if strand wire, shall be not less in thickness than No. 9 U.S. gage [(0.148 inch) (4 mm)] wire and shall have a hook embedded in the mortar joint, or if sheet metal, shall be

TABLE R703.8.3.1
ALLOWABLE SPANS FOR LINTELS SUPPORTING MASONRY VENEER[a, b, c, d]

SIZE OF STEEL ANGLE[a, c, d] (inches)	NO STORY ABOVE	ONE STORY ABOVE	TWO STORIES ABOVE	NO. OF $^1/_2$-INCH OR EQUIVALENT REINFORCING BARS IN REINFORCED LINTEL[b, d]
$3 \times 3 \times {}^1/_4$	6′-0″	4′-6″	3′-0″	1
$4 \times 3 \times {}^1/_4$	8′-0″	6′-0″	4′-6″	1
$5 \times 3^1/_2 \times {}^5/_{16}$	10′-0″	8′-0″	6′-0″	2
$6 \times 3^1/_2 \times {}^5/_{16}$	14′-0″	9′-6″	7′-0″	2
$2\text{-}6 \times 3^1/_2 \times {}^5/_{16}$	20′-0″	12′-0″	9′-6″	4

For SI: 1 inch = 25.4 mm, 1 foot = 304.8 mm.

a. Long leg of the angle shall be placed in a vertical position.

b. Depth of reinforced lintels shall be not less than 8 inches and all cells of hollow masonry lintels shall be grouted solid. Reinforcing bars shall extend not less than 8 inches into the support.

c. Steel members indicated are adequate typical examples; other steel members meeting structural design requirements shall be permitted to be used.

d. Either steel angle or reinforced lintel shall span opening.

INTERNATIONAL CODE COUNCIL®
Copyright © 2019 ICC & NYSDOS. ALL RIGHTS RESERVED. Accessed by Lauren Gualdino (lgualdino@briarcliffmanor.org), (-) Order Number #100880972 on May 08, 2020 07:05 AM (PDT) pursuant to License Agreement with ICC & NYSDOS. No further reproduction, no

100880972

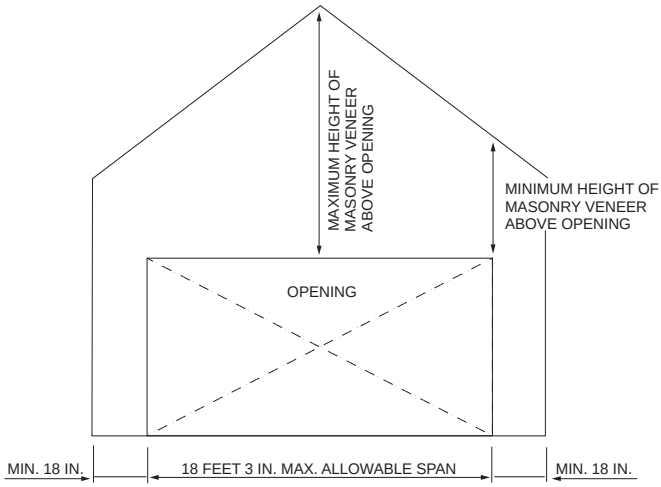

For SI: 1 inch = 25.4 mm, 1 foot = 304.8 mm.

FIGURE R703.8.3.2
MASONRY VENEER OPENING

not less than No. 22 U.S. gage by [(0.0299 inch) (0.76 mm)] $^{7}/_{8}$ inch (22 mm) corrugated. Each tie shall support not more than 2.67 square feet (0.25 m^2) of wall area and shall be spaced not more than 32 inches (813 mm) on center horizontally and 24 inches (635 mm) on center vertically.

Exception: In Seismic Design Category D_0, D_1 or D_2 or townhouses in Seismic Design Category C or in wind areas of more than 30 pounds per square foot pressure (1.44 kPa), each tie shall support not more than 2 square feet (0.2 m^2) of wall area.

R703.8.4.1.1 Veneer ties around wall openings. Additional metal ties shall be provided around wall openings greater than 16 inches (406 mm) in either dimension. Metal ties around the perimeter of openings shall be spaced not more than 3 feet (9144 mm) on center and placed within 12 inches (305 mm) of the wall opening.

R703.8.4.2 Grout fill. As an alternative to the airspace required by Table R703.8.4, grout shall be permitted to fill the airspace. Where the airspace is filled with grout, a water-resistive barrier is required over studs or sheathing. Where the airspace is filled, replacing the sheathing and water-resistive barrier with a wire mesh and *approved* water-resistive barrier or an *approved* water-resistive barrier-backed reinforcement attached directly to the studs is permitted.

R703.8.5 Flashing. Flashing shall be located beneath the first course of masonry above finished ground level above the foundation wall or slab and at other points of support, including structural floors, shelf angles and lintels where masonry veneers are designed in accordance with Section R703.8. See Section R703.4 for additional requirements.

R703.8.6 Weepholes. Weepholes shall be provided in the outside wythe of masonry walls at a maximum spacing of 33 inches (838 mm) on center. Weepholes shall be not less than $^{3}/_{16}$ inch (5 mm) in diameter. Weepholes shall be located immediately above the flashing.

R703.9 Exterior insulation and finish system (EIFS)/EIFS with drainage. Exterior insulation and finish systems (EIFS) shall comply with this chapter and Section R703.9.1. EIFS with drainage shall comply with this chapter and Section R703.9.2.

R703.9.1 Exterior insulation and finish systems (EIFS). EIFS shall comply with the following:

1. ASTM E2568.
2. EIFS shall be limited to applications over substrates of concrete or masonry wall assemblies.
3. Flashing of EIFS shall be provided in accordance with the requirements of Section R703.4.
4. EIFS shall be installed in accordance with the manufacturer's instructions.
5. EIFS shall terminate not less than 6 inches (152 mm) above the finished ground level.
6. Decorative trim shall not be face-nailed through the EIFS.

R703.9.2 Exterior insulation and finish system (EIFS) with drainage. EIFS with drainage shall comply with the following:

1. ASTM E2568.

TABLE R703.8.4(1)
TIE ATTACHMENT AND AIRSPACE REQUIREMENTS

BACKING AND TIE	MINIMUM TIE	MINIMUM TIE FASTENER[a]	AIRSPACE[c]	
Wood stud backing with corrugated sheet metal	22 U.S. gage (0.0299 in.) × $^{7}/_{8}$ in. wide	8d common nail [b] ($2^{1}/_{2}$ in. × 0.131 in.)	Nominal 1 in. between sheathing and veneer	
Wood stud backing with metal strand wire	W1.7 (No. 9 U.S. gage; 0.148 in.) with hook embedded in mortar joint	8d common nail [b] ($2^{1}/_{2}$ in. × 0.131 in.)	Minimum nominal 1 in. between sheathing and veneer	Maximum $4^{1}/_{2}$ in. between backing and veneer
Cold-formed steel stud backing with adjustable metal strand wire	W1.7 (No. 9 U.S. gage; 0.148 in.) with hook embedded in mortar joint	No. 10 screw extending through the steel framing a minimum of three exposed threads	Minimum nominal 1 in. between sheathing and veneer	Maximum $4^{1}/_{2}$ in. between backing and veneer

For SI: 1 inch = 25.4 mm.

a. In Seismic Design Category D_0, D_1 or D_2, the minimum tie fastener shall be an 8d ring-shank nail ($2^{1}/_{2}$ in. × 0.131 in.) or a No. 10 screw extending through the steel framing a minimum of three exposed threads.

b. All fasteners shall have rust-inhibitive coating suitable for the installation in which they are being used, or be manufactured from material not susceptible to corrosion.

c. An airspace that provides drainage shall be permitted to contain mortar from construction.

INTERNATIONAL CODE COUNCIL®
Copyright © 2019 ICC & NYSDOS. ALL RIGHTS RESERVED. Accessed by Lauren Gualdino (lgualdino@briarcliffmanor.org), (-) Order Number #100880972 on May 08, 2020 07:05 AM (PDT) pursuant to License Agreement with ICC & NYSDOS. No further reproduction, no

Copyright © 2019 ICC & NYSDOS. ALL RIGHTS RESERVED. Accessed by Lauren Gualdino (lgualdino@briarcliffmanor.org). (-) Order Number #100880972 on May 08, 2020 07:05 AM (PDT) pursuant to License Agreement with ICC & NYSDOS. No further reproduction, no

TABLE R703.8.4(2)
REQUIRED BRICK TIE SPACING FOR DIRECT APPLICATION TO WOOD STRUCTURAL PANEL SHEATHING[a, b, c]

FASTENER TYPE[d]	SIZE (DIA. OR SCREW #)	REQUIRED BRICK-TIE SPACING (VERTICAL-TIE SPACING/HORIZONTAL-TIE SPACING) (inches/inches)											
		110 mph V Ultimate			115 mph V Ultimate			130 mph V Ultimate			140 mph V Ultimate		
		Zone 5, Exposure B	Zone 5, Exposure C	Zone 5, Exposure D	Zone 5, Exposure B	Zone 5, Exposure C	Zone 5, Exposure D	Zone 5, Exposure B	Zone 5, Exposure C	Zone 5, Exposure D	Zone 5, Exposure B	Zone 5, Exposure C	Zone 5, Exposure D
Ring Shank Nails	0.091	16/16, 16/12, 12/16, 12/12	16/12, 12/16, 12/12	12/12	16/16, 16/12, 12/16, 12/12	16/12, 12/16, 12/12	12/12	16/12, 12/16, 12/12	12/12	—	12/12	—	—
	0.148	24/16, 16/24, 16/16, 16/12, 12/16, 12/12	16/16, 16/12, 12/16, 12/12	16/16, 16/12, 12/16, 12/12	24/16, 16/24, 16/16, 16/12, 12/16, 12/12	16/16, 16/12, 12/16, 12/12	16/16, 16/12, 12/16, 12/12	16/16, 16/12, 12/16, 12/12	16/12, 12/16, 12/12	16/12, 12/16, 12/12	16/16, 16/12, 12/16, 12/12	16/12, 12/16, 12/12	12/12
Screws	#6	24/16, 16/24, 16/16, 16/12, 12/16, 12/12	16/16, 16/12, 12/16, 12/12	16/16, 16/12, 12/16, 12/12	24/16, 16/24, 16/16, 16/12, 12/16, 12/12	16/16, 16/12, 12/16, 12/12	16/16, 16/12, 12/16, 12/12	16/16, 16/12, 12/16, 12/12	16/12, 12/16, 12/12	16/12, 12/16, 12/12	16/16, 16/12, 12/16, 12/12	16/12, 12/16, 12/12	12/12
	#8	24/16, 16/24, 16/16, 16/12, 12/16, 12/12	24/16, 16/24, 16/16, 16/12, 12/16, 12/12	16/16, 16/12, 12/16, 12/12	24/16, 16/24, 16/16, 16/12, 12/16, 12/12	16/16, 16/12, 12/16, 12/12	16/16, 16/12, 12/16, 12/12	24/16, 16/24, 16/16, 16/12, 12/16, 12/12	16/16, 16/12, 12/16, 12/12	16/12, 12/16, 12/12	16/16, 16/12, 12/16, 12/12	16/12, 12/16, 12/12	16/12, 12/16, 12/12
	#10	24/16, 16/24, 16/16, 16/12, 12/16, 12/12	24/16, 16/24, 16/16, 16/12, 12/16, 12/12	24/16, 16/24, 16/16, 16/12, 12/16, 12/12	24/16, 16/24, 16/16, 16/12, 12/16, 12/12	24/16, 16/24, 16/16, 16/12, 12/16, 12/12	16/16, 16/12, 12/16, 12/12	24/16, 16/24, 16/16, 16/12, 12/16, 12/12	16/16, 16/12, 12/16, 12/12	16/16, 16/12, 12/16, 12/12	24/16, 16/24, 16/16, 16/12, 12/16, 12/12	16/16, 16/12, 12/16, 12/12	16/12, 12/16, 12/12
	#14	24/16, 16/24, 16/16, 16/12, 12/16, 12/12	24/16, 16/24, 16/16, 16/12, 12/16, 12/12	24/16, 16/24, 16/16, 16/12, 12/16, 12/12	24/16, 16/24, 16/16, 16/12, 12/16, 12/12	24/16, 16/24, 16/16, 16/12, 12/16, 12/12	24/16, 16/24, 16/16, 16/12, 12/16, 12/12	24/16, 16/24, 16/16, 16/12, 12/16, 12/12	24/16, 16/24, 16/16, 16/12, 12/16, 12/12	16/16, 16/12, 12/16, 12/12	24/16, 16/24, 16/16, 16/12, 12/16, 12/12	16/16, 16/12, 12/16, 12/12	16/16, 16/12, 12/16, 12/12

For SI: 1 inch = 25.4 mm, 1 mph = 0.447 m/s.

a. This table is based on attachment of brick ties directly to wood structural panel sheathing only. Additional attachment of the brick tie to lumber framing is not required. The brick ties shall be permitted to be placed over any insulating sheathing, not to exceed 2 inches in thickness. Wood structural panel sheathing shall be a minimum 7/16 performance category. The table is based on a building height of 30 feet or less.

b. Wood structural panels shall have a specific gravity of 0.42 or greater in accordance with NDS.

c. Foam sheathing shall have a minimum compressive strength of 15 psi in accordance with ASTM C578 or ASTM C1289.

d. Fasteners shall be sized such that the tip of the fastener passes completely through the wood structural panel sheathing by not less than $^1/_4$ inch.

100880972

100880972

2. EIFS with drainage shall be required over all wall assemblies with the exception of substrates of concrete or masonry wall assemblies.
3. EIFS with drainage shall have an average minimum drainage efficiency of 90 percent when tested in accordance with ASTM E2273.
4. The water-resistive barrier shall comply with Section R703.2 or ASTM E2570.
5. The water-resistive barrier shall be applied between the EIFS and the wall sheathing.
6. Flashing of EIFS with drainage shall be provided in accordance with the requirements of Section R703.4.
7. EIFS with drainage shall be installed in accordance with the manufacturer's instructions.
8. EIFS with drainage shall terminate not less than 6 inches (152 mm) above the finished ground level.
9. Decorative trim shall not be face-nailed through the EIFS with drainage.

R703.10 Fiber cement siding.

R703.10.1 Panel siding. Fiber-cement panels shall comply with the requirements of ASTM C1186, Type A, minimum Grade II or ISO 8336, Category A, minimum Class 2. Panels shall be installed with the long dimension either parallel or perpendicular to framing. Vertical and horizontal joints shall occur over framing members and shall be protected with caulking, or with battens or flashing, or be vertical or horizontal shiplap, or otherwise designed to comply with Section R703.1. Panel siding shall be installed with fasteners in accordance with Table R703.3(1) or the approved manufacturer's instructions.

R703.10.2 Lap siding. Fiber-cement lap siding having a maximum width of 12 inches (305 mm) shall comply with the requirements of ASTM C1186, Type A, minimum Grade II or ISO 8336, Category A, minimum Class 2. Lap siding shall be lapped a minimum of $1^1/_4$ inches (32 mm) and lap siding not having tongue-and-groove end joints shall have the ends protected with caulking, covered with an H-section joint cover, located over a strip of flashing, or shall be designed to comply with Section R703.1. Lap siding courses shall be installed with the fastener heads exposed or concealed, in accordance with Table R703.3(1) or approved manufacturer's instructions.

R703.11 Vinyl siding. Vinyl siding shall be certified and *labeled* as conforming to the requirements of ASTM D3679 by an *approved* quality control agency.

R703.11.1 Installation. Vinyl siding, soffit and accessories shall be installed in accordance with the manufacturer's instructions.

R703.11.1.1 Fasteners. Unless specified otherwise by the manufacturer's instructions, fasteners for vinyl siding shall be 0.120-inch (3 mm) shank diameter nail with a 0.313-inch (8 mm) head or 16-gage staple with a $^3/_8$-inch (9.5 mm) to $^1/_2$-inch (12.7 mm) crown.

R703.11.1.2 Penetration depth. Unless specified otherwise by the manufacturer's instructions, fasteners shall penetrate into building framing. The total penetration into sheathing, furring framing or other nailable substrate shall be a minimum $1^1/_4$ inches (32 mm). Where specified by the manufacturer's instructions and supported by a test report, fasteners are permitted to penetrate into or fully through nailable sheathing or other nailable substrate of minimum thickness specified by the instructions or test report without penetrating into framing. Where the fastener penetrates fully through the sheathing, the end of the fastener shall extend a minimum of $^1/_4$ inch (6.4 mm) beyond the opposite face of the sheathing or nailable substrate.

R703.11.1.3 Spacing. Unless specified otherwise by the manufacturer's instructions, the maximum spacing between fasteners for horizontal siding shall be 16 inches (406 mm), and for vertical siding 12 inches (305 mm) both horizontally and vertically. Where specified by the manufacturer's instructions and supported by a test report, greater fastener spacing is permitted.

R703.11.2 Installation over foam plastic sheathing. Where vinyl siding or insulated vinyl siding is installed over foam plastic sheathing, the vinyl siding shall comply with Section R703.11 and shall have a design wind pressure resistance in accordance with Table R703.11.2.

Exceptions:

1. Where the foam plastic sheathing is applied directly over wood structural panels, fiberboard, gypsum sheathing or other *approved* backing capable of independently resisting the design wind pressure, the vinyl siding shall be installed in accordance with Sections R703.3.3 and R703.11.1.
2. Where the vinyl siding manufacturer's product specifications provide an approved design wind pressure rating for installation over foam plastic sheathing, use of this design wind pressure rating shall be permitted and the siding shall be installed in accordance with the *manufacturer's installation instructions*.
3. Where the foam plastic sheathing and its attachment have a design wind pressure resistance complying with Sections R316.8 and R301.2.1, the vinyl siding shall be installed in accordance with Sections R703.3.3 and R703.11.1.

R703.12 Adhered masonry veneer installation. Adhered masonry veneer shall comply with the requirements of Section R703.7.3 and the requirements in Sections 12.1 and 12.3 of TMS 402. Adhered masonry veneer shall be installed in accordance with Section R703.7.1, Article 3.3C of TMS 602 or the manufacturer's instructions.

R703.12.1 Clearances. On exterior stud walls, adhered masonry veneer shall be installed:

1. Minimum of 4 inches (102 mm) above the earth;
2. Minimum of 2 inches (51 mm) above paved areas; or
3. Minimum of $^1/_2$ inch (12.7 mm) above exterior walking surfaces that are supported by the same foundation that supports the exterior wall.

INTERNATIONAL CODE COUNCIL®
Copyright © 2019 ICC & NYSDOS. ALL RIGHTS RESERVED. Accessed by Lauren Gualdino (lgualdino@briarcliffmanor.org), (-) Order Number #100880972 on May 08, 2020 07:05 AM (PDT) pursuant to License Agreement with ICC & NYSDOS. No further reproduction, no

100880972

R703.12.2 Flashing at foundation. A corrosion-resistant screed or flashing of a minimum 0.019-inch (0.48 mm) or 26-gage galvanized or plastic with a minimum vertical attachment flange of $3^1/_2$ inches (89 mm) shall be installed to extend a minimum of 1 inch (25 mm) below the foundation plate line on exterior stud walls in accordance with Section R703.4.

R703.12.3 Water-resistive barrier. A water-resistive barrier shall be installed as required by Section R703.2 and shall comply with the requirements of Section R703.7.3. The water-resistive barrier shall lap over the exterior of the attachment flange of the screed or flashing provided in accordance with Section R703.12.2.

R703.13 Insulated vinyl siding. Insulated vinyl siding shall be certified and labeled as conforming to the requirements of ASTM D7793 by an approved quality control agency.

R703.13.1 Insulated vinyl siding and accessories. Insulated vinyl siding and accessories shall be installed in accordance with the manufacturer's installation instructions.

R703.14 Polypropylene siding. Polypropylene siding shall be certified and labeled as conforming to the requirements of ASTM D7254, and those of Section R703.14.2 or Section R703.14.3, by an approved quality control agency.

R703.14.1 Polypropylene siding and accessories. Polypropylene siding and accessories shall be installed in accordance with manufacturer's installation instructions.

R703.14.1.1 Installation. Polypropylene siding shall be installed over and attached to wood structural panel sheathing with minimum thickness of $^7/_{16}$ inch (11.1 mm), or other substrate, composed of wood or wood-based material and fasteners having equivalent withdrawal resistance.

R703.14.1.2 Fastener requirements. Unless otherwise specified in the approved manufacturer's instructions, nails shall be corrosion resistant, with a minimum 0.120-inch (3 mm) shank and minimum 0.313-inch (8 mm) head diameter. Nails shall be a minimum of $1^1/_4$ inches (32 mm) long or as necessary to penetrate sheathing or substrate not less than $^3/_4$ inch (19.1 mm). Where the nail fully penetrates the sheathing or nailable substrate, the end of the fastener shall extend not less than $^1/_4$ inch (6.4 mm) beyond the opposite face of the sheathing or substrate. Staples are not permitted.

R703.14.2 Fire separation. Polypropylene siding shall not be installed on walls with a fire separation distance of less than 5 feet (1524 mm) and walls closer than 10 feet (3048 mm) to a building on another lot.

Exception: Walls perpendicular to the line used to determine the fire separation distance.

R703.14.3 Flame spread index. The certification of the *flame spread index* shall be accompanied by a test report stating that all portions of the test specimen ahead of the flame front remained in position during the test in accordance with ASTM E84 or UL 723.

R703.15 Cladding attachment over foam sheathing to wood framing. Cladding shall be specified and installed in accordance with Section R703, the cladding manufacturer's approved instructions, including any limitations for use over foam plastic sheathing, or an approved design. In addition, the cladding or furring attachments through foam sheathing to framing shall meet or exceed the minimum fastening requirements of Section R703.15.1, Section R703.15.2, or an approved design for support of cladding weight.

Exceptions:

1. Where the cladding manufacturer has provided approved installation instructions for application over foam sheathing, those requirements shall apply.
2. For exterior insulation and finish systems, refer to Section R703.9.
3. For anchored masonry or stone veneer installed over foam sheathing, refer to Section R703.8.

TABLE R703.11.2
ADJUSTED MINIMUM DESIGN WIND PRESSURE REQUIREMENT FOR VINYL SIDING

ULTIMATE DESIGN WIND SPEED (MPH)	ADJUSTED MINIMUM DESIGN WIND PRESSURE (ASD) (PSF)[a, b]					
	Case 1: With interior gypsum wallboard[c]			Case 2: Without interior gypsum wallboard[c]		
	Exposure			Exposure		
	B	C	D	B	C	D
110	-44.0	-61.6	-73.1	-62.9	-88.1	-104.4
115	-49.2	-68.9	-81.7	-70.3	-98.4	-116.7
120	-51.8	-72.5	-86.0	-74.0	-103.6	-122.8
130	-62.2	-87.0	-103.2	-88.8	-124.3	-147.4
> 130	Not Allowed[d]					

For SI: 1 inch = 25.4 mm, 1 foot = 304.8 mm, 1 square foot = 0.0929 m^2, 1 mile per hour = 0.447 m/s, 1 pound per square foot = 0.0479 kPa.

a. Linear interpolation is permitted.

b. The table values are based on a maximum 30-foot mean roof height, and effective wind area of 10 square feet Wall Zone 5 (corner), and the ASD design wind pressure from Table R301.2(2) multiplied by the following adjustment factors: 2.6 (Case 1) and 3.7 (Case 2) for wind speeds less than 130 mph and 3.7 (Case 2) for wind speeds greater than 130 mph.

c. Gypsum wallboard, gypsum panel product or equivalent.

d. For the indicated wind speed condition, foam sheathing only on the exterior of frame walls with vinyl siding is not allowed unless the vinyl siding complies with an adjusted minimum design wind pressure requirement as determined in accordance with Note b and the wall assembly is capable of resisting an impact without puncture at least equivalent to that of a wood frame wall with minimum $^7/_{16}$-inch OSB sheathing as tested in accordance with ASTM E1886.

INTERNATIONAL CODE COUNCIL®
Copyright © 2019 ICC & NYSDOS. ALL RIGHTS RESERVED. Accessed by Lauren Gualdino (lgualdino@briarcliffmanor.org), (-) Order Number #100880972 on May 08, 2020 07:05 AM (PDT) pursuant to License Agreement with ICC & NYSDOS. No further reproduction, no

100880972

R703.15.1 Direct attachment. Where cladding is installed directly over foam sheathing without the use of furring, cladding minimum fastening requirements to support the cladding weight shall be as specified in Table R703.15.1.

R703.15.2 Furred cladding attachment. Where wood furring is used to attach cladding over foam sheathing, furring minimum fastening requirements to support the cladding weight shall be as specified in Table R703.15.2. Where placed horizontally, wood furring shall be preservative-treated wood in accordance with Section R317.1 or naturally durable wood and fasteners shall be corrosion resistant in accordance Section R317.3.

R703.16 Cladding attachment over foam sheathing to cold-formed steel framing. Cladding shall be specified and installed in accordance with Section R703, the cladding manufacturer's approved instructions, including any limitations for use over foam plastic sheathing, or an approved design. In addition, the cladding or furring attachments through foam sheathing to framing shall meet or exceed the minimum fastening requirements of Section R703.16.1, Section R703.16.2 or an approved design for support of cladding weight.

Exceptions:

1. Where the cladding manufacturer has provided approved installation instructions for application over foam sheathing, those requirements shall apply.
2. For exterior insulation and finish systems, refer to Section R703.9.
3. For anchored masonry or stone veneer installed over foam sheathing, refer to Section R703.8.

R703.16.1 Direct attachment. Where cladding is installed directly over foam sheathing without the use of furring, cladding minimum fastening requirements to support the cladding weight shall be as specified in Table R703.16.1.

R703.16.2 Furred cladding attachment. Where steel or wood furring is used to attach cladding over foam sheathing, furring minimum fastening requirements to support the cladding weight shall be as specified in Table R703.16.2. Where placed horizontally, wood furring shall be preservative-treated wood in accordance with Section R317.1 or naturally durable wood and fasteners shall be corrosion resistant in accordance with Section R317.3. Steel furring shall have a minimum G60 galvanized coating.

R703.17 Cladding attachment over foam sheathing to masonry or concrete wall construction. Cladding shall be specified and installed in accordance with Section 703.3 and the cladding manufacturer's instructions or an approved design. Foam sheathing shall be attached to masonry or concrete construction in accordance with the insulation manufacturer's installation instructions or an approved design. Furring and furring attachments through foam sheathing into concrete or masonry substrate shall be designed to resist design loads determined in accordance with Section R301, including support of cladding weight as applicable. Fasteners used to attach cladding or furring through foam sheathing to masonry or concrete substrates shall be approved for application into masonry or concrete material and shall be installed in accordance with the fastener manufacturer's instructions.

Exceptions:

1. Where the cladding manufacturer has provided approved installation instructions for application over foam sheathing and connection to a masonry or concrete substrate, those requirements shall apply.
2. For exterior insulation and finish systems, refer to Section R703.6.
3. For anchored masonry or stone veneer installed over foam sheathing, refer to Section R703.8.

INTERNATIONAL CODE COUNCIL®
Copyright © 2019 ICC & NYSDOS. ALL RIGHTS RESERVED. Accessed by Lauren Gualdino (lgualdino@briarcliffmanor.org), (-) Order Number #100880972 on May 08, 2020 07:05 AM (PDT) pursuant to License Agreement with ICC & NYSDOS. No further reproduction, no

100880972

TABLE R703.15.1
CLADDING MINIMUM FASTENING REQUIREMENTS FOR DIRECT ATTACHMENT OVER FOAM PLASTIC SHEATHING TO SUPPORT CLADDING WEIGHT[a]

CLADDING FASTENER THROUGH FOAM SHEATHING	CLADDING FASTENER TYPE AND MINIMUM SIZE[b]	CLADDING FASTENER VERTICAL SPACING (inches)	MAXIMUM THICKNESS OF FOAM SHEATHING[c] (inches)							
			16″ o.c. Fastener Horizontal Spacing				24″ o.c. Fastener Horizontal Spacing			
			Cladding Weight:				Cladding Weight:			
			3 psf	11 psf	18 psf	25 psf	3 psf	11 psf	18 psf	25 psf
Wood framing (minimum $1^1/_4$-inch penetration)	0.113″ diameter nail	6	2.00	1.45	0.75	DR	2.00	0.85	DR	DR
		8	2.00	1.00	DR	DR	2.00	0.55	DR	DR
		12	2.00	0.55	DR	DR	1.85	DR	DR	DR
	0.120″ diameter nail	6	3.00	1.70	0.90	0.55	3.00	1.05	0.50	DR
		8	3.00	1.20	0.60	DR	3.00	0.70	DR	DR
		12	3.00	0.70	DR	DR	2.15	DR	DR	DR
	0.131″ diameter nail	6	4.00	2.15	1.20	0.75	4.00	1.35	0.70	DR
		8	4.00	1.55	0.80	DR	4.00	0.90	DR	DR
		12	4.00	0.90	DR	DR	2.70	0.50	DR	DR
	0.162″ diameter nail	6	4.00	3.55	2.05	1.40	4.00	2.25	1.25	0.80
		8	4.00	2.55	1.45	0.95	4.00	1.60	0.85	0.50
		12	4.00	1.60	0.85	0.50	4.00	0.95	DR	DR

For SI: 1 inch = 25.4 mm, 1 pound per square foot = 0.0479 kPa, 1 pound per square inch = 6.895 kPa.
DR = Design Required.
o.c. = On Center.
a. Wood framing shall be Spruce-pine-fir or any wood species with a specific gravity of 0.42 or greater in accordance with AWC NDS.
b. Nail fasteners shall comply with ASTM F1667, except nail length shall be permitted to exceed ASTM F1667 standard lengths.
c. Foam sheathing shall have a minimum compressive strength of 15 psi in accordance with ASTM C578 or ASTM C1289.

TABLE R703.15.2
FURRING MINIMUM FASTENING REQUIREMENTS FOR APPLICATION OVER FOAM PLASTIC SHEATHING TO SUPPORT CLADDING WEIGHT[a, b]

FURRING MATERIAL	FRAMING MEMBER	FASTENER TYPE AND MINIMUM SIZE	MINIMUM PENETRATION INTO WALL FRAMING (inches)	FASTENER SPACING IN FURRING (inches)	MAXIMUM THICKNESS OF FOAM SHEATHING[d] (inches)							
					16″ o.c. Furring[e]				24″ o.c. Furring[e]			
					Siding Weight:				Siding Weight:			
					3 psf	11 psf	18 psf	25 psf	3 psf	11 psf	18 psf	25 psf
Minimum 1× wood furring[c]	Minimum 2× wood stud	0.131″ diameter nail	$1^1/_4$	8	4.00	2.45	1.45	0.95	4.00	1.60	0.85	DR
				12	4.00	1.60	0.85	DR	4.00	0.95	DR	DR
				16	4.00	1.10	DR	DR	3.05	0.60	DR	DR
		0.162″ diameter nail	$1^1/_4$	8	4.00	4.00	2.45	1.60	4.00	2.75	1.45	0.85
				12	4.00	2.75	1.45	0.85	4.00	1.65	0.75	DR
				16	4.00	1.90	0.95	DR	4.00	1.05	DR	DR
		No.10 wood screw	1	12	4.00	2.30	1.20	0.70	4.00	1.40	0.60	DR
				16	4.00	1.65	0.75	DR	4.00	0.90	DR	DR
				24	4.00	0.90	DR	DR	2.85	DR	DR	DR
		$^1/_4$″ lag screw	$1^1/_2$	12	4.00	2.65	1.50	0.90	4.00	1.65	0.80	DR
				16	4.00	1.95	0.95	0.50	4.00	1.10	DR	DR
				24	4.00	1.10	DR	DR	3.25	0.50	DR	DR

For SI: 1 inch = 25.4 mm, 1 pound per square foot = 0.0479 kPa, 1 pound per square inch = 6.895 kPa.
DR = Design Required.
o.c. = On Center.
a. Wood framing and furring shall be Spruce-pine-fir or any wood species with a specific gravity of 0.42 or greater in accordance with AWC NDS.
b. Nail fasteners shall comply with ASTM F1667, except nail length shall be permitted to exceed ASTM F1667 standard lengths.
c. Where the required cladding fastener penetration into wood material exceeds $^3/_4$ inch and is not more than $1^1/_2$ inches, a minimum 2× wood furring or an approved design shall be used.
d. Foam sheathing shall have a minimum compressive strength of 15 psi in accordance with ASTM C578 or ASTM C1289.
e. Furring shall be spaced not more than 24 inches on center, in a vertical or horizontal orientation. In a vertical orientation, furring shall be located over wall studs and attached with the required fastener spacing. In a horizontal orientation, the indicated 8-inch and 12-inch fastener spacing in furring shall be achieved by use of two fasteners into studs at 16 inches and 24 inches on center, respectively.

INTERNATIONAL CODE COUNCIL®
Copyright © 2019 ICC & NYSDOS. ALL RIGHTS RESERVED. Accessed by Lauren Gualdino (lgualdino@briarcliffmanor.org), (-) Order Number #100880972 on May 08, 2020 07:05 AM (PDT) pursuant to License Agreement with ICC & NYSDOS. No further reproduction, no

100880972

TABLE R703.16.1
CLADDING MINIMUM FASTENING REQUIREMENTS FOR DIRECT ATTACHMENT OVER FOAM PLASTIC SHEATHING TO SUPPORT CLADDING WEIGHT[a]

CLADDING FASTENER THROUGH FOAM SHEATHING INTO:	CLADDING FASTENER TYPE AND MINIMUM SIZE[b]	CLADDING FASTENER VERTICAL SPACING (inches)	MAXIMUM THICKNESS OF FOAM SHEATHING[c] (inches)							
			16″ o.c. Fastener Horizontal Spacing				24" o.c. Fastener Horizontal Spacing			
			Cladding Weight:				Cladding Weight:			
			3 psf	11 psf	18 psf	25 psf	3 psf	11 psf	18 psf	25 psf
Steel framing (minimum penetration of steel thickness + 3 threads)	No. 8 screw into 33-mil steel or thicker	6	3.00	2.95	2.20	1.45	3.00	2.35	1.25	DR
		8	3.00	2.55	1.60	0.60	3.00	1.80	DR	DR
		12	3.00	1.80	DR	DR	3.00	0.65	DR	DR
	No. 10 screw into 33-mil steel	6	4.00	3.50	2.70	1.95	4.00	2.90	1.70	0.55
		8	4.00	3.10	2.05	1.00	4.00	2.25	0.70	DR
		12	4.00	2.25	0.70	DR	3.70	1.05	DR	DR
	No. 10 screw into 43-mil steel or thicker	6	4.00	4.00	4.00	3.60	4.00	4.00	3.45	2.70
		8	4.00	4.00	3.70	3.00	4.00	3.85	2.80	1.80
		12	4.00	3.85	2.80	1.80	4.00	3.05	1.50	DR

For SI: 1 inch = 25.4 mm, 1 mil = 0.0254 mm, 1 pound per square foot = 0.0479 kPa, 1 pound per square inch = 6.895 kPa.
DR = Design Required.
o.c. = On Center.
a. Steel framing shall be minimum 33 ksi steel for 33 mil and 43 mil steel, and 50 ksi steel for 54 mil steel or thicker.
b. Screws shall comply with the requirements of ASTM C1513.
c. Foam sheathing shall have a minimum compressive strength of 15 psi in accordance with ASTM C578 or ASTM C1289.

TABLE R703.16.2
FURRING MINIMUM FASTENING REQUIREMENTS FOR APPLICATION OVER FOAM PLASTIC SHEATHING TO SUPPORT CLADDING WEIGHT[a]

FURRING MATERIAL	FRAMING MEMBER	FASTENER TYPE AND MINIMUM SIZE[b]	MINIMUM PENETRATION INTO WALL FRAMING (inches)	FASTENER SPACING IN FURRING (inches)	MAXIMUM THICKNESS OF FOAM SHEATHING[d] (inches)							
					16″ o.c. Furring[e]				24″ o.c. Furring[e]			
					Cladding Weight:				Cladding Weight:			
					3 psf	11 psf	18 psf	25 psf	3 psf	11 psf	18 psf	25 psf
Minimum 33-mil steel furring or minimum 1× wood furring[c]	33-mil steel stud	No. 8 screw	Steel thickness + 3 threads	12	3.00	1.80	DR	DR	3.00	0.65	DR	DR
				16	3.00	1.00	DR	DR	2.85	DR	DR	DR
				24	2.85	DR	DR	DR	2.20	DR	DR	DR
		No. 10 screw	Steel thickness + 3 threads	12	4.00	2.25	0.70	DR	3.70	1.05	DR	DR
				16	3.85	1.45	DR	DR	3.40	DR	DR	DR
				24	3.40	DR	DR	DR	2.70	DR	DR	DR
	43-mil or thicker steel stud	No. 8 Screw	Steel thickness + 3 threads	12	3.00	1.80	DR	DR	3.00	0.65	DR	DR
				16	3.00	1.00	DR	DR	2.85	DR	DR	DR
				24	2.85	DR	DR	DR	2.20	DR	DR	DR
		No. 10 screw	Steel thickness + 3 threads	12	4.00	3.85	2.80	1.80	4.00	3.05	1.50	DR
				16	4.00	3.30	1.95	0.60	4.00	2.25	DR	DR
				24	4.00	2.25	DR	DR	4.00	0.65	DR	DR

For SI: 1 inch = 25.4 mm, 1 mil = 0.0254 mm, 1 pound per square foot = 0.0479 kPa, 1 pound per square inch = 6.895 kPa.
DR = Design Required.
o.c. = On Center.
a. Wood furring shall be Spruce-pine-fir or any softwood species with a specific gravity of 0.42 or greater. Steel furring shall be minimum 33-ksi steel. Steel studs shall be minimum 33-ksi steel for 33-mil and 43-mil thickness, and 50-ksi steel for 54-mil steel or thicker.
b. Screws shall comply with the requirements of ASTM C1513.
c. Where the required cladding fastener penetration into wood material exceeds $^{3}/_{4}$ inch and is not more than $1^{1}/_{2}$ inches, a minimum 2-inch nominal wood furring or an approved design shall be used.
d. Foam sheathing shall have a minimum compressive strength of 15 psi in accordance with ASTM C578 or ASTM C1289.
e. Furring shall be spaced not more than 24 inches (610 mm) on center, in a vertical or horizontal orientation. In a vertical orientation, furring shall be located over wall studs and attached with the required fastener spacing. In a horizontal orientation, the indicated 8-inch and 12-inch fastener spacing in furring shall be achieved by use of two fasteners into studs at 16 inches and 24 inches on center, respectively.

INTERNATIONAL CODE COUNCIL®
Copyright © 2019 ICC & NYSDOS. ALL RIGHTS RESERVED. Accessed by Lauren Gualdino (lgualdino@briarcliffmanor.org), (-) Order Number #100880972 on May 08, 2020 07:05 AM (PDT) pursuant to License Agreement with ICC & NYSDOS. No further reproduction, no

100880972

CHAPTER 8
ROOF-CEILING CONSTRUCTION

SECTION R801
GENERAL

R801.1 Application. The provisions of this chapter shall control the design and construction of the roof-ceiling system for buildings.

R801.2 Requirements. Roof and ceiling construction shall be capable of accommodating all loads imposed in accordance with Section R301 and of transmitting the resulting loads to the supporting structural elements.

R801.3 Roof drainage. In areas where *expansive soils* or *collapsible soils* are known to exist, all *dwellings* shall have a controlled method of water disposal from roofs that will collect and discharge roof drainage to the ground surface not less than 5 feet (1524 mm) from foundation walls or to an *approved* drainage system.

SECTION R802
WOOD ROOF FRAMING

R802.1 General. Wood and wood-based products used for load-supporting purposes shall conform to the applicable provisions of this section.

[NY] R802.1.1 Sawn lumber. Sawn lumber shall be identified by a grade mark of an accredited lumber grading or inspection agency and have design values certified by an accreditation body that complies with DOC PS 20. In lieu of a grade mark, a certificate of inspection issued by a lumber grading or inspection agency meeting the requirements of this section shall be accepted.

Exception: Dimension lumber which is neither identified by a grade mark nor issued a certificate of inspection by a lumber grading or inspection agency may be used for load-bearing purposes under the following conditions when authorized by the authority having jurisdiction:

1. The producing mill shall sell or provide the lumber directly to the ultimate consumer or the consumer's contract builder for use in an approved structure.
2. The producing mill shall certify in writing to the consumer or contract builder on a form to be produced by the authority having jurisdiction that the quality and safe working stresses of such lumber are equal to or exceed No. 2 grade of the species in accordance with the conditions set forth in DOC PS 20. Such certification shall be filed as part of the building permit application.

R802.1.1.1 End-jointed lumber. *Approved* end-jointed lumber identified by a grade mark conforming to Section R802.1.1 shall be permitted to be used interchangeably with solid-sawn members of the same species and grade. End-jointed lumber used in an assembly required elsewhere in this code to have a fire-resistance rating shall have the designation "Heat-Resistant Adhesive" or "HRA" included in its grade mark.

R802.1.2 Structural glued-laminated timbers. Glued-laminated timbers shall be manufactured and identified as required in ANSI A190.1, ANSI 117 and ASTM D3737.

R802.1.3 Structural log members. Structural log members shall comply with the provisions of ICC 400.

R802.1.4 Structural composite lumber. Structural capacities for structural composite lumber shall be established and monitored in accordance with ASTM D5456.

R802.1.5 Fire-retardant-treated wood. Fire-retardant-treated wood (FRTW) is any wood product that, when impregnated with chemicals by a pressure process or other means during manufacture, shall have, when tested in accordance with ASTM E84 or UL 723, a listed flame spread index of 25 or less and does not show evidence of significant progressive combustion where the test is continued for an additional 20-minute period. In addition, the flame front shall not progress more than 10.5 feet (3200 mm) beyond the center line of the burners at any time during the test.

R802.1.5.1 Pressure process. For wood products impregnated with chemicals by a pressure process, the process shall be performed in closed vessels under pressures not less than 50 pounds per square inch gauge (psig) (344.7 kPa).

R802.1.5.2 Other means during manufacture. For wood products produced by other means during manufacture the treatment shall be an integral part of the manufacturing process of the wood product. The treatment shall provide permanent protection to all surfaces of the wood product.

R802.1.5.3 Testing. For wood products produced by other means during manufacture, other than a pressure process, all sides of the wood product shall be tested in accordance with and produce the results required in Section R802.1.5. Testing of only the front and back faces of wood structural panels shall be permitted.

R802.1.5.4 Labeling. In addition to the labels required by Section 802.1.1 for sawn lumber and Section 803.2.1 for wood structural panels, each piece of *fire-retardant-treated* lumber and wood structural panel shall be labeled. The label shall contain:

1. The identification *mark* of an *approved agency* in accordance with Section 1703.5 of the *Building Code of New York State*.
2. Identification of the treating manufacturer.
3. The name of the fire-retardant treatment.
4. The species of wood treated.

INTERNATIONAL CODE COUNCIL®
Copyright © 2019 ICC & NYSDOS. ALL RIGHTS RESERVED. Accessed by Lauren Gualdino (lgualdino@briarcliffmanor.org), (-) Order Number #100880972 on May 08, 2020 07:05 AM (PDT) pursuant to License Agreement with ICC & NYSDOS. No further reproduction, no

100880972

5. Flame spread index and smoke-developed index.
6. Method of drying after treatment.
7. Conformance to applicable standards in accordance with Sections R802.1.5.5 through R802.1.5.10.
8. For FRTW exposed to weather, or a damp or wet location, the words "No increase in the listed classification when subjected to the Standard Rain Test" (ASTM D2898).

R802.1.5.5 Strength adjustments. Design values for untreated lumber and wood structural panels as specified in Section R802.1 shall be adjusted for fire-retardant-treated wood. Adjustments to design values shall be based on an *approved* method of investigation that takes into consideration the effects of the anticipated temperature and humidity to which the fire-retardant-treated wood will be subjected, the type of treatment and redrying procedures.

R802.1.5.6 Wood structural panels. The effect of treatment and the method of redrying after treatment, and exposure to high temperatures and high humidities on the flexure properties of fire-retardant-treated softwood plywood shall be determined in accordance with ASTM D5516. The test data developed by ASTM D5516 shall be used to develop adjustment factors, maximum loads and spans, or both for untreated plywood design values in accordance with ASTM D6305. Each manufacturer shall publish the allowable maximum loads and spans for service as floor and roof sheathing for their treatment.

R802.1.5.7 Lumber. For each species of wood treated, the effect of the treatment and the method of redrying after treatment and exposure to high temperatures and high humidities on the allowable design properties of fire-retardant-treated lumber shall be determined in accordance with ASTM D5664. The test data developed by ASTM D5664 shall be used to develop modification factors for use at or near room temperature and at elevated temperatures and humidity in accordance with ASTM D6841. Each manufacturer shall publish the modification factors for service at temperatures of not less than 80°F (27°C) and for roof framing. The roof framing modification factors shall take into consideration the climatological location.

R802.1.5.8 Exposure to weather. Where fire-retardant-treated wood is exposed to weather or damp or wet locations, it shall be identified as "Exterior" to indicate there is not an increase in the listed flame spread index as defined in Section R802.1.5 when subjected to ASTM D2898.

R802.1.5.9 Interior applications. Interior fire-retardant-treated wood shall have a moisture content of not over 28 percent when tested in accordance with ASTM D3201 procedures at 92-percent relative humidity. Interior fire-retardant-treated wood shall be tested in accordance with Section R802.1.5.6 or R802.1.5.7. Interior fire-retardant-treated wood designated as Type A shall be tested in accordance with the provisions of this section.

R802.1.5.10 Moisture content. Fire-retardant-treated wood shall be dried to a moisture content of 19 percent or less for lumber and 15 percent or less for wood structural panels before use. For wood kiln dried after treatment (KDAT) the kiln temperatures shall not exceed those used in kiln drying the lumber and plywood submitted for the tests described in Section R802.1.5.6 for plywood and R802.1.5.7 for lumber.

R802.1.6 Cross-laminated timber. Cross-laminated timber shall be manufactured and identified as required by ANSI/APA PRG 320.

R802.1.7 Engineered wood rim board. Engineered wood rim boards shall conform to ANSI/APA PRR 410 or shall be evaluated in accordance with ASTM D7672. Structural capacities shall be in accordance with ANSI/APA PRR 410 or established in accordance with ASTM D7672. Rim boards conforming to ANSI/APA PRR 410 shall be marked in accordance with that standard.

R802.1.8 Prefabricated wood I-joists. Structural capacities and design provisions for prefabricated wood I-joists shall be established and monitored in accordance with ASTM D5055.

R802.2 Design and construction. The roof and ceiling assembly shall provide continuous ties across the structure to prevent roof thrust from being applied to the supporting walls. The assembly shall be designed and constructed in accordance with the provisions of this chapter and Figures R606.11(1), R606.11(2) and R606.11(3) or in accordance with AWC NDS.

R802.3 Ridge. A ridge board used to connect opposing rafters shall be not less than 1 inch (25 mm) nominal thickness and not less in depth than the cut end of the rafter. Where ceiling joist or rafter ties do not provide continuous ties across the structure, a ridge beam shall be provided and supported on each end by a wall or girder.

R802.4 Rafters. Rafters shall be in accordance with this section.

R802.4.1 Rafter size. Rafters shall be sized based on the rafter spans in Tables R802.4.1(1) through R802.4.1(8). Rafter spans shall be measured along the horizontal projection of the rafter. For other grades and species and for other loading conditions, refer to the AWC STJR.

R802.4.2 Framing details. Rafters shall be framed not more than $1^1/_2$ inches (38 mm) offset from each other to a ridge board or directly opposite from each other with a collar tie, gusset plate or ridge strap in accordance with Table R602.3(1). Rafters shall be nailed to the top wall plates in accordance with Table R602.3(1) unless the roof assembly is required to comply with the uplift requirements of Section R802.11.

INTERNATIONAL CODE COUNCIL®
Copyright © 2019 ICC & NYSDOS. ALL RIGHTS RESERVED. Accessed by Lauren Gualdino (lgualdino@briarcliffmanor.org), (-) Order Number #100880972 on May 08, 2020 07:05 AM (PDT) pursuant to License Agreement with ICC & NYSDOS. No further reproduction, no

100880972

TABLE R802.4.1(1)
RAFTER SPANS FOR COMMON LUMBER SPECIES
(Roof live load = 20 psf, ceiling not attached to rafters, L/Δ = 180)

RAFTER SPACING (inches)	SPECIES AND GRADE		DEAD LOAD = 10 psf					DEAD LOAD = 20 psf				
			2 × 4	2 × 6	2 × 8	2 × 10	2 × 12	2 × 4	2 × 6	2 × 8	2 × 10	2 × 12
			Maximum rafter spans[a]									
			(feet - inches)	(feet - inches)	(feet - inches)	(feet - inches)	(feet - inches)	(feet - inches)	(feet - inches)	(feet - inches)	(feet - inches)	(feet - inches)
12	Douglas fir-larch	SS	11-6	18-0	23-9	Note b	Note b	11-6	18-0	23-9	Note b	Note b
	Douglas fir-larch	#1	11-1	17-4	22-5	Note b	Note b	10-6	15-4	19-5	23-9	Note b
	Douglas fir-larch	#2	10-10	16-10	21-4	26-0	Note b	10-0	14-7	18-5	22-6	26-0
	Douglas fir-larch	#3	8-9	12-10	16-3	19-10	23-0	7-7	11-1	14-1	17-2	19-11
	Hem-fir	SS	10-10	17-0	22-5	Note b	Note b	10-10	17-0	22-5	Note b	Note b
	Hem-fir	#1	10 -7	16-8	22-0	Note b	Note b	10-4	15-2	19-2	23-5	Note b
	Hem-fir	#2	10-1	15-11	20-8	25-3	Note b	9-8	14-2	17-11	21-11	25-5
	Hem-fir	#3	8-7	12-6	15-10	19-5	22-6	7-5	10-10	13-9	16-9	19-6
	Southern pine	SS	11-3	17-8	23-4	Note b	Note b	11-3	17-8	23-4	Note b	Note b
	Southern pine	#1	10-10	17-0	22-5	Note b	Note b	10-6	15-8	19-10	23-2	Note b
	Southern pine	#2	10-4	15-7	19-8	23-5	Note b	9-0	13-6	17-1	20-3	23-10
	Southern pine	#3	8-0	11-9	14-10	18-0	21-4	6-11	10-2	12-10	15-7	18-6
	Spruce-pine-fir	SS	10-7	16-8	21-11	Note b	Note b	10-7	16-8	21-9	Note b	Note b
	Spruce-pine-fir	#1	10-4	16-3	21-0	25-8	Note b	9-10	14-4	18-2	22-3	25-9
	Spruce-pine-fir	#2	10-4	16-3	21-0	25-8	Note b	9-10	14-4	18-2	22-3	25-9
	Spruce-pine-fir	#3	8-7	12-6	15-10	19-5	22-6	7-5	10-10	13-9	16-9	19-6
16	Douglas fir-larch	SS	10-5	16-4	21-7	Note b	Note b	10-5	16-3	20-7	25-2	Note b
	Douglas fir-larch	#1	10-0	15-4	19-5	23-9	Note b	9-1	13-3	16-10	20-7	23-10
	Douglas fir-larch	#2	9-10	14-7	18-5	22-6	26-0	8-7	12-7	16-0	19-6	22-7
	Douglas fir-larch	#3	7-7	11-1	14-1	17-2	19-11	6-7	9-8	12-12	14-11	17-3
	Hem-fir	SS	9-10	15-6	20-5	Note b	Note b	9-10	15-6	19-11	24-4	Note b
	Hem-fir	#1	9-8	15-2	19-2	23-5	Note b	9-0	13-1	16-7	20-4	23-7
	Hem-fir	#2	9-2	14-2	17-11	21-11	25-5	8-5	12-3	15-6	18-11	22-0
	Hem-fir	#3	7-5	10-10	13-9	16-9	19-6	6-5	9-5	11-11	14-6	16-10
	Southern pine	SS	10-3	16-1	21-2	Note b	Note b	10-3	16-1	21-2	25-7	Note b
	Southern pine	#1	9-10	15-6	19-10	23-2	Note b	9-1	13-7	17-2	20-1	23-10
	Southern pine	#2	9-0	13-6	17-1	20-3	23-10	7-9	11-8	14-9	17-6	20-8
	Southern pine	#3	6-11	10-2	12-10	15-7	18-6	6-0	8-10	11-2	13-6	16-0
	Spruce-pine-fir	SS	9-8	15-2	19-11	25-5	Note b	9-8	14-10	18-10	23-0	Note b
	Spruce-pine-fir	#1	9-5	14-4	18-2	22-3	25-9	8-6	12-5	15-9	19-3	22-4
	Spruce-pine-fir	#2	9-5	14-4	18-2	22-3	25-9	8-6	12-5	15-9	19-3	22-4
	Spruce-pine-fir	#3	7-5	10-10	13-9	16-9	19-6	6-5	9-5	11-11	14-6	16-10
19.2	Douglas fir-larch	SS	9-10	15-5	20-4	25-11	Note b	9-10	14-10	18-10	23-0	Note b
	Douglas fir-larch	#1	9-5	14-0	17-9	21-8	25-2	8-4	12-2	15-4	18-9	21-9
	Douglas fir-larch	#2	9-1	13-3	16-10	20-7	23-10	7-10	11-6	14-7	17-10	20-8
	Douglas fir-larch	#3	6-11	10-2	12-10	15-8	18-3	6-0	8-9	11-2	12-7	15-9
	Hem-fir	SS	9-3	14-7	19-2	24-6	Note b	9-3	14-4	18-2	22-3	25-9
	Hem-fir	#1	9-1	13-10	17-6	21-5	24-10	8-2	12-0	15-2	18-6	21-6
	Hem-fir	#2	8-8	12-11	16-4	20-0	23-2	7-8	11-2	14-2	17-4	20-1
	Hem-fir	#3	6-9	9-11	12-7	15-4	17-9	5-10	8-7	10-10	13-3	15-5
	Southern pine	SS	9-8	15-2	19-11	25-5	Note b	9-8	15-2	19-7	23-4	Note b
	Southern pine	#1	9-3	14-3	18-1	21-2	25-2	8-4	12-4	15-8	18-4	21-9
	Southern pine	#2	8-2	12-3	15-7	18-6	21-9	7-1	10-8	13-6	16-0	18-10
	Southern pine	#3	6-4	9-4	11-9	14-3	16-10	5-6	8-1	10-2	12-4	14-7
	Spruce-pine-fir	SS	9-1	14-3	18-9	23-11	Note b	9-1	13-7	17-2	21-0	24-4
	Spruce-pine-fir	#1	8-10	13-1	16-7	20-3	23-6	7-9	11-4	14-4	17-7	20-4
	Spruce-pine-fir	#2	8-10	13-1	16-7	20-3	23-6	7-9	11-4	14-4	17-7	20-4
	Spruce-pine-fir	#3	6-9	9-11	12-7	15-4	17-9	5-10	8-7	10-10	13-3	15-5

(continued)

INTERNATIONAL CODE COUNCIL®
Copyright © 2019 ICC & NYSDOS. ALL RIGHTS RESERVED. Accessed by Lauren Gualdino (lgualdino@briarcliffmanor.org), (-) Order Number #100880972 on May 08, 2020 07:05 AM (PDT) pursuant to License Agreement with ICC & NYSDOS. No further reproduction, no

100880972

TABLE R802.4.1(1)—continued
RAFTER SPANS FOR COMMON LUMBER SPECIES
(Roof live load = 20 psf, ceiling not attached to rafters, L/Δ = 180)

RAFTER SPACING (inches)	SPECIES AND GRADE		DEAD LOAD = 10 psf					DEAD LOAD = 20 psf				
			2 × 4	2 × 6	2 × 8	2 × 10	2 × 12	2 × 4	2 × 6	2 × 8	2 × 10	2 × 12
			Maximum rafter spans[a]									
			(feet - inches)	(feet - inches)	(feet - inches)	(feet - inches)	(feet - inches)	(feet - inches)	(feet - inches)	(feet - inches)	(feet - inches)	(feet - inches)
24	Douglas fir-larch	SS	9-1	14-4	18-10	23-9	Note b	9-1	13-3	16-10	20-7	23-10
	Douglas fir-larch	#1	8-7	12-6	15-10	19-5	22-6	7-5	10-10	13-9	16-9	19-6
	Douglas fir-larch	#2	8-2	11-11	15-1	18-5	21-4	7-0	10-4	13-0	15-11	18-6
	Douglas fir-larch	#3	6-2	9-1	11-6	14-1	16-3	5-4	7-10	10-0	12-2	14-1
	Hem-fir	SS	8-7	13-6	17-10	22-9	Note b	8-7	12-10	16-3	19-10	23-0
	Hem-fir	#1	8-5	12-4	15-8	19-2	22-2	7-4	10-9	13-7	16-7	19-3
	Hem-fir	#2	7-11	11-7	14-8	17-10	20-9	6-10	10-0	12-8	15-6	17-11
	Hem-fir	#3	6-1	8-10	11-3	13-8	15-11	5-3	7-8	9-9	11-10	13-9
	Southern pine	SS	8-11	14-1	18-6	23-8	Note b	8-11	13-10	17-6	20-10	24-8
	Southern pine	#1	8-7	12-9	16-2	18-11	22-6	7-5	11-1	14-0	16-5	19-6
	Southern pine	#2	7-4	11-0	13-11	16-6	19-6	6-4	9-6	12-1	14-4	16-10
	Southern pine	#3	5-8	8-4	10-6	12-9	15-1	4-11	7-3	9-1	11-0	13-1
	Spruce-pine-fir	SS	8-5	13-3	17-5	21-8	25-2	8-4	12-2	15-4	18-9	21-9
	Spruce-pine-fir	#1	8-0	11-9	14-10	18-2	21-0	6-11	10-2	12-10	15-8	18-3
	Spruce-pine-fir	#2	8-0	11-9	14-10	18-2	21-0	6-11	10-2	12-10	15-8	18-3
	Spruce-pine-fir	#3	6-1	8-10	11-3	13-8	15-11	5-3	7-8	9-9	11-10	13-9

Check sources for availability of lumber in lengths greater than 20 feet.

For SI: 1 inch = 25.4 mm, 1 foot = 304.8 mm, 1 pound per square foot = 0.0479 kPa.

a. The tabulated rafter spans assume that ceiling joists are located at the bottom of the attic space or that some other method of resisting the outward push of the rafters on the bearing walls, such as rafter ties, is provided at that location. Where ceiling joists or rafter ties are located higher in the attic space, the rafter spans shall be multiplied by the following factors:

H_C/H_R	Rafter Span Adjustment Factor
1/3	0.67
1/4	0.76
1/5	0.83
1/6	0.90
1/7.5 or less	1.00

where:

H_C = Height of ceiling joists or rafter ties measured vertically above the top of the rafter support walls.

H_R = Height of roof ridge measured vertically above the top of the rafter support walls.

b. Span exceeds 26 feet in length.

INTERNATIONAL CODE COUNCIL®
Copyright © 2019 ICC & NYSDOS. ALL RIGHTS RESERVED. Accessed by Lauren Gualdino (lgualdino@briarcliffmanor.org), (-) Order Number #100880972 on May 08, 2020 07:05 AM (PDT) pursuant to License Agreement with ICC & NYSDOS. No further reproduction, no

100880972

TABLE R802.4.1(2)
RAFTER SPANS FOR COMMON LUMBER SPECIES
(Roof live load = 20 psf, ceiling attached to rafters, L/Δ = 240)

RAFTER SPACING (inches)	SPECIES AND GRADE		DEAD LOAD = 10 psf					DEAD LOAD = 20 psf				
			2 × 4	2 × 6	2 × 8	2 × 10	2 × 12	2 × 4	2 × 6	2 × 8	2 × 10	2 × 12
			Maximum rafter spans[a]									
			(feet - inches)	(feet - inches)	(feet - inches)	(feet - inches)	(feet - inches)	(feet - inches)	(feet - inches)	(feet - inches)	(feet - inches)	(feet - inches)
12	Douglas fir-larch	SS	10-5	16-4	21-7	Note b	Note b	10-5	16-4	21-7	Note b	Note b
	Douglas fir-larch	#1	10-0	15-9	20-10	Note b	Note b	10-0	15-4	19-5	23-9	Note b
	Douglas fir-larch	#2	9-10	15-6	20-5	26-0	Note b	9-10	14-7	18-5	22-6	26-0
	Douglas fir-larch	#3	8-9	12-10	16-3	19-10	23-0	7-7	11-1	14-1	17-2	19-11
	Hem-fir	SS	9-10	15-6	20-5	Note b	Note b	9-10	15-6	20-5	Note b	Note b
	Hem-fir	#1	9-8	15-2	19-11	25-5	Note b	9-8	15-2	19-2	23-5	Note b
	Hem-fir	#2	9-2	14-5	19-0	24-3	Note b	9-2	14-2	17-11	21-11	25-5
	Hem-fir	#3	8-7	12-6	15-10	19-5	22-6	7-5	10-10	13-9	16-9	19-6
	Southern pine	SS	10-3	16-1	21-2	Note b	Note b	10-3	16-1	21-2	Note b	Note b
	Southern pine	#1	9-10	15-6	20-5	Note b	Note b	9-10	15-6	19-10	23-2	Note b
	Southern pine	#2	9-5	14-9	19-6	23-5	Note b	9-0	13-6	17-1	20-3	23-10
	Southern pine	#3	8-0	11-9	14-10	18-0	21-4	6-11	10-2	12-10	15-7	18-6
	Spruce-pine-fir	SS	9-8	15-2	19-11	25-5	Note b	9-8	15-2	19-11	25-5	Note b
	Spruce-pine-fir	#1	9-5	14-9	19-6	24-10	Note b	9-5	14-4	18-2	22-3	25-9
	Spruce-pine-fir	#2	9-5	14-9	19-6	24-10	Note b	9-5	14-4	18-2	22-3	25-9
	Spruce-pine-fir	#3	8-7	12-6	15-10	19-5	22-6	7-5	10-10	13-9	16-9	19-6
16	Douglas fir-larch	SS	9-6	14-11	19-7	25-0	Note b	9-6	14-11	19-7	25-0	Note b
	Douglas fir-larch	#1	9-1	14-4	18-11	23-9	Note b	9-1	13-3	16-10	20-7	23-10
	Douglas fir-larch	#2	8-11	14-1	18-5	22-6	26-0	8-7	12-7	16-0	19-6	22-7
	Douglas fir-larch	#3	7-7	11-1	14-1	17-2	19-11	6-7	9-8	12-2	14-11	17-3
	Hem-fir	SS	8-11	14-1	18-6	23-8	Note b	8-11	14-1	18-6	23-8	Note b
	Hem-fir	#1	8-9	13-9	18-1	23-1	Note b	8-9	13-1	16-7	20-4	23-7
	Hem-fir	#2	8-4	13-1	17-3	21-11	25-5	8-4	12-3	15-6	18-11	22-0
	Hem-fir	#3	7-5	10-10	13-9	16-9	19-6	6-5	9-5	11-11	14-6	16-10
	Southern pine	SS	9-4	14-7	19-3	24-7	Note b	9-4	14-7	19-3	24-7	Note b
	Southern pine	#1	8-11	14-1	18-6	23-2	Note b	8-11	13-7	17-2	20-1	23-10
	Southern pine	#2	8-7	13-5	17-1	20-3	23-10	7-9	11-8	14-9	17-6	20-8
	Southern pine	#3	6-11	10-2	12-10	15-7	18-6	6-0	8-10	11-2	13-6	16-0
	Spruce-pine-fir	SS	8-9	13-9	18-1	23-1	Note b	8-9	13-9	18-1	23-0	Note b
	Spruce-pine-fir	#1	8-7	13-5	17-9	22-3	25-9	8-6	12-5	15-9	19-3	22-4
	Spruce-pine-fir	#2	8-7	13-5	17-9	22-3	25-9	8-6	12-5	15-9	19-3	22-4
	Spruce-pine-fir	#3	7-5	10-10	13-9	16-9	19-6	6-5	9-5	11-11	14-6	16-10
19.2	Douglas fir-larch	SS	8-11	14-0	18-5	23-7	Note b	8-11	14-0	18-5	23-0	Note b
	Douglas fir-larch	#1	8-7	13-6	17-9	21-8	25-2	8-4	12-2	15-4	18-9	21-9
	Douglas fir-larch	#2	8-5	13-3	16-10	20-7	23-10	7-10	11-6	14-7	17-10	20-8
	Douglas fir-larch	#3	6-11	10-2	12-10	15-8	18-3	6-0	8-9	11-2	13-7	15-9
	Hem-fir	SS	8-5	13-3	17-5	22-3	Note b	8-5	13-3	17-5	22-3	25-9
	Hem-fir	#1	8-3	12-11	17-1	21-5	24-10	8-2	12-0	15-2	18-6	21-6
	Hem-fir	#2	7-10	12-4	16-3	20-0	23-2	7-8	11-2	14-2	17-4	20-1
	Hem-fir	#3	6-9	9-11	12-7	15-4	17-9	5-10	8-7	10-10	13-3	15-5

(continued)

INTERNATIONAL CODE COUNCIL®
Copyright © 2019 ICC & NYSDOS. ALL RIGHTS RESERVED. Accessed by Lauren Gualdino (lgualdino@briarcliffmanor.org), (-) Order Number #100880972 on May 08, 2020 07:05 AM (PDT) pursuant to License Agreement with ICC & NYSDOS. No further reproduction, no

100880972

TABLE R802.4.1(2)—continued
RAFTER SPANS FOR COMMON LUMBER SPECIES
(Roof live load = 20 psf, ceiling attached to rafters, L/Δ = 240)

RAFTER SPACING (inches)	SPECIES AND GRADE		DEAD LOAD = 10 psf					DEAD LOAD = 20 psf				
			2 × 4	2 × 6	2 × 8	2 × 10	2 × 12	2 × 4	2 × 6	2 × 8	2 × 10	2 × 12
			Maximum rafter spans[a]									
			(feet - inches)	(feet - inches)	(feet - inches)	(feet - inches)	(feet - inches)	(feet - inches)	(feet - inches)	(feet - inches)	(feet - inches)	(feet - inches)
19.2	Southern pine	SS	8-9	13-9	18-2	23-1	Note b	8-9	13-9	18-2	23-1	Note b
	Southern pine	#1	8-5	13-3	17-5	21-2	25-2	8-4	12-4	15-8	18-4	21-9
	Southern pine	#2	8-1	12-3	15-7	18-6	21-9	7-1	10-8	13-6	16-0	18-10
	Southern pine	#3	6-4	9-4	11-9	14-3	16-10	5-6	8-1	10-2	12-4	14-7
	Spruce-pine-fir	SS	8-3	12-11	17-1	21-9	Note b	8-3	12-11	17-1	21-0	24-4
	Spruce-pine-fir	#1	8-1	12-8	16-7	20-3	23-6	7-9	11-4	14-4	17-7	20-4
	Spruce-pine-fir	#2	8-1	12-8	16-7	20-3	23-6	7-9	11-4	14-4	17-7	20-4
	Spruce-pine-fir	#3	6-9	9-11	12-7	15-4	17-9	5-10	8-7	10-10	13-3	15-5
24	Douglas fir-larch	SS	8-3	13-0	17-2	21-10	Note b	8-3	13-0	16-10	20-7	23-10
	Douglas fir-larch	#1	8-0	12-6	15-10	19-5	22-6	7-5	10-10	13-9	16-9	19-6
	Douglas fir-larch	#2	7-10	11-11	15-1	18-5	21-4	7-0	10-4	13-0	15-11	18-6
	Douglas fir-larch	#3	6-2	9-1	11-6	14-1	16-3	5-4	7-10	10-0	12-2	14-1
	Hem-fir	SS	7-10	12-3	16-2	20-8	25-1	7-10	12-3	16-2	19-10	23-0
	Hem-fir	#1	7-8	12-0	15-8	19-2	22-2	7-4	10-9	13-7	16-7	19-3
	Hem-fir	#2	7-3	11-5	14-8	17-10	20-9	6-10	10-0	12-8	15-6	17-11
	Hem-fir	#3	6-1	8-10	11-3	13-8	15-11	5-3	7-8	9-9	11-10	13-9
	Southern pine	SS	8-1	12-9	16-10	21-6	Note b	8-1	12-9	16-10	20-10	24-8
	Southern pine	#1	7-10	12-3	16-2	18-11	22-6	7-5	11-1	14-0	16-5	19-6
	Southern pine	#2	7-4	11-0	13-11	16-6	19-6	6-4	9-6	12-1	14-4	16-10
	Southern pine	#3	5-8	8-4	10-6	12-9	15-1	4-11	7-3	9-1	11-0	13-1
	Spruce-pine-fir	SS	7-8	12-0	15-10	20-2	24-7	7-8	12-0	15-4	18-9	21-9
	Spruce-pine-fir	#1	7-6	11-9	14-10	18-2	21-0	6-11	10-2	12-10	15-8	18-3
	Spruce-pine-fir	#2	7-6	11-9	14-10	18-2	21-0	6-11	10-2	12-10	15-8	18-3
	Spruce-pine-fir	#3	6-1	8-10	11-3	13-8	15-11	5-3	7-8	9-9	11-10	13-9

Check sources for availability of lumber in lengths greater than 20 feet.

For SI: 1 inch = 25.4 mm, 1 foot = 304.8 mm, 1 pound per square foot = 0.0479 kPa.

a. The tabulated rafter spans assume that ceiling joists are located at the bottom of the attic space or that some other method of resisting the outward push of the rafters on the bearing walls, such as rafter ties, is provided at that location. Where ceiling joists or rafter ties are located higher in the attic space, the rafter spans shall be multiplied by the following factors:

H_C/H_R	Rafter Span Adjustment Factor
1/3	0.67
1/4	0.76
1/5	0.83
1/6	0.90
1/7.5 or less	1.00

where:

H_C = Height of ceiling joists or rafter ties measured vertically above the top of the rafter support walls.

H_R = Height of roof ridge measured vertically above the top of the rafter support walls.

b. Span exceeds 26 feet in length.

INTERNATIONAL CODE COUNCIL®
Copyright © 2019 ICC & NYSDOS. ALL RIGHTS RESERVED. Accessed by Lauren Gualdino (lgualdino@briarcliffmanor.org), (-) Order Number #100880972 on May 08, 2020 07:05 AM (PDT) pursuant to License Agreement with ICC & NYSDOS. No further reproduction, no

100880972

TABLE R802.4.1(3)
RAFTER SPANS FOR COMMON LUMBER SPECIES
(Ground snow load = 30 psf, ceiling not attached to rafters, L/Δ = 180)

RAFTER SPACING (inches)	SPECIES AND GRADE		DEAD LOAD = 10 psf					DEAD LOAD = 20 psf				
			2 × 4	2 × 6	2 × 8	2 × 10	2 × 12	2 × 4	2 × 6	2 × 8	2 × 10	2 × 12
			Maximum rafter spans[a]									
			(feet - inches)	(feet - inches)	(feet - inches)	(feet - inches)	(feet - inches)	(feet - inches)	(feet - inches)	(feet - inches)	(feet - inches)	(feet - inches)
12	Douglas fir-larch	SS	10-0	15-9	20-9	Note b	Note b	10-0	15-9	20-5	24-11	Note b
	Douglas fir-larch	#1	9-8	14-9	18-8	22-9	Note b	9-0	13-2	16-8	20-4	23-7
	Douglas fir-larch	#2	9-6	14-0	17-8	21-7	25-1	8-6	12-6	15-10	19-4	22-5
	Douglas fir-larch	#3	7-3	10-8	13-6	16-6	19-2	6-6	9-6	12-1	14-9	17-1
	Hem-fir	SS	9-6	14-10	19-7	25-0	Note b	9-6	14-10	19-7	24-1	Note b
	Hem-fir	#1	9-3	14-6	18-5	22-6	26-0	8-11	13-0	16-6	20-1	23-4
	Hem-fir	#2	8-10	13-7	17-2	21-0	24-4	8-4	12-2	15-4	18-9	21-9
	Hem-fir	#3	7-1	10-5	13-2	16-1	18-8	6-4	9-4	11-9	14-5	16-8
	Southern pine	SS	9-10	15-6	20-5	Note b	Note b	9-10	15-6	20-5	25-4	Note b
	Southern pine	#1	9-6	14-10	19-0	22-3	Note b	9-0	13-5	17-0	19-11	23-7
	Southern pine	#2	8-7	12-11	16-4	19-5	22-10	7-8	11-7	14-8	17-4	20-5
	Southern pine	#3	6-7	9-9	12-4	15-0	17-9	5-11	8-9	11-0	13-5	15-10
	Spruce-pine-fir	SS	9-3	14-7	19-2	24-6	Note b	9-3	14-7	18-8	22-9	Note b
	Spruce-pine-fir	#1	9-1	13-9	17-5	21-4	24-8	8-5	12-4	15-7	19-1	22-1
	Spruce-pine-fir	#2	9-1	13-9	17-5	21-4	24-8	8-5	12-4	15-7	19-1	22-1
	Spruce-pine-fir	#3	7-1	10-5	13-2	16-1	18-8	6-4	9-4	11-9	14-5	16-8
16	Douglas fir-larch	SS	9-1	14-4	18-10	24-1	Note b	9-1	14-0	17-8	21-7	25-1
	Douglas fir-larch	#1	8-9	12-9	16-2	19-9	22-10	7-10	11-5	14-5	17-8	20-5
	Douglas fir-larch	#2	8-3	12-1	15-4	18-9	21-8	7-5	10-10	13-8	16-9	19-5
	Douglas fir-larch	#3	6-4	9-3	11-8	14-3	16-7	5-8	8-3	10-6	12-9	14-10
	Hem-fir	SS	8-7	13-6	17-10	22-9	Note b	8-7	13-6	17-1	20-10	24-2
	Hem-fir	#1	8-5	12-7	15-11	19-6	22-7	7-8	11-3	14-3	17-5	20-2
	Hem-fir	#2	8-0	11-9	14-11	18-2	21-1	7-2	10-6	13-4	16-3	18-10
	Hem-fir	#3	6-2	9-0	11-5	13-11	16-2	5-6	8-1	10-3	12-6	14-6
	Southern pine	SS	8-11	14-1	18-6	23-8	Note b	8-11	14-1	18-5	1-11	25-11
	Southern pine	#1	8-7	13-0	16-6	19-3	22-10	7-10	11-7	14-9	17-3	20-5
	Southern pine	#2	7-6	11-2	14-2	16-10	19-10	6-8	10-0	12-8	15-1	17-9
	Southern pine	#3	5-9	8-6	10-8	13-0	15-4	5-2	7-7	9-7	11-7	13-9
	Spruce-pine-fir	SS	8-5	13-3	17-5	22-1	25-7	8-5	12-9	16-2	19-9	22-10
	Spruce-pine-fir	#1	8-2	11-11	15-1	18-5	21-5	7-3	10-8	13-6	16-6	19-2
	Spruce-pine-fir	#2	8-2	11-11	15-1	18-5	21-5	7-3	10-8	13-6	16-6	19-2
	Spruce-pine-fir	#3	6-2	9-0	11-5	13-11	16-2	5-6	8-1	10-3	12-6	14-6
19.2	Douglas fir-larch	SS	8-7	13-6	17-9	22-1	25-7	8-7	12-9	16-2	19-9	22-10
	Douglas fir-larch	#1	7-11	11-8	14-9	18-0	20-11	7-1	10-5	13-2	16-1	18-8
	Douglas fir-larch	#2	7-7	11-0	14-0	17-1	19-10	6-9	9-10	12-6	15-3	17-9
	Douglas fir-larch	#3	5-9	8-5	10-8	13-1	15-2	5-2	7-7	9-7	11-8	13-6
	Hem-fir	SS	8-1	12-9	16-9	21-4	24-8	8-1	12-4	15-7	19-1	22-1
	Hem-fir	#1	7-10	11-6	14-7	17-9	20-7	7-0	10-3	13-0	15-11	18-5
	Hem-fir	#2	7-4	10-9	13-7	16-7	19-3	6-7	9-7	12-2	14-10	17-3
	Hem-fir	#3	5-7	8-3	10-5	12-9	14-9	5-0	7-4	9-4	11-5	13-2

(continued)

INTERNATIONAL CODE COUNCIL®
Copyright © 2019 ICC & NYSDOS. ALL RIGHTS RESERVED. Accessed by Lauren Gualdino (lgualdino@briarcliffmanor.org), (-) Order Number #100880972 on May 08, 2020 07:05 AM (PDT) pursuant to License Agreement with ICC & NYSDOS. No further reproduction, no

100880972

TABLE R802.4.1(3)—continued
RAFTER SPANS FOR COMMON LUMBER SPECIES
(Ground snow load = 30 psf, ceiling not attached to rafters, L/Δ = 180)

RAFTER SPACING (inches)	SPECIES AND GRADE		DEAD LOAD = 10 psf					DEAD LOAD = 20 psf				
			2 × 4	2 × 6	2 × 8	2 × 10	2 × 12	2 × 4	2 × 6	2 × 8	2 × 10	2 × 12
			Maximum rafter spans[a]									
			(feet - inches)	(feet - inches)	(feet - inches)	(feet - inches)	(feet - inches)	(feet - inches)	(feet - inches)	(feet - inches)	(feet - inches)	(feet - inches)
19.2	Southern pine	SS	8-5	13-3	17-5	22-3	Note b	8-5	13-3	16-10	20-0	23-7
	Southern pine	#1	8-0	11-10	15-1	17-7	20-11	7-1	10-7	13-5	15-9	18-8
	Southern pine	#2	6-10	10-2	12-11	15-4	18-1	6-1	9-2	11-7	13-9	16-2
	Southern pine	#3	5-3	7-9	9-9	11-10	14-0	4-8	6-11	8-9	10-7	12-6
	Spruce-pine-fir	SS	7-11	12-5	16-5	20-2	23-4	7-11	11-8	14-9	18-0	20-11
	Spruce-pine-fir	#1	7-5	10-11	13-9	16-10	19-6	6-8	9-9	12-4	15-1	17-6
	Spruce-pine-fir	#2	7-5	10-11	13-9	16-10	19-6	6-8	9-9	12-4	15-1	17-6
	Spruce-pine-fir	#3	5-7	8-3	10-5	12-9	14-9	5-0	7-4	9-4	11-5	13-2
24	Douglas fir-larch	SS	8-0	12-6	16-2	19-9	22-10	7-10	11-5	14-5	17-8	20-5
	Douglas fir-larch	#1	7-1	10-5	13-2	16-1	18-8	6-4	9-4	11-9	14-5	16-8
	Douglas fir-larch	#2	6-9	9-10	12-6	15-3	17-9	6-0	8-10	11-2	13-8	15-10
	Douglas fir-larch	#3	5-2	7-7	9-7	11-8	13-6	4-7	6-9	8-7	10-5	12-1
	Hem-fir	SS	7-6	11-10	15-7	19-1	22-1	7-6	11-0	13-11	17-0	19-9
	Hem-fir	#1	7-0	10-3	13-0	15-11	18-5	6-3	9-2	11-8	14-3	16-6
	Hem-fir	#2	6-7	9-7	12-2	14-10	17-3	5-10	8-7	10-10	13-3	15-5
	Hem-fir	#3	5-0	7-4	9-4	11-5	13-2	4-6	6-7	8-4	10-2	11-10
	Southern pine	SS	7-10	12-3	16-2	20-0	23-7	7-10	11-10	15-0	17-11	21-2
	Southern pine	#1	7-1	10-7	13-5	15-9	18-8	6-4	9-6	12-0	14-1	16-8
	Southern pine	#2	6-1	9-2	11-7	13-9	16-2	5-5	8-2	10-4	12-3	14-6
	Southern pine	#3	4-8	6-11	8-9	10-7	12-6	4-2	6-2	7-10	9-6	11-2
	Spruce-pine-fir	SS	7-4	11-7	14-9	18-0	20-11	7-1	10-5	13-2	16-1	18-8
	Spruce-pine-fir	#1	6-8	9-9	12-4	15-1	17-6	5-11	8-8	11-0	13-6	15-7
	Spruce-pine-fir	#2	6-8	9-9	12-4	15-1	17-6	5-11	8-8	11-0	13-6	15-7
	Spruce-pine-fir	#3	5-0	7-4	9-4	11-5	13-2	4-6	6-7	8-4	10-2	11-10

Check sources for availability of lumber in lengths greater than 20 feet.

For SI: 1 inch = 25.4 mm, 1 foot = 304.8 mm, 1 pound per square foot = 0.0479 kPa.

a. The tabulated rafter spans assume that ceiling joists are located at the bottom of the attic space or that some other method of resisting the outward push of the rafters on the bearing walls, such as rafter ties, is provided at that location. Where ceiling joists or rafter ties are located higher in the attic space, the rafter spans shall be multiplied by the following factors:

H_C/H_R	Rafter Span Adjustment Factor
1/3	0.67
1/4	0.76
1/5	0.83
1/6	0.90
1/7.5 or less	1.00

where:

H_C = Height of ceiling joists or rafter ties measured vertically above the top of the rafter support walls.

H_R = Height of roof ridge measured vertically above the top of the rafter support walls.

b. Span exceeds 26 feet in length.

INTERNATIONAL CODE COUNCIL®
Copyright © 2019 ICC & NYSDOS. ALL RIGHTS RESERVED. Accessed by Lauren Gualdino (lgualdino@briarcliffmanor.org), (-) Order Number #100880972 on May 08, 2020 07:05 AM (PDT) pursuant to License Agreement with ICC & NYSDOS. No further reproduction, no

100880972

TABLE R802.4.1(4)
RAFTER SPANS FOR COMMON LUMBER SPECIES
(Ground snow load = 30 psf, ceiling attached to rafters, L/Δ = 240)

RAFTER SPACING (inches)	SPECIES AND GRADE		DEAD LOAD = 10 psf					DEAD LOAD = 20 psf				
			2 × 4	2 × 6	2 × 8	2 × 10	2 × 12	2 × 4	2 × 6	2 × 8	2 × 10	2 × 12
			Maximum rafter spans[a]									
			(feet - inches)	(feet - inches)	(feet - inches)	(feet - inches)	(feet - inches)	(feet - inches)	(feet - inches)	(feet - inches)	(feet - inches)	(feet - inches)
12	Douglas fir-larch	SS	9-1	14-4	18-10	24-1	Note b	9-1	14-4	18-10	24-1	Note b
	Douglas fir-larch	#1	8-9	13-9	18-2	22-9	Note b	8-9	13-2	16-8	20-4	23-7
	Douglas fir-larch	#2	8-7	13-6	17-8	21-7	25-1	8-6	12-6	15-10	19-4	22-5
	Douglas fir-larch	#3	7-3	10-8	13-6	16-6	19-2	6-6	9-6	12-1	14-9	17-1
	Hem-fir	SS	8-7	13-6	17-10	22-9	Note b	8-7	13-6	17-10	22-9	Note b
	Hem-fir	#1	8-5	13-3	17-5	22-3	26-0	8-5	13-0	16-6	20-1	23-4
	Hem-fir	#2	8-0	12-7	16-7	21-0	24-4	8-0	12-2	15-4	18-9	21-9
	Hem-fir	#3	7-1	10-5	13-2	16-1	18-8	6-4	9-4	11-9	14-5	16-8
	Southern pine	SS	8-11	14-1	18-6	23-8	Note b	8-11	14-1	18-6	23-8	Note b
	Southern pine	#1	8-7	13-6	17-10	22-3	Note b	8-7	13-5	17-0	19-11	23-7
	Southern pine	#2	8-3	12-11	16-4	19-5	22-10	7-8	11-7	14-8	17-4	20-5
	Southern pine	#3	6-7	9-9	12-4	15-0	17-9	5-11	8-9	11-0	13-5	15-10
	Spruce-pine-fir	SS	8-5	13-3	17-5	22-3	Note b	8-5	13-3	17-5	22-3	Note b
	Spruce-pine-fir	#1	8-3	12-11	17-0	21-4	24-8	8-3	12-4	15-7	19-1	22-1
	Spruce-pine-fir	#2	8-3	12-11	17-0	21-4	24-8	8-3	12-4	15-7	19-1	22-1
	Spruce-pine-fir	#3	7-1	10-5	13-2	16-1	18-8	6-4	9-4	11-9	14-5	16-8
16	Douglas fir-larch	SS	8-3	13-0	17-2	21-10	Note b	8-3	13-0	17-2	21-7	25-1
	Douglas fir-larch	#1	8-0	12-6	16-2	19-9	22-10	7-10	11-5	14-5	17-8	20-5
	Douglas fir-larch	#2	7-10	12-1	15-4	18-9	21-8	7-5	10-10	13-8	16-9	19-5
	Douglas fir-larch	#3	6-4	9-3	11-8	14-3	16-7	5-8	8-3	10-6	12-9	14-10
	Hem-fir	SS	7-10	12-3	16-2	20-8	25-1	7-10	12-3	16-2	20-8	24-2
	Hem-fir	#1	7-8	12-0	15-10	19-6	22-7	7-8	11-3	14-3	17-5	20-2
	Hem-fir	#2	7-3	11-5	14-11	18-2	21-1	7-2	10-6	13-4	16-3	18-10
	Hem-fir	#3	6-2	9-0	11-5	13-11	16-2	5-6	8-1	10-3	12-6	14-6
	Southern pine	SS	8-1	12-9	16-10	21-6	Note b	8-1	12-9	16-10	21-6	25-11
	Southern pine	#1	7-10	12-3	16-2	19-3	22-10	7-10	11-7	14-9	17-3	20-5
	Southern pine	#2	7-6	11-2	14-2	16-10	19-10	6-8	10-0	12-8	15-1	17-9
	Southern pine	#3	5-9	8-6	10-8	13-0	15-4	5-2	7-7	9-7	11-7	13-9
	Spruce-pine-fir	SS	7-8	12-0	15-10	20-2	24-7	7-8	12-0	15-10	19-9	22-10
	Spruce-pine-fir	#1	7-6	11-9	15-1	18-5	21-5	7-3	10-8	13-6	16-6	19-2
	Spruce-pine-fir	#2	7-6	11-9	15-1	18-5	21-5	7-3	10-8	13-6	16-6	19-2
	Spruce-pine-fir	#3	6-2	9-0	11-5	13-11	16-2	5-6	8-1	10-3	12-6	14-6
19.2	Douglas fir-larch	SS	7-9	12-3	16-1	20-7	25-0	7-9	12-3	16-1	19-9	22-10
	Douglas fir-larch	#1	7-6	11-8	14-9	18-0	20-11	7-1	10-5	13-2	16-1	18-8
	Douglas fir-larch	#2	7-4	11-0	14-0	17-1	19-10	6-9	9-1	12-6	15-3	17-9
	Douglas fir-larch	#3	5-9	8-5	10-8	13-1	15-2	5-2	7-7	9-7	11-8	13-6
	Hem-fir	SS	7-4	11-7	15-3	19-5	23-7	7-4	11-7	15-3	19-1	22-1
	Hem-fir	#1	7-2	11-4	14-7	17-9	20-7	7-0	16-3	13-0	15-11	18-5
	Hem-fir	#2	6-10	10-9	13-7	16-7	19-3	6-7	9-7	12-2	14-10	17-3
	Hem-fir	#3	5-7	8-3	10-5	12-9	14-9	5-0	7-4	9-4	11-5	13-2

(continued)

INTERNATIONAL CODE COUNCIL®
Copyright © 2019 ICC & NYSDOS. ALL RIGHTS RESERVED. Accessed by Lauren Gualdino (lgualdino@briarcliffmanor.org), (-) Order Number #100880972 on May 08, 2020 07:05 AM (PDT) pursuant to License Agreement with ICC & NYSDOS. No further reproduction, no

100880972

TABLE R802.4.1(4)—continued
RAFTER SPANS FOR COMMON LUMBER SPECIES
(Ground snow load = 30 psf, ceiling attached to rafters, L/Δ = 240)

RAFTER SPACING (inches)	SPECIES AND GRADE		DEAD LOAD = 10 psf					DEAD LOAD = 20 psf				
			2 × 4	2 × 6	2 × 8	2 × 10	2 × 12	2 × 4	2 × 6	2 × 8	2 × 10	2 × 12
			Maximum rafter spans[a]									
			(feet - inches)	(feet - inches)	(feet - inches)	(feet - inches)	(feet - inches)	(feet - inches)	(feet - inches)	(feet - inches)	(feet - inches)	(feet - inches)
19.2	Southern pine	SS	7-8	12-0	15-10	20-2	24-7	7-8	12-0	15-10	20-0	23-7
	Southern pine	#1	7-4	11-7	15-1	17-7	20-11	7-1	10-7	13-5	15-9	18-8
	Southern pine	#2	6-10	10-2	12-11	15-4	18-1	6-1	9-2	11-7	13-9	16-2
	Southern pine	#3	5-3	7-9	9-9	11-10	14-0	4-8	6-11	8-9	10-7	12-6
	Spruce-pine-fir	SS	7-2	11-4	14-11	19-0	23-1	7-2	11-4	14-9	18-0	20-11
	Spruce-pine-fir	#1	7-0	10-11	13-9	16-10	19-6	6-8	9-9	12-4	15-1	17-6
	Spruce-pine-fir	#2	7-0	10-11	13-9	16-10	19-6	6-8	9-9	12-4	15-1	17-6
	Spruce-pine-fir	#3	5-7	8-3	10-5	12-9	14-9	5-0	7-4	9-4	11-5	13-2
24	Douglas fir-larch	SS	7-3	11-4	15-0	19-1	22-10	7-3	11-4	14-5	17-8	20-5
	Douglas fir-larch	#1	7-0	10-5	13-2	16-1	18-8	6-4	9-4	11-9	14-5	16-8
	Douglas fir-larch	#2	6-9	9-10	12-6	15-3	17-9	6-0	8-10	11-2	13-8	15-10
	Douglas fir-larch	#3	5-2	7-7	9-7	11-8	13-6	4-7	6-9	8-7	10-5	12-1
	Hem-fir	SS	6-10	10-9	14-2	18-0	21-11	6-10	10-9	13-11	17-0	19-9
	Hem-fir	#1	6-8	10-3	13-0	15-11	18-5	6-3	9-2	11-8	14-3	16-6
	Hem-fir	#2	6-4	9-7	12-2	14-10	17-3	5-10	8-7	10-10	13-3	15-5
	Hem-fir	#3	5-0	7-4	9-4	11-5	13-2	4-6	6-7	8-4	10-2	11-10
	Southern pine	SS	7-1	11-2	14-8	18-9	22-10	7-1	11-2	14-8	17-11	21-2
	Southern pine	#1	6-10	10-7	13-5	15-9	18-8	6-4	9-6	12-0	14-1	16-8
	Southern pine	#2	6-1	9-2	11-7	13-9	16-2	5-5	8-2	10-4	12-3	14-6
	Southern pine	#3	4-8	6-11	8-9	10-7	12-6	4-2	6-2	7-10	9-6	11-2
	Spruce-pine-fir	SS	6-8	10-6	13-10	17-8	20-11	6-8	10-5	13-2	16-1	18-8
	Spruce-pine-fir	#1	6-6	9-9	12-4	15-1	17-6	5-11	8-8	11-0	13-6	15-7
	Spruce-pine-fir	#2	6-6	9-9	12-4	15-1	17-6	5-11	8-8	11-0	13-6	15-7
	Spruce-pine-fir	#3	5-0	7-4	9-4	11-5	13-2	4-6	6-7	8-4	10-2	11-10

Check sources for availability of lumber in lengths greater than 20 feet.

For SI: 1 inch = 25.4 mm, 1 foot = 304.8 mm, 1 pound per square foot = 0.0479 kPa.

a. The tabulated rafter spans assume that ceiling joists are located at the bottom of the attic space or that some other method of resisting the outward push of the rafters on the bearing walls, such as rafter ties, is provided at that location. Where ceiling joists or rafter ties are located higher in the attic space, the rafter spans shall be multiplied by the following factors:

H_C/H_R	Rafter Span Adjustment Factor
1/3	0.67
1/4	0.76
1/5	0.83
1/6	0.90
1/7.5 or less	1.00

where:

H_C = Height of ceiling joists or rafter ties measured vertically above the top of the rafter support walls.

H_R = Height of roof ridge measured vertically above the top of the rafter support walls.

b. Span exceeds 26 feet in length.

INTERNATIONAL CODE COUNCIL®
Copyright © 2019 ICC & NYSDOS. ALL RIGHTS RESERVED. Accessed by Lauren Gualdino (lgualdino@briarcliffmanor.org), (-) Order Number #100880972 on May 08, 2020 07:05 AM (PDT) pursuant to License Agreement with ICC & NYSDOS. No further reproduction, no

100880972

TABLE R802.4.1(5)
RAFTER SPANS FOR COMMON LUMBER SPECIES
(Ground snow load = 50 psf, ceiling not attached to rafters, L/Δ = 180)

RAFTER SPACING (inches)	SPECIES AND GRADE		DEAD LOAD = 10 psf					DEAD LOAD = 20 psf				
			2 × 4	2 × 6	2 × 8	2 × 10	2 × 12	2 × 4	2 × 6	2 × 8	2 × 10	2 × 12
			Maximum rafter spans[a]									
			(feet - inches)	(feet - inches)	(feet - inches)	(feet - inches)	(feet - inches)	(feet - inches)	(feet - inches)	(feet - inches)	(feet - inches)	(feet - inches)
12	Douglas fir-larch	SS	8-5	13-3	17-6	22-4	26-0	8-5	13-3	17-3	21-1	24-5
	Douglas fir-larch	#1	8-2	12-0	15-3	18-7	21-7	7-7	11-2	14-1	17-3	20-0
	Douglas fir-larch	#2	7-10	11-5	14-5	17-8	20-5	7-3	10-7	13-4	16-4	18-11
	Douglas fir-larch	#3	6-0	8-9	11-0	13-6	15-7	5-6	8-1	10-3	12-6	14-6
	Hem-fir	SS	8-0	12-6	16-6	21-1	25-6	8-0	12-6	16-6	20-4	23-7
	Hem-fir	#1	7-10	11-10	15-0	18-4	21-3	7-6	11-0	13-11	17-0	19-9
	Hem-fir	#2	7-5	11-1	14-0	17-2	19-11	7-0	10-3	13-0	15-10	18-5
	Hem-fir	#3	5-10	8-6	10-9	13-2	15-3	5-5	7-10	10-0	12-2	14-1
	Southern pine	SS	8-4	13-1	17-2	21-11	Note b	8-4	13-1	17-2	21-5	25-3
	Southern pine	#1	8-0	12-3	15-6	18-2	21-7	7-7	11-4	14-5	16-10	20-0
	Southern pine	#2	7-0	10-6	13-4	15-10	18-8	6-6	9-9	12-4	14-8	17-3
	Southern pine	#3	5-5	8-0	10-1	12-3	14-6	5-0	7-5	9-4	11-4	13-5
	Spruce-pine-fir	SS	7-10	12-3	16-2	20-8	24-1	7-10	12-3	15-9	19-3	22-4
	Spruce-pine-fir	#1	7-8	11-3	14-3	17-5	20-2	7-1	10-5	13-2	16-1	18-8
	Spruce-pine-fir	#2	7-8	11-3	14-3	17-5	20-2	7-1	10-5	13-2	16-1	18-8
	Spruce-pine-fir	#3	5-10	8-6	10-9	13-2	15-3	5-5	7-10	10-0	12-2	14-1
16	Douglas fir-larch	SS	7-8	12-1	15-11	19-9	22-10	7-8	11-10	14-11	18-3	21-2
	Douglas fir-larch	#1	7-1	10-5	13-2	16-1	18-8	6-7	9-8	12-2	14-11	17-3
	Douglas fir-larch	#2	6-9	9-10	12-6	15-3	17-9	6-3	9-2	11-7	14-2	16-5
	Douglas fir-larch	#3	5-2	7-7	9-7	11-18	13-6	4-9	7-0	8-10	10-10	12-6
	Hem-fir	SS	7-3	11-5	15-0	19-1	22-1	7-3	11-5	14-5	17-8	20-5
	Hem-fir	#1	7-0	10-3	13-0	15-11	18-5	6-6	9-6	12-1	14-9	17-1
	Hem-fir	#2	6-7	9-7	12-2	14-10	17-3	6-1	8-11	11-3	13-9	15-11
	Hem-fir	#3	5-0	7-4	9-4	11-5	13-2	4-8	6-10	8-8	10-6	12-3
	Southern pine	SS	7-6	11-10	15-7	19-11	23-7	7-6	11-10	15-7	18-6	21-10
	Southern pine	#1	7-1	10-7	13-5	15-9	18-8	6-7	9-10	12-5	14-7	17-3
	Southern pine	#2	6-1	9-2	11-7	13-9	16-2	5-8	8-5	10-9	12-9	15-0
	Southern pine	#3	4-8	6-11	8-9	10-7	12-6	4-4	6-5	8-1	9-10	11-7
	Spruce-pine-fir	SS	7-1	11-2	14-8	18-0	20-11	7-1	10-9	13-8	15-11	19-4
	Spruce-pine-fir	#1	6-8	9-9	12-4	15-1	17-6	6-2	9-0	11-5	13-11	16-2
	Spruce-pine-fir	#2	6-8	9-9	12-4	15-1	17-6	6-2	9-0	11-5	13-11	16-2
	Spruce-pine-fir	#3	5-0	7-4	9-4	11-5	13-2	4-8	6-10	8-8	10-6	12-3
19.2	Douglas fir-larch	SS	7-3	11-4	14-9	18-0	20-11	7-3	10-9	13-8	16-8	19-4
	Douglas fir-larch	#1	6-6	9-6	12-0	14-8	17-1	6-0	8-10	11-2	13-7	15-9
	Douglas fir-larch	#2	6-2	9-0	11-5	13-11	16-2	5-8	8-4	10-9	12-11	15-0
	Douglas fir-larch	#3	4-8	6-11	8-9	10-8	12-4	4-4	6-4	8-1	9-10	11-5
	Hem-fir	SS	6-10	10-9	14-2	17-5	20-2	6-10	10-5	13-2	16-1	18-8
	Hem-fir	#1	6-5	9-5	11-11	14-6	16-10	8-11	8-8	11-0	13-5	15-7
	Hem-fir	#2	6-0	8-9	11-1	13-7	15-9	5-7	8-1	10-3	12-7	14-7
	Hem-fir	#3	4-7	6-9	8-6	10-5	12-1	4-3	6-3	7-11	9-7	11-2

(continued)

INTERNATIONAL CODE COUNCIL®
Copyright © 2019 ICC & NYSDOS. ALL RIGHTS RESERVED. Accessed by Lauren Gualdino (lgualdino@briarcliffmanor.org), (-) Order Number #100880972 on May 08, 2020 07:05 AM (PDT) pursuant to License Agreement with ICC & NYSDOS. No further reproduction, no

100880972

TABLE R802.4.1(5)—continued
RAFTER SPANS FOR COMMON LUMBER SPECIES
(Ground snow load = 50 psf, ceiling not attached to rafters, L/Δ = 180)

RAFTER SPACING (inches)	SPECIES AND GRADE		DEAD LOAD = 10 psf					DEAD LOAD = 20 psf				
			2 × 4	2 × 6	2 × 8	2 × 10	2 × 12	2 × 4	2 × 6	2 × 8	2 × 10	2 × 12
			Maximum rafter spans[a]									
			(feet - inches)	(feet - inches)	(feet - inches)	(feet - inches)	(feet - inches)	(feet - inches)	(feet - inches)	(feet - inches)	(feet - inches)	(feet - inches)
19.2	Southern pine	SS	7-1	11-2	14-8	18-3	21-7	7-1	11-2	14-2	16-11	20-0
	Southern pine	#1	6-6	9-8	12-3	14-4	17-1	6-0	9-0	11-4	13-4	15-9
	Southern pine	#2	5-7	8-4	10-7	12-6	14-9	5-2	7-9	9-9	11-7	13-8
	Southern pine	#3	4-3	6-4	8-0	9-8	11-5	4-0	5-10	7-4	8-11	10-7
	Spruce-pine-fir	SS	6-8	10-6	13-5	16-5	19-1	6-8	9-10	12-5	15-3	17-8
	Spruce-pine-fir	#1	6-1	8-11	11-3	13-9	15-11	5-7	8-3	10-5	12-9	14-9
	Spruce-pine-fir	#2	6-1	8-11	11-3	13-9	15-11	5-7	8-3	10-5	12-9	14-9
	Spruce-pine-fir	#3	4-7	6-9	8-6	10-5	12-1	4-3	6-3	7-11	9-7	11-2
24	Douglas fir-larch	SS	6-8	10-5	13-2	16-1	18-8	6-7	9-8	12-2	14-11	17-3
	Douglas fir-larch	#1	5-10	8-6	10-9	13-2	15-3	5-5	7-10	10-0	12-2	14-1
	Douglas fir-larch	#2	5-6	8-1	10-3	12-6	14-6	5-1	7-6	9-5	11-7	13-5
	Douglas fir-larch	#3	4-3	6-2	7-10	9-6	11-1	3-11	5-8	7-3	8-10	10-3
	Hem-fir	SS	6-4	9-11	12-9	15-7	18-0	6-4	9-4	11-9	14-5	16-8
	Hem-fir	#1	5-9	8-5	10-8	13-0	15-1	8-4	7-9	9-10	12-0	13-11
	Hem-fir	#2	5-4	7-10	9-11	12-1	14-1	4-11	7-3	9-2	11-3	13-0
	Hem-fir	#3	4-1	6-0	7-7	9-4	10-9	3-10	5-7	7-1	8-7	10-0
	Southern pine	SS	6-7	10-4	13-8	16-4	19-3	6-7	10-0	12-8	15-2	17-10
	Southern pine	#1	5-10	8-8	11-0	12-10	15-3	5-5	8-0	10-2	11-11	14-1
	Southern pine	#2	5-0	7-5	9-5	11-3	13-2	4-7	6-11	8-9	10-5	12-3
	Southern pine	#3	3-10	5-8	7-1	8-8	10-3	3-6	5-3	6-7	8-0	9-6
	Spruce-pine-fir	SS	6-2	9-6	12-0	14-8	17-1	6-0	8-10	11-2	13-7	15-9
	Spruce-pine-fir	#1	5-5	7-11	10-1	12-4	14-3	5-0	7-4	9-4	11-5	13-2
	Spruce-pine-fir	#2	5-5	7-11	10-1	12-4	14-3	5-0	7-4	9-4	11-5	13-2
	Spruce-pine-fir	#3	4-1	6-0	7-7	9-4	10-9	3-10	5-7	7-1	8-7	10-0

Check sources for availability of lumber in lengths greater than 20 feet.

For SI: 1 inch = 25.4 mm, 1 foot = 304.8 mm, 1 pound per square foot = 0.0479 kPa

a. The tabulated rafter spans assume that ceiling joists are located at the bottom of the attic space or that some other method of resisting the outward push of the rafters on the bearing walls, such as rafter ties, is provided at that location. Where ceiling joists or rafter ties are located higher in the attic space, the rafter spans shall be multiplied by the following factors:

H_C/H_R	Rafter Span Adjustment Factor
1/3	0.67
1/4	0.76
1/5	0.83
1/6	0.90
1/7.5 or less	1.00

where:

H_C = Height of ceiling joists or rafter ties measured vertically above the top of the rafter support walls.

H_R = Height of roof ridge measured vertically above the top of the rafter support walls.

b. Span exceeds 26 feet in length.

INTERNATIONAL CODE COUNCIL®
Copyright © 2019 ICC & NYSDOS. ALL RIGHTS RESERVED. Accessed by Lauren Gualdino (lgualdino@briarcliffmanor.org), (-) Order Number #100880972 on May 08, 2020 07:05 AM (PDT) pursuant to License Agreement with ICC & NYSDOS. No further reproduction, no

100880972

TABLE R802.4.1(6)
RAFTER SPANS FOR COMMON LUMBER SPECIES
(Ground snow load = 50 psf, ceiling attached to rafters, L/Δ = 240)

RAFTER SPACING (inches)	SPECIES AND GRADE		DEAD LOAD = 10 psf					DEAD LOAD = 20 psf				
			2 × 4	2 × 6	2 × 8	2 × 10	2 × 12	2 × 4	2 × 6	2 × 8	2 × 10	2 × 12
			Maximum rafter spans[a]									
			(feet-inches)	(feet-inches)	(feet-inches)	(feet-inches)	(feet-inches)	(feet-inches)	(feet-inches)	(feet-inches)	(feet-inches)	(feet-inches)
12	Douglas fir-larch	SS	7-8	12-1	15-11	20-3	24-8	7-8	12-1	15-11	20-3	24-5
	Douglas fir-larch	#1	7-5	11-7	15-3	18-7	21-7	7-5	11-2	14-1	17-3	20-0
	Douglas fir-larch	#2	7-3	11-5	14-5	17-8	20-5	7-3	10-7	13-4	16-4	18-11
	Douglas fir-larch	#3	6-0	8-9	11-0	13-6	15-7	5-6	8-1	10-3	12-6	14-6
	Hem-fir	SS	7-3	11-5	15-0	19-2	23-4	7-3	11-5	15-0	19-2	23-4
	Hem-fir	#1	7-1	11-2	14-8	18-4	21-3	7-1	11-0	13-11	17-0	19-9
	Hem-fir	#2	6-9	10-8	14-0	17-2	19-11	6-9	10-3	13-0	15-10	18-5
	Hem-fir	#3	5-10	8-6	10-9	13-2	15-3	5-5	7-10	10-0	12-2	14-1
	Southern pine	SS	7-6	11-10	15-7	19-11	24-3	7-6	11-10	15-7	19-11	24-3
	Southern pine	#1	7-3	11-5	15-0	18-2	21-7	7-3	11-4	14-5	16-10	20-0
	Southern pine	#2	6-11	10-6	13-4	15-10	18-8	6-6	9-9	12-4	14-8	17-3
	Southern pine	#3	5-5	8-0	10-1	12-3	14-6	5-0	7-5	9-4	11-4	13-5
	Spruce-pine-fir	SS	7-1	11-2	14-8	18-9	22-10	7-1	11-2	14-8	18-9	22-4
	Spruce-pine-fir	#1	6-11	10-11	14-3	17-5	20-2	6-11	10-5	13-2	16-1	18-8
	Spruce-pine-fir	#2	6-11	10-11	14-3	17-5	20-2	6-11	10-5	13-2	16-1	18-8
	Spruce-pine-fir	#3	5-10	8-6	10-9	13-2	15-3	5-5	7-10	10-0	12-2	14-1
16	Douglas fir-larch	SS	7-0	11-0	14-5	18-5	22-5	7-0	11-0	14-5	18-3	21-2
	Douglas fir-larch	#1	6-9	10-5	13-2	16-1	18-8	6-7	9-8	12-2	14-11	17-3
	Douglas fir-larch	#2	6-7	9-10	12-6	15-3	17-9	6-3	9-2	11-7	14-2	16-5
	Douglas fir-larch	#3	5-2	7-7	9-7	11-8	13-6	4-9	7-0	8-10	10-10	12-6
	Hem-fir	SS	6-7	10-4	13-8	17-5	21-2	6-7	10-4	13-8	17-5	20-5
	Hem-fir	#1	6-5	10-2	13-0	15-11	18-5	6-5	9-6	12-1	14-9	17-1
	Hem-fir	#2	6-2	9-7	12-2	14-10	17-3	6-1	8-11	11-3	13-9	15-11
	Hem-fir	#3	5-0	7-4	9-4	11-5	13-2	4-8	6-10	8-8	10-6	12-3
	Southern pine	SS	6-10	10-9	14-2	18-1	22-0	6-10	10-9	14-2	18-1	21-10
	Southern pine	#1	6-7	10-4	13-5	15-9	18-8	6-7	9-10	12-5	14-7	17-3
	Southern pine	#2	6-1	9-2	11-7	13-9	16-2	5-8	8-5	10-9	12-9	15-0
	Southern pine	#3	4-8	6-11	8-9	10-7	12-6	4-4	6-5	8-1	9-10	11-7
	Spruce-pine-fir	SS	6-5	10-2	13-4	17-0	20-9	6-5	10-2	13-4	16-8	19-4
	Spruce-pine-fir	#1	6-4	9-9	12-4	15-1	17-6	6-2	9-0	11-5	13-11	16-2
	Spruce-pine-fir	#2	6-4	9-9	12-4	15-1	17-6	6-2	9-0	11-5	13-11	16-2
	Spruce-pine-fir	#3	5-0	7-4	9-4	11-5	13-2	4-8	6-10	8-8	10-6	12-3
19.2	Douglas fir-larch	SS	6-7	10-4	13-7	17-4	20-11	6-7	10-4	13-7	16-8	19-4
	Douglas fir-larch	#1	6-4	9-6	12-0	14-8	17-1	6-0	8-10	11-2	13-7	15-9
	Douglas fir-larch	#2	6-2	9-0	11-5	13-11	16-2	5-8	8-4	10-7	12-11	15-0
	Douglas fir-larch	#3	4-8	6-11	8-9	10-8	12-4	4-4	6-4	8-1	9-10	11-5
	Hem-fir	SS	6-2	9-9	12-10	16-5	19-11	6-2	9-9	12-10	16-1	18-8
	Hem-fir	#1	6-1	9-5	11-11	14-6	16-10	5-11	8-8	11-0	13-5	15-7
	Hem-fir	#2	5-9	8-9	11-1	13-7	15-9	5-7	8-1	10-3	12-7	14-7
	Hem-fir	#3	4-7	6-9	8-6	10-5	12-1	4-3	6-3	7-11	9-7	11-2

(continued)

INTERNATIONAL CODE COUNCIL®
Copyright © 2019 ICC & NYSDOS. ALL RIGHTS RESERVED. Accessed by Lauren Gualdino (lgualdino@briarcliffmanor.org), (-) Order Number #100880972 on May 08, 2020 07:05 AM (PDT) pursuant to License Agreement with ICC & NYSDOS. No further reproduction, no

100880972

TABLE R802.4.1(6)—continued
RAFTER SPANS FOR COMMON LUMBER SPECIES
(Ground snow load = 50 psf, ceiling attached to rafters, L/Δ = 240)

RAFTER SPACING (inches)	SPECIES AND GRADE		DEAD LOAD = 10 psf					DEAD LOAD = 20 psf				
			2 × 4	2 × 6	2 × 8	2 × 10	2 × 12	2 × 4	2 × 6	2 × 8	2 × 10	2 × 12
			Maximum rafter spans[a]									
			(feet-inches)	(feet-inches)	(feet-inches)	(feet-inches)	(feet-inches)	(feet-inches)	(feet-inches)	(feet-inches)	(feet-inches)	(feet-inches)
19.2	Southern pine	SS	6-5	10-2	13-4	17-0	20-9	6-5	10-2	13-4	16-11	20-0
	Southern pine	#1	6-2	9-8	12-3	14-4	17-1	6-0	9-0	11-4	13-4	15-9
	Southern pine	#2	5-7	8-4	10-7	12-6	14-9	5-2	7-9	9-9	11-7	13-8
	Southern pine	#3	4-3	6-4	8-0	9-8	11-5	4-0	5-10	7-4	8-11	10-7
	Spruce-pine-fir	SS	6-1	9-6	12-7	16-0	19-1	6-1	9-6	12-5	15-3	17-8
	Spruce-pine-fir	#1	5-11	8-11	11-3	13-9	15-11	5-7	8-3	10-5	12-9	14-9
	Spruce-pine-fir	#2	5-11	8-11	11-3	13-9	15-11	5-7	8-3	10-5	12-9	14-9
	Spruce-pine-fir	#3	4-7	6-9	8-6	10-5	12-1	4-3	6-3	7-11	9-7	11-2
24	Douglas fir-larch	SS	6-1	9-7	12-7	16-1	18-8	6-1	9-7	12-2	14-11	17-3
	Douglas fir-larch	#1	5-10	8-6	10-9	13-2	15-3	5-5	7-10	10-0	12-2	14-1
	Douglas fir-larch	#2	5-6	8-1	10-3	12-6	14-6	5-1	7-6	9-5	11-7	13-5
	Douglas fir-larch	#3	4-3	6-2	7-10	9-6	11-1	3-11	5-8	7-3	8-10	10-3
	Hem-fir	SS	5-9	9-1	11-11	15-2	18-0	5-9	9-1	11-9	14-5	15-11
	Hem-fir	#1	5-8	8-5	10-8	13-0	15-1	5-4	7-9	9-10	12-0	13-11
	Hem-fir	#2	5-4	7-10	9-11	12-1	14-1	4-11	7-3	9-2	11-3	13-0
	Hem-fir	#3	4-1	6-0	7-7	9-4	10-9	3-10	5-7	7-1	8-7	10-0
	Southern pine	SS	6-0	9-5	12-5	15-10	19-3	6-0	9-5	12-5	15-2	17-10
	Southern pine	#1	5-9	8-8	11-0	12-10	15-3	5-5	8-0	10-2	11-11	14-1
	Southern pine	#2	5-0	7-5	9-5	11-3	13-2	4-7	6-11	8-9	10-5	12-3
	Southern pine	#3	3-10	5-8	7-1	8-8	10-3	3-6	5-3	6-7	8-0	9-6
	Spruce-pine-fir	SS	5-8	8-10	11-8	14-8	17-1	5-8	8-10	11-2	13-7	15-9
	Spruce-pine-fir	#1	5-5	7-11	10-1	12-4	14-3	5-0	7-4	9-4	11-5	13-2
	Spruce-pine-fir	#2	5-5	7-11	10-1	12-4	14-3	5-0	7-4	9-4	11-5	13-2
	Spruce-pine-fir	#3	4-1	6-0	7-7	9-4	10-9	3-10	5-7	7-1	8-7	10-0

Check sources for availability of lumber in lengths greater than 20 feet.

For SI: 1 inch = 25.4 mm, 1 foot = 304.8 mm, 1 pound per square foot = 0.0479 kPa.

a. The tabulated rafter spans assume that ceiling joists are located at the bottom of the attic space or that some other method of resisting the outward push of the rafters on the bearing walls, such as rafter ties, is provided at that location. Where ceiling joists or rafter ties are located higher in the attic space, the rafter spans shall be multiplied by the following factors:

H_C/H_R	Rafter Span Adjustment Factor
1/3	0.67
1/4	0.76
1/5	0.83
1/6	0.90
1/7.5 or less	1.00

where:

H_C = Height of ceiling joists or rafter ties measured vertically above the top of the rafter support walls.

H_R = Height of roof ridge measured vertically above the top of the rafter support walls.

INTERNATIONAL CODE COUNCIL®
Copyright © 2019 ICC & NYSDOS. ALL RIGHTS RESERVED. Accessed by Lauren Gualdino (lgualdino@briarcliffmanor.org), (-) Order Number #100880972 on May 08, 2020 07:05 AM (PDT) pursuant to License Agreement with ICC & NYSDOS. No further reproduction, no

100880972

TABLE R802.4.1(7)
RAFTER SPANS FOR COMMON LUMBER SPECIES
(Ground snow load = 70 psf, ceiling not attached to rafters, L/Δ = 180)

RAFTER SPACING (inches)	SPECIES AND GRADE		DEAD LOAD = 10 psf					DEAD LOAD = 20 psf				
			2 × 4	2 × 6	2 × 8	2 × 10	2 × 12	2 × 4	2 × 6	2 × 8	2 × 10	2 × 12
			Maximum Rafter Spans[a]									
			(feet-inches)	(feet-inches)	(feet-inches)	(feet-inches)	(feet-inches)	(feet-inches)	(feet-inches)	(feet-inches)	(feet-inches)	(feet-inches)
12	Douglas fir-larch	SS	7-7	11-10	15-8	19-9	22-10	7-7	11-10	15-3	18-7	21-7
	Douglas fir-larch	#1	7-1	10-5	13-2	16-1	18-8	6-8	9-10	12-5	15-2	17-7
	Douglas fir-larch	#2	6-9	9-10	12-6	15-3	17-9	6-4	9-4	11-9	14-5	16-8
	Douglas fir-larch	#3	5-2	7-7	9-7	11-8	13-6	4-10	7-1	9-0	11-0	12-9
	Hem-fir	SS	7-2	11-3	14-9	18-10	22-1	7-2	11-3	14-8	18-0	20-10
	Hem-fir	#1	7-0	10-3	13-0	15-11	18-5	6-7	9-8	12-3	15-0	17-5
	Hem-fir	#2	6-7	9-7	12-2	14-10	17-3	6-2	9-1	11-5	14-0	16-3
	Hem-fir	#3	5-0	7-4	9-4	11-5	13-2	4-9	6-11	8-9	10-9	12-5
	Southern pine	SS	7-5	11-8	15-4	19-7	23-7	7-5	11-8	15-4	18-10	22-3
	Southern pine	#1	7-1	10-7	13-5	15-9	18-8	6-9	10-0	12-8	14-10	17-7
	Southern pine	#2	6-1	9-2	11-7	13-9	16-2	5-9	8-7	10-11	12-11	15-3
	Southern pine	#3	4-8	6-11	8-9	10-7	12-6	4-5	6-6	8-3	10-0	11-10
	Spruce-pine-fir	SS	7-0	11-0	14-6	18-0	20-11	7-0	11-0	13-11	17-0	19-8
	Spruce-pine-fir	#1	6-8	9-9	12-4	15-1	17-6	6-3	9-2	11-8	14-2	16-6
	Spruce-pine-fir	#2	6-8	9-9	12-4	15-1	17-6	6-3	9-2	11-8	14-2	16-6
	Spruce-pine-fir	#3	5-0	7-4	9-4	11-5	13-2	4-9	6-11	8-9	10-9	12-5
16	Douglas fir-larch	SS	6-10	10-9	14-0	17-1	19-10	6-10	10-5	13-2	16-1	18-8
	Douglas fir-larch	#1	6-2	9-0	11-5	13-11	16-2	5-10	8-6	10-9	13-2	15-3
	Douglas fir-larch	#2	5-10	8-7	10-10	13-3	15-4	5-6	8-1	10-3	12-6	14-6
	Douglas fir-larch	#3	4-6	6-6	8-3	10-1	11-9	4-3	6-2	7-10	9-6	11-1
	Hem-fir	SS	6-6	10-2	13-5	16-6	19-2	6-6	10-1	12-9	15-7	18-0
	Hem-fir	#1	6-1	8-11	11-3	13-9	16-0	5-9	8-5	10-8	13-0	15-1
	Hem-fir	#2	5-8	8-4	10-6	12-10	14-11	5-4	7-10	9-11	12-1	14-1
	Hem-fir	#3	4-4	6-4	8-1	9-10	11-5	4-1	6-0	7-7	9-4	10-9
	Southern pine	SS	6-9	10-7	14-0	17-4	20-5	6-9	10-7	13-9	16-4	19-3
	Southern pine	#1	6-2	9-2	11-8	13-8	16-2	5-10	8-8	11-0	12-10	15-3
	Southern pine	#2	5-3	7-11	10-0	11-11	14-0	5-0	7-5	9-5	11-3	13-2
	Southern pine	#3	4-1	6-0	7-7	9-2	10-10	3-10	5-8	7-1	8-8	10-3
	Spruce-pine-fir	SS	6-4	10-0	12-9	15-7	18-1	6-4	9-6	12-0	14-8	17-1
	Spruce-pine-fir	#1	5-9	8-5	10-8	13-1	15-2	5-5	7-11	10-1	12-4	14-3
	Spruce-pine-fir	#2	5-9	8-5	10-8	13-1	15-2	5-5	7-11	10-1	12-4	14-3
	Spruce-pine-fir	#3	4-4	6-4	8-1	9-10	11-5	4-1	6-0	7-7	9-4	10-9
19.2	Douglas fir-larch	SS	6-6	10-1	12-9	15-7	18-1	6-6	9-6	12-0	14-8	17-1
	Douglas fir-larch	#1	5-7	8-3	10-5	12-9	14-9	5-4	7-9	9-10	12-0	13-11
	Douglas fir-larch	#2	5-4	7-10	9-11	12-1	14-0	5-0	7-4	9-4	11-5	13-2
	Douglas fir-larch	#3	4-1	6-0	7-7	9-3	10-8	3-10	5-7	7-1	8-8	10-1
	Hem-fir	SS	6-1	9-7	12-4	15-1	17-4	6-1	9-2	11-8	14-2	15-5
	Hem-fir	#1	5-7	8-2	10-3	12-7	14-7	5-3	7-8	9-8	11-10	13-9
	Hem-fir	#2	5-2	7-7	9-7	11-9	13-7	4-11	7-2	9-1	11-1	12-10
	Hem-fir	#3	4-0	5-10	7-4	9-0	10-5	3-9	5-6	6-11	8-6	9-10

(continued)

INTERNATIONAL CODE COUNCIL®
Copyright © 2019 ICC & NYSDOS. ALL RIGHTS RESERVED. Accessed by Lauren Gualdino (lgualdino@briarcliffmanor.org), (-) Order Number #100880972 on May 08, 2020 07:05 AM (PDT) pursuant to License Agreement with ICC & NYSDOS. No further reproduction, no

100880972

TABLE R802.4.1(7)—continued
RAFTER SPANS FOR COMMON LUMBER SPECIES
(Ground snow load = 70 psf, ceiling not attached to rafters, L/Δ = 180)

RAFTER SPACING (inches)	SPECIES AND GRADE		DEAD LOAD = 10 psf					DEAD LOAD = 20 psf				
			2 × 4	2 × 6	2 × 8	2 × 10	2 × 12	2 × 4	2 × 6	2 × 8	2 × 10	2 × 12
			Maximum Rafter Spans[a]									
			(feet-inches)	(feet-inches)	(feet-inches)	(feet-inches)	(feet-inches)	(feet-inches)	(feet-inches)	(feet-inches)	(feet-inches)	(feet-inches)
19.2	Southern pine	SS	6-4	10-0	13-2	15-10	18-8	6-4	9-10	12-6	14-11	17-7
	Southern pine	#1	5-8	8-5	10-8	12-5	14-9	5-4	7-11	10-0	11-9	13-11
	Southern pine	#2	4-10	7-3	9-2	10-10	12-9	4-6	6-10	8-8	10-3	12-1
	Southern pine	#3	3-8	5-6	6-11	8-4	9-11	3-6	5-2	6-6	7-11	9-4
	Spruce-pine-fir	SS	6-0	9-2	11-8	14-3	16-6	5-11	8-8	11-0	13-5	15-7
	Spruce-pine-fir	#1	5-3	7-8	9-9	11-11	13-10	5-0	7-3	9-2	11-3	13-0
	Spruce-pine-fir	#2	5-3	7-8	9-9	11-11	13-10	5-0	7-3	9-2	11-3	13-0
	Spruce-pine-fir	#3	4-0	5-10	7-4	9-0	10-5	3-9	5-6	6-11	8-6	9-10
24	Douglas fir-larch	SS	6-0	9-0	11-5	13-11	16-2	5-10	8-6	10-9	13-2	15-3
	Douglas fir-larch	#1	5-0	7-4	9-4	11-5	13-2	4-9	6-11	8-9	10-9	12-5
	Douglas fir-larch	#2	4-9	7-0	8-10	10-10	12-6	4-6	6-7	8-4	10-2	11-10
	Douglas fir-larch	#3	3-8	5-4	6-9	8-3	9-7	3-5	5-0	6-4	7-9	9-10
	Hem-fir	SS	5-8	8-8	11-0	13-6	13-11	5-7	8-3	10-5	12-4	12-4
	Hem-fir	#1	5-0	7-3	9-2	11-3	13-0	4-8	6-10	8-8	10-7	12-4
	Hem-fir	#2	4-8	6-9	8-7	10-6	12-2	4-4	6-5	8-1	9-11	11-6
	Hem-fir	#3	3-7	5-2	6-7	8-1	9-4	3-4	4-11	6-3	7-7	8-10
	Southern pine	SS	5-11	9-3	11-11	14-2	16-8	5-11	8-10	11-2	13-4	15-9
	Southern pine	#1	5-0	7-6	9-6	11-1	13-2	4-9	7-1	9-0	10-6	12-5
	Southern pine	#2	4-4	6-5	8-2	9-9	11-5	4-1	6-1	7-9	9-2	10-9
	Southern pine	#3	3-4	4-11	6-2	7-6	8-10	3-1	4-7	5-10	7-1	8-4
	Spruce-pine-fir	SS	5-6	8-3	10-5	12-9	14-9	5-4	7-9	9-10	12-0	12-11
	Spruce-pine-fir	#1	4-8	6-11	8-9	10-8	12-4	4-5	6-6	8-3	10-0	11-8
	Spruce-pine-fir	#2	4-8	6-11	8-9	10-8	12-4	4-5	6-6	8-3	10-0	11-8
	Spruce-pine-fir	#3	3-7	5-2	6-7	8-1	9-4	3-4	4-11	6-3	7-7	8-10

Check sources for availability of lumber in lengths greater than 20 feet.

For SI: 1 inch = 25.4 mm, 1 foot = 304.8 mm, 1 pound per square foot = 0.0479 kPa.

a. The tabulated rafter spans assume that ceiling joists are located at the bottom of the attic space or that some other method of resisting the outward push of the rafters on the bearing walls, such as rafter ties, is provided at that location. Where ceiling joists or rafter ties are located higher in the attic space, the rafter spans shall be multiplied by the following factors:

H_C/H_R	Rafter Span Adjustment Factor
1/3	0.67
1/4	0.76
1/5	0.83
1/6	0.90
1/7.5 or less	1.00

where:

H_C = Height of ceiling joists or rafter ties measured vertically above the top of the rafter support walls.

H_R = Height of roof ridge measured vertically above the top of the rafter support walls.

INTERNATIONAL CODE COUNCIL®
Copyright © 2019 ICC & NYSDOS. ALL RIGHTS RESERVED. Accessed by Lauren Gualdino (lgualdino@briarcliffmanor.org), (-) Order Number #100880972 on May 08, 2020 07:05 AM (PDT) pursuant to License Agreement with ICC & NYSDOS. No further reproduction, no

100880972

TABLE R802.4.1(8)
RAFTER SPANS FOR COMMON LUMBER SPECIES
(Ground snow load = 70 psf, ceiling attached to rafters, L/Δ = 240)

RAFTER SPACING (inches)	SPECIES AND GRADE		DEAD LOAD = 10 psf					DEAD LOAD = 20 psf				
			2 × 4	2 × 6	2 × 8	2 × 10	2 × 12	2 × 4	2 × 6	2 × 8	2 × 10	2 × 12
			Maximum rafter spans[a]									
			(feet - inches)	(feet - inches)	(feet - inches)	(feet - inches)	(feet - inches)	(feet - inches)	(feet - inches)	(feet - inches)	(feet - inches)	(feet - inches)
12	Douglas fir-larch	SS	6-10	10-9	14-3	18-2	22-1	6-10	10-9	14-3	18-2	21-7
	Douglas fir-larch	#1	6-7	10-5	13-2	16-1	18-8	6-7	9-10	12-5	15-2	17-7
	Douglas fir-larch	#2	6-6	9-10	12-6	15-3	17-9	6-4	9-4	11-9	14-5	16-8
	Douglas fir-larch	#3	5-2	7-7	9-7	11-8	13-6	4-10	7-1	9-0	11-0	12-9
	Hem-fir	SS	6-6	10-2	13-5	17-2	20-10	6-6	10-2	13-5	17-2	20-10
	Hem-fir	#1	6-4	10-0	13-0	15-11	18-5	6-4	9-8	12-3	15-0	17-5
	Hem-fir	#2	6-1	9-6	12-2	14-10	17-3	6-1	9-1	11-5	14-0	16-3
	Hem-fir	#3	5-0	7-4	9-4	11-5	13-2	4-9	6-11	8-9	10-9	12-5
	Southern pine	SS	6-9	10-7	14-0	17-10	21-8	6-9	10-7	14-0	17-10	21-8
	Southern pine	#1	6-6	10-2	13-5	15-9	18-8	6-6	10-0	12-8	14-10	17-7
	Southern pine	#2	6-1	9-2	11-7	13-9	16-2	5-9	8-7	10-11	12-11	15-3
	Southern pine	#3	4-8	6-11	8-9	10-7	12-6	4-5	6-6	8-3	10-0	11-10
	Spruce-pine-fir	SS	6-4	10-0	13-2	16-9	20-5	6-4	10-0	13-2	16-9	19-8
	Spruce-pine-fir	#1	6-2	9-9	12-4	15-1	17-6	6-2	9-2	11-8	14-2	16-6
	Spruce-pine-fir	#2	6-2	9-9	12-4	15-1	17-6	6-2	9-2	11-8	14-2	16-6
	Spruce-pine-fir	#3	5-0	7-4	9-4	11-5	13-2	4-9	6-11	8-9	10-9	12-5
16	Douglas fir-larch	SS	6-3	9-10	12-11	16-6	19-10	6-3	9-10	12-11	16-1	18-8
	Douglas fir-larch	#1	6-0	9-0	11-5	13-11	16-2	5-10	8-6	10-9	13-2	15-3
	Douglas fir-larch	#2	5-10	8-7	10-10	13-3	15-4	5-6	8-1	10-3	12-6	14-6
	Douglas fir-larch	#3	4-6	6-6	8-3	10-1	11-9	4-3	6-2	7-10	9-6	11-1
	Hem-fir	SS	5-11	9-3	12-2	15-7	18-11	5-11	9-3	12-2	15-7	18-0
	Hem-fir	#1	5-9	8-11	11-3	13-9	16-0	5-9	8-5	10-8	13-0	15-1
	Hem-fir	#2	5-6	8-4	10-6	12-10	14-11	5-4	7-10	9-11	12-1	14-1
	Hem-fir	#3	4-4	6-4	8-1	9-10	11-5	4-1	6-0	7-7	9-4	10-9
	Southern pine	SS	6-1	9-7	12-8	16-2	19-8	6-1	9-7	12-8	16-2	19-3
	Southern pine	#1	5-11	9-2	11-8	13-8	16-2	5-10	8-8	11-0	12-10	15-3
	Southern pine	#2	5-3	7-11	10-0	11-11	14-0	5-0	7-5	9-5	11-3	13-2
	Southern pine	#3	4-1	6-0	7-7	9-2	10-10	3-10	5-8	7-1	8-8	10-3
	Spruce-pine-fir	SS	5-9	9-1	11-11	15-3	18-1	5-9	9-1	11-11	14-8	17-1
	Spruce-pine-fir	#1	5-8	8-5	10-8	13-1	15-2	5-5	7-11	10-1	12-4	14-3
	Spruce-pine-fir	#2	5-8	8-5	10-8	13-1	15-2	5-5	7-11	10-1	12-4	14-3
	Spruce-pine-fir	#3	4-4	6-4	8-1	9-10	11-5	4-1	6-0	7-7	9-4	10-9
19.2	Douglas fir-larch	SS	5-10	9-3	12-2	15-6	18-1	5-10	9-3	12-0	14-8	17-1
	Douglas fir-larch	#1	5-7	8-3	10-5	12-9	14-9	5-4	7-9	9-10	12-0	13-11
	Douglas fir-larch	#2	5-4	7-10	9-11	12-1	14-0	5-0	7-4	9-4	11-5	13-2
	Douglas fir-larch	#3	4-1	6-0	7-7	9-3	10-8	3-10	5-7	7-1	8-8	10-1
	Hem-fir	SS	5-6	8-8	11-6	14-8	17-4	5-6	8-8	11-6	14-2	15-5
	Hem-fir	#1	5-5	8-2	10-3	12-7	14-7	5-3	7-8	9-8	11-10	13-9
	Hem-fir	#2	5-2	7-7	9-7	11-9	13-7	4-11	7-2	9-1	11-1	12-10
	Hem-fir	#3	4-0	5-10	7-4	9-0	10-5	3-9	5-6	6-11	8-6	9-10

(continued)

INTERNATIONAL CODE COUNCIL®
Copyright © 2019 ICC & NYSDOS. ALL RIGHTS RESERVED. Accessed by Lauren Gualdino (lgualdino@briarcliffmanor.org), (-) Order Number #100880972 on May 08, 2020 07:05 AM (PDT) pursuant to License Agreement with ICC & NYSDOS. No further reproduction, no

100880972

TABLE R802.4.1(8)—continued
RAFTER SPANS FOR COMMON LUMBER SPECIES
(Ground snow load = 70 psf, ceiling attached to rafters, L/Δ = 240)

RAFTER SPACING (inches)	SPECIES AND GRADE		DEAD LOAD = 10 psf					DEAD LOAD = 20 psf				
			2 × 4	2 × 6	2 × 8	2 × 10	2 × 12	2 × 4	2 × 6	2 × 8	2 × 10	2 × 12
			Maximum rafter spans[a]									
			(feet - inches)	(feet - inches)	(feet - inches)	(feet - inches)	(feet - inches)	(feet - inches)	(feet - inches)	(feet - inches)	(feet - inches)	(feet - inches)
19.2	Southern pine	SS	5-9	9-1	11-11	15-3	18-6	5-9	9-1	11-11	14-11	17-7
	Southern pine	#1	5-6	8-5	10-8	12-5	14-9	5-4	7-11	10-0	11-9	13-11
	Southern pine	#2	4-10	7-3	9-2	10-10	12-9	4-6	6-10	8-8	10-3	12-1
	Southern pine	#3	3-8	5-6	6-11	8-4	9-11	3-6	5-2	6-6	7-11	9-4
	Spruce-pine-fir	SS	5-5	8-6	11-3	14-3	16-6	5-5	8-6	11-0	13-5	15-7
	Spruce-pine-fir	#1	5-3	7-8	9-9	11-11	13-10	5-0	7-3	9-2	11-3	13-0
	Spruce-pine-fir	#2	5-3	7-8	9-9	11-11	13-10	5-0	7-3	9-2	11-3	13-0
	Spruce-pine-fir	#3	4-0	5-10	7-4	9-0	10-5	3-9	5-6	6-11	8-6	9-10
24	Douglas fir-larch	SS	5-5	8-7	11-3	13-11	16-2	5-5	8-6	10-9	13-2	15-3
	Douglas fir-larch	#1	5-0	7-4	9-4	11-5	13-2	4-9	6-11	8-9	10-9	12-5
	Douglas fir-larch	#2	4-9	7-0	8-10	10-10	12-6	4-6	6-7	8-4	10-2	11-10
	Douglas fir-larch	#3	3-8	5-4	6-9	8-3	9-7	3-5	5-0	6-4	7-9	9-0
	Hem-fir	SS	5-2	8-1	10-8	13-6	13-11	5-2	8-1	10-5	12-4	12-4
	Hem-fir	#1	5-0	7-3	9-2	11-3	13-0	4-8	6-10	8-8	10-7	12-4
	Hem-fir	#2	4-8	6-9	8-7	10-6	12-2	4-4	6-5	8-1	9-11	11-6
	Hem-fir	#3	3-7	5-2	6-7	8-1	9-4	3-4	4-11	6-3	7-7	8-10
	Southern pine	SS	5-4	8-5	11-1	14-2	16-8	5-4	8-5	11-1	13-4	15-9
	Southern pine	#1	5-0	7-6	9-6	11-1	13-2	4-9	7-1	9-0	10-6	12-5
	Southern pine	#2	4-4	6-5	8-2	9-9	11-5	4-1	6-1	7-9	9-2	10-9
	Southern pine	#3	3-4	4-11	6-2	7-6	8-10	3-1	4-7	5-10	7-1	8-4
	Spruce-pine-fir	SS	5-0	7-11	10-5	12-9	14-9	5-0	7-9	9-10	12-0	12-11
	Spruce-pine-fir	#1	4-8	6-11	8-9	10-8	12-4	4-5	6-6	8-3	10-0	11-8
	Spruce-pine-fir	#2	4-8	6-11	8-9	10-8	12-4	4-5	6-6	8-3	10-0	11-8
	Spruce-pine-fir	#3	3-7	5-2	6-7	8-1	9-4	3-4	4-11	6-3	7-7	8-10

Check sources for availability of lumber in lengths greater than 20 feet.

For SI: 1 inch = 25.4 mm, 1 foot = 304.8 mm, 1 pound per square foot = 0.0479 kPa.

a. The tabulated rafter spans assume that ceiling joists are located at the bottom of the attic space or that some other method of resisting the outward push of the rafters on the bearing walls, such as rafter ties, is provided at that location. Where ceiling joists or rafter ties are located higher in the attic space, the rafter spans shall be multiplied by the following factors:

H_C/H_R	Rafter Span Adjustment Factor
1/3	0.67
1/4	0.76
1/5	0.83
1/6	0.90
1/7.5 or less	1.00

where:

H_C = Height of ceiling joists or rafter ties measured vertically above the top of the rafter support walls.

H_R = Height of roof ridge measured vertically above the top of the rafter support walls.

INTERNATIONAL CODE COUNCIL®
Copyright © 2019 ICC & NYSDOS. ALL RIGHTS RESERVED. Accessed by Lauren Gualdino (lgualdino@briarcliffmanor.org), (-) Order Number #100880972 on May 08, 2020 07:05 AM (PDT) pursuant to License Agreement with ICC & NYSDOS. No further reproduction, no

100880972

R802.4.3 Hips and valleys. Hip and valley rafters shall be not less than 2 inches (51 mm) nominal in thickness and not less in depth than the cut end of the rafter. Hip and valley rafters shall be supported at the ridge by a brace to a bearing partition or be designed to carry and distribute the specific load at that point.

R802.4.4 Rafter supports. Where the roof pitch is less than 3:12 (25-percent slope), structural members that support rafters, such as ridges, hips and valleys, shall be designed as beams, and bearing shall be provided for rafters in accordance with Section R802.6.

R802.4.5 Purlins. Installation of purlins to reduce the span of rafters is permitted as shown in Figure R802.4.5. Purlins shall be sized not less than the required size of the rafters that they support. Purlins shall be continuous and shall be supported by 2-inch by 4-inch (51 mm by 102 mm) braces installed to bearing walls at a slope not less than 45 degrees (0.79 rad) from the horizontal. The braces shall be spaced not more than 4 feet (1219 mm) on center and the unbraced length of braces shall not exceed 8 feet (2438 mm).

R802.4.6 Collar ties. Where collar ties are used to connect opposing rafters, they shall be located in the upper third of the *attic* space and fastened in accordance with Table R602.3(1). Collar ties shall be not less than 1 inch by 4 inches (25 mm × 102 mm) nominal, spaced not more than 4 feet (1220 mm) on center. Ridge straps in accordance with Table R602.3(1) shall be permitted to replace collar ties.

R802.5 Ceiling joists. Ceiling joists shall be continuous across the structure or securely joined where they meet over interior partitions in accordance with Table R802.5.2.

R802.5.1 Ceiling joist size. Ceiling joists shall be sized based on the joist spans in Tables R802.5.1(1) and R802.5.1(2). For other grades and species and for other loading conditions, refer to the AWC STJR.

R802.5.2 Ceiling joist and rafter connections. Where ceiling joists run parallel to rafters, they shall be connected to rafters at the top wall plate in accordance with Table R802.5.2. Where ceiling joists are not connected to the rafters at the top wall plate, they shall be installed in the bottom third of the rafter height in accordance with Figure R802.4.5 and Table R802.5.2. Where the ceiling joists are installed above the bottom third of the rafter height, the ridge shall be designed as a beam.Where ceiling joists do not run parallel to rafters, the ceiling joists shall be connected to top plates in accordance with Table R602.3(1). Each rafter shall be tied across the structure with a rafter

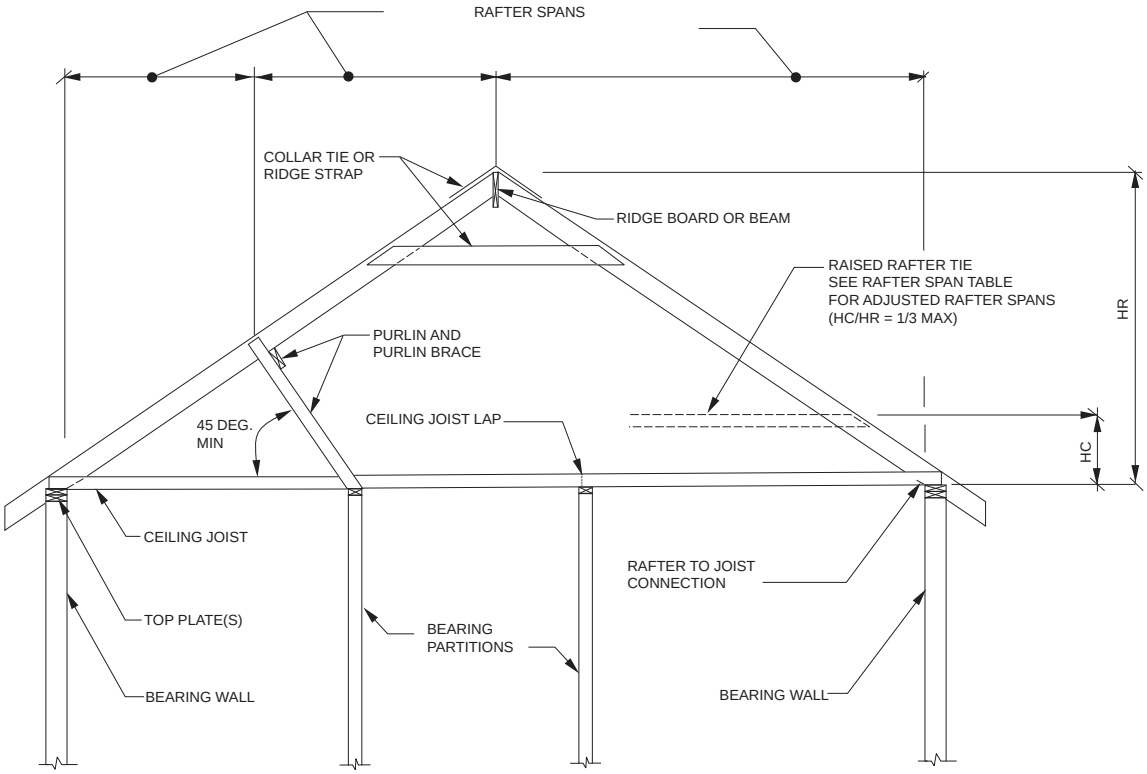

For SI: 1 inch = 25.4 mm, 1 foot = 305 mm, 1 degree = 0.018 rad.

H_C = Height of ceiling joists or rafter ties measured vertically above the top of rafter support walls.

H_R = Height of roof ridge measured vertically above the top of the rafter support walls.

FIGURE R802.4.5
BRACED RAFTER CONSTRUCTION

INTERNATIONAL CODE COUNCIL®
Copyright © 2019 ICC & NYSDOS. ALL RIGHTS RESERVED. Accessed by Lauren Gualdino (lgualdino@briarcliffmanor.org), (-) Order Number #100880972 on May 08, 2020 07:05 AM (PDT) pursuant to License Agreement with ICC & NYSDOS. No further reproduction, no

100880972

TABLE R802.5.1(1)
CEILING JOIST SPANS FOR COMMON LUMBER SPECIES
(Uninhabitable attics without storage, live load = 10 psf, L/Δ = 240)

CEILING JOIST SPACING (inches)	SPECIES AND GRADE		DEAD LOAD = 5 psf			
			2 × 4	2 × 6	2 × 8	2 × 10
			Maximum ceiling joist spans			
			(feet - inches)	(feet - inches)	(feet - inches)	(feet - inches)
12	Douglas fir-larch	SS	13-2	20-8	Note a	Note a
	Douglas fir-larch	#1	12-8	19-11	Note a	Note a
	Douglas fir-larch	#2	12-5	19-6	25-8	Note a
	Douglas fir-larch	#3	11-1	16-3	20-7	25-2
	Hem-fir	SS	12-5	19-6	25-8	Note a
	Hem-fir	#1	12-2	19-1	25-2	Note a
	Hem-fir	#2	11-7	18-2	24-0	Note a
	Hem-fir	#3	10-10	15-10	20-1	24-6
	Southern pine	SS	12-11	20-3	Note a	Note a
	Southern pine	#1	12-5	19-6	25-8	Note a
	Southern pine	#2	11-10	18-8	24-7	Note a
	Southern pine	#3	10-1	14-11	18-9	22-9
	Spruce-pine-fir	SS	12-2	19-1	25-2	Note a
	Spruce-pine-fir	#1	11-10	18-8	24-7	Note a
	Spruce-pine-fir	#2	11-10	18-8	24-7	Note a
	Spruce-pine-fir	#3	10-10	15-10	20-1	24-6
16	Douglas fir-larch	SS	11-11	18-9	24-8	Note a
	Douglas fir-larch	#1	11-6	18-1	23-10	Note a
	Douglas fir-larch	#2	11-3	17-8	23-4	Note a
	Douglas fir-larch	#3	9-7	14-1	17-10	21-9
	Hem-fir	SS	11-3	17-8	23-4	Note a
	Hem-fir	#1	11-0	17-4	22-10	Note a
	Hem-fir	#2	10-6	16-6	21-9	Note a
	Hem-fir	#3	9-5	13-9	17-5	21-3
	Southern pine	SS	11-9	18-5	24-3	Note a
	Southern pine	#1	11-3	17-8	23-10	Note a
	Southern pine	#2	10-9	16-11	21-7	25-7
	Southern pine	#3	8-9	12-11	16-3	19-9
	Spruce-pine-fir	SS	11-0	17-4	22-10	Note a
	Spruce-pine-fir	#1	10-9	16-11	22-4	Note a
	Spruce-pine-fir	#2	10-9	16-11	22-4	Note a
	Spruce-pine-fir	#3	9-5	13-9	17-5	21-3

(continued)

INTERNATIONAL CODE COUNCIL®
Copyright © 2019 ICC & NYSDOS. ALL RIGHTS RESERVED. Accessed by Lauren Gualdino (lgualdino@briarcliffmanor.org), (-) Order Number #100880972 on May 08, 2020 07:05 AM (PDT) pursuant to License Agreement with ICC & NYSDOS. No further reproduction, no

100880972

TABLE R802.5.1(1)—continued
CEILING JOIST SPANS FOR COMMON LUMBER SPECIES
(Uninhabitable attics without storage, live load = 10 psf, L/Δ = 240)

CEILING JOIST SPACING (inches)	SPECIES AND GRADE		DEAD LOAD = 5 psf			
			2 × 4	2 × 6	2 × 8	2 × 10
			Maximum ceiling joist spans			
			(feet - inches)	(feet - inches)	(feet - inches)	(feet - inches)
19.2	Douglas fir-larch	SS	11-3	17-8	23-3	Note a
	Douglas fir-larch	#1	10-10	17-0	22-5	Note a
	Douglas fir-larch	#2	10-7	16-8	21-4	26-0
	Douglas fir-larch	#3	8-9	12-10	16-3	19-10
	Hem-fir	SS	10-7	16-8	21-11	Note a
	Hem-fir	#1	10-4	16-4	21-6	Note a
	Hem-fir	#2	9-11	15-7	20-6	25-3
	Hem-fir	#3	8-7	12-6	15-10	19-5
	Southern -pine	SS	11-0	17-4	22-10	Note a
	Southern pine	#1	10-7	16-8	22-0	Note a
	Southern pine	#2	10-2	15-7	19-8	23-5
	Southern pine	#3	8-0	11-9	14-10	18-0
	Spruce-pine-fir	SS	10-4	16-4	21-6	Note a
	Spruce-pine-fir	#1	10-2	15-11	21-0	25-8
	Spruce-pine-fir	#2	10-2	15-11	21-0	25-8
	Spruce-pine-fir	#3	8-7	12-6	15-10	19-5
24	Douglas fir-larch	SS	10-5	16-4	21-7	Note a
	Douglas fir-larch	#1	10-0	15-9	20-1	24-6
	Douglas fir-larch	#2	9-10	15-0	19-1	23-3
	Douglas fir-larch	#3	7-10	11-6	14-7	17-9
	Hem-fir	SS	9-10	15-6	20-5	Note a
	Hem-fir	#1	9-8	15-2	19-10	24-3
	Hem-fir	#2	9-2	14-5	18-6	22-7
	Hem-fir	#3	7-8	11-2	14-2	17-4
	Southern pine	SS	10-3	16-1	21-2	Note a
	Southern pine	#1	9-10	15-6	20-5	24-0
	Southern pine	#2	9-3	13-11	17-7	20-11
	Southern pine	#3	7-2	10-6	13-3	16-1
	Spruce-pine-fir	SS	9-8	15-2	19-11	25-5
	Spruce-pine-fir	#1	9-5	14-9	18-9	22-11
	Spruce-pine-fir	#2	9-5	14-9	18-9	22-11
	Spruce-pine-fir	#3	7-8	11-2	14-2	17-4

Check sources for availability of lumber in lengths greater than 20 feet.

For SI: 1 inch = 25.4 mm, 1 foot = 304.8 mm, 1 pound per square foot = 0.0479 kPa.

a. Span exceeds 26 feet in length.

INTERNATIONAL CODE COUNCIL®
Copyright © 2019 ICC & NYSDOS. ALL RIGHTS RESERVED. Accessed by Lauren Gualdino (lgualdino@briarcliffmanor.org), (-) Order Number #100880972 on May 08, 2020 07:05 AM (PDT) pursuant to License Agreement with ICC & NYSDOS. No further reproduction, no

100880972

TABLE R802.5.1(2)
CEILING JOIST SPANS FOR COMMON LUMBER SPECIES
(Uninhabitable attics with limited storage, live load = 20 psf, L/Δ = 240)

CEILING JOIST SPACING (inches)	SPECIES AND GRADE		DEAD LOAD = 10 psf			
			2 × 4	2 × 6	2 × 8	2 × 10
			Maximum ceiling joist spans			
			(feet - inches)	(feet - inches)	(feet - inches)	(feet - inches)
12	Douglas fir-larch	SS	10-5	16-4	21-7	Note a
	Douglas fir-larch	#1	10-0	15-9	20-1	24-6
	Douglas fir-larch	#2	9-10	15-0	19-1	23-3
	Douglas fir-larch	#3	7-10	11-6	14-7	17-9
	Hem-fir	SS	9-10	15-6	20-5	Note a
	Hem-fir	#1	9-8	15-2	19-10	24-3
	Hem-fir	#2	9-2	14-5	18-6	22-7
	Hem-fir	#3	7-8	11-2	14-2	17-4
	Southern pine	SS	10-3	16-1	21-2	Note a
	Southern pine	#1	9-10	15-6	20-5	24-0
	Southern pine	#2	9-3	13-11	17-7	20-11
	Southern pine	#3	7-2	10-6	13-3	16-1
	Spruce-pine-fir	SS	9-8	15-2	19-11	25-5
	Spruce-pine-fir	#1	9-5	14-9	18-9	22-11
	Spruce-pine-fir	#2	9-5	14-9	18-9	22-11
	Spruce-pine-fir	#3	7-8	11-2	14-2	17-4
16	Douglas fir-larch	SS	9-6	14-11	19-7	25-0
	Douglas fir-larch	#1	9-1	13-9	17-5	21-3
	Douglas fir-larch	#2	8-11	13-0	16-6	20-2
	Douglas fir-larch	#3	6-10	9-11	12-7	15-5
	Hem-fir	SS	8-11	14-1	18-6	23-8
	Hem-fir	#1	8-9	13-7	17-2	21-0
	Hem-fir	#2	8-4	12-8	16-0	19-7
	Hem-fir	#3	6-8	9-8	12-4	15-0
	Southern pine	SS	9-4	14-7	19-3	24-7
	Southern pine	#1	8-11	14-0	17-9	20-9
	Southern pine	#2	8-0	12-0	15-3	18-1
	Southern pine	#3	6-2	9-2	11-6	14-0
	Spruce-pine-fir	SS	8-9	13-9	18-1	23-1
	Spruce-pine-fir	#1	8-7	12-10	16-3	19-10
	Spruce-pine-fir	#2	8-7	12-10	16-3	19-10
	Spruce-pine-fir	#3	6-8	9-8	12-4	15-0

(continued)

INTERNATIONAL CODE COUNCIL®
Copyright © 2019 ICC & NYSDOS. ALL RIGHTS RESERVED. Accessed by Lauren Gualdino (lgualdino@briarcliffmanor.org), (-) Order Number #100880972 on May 08, 2020 07:05 AM (PDT) pursuant to License Agreement with ICC & NYSDOS. No further reproduction, no

100880972

TABLE R802.5.1(2)—continued
CEILING JOIST SPANS FOR COMMON LUMBER SPECIES
(Uninhabitable attics with limited storage, live load = 20 psf, L/Δ = 240)

CEILING JOIST SPACING (inches)	SPECIES AND GRADE		DEAD LOAD = 10 psf			
			2 × 4	2 × 6	2 × 8	2 × 10
			Maximum ceiling joist spans			
			(feet - inches)	(feet - inches)	(feet - inches)	(feet - inches)
19.2	Douglas fir-larch	SS	8-11	14-0	18-5	23-7
	Douglas fir-larch	#1	8-7	12-6	15-10	19-5
	Douglas fir-larch	#2	8-2	11-11	15-1	18-5
	Douglas fir-larch	#3	6-2	9-1	11-6	14-1
	Hem-fir	SS	8-5	13-3	17-5	22-3
	Hem-fir	#1	8-3	12-4	15-8	19-2
	Hem-fir	#2	7-10	11-7	14-8	17-10
	Hem-fir	#3	6-1	8-10	11-3	13-8
	Southern pine	SS	8-9	13-9	18-2	23-1
	Southern pine	#1	8-5	12-9	16-2	18-11
	Southern pine	#2	7-4	11-0	13-11	16-6
	Southern pine	#3	5-8	8-4	10-6	12-9
	Spruce-pine-fir	SS	8-3	12-11	17-1	21-8
	Spruce-pine-fir	#1	8-0	11-9	14-10	18-2
	Spruce-pine-fir	#2	8-0	11-9	14-10	18-2
	Spruce-pine-fir	#3	6-1	8-10	11-3	13-8
24	Douglas fir-larch	SS	8-3	13-0	17-2	21-3
	Douglas fir-larch	#1	7-8	11-2	14-2	17-4
	Douglas fir-larch	#2	7-3	10-8	13-6	16-5
	Douglas fir-larch	#3	5-7	8-1	10-3	12-7
	Hem-fir	SS	7-10	12-3	16-2	20-6
	Hem-fir	#1	7-7	11-1	14-0	17-1
	Hem-fir	#2	7-1	10-4	13-1	16-0
	Hem-fir	#3	5-5	7-11	10-0	12-3
	Southern pine	SS	8-1	12-9	16-10	21-6
	Southern pine	#1	7-8	11-5	14-6	16-11
	Southern pine	#2	6-7	9-10	12-6	14-9
	Southern pine	#3	5-1	7-5	9-5	11-5
	Spruce-pine-fir	SS	7-8	12-0	15-10	19-5
	Spruce-pine-fir	#1	7-2	10-6	13-3	16-3
	Spruce-pine-fir	#2	7-2	10-6	13-3	16-3
	Spruce-pine-fir	#3	5-5	7-11	10-0	12-3

Check sources for availability of lumber in lengths greater than 20 feet.

For SI: 1 inch = 25.4 mm, 1 foot = 304.8 mm, 1 pound per square foot = 0.0479 kPa.

a. Span exceeds 26 feet in length.

INTERNATIONAL CODE COUNCIL®
Copyright © 2019 ICC & NYSDOS. ALL RIGHTS RESERVED. Accessed by Lauren Gualdino (lgualdino@briarcliffmanor.org), (-) Order Number #100880972 on May 08, 2020 07:05 AM (PDT) pursuant to License Agreement with ICC & NYSDOS. No further reproduction, no

100880972

tie or a 2-inch by 4-inch (51 mm × 102 mm) kicker connected to the ceiling diaphragm with nails equivalent in capacity to Table R802.5.2.

R802.5.2.1 Ceiling joists lapped. Ends of ceiling joists shall be lapped not less than 3 inches (76 mm) or butted over bearing partitions or beams and toenailed to the bearing member. Where ceiling joists are used to provide resistance to rafter thrust, lapped joists shall be nailed together in accordance with Table R802.5.2 and butted joists shall be tied together in a manner to resist such thrust. Joists that do not resist thrust shall be permitted to be nailed in accordance with Table R602.3(1). Wood structural panel roof sheathing, in accordance with Table R503.2.1.1(1), shall not cantilever more than 9 inches (229 mm) beyond the gable endwall unless supported by gable overhang framing.

R802.5.2.2 Rafter ties. Wood rafter ties shall be not less than 2 inches by 4 inches (51 mm × 102 mm) installed in accordance with Table R802.5.2 at each rafter. Other approved rafter tie methods shall be permitted.

R802.5.2.3 Blocking. Blocking shall be not less than utility grade lumber.

R802.6 Bearing. The ends of each rafter or ceiling joist shall have not less than $1^1/_2$ inches (38 mm) of bearing on wood or metal and not less than 3 inches (76 mm) on masonry or concrete. The bearing on masonry or concrete shall be direct, or a sill plate of 2-inch (51 mm) minimum nominal thickness shall be provided under the rafter or ceiling joist. The sill plate shall provide a minimum nominal bearing area of 48 square inches (30 865 mm^2).

R802.6.1 Finished ceiling material. If the finished ceiling material is installed on the ceiling prior to the attachment of the ceiling to the walls, such as in construction at a factory, a compression strip of the same thickness as the finished ceiling material shall be installed directly above the top plate of bearing walls if the compressive strength of the finished ceiling material is less than the loads it will be required to withstand. The compression strip shall cover the entire length of such top plate and shall be not less than one-half the width of the top plate. It shall be of material capable of transmitting the loads transferred through it.

R802.7 Cutting, drilling and notching. Structural roof members shall not be cut, bored or notched in excess of the limitations specified in this section.

R802.7.1 Sawn lumber. Cuts, notches and holes in solid lumber joists, rafters, blocking and beams shall comply with the provisions of Section R502.8.1 except that cantilevered portions of rafters shall be permitted in accordance with Section R802.7.1.1.

R802.7.1.1 Cantilevered portions of rafters. Notches on cantilevered portions of rafters are permitted provided the dimension of the remaining portion of the rafter is not less than $3^1/_2$ inches (89 mm) and the length of the cantilever does not exceed 24 inches (610 mm) in accordance with Figure R802.7.1.1.

R802.7.1.2 Ceiling joist taper cut. Taper cuts at the ends of the ceiling joist shall not exceed one-fourth the depth of the member in accordance with Figure R802.7.1.2.

R802.7.2 Engineered wood products. Cuts, notches and holes bored in trusses, structural composite lumber, structural glue-laminated members, cross-laminated timber members or I-joists are prohibited except where permitted by the manufacturer's recommendations or where the effects of such alterations are specifically considered in the design of the member by a registered design professional.

R802.8 Lateral support. Roof framing members and ceiling joists having a depth-to-thickness ratio exceeding 5 to 1 based on nominal dimensions shall be provided with lateral support at points of bearing to prevent rotation. For roof rafters with ceiling joists attached in accordance with Table R602.3(1), the depth-to-thickness ratio for the total assembly shall be determined using the combined thickness of the rafter plus the attached ceiling joist.

Exception: Roof trusses shall be braced in accordance with Section R802.10.3.

R802.8.1 Bridging. Rafters and ceiling joists having a depth-to-thickness ratio exceeding 6 to 1 based on nominal dimensions shall be supported laterally by solid blocking, diagonal bridging (wood or metal) or a continuous 1-inch by 3-inch (25 mm by 76 mm) wood strip nailed across the rafters or ceiling joists at intervals not exceeding 8 feet (2438 mm).

R802.9 Framing of openings. Openings in roof and ceiling framing shall be framed with header and trimmer joists. Where the header joist span does not exceed 4 feet (1219 mm), the header joist shall be permitted to be a single member the same size as the ceiling joist or rafter. Single trimmer joists shall be permitted to be used to carry a single header joist that is located within 3 feet (914 mm) of the trimmer joist bearing. Where the header joist span exceeds 4 feet (1219 mm), the trimmer joists and the header joist shall be doubled and of sufficient cross section to support the ceiling joists or rafter framing into the header. *Approved* hangers shall be used for the header joist to trimmer joist connections where the header joist span exceeds 6 feet (1829 mm). Tail joists over 12 feet (3658 mm) long shall be supported at the header by framing anchors or on ledger strips not less than 2 inches by 2 inches (51 mm by 51 mm).

R802.10 Wood trusses.

R802.10.1 Truss design drawings. Truss design drawings, prepared in conformance to Section R802.10.1, shall be provided to the *building official* and *approved* prior to installation. Truss design drawings shall be provided with the shipment of trusses delivered to the job site. Truss design drawings shall include, at a minimum, the following information:

1. Slope or depth, span and spacing.
2. Location of all joints.
3. Required bearing widths.

INTERNATIONAL CODE COUNCIL®
Copyright © 2019 ICC & NYSDOS. ALL RIGHTS RESERVED. Accessed by Lauren Gualdino (lgualdino@briarcliffmanor.org), (-) Order Number #100880972 on May 08, 2020 07:05 AM (PDT) pursuant to License Agreement with ICC & NYSDOS. No further reproduction, no

100880972

TABLE R802.5.2
RAFTER/CEILING JOIST HEEL JOINT CONNECTIONS[a, b, c, d, e, g]

RAFTER SLOPE	RAFTER SPACING (inches)	GROUND SNOW LOAD (psf)															
		20[f]				30				50				70			
		Roof span (feet)															
		12	20	28	36	12	20	28	36	12	20	28	36	12	20	28	36
		Required number of 16d common nails[a, b] per heel joint splices[c, d, e]															
3:12	12	4	6	8	10	4	6	8	11	5	8	12	15	6	11	15	20
	16	5	8	10	13	5	8	11	14	6	11	15	20	8	14	20	26
	24	7	11	15	19	7	11	16	21	9	16	23	30	12	21	30	39
4:12	12	3	5	6	8	3	5	6	8	4	6	9	11	5	8	12	15
	16	4	6	8	10	4	6	8	11	5	8	12	15	6	11	15	20
	24	5	8	12	15	5	9	12	16	7	12	17	22	9	16	23	29
5:12	12	3	4	5	6	3	4	5	7	3	5	7	9	4	7	9	12
	16	3	5	6	8	3	5	7	9	4	7	9	12	5	9	12	16
	24	4	7	9	12	4	7	10	13	6	10	14	18	7	13	18	23
7:12	12	3	4	4	5	3	3	4	5	3	4	5	7	3	5	7	9
	16	3	4	5	6	3	4	5	6	3	5	7	9	4	6	9	11
	24	3	5	7	9	3	5	7	9	4	7	10	13	5	9	13	17
9:12	12	3	3	4	4	3	3	3	4	3	3	4	5	3	4	5	7
	16	3	4	4	5	3	3	4	5	3	4	5	7	3	5	7	9
	24	3	4	6	7	3	4	6	7	3	6	8	10	4	7	10	13
12:12	12	3	3	3	3	3	3	3	3	3	3	3	4	3	3	4	5
	16	3	3	4	4	3	3	3	4	3	3	4	5	3	4	5	7
	24	3	4	4	5	3	3	4	6	3	4	6	8	3	6	8	10

For SI: 1 inch = 25.4 mm, 1 foot = 304.8 mm, 1 pound per square foot = 0.0479 kPa.

a. 40d box nails shall be permitted to be substituted for 16d common nails.

b. Nailing requirements shall be permitted to be reduced 25 percent if nails are clinched.

c. Heel joint connections are not required where the ridge is supported by a load-bearing wall, header or ridge beam.

d. Where intermediate support of the rafter is provided by vertical struts or purlins to a load-bearing wall, the tabulated heel joint connection requirements shall be permitted to be reduced proportionally to the reduction in span.

e. Equivalent nailing patterns are required for ceiling joist to ceiling joist lap splices.

f. Applies to roof live load of 20 psf or less.

g. Tabulated heel joint connection requirements assume that ceiling joists or rafter ties are located at the bottom of the attic space. Where ceiling joists or rafter ties are located higher in the attic, heel joint connection requirements shall be increased by the following factors:

H_C/H_R	Heel Joint Connection Adjustment Factor
1/3	1.5
1/4	1.33
1/5	1.25
1/6	1.2
1/10 or less	1.11

where:

H_C = Height of ceiling joists or rafter ties measured vertically above the top of the rafter support walls.

H_R = Height of roof ridge measured vertically above the top of the rafter support walls.

INTERNATIONAL CODE COUNCIL®
Copyright © 2019 ICC & NYSDOS. ALL RIGHTS RESERVED. Accessed by Lauren Gualdino (lgualdino@briarcliffmanor.org), (-) Order Number #100880972 on May 08, 2020 07:05 AM (PDT) pursuant to License Agreement with ICC & NYSDOS. No further reproduction, no

100880972

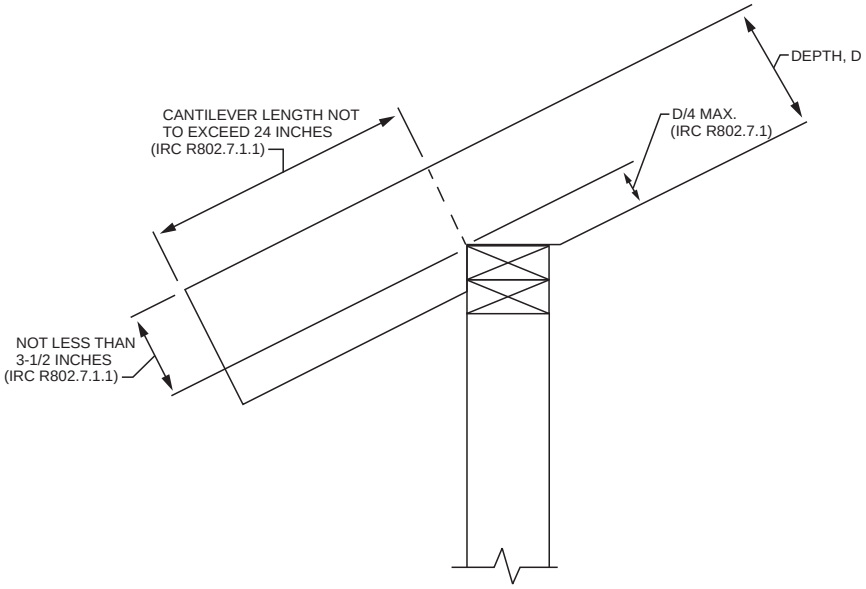

For SI: 1 inch = 25.4 mm.

FIGURE R802.7.1.1
RAFTER NOTCH

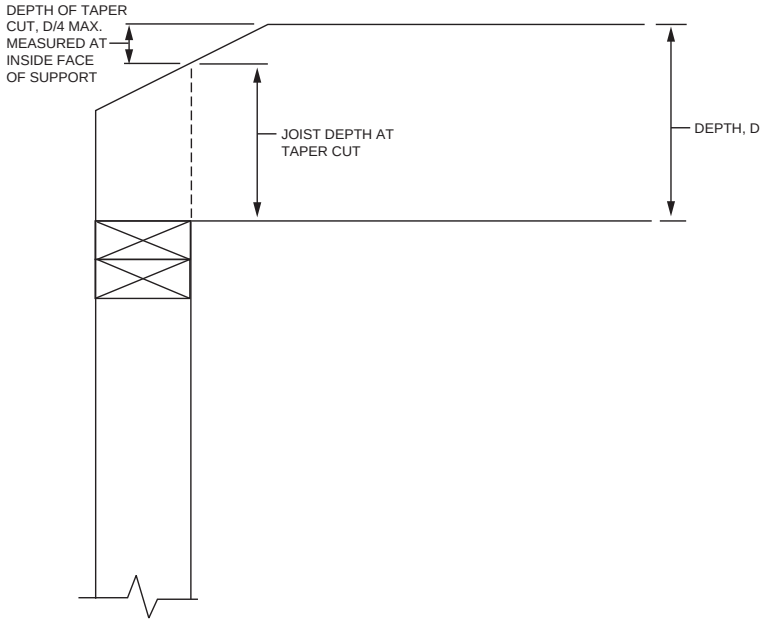

FIGURE R802.7.1.2
CEILING JOIST TAPER CUT

INTERNATIONAL CODE COUNCIL®
Copyright © 2019 ICC & NYSDOS. ALL RIGHTS RESERVED. Accessed by Lauren Gualdino (lgualdino@briarcliffmanor.org), (-) Order Number #100880972 on May 08, 2020 07:05 AM (PDT) pursuant to License Agreement with ICC & NYSDOS. No further reproduction, no

100880972

4. Design loads as applicable.
   4.1. Top chord live load (as determined from Section R301.6).
   4.2. Top chord dead load.
   4.3. Bottom chord live load.
   4.4. Bottom chord dead load.
   4.5. Concentrated loads and their points of application.
   4.6. Controlling wind and earthquake loads.
5. Adjustments to lumber and joint connector design values for conditions of use.
6. Each reaction force and direction.
7. Joint connector type and description such as size, thickness or gage and the dimensioned location of each joint connector except where symmetrically located relative to the joint interface.
8. Lumber size, species and *grade for each member.*
9. Connection requirements for:
   9.1. Truss to girder-truss.
   9.2. Truss ply to ply.
   9.3. Field splices.
10. Calculated deflection ratio or maximum description for live and total load.
11. Maximum axial compression forces in the truss members to enable the building designer to design the size, connections and anchorage of the permanent continuous lateral bracing. Forces shall be shown on the truss design drawing or on supplemental documents.
12. Required permanent truss member bracing location.

R802.10.2 Design. Wood trusses shall be designed in accordance with accepted engineering practice. The design and manufacture of metal-plate-connected wood trusses shall comply with ANSI/TPI 1. The truss design drawings shall be prepared by a registered professional where required by the statutes of the *jurisdiction* in which the project is to be constructed in accordance with Section R106.1.

R802.10.2.1 Applicability limits. The provisions of this section shall control the design of truss roof framing where snow controls for buildings that are not greater than 60 feet (18 288 mm) in length perpendicular to the joist, rafter or truss span, not greater than 36 feet (10 973 mm) in width parallel to the joist, rafter or truss span, not more than three stories above grade plane in height, and have roof slopes not smaller than 3:12 (25-percent slope) or greater than 12:12 (100-percent slope). Truss roof framing constructed in accordance with the provisions of this section shall be limited to sites subjected to a maximum design wind speed of 140 miles per hour (63 m/s), Exposure B or C, and a maximum ground snow load of 70 psf (3352 Pa). For consistent loading of all truss types, roof snow load is to be computed as: $0.7\ p_g$.

R802.10.3 Bracing. Trusses shall be braced to prevent rotation and provide lateral stability in accordance with the requirements specified in the *construction documents* for the building and on the individual truss design drawings. In the absence of specific bracing requirements, trusses shall be braced in accordance with accepted industry practice such as the SBCA *Building Component Safety Information (BCSI) Guide to Good Practice for Handling, Installing & Bracing of Metal Plate Connected Wood Trusses.*

R802.10.4 Alterations to trusses. Truss members shall not be cut, notched, drilled, spliced or otherwise altered in any way without the approval of a registered *design professional.* Alterations resulting in the addition of load such as HVAC equipment water heater that exceeds the design load for the truss shall not be permitted without verification that the truss is capable of supporting such additional loading.

R802.11 Roof tie-down.

R802.11.1 Uplift resistance. Roof assemblies shall have uplift resistance in accordance with Sections R802.11.1.1 and R802.11.1.2.

Where the uplift force does not exceed 200 pounds (90.8 kg), rafters and trusses spaced not more than 24 inches (610 mm) on center shall be permitted to be attached to their supporting wall assemblies in accordance with Table R602.3(1).

Where the basic wind speed does not exceed 115 mph, the wind exposure category is B, the roof pitch is 5:12 (42-percent slope) or greater, and the roof span is 32 feet (9754 mm) or less, rafters and trusses spaced not more than 24 inches (610 mm) on center shall be permitted to be attached to their supporting wall assemblies in accordance with Table R602.3(1).

R802.11.1.1 Truss uplift resistance. Trusses shall be attached to supporting wall assemblies by connections capable of resisting uplift forces as specified on the truss design drawings for the ultimate design wind speed as determined by Figure R301.2(5)A and listed in Table R301.2(1) or as shown on the construction documents. Uplift forces shall be permitted to be determined as specified by Table R802.11, if applicable, or as determined by accepted engineering practice.

R802.11.1.2 Rafter uplift resistance. Individual rafters shall be attached to supporting wall assemblies by connections capable of resisting uplift forces as determined by Table R802.11 or as determined by accepted engineering practice. Connections for beams used in a roof system shall be designed in accordance with accepted engineering practice.

SECTION R803
ROOF SHEATHING

R803.1 Lumber sheathing. Allowable spans for lumber used as roof sheathing shall conform to Table R803.1. Spaced lumber sheathing for wood shingle and shake roofing shall conform to the requirements of Sections R905.7 and R905.8. Spaced lumber sheathing is not allowed in Seismic Design Category D_2.

INTERNATIONAL CODE COUNCIL®
Copyright © 2019 ICC & NYSDOS. ALL RIGHTS RESERVED. Accessed by Lauren Gualdino (lgualdino@briarcliffmanor.org), (-) Order Number #100880972 on May 08, 2020 07:05 AM (PDT) pursuant to License Agreement with ICC & NYSDOS. No further reproduction, no

100880972

TABLE R802.11
RAFTER OR TRUSS UPLIFT CONNECTION FORCES FROM WIND (ASD) (POUNDS PER CONNECTION)[a, b, c, d, e, f, g, h]

RAFTER OR TRUSS SPACING	ROOF SPAN (feet)	EXPOSURE B									
		Ultimate Design Wind Speed V_{ULT} (mph)									
		110		115		120		130		140	
		Roof Pitch		Roof Pitch		Roof Pitch		Roof Pitch		Roof Pitch	
		< 5:12	≥ 5:12	< 5:12	≥ 5:12	< 5:12	≥ 5:12	< 5:12	≥ 5:12	< 5:12	≥ 5:12
12″ o.c.	12	48	43	59	53	70	64	95	88	122	113
	18	59	52	74	66	89	81	122	112	157	146
	24	71	62	89	79	108	98	149	137	192	178
	28	79	69	99	88	121	109	167	153	216	200
	32	86	75	109	97	134	120	185	170	240	222
	36	94	82	120	106	146	132	203	186	264	244
	42	106	92	135	120	166	149	230	211	300	278
	48	118	102	151	134	185	166	258	236	336	311
16″ o.c.	12	64	57	78	70	93	85	126	117	162	150
	18	78	69	98	88	118	108	162	149	209	194
	24	94	82	118	105	144	130	198	182	255	237
	28	105	92	132	117	161	145	222	203	287	266
	32	114	100	145	129	178	160	246	226	319	295
	36	125	109	160	141	194	176	270	247	351	325
	42	141	122	180	160	221	198	306	281	399	370
	48	157	136	201	178	246	221	343	314	447	414
24″ o.c.	12	96	86	118	106	140	128	190	176	244	226
	18	118	104	148	132	178	162	244	224	314	292
	24	142	124	178	158	216	196	298	274	384	356
	28	158	138	198	176	242	218	334	306	432	400
	32	172	150	218	194	268	240	370	340	480	444
	36	188	164	240	212	292	264	406	372	528	488
	42	212	184	270	240	332	298	460	422	600	556
	48	236	204	302	268	370	332	516	472	672	622

(continued)

INTERNATIONAL CODE COUNCIL®
Copyright © 2019 ICC & NYSDOS. ALL RIGHTS RESERVED. Accessed by Lauren Gualdino (lgualdino@briarcliffmanor.org), (-) Order Number #100880972 on May 08, 2020 07:05 AM (PDT) pursuant to License Agreement with ICC & NYSDOS. No further reproduction, no

100880972

TABLE R802.11—continued
RAFTER OR TRUSS UPLIFT CONNECTION FORCES FROM WIND (ASD) (POUNDS PER CONNECTION)[a, b, c, d, e, f, g, h]

RAFTER OR TRUSS SPACING	ROOF SPAN (feet)	EXPOSURE C									
		Ultimate Design Wind Speed V_{ULT} (mph)									
		110		115		120		130		140	
		Roof Pitch		Roof Pitch		Roof Pitch		Roof Pitch		Roof Pitch	
		< 5:12	≥ 5:12	< 5:12	≥ 5:12	< 5:12	≥ 5:12	< 5:12	≥ 5:12	< 5:12	≥ 5:12
12″ o.c.	12	95	88	110	102	126	118	161	151	198	186
	18	121	111	141	131	163	151	208	195	257	242
	24	148	136	173	160	200	185	256	239	317	298
	28	166	152	195	179	225	208	289	269	358	335
	32	184	168	216	199	249	231	321	299	398	373
	36	202	185	237	219	274	254	353	329	438	411
	42	229	210	269	248	312	289	402	375	499	468
	48	256	234	302	278	349	323	450	420	560	524
16″ o.c.	12	126	117	146	136	168	157	214	201	263	247
	18	161	148	188	174	217	201	277	259	342	322
	24	197	181	230	213	266	246	340	318	422	396
	28	221	202	259	238	299	277	384	358	476	446
	32	245	223	287	265	331	307	427	398	529	496
	36	269	246	315	291	364	338	469	438	583	547
	42	305	279	358	330	415	384	535	499	664	622
	48	340	311	402	370	464	430	599	559	745	697
24″ o.c.	12	190	176	220	204	252	236	322	302	396	372
	18	242	222	282	262	326	302	416	390	514	484
	24	296	272	346	320	400	370	512	478	634	596
	28	332	304	390	358	450	416	578	538	716	670
	32	368	336	432	398	498	462	642	598	796	746
	36	404	370	474	438	548	508	706	658	876	822
	42	458	420	538	496	624	578	804	750	998	936
	48	512	468	604	556	698	646	900	840	1120	1048

For SI: 1 inch = 25.4 mm, 1 foot = 304.8 mm, 1 mile per hour = 0.447 m/s, 1 pound = 0.454 kg, 1 pound per square foot = 47.9 N/m^2, 1 pound per linear foot = 14.6 N/m.

a. The uplift connection forces are based on a maximum 33-foot mean roof height and Wind Exposure Category B or C. For Exposure D, the uplift connection force shall be selected from the Exposure C portion of the table using the next highest tabulated ultimate design wind speed. The adjustment coefficients in Table R301.2(3) shall not be used to multiply the tabulated forces for Exposures C and D or for other mean roof heights.

b. The uplift connection forces include an allowance for roof and ceiling assembly dead load of 15 psf.

c. The tabulated uplift connection forces are limited to a maximum roof overhang of 24 inches.

d. The tabulated uplift connection forces shall be permitted to be multiplied by 0.75 for connections not located within 8 feet of building corners.

e. For buildings with hip roofs with 5:12 and greater pitch, the tabulated uplift connection forces shall be permitted to be multiplied by 0.70. This reduction shall not be combined with any other reduction in tabulated forces.

f. For wall-to-wall and wall-to-foundation connections, the uplift connection force shall be permitted to be reduced by 60 plf for each full wall above.

g. Linear interpolation between tabulated roof spans and wind speeds shall be permitted.

h. The tabulated forces for a 12-inch on-center spacing shall be permitted to be used to determine the uplift load in pounds per linear foot.

INTERNATIONAL CODE COUNCIL®
Copyright © 2019 ICC & NYSDOS. ALL RIGHTS RESERVED. Accessed by Lauren Gualdino (lgualdino@briarcliffmanor.org), (-) Order Number #100880972 on May 08, 2020 07:05 AM (PDT) pursuant to License Agreement with ICC & NYSDOS. No further reproduction, no

100880972

TABLE R803.1
MINIMUM THICKNESS OF LUMBER ROOF SHEATHING

RAFTER OR BEAM SPACING (inches)	MINIMUM NET THICKNESS (inches)
24	$^5/_8$
48[a]	$1^1/_2$ T & G
60[b]	
72[c]	

For SI: 1 inch = 25.4 mm.

a. Minimum 270 F_b, 340,000 *E*.

b. Minimum 420 F_b, 660,000 *E*.

c. Minimum 600F_b, 1,150,000 *E*.

R803.2 Wood structural panel sheathing.

R803.2.1 Identification and grade. Wood structural panels shall conform to DOC PS 1, DOC PS 2, CSA O437 or CSA O325, and shall be identified for grade, bond classification and performance category by a grade mark or certificate of inspection issued by an *approved* agency. Wood structural panels shall comply with the grades specified in Table R503.2.1.1(1).

R803.2.1.1 Exposure durability. Wood structural panels, when designed to be permanently exposed in outdoor applications, shall be of an exterior exposure durability. Wood structural panel roof sheathing exposed to the underside shall be permitted to be of interior type bonded with exterior glue, identified as Exposure 1.

R803.2.1.2 Fire-retardant-treated plywood. The allowable unit stresses for fire-retardant-treated plywood, including fastener values, shall be developed from an *approved* method of investigation that considers the effects of anticipated temperature and humidity to which the fire-retardant-treated plywood will be subjected, the type of treatment and redrying process. The fire-retardant-treated plywood shall be graded by an *approved agency.*

R803.2.2 Allowable spans. The maximum allowable spans for wood structural panel roof sheathing shall not exceed the values set forth in Table R503.2.1.1(1), or APA E30.

R803.2.3 Installation. Wood structural panel used as roof sheathing shall be installed with joints staggered or not staggered in accordance with Table R602.3(1), APA E30 for wood roof framing or with Table R804.3 for cold-formed steel roof framing. Wood structural panel roof sheathing in accordance with Table R503.2.1.1(1) shall not cantilever more than 9 inches (229 mm) beyond the gable endwall unless supported by gable overhang framing.

SECTION R804
COLD-FORMED STEEL ROOF FRAMING

R804.1 General. Elements shall be straight and free of any defects that would significantly affect their structural performance. Cold-formed steel roof framing members shall be in accordance with the requirements of this section.

R804.1.1 Applicability limits. The provisions of this section shall control the construction of cold-formed steel roof framing for buildings not greater than 60 feet (18 288 mm) perpendicular to the joist, rafter or truss span, not greater than 40 feet (12 192 mm) in width parallel to the joist span or truss, less than or equal to three stories above *grade* plane and with roof slopes not less than 3:12 (25-percent slope) or greater than 12:12 (100-percent slope). Cold-formed steel roof framing constructed in accordance with the provisions of this section shall be limited to sites where the ultimate design wind speed is less than 140 miles per hour (63 m/s), Exposure Category B or C, and the ground snow load is less than or equal to 70 pounds per square foot (3350 Pa).

R804.1.2 In-line framing. Cold-formed steel roof framing constructed in accordance with Section R804 shall be located in line with load-bearing studs in accordance with Figure R804.1.2 and the tolerances specified as follows:

1. The maximum tolerance shall be $^3/_4$ inch (19.1 mm) between the centerline of the horizontal framing member and the centerline of the vertical framing member.
2. Where the centerline of the horizontal framing member and bearing stiffener are located to one side of the centerline of the vertical framing member, the maximum tolerance shall be $^1/_8$ inch (3.2 mm) between the web of the horizontal framing member and the edge of the vertical framing member.

R804.2 Structural framing. Load-bearing, cold-formed steel roof framing members shall be in accordance with this section.

R804.2.1 Material. Load-bearing, cold-formed steel framing members shall be cold formed to shape from structural quality sheet steel complying with the requirements of ASTM A1003, Structural Grades 33 Type H and 50 Type H.

R804.2.2 Corrosion protection. Load-bearing, cold-formed steel framing shall have a metallic coating complying with ASTM A1003 and one of the following:

1. Not less than G 60 in accordance with ASTM A653.
2. Not less than AZ 50 in accordance with ASTM A792.

R804.2.3 Dimension, thickness and material grade. Load-bearing, cold-formed steel roof framing members shall comply with Figure R804.2.3(1) and with the dimensional and thickness requirements specified in Table R804.2.3. Additionally, C-shaped sections shall have a minimum flange width of 1.625 inches (41 mm) and a maximum flange width of 2 inches (51 mm). The minimum lip size for C-shaped sections shall be $^1/_2$ inch (12.7 mm). Tracks shall comply with Figure R804.2.3(2) and shall have a minimum flange width of $1^1/_4$ inches (32 mm). Minimum Grade 33 ksi steel shall be used wherever 33 mil and 43 mil thicknesses are specified. Minimum Grade 50 ksi steel shall be used wherever 54 and 68 mil thicknesses are specified.

INTERNATIONAL CODE COUNCIL®
Copyright © 2019 ICC & NYSDOS. ALL RIGHTS RESERVED. Accessed by Lauren Gualdino (lgualdino@briarcliffmanor.org), (-) Order Number #100880972 on May 08, 2020 07:05 AM (PDT) pursuant to License Agreement with ICC & NYSDOS. No further reproduction, no

100880972

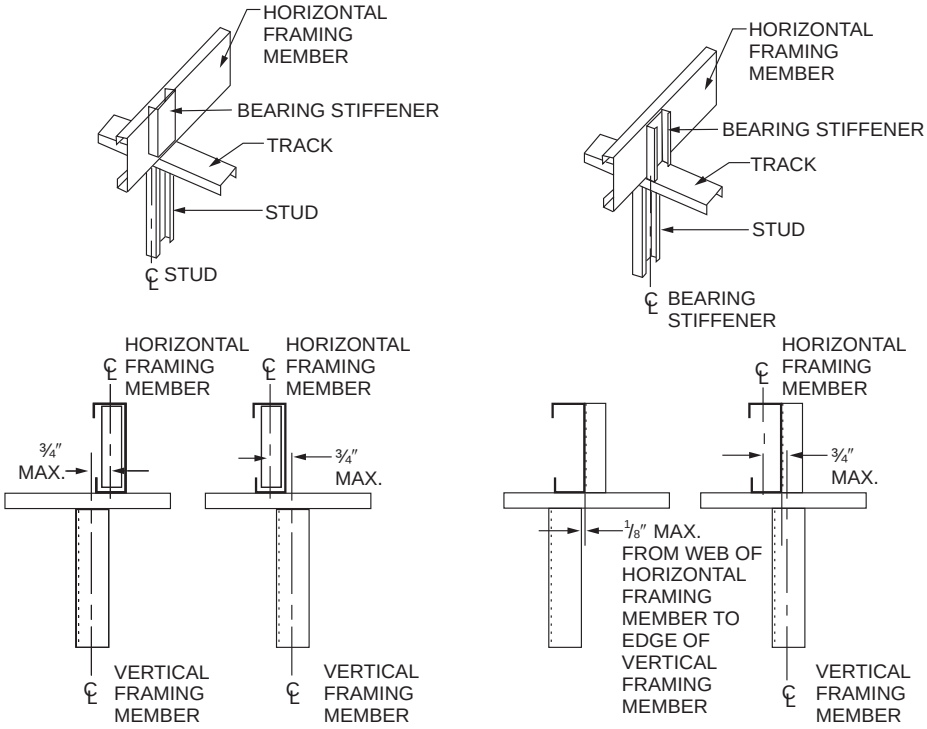

For SI: 1 inch = 25.4 mm.

FIGURE R804.1.2
IN-LINE FRAMING

TABLE R804.2.3
LOAD-BEARING COLD-FORMED STEEL ROOF FRAMING MEMBER SIZES AND THICKNESSES

MEMBER DESIGNATION[a]	WEB DEPTH (inches)	MINIMUM BASE STEEL THICKNESS mil (inches)
350S162-t	3.5	33 (0.0329), 43 (0.0428), 54 (0.0538)
550S162-t	5.5	33 (0.0329), 43 (0.0428), 54 (0.0538), 68 (0.0677)
800S162-t	8	33 (0.0329), 43 (0.0428), 54 (0.0538), 68 (0.0677)
1000S162-t	10	43 (0.0428), 54 (0.0538), 68 (0.0677)
1200S162-t	12	43 (0.0428), 54 (0.0538), 68 (0.0677)

For SI: 1 inch = 25.4 mm

a. The member designation is defined by the first number representing the member depth in hundredths of an inch, the letter "s" representing a stud or joist member, the second number representing the flange width in hundredths of an inch and the letter "t" shall be a number representing the minimum base metal thickness in mils.

INTERNATIONAL CODE COUNCIL®
Copyright © 2019 ICC & NYSDOS. ALL RIGHTS RESERVED. Accessed by Lauren Gualdino (lgualdino@briarcliffmanor.org), (-) Order Number #100880972 on May 08, 2020 07:05 AM (PDT) pursuant to License Agreement with ICC & NYSDOS. No further reproduction, no

100880972

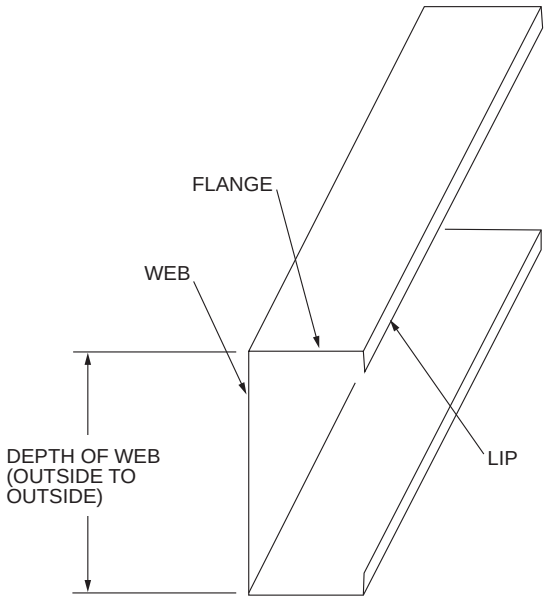

FIGURE R804.2.3(1)
C-SHAPED SECTION

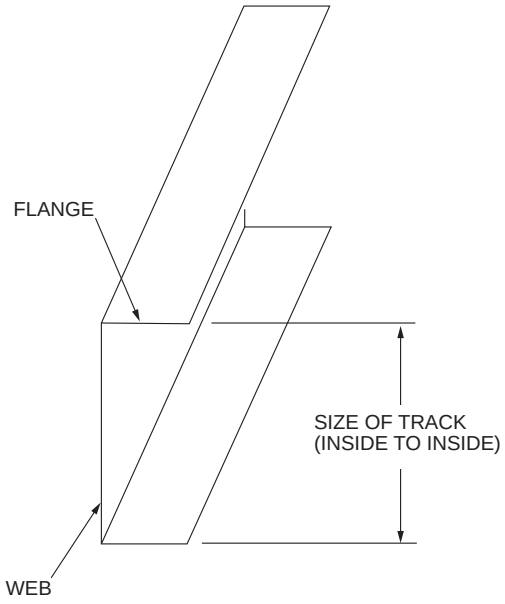

FIGURE R804.2.3(2)
TRACK SECTION

R804.2.4 Identification. Load-bearing, cold-formed steel framing members shall have a legible *label,* stencil, stamp or embossment with the following information as a minimum:

1. Manufacturer's identification.
2. Minimum base steel thickness in inches (mm).
3. Minimum coating designation.
4. Minimum yield strength, in kips per square inch (ksi) (MPa).

R804.2.5 Fastening requirements. Screws for steel-to-steel connections shall be installed with a minimum edge distance and center-to-center spacing of $^1/_2$ inch (12.7 mm), shall be self-drilling tapping and shall conform to ASTM C1513. Structural sheathing shall be attached to cold-formed steel roof rafters with minimum No. 8 self-drilling tapping screws that conform to ASTM C1513. Screws for attaching structural sheathing to cold-formed steel roof framing shall have a minimum head diameter of 0.292 inch (7.4 mm) with countersunk heads and shall be installed with a minimum edge distance of $^3/_8$ inch (9.5 mm). Gypsum board ceilings shall be attached to cold-formed steel joists with minimum No. 6 screws conforming to ASTM C954 or ASTM C1513 with a bugle-head style and shall be installed in accordance with Section R805. For all connections, screws shall extend through the steel not fewer than three exposed threads. Fasteners shall have rust-inhibitive coating suitable for the installation in which they are being used, or be manufactured from material not susceptible to corrosion.

R804.2.6 Web holes, web hole reinforcing and web hole patching. Web holes, web hole reinforcing and web hole patching shall be in accordance with this section.

R804.2.6.1 Web holes. Web holes in roof framing members shall comply with all of the following conditions:

1. Holes shall conform to Figure R804.2.6.1.
2. Holes shall be permitted only along the centerline of the web of the framing member.
3. Center-to-center spacing of holes shall be not less than 24 inches (610 mm).
4. The web hole width shall be not greater than one-half the member depth, or $2^1/_2$ inches (64 mm).
5. Holes shall have a web hole length not exceeding $4^1/_2$ inches (114 mm).
6. The minimum distance between the edge of the bearing surface and the edge of the web hole shall be not less than 10 inches (254 mm).

Framing members with web holes not conforming to Items 1 though 6 shall be reinforced in accordance with Section R804.2.6.2, patched in accordance with Section R804.2.6.3 or designed in accordance with accepted engineering practices.

R804.2.6.2 Web hole reinforcing. Reinforcement of web holes in ceiling joists not conforming to the requirements of Section R804.2.6.1 shall be permitted if the hole is located fully within the center 40 percent of the span and the depth and length of the hole do not exceed 65 percent of the flat width of the web. The reinforcing shall be a steel plate or C-shaped section with a hole that does not exceed the web hole size limitations of Section R804.2.6.1 for the member being reinforced. The steel reinforcing shall be the same thickness as the receiving member and shall extend not less than 1 inch (25 mm) beyond all edges of the hole. The steel reinforcing shall be fastened to the web of the receiving member with No. 8 screws spaced not greater than 1 inch (25 mm) center

INTERNATIONAL CODE COUNCIL®
Copyright © 2019 ICC & NYSDOS. ALL RIGHTS RESERVED. Accessed by Lauren Gualdino (lgualdino@briarcliffmanor.org), (-) Order Number #100880972 on May 08, 2020 07:05 AM (PDT) pursuant to License Agreement with ICC & NYSDOS. No further reproduction, no

100880972

to center along the edges of the patch with minimum edge distance of $^1/_2$ inch (12.7 mm).

R804.2.6.3 Hole patching. Patching of web holes in roof framing members not conforming to the requirements in Section R804.2.6.1 shall be permitted in accordance with either of the following methods:

1. Framing members shall be replaced or designed in accordance with accepted engineering practices where web holes exceed either of the following size limits:
   1.1. The depth of the hole, measured across the web, exceeds 70 percent of the flat width of the web.
   1.2. The length of the hole measured along the web, exceeds 10 inches (254 mm) or the depth of the web, whichever is greater.
2. Web holes not exceeding the dimensional requirements in Section R804.2.6.3, Item 1, shall be patched with a solid steel plate, stud section or track section in accordance with Figure R804.2.6.3. The steel patch shall, as a minimum, be the same thickness as the receiving member and shall extend not less than 1 inch (25 mm) beyond all edges of the hole. The steel patch shall be fastened to the web of the receiving member with No. 8 screws spaced not greater than 1 inch (25 mm) center-to-center along the edges of the patch with minimum edge distance of $^1/_2$ inch (12.7 mm).

R804.3 Roof construction. Cold-formed steel roof systems constructed in accordance with the provisions of this section shall consist of both ceiling joists and rafters in accordance with Figure R804.3 and fastened in accordance with Table R804.3.

R804.3.1 Ceiling joists. Cold-formed steel ceiling joists shall be in accordance with this section.

R804.3.1.1 Minimum ceiling joist size. Ceiling joist size and thickness shall be determined in accordance with the limits set forth in Tables R804.3.1.1(1) and R804.3.1.1(2). When determining the size of ceiling joists, the lateral support of the top flange shall be classified as unbraced, braced at midspan or braced at third points in accordance with Section R804.3.1.3. Where sheathing material is attached to the top flange of ceiling joists or where the bracing is spaced closer than at third points of the joists, the "third point" values from Tables R804.3.1.1(1) and R804.3.1.1(2) shall be used.

Ceiling joists shall have a bearing support length of not less than $1^1/_2$ inches (38 mm) and shall be connected to roof rafters (heel joint) with No. 10 screws in accordance with Figure R804.3.1.1 and Table R804.3.1.1(3).

Where continuous joists are framed across interior bearing supports, the interior bearing supports shall be located within 24 inches (610 mm) of midspan of the ceiling joist, and the individual spans shall not exceed the applicable spans in Tables R804.3.1.1(1) and R804.3.1.1(2).Where the *attic* is to be used as an occupied space, the ceiling joists shall be designed in accordance with Section R505.

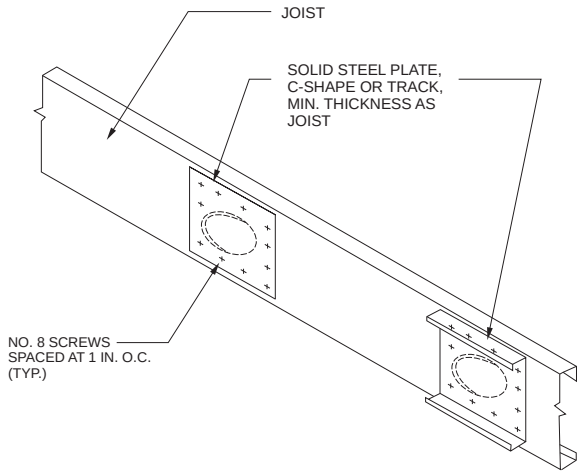

For SI: 1 inch = 25.4 mm.

FIGURE R804.2.6.3
ROOF FRAMING MEMBER WEB HOLE PATCH

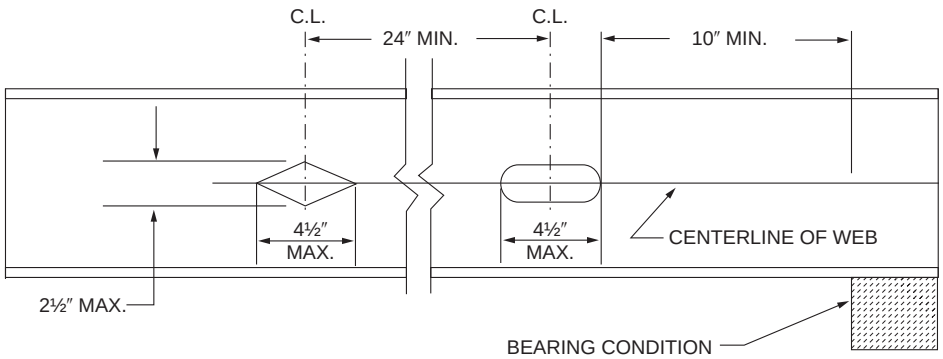

For SI: 1 inch = 25.4 mm.

FIGURE R804.2.6.1
ROOF FRAMING MEMBER WEB HOLES

INTERNATIONAL CODE COUNCIL®
Copyright © 2019 ICC & NYSDOS. ALL RIGHTS RESERVED. Accessed by Lauren Gualdino (lgualdino@briarcliffmanor.org), (-) Order Number #100880972 on May 08, 2020 07:05 AM (PDT) pursuant to License Agreement with ICC & NYSDOS. No further reproduction, no

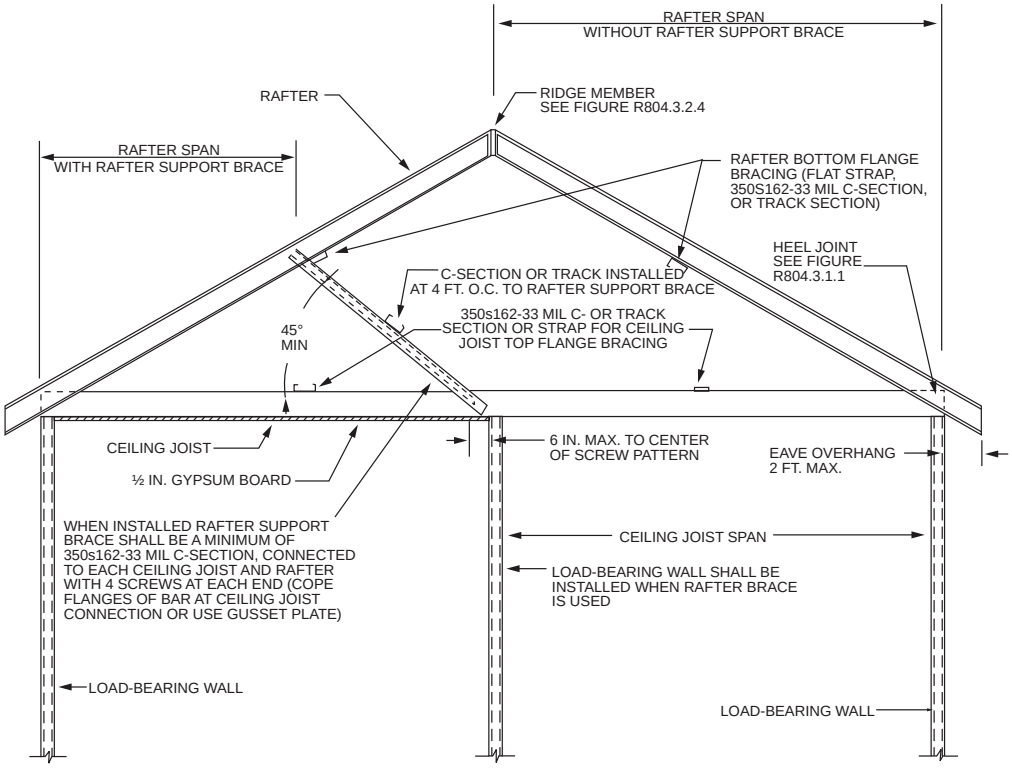

For SI: 1 inch = 25.4 mm, 1 foot = 304.8 mm, 1 mil = 0.0254 mm.

FIGURE R804.3
COLD-FORMED STEEL ROOF CONSTRUCTION

TABLE R804.3
ROOF FRAMING FASTENING SCHEDULE[a, b]

DESCRIPTION OF BUILDING ELEMENTS			NUMBER AND SIZE OF FASTENERS[a]				SPACING OF FASTENERS
Roof sheathing (oriented strand board or plywood) to rafter			No. 8 screws				6″ o.c. on edges and 12″ o.c. at interior supports. 6″ o.c. at gable end truss
Gable end truss to endwall top track			No. 10 screws				12″ o.c.
Rafter to ceiling joist			Minimum No. 10 screws, in accordance with Table R804.3.1.1(3)				Evenly spaced, not less than $^1/_2$″ from all edges.
Ceiling joist or roof truss to top track of bearing wall[b]	Ceiling Joist Spacing (in.)	Roof Span (ft)	Ultimate Design Wind Speed (mph) and Exposure Category				Each ceiling joist or roof truss
			126 B 110 C	<139 B 115 C	126 C	<139 C	
	16	24	2	2	2	3	
		28	2	2	3	3	
		32	2	2	3	4	
		36	2	2	3	4	
		40	2	2	3	4	
	24	24	2	2	3	4	
		28	2	2	4	5	
		32	2	3	4	5	
		36	2	3	4	6	
		40	2	3	5	6	

For SI: 1 inch = 25.4 mm, 1 foot = 304.8 mm, 1 pound per square foot = 0.0479 kPa, 1 mil = 0.0254 mm.

a. Screws are a minimum No. 10 unless noted otherwise.

b. Indicated number of screws shall be applied through the flanges of the truss or ceiling joist or through each leg of a 54 mil clip angle. See Section R804.3.8 for additional requirements to resist uplift forces.

INTERNATIONAL CODE COUNCIL®
Copyright © 2019 ICC & NYSDOS. ALL RIGHTS RESERVED. Accessed by Lauren Gualdino (lgualdino@briarcliffmanor.org), (-) Order Number #100880972 on May 08, 2020 07:05 AM (PDT) pursuant to License Agreement with ICC & NYSDOS. No further reproduction, no

100880972

TABLE R804.3.1.1(1)
CEILING JOIST SPANS
10 PSF LIVE LOAD (NO ATTIC STORAGE)[a, b, c, d]

MEMBER DESIGNATION	ALLOWABLE SPAN (feet - inches)					
	Lateral Support of Top (Compression) Flange					
	Unbraced		Midspan Bracing		Third-point Bracing	
	Ceiling Joist Spacing (inches)					
	16	24	16	24	16	24
350S162-33	9′-6″	8′-6″	11′-10″	9′-10″	11′-10″	10′-4″
350S162-43	10′-4″	9′-3″	12′-10″	11′-3″	12′-10″	11′-3″
350S162-54	11′-1″	9′-11″	13′-9″	12′-0″	13′-9″	12′-0″
350S162-68	12′-2″	10′-10″	14′-9″	12′-10″	14′-9″	12′-10″
550S162-33	10′-11″	9′-10″	15′-7″	12′-0″	16′-10″	12′-0″
550S162-43	11′-8″	10′-6″	16′-10″	14′-10″	18′-4″	16′-0″
550S162-54	12′-7″	11′-3″	18′-0″	16′-2″	19′-4″	17′-2″
550S162-68	13′-7″	12′-1″	19′-3″	17′-3″	20′-6″	18′-5″
800S162-33	—	—	—	—	—	—
800S162-43	13′-1″	11′-9″	18′-9″	16′-9″	21′-2″	18′-7″
800S162-54	13′-11″	12′-6″	20′-1″	18′-1″	21′-5″	20′-5″
800S162-68	14′-11″	13′-4″	21′-4″	19′-2″	22′-9″	21′-9″
1000S162-43	—	—	—	—	—	—
1000S162-54	14′-10″	13′-4″	21′-4″	19′-2″	22′-8″	21′-8″
1000S162-68	15′-10″	14′-3″	22′-9″	20′-5″	24′-3″	23′-3″
1200S162-43	—	—	—	—	—	—
1200S162-54	—	—	—	—	—	—
1200S162-68	16′-8″	14′-11″	23′-11″	21′-7″	25′-5″	24′-5″

For SI: 1 inch = 25.4 mm, 1 foot = 304.8 mm, 1 mil = 0.0254 mm, 1 pound per square foot = 0.0479 kPa.

a. Deflection criterion: *L*/240 for total loads.

b. Ceiling dead load = 5 psf.

c. Minimum Grade 33 ksi steel shall be used for 33 mil and 43 mil thicknesses. Minimum Grade 50 ksi steel shall be used for 54 and 68 mil thicknesses.

d. Listed allowable spans are not applicable for 350S162-33, 550S162-33, 550S162-43 and 800S162-43 continuous joist members.

INTERNATIONAL CODE COUNCIL®
Copyright © 2019 ICC & NYSDOS. ALL RIGHTS RESERVED. Accessed by Lauren Gualdino (lgualdino@briarcliffmanor.org), (-) Order Number #100880972 on May 08, 2020 07:05 AM (PDT) pursuant to License Agreement with ICC & NYSDOS. No further reproduction, no

100880972

TABLE R804.3.1.1(2)
CEILING JOIST SPANS
20 PSF LIVE LOAD (LIMITED ATTIC STORAGE)[a, b, c, d]

MEMBER DESIGNATION	ALLOWABLE SPAN (feet - inches)					
	Lateral Support of Top (Compression) Flange					
	Unbraced		Midspan Bracing		Third-point Bracing	
	Ceiling Joist Spacing (inches)					
	16	24	16	24	16	24
350S162-33	8′-0″	6′-5″	9′-2″	7′-5″	9′-11″	7′-5″
350S162-43	8′-11″	7′-8″	10′-9″	8′-9″	10′-0″	9′-6″
350S162-54	9′-7″	8′-7″	11′-7″	10′-2″	11′-7″	10′-2″
350S162-68	10′-4″	9′-3″	12′-5″	10′-10″	12′-5″	10′-10″
550S162-33	9′-5″	6′-11″	10′-5″	6′-11″	10′-5″	6′-11″
550S162-43	10′-2″	9′-2″	14′-2″	11′-8″	15′-2″	11′-8″
550S162-54	10′-10″	9′-9″	15′-7″	14′-0″	16′-7″	14′-5″
550S162-68	11′-8″	10′-5″	16′-7″	14′-10″	17′-9″	15′-6″
800S162-33	—	—	—	—	—	—
800S162-43	11′-4″	10′-2″	16′-1″	11′-0″	16′-6″	11′-0″
800S162-54	12′-0″	10′-10″	17′-4″	15′-7″	18′-7″	17′-7″
800S162-68	12′-10″	11′-6″	18′-6″	16′-7″	19′-11″	18′-11″
1000S162-43	—	—	—	—	—	—
1000S162-54	12′-10″	11′-7″	18′-5″	16′-6″	19′-8″	18′-8″
1000S162-68	13′-8″	12′-3″	19′-8″	17′-9″	21′-1″	20′-1″
1200S162-43	—	—	—	—	—	—
1200S162-54	—	—	—	—	—	—
1200S162-68	14′-5″	12′-11″	20′-9″	18′-7″	22′-0″	21′-0″

For SI: 1 inch = 25.4 mm, 1 foot = 304.8 mm, 1 mil = 0.0254 mm, 1 pound per square foot = 0.0479 kPa.

a. Deflection criterion: L/240 for total loads.

b. Ceiling deal load = 5 psf.

c. Minimum Grade 33 ksi steel shall be used for 33 mil and 43 mil thicknesses. Minimum Grade 50 ksi steel shall be used for 54 and 68 mil thicknesses.

d. Listed allowable spans are not applicable for 350S162-33, 350S162-43, 550S162-33, 550S162-43 and 800S162-43 continuous joist members.

TABLE R804.3.1.1(3)
NUMBER OF SCREWS REQUIRED FOR CEILING JOIST TO ROOF RAFTER CONNECTION[a]

ROOF SLOPE	NUMBER OF SCREWS																			
	Building width (feet)																			
	24				28				32				36				40			
	Ground snow load (psf)																			
	20	30	50	70	20	30	50	70	20	30	50	70	20	30	50	70	20	30	50	70
3/12	5	6	9	11	5	7	10	13	6	8	11	15	7	8	13	17	8	9	14	19
4/12	4	5	7	9	4	5	8	10	5	6	9	12	5	7	10	13	6	7	11	14
5/12	3	4	6	7	4	4	6	8	4	5	7	10	5	5	8	11	5	6	9	12
6/12	3	3	5	6	3	4	6	7	4	4	6	8	4	5	7	9	4	5	8	10
7/12	3	3	4	6	3	3	5	7	3	4	6	7	4	4	6	8	4	5	7	9
8/12	2	3	4	5	3	3	5	6	3	4	5	7	3	4	6	8	4	4	6	8
9/12	2	3	4	5	3	3	4	6	3	3	5	6	3	4	5	7	3	4	6	8
10/12	2	2	4	5	2	3	4	5	3	3	5	6	3	3	5	7	3	4	6	7
11/12	2	2	3	4	2	3	4	5	3	3	4	6	3	3	5	6	3	4	5	7
12/12	2	2	3	4	2	3	4	5	2	3	4	5	3	3	5	6	3	4	5	7

For SI: 1 inch = 25.4 mm, 1 foot = 304.8 mm, 1 pound per square foot = 0.0479kPa.

a. Screws shall be No. 10.

INTERNATIONAL CODE COUNCIL®
Copyright © 2019 ICC & NYSDOS. ALL RIGHTS RESERVED. Accessed by Lauren Gualdino (lgualdino@briarcliffmanor.org), (-) Order Number #100880972 on May 08, 2020 07:05 AM (PDT) pursuant to License Agreement with ICC & NYSDOS. No further reproduction, no

100880972

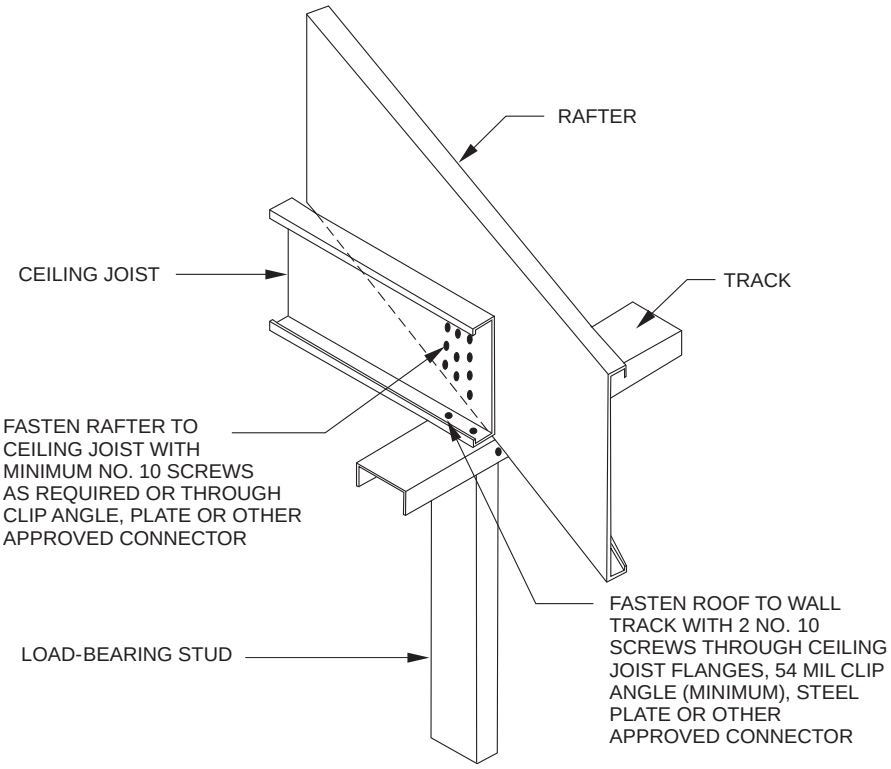

For SI: 1 mil = 0.0254 mm.

FIGURE R804.3.1.1
JOIST TO RAFTER CONNECTION

R804.3.1.2 Ceiling joist bottom flange bracing. The bottom flanges of ceiling joists shall be laterally braced by the application of gypsum board or continuous steel straps installed perpendicular to the joist run in accordance with one of the following:

1. Gypsum board shall be fastened with No. 6 screws in accordance with Section R702.
2. Steel straps with a minimum size of $1^1/_2$ inches by 33 mils (38 mm by 0.84 mm) shall be installed at a maximum spacing of 4 feet (1219 mm). Straps shall be fastened to the bottom flange at each joist with one No. 8 screw and shall be fastened to blocking with two No. 8 screws. Blocking shall be installed between joists at a maximum spacing of 12 feet (3658 mm) measured along a line of continuous strapping (perpendicular to the joist run), and at the termination of all straps.

R804.3.1.3 Ceiling joist top flange bracing. The top flanges of ceiling joists shall be laterally braced as required by Tables R804.3.1.1(1) and R804.3.1.1(2), in accordance with one of the following:

1. Minimum 33-mil (0.84 mm) C-shaped member in accordance with Figure R804.3.1.3(1).
2. Minimum 33-mil (0.84 mm) track section in accordance with Figure R804.3.1.3(1).
3. Minimum 33-mil (0.84 mm) hat section in accordance with Figure R804.3.1.3(1).
4. Minimum 54-mil (1.37 mm) $1^1/_2$-inch (38 mm) cold-rolled channel section in accordance with Figure R804.3.1.3(1).
5. Minimum $1^1/_2$-inch by 33-mil (38 mm by 0.84 mm) continuous steel strap in accordance with Figure R804.3.1.3(2).

Lateral bracing shall be installed perpendicular to the ceiling joists and shall be fastened to the top flange of each joist with one No. 8 screw. Blocking shall be installed between joists in line with bracing at a maximum spacing of 12 feet (3658 mm) measured perpendicular to the joists. Ends of lateral bracing shall be attached to blocking or anchored to a stable building component with two No. 8 screws.

R804.3.1.4 Ceiling joist splicing. Splices in ceiling joists shall be permitted, if ceiling joist splices are supported at interior bearing points and are constructed in accordance with Figure R804.3.1.4. The number of screws on each side of the splice shall be the same as required for the heel joint connection in Table R804.3.1.1(3).

R804.3.2 Roof rafters. Cold-formed steel roof rafters shall be in accordance with this section.

INTERNATIONAL CODE COUNCIL®
Copyright © 2019 ICC & NYSDOS. ALL RIGHTS RESERVED. Accessed by Lauren Gualdino (lgualdino@briarcliffmanor.org), (-) Order Number #100880972 on May 08, 2020 07:05 AM (PDT) pursuant to License Agreement with ICC & NYSDOS. No further reproduction, no

100880972

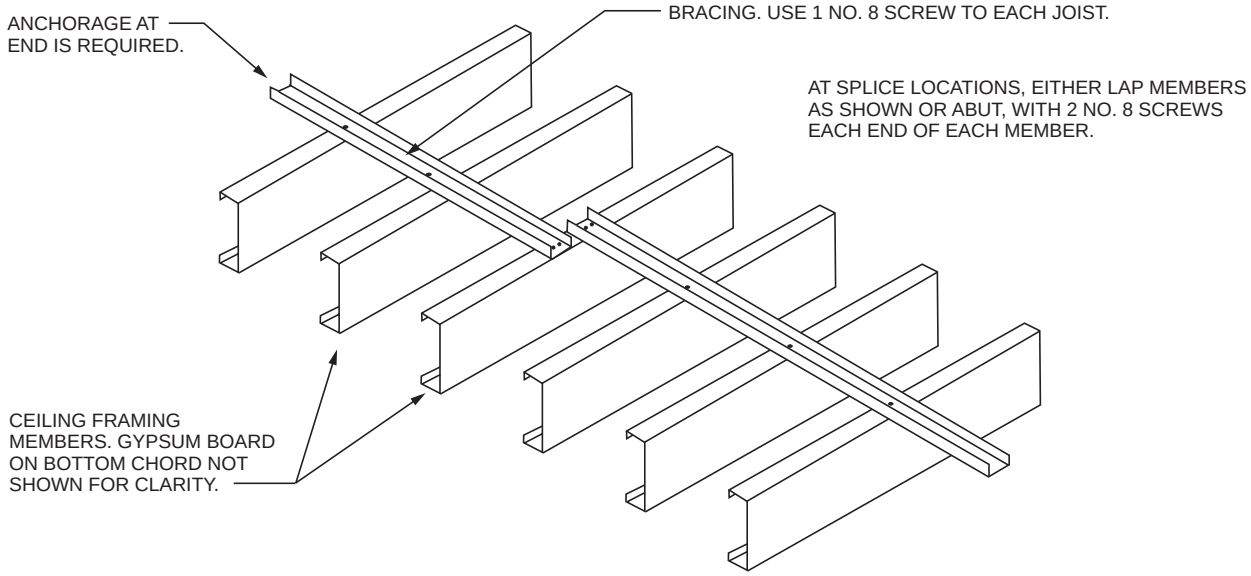

FIGURE R804.3.1.3(1)
CEILING JOIST TOP FLANGE BRACING WITH C-SHAPED, TRACK OR COLD-ROLLED CHANNEL

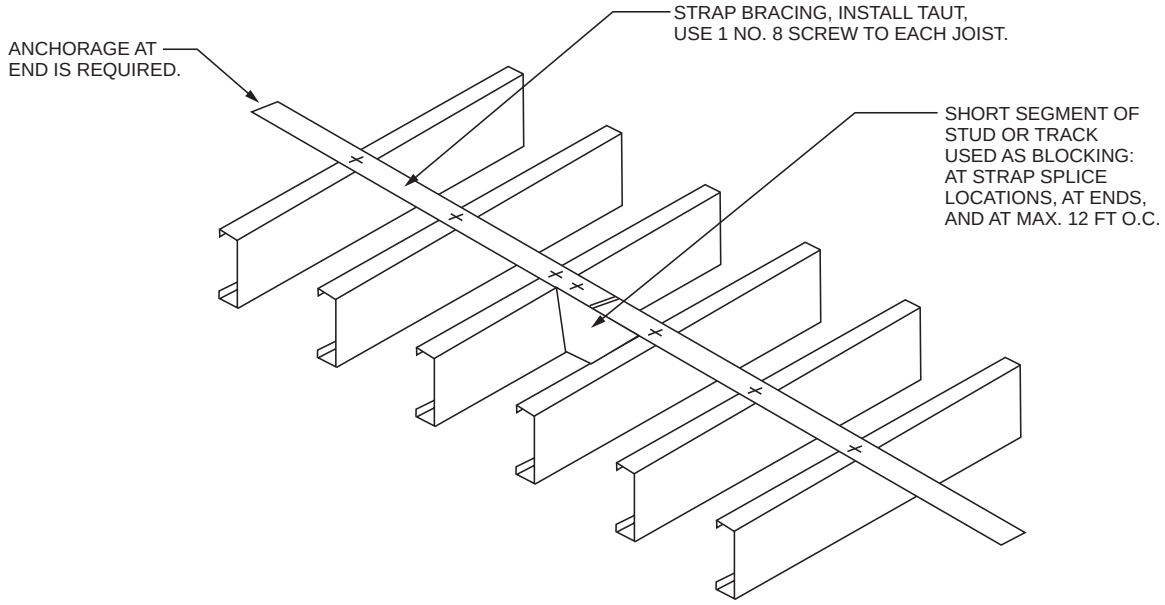

For SI: 1 foot = 304.8 mm.

FIGURE R804.3.1.3(2)
CEILING JOIST TOP FLANGE BRACING WITH CONTINUOUS STEEL STRAP AND BLOCKING

INTERNATIONAL CODE COUNCIL®
Copyright © 2019 ICC & NYSDOS. ALL RIGHTS RESERVED. Accessed by Lauren Gualdino (lgualdino@briarcliffmanor.org), (-) Order Number #100880972 on May 08, 2020 07:05 AM (PDT) pursuant to License Agreement with ICC & NYSDOS. No further reproduction, no

100880972

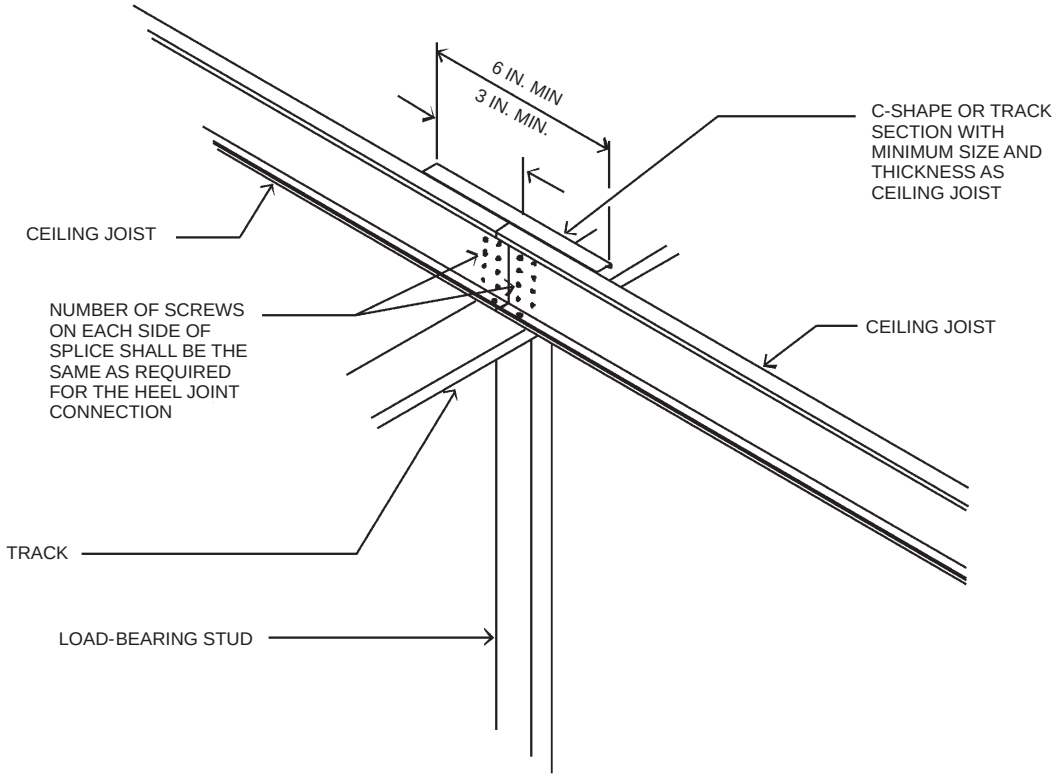

For SI: 1 inch = 25.4 mm.

FIGURE R804.3.1.4
SPLICED CEILING JOISTS

R804.3.2.1 Minimum roof rafter sizes. Roof rafter size and thickness shall be determined in accordance with the limits set forth in Table R804.3.2.1(1) based on the horizontal projection of the roof rafter span. For determination of roof rafter sizes, reduction of roof spans shall be permitted where a roof rafter support brace is installed in accordance with Section R804.3.2.2. The reduced roof rafter span shall be taken as the larger of the distances from the roof rafter support brace to the ridge or to the heel measured horizontally.

For the purpose of determining roof rafter sizes in Table R804.3.2.1(1), ultimate design wind speeds shall be converted to equivalent ground snow loads in accordance with Table R804.3.2.1(2). Roof rafter sizes shall be based on the higher of the ground snow load or the equivalent snow load converted from the ultimate design wind speed.

R804.3.2.1.1 Eave overhang. Eave overhangs shall not exceed 24 inches (610 mm) measured horizontally.

R804.3.2.1.2 Rake overhangs. Rake overhangs shall not exceed 12 inches (305 mm) measured horizontally. Outlookers at gable endwalls shall be installed in accordance with Figure R804.3.2.1.2.

R804.3.2.2 Roof rafter support brace. Where used to reduce roof rafter spans in determining roof rafter sizes, a roof rafter support brace shall meet all of the following conditions:

1. Minimum 350S162-33 C-shaped brace member with maximum length of 8 feet (2438 mm).
2. Minimum brace member slope of 45 degrees (0.785 rad) to the horizontal.
3. Minimum connection of brace to a roof rafter and ceiling joist with four No.10 screws at each end.
4. Maximum 6 inches (152 mm) between brace/ceiling joist connection and load-bearing wall below.
5. Each roof rafter support brace greater than 4 feet (1219 mm) in length, shall be braced with a supplemental brace having a minimum size of 350S162-33 or 350T162-33 such that the maximum unsupported length of the roof rafter support brace is 4 feet (1219 mm). The supplemental brace shall be continuous and shall be connected to each roof rafter support brace using two No. 8 screws.

R804.3.2.3 Roof rafter splice. Roof rafters shall not be spliced.

R804.3.2.4 Roof rafter to ceiling joist and ridge member connection. Roof rafters shall be connected to a parallel ceiling joist to form a continuous tie between exterior walls in accordance with Figure R804.3.1.1 and Table R804.3.1.1(3). Ceiling joists shall be connected to the top track of the load-bearing wall in accordance with

INTERNATIONAL CODE COUNCIL®
Copyright © 2019 ICC & NYSDOS. ALL RIGHTS RESERVED. Accessed by Lauren Gualdino (lgualdino@briarcliffmanor.org), (-) Order Number #100880972 on May 08, 2020 07:05 AM (PDT) pursuant to License Agreement with ICC & NYSDOS. No further reproduction, no

100880972

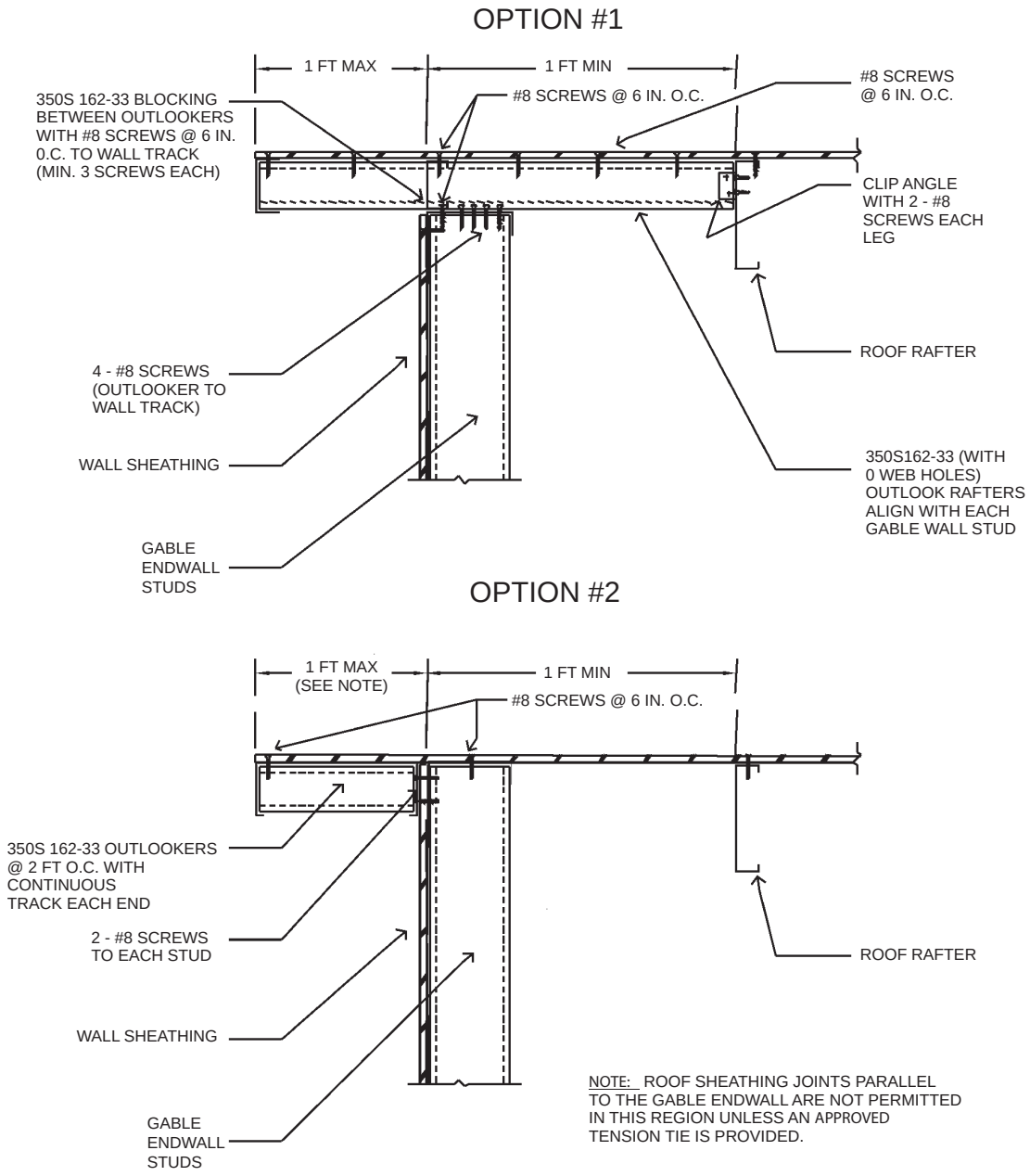

For SI: 1 inch = 25.4 mm, 1 foot = 304.8 mm.

FIGURE R804.3.2.1.2
GABLE ENDWALL OVERHANG DETAILS

INTERNATIONAL CODE COUNCIL®
Copyright © 2019 ICC & NYSDOS. ALL RIGHTS RESERVED. Accessed by Lauren Gualdino (lgualdino@briarcliffmanor.org), (-) Order Number #100880972 on May 08, 2020 07:05 AM (PDT) pursuant to License Agreement with ICC & NYSDOS. No further reproduction, no

100880972

TABLE R804.3.2.1(1)
ROOF RAFTER SPANS[a, b, c, d]

MEMBER DESIGNATION	ALLOWABLE SPAN MEASURED HORIZONTALLY (feet - inches)							
	Ground snow load (psf)							
	20		30		50		70	
	Rafter spacing (inches)							
	16	24	16	24	16	24	16	24
550S162-33	13′-11″	11′-4″	11′-9″	9′-7″	9′-5″	7′-8″	8′-1″	6′-7″
550S162-43	15′-9″	13′-8″	14′-3″	11′-8″	11′-4″	9′-3″	9′-9″	7′-11″
550S162-54	16′-11″	14′-10″	15′-3″	13′-4″	13′-3″	11′-7″	12′-0″	10′-6″
550S162-68	18′-2″	15′-10″	16′-5″	14′-4″	14′-3″	12′-5″	12′-11″	11′-3″
800S162-33	16′-4″	13′-4″	13′-11″	11′-4″	11′-1″	9′-0″	9′-6″	6′-7″
800S162-43	19′-7″	16′-0″	16′-8″	13′-7″	13′-4″	10′-10″	11′-5″	9′-4″
800S162-54	22′-9″	19′-11″	20′-7″	17′-11″	17′-10″	4′-9″	15′-6″	12′-7″
800S162-68	24′-7″	21′-6″	22′-2″	19′-5″	19′-3″	16′-10″	17′-5″	14′-8″
1000S162-43	22′-2″	18′-1″	18′-10″	15′-4″	15′-1″	12′-4″	12′-11″	10′-7″
1000S162-54	27′-1″	23′-8″	24′-6″	20′-9″	20′-5″	16′-8″	17′-6″	14′-3″
1000S162-68	29′-5″	25′-8″	26′-6″	23′-2″	23′-0″	19′-6″	20′-6″	16′-9″
1200S162-54	31′-3″	27′-0″	28′-1″	22′-11″	22′-6″	18′-4″	19′-4″	15′-9″
1200S162-68	34′-0″	29′-8″	30′-8″	26′-9″	26′-6″	21′-7″	22′-8″	18′-6″

For SI: 1 inch = 25.4 mm, 1 foot = 304.8 mm, 1 pound per square foot = 0.0479 kPa.

a. Table provides maximum horizontal rafter spans in feet and inches for slopes between 3:12 and 12:12.

b. Deflection criteria: L/240 for live loads and L/180 for total loads.

c. Roof dead load = 12 psf.

d. Grade 33 ksi steel is permitted to be used for 33 mil and 43 mil thicknesses. Grade 50 ksi steel shall be used for 54 and 68 mil thicknesses.

TABLE R804.3.2.1(2)
ULTIMATE DESIGN WIND SPEED TO EQUIVALENT SNOW LOAD CONVERSION

ULTIMATE WIND SPEED AND EXPOSURE		EQUIVALENT GROUND SNOW LOAD (psf)									
		Roof slope									
Exposure	Wind speed (mph)	3:12	4:12	5:12	6:12	7:12	8:12	9:12	10:12	11:12	12:12
B	115	20	20	20	20	30	20	30	30	30	50
	120	20	20	20	20	30	30	30	30	30	50
	130	20	20	20	20	30	30	30	50	50	50
	<140	20	20	20	20	30	50	50	50	50	50
C	115	20	20	20	20	30	30	30	50	50	50
	120	20	20	20	20	30	30	50	50	50	50
	130	20	20	20	30	30	50	50	50	50	70
	<140	30	30	30	50	50	50	70	70	70	—

For SI: 1 mile per hour = 0.447 m/s, 1 pound per square foot = 0.0479 kPa.

INTERNATIONAL CODE COUNCIL®
Copyright © 2019 ICC & NYSDOS. ALL RIGHTS RESERVED. Accessed by Lauren Gualdino (lgualdino@briarcliffmanor.org), (-) Order Number #100880972 on May 08, 2020 07:05 AM (PDT) pursuant to License Agreement with ICC & NYSDOS. No further reproduction, no

100880972

Table R804.3, either with the required number of No. 10 screws applied through the flange of the ceiling joist or by using a 54-mil (1.37 mm) clip angle with the required number of No.10 screws in each leg. Roof rafters shall be connected to a ridge member with a minimum 2-inch by 2-inch (51 mm by 51 mm) clip angle fastened with No. 10 screws to the ridge member in accordance with Figure R804.3.2.4 and Table R804.3.2.4. The clip angle shall have a steel thickness equivalent to or greater than the roof rafter thickness and shall extend the depth of the roof rafter member to the extent possible. The ridge member shall be fabricated from a C-shaped member and a track section that shall have a minimum size and steel thickness equivalent to or greater than that of adjacent roof rafters and shall be installed in accordance with Figure R804.3.2.4. The ridge member shall extend the full depth of the sloped roof rafter cut.

R804.3.2.5 Roof rafter bottom flange bracing. The bottom flanges of roof rafters shall be continuously braced, at a maximum spacing of 8 feet (2440 mm) as measured parallel to the roof rafters, with one of the following members:

1. Minimum 33-mil (0.84 mm) C-shaped member.
2. Minimum 33-mil (0.84 mm) track section.
3. Minimum $1^1/_2$-inch by 33-mil (38 mm by 0.84 mm) steel strap.

The bracing element shall be fastened to the bottom flange of each roof rafter with one No. 8 screw and shall be fastened to blocking with two No. 8 screws. Blocking shall be installed between roof rafters in-line with the continuous bracing at a maximum spacing of 12 feet (3658 mm) measured perpendicular to the roof rafters. The ends of continuous bracing shall be fastened to blocking or anchored to a stable building component with two No. 8 screws.

R804.3.3 Cutting and notching. Flanges and lips of load-bearing, cold-formed steel roof framing members shall not be cut or notched.

R804.3.4 Headers. Roof-ceiling framing above wall openings shall be supported on headers. The allowable spans for headers in load-bearing walls shall not exceed the values set forth in Section R603.6 and Tables R603.6(1) through R603.6(6).

R804.3.5 Framing of openings in roofs and ceilings. Openings in roofs and ceilings shall be framed with header and trimmer joists. Header joist spans shall not exceed 4 feet (1219 mm) in length. Header and trimmer joists shall be fabricated from joist and track members having a minimum size and thickness equivalent to the adjacent ceiling joists or roof rafters and shall be installed in accordance with Figures R804.3.5(1) and R804.3.5(2). Each header joist shall be connected to trimmer joists with not less than four 2-inch by 2-inch (51 by 51 mm) clip angles. Each clip angle shall be fastened to both the header and trimmer joists with four No. 8 screws, evenly spaced, through each leg of the clip angle. The steel thickness of the clip angles shall be not less than that of the ceiling joist or roof rafter. Each track section for a built-up header or trimmer joist shall extend the full length of the joist (continuous).

R804.3.6 Roof trusses. Cold-formed steel trusses shall be designed and installed in accordance with AISI S240. In the absence of specific bracing requirements, trusses shall be braced in accordance with accepted industry practices, such as the SBCA *Cold-Formed Steel Building Component Safety Information (CFSBCSI) Guide to Good Practice for Handling, Installing & Bracing of Cold-Formed Steel Trusses*. Trusses shall be connected to the top track of the load-bearing wall in accordance with Table R804.3, either with two No. 10 screws applied through the flange of the truss or by using a 54-mil (1.37 mm) clip angle with two No. 10 screws in each leg.

R804.3.7 Ceiling and roof diaphragms. Ceiling and roof diaphragms shall be in accordance with this section.

R804.3.7.1 Ceiling diaphragms. At gable endwalls a ceiling *diaphragm* shall be provided by attaching a minimum $^1/_2$-inch (12.7 mm) gypsum board or a minimum $^3/_8$-inch (9.5 mm) wood structural panel sheathing, that complies with Section R803, to the bottom of ceiling joists or roof trusses and connected to wall framing in accordance with Figures R804.3.7.1(1) and R804.3.7.1(2), unless studs are designed as full height without bracing at the ceiling. Flat blocking shall consist of C-shaped or track section with a minimum thickness of 33 mils (0.84 mm). For a gypsum board sheathed ceiling, the diaphragm length shall be in accordance with Table R804.3.7.1. For a wood structural panel sheathed ceiling, the diaphragm length shall be not less than 12 feet (3658 mm) for building widths less than 36 feet (10 973 mm), or not less than 14 feet (4267 mm) for building widths greater than or equal to 36 feet (10 973 mm).

The ceiling diaphragm shall be secured with screws spaced at a maximum 6 inches (152 mm) o.c. at panel edges and a maximum 12 inches (305 mm) o.c. in the field. The required lengths in Table R804.3.7.1 for gypsum board sheathed ceiling diaphragms shall be permitted to be multiplied by 0.35 if all panel edges are blocked. Multiplying the required lengths in Table R804.3.7.1 for gypsum board sheathed ceiling diaphragms by 0.9 shall be permitted if all panel edges are secured with screws spaced at 4 inches (102 mm) o.c.

R804.3.7.2 Roof diaphragm. A roof *diaphragm* shall be provided by attaching not less than $^3/_8$-inch (9.5 mm) wood structural panel that complies with Section R803 to roof rafters or truss top chords in accordance with Table R804.3. Buildings with 3:1 or larger plan *aspect ratio* and with roof rafter slope (pitch) of 9:12 or larger shall have the roof rafters and ceiling joists blocked in accordance with Figure R804.3.7.2.

R804.3.8 Roof tie-down. Roof assemblies shall be connected to walls below in accordance with Table R804.3. A continuous load path shall be provided to transfer uplift loads to the foundation.

INTERNATIONAL CODE COUNCIL®
Copyright © 2019 ICC & NYSDOS. ALL RIGHTS RESERVED. Accessed by Lauren Gualdino (lgualdino@briarcliffmanor.org), (-) Order Number #100880972 on May 08, 2020 07:05 AM (PDT) pursuant to License Agreement with ICC & NYSDOS. No further reproduction, no

100880972

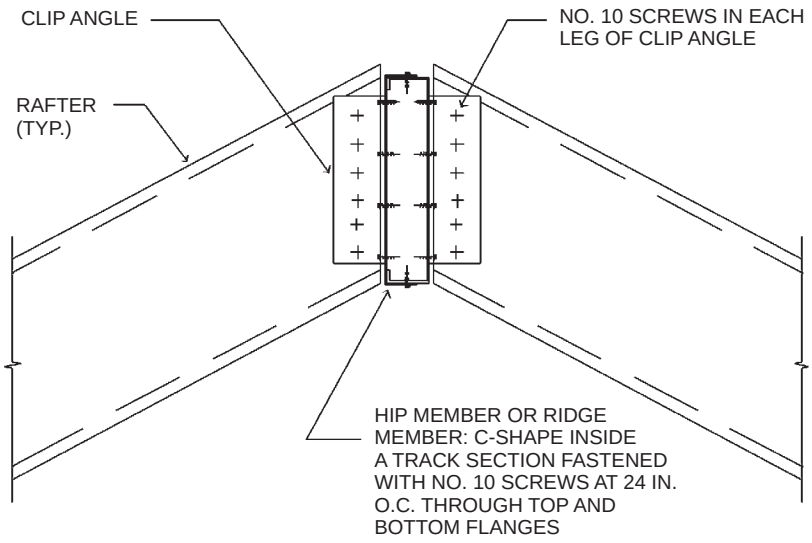

For SI: 1 inch = 25.4 mm.

FIGURE R804.3.2.4
RIDGE MEMBER CONNECTION

TABLE R804.3.2.4
SCREWS REQUIRED AT EACH LEG OF CLIP ANGLE FOR ROOF RAFTER TO RIDGE MEMBER CONNECTION[a]

BUILDING WIDTH (feet)	NUMBER OF SCREWS			
	Ground snow load (psf)			
	0 to 20	21 to 30	31 to 50	51 to 70
24	2	2	3	4
28	2	3	4	5
32	2	3	4	5
36	3	3	5	6
40	3	4	5	7

For SI: 1 inch = 25.4 mm, 1 foot = 304.8 mm, 1 pound per square foot = 0.0479 kPa.
a. Screws shall be No. 10 minimum.

INTERNATIONAL CODE COUNCIL®
Copyright © 2019 ICC & NYSDOS. ALL RIGHTS RESERVED. Accessed by Lauren Gualdino (lgualdino@briarcliffmanor.org), (-) Order Number #100880972 on May 08, 2020 07:05 AM (PDT) pursuant to License Agreement with ICC & NYSDOS. No further reproduction, no

100880972

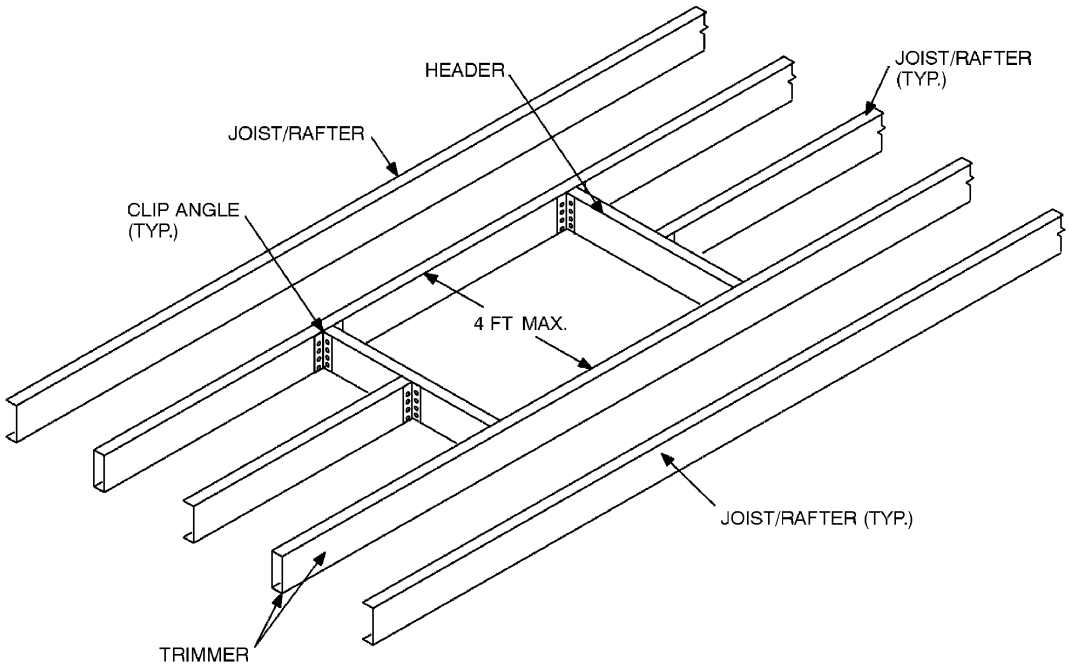

For SI: 1 foot = 304.8 mm.

FIGURE R804.3.5(1)
ROOF OR CEILING OPENING

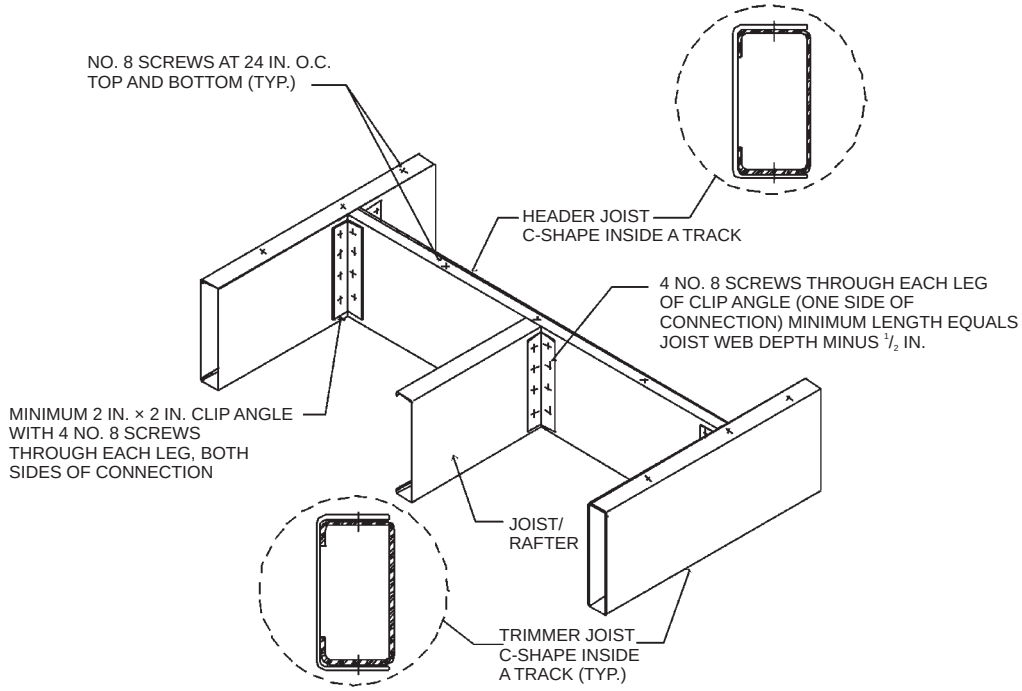

For SI: 1 inch = 25.4 mm.

FIGURE R804.3.5(2)
HEADER TO TRIMMER CONNECTION

INTERNATIONAL CODE COUNCIL®
Copyright © 2019 ICC & NYSDOS. ALL RIGHTS RESERVED. Accessed by Lauren Gualdino (lgualdino@briarcliffmanor.org), (-) Order Number #100880972 on May 08, 2020 07:05 AM (PDT) pursuant to License Agreement with ICC & NYSDOS. No further reproduction, no

100880972

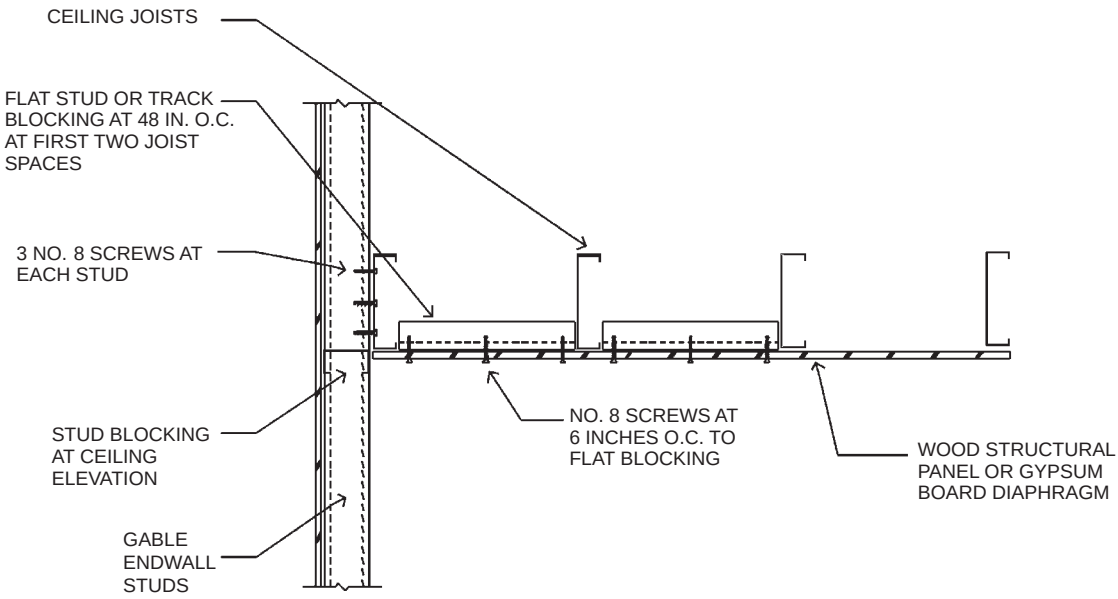

For SI: 1 inch = 25.4 mm.

FIGURE R804.3.7.1(1)
CEILING DIAPHRAGM TO GABLE ENDWALL DETAIL

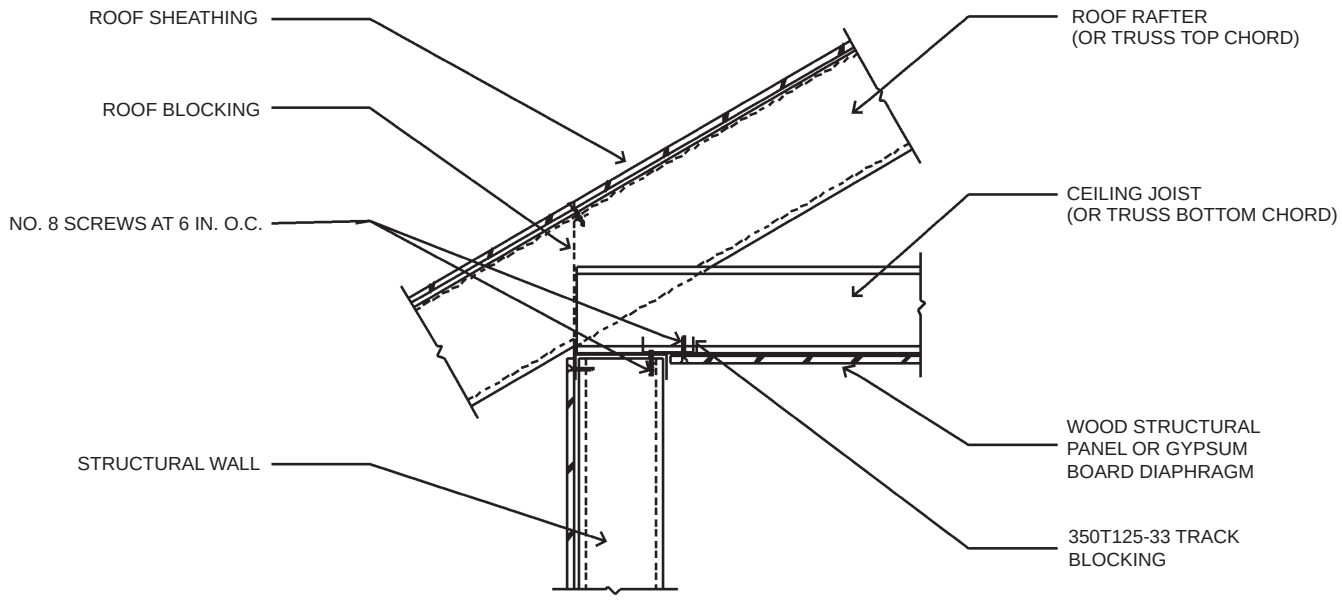

For SI: 1 inch = 25.4 mm.

FIGURE R804.3.7.1(2)
CEILING DIAPHRAGM TO SIDEWALL DETAIL

INTERNATIONAL CODE COUNCIL®
Copyright © 2019 ICC & NYSDOS. ALL RIGHTS RESERVED. Accessed by Lauren Gualdino (lgualdino@briarcliffmanor.org), (-) Order Number #100880972 on May 08, 2020 07:05 AM (PDT) pursuant to License Agreement with ICC & NYSDOS. No further reproduction, no

100880972

TABLE R804.3.7.1
REQUIRED LENGTHS FOR CEILING DIAPHRAGMS AT GABLE ENDWALLS
GYPSUM BOARD SHEATHED, CEILING HEIGHT = 8 FEET[a, b, c, d, e, f, g]

EXPOSURE CATEGORY		ULTIMATE DESIGN WIND SPEED (mph)					
B		115	120	130	< 140	—	—
C		—	—	115	120	130	< 140
Roof pitch	Building endwall width (feet)	Minimum diaphragm length (feet)					
3:12 to 6:12	24 - 28	16	18	24	26	30	34
	> 28 - 32	20	20	26	32	34	40
	> 32 - 36	24	26	30	36	42	46
	> 36 - 40	26	28	36	40	48	52
6:12 to 9:12	> 24 - 28	20	20	26	30	34	38
	> 28 - 32	24	26	30	36	42	46
	> 32 - 36	26	30	38	42	48	54
	> 36 - 40	30	34	40	50	56	62
9:12 to 12:12	> 24 - 28	22	24	30	34	38	44
	> 28 - 32	26	28	36	40	46	52
	> 32 - 36	30	32	40	48	54	62
	> 36 - 40	36	38	48	56	64	72

For SI: 1 inch = 25.4 mm, 1 pound per square foot = 0.0479 kPa, 1 mile per hour = 0.447 m/s, 1 foot = 304.8 mm, 1 mil = 0.0254 mm.

a. Ceiling diaphragm is composed of $^1/_2$-inch gypsum board (min. thickness) secured with screws spaced at 6 inches o.c. at panel edges and 12 inches o.c. infield. Use No. 8 screws (min.) where framing members have a designation thickness of 54 mils or less and No. 10 screws (min.) where framing members have a designation thickness greater than 54 mils.

b. Maximum aspect ratio (length/width) of diaphragms is 2:1.

c. Building width is in the direction of horizontal framing members supported by the wall studs.

d. Required diaphragm lengths are to be provided at each end of the structure.

e. Multiplying required diaphragm lengths by 0.35 is permitted if all panel edges are blocked.

f. Multiplying required diaphragm lengths by 0.9 is permitted if all panel edges are secured with screws spaced at 4 inches o.c.

g. To determine the minimum diaphragm length for buildings with ceiling heights of 9 feet or 10 feet values in this table shall be multiplied by 1.15.

INTERNATIONAL CODE COUNCIL®
Copyright © 2019 ICC & NYSDOS. ALL RIGHTS RESERVED. Accessed by Lauren Gualdino (lgualdino@briarcliffmanor.org), (-) Order Number #100880972 on May 08, 2020 07:05 AM (PDT) pursuant to License Agreement with ICC & NYSDOS. No further reproduction, no

100880972

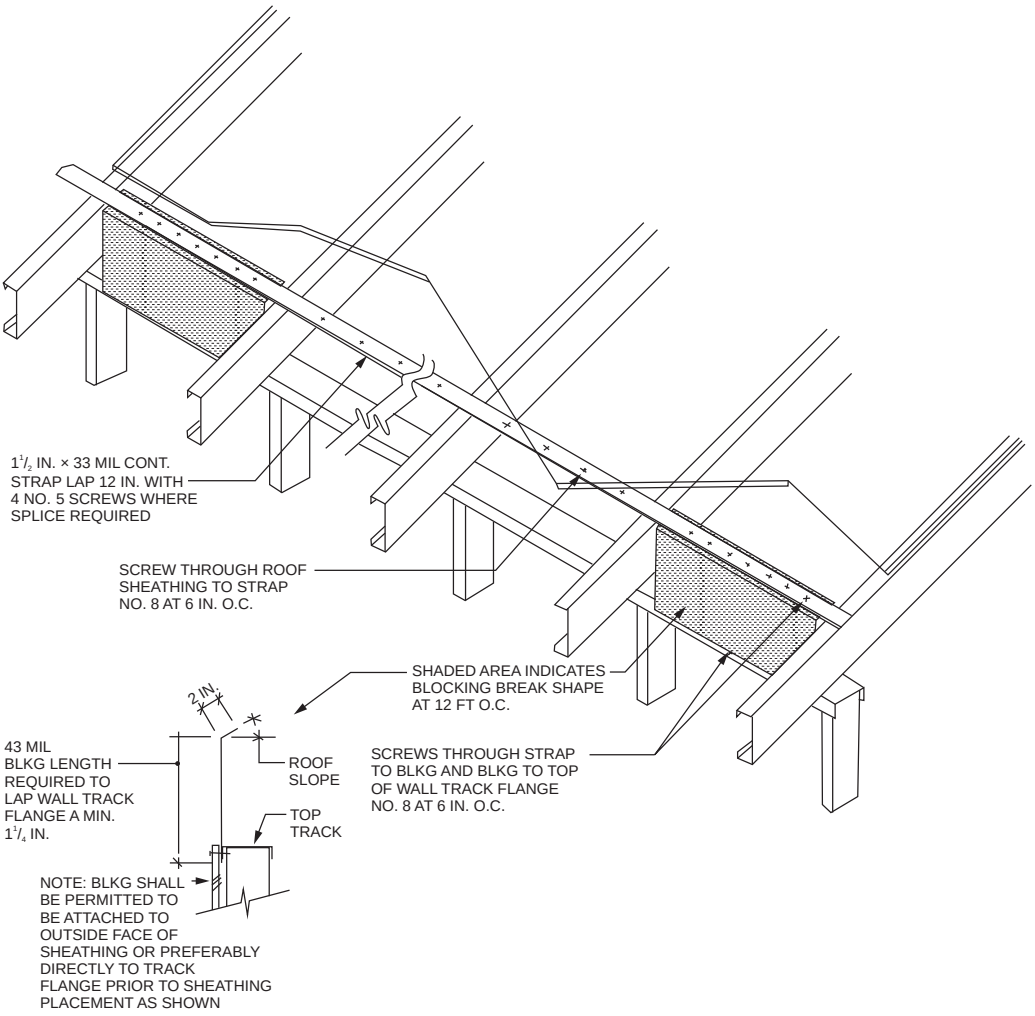

For SI: 1 mil = 0.0254 mm, 1 inch = 25.4 mm.

FIGURE R804.3.7.2
ROOF BLOCKING DETAIL

INTERNATIONAL CODE COUNCIL®
Copyright © 2019 ICC & NYSDOS. ALL RIGHTS RESERVED. Accessed by Lauren Gualdino (lgualdino@briarcliffmanor.org), (-) Order Number #100880972 on May 08, 2020 07:05 AM (PDT) pursuant to License Agreement with ICC & NYSDOS. No further reproduction, no

100880972

SECTION R805
CEILING FINISHES

R805.1 Ceiling installation. Ceilings shall be installed in accordance with the requirements for interior wall finishes as provided in Section R702.

SECTION R806
ROOF VENTILATION

R806.1 Ventilation required. Enclosed attics and enclosed rafter spaces formed where ceilings are applied directly to the underside of roof rafters shall have cross ventilation for each separate space by ventilating openings protected against the entrance of rain or snow. Ventilation openings shall have a least dimension of $^1/_{16}$ inch (1.6 mm) minimum and $^1/_4$ inch (6.4 mm) maximum. Ventilation openings having a least dimension larger than $^1/_4$ inch (6.4 mm) shall be provided with corrosion-resistant wire cloth screening, hardware cloth, perforated vinyl or similar material with openings having a least dimension of $^1/_{16}$ inch (1.6 mm) minimum and $^1/_4$ inch (6.4 mm) maximum. Openings in roof framing members shall conform to the requirements of Section R802.7. Required ventilation openings shall open directly to the outside air and shall be protected to prevent the entry of birds, rodents, snakes and other similar creatures.

R806.2 Minimum vent area. The minimum net free ventilating area shall be $^1/_{150}$ of the area of the vented space.

Exception: The minimum net free ventilation area shall be $^1/_{300}$ of the vented space provided both of the following conditions are met:

1. In Climate Zones 6, 7 and 8, a Class I or II vapor retarder is installed on the warm-in-winter side of the ceiling.
2. Not less than 40 percent and not more than 50 percent of the required ventilating area is provided by ventilators located in the upper portion of the attic or rafter space. Upper ventilators shall be located not more than 3 feet (914 mm) below the ridge or highest point of the space, measured vertically. The balance of the required ventilation provided shall be located in the bottom one-third of the *attic* space. Where the location of wall or roof framing members conflicts with the installation of upper ventilators, installation more than 3 feet (914 mm) below the ridge or highest point of the space shall be permitted.

R806.3 Vent and insulation clearance. Where eave or cornice vents are installed, blocking, bridging and insulation shall not block the free flow of air. Not less than a 1-inch (25 mm) space shall be provided between the insulation and the roof sheathing and at the location of the vent.

R806.4 Installation and weather protection. Ventilators shall be installed in accordance with manufacturer's instructions. Installation of ventilators in roof systems shall be in accordance with the requirements of Section R903. Installation of ventilators in wall systems shall be in accordance with the requirements of Section R703.1.

R806.5 Unvented attic and unvented enclosed rafter assemblies. Unvented *attics* and unvented enclosed roof framing assemblies created by ceilings that are applied directly to the underside of the roof framing members and structural roof sheathing applied directly to the top of the roof framing members/rafters, shall be permitted where all the following conditions are met:

1. The unvented *attic* space is completely within the *building thermal envelope*.
2. Interior Class I vapor retarders are not installed on the ceiling side (*attic* floor) of the unvented *attic* assembly or on the ceiling side of the unvented enclosed roof framing assembly.
3. Where wood shingles or shakes are used, a minimum $^1/_4$-inch (6.4 mm) vented airspace separates the shingles or shakes and the roofing underlayment above the structural sheathing.
4. In Climate Zones 5, 6, 7 and 8, any *air-impermeable insulation* shall be a Class II vapor retarder, or shall have a Class II vapor retarder coating or covering in direct contact with the underside of the insulation.
5. Insulation shall comply with Item 5.3 and either Item 5.1 or 5.2:
   - 5.1. Item 5.1.1, 5.1.2, 5.1.3 or 5.1.4 shall be met, depending on the air permeability of the insulation directly under the structural roof sheathing.
     - 5.1.1. Where only *air-impermeable insulation* is provided, it shall be applied in direct contact with the underside of the structural roof sheathing.
     - 5.1.2. Where *air-permeable insulation* is installed directly below the structural sheathing, rigid board or sheet insulation shall be installed directly above the structural roof sheathing in accordance with the *R*-values in Table R806.5 for condensation control.
     - 5.1.3. Where both *air-impermeable* and *air-permeable insulation* are provided, the *air-impermeable insulation* shall be applied in direct contact with the underside of the structural roof sheathing in accordance with Item 5.1.1 and shall be in accordance with the *R*-values in Table R806.5 for condensation control. The *air-permeable insulation* shall be installed directly under the *air-impermeable insulation*.
     - 5.1.4. Alternatively, sufficient rigid board or sheet insulation shall be installed directly above the structural roof sheathing to maintain the monthly average temperature of the underside of the structural roof sheathing above 45°F (7°C). For calculation purposes, an interior air temperature of 68°F (20°C) is assumed and the exterior air tempera-

INTERNATIONAL CODE COUNCIL®
Copyright © 2019 ICC & NYSDOS. ALL RIGHTS RESERVED. Accessed by Lauren Gualdino (lgualdino@briarcliffmanor.org), (-) Order Number #100880972 on May 08, 2020 07:05 AM (PDT) pursuant to License Agreement with ICC & NYSDOS. No further reproduction, no

100880972

ture is assumed to be the monthly average outside air temperature of the three coldest months.

5.2. In Climate Zones 1, 2 and 3, air-permeable insulation installed in unvented *attics* shall meet the following requirements:

5.2.1. An approved *vapor diffusion port* shall be installed not more than 12 inches (305 mm) from the highest point of the roof, measured vertically from the highest point of the roof to the lower edge of the port.

5.2.2. The port area shall be greater than or equal to 1:600 of the ceiling area. Where there are multiple ports in the attic, the sum of the port areas shall be greater than or equal to the area requirement.

5.2.3. The vapor-permeable membrane in the *vapor diffusion port* shall have a vapor permeance rating of greater than or equal to 20 perms when tested in accordance with Procedure A of ASTM E96.

5.2.4. The *vapor diffusion port* shall serve as an air barrier between the *attic* and the exterior of the building.

5.2.5. The *vapor diffusion port* shall protect the *attic* against the entrance of rain and snow.

5.2.6. Framing members and blocking shall not block the free flow of water vapor to the port. Not less than a 2-inch (51 mm) space shall be provided between any blocking and the roof sheathing. Air-permeable insulation shall be permitted within that space.

5.2.7. The roof slope shall be greater than or equal to 3:12 (vertical/horizontal).

5.2.8. Where only air-permeable insulation is used, it shall be installed directly below the structural roof sheathing.

5.2.9. *Air-impermeable insulation*, if any, shall be directly above or below the structural roof sheathing and is not required to meet the *R*-value in Table 806.5. Where directly below the structural roof sheathing, there shall be no space between the *air-impermeable insulation* and air-permeable insulation.

5.2.10. The air shall be supplied at a flow rate greater than or equal to 50 CFM (23.6 L/s) per 1,000 square feet (93 m^2) of ceiling. The air shall be supplied from ductwork providing supply air to the occupiable space when the conditioning system is operating. Alternatively, the air shall be supplied by a supply fan when the conditioning system is operating.

5.3. Where preformed insulation board is used as the air-impermeable insulation layer, it shall be sealed at the perimeter of each individual sheet interior surface to form a continuous layer.

TABLE R806.5
INSULATION FOR CONDENSATION CONTROL

CLIMATE ZONE	MINIMUM RIGID BOARD ON AIR-IMPERMEABLE INSULATION *R*-VALUE[a, b]
2B and 3B tile roof only	0 (none required)
1, 2A, 2B, 3A, 3B, 3C	R-5
4C	R-10
4A, 4B	R-15
5	R-20
6	R-25
7	R-30
8	R-35

a. Contributes to but does not supersede the requirements in Section N1102.

b. Alternatively, sufficient continuous insulation shall be installed directly above the structural roof sheathing to maintain the monthly average temperature of the underside of the structural roof sheathing above 45°F (7°C). For calculation purposes, an interior air temperature of 68°F (20°C) is assumed and the exterior air temperature is assumed to be the monthly average outside air temperature of the three coldest months.

SECTION R807
ATTIC ACCESS

R807.1 Attic access. Buildings with combustible ceiling or roof construction shall have an *attic* access opening to *attic* areas that have a vertical height of 30 inches (762 mm) or greater over an area of not less than 30 square feet (2.8 m^2). The vertical height shall be measured from the top of the ceiling framing members to the underside of the roof framing members.

The rough-framed opening shall be not less than 22 inches by 30 inches (559 mm by 762 mm) and shall be located in a hallway or other location with *ready access*. Where located in a wall, the opening shall be not less than 22 inches wide by 30 inches high (559 mm wide by 762 mm high). Where the access is located in a ceiling, minimum unobstructed headroom in the *attic* space shall be 30 inches (762 mm) at some point above the access measured vertically from the bottom of ceiling framing members. See Section M1305.1.3 for access requirements where mechanical *equipment* is located in *attics*.

INTERNATIONAL CODE COUNCIL®
Copyright © 2019 ICC & NYSDOS. ALL RIGHTS RESERVED. Accessed by Lauren Gualdino (lgualdino@briarcliffmanor.org), (-) Order Number #100880972 on May 08, 2020 07:05 AM (PDT) pursuant to License Agreement with ICC & NYSDOS. No further reproduction, no

100880972

INTERNATIONAL CODE COUNCIL®
Copyright © 2019 ICC & NYSDOS. ALL RIGHTS RESERVED. Accessed by Lauren Gualdino (lgualdino@briarcliffmanor.org), (-) Order Number #100880972 on May 08, 2020 07:05 AM (PDT) pursuant to License Agreement with ICC & NYSDOS. No further reproduction, no

100880972

CHAPTER 9

ROOF ASSEMBLIES

SECTION R901
GENERAL

R901.1 Scope. The provisions of this chapter shall govern the design, materials, construction and quality of roof assemblies.

SECTION R902
FIRE CLASSIFICATION

R902.1 Roofing covering materials. Roofs shall be covered with materials as set forth in Sections R904 and R905. Class A, B or C roofing shall be installed in jurisdictions designated by law as requiring their use or where the edge of the roof is less than 3 feet (914 mm) from a lot line. Class A, B and C roofing required by this section to be listed shall be tested in accordance with UL 790 or ASTM E108.

Exceptions:

1. Class A roof assemblies include those with coverings of brick, masonry and exposed concrete roof deck.
2. Class A roof assemblies include ferrous or copper shingles or sheets, metal sheets and shingles, clay or concrete roof tile, or slate installed on noncombustible decks.
3. Class A roof assemblies include minimum 16 ounces per square foot copper sheets installed over combustible decks.
4. Class A roof assemblies include slate installed over *underlayment* over combustible decks.

R902.2 Fire-retardant-treated shingles and shakes. Fire-retardant-treated wood shakes and shingles shall be treated by impregnation with chemicals by the full-cell vacuum-pressure process, in accordance with AWPA C1. Each bundle shall be marked to identify the manufactured unit and the manufacturer, and shall be *labeled* to identify the classification of the material in accordance with the testing required in Section R902.1, the treating company and the quality control agency.

R902.3 Building-integrated photovoltaic product. Building-integrated photovoltaic products installed as the roof covering shall be tested, listed and labeled for fire classification in accordance with Section R902.1.

R902.4 Rooftop-mounted photovoltaic panel systems. Rooftop-mounted *photovoltaic panel systems* installed on or above the roof covering shall be tested, listed and identified with a fire classification in accordance with UL 1703 and UL 2703. Class A, B or C *photovoltaic panel systems* and modules shall be installed in jurisdictions designated by law as requiring their use or where the edge of the roof is less than 3 feet (914 mm) from a lot line.

SECTION R903
WEATHER PROTECTION

R903.1 General. Roof decks shall be covered with *approved* roof coverings secured to the building or structure in accordance with the provisions of this chapter. Roof assemblies shall be designed and installed in accordance with this code and the *approved* manufacturer's instructions such that the *roof assembly* shall serve to protect the building or structure.

R903.2 Flashing. Flashings shall be installed in a manner that prevents moisture from entering the wall and roof through joints in copings, through moisture permeable materials and at intersections with parapet walls and other penetrations through the roof plane.

R903.2.1 Locations. Flashings shall be installed at wall and roof intersections, wherever there is a change in roof slope or direction and around roof openings. A flashing shall be installed to divert the water away from where the eave of a sloped roof intersects a vertical sidewall. Where flashing is of metal, the metal shall be corrosion resistant with a thickness of not less than 0.019 inch (0.5 mm) (No. 26 galvanized sheet).

R903.2.2 Crickets and saddles. A cricket or saddle shall be installed on the ridge side of any chimney or penetration more than 30 inches (762 mm) wide as measured perpendicular to the slope. Cricket or saddle coverings shall be sheet metal or of the same material as the roof covering.

Exception: Unit skylights installed in accordance with Section R308.6 and flashed in accordance with the manufacturer's instructions shall be permitted to be installed without a cricket or saddle.

R903.3 Coping. Parapet walls shall be properly coped with noncombustible, weatherproof materials of a width not less than the thickness of the parapet wall.

R903.4 Roof drainage. Unless roofs are sloped to drain over roof edges, roof drains shall be installed at each low point of the roof.

R903.4.1 Secondary (emergency overflow) drains or scuppers. Where roof drains are required, secondary emergency overflow roof drains or scuppers shall be provided where the roof perimeter construction extends above the roof in such a manner that water will be entrapped if the primary drains allow buildup for any reason. Overflow drains having the same size as the roof drains shall be installed with the inlet flow line located 2 inches (51 mm) above the low point of the roof, or overflow scuppers having three times the size of the roof drains and having a minimum opening height of 4 inches (102 mm) shall be installed in the adjacent

INTERNATIONAL CODE COUNCIL®
Copyright © 2019 ICC & NYSDOS. ALL RIGHTS RESERVED. Accessed by Lauren Gualdino (lgualdino@briarcliffmanor.org), (-) Order Number #100880972 on May 08, 2020 07:05 AM (PDT) pursuant to License Agreement with ICC & NYSDOS. No further reproduction, no

100880972

parapet walls with the inlet flow located 2 inches (51 mm) above the low point of the roof served. The installation and sizing of overflow drains, leaders and conductors shall comply with Sections 1106 and 1108 of the *Plumbing Code of New York State,* as applicable.

Overflow drains shall discharge to an *approved* location and shall not be connected to roof drain lines.

SECTION R904
MATERIALS

R904.1 Scope. The requirements set forth in this section shall apply to the application of roof covering materials specified herein. Roof assemblies shall be applied in accordance with this chapter and the manufacturer's installation instructions. Installation of roof assemblies shall comply with the applicable provisions of Section R905.

R904.2 Compatibility of materials. Roof assemblies shall be of materials that are compatible with each other and with the building or structure to which the materials are applied.

R904.3 Material specifications and physical characteristics. Roof covering materials shall conform to the applicable standards listed in this chapter.

R904.4 Product identification. Roof covering materials shall be delivered in packages bearing the manufacturer's identifying marks and *approved* testing agency *labels* required. Bulk shipments of materials shall be accompanied by the same information issued in the form of a certificate or on a bill of lading by the manufacturer.

SECTION R905
REQUIREMENTS FOR ROOF COVERINGS

R905.1 Roof covering application. Roof coverings shall be applied in accordance with the applicable provisions of this section and the manufacturer's installation instructions. Unless otherwise specified in this section, roof coverings shall be installed to resist the component and cladding loads specified in Table R301.2(2), adjusted for height and exposure in accordance with Table R301.2(3).

R905.1.1 Underlayment. *Underlayment* for asphalt shingles, clay and concrete tile, metal roof shingles, mineral-surfaced roll roofing, slate and slate-type shingles, wood shingles, wood shakes, metal roof panels and *photovoltaic shingles* shall conform to the applicable standards listed in this chapter. *Underlayment* materials required to comply with ASTM D226, D1970, D4869 and D6757 shall bear a label indicating compliance to the standard designation and, if applicable, type classification indicated in Table R905.1.1(1). *Underlayment* shall be applied in accordance with Table R905.1.1(2). *Underlayment* shall be attached in accordance with Table R905.1.1(3).

Exceptions:

1. As an alternative, self-adhering polymer-modified bitumen *underlayment* complying with ASTM D1970 installed in accordance with both the *underlayment* manufacturer's and roof covering manufacturer's instructions for the deck material, roof ventilation configuration and climate exposure for the roof covering to be installed, shall be permitted.
2. As an alternative, a minimum 4-inch-wide (102 mm) strip of self-adhering polymer-modified bitumen membrane complying with ASTM D1970, installed in accordance with the *manufacturer's installation instructions* for the deck material, shall be applied over all joints in the roof decking. An *approved underlayment* for the applicable roof covering for maximum ultimate design wind speeds, V_{ult}, less than 140 miles per hour shall be applied over the entire roof over the 4-inch-wide (102 mm) membrane strips.
3. As an alternative, two layers of *underlayment* complying with ASTM D226 Type II or ASTM D4869 Type III or Type IV shall be permitted to be installed as follows in 3.1–3.4:
    - 3.1. Apply a 19-inch-wide (483 mm) strip of *underlayment* parallel with the eave. Starting at the eave, apply 36-inch-wide (914 mm) strips of *underlayment* felt, overlapping successive sheets 19 inches (483 mm). End laps shall be 4 inches (102 mm) and shall be offset by 6 feet (1829 mm).
    - 3.2. The *underlayment* shall be attached with corrosion-resistant fasteners in a grid pattern of 12 inches (305 mm) between side laps with a 6-inch (152 mm) spacing at side and end laps.
    - 3.3. *Underlayment* shall be attached using metal or plastic cap nails with a nominal cap diameter of not less than 1 inch (25 mm). Metal caps shall have a thickness of not less than 32-gage sheet metal. Power-driven metal caps shall have a thickness of not less than 0.010 inch (0.25 mm). Minimum thickness of the outside edge of plastic caps shall be 0.035 inch (0.89 mm).
    - 3.4. The cap nail shank shall be not less than 0.083 inch (2.11 mm) for ring shank cap nails and 0.091 inch (2.31 mm) for smooth shank cap nails. Cap nail shank shall have a length sufficient to penetrate through the roof sheathing or not less than $^3/_4$ inch (19 mm) into the roof sheathing.

R905.1.2 Ice barriers. In areas where there has been a history of ice forming along the eaves causing a backup of water as designated in Table R301.2(1), an ice barrier shall be installed for asphalt shingles, metal roof shingles, mineral-surfaced roll roofing, slate and slate-type shingles, wood shingles and wood shakes. The ice barrier shall consist of not fewer than two layers of *underlayment* cemented together, or a self-adhering polymer-modified bitumen

INTERNATIONAL CODE COUNCIL®
Copyright © 2019 ICC & NYSDOS. ALL RIGHTS RESERVED. Accessed by Lauren Gualdino (lgualdino@briarcliffmanor.org), (-) Order Number #100880972 on May 08, 2020 07:05 AM (PDT) pursuant to License Agreement with ICC & NYSDOS. No further reproduction, no

100880972

TABLE R905.1.1(1)
UNDERLAYMENT TYPES

ROOF COVERING	SECTION	MAXIMUM ULTIMATE DESIGN WIND SPEED, V_{ult} < 140 MPH	MAXIMUM ULTIMATE DESIGN WIND SPEED, V_{ult} ≥ 140 MPH
Asphalt shingles	R905.2	ASTM D226 Type I ASTM D4869 Type I, II, III or IV ASTM D6757	ASTM D226 Type II ASTM D4869 Type III or Type IV ASTM D6757
Clay and concrete tile	R905.3	ASTM D226 Type II ASTM D2626 Type I ASTM D6380 Class M mineral-surfaced roll roofing	ASTM D226 Type II ASTM D2626 Type I ASTM D6380 Class M mineral-surfaced roll roofing
Metal roof shingles	R905.4	ASTM D226 Type I or II ASTM D4869 Type I, II, III or IV	ASTM D226 Type II ASTM D4869 Type III or Type IV
Mineral-surfaced roll roofing	R905.5	ASTM D226 Type I or II ASTM D4869 Type I, II, III or IV	ASTM D226 Type II ASTM D4869 Type III or Type IV
Slate and slate-type shingles	R905.6	ASTM D226 Type I ASTM D4869 Type I, II, III or IV	ASTM D226 Type II ASTM D4869 Type III or Type IV
Wood shingles	R905.7	ASTM D226 Type I or II ASTM D4869 Type I, II, III or IV	ASTM D226 Type II ASTM D4869 Type III or Type IV
Wood shakes	R905.8	ASTM D226 Type I or II ASTM D4869 Type I, II, III or IV	ASTM D226 Type II ASTM D4869 Type III or Type IV
Metal panels	R905.10	Manufacturer's instructions	ASTM D226 Type II ASTM D4869 Type III or Type IV
Photovoltaic shingles	R905.16	ASTM D4869 Type I, II, III or IV ASTM D6757	ASTM D4869 Type III or Type IV ASTM D6757

For SI: 1 mile per hour = 0.447 m/s.

TABLE R905.1.1(2)
UNDERLAYMENT APPLICATION

ROOF COVERING	SECTION	MAXIMUM ULTIMATE DESIGN WIND SPEED, V_{ult} < 140 MPH	MAXIMUM ULTIMATE DESIGN WIND SPEED, V_{ult} ≥ 140 MPH
Asphalt shingles	R905.2	For roof slopes from two units vertical in 12 units horizontal (2:12), up to four units vertical in 12 units horizontal (4:12), underlayment shall be two layers applied in the following manner: apply a 19-inch strip of underlayment felt parallel to and starting at the eaves. Starting at the eave, apply 36-inch-wide sheets of underlayment, overlapping successive sheets 19 inches. Distortions in the underlayment shall not interfere with the ability of the shingles to seal. End laps shall be 4 inches and shall be offset by 6 feet. For roof slopes of four units vertical in 12 units horizontal (4:12) or greater, underlayment shall be one layer applied in the following manner: underlayment shall be applied shingle fashion, parallel to and starting from the eave and lapped 2 inches, Distortions in the underlayment shall not interfere with the ability of the shingles to seal. End laps shall be 4 inches and shall be offset by 6 feet.	Same as Maximum Ultimate Design Wind Speed, V_{ult} < 140 mph except all laps shall be not less than 4 inches.

(continued)

INTERNATIONAL CODE COUNCIL®
Copyright © 2019 ICC & NYSDOS. ALL RIGHTS RESERVED. Accessed by Lauren Gualdino (lgualdino@briarcliffmanor.org), (-) Order Number #100880972 on May 08, 2020 07:05 AM (PDT) pursuant to License Agreement with ICC & NYSDOS. No further reproduction, no

100880972

TABLE R905.1.1(2)—continued
UNDERLAYMENT APPLICATION

ROOF COVERING	SECTION	MAXIMUM ULTIMATE DESIGN WIND SPEED, V_{ult} < 140 MPH	MAXIMUM ULTIMATE DESIGN WIND SPEED, V_{ult} ≥ 140 MPH
Clay and concrete tile	R905.3	For roof slopes from two and one-half units vertical in 12 units horizontal ($2^1/_2$:12), up to four units vertical in 12 units horizontal (4:12), underlayment shall be not fewer than two layers applied as follows: starting at the eave, apply a 19-inch strip of underlayment parallel with the eave. Starting at the eave, apply 36-inch-wide strips of underlayment felt, overlapping successive sheets 19 inches. End laps shall be 4 inches and shall be offset by 6 feet. For roof slopes of four units vertical in 12 units horizontal (4:12) or greater, underlayment shall be not fewer than one layer of underlayment felt applied shingle fashion, parallel to and starting from the eaves and lapped 2 inches. End laps shall be 4 inches and shall be offset by 6 feet.	Same as Maximum Ultimate Design Wind Speed, V_{ult} < 140 mph, except all laps shall be not less than 4 inches.
Metal roof shingles	R905.4	Apply in accordance with the manufacturer's installation instructions.	For roof slopes from two units vertical in 12 units horizontal (2:12), up to four units vertical in 12 units horizontal (4:12), underlayment shall be two layers applied in the following manner: apply a 19-inch strip of underlayment felt parallel to and starting at the eaves. Starting at the eave, apply 36-inch-wide sheets of underlayment, overlapping successive sheets 19 inches. End laps shall be 4 inches and shall be offset by 6 feet. For roof slopes of four units vertical in 12 units horizontal (4:12) or greater, underlayment shall be one layer applied in the following manner: underlayment shall be applied shingle fashion, parallel to and starting from the eave and lapped 4 inches. End laps shall be 4 inches and shall be offset by 6 feet.
Mineral-surfaced roll roofing	R905.5		
Slate and slate-type shingles	R905.6		
Wood shingles	R905.7		
Wood shakes	R905.8		
Metal panels	R905.10		
Photovoltaic shingles	R905.16	For roof slopes from two units vertical in 12 units horizontal (2:12), up to four units vertical in 12 units horizontal (4:12), underlayment shall be two layers applied in the following manner: apply a 19-inch strip of underlayment felt parallel to and starting at the eaves. Starting at the eave, apply 36-inch-wide sheets of underlayment, overlapping successive sheets 19 inches. Distortions in the underlayment shall not interfere with the ability of the shingles to seal. End laps shall be 4 inches and shall be offset by 6 feet. For roof slopes of four units vertical in 12 units horizontal (4:12) or greater, underlayment shall be one layer applied in the following manner: underlayment shall be applied shingle fashion, parallel to and starting from the eave and lapped 2 inches. Distortions in the underlayment shall not interfere with the ability of the shingles to seal. End laps shall be 4 inches and shall be offset by 6 feet.	Same as Maximum Ultimate Design Wind Speed, V_{ult} < 140 mph, except all laps shall be not less than 4 inches.

For SI: 1 inch = 25.4 mm, 1 foot = 304.8 mm, 1 mile per hour = 0.447 m/s.

INTERNATIONAL CODE COUNCIL®
Copyright © 2019 ICC & NYSDOS. ALL RIGHTS RESERVED. Accessed by Lauren Gualdino (lgualdino@briarcliffmanor.org), (-) Order Number #100880972 on May 08, 2020 07:05 AM (PDT) pursuant to License Agreement with ICC & NYSDOS. No further reproduction, no

100880972

TABLE R905.1.1(3)
UNDERLAYMENT ATTACHMENT

ROOF COVERING	SECTION	MAXIMUM ULTIMATE DESIGN WIND SPEED, V_{ult} < 140 MPH	MAXIMUM ULTIMATE DESIGN WIND SPEED, V_{ult} ≥ 140 MPH
Asphalt shingles	R905.2	Fastened sufficiently to hold in place	The underlayment shall be attached with corrosion-resistant fasteners in a grid pattern of 12 inches between side laps with a 6-inch spacing at side and end laps. Underlayment shall be attached using metal or plastic cap nails or cap staples with a nominal cap diameter of not less than 1 inch. Metal caps shall have a thickness of not less than 32-gage sheet metal. Power-driven metal caps shall have a minimum thickness of 0.010 inch. Minimum thickness of the outside edge of plastic caps shall be 0.035 inch. The cap nail shank shall be not less than 0.083 inch for ring shank cap nails and 0.091 inch for smooth shank cap nails. Staples shall be not less than 21 gage. Cap nail shank and cap staple legs shall have a length sufficient to penetrate through the roof sheathing or not less than $^3/_4$ inch into the roof sheathing.
Clay and concrete tile	R905.3		
Photovoltaic	R905.16		
Metal roof shingles	R905.4	Manufacturer's installation instructions.	The underlayment shall be attached with corrosion-resistant fasteners in a grid pattern of 12 inches between side laps with a 6-inch spacing at side and end laps. Underlayment shall be attached using metal or plastic cap nails or cap staples with a nominal cap diameter of not less than 1 inch. Metal caps shall have a thickness of not less than 32-gage sheet metal. Power-driven metal caps shall have a minimum thickness of 0.010 inch. Minimum thickness of the outside edge of plastic caps shall be 0.035 inch. The cap nail shank shall be not less than 0.083 inch for ring shank cap nails and 0.091 inch for smooth shank cap nails. Staples shall be not less than 21 gage. Cap nail shank and cap staple legs shall have a length sufficient to penetrate through the roof sheathing or not less than $^3/_4$ inch into the roof sheathing.
Mineral-surfaced roll roofing	R905.5		
Slate and slate-type shingles	R905.6		
Wood shingles	R905.7		
Wood shakes	R905.8		
Metal panels	R905.10		

For SI: 1 inch = 25.4 mm, 1 mile per hour = 0.447 m/s.

INTERNATIONAL CODE COUNCIL®
Copyright © 2019 ICC & NYSDOS. ALL RIGHTS RESERVED. Accessed by Lauren Gualdino (lgualdino@briarcliffmanor.org), (-) Order Number #100880972 on May 08, 2020 07:05 AM (PDT) pursuant to License Agreement with ICC & NYSDOS. No further reproduction, no

100880972

sheet shall be used in place of normal *underlayment* and extend from the lowest edges of all roof surfaces to a point not less than 24 inches (610 mm) inside the exterior wall line of the building. On roofs with slope equal to or greater than eight units vertical in 12 units horizontal (67-percent slope), the ice barrier shall also be applied not less than 36 inches (914 mm) measured along the roof slope from the eave edge of the building.

Exception: Detached accessory structures not containing conditioned floor area.

R905.2 Asphalt shingles. The installation of asphalt shingles shall comply with the provisions of this section.

R905.2.1 Sheathing requirements. Asphalt shingles shall be fastened to solidly sheathed decks.

R905.2.2 Slope. Asphalt shingles shall be used only on roof slopes of two units vertical in 12 units horizontal (17-percent slope) or greater. For roof slopes from two units vertical in 12 units horizontal (17-percent slope) up to four units vertical in 12 units horizontal (33-percent slope), double *underlayment* application is required in accordance with Section R905.1.1.

R905.2.3 Underlayment. *Underlayment* shall comply with Section R905.1.1.

R905.2.4 Asphalt shingles. Asphalt shingles shall comply with ASTM D3462.

R905.2.4.1 Wind resistance of asphalt shingles. Asphalt shingles shall be tested in accordance with ASTM D7158. Asphalt shingles shall meet the classification requirements of Table R905.2.4.1 for the appropriate ultimate design wind speed. Asphalt shingle packaging shall bear a label to indicate compliance with ASTM D7158 and the required classification in Table R905.2.4.1.

Exception: Asphalt shingles not included in the scope of ASTM D7158 shall be tested and labeled in accordance with ASTM D3161. Asphalt shingle packaging shall bear a label to indicate compliance with ASTM D3161 and the required classification in Table R905.2.4.1.

R905.2.5 Fasteners. Fasteners for asphalt shingles shall be galvanized steel, stainless steel, aluminum or copper roofing nails, minimum 12-gage [0.105 inch (3 mm)] shank with a minimum $^3/_8$-inch-diameter (9.5 mm) head, complying with ASTM F1667, of a length to penetrate through the roofing materials and not less than $^3/_4$ inch (19.1 mm) into the roof sheathing. Where the roof sheathing is less than $^3/_4$ inch (19.1 mm) thick, the fasteners shall penetrate through the sheathing.

R905.2.6 Attachment. Asphalt shingles shall have the minimum number of fasteners required by the manufacturer's *approved* installation instructions, but not less than four fasteners per strip shingle or two fasteners per individual shingle. Where the roof slope exceeds 21 units vertical in 12 units horizontal (21:12, 175-percent slope), shingles shall be installed in accordance with the manufacturer's *approved* installation instructions.

R905.2.7 Ice barrier. Where required, ice barriers shall comply with Section R905.1.2.

R905.2.8 Flashing. Flashing for asphalt shingles shall comply with this section and the asphalt shingle manufacturer's *approved* installation instructions.

R905.2.8.1 Base and cap flashing. Base and cap flashing shall be installed in accordance with manufacturer's instructions. Base flashing shall be of either corrosion-resistant metal of minimum nominal 0.019-inch (0.5 mm) thickness or mineral-surfaced roll roofing weighing not less than 77 pounds per 100 square feet (4 kg/m^2). Cap flashing shall be corrosion-resistant metal of minimum nominal 0.019-inch (0.5 mm) thickness.

R905.2.8.2 Valleys. Valley linings shall be installed in accordance with the manufacturer's instructions before applying shingles. Valley linings of the following types shall be permitted:

1. For open valleys (valley lining exposed) lined with metal, the valley lining shall be not less than 24 inches (610 mm) wide and of any of the corrosion-resistant metals in Table R905.2.8.2.

TABLE R905.2.4.1
CLASSIFICATION OF ASPHALT ROOF SHINGLES

MAXIMUM ULTIMATE DESIGN WIND SPEED, V_{ult} FROM FIGURE R301.2(5)A (mph)	MAXIMUM BASIC WIND SPEED, V_{ASD} FROM TABLE R301.2.1.3 (mph)	ASTM D7158[a] SHINGLE CLASSIFICATION	ASTM D3161 SHINGLE CLASSIFICATION
110	85	D, G or H	A, D or F
116	90	D, G or H	A, D or F
129	100	G or H	A, D or F
142	110	G or H	F
155	120	G or H	F
168	130	H	F
181	140	H	F
194	150	H	F

For SI: 1 foot = 304.8 mm; 1 mile per hour = 0.447 m/s.

a. The standard calculations contained in ASTM D7158 assume Exposure Category B or C and a building height of 60 feet or less. Additional calculations are required for conditions outside of these assumptions.

INTERNATIONAL CODE COUNCIL®
Copyright © 2019 ICC & NYSDOS. ALL RIGHTS RESERVED. Accessed by Lauren Gualdino (lgualdino@briarcliffmanor.org), (-) Order Number #100880972 on May 08, 2020 07:05 AM (PDT) pursuant to License Agreement with ICC & NYSDOS. No further reproduction, no

100880972

2. For open valleys, valley lining of two plies of mineral-surfaced roll roofing, complying with ASTM D3909 or ASTM D6380 Class M, shall be permitted. The bottom layer shall be 18 inches (457 mm) and the top layer not less than 36 inches (914 mm) wide.
3. For closed valleys (valley covered with shingles), valley lining of one ply of smooth roll roofing complying with ASTM D6380 and not less than 36 inches wide (914 mm) or valley lining as described in Item 1 or 2 shall be permitted. Self-adhering polymer-modified bitumen *underlayment* complying with ASTM D1970 shall be permitted in lieu of the lining material.

R905.2.8.3 Sidewall flashing. Base flashing against a vertical sidewall shall be continuous or step flashing and shall be not less than 4 inches (102 mm) in height and 4 inches (102 mm) in width and shall direct water away from the vertical sidewall onto the roof or into the gutter. Where siding is provided on the vertical sidewall, the vertical leg of the flashing shall be continuous under the siding. Where anchored masonry veneer is provided on the vertical sidewall, the base flashing shall be provided in accordance with this section and counterflashing shall be provided in accordance with Section R703.8.2.2. Where exterior plaster or adhered masonry veneer is provided on the vertical sidewall, the base flashing shall be provided in accordance with this section and Section R703.6.3.

R905.2.8.4 Other flashing. Flashing against a vertical front wall, as well as soil stack, vent pipe and chimney flashing, shall be applied in accordance with the asphalt shingle manufacturer's printed instructions.

R905.2.8.5 Drip edge. A drip edge shall be provided at eaves and rake edges of shingle roofs. Adjacent segments of drip edge shall be overlapped not less than 2 inches (51 mm). Drip edges shall extend not less than $^1/_4$ inch (6.4 mm) below the roof sheathing and extend up back onto the roof deck not less than 2 inches (51 mm). Drip edges shall be mechanically fastened to the roof deck at not more than 12 inches (305 mm) o.c. with fasteners as specified in Section R905.2.5. *Underlayment* shall be installed over the drip edge along eaves and under the drip edge along rake edges.

R905.3 Clay and concrete tile. The installation of clay and concrete tile shall comply with the provisions of this section.

R905.3.1 Deck requirements. Concrete and clay tile shall be installed only over solid sheathing or spaced structural sheathing boards.

R905.3.2 Deck slope. Clay and concrete roof tile shall be installed on roof slopes of two and one-half units vertical in 12 units horizontal (25-percent slope) or greater. For roof slopes from two and one-half units vertical in 12 units horizontal (25-percent slope) to four units vertical in 12 units horizontal (33-percent slope), double *underlayment* application is required in accordance with Section R905.3.3.

R905.3.3 Underlayment. *Underlayment* shall comply with Section R905.1.1.

R905.3.4 Clay tile. Clay roof tile shall comply with ASTM C1167.

R905.3.5 Concrete tile. Concrete roof tile shall comply with ASTM C1492.

R905.3.6 Fasteners. Nails shall be corrosion resistant and not less than 11-gage, $^5/_{16}$-inch (11 mm) head, and of sufficient length to penetrate the deck not less than $^3/_4$ inch (19 mm) or through the thickness of the deck, whichever is less. Attaching wire for clay or concrete tile shall not be smaller than 0.083 inch (2 mm). Perimeter fastening areas include three tile courses but not less than 36 inches (914 mm) from either side of hips or ridges and edges of eaves and gable rakes.

R905.3.7 Application. Tile shall be applied in accordance with this chapter and the manufacturer's installation instructions, based on the following:

1. Climatic conditions.
2. Roof slope.
3. *Underlayment* system.
4. Type of tile being installed.

TABLE R905.2.8.2
VALLEY LINING MATERIAL

MATERIAL	MINIMUM THICKNESS (inches)	GAGE	WEIGHT (pounds)
Cold-rolled copper	0.0216 nominal	—	ASTM B370, 16 oz. per square foot
Lead-coated copper	0.0216 nominal	—	ASTM B101, 16 oz. per square foot
High-yield copper	0.0162 nominal	—	ASTM B370, 12 oz. per square foot
Lead-coated high-yield copper	0.0162 nominal	—	ASTM B101, 12 oz. per square foot
Aluminum	0.024	—	—
Stainless steel	—	28	—
Galvanized steel	0.0179	26 (zinc coated G90)	—
Zinc alloy	0.027	—	—
Lead	—	—	$2^1/_2$
Painted terne	—	—	20

For SI: 1 inch = 25.4 mm, 1 pound = 0.454 kg.

INTERNATIONAL CODE COUNCIL®
Copyright © 2019 ICC & NYSDOS. ALL RIGHTS RESERVED. Accessed by Lauren Gualdino (lgualdino@briarcliffmanor.org), (-) Order Number #100880972 on May 08, 2020 07:05 AM (PDT) pursuant to License Agreement with ICC & NYSDOS. No further reproduction, no

100880972

Clay and concrete roof tiles shall be fastened in accordance with this section and the manufacturer's installation instructions. Perimeter tiles shall be fastened with not less than one fastener per tile. Tiles with installed weight less than 9 pounds per square foot (0.4 kg/m^2) require not less than one fastener per tile regardless of roof slope. Clay and concrete roof tile attachment shall be in accordance with the manufacturer's installation instructions where applied in areas where the ultimate design wind speed exceeds 130 miles per hour (58 m/s) and on buildings where the roof is located more than 40 feet (12 192 mm) above grade. In areas subject to snow, not less than two fasteners per tile are required. In other areas, clay and concrete roof tiles shall be attached in accordance with Table R905.3.7.

TABLE R905.3.7
CLAY AND CONCRETE TILE ATTACHMENT

SHEATHING	ROOF SLOPE	NUMBER OF FASTENERS
Solid without battens	All	One per tile
Spaced or solid with battens and slope < 5:12	Fasteners not required	—
Spaced sheathing without battens	5:12 ≤ slope < 12:12	One per tile/ every other row
	12:12 ≤ slope < 24:12	One per tile

R905.3.8 Flashing. At the juncture of roof vertical surfaces, flashing and counterflashing shall be provided in accordance with this chapter and the manufacturer's installation instructions and, where of metal, shall be not less than 0.019 inch (0.5 mm) (No. 26 galvanized sheet gage) corrosion-resistant metal. The valley flashing shall extend not less than 11 inches (279 mm) from the centerline each way and have a splash diverter rib not less than 1 inch (25 mm) in height at the flow line formed as part of the flashing. Sections of flashing shall have an end lap of not less than 4 inches (102 mm). For roof slopes of three units vertical in 12 units horizontal (25-percent slope) and greater, valley flashing shall have a 36-inch-wide (914 mm) *underlayment* of one layer of Type I *underlayment* running the full length of the valley, in addition to other required *underlayment*. In areas where the average daily temperature in January is 25°F (-4°C) or less, metal valley flashing *underlayment* shall be solid-cemented to the roofing *underlayment* for slopes less than seven units vertical in 12 units horizontal (58-percent slope) or be of self-adhering polymer-modified bitumen sheet.

R905.4 Metal roof shingles. The installation of metal roof shingles shall comply with the provisions of this section.

R905.4.1 Deck requirements. Metal roof shingles shall be applied to a solid or closely fitted deck, except where the roof covering is specifically designed to be applied to spaced sheathing.

R905.4.2 Deck slope. Metal roof shingles shall not be installed on roof slopes below three units vertical in 12 units horizontal (25-percent slope).

R905.4.3 Underlayment. *Underlayment* shall comply with Section R905.1.1.

R905.4.3.1 Ice barrier. Where required, ice barriers shall comply with Section R905.1.2.

R905.4.4 Material standards. Metal roof shingle roof coverings shall comply with Table R905.10.3(1). The materials used for metal roof shingle roof coverings shall be naturally corrosion resistant or be made corrosion resistant in accordance with the standards and minimum thicknesses listed in Table R905.10.3(2).

R905.4.5 Application. Metal roof shingles shall be secured to the roof in accordance with this chapter and the *approved* manufacturer's installation instructions.

R905.4.6 Flashing. Roof valley flashing shall be of corrosion-resistant metal of the same material as the roof covering or shall comply with the standards in Table R905.10.3(1). The valley flashing shall extend not less than 8 inches (203 mm) from the centerline each way and shall have a splash diverter rib not less than $^3/_4$ inch (19 mm) in height at the flow line formed as part of the flashing. Sections of flashing shall have an end lap of not less than 4 inches (102 mm). The metal valley flashing shall have a 36-inch-wide (914 mm) *underlayment* directly under it consisting of one layer of *underlayment* running the full length of the valley, in addition to *underlayment* required for metal roof shingles. In areas where the average daily temperature in January is 25°F (-4°C) or less, the metal valley flashing *underlayment* shall be solid-cemented to the roofing *underlayment* for roof slopes under seven units vertical in 12 units horizontal (58-percent slope) or self-adhering polymer-modified bitumen sheet.

R905.5 Mineral-surfaced roll roofing. The installation of mineral-surfaced roll roofing shall comply with this section.

R905.5.1 Deck requirements. Mineral-surfaced roll roofing shall be fastened to solidly sheathed roofs.

R905.5.2 Deck slope. Mineral-surfaced roll roofing shall not be applied on roof slopes below one unit vertical in 12 units horizontal (8-percent slope).

R905.5.3 Underlayment. *Underlayment* shall comply with Section R905.1.1.

R905.5.3.1 Ice barrier. Where required, ice barriers shall comply with Section R905.1.2.

R905.5.4 Material standards. Mineral-surfaced roll roofing shall conform to ASTM D3909 or ASTM D6380, Class M.

R905.5.5 Application. Mineral-surfaced roll roofing shall be installed in accordance with this chapter and the manufacturer's instructions.

R905.6 Slate shingles. The installation of slate shingles shall comply with the provisions of this section.

R905.6.1 Deck requirements. Slate shingles shall be fastened to solidly sheathed roofs.

R905.6.2 Deck slope. Slate shingles shall be used only on slopes of four units vertical in 12 units horizontal (33-percent slope) or greater.

R905.6.3 Underlayment. *Underlayment* shall comply with Section R905.1.1.

INTERNATIONAL CODE COUNCIL®
Copyright © 2019 ICC & NYSDOS. ALL RIGHTS RESERVED. Accessed by Lauren Gualdino (lgualdino@briarcliffmanor.org), (-) Order Number #100880972 on May 08, 2020 07:05 AM (PDT) pursuant to License Agreement with ICC & NYSDOS. No further reproduction, no

100880972

R905.6.3.1 Ice barrier. Where required, ice barriers shall comply with Section R905.1.2.

R905.6.4 Material standards. Slate shingles shall comply with ASTM C406.

R905.6.5 Application. Minimum headlap for slate shingles shall be in accordance with Table R905.6.5. Slate shingles shall be secured to the roof with two fasteners per slate. Slate shingles shall be installed in accordance with this chapter and the manufacturer's instructions.

TABLE R905.6.5
SLATE SHINGLE HEADLAP

SLOPE	HEADLAP (inches)
4:12 ≤ slope < 8:12	4
8:12 ≤ slope < 20:12	3
Slope ≥ 20:12	2

For SI: 1 inch = 25.4 mm.

R905.6.6 Flashing. Flashing and counterflashing shall be made with sheet metal. Valley flashing shall be not less than 15 inches (381 mm) wide. Valley and flashing metal shall be a minimum uncoated thickness of 0.0179-inch (0.5 mm) zinc coated G90. Chimneys, stucco or brick walls shall have not less than two plies of felt for a cap flashing consisting of a 4-inch-wide (102 mm) strip of felt set in plastic cement and extending 1 inch (25 mm) above the first felt and a top coating of plastic cement. The felt shall extend 2 inches (51 mm) over the base flashing.

R905.7 Wood shingles. The installation of wood shingles shall comply with the provisions of this section.

R905.7.1 Deck requirements. Wood shingles shall be installed on solid or spaced sheathing. Where spaced sheathing is used, sheathing boards shall be not less than 1-inch by 4-inch (25 mm by 102 mm) nominal dimensions and shall be spaced on centers equal to the weather exposure to coincide with the placement of fasteners.

R905.7.1.1 Solid sheathing required. In areas where the average daily temperature in January is 25°F (-4°C) or less, solid sheathing is required on that portion of the roof requiring the application of an ice barrier.

R905.7.2 Deck slope. Wood shingles shall be installed on slopes of three units vertical in 12 units horizontal (25-percent slope) or greater.

R905.7.3 Underlayment. *Underlayment* shall comply with Section R905.1.1.

R905.7.3.1 Ice barrier. Where required, ice barriers shall comply with Section R905.1.2.

R905.7.4 Material standards. Wood shingles shall be of naturally durable wood and comply with the requirements of Table R905.7.4.

TABLE R905.7.4
WOOD SHINGLE MATERIAL REQUIREMENTS

MATERIAL	MINIMUM GRADES	APPLICABLE GRADING RULES
Wood shingles of naturally durable wood	1, 2 or 3	CSSB

R905.7.5 Application. Wood shingles shall be installed in accordance with this chapter and the manufacturer's instructions. Wood shingles shall be laid with a side lap not less than $1^1/_2$ inches (38 mm) between joints in courses, and two joints shall not be in direct alignment in any three adjacent courses. Spacing between shingles shall be not less than $^1/_4$ inch to $^3/_8$ inch (6.4 mm to 9.5 mm). Weather exposure for wood shingles shall not exceed those set in Table R905.7.5(1). Fasteners for untreated (naturally durable) wood shingles shall be box nails in accordance with Table R905.7.5(2). Nails shall be stainless steel Type 304 or 316 or hot-dipped galvanized with a coating weight of ASTM A153 Class D (1.0 oz/ft^2). Alternatively, two 16-gage stainless steel Type 304 or 316 staples with crown widths $^7/_{16}$ inch (11.1 mm) minimum, $^3/_4$ inch (19.1 mm) maximum, shall be used. Fasteners installed within 15 miles (24 km) of saltwater coastal areas shall be stainless steel Type 316. Fasteners for fire-retardant-treated shingles in accordance with Section R902 or pressure-impregnated-preservative-treated shingles of naturally durable wood in accordance with AWPA U1 shall be stainless steel Type 316. Fasteners shall have a minimum penetration into the sheathing of $^3/_4$ inch (19.1 mm). For sheathing less than $^3/_4$ inch in (19.1 mm) thickness, each fastener shall penetrate through the sheathing. Wood shingles shall be attached to the roof with two fasteners per shingle, positioned in accordance with the manufacturer's installation instructions. Fastener packaging shall bear a label indicating the appropriate grade material or coating weight.

TABLE R905.7.5(1)
WOOD SHINGLE WEATHER EXPOSURE AND ROOF SLOPE

ROOFING MATERIAL	LENGTH (inches)	GRADE	EXPOSURE (inches)	
			3:12 pitch to < 4:12	4:12 pitch or steeper
Shingles of naturally durable wood	16	No. 1	$3^3/_4$	5
		No. 2	$3^1/_2$	4
		No. 3	3	$3^1/_2$
	18	No. 1	$4^1/_4$	$5^1/_2$
		No. 2	4	$4^1/_2$
		No. 3	$3^1/_2$	4
	24	No. 1	$5^3/_4$	$7^1/_2$
		No. 2	$5^1/_2$	$6^1/_2$
		No. 3	5	$5^1/_2$

For SI: 1 inch = 25.4 mm.

INTERNATIONAL CODE COUNCIL®
Copyright © 2019 ICC & NYSDOS. ALL RIGHTS RESERVED. Accessed by Lauren Gualdino (lgualdino@briarcliffmanor.org), (-) Order Number #100880972 on May 08, 2020 07:05 AM (PDT) pursuant to License Agreement with ICC & NYSDOS. No further reproduction, no

100880972

TABLE R905.7.5(2)
NAIL REQUIREMENTS FOR WOOD SHAKES AND WOOD SHINGLES

SHAKES	NAIL TYPE AND MINIMUM LENGTH	MINIMUM HEAD SIZE	MINIMUM SHANK DIAMETER
18″ straight-split	5d box $1^3/_4$″	0.19″	.080″
18″ and 24″ handsplit and resawn	6d box 2″	0.19″	.0915″
24″ taper-split	5d box $1^3/_4$″	0.19″	.080″
18″ and 24″ tapersawn	6d box 2″	0.19″	.0915″
Shingles	**Nail Type and Minimum Length**	**Minimum Head Size**	**Minimum Shank Diameter**
16″ and 18″	3d box $1^1/_4$″	0.19″	.080″
24″	4d box $1^1/_2$″	0.19″	.080″

For SI: 1 inch = 25.4 mm.

R905.7.6 Valley flashing. Roof flashing shall be not less than No. 26 gage [0.019 inches (0.5 mm)] corrosion-resistant sheet metal and shall extend 10 inches (254 mm) from the centerline each way for roofs having slopes less than 12 units vertical in 12 units horizontal (100-percent slope), and 7 inches (178 mm) from the centerline each way for slopes of 12 units vertical in 12 units horizontal (100-percent slope) and greater. Sections of flashing shall have an end lap of not less than 4 inches (102 mm).

R905.7.7 Label required. Each bundle of shingles shall be identified by a *label* of an *approved* grading or inspection bureau or agency.

R905.8 Wood shakes. The installation of wood shakes shall comply with the provisions of this section.

R905.8.1 Deck requirements. Wood shakes shall be used only on solid or spaced sheathing. Where spaced sheathing is used, sheathing boards shall be not less than 1-inch by 4-inch (25 mm by 102 mm) nominal dimensions and shall be spaced on centers equal to the weather exposure to coincide with the placement of fasteners. Where 1-inch by 4-inch (25 mm by 102 mm) spaced sheathing is installed at 10 inches (254 mm) on center, additional 1-inch by 4-inch (25 mm by 102 mm) boards shall be installed between the sheathing boards.

R905.8.1.1 Solid sheathing required. In areas where the average daily temperature in January is 25°F (-4°C) or less, solid sheathing is required on that portion of the roof requiring an ice barrier.

R905.8.2 Deck slope. Wood shakes shall only be used on slopes of three units vertical in 12 units horizontal (25-percent slope) or greater.

R905.8.3 Underlayment. *Underlayment* shall comply with Section R905.1.1.

R905.8.3.1 Ice barrier. Where required, ice barriers shall comply with Section R905.1.2.

R905.8.4 Interlayment. Interlayment shall comply with ASTM D226, Type I.

R905.8.5 Material standards. Wood shakes shall comply with the requirements of Table R905.8.5.

TABLE R905.8.5
WOOD SHAKE MATERIAL REQUIREMENTS

MATERIAL	MINIMUM GRADES	APPLICABLE GRADING RULES
Wood shakes of naturally durable wood	1	Cedar Shake and Shingle Bureau
Tapersawn shakes of naturally durable wood	1 or 2	Cedar Shake and Shingle Bureau
Preservative-treated shakes and shingles of naturally durable wood	1	Cedar Shake and Shingle Bureau
Fire-retardant-treated shakes and shingles of naturally durable wood	1	Cedar Shake and Shingle Bureau
Preservative-treated tapersawn shakes of Southern pine treated in accordance with AWPA Standard U1 (Commodity Specification A, Special Requirement 4.6)	1 or 2	Forest Products Laboratory of the Texas Forest Services

R905.8.6 Application. Wood shakes shall be installed in accordance with this chapter and the manufacturer's installation instructions. Wood shakes shall be laid with a side lap not less than $1^1/_2$ inches (38 mm) between joints in adjacent courses. Spacing between shakes in the same course shall be $^3/_8$ inch to $^5/_8$ inch (9.5 mm to 15.9 mm) including tapersawn shakes. Weather exposures for wood shakes shall not exceed those set in Table R905.8.6. Fasteners for untreated (naturally durable) wood shakes shall be box nails in accordance with Table R905.7.5(2). Nails shall be stainless steel Type 304, or Type 316 or hot-dipped with a coating weight of ASTM A153 Class D (1.0 oz/ft^2). Alternatively, two 16-gage Type 304 or Type 316 stainless steel staples, with crown widths $^7/_{16}$ inch (11.1 mm) minimum, $^3/_4$ inch (19.1 mm) maximum, shall be used. Fasteners installed within 15 miles (24 km) of salt-water coastal areas shall be stainless steel Type 316. Wood shakes shall be attached to the roof with two fasteners per shake positioned in accordance with the manufacturer's installation instructions Fasteners for fire-retardant-treated (as defined in Section R902) shakes or pressure-impregnated-preservative-treated shakes of naturally durable wood in accordance with AWPA U1 shall be stainless steel Type 316. Fasteners shall have a minimum penetration into the sheathing of $^3/_4$ inch (19.1 mm). Where the sheathing is less than $^3/_4$ inch (19.1 mm) thick, each fastener shall penetrate through the sheathing. Fastener packaging shall bear a label indicating the appropriate grade material or coating weight.

R905.8.7 Shake placement. The starter course at the eaves shall be doubled and the bottom layer shall be either 15-inch (381 mm), 18-inch (457 mm) or 24-inch (610 mm) wood shakes or wood shingles. Fifteen-inch (381 mm) or 18-inch (457 mm) wood shakes shall be permitted to be used for the final course at the ridge. Shakes shall be interlaid with 18-inch-wide (457 mm) strips of not less than No. 30 felt shingled between each course in such a manner that felt is not exposed to the weather by positioning the lower edge of each felt strip above the butt end of the shake it covers a distance equal to twice the weather exposure.

INTERNATIONAL CODE COUNCIL®
Copyright © 2019 ICC & NYSDOS. ALL RIGHTS RESERVED. Accessed by Lauren Gualdino (lgualdino@briarcliffmanor.org), (-) Order Number #100880972 on May 08, 2020 07:05 AM (PDT) pursuant to License Agreement with ICC & NYSDOS. No further reproduction, no

100880972

TABLE R905.8.6
WOOD SHAKE WEATHER EXPOSURE AND ROOF SLOPE

ROOFING MATERIAL	LENGTH (inches)	GRADE	EXPOSURE (inches)
			4:12 pitch or steeper
Shakes of naturally durable wood	18	No. 1	$7^1/_2$
	24	No. 1	10[a]
Preservative-treated tapersawn shakes of Southern Yellow Pine	18	No. 1	$7^1/_2$
	24	No. 1	10
	18	No. 2	$5^1/_2$
	24	No. 2	$7^1/_2$
Taper-sawn shakes of naturally durable wood	18	No. 1	$7^1/_2$
	24	No. 1	10
	18	No. 2	$5^1/_2$
	24	No. 2	$7^1/_2$

For SI: 1 inch = 25.4 mm.
a. For 24-inch by $^3/_8$-inch handsplit shakes, the maximum exposure is $7^1/_2$ inches.

R905.8.8 Valley flashing. Roof valley flashing shall be not less than No. 26 gage [0.019 inch (0.5 mm)] corrosion-resistant sheet metal and shall extend not less than 11 inches (279 mm) from the centerline each way. Sections of flashing shall have an end lap of not less than 4 inches (102 mm).

R905.8.9 Label required. Each bundle of shakes shall be identified by a *label* of an *approved* grading or inspection bureau or agency.

R905.9 Built-up roofs. The installation of built-up roofs shall comply with the provisions of this section and the manufacturer's *approved* installation instructions.

R905.9.1 Slope. Built-up roofs shall have a design slope of not less than one-fourth unit vertical in 12 units horizontal (2-percent slope) for drainage, except for coal-tar built-up roofs, which shall have a design slope of a minimum one-eighth unit vertical in 12 units horizontal (1-percent slope).

R905.9.2 Material standards. Built-up roof covering materials shall comply with the standards in Table R905.9.2 or UL 55A.

R905.9.3 Application. Built-up roofs shall be installed in accordance with this chapter and the manufacturer's instructions.

R905.10 Metal roof panels. The installation of metal roof panels shall comply with the provisions of this section.

R905.10.1 Deck requirements. Metal roof panel roof coverings shall be applied to solid or spaced sheathing, except where the roof covering is specifically designed to be applied to spaced supports.

R905.10.2 Slope. Minimum slopes for metal roof panels shall comply with the following:

1. The minimum slope for lapped, nonsoldered-seam metal roofs without applied lap sealant shall be three units vertical in 12 units horizontal (25-percent slope).
2. The minimum slope for lapped, nonsoldered-seam metal roofs with applied lap sealant shall be one-half unit vertical in 12 units horizontal (4-percent slope). Lap sealants shall be applied in accordance with the *approved* manufacturer's installation instructions.
3. The minimum slope for standing-seam roof systems shall be one-quarter unit vertical in 12 units horizontal (2-percent slope).

R905.10.3 Material standards. Metal-sheet roof covering systems that incorporate supporting structural members shall be designed in accordance with the *Building Code of New York State*. Metal-sheet roof coverings installed over structural decking shall comply with Table R905.10.3(1). The materials used for metal-sheet roof coverings shall be naturally corrosion resistant or provided with corrosion resistance in accordance with the standards and minimum thicknesses shown in Table R905.10.3(2).

INTERNATIONAL CODE COUNCIL®
Copyright © 2019 ICC & NYSDOS. ALL RIGHTS RESERVED. Accessed by Lauren Gualdino (lgualdino@briarcliffmanor.org), (-) Order Number #100880972 on May 08, 2020 07:05 AM (PDT) pursuant to License Agreement with ICC & NYSDOS. No further reproduction, no

100880972

TABLE R905.9.2
BUILT-UP ROOFING MATERIAL STANDARDS

MATERIAL STANDARD	STANDARD
Acrylic coatings used in roofing	ASTM D6083
Aggregate surfacing	ASTM D1863
Asphalt adhesive used in roofing	ASTM D3747
Asphalt cements used in roofing	ASTM D2822; D3019; D4586
Asphalt-coated glass fiber base sheet	ASTM D4601
Asphalt coatings used in roofing	ASTM D1227; D2823; D2824; D4479
Asphalt glass felt	ASTM D2178
Asphalt primer used in roofing	ASTM D41
Asphalt-saturated and asphalt-coated organic felt base sheet	ASTM D2626
Asphalt-saturated organic felt (perforated)	ASTM D226
Asphalt used in roofing	ASTM D312
Coal-tar cements used in roofing	ASTM D4022; D5643
Coal-tar primer used in roofing, dampproofing and waterproofing	ASTM D43
Coal-tar saturated organic felt	ASTM D227
Coal-tar used in roofing	ASTM D450, Type I or II
Glass mat, coal tar	ASTM D4990
Glass mat, venting type	ASTM D4897
Mineral-surfaced inorganic cap sheet	ASTM D3909
Thermoplastic fabrics used in roofing	ASTM D5665; D5726

TABLE R905.10.3(1)
METAL ROOF COVERING STANDARDS

ROOF COVERING TYPE	STANDARD APPLICATION RATE/THICKNESS
Galvanized steel	ASTM A653 G90 Zinc coated
Stainless steel	ASTM A240, 300 Series alloys
Steel	ASTM A924
Lead-coated copper	ASTM B101
Cold-rolled copper	ASTM B370 minimum 16 oz/sq ft and 12 oz/sq ft high-yield copper for metal-sheet roof-covering systems; 12 oz/sq ft for preformed metal shingle systems.
Hard lead	2 lb/sq ft
Soft lead	3 lb/sq ft
Aluminum	ASTM B209, 0.024 minimum thickness for roll-formed panels and 0.019-inch minimum thickness for press-formed shingles.
Terne (tin) and terne-coated stainless	Terne coating of 40 lb per double base box, field painted where applicable in accordance with manufacturer's installation instructions.
Zinc	0.027 inch minimum thickness: 99.995% electrolytic high-grade zinc with alloy additives of copper (0.08 - 0.20%), titanium (0.07% - 0.12%) and aluminum (0.015%).

For SI: 1 ounce per square foot = 0.305 kg/m^2, 1 pound per square foot = 4.214 kg/m^2, 1 inch = 25.4 mm, 1 pound = 0.454 kg.

INTERNATIONAL CODE COUNCIL®
Copyright © 2019 ICC & NYSDOS. ALL RIGHTS RESERVED. Accessed by Lauren Gualdino (lgualdino@briarcliffmanor.org), (-) Order Number #100880972 on May 08, 2020 07:05 AM (PDT) pursuant to License Agreement with ICC & NYSDOS. No further reproduction, no

100880972

TABLE R905.10.3(2)
MINIMUM CORROSION RESISTANCE

55% aluminum-zinc-alloy-coated steel	ASTM A792 AZ 50
5% aluminum alloy-coated steel	ASTM A875 GF60
Aluminum-coated steel	ASTM A463 T2 65
Galvanized steel	ASTM A653 G-90
Prepainted steel	ASTM A755[a]

a. Paint systems in accordance with ASTM A755 shall be applied over steel products with corrosion-resistant coatings complying with ASTM A792, ASTM A875, ASTM A463, or ASTM A653.

R905.10.4 Attachment. Metal roof panels shall be secured to the supports in accordance with this chapter and the manufacturer's installation instructions. In the absence of manufacturer's installation instructions, the following fasteners shall be used:

1. Galvanized fasteners shall be used for steel roofs.
2. Copper, brass, bronze, copper alloy and 300-series stainless steel fasteners shall be used for copper roofs.
3. Stainless steel fasteners are acceptable for metal roofs.

R905.10.5 Underlayment. *Underlayment* shall comply with Section R905.1.1.

R905.11 Modified bitumen roofing. The installation of modified bitumen roofing shall comply with the provisions of this section and the manufacturer's *approved* installation instructions.

R905.11.1 Slope. Modified bitumen roofing shall have a design slope of not less than one-fourth unit vertical in 12 units horizontal (2-percent slope) for drainage.

R905.11.2 Material standards. Modified bitumen roofing shall comply with the standards in Table R905.11.2.

TABLE R905.11.2
MODIFIED BITUMEN ROOFING MATERIAL STANDARDS

MATERIAL	STANDARD
Acrylic coating	ASTM D6083
Asphalt adhesive	ASTM D3747
Asphalt cement	ASTM D3019
Asphalt coating	ASTM D1227; D2824
Asphalt primer	ASTM D41
Modified bitumen roof membrane	ASTM D6162; D6163; D6164; D6222; D6223; D6298

R905.11.2.1 Base sheet. A base sheet that complies with the requirements of Section 1507.11.2 of the *Building Code of New York State*, ASTM D1970, or ASTM D4601 shall be permitted to be used with a modified bitumen cap sheet.

R905.11.3 Application. Modified bitumen roofs shall be installed in accordance with this chapter and the manufacturer's instructions.

R905.12 Thermoset single-ply roofing. The installation of thermoset single-ply roofing shall comply with the provisions of this section.

R905.12.1 Slope. Thermoset single-ply membrane roofs shall have a design slope of not less than one-fourth unit vertical in 12 units horizontal (2-percent slope) for drainage.

R905.12.2 Material standards. Thermoset single-ply roof coverings shall comply with ASTM D4637 or ASTM D5019.

R905.12.3 Application. Thermoset single-ply roofs shall be installed in accordance with this chapter and the manufacturer's instructions.

R905.13 Thermoplastic single-ply roofing. The installation of thermoplastic single-ply roofing shall comply with the provisions of this section.

R905.13.1 Slope. Thermoplastic single-ply membrane roofs shall have a design slope of not less than one-fourth unit vertical in 12 units horizontal (2-percent slope).

R905.13.2 Material standards. Thermoplastic single-ply roof coverings shall comply with ASTM D4434, ASTM D6754 or ASTM D6878.

R905.13.3 Application. Thermoplastic single-ply roofs shall be installed in accordance with this chapter and the manufacturer's instructions.

R905.14 Sprayed polyurethane foam roofing. The installation of sprayed polyurethane foam roofing shall comply with the provisions of this section.

R905.14.1 Slope. Sprayed polyurethane foam roofs shall have a design slope of not less than one-fourth unit vertical in 12 units horizontal (2-percent slope) for drainage.

R905.14.2 Material standards. Spray-applied polyurethane foam insulation shall comply with ASTM C1029, Type III or IV or ASTM D7425.

R905.14.3 Application. Foamed-in-place roof insulation shall be installed in accordance with this chapter and the manufacturer's instructions. A liquid-applied protective coating that complies with Table R905.14.3 shall be applied not less than 2 hours nor more than 72 hours following the application of the foam.

TABLE R905.14.3
PROTECTIVE COATING MATERIAL STANDARDS

MATERIAL	STANDARD
Acrylic coating	ASTM D6083
Silicone coating	ASTM D6694
Moisture-cured polyurethane coating	ASTM D6947

R905.14.4 Foam plastics. Foam plastic materials and installation shall comply with Section R316.

R905.15 Liquid-applied roofing. The installation of liquid-applied roofing shall comply with the provisions of this section.

R905.15.1 Slope. Liquid-applied roofing shall have a design slope of not less than one-fourth unit vertical in 12 units horizontal (2-percent slope).

INTERNATIONAL CODE COUNCIL®
Copyright © 2019 ICC & NYSDOS. ALL RIGHTS RESERVED. Accessed by Lauren Gualdino (lgualdino@briarcliffmanor.org), (-) Order Number #100880972 on May 08, 2020 07:05 AM (PDT) pursuant to License Agreement with ICC & NYSDOS. No further reproduction, no

100880972

R905.15.2 Material standards. Liquid-applied roofing shall comply with ASTM C836, C957, D1227, D3468, D6083, D6694 or D6947.

R905.15.3 Application. Liquid-applied roofing shall be installed in accordance with this chapter and the manufacturer's installation instructions.

R905.16 Photovoltaic shingles. The installation of *photovoltaic shingles* shall comply with the provisions of this section, Section R324 and NFPA 70.

R905.16.1 Deck requirements. *Photovoltaic shingles* shall be applied to a solid or closely-fitted deck, except where the roof covering is specifically designed to be applied over spaced sheathing.

R905.16.2 Deck slope. *Photovoltaic shingles* shall be used only on roof slopes of two units vertical in 12 units horizontal (2:12) or greater.

R905.16.3 Underlayment. *Underlayment* shall comply with Section R905.1.1

R905.16.3.1 Ice barrier. Where required, ice barriers shall comply with Section R905.1.2.

R905.16.4 Material standards. *Photovoltaic shingles* shall be listed and labeled in accordance with UL 1703.

R905.16.5 Attachment. *Photovoltaic shingles* shall be attached in accordance with the manufacturer's installation instructions.

R905.16.6 Wind resistance. *Photovoltaic shingles* shall be tested in accordance with procedures and acceptance criteria in ASTM D3161. *Photovoltaic shingles* shall comply with the classification requirements of Table R905.2.4.1 for the appropriate maximum basic wind speed. *Photovoltaic shingle* packaging shall bear a label to indicate compliance with the procedures in ASTM D3161 and the required classification from Table R905.2.4.1.

R905.17 Building-integrated Photovoltaic (BIPV) roof panels applied directly to the roof deck. The installation of *BIPV roof panels* shall comply with the provisions of this section, Section R324 and NFPA 70.

R905.17.1 Deck requirements. *BIPV roof panels* shall be applied to a solid or closely-fitted deck, except where the roof covering is specifically designed to be applied over spaced sheathing.

R905.17.2 Deck slope. *BIPV roof panels* shall be used only on roof slopes of two units vertical in 12 units horizontal (17-percent slope) or greater.

R905.17.3 Underlayment. *Underlayment* shall comply with Section 905.1.1.

R905.17.3.1 Ice barrier. Where required, an ice barrier shall comply with Section R905.1.2.

R905.17.4 Ice barrier. In areas where there has been a history of ice forming along the eaves causing a backup of water, as designated in Table R301.2(1), an ice barrier that consists of not less than two layers of *underlayment* cemented together or of a self-adhering polymer-modified bitumen sheet shall be used in lieu of normal *underlayment* and extend from the lowest edges of all roof surfaces to a point not less than 24 inches (610 mm) inside the exterior wall line of the building.

Exception: Detached accessory structures that do not contain conditioned floor area.

R905.17.5 Material standards. *BIPV roof panels* shall be *listed* and *labeled* in accordance with UL 1703.

R905.17.6 Attachment. *BIPV roof panels* shall be attached in accordance with the manufacturer's installation instructions.

R905.17.7 Wind resistance. *BIPV roof panels* shall be tested in accordance with UL 1897. *BIPV roof panel* packaging shall bear a *label* to indicate compliance with UL 1897.

SECTION R906
ROOF INSULATION

R906.1 General. The use of above-deck thermal insulation shall be permitted provided that such insulation is covered with an *approved* roof covering and complies with FM 4450 or UL 1256.

R906.2 Material standards. Above-deck thermal insulation board shall comply with the standards in Table R906.2.

TABLE R906.2
MATERIAL STANDARDS FOR ROOF INSULATION

Cellular glass board	ASTM C552
Composite boards	ASTM C1289, Type III, IV, V or VI
Expanded polystyrene	ASTM C578
Extruded polystyrene board	ASTM C578
Fiber-reinforced gypsum board	ASTM C1278
Glass-faced gypsum board	ASTM C1177
Mineral wool board	ASTM C726
Perlite board	ASTM C728
Polyisocyanurate board	ASTM C1289, Type I or II
Wood fiberboard	ASTM C208

SECTION R907
ROOFTOP-MOUNTED PHOTOVOLTAIC PANEL SYSTEMS

R907.1 Rooftop-mounted photovoltaic panel systems. Rooftop-mounted *photovoltaic panel systems* shall be designed and installed in accordance with Section R324 and NFPA 70.

INTERNATIONAL CODE COUNCIL®
Copyright © 2019 ICC & NYSDOS. ALL RIGHTS RESERVED. Accessed by Lauren Gualdino (lgualdino@briarcliffmanor.org), (-) Order Number #100880972 on May 08, 2020 07:05 AM (PDT) pursuant to License Agreement with ICC & NYSDOS. No further reproduction, no

100880972

SECTION R908
REROOFING

R908.1 General. Materials and methods of application used for recovering or replacing an existing roof covering shall comply with the requirements of Chapter 9.

Exceptions:

1. Reroofing shall not be required to meet the minimum design slope requirement of one-quarter unit vertical in 12 units horizontal (2-percent slope) in Section R905 for roofs that provide positive roof drainage.
2. For roofs that provide positive drainage, recovering or replacing an existing roof covering shall not require the secondary (emergency overflow) drains or scuppers of Section R903.4.1 to be added to an existing roof.

R908.2 Structural and construction loads. The structural roof components shall be capable of supporting the roof covering system and the material and equipment loads that will be encountered during installation of the roof covering system.

R908.3 Roof replacement. Roof replacement shall include the removal of existing layers of roof coverings down to the roof deck.

Exception: Where the existing *roof assembly* includes an ice barrier membrane that is adhered to the roof deck, the existing ice barrier membrane shall be permitted to remain in place and covered with an additional layer of ice barrier membrane in accordance with Section R905.

R908.3.1 Roof recover. The installation of a new roof covering over an existing roof covering shall be permitted where any of the following conditions occur:

1. Where the new roof covering is installed in accordance with the roof covering manufacturer's approved instructions.
2. Complete and separate roofing systems, such as standing-seam metal roof systems, that are designed to transmit the roof loads directly to the building's structural system and do not rely on existing roofs and roof coverings for support, shall not require the removal of existing roof coverings.
3. Metal panel, metal shingle and concrete and clay tile roof coverings shall be permitted to be installed over existing wood shake roofs where applied in accordance with Section R908.4.
4. The application of a new protective *roof coating* over an existing protective *roof coating*, metal roof panel, metal roof shingle, mineral surfaced roll roofing, built-up roof, modified bitumen roofing, thermoset and thermoplastic single-ply roofing and spray polyurethane foam roofing system shall be permitted without tear-off of existing roof coverings.

R908.3.1.1 Roof recover not allowed. A *roof recover* shall not be permitted where any of the following conditions occur:

1. Where the existing roof or roof covering is water soaked or has deteriorated to the point that the existing roof or roof covering is not adequate as a base for additional roofing.
2. Where the existing roof covering is slate, clay, cement or asbestos-cement tile.
3. Where the existing roof has two or more applications of any type of roof covering.

R908.4 Roof recovering. Where the application of a new roof covering over wood shingle or shake roofs creates a combustible concealed space, the entire existing surface shall be covered with gypsum board, mineral fiber, glass fiber or other *approved* materials securely fastened in place.

R908.5 Reinstallation of materials. Existing slate, clay or cement tile shall be permitted for reinstallation, except that damaged, cracked or broken slate or tile shall not be reinstalled. Any existing flashings, edgings, outlets, vents or similar devices that are a part of the assembly shall be replaced where rusted, damaged or deteriorated. Aggregate surfacing materials shall not be reinstalled.

R908.6 Flashings. Flashings shall be reconstructed in accordance with *approved* manufacturer's installation instructions. Metal flashing to which bituminous materials are to be adhered shall be primed prior to installation.

INTERNATIONAL CODE COUNCIL®
Copyright © 2019 ICC & NYSDOS. ALL RIGHTS RESERVED. Accessed by Lauren Gualdino (lgualdino@briarcliffmanor.org), (-) Order Number #100880972 on May 08, 2020 07:05 AM (PDT) pursuant to License Agreement with ICC & NYSDOS. No further reproduction, no

100880972

INTERNATIONAL CODE COUNCIL®
Copyright © 2019 ICC & NYSDOS. ALL RIGHTS RESERVED. Accessed by Lauren Gualdino (lgualdino@briarcliffmanor.org), (-) Order Number #100880972 on May 08, 2020 07:05 AM (PDT) pursuant to License Agreement with ICC & NYSDOS. No further reproduction, no

100880972

CHAPTER 10

CHIMNEYS AND FIREPLACES

SECTION R1001
MASONRY FIREPLACES

R1001.1 General. Masonry fireplaces shall be constructed in accordance with this section and the applicable provisions of Chapters 3 and 4.

R1001.2 Footings and foundations. Footings for masonry fireplaces and their chimneys shall be constructed of concrete or *solid masonry* not less than 12 inches (305 mm) thick and shall extend not less than 6 inches (152 mm) beyond the face of the fireplace or foundation wall on all sides. Footings shall be founded on natural, undisturbed earth or engineered fill below frost depth. In areas not subjected to freezing, footings shall be not less than 12 inches (305 mm) below finished *grade*.

R1001.2.1 Ash dump cleanout. Cleanout openings located within foundation walls below fireboxes, where provided, shall be equipped with ferrous metal or masonry doors and frames constructed to remain tightly closed except when in use. Cleanouts shall be located to allow *access* so that ash removal will not create a hazard to combustible materials.

R1001.3 Seismic reinforcing. Masonry or concrete chimneys in Seismic Design Category D_0, D_1 or D_2 shall be reinforced. Reinforcing shall conform to the requirements set forth in Table R1001.1 and Section R606.

R1001.3.1 Vertical reinforcing. For chimneys up to 40 inches (1016 mm) wide, four No. 4 continuous vertical bars shall be placed between wythes of *solid masonry* or within the cells of hollow unit masonry and grouted in accordance with Section R606. Grout shall be prevented from bonding with the flue liner so that the flue liner is free to move with thermal expansion. For chimneys more than 40 inches (1016 mm) wide, two additional No. 4 vertical bars shall be provided for each additional flue incorporated into the chimney or for each additional 40 inches (1016 mm) in width or fraction thereof.

R1001.3.2 Horizontal reinforcing. Vertical reinforcement shall be placed within $^1/_4$-inch (6.4 mm) ties, or other reinforcing of equivalent net cross-sectional area, placed in the bed joints in accordance with Section R606 at not less than every 18 inches (457 mm) of vertical height. Two such ties shall be installed at each bend in the vertical bars.

R1001.4 Seismic anchorage. Masonry or concrete chimneys in Seismic Design Category D_0, D_1 or D_2 shall be anchored at each floor, ceiling or roof line more than 6 feet (1829 mm) above *grade*, except where constructed completely within the exterior walls. Anchorage shall conform to the requirements of Section R1001.4.1.

R1001.4.1 Anchorage. Two $^3/_{16}$-inch by 1-inch (5 mm by 25 mm) straps shall be embedded not less than 12 inches (305 mm) into the chimney. Straps shall be hooked around the outer bars and extend 6 inches (152 mm) beyond the bend. Each strap shall be fastened to not less than four floor ceiling or floor joists or rafters with two $^1/_2$-inch (12.7 mm) bolts.

R1001.4.1.1 Cold-formed steel framing. Where cold-formed steel framing is used, the location where the $^1/_2$-inch (12.7 mm) bolts are used to attach the straps to the framing shall be reinforced with not less than a 3-inch × 3-inch × 0.229-inch (76 mm × 76 mm × 5.8 mm) steel plate on top of the strap that is screwed to the framing with not fewer than seven No. 6 screws for each bolt.

R1001.5 Firebox walls. Masonry fireboxes shall be constructed of *solid masonry* units, hollow masonry units grouted solid, stone or concrete. Where a lining of firebrick not less than 2 inches (51 mm) thick or other *approved* lining is provided, the minimum thickness of back and sidewalls shall each be 8 inches (203 mm) of *solid masonry*, including the lining. The width of joints between firebricks shall not be greater than $^1/_4$ inch (6.4 mm). Where a lining is not provided, the total minimum thickness of back and side walls shall be 10 inches (254 mm) of *solid masonry*. Firebrick shall conform to ASTM C27 or C1261 and shall be laid with medium-duty refractory mortar conforming to ASTM C199.

R1001.5.1 Steel fireplace units. Installation of steel fireplace units with *solid masonry* to form a masonry fireplace is permitted where installed either in accordance with the requirements of their listing or the requirements of this section. Steel fireplace units incorporating a steel firebox lining shall be constructed with steel not less than $^1/_4$ inch (6.4 mm) thick, and an air-circulating chamber that is ducted to the interior of the building. The firebox lining shall be encased with *solid masonry* to provide a total thickness at the back and sides of not less than 8 inches (203 mm), of which not less than 4 inches (102 mm) shall be of *solid masonry* or concrete. Circulating air ducts used with steel fireplace units shall be constructed of metal or masonry.

R1001.6 Firebox dimensions. The firebox of a concrete or masonry fireplace shall have a depth of not less than 20 inches (508 mm). The throat shall be not less than 8 inches (203 mm) above the fireplace opening. The throat opening shall be not less than 4 inches (102 mm) deep. The cross-sectional area of the passageway above the firebox, including the throat, damper and smoke chamber, shall be not less than the cross-sectional area of the flue.

Exception: Rumford fireplaces shall be permitted provided that the depth of the fireplace is not less than 12 inches (305 mm) and not less than one-third of the width of the fireplace opening, that the throat is not less than 12 inches (305 mm) above the lintel and is not less than one-twentieth the cross-sectional area of the fireplace opening.

INTERNATIONAL CODE COUNCIL®
Copyright © 2019 ICC & NYSDOS. ALL RIGHTS RESERVED. Accessed by Lauren Gualdino (lgualdino@briarcliffmanor.org), (-) Order Number #100880972 on May 08, 2020 07:05 AM (PDT) pursuant to License Agreement with ICC & NYSDOS. No further reproduction, no

100880972

TABLE R1001.1
SUMMARY OF REQUIREMENTS FOR MASONRY FIREPLACES AND CHIMNEYS

ITEM	LETTER[a]	REQUIREMENTS
Hearth slab thickness	A	4″
Hearth extension (each side of opening)	B	8″ fireplace opening < 6 square feet. 12″ fireplace opening ≥ 6 square feet.
Hearth extension (front of opening)	C	16″ fireplace opening < 6 square feet. 20″ fireplace opening ≥ 6 square feet.
Hearth slab reinforcing	D	Reinforced to carry its own weight and all imposed loads.
Thickness of wall of firebox	E	10″ solid brick or 8″ where a firebrick lining is used. Joints in firebrick $^1/_4$″ maximum.
Distance from top of opening to throat	F	8″
Smoke chamber wall thickness Unlined walls	G	6″ 8″
Chimney Vertical reinforcing[b]	H	Four No. 4 full-length bars for chimney up to 40″ wide. Add two No. 4 bars for each additional 40″ or fraction of width or each additional flue.
Horizontal reinforcing	J	$^1/_4$″ ties at 18″ and two ties at each bend in vertical steel.
Bond beams	K	No specified requirements.
Fireplace lintel	L	Noncombustible material.
Chimney walls with flue lining	M	Solid masonry units or hollow masonry units grouted solid with not less than 4-inch nominal thickness.
Distances between adjacent flues	—	See Section R1003.13.
Effective flue area (based on area of fireplace opening)	P	See Section R1003.15.
Clearances Combustible material Mantel and trim Above roof	R	 See Sections R1001.11 and R1003.18. See Section R1001.11, Exception 4. 3′ at roofline and 2′ at 10′.
Anchorage[b] Strap Number Embedment into chimney Fasten to Bolts	S	 $^3/_{16}$″ × 1″ Two 12″ hooked around outer bar with 6″ extension. 4 joists Two $^1/_2$″ diameter.
Footing Thickness Width	T	 12″ min. 6″ each side of fireplace wall.

For SI: 1 inch = 25.4 mm, 1 foot = 304.8 mm, 1 square foot = 0.0929 m^2.

Note: This table provides a summary of major requirements for the construction of masonry chimneys and fireplaces. Letter references are to Figure R1001.1, which shows examples of typical construction. This table does not cover all requirements, nor does it cover all aspects of the indicated requirements. For the actual mandatory requirements of the code, see the indicated section of text.

a. The letters refer to Figure R1001.1.

b. Not required in Seismic Design Category A, B or C.

R1001.7 Lintel and throat. Masonry over a fireplace opening shall be supported by a lintel of noncombustible material. The minimum required bearing length on each end of the fireplace opening shall be 4 inches (102 mm). The fireplace throat or damper shall be located not less than 8 inches (203 mm) above the lintel.

R1001.7.1 Damper. Masonry fireplaces shall be equipped with a ferrous metal damper located not less than 8 inches (203 mm) above the top of the fireplace opening. Dampers shall be installed in the fireplace or the chimney venting the fireplace, and shall be operable from the room containing the fireplace.

R1001.8 Smoke chamber. Smoke chamber walls shall be constructed of *solid masonry* units, hollow masonry units grouted solid, stone or concrete. The total minimum thickness of front, back and side walls shall be 8 inches (203 mm) of *solid masonry*. The inside surface shall be parged smooth with refractory mortar conforming to ASTM C199. Where a lining of firebrick not less than 2 inches (51 mm) thick, or a lining of vitrified clay not less than $^5/_8$ inch (16 mm) thick, is provided, the total minimum thickness of front, back and side walls shall be 6 inches (152 mm) of *solid masonry*, including the lining. Firebrick shall conform to ASTM C1261 and shall be laid with medium-duty refractory mortar conforming to ASTM C199. Vitrified clay linings shall conform to ASTM C315.

INTERNATIONAL CODE COUNCIL®
Copyright © 2019 ICC & NYSDOS. ALL RIGHTS RESERVED. Accessed by Lauren Gualdino (lgualdino@briarcliffmanor.org), (-) Order Number #100880972 on May 08, 2020 07:05 AM (PDT) pursuant to License Agreement with ICC & NYSDOS. No further reproduction, no

100880972

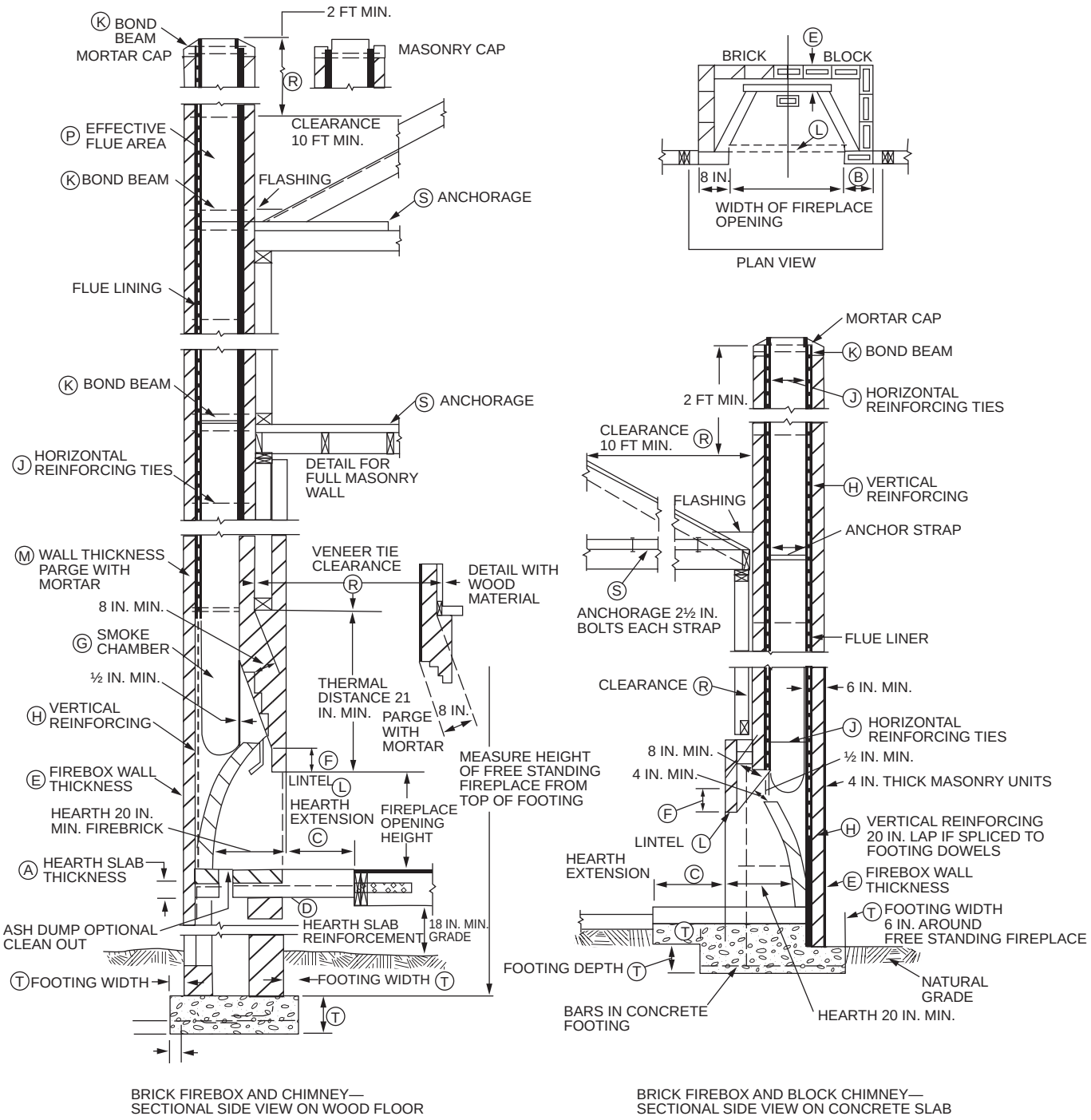

For SI: 1 inch = 25.4 mm, 1 foot = 304.8 mm.

FIGURE R1001.1
FIREPLACE AND CHIMNEY DETAILS

INTERNATIONAL CODE COUNCIL®
Copyright © 2019 ICC & NYSDOS. ALL RIGHTS RESERVED. Accessed by Lauren Gualdino (lgualdino@briarcliffmanor.org), (-) Order Number #100880972 on May 08, 2020 07:05 AM (PDT) pursuant to License Agreement with ICC & NYSDOS. No further reproduction, no

100880972

R1001.8.1 Smoke chamber dimensions. The inside height of the smoke chamber from the fireplace throat to the beginning of the flue shall not be greater than the inside width of the fireplace opening. The inside surface of the smoke chamber shall not be inclined more than 45 degrees (0.79 rad) from vertical where prefabricated smoke chamber linings are used or where the smoke chamber walls are rolled or sloped rather than corbeled. Where the inside surface of the smoke chamber is formed by corbeled masonry, the walls shall not be corbeled more than 30 degrees (0.52 rad) from vertical.

R1001.9 Hearth and hearth extension. Masonry fireplace hearths and hearth extensions shall be constructed of concrete or masonry, supported by noncombustible materials, and reinforced to carry their own weight and all imposed loads. Combustible material shall not remain against the underside of hearths and hearth extensions after construction.

R1001.9.1 Hearth thickness. The minimum thickness of fireplace hearths shall be 4 inches (102 mm).

R1001.9.2 Hearth extension thickness. The minimum thickness of hearth extensions shall be 2 inches (51 mm).

Exception: Where the bottom of the firebox opening is raised not less than 8 inches (203 mm) above the top of the hearth extension, a hearth extension of not less than $^3/_8$-inch-thick (10 mm) brick, concrete, stone, tile or other *approved* noncombustible material is permitted.

R1001.10 Hearth extension dimensions. Hearth extensions shall extend not less than 16 inches (406 mm) in front of and not less than 8 inches (203 mm) beyond each side of the fireplace opening. Where the fireplace opening is 6 square feet (0.6 m^2) or larger, the hearth extension shall extend not less than 20 inches (508 mm) in front of and not less than 12 inches (305 mm) beyond each side of the fireplace opening.

R1001.11 Fireplace clearance. Wood beams, joists, studs and other combustible material shall have a clearance of not less than 2 inches (51 mm) from the front faces and sides of masonry fireplaces and not less than 4 inches (102 mm) from the back faces of masonry fireplaces. The airspace shall not be filled, except to provide fireblocking in accordance with Section R1001.12.

Exceptions:

1. Masonry fireplaces *listed* and *labeled* for use in contact with combustibles in accordance with UL 127 and installed in accordance with the manufacturer's instructions are permitted to have combustible material in contact with their exterior surfaces.
2. Where masonry fireplaces are part of masonry or concrete walls, combustible materials shall not be in contact with the masonry or concrete walls less than 12 inches (306 mm) from the inside surface of the nearest firebox lining.
3. Exposed combustible trim and the edges of sheathing materials such as wood siding, flooring and gypsum board shall be permitted to abut the masonry fireplace sidewalls and hearth extension in accordance with Figure R1001.11, provided such combustible trim or sheathing is not less than 12 inches (305 mm) from the inside surface of the nearest firebox lining.
4. Exposed combustible mantels or trim is permitted to be placed directly on the masonry fireplace front surrounding the fireplace opening providing such combustible materials are not placed within 6 inches (152 mm) of a fireplace opening. Combustible material within 12 inches (306 mm) of the fireplace opening shall not project more than $^1/_8$ inch (3 mm) for each 1-inch (25 mm) distance from such an opening.

R1001.12 Fireplace fireblocking. Fireplace fireblocking shall comply with the provisions of Section R602.8.

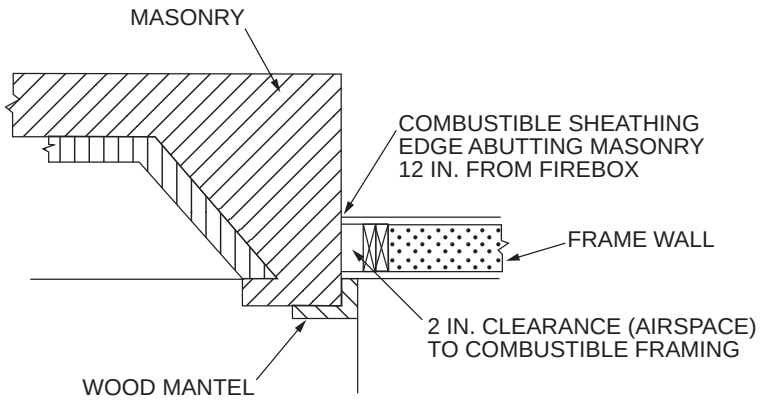

For SI: 1 inch = 25.4 mm.

FIGURE R1001.11
CLEARANCE FROM COMBUSTIBLES

INTERNATIONAL CODE COUNCIL®
Copyright © 2019 ICC & NYSDOS. ALL RIGHTS RESERVED. Accessed by Lauren Gualdino (lgualdino@briarcliffmanor.org), (-) Order Number #100880972 on May 08, 2020 07:05 AM (PDT) pursuant to License Agreement with ICC & NYSDOS. No further reproduction, no

100880972

SECTION R1002
MASONRY HEATERS

R1002.1 Definition. A masonry heater is a heating *appliance* constructed of concrete or *solid masonry*, hereinafter referred to as masonry, that is designed to absorb and store heat from a solid-fuel fire built in the firebox by routing the exhaust gases through internal heat exchange channels in which the flow path downstream of the firebox includes flow in a horizontal or downward direction before entering the chimney and that delivers heat by radiation from the masonry surface of the heater.

R1002.2 Installation. Masonry heaters shall be installed in accordance with this section and comply with one of the following:

1. Masonry heaters shall comply with the requirements of ASTM E1602.
2. Masonry heaters shall be *listed* and *labeled* in accordance with UL 1482 or CEN 15250 and installed in accordance with the manufacturer's instructions.

R1002.3 Footings and foundation. The firebox floor of a masonry heater shall be a minimum thickness of 4 inches (102 mm) of noncombustible material and be supported on a noncombustible footing and foundation in accordance with Section R1003.2.

R1002.4 Seismic reinforcing. In Seismic Design Categories D_0, D_1 and D_2, masonry heaters shall be anchored to the masonry foundation in accordance with Section R1003.3. Seismic reinforcing shall not be required within the body of a masonry heater whose height is equal to or less than 3.5 times its body width and where the masonry chimney serving the heater is not supported by the body of the heater. Where the masonry chimney shares a common wall with the facing of the masonry heater, the chimney portion of the structure shall be reinforced in accordance with Section R1003.

R1002.5 Masonry heater clearance. Combustible materials shall not be placed within 36 inches (914 mm) of the outside surface of a masonry heater in accordance with NFPA 211 Section 8-7 (clearances for solid-fuel-burning *appliances*), and the required space between the heater and combustible material shall be fully vented to permit the free flow of air around all heater surfaces.

Exceptions:

1. Where the masonry heater wall is not less than 8 inches (203 mm) thick of *solid masonry* and the wall of the heat exchange channels is not less than 5 inches (127 mm) thick of *solid masonry*, combustible materials shall not be placed within 4 inches (102 mm) of the outside surface of a masonry heater. A clearance of not less than 8 inches (203 mm) shall be provided between the gas-tight capping slab of the heater and a combustible ceiling.
2. Masonry heaters listed and labeled in accordance with UL 1482 or CEN 15250 shall be installed in accordance with the listing specifications and the manufacturer's written instructions.

SECTION R1003
MASONRY CHIMNEYS

R1003.1 Definition. A masonry chimney is a chimney constructed of *solid masonry* units, hollow masonry units grouted solid, stone or concrete, hereinafter referred to as masonry. Masonry chimneys shall be constructed, anchored, supported and reinforced as required in this chapter.

R1003.2 Footings and foundations. Footings for masonry chimneys shall be constructed of concrete or *solid masonry* not less than 12 inches (305 mm) thick and shall extend not less than 6 inches (152 mm) beyond the face of the foundation or support wall on all sides. Footings shall be founded on natural undisturbed earth or engineered fill below frost depth. In areas not subjected to freezing, footings shall be not less than 12 inches (305 mm) below finished *grade*.

R1003.3 Seismic reinforcing. Masonry or concrete chimneys shall be constructed, anchored, supported and reinforced as required in this chapter. In Seismic Design Category D_0, D_1 or D_2 masonry and concrete chimneys shall be reinforced and anchored as detailed in Sections R1003.3.1, R1003.3.2 and R1003.4. In Seismic Design Category A, B or C, reinforcement and seismic anchorage are not required.

R1003.3.1 Vertical reinforcing. For chimneys up to 40 inches (1016 mm) wide, four No. 4 continuous vertical bars, anchored in the foundation, shall be placed in the concrete, or between wythes of *solid masonry*, or within the cells of hollow unit masonry, and grouted in accordance with Section R608.1.1. Grout shall be prevented from bonding with the flue liner so that the flue liner is free to move with thermal expansion. For chimneys more than 40 inches (1016 mm) wide, two additional No. 4 vertical bars shall be installed for each additional 40 inches (1016 mm) in width or fraction thereof.

R1003.3.2 Horizontal reinforcing. Vertical reinforcement shall be placed enclosed within $^1/_4$-inch (6.4 mm) ties, or other reinforcing of equivalent net cross-sectional area, spaced not to exceed 18 inches (457 mm) on center in concrete, or placed in the bed joints of unit masonry, at not less than every 18 inches (457 mm) of vertical height. Two such ties shall be installed at each bend in the vertical bars.

R1003.4 Seismic anchorage. Masonry and concrete chimneys and foundations in Seismic Design Category D_0, D_1 or D_2 shall be anchored at each floor, ceiling or roof line more than 6 feet (1829 mm) above *grade*, except where constructed completely within the exterior walls. Anchorage shall conform to the requirements in Section R1003.4.1.

R1003.4.1 Anchorage. Two $^3/_{16}$-inch by 1-inch (5 mm by 25 mm) straps shall be embedded not less than 12 inches (305 mm) into the chimney. Straps shall be hooked around the outer bars and extend 6 inches (152 mm) beyond the bend. Each strap shall be fastened to not less than four floor joists with two $^1/_2$-inch (12.7 mm) bolts.

R1003.4.1.1 Cold-formed steel framing. Where cold-formed steel framing is used, the location where the $^1/_2$-inch (12.7 mm) bolts are used to attach the straps to the framing shall be reinforced with not less than a 3-inch × 3-inch × 0.229-inch (76 mm × 76 mm × 5.8 mm) steel

INTERNATIONAL CODE COUNCIL®
Copyright © 2019 ICC & NYSDOS. ALL RIGHTS RESERVED. Accessed by Lauren Gualdino (lgualdino@briarcliffmanor.org), (-) Order Number #100880972 on May 08, 2020 07:05 AM (PDT) pursuant to License Agreement with ICC & NYSDOS. No further reproduction, no

100880972

plate on top of a strap that is screwed to the framing with not fewer than seven No. 6 screws for each bolt.

R1003.5 Corbeling. Masonry chimneys shall not be corbeled more than one-half of the chimney's wall thickness from a wall or foundation, nor shall a chimney be corbeled from a wall or foundation that is less than 12 inches (305 mm) thick unless it projects equally on each side of the wall, except that on the second *story* of a two-story *dwelling*, corbeling of chimneys on the exterior of the enclosing walls shall be permitted to be equal to the wall thickness. The projection of a single course shall not exceed one-half the unit height or one-third of the unit bed depth, whichever is less.

R1003.6 Changes in dimension. The chimney wall or chimney flue lining shall not change in size or shape within 6 inches (152 mm) above or below where the chimney passes through floor components, ceiling components or roof components.

R1003.7 Offsets. Where a masonry chimney is constructed with a fireclay flue liner surrounded by one wythe of masonry, the maximum offset shall be such that the centerline of the flue above the offset does not extend beyond the center of the chimney wall below the offset. Where the chimney offset is supported by masonry below the offset in an *approved* manner, the maximum offset limitations shall not apply. Each individual corbeled masonry course of the offset shall not exceed the projection limitations specified in Section R1003.5.

R1003.8 Additional load. Chimneys shall not support loads other than their own weight unless they are designed and constructed to support the additional load. Construction of masonry chimneys as part of the masonry walls or reinforced concrete walls of the building shall be permitted.

R1003.9 Termination. Chimneys shall extend not less than 2 feet (610 mm) higher than any portion of a building within 10 feet (3048 mm), but shall be not less than 3 feet (914 mm) above the highest point where the chimney passes through the roof.

R1003.9.1 Chimney caps. Masonry chimneys shall have a concrete, metal or stone cap, a drip edge and a caulked bond break around any flue liners in accordance with ASTM C1283. The concrete, metal or stone cap shall be sloped to shed water.

R1003.9.2 Spark arrestors. Where a spark arrestor is installed on a masonry chimney, the spark arrestor shall meet all of the following requirements:

1. The net free area of the arrestor shall be not less than four times the net free area of the outlet of the chimney flue it serves.
2. The arrestor screen shall have heat and corrosion resistance equivalent to 19-gage galvanized steel or 24-gage stainless steel.
3. Openings shall not permit the passage of spheres having a diameter greater than $^1/_2$ inch (12.7 mm) nor block the passage of spheres having a diameter less than $^3/_8$ inch (9.5 mm).
4. The spark arrestor shall be located with *access* for cleaning and the screen or chimney cap shall be removable to allow for cleaning of the chimney flue.

R1003.9.3 Rain caps. Where a masonry or metal rain cap is installed on a masonry chimney, the net free area under the cap shall be not less than four times the net free area of the outlet of the chimney flue it serves.

R1003.10 Wall thickness. Masonry chimney walls shall be constructed of *solid masonry* units or hollow masonry units grouted solid with not less than a 4-inch (102 mm) nominal thickness.

R1003.10.1 Masonry veneer chimneys. Where masonry is used to veneer a frame chimney, through-flashing and weep holes shall be installed as required by Section R703.

R1003.11 Flue lining (material). Masonry chimneys shall be lined. The lining material shall be appropriate for the type of *appliance* connected, in accordance with the terms of the *appliance* listing and manufacturer's instructions.

R1003.11.1 Residential-type appliances (general). Flue lining systems shall comply with one of the following:

1. Clay flue lining complying with the requirements of ASTM C315.
2. Listed and labeled chimney lining systems complying with UL 1777.
3. Factory-built chimneys or chimney units listed for installation within masonry chimneys.
4. Other *approved* materials that will resist corrosion, erosion, softening or cracking from flue gases and condensate at temperatures up to 1,800°F (982°C).

R1003.11.2 Flue linings for specific appliances. Flue linings other than these covered in Section R1003.11.1, intended for use with specific types of *appliances*, shall comply with Sections R1003.11.3 through R1003.11.6.

R1003.11.3 Gas appliances. Flue lining systems for gas *appliances* shall be in accordance with Chapter 24.

R1003.11.4 Pellet fuel-burning appliances. Flue lining and vent systems for use in masonry chimneys with pellet fuel-burning *appliances* shall be limited to the following:

1. Flue lining systems complying with Section R1003.11.1.
2. Pellet vents listed for installation within masonry chimneys (see Section R1003.11.6 for marking).

R1003.11.5 Oil-fired appliances approved for use with Type L vent. Flue lining and vent systems for use in masonry chimneys with oil-fired *appliances approved* for use with Type L vent shall be limited to the following:

1. Flue lining systems complying with Section R1003.11.1.
2. Listed chimney liners complying with UL 641 (see Section R1003.11.6 for marking).

INTERNATIONAL CODE COUNCIL®
Copyright © 2019 ICC & NYSDOS. ALL RIGHTS RESERVED. Accessed by Lauren Gualdino (lgualdino@briarcliffmanor.org), (-) Order Number #100880972 on May 08, 2020 07:05 AM (PDT) pursuant to License Agreement with ICC & NYSDOS. No further reproduction, no

100880972

R1003.11.6 Notice of usage. Where a flue is relined with a material not complying with Section R1003.11.1, the chimney shall be plainly and permanently identified by a *label* attached to a wall, ceiling or other conspicuous location adjacent to where the connector enters the chimney. The *label* shall include the following message or equivalent language:

> THIS CHIMNEY FLUE IS FOR USE ONLY WITH [TYPE OR CATEGORY OF APPLIANCE] APPLIANCES THAT BURN [TYPE OF FUEL]. DO NOT CONNECT OTHER TYPES OF APPLIANCES.

R1003.12 Clay flue lining (installation). Clay flue liners shall be installed in accordance with ASTM C1283 and extend from a point not less than 8 inches (203 mm) below the lowest inlet or, in the case of fireplaces, from the top of the smoke chamber to a point above the enclosing walls. The lining shall be carried up vertically, with a slope not greater than 30 degrees (0.52 rad) from the vertical.

Clay flue liners shall be laid in medium-duty water insoluble refractory mortar conforming to ASTM C199 with tight mortar joints left smooth on the inside and installed to maintain an airspace or insulation not to exceed the thickness of the flue liner separating the flue liners from the interior face of the chimney masonry walls. Flue liners shall be supported on all sides. Only enough mortar shall be placed to make the joint and hold the liners in position.

R1003.12.1 Listed materials. *Listed* materials used as flue linings shall be installed in accordance with the terms of their listings and manufacturer's instructions.

R1003.12.2 Space around lining. The space surrounding a chimney lining system or vent installed within a masonry chimney shall not be used to vent any other *appliance*.

> **Exception:** This shall not prevent the installation of a separate flue lining in accordance with the manufacturer's instructions.

R1003.13 Multiple flues. Where two or more flues are located in the same chimney, masonry wythes shall be built between adjacent flue linings. The masonry wythes shall be not less than 4 inches (102 mm) thick and bonded into the walls of the chimney.

> **Exception:** Where venting only one *appliance*, two flues shall be permitted to adjoin each other in the same chimney with only the flue lining separation between them. The joints of the adjacent flue linings shall be staggered not less than 4 inches (102 mm).

R1003.14 Flue area (appliance). Chimney flues shall not be smaller in area than that of the area of the connector from the *appliance* [see Tables R1003.14(1) and R1003.14(2)]. The sizing of a chimney flue to which multiple *appliance* venting systems are connected shall be in accordance with Section M1805.3.

TABLE R1003.14(1)
NET CROSS-SECTIONAL AREA OF ROUND FLUE SIZES[a]

FLUE SIZE, INSIDE DIAMETER (inches)	CROSS-SECTIONAL AREA (square inches)
6	28
7	38
8	50
10	78
$10^{3}/_{4}$	90
12	113
15	176
18	254

For SI: 1 inch = 25.4 mm, 1 square inch = 645.16 mm^2.

a. Flue sizes are based on ASTM C315.

TABLE R1003.14(2)
NET CROSS-SECTIONAL AREA OF SQUARE AND RECTANGULAR FLUE SIZES

FLUE SIZE, OUTSIDE NOMINAL DIMENSIONS (inches)	CROSS-SECTIONAL AREA (square inches)
4.5 × 8.5	23
4.5 × 13	34
8 × 8	42
8.5 × 8.5	49
8 × 12	67
8.5 × 13	76
12 × 12	102
8.5 × 18	101
13 × 13	127
12 × 16	131
13 × 18	173
16 × 16	181
16 × 20	222
18 × 18	233
20 × 20	298
20 × 24	335
24 × 24	431

For SI: 1 inch = 25.4 mm, 1 square inch = 645.16 mm^2.

R1003.15 Flue area (masonry fireplace). Flue sizing for chimneys serving fireplaces shall be in accordance with Section R1003.15.1 or R1003.15.2.

R1003.15.1 Option 1. Round chimney flues shall have a minimum net cross-sectional area of not less than one-twelfth of the fireplace opening. Square chimney flues shall have a minimum net cross-sectional area of one-tenth of the fireplace opening. Rectangular chimney flues with an *aspect ratio* less than 2 to 1 shall have a minimum net cross-sectional area of one-tenth of the fireplace opening. Rectangular chimney flues with an *aspect ratio* of 2 to 1 or more shall have a minimum net cross-sectional area of one-eighth of the fireplace opening. Cross-sectional areas of clay flue linings are shown in Tables R1003.14(1) and

INTERNATIONAL CODE COUNCIL®
Copyright © 2019 ICC & NYSDOS. ALL RIGHTS RESERVED. Accessed by Lauren Gualdino (lgualdino@briarcliffmanor.org), (-) Order Number #100880972 on May 08, 2020 07:05 AM (PDT) pursuant to License Agreement with ICC & NYSDOS. No further reproduction, no

100880972

R1003.14(2) or as provided by the manufacturer or as measured in the field.

R1003.15.2 Option 2. The minimum net cross-sectional area of the chimney flue shall be determined in accordance with Figure R1003.15.2. A flue size providing not less than the equivalent net cross-sectional area shall be used. Cross-sectional areas of clay flue linings are shown in Tables R1003.14(1) and R1003.14(2) or as provided by the manufacturer or as measured in the field. The height of the chimney shall be measured from the firebox floor to the top of the chimney flue.

R1003.16 Inlet. Inlets to masonry chimneys shall enter from the side. Inlets shall have a thimble of fireclay, rigid refractory material or metal that will prevent the connector from pulling out of the inlet or from extending beyond the wall of the liner.

R1003.17 Masonry chimney cleanout openings. Cleanout openings shall be provided within 6 inches (152 mm) of the base of each flue within every masonry chimney. The upper edge of the cleanout shall be located not less than 6 inches (152 mm) below the lowest chimney inlet opening. The height of the opening shall be not less than 6 inches (152 mm). The cleanout shall be provided with a noncombustible cover.

Exception: Chimney flues serving masonry fireplaces where cleaning is possible through the fireplace opening.

R1003.18 Chimney clearances. Any portion of a masonry chimney located in the interior of the building or within the exterior wall of the building shall have a minimum airspace clearance to combustibles of 2 inches (51 mm). Chimneys located entirely outside the exterior walls of the building, including chimneys that pass through the soffit or cornice, shall have a minimum airspace clear-

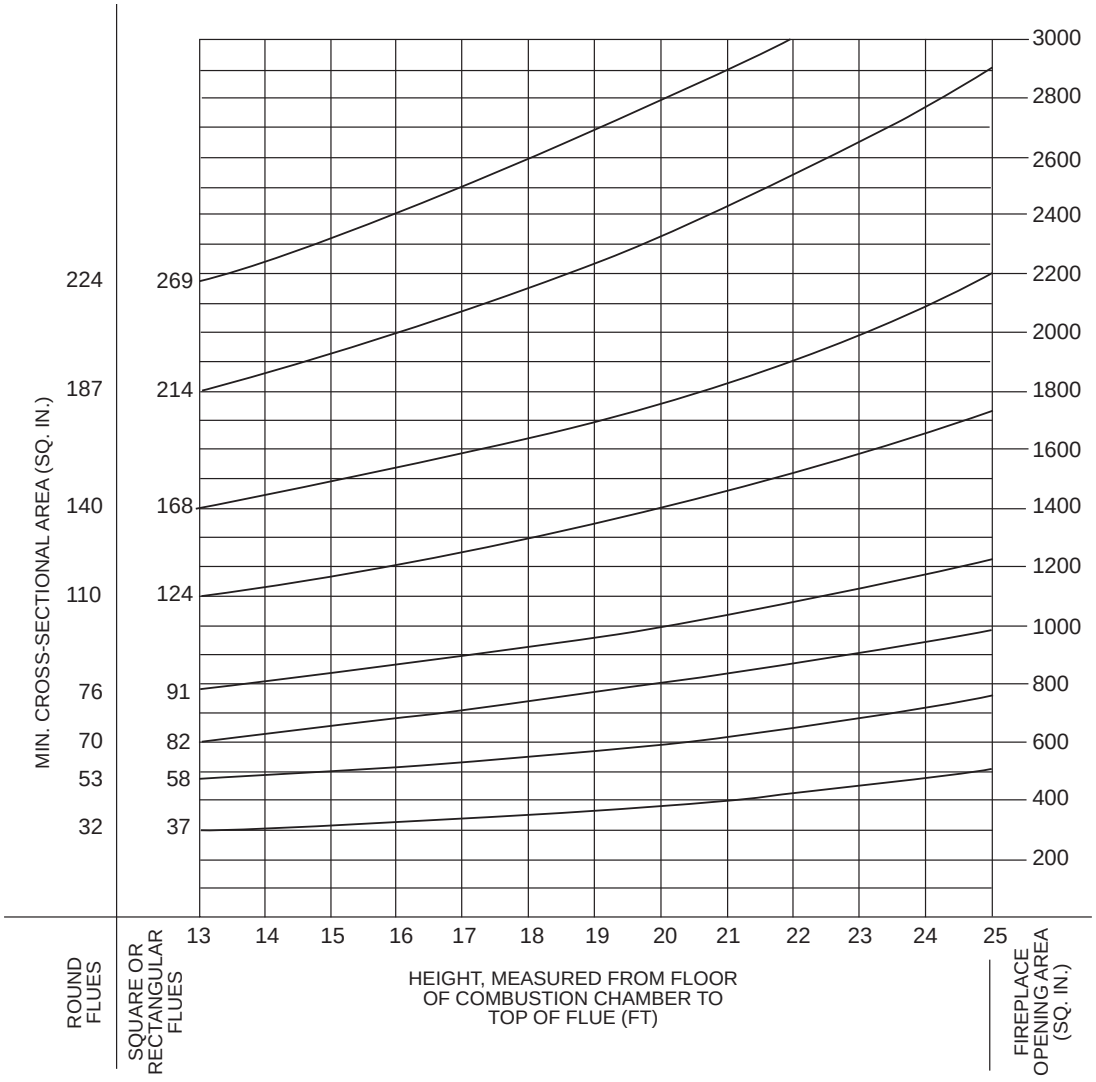

For SI: 1 foot = 304.8 mm, 1 square inch = 645.16 mm^2.

FIGURE R1003.15.2
FLUE SIZES FOR MASONRY CHIMNEYS

INTERNATIONAL CODE COUNCIL®
Copyright © 2019 ICC & NYSDOS. ALL RIGHTS RESERVED. Accessed by Lauren Gualdino (lgualdino@briarcliffmanor.org), (-) Order Number #100880972 on May 08, 2020 07:05 AM (PDT) pursuant to License Agreement with ICC & NYSDOS. No further reproduction, no

100880972

ance of 1 inch (25 mm). The airspace shall not be filled, except to provide fire blocking in accordance with Section R1003.19.

Exceptions:

1. Masonry chimneys equipped with a chimney lining system listed and *labeled* for use in chimneys in contact with combustibles in accordance with UL 1777 and installed in accordance with the manufacturer's instructions are permitted to have combustible material in contact with their exterior surfaces.
2. Where masonry chimneys are constructed as part of masonry or concrete walls, combustible materials shall not be in contact with the masonry or concrete wall less than 12 inches (305 mm) from the inside surface of the nearest flue lining.
3. Exposed combustible trim and the edges of sheathing materials, such as wood siding and flooring, shall be permitted to abut the masonry chimney side walls, in accordance with Figure R1003.18, provided such combustible trim or sheathing is not less than 8 inches (203 mm) from the inside surface of the nearest flue lining.

R1003.19 Chimney fireblocking. Spaces between chimneys and floors and ceilings through which chimneys pass shall be fireblocked with noncombustible material securely fastened in place. The fireblocking of spaces between chimneys and wood joists, beams or headers shall be self-supporting or be placed on strips of metal or metal lath laid across the spaces between combustible material and the chimney.

R1003.20 Chimney crickets. Chimneys shall be provided with crickets where the dimension parallel to the ridgeline is greater than 30 inches (762 mm) and does not intersect the ridgeline. The intersection of the cricket and the chimney shall be flashed and counterflashed in the same manner as normal roof-chimney intersections. Crickets shall be constructed in compliance with Figure R1003.20 and Table R1003.20.

TABLE R1003.20
CRICKET DIMENSIONS

ROOF SLOPE	H
12:12	$^1/_2$ of W
8:12	$^1/_3$ of W
6:12	$^1/_4$ of W
4:12	$^1/_6$ of W
3:12	$^1/_8$ of W

SECTION R1004
FACTORY-BUILT FIREPLACES

R1004.1 General. Factory-built fireplaces shall be *listed* and *labeled* and shall be installed in accordance with the conditions of the *listing*. Factory-built fireplaces shall be tested in accordance with UL 127.

R1004.2 Hearth extensions. Hearth extensions of *approved* factory-built fireplaces shall be installed in accordance with the *listing* of the fireplace. The hearth extension shall be readily distinguishable from the surrounding floor area. Listed and labeled hearth extensions shall comply with UL 1618.

R1004.3 Decorative shrouds. Decorative shrouds shall not be installed at the termination of chimneys for factory-built fireplaces except where the shrouds are listed and *labeled* for use with the specific factory-built fireplace system and installed in accordance with the manufacturer's instructions.

R1004.4 Unvented gas log heaters. An unvented gas log heater shall not be installed in a factory-built fireplace unless the fireplace system has been specifically tested, *listed* and *labeled* for such use in accordance with UL 127.

R1004.5 Gasketed fireplace doors. A gasketed fireplace door shall not be installed on a factory-built fireplace except where the fireplace system has been specifically tested, *listed* and *labeled* for such use in accordance with UL 127.

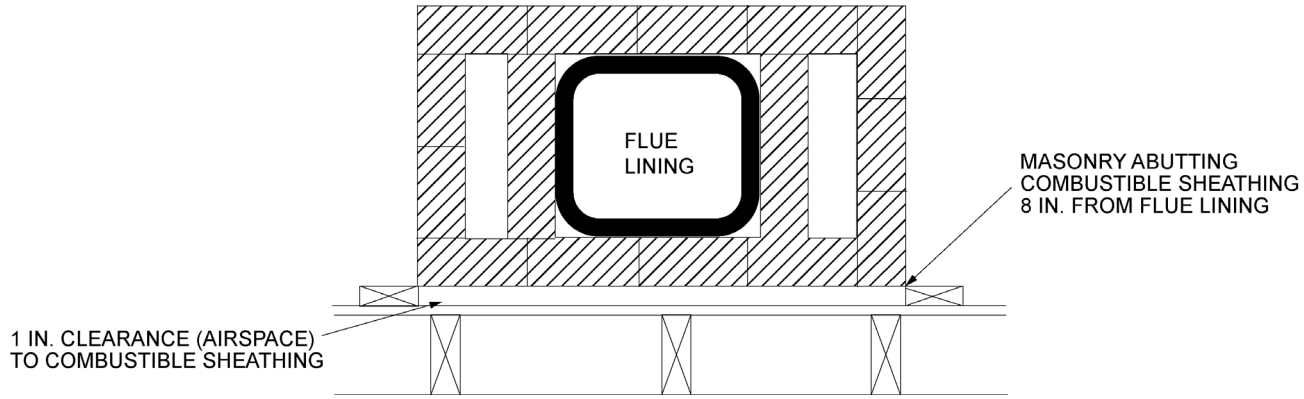

For SI: 1 inch = 25.4 mm.

FIGURE R1003.18
CLEARANCE FROM COMBUSTIBLES

INTERNATIONAL CODE COUNCIL®
Copyright © 2019 ICC & NYSDOS. ALL RIGHTS RESERVED. Accessed by Lauren Gualdino (lgualdino@briarcliffmanor.org), (-) Order Number #100880972 on May 08, 2020 07:05 AM (PDT) pursuant to License Agreement with ICC & NYSDOS. No further reproduction, no

100880972

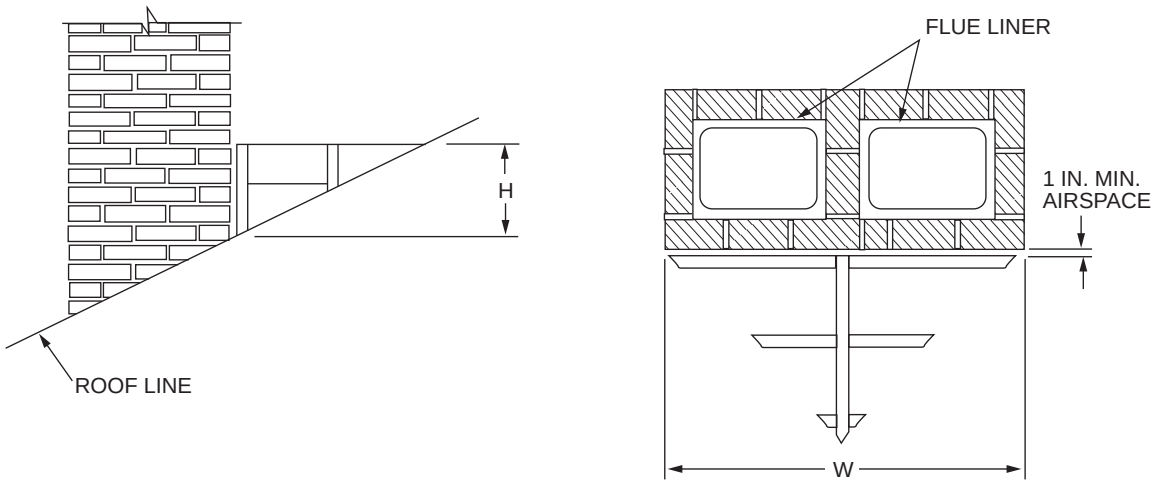

For SI: 1 inch = 25.4 mm.

FIGURE R1003.20
CHIMNEY CRICKET

SECTION R1005
FACTORY-BUILT CHIMNEYS

R1005.1 Listing. *Factory-built chimneys* shall be *listed* and *labeled* and shall be installed and terminated in accordance with the *manufacturer's installation instructions*.

R1005.2 Decorative shrouds. Decorative shrouds shall not be installed at the termination of *factory-built chimneys* except where the shrouds are *listed* and *labeled* for use with the specific *factory-built chimney* system and installed in accordance with the *manufacturer's installation instructions*.

R1005.3 Solid-fuel appliances. *Factory-built chimneys* installed in *dwelling units* with solid-fuel-burning *appliances* shall comply with the Type HT requirements of UL 103 and shall be marked "Type HT" and "Residential Type and Building Heating Appliance Chimney."

Exception: *Chimneys* for use with open combustion chamber fireplaces shall comply with the requirements of UL 103 and shall be marked "Residential Type and Building Heating Appliance Chimney."

Chimneys for use with open combustion chamber *appliances* installed in buildings other than *dwelling units* shall comply with the requirements of UL 103 and shall be marked "Building Heating Appliance Chimney" or "Residential Type and Building Heating Appliance Chimney."

R1005.4 Factory-built fireplaces. *Chimneys* for use with factory-built fireplaces shall comply with the requirements of UL 127.

R1005.5 Support. Where *factory-built chimneys* are supported by structural members, such as joists and rafters, those members shall be designed to support the additional load.

R1005.6 Medium-heat appliances. *Factory-built chimneys* for medium-heat *appliances* producing flue gases having a temperature above 1,000°F (538°C), measured at the entrance to the *chimney*, shall comply with UL 959.

R1005.7 Factory-built chimney offsets. Where a *factory-built chimney* assembly incorporates offsets, no part of the *chimney* shall be at an angle of more than 30 degrees (0.52 rad) from vertical at any point in the assembly and the chimney assembly shall not include more than four elbows.

R1005.8 Insulation shield. Where *factory-built chimneys* pass through insulated assemblies, an insulation shield constructed of steel having a thickness of not less than 0.0187 inch (0.4712 mm) (No. 26 gage) shall be installed to provide clearance between the *chimney* and the insulation material. The clearance shall be not less than the clearance to combustibles specified by the chimney *manufacturer's installation instructions*. Where *chimneys* pass through attic space, the shield shall terminate not less than 2 inches (51 mm) above the insulation materials and shall be secured in place to prevent displacement. Insulation shields provided as part of a *listed* chimney system shall be installed in accordance with the manufacturer's installation instructions.

SECTION R1006
EXTERIOR AIR SUPPLY

R1006.1 Exterior air. Factory-built or masonry fireplaces covered in this chapter shall be equipped with an exterior air supply to ensure proper fuel combustion unless the room is mechanically ventilated and controlled so that the indoor pressure is neutral or positive.

R1006.1.1 Factory-built fireplaces. Exterior *combustion air* ducts for factory-built fireplaces shall be a *listed* component of the fireplace and shall be installed in accordance with the fireplace manufacturer's instructions.

R1006.1.2 Masonry fireplaces. *Listed combustion air* ducts for masonry fireplaces shall be installed in accordance with the terms of their *listing* and the manufacturer's instructions.

INTERNATIONAL CODE COUNCIL®
Copyright © 2019 ICC & NYSDOS. ALL RIGHTS RESERVED. Accessed by Lauren Gualdino (lgualdino@briarcliffmanor.org), (-) Order Number #100880972 on May 08, 2020 07:05 AM (PDT) pursuant to License Agreement with ICC & NYSDOS. No further reproduction, no

100880972

R1006.2 Exterior air intake. The exterior air intake shall be capable of supplying all *combustion air* from the exterior of the *dwelling* or from spaces within the *dwelling* ventilated with outdoor air such as nonmechanically ventilated crawl or *attic* spaces. The exterior air intake shall not be located within the garage or basement of the dwelling. The exterior air intake, for other than listed factory-built fireplaces, shall not be located at an elevation higher than the firebox. The exterior air intake shall be covered with a corrosion-resistant screen of $^1/_4$-inch (6.4 mm) mesh.

R1006.3 Clearance. Unlisted *combustion air* ducts shall be installed with a minimum 1-inch (25 mm) clearance to combustibles for all parts of the duct within 5 feet (1524 mm) of the duct outlet.

R1006.4 Passageway. The *combustion air* passageway shall be not less than 6 square inches (3870 mm^2) and not more than 55 square inches (0.035 m^2), except that *combustion air* systems for listed fireplaces shall be constructed in accordance with the fireplace manufacturer's instructions.

R1006.5 Outlet. The exterior air outlet shall be located in the back or side of the firebox chamber or shall be located outside of the firebox, at the level of the hearth and not greater than 24 inches (610 mm) from the firebox opening. The outlet shall be closable and designed to prevent burning material from dropping into concealed combustible spaces.

INTERNATIONAL CODE COUNCIL®
Copyright © 2019 ICC & NYSDOS. ALL RIGHTS RESERVED. Accessed by Lauren Gualdino (lgualdino@briarcliffmanor.org), (-) Order Number #100880972 on May 08, 2020 07:05 AM (PDT) pursuant to License Agreement with ICC & NYSDOS. No further reproduction, no

100880972

INTERNATIONAL CODE COUNCIL®
Copyright © 2019 ICC & NYSDOS. ALL RIGHTS RESERVED. Accessed by Lauren Gualdino (lgualdino@briarcliffmanor.org), (-) Order Number #100880972 on May 08, 2020 07:05 AM (PDT) pursuant to License Agreement with ICC & NYSDOS. No further reproduction, no

100880972

Part IV—Energy Conservation

CHAPTER 11 [RE]

ENERGY EFFICIENCY

Note:

The *New York State Energy Conservation Construction Code* (the "Energy Code") is adopted pursuant to Article 11 of the Energy Law. The *Energy Code* is set forth in Part 1240 of Title 19 of the New York Codes, Rules and Regulations ("Part 1240") and in the publications incorporated by reference in Part 1240. Those publications include, but are not limited to, the *2020 Energy Conservation Construction Code of New York State* (the "2020 ECCCNYS"). The provisions of the *Energy Code* applicable to "residential buildings" are set forth in that part of the 2020 ECCCNYS denoted as the "ECCCNYS—Residential Provisions."

Chapter 11 is intended to be a restatement of the ECCCNYS—Residential Provisions and is included in this code as a convenience to the users of this code. However, the legally binding provisions of the *Energy Code* are as set forth in Part 1240 and the publications incorporated by reference in Part 1240, and in the event of any conflict between the provisions of the ECCCNYS—Residential Provisions and provisions set forth in Chapter 11, the provisions of the ECCCNYS—Residential Provisions will control.

SECTION N1101
GENERAL

[NY] N1101.1 Scope. This chapter regulates the energy efficiency for the design and construction of buildings regulated by this code.

Exceptions:

1. Any of the following, provided that the energy use of the building is not increased:
   - 1.1. Storm windows installed over existing fenestration.
   - 1.2. Glass only replacements in an existing sash and frame.
   - 1.3. Existing ceiling, wall or floor cavities exposed during construction provided that these cavities are filled with insulation.
   - 1.4. Construction where the existing roof, wall or floor cavity is not exposed.
   - 1.5. Reroofing for roofs where neither the sheathing nor the insulation is exposed; roofs without insulation in the cavity and where the sheathing or insulation is exposed during reroofing shall be insulated either above or below the sheathing.
   - 1.6. Replacement of existing doors that separate conditioned space from the exterior shall not require the installation of a vestibule or revolving door, provided, however, that an existing vestibule that separates such conditioned space from the exterior shall not be removed.
   - 1.7. Alterations that replace less than 50 percent of the luminaires in a space, provided that such alterations do not increase the installed interior lighting power.
   - 1.8. Alterations that replace only the bulb and ballast within the existing luminaires in a space provided that the alteration does not increase the installed interior lighting power.
2. Historic buildings as defined in this chapter.

N1101.2 (R101.4) Intent. This chapter shall regulate the design and construction of new *residential building*s; *additions* to*, alterations* of, and/or renovations of *existing residential buildings;* and *additions* to*, alterations* of, and/or renovations of *building system*s in existing *residential building*s for the use and conservation of energy over the life of each such *residential building*.

These provisions are intended to provide flexibility to permit the use of innovative approaches and techniques to achieve the objectives set forth in the preceding paragraph. However, nothing in Section N1101.2 shall be construed as permitting any *building official*, or any governmental unit or agency charged with the administration and enforcement of the *Energy Code*, to waive, vary, modify, or otherwise alter any standard or requirement of this code or any other standard or requirement of the *Energy Code*. Standards or requirements of the *Energy Code* may be varied or modified only pursuant to Section 11-106 of the New York State Energy Law.

These provisions are not intended to abridge safety, health or environmental requirements contained in other applicable statutes, laws, rules, regulations, codes or ordinances. However, nothing in Section N1101.2 shall be construed as limiting the provisions of Section 11-103(3) of the New York State Energy Law, which provides that (1) any code, rule, or regulation promulgated or enacted prior to June 19, 1978, by any state agency other than the State Fire Prevention and Building Code Council, incorporating specific energy conservation requirements applicable to the construction of any building, is superseded by the *Energy Code* and (2) on and after June 19, 1978, the State Fire Prevention and Building Code Council, in accordance with the mandate under Article 11 of the New York State Energy Law, shall have exclusive authority among state agencies to promulgate a construction code incorporating energy conservation features.

INTERNATIONAL CODE COUNCIL®
Copyright © 2019 ICC & NYSDOS. ALL RIGHTS RESERVED. Accessed by Lauren Gualdino (lgualdino@briarcliffmanor.org), (-) Order Number #100880972 on May 08, 2020 07:05 AM (PDT) pursuant to License Agreement with ICC & NYSDOS. No further reproduction, no

100880972

N1101.3 Compliance materials. The *building official* shall be permitted to approve specific computer software, worksheets, compliance manuals and other similar materials that meet the intent of this chapter.

[NY] N1101.3.1 (R101.5.1) Compliance software. Compliance with this code can be demonstrated through the use of:

1. Computer software that is developed by the United States Department of Energy (such as REScheck) specifically for the ECCCNYS—Residential Provisions, or
2. Other software that shall have been expressly approved in writing by the New York Secretary of State as acceptable for demonstrating compliance with the ECCCNYS—Residential Provisions.

[NY] N1101.3.1.1 Software requirements. Software programs used to demonstrate compliance with this code must indicate compliance with the ECCCNYS—Residential Provisions, and must reflect the actual requirements of the ECCCNYS—Residential Provisions.

[NY] N1101.3.1.1.1 (R101.5.2) Mandatory provisions. The use of the software approach to demonstrate compliance with this code does not excuse compliance with any mandatory provision of the this code. When using the software approach to demonstrate compliance with the provisions of this code, compliance with all applicable mandatory provisions of the this code will still be required.

N1101.4 (R102.1.1) Reserved.

N1101.5 (R105.2) Information on construction documents. Construction documents shall be drawn to scale on suitable material. Electronic media documents are permitted to be submitted when *approved* by the *building official*. Construction documents shall be of sufficient clarity to indicate the location, nature and extent of the work proposed, and show in sufficient detail pertinent data and features of the building, systems and equipment as herein governed. Details shall include the following as applicable:

1. Insulation materials and their *R*-values.
2. Fenestration *U*-factors and *solar heat gain coefficients* (SHGC).
3. Area-weighted *U*-factor and *solar heat gain coefficient* (SHGC) calculations.
4. Mechanical system design criteria.
5. Mechanical and service water heating systems and equipment types, sizes and efficiencies.
6. Equipment and system controls.
7. Duct sealing, duct and pipe insulation and location.
8. Air sealing details.

N1101.5.1 (R105.2.1) Building thermal envelope depiction. The *building thermal envelope* shall be represented on the construction documents.

N1101.6 (R202) Defined terms. The following words and terms shall, for the purposes of this chapter, have the meanings shown herein.

ABOVE-GRADE WALL. A wall more than 50 percent above grade and enclosing *conditioned space*. This includes between-floor spandrels, peripheral edges of floors, roof and basement knee walls, dormer walls, gable end walls, walls enclosing a mansard roof and *skylight* shafts.

ACCESSIBLE. Admitting close approach as a result of not being guarded by locked doors, elevation or other effective means (see "Readily *accessible*").

ADDITION. An extension or increase in the *conditioned space* floor area, number of stories or height of a building or structure.

AIR BARRIER. One or more materials joined together in a continuous manner to restrict or prevent the passage of air through the *building thermal envelope* and its assemblies.

[NY] AIR-IMPERMEABLE INSULATION. An insulation having an air permeance equal to, or less than 0.02 L/s-m^2 at 75 Pa pressure differential tested according to ASTM E2178 or E283.

ALTERATION. Any construction, retrofit or renovation to an existing structure other than *repair* or *addition*. Also, a change in a building, electrical, gas, mechanical or plumbing system that involves an extension, *addition* or change to the arrangement, type or purpose of the original installation.

AUTOMATIC. Self-acting, operating by its own mechanism when actuated by some impersonal influence, as, for example, a change in current strength, pressure, temperature or mechanical configuration (see "Manual").

BASEMENT WALL. A wall 50 percent or more below grade and enclosing *conditioned space*.

[NY] BUILDING. Any structure used or intended for supporting or sheltering any use or occupancy or for affording shelter to persons, animals or property, including any (1) mechanical systems, *service water heating* systems and electric power and lighting systems located in such structure, and (2) any mechanical systems, *service water heating* systems, and electric power and lighting systems located on the building site and supporting the building. The term "building" shall include, but shall not be limited to, factory manufactured homes (as defined in Section 372(8) of the Executive Law) and mobile homes (as defined in Section 372(13) of the Executive Law).

BUILDING SITE. A contiguous area of land that is under the ownership or control of one entity.

[NY] BUILDING THERMAL ENVELOPE. The *exterior walls* (above and below grade), floors, ceilings, roofs and any other *building* element assemblies that enclose *conditioned space* or provide a boundary between *conditioned space* and *unconditioned space*.

CIRCULATING HOT WATER SYSTEM. A specifically designed water distribution system where one or more pumps are operated in the service hot water piping to circulate heated water from the water-heating equipment to fixtures and back to the water-heating equipment.

INTERNATIONAL CODE COUNCIL®
Copyright © 2019 ICC & NYSDOS. ALL RIGHTS RESERVED. Accessed by Lauren Gualdino (lgualdino@briarcliffmanor.org), (-) Order Number #100880972 on May 08, 2020 07:05 AM (PDT) pursuant to License Agreement with ICC & NYSDOS. No further reproduction, no

100880972

CLIMATE ZONE. A geographical region based on climatic criteria as specified in this code.

CONDITIONED FLOOR AREA. The horizontal projection of the floors associated with the *conditioned space*.

[NY] CONDITIONED SPACE. An area or room that is enclosed within the *building thermal envelope* and that is directly or indirectly heated or cooled using fossil fuel or electricity as the energy source. Spaces are indirectly heated or cooled where they communicate through openings with conditioned spaces, where they are separated from conditioned spaces by uninsulated walls, floors or ceilings, or where they contain uninsulated ducts, piping or other sources of heating or cooling using fossil fuel or electricity.

CONTINUOUS AIR BARRIER. A combination of materials and assemblies that restrict or prevent the passage of air through the *building thermal envelope*.

CONTINUOUS INSULATION (ci). Insulating material that is continuous across all structural members without thermal bridges other than fasteners and service openings. It is installed on the interior or exterior, or is integral to any opaque surface, of the *building* envelope.

CRAWL SPACE WALL. The opaque portion of a wall that encloses a crawl space and is partially or totally below grade.

CURTAIN WALL. Fenestration products used to create an external nonload-bearing wall that is designed to separate the exterior and interior environments.

DEMAND RECIRCULATION WATER SYSTEM. A water distribution system having one or more recirculation pumps that pump water from a heated water supply pipe back to the heated water source through a cold-water supply pipe.

DUCT. A tube or conduit utilized for conveying air. The air passages of self-contained systems are not to be construed as air ducts.

DUCT SYSTEM. A continuous passageway for the transmission of air that, in addition to ducts, includes duct fittings, dampers, plenums, fans and accessory air-handling equipment and appliances.

DWELLING UNIT. A single unit providing complete independent living facilities for one or more persons, including permanent provisions for living, sleeping, eating, cooking and sanitation.

ENERGY ANALYSIS. A method for estimating the annual energy use of the *proposed design* and *standard reference design* based on estimates of energy use.

ENERGY COST. The total estimated annual cost for purchased energy for the building functions regulated by this code, including applicable demand charges.

ENERGY SIMULATION TOOL. An *approved* software program or calculation-based methodology that projects the annual energy use of a *building*.

[NY] ERI REFERENCE DESIGN. A version of the *rated design* that meets the minimum requirements of the 2006 *International Energy Conservation Code, and that establishes the index value of 100 on the Energy Rating Index scale.*

EXTERIOR WALL. Walls including both above-grade walls and *basement walls*.

FENESTRATION. Products classified as either *vertical fenestration* or *skylights*.

Skylights. Glass or other transparent or translucent glazing material installed at a slope of less than 60 degrees (1.05 rad) from horizontal.

Vertical fenestration. Windows that are fixed or operable, opaque doors, glazed doors, glazed block and combination opaque/glazed doors composed of glass or other transparent or translucent glazing materials and installed at a slope of not less than 60 degrees (1.05 rad) from horizontal.

FENESTRATION PRODUCT, SITE-BUILT. A fenestration designed to be made up of field-glazed or field-assembled units using specific factory cut or otherwise factory-formed framing and glazing units. Examples of site-built fenestration include storefront systems, curtain walls, and atrium roof systems.

HEATED SLAB. Slab-on-grade construction in which the heating elements, hydronic tubing, or hot air distribution system is in contact with, or placed within or under, the slab.

HIGH-EFFICACY LAMPS. Compact fluorescent lamps, light-emitting diode (LED) lamps, T-8 or smaller diameter linear fluorescent lamps, or other lamps with an efficacy of not less than the following:

1. 60 lumens per watt for lamps over 40 watts.
2. 50 lumens per watt for lamps over 15 watts to 40 watts.
3. 40 lumens per watt for lamps 15 watts or less.

[NY] HISTORIC BUILDING. The term "Historic building" means an existing building or structure that is one or more of the following:

1. Listed in the New York State Register of Historic Places, either individually or as a contributing building to a historic district.
2. Listed in the National Register of Historic Places, either individually or as a contributing building to a historic district.
3. Determined to be eligible for listing in either the New York State or National Register of Historic Places, either individually or as a contributing building to a historic district, by the New York State Commissioner of Parks, Recreation and Historic Preservation.
4. Determined to be eligible for listing in the National Register of Historic Places, either individually or as a contributing building to a historic district, by the U.S. Secretary of the Interior.

INFILTRATION. The uncontrolled inward air leakage into a building caused by the pressure effects of wind or the effect of differences in the indoor and outdoor air density or both.

INSULATED SIDING. A type of continuous insulation with manufacturer-installed insulating material as an integral part of the cladding product having an *R*-value of not less than R-2.

INTERNATIONAL CODE COUNCIL®
Copyright © 2019 ICC & NYSDOS. ALL RIGHTS RESERVED. Accessed by Lauren Gualdino (lgualdino@briarcliffmanor.org), (-) Order Number #100880972 on May 08, 2020 07:05 AM (PDT) pursuant to License Agreement with ICC & NYSDOS. No further reproduction, no

100880972

INSULATING SHEATHING. An insulating board with a core material having an *R*-value of not less than R-2.

LABELED. Equipment, materials or products to which have been affixed a label, seal, symbol or other identifying mark of a nationally recognized testing laboratory, *approved* agency or other organization concerned with product evaluation that maintains periodic inspection of the production of such labeled items and whose labeling indicates either that the equipment, material or product meets identified standards or has been tested and found suitable for a specified purpose.

LISTED. Equipment, materials, products or services included in a list published by an organization acceptable to the *building official* and concerned with evaluation of products or services that maintains periodic inspection of production of *listed* equipment or materials or periodic evaluation of services and where the listing states either that the equipment, material, product or service meets identified standards or has been tested and found suitable for a specified purpose.

LOW-VOLTAGE LIGHTING. Lighting equipment powered through a transformer such as a cable conductor, a rail conductor and track lighting.

MANUAL. Capable of being operated by personal intervention (see "Automatic").

OPAQUE DOOR. A door that is not less than 50-percent opaque in surface area.

PROPOSED DESIGN. A description of the proposed building used to estimate annual energy use for determining compliance based on total building performance.

RATED DESIGN. A description of the proposed *building* used to determine the energy rating index.

READILY ACCESSIBLE. Capable of being reached quickly for operation, renewal or inspection without requiring those to whom ready access is requisite to climb over or remove obstacles or to resort to portable ladders or access equipment (see "*Accessible*").

REPAIR. The reconstruction or renewal of any part of an existing *building* for the purpose of its maintenance or to correct damage.

REROOFING. The process of recovering or replacing an existing roof covering. See "Roof recover" and "Roof replacement."

[NY] RESIDENTIAL BUILDING. For this code, a "residential building" includes:

1. Detached one-family dwellings having not more than three stories above grade plane;
2. Detached two-family dwellings having not more than three stories above grade plane;
3. Buildings that (i) consist of three or more attached *townhouse* units and (ii) have not more than three stories above grade plane;
4. Buildings that (i) are classified in accordance with Chapter 3 of the *Building Code of New York State* in Group R-2, R-3 or R-4 and (ii) have not more than three stories above grade plane;
5. Factory-manufactured homes (as defined in Section 372(8) of the New York State Executive Law); and
6. Mobile homes (as defined in Section 372(13) of the New York State Executive Law).

For the purposes of this definition of the term "*residential building*," the term "*townhouse unit*" means a single-family *dwelling unit* constructed in a group of three or more attached units in which each unit: (1) extends from the foundation to roof, (2) has open space on at least two sides, and (3) has a separate *means of egress*.

ROOF ASSEMBLY. A system designed to provide weather protection and resistance to design loads. The system consists of a roof covering and roof deck or a single component serving as both the roof covering and the roof deck. A roof assembly includes the roof covering, underlayment, and roof deck, and can also include a thermal barrier, ignition barrier, insulation or a vapor retarder.

ROOF RECOVER. The process of installing an additional roof covering over a prepared existing roof covering without removing the existing roof covering.

ROOF REPAIR. Reconstruction or renewal of any part of an existing roof for the purposes of its maintenance.

ROOF REPLACEMENT. The process of removing the existing roof covering, repairing any damaged substrate and installing a new roof covering.

***R*-VALUE (THERMAL RESISTANCE).** The inverse of the time rate of heat flow through a body from one of its bounding surfaces to the other surface for a unit temperature difference between the two surfaces, under steady state conditions, per unit area ($h \cdot ft^2 \cdot °F/Btu$) [$(m^2 \cdot K)/W$].

SERVICE WATER HEATING. Supply of hot water for purposes other than comfort heating.

SOLAR HEAT GAIN COEFFICIENT (SHGC). The ratio of the solar heat gain entering the space through the fenestration assembly to the incident solar radiation. Solar heat gain includes directly transmitted solar heat and absorbed solar radiation that is then reradiated, conducted or convected into the space.

[NY] STANDARD REFERENCE DESIGN. A version of the *proposed design* that meets the minimum prescriptive and mandatory baseline requirements of this code. The *standard reference design*, as the code baseline, is used to determine the maximum allowable annual energy use requirement for compliance. The proposed design is measured against the *standard reference design* in an annual energy use simulation and is based on total building performance. Parameters of the standard reference design and the proposed design are specified in Tables contained in Section R405.

SUNROOM. A one-story structure attached to a dwelling with a glazing area in excess of 40 percent of the gross area of the structure's *exterior walls* and roof.

THERMAL ISOLATION. Physical and space conditioning separation from *conditioned spaces*. The *conditioned spaces* shall be controlled as separate *zones* for heating and cooling or conditioned by separate equipment.

THERMOSTAT. An automatic control device used to maintain temperature at a fixed or adjustable set point.

INTERNATIONAL CODE COUNCIL®
Copyright © 2019 ICC & NYSDOS. ALL RIGHTS RESERVED. Accessed by Lauren Gualdino (lgualdino@briarcliffmanor.org), (-) Order Number #100880972 on May 08, 2020 07:05 AM (PDT) pursuant to License Agreement with ICC & NYSDOS. No further reproduction, no

100880972

***U*-FACTOR (THERMAL TRANSMITTANCE).** The coefficient of heat transmission (air to air) through a building component or assembly, equal to the time rate of heat flow per unit area and unit temperature difference between the warm side and cold side air films (Btu/h • ft^2 • °F) [W/(m^2 • K)].

VENTILATION. The natural or mechanical process of supplying conditioned or unconditioned air to, or removing such air from, any space.

VENTILATION AIR. That portion of supply air that comes from outside (outdoors) plus any recirculated air that has been treated to maintain the desired quality of air within a designated space.

VISIBLE TRANSMITTANCE [VT]. The ratio of visible light entering the space through the fenestration product assembly to the incident visible light, Visible Transmittance, includes the effects of glazing material and frame and is expressed as a number between 0 and 1.

WHOLE HOUSE MECHANICAL VENTILATION SYSTEM. An exhaust system, supply system, or combination thereof that is designed to mechanically exchange indoor air with outdoor air when operating continuously or through a programmed intermittent schedule to satisfy the whole house ventilation rates.

ZONE. A space or group of spaces within a *building* with heating or cooling requirements that are sufficiently similar so that desired conditions can be maintained throughout using a single controlling device.

N1101.7 (R301.1) Climate zones. Climate zones from Table N1101.7 shall be used for determining the applicable requirements in Sections N1101 through N1111.

[NY] N1101.8 (R301.4) Reserved.

N1101.9 (R302.1) Interior design conditions. The interior design temperatures used for heating and cooling load calculations shall be a maximum of 72°F (22°C) for heating and minimum of 75°F (24°C) for cooling.

N1101.10 (R303.1) Identification. Materials, systems and equipment shall be identified in a manner that will allow a determination of compliance with the applicable provisions of this code.

N1101.10.1 (R303.1.1) Building thermal envelope insulation. An *R*-value identification mark shall be applied by the manufacturer to each piece of *building thermal envelope* insulation that is 12 inches (305 mm) or greater in width. Alternatively, the insulation installers shall provide a certification that indicates the type, manufacturer and *R*-value of insulation installed in each element of the *building thermal envelope*. For blown-in or sprayed fiberglass and cellulose insulation, the initial installed thickness, settled thickness, settled *R*-value, installed density, coverage area and number of bags installed shall be indicated on the certification. For sprayed polyurethane foam (SPF) insulation, the installed thickness of the areas covered and the *R*-value of the installed thickness shall be indicated on the certification. For insulated siding, the *R*-value shall be on a label on the product's package and shall be indicated on the certification. The insulation installer shall sign, date and post the certification in a conspicuous location on the job site.

Exception: For roof insulation installed above the deck, the *R*-value shall be labeled as required by the material standards specified in Table R906.2.

N1101.10.1.1 (R303.1.1.1) Blown-in or sprayed roof and ceiling insulation. The thickness of blown-in or sprayed fiberglass and cellulose roof and ceiling insulation shall be written in inches (mm) on markers that are installed at not less than one for every 300 square feet (28 m^2) throughout the attic space. The markers shall be affixed to the trusses or joists and marked with the minimum initial installed thickness with numbers not less than 1 inch (25 mm) in height. Each marker shall face the attic access opening. The thickness and installed *R*-value of sprayed polyurethane foam insulation shall be indicated on the certification provided by the insulation installer.

N1101.10.2 (R303.1.2) Insulation mark installation. Insulating materials shall be installed such that the manufacturer's *R*-value mark is readily observable at inspection.

N1101.10.3 (R303.1.3) Fenestration product rating. *U*-factors of fenestration products such as windows, doors and *skylights* shall be determined in accordance with NFRC 100.

Exception: Where required, garage door *U*-factors shall be determined in accordance with either NFRC 100 or ANSI/DASMA 105.

U-factors shall be determined by an accredited, independent laboratory, and labeled and certified by the manufacturer.

Products lacking such a labeled *U*-factor shall be assigned a default *U*-factor from Table N1101.10.3(1) or N1101.10.3(2). The *solar heat gain coefficient* (SHGC) and visible transmittance (VT) of glazed fenestration products such as windows, glazed doors and *skylights* shall be determined in accordance with NFRC 200 by an accredited, independent laboratory, and labeled and certified by the manufacturer. Products lacking such a labeled SHGC or VT shall be assigned a default SHGC or VT from Table N1101.10.3(3).

TABLE N1101.10.3(1) [R303.1.3(1)]
DEFAULT GLAZED WINDOW, GLASS DOOR AND SKYLIGHT *U*-FACTORS

FRAME TYPE	WINDOW AND GLASS DOOR		SKYLIGHT	
	Single pane	Double pane	Single	Double
Metal	1.20	0.80	2.00	1.30
Metal with Thermal Break	1.10	0.65	1.90	1.10
Nonmetal or Metal Clad	0.95	0.55	1.75	1.05
Glazed Block	0.60			

INTERNATIONAL CODE COUNCIL®
Copyright © 2019 ICC & NYSDOS. ALL RIGHTS RESERVED. Accessed by Lauren Gualdino (lgualdino@briarcliffmanor.org), (-) Order Number #100880972 on May 08, 2020 07:05 AM (PDT) pursuant to License Agreement with ICC & NYSDOS. No further reproduction, no

100880972

[NY] TABLE N1101.7 (R301.1)
NEW YORK STATE CLIMATE ZONES BY COUNTY

Zone 4A	Zone 5A	Zone 6A
Bronx	Albany	Allegany
Kings	Cayuga	Broome
Nassau	Chautauqua	Cattaraugus
New York	Chemung	Chenango
Queens	Columbia	Clinton
Richmond	Cortland	Delaware
Suffolk	Dutchess	Essex
Westchester	Erie	Franklin
	Genessee	Fulton
	Greene	Hamilton
	Livingston	Herkimer
	Monroe	Jefferson
	Niagara	Lewis
	Onondaga	Madison
	Ontario	Montgomery
	Orange	Oneida
	Orleans	Otsego
	Oswego	Schoharie
	Putnam	Schuyler
	Rensselaer	Steuben
	Rockland	St. Lawrence
	Saratoga	Sullivan
	Schenectady	Tompkins
	Seneca	Ulster
	Tioga	Warren
	Washington	Wyoming
	Wayne	
	Yates	

INTERNATIONAL CODE COUNCIL®
Copyright © 2019 ICC & NYSDOS. ALL RIGHTS RESERVED. Accessed by Lauren Gualdino (lgualdino@briarcliffmanor.org), (-) Order Number #100880972 on May 08, 2020 07:05 AM (PDT) pursuant to License Agreement with ICC & NYSDOS. No further reproduction, no

100880972

TABLE N1101.10.3(2) [R303.1.3(2)]
DEFAULT OPAQUE DOOR *U*-FACTORS

DOOR TYPE	OPAQUE *U*-FACTOR
Uninsulated Metal	1.20
Insulated Metal	0.60
Wood	0.50
Insulated, nonmetal edge, not exceeding 45% glazing, any glazing double pane	0.35

TABLE N1101.10.3(3) [R303.1.3(3)]
DEFAULT GLAZED FENESTRATION SHGC AND VT

	SINGLE GLAZED		DOUBLE GLAZED		GLAZED BLOCK
	Clear	Tinted	Clear	Tinted	
SHGC	0.8	0.7	0.7	0.6	0.6
VT	0.6	0.3	0.6	0.3	0.6

N1101.10.4 (R303.1.4) Insulation product rating. The thermal resistance, *R*-value, of insulation shall be determined in accordance with Part 460 of US-FTC CFR Title 16 in units of h • ft^2 • °F/Btu at a mean temperature of 75°F (24°C).

N1101.10.4.1 (R303.1.4.1) Insulated siding. The thermal resistance, *R*-value, of insulated siding shall be determined in accordance with ASTM C1363. Installation for testing shall be in accordance with the manufacturer's instructions.

N1101.11 (R303.2) Installation. Materials, systems and equipment shall be installed in accordance with the manufacturer's instructions and this code.

N1101.11.1 (R303.2.1) Protection of exposed foundation insulation. Insulation applied to the exterior of *basement walls*, crawl space walls and the perimeter of slab-on-grade floors shall have a rigid, opaque and weather-resistant protective covering to prevent the degradation of the insulation's thermal performance. The protective covering shall cover the exposed exterior insulation and extend not less than 6 inches (153 mm) below grade.

N1101.12 (R303.3) Maintenance information. Maintenance instructions shall be furnished for equipment and systems that require preventive maintenance. Required regular maintenance actions shall be clearly stated and incorporated on a readily *accessible* label. The label shall include the title or publication number for the operation and maintenance manual for that particular model and type of product.

N1101.13 (R401.2) Compliance. Projects shall comply with one of the following:

1. Sections N1101.14 through N1104.
2. Section N1105 and the provisions of Sections N1101.14 through N1104 indicated as "Mandatory."
3. The energy rating index (ERI) approach in Section N1106.

N1101.13.1 (R401.2.1) Reserved.

N1101.14 (R401.3) Certificate (Mandatory). A permanent certificate shall be completed by the builder or other *approved* party and posted on a wall in the space where the furnace is located, a utility room or an *approved* location inside the *building*. Where located on an electrical panel, the certificate shall not cover or obstruct the visibility of the circuit directory label, service disconnect label or other required labels. The certificate shall indicate the predominant *R*-values of insulation installed in or on ceilings, roofs, walls, foundation components such as slabs, *basement walls,* crawl space walls and floors, and ducts outside *conditioned spaces*; *U*-factors of fenestration and the *solar heat gain coefficient* (SHGC) of fenestration, and the results from any required duct system and *building* envelope air leakage testing performed on the *building*. Where there is more than one value for each component, the certificate shall indicate the value covering the largest area. The certificate shall indicate the types and efficiencies of heating, cooling and service water heating equipment. Where a gas-fired unvented room heater, electric furnace, or baseboard electric heater is installed in the residence, the certificate shall indicate "gas-fired unvented room heater," "electric furnace" or "baseboard electric heater," as appropriate. An efficiency shall not be indicated for gas-fired unvented room heaters, electric furnaces and electric baseboard heaters**.**

SECTION N1102 (R402)
BUILDING THERMAL ENVELOPE

[NY] N1102.1 (R402.1) General (Prescriptive). The *building thermal envelope* shall comply with the requirements of Sections N1102.1.1 through N1102.1.5.

Exceptions:

1. The following low-energy *buildings*, or portions thereof, separated from the remainder of the building by *building thermal envelope* assemblies complying with this section shall be exempt from the *building thermal envelope* provisions of Sections N1102.1.1 through N1102.1.5.
   1.1. Those with a peak design rate of energy usage less than 3.4 Btu/h • ft^2 (10.7 W/m^2) or 1.0 watt/ft^2 of floor area for space-conditioning purposes.
   1.2. Those that do not contain *conditioned space*.
2. Log homes designed in accordance with ICC 400.

N1102.1.1 (R402.1.1) Vapor retarder. Wall assemblies in the *building thermal envelope* shall comply with the vapor retarder requirements of Section R702.7.

[NY] N1102.1.2 (R402.1.2) Insulation and fenestration criteria. The *building thermal envelope* shall meet the requirements of Table N1102.1.2 based on the *climate zone* specified in Section N1101.7. In Climate Zone 6, the building thermal envelope shall meet either the requirements of the Climate Zone 6 "option 1" row in Table N1102.1.2 or the requirements of the Climate Zone 6 "option 2" row in Table N1102.1.2.

N1102.1.3 (R402.1.3) *R*-value computation. Insulation material used in layers, such as framing cavity insulation or continuous insulation, shall be summed to compute the

INTERNATIONAL CODE COUNCIL®
Copyright © 2019 ICC & NYSDOS. ALL RIGHTS RESERVED. Accessed by Lauren Gualdino (lgualdino@briarcliffmanor.org), (-) Order Number #100880972 on May 08, 2020 07:05 AM (PDT) pursuant to License Agreement with ICC & NYSDOS. No further reproduction, no

100880972

corresponding component *R*-value. The manufacturer's settled *R*-value shall be used for blown-in insulation. Computed *R*-values shall not include an *R*-value for other building materials or air films. Where insulated siding is used for the purpose of complying with the continuous insulation requirements of Table N1102.1.2, the manufacturer's labeled *R*-value for insulated siding shall be reduced by R-0.6.

N1102.1.4 (R402.1.4) *U*-factor alternative. An assembly with a *U*-factor equal to or less than that specified in Table N1102.1.4 shall be permitted as an alternative to the *R*-value in Table N1102.1.2.

N1102.1.5 (R402.1.5) Total UA alternative. Where the total *building thermal envelope* UA, the sum of *U*-factor times assembly area, is less than or equal to the Total UA resulting from multiplying the *U*-factors in Table N1102.1.4 by the same assembly area as in the proposed *building*, the *building* shall be considered to be in compliance with Table N1102.1.2. The UA calculation shall be performed using a method consistent with the ASHRAE *Handbook of Fundamentals* and shall include the thermal bridging effects of framing materials. In addition to UA compliance, SHGC requirements shall be met.

N1102.2 (R402.2) Specific insulation requirements (Prescriptive). In addition to the requirements of Section N1102.1, insulation shall meet the specific requirements of Sections N1102.2.1 through N1102.2.13.

N1102.2.1 (R402.2.1) Ceilings with attic spaces. Where Section R1102.1.2 requires R-38 insulation in the ceiling, installing R-30 insulation over 100 percent of the ceiling area requiring insulation shall satisfy the requirement for R-38 insulation wherever the full height of uncompressed R-30 insulation extends over the wall top plate at the eaves. Where Section N1102.1.2 requires R-49 insulation in the ceiling, installing R-38 insulation over 100 percent of the ceiling area requiring insulation shall satisfy the requirement for R-49 insulation wherever the full height of uncompressed R-38 insulation extends over the wall top plate at the eaves. This reduction shall not apply to the *U*-factor alternative approach in Section N1102.1.4 and the Total UA alternative in Section N1102.1.5.

N1102.2.2 (R402.2.2) Ceilings without attic spaces. Where Section N1102.1.2 requires insulation *R*-values greater than R-30 in the ceiling and the design of the roof/ceiling assembly does not allow sufficient space for the required insulation, the minimum required insulation *R*-value for such roof/ceiling assemblies shall be R-30. Insulation shall extend over the top of the wall plate to the outer edge of such plate and shall not be compressed. This reduction of insulation from the requirements of Section N1102.1.2 shall be limited to 500 square feet (46 m^2) or 20 percent of the total insulated ceiling area, whichever is less. This reduction shall not apply to the *U*-factor alternative approach in Section N1102.1.4 and the Total UA alternative in Section N1102.1.5.

N1102.2.3 (R402.2.3) Eave baffle. For air-permeable insulations in vented attics, a baffle shall be installed adjacent to soffit and eave vents. Baffles shall maintain an opening equal or greater than the size of the vent. The baffle shall extend over the top of the attic insulation. The baffle shall be permitted to be any solid material.

N1102.2.4 (R402.2.4) Access hatches and doors. Access doors from *conditioned spaces* to *unconditioned spaces* such as attics and crawl spaces shall be weatherstripped and insulated to a level equivalent to the insulation on the surrounding surfaces. Access that prevents damaging or compressing the insulation shall be provided to all equipment. Where loose-fill insulation is installed, a wood-framed or equivalent baffle or retainer shall be installed to prevent the loose-fill insulation from spilling into the living space when the attic access is opened. The baffle or retainer shall provide a permanent means of maintaining the installed *R*-value of the loose-fill insulation.

Exception: Vertical doors providing access from *conditioned spaces* to *unconditioned spaces* that comply with the fenestration requirements of Table N1102.1.2 based on the applicable *climate zone* specified in Section N1101.7.

N1102.2.5 (R402.2.5) Mass walls. Mass walls where used as a component of the building thermal envelope shall be one of the following:

1. Above-ground walls of concrete block, concrete, insulated concrete form, masonry cavity, brick but not brick veneer, adobe, compressed earth block, rammed earth, solid timber or solid logs.
2. Any wall having a heat capacity greater than or equal to 6 Btu/ft^2 • °F (123 kJ/m^2 • K).

N1102.2.6 (R402.2.6) Steel-frame ceilings, walls, and floors. Steel-frame ceilings, walls, and floors shall comply with the insulation requirements of Table N1102.2.6 or the *U*-factor requirements of Table N1102.1.4. The calculation of the *U*-factor for a steel-frame envelope assembly shall use a series-parallel path calculation method.

N1102.2.7 (R402.2.7) Walls with partial structural sheathing. Where Section N1102.1.2 requires continuous insulation on *exterior walls* and structural sheathing covers 40 percent or less of the gross area of all *exterior walls*, the required continuous insulation *R*-value shall be permitted to be reduced by an amount necessary, but not more than R-3, to result in a consistent total sheathing thickness on areas of the walls covered by structural sheathing. This reduction shall not apply to the *U*-factor alternative in Section N1102.1.4 and the Total UA alternative in Section N1102.1.5.

N1102.2.8 (R402.2.8) Floors. Floor framing-cavity insulation shall be installed to maintain permanent contact with the underside of the subfloor decking.

Exception: As an alternative, the floor framing-cavity insulation shall be in contact with the topside of sheathing or continuous insulation installed on the bottom side

INTERNATIONAL CODE COUNCIL®
Copyright © 2019 ICC & NYSDOS. ALL RIGHTS RESERVED. Accessed by Lauren Gualdino (lgualdino@briarcliffmanor.org), (-) Order Number #100880972 on May 08, 2020 07:05 AM (PDT) pursuant to License Agreement with ICC & NYSDOS. No further reproduction, no

100880972

[NY] TABLE N1102.1.2 (R402.1.2)
INSULATION AND FENESTRATION REQUIREMENTS BY COMPONENT[a]

CLIMATE ZONE	FENESTRATION *U*-FACTOR[b]	SKYLIGHT[b] *U*-FACTOR	GLAZED FENESTRATION SHGC[b, e]	CEILING *R*-VALUE	WOOD FRAME WALL *R*-VALUE	MASS WALL *R*-VALUE[i]	FLOOR *R*-VALUE	BASEMENT[c] WALL *R*-VALUE	SLAB[d] *R*-VALUE & DEPTH	CRAWL SPACE[c] WALL *R*-VALUE
1	NR	0.75	0.25	30	13	3/4	13	0	0	0
2	0.40	0.65	0.25	38	13	4/6	13	0	0	0
3	0.32	0.55	0.25	38	20 or 13 + 5[h]	8/13	19	5/13[f]	0	5/13
4 except Marine	0.32	0.55	0.40	49	20 or 13 + 5[h]	8/13	19	10 /13	10, 2 ft	10/13
5 and Marine 4	0.30	0.55	NR	49	20 or 13 + 5[h]	13/17	30[g]	15/19	10, 2 ft	15/19
6	0.30	0.55	NR	49	20 + 5[h] or 13 + 10[h]	15/20	30[g]	15/19	10, 4 ft	15/19
7 and 8	0.30	0.55	NR	49	20 + 5[h] or 13 + 10[h]	19/21	38[g]	15/19	10, 4 ft	15/19

For SI: 1 foot = 304.8 mm.

NR = Not Required.

a. *R*-values are minimums. *U*-factors and SHGC are maximums. Where insulation is installed in a cavity that is less than the label or design thickness of the insulation, the installed *R*-value of the insulation shall be not less than the *R*-value specified in the table.

b. The fenestration *U*-factor column excludes skylights. The SHGC column applies to all glazed fenestration.

c. "10/13" means R-10 continuous insulation on the interior or exterior of the home or R-13 cavity insulation on the interior of the basement wall. "15/19" means R-15 continuous insulation on the interior or exterior of the home or R-19 cavity insulation on the interior of the basement wall. Alternatively, compliance with "15/19" shall be R-13 cavity insulation on the interior of the basement wall plus R-5 continuous insulation on the interior or exterior of the home.

d. R-5 insulation shall be provided under the full slab area of a heated slab in addition to the required slab edge insulation *R*-value for slabs. as indicated in the table. The slab edge insulation for heated slabs shall not be required to extend below the slab.

e. Reserved.

f. Reserved.

g. Alternatively, insulation sufficient to fill the framing cavity providing not less than an *R*-value of R-19.

h. The first value is cavity insulation, the second value is continuous insulation. Therefore, as an example, "13+5" means R-13 cavity insulation plus R-5 continuous insulation.

i. Mass walls shall be in accordance with Section N1102.2.5. The second *R*-value applies where more than half of the insulation is on the interior of the mass wall.

[NY] TABLE N1102.1.4 (R402.1.4)
EQUIVALENT *U*-FACTORS[a]

CLIMATE ZONE	FENESTRATION *U*-FACTOR	SKYLIGHT *U*-FACTOR	CEILING *U*-FACTOR	FRAME WALL *U*-FACTOR	MASS WALL *U*-FACTOR[b]	FLOOR *U*-FACTOR	BASEMENT WALL *U*-FACTOR	CRAWL SPACE WALL *U*-FACTOR
4	0.32	0.55	0.026	0.060	0.098	0.047	0.059	0.065
5	0.30	0.55	0.026	0.060	0.082	0.033	0.050	0.055
6	0.30	0.55	0.026	0.045	0.060	0.033	0.050	0.055

a. Nonfenestration *U*-factors shall be obtained from measurement, calculation or an approved source.

b. Mass walls shall be in accordance with Section N1102.2.5 (R402.2.5). Where more than half the insulation is on the interior, the mass wall *U*-factors shall not exceed 0.087 in Climate Zone 4 except Marine, 0.065 in Climate Zone 5 and Marine 4, and 0.057 in Climate Zone 6.

c. In warm-humid locations as defined by Figure N1101.7 and Table N1101.7, the basement wall *U*-factor shall not exceed 0.360.

of floor framing where combined with insulation that meets or exceeds the minimum wood frame wall *R*-value in Table N1102.1.2 and that extends from the bottom to the top of all perimeter floor framing members.

N1102.2.9 (R402.2.9) Basement walls. Walls associated with conditioned basements shall be insulated from the top of the *basement wall* down to 10 feet (3048 mm) below grade or to the basement floor, whichever is less. Walls associated with unconditioned basements shall comply with this requirement except where the floor overhead is insulated in accordance with Sections N1102.1.2 and N1102.2.8.

N1102.2.10 (R402.2.10) Slab-on-grade floors. Slab-on-grade floors with a floor surface less than 12 inches (305 mm) below grade shall be insulated in accordance with Table N1102.1.2. The insulation shall extend downward from the top of the slab on the outside or inside of the foundation wall. Insulation located below grade shall be extended the distance provided in Table N1102.1.2 by any combination of vertical insulation, insulation extending under the slab or insulation extending out from the *building*. Insulation extending away from the *building* shall be protected by pavement or by not less than 10 inches (254 mm) of soil. The top edge of the insulation installed between the *exterior wall* and the edge of the interior slab shall be permitted to be cut at a 45-degree (0.79 rad) angle away from the *exterior wall.* Slab-edge insulation is not

INTERNATIONAL CODE COUNCIL®
Copyright © 2019 ICC & NYSDOS. ALL RIGHTS RESERVED. Accessed by Lauren Gualdino (lgualdino@briarcliffmanor.org), (-) Order Number #100880972 on May 08, 2020 07:05 AM (PDT) pursuant to License Agreement with ICC & NYSDOS. No further reproduction, no

100880972

TABLE N1102.2.6 (R402.2.6)
STEEL-FRAME CEILING, WALL AND FLOOR INSULATION *R*-VALUES

WOOD FRAME *R*-VALUE REQUIREMENT	COLD-FORMED STEEL-FRAME EQUIVALENT *R*-VALUE[a]
Steel Truss Ceilings[b]	
R-30	R-38 or R-30 + 3 or R-26 + 5
R-38	R-49 or R-38 + 3
R-49	R-38 + 5
Steel Joist Ceilings[b]	
R-30	R-38 in 2 × 4 or 2 × 6 or 2 × 8 R-49 in any framing
R-38	R-49 in 2 × 4 or 2 × 6 or 2 × 8 or 2 × 10
Steel-Framed Wall, 16 inches on center	
R-13	R-13 + 4.2 or R-21 + 2.8 or R-0 + 9.3 or R-15 + 3.8 or R-21 + 3.1
R-13 + 3	R-0 + 11.2 or R-13 + 6.1 or R-15 + 5.7 or R-19 + 5.0 or R-21 + 4.7
R-20	R-0 + 14.0 or R-13 + 8.9 or R-15 + 8.5 or R-19 + 7.8 or R-19 + 6.2 or R-21 + 7.5
R-20 + 5	R-13 + 12.7 or R-15 + 12.3 or R-19 + 11.6 or R-21 + 11.3 or R-25 + 10.9
R-21	R-0 + 14.6 or R-13 + 9.5 or R-15 + 9.1 or R-19 + 8.4 or R-21 + 8.1 or R-25 + 7.7
Steel-Framed Wall, 24 inches on center	
R-13	R-0 + 9.3 or R-13 + 3.0 or R-15 + 2.4
R-13 + 3	R-0 + 11.2 or R-13 + 4.9 or R-15 + 4.3 or R-19 + 3.5 or R-21 + 3.1
R-20	R-0 + 14.0 or R-13 + 7.7 or R-15 + 7.1 or R-19 + 6.3 or R-21 + 5.9
R-20 + 5	R-13 + 11.5 or R-15 + 10.9 or R-19 + 10.1 or R-21 + 9.7 or R-25 + 9.1
R-21	R-0 + 14.6 or R-13 + 8.3 or R-15 + 7.7 or R-19 + 6.9 or R-21 + 6.5 or R-25 + 5.9
Steel Joist Floor	
R-13	R-19 in 2 × 6, or R-19 + 6 in 2 × 8 or 2 × 10
R-19	R-19 + 6 in 2 × 6, or R-19 + 12 in 2 × 8 or 2 × 10

a. The first value is cavity insulation *R*-value, the second value is continuous insulation *R*-value. Therefore, for example, "R-30+3" means R-30 cavity insulation plus R-3 continuous insulation.

b. Insulation exceeding the height of the framing shall cover the framing.

required in jurisdictions designated by the *building official* as having a very heavy termite infestation.

N1102.2.11 (R402.2.11) Crawl space walls. As an alternative to insulating floors over crawl spaces, crawl space walls shall be insulated provided that the crawl space is not vented to the outdoors. Crawl space wall insulation shall be permanently fastened to the wall and shall extend downward from the floor to the finished grade elevation and then vertically or horizontally for not less than an additional 24 inches (610 mm). Exposed earth in unvented crawl space foundations shall be covered with a continuous Class I vapor retarder in accordance with this code. Joints of the vapor retarder shall overlap by 6 inches (153 mm) and be sealed or taped. The edges of the vapor retarder shall extend not less than 6 inches (153 mm) up the stem walls and shall be attached to the stem walls.

N1102.2.12 (R402.2.12) Masonry veneer. Insulation shall not be required on the horizontal portion of a foundation that supports a masonry veneer.

N1102.2.13 (R402.2.13) Sunroom insulation. S*unrooms* enclosing *conditioned space* shall meet the insulation requirements of this code.

Exception: For *sunrooms* with *thermal isolation*, and enclosing *conditioned space*, the following exceptions to the insulation *requirements* of this code shall apply:

1. The minimum ceiling insulation *R*-values shall be R-19 in *Climate Zones* 1 through 4 and R-24 in *Climate Zones* 5 through 8.
2. The minimum wall insulation *R*-value shall be R-13 in all *climate zones*. Walls separating a *sunroom* with a *thermal isolation* from *conditioned space* shall comply with the *building thermal envelope* requirements of this code.

N1102.3 (R402.3) Fenestration (Prescriptive). In addition to the requirements of Section N1102, fenestration shall comply with Sections N1102.3.1 through N1102.3.5.

N1102.3.1 (R402.3.1) *U*-factor. An area-weighted average of fenestration products shall be permitted to satisfy the *U*-factor requirements.

N1102.3.2 (R402.3.2) Glazed fenestration SHGC. An area-weighted average of fenestration products more than 50-percent glazed shall be permitted to satisfy the SHGC requirements.

Dynamic glazing shall be permitted to satisfy the SHGC requirements of Table N1102.1.2 provided that the ratio of the higher to lower labeled SHGC is greater than or equal to 2.4, and the dynamic glazing is automatically controlled to modulate the amount of solar gain into the space in multiple steps. Dynamic glazing shall be considered separately from other fenestration, and area-weighted averaging with other fenestration that is not dynamic glazing shall be prohibited.

Exception: Dynamic glazing shall not be required to comply with this section where both the lower and higher labeled SHGC comply with the requirements of Table N1102.1.2.

N1102.3.3 (R402.3.3) Glazed fenestration exemption. Not greater than 15 square feet (1.4 m^2) of glazed fenestration per dwelling unit shall be exempt from the *U*-factor and SHGC requirements in Section N1102.1.2. This exemption shall not apply to the *U*-factor alternative in Section N1102.1.4 and the Total UA alternative in Section N1102.1.5.

N1102.3.4 (R402.3.4) Opaque door exemption. One side-hinged opaque door assembly not greater than 24 square feet (2.22 m^2) in area shall be exempt from the *U*-factor requirement in Section N1102.1.2. This exemption shall

INTERNATIONAL CODE COUNCIL®
Copyright © 2019 ICC & NYSDOS. ALL RIGHTS RESERVED. Accessed by Lauren Gualdino (lgualdino@briarcliffmanor.org), (-) Order Number #100880972 on May 08, 2020 07:05 AM (PDT) pursuant to License Agreement with ICC & NYSDOS. No further reproduction, no

100880972

not apply to the *U*-factor alternative in Section N1102.1.4 and the Total UA alternative in Section N1102.1.5.

N1102.3.5 (R402.3.5) Sunroom fenestration. S*unrooms* enclosing *conditioned space* shall comply with the fenestration requirements of this code.

New fenestration separating the *sunroom* with *thermal isolation* from conditioned space shall comply with the *building thermal envelope* requirements of this code.

Exception: In *Climate Zones* 2 through 8, for *sunrooms* with *thermal isolation* and enclosing *conditioned space*, the fenestration *U*-factor shall not exceed 0.45 and the *skylight U*-factor shall not exceed 0.70.

N1102.4 (R402.4) Air leakage (Mandatory). The *building thermal envelope* shall be constructed to limit air leakage in accordance with the requirements of Sections N1102.4.1 through N1102.4.6.

N1102.4.1 (R402.4.1) Building thermal envelope. The *building thermal envelope* shall comply with Sections N1102.4.1.1 and N1102.4.1.2. The sealing methods between dissimilar materials shall allow for differential expansion and contraction.

N1102.4.1.1 (R402.4.1.1) Installation. The components of the *building thermal envelope* as indicated in Table N1102.4.1.1 shall be installed in accordance with the manufacturer's instructions and the criteria indicated in Table N1102.4.1.1, as applicable to the method of construction. Where required by the *building official*, an *approved* third party shall inspect all components and verify compliance.

[NY] N1102.4.1.2 (R402.4.1.2) Testing. The *building* or dwelling unit shall be tested and verified as having an air leakage rate not exceeding three air changes per hour. Testing shall be conducted in accordance with RESNET/ICC 380, ASTM E779 or ASTM E1827 and reported at a pressure of 0.2 inch w.g. (50 Pascals). Testing shall be performed at any time after creation of all penetrations of the *building thermal envelope*.

During testing:

1. Exterior windows and doors, fireplace and stove doors shall be closed, but not sealed, beyond the intended weatherstripping or other infiltration control measures.
2. Dampers including exhaust, intake, makeup air, backdraft and flue dampers shall be closed, but not sealed beyond intended infiltration control measures.
3. Interior doors, where installed at the time of the test, shall be open.
4. Exterior doors for continuous ventilation systems and heat recovery ventilators shall be closed and sealed.
5. Heating and cooling systems, where installed at the time of the test, shall be turned off.
6. Supply and return registers, where installed at the time of the test, shall be fully open.

Where required by the *building official*, testing shall be conducted by an approved third party. A written report of the results of the test shall be prepared and signed by the third party conducting the test and provided to the *building official*. The written report shall include:

1. The name and place of business of the party conducting the test;
2. The address of the building that was tested;
3. The conditioned floor area of dwelling, calculated in accordance with ANSI Z65, except that conditioned floor area shall include areas where the ceiling height is less than 5 feet (1524 mm);
4. Measurement of the air volume lost at an internal pressurization of 0.2 inches w.g. (50 Pascals);
5. The date(s) of the test;
6. A certification by the party conducting the test of the accuracy of the test results; and
7. The signature of the party conducting the test.

[NY] N1102.4.1.3 (R402.4.1.3) Optional testing procedure for buildings with two or more dwelling units within the building thermal envelope. Where two or more dwelling units are located within the building thermal envelope of a building, the testing procedure specified in this section shall be permitted as an alternative to compliance with Section N1102.4.1.2.

In this section, each dwelling unit and each other conditioned occupied space located within the building thermal envelope of the building shall be referred to as a "testing unit," and the "enclosure surface area" within a testing unit shall be equal to the sum of the areas of:

1. Each exterior wall in such testing unit,
2. Each interior wall in such testing unit that abuts other testing unit(s),
3. Each ceiling in such testing unit that abuts other testing unit(s) or abuts unconditioned space, and
4. Each floor in such testing unit that abuts other testing unit(s) or abuts unconditioned space.

Each testing unit shall be tested and verified as having an air leakage rate not exceeding 0.3 cubic feet per minute per square foot of enclosure surface area within the testing area. Testing shall be conducted with a blower door at a pressure of 0.2 inches w.g. (50 Pascals), and shall be conducted in accordance with ASTM E779. Testing shall be performed at any time after creation of all penetrations of the building thermal envelope. During testing:

1. Exterior windows and doors, fireplace and stove doors shall be closed, but not sealed, beyond the intended weather-stripping or other infiltration control measures.
2. Dampers including exhaust, intake, makeup air, backdraft and flue dampers shall be closed, but

INTERNATIONAL CODE COUNCIL®
Copyright © 2019 ICC & NYSDOS. ALL RIGHTS RESERVED. Accessed by Lauren Gualdino (lgualdino@briarcliffmanor.org), (-) Order Number #100880972 on May 08, 2020 07:05 AM (PDT) pursuant to License Agreement with ICC & NYSDOS. No further reproduction, no

100880972

TABLE N1102.4.1.1 (R402.4.1.1)
AIR BARRIER AND INSULATION INSTALLATION[a]

COMPONENT	AIR BARRIER CRITERIA	INSULATION INSTALLATION CRITERIA
General requirements	A continuous air barrier shall be installed in the building envelope. The exterior thermal envelope contains a continuous air barrier. Breaks or joints in the air barrier shall be sealed.	Air-permeable insulation shall not be used as a sealing material.
Ceiling/attic	The air barrier in any dropped ceiling or soffit shall be aligned with the insulation and any gaps in the air barrier sealed. Access openings, drop down stairs or knee wall doors to unconditioned attic spaces shall be sealed.	The insulation in any dropped ceiling/soffit shall be aligned with the air barrier.
Walls	The junction of the foundation and sill plate shall be sealed. The junction of the top plate and the top of exterior walls shall be sealed. Knee walls shall be sealed.	Cavities within corners and headers of frame walls shall be insulated by completely filling the cavity with a material having a thermal resistance of not less than R-3 per inch. Exterior thermal envelope insulation for framed walls shall be installed in substantial contact and in continuous alignment with the air barrier.
Windows, skylights and doors	The space between framing and skylights, and the jambs of windows and doors, shall be sealed.	—
Rim joists	Rim joists shall include the air barrier.	Rim joists shall be insulated.
Floors including cantilevered floors and floors above garages.	The air barrier shall be installed at any exposed edge of insulation.	Floor framing cavity insulation shall be installed to maintain permanent contact with the underside of subfloor decking. Alternatively, floor framing cavity insulation shall be in contact with the top side of sheathing or continuous insulation installed on the underside of floor framing; and extending from the bottom to the top of all perimeter floor framing members.
Crawl space walls	Exposed earth in unvented crawl spaces shall be covered with a Class I vapor retarder with overlapping joints taped.	Crawl space insulation, where provided instead of floor insulation, shall be permanently attached to the walls.
Shafts, penetrations	Duct shafts, utility penetrations, and flue shafts opening to exterior or unconditioned space shall be sealed.	—
Narrow cavities	—	Batts to be installed in narrow cavities shall be cut to fit or narrow cavities shall be filled with insulation that on installation readily conforms to the available cavity space.
Garage separation	Air sealing shall be provided between the garage and conditioned spaces.	—
Recessed lighting	Recessed light fixtures installed in the building thermal envelope shall be sealed to the finished surface.	Recessed light fixtures installed in the building thermal envelope shall be airtight and IC rated.
Plumbing and wiring	—	In exterior walls, batt insulation shall be cut neatly to fit around wiring and plumbing or insulation that on installation, readily conforms to available space, shall extend behind piping and wiring.
Shower/tub on exterior wall	The air barrier installed at exterior walls adjacent to showers and tubs shall separate the wall from the shower or tub.	Exterior walls adjacent to showers and tubs shall be insulated.
Electrical/phone box on exterior walls	The air barrier shall be installed behind electrical and communication boxes. Alternatively, air-sealed boxes shall be installed.	—
HVAC register boots	HVAC supply and return register boots that penetrate building thermal envelope shall be sealed to the subfloor, wall covering or ceiling penetrated by the boot.	—
Concealed sprinklers	Where required to be sealed, concealed fire sprinklers shall only be sealed in a manner that is recommended by the manufacturer. Caulking or other adhesive sealants shall not be used to fill voids between fire sprinkler cover plates and walls or ceilings.	—

a. Inspection of log walls shall be in accordance with the provisions of ICC 400.

INTERNATIONAL CODE COUNCIL®
Copyright © 2019 ICC & NYSDOS. ALL RIGHTS RESERVED. Accessed by Lauren Gualdino (lgualdino@briarcliffmanor.org), (-) Order Number #100880972 on May 08, 2020 07:05 AM (PDT) pursuant to License Agreement with ICC & NYSDOS. No further reproduction, no

100880972

not sealed beyond intended infiltration control measures.

3. Interior doors, if installed at the time of the test, shall be open.
4. Exterior doors for continuous ventilation systems and heat recovery ventilators shall be closed and sealed.
5. Heating and cooling systems, if installed at the time of the test, shall be turned off.
6. Supply and return registers, if installed at the time of the test, shall be fully open.

A written report of the results of the test shall be prepared and signed by the party conducting the test and provided to the *building official*. The written report shall include:

1. The name and place of business of the party conducting the test.
2. The address of the building which was tested.
3. The conditioned floor area of dwelling, calculated in accordance with ANSI Z65, except that conditioned floor area shall include areas where the ceiling height is less than 5 feet (1524 mm).
4. Measurement of the air lost at an internal pressurization of 0.2 inches w.g. (50 Pascals).
5. The date(s) of the test.
6. A certification by the party conducting the test of the accuracy of the test results.
7. The signature of the party conducting the test.

[NY] N1102.4.1.3.1 (R402.4.1.3.1) Buildings with more than seven dwelling units. When the optional testing procedure authorized by Section R402.4.1.3 is used for a building with more than seven dwelling units, testing each testing unit shall not be required, and testing of sample testing units selected in accordance with the provisions set forth below in this section shall be permitted, when approved by the *building official.*

1. Testing units shall be grouped into sample sets of not more than seven testing units and common rooms in each sample set. Each sample set shall contain testing units that are representative of all dwelling unit types and all other conditioned occupied spaces.
2. If all testing units in the first sample set tested are verified as having an air leakage rate not exceeding 0.3 cubic feet per minute per square foot of enclosure surface area within the testing area, remaining sample sets shall be permitted to be tested at the rate of one testing unit per sample set.
3. If any testing unit tested in accordance with Item 2 is not verified as having an air leakage rate not exceeding 0.3 cubic feet per minute per square foot of enclosure surface area within the testing area, two additional testing units in the sample set shall be tested.
4. If any testing unit tested in accordance with Item 3 is not verified as having an air leakage rate not exceeding 0.3 cubic feet per minute per square foot of enclosure surface area within the testing area, all testing units in the sample set shall be tested, and all testing units in the subsequent sample set, if any, shall be tested.
5. If all testing units in the sample set tested in accordance with Item 4 are verified as having an air leakage rate not exceeding 0.3 cubic feet per minute per square foot of enclosure surface area within the testing area, subsequent sample sets shall be permitted to be tested in accordance with Item 2, where approved by the *building official.*

N1102.4.2 (R402.4.2) Fireplaces. New wood-burning fireplaces shall have tight-fitting flue dampers or doors, and outdoor combustion air. Where using tight-fitting doors on factory-built fireplaces *listed* and *labeled* in accordance with UL 127, the doors shall be tested and *listed* for the fireplace.

N1102.4.3 (R402.4.3) Fenestration air leakage. Windows, *skylights* and sliding glass doors shall have an air infiltration rate of not greater than 0.3 cfm per square foot (1.5 L/s/m^2), and for swinging doors not greater than 0.5 cfm per square foot (2.6 L/s/m^2), when tested in accordance with NFRC 400 or AAMA/WDMA/CSA 101/I.S.2/A440 by an accredited, independent laboratory and *listed* and labeled by the manufacturer.

Exception: Site-built windows, *skylights* and doors.

N1102.4.4 (R402.4.4) Rooms containing fuel-burning appliances. In *Climate Zones* 3 through 8, where open combustion air ducts provide combustion air to open combustion fuel-burning appliances, the appliances and combustion air opening shall be located outside the *building thermal envelope* or enclosed in a room that is isolated from inside the thermal envelope. Such rooms shall be sealed and insulated in accordance with the envelope requirements of Table N1102.1.2, where the walls, floors and ceilings shall meet a minimum of the *basement wall R*-value requirement. The door into the room shall be fully gasketed and any water lines and ducts in the room insulated in accordance with Section N1103. The combustion air duct shall be insulated where it passes through *conditioned space* to an *R*-value of not less than R-8.

Exceptions:

1. Direct vent appliances with both intake and exhaust pipes installed continuous to the outside.
2. Fireplaces and stoves complying with Sections N1102.4.2 and R1006.

N1102.4.5 (R402.4.5) Recessed lighting. Recessed luminaires installed in the *building thermal envelope* shall be sealed to limit air leakage between conditioned and *uncon-*

INTERNATIONAL CODE COUNCIL®
Copyright © 2019 ICC & NYSDOS. ALL RIGHTS RESERVED. Accessed by Lauren Gualdino (lgualdino@briarcliffmanor.org), (-) Order Number #100880972 on May 08, 2020 07:05 AM (PDT) pursuant to License Agreement with ICC & NYSDOS. No further reproduction, no

100880972

ditioned spaces. Recessed luminaires shall be IC-rated and *labeled* as having an air leakage rate of not greater than 2.0 cfm (0.944 L/s) when tested in accordance with ASTM E283 at a pressure differential of 1.57 psf (75 Pa). Recessed luminaires shall be sealed with a gasket or caulked between the housing and the interior wall or ceiling covering.

[NY] N1102.4.6 (R402.4.6) Tenant separation walls (Mandatory). Fire separations between dwelling units in two-family dwellings and multiple single-family dwellings (townhouses) shall be insulated to no less than R-10, and the walls shall be air sealed in accordance with Section N1102.4 of this chapter.

N1102.5 (R402.5) Maximum fenestration *U*-factor and SHGC (Mandatory). The area-weighted average maximum fenestration *U*-factor permitted using tradeoffs from Section N1102.1.5 or N1105 shall be 0.48 in *Climate Zones* 4 and 5 and 0.40 in *Climate Zones* 6 through 8 for vertical fenestration, and 0.75 in *Climate Zones* 4 through 8 for *skylights*. The area-weighted average maximum fenestration SHGC permitted using tradeoffs from Section N1105 in *Climate Zones* 1 through 3 shall be 0.50.

SECTION N1103 (R403) SYSTEMS

N1103.1 (R403.1) Controls (Mandatory). Not less than one thermostat shall be provided for each separate heating and cooling system.

N1103.1.1 (R403.1.1) Programmable thermostat. The thermostat controlling the primary heating or cooling system of the dwelling unit shall be capable of controlling the heating and cooling system on a daily schedule to maintain different temperature set points at different times of the day. This thermostat shall include the capability to set back or temporarily operate the system to maintain *zone* temperatures of not less than 55°F (13°C) to not greater than 85°F (29°C). The thermostat shall be programmed initially by the manufacturer with a heating temperature setpoint of not greater than 70°F (21°C) and a cooling temperature setpoint of not less than 78°F (26°C).

N1103.1.2 (R403.1.2) Heat pump supplementary heat (Mandatory). Heat pumps having supplementary electric-resistance heat shall have controls that, except during defrost, prevent supplemental heat operation when the heat pump compressor can meet the heating load.

N1103.2 (R403.2) Hot water boiler outdoor temperature setback. Hot water boilers that supply heat to the *building* through one- or two-pipe heating systems shall have an outdoor setback control that decreases the boiler water temperature based on the outdoor temperature.

N1103.3 (R403.3) Ducts. Ducts and air handlers shall be installed in accordance with Sections N1103.3.1 through N1103.3.8.

N1103.3.1 (R403.3.1) Insulation (Prescriptive). Supply and return ducts in attics shall be insulated to an *R*-value of not less than R-8 for ducts 3 inches (76 mm) in diameter and larger and not less than R-6 for ducts smaller than 3 inches (76 mm) in diameter. Supply and return ducts in other portions of the *building* shall be insulated to not less than R-6 for ducts 3 inches (76 mm) in diameter and to not less than R-4.2 for ducts smaller than 3 inches (76.2 mm) in diameter.

Exception: Ducts or portions thereof located completely inside the *building thermal envelope.*

[NY] N1103.3.2 (R403.3.2) Sealing (Mandatory). Ducts, air handlers and filter boxes shall be sealed. Joints and seams shall comply with Section M1601.4.1.

Exceptions:

1. Air-impermeable spray foam products shall be permitted to be applied without additional joint seals.
2. For ducts having a static pressure classification of less than 2 inches of water column (500 Pa), additional closure systems shall not be required for continuously welded joints and seams, and locking-type joints and seams of other than the snap-lock and button-lock types.

N1103.3.2.1 (R403.3.2.1) Sealed air handler. Air handlers shall have a manufacturer's designation for an air leakage of not greater than 2 percent of the design airflow rate when tested in accordance with ASHRAE 193.

N1103.3.3 (R403.3.3) Duct testing (Mandatory). Ducts shall be pressure tested to determine air leakage by one of the following methods:

1. Rough-in test: Total leakage shall be measured with a pressure differential of 0.1 inch w.g. (25 Pa) across the system, including the manufacturer's air handler enclosure if installed at the time of the test. Registers shall be taped or otherwise sealed during the test.
2. Postconstruction test: Total leakage shall be measured with a pressure differential of 0.1 inch w.g. (25 Pa) across the entire system, including the manufacturer's air handler enclosure. Registers shall be taped or otherwise sealed during the test.

Exceptions:

1. A duct air-leakage test shall not be required where the ducts and air handlers are located entirely within the *building thermal envelope*.
2. A duct air-leakage test shall not be required for ducts serving heat or energy recovery ventilators that are not integrated with ducts serving heating or cooling systems.

A written report of the results of the test shall be signed by the party conducting the test and provided to the *building official*.

N1103.3.4 (R403.3.4) Duct leakage (Prescriptive). The total leakage of the ducts, where measured in accordance with Section R403.3.3, shall be as follows:

1. Rough-in test: The total leakage shall be less than or equal to 4 cubic feet per minute (113.3 L/min) per 100 square feet (9.29 m^2) of conditioned floor area where the air handler is installed at the time of the test. Where the air handler is not installed at the time

INTERNATIONAL CODE COUNCIL®
Copyright © 2019 ICC & NYSDOS. ALL RIGHTS RESERVED. Accessed by Lauren Gualdino (lgualdino@briarcliffmanor.org), (-) Order Number #100880972 on May 08, 2020 07:05 AM (PDT) pursuant to License Agreement with ICC & NYSDOS. No further reproduction, no

100880972

of the test, the total leakage shall be less than or equal to 3 cubic feet per minute (85 L/min) per 100 square feet (9.29 m^2) of conditioned floor area.

2. Postconstruction test: Total leakage shall be less than or equal to 4 cubic feet per minute (113.3 L/min) per 100 square feet (9.29 m^2) of conditioned floor area.

N1103.3.5 (R403.3.5) Building cavities (Mandatory). *Building* framing cavities shall not be used as ducts or plenums.

[NY] N1103.3.6 (R403.3.6) Ducts buried within ceiling insulation. Where supply and return air ducts are partially or completely buried in ceiling insulation, such ducts shall comply with all of the following:

1. The supply and return duct shall have an insulation *R*-value not less than R-8.
2. At all points along each duct, the sum of the ceiling insulation *R*-values against and above the top of the duct, and against and below the bottom of the duct shall be not less than R-19, excluding the *R*-value of the duct insulation.

N1103.3.6.1 (R403.3.6.1) Effective *R*-value of deeply buried ducts. Where using a simulated energy performance analysis, sections of ducts that are installed in accordance with Section N1103.3.6, located directly on, or within 5.5 inches (140 mm) of the ceiling, surrounded with blown-in attic insulation having an *R*-value of R-30 or greater and located such that the top of the duct is not less than 3.5 inches (89 mm) below the top of the insulation, shall be considered as having an effective duct insulation *R*-value of R-25.

N1103.3.7 (R403.3.7) Ducts located in conditioned space. For ducts to be considered as inside a *conditioned space*, such ducts shall comply with either of the following:

1. The duct system is located completely within the *continuous air barrier* and within the *building thermal envelope*.
2. The ducts are buried within ceiling insulation in accordance with Section N1103.3.6 and all of the following conditions exist:
   2.1. The air handler is located completely within the *continuous air barrier* and within the *building thermal envelope*.
   2.2. The duct leakage, as measured either by a rough-in test of the ducts or a post-construction total system leakage test to outside the *building thermal envelope* in accordance with Section N1103.3.4, is less than or equal to 1.5 cubic feet per minute (42.5 L/min) per 100 square feet (9.29 m^2) of conditioned floor area served by the duct system.
   2.3. The ceiling insulation *R*-value installed against and above the insulated duct is greater than or equal to the proposed ceiling insulation *R*-value, less the *R*-value of the insulation on the duct.

N1103.4 (R403.4) Mechanical system piping insulation (Mandatory). Mechanical system piping capable of carrying fluids greater than 105°F (41°C) or less than 55°F (13°C) shall be insulated to an *R*-value of not less than R-3.

N1103.4.1 (R403.4.1) Protection of piping insulation. Piping insulation exposed to weather shall be protected from damage, including that caused by sunlight, moisture, equipment maintenance and wind. The protection shall provide shielding from solar radiation that can cause degradation of the material. Adhesive tape shall be prohibited.

N1103.5 (R403.5) Service hot water systems. Energy conservation measures for service hot water systems shall be in accordance with Sections N1103.5.1 through N1103.5.4.

N1103.5.1 (R403.5.1) Heated water circulation and temperature maintenance systems (Mandatory). Heated water circulation systems shall be in accordance with Section N1103.5.1.1. Heat trace temperature maintenance systems shall be in accordance with Section N1103.5.1.2. Automatic controls, temperature sensors and pumps shall be *accessible*. Manual controls shall be readily *accessible*.

N1103.5.1.1 (R403.5.1.1) Circulation systems. Heated water circulation systems shall be provided with a circulation pump. The system return pipe shall be a dedicated return pipe or a cold water supply pipe. Gravity and thermosyphon circulation systems shall be prohibited. Controls for circulating hot water system pumps shall start the pump based on the identification of a demand for hot water within the occupancy. The controls shall automatically turn off the pump when the water in the circulation loop is at the desired temperature and when there is no demand for hot water.

N1103.5.1.2 (R403.5.1.2) Heat trace systems. Electric heat trace systems shall comply with IEEE 515.1 or UL 515. Controls for such systems shall automatically adjust the energy input to the heat tracing to maintain the desired water temperature in the piping in accordance with the times when heated water is used in the occupancy.

N1103.5.2 (R403.5.2) Demand recirculation water systems. *Demand recirculation water systems* shall have controls that comply with both of the following:

1. The controls shall start the pump upon receiving a signal from the action of a user of a fixture or appliance, sensing the presence of a user of a fixture or sensing the flow of hot or tempered water to a fixture fitting or appliance.
2. The controls shall limit the temperature of the water entering the cold water piping to not greater than 104ºF (40ºC).

INTERNATIONAL CODE COUNCIL®
Copyright © 2019 ICC & NYSDOS. ALL RIGHTS RESERVED. Accessed by Lauren Gualdino (lgualdino@briarcliffmanor.org), (-) Order Number #100880972 on May 08, 2020 07:05 AM (PDT) pursuant to License Agreement with ICC & NYSDOS. No further reproduction, no

100880972

N1103.5.3 (R403.5.3) Hot water pipe insulation (Prescriptive). Insulation for hot water piping with a thermal resistance, *R*-value, of not less than R-3 shall be applied to the following:

1. Piping $^{3}/_{4}$ inch (19 mm) and larger in nominal diameter.
2. Piping serving more than one dwelling unit.
3. Piping located outside the *conditioned space*.
4. Piping from the water heater to a distribution manifold.
5. Piping located under a floor slab.
6. Buried piping.
7. Supply and return piping in recirculation systems other than demand recirculation systems.

N1103.5.4 (R403.5.4) Drain water heat recovery units. Drain water heat recovery units shall comply with CSA B55.2. Drain water heat recovery units shall be tested in accordance with CSA B55.1. Potable water-side pressure loss of drain water heat recovery units shall be less than 3 psi (20.7 kPa) for individual units connected to one or two showers. Potable water-side pressure loss of drain water heat recovery units shall be less than 2 psi (13.8 kPa) for individual units connected to three or more showers.

N1103.6 (R403.6) Mechanical ventilation (Mandatory). The *building* shall be provided with ventilation that complies with the requirements of Section M1505 or with other *approved* means of ventilation. Outdoor air intakes and exhausts shall have automatic or gravity dampers that close when the ventilation system is not operating.

N1103.6.1 (R403.6.1) Whole-house mechanical ventilation system fan efficacy. Fans used to provide whole-house mechanical ventilation shall meet the efficacy requirements of Table N1103.6.1.

Exception: Where an air handler that is integral to tested and *listed* HVAC equipment is used to provide whole-house mechanical ventilation, the air handler shall be powered by an electronically commutated motor.

N1103.7 (R403.7) Equipment sizing and efficiency rating (Mandatory). Heating and cooling equipment shall be sized in accordance with ACCA Manual S based on *building* loads calculated in accordance with ACCA Manual J or other *approved* heating and cooling calculation methodologies. New or replacement heating and cooling equipment shall have an efficiency rating equal to or greater than the minimum required by federal law for the geographic location where the equipment is installed.

N1103.8 (R403.8) Systems serving multiple dwelling units (Mandatory). Systems serving multiple dwelling units shall comply with Sections C403 and C404 of the *Energy Conservation Code of New York*—Commercial Provisions instead of Section N1103.

N1103.9 (R403.9) Snow melt system controls (Mandatory). Snow- and ice-melting systems, supplied through energy service to the building, shall include automatic controls capable of shutting off the system when the pavement temperature is greater than 50°F (10°C) and precipitation is not falling, and an automatic or manual control that will allow shutoff when the outdoor temperature is greater than 40°F (4.8°C).

N1103.10 (R403.10) Pools and permanent spa energy consumption (Mandatory). The energy consumption of pools and permanent spas shall be in accordance with Sections N1103.10.1 through N1103.10.3.

N1103.10.1 (R403.10.1) Heaters. The electric power to heaters shall be controlled by a readily *accessible* on-off switch that is an integral part of the heater mounted on the exterior of the heater, or external to and within 3 feet (914 mm) of the heater. Operation of such switch shall not change the setting of the heater thermostat. Such switches shall be in addition to a circuit breaker for the power to the heater. Gas-fired heaters shall not be equipped with continuously burning ignition pilots.

N1103.10.2 (R403.10.2) Time switches. Time switches or other control methods that can automatically turn off and on according to a preset schedule shall be installed for heaters and pump motors. Heaters and pump motors that have built-in time switches shall be in compliance with this section.

Exceptions:

1. Where public health standards require 24-hour pump operation.
2. Pumps that operate solar- and waste-heat-recovery pool heating systems.

TABLE N1103.6.1 (R403.6.1)
WHOLE-HOUSE MECHANICAL VENTILATION SYSTEM FAN EFFICACY[a]

FAN LOCATION	AIR FLOW RATE MINIMUM (CFM)	MINIMUM EFFICACY (CFM/WATT)	AIR FLOW RATE MAXIMUM (CFM)
HRV or ERV	Any	1.2 cfm/watt	Any
Range hoods	Any	2.8 cfm/watt	Any
In-line fan	Any	2.8 cfm/watt	Any
Bathroom, utility room	10	1.4 cfm/watt	< 90
Bathroom, utility room	90	2.8 cfm/watt	Any

For SI: 1 cubic foot per minute = 28.3 L/min.

a. When tested in accordance with HVI Standard 916.

INTERNATIONAL CODE COUNCIL®
Copyright © 2019 ICC & NYSDOS. ALL RIGHTS RESERVED. Accessed by Lauren Gualdino (lgualdino@briarcliffmanor.org), (-) Order Number #100880972 on May 08, 2020 07:05 AM (PDT) pursuant to License Agreement with ICC & NYSDOS. No further reproduction, no

100880972

[NY] N1103.10.3 (R403.10.3) Covers. Outdoor heated pools and outdoor heated permanent spas shall be equipped with a vapor-retardant pool cover or other *approved* vapor-retardant means. Outdoor heated pools and outdoor heated permanent spas heated to more than 90°F (32°C) shall have a pool cover with a minimum insulation value of R-12.

Exception: Where more than 60 percent of the energy for heating is from site-recovered energy or solar energy source, covers or other vapor-retardant means shall not be required

N1103.11 (R403.11) Portable spas (Mandatory). The energy consumption of electric-powered portable spas shall be controlled by the requirements of APSP 14.

N1103.12 (R403.12) Residential pools and permanent residential spas. Residential swimming pools and permanent residential spas that are accessory to detached one- and two-family dwellings and townhouses three stories or less in height above grade plane and that are available only to the household and its guests shall be in accordance with APSP 15.

SECTION N1104 (R404)
ELECTRICAL POWER AND LIGHTING SYSTEMS (MANDATORY)

N1104.1 (R404.1) Lighting equipment (Mandatory). Not less than 90 percent of the permanently installed lighting fixtures shall contain only high-efficacy lamps.

N1104.1.1 (R404.1.1) Lighting equipment (Mandatory). Fuel gas lighting systems shall not have continuously burning pilot lights.

SECTION N1105 (R405)
SIMULATED PERFORMANCE ALTERNATIVE (PERFORMANCE)

N1105.1 (R405.1) Scope. This section establishes criteria for compliance using simulated energy performance analysis. Such analysis shall include heating, cooling, mechanical ventilation and service water heating energy only.

N1105.2 (R405.2) Mandatory requirements. Compliance with this section requires that the mandatory provisions identified in Section N1101.13 be met. Supply and return ducts not completely inside the *building thermal envelope* shall be insulated to an *R*-value of not less than R-6.

N1105.3 (R405.3) Performance-based compliance. Compliance based on simulated energy performance requires that a proposed residence (*proposed design)* be shown to have an annual energy cost that is less than or equal to the annual energy cost of the *standard reference design.* Energy prices shall be taken from a source *approved* by the *building official,* such as the Department of Energy, Energy Information Administration's State Energy Data System Prices and Expenditures reports. *Building officials* shall be permitted to require time-of-use pricing in energy cost calculations.

Exception: The energy use based on source energy expressed in Btu (J) or Btu per square foot (J/m^2) of *conditioned floor area* shall be permitted to be substituted for the energy cost. The source energy multiplier for electricity shall be 3.16. The source energy multiplier for fuels other than electricity shall be 1.1.

N1105.4 (R405.4) Documentation. Documentation of the software used for the performance design and the parameters for the *building* shall be in accordance with Sections N1105.4.1 through N1105.4.3.

N1105.4.1 (R405.4.1) Compliance software tools. Documentation verifying that the methods and accuracy of the compliance software tools conform to the provisions of this section shall be provided to the *building official.*

N1105.4.2 (R405.4.2) Compliance report. Compliance software tools shall generate a report that documents that the *proposed design* complies with Section N1105.3. A compliance report on the *proposed design* shall be submitted with the application for the *building* permit. Upon completion of the *building*, a compliance report based on the as-built condition of the *building* shall be submitted to the *building official* before a certificate of occupancy is issued. Batch sampling of *buildings* to determine energy code compliance shall only be allowed for stacked multiple-family units.

Compliance reports shall include information in accordance with Sections N1105.4.2.1 and N1105.4.2.2. Where the *proposed design* of a *building* could be built on different sites where the cardinal orientation of the building on each site is different, compliance of the *proposed design* for the purposes of the application for the building permit shall be based on the worst-case orientation, worst-case configuration, worst-case *building* air leakage and worst-case duct leakage. Such worst-case parameters shall be used as inputs to the compliance software for energy analysis.

N1105.4.2.1 (R405.4.2.1) Compliance report for permit application. A compliance report submitted with the application for building permit shall include the following:

1. Building street address, or other building site identification.
2. A statement indicating that the *proposed design* complies with Section N1105.3.
3. An inspection checklist documenting the building component characteristics of the *proposed design* as indicated in Table N1105.5.2(1). The inspection checklist shall show results for both the *standard reference design* and the *proposed design* with user inputs to the compliance software to generate the results.
4. A site-specific energy analysis report that is in compliance with Section N1105.3.
5. The name of the individual performing the analysis and generating the report.
6. The name and version of the compliance software tool.

INTERNATIONAL CODE COUNCIL®
Copyright © 2019 ICC & NYSDOS. ALL RIGHTS RESERVED. Accessed by Lauren Gualdino (lgualdino@briarcliffmanor.org), (-) Order Number #100880972 on May 08, 2020 07:05 AM (PDT) pursuant to License Agreement with ICC & NYSDOS. No further reproduction, no

100880972

N1105.4.2.2 (R405.4.2.2) Compliance report for certificate of occupancy. A compliance report submitted for obtaining the certificate of occupancy shall include the following:

1. Building street address, or other building site identification.
2. A statement indicating that the as-built building complies with Section N1105.3.
3. A certificate indicating that the building passes the performance matrix for code compliance and indicating the energy saving features of the buildings.
4. A site-specific energy analysis report that is in compliance with Section N1105.3.
5. The name of the individual performing the analysis and generating the report.
6. The name and version of the compliance software tool.

N1105.4.3 (R405.4.3) Additional documentation. The *building official* shall be permitted to require the following documents:

1. Documentation of the building component characteristics of the *standard reference design.*
2. A certification signed by the builder providing the building component characteristics of the *proposed design* as given in Table N1105.5.2(1).
3. Documentation of the actual values used in the software calculations for the *proposed design.*

N1105.5 (R405.5) Calculation procedure. Calculations of the performance design shall be in accordance with Sections N1105.5.1 and N1105.5.2.

N1105.5.1 (R405.5.1) General. Except as specified by this section, the *standard reference design* and *proposed design* shall be configured and analyzed using identical methods and techniques.

N1105.5.2 (R405.5.2) Residence specifications. The *standard reference design* and *proposed design* shall be configured and analyzed as specified by Table N1105.5.2(1). Table N1105.5.2(1) shall include, by reference, all notes contained in Table N1102.1.2.

N1105.6 (R405.6) Calculation software tools. Calculation software, where used, shall be in accordance with Sections N1105.6.1 through N1105.6.3.

N1105.6.1 (R405.6.1) Minimum capabilities. Calculation procedures used to comply with this section shall be software tools capable of calculating the annual energy consumption of all building elements that differ between the *standard reference design* and the *proposed design* and shall include the following capabilities:

1. Computer generation of the *standard reference design* using only the input for the *proposed design.* The calculation procedure shall not allow the user to directly modify the building component characteristics of the *standard reference design.*
2. Calculation of whole-building (as a single *zone)* sizing for the heating and cooling equipment in the *standard reference design* residence in accordance with Section N1103.6.
3. Calculations that account for the effects of indoor and outdoor temperatures and part-load ratios on the performance of heating, ventilating and air-conditioning equipment based on climate and equipment sizing.
4. Printed *building official* inspection checklist listing each of the *proposed design* component characteristics from Table N1105.5.2(1) determined by the analysis to provide compliance, along with their respective performance ratings such as *R*-value, *U*-factor, SHGC, HSPF, AFUE, SEER and EF.

N1105.6.2 (R405.6.2) Specific approval. Performance analysis tools meeting the applicable provisions of Section N1105 shall be permitted to be *approved.* Tools are permitted to be *approved* based on meeting a specified threshold for a jurisdiction. The *building official* shall be permitted to approve such tools for a specified application or limited scope.

N1105.6.3 (R405.6.3) Input values. When calculations require input values not specified by Sections N1102, N1103, N1104 and N1105, those input values shall be taken from an *approved* source.

SECTION N1106 (R406) ENERGY RATING INDEX COMPLIANCE ALTERNATIVE

N1106.1 (R406.1) Scope. This section establishes criteria for compliance using an Energy Rating Index (ERI) analysis.

N1106.2 (R406.2) Mandatory requirements. Compliance with this section requires that the provisions identified in Sections N1101.13 through N1104 indicated as "mandatory" and in Section N1103.5.3 be met. The *building thermal envelope* shall be greater than or equal to levels of efficiency and *Solar Heat Gain Coefficients* in Table 402.1.1 or 402.1.3 of the 2010 *Energy Conservation Construction Code of New York State*.

Exception: Supply and return ducts not completely inside the *building thermal envelope* shall be insulated to an *R*-value of not less than R-6.

N1106.3 (R406.3) Energy rating index. The Energy Rating Index (ERI) shall be determined in accordance with RESNET/ICC 301 except that the ERI reference design ventilation rate shall be in accordance with Equation 11-1.

Ventilation rate, CFM = (0.01 × total square foot area of house) + [7.5 × (number of bedrooms + 1)]

(Equation 11-1)

Energy used to recharge or refuel a vehicle used for transportation on roads that are not on the building site shall not be included in the *ERI reference design* or the *rated design*.

INTERNATIONAL CODE COUNCIL®
Copyright © 2019 ICC & NYSDOS. ALL RIGHTS RESERVED. Accessed by Lauren Gualdino (lgualdino@briarcliffmanor.org), (-) Order Number #100880972 on May 08, 2020 07:05 AM (PDT) pursuant to License Agreement with ICC & NYSDOS. No further reproduction, no

100880972

TABLE N1105.5.2(1) [R405.5.2(1)]
SPECIFICATIONS FOR THE STANDARD REFERENCE AND PROPOSED DESIGNS

BUILDING COMPONENT	STANDARD REFERENCE DESIGN	PROPOSED DESIGN
Above-grade walls	Type: mass where the proposed wall is a mass wall; otherwise wood frame.	As proposed
	Gross area: same as proposed.	As proposed
	U-factor: as specified in Table N1102.1.4.	As proposed
	Solar absorptance = 0.75.	As proposed
	Emittance = 0.90.	As proposed
Basement and crawl space walls	Type: same as proposed.	As proposed
	Gross area: same as proposed.	As proposed
	U-factor: as specified in Table N1102.1.4, with the insulation layer on the interior side of the walls.	As proposed
Above-grade floors	Type: wood frame.	As proposed
	Gross area: same as proposed.	As proposed
	U-factor: as specified in Table N1102.1.4.	As proposed
Ceilings	Type: wood frame.	As proposed
	Gross area: same as proposed.	As proposed
	U-factor: as specified in Table N1102.1.4.	As proposed
Roofs	Type: composition shingle on wood sheathing.	As proposed
	Gross area: same as proposed.	As proposed
	Solar absorptance = 0.75.	As proposed
	Emittance = 0.90.	As proposed
Attics	Type: vented with an aperture of 1 ft^2 per 300 ft^2 of ceiling area.	As proposed
Foundations	Type: same as proposed.	As proposed
	Foundation wall area above and below grade and soil characteristics: same as proposed.	As proposed
Opaque doors	Area: 40 ft^2 .	As proposed
	Orientation: North.	As proposed
	U-factor: same as fenestration as specified in Table N1102.1.4.	As proposed
Vertical fenestration other than opaque doors	Total area[h] = (a) The proposed glazing area, where the proposed glazing area is less than 15 percent of the conditioned floor area. (b) 15 percent of the conditioned floor area, where the proposed glazing area is 15 percent or more of the conditioned floor area.	As proposed
	Orientation: equally distributed to four cardinal compass orientations (N, E, S & W).	As proposed
	U-factor: as specified in Table N1102.1.4.	As proposed
	SHGC: as specified in Table N1102.1.2 except for *climate zones* without an SHGC requirement, the SHGC shall be equal to 0.40.	As proposed
	Interior shade fraction: 0.92-(0.21 × SHGC for the standard reference design).	Interior shade fraction: 0.92-(0.21 × SHGC as proposed)
	External shading: none	As proposed
Skylights	None	As proposed
Thermally isolated sunrooms	None	As proposed

(continued)

INTERNATIONAL CODE COUNCIL®
Copyright © 2019 ICC & NYSDOS. ALL RIGHTS RESERVED. Accessed by Lauren Gualdino (lgualdino@briarcliffmanor.org), (-) Order Number #100880972 on May 08, 2020 07:05 AM (PDT) pursuant to License Agreement with ICC & NYSDOS. No further reproduction, no

100880972

TABLE N1105.5.2(1) [R405.5.2(1)]—continued
SPECIFICATIONS FOR THE STANDARD REFERENCE AND PROPOSED DESIGNS

BUILDING COMPONENT	STANDARD REFERENCE DESIGN	PROPOSED DESIGN
Air exchange rate	The air leakage rate at a pressure of 0.2 inch w.g. (50 Pa) shall be *Climate Zones* 1 and 2: 5 air changes per hour. *Climate Zones* 3 through 8: 3 air changes per hour. The mechanical ventilation rate shall be in addition to the air leakage rate and shall be the same as in the proposed design, but not greater than $0.01 \times CFA + 7.5 \times (N_{br} + 1)$ where: CFA = conditioned floor area, ft^2. N_{br} = number of bedrooms. Energy recovery shall not be assumed for mechanical ventilation.	The measured air exchange rate[a]. The mechanical ventilation rate[b] shall be in addition to the air leakage rate and shall be as proposed.
Mechanical ventilation	Where mechanical ventilation is not specified in the proposed design: None Where mechanical ventilation is specified in the proposed design, the annual vent fan energy use, in units of kWh/yr, shall equal $(1/e_f) \times [0.0876 \times CFA + 65.7 \times (N_{br}+1)]$ where: e_f = the minimum exhaust fan efficacy, as specified in Table R403.6.1, corresponding to a flow rate of $0.01 \times CFA + 7.5 \times (N_{br}+1)$ CFA = conditioned floor area, ft^2. N_{br} = number of bedrooms.	As proposed
Internal gains	IGain, in units of Btu/day per dwelling unit, shall equal $17{,}900 + 23.8 \times CFA + 4{,}104 \times N_{br}$ where: CFA = conditioned floor area, ft^2. N_{br} = number of bedrooms.	Same as standard reference design.
Internal mass	Internal mass for furniture and contents: 8 pounds per square foot of floor area.	Same as standard reference design, plus any additional mass specifically designed as a thermal storage element[c] but not integral to the building envelope or structure.
Structural mass	For masonry floor slabs: 80 percent of floor area covered by R-2 carpet and pad, and 20 percent of floor directly exposed to room air.	As proposed
	For masonry basement walls, as proposed, but with insulation as specified in Table N1102.1.4, located on the interior side of the walls.	As proposed
	For other walls, ceilings, floors, and interior walls: wood frame construction.	As proposed
Heating systems[d, e]	For other than electric heating without a heat pump: as proposed. Where the proposed design utilizes electric heating without a heat pump, the standard reference design shall be an air source heat pump meeting the requirements of Section C403 of the IECC—Commercial Provisions. Capacity: sized in accordance with Section N1103.7.	As proposed
Cooling systems[d, f]	As proposed. Capacity: sized in accordance with Section N1103.7.	As proposed
Service water heating[d, e, f, g]	As proposed. Use: same as proposed design.	As proposed Use, in units of gal/day = $30 + (10 \times N_{br})$ where: N_{br} = number of bedrooms.

(continued)

INTERNATIONAL CODE COUNCIL®
Copyright © 2019 ICC & NYSDOS. ALL RIGHTS RESERVED. Accessed by Lauren Gualdino (lgualdino@briarcliffmanor.org), (-) Order Number #100880972 on May 08, 2020 07:05 AM (PDT) pursuant to License Agreement with ICC & NYSDOS. No further reproduction, no

100880972

TABLE N1105.5.2(1) [R405.5.2(1)]—continued
SPECIFICATIONS FOR THE STANDARD REFERENCE AND PROPOSED DESIGNS

BUILDING COMPONENT	STANDARD REFERENCE DESIGN	PROPOSED DESIGN
Thermal distribution systems	Duct insulation: in accordance with Section N1103.3.1. A thermal distribution system efficiency (DSE) of 0.88 shall be applied to both the heating and cooling system efficiencies for all systems other than tested duct systems. **Exception:** For nonducted heating and cooling systems that do not have a fan, the standard reference design thermal distribution system efficiency (DSE) shall be 1. For tested duct systems, the leakage rate shall be 4 cfm (113.3 L/min) per 100 ft^2 (9.29 m^2) of *conditioned floor area* at a pressure of differential of 0.1 inch w.g. (25 Pa).	Duct insulation: as proposed. As tested or, where not tested, as specified in Table N1105.5.2(2).
Thermostat	Type: Manual, cooling temperature setpoint = 75°F; Heating temperature setpoint = 72°F.	Same as standard reference design.

For SI: 1 square foot = 0.93 m^2, 1 British thermal unit = 1055 J, 1 pound per square foot = 4.88 kg/m^2, 1 gallon (US) = 3.785 L, °C = (°F-32)/1.8, 1 degree = 0.79 rad.

a. Where required by the *building official*, testing shall be conducted by an *approved* party. Hourly calculations as specified in the ASHRAE *Handbook of Fundamentals*, or the equivalent, shall be used to determine the energy loads resulting from infiltration.

b. The combined air exchange rate for infiltration and mechanical ventilation shall be determined in accordance with Equation 43 of 2001 ASHRAE *Handbook of Fundamentals*, page 26.24 and the "Whole-house Ventilation" provisions of 2001 ASHRAE *Handbook of Fundamentals*, page 26.19 for intermittent mechanical ventilation.

c. Thermal storage element shall mean a component that is not part of the floors, walls or ceilings that is part of a passive solar system, and that provides thermal storage such as enclosed water columns, rock beds, or phase-change containers. A thermal storage element shall be in the same room as fenestration that faces within 15 degrees (0.26 rad) of true south, or shall be connected to such a room with pipes or ducts that allow the element to be actively charged.

d. For a proposed design with multiple heating, cooling or water heating systems using different fuel types, the applicable standard reference design system capacities and fuel types shall be weighted in accordance with their respective loads as calculated by accepted engineering practice for each equipment and fuel type present.

e. For a proposed design without a proposed heating system, a heating system having the prevailing federal minimum efficiency shall be assumed for both the standard reference design and proposed design.

f. For a proposed design home without a proposed cooling system, an electric air conditioner having the prevailing federal minimum efficiency shall be assumed for both the standard reference design and the proposed design.

g. For a proposed design with a nonstorage-type water heater, a 40-gallon storage-type water heater having the prevailing federal minimum energy factor for the same fuel as the predominant heating fuel type shall be assumed. For a proposed design without a proposed water heater, a 40-gallon storage-type water heater with the prevailing federal minimum efficiency for the same fuel as the predominant heating fuel type shall be assumed for both the proposed design and standard reference design.

h. For residences with conditioned basements, R-2 and R-4 residences, and for townhouses, the following formula shall be used to determine glazing area:

$AF = A_s \times FA \times F$

where:

AF = Total glazing area.

A_s = Standard reference design total glazing area.

FA = (Above-grade thermal boundary gross wall area)/(above-grade boundary wall area + 0.5 × below-grade boundary wall area).

F = (above-grade thermal boundary wall area)/(above-grade thermal boundary wall area + common wall area) or 0.56, whichever is greater.

and where:

Thermal boundary wall is any wall that separates conditioned space from unconditioned space or ambient conditions.

Above-grade thermal boundary wall is any thermal boundary wall component not in contact with soil.

Below-grade boundary wall is any thermal boundary wall in soil contact.

TABLE N1105.5.2(2) [R405.5.2(2)]
DEFAULT DISTRIBUTION SYSTEM EFFICIENCIES FOR PROPOSED DESIGNS[a]

DISTRIBUTION SYSTEM CONFIGURATION AND CONDITION	FORCED AIR SYSTEMS	HYDRONIC SYSTEMS[b]
Distribution system components located in unconditioned space	—	0.95
Untested distribution systems entirely located in conditioned space[c]	0.88	1
"Ductless" systems[d]	1	—

For SI: 1 cubic foot per minute = 0.47 L/s, 1 square foot = 0.093m^2, 1 pound per square inch = 6895 Pa, 1 inch water gauge = 1250 Pa.

a. Default values this table are for untested distribution systems, which must still meet minimum requirements for duct system insulation.

b. Hydronic systems shall mean those systems that distribute heating and cooling energy directly to individual spaces using liquids pumped through closed-loop piping and that do not depend on ducted, forced airflow to maintain space temperatures.

c. Entire system in conditioned space shall mean that no component of the distribution system, including the air handler unit, is located outside of the conditioned space.

d. Ductless systems shall be allowed to have forced airflow across a coil but shall not have any ducted airflow external to the manufacturer's air handler enclosure.

INTERNATIONAL CODE COUNCIL®
Copyright © 2019 ICC & NYSDOS. ALL RIGHTS RESERVED. Accessed by Lauren Gualdino (lgualdino@briarcliffmanor.org), (-) Order Number #100880972 on May 08, 2020 07:05 AM (PDT) pursuant to License Agreement with ICC & NYSDOS. No further reproduction, no

100880972

N1106.4 (R406.4) ERI-based compliance. Compliance based on an ERI analysis requires that the *rated design* be shown to have an ERI less than or equal to the appropriate value indicated in Table N1106.4 when compared to the *ERI reference design*.

[NY] TABLE N1106.4 (R406.4)
MAXIMUM ENERGY RATING INDEX

CLIMATE ZONE	ENERGY RATING INDEX[a]
4	62
5	61
6	61

a. Where on-site renewable energy is included for compliance using the ERI analysis of Section N1106.4, the building shall meet the mandatory requirements of Section N1106.2, and the building thermal envelope shall be greater than or equal to the levels of efficiency and SHGC in Table N1102.1.2 or Table N1102.1.4 of the 2015 *International Residential Code*, second printing: May 30th 2014.

N1106.5 (R406.5) Verification by approved agency. Verification of compliance with Section N1106 shall be completed by an *approved* third party.

N1106.6 (R406.6) Documentation. Documentation of the software used to determine the ERI and the parameters for the *residential building* shall be in accordance with Sections N1106.6.1 through N1106.6.3.

N1106.6.1 (R406.6.1) Compliance software tools. Software tools used for determining ERI shall be Approved Software Rating Tools in accordance with RESNET/ICC 301.

N1106.6.2 (R406.6.2) Compliance report. Compliance software tools shall generate a report that documents that the ERI of the *rated design* complies with Sections N1106.3 and N1106.4. The compliance documentation shall include the following information:

1. Address or other identification of the residential building.
2. An inspection checklist documenting the building component characteristics of the *rated design*. The inspection checklist shall show results for both the *ERI reference design* and the *rated design*, and shall document all inputs entered by the user necessary to reproduce the results.
3. Name of individual completing the compliance report.
4. Name and version of the compliance software tool.

Exception: Where an otherwise identical building model is offered in multiple orientations, compliance for any orientation shall be permitted by documenting that the building meets the performance requirements in each of the four (north, east, south and west) cardinal orientations.

N1106.6.3 (R406.6.3) Additional documentation. The *building official* shall be permitted to require the following documents:

1. Documentation of the building component characteristics of the *ERI reference design*.
2. A certification signed by the builder providing the building component characteristics of the *rated design.*
3. Documentation of the actual values used in the software calculations for the *rated design*.

N1106.6.4 (R406.6.4) Specific approval. Performance analysis tools meeting the applicable sections of Section N1106 shall be *approved*. Documentation demonstrating the approval of performance analysis tools in accordance with Section N1106.6.1 shall be provided.

N1106.6.5 (R406.6.5) Input values. Where calculations require input values not specified by Sections N1102, N1103, N1104 and N1105, those input values shall be taken from RESNET/ICC 301.

SECTION N1107 (R501)
EXISTING BUILDINGS—GENERAL

N1107.1 (R501.1) Scope. The provisions of Sections N1107 through N1111 shall control the *alteration*, *repair, addition* and change of occupancy of existing *buildings* and structures.

[NY] N1107.1.1 (R501.1.1) Additions, alterations, or repairs: General. *Additions, alterations*, or *repairs* to an existing *building*, *building* system or portion thereof shall comply with Section N1108, N1109 or N1110. Unaltered portions of the existing *building* or *building* supply system shall not be required to comply with this chapter.

Exception: The exceptions of Section N1101.1 of this code shall apply.

N1107.2 (R501.2) Existing buildings. Except as specified in this chapter, this code shall not be used to require the removal, *alteration* or abandonment of, nor prevent the continued use and maintenance of, an existing *building* or *building* system lawfully in existence at the time of adoption of this code.

N1107.3 (R501.3) Maintenance. *Buildings* and structures, and parts thereof, shall be maintained in a safe and sanitary condition. Devices and systems that are required by this code shall be maintained in compliance with the code edition under which installed. The owner or the owner's authorized agent shall be responsible for the maintenance of *buildings* and structures. The requirements of this chapter shall not provide the basis for removal or abrogation of energy conservation, fire protection and safety systems and devices in existing structures.

[NY] N1107.4 (R501.4) Compliance. *Alterations*, *repairs*, *additions* and changes of occupancy to, or relocation of, existing *buildings* and structures shall comply with the provisions for *alterations*, *repairs*, *additions* and changes of occupancy or relocation, respectively, in the New York State Uniform Fire Prevention and Building Code (the *Uniform Code*) the New York State Energy Conservation Construction Code (the *Energy Code*), and NFPA 70.

N1107.5 (R501.5) New and replacement materials. Except as otherwise required or permitted by this code, materials permitted by the applicable code for new construction shall be used. Like materials shall be permitted for *repairs*, provided

INTERNATIONAL CODE COUNCIL®
Copyright © 2019 ICC & NYSDOS. ALL RIGHTS RESERVED. Accessed by Lauren Gualdino (lgualdino@briarcliffmanor.org), (-) Order Number #100880972 on May 08, 2020 07:05 AM (PDT) pursuant to License Agreement with ICC & NYSDOS. No further reproduction, no

100880972

that hazards to life, health or property are not created. Hazardous materials shall not be used where the code for new construction would not allow their use in *buildings* of similar occupancy, purpose and location.

[NY] N1107.6 (R501.6) Historic buildings. No provisions of this Chapter 11 relating to the construction, repair, alteration, restoration, and change of occupancy shall be mandatory for historic buildings.

SECTION N1108 (R502) ADDITIONS

N1108.1 (R502.1) General. *Additions* to an existing *building*, *building* system or portion thereof shall conform to the provisions of this chapter as they relate to new construction without requiring the unaltered portion of the existing *building* or *building* system to comply with this chapter. *Additions* shall not create an unsafe or hazardous condition or overload existing *building* systems. An *addition* shall be deemed to comply with this chapter where the *addition* alone complies, where the existing *building* and *addition* comply with this chapter as a single *building*, or where the *building* with the *addition* does not use more energy than the existing *building*. *Additions* shall be in accordance with Section N1108.1.1 or N1108.1.2.

N1108.1.1 (R502.1.1) Prescriptive compliance. *Additions* shall comply with Sections N1108.1.1.1 through N1108.1.1.4.

[NY] N1108.1.1.1 (R502.1.1.1) Building envelope. New *building* envelope assemblies that are part of the *addition* shall comply with Sections N1102.1, N1102.2, N1102.3.1 through N1102.3.5.

Exception: Where *unconditioned space* is changed to *conditioned space*, the *building* envelope of the addition shall comply where the Total UA, as determined in Section N1102.1.5, of the existing *building* and the *addition*, and any *alterations* that are part of the project, is less than or equal to the Total UA generated for the existing *building*.

N1108.1.1.2 (R502.1.1.2) Heating and cooling systems. New heating, cooling and duct systems that are part of the *addition* shall comply with Section N1103.

Exception: Where ducts from an existing heating and cooling system are extended to an *addition*, duct systems with less than 40 linear feet (12.19 m) in *unconditioned spaces* shall not be required to be tested in accordance with Section N1103.3.3.

N1108.1.1.3 (R502.1.1.3) Service hot water systems. New service hot water systems that are part of the *addition* shall comply with Section N1103.5.

N1108.1.1.4 (R502.1.1.4) Lighting. New lighting systems that are part of the *addition* shall comply with Section N1104.1.

N1108.1.2 (R502.1.2) Existing plus addition compliance (Simulated Performance Alternative). Where *unconditioned space* is changed to *conditioned space*, the *addition* shall comply where the annual energy cost or energy use of the *addition* and the existing *building*, and any *alterations* that are part of the project, is less than or equal to the annual energy cost of the existing *building* when modeled in accordance with Section N1105. The *addition* and any *alterations* that are part of the project shall comply with Section N1105 in its entirety.

SECTION N1109 (R503) ALTERATIONS

N1109.1 (R503.1) General. *Alterations* to any *building* or structure shall comply with the requirements of the code for new construction. *Alterations* shall be such that the existing *building* or structure is not less conforming with the provisions of this chapter than the existing building or structure was prior to the *alteration*.

Alterations to an existing *building*, *building* system or portion thereof shall conform to the provisions of this chapter as they relate to new construction without requiring the unaltered portions of the existing *building* or *building* system to comply with this chapter. *Alterations* shall not create an unsafe or hazardous condition or overload existing *building* systems. *Alterations* shall be such that the existing *building* or structure does not use more energy than the existing *building* or structure prior to the *alteration*. *Alterations* to existing *buildings* shall comply with Sections N1109.1.1 through N1109.2.

[NY] N1109.1.1 (R503.1.1) Building envelope. *Building* envelope assemblies that are part of the *alteration* shall comply with Section N1102.1.2 or N1102.1.4, Sections N1102.2.1 through N1102.2.13, N1102.3.1, N1102.3.2, N1102.4.3 and N1102.4.5.

Exception: The following *alterations* shall not be required to comply with the requirements for new construction provided that the energy use of the *building* is not increased:

1. Storm windows installed over existing fenestration.
2. Existing ceiling, wall or floor cavities exposed during construction provided that these cavities are filled with insulation.
3. Construction where the existing roof, wall or floor cavity is not exposed.
4. Roof recover.
5. Roofs without insulation in the cavity and where the sheathing or insulation is exposed during reroofing shall be insulated either above or below the sheathing.
6. Surface-applied window film installed on existing single-pane fenestration assemblies to reduce solar heat gain provided that the code does not require the glazing or fenestration assembly to be replaced.
7. Alterations which replace less than fifty percent of the luminaires within a space, provided that such alterations do not increase the installed interior lighting power.

INTERNATIONAL CODE COUNCIL®
Copyright © 2019 ICC & NYSDOS. ALL RIGHTS RESERVED. Accessed by Lauren Gualdino (lgualdino@briarcliffmanor.org), (-) Order Number #100880972 on May 08, 2020 07:05 AM (PDT) pursuant to License Agreement with ICC & NYSDOS. No further reproduction, no

100880972

N1109.1.1.1 (R503.1.1.1) Replacement fenestration. Where some or all of an existing fenestration unit is replaced with a new fenestration product, including sash and glazing, the replacement fenestration unit shall meet the applicable requirements for *U*-factor and SHGC as specified in Table N1102.1.2. Where more than one replacement *fenestration* unit is to be installed, an area-weighted average of the *U*-factor, SHGC or both of all replacement *fenestration* units shall be an alternative that can be used to show compliance.

N1109.1.2 (R503.1.2) Heating and cooling systems. New heating, cooling and duct systems that are part of the *alteration* shall comply with Section N1103.

Exception: Where ducts from an existing heating and cooling system are extended, duct systems with less than 40 linear feet (12.19 m) in *unconditioned spaces* shall not be required to be tested in accordance with Section N1103.3.3.

N1109.1.3 (R503.1.3) Service hot water systems. New service hot water systems that are part of the *alteration* shall comply with Section N1103.5.

N1109.1.4 (R503.1.4) Lighting. New lighting systems that are part of the *alteration* shall comply with Section N1104.1.

Exception: *Alterations* that replace less than 50 percent of the luminaires in a space, provided that such *alterations* do not increase the installed interior lighting power.

N1109.2 (R503.2) Change in space conditioning. Any nonconditioned or low energy space that is altered to become *conditioned space* shall be required to be brought into full compliance with this chapter.

Exception: Where the simulated performance option in Section N1105 is used to comply with this section, the annual energy cost of the *proposed design* is permitted to be 110 percent of the annual energy cost otherwise allowed by Section N1105.3.

SECTION N1110 (R504)
REPAIRS

N1110.1 (R504.1) General. *Buildings*, structures and parts thereof shall be repaired in compliance with Section N1107.3 and this section. Work on nondamaged components necessary for the required *repair* of damaged components shall be considered to be part of the *repair* and shall not be subject to the requirements for *alterations* in this chapter. Routine maintenance required by Section N1107.3, ordinary *repairs* exempt from *permit*, and abatement of wear due to normal service conditions shall not be subject to the requirements for *repairs* in this section.

[NY] N1110.2 (R504.2) Application. For the purposes of this code, the following shall be considered to be *repairs*:

1. Glass-only replacements in an existing sash and frame.
2. Roof *repairs*.
3. *Repairs* where only the bulb, ballast or both within the existing luminaires in a space are replaced provided that the replacement does not increase the installed interior lighting power.
4. Replacement of existing doors that separate conditioned space from the exterior shall not require the installation of a vestibule provided, however, that an existing vestibule that separates conditioned space from the exterior shall not be removed.

SECTION N1111 (R505)
CHANGE OF OCCUPANCY OR USE

N1111.1 (R505.1) General. Spaces undergoing a change in occupancy that would result in an increase in demand for either fossil fuel or electrical energy shall comply with this chapter.

N1111.2 (R505.2) General. Any space that is converted to a dwelling unit or portion thereof from another use or occupancy shall comply with this chapter.

Exception: Where the simulated performance option in Section N1105 is used to comply with this section, the annual energy cost of the *proposed design* is permitted to be 110 percent of the annual energy cost allowed by Section N1105.3.

INTERNATIONAL CODE COUNCIL®
Copyright © 2019 ICC & NYSDOS. ALL RIGHTS RESERVED. Accessed by Lauren Gualdino (lgualdino@briarcliffmanor.org), (-) Order Number #100880972 on May 08, 2020 07:05 AM (PDT) pursuant to License Agreement with ICC & NYSDOS. No further reproduction, no

100880972

Part V—Mechanical

CHAPTER 12

MECHANICAL ADMINISTRATION

SECTION M1201
GENERAL

M1201.1 Scope. The provisions of Chapters 12 through 24 shall regulate the design, installation, maintenance, *alteration* and inspection of mechanical systems that are permanently installed and used to control environmental conditions within buildings. These chapters shall also regulate those mechanical systems, system components, *equipment* and *appliances* specifically addressed in this code.

M1201.2 Application. In addition to the general administration requirements of Chapter 1, the administrative provisions of this chapter shall apply to the mechanical requirements of Chapters 13 through 24.

SECTION M1202
EXISTING MECHANICAL SYSTEMS

M1202.1 Additions, alterations or repairs. *Additions*, *alterations*, renovations or repairs to a mechanical system shall conform to the requirements for a new mechanical system without requiring the existing mechanical system to comply with all of the requirements of this code. *Additions, alterations* or repairs shall not cause an existing mechanical system to become unsafe, hazardous or overloaded. Minor *additions*, *alterations* or repairs to existing mechanical systems shall meet the provisions for new construction, unless such work is done in the same manner and arrangement as was in the existing system, is not hazardous, and is *approved*.

M1202.2 Existing installations. Except as otherwise provided for in this code, a provision in this code shall not require the removal, *alteration* or abandonment of, nor prevent the continued use and maintenance of, an existing mechanical system lawfully in existence at the time of the adoption of this code.

M1202.3 Maintenance. Mechanical systems, both existing and new, and parts thereof shall be maintained in proper operating condition in accordance with the original design and in a safe and sanitary condition. Devices or safeguards that are required by this code shall be maintained in compliance with the code edition under which such devices and safeguards were installed. The owner or the owner's designated agent shall be responsible for maintenance of the mechanical systems. To determine compliance with this provision, the *building official* shall have the authority to require a mechanical system to be reinspected.

INTERNATIONAL CODE COUNCIL®
Copyright © 2019 ICC & NYSDOS. ALL RIGHTS RESERVED. Accessed by Lauren Gualdino (lgualdino@briarcliffmanor.org), (-) Order Number #100880972 on May 08, 2020 07:05 AM (PDT) pursuant to License Agreement with ICC & NYSDOS. No further reproduction, no

100880972

INTERNATIONAL CODE COUNCIL®
Copyright © 2019 ICC & NYSDOS. ALL RIGHTS RESERVED. Accessed by Lauren Gualdino (lgualdino@briarcliffmanor.org), (-) Order Number #100880972 on May 08, 2020 07:05 AM (PDT) pursuant to License Agreement with ICC & NYSDOS. No further reproduction, no

100880972

CHAPTER 13

GENERAL MECHANICAL SYSTEM REQUIREMENTS

SECTION M1301
GENERAL

M1301.1 Scope. The provisions of this chapter shall govern the installation of mechanical systems not specifically covered in other chapters applicable to mechanical systems. Installations of mechanical *appliances, equipment* and systems not addressed by this code shall comply with the applicable provisions of the *Mechanical Code of New York State* and the *Fuel Gas Code of New York State.*

M1301.1.1 Flood-resistant installation. In flood hazard areas as established by Table R301.2(1), mechanical *appliances, equipment* and systems shall be located or installed in accordance with Section R322.1.6.

M1301.2 Identification. Each length of pipe and tubing and each pipe fitting utilized in a mechanical system shall bear the identification of the manufacturer.

M1301.3 Installation of materials. Materials shall be installed in strict accordance with the standards under which the materials are accepted and approved. In the absence of such installation procedures, the manufacturer's instructions shall be followed. Where the requirements of referenced standards or manufacturer's instructions do not conform to minimum provisions of this code, the provisions of this code shall apply.

M1301.4 Plastic pipe, fittings and components. Plastic pipe, fittings and components shall be third-party certified as conforming to NSF 14.

M1301.5 Third-party testing and certification. Piping, tubing and fittings shall comply with the applicable referenced standards, specifications and performance criteria of this code and shall be identified in accordance with Section M1301.2. Piping, tubing and fittings shall either be tested by an approved third-party testing agency or certified by an approved third-party certification agency.

SECTION M1302
APPROVAL

M1302.1 Listed and labeled. *Appliances* regulated by this code shall be *listed* and *labeled* for the application in which they are installed and used, unless otherwise *approved* in accordance with Section R104.3.

SECTION M1303
LABELING OF APPLIANCES

M1303.1 Label information. A permanent factory-applied nameplate(s) shall be affixed to *appliances* on which shall appear, in legible lettering, the manufacturer's name or trademark, the model number, a serial number and the seal or *mark* of the testing agency. A *label* also shall include the following:

1. Electrical *appliances*. Electrical rating in volts, amperes and motor phase; identification of individual electrical components in volts, amperes or watts and motor phase; and in Btu/h (W) output and required clearances.
2. Absorption units. Hourly rating in Btu/h (W), minimum hourly rating for units having step or automatic modulating controls, type of fuel, type of refrigerant, cooling capacity in Btu/h (W) and required clearances.
3. Fuel-burning units. Hourly rating in Btu/h (W), type of fuel *approved* for use with the *appliance* and required clearances.
4. Electric comfort-heating appliances. The electric rating in volts, amperes and phase; Btu/h (W) output rating; individual marking for each electrical component in amperes or watts, volts and phase; and required clearances from combustibles.
5. Maintenance instructions. Required regular maintenance actions and title or publication number for the operation and maintenance manual for that particular model and type of product.

SECTION M1304
TYPE OF FUEL

M1304.1 Fuel types. Fuel-fired *appliances* shall be designed for use with the type of fuel to which they will be connected and the altitude at which they are installed. *Appliances* that comprise parts of the building mechanical system shall not be converted for the use of a different fuel, except where *approved* and converted in accordance with the manufacturer's instructions. The fuel input rate shall not be increased or decreased beyond the limit rating for the altitude at which the *appliance* is installed.

SECTION M1305
APPLIANCE ACCESS

M1305.1 Appliance access for inspection service, repair and replacement. *Appliances* shall be located to allow for access for inspection, service, repair and replacement without removing permanent construction, other *appliances*, or any other piping or ducts not connected to the *appliance* being inspected, serviced, repaired or replaced. A level working space not less than 30 inches deep and 30 inches wide (762 mm by 762 mm) shall be provided in front of the control side to service an *appliance*.

INTERNATIONAL CODE COUNCIL®
Copyright © 2019 ICC & NYSDOS. ALL RIGHTS RESERVED. Accessed by Lauren Gualdino (lgualdino@briarcliffmanor.org), (-) Order Number #100880972 on May 08, 2020 07:05 AM (PDT) pursuant to License Agreement with ICC & NYSDOS. No further reproduction, no

100880972

M1305.1.1 Appliances in rooms. *Appliances* installed in a compartment, alcove, *basement* or similar space shall be accessed by an opening or door and an unobstructed passageway measuring not less than 24 inches (610 mm) wide and large enough to allow removal of the largest *appliance* in the space, provided there is a level service space of not less than 30 inches (762 mm) deep and the height of the *appliance*, but not less than 30 inches (762 mm), at the front or service side of the *appliance* with the door open.

M1305.1.2 Appliances in attics. *Attics* containing *appliances* shall be provided with an opening and a clear and unobstructed passageway large enough to allow removal of the largest *appliance*, but not less than 30 inches (762 mm) high and 22 inches (559 mm) wide and not more than 20 feet (6096 mm) long measured along the centerline of the passageway from the opening to the *appliance*. The passageway shall have continuous solid flooring in accordance with Chapter 5 not less than 24 inches (610 mm) wide. A level service space not less than 30 inches (762 mm) deep and 30 inches (762 mm) wide shall be present along all sides of the *appliance* where access is required. The clear access opening dimensions shall be not less than of 20 inches by 30 inches (508 mm by 762 mm), and large enough to allow removal of the largest appliance.

Exceptions:

1. The passageway and level service space are not required where the *appliance* can be serviced and removed through the required opening.
2. Where the passageway is unobstructed and not less than 6 feet (1829 mm) high and 22 inches (559 mm) wide for its entire length, the passageway shall be not more than 50 feet (15 250 mm) long.

M1305.1.2.1 Electrical requirements. A luminaire controlled by a switch located at the required passageway opening and a receptacle outlet shall be installed at or near the *appliance* location in accordance with Chapter 39. Exposed lamps shall be protected from damage by location or lamp guards.

M1305.1.3 Appliances under floors. Underfloor spaces containing *appliances* shall be provided with an unobstructed passageway large enough to remove the largest *appliance*, but not less than 30 inches (762 mm) high and 22 inches (559 mm) wide, nor more than 20 feet (6096 mm) long measured along the centerline of the passageway from the opening to the *appliance*. A level service space not less than 30 inches (762 mm) deep and 30 inches (762 mm) wide shall be present at the front or service side of the *appliance*. If the depth of the passageway or the service space exceeds 12 inches (305 mm) below the adjoining grade, the walls of the passageway shall be lined with concrete or masonry extending 4 inches (102 mm) above the adjoining grade in accordance with Chapter 4. The rough-framed access opening dimensions shall be not less than 22 inches by 30 inches (559 mm by 762 mm), and large enough to remove the largest *appliance*.

Exceptions:

1. The passageway is not required where the level service space is present when the access is open, and the *appliance* can be serviced and removed through the required opening.
2. Where the passageway is unobstructed and not less than 6 feet high (1829 mm) and 22 inches (559 mm) wide for its entire length, the passageway shall not be limited in length.

M1305.1.3.1 Ground clearance. *Equipment* and *appliances* supported from the ground shall be level and firmly supported on a concrete slab or other *approved* material extending not less than 3 inches (76 mm) above the adjoining ground. Such support shall be in accordance with the manufacturer's installation instructions. *Appliances* suspended from the floor shall have a clearance of not less than 6 inches (152 mm) from the ground.

M1305.1.3.2 Pit locations. Appliances installed in pits or excavations shall not come in direct contact with the surrounding soil and shall be installed not less than 3 inches (76 mm) above the pit floor. The sides of the pit or excavation shall be held back not less than 12 inches (305 mm) from the appliance. Where the depth exceeds 12 inches (305 mm) below adjoining grade, the walls of the pit or excavation shall be lined with concrete or masonry. Such concrete or masonry shall extend not less than 4 inches (102 mm) above adjoining grade and shall have sufficient lateral load-bearing capacity to resist collapse. Excavation on the control side of the appliance shall extend horizontally not less than 30 inches (762 mm). The appliance shall be protected from flooding in an approved manner.

M1305.1.3.3 Electrical requirements. A luminaire controlled by a switch located at the required passageway opening and a receptacle outlet shall be installed at or near the *appliance* location in accordance with Chapter 39. Exposed lamps shall be protected from damage by location or lamp guards.

SECTION M1306
CLEARANCES FROM COMBUSTIBLE CONSTRUCTION

M1306.1 Appliance clearance. *Appliances* shall be installed with the clearances from unprotected combustible materials as indicated on the *appliance label* and in the manufacturer's installation instructions.

INTERNATIONAL CODE COUNCIL®
Copyright © 2019 ICC & NYSDOS. ALL RIGHTS RESERVED. Accessed by Lauren Gualdino (lgualdino@briarcliffmanor.org), (-) Order Number #100880972 on May 08, 2020 07:05 AM (PDT) pursuant to License Agreement with ICC & NYSDOS. No further reproduction, no

100880972

M1306.2 Clearance reduction. The reduction of required clearances to combustible assemblies or combustible materials shall be based on Section M1306.2.1 or Section M1306.2.2.

M1306.2.1 Labeled assemblies. The allowable clearance shall be based on an approved reduced clearance protective assembly that is listed and labeled in accordance with UL 1618.

M1306.2.2 Reduction table. Reduction of clearances shall be in accordance with the *appliance* manufacturer's instructions and Table M1306.2. Forms of protection with ventilated airspace shall conform to the following requirements:

1. Not less than 1-inch (25 mm) airspace shall be provided between the protection and combustible wall surface.
2. Air circulation shall be provided by having edges of the wall protection open not less than 1 inch (25 mm).
3. If the wall protection is mounted on a single flat wall away from corners, air circulation shall be provided by having the bottom and top edges, or the side and top edges not less than 1 inch (25 mm).
4. Wall protection covering two walls in a corner shall be open at the bottom and top edges not less than 1 inch (25 mm).

M1306.2.3 Solid-fuel appliances. Table M1306.2 shall not be used to reduce the clearance required for solid-fuel *appliances* listed for installation with minimum clearances of 12 inches (305 mm) or less. For *appliances listed* for installation with minimum clearances greater than 12 inches (305 mm), Table M1306.2 shall not be used to reduce the clearance to less than 12 inches (305 mm).

SECTION M1307
APPLIANCE INSTALLATION

M1307.1 General. Installation of *appliances* shall conform to the conditions of their *listing* and *label* and the manufacturer's instructions. The manufacturer's operating and installation instructions shall remain attached to the *appliance*.

M1307.2 Anchorage of appliances. *Appliances* designed to be fixed in position shall be fastened or anchored in an *approved* manner. In Seismic Design Categories D_0, D_1 and D_2, and in townhouses in Seismic Design Category C, water heaters and thermal storage units shall be anchored or strapped to resist horizontal displacement caused by earthquake motion in accordance with one of the following:

1. Anchorage and strapping shall be designed to resist a horizontal force equal to one-third of the operating weight of the water heater storage tank, acting in any horizontal direction. Strapping shall be at points within the upper one-third and lower one-third of the *appliance's* vertical dimensions. At the lower point, the strapping shall maintain a minimum distance of 4 inches (102 mm) above the controls.
2. The anchorage strapping shall be in accordance with the appliance manufacturer's recommendations.

M1307.3 Elevation of ignition source. *Appliances* having an *ignition source* shall be elevated such that the source of ignition is not less than 18 inches (457 mm) above the floor in garages. For the purpose of this section, rooms or spaces that are not part of the *living space* of a *dwelling unit* and that communicate with a private garage through openings shall be considered to be part of the garage.

Exception: Elevation of the ignition source is not required for appliances that are listed as flammable-vapor-ignition resistant.

M1307.3.1 Protection from impact. *Appliances* shall not be installed in a location subject to vehicle damage except where protected by *approved* barriers.

M1307.4 Hydrogen generating and refueling operations. *Ventilation* shall be required in accordance with Section M1307.4.1, M1307.4.2 or M1307.4.3 in private garages that contain hydrogen-generating *appliances* or refueling systems. For the purpose of this section, rooms or spaces that are not part of the *living space* of a *dwelling unit* and that communicate directly with a private garage through openings shall be considered to be part of the private garage.

M1307.4.1 Natural ventilation. Indoor locations intended for hydrogen-generating or refueling operations shall be limited to a maximum floor area of 850 square feet (79 m^2) and shall communicate with the outdoors in accordance with Sections M1307.4.1.1 and M1307.4.1.2. The maximum rated output capacity of hydrogen-generating *appliances* shall not exceed 4 standard cubic feet per minute (1.9 L/s) of hydrogen for each 250 square feet (23 m^2) of floor area in such spaces. The minimum cross-sectional dimension of air openings shall be 3 inches (76 mm). Where ducts are used, they shall be of the same cross-sectional area as the free area of the openings to which they connect. In those locations, *equipment* and *appliances* having an *ignition source* shall be located so that the source of ignition is not within 12 inches (305 mm) of the ceiling.

M1307.4.1.1 Two openings. Two permanent openings shall be constructed within the garage. The upper opening shall be located entirely within 12 inches (305 mm) of the ceiling of the garage. The lower opening shall be located entirely within 12 inches (305 mm) of the floor of the garage. Both openings shall be constructed in the same exterior wall. The openings shall communicate directly with the outdoors and shall have a minimum free area of $^1/_2$ square foot per 1,000 cubic feet (1.7 m^2/1000 m^3) of garage volume.

M1307.4.1.2 Louvers and grilles. In calculating free area required by Section M1307.4.1, the required size of openings shall be based on the net free area of each opening. If the free area through a design of louver or grille is known, it shall be used in calculating the size opening required to provide the free area specified. If the design and free area are not known, it shall be assumed that wood louvers will have a 25-percent free area and metal louvers and grilles will have a 75-percent free area. Louvers and grilles shall be fixed in the open position.

INTERNATIONAL CODE COUNCIL®
Copyright © 2019 ICC & NYSDOS. ALL RIGHTS RESERVED. Accessed by Lauren Gualdino (lgualdino@briarcliffmanor.org), (-) Order Number #100880972 on May 08, 2020 07:05 AM (PDT) pursuant to License Agreement with ICC & NYSDOS. No further reproduction, no

100880972

TABLE M1306.2
REDUCTION OF CLEARANCES WITH SPECIFIED FORMS OF PROTECTION[a, c, d, e, f, g, h, i, j, k, l]

TYPE OF PROTECTION APPLIED TO AND COVERING ALL SURFACES OF COMBUSTIBLE MATERIAL WITHIN THE DISTANCE SPECIFIED AS THE REQUIRED CLEARANCE WITH NO PROTECTION (See Figures M1306.1 and M1306.2)	WHERE THE REQUIRED CLEARANCE WITHOUT PROTECTION FROM APPLIANCE, VENT CONNECTOR, OR SINGLE WALL METAL PIPE IS:									
	36 inches		18 inches		12 inches		9 inches		6 inches	
	Allowable clearances with specified protection (Inches)[b]									
	Use column 1 for clearances above an appliance or horizontal connector. Use column 2 for clearances from an appliance, vertical connector and single-wall metal pipe.									
	Above column 1	Sides and rear column 2	Above column 1	Sides and rear column 2	Above column 1	Sides and rear column 2	Above column 1	Sides and rear column 2	Above column 1	Sides and rear column 2
$3^1/_2$-inch-thick masonry wall without ventilated airspace	—	24	—	12	—	9	—	6	—	5
$^1/_2$-inch insulation board over 1-inch glass fiber or mineral wool batts	24	18	12	9	9	6	6	5	4	3
Galvanized sheet steel having a minimum thickness of 0.0236-inch (No. 24 gage) over 1-inch glass fiber or mineral wool batts reinforced with wire or rear face with a ventilated airspace	18	12	9	6	6	4	5	3	3	3
$3^1/_2$-inch-thick masonry wall with ventilated airspace	—	12	—	6	—	6	—	6	—	6
Galvanized sheet steel having a minimum thickness of 0.0236-inch (No. 24 gage) with a ventilated airspace 1-inch off the combustible assembly	18	12	9	6	6	4	5	3	3	2
$^1/_2$-inch-thick insulation board with ventilated airspace	18	12	9	6	6	4	5	3	3	3
Galvanized sheet steel having a minimum thickness of 0.0236-inch (No. 24 gage) with ventilated airspace over 24 gage sheet steel with a ventilated space	18	12	9	6	6	4	5	3	3	3
1-inch glass fiber or mineral wool batts sandwiched between two sheets of galvanized sheet steel having a minimum thickness of 0.0236-inch (No. 24 gage) with a ventilated airspace	18	12	9	6	6	4	5	3	3	3

For SI: 1 inch = 25.4 mm, 1 pound per cubic foot = 16.019 kg/m^3, °C = [(°F)-32/1.8], 1 Btu/(h × ft^2 × °F/in.) = 0.001442299 (W/cm^2 × °C/cm).

a. Reduction of clearances from combustible materials shall not interfere with combustion air, draft hood clearance and relief, and accessibility of servicing.

b. Clearances shall be measured from the surface of the heat producing appliance or equipment to the outer surface of the combustible material or combustible assembly.

c. Spacers and ties shall be of noncombustible material. Spacers and ties shall not be used directly opposite appliance or connector.

d. Where all clearance reduction systems use a ventilated airspace, adequate provision for air circulation shall be provided as described. (See Figures M1306.1 and M1306.2.)

e. There shall be not less than 1 inch between clearance reduction systems and combustible walls and ceilings for reduction systems using ventilated airspace.

f. If a wall protector is mounted on a single flat wall away from corners, adequate air circulation shall be permitted to be provided by leaving only the bottom and top edges or only the side and top edges open with not less than a 1-inch air gap.

g. Mineral wool and glass fiber batts (blanket or board) shall have a minimum density of 8 pounds per cubic foot and a minimum melting point of 1,500°F.

h. Insulation material used as part of a clearance reduction system shall have a thermal conductivity of 1.0 Btu inch per square foot per hour °F or less. Insulation board shall be formed of noncombustible material.

i. There shall be not less than 1 inch between the appliance and the protector. The clearance between the appliance and the combustible surface shall not be reduced below that allowed in this table.

j. All clearances and thicknesses are minimum; larger clearances and thicknesses are acceptable.

k. Listed single-wall connectors shall be permitted to be installed in accordance with the terms of their listing and the manufacturer's instructions.

l. For limitations on clearance reduction for solid-fuel-burning appliances see Section M1306.2.3.

INTERNATIONAL CODE COUNCIL®
Copyright © 2019 ICC & NYSDOS. ALL RIGHTS RESERVED. Accessed by Lauren Gualdino (lgualdino@briarcliffmanor.org), (-) Order Number #100880972 on May 08, 2020 07:05 AM (PDT) pursuant to License Agreement with ICC & NYSDOS. No further reproduction, no

100880972

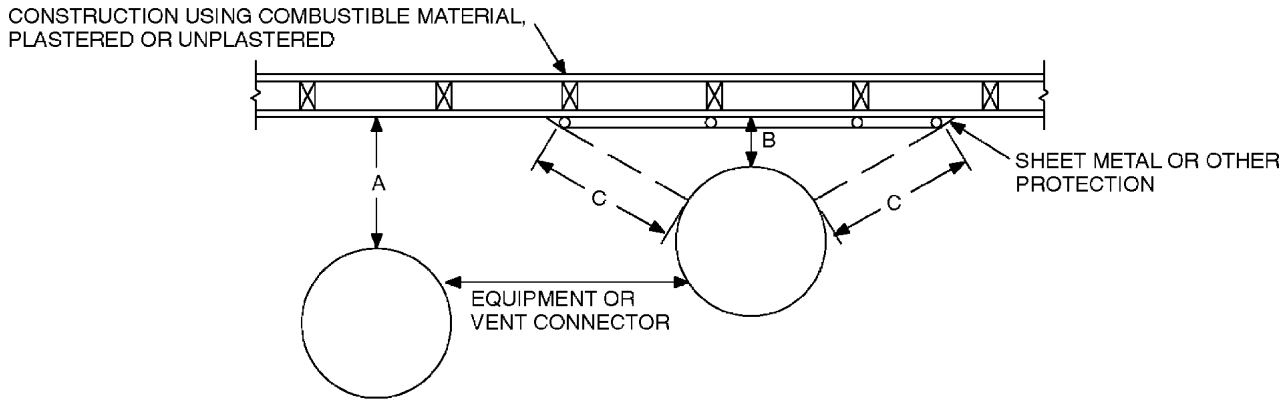

Note: "A" equals the required clearance with no protection. "B" equals the reduced clearance permitted in accordance with Table M1306.2. The protection applied to the construction using combustible material shall extend far enough in each direction to make "C" equal to "A."

FIGURE M1306.1
REDUCED CLEARANCE DIAGRAM

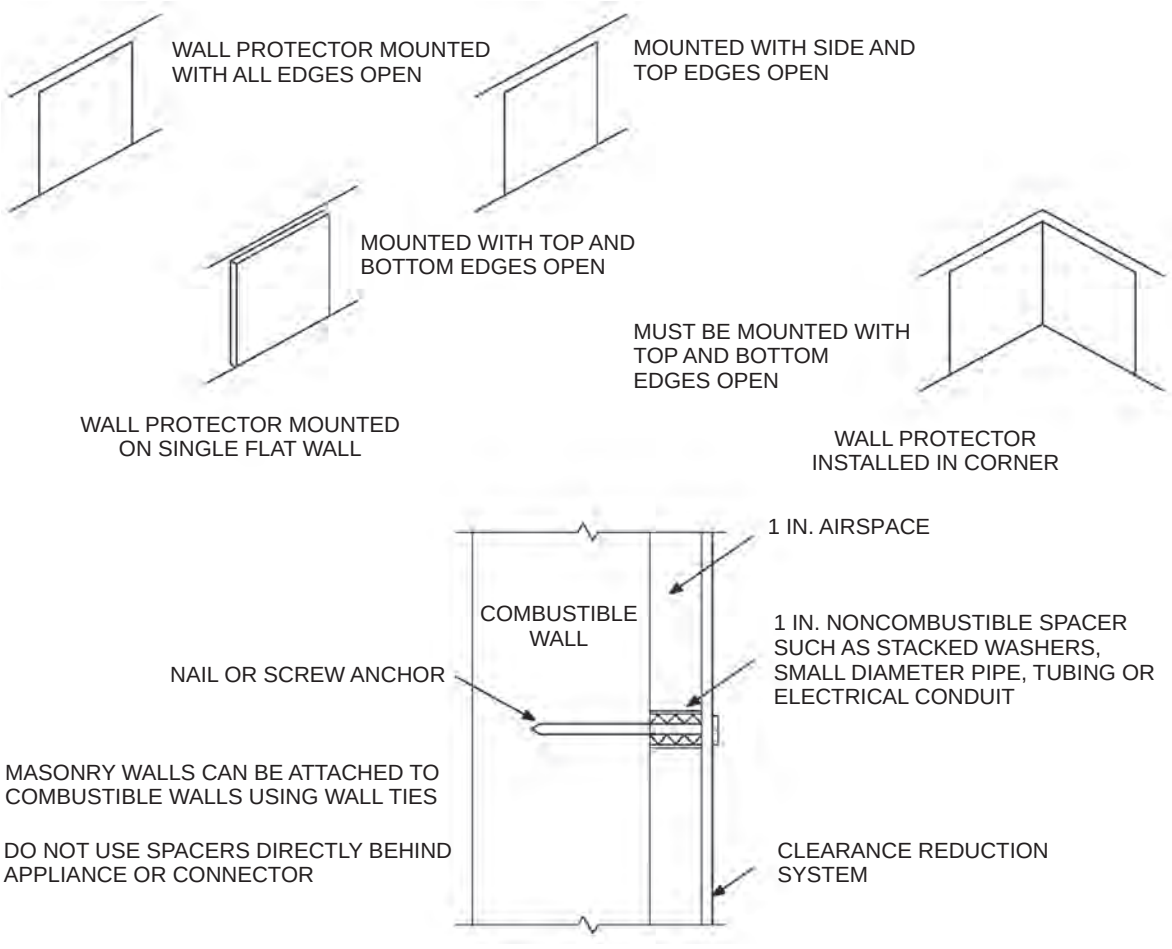

For SI: 1 inch = 25.4 mm.

FIGURE M1306.2
WALL PROTECTOR CLEARANCE REDUCTION SYSTEM

INTERNATIONAL CODE COUNCIL®
Copyright © 2019 ICC & NYSDOS. ALL RIGHTS RESERVED. Accessed by Lauren Gualdino (lgualdino@briarcliffmanor.org), (-) Order Number #100880972 on May 08, 2020 07:05 AM (PDT) pursuant to License Agreement with ICC & NYSDOS. No further reproduction, no

100880972

M1307.4.2 Mechanical ventilation. Indoor locations intended for hydrogen-generating or refueling operations shall be ventilated in accordance with Section 502.16 of the *Mechanical Code of New York State*. In these locations, *equipment* and *appliances* having an *ignition source* shall be located so that the source of ignition is below the mechanical *ventilation* outlet(s).

M1307.4.3 Specially engineered installations. As an alternative to the provisions of Sections M1307.4.1 and M1307.4.2, the necessary supply of air for *ventilation* and dilution of flammable gases shall be provided by an *approved* engineered system.

M1307.5 Electrical appliances. Electrical *appliances* shall be installed in accordance with Chapters 14, 15, 19, 20 and 34 through 43.

M1307.6 Plumbing connections. Potable water and drainage system connections to *equipment* and *appliances* regulated by this code shall be in accordance with Chapters 29 and 30.

SECTION M1308
MECHANICAL SYSTEMS INSTALLATION

M1308.1 Drilling and notching. Wood-framed structural members shall be drilled, notched or altered in accordance with the provisions of Sections R502.8, R602.6, R602.6.1 and R802.7. Holes in load-bearing members of cold-formed steel light-frame construction shall be permitted only in accordance with Sections R505.2.6, R603.2.6 and R804.2.6. In accordance with the provisions of Sections R505.3.5, R603.3.4 and R804.3.3, cutting and notching of flanges and lips of load-bearing members of cold-formed steel light frame construction shall not be permitted. Structural insulated panels (SIPs) shall be drilled and notched or altered in accordance with the provisions of Section R610.7.

M1308.2 Protection against physical damage. Where piping will be concealed within light-frame construction assemblies, the piping shall be protected against penetration by fasteners in accordance with Sections M1308.2.1 through M1308.2.3.

Exception: Cast-iron piping and galvanized steel piping shall not be required to be protected.

M1308.2.1 Piping through bored holes or notches. Where *piping* is installed through holes or notches in framing members and is located less than $1^1/_2$ inches (38 mm) from the framing member face to which wall, ceiling or floor membranes will be attached, the pipe shall be protected by shield plates that cover the width of the pipe and the framing member and that extend 2 inches (51 mm) to each side of the framing member. Where the framing member that the piping passes through is a bottom plate, bottom track, top plate or top track, the shield plates shall cover the framing member and extend 2 inches (51 mm) above the bottom framing member and 2 inches (51 mm) below the top framing member.

M1308.2.2 Piping in other locations. Where piping is located within a framing member and is less than $1^1/_2$ inches (38 mm) from the framing member face to which wall, ceiling or floor membranes will be attached, the piping shall be protected by shield plates that cover the width and length of the piping. Where piping is located outside of a framing member and is located less than $1^1/_2$ inches (38 mm) from the nearest edge of the face of the framing member to which the membrane will be attached, the piping shall be protected by shield plates that cover the width and length of the piping.

M1308.2.3 Shield plates. Shield plates shall be of steel material having a thickness of not less than 0.0575 inch (1.463 mm) (No. 16 gage).

INTERNATIONAL CODE COUNCIL®
Copyright © 2019 ICC & NYSDOS. ALL RIGHTS RESERVED. Accessed by Lauren Gualdino (lgualdino@briarcliffmanor.org), (-) Order Number #100880972 on May 08, 2020 07:05 AM (PDT) pursuant to License Agreement with ICC & NYSDOS. No further reproduction, no

100880972

CHAPTER 14

HEATING AND COOLING EQUIPMENT AND APPLIANCES

SECTION M1401
GENERAL

M1401.1 Installation. Heating and cooling *equipment* and *appliances* shall be installed in accordance with the manufacturer's instructions and the requirements of this code.

M1401.2 Access. Heating and cooling *equipment* and appliances shall be located with respect to building construction and other *equipment* and appliances to permit maintenance, servicing and replacement. Clearances shall be maintained to permit cleaning of heating and cooling surfaces; replacement of filters, blowers, motors, controls and vent connections; lubrication of moving parts; and adjustments.

Exception: Access shall not be required for ducts, piping, or other components approved for concealment.

M1401.3 Equipment and appliance sizing. Heating and cooling *equipment* and *appliances* shall be sized in accordance with ACCA Manual S or other approved sizing methodologies based on building loads calculated in accordance with ACCA Manual J or other *approved* heating and cooling calculation methodologies.

Exception: Heating and cooling equipment and appliance sizing shall not be limited to the capacities determined in accordance with Manual S where either of the following conditions applies:

1. The specified equipment or appliance utilizes multistage technology or variable refrigerant flow technology and the loads calculated in accordance with the approved heating and cooling calculation methodology are within the range of the manufacturer's published capacities for that equipment or appliance.
2. The specified equipment or appliance manufacturer's published capacities cannot satisfy both the total and sensible heat gains calculated in accordance with the approved heating and cooling calculation methodology and the next larger standard size unit is specified.

M1401.4 Outdoor installations. *Equipment* and *appliances* installed outdoors shall be *listed* and *labeled* for outdoor installation. Supports and foundations shall prevent excessive vibration, settlement or movement of the *equipment*. Supports and foundations shall be in accordance with Section M1305.1.3.1.

M1401.5 Flood hazard. In flood hazard areas as established by Table R301.2(1), heating and cooling *equipment* and *appliances* shall be located or installed in accordance with Section R322.1.6.

[NY] M1401.6 Solid fuel-burning heating appliances, chimneys and flues. Building permits, inspection requirements, and compliance certificates for the installation, inspection, and subsequent use of solid fuel-burning heating appliances, chimneys and flues shall be in accordance with Section R108.

SECTION M1402
CENTRAL FURNACES

M1402.1 General. Oil-fired central furnaces shall conform to ANSI/UL 727. Electric furnaces shall conform to UL 1995.

M1402.2 Clearances. Clearances shall be provided in accordance with the *listing* and the manufacturer's installation instructions.

M1402.3 Combustion air. *Combustion air* shall be supplied in accordance with Chapter 17. *Combustion air* openings shall be unobstructed for a distance of not less than 6 inches (152 mm) in front of the openings.

SECTION M1403
HEAT PUMP EQUIPMENT

M1403.1 Heat pumps. Electric heat pumps shall be listed and labeled in accordance with UL 1995 or UL/CSA/ANCE 60335-2-40.

SECTION M1404
REFRIGERATION COOLING EQUIPMENT

M1404.1 Compliance. Refrigeration cooling *equipment* shall comply with Section M1411.

SECTION M1405
BASEBOARD CONVECTORS

M1405.1 General. Electric baseboard convectors shall be installed in accordance with the manufacturer's instructions and Chapters 34 through 43. Electric baseboard heaters shall be listed and labeled in accordance with UL 1042.

SECTION M1406
RADIANT HEATING SYSTEMS

M1406.1 General. Electric radiant heating systems shall be installed in accordance with the manufacturer's instructions and Chapters 34 through 43 and shall be listed for the application.

M1406.2 Clearances. Clearances for radiant heating panels or elements to any wiring, outlet boxes and junction boxes used for installing electrical devices or mounting luminaires shall comply with Chapters 34 through 43.

INTERNATIONAL CODE COUNCIL®
Copyright © 2019 ICC & NYSDOS. ALL RIGHTS RESERVED. Accessed by Lauren Gualdino (lgualdino@briarcliffmanor.org), (-) Order Number #100880972 on May 08, 2020 07:05 AM (PDT) pursuant to License Agreement with ICC & NYSDOS. No further reproduction, no

100880972

M1406.3 Installation of radiant panels. Radiant panels installed on wood framing shall conform to the following requirements:

1. Heating panels shall be installed parallel to framing members and secured to the surface of framing members or mounted between framing members.
2. Mechanical fasteners shall penetrate only the unheated portions provided for this purpose. Panels shall not be fastened at any point closer than $^1/_4$ inch (6.4 mm) to an element. Other methods of attachment of the panels shall be in accordance with the panel manufacturer's instructions.
3. Unless *listed* and *labeled* for field cutting, heating panels shall be installed as complete units.

M1406.4 Installation in concrete or masonry. Radiant heating systems installed in concrete or masonry shall conform to the following requirements:

1. Radiant heating systems shall be identified as being suitable for the installation, and shall be secured in place as specified in the manufacturer's installation instructions.
2. Radiant heating panels or radiant heating panel sets shall not be installed where they bridge expansion joints unless protected from expansion and contraction.

M1406.5 Finish surfaces. Finish materials installed over radiant heating panels or systems shall be installed in accordance with the manufacturer's instructions. Surfaces shall be secured so that nails or other fastenings do not pierce the radiant heating elements.

SECTION M1407
DUCT HEATERS

M1407.1 General. Electric duct heaters shall be installed in accordance with the manufacturer's instructions and Chapters 34 through 43. Electric duct heaters shall comply with UL 1996.

M1407.2 Installation. Electric duct heaters shall be installed so that they will not create a fire hazard. Class 1 ducts, duct coverings and linings shall be interrupted at each heater to provide the clearances specified in the manufacturer's installation instructions. Such interruptions are not required for duct heaters *listed* and *labeled* for zero clearance to combustible materials. Insulation installed in the immediate area of each heater shall be classified for the maximum temperature produced on the duct surface.

M1407.3 Installation with heat pumps and air conditioners. Duct heaters located within 4 feet (1219 mm) of a heat pump or air conditioner shall be *listed* and *labeled* for such installations. The heat pump or air conditioner shall additionally be *listed* and *labeled* for such duct heater installations.

M1407.4 Access. Duct heaters shall be located to allow access for servicing, and clearance shall be maintained to permit adjustment, servicing and replacement of controls and heating elements.

M1407.5 Fan interlock. The fan circuit shall be provided with an interlock to prevent heater operation when the fan is not operating.

SECTION M1408
VENTED FLOOR FURNACES

M1408.1 General. Oil-fired vented floor furnaces shall comply with UL 729 and shall be installed in accordance with their *listing*, the manufacturer's instructions and the requirements of this code.

M1408.2 Clearances. Vented floor furnaces shall be installed in accordance with their listing and the manufacturer's instructions.

M1408.3 Location. Location of floor furnaces shall conform to the following requirements:

1. Floor registers of floor furnaces shall be installed not less than 6 inches (152 mm) from a wall.
2. Wall registers of floor furnaces shall be installed not less than 6 inches (152 mm) from the adjoining wall at inside corners.
3. The furnace register shall be located not less than 12 inches (305 mm) from doors in any position, draperies or similar combustible objects.
4. The furnace register shall be located not less than 5 feet (1524 mm) below any projecting combustible materials.
5. The floor furnace burner assembly shall not project into an occupied under-floor area.
6. The floor furnace shall not be installed in concrete floor construction built on grade.
7. The floor furnace shall not be installed where a door can swing within 12 inches (305 mm) of the grille opening.

M1408.4 Access. An opening in the foundation not less than 18 inches by 24 inches (457 mm by 610 mm), or a trap door not less than 22 inches by 30 inches (559 mm by 762 mm) shall be provided for access to a floor furnace. The opening and passageway shall be large enough to allow replacement of any part of the *equipment*.

M1408.5 Installation. Floor furnace installations shall conform to the following requirements:

1. Thermostats controlling floor furnaces shall be located in the room in which the register of the floor furnace is located.
2. Floor furnaces shall be supported independently of the furnace floor register.
3. Floor furnaces shall be installed not closer than 6 inches (152 mm) to the ground. The minimum clearance shall be 2 inches (51 mm), where the lower 6 inches (152 mm) of the furnace is sealed to prevent water entry.
4. Where excavation is required for a floor furnace installation, the excavation shall extend 30 inches (762 mm) beyond the control side of the floor furnace and 12 inches (305 mm) beyond the remaining sides. Excava-

INTERNATIONAL CODE COUNCIL®
Copyright © 2019 ICC & NYSDOS. ALL RIGHTS RESERVED. Accessed by Lauren Gualdino (lgualdino@briarcliffmanor.org), (-) Order Number #100880972 on May 08, 2020 07:05 AM (PDT) pursuant to License Agreement with ICC & NYSDOS. No further reproduction, no

100880972

tions shall slope outward from the perimeter of the base of the excavation to the surrounding *grade* at an angle not exceeding 45 degrees (0.79 rad) from horizontal.

5. Floor furnaces shall not be supported from the ground.

SECTION M1409
VENTED WALL FURNACES

M1409.1 General. Oil-fired vented wall furnaces shall comply with UL 730 and shall be installed in accordance with their *listing*, the manufacturer's instructions and the requirements of this code.

M1409.2 Location. The location of vented wall furnaces shall conform to the following requirements:

1. Vented wall furnaces shall be located where they will not cause a fire hazard to walls, floors, combustible furnishings or doors. Vented wall furnaces installed between bathrooms and adjoining rooms shall not circulate air from bathrooms to other parts of the building.
2. Vented wall furnaces shall not be located where a door can swing within 12 inches (305 mm) of the furnace air inlet or outlet measured at right angles to the opening. Doorstops or door closers shall not be installed to obtain this clearance.

M1409.3 Installation. Vented wall furnace installations shall conform to the following requirements:

1. Required wall thicknesses shall be in accordance with the manufacturer's installation instructions.
2. Ducts shall not be attached to a wall furnace. Casing extensions or boots shall be installed only where listed as part of a *listed* and *labeled appliance*.
3. A manual shutoff valve shall be installed ahead of all controls.

M1409.4 Access. Vented wall furnaces shall be provided with access for cleaning of heating surfaces; removal of burners; replacement of sections, motors, controls, filters and other working parts; and for adjustments and lubrication of parts requiring such attention. Panels, grilles and access doors that must be removed for normal servicing operations shall not be attached to the building construction.

SECTION M1410
VENTED ROOM HEATERS

M1410.1 General. Vented room heaters shall be tested in accordance with ASTM E1509 for pellet-fuel burning, UL 896 for oil-fired or UL 1482 for solid fuel-fired and installed in accordance with their *listing*, the manufacturer's installation instructions and the requirements of this code.

M1410.2 Floor mounting. Room heaters shall be installed on noncombustible floors or *approved* assemblies constructed of noncombustible materials that extend not less than 18 inches (457 mm) beyond the *appliance* on all sides.

Exceptions:

1. *Listed* room heaters shall be installed on noncombustible floors, assemblies constructed of noncombustible materials or floor protectors *listed* and *labeled* in accordance with UL 1618. The materials and dimensions shall be in accordance with the *appliance* manufacturer's instructions.
2. Room heaters *listed* for installation on combustible floors without floor protection shall be installed in accordance with the *appliance* manufacturer's instructions.

SECTION M1411
HEATING AND COOLING EQUIPMENT

M1411.1 Approved refrigerants. Refrigerants used in direct refrigerating systems shall conform to the applicable provisions of ANSI/ASHRAE 34.

M1411.2 Refrigeration coils in warm-air furnaces. Where a cooling coil is located in the supply plenum of a warm-air furnace, the furnace blower shall be rated at not less than 0.5-inch water column (124 Pa) static pressure unless the furnace is *listed* and *labeled* for use with a cooling coil. Cooling coils shall not be located upstream from heat exchangers unless *listed* and *labeled* for such use. Conversion of existing furnaces for use with cooling coils shall be permitted provided that the furnace will operate within the temperature rise specified for the furnace.

M1411.3 Condensate disposal. Condensate from cooling coils and evaporators shall be conveyed from the drain pan outlet to an *approved* place of disposal. Such piping shall maintain a minimum horizontal slope in the direction of discharge of not less than $^1/_8$ unit vertical in 12 units horizontal (1-percent slope). Condensate shall not discharge into a street, alley or other area where it would cause a nuisance.

M1411.3.1 Auxiliary and secondary drain systems. In addition to the requirements of Section M1411.3, a secondary drain or auxiliary drain pan shall be required for each cooling or evaporator coil where damage to any building components will occur as a result of overflow from the *equipment* drain pan or stoppage in the condensate drain piping. Such piping shall maintain a minimum horizontal slope in the direction of discharge of not less than $^1/_8$ unit vertical in 12 units horizontal (1-percent slope). Drain piping shall be not less than $^3/_4$-inch (19 mm) nominal pipe size. One of the following methods shall be used:

1. An auxiliary drain pan with a separate drain shall be installed under the coils on which condensation will occur. The auxiliary pan drain shall discharge to a conspicuous point of disposal to alert occupants in the event of a stoppage of the primary drain. The pan shall have a minimum depth of 1.5 inches (38 mm), shall be not less than 3 inches (76 mm) larger than the unit or the coil dimensions in width and length and shall be constructed of corrosion-resistant material. Galvanized sheet steel pans shall have a minimum thickness of not less than 0.0236-inch (0.6010 mm) (No. 24 Gage). Nonmetallic pans shall have a minimum thickness of not less than 0.0625 inch (1.6 mm).

INTERNATIONAL CODE COUNCIL®
Copyright © 2019 ICC & NYSDOS. ALL RIGHTS RESERVED. Accessed by Lauren Gualdino (lgualdino@briarcliffmanor.org), (-) Order Number #100880972 on May 08, 2020 07:05 AM (PDT) pursuant to License Agreement with ICC & NYSDOS. No further reproduction, no

100880972

2. A separate overflow drain line shall be connected to the drain pan installed with the *equipment*. This overflow drain shall discharge to a conspicuous point of disposal to alert occupants in the event of a stoppage of the primary drain. The overflow drain line shall connect to the drain pan at a higher level than the primary drain connection.
3. An auxiliary drain pan without a separate drain line shall be installed under the coils on which condensation will occur. This pan shall be equipped with a water level detection device conforming to UL 508 that will shut off the *equipment* served prior to overflow of the pan. The pan shall be equipped with a fitting to allow for drainage. The auxiliary drain pan shall be constructed in accordance with Item 1 of this section.
4. A water-level detection device conforming to UL 508 shall be installed that will shut off the *equipment* served in the event that the primary drain is blocked. The device shall be installed in the primary drain line, the overflow drain line or the *equipment*-supplied drain pan, located at a point higher than the primary drain line connection and below the overflow rim of such pan.

M1411.3.1.1 Water-level monitoring devices. On down-flow units and other coils that do not have secondary drain or provisions to install a secondary or auxiliary drain pan, a water-level monitoring device shall be installed inside the primary drain pan. This device shall shut off the equipment served in the event that the primary drain becomes restricted. Devices shall not be installed in the drain line.

M1411.3.2 Drain pipe materials and sizes. Components of the condensate disposal system shall be ABS, cast iron, copper, cross-linked polyethylene, CPVC, galvanized steel, PE-RT, polyethylene, polypropylene or PVC pipe or tubing. Components shall be selected for the pressure and temperature rating of the installation. Joints and connections shall be made in accordance with the applicable provisions of Chapter 30. Condensate waste and drain line size shall be not less than $^3/_4$-inch (19 mm) nominal diameter from the drain pan connection to the place of condensate disposal. Where the drain pipes from more than one unit are manifolded together for condensate drainage, the pipe or tubing shall be sized in accordance with an *approved* method.

M1411.3.3 Drain line maintenance. Condensate drain lines shall be configured to permit the clearing of blockages and performance of maintenance without requiring the drain line to be cut.

M1411.3.4 Appliances, equipment and insulation in pans. Where *appliances, equipment* or insulation are subject to water damage when auxiliary drain pans fill, those portions of the *appliances, equipment* and insulation shall be installed above the flood level rim of the pan. Supports located inside of the pan to support the *appliance* or *equipment* shall be water resistant and *approved*.

M1411.4 Condensate pumps. Condensate pumps located in uninhabitable spaces, such as attics and crawl spaces, shall be connected to the appliance or equipment served such that when the pump fails, the appliance or equipment will be prevented from operating. Pumps shall be installed in accordance with the manufacturer's instructions.

M1411.5 Auxiliary drain pan. Category IV condensing *appliances* shall have an auxiliary drain pan where damage to any building component will occur as a result of stoppage in the condensate drainage system. These pans shall be installed in accordance with the applicable provisions of Section M1411.3.

Exception: Fuel-fired *appliances* that automatically shut down operation in the event of a stoppage in the condensate drainage system.

M1411.6 Insulation of refrigerant piping. Piping and fittings for refrigerant vapor (suction) lines shall be insulated with insulation having a thermal resistivity of not less than R-4 and having external surface permeance not exceeding 0.05 perm [2.87 ng/(s · m^2 · Pa)] when tested in accordance with ASTM E96.

M1411.7 Location and protection of refrigerant piping. Refrigerant piping installed within $1^1/_2$ inches (38 mm) of the underside of roof decks shall be protected from damage caused by nails and other fasteners.

M1411.8 Locking access port caps. Refrigerant circuit access ports located outdoors shall be fitted with locking-type tamper-resistant caps or shall be otherwise secured to prevent unauthorized access.

SECTION M1412
ABSORPTION COOLING EQUIPMENT

M1412.1 Approval of equipment. Absorption systems shall be installed in accordance with the manufacturer's instructions. Absorption equipment shall comply with UL 1995 or UL/CSA/ANCE 60335-2-40.

M1412.2 Condensate disposal. Condensate from the cooling coil shall be disposed of as provided in Section M1411.3.

M1412.3 Insulation of piping. Refrigerant piping, brine piping and fittings within a building shall be insulated to prevent condensation from forming on piping.

M1412.4 Pressure-relief protection. Absorption systems shall be protected by a pressure-relief device. Discharge from the pressure-relief device shall be located where it will not create a hazard to persons or property.

SECTION M1413
EVAPORATIVE COOLING EQUIPMENT

M1413.1 General. Evaporative cooling equipment and appliances shall comply with UL 1995 or UL/CSA/ANCE 60335-2-40 and shall be installed:

1. In accordance with the manufacturer's instructions.
2. On level platforms in accordance with Section M1305.1.3.1.

INTERNATIONAL CODE COUNCIL®
Copyright © 2019 ICC & NYSDOS. ALL RIGHTS RESERVED. Accessed by Lauren Gualdino (lgualdino@briarcliffmanor.org), (-) Order Number #100880972 on May 08, 2020 07:05 AM (PDT) pursuant to License Agreement with ICC & NYSDOS. No further reproduction, no

100880972

3. So that openings in exterior walls are flashed in accordance with Section R703.4.
4. So as to protect the potable water supply in accordance with Section P2902.
5. So that air intake opening locations are in accordance with Section R303.5.1.

SECTION M1414
FIREPLACE STOVES

M1414.1 General. Fireplace stoves shall be *listed*, *labeled* and installed in accordance with the terms of the listing. Fireplace stoves shall be tested in accordance with UL 737.

M1414.2 Hearth extensions. Hearth extensions for fireplace stoves shall be installed in accordance with the *listing* of the fireplace stove. The supporting structure for a hearth extension for a fireplace stove shall be at the same level as the supporting structure for the fireplace unit. The hearth extension shall be readily distinguishable from the surrounding floor area.

SECTION M1415
MASONRY HEATERS

M1415.1 General. Masonry heaters shall be constructed in accordance with Section R1002.

[NY] SECTION M1416
PORTABLE KEROSENE HEATERS

[NY] M1416.1 General. Unvented portable kerosene-fired heaters tested and listed in accordance with UL 647 are approved by the Secretary of State for use in New York State if packaged for sale with all provisions required in New York State Real Property Law Article 7A Section 239-a(7). Unvented portable kerosene-fired heaters shall not be located in, or obtain combustion air from, any of the following rooms or spaces: sleeping rooms, bathrooms, toilet rooms, or storage closets. Portable kerosene heaters shall be prohibited in buildings of occupancy groups A, E, I, R-1, R-2, R-3 and R-4 (except for one- and two-family homes and townhouses). The use of unvented portable kerosene-fired heaters is further regulated by New York State Real Property Law Article 7A.

INTERNATIONAL CODE COUNCIL®
Copyright © 2019 ICC & NYSDOS. ALL RIGHTS RESERVED. Accessed by Lauren Gualdino (lgualdino@briarcliffmanor.org), (-) Order Number #100880972 on May 08, 2020 07:05 AM (PDT) pursuant to License Agreement with ICC & NYSDOS. No further reproduction, no

100880972

INTERNATIONAL CODE COUNCIL®
Copyright © 2019 ICC & NYSDOS. ALL RIGHTS RESERVED. Accessed by Lauren Gualdino (lgualdino@briarcliffmanor.org), (-) Order Number #100880972 on May 08, 2020 07:05 AM (PDT) pursuant to License Agreement with ICC & NYSDOS. No further reproduction, no

100880972

CHAPTER 15
EXHAUST SYSTEMS

SECTION M1501
GENERAL

M1501.1 Outdoor discharge. The air removed by every mechanical exhaust system shall be discharged to the outdoors in accordance with Section M1504.3. Air shall not be exhausted into an attic, soffit, ridge vent or crawl space.

Exception: Whole-house *ventilation*-type *attic* fans that discharge into the *attic* space of *dwelling units* having private *attics* shall be permitted.

SECTION M1502
CLOTHES DRYER EXHAUST

M1502.1 General. Clothes dryers shall be exhausted in accordance with the manufacturer's instructions.

M1502.2 Independent exhaust systems. Dryer exhaust systems shall be independent of all other systems and shall convey the moisture to the outdoors.

Exception: This section shall not apply to *listed* and *labeled* condensing (ductless) clothes dryers.

M1502.3 Duct termination. Exhaust ducts shall terminate on the outside of the building. Exhaust duct terminations shall be in accordance with the dryer manufacturer's installation instructions. If the manufacturer's instructions do not specify a termination location, the exhaust duct shall terminate not less than 3 feet (914 mm) in any direction from openings into buildings. Exhaust duct terminations shall be equipped with a backdraft damper. Screens shall not be installed at the duct termination.

M1502.3.1 Exhaust termination outlet and passageway size. The passageway of dryer exhaust duct terminals shall be undiminished in size and shall provide an open area of not less than 12.5 square inches (8065 mm^2).

M1502.4 Dryer exhaust ducts. Dryer exhaust ducts shall conform to the requirements of Sections M1502.4.1 through M1502.4.7.

M1502.4.1 Material and size. Exhaust ducts shall have a smooth interior finish and shall be constructed of metal not less than 0.0157 inch (0.3950 mm) in thickness (No. 28 gage). The duct shall be 4 inches (102 mm) nominal in diameter.

M1502.4.2 Duct installation. Exhaust ducts shall be supported at intervals not to exceed 12 feet (3658 mm) and shall be secured in place. The insert end of the duct shall extend into the adjoining duct or fitting in the direction of airflow. Exhaust duct joints shall be sealed in accordance with Section M1601.4.1 and shall be mechanically fastened. Ducts shall not be joined with screws or similar fasteners that protrude more than $^1/_8$ inch (3.2 mm) into the inside of the duct. Where dryer exhaust ducts are enclosed in wall or ceiling cavities, such cavities shall allow the installation of the duct without deformation.

M1502.4.3 Transition duct. Transition ducts used to connect the dryer to the exhaust *duct system* shall be a single length that is *listed* and *labeled* in accordance with UL 2158A. Transition ducts shall be not greater than 8 feet (2438 mm) in length. Transition ducts shall not be concealed within construction.

M1502.4.4 Dryer exhaust duct power ventilators. Domestic dryer exhaust duct power ventilators shall conform to UL 705 for use in dryer exhaust duct systems. The dryer exhaust duct power ventilator shall be installed in accordance with the manufacturer's instructions.

M1502.4.5 Duct length. The maximum allowable exhaust duct length shall be determined by one of the methods specified in Sections M1502.4.5.1 through M1502.4.5.3.

M1502.4.5.1 Specified length. The maximum length of the exhaust duct shall be 35 feet (10 668 mm) from the connection to the transition duct from the dryer to the outlet terminal. Where fittings are used, the maximum length of the exhaust duct shall be reduced in accordance with Table M1502.4.5.1. The maximum length of the exhaust duct does not include the transition duct.

M1502.4.5.2 Manufacturer's instructions. The size and maximum length of the exhaust duct shall be determined by the dryer manufacturer's installation instructions. The *building official* shall be provided with a copy of the installation instructions for the make and model of the dryer at the concealment inspection. In the absence of fitting equivalent length calculations from the clothes dryer manufacturer, Table M1502.4.5.1 shall be used.

M1502.4.5.3 Dryer exhaust duct power ventilator. The maximum length of the exhaust duct shall be determined in accordance with the manufacturer's instructions for the dryer exhaust duct power ventilator.

M1502.4.6 Length identification. Where the exhaust duct equivalent length exceeds 35 feet (10 668 mm), the equivalent length of the exhaust duct shall be identified on a permanent label or tag. The label or tag shall be located within 6 feet (1829 mm) of the exhaust duct connection.

M1502.4.7 Exhaust duct required. Where space for a clothes dryer is provided, an exhaust *duct system* shall be installed. Where the clothes dryer is not installed at the time of occupancy the exhaust duct shall be capped or plugged in the space in which it originates and identified and marked "future use."

Exception: Where a *listed* condensing clothes dryer is installed prior to occupancy of the structure.

INTERNATIONAL CODE COUNCIL®
Copyright © 2019 ICC & NYSDOS. ALL RIGHTS RESERVED. Accessed by Lauren Gualdino (lgualdino@briarcliffmanor.org), (-) Order Number #100880972 on May 08, 2020 07:05 AM (PDT) pursuant to License Agreement with ICC & NYSDOS. No further reproduction, no

100880972

TABLE M1502.4.5.1
DRYER EXHAUST DUCT FITTING EQUIVALENT LENGTH

DRYER EXHAUST DUCT FITTING TYPE	EQUIVALENT LENGTH
4-inch radius mitered 45-degree elbow	2 feet 6 inches
4-inch radius mitered 90-degree elbow	5 feet
6-inch radius smooth 45-degree elbow	1 foot
6-inch radius smooth 90-degree elbow	1 foot 9 inches
8-inch radius smooth 45-degree elbow	1 foot
8-inch radius smooth 90-degree elbow	1 foot 7 inches
10-inch radius smooth 45-degree elbow	9 inches
10-inch radius smooth 90-degree elbow	1 foot 6 inches

For SI: 1 inch = 25.4 mm, 1 foot = 304.8 mm, 1 degree = 0.0175 rad.

M1502.5 Protection required. Protective shield plates shall be placed where nails or screws from finish or other work are likely to penetrate the clothes dryer exhaust duct. Shield plates shall be placed on the finished face of framing members where there is less than $1^1/_4$ inches (32 mm) between the duct and the finished face of the framing member. Protective shield plates shall be constructed of steel, shall have a minimum thickness of 0.062 inch (1.6 mm) and shall extend not less than 2 inches (51 mm) above sole plates and below top plates.

SECTION M1503
DOMESTIC COOKING EXHAUST EQUIPMENT

M1503.1 General. Domestic cooking exhaust equipment shall comply with the requirements of this section.

M1503.2 Domestic cooking exhaust. Where domestic cooking exhaust equipment is provided, it shall comply with one of the following:

1. The fan for overhead range hoods and downdraft exhaust equipment not integral with the cooking appliance shall be listed and labeled in accordance with UL 507.
2. Overhead range hoods and downdraft exhaust equipment with integral fans shall comply with UL 507.
3. Domestic cooking appliances with integral downdraft exhaust equipment shall be listed and labeled in accordance with ANSI Z21.1 or UL 858.
4. Microwave ovens with integral exhaust for installation over the cooking surface shall be listed and labeled in accordance with UL 923.

M1503.2.1 Open-top broiler exhaust. Domestic open-top broiler units shall be provided with a metal exhaust hood having a thickness of not less than 0.0157 inch (0.3950 mm) (No. 28 gage). Such hoods shall be installed with a clearance of not less than $^1/_4$ inch (6.4 mm) between the hood and the underside of combustible material and cabinets. A clearance of not less than 24 inches (610 mm) shall be maintained between the cooking surface and combustible material and cabinets. The hood width shall be not less than the width of the broiler unit and shall extend over the entire unit.

Exception: Broiler units that incorporate an integral exhaust system, and that are listed and labeled for use without an exhaust hood, shall not be required to have an exhaust hood.

M1503.3 Exhaust discharge. Domestic cooking exhaust equipment shall discharge to the outdoors through a duct. The duct shall have a smooth interior surface, shall be airtight, shall be equipped with a backdraft damper and shall be independent of all other exhaust systems. Ducts serving domestic cooking exhaust equipment shall not terminate in an attic or crawl space or areas inside the building.

Exception: Where installed in accordance with the manufacturer's instructions, and where mechanical or natural *ventilation* is otherwise provided, *listed* and *labeled* ductless range hoods shall not be required to discharge to the outdoors.

M1503.4 Duct material. Ducts serving domestic cooking exhaust equipment shall be constructed of galvanized steel, stainless steel or copper.

Exception: Ducts for domestic kitchen cooking *appliances* equipped with down-draft exhaust systems shall be permitted to be constructed of schedule 40 PVC pipe and fittings provided that the installation complies with all of the following:

1. The duct is installed under a concrete slab poured on grade.
2. The underfloor trench in which the duct is installed is completely backfilled with sand or gravel.
3. The PVC duct extends not more than 1 inch (25 mm) above the indoor concrete floor surface.
4. The PVC duct extends not more than 1 inch (25 mm) above grade *outside of the building.*
5. The PVC ducts are solvent cemented.

INTERNATIONAL CODE COUNCIL®
Copyright © 2019 ICC & NYSDOS. ALL RIGHTS RESERVED. Accessed by Lauren Gualdino (lgualdino@briarcliffmanor.org), (-) Order Number #100880972 on May 08, 2020 07:05 AM (PDT) pursuant to License Agreement with ICC & NYSDOS. No further reproduction, no

100880972

M1503.5 Kitchen exhaust rates. Where domestic kitchen cooking *appliances* are equipped with ducted range hoods or down-draft exhaust systems, the fans shall be sized in accordance with Section M1505.4.4.

M1503.6 Makeup air required. Where one or more gas, liquid or solid fuel-burning appliance that is neither direct-vent nor uses a mechanical draft venting system is located within a dwelling unit's air barrier, each exhaust system capable of exhausting in excess of 400 cubic feet per minute (0.19 m^3/s) shall be mechanically or passively provided with makeup air at a rate approximately equal to the exhaust air rate. Such makeup air systems shall be equipped with not fewer than one damper complying with Section M1503.6.2.

Exception: Makeup air is not required for exhaust systems installed for the exclusive purpose of space cooling and intended to be operated only when windows or other air inlets are open.

M1503.6.1 Location. Kitchen exhaust makeup air shall be discharged into the same room in which the exhaust system is located or into rooms or *duct systems* that communicate through one or more permanent openings with the room in which such exhaust system is located. Such permanent openings shall have a net cross-sectional area not less than the required area of the makeup air supply openings.

M1503.6.2 Makeup air dampers. Where makeup air is required by Section M1503.6, makeup air dampers shall comply with this section. Each damper shall be a gravity damper or an electrically operated damper that automatically opens when the exhaust system operates. Dampers shall be located to allow access for inspection, service, repair and replacement without removing permanent construction or any other ducts not connected to the damper being inspected, serviced, repaired or replaced. Gravity or barometric dampers shall not be used in passive makeup air systems except where the dampers are rated to provide the design makeup airflow at a pressure differential of 0.01 in. w.c. (3 Pa) or less.

SECTION M1504
EXHAUST DUCTS AND EXHAUST OPENINGS

M1504.1 Duct construction. Where exhaust duct construction is not specified in this chapter, construction shall comply with Chapter 16.

M1504.2 Duct length. The length of exhaust and supply ducts used with ventilating equipment shall not exceed the lengths determined in accordance with Table M1504.2.

Exception: Duct length shall not be limited where the duct system complies with the manufacturer's design criteria or where the flow rate of the installed ventilating equipment is verified by the installer or approved third party using a flow hood, flow grid or other airflow measuring device.

M1504.3 Exhaust openings. Air exhaust openings shall terminate as follows:

1. Not less than 3 feet (914 mm) from property lines.
2. Not less than 3 feet (914 mm) from gravity air intake openings, operable windows and doors.
3. Not less than 10 feet (3048 mm) from mechanical air intake openings except where the exhaust opening is located not less than 3 feet (914 mm) above the air intake opening. Openings shall comply with Sections R303.5.2 and R303.6.

SECTION M1505
MECHANICAL VENTILATION

M1505.1 General. Where local exhaust or whole-house mechanical ventilation is provided, the equipment shall be designed in accordance with this section.

M1505.2 Recirculation of air. Exhaust air from bathrooms and toilet rooms shall not be recirculated within a residence or circulated to another *dwelling unit* and shall be exhausted directly to the outdoors. Exhaust air from bathrooms, toilet rooms and kitchens shall not discharge into an *attic*, crawl

TABLE M1504.2
DUCT LENGTH

DUCT TYPE	FLEX DUCT								SMOOTH-WALL DUCT							
Fan airflow rating (CFM @ 0.25 inch wc[a])	50	80	100	125	150	200	250	300	50	80	100	125	150	200	250	300
Diameter[b] (inches)	Maximum length[c, d, e] (feet)															
3	X	X	X	X	X	X	X	X	5	X	X	X	X	X	X	X
4	56	4	X	X	X	X	X	X	114	31	10	X	X	X	X	X
5	NL	81	42	16	2	X	X	X	NL	152	91	51	28	4	X	X
6	NL	NL	158	91	55	18	1	X	NL	NL	NL	168	112	53	25	9
7	NL	NL	NL	NL	161	78	40	19	NL	NL	NL	NL	NL	148	88	54
8 and above	NL	NL	NL	NL	NL	189	111	69	NL	NL	NL	NL	NL	NL	198	133

For SI: 1 inch = 25.4 mm, 1 foot = 304.8 mm.

a. Fan airflow rating shall be in accordance with ANSI/AMCA 210-ANSI/ASHRAE 51.

b. For noncircular ducts, calculate the diameter as four times the cross-sectional area divided by the perimeter.

c. This table assumes that elbows are not used. Fifteen feet of allowable duct length shall be deducted for each elbow installed in the duct run.

d. NL = no limit on duct length of this size.

e. X = not allowed. Any length of duct of this size with assumed turns and fittings will exceed the rated pressure drop.

INTERNATIONAL CODE COUNCIL®
Copyright © 2019 ICC & NYSDOS. ALL RIGHTS RESERVED. Accessed by Lauren Gualdino (lgualdino@briarcliffmanor.org), (-) Order Number #100880972 on May 08, 2020 07:05 AM (PDT) pursuant to License Agreement with ICC & NYSDOS. No further reproduction, no

100880972

space or other areas inside the building. This section shall not prohibit the installation of ductless range hoods in accordance with the exception to Section M1503.3.

M1505.3 Exhaust equipment. Exhaust equipment serving single *dwelling units* shall be *listed* and *labeled* as providing the minimum required airflow in accordance with ANSI/AMCA 210-ANSI/ASHRAE 51.

M1505.4 Whole-house mechanical ventilation system. Whole-house mechanical ventilation systems shall be designed in accordance with Sections M1505.4.1 through M1505.4.4.

M1505.4.1 System design. The whole-house ventilation system shall consist of one or more supply or exhaust fans, or a combination of such, and associated ducts and controls. Local exhaust or supply fans are permitted to serve as such a system. Outdoor air ducts connected to the return side of an air handler shall be considered as providing supply ventilation.

M1505.4.2 System controls. The whole-house mechanical ventilation system shall be provided with controls that enable manual override.

M1505.4.3 Mechanical ventilation rate. The whole-house mechanical ventilation system shall provide outdoor air at a continuous rate as determined in accordance with Table M1505.4.3(1) or Equation 15-1.

Ventilation rate in cubic feet per minute = (0.01 × total square foot area of house) + [7.5 × (number of bedrooms + 1)] **(Equation 15-1)**

Exception: The whole-house mechanical ventilation system is permitted to operate intermittently where the system has controls that enable operation for not less than 25 percent of each 4-hour segment and the ventilation rate prescribed in Table M1505.4.3(1) is multiplied by the factor determined in accordance with Table M1505.4.3(2).

M1505.4.4 Local exhaust rates. *Local exhaust* systems shall be designed to have the capacity to exhaust the minimum airflow rate determined in accordance with Table M1505.4.4.

TABLE M1505.4.4
MINIMUM REQUIRED LOCAL EXHAUST RATES FOR ONE- AND TWO-FAMILY DWELLINGS

AREA TO BE EXHAUSTED	EXHAUST RATES
Kitchens	100 cfm intermittent or 25 cfm continuous
Bathrooms-Toilet Rooms	Mechanical exhaust capacity of 50 cfm intermittent or 20 cfm continuous

For SI: 1 cubic foot per minute = 0.0004719 m^3/s.

TABLE M1505.4.3(1)
CONTINUOUS WHOLE-HOUSE MECHANICAL VENTILATION SYSTEM AIRFLOW RATE REQUIREMENTS

DWELLING UNIT FLOOR AREA (square feet)	NUMBER OF BEDROOMS				
	0 – 1	2 – 3	4 – 5	6 – 7	> 7
	Airflow in CFM				
< 1,500	30	45	60	75	90
1,501 – 3,000	45	60	75	90	105
3,001 – 4,500	60	75	90	105	120
4,501 – 6,000	75	90	105	120	135
6,001 – 7,500	90	105	120	135	150
> 7,500	105	120	135	150	165

For SI: 1 square foot = 0.0929 m^2, 1 cubic foot per minute = 0.0004719 m^3/s.

TABLE M1505.4.3(2)
INTERMITTENT WHOLE-HOUSE MECHANICAL VENTILATION RATE FACTORS[a, b]

RUN-TIME PERCENTAGE IN EACH 4-HOUR SEGMENT	25%	33%	50%	66%	75%	100%
Factor[a]	4	3	2	1.5	1.3	1.0

a. For ventilation system run time values between those given, the factors are permitted to be determined by interpolation.
b. Extrapolation beyond the table is prohibited.

INTERNATIONAL CODE COUNCIL®
Copyright © 2019 ICC & NYSDOS. ALL RIGHTS RESERVED. Accessed by Lauren Gualdino (lgualdino@briarcliffmanor.org), (-) Order Number #100880972 on May 08, 2020 07:05 AM (PDT) pursuant to License Agreement with ICC & NYSDOS. No further reproduction, no

100880972

CHAPTER 16

DUCT SYSTEMS

SECTION M1601
DUCT CONSTRUCTION

M1601.1 Duct design. *Duct systems* serving heating, cooling and *ventilation equipment* shall be installed in accordance with the provisions of this section and ACCA Manual D, the appliance manufacturer's installation instructions or other *approved* methods.

M1601.1.1 Above-ground duct systems. Above-ground *duct systems* shall conform to the following:

1. *Equipment* connected to *duct systems* shall be designed to limit discharge air temperature to not greater than 250°F (121°C).
2. Factory-made ducts shall be listed and labeled in accordance with UL 181 and installed in accordance with the manufacturer's instructions.
3. Fibrous glass duct construction shall conform to the SMACNA *Fibrous Glass Duct Construction Standards* or NAIMA *Fibrous Glass Duct Construction Standards*.
4. Field-fabricated and shop-fabricated metal and flexible duct constructions shall conform to the SMACNA HVAC *Duct Construction Standards—Metal and Flexible* except as allowed by Table M1601.1.1. Galvanized steel shall conform to ASTM A653.
5. The use of gypsum products to construct return air ducts or plenums is permitted, provided that the air temperature does not exceed 125°F (52°C) and exposed surfaces are not subject to condensation.
6. *Duct systems* shall be constructed of materials having a flame spread index of not greater than 200.
7. Stud wall cavities and the spaces between solid floor joists to be used as air plenums shall comply with the following conditions:
   - 7.1. These cavities or spaces shall not be used as a plenum for supply air.
   - 7.2. These cavities or spaces shall not be part of a required fire-resistance-rated assembly.
   - 7.3. Stud wall cavities shall not convey air from more than one floor level.
   - 7.4. Stud wall cavities and joist-space plenums shall be isolated from adjacent concealed spaces by tight-fitting fireblocking in accordance with Section R602.8.
   - 7.5. Stud wall cavities in the outside walls of building envelope assemblies shall not be utilized as air plenums.
8. Volume dampers, equipment and other means of supply, return and exhaust air adjustment used in system balancing shall be provided with access.

M1601.1.2 Underground duct systems. Underground *duct systems* shall be constructed of *approved* concrete, clay, metal or plastic. The maximum design temperature for systems utilizing plastic duct and fittings shall be 150°F (66°C). Metal ducts shall be protected from corrosion in an *approved* manner or shall be completely encased in concrete not less than 2 inches (51 mm) thick. Nonmetallic ducts shall be installed in accordance with the manufacturer's instructions. Plastic pipe and fitting materials shall conform to cell classification 12454-B of ASTM D1248 or ASTM D1784 and external loading properties of ASTM D2412. Ducts shall slope to a drainage point that has access. Ducts shall be sealed, secured and tested prior to encasing the ducts in concrete or direct burial. Duct tightness shall be verified as required by Section N1103.3. Metallic ducts having an *approved* protective coating and nonmetallic ducts shall be installed in accordance with the manufacturer's instructions.

M1601.2 Vibration isolators. Vibration isolators installed between mechanical *equipment* and metal ducts shall be fabricated from *approved* materials and shall not exceed 10 inches (254 mm) in length.

M1601.3 Duct insulation materials. Duct insulation materials shall conform to the following requirements:

1. Duct coverings and linings, including adhesives where used, shall have a flame spread index not higher than 25, and a smoke-developed index not over 50 when tested in accordance with ASTM E84 or UL 723, using the specimen preparation and mounting procedures of ASTM E2231.

   Exception: Spray application of polyurethane foam to the exterior of ducts in *attics* and crawl spaces shall be permitted subject to all of the following:

   1. The flame spread index is not greater than 25 and the smoke-developed index is not greater than 450 at the specified installed thickness.
   2. The foam plastic is protected in accordance with the ignition barrier requirements of Sections R316.5.3 and R316.5.4.
   3. The foam plastic complies with the requirements of Section R316.
2. Duct coverings and linings shall not flame, glow, smolder or smoke when tested in accordance with ASTM C411 at the temperature to which they are exposed in service. The test temperature shall not fall below 250°F (121°C). Coverings and linings shall be listed and labeled.
3. External reflective duct insulation shall be legibly printed or identified at intervals not greater than 36 inches (914 mm) with the name of the manufacturer, the product *R*-value at the specified installed thickness and the flame spread and smoke-developed indices. The

INTERNATIONAL CODE COUNCIL®
Copyright © 2019 ICC & NYSDOS. ALL RIGHTS RESERVED. Accessed by Lauren Gualdino (lgualdino@briarcliffmanor.org), (-) Order Number #100880972 on May 08, 2020 07:05 AM (PDT) pursuant to License Agreement with ICC & NYSDOS. No further reproduction, no

100880972

installed thickness of the external duct insulation shall include the enclosed airspace(s). The product *R*-value for external reflective duct insulation shall be determined in accordance with ASTM C1668.

4. External duct insulation and factory-insulated flexible ducts shall be legibly printed or identified at intervals not longer than 36 inches (914 mm) with the name of the manufacturer, the thermal resistance *R*-value at the specified installed thickness and the flame spread and smoke-developed indices of the composite materials. Spray polyurethane foam manufacturers shall provide the same product information and properties, at the nominal installed thickness, to the customer in writing at the time of foam application. Nonreflective duct insulation product *R*-values shall be based on insulation only, excluding air films, vapor retarders or other duct components, and shall be based on tested C-values at 75°F (24°C) mean temperature at the installed thickness, in accordance with recognized industry procedures. The installed thickness of duct insulation used to determine its *R*-value shall be determined as follows:

   4.1. For duct board, duct liner and factory-made rigid ducts not normally subjected to compression, the nominal insulation thickness shall be used.

   4.2. For ductwrap, the installed thickness shall be assumed to be 75 percent (25-percent compression) of nominal thickness.

   4.3. For factory-made flexible air ducts, The installed thickness shall be determined by dividing the difference between the actual outside diameter and nominal inside diameter by two.

   4.4. For spray polyurethane foam, the aged *R*-value per inch measured in accordance with recognized industry standards shall be provided to the customer in writing at the time of foam application. In addition, the total *R*-value for the nominal application thickness shall be provided.

M1601.4 Installation. Duct installation shall comply with Sections M1601.4.1 through M1601.4.10.

M1601.4.1 Joints, seams and connections. Longitudinal and transverse joints, seams and connections in metallic and nonmetallic ducts shall be constructed as specified in SMACNA HVAC *Duct Construction Standards—Metal and Flexible* and NAIMA *Fibrous Glass Duct Construction Standards*. Joints, longitudinal and transverse seams, and connections in ductwork shall be securely fastened and sealed with welds, gaskets, mastics (adhesives), mastic-plus-embedded-fabric systems, liquid sealants or tapes. Tapes and mastics used to seal fibrous glass ductwork shall be *listed* and *labeled* in accordance with UL 181A and shall be marked "181A-P" for pressure-sensitive tape, "181 A-M" for mastic or "181 A-H" for heat-sensitive tape.

Tapes and mastics used to seal metallic and flexible air ducts and flexible air connectors shall comply with UL 181B and shall be marked "181 B-FX" for pressure-sensitive tape or "181 BM" for mastic. Duct connections to flanges of air distribution system equipment shall be sealed and mechanically fastened. Mechanical fasteners for use with flexible nonmetallic air ducts shall comply with UL 181B and shall be marked 181B-C. Crimp joints for round metallic ducts shall have a contact lap of not less

TABLE M1601.1.1
DUCT CONSTRUCTION MINIMUM SHEET METAL THICKNESS FOR SINGLE DWELLING UNITS[a]

ROUND DUCT DIAMETER (inches)	STATIC PRESSURE			
	$^1/_2$-inch water gage		1-inch water gage	
	Thickness (inches)		Thickness (inches)	
	Galvanized	Aluminum	Galvanized	Aluminum
< 12	0.013	0.018	0.013	0.018
12 to 14	0.013	0.018	0.016	0.023
15 to 17	0.016	0.023	0.019	0.027
18	0.016	0.023	0.024	0.034
19 to 20	0.019	0.027	0.024	0.034

RECTANGULAR DUCT DIMENSION (inches)	STATIC PRESSURE			
	$^1/_2$-inch water gage		1-inch water gage	
	Thickness (inches)		Thickness (inches)	
	Galvanized	Aluminum	Galvanized	Aluminum
≤ 8	0.013	0.018	0.013	0.018
9 to 10	0.013	0.018	0.016	0.023
11 to 12	0.016	0.023	0.019	0.027
13 to 16	0.019	0.027	0.019	0.027
17 to 18	0.019	0.027	0.024	0.034
19 to 20	0.024	0.034	0.024	0.034

For SI: 1 inch = 25.4 mm, 1 inch water gage = 249 Pa.

a. Ductwork that exceeds 20 inches by dimension or exceeds a pressure of 1 inch water gage shall be constructed in accordance with SMACNA *HVAC Duct Construction Standards—Metal and Flexible*.

INTERNATIONAL CODE COUNCIL®
Copyright © 2019 ICC & NYSDOS. ALL RIGHTS RESERVED. Accessed by Lauren Gualdino (lgualdino@briarcliffmanor.org), (-) Order Number #100880972 on May 08, 2020 07:05 AM (PDT) pursuant to License Agreement with ICC & NYSDOS. No further reproduction, no

100880972

than 1 inch (25 mm) and shall be mechanically fastened by means of not less than three sheet-metal screws or rivets equally spaced around the joint.

Closure systems used to seal all ductwork shall be installed in accordance with the manufacturers' instructions.

Exceptions:

1. Spray polyurethane foam shall be permitted to be applied without additional joint seals.
2. Where a duct connection is made that is partially without access, three screws or rivets shall be equally spaced on the exposed portion of the joint so as to prevent a hinge effect.
3. For ducts having a static pressure classification of less than 2 inches of water column (500 Pa), additional closure systems shall not be required for continuously welded joints and seams and locking-type joints and seams. This exception shall not apply to snap-lock and button-lock type joints and seams that are located outside of conditioned spaces.

M1601.4.2 Duct lap. Crimp joints for round and oval metal ducts shall be lapped not less than 1 inch (25 mm) and the male end of the duct shall extend into the adjoining duct in the direction of airflow.

M1601.4.3 Plastic duct joints. Joints between plastic ducts and plastic fittings shall be made in accordance with the manufacturer's installation instructions.

M1601.4.4 Support. Factory-made ducts listed in accordance with UL 181 shall be supported in accordance with the manufacturer's installation instructions. Field- and shop-fabricated fibrous glass ducts shall be supported in accordance with the SMACNA *Fibrous Glass Duct Construction Standards* or the NAIMA *Fibrous Glass Duct Construction Standards*. Field- and shop-fabricated metal and flexible ducts shall be supported in accordance with the SMACNA HVAC *Duct Construction Standards—Metal and Flexible*.

M1601.4.5 Fireblocking. Duct installations shall be fireblocked in accordance with Section R602.8.

M1601.4.6 Duct insulation. Duct insulation shall be installed in accordance with the following requirements:

1. A vapor retarder having a permeance of not greater than 0.05 perm [2.87 ng/(s · m^2 · Pa)] in accordance with ASTM E96, or aluminum foil with a thickness of not less than 2 mils (0.05 mm), shall be installed on the exterior of insulation on cooling supply ducts that pass through unconditioned spaces conducive to condensation except where the insulation is spray polyurethane foam with a water vapor permeance of not greater than 3 perms per inch [1722 ng/(s · m^2 · Pa)] at the installed thickness.
2. Outdoor *duct systems* shall be protected against the elements.
3. Duct coverings shall not penetrate a fireblocked wall or floor.

M1601.4.7 Factory-made air ducts. Factory-made air ducts shall not be installed in or on the ground, in tile or metal pipe, or within masonry or concrete.

M1601.4.8 Duct separation. Ducts shall be installed with not less than 4 inches (102 mm) separation from earth except where they meet the requirements of Section M1601.1.2.

M1601.4.9 Ducts located in garages. Ducts in garages shall comply with the requirements of Section R302.5.2.

M1601.4.10 Flood hazard areas. In flood hazard areas as established by Table R301.2(1), *duct systems* shall be located or installed in accordance with Section R322.1.6.

M1601.5 Under-floor plenums. Under-floor plenums shall be prohibited in new structures. Modification or repairs to under-floor plenums in existing structures shall conform to the requirements of this section.

M1601.5.1 General. The space shall be cleaned of loose combustible materials and scrap, and shall be tightly enclosed. The ground surface of the space shall be covered with a moisture barrier having a thickness of not less than 4 mils (0.1 mm). Plumbing waste cleanouts shall not be located within the space.

Exception: Plumbing waste cleanouts shall be permitted to be located in unvented crawl spaces that receive *conditioned air* in accordance with Section R408.3.

M1601.5.2 Materials. The under-floor space, including the sidewall insulation, shall be formed by materials having flame spread index values not greater than 200 when tested in accordance with ASTM E84 or UL 723.

M1601.5.3 Furnace connections. A duct shall extend from the furnace supply outlet to not less than 6 inches (152 mm) below the combustible framing. This duct shall comply with the provisions of Section M1601.1. A noncombustible receptacle shall be installed below any floor opening into the plenum in accordance with the following requirements:

1. The receptacle shall be securely suspended from the floor members and shall be not more than 18 inches (457 mm) below the floor opening.
2. The area of the receptacle shall extend 3 inches (76 mm) beyond the opening on all sides.
3. The perimeter of the receptacle shall have a vertical lip not less than 1 inch (25 mm) in height at the open sides.

M1601.5.4 Access. Access to an under-floor plenum shall be provided through an opening in the floor with minimum dimensions of 18 inches by 24 inches (457 mm by 610 mm).

M1601.5.5 Furnace controls. The furnace shall be equipped with an automatic control that will start the air-circulating fan when the air in the furnace bonnet reaches a temperature not higher than 150°F (66°C). The furnace shall additionally be equipped with an *approved* automatic control that limits the outlet air temperature to 200°F (93°C).

INTERNATIONAL CODE COUNCIL®
Copyright © 2019 ICC & NYSDOS. ALL RIGHTS RESERVED. Accessed by Lauren Gualdino (lgualdino@briarcliffmanor.org), (-) Order Number #100880972 on May 08, 2020 07:05 AM (PDT) pursuant to License Agreement with ICC & NYSDOS. No further reproduction, no

100880972

M1601.6 Independent garage HVAC systems. Furnaces and air-handling systems that supply air to living spaces shall not supply air to or return air from a garage.

SECTION M1602
RETURN AIR

M1602.1 Outdoor air openings. Outdoor intake openings shall be located in accordance with Section R303.5.1. Opening protection shall be in accordance with Section R303.6.

M1602.2 Return air openings. Return air openings for heating, ventilation and air-conditioning systems shall comply with all of the following:

1. Openings shall not be located less than 10 feet (3048 mm) measured in any direction from an open combustion chamber or draft hood of another appliance located in the same room or space.
2. The amount of return air taken from any room or space shall be not greater than the flow rate of supply air delivered to such room or space.
3. Return and transfer openings shall be sized in accordance with the appliance or equipment manufacturer's installation instructions, Manual D or the design of the registered design professional.
4. Return air shall not be taken from a closet, bathroom, toilet room, kitchen, garage, mechanical room, boiler room, furnace room or unconditioned attic.

   Exceptions:

   1. Taking return air from a kitchen is not prohibited where such return air openings serve the kitchen only, and are located not less than 10 feet (3048 mm) from the cooking appliances.
   2. Dedicated forced-air systems serving only the garage shall not be prohibited from obtaining return air from the garage.
5. For other than dedicated HVAC systems, return air shall not be taken from indoor swimming pool enclosures and associated deck areas except where the air in such spaces is dehumidified.
6. Taking return air from an unconditioned crawl space shall not be accomplished through a direct connection to the return side of a forced-air furnace. Transfer openings in the crawl space enclosure shall not be prohibited.
7. Return air from one dwelling unit shall not be discharged into another dwelling unit.

INTERNATIONAL CODE COUNCIL®
Copyright © 2019 ICC & NYSDOS. ALL RIGHTS RESERVED. Accessed by Lauren Gualdino (lgualdino@briarcliffmanor.org), (-) Order Number #100880972 on May 08, 2020 07:05 AM (PDT) pursuant to License Agreement with ICC & NYSDOS. No further reproduction, no

100880972

CHAPTER 17

COMBUSTION AIR

SECTION M1701
GENERAL

M1701.1 Scope. Solid fuel-burning *appliances* shall be provided with *combustion air* in accordance with the *appliance* manufacturer's installation instructions. Oil-fired *appliances* shall be provided with *combustion air* in accordance with NFPA 31. The methods of providing *combustion air* in this chapter do not apply to fireplaces, fireplace stoves and direct-vent *appliances*. The requirements for combustion and dilution air for gas-fired *appliances* shall be in accordance with Chapter 24.

M1701.2 Opening location. In flood hazard areas as established in Table R301.2(1), *combustion air* openings shall be located at or above the elevation required in Section R322.2.1 or R322.3.2.

INTERNATIONAL CODE COUNCIL®
Copyright © 2019 ICC & NYSDOS. ALL RIGHTS RESERVED. Accessed by Lauren Gualdino (lgualdino@briarcliffmanor.org), (-) Order Number #100880972 on May 08, 2020 07:05 AM (PDT) pursuant to License Agreement with ICC & NYSDOS. No further reproduction, no

100880972

INTERNATIONAL CODE COUNCIL®
Copyright © 2019 ICC & NYSDOS. ALL RIGHTS RESERVED. Accessed by Lauren Gualdino (lgualdino@briarcliffmanor.org), (-) Order Number #100880972 on May 08, 2020 07:05 AM (PDT) pursuant to License Agreement with ICC & NYSDOS. No further reproduction, no

100880972

CHAPTER 18

CHIMNEYS AND VENTS

SECTION M1801
GENERAL

M1801.1 Venting required. Fuel-burning *appliances* shall be vented to the outdoors in accordance with their *listing* and *label* and manufacturer's installation instructions except *appliances* listed and *labeled* for unvented use. Venting systems shall consist of *approved* chimneys or vents, or venting assemblies that are integral parts of *labeled appliances*. Gas-fired *appliances* shall be vented in accordance with Chapter 24.

M1801.2 Draft requirements. A venting system shall satisfy the draft requirements of the *appliance* in accordance with the manufacturer's installation instructions, and shall be constructed and installed to develop a positive flow to convey combustion products to the outside atmosphere.

M1801.3 Existing chimneys and vents. Where an *appliance* is permanently disconnected from an existing chimney or vent, or where an *appliance* is connected to an existing chimney or vent during the process of a new installation, the chimney or vent shall comply with Sections M1801.3.1 through M1801.3.4.

M1801.3.1 Size. The chimney or vent shall be resized as necessary to control flue gas condensation in the interior of the chimney or vent and to provide the *appliance*, or *appliances* served, with the required draft. For the venting of oil-fired *appliances* to masonry chimneys, the resizing shall be done in accordance with NFPA 31.

M1801.3.2 Flue passageways. The flue gas passageway shall be free of obstructions and combustible deposits and shall be cleaned if previously used for venting a solid or liquid fuel-burning *appliance* or fireplace. The flue liner, chimney inner wall or vent inner wall shall be continuous and free of cracks, gaps, perforations, or other damage or deterioration that would allow the escape of combustion products, including gases, moisture and creosote.

M1801.3.3 Cleanout. Masonry chimneys shall be provided with a cleanout opening complying with Section R1003.17.

M1801.3.4 Clearances. Chimneys and vents shall have airspace clearance to combustibles in accordance with this code and the chimney or vent manufacturer's installation instructions.

Exception: Masonry chimneys equipped with a chimney lining system tested and *listed* for installation in chimneys in contact with combustibles in accordance with UL 1777, and installed in accordance with the manufacturer's instructions, shall not be required to have a clearance between combustible materials and exterior surfaces of the masonry chimney. Noncombustible firestopping shall be provided in accordance with this code.

M1801.4 Space around lining. The space surrounding a flue lining system or other vent installed within a masonry chimney shall not be used to vent any other *appliance*. This shall not prevent the installation of a separate flue lining in accordance with the manufacturer's installation instructions and this code.

M1801.5 Mechanical draft systems. A mechanical draft system shall be used only with *appliances listed* and *labeled* for such use. Provisions shall be made to prevent the flow of fuel to the *equipment* when the draft system is not operating. Forced draft systems and portions of induced draft systems under positive pressure during operation shall be designed and installed to prevent leakage of flue gases into a building.

M1801.6 Direct-vent appliances. Direct-vent *appliances* shall be installed in accordance with the manufacturer's instructions.

M1801.7 Support. Venting systems shall be adequately supported for the weight of the material used.

M1801.8 Duct penetrations. Chimneys, vents and vent connectors shall not extend into or through supply and return air ducts or plenums.

M1801.9 Fireblocking. Vent and chimney installations shall be fireblocked in accordance with Section R602.8.

M1801.10 Unused openings. Unused openings in any venting system shall be closed or capped.

M1801.11 Multiple-appliance venting systems. Two or more *listed* and *labeled appliances* connected to a common natural draft venting system shall comply with the following requirements:

1. *Appliances* that are connected to common venting systems shall be located on the same floor of the *dwelling*.

   Exception: Engineered systems as provided for in Section G2427.

2. Inlets to common venting systems shall be offset such that no portion of an inlet is opposite another inlet.
3. Connectors serving *appliances* operating under a natural draft shall not be connected to any portion of a mechanical draft system operating under positive pressure.

M1801.12 Multiple solid fuel prohibited. A solid fuel-burning *appliance* or fireplace shall not connect to a chimney passageway venting another *appliance*.

SECTION M1802
VENT COMPONENTS

M1802.1 Draft hoods. Draft hoods shall be located in the same room or space as the *combustion air* openings for the *appliances.*

INTERNATIONAL CODE COUNCIL®
Copyright © 2019 ICC & NYSDOS. ALL RIGHTS RESERVED. Accessed by Lauren Gualdino (lgualdino@briarcliffmanor.org), (-) Order Number #100880972 on May 08, 2020 07:05 AM (PDT) pursuant to License Agreement with ICC & NYSDOS. No further reproduction, no

100880972

M1802.2 Vent dampers. Vent dampers shall comply with Sections M1802.2.1 and M1802.2.2.

M1802.2.1 Manually operated. Manually operated dampers shall not be installed except in connectors or chimneys serving solid fuel-burning *appliances*.

M1802.2.2 Automatically operated. Automatically operated dampers shall conform to UL 17 and be installed in accordance with the terms of their *listing* and *label*. The installation shall prevent firing of the burner when the damper is not opened to a safe position.

M1802.3 Draft regulators. Draft regulators shall be provided for oil-fired *appliances* that must be connected to a chimney. Draft regulators provided for solid fuel-burning *appliances* to reduce draft intensity shall be installed and set in accordance with the manufacturer's installation instructions.

M1802.3.1 Location. Where required, draft regulators shall be installed in the same room or enclosure as the *appliance* so that a difference in pressure will not exist between the air at the regulator and the *combustion air* supply.

SECTION M1803
CHIMNEY AND VENT CONNECTORS

M1803.1 General. Connectors shall be used to connect fuel-burning *appliances* to a vertical chimney or vent except where the chimney or vent is attached directly to the *appliance*.

M1803.2 Connectors for oil and solid fuel-burning appliances. Connectors for oil and solid fuel-burning *appliances* shall be constructed of factory-built chimney material, Type L vent material or single-wall metal pipe having resistance to corrosion and heat and thickness not less than that of galvanized steel as specified in Table M1803.2.

TABLE M1803.2
THICKNESS FOR SINGLE-WALL METAL PIPE CONNECTORS

DIAMETER OF CONNECTOR (inches)	GALVANIZED SHEET METAL GAGE NUMBER	MINIMUM THICKNESS (inch)
Less than 6	26	0.019
6 to 10	24	0.024
Over 10 through 16	22	0.029

For SI: 1 inch = 25.4 mm.

M1803.3 Installation. Vent and chimney connectors shall be installed in accordance with the manufacturer's instructions and within the space where the *appliance* is located. *Appliances* shall be located as close as practical to the vent or chimney. Connectors shall be as short and straight as possible and installed with a slope of not less than $^1/_4$ inch (6 mm) rise per foot of run. Connectors shall be securely supported and joints shall be fastened with sheet metal screws or rivets. Devices that obstruct the flow of flue gases shall not be installed in a connector unless *listed* and *labeled* or *approved* for such installation.

M1803.3.1 Floor, ceiling and wall penetrations. A chimney connector or vent connector shall not pass through any floor or ceiling. A chimney connector or vent connector shall not pass through a wall or partition unless the connector is *listed* and *labeled* for wall pass-through, or is routed through a device *listed* and *labeled* for wall pass-through and is installed in accordance with the conditions of its *listing* and *label*. Connectors for oil-fired *appliances listed* and *labeled* for Type L vents, passing through walls or partitions shall be in accordance with the following:

1. Type L vent material for oil *appliances* shall be installed with not less than *listed* and *labeled* clearances to combustible material.
2. Single-wall metal pipe shall be *guarded* by a ventilated metal thimble not less than 4 inches (102 mm) larger in diameter than the vent connector. Not less than 6 inches (152 mm) of clearance shall be maintained between the thimble and combustibles.

M1803.3.2 Length. The horizontal run of an uninsulated connector to a natural draft chimney shall not exceed 75 percent of the height of the vertical portion of the chimney above the connector. The horizontal run of a *listed* connector to a natural draft chimney shall not exceed 100 percent of the height of the vertical portion of the chimney above the connector.

M1803.3.3 Size. A connector shall not be smaller than the flue collar of the *appliance*.

Exception: Where installed in accordance with the *appliance* manufacturer's instructions.

M1803.3.4 Clearance. Connectors shall be installed with clearance to combustibles as set forth in Table M1803.3.4. Reduced clearances to combustible materials shall be in accordance with Table M1306.2 and Figure M1306.1.

TABLE M1803.3.4
CHIMNEY AND VENT CONNECTOR CLEARANCES TO COMBUSTIBLE MATERIALS[a]

TYPE OF CONNECTOR	MINIMUM CLEARANCE (inches)
Single-wall metal pipe connectors:	
Oil and solid-fuel appliances	18
Oil appliances listed for use with Type L vents	9
Type L vent piping connectors:	
Oil and solid-fuel appliances	9
Oil appliances listed for use with Type L vents	3[b]

For SI: 1 inch = 25.4 mm.

a. These minimum clearances apply to unlisted single-wall chimney and vent connectors. Reduction of required clearances is permitted as in Table M1306.2.

b. Where listed Type L vent piping is used, the clearance shall be in accordance with the vent listing.

M1803.3.5 Access. The entire length of a connector shall allow access for inspection, cleaning and replacement.

M1803.4 Connection to fireplace flue. Connection of *appliances* to chimney flues serving fireplaces shall comply with Sections M1803.4.1 through M1803.4.4.

M1803.4.1 Closure and accessibility. A noncombustible seal shall be provided below the point of connection to prevent entry of room air into the flue. Means shall be provided for access to the flue for inspection and cleaning.

INTERNATIONAL CODE COUNCIL®
Copyright © 2019 ICC & NYSDOS. ALL RIGHTS RESERVED. Accessed by Lauren Gualdino (lgualdino@briarcliffmanor.org), (-) Order Number #100880972 on May 08, 2020 07:05 AM (PDT) pursuant to License Agreement with ICC & NYSDOS. No further reproduction, no

100880972

M1803.4.2 Connection to factory-built fireplace flue. A different *appliance* shall not be connected to a flue serving a factory-built fireplace unless the *appliance* is specifically *listed* for such an installation. The connection shall be made in compliance with the *appliance* manufacturer's instructions.

M1803.4.3 Connection to masonry fireplace flue. A connector shall extend from the *appliance* to the flue serving a masonry fireplace to convey the flue gases directly into the flue. The connector shall be provided with access or shall be removable for inspection and cleaning of both the connector and the flue. *Listed* direct-connection devices shall be installed in accordance with their *listing*.

M1803.4.4 Size of flue. The size of the fireplace flue shall be in accordance with Section M1805.3.1.

SECTION M1804
VENTS

M1804.1 Type of vent required. *Appliances* shall be provided with a *listed* and *labeled* venting system as set forth in Table M1804.1.

TABLE M1804.1
VENT SELECTION CHART

VENT TYPES	APPLIANCE TYPES
Type L oil vents	Oil-burning appliances listed and labeled for venting with Type L vents
Pellet vents	Pellet fuel-burning appliances listed and labeled for use with pellet vents

M1804.2 Termination. Vent termination shall comply with Sections M1804.2.1 through M1804.2.6.

M1804.2.1 Through the roof. Vents passing through a roof shall extend through flashing and terminate in accordance with the manufacturer's installation requirements.

M1804.2.2 Decorative shrouds. Decorative shrouds shall not be installed at the termination of vents except where the shrouds are *listed* and *labeled* for use with the specific venting system and are installed in accordance with the manufacturer's instructions.

M1804.2.3 Natural draft appliances. Vents for natural draft *appliances* shall terminate not less than 5 feet (1524 mm) above the highest connected *appliance* outlet, and natural draft gas vents serving wall furnaces shall terminate at an elevation not less than 12 feet (3658 mm) above the bottom of the furnace.

M1804.2.4 Type L vent. Type L venting systems shall conform to UL 641 and shall terminate with a *listed* and *labeled* cap in accordance with the vent manufacturer's installation instructions not less than 2 feet (610 mm) above the roof and not less than 2 feet (610 mm) above any portion of the building within 10 feet (3048 mm).

M1804.2.5 Direct vent terminations. Vent terminals for direct-vent *appliances* shall be installed in accordance with the manufacturer's instructions.

M1804.2.6 Mechanical draft systems. Mechanical draft systems shall comply with UL 378 and shall be installed in accordance with their *listing*, the manufacturer's instructions and, except for direct-vent *appliances*, the following requirements:

1. The vent terminal shall be located not less than 3 feet (914 mm) above a forced air inlet located within 10 feet (3048 mm).
2. The vent terminal shall be located not less than 4 feet (1219 mm) below, 4 feet (1219 mm) horizontally from, or 1 foot (305 mm) above any door, window or gravity air inlet into a *dwelling*.
3. The vent termination point shall be located not closer than 3 feet (914 mm) to an interior corner formed by two walls perpendicular to each other.
4. The bottom of the vent terminal shall be located not less than 12 inches (305 mm) above finished ground level.
5. The vent termination shall not be mounted directly above or within 3 feet (914 mm) horizontally of an oil tank vent or gas meter.
6. Power exhauster terminations shall be located not less than 10 feet (3048 mm) from *lot lines* and adjacent buildings.
7. The discharge shall be directed away from the building.

M1804.3 Installation. Type L and pellet vents shall be installed in accordance with the terms of their *listing* and *label* and the manufacturer's instructions.

M1804.3.1 Size of single-appliance venting systems. An individual vent for a single *appliance* shall have a cross-sectional area equal to or greater than the area of the connector to the *appliance*, but not less than 7 square inches (4515 mm^2) except where the vent is an integral part of a *listed* and *labeled appliance*.

M1804.4 Door swing. Appliance and equipment vent terminals shall be located such that doors cannot swing within 12 inches (305 mm) horizontally of the vent terminals. Door stops or closers shall not be installed to obtain this clearance.

SECTION M1805
MASONRY AND FACTORY-BUILT CHIMNEYS

M1805.1 General. Masonry and factory-built chimneys shall be built and installed in accordance with Sections R1003 and R1005, respectively. Flue lining for masonry chimneys shall comply with Section R1003.11.

M1805.2 Masonry chimney connection. A chimney connector shall enter a masonry chimney not less than 6 inches (152 mm) above the bottom of the chimney. Where it is not possible to locate the connector entry not less than 6 inches (152 mm) above the bottom of the chimney flue, a cleanout shall be provided by installing a capped tee in the connector next to the chimney. A connector entering a masonry chimney shall extend through, but not beyond, the wall and shall be flush with the inner face of the liner. Connectors, or thimbles where used, shall be firmly cemented into the masonry.

INTERNATIONAL CODE COUNCIL®
Copyright © 2019 ICC & NYSDOS. ALL RIGHTS RESERVED. Accessed by Lauren Gualdino (lgualdino@briarcliffmanor.org), (-) Order Number #100880972 on May 08, 2020 07:05 AM (PDT) pursuant to License Agreement with ICC & NYSDOS. No further reproduction, no

100880972

M1805.3 Size of chimney flues. The effective area of a natural draft chimney flue for one *appliance* shall be not less than the area of the connector to the *appliance*. The area of chimney flues connected to more than one *appliance* shall be not less than the area of the largest connector plus 50 percent of the areas of additional chimney connectors.

Exception: Chimney flues serving oil-fired *appliances* sized in accordance with NFPA 31.

M1805.3.1 Size of chimney flue for solid-fuel appliance. Except where otherwise specified in the manufacturer's installation instructions, the cross-sectional area of a flue connected to a solid fuel-burning *appliance* shall be not less than the area of the flue collar or connector, and not larger than three times the area of the flue collar.

INTERNATIONAL CODE COUNCIL®
Copyright © 2019 ICC & NYSDOS. ALL RIGHTS RESERVED. Accessed by Lauren Gualdino (lgualdino@briarcliffmanor.org), (-) Order Number #100880972 on May 08, 2020 07:05 AM (PDT) pursuant to License Agreement with ICC & NYSDOS. No further reproduction, no

100880972

CHAPTER 19

SPECIAL APPLIANCES, EQUIPMENT AND SYSTEMS

SECTION M1901
RANGES AND OVENS

M1901.1 Clearances. Freestanding or built-in ranges shall have a vertical clearance above the cooking top of not less than 30 inches (762 mm) to unprotected combustible material. Reduced clearances are permitted in accordance with the *listing* and *labeling* of the range hoods or ovens with integral exhaust.

M1901.2 Cooking appliances. Cooking *appliances* shall be *listed* and *labeled* for household use and shall be installed in accordance with the manufacturer's instructions. The installation shall not interfere with *combustion air* or access for operation and servicing. Electric cooking appliances shall comply with UL 1026 or UL 858. Solid-fuel-fired fireplace stoves shall comply with UL 737. Microwave ovens shall comply with UL 923.

SECTION M1902
SAUNA HEATERS

M1902.1 Locations and protection. Sauna heaters shall be protected from accidental contact by persons with a guard of material having a low thermal conductivity, such as wood. The guard shall not have a substantial effect on the transfer of heat from the heater to the room.

M1902.2 Installation. Sauna heaters shall be installed in accordance with the manufacturer's instructions. Sauna heaters shall comply with UL 875.

M1902.3 Combustion air. *Combustion air* and venting for a nondirect vent-type heater shall be provided in accordance with Chapters 17 and 18, respectively.

M1902.4 Controls. Sauna heaters shall be equipped with a thermostat that will limit room temperature to not greater than 194°F (90°C). Where the thermostat is not an integral part of the heater, the heat-sensing element shall be located within 6 inches (152 mm) of the ceiling.

SECTION M1903
STATIONARY FUEL CELL POWER PLANTS

M1903.1 General. Stationary fuel cell power plants having a power output not exceeding 1,000 kW shall comply with ANSI/CSA America FC 1 and shall be installed in accordance with the manufacturer's instructions and NFPA 853.

SECTION M1904
GASEOUS HYDROGEN SYSTEMS

M1904.1 Installation. Gaseous hydrogen systems shall be installed in accordance with the applicable requirements of Sections M1307.4 and M1903.1, the *Fuel Gas Code of New York State*, the *Fire Code of New York State* and the *Building Code of New York State*.

INTERNATIONAL CODE COUNCIL®
Copyright © 2019 ICC & NYSDOS. ALL RIGHTS RESERVED. Accessed by Lauren Gualdino (lgualdino@briarcliffmanor.org), (-) Order Number #100880972 on May 08, 2020 07:05 AM (PDT) pursuant to License Agreement with ICC & NYSDOS. No further reproduction, no

INTERNATIONAL CODE COUNCIL®
Copyright © 2019 ICC & NYSDOS. ALL RIGHTS RESERVED. Accessed by Lauren Gualdino (lgualdino@briarcliffmanor.org), (-) Order Number #100880972 on May 08, 2020 07:05 AM (PDT) pursuant to License Agreement with ICC & NYSDOS. No further reproduction, no

100880972

CHAPTER 20

BOILERS AND WATER HEATERS

SECTION M2001
BOILERS

M2001.1 Installation. In addition to the requirements of this code, the installation of boilers shall conform to the manufacturer's instructions. The manufacturer's rating data, the nameplate and operating instructions of a permanent type shall be attached to the boiler. Boilers shall have their controls set, adjusted and tested by the installer. A complete control diagram together with complete boiler operating instructions shall be furnished by the installer. Solid and liquid fuel-burning boilers shall be provided with *combustion air* as required by Chapter 17.

M2001.1.1 Standards. Packaged oil-fired boilers shall be *listed* and *labeled* in accordance with UL 726. Packaged electric boilers shall be *listed* and *labeled* in accordance with UL 834. Solid fuel-fired boilers shall be *listed* and *labeled* in accordance with UL 2523. Boilers shall be designed, constructed and certified in accordance with the ASME *Boiler and Pressure Vessel Code*, Section I or IV. Controls and safety devices for boilers with fuel input ratings of 12,500,000 Btu/hr (3663 kW) or less shall meet the requirements of ASME CSD-1. Gas-fired boilers shall conform to the requirements listed in Chapter 24.

M2001.2 Clearance. Boilers shall be installed in accordance with their *listing* and *label*.

M2001.3 Valves. Every boiler or modular boiler shall have a shutoff valve in the supply and return piping. For multiple boiler or multiple modular boiler installations, each boiler or modular boiler shall have individual shutoff valves in the supply and return piping.

Exception: Shutoff valves are not required in a system having a single low-pressure steam boiler.

M2001.4 Flood-resistant installation. In flood hazard areas established in Table R301.2(1), boilers, water heaters and their control systems shall be located or installed in accordance with Section R322.1.6.

SECTION M2002
OPERATING AND SAFETY CONTROLS

M2002.1 Safety controls. Electrical and mechanical operating and safety controls for boilers shall be *listed* and *labeled*.

M2002.2 Hot water boiler gauges. Every hot water boiler shall have a pressure gauge and a temperature gauge, or combination pressure and temperature gauge. The gauges shall indicate the temperature and pressure within the normal range of the system's operation.

M2002.3 Steam boiler gauges. Every steam boiler shall have a water-gauge glass and a pressure gauge. The pressure gauge shall indicate the pressure within the normal range of the system's operation. The gauge glass shall be installed so that the midpoint is at the normal water level.

M2002.4 Pressure relief valve. Boilers shall be equipped with pressure relief valves with minimum rated capacities for the *equipment* served. Pressure relief valves shall be set at the maximum rating of the boiler. Discharge shall be piped to drains by gravity to within 18 inches (457 mm) of the floor or to an open receptor.

M2002.5 Boiler low-water cutoff. Steam and hot water boilers shall be protected with a low-water cutoff control.

Exception: A low-water cutoff is not required for coil-type and water-tube-type boilers that require forced circulation of water through the boiler and that are protected with a flow-sensing control.

M2002.6 Operation. Low-water cutoff controls and flow-sensing controls required by Section M2002.5 shall automatically stop the combustion operation of the appliance when the water level drops below the lowest safe water level as established by the manufacturer or when the water circulation flow is less than that required for safe operation of the appliance, respectively.

SECTION M2003
EXPANSION TANKS

M2003.1 General. Hot water boilers shall be provided with expansion tanks. Nonpressurized expansion tanks shall be securely fastened to the structure or boiler and supported to carry twice the weight of the tank filled with water. Provisions shall be made for draining nonpressurized tanks without emptying the system.

M2003.1.1 Pressurized expansion tanks. Pressurized expansion tanks shall be consistent with the volume and capacity of the system. Tanks shall be capable of withstanding a hydrostatic test pressure of two and one-half times the allowable working pressure of the system.

M2003.2 Minimum capacity. The minimum capacity of expansion tanks shall be determined from Table M2003.2.

TABLE M2003.2
EXPANSION TANK MINIMUM CAPACITY[a]
FOR FORCED HOT-WATER SYSTEMS

SYSTEM VOLUME[b] (gallons)	PRESSURIZED DIAPHRAGM TYPE	NONPRESSURIZED TYPE
10	1.0	1.5
20	1.5	3.0
30	2.5	4.5
40	3.0	6.0
50	4.0	7.5
60	5.0	9.0
70	6.0	10.5
80	6.5	12.0
90	7.5	13.5
100	8.0	15.0

For SI: 1 gallon = 3.785 L, 1 pound per square inch gauge = 6.895 kPa, °C = [(°F)-32]/1.8.

a. Based on average water temperature of 195°F, fill pressure of 12 psig and an operating pressure of not greater than 30 psig.

b. System volume includes volume of water in boiler, convectors and piping, not including the expansion tank.

INTERNATIONAL CODE COUNCIL®
Copyright © 2019 ICC & NYSDOS. ALL RIGHTS RESERVED. Accessed by Lauren Gualdino (lgualdino@briarcliffmanor.org), (-) Order Number #100880972 on May 08, 2020 07:05 AM (PDT) pursuant to License Agreement with ICC & NYSDOS. No further reproduction, no

100880972

SECTION M2004
WATER HEATERS USED FOR SPACE HEATING

M2004.1 General. Water heaters used to supply both potable hot water and hot water for space heating shall be installed in accordance with this chapter, Chapter 24, Chapter 28 and the manufacturer's instructions.

SECTION M2005
WATER HEATERS

M2005.1 General. Water heaters shall be installed in accordance with Chapter 28, the manufacturer's instructions and the requirements of this code. Water heaters installed in an attic shall comply with the requirements of Section M1305.1.2. Gas-fired water heaters shall comply with the requirements in Chapter 24. Domestic electric water heaters shall comply with UL 174. Oiled-fired water heaters shall comply with UL 732. Solar thermal water heating systems shall comply with Chapter 23 and SRCC 300. Solid fuel-fired water heaters shall comply with UL 2523.

M2005.2 Prohibited locations. Fuel-fired water heaters shall not be installed in a room used as a storage closet. Water heaters located in a bedroom or bathroom shall be installed in a sealed enclosure so that *combustion air* will not be taken from the living space. Installation of direct-vent water heaters within an enclosure is not required.

M2005.2.1 Water heater access. Access to water heaters that are located in an *attic* or underfloor crawl space is permitted to be through a closet located in a sleeping room or bathroom where *ventilation* of those spaces is in accordance with this code.

M2005.3 Electric water heaters. Electric water heaters shall be installed in accordance with the applicable provisions of Chapters 34 through 43.

M2005.4 Supplemental water-heating devices. Potable water-heating devices that use refrigerant-to-water heat exchangers shall be *approved* and installed in accordance with the manufacturer's instructions.

SECTION M2006
POOL HEATERS

M2006.1 General. Pool and spa heaters shall be installed in accordance with the manufacturer's installation instructions. Oil-fired pool heaters shall comply with UL 726. Electric pool and spa heaters shall comply with UL 1261. Pool and spa heat pump water heaters shall comply with UL 1995 or CSA C22.2 No. 236.

Exception: Portable residential spas and portable residential exercise spas shall comply with UL 1563 or CSA C22.2 No. 218.1.

M2006.2 Clearances. The clearances shall not interfere with *combustion air*, draft hood or flue terminal relief, or accessibility for servicing.

M2006.3 Bypass valves. Where an integral bypass system is not provided as a part of the pool heater, a bypass line and valve shall be installed between the inlet and outlet piping for use in adjusting the flow of water through the heater.

INTERNATIONAL CODE COUNCIL®
Copyright © 2019 ICC & NYSDOS. ALL RIGHTS RESERVED. Accessed by Lauren Gualdino (lgualdino@briarcliffmanor.org), (-) Order Number #100880972 on May 08, 2020 07:05 AM (PDT) pursuant to License Agreement with ICC & NYSDOS. No further reproduction, no

100880972

CHAPTER 21

HYDRONIC PIPING

SECTION M2101
HYDRONIC PIPING SYSTEMS INSTALLATION

M2101.1 General. Hydronic piping shall conform to Table M2101.1. *Approved* piping, valves, fittings and connections shall be installed in accordance with the manufacturer's instructions. Pipe and fittings shall be rated for use at the operating temperature and pressure of the hydronic system. Used pipe, fittings, valves or other materials shall be free of foreign materials.

M2101.2 System drain down. Hydronic piping systems shall be installed to permit draining of the system. Where the system drains to the plumbing drainage system, the installation shall conform to the requirements of Chapters 25 through 32 of this code.

> **Exception:** The buried portions of systems embedded underground or under floors.

M2101.3 Protection of potable water. The potable water system shall be protected from backflow in accordance with the provisions listed in Section P2902.

M2101.4 Pipe penetrations. Openings through concrete or masonry building elements shall be sleeved.

M2101.5 Contact with building material. A hydronic piping system shall not be in direct contact with any building material that causes the piping material to degrade or corrode.

M2101.6 Drilling and notching. Wood-framed structural members shall be drilled, notched or altered in accordance with the provisions of Sections R502.8, R602.6, R602.6.1 and R802.7. Holes in load-bearing members of cold-formed steel light-frame construction shall be permitted only in accordance with Sections R505.2.6, R603.2.6 and R804.2.6. In accordance with the provisions of Sections R505.3.5, R603.3.4 and R804.3.3, cutting and notching of flanges and lips of load-bearing members of cold-formed steel light-frame construction shall not be permitted. Structural insulated panels (SIPs) shall be drilled and notched or altered in accordance with the provisions of Section R610.7.

M2101.7 Prohibited tee applications. Fluid in the supply side of a hydronic system shall not enter a tee fitting through the branch opening.

M2101.8 Expansion, contraction and settlement. Piping shall be installed so that piping, connections and *equipment* shall not be subjected to excessive strains or stresses. Provisions shall be made to compensate for expansion, contraction, shrinkage and structural settlement.

M2101.9 Piping support. Hangers and supports shall be of material of sufficient strength to support the piping, and shall be fabricated from materials compatible with the piping material. Piping shall be supported at intervals not exceeding the spacing specified in Table M2101.9.

TABLE M2101.9
HANGER SPACING INTERVALS

PIPING MATERIAL	MAXIMUM HORIZONTAL SPACING (feet)	MAXIMUM VERTICAL SPACING (feet)
ABS	4	10[a]
CPVC ≤ 1-inch pipe or tubing	3	5[a]
CPVC ≥ $1^1/_4$ inches	4	10[a]
Copper or copper-alloy pipe	12	10
Copper or copper-alloy tubing	6	10
PB pipe or tubing	2.67	4
PE pipe or tubing	2.67	4
PE-RT ≤ 1 inch	2.67	10[a]
PE-RT ≥ $1^1/_4$ inches	4	10[a]
PEX tubing ≤ 1 inch	2.67	4
PEX tubing ≥ $1^1/_4$ inches	4	10[a]
PP < 1-inch pipe or tubing	2.67	4
PP > $1^1/_4$ inches	4	10[a]
PVC	4	10[a]
Steel pipe	12	15
Steel tubing	8	10

For SI: 1 inch = 25.4 mm, 1 foot = 304.8 mm.

a. For sizes 2 inches and smaller, a guide shall be installed midway between required vertical supports. Such guides shall prevent pipe movement in a direction perpendicular to the axis of the pipe.

M2101.10 Tests. Hydronic piping systems shall be tested hydrostatically at a pressure of one and one-half times the maximum system design pressure, but not less than 100 pounds per square inch (689 kPa). The duration of each test shall be not less than 15 minutes.

> **Exception:** For PEX piping systems, testing with a compressed gas shall be an alternative to hydrostatic testing where compressed air or other gas pressure testing is specifically authorized by all of the manufacturers' instructions for the PEX pipe and fittings products installed at the time the system is being tested, and compressed air or other gas testing is not otherwise prohibited by applicable codes, laws, or regulations outside of this code.

SECTION M2102
BASEBOARD CONVECTORS

M2102.1 General. Baseboard convectors shall be installed in accordance with the manufacturer's instructions. Convectors shall be supported independently of the hydronic piping.

INTERNATIONAL CODE COUNCIL®
Copyright © 2019 ICC & NYSDOS. ALL RIGHTS RESERVED. Accessed by Lauren Gualdino (lgualdino@briarcliffmanor.org), (-) Order Number #100880972 on May 08, 2020 07:05 AM (PDT) pursuant to License Agreement with ICC & NYSDOS. No further reproduction, no

100880972

TABLE M2101.1
HYDRONIC PIPING AND FITTING MATERIALS

MATERIAL	USE CODE[a]	STANDARD[b]	JOINTS	NOTES
Acrylonitrile butadiene styrene (ABS) plastic pipe	1, 5	ASTM D1527 ASTM F2806 ASTM F2969	Solvent cement joints	—
Chlorinated poly (vinyl chloride) (CPVC) pipe and tubing	1, 2, 3	ASTM D2846	Solvent cement joints, compression joints and threaded adapters	—
Copper and copper-alloy pipe	1	ASTM B42, B43, B302	Brazed, soldered and mechanical fittings threaded, welded and flanged	—
Copper and copper-alloy tubing (Type K, L or M)	1, 2	ASME B16.51, ASTM B75, B88, B135, B251, B306	Brazed, soldered, press-connected and flared mechanical fittings	Joints embedded in concrete shall be brazed
Cross-linked polyethylene (PEX)	1, 2, 3	ASTM F876	(See PEX fittings)	Install in accordance with manufacturer's instructions
Cross-linked polyethylene/ aluminum/cross-linked polyethylene (PEX-AL-PEX) pressure pipe	1, 2	ASTM F1281 or CAN/ CSA B137.10	Mechanical, crimp/insert	Install in accordance with manufacturer's instructions
PEX fittings		ASTM F877 ASTM F1807 ASTM F1960 ASTM F2098 ASTM F2159 ASTM F2735	Copper crimp/insert fittings, cold expansion fittings, stainless steel clamp, insert fittings	Install in accordance with manufacturer's instructions
Polybutylene (PB) pipe and tubing	1, 2, 3	ASTM D3309	Heat-fusion, crimp/insert and compression	Joints in concrete shall be heat-fused
Polyethylene/aluminum/polyethylene (PE-AL-PE) pressure pipe	1, 2, 3	ASTM F1282 CSA B 137.9	Mechanical, crimp/insert	—
Polypropylene (PP)	1, 2, 3	ISO 15874 ASTM F2389	Heat-fusion joints, mechanical fittings, threaded adapters, compression joints	—
Raised temperature polyethylene (PE-RT)	1, 2, 3	ASTM F2623 ASTM F2769, CSA B137.18	Copper crimp/insert fitting, stainless steel clamp, insert fittings	—
Raised temperature polyethylene (PE-RT) fittings	1, 2,3	ASTM D3261 ASTM F1807 ASTM F2098 ASTM F2159 ASTM F2735 ASTM F2769 CSA B137.18	Copper crimp/insert fitting, stainless steel clamp, insert fittings	—
Steel pipe	1, 2	ASTM A53 ASTM A106	Brazed, welded, threaded, flanged and mechanical fittings	Joints in concrete shall be welded. Galvanized pipe shall not be welded or brazed.
Steel tubing	1	ASTM A254	Mechanical fittings, welded	—

For SI: °C = [(°F)-32]/1.8.

a. Use code:
   1. Above ground.
   2. Embedded in radiant systems.
   3. Temperatures below 180°F only.
   4. Low temperature (below 130°F) applications only.
   5. Temperatures below 160°F only.

b. Standards as listed in Chapter 44.

INTERNATIONAL CODE COUNCIL®
Copyright © 2019 ICC & NYSDOS. ALL RIGHTS RESERVED. Accessed by Lauren Gualdino (lgualdino@briarcliffmanor.org), (-) Order Number #100880972 on May 08, 2020 07:05 AM (PDT) pursuant to License Agreement with ICC & NYSDOS. No further reproduction, no

100880972

SECTION M2103
FLOOR HEATING SYSTEMS

M2103.1 Piping materials. Piping for embedment in concrete or gypsum materials shall be standard-weight steel pipe, copper and copper-alloy pipe and tubing, cross-linked polyethylene/aluminum/cross-linked polyethylene (PEX-AL-PEX) pressure pipe, chlorinated polyvinyl chloride (CPVC), polybutylene, cross-linked polyethylene (PEX) tubing, polyethylene of raised temperature (PE-RT) or polypropylene (PP) with a rating of not less than 100 psi at 180°F (690 kPa at 82°C).

M2103.2 Thermal barrier required. Radiant floor heating systems shall have a thermal barrier in accordance with Sections M2103.2.1 and M2103.2.2. Insulation *R*-values for slab-on-grade and suspended floor installations shall be in accordance with Chapter 11.

Exception: Insulation shall not be required in engineered systems where it can be demonstrated that the insulation will decrease the efficiency or have a negative effect on the installation.

➡

M2103.2.1 Thermal break required. A thermal break consisting of asphalt expansion joint materials or similar insulating materials shall be provided at a point where a heated slab meets a foundation wall or other conductive slab.

M2103.2.2 Thermal barrier material marking. Insulating materials used in thermal barriers shall be installed so that the manufacturer's *R*-value mark *is readily observable upon inspection.*

M2103.3 Piping joints. Copper and copper-alloy systems shall be soldered, brazed, or press connected. Soldering shall be in accordance with ASTM B828. Fluxes for soldering shall be in accordance with ASTM B813. Brazing fluxes shall be in accordance with AWS A5.31. Press-connect joints shall be in accordance with ASME B16.51. Piping joints that are embedded shall be installed in accordance with the following requirements:

1. Steel pipe joints shall be welded.
2. Copper tubing shall be joined by brazing complying with Section P3003.6.1.
3. Polybutylene pipe and tubing joints shall be installed with socket-type heat-fused polybutylene fittings.
4. CPVC tubing shall be joined using solvent cement joints.
5. Polypropylene pipe and tubing joints shall be installed with socket-type heat-fused polypropylene fittings.
6. Cross-linked polyethylene (PEX) tubing shall be joined using cold expansion, insert or compression fittings.
7. Raised temperature polyethylene (PE-RT) tubing shall be joined using insert or compression fittings.

M2103.4 Testing. Piping or tubing to be embedded shall be tested by applying a hydrostatic pressure of not less than 100 psi (690 kPa). The pressure shall be maintained for 30 minutes, during which the joints shall be visually inspected for leaks.

SECTION M2104
LOW TEMPERATURE PIPING

M2104.1 Piping materials. Low temperature piping for embedment in concrete or gypsum materials shall be as indicated in Table M2101.1.

M2104.2 Piping joints. Piping joints that are embedded, other than those in Section M2103.3, shall comply with the following requirements:

1. Cross-linked polyethylene (PEX) tubing shall be installed in accordance with the manufacturer's instructions.
2. Polyethylene tubing shall be installed with heat-fusion joints.
3. Polypropylene (PP) tubing shall be installed in accordance with the manufacturer's instructions.
4. Raised temperature polyethylene (PE-RT) shall be installed in accordance with the manufacturer's instructions.

M2104.3 Raised temperature polyethylene (PE-RT) plastic tubing. Joints between raised temperature polyethylene tubing and fittings shall conform to Sections M2104.3.1 through M2104.3.3. Mechanical joints shall be installed in accordance with the manufacturer's instructions.

M2104.3.1 Compression-type fittings. Where compression-type fittings include inserts and ferrules or O-rings, the fittings shall be installed without omitting such inserts and ferrules or O-rings.

M2104.3.2 PE-RT-to-metal connections. Solder joints in a metal pipe shall not occur within 18 inches (457 mm) of a transition from such metal pipe to PE-RT pipe.

M2104.3.3 PE-RT insert fittings. PE-RT insert fittings shall be installed in accordance with the manufacturer's instructions.

M2104.4 Polyethylene/aluminum/polyethylene (PE-AL-PE) pressure pipe. Joints between polyethylene/aluminum/polyethylene pressure pipe and fittings shall conform to Sections M2104.4.1 and M2104.4.2. Mechanical joints shall be installed in accordance with the manufacturer's instructions.

M2104.4.1 Compression-type fittings. Where compression-type fittings include inserts and ferrules or O-rings, the fittings shall be installed without omitting such inserts and ferrules or O-rings.

M2104.4.2 PE-AL-PE-to-metal connections. Solder joints in a metal pipe shall not occur within 18 inches (457 mm) of a transition from such metal pipe to PE-AL-PE pipe.

SECTION M2105
GROUND-SOURCE HEAT-PUMP SYSTEM LOOP PIPING

M2105.1 Plastic ground-source heat-pump loop piping. Plastic piping and tubing material used in water-based ground-source heat-pump ground-loop systems shall conform to the standards specified in this section.

INTERNATIONAL CODE COUNCIL®
Copyright © 2019 ICC & NYSDOS. ALL RIGHTS RESERVED. Accessed by Lauren Gualdino (lgualdino@briarcliffmanor.org), (-) Order Number #100880972 on May 08, 2020 07:05 AM (PDT) pursuant to License Agreement with ICC & NYSDOS. No further reproduction, no

100880972

M2105.2 Used materials. Reused pipe, fittings, valves, and other materials shall not be used in ground-source heat-pump loop systems.

M2105.3 Material rating. Pipe and tubing shall be rated for the operating temperature and pressure of the ground-source heat-pump loop system. Fittings shall be suitable for the pressure applications and recommended by the manufacturer for installation with the pipe and tubing material installed. Where used underground, materials shall be suitable for burial.

M2105.4 Piping and tubing materials standards. Ground-source heat-pump ground-loop pipe and tubing shall conform to the standards listed in Table M2105.4.

M2105.5 Fittings. Ground-source heat-pump pipe fittings shall be approved for installation with the piping materials to be installed, shall conform to the standards listed in Table M2105.5 and, where installed underground, shall be suitable for burial.

M2105.6 Joints and connections. Joints and connections shall be of an approved type. Joints and connections shall be tight for the pressure of the ground-source loop system. Joints used underground shall be approved for such applications.

M2105.6.1 Joints between different piping materials. Joints between different piping materials shall be made with approved transition fittings.

M2105.7 Preparation of pipe ends. Pipe shall be cut square, reamed, and shall be free of burrs and obstructions. CPVC, PE and PVC pipe shall be chamfered. Pipe ends shall have full-bore openings and shall not be undercut.

M2105.8 Joint preparation and installation. Where required by Sections M2105.9 through M2105.11, the preparation and installation of mechanical and thermoplastic-welded joints shall comply with Sections M2105.8.1 and M2105.8.2.

M2105.8.1 Mechanical joints. Mechanical joints shall be installed in accordance with the manufacturer's instructions.

M2105.8.2 Thermoplastic-welded joints. Joint surfaces for thermoplastic-welded joints shall be cleaned by an approved procedure. Joints shall be welded in accordance with the manufacturer's instructions.

M2105.9 CPVC plastic pipe. Joints between CPVC plastic pipe or fittings shall be solvent-cemented in accordance with Section P2906.9.1.2. Threaded joints between fittings and CPVC plastic pipe shall be in accordance with Section M2105.9.1.

M2105.9.1 Threaded joints. Threads shall conform to ASME B1.20.1. The pipe shall be Schedule 80 or heavier plastic pipe and shall be threaded with dies specifically designed for plastic pipe. Thread lubricant, pipe-joint com-

TABLE M2105.4
GROUND-SOURCE LOOP PIPE

MATERIAL	STANDARD
Chlorinated polyvinyl chloride (CPVC)	ASTM D2846; ASTM F437; ASTM F438; ASTM F439; ASTM F441; ASTM F442; CSA B137.6
Cross-linked polyethylene (PEX)	ASTM F876; CSA B137.5
High-density polyethylene (HDPE)	ASTM D2737; ASTM D3035; ASTM F714; AWWA C901; CSA B137.1; CSA C448; NSF 358-1
Polyethylene/aluminum/polyethylene (PE-AL-PE) pressure pipe	ASTM F1282; AWWA C 903; CSA B137.9
Polypropylene (PP-R)	ASTM F2389; CSA B137.11, NSF 358-2
Polyvinyl chloride (PVC)	ASTM D1785; ASTM D2241; CSA 137.3
Raised temperature polyethylene (PE-RT)	ASTM F2623; ASTM F2769, CSA B137.18

TABLE M2105.5
GROUND-SOURCE LOOP PIPE FITTINGS

PIPE MATERIAL	STANDARD
Chlorinated polyvinyl chloride (CPVC)	ASTM D2846; ASTM F437; ASTM F438; ASTM F439; ASTM F1970; CSA B137.6
Cross-linked polyethylene (PEX)	ASTM F877; ASTM F1807; ASTM F1960; ASTM F2080; ASTM F2159; ASTM F2434; CSA B137.5
High-density polyethylene (HDPE)	ASTM D2683; ASTM D3261; ASTM F1055; CSA B137.1; CSA C448; NSF 358-1
Polyethylene/aluminum/polyethylene (PE-AL-PE)	ASTM F1282; ASTM F2434; CSA B137.9
Polypropylene (PP-R)	ASTM F2389; CSA B137.11; NSF 358-2
Polyvinyl chloride (PVC)	ASTM D2464; ASTM D2466; ASTM D2467; ASTM F1970, CSA B137.2; CSA B137.3
Raised temperature polyethylene (PE-RT)	ASTM D2683; ASTM D3261; ASTM F1055; ASTM F1807; ASTM F2098; ASTM F2159; ASTM F2735; ASTM F2769; CSA B137.1; CSA B137.18

INTERNATIONAL CODE COUNCIL®
Copyright © 2019 ICC & NYSDOS. ALL RIGHTS RESERVED. Accessed by Lauren Gualdino (lgualdino@briarcliffmanor.org), (-) Order Number #100880972 on May 08, 2020 07:05 AM (PDT) pursuant to License Agreement with ICC & NYSDOS. No further reproduction, no

100880972

pound or tape shall be applied on the male threads only and shall be approved for application on the piping material.

M2105.10 Cross-linked polyethylene (PEX) plastic tubing. Joints between cross-linked polyethylene plastic tubing and fittings shall comply with Sections M2105.10.1 and M2105.10.2. Mechanical joints shall comply with Section M2105.8.1.

M2105.10.1 Compression-type fittings. Where compression-type fittings include inserts and ferrules or O-rings, the fittings shall be installed without omitting the inserts and ferrules or O-rings.

M2105.10.2 Plastic-to-metal connections. Solder joints in a metal pipe shall not occur within 18 inches (457 mm) of a transition from such metal pipe to plastic pipe or tubing.

M2105.11 Polyethylene plastic pipe and tubing. Joints between polyethylene plastic pipe and tubing or fittings for ground-source heat-pump loop systems shall be heat-fusion joints complying with Section M2105.11.1, electrofusion joints complying with Section M2105.11.2, or stab-type insertion joints complying with Section M2105.11.3.

M2105.11.1 Heat-fusion joints. Joints shall be of the socket-fusion, saddle-fusion or butt-fusion type, and joined in accordance with ASTM D2657. Joint surfaces shall be clean and free from moisture. Joint surfaces shall be heated to melt temperatures and joined. The joint shall remain undisturbed until cool. Fittings shall be manufactured in accordance with ASTM D2683 or ASTM D3261.

M2105.11.2 Electrofusion joints. Joints shall be of the electrofusion type. Joint surfaces shall be clean and free from moisture, and scoured to expose virgin resin. Joint surfaces shall be heated to melt temperatures for the period of time specified by the manufacturer. The joint shall remain undisturbed until cool. Fittings shall be manufactured in accordance with ASTM F1055.

M2105.11.3 Stab-type insert fittings. Joint surfaces shall be clean and free from moisture. Pipe ends shall be chamfered and inserted into the fittings to full depth. Fittings shall be manufactured in accordance with ASTM F1924.

M2105.12 Polypropylene (PP) plastic. Joints between PP plastic pipe and fittings shall comply with Sections M2105.12.1 and M2105.12.2.

M2105.12.1 Heat-fusion joints. Heat-fusion joints for polypropylene (PP) pipe and tubing joints shall be installed with socket-type heat-fused polypropylene fittings, electrofusion polypropylene fittings or by butt fusion. Joint surfaces shall be clean and free from moisture. The joint shall remain undisturbed until cool. Joints shall be made in accordance with ASTM F2389.

M2105.12.2 Mechanical and compression sleeve joints. Mechanical and compression sleeve joints shall be installed in accordance with the manufacturer's instructions.

M2105.13 Raised temperature polyethylene (PE-RT) plastic tubing. Joints between raised temperature polyethylene tubing and fittings shall comply with Sections M2105.13.1 through M2105.13.4. Mechanical joints shall comply with Section M2105.8.1.

M2105.13.1 Compression-type fittings. Where compression-type fittings include inserts and ferrules or O-rings, the fittings shall be installed without omitting the inserts and ferrules or O-rings.

M2105.13.2 PE-RT-to-metal connections. Solder joints in a metal pipe shall not occur within 18 inches (457 mm) of a transition from such metal pipe to PE-RT pipe or tubing.

M2105.13.3 Heat-fusion joints. Heat-fusion joints shall be of the socket-fusion, saddle-fusion or butt-fusion type, and shall be joined in accordance with ASTM D2657. Joint surfaces shall be clean and free from moisture. Joint surfaces shall be heated to melt temperatures and joined. The joint shall remain undisturbed until cool. Fittings shall be manufactured in accordance with ASTM D2683 or ASTM D3261.

M2105.13.4 Electrofusion joints. Joints shall be of the electrofusion type. Joint surfaces shall be clean and free from moisture and scoured to expose virgin resin. Joint surfaces shall be heated to melt temperatures for the period of time specified by the manufacturer and joined. The joint shall remain undisturbed until cool. Fittings shall be manufactured in accordance with ASTM F1055.

M2105.14 PVC plastic pipe. Joints between PVC plastic pipe or fittings shall be solvent-cemented in accordance with Section P2906.9.1.4. Threaded joints between fittings and PVC plastic pipe shall be in accordance with Section M2105.9.1.

M2105.15 Shutoff valves. Shutoff valves shall be installed in ground-source loop piping systems in the locations indicated in Sections M2105.15.1 through M2105.15.6.

M2105.15.1 Heat exchangers. Shutoff valves shall be installed on the supply and return side of a heat exchanger.

Exception: Shutoff valves shall not be required where heat exchangers are integral with a boiler or are a component of a manufacturer's boiler and heat exchanger packaged unit and are capable of being isolated from the hydronic system by the supply and return valves required by Section M2001.3.

M2105.15.2 Central systems. Shutoff valves shall be installed on the building supply and return of a central utility system.

M2105.15.3 Pressure vessels. Shutoff valves shall be installed on the connection to any pressure vessel.

M2105.15.4 Pressure-reducing valves. Shutoff valves shall be installed on both sides of a pressure-reducing valve.

M2105.15.5 Equipment and appliances. Shutoff valves shall be installed on connections to mechanical equipment and appliances. This requirement does not apply to components of ground-source loop systems such as pumps, air separators, metering devices, and similar equipment.

M2105.15.6 Expansion tanks. Shutoff valves shall be installed at connections to nondiaphragm-type expansion tanks.

INTERNATIONAL CODE COUNCIL®
Copyright © 2019 ICC & NYSDOS. ALL RIGHTS RESERVED. Accessed by Lauren Gualdino (lgualdino@briarcliffmanor.org), (-) Order Number #100880972 on May 08, 2020 07:05 AM (PDT) pursuant to License Agreement with ICC & NYSDOS. No further reproduction, no

100880972

M2105.16 Reduced pressure. A pressure relief valve shall be installed on the low-pressure side of a hydronic piping system that has been reduced in pressure. The relief valve shall be set at the maximum pressure of the system design. The valve shall be installed in accordance with Section M2002.

M2105.17 Installation. Piping, valves, fittings, and connections shall be installed in accordance with the manufacturer's instructions.

M2105.18 Protection of potable water. Where ground-source heat-pump ground-loop systems have a connection to a potable water supply, the potable water system shall be protected from backflow in accordance with Section P2902.

M2105.19 Pipe penetrations. Openings for pipe penetrations in walls, floors and ceilings shall be larger than the penetrating pipe. Openings through concrete or masonry building elements shall be sleeved. The annular space surrounding pipe penetrations shall be protected in accordance with Section P2606.1.

M2105.20 Clearance from combustibles. A pipe in a ground-source heat pump piping system having an exterior surface temperature exceeding 250°F (121°C) shall have a clearance of not less than 1 inch (25 mm) from combustible materials.

M2105.21 Contact with building material. A ground-source heat-pump ground-loop piping system shall not be in direct contact with building materials that cause the piping or fitting material to degrade or corrode, or that interfere with the operation of the system.

M2105.22 Strains and stresses. Piping shall be installed so as to prevent detrimental strains and stresses in the pipe. Provisions shall be made to protect piping from damage resulting from expansion, contraction and structural settlement. Piping shall be installed so as to avoid structural stresses or strains within building components.

M2105.22.1 Flood hazard. Piping located in a flood hazard area shall be capable of resisting hydrostatic and hydrodynamic loads and stresses, including the effects of buoyancy, during the occurrence of flooding to the *design flood elevation.*

M2105.23 Pipe support. Pipe shall be supported in accordance with Section M2101.9.

M2105.24 Velocities. Ground-source heat-pump ground-loop systems shall be designed so that the flow velocities do not exceed the maximum flow velocity recommended by the pipe and fittings manufacturer. Flow velocities shall be controlled to reduce the possibility of water hammer.

M2105.25 Labeling and marking. Ground-source heat-pump ground-loop system piping shall be marked with tape, metal tags or other methods where it enters a building. The marking shall state the following words: "GROUND-SOURCE HEAT-PUMP LOOP SYSTEM." The marking shall indicate if antifreeze is used in the system and shall indicate the chemicals by name and concentration.

M2105.26 Chemical compatibility. Antifreeze and other materials used in the system shall be chemically compatible with the pipe, tubing, fittings and mechanical systems.

M2105.27 Makeup water. The transfer fluid shall be compatible with the makeup water supplied to the system.

M2105.28 Testing. Before connection header trenches are backfilled, the assembled loop system shall be pressure tested with water at 100 psi (689 kPa) for 15 minutes without observed leaks. Flow and pressure loss testing shall be performed and the actual flow rates and pressure drops shall be compared to the calculated design values. If actual flow rate or pressure drop values differ from calculated design values by more than 10 percent, the cause shall be identified and corrective action taken.

M2105.29 Embedded piping. Ground-source heat-pump ground-loop piping to be embedded in concrete shall be pressure tested prior to pouring concrete. During pouring, the pipe shall be maintained at the proposed operating pressure.

INTERNATIONAL CODE COUNCIL®
Copyright © 2019 ICC & NYSDOS. ALL RIGHTS RESERVED. Accessed by Lauren Gualdino (lgualdino@briarcliffmanor.org), (-) Order Number #100880972 on May 08, 2020 07:05 AM (PDT) pursuant to License Agreement with ICC & NYSDOS. No further reproduction, no

100880972

CHAPTER 22

SPECIAL PIPING AND STORAGE SYSTEMS

SECTION M2201
OIL TANKS

M2201.1 Materials. Supply tanks shall be *listed* and *labeled* and shall conform to UL 58 for underground tanks and UL 80 for indoor tanks.

M2201.2 Above-ground tanks. The maximum amount of fuel oil stored above ground or inside of a building shall be 660 gallons (2498 L). The supply tank shall be supported on rigid noncombustible supports to prevent settling or shifting.

Exception: The storage of fuel oil, used for space or water heating, above ground or inside buildings in quantities exceeding 660 gallons (2498 L) shall comply with NFPA 31.

M2201.2.1 Tanks within buildings. Supply tanks for use inside of buildings shall be of such size and shape to permit installation and removal from *dwellings* as whole units. Supply tanks larger than 10 gallons (38 L) shall be placed not less than 5 feet (1524 mm) from any fire or flame either within or external to any fuel-burning *appliance*.

M2201.2.2 Outdoor above-ground tanks. Tanks installed outdoors, above ground shall be not less than 5 feet (1524 mm) from an adjoining property line. Such tanks shall be suitably protected from the weather and from physical damage.

M2201.3 Underground tanks. Excavations for underground tanks shall not undermine the foundations of existing structures. The clearance from the tank to the nearest wall of a *basement*, pit or property line shall be not less than 1 foot (305 mm). Tanks shall be set on and surrounded with noncorrosive inert materials such as clean earth, sand or gravel well-tamped in place. Tanks shall be covered with not less than 1 foot (305 mm) of earth. Corrosion protection shall be provided in accordance with Section M2203.7.

M2201.4 Multiple tanks. Cross connection of two supply tanks shall be permitted in accordance with Section M2203.6.

M2201.5 Oil gauges. Inside tanks shall be provided with a device to indicate when the oil in the tank has reached a predetermined safe level. Glass gauges or a gauge subject to breakage that could result in the escape of oil from the tank shall not be used. Liquid-level indicating gauges shall comply with UL 180.

M2201.6 Flood-resistant installation. In flood hazard areas as established by Table R301.2(1), tanks shall be installed in accordance with Section R322.2.4 or R322.3.10.

M2201.7 Tanks abandoned or removed. Outdoor above-grade fill piping shall be removed when tanks are abandoned or removed. Tank abandonment and removal shall be in accordance with the *Fire Code of New York State*.

SECTION M2202
OIL PIPING, FITTING AND CONNECTIONS

M2202.1 Materials. Piping shall consist of steel pipe, copper and copper-alloy pipe and tubing or steel tubing conforming to ASTM A539. Aluminum tubing shall not be used between the fuel-oil tank and the burner units.

M2202.2 Joints and fittings. Piping shall be connected with standard fittings compatible with the piping material. Cast-iron fittings shall not be used for oil piping. Unions requiring gaskets or packings, right or left couplings, and sweat fittings employing solder having a melting point less than 1,000°F (538°C) shall not be used for oil piping. Threaded joints and connections shall be made tight with a lubricant or pipe thread compound.

M2202.3 Flexible connectors. Flexible metallic hoses shall be *listed* and *labeled* in accordance with UL 536 and shall be installed in accordance with their *listing* and *labeling* and the manufacturer's installation instructions. Connectors made from combustible materials shall not be used inside of buildings or above ground outside of buildings.

SECTION M2203
INSTALLATION

M2203.1 General. Piping shall be installed in a manner to avoid placing stresses on the piping, and to accommodate expansion and contraction of the piping system.

M2203.2 Supply piping. Supply piping used in the installation of oil burners and *appliances* shall be not smaller than $^3/_8$-inch (9 mm) pipe or $^3/_8$-inch (9 mm) outside diameter tubing. Copper tubing and fittings shall be Type L or heavier.

M2203.3 Fill piping. Fill piping shall terminate outside of buildings at a point not less than 2 feet (610 mm) from any building opening at the same or lower level. Fill openings shall be equipped with a tight metal cover.

M2203.4 Vent piping. Vent piping shall be not smaller than $1^1/_4$-inch (32 mm) pipe. Vent piping shall be laid to drain toward the tank without sags or traps in which the liquid can collect. Vent pipes shall not be cross connected with fill pipes, lines from burners or overflow lines from auxiliary tanks. The lower end of a vent pipe shall enter the tank through the top and shall extend into the tank not more than 1 inch (25 mm).

M2203.5 Vent termination. Vent piping shall terminate outside of buildings at a point not less than 2 feet (610 mm), measured vertically or horizontally, from any building opening. Outer ends of vent piping shall terminate in a weatherproof cap or fitting having an unobstructed area equal to or greater than the cross-sectional area of the vent pipe, and shall be located sufficiently above the ground to avoid being obstructed by snow and ice.

INTERNATIONAL CODE COUNCIL®
Copyright © 2019 ICC & NYSDOS. ALL RIGHTS RESERVED. Accessed by Lauren Gualdino (lgualdino@briarcliffmanor.org), (-) Order Number #100880972 on May 08, 2020 07:05 AM (PDT) pursuant to License Agreement with ICC & NYSDOS. No further reproduction, no

100880972

M2203.6 Cross connection of tanks. Cross connection of two supply tanks, not exceeding 660 gallons (2498 L) aggregate capacity, with gravity flow from one tank to another, shall be acceptable providing that the two tanks are on the same horizontal plane.

M2203.7 Corrosion protection. Underground tanks and buried piping shall be protected by corrosion-resistant coatings or special alloys or fiberglass-reinforced plastic.

SECTION M2204
OIL PUMPS AND VALVES

M2204.1 Pumps. Oil pumps shall be positive displacement types that automatically shut off the oil supply when stopped. Automatic pumps shall be *listed* and *labeled* in accordance with UL 343 and shall be installed in accordance with their *listing*.

M2204.2 Shutoff valves. A manual shutoff valve shall be installed between the oil supply tank and the burner. Such valve shall be provided with ready access. Where the shutoff valve is installed in the discharge line of an oil pump, a pressure relief valve shall be incorporated to bypass or return surplus oil. Valves shall comply with UL 842.

M2204.3 Maximum pressure. Pressure at the oil supply inlet to an *appliance* shall be not greater than 3 pounds per square inch (20.7 kPa).

M2204.4 Relief valves. Fuel-oil lines incorporating heaters shall be provided with relief valves that will discharge to a return line when excess pressure exists.

INTERNATIONAL CODE COUNCIL®
Copyright © 2019 ICC & NYSDOS. ALL RIGHTS RESERVED. Accessed by Lauren Gualdino (lgualdino@briarcliffmanor.org), (-) Order Number #100880972 on May 08, 2020 07:05 AM (PDT) pursuant to License Agreement with ICC & NYSDOS. No further reproduction, no

100880972

CHAPTER 23

SOLAR THERMAL ENERGY SYSTEMS

SECTION M2301
SOLAR THERMAL ENERGY SYSTEMS

M2301.1 General. This section provides for the design, construction, installation, *alteration* and repair of *equipment* and systems using solar thermal energy to provide space heating or cooling, hot water heating and swimming pool heating.

M2301.2 Design and installation. The design and installation of solar thermal energy systems shall comply with Sections M2301.2.1 through M2301.2.13.

M2301.2.1 Access. Access shall be provided to solar energy *equipment* for maintenance. Solar systems and appurtenances shall not obstruct or interfere with the operation of any doors, windows or other building components requiring operation or access. Roof-mounted solar thermal equipment shall not obstruct or interfere with the operation of roof-mounted equipment, appliances, chimneys, plumbing vents, roof hatches, smoke vents, skylights and other roof penetrations and openings.

M2301.2.2 Collectors and panels. Solar collectors and panels shall comply with Sections M2301.2.2.1 and M2301.2.2.2.

M2301.2.2.1 Roof-mounted collectors. The roof shall be constructed to support the loads imposed by roof-mounted solar collectors. Roof-mounted solar collectors that serve as a roof covering shall conform to the requirements for roof coverings in Chapter 9 of this code. Where mounted on or above the roof coverings, the collectors and supporting structure shall be constructed of noncombustible materials or fire-retardant-treated wood equivalent to that required for the roof construction.

M2301.2.2.2 Collector sensors. Collector sensor installation, sensor location and the protection of exposed sensor wires from degradation shall be in accordance with ICC 900/SRCC 300.

M2301.2.3 Pressure and temperature relief valves and system components. System components containing fluids shall be protected with temperature and pressure relief valves or pressure relief valves. Relief devices shall be installed in sections of the system so that a section cannot be valved off or isolated from a relief device. Direct systems and the potable water portion of indirect systems shall be equipped with a relief valve in accordance with Section P2804. For indirect systems, pressure relief valves in solar loops shall comply with ICC 900/SRCC 300. System components shall have a working pressure rating of not less than the setting of the pressure relief device.

M2301.2.4 Vacuum relief. System components that might be subjected to a vacuum during operation or shutdown shall be designed to withstand such a vacuum or shall be protected with vacuum relief valves.

M2301.2.5 Piping insulation. Piping shall be insulated in accordance with the requirements of Chapter 11. Exterior insulation shall be protected from ultraviolet degradation. The entire solar loop shall be insulated. Where split-style insulation is used, the seam shall be sealed. Fittings shall be fully insulated.

Exceptions:

1. Those portions of the piping that are used to help prevent the system from overheating shall not be required to be insulated.
2. Those portions of piping that are exposed to solar radiation, made of the same material as the solar collector absorber plate and are covered in the same manner as the solar collector absorber, or that are used to collect additional solar energy, shall not be required to be insulated.
3. Piping in thermal solar systems using unglazed solar collectors to heat a swimming pool shall not be required to be insulated.

M2301.2.6 Protection from freezing. System components shall be protected from damage resulting from freezing of heat-transfer liquids at the winter design temperature provided in Table R301.2(1). Freeze protection shall be provided in accordance with ICC 900/SRCC 300. Drain-back systems shall be installed in compliance with Section M2301.2.6.1. Systems utilizing freeze-protection valves shall comply with Section M2301.2.6.2.

Exception: Where the 97.5-percent winter design temperature is greater than or equal to 48°F (9°C).

M2301.2.6.1 Drain-back systems. Drain-back systems shall be designed and installed to allow for manual gravity draining of fluids from areas subject to freezing to locations not subject to freezing, and air filling of the components and piping. Such piping and components shall maintain a horizontal slope in the direction of flow of not less than one-fourth unit vertical in 12 units horizontal (2-percent slope). Piping and components subject to manual gravity draining shall permit subsequent air filling upon drainage and air venting upon refilling.

M2301.2.6.2 Freeze-protection valves. Freeze-protection valves shall discharge in a manner that does not create a hazard or structural damage.

M2301.2.7 Storage tank sensors. Storage tank sensors shall comply with ICC 900/SRCC 300.

M2301.2.8 Expansion tanks. Expansion tanks in solar energy systems shall be installed in accordance with Section M2003 in solar collector loops that contain pressurized heat transfer fluid. Where expansion tanks are used, the system shall be designed in accordance with ICC 900/

INTERNATIONAL CODE COUNCIL®
Copyright © 2019 ICC & NYSDOS. ALL RIGHTS RESERVED. Accessed by Lauren Gualdino (lgualdino@briarcliffmanor.org), (-) Order Number #100880972 on May 08, 2020 07:05 AM (PDT) pursuant to License Agreement with ICC & NYSDOS. No further reproduction, no

100880972

SRCC 300 to provide an expansion tank that is sized to withstand the maximum operating pressure of the system.

Exception: Expansion tanks shall not be required in the collector loop of *drain-back systems*.

M2301.2.9 Roof and wall penetrations. Roof and wall penetrations shall be flashed and sealed in accordance with Chapter 9 to prevent entry of water, rodents and insects.

M2301.2.10 Description and warning labels. Solar thermal systems shall comply with description label and warning label requirements of Section M2301.2.11.2 and ICC 900/SRCC 300.

M2301.2.11 Solar loop. Solar loops shall be in accordance with Sections M2301.2.11.1 and M2301.2.11.2.

M2301.2.11.1 Solar loop isolation. Valves shall be installed to allow the solar loop to be isolated from the remainder of the system.

M2301.2.11.2 Drain and fill valve labels and caps. Drain and fill valves shall be labeled with a description and warning that identifies the fluid in the solar loop and a warning that the fluid might be discharged at high temperature and pressure. Drain caps shall be installed at drain and fill valves.

M2301.2.12 Maximum temperature limitation. Systems shall be equipped with means to limit the maximum water temperature of the system fluid entering or exchanging heat with any pressurized vessel inside the *dwelling* to 180°F (82°C). This protection is in addition to the required temperature and pressure relief valves required by Section M2301.2.3.

M2301.2.13 Thermal storage unit seismic bracing. In Seismic Design Categories D_0, D_1 and D_2 and in townhouses in Seismic Design Category C, thermal storage units shall be anchored in accordance with Section M1307.2.

M2301.3 Labeling. *Labeling* shall comply with Sections M2301.3.1 and M2301.3.2.

M2301.3.1 Collectors and panels. Solar thermal collectors and panels shall be listed and labeled in accordance with ICC 901/SRCC 100. Factory-built collectors shall bear a label indicating the manufacturer's name, model number and serial number.

M2301.3.2 Thermal storage units. Pressurized water storage tanks shall bear a label indicating the manufacturer's name and address, model number, serial number, storage unit maximum and minimum allowable operating temperatures and storage unit maximum and minimum allowable operating pressures. The *label* shall clarify that these specifications apply only to the water storage tanks.

M2301.4 Heat transfer gases or liquids and heat exchangers. *Essentially toxic transfer fluids*, ethylene glycol, flammable gases and flammable liquids shall not be used as heat transfer fluids. Heat transfer gases and liquids shall be rated to withstand the system's maximum design temperature under operating conditions without degradation. Heat exchangers used in solar thermal systems shall comply with Section P2902.5.2 and ICC 900/SRCC 300.

Heat transfer fluids shall be in accordance with SRCC 300. The flash point of the heat transfer fluids utilized in solar thermal systems shall be not less than 50°F (28°C) above the design maximum nonoperating or no-flow temperature attained by the fluid in the collector.

M2301.5 Backflow protection. Connections from the potable water supply to solar systems shall comply with Section P2902.5.5.

M2301.6 Filtering. Air provided to occupied spaces that passes through thermal mass storage systems by mechanical means shall be filtered for particulates at the outlet of the thermal mass storage system.

M2301.7 Solar thermal systems for heating potable water. Where a solar thermal system heats potable water to supply a potable hot water distribution system, the solar thermal system shall be in accordance with Sections M2301.7.1, M2301.7.2 and P2902.5.5.

M2301.7.1 Indirect systems. Heat exchangers that are components of indirect solar thermal heating systems shall comply with Section P2902.5.2.

M2301.7.2 Direct systems. Where potable water is directly heated by a solar thermal system, the pipe, fittings, valves and other components that are in contact with the potable water in the solar heating system shall comply with the requirements of Chapter 29.

INTERNATIONAL CODE COUNCIL®
Copyright © 2019 ICC & NYSDOS. ALL RIGHTS RESERVED. Accessed by Lauren Gualdino (lgualdino@briarcliffmanor.org), (-) Order Number #100880972 on May 08, 2020 07:05 AM (PDT) pursuant to License Agreement with ICC & NYSDOS. No further reproduction, no

100880972

Part VI—Fuel Gas

CHAPTER 24

FUEL GAS

The text of this chapter is extracted from the Fuel Gas Code of New York State *and has been modified where necessary to conform to the scope of application of the* Residential Code of New York State for One- and Two-Family Dwellings. *The section numbers appearing in parentheses after each section number are the section numbers of the corresponding text in the* Fuel Gas Code of New York State.

SECTION G2401 (101) GENERAL

G2401.1 (101.2) Application. This chapter covers those fuel gas *piping systems*, fuel-gas *appliances* and related accessories, *venting systems* and *combustion air* configurations most commonly encountered in the construction of one- and two-family dwellings and structures regulated by this *code*.

Coverage of *piping systems* shall extend from the *point of delivery* to the outlet of the *appliance* shutoff *valves* (see definition of *"Point of delivery"*). *Piping systems* requirements shall include design, materials, components, fabrication, assembly, installation, testing, inspection, operation and maintenance. Requirements for gas *appliances* and related accessories shall include installation, combustion and ventilation air and venting and connections to *piping systems*.

The omission from this chapter of any material or method of installation provided for in the *Fuel Gas Code of New York State* shall not be construed as prohibiting the use of such material or method of installation. Fuel-gas *piping systems*, fuel-gas *appliances* and related accessories, *venting systems* and *combustion air* configurations not specifically covered in these chapters shall comply with the applicable provisions of the *Fuel Gas Code of New York State*.

Gaseous hydrogen systems shall be regulated by Chapter 7 of the *Fuel Gas Code of New York State*.

This chapter shall not apply to the following:

1. Liquefied natural gas (LNG) installations.
2. Temporary LP-*gas piping* for buildings under construction or renovation that is not to become part of the permanent *piping system*.
3. Except as provided in Section G2412.1.1, gas *piping*, meters, gas pressure regulators, and other appurtenances used by the serving gas supplier in the distribution of gas, other than undiluted LP-gas.
4. Portable LP-gas *appliances* and *equipment* of all types that is not connected to a fixed fuel *piping system*.
5. Portable fuel cell *appliances* that are neither connected to a fixed *piping system* nor interconnected to a power grid.
6. Installation of hydrogen gas, LP-gas and compressed natural gas (CNG) systems on vehicles.

SECTION G2402 (201) GENERAL

G2402.1 (201.1) Scope. Unless otherwise expressly stated, the following words and terms shall, for the purposes of this chapter, have the meanings indicated in this chapter.

G2402.2 (201.2) Interchangeability. Words used in the present tense include the future; words in the masculine gender include the feminine and neuter; the singular number includes the plural and the plural, the singular.

G2402.3 (201.3) Terms defined in other codes. Where terms are not defined in this code and are defined in the *Building Code of New York State*, *Fire Code of New York State*, *Mechanical Code of New York State, Fuel Gas Code of New York State* or *Plumbing Code of New York State*, such terms shall have meanings ascribed to them as in those *codes*.

SECTION G2403 (202) GENERAL DEFINITIONS

ACCESS (TO). That which enables a device, *appliance* or *equipment* to be reached by ready *access* or by a means that first requires the removal or movement of a panel, door or similar obstruction (see also "Ready *access*").

AIR CONDITIONER, GAS-FIRED. A gas-burning, automatically operated *appliance* for supplying cooled air, dehumidified air, or both, or chilled liquid.

AIR CONDITIONING. The treatment of air so as to control simultaneously the temperature, humidity, cleanness and distribution of the air to meet the requirements of a conditioned space.

AIR, EXHAUST. Air being removed from any space or piece of *equipment* or *appliance* and conveyed directly to the atmosphere by means of openings or ducts.

AIR-HANDLING UNIT. A blower or fan used for the purpose of distributing supply air to a room, space or area.

AIR, MAKEUP. Any combination of outdoor and transfer air intended to replace exhaust air and exfiltration.

INTERNATIONAL CODE COUNCIL®
Copyright © 2019 ICC & NYSDOS. ALL RIGHTS RESERVED. Accessed by Lauren Gualdino (lgualdino@briarcliffmanor.org), (-) Order Number #100880972 on May 08, 2020 07:05 AM (PDT) pursuant to License Agreement with ICC & NYSDOS. No further reproduction, no

100880972

ALTERATION. A change in a system that involves an extension, addition or change to the arrangement, type or purpose of the original installation.

ANODELESS RISER. A transition assembly in which plastic *piping* is installed and terminated above ground outside of a building.

APPLIANCE. Any apparatus or device that utilizes a fuel or a raw material as a fuel to produce light, heat, power, refrigeration or air conditioning. Also, an apparatus that compresses fuel gases.

APPLIANCE, AUTOMATICALLY CONTROLLED. Appliances equipped with an automatic *burner* ignition and safety shutoff device and other automatic devices, that accomplish complete turn-on and shutoff of the gas to the *main burner* or *burners*, and graduate the gas supply to the *burner* or *burners*, but do not affect complete shutoff of the gas.

APPLIANCE, FAN-ASSISTED COMBUSTION. An *appliance* equipped with an integral mechanical means to either draw or force products of combustion through the combustion chamber or heat exchanger.

APPLIANCE, UNVENTED. An *appliance* designed or installed in such a manner that the products of combustion are not conveyed by a vent or *chimney* directly to the outside atmosphere.

APPLIANCE, VENTED. An *appliance* designed and installed in such a manner that all of the products of combustion are conveyed directly from the *appliance* to the outside atmosphere through an *approved chimney* or vent system.

APPROVED. Acceptable to the *building official*.

APPROVED AGENCY. An established and recognized agency that is regularly engaged in conducting tests, furnishing inspection services or furnishing certification, where such agency has been approved by the *building official*.

ATMOSPHERIC PRESSURE. The pressure of the weight of air and water vapor on the surface of the earth, approximately 14.7 pounds per square inch (psia) (101 kPa absolute) at sea level.

AUTOMATIC IGNITION. Ignition of gas at the *burner(s)* when the gas controlling device is turned on, including reignition if the flames on the *burner(s)* have been extinguished by means other than by the closing of the gas controlling device.

BAROMETRIC DRAFT REGULATOR. A balanced *damper* device attached to a *chimney,* vent *connector,* breeching or flue gas manifold to protect combustion *appliances* by controlling *chimney draft*. A double-acting *barometric draft regulator* is one whose balancing *damper* is free to move in either direction to protect combustion *appliances* from both excessive *draft* and backdraft.

BOILER, LOW-PRESSURE. A self-contained *appliance* for supplying steam or hot water.

Hot water heating boiler. A boiler in which no steam is generated, from which hot water is circulated for heating purposes and then returned to the boiler, and that operates at water pressures not exceeding 160 pounds per square inch gauge (psig) (1100 kPa gauge) and at water temperatures not exceeding 250ºF (121ºC) at or near the boiler outlet.

Hot water supply boiler. A boiler, completely filled with water, which furnishes hot water to be used externally to itself, and that operates at water pressures not exceeding 160 psig (1100 kPa gauge) and at water temperatures not exceeding 250ºF (121ºC) at or near the boiler outlet.

Steam heating boiler. A boiler in which steam is generated and that operates at a steam pressure not exceeding 15 psig (100 kPa gauge).

BONDING JUMPER. A conductor installed to electrically connect metallic gas *piping* to the grounding electrode system.

BRAZING. A metal-joining process wherein coalescence is produced by the use of a nonferrous filler metal having a melting point above 1,000ºF (538ºC), but lower than that of the base metal being joined. The filler material is distributed between the closely fitted surfaces of the joint by capillary action.

BTU. Abbreviation for British thermal unit, which is the quantity of heat required to raise the temperature of 1 pound (454 g) of water 1ºF (0.56ºC) (1 *Btu* = 1055 J).

BUILDING OFFICIAL. The officer or other designated authority charged with the administration and enforcement of this code, or a duly authorized representative.

BURNER. A device for the final conveyance of the gas, or a mixture of gas and air, to the combustion zone.

Induced-draft. A *burner* that depends on *draft* induced by a fan that is an integral part of the *appliance* and is located downstream from the *burner*.

Power. A *burner* in which gas, air or both are supplied at pressures exceeding, for gas, the line pressure, and for air, atmospheric pressure, with this added pressure being applied at the *burner*.

CHIMNEY. A primarily vertical structure containing one or more flues, for the purpose of carrying gaseous products of *combustion* and air from an *appliance* to the outside atmosphere.

Factory-built chimney. A *listed* and *labeled* chimney composed of factory-made components, assembled in the field in accordance with manufacturer's instructions and the conditions of the listing.

Masonry chimney. A field-constructed chimney composed of solid masonry units, bricks, stones or concrete.

CLEARANCE. The minimum distance through air measured between the heat-producing surface of the mechanical *appliance*, device or *equipment* and the surface of the *combustible material* or *assembly*.

CLOTHES DRYER. An *appliance* used to dry wet laundry by means of heated air.

Type 1. Factory-built package, multiple production. Primarily used in the family living environment. Usually the smallest unit physically and in function output.

INTERNATIONAL CODE COUNCIL®
Copyright © 2019 ICC & NYSDOS. ALL RIGHTS RESERVED. Accessed by Lauren Gualdino (lgualdino@briarcliffmanor.org), (-) Order Number #100880972 on May 08, 2020 07:05 AM (PDT) pursuant to License Agreement with ICC & NYSDOS. No further reproduction, no

100880972

CODE. These regulations, subsequent amendments thereto, or any emergency rule or regulation that the administrative authority having jurisdiction has lawfully adopted.

COMBUSTIBLE ASSEMBLY. Wall, floor, ceiling or other assembly constructed of one or more component materials that are not defined as noncombustible.

COMBUSTIBLE MATERIAL. Any material not defined as noncombustible.

COMBUSTION. In the context of this code, refers to the rapid oxidation of fuel accompanied by the production of heat or heat and light.

COMBUSTION AIR. Air necessary for complete combustion of a fuel, including theoretical air and excess air.

COMBUSTION CHAMBER. The portion of an *appliance* within which combustion occurs.

COMBUSTION PRODUCTS. Constituents resulting from the combustion of a fuel with the oxygen of the air, including the inert gases, but excluding excess air.

CONCEALED LOCATION. A location that cannot be accessed without damaging permanent parts of the building structure or finish surface. Spaces above, below or behind readily removable panels or doors shall not be considered as concealed.

CONCEALED PIPING. *Piping* that is located in a *concealed location* (see *"Concealed location"*).

CONDENSATE. The liquid that condenses from a gas (including flue gas) caused by a reduction in temperature or increase in pressure.

CONNECTOR, APPLIANCE (Fuel). Rigid metallic *pipe* and fittings, semirigid metallic *tubing* and fittings or a *listed* and *labeled* device that connects an *appliance* to the *gas piping system*.

CONNECTOR, CHIMNEY OR VENT. The *pipe* that connects an *appliance* to a chimney or vent.

CONTROL. A manual or automatic device designed to regulate the gas, air, water or electrical supply to, or operation of, a mechanical system.

CONVERSION BURNER. A unit consisting of a *burner* and its *controls* for installation in an *appliance* originally utilizing another fuel.

CUBIC FOOT. The amount of gas that occupies 1 cubic foot (0.02832 m^3) when at a temperature of 60ºF (16ºC), saturated with water vapor and under a pressure equivalent to that of 30 inches of mercury (101 kPa).

DAMPER. A manually or automatically controlled device to regulate *draft* or the rate of flow of air or combustion gases.

DECORATIVE APPLIANCE, VENTED. A *vented appliance* wherein the primary function lies in the aesthetic effect of the flames.

DECORATIVE APPLIANCES FOR INSTALLATION IN VENTED FIREPLACES. A *vented appliance* designed for installation within the fire chamber of a vented *fireplace*, wherein the primary function lies in the aesthetic effect of the flames.

DEMAND. The maximum amount of gas input required per unit of time, usually expressed in cubic feet per hour, or *Btu*/h (1 *Btu*/h = 0.2931 W).

DESIGN FLOOD ELEVATION. The elevation of the "design flood," including wave height, relative to the datum specified on the community's legally designated flood hazard map. In areas designated as Zone AO, the *design flood elevation* shall be the elevation of the highest existing grade of the *building's* perimeter plus the depth number (in feet) specified on the flood hazard map. In areas designated as Zone AO where a depth number is not specified on the map, the depth number shall be taken as being equal to 2 feet (610 mm).

DILUTION AIR. Air that is introduced into a *draft hood* and is mixed with the *flue gases*.

DIRECT-VENT APPLIANCES. *Appliances* that are constructed and installed so that all air for combustion is derived directly from the outside atmosphere and all *flue gases* are discharged directly to the outside atmosphere.

DRAFT. The pressure difference existing between the *appliance* or any component part and the atmosphere, that causes a continuous flow of air and products of combustion through the gas passages of the *appliance* to the atmosphere.

Mechanical or induced draft. The pressure difference created by the action of a fan, blower or ejector that is located between the *appliance* and the chimney or vent termination.

Natural draft. The pressure difference created by a vent or chimney because of its height, and the temperature difference between the *flue gases* and the atmosphere.

DRAFT HOOD. A nonadjustable device built into an *appliance*, or made as part of the *vent connector* from an *appliance*, that is designed to: provide for ready escape of the *flue gases* from the *appliance* in the event of no *draft,* backdraft, or stoppage beyond the *draft hood*; prevent a backdraft from entering the *appliance*; and neutralize the effect of stack action of the chimney or gas vent upon operation of the *appliance*.

DRAFT REGULATOR. A device that functions to maintain a desired *draft* in the *appliance* by automatically reducing the *draft* to the desired value.

DRIP. The container placed at a low point in a system of *piping* to collect *condensate* and from which the *condensate* is removable.

DUCT FURNACE. A warm-air *furnace* normally installed in an air distribution duct to supply warm air for heating. This definition shall apply only to a warm-air heating *appliance* that depends for air circulation on a blower not furnished as part of the *furnace*.

DWELLING UNIT. A single unit providing complete, independent living facilities for one or more persons, including permanent provisions for living, sleeping, eating, cooking and sanitation.

EQUIPMENT. Apparatus and devices other than *appliances*.

INTERNATIONAL CODE COUNCIL®
Copyright © 2019 ICC & NYSDOS. ALL RIGHTS RESERVED. Accessed by Lauren Gualdino (lgualdino@briarcliffmanor.org), (-) Order Number #100880972 on May 08, 2020 07:05 AM (PDT) pursuant to License Agreement with ICC & NYSDOS. No further reproduction, no

100880972

EXCESS FLOW VALVE (EFV). A valve designed to activate when the fuel gas passing through it exceeds a prescribed flow rate.

EXTERIOR MASONRY CHIMNEYS. Masonry chimneys exposed to the outdoors on one or more sides below the roof line.

FIREPLACE. A fire chamber and hearth constructed of *noncombustible material* for use with solid fuels and provided with a chimney.

Factory-built fireplace. A *fireplace* composed of *listed* factory-built components assembled in accordance with the terms of listing to form the completed *fireplace.*

Masonry fireplace. A hearth and fire chamber of solid masonry units such as bricks, stones, *listed* masonry units or reinforced concrete, provided with a suitable chimney.

FLAME SAFEGUARD. A device that will automatically shut off the fuel supply to a *main burner* or group of *burners* when the means of ignition of such *burners* becomes inoperative, and when flame failure occurs on the *burner* or group of *burners*.

FLASHBACK ARRESTOR CHECK VALVE. A device that will prevent the backflow of one gas into the supply system of another gas and prevent the passage of flame into the gas supply system.

FLOOD HAZARD AREA. The greater of the following two areas:

1. The area within a floodplain subject to a 1 percent or greater chance of flooding in any given year.
2. This area designated as a *flood hazard area* on a community's flood hazard map, or otherwise legally designated.

FLOOR FURNACE. A completely self-contained *furnace* suspended from the floor of the space being heated, taking air for combustion from outside such space and with means for observing flames and lighting the *appliance* from such space.

FLUE, APPLIANCE. The passage(s) within an *appliance* through which *combustion products* pass from the *combustion chamber* of the *appliance* to the *draft hood* inlet opening on an *appliance* equipped with a *draft hood* or to the outlet of the *appliance* on an *appliance* not equipped with a *draft hood*.

FLUE COLLAR. That portion of an *appliance* designed for the attachment of a *draft hood*, *vent connector* or venting system.

FLUE GASES. Products of combustion plus excess air in *appliance flues* or heat exchangers.

FLUE LINER (LINING). A system or material used to form the inside surface of a flue in a *chimney* or vent, for the purpose of protecting the surrounding structure from the effects of *combustion products* and for conveying *combustion products* without leakage to the atmosphere.

FUEL GAS. A natural gas, manufactured gas, *liquefied petroleum gas* or mixtures of these gases.

FURNACE. A completely self-contained heating unit that is designed to supply heated air to spaces remote from or adjacent to the *appliance* location.

FURNACE, CENTRAL. A self-contained *appliance* for heating air by transfer of heat of *combustion* through metal to the air, and designed to supply heated air through ducts to spaces remote from or adjacent to the *appliance* location.

FURNACE PLENUM. An air compartment or chamber to which one or more ducts are connected and that forms part of an air distribution system.

GAS CONVENIENCE OUTLET. A permanently mounted, manually operated device that provides the means for connecting an *appliance* to, and disconnecting an *appliance* from, the supply *piping*. The device includes an integral, manually operated valve with a nondisplaceable valve member and is designed so that disconnection of an *appliance* only occurs when the manually operated valve is in the closed position.

GAS PIPING. An installation of pipe, valves or fittings installed on a premises or in a building and utilized to convey fuel gas.

HAZARDOUS LOCATION. Any location considered to be a fire hazard for flammable vapors, dust, combustible fibers or other highly combustible substances. The location is not necessarily categorized in the *Building Code of New York State* as a high-hazard use group classification.

HOUSE PIPING. See *"Piping system."*

IGNITION PILOT. A *pilot* that operates during the lighting cycle and discontinues during *main burner* operation.

IGNITION SOURCE. A flame spark or hot surface capable of igniting flammable vapors or fumes. Such sources include *appliance burners, burner* ignitors and electrical switching devices.

INFRARED RADIANT HEATER. A heater that directs a substantial amount of its energy output in the form of infrared radiant energy into the area to be heated. Such heaters are of either the vented or unvented type.

JOINT, FLARED. A metal-to-metal compression joint in which a conical spread is made on the end of a tube that is compressed by a flare nut against a mating flare.

JOINT, MECHANICAL. A general form of gas-tight joints obtained by the joining of metal parts through a positive-holding mechanical construction, such as a press-connect joint, flanged joint, threaded joint, flared joint or compression joint.

JOINT, PLASTIC ADHESIVE. A joint made in thermoset plastic *piping* by the use of an adhesive substance that forms a continuous bond between the mating surfaces without dissolving either one of them.

LABELED. Equipment, materials or products to which have been affixed a label, seal, symbol or other identifying mark of a nationally recognized testing laboratory, inspection agency or other organization concerned with product evaluation that maintains periodic inspection of the production of the above-labeled items and whose labeling indicates either that the *equipment*, material or product meets identified standards or has been tested and found suitable for a specified purpose.

INTERNATIONAL CODE COUNCIL®
Copyright © 2019 ICC & NYSDOS. ALL RIGHTS RESERVED. Accessed by Lauren Gualdino (lgualdino@briarcliffmanor.org), (-) Order Number #100880972 on May 08, 2020 07:05 AM (PDT) pursuant to License Agreement with ICC & NYSDOS. No further reproduction, no

100880972

LEAK CHECK. An operation performed on a gas *piping system* to verify that the system does not leak.

LIQUEFIED PETROLEUM GAS or LPG (LP-GAS). *Liquefied petroleum gas* composed predominately of propane, propylene, butanes or butylenes, or mixtures thereof that is gaseous under normal atmospheric conditions, but is capable of being liquefied under moderate pressure at normal temperatures.

LISTED. Equipment, materials, products or services included in a list published by an organization acceptable to the *building official* and concerned with evaluation of products or services that maintains periodic inspection of production of *listed equipment* or materials or periodic evaluation of services and whose listing states either that the *equipment*, material, product or service meets identified standards or has been tested and found suitable for a specified purpose.

LIVING SPACE. Space within a *dwelling unit* utilized for living, sleeping, eating, cooking, bathing, washing and sanitation purposes.

LOG LIGHTER. A manually operated solid-fuel ignition *appliance* for installation in a vented solid fuel-burning *fireplace*.

MAIN BURNER. A device or group of devices essentially forming an integral unit for the final conveyance of gas or a mixture of gas and air to the combustion zone, and on which combustion takes place to accomplish the function for which the *appliance* is designed.

METER. The instrument installed to measure the volume of gas delivered through it.

MODULATING. Modulating or throttling is the action of a *control* from its maximum to minimum position in either predetermined steps or increments of movement as caused by its actuating medium.

NONCOMBUSTIBLE MATERIALS. Materials that, where tested in accordance with ASTM E136, have not fewer than three of four specimens tested meeting all of the following criteria:

1. The recorded temperature of the surface and interior thermocouples shall not at any time during the test rise more than 54ºF (30ºC) above the furnace temperature at the beginning of the test.
2. There shall not be flaming from the specimen after the first 30 seconds.
3. If the weight loss of the specimen during testing exceeds 50 percent, the recorded temperature of the surface and interior thermocouples shall not at any time during the test rise above the furnace air temperature at the beginning of the test, and there shall not be flaming of the specimen.

OFFSET (VENT). A combination of *approved* bends that make two changes in direction bringing one section of the vent out of line, but into a line parallel with the other section.

OUTLET. The point at which a gas-fired *appliance* connects to the gas *piping system*.

OXYGEN DEPLETION SAFETY SHUTOFF SYSTEM (ODS). A system designed to act to shut off the gas supply to the main and *pilot burners* if the oxygen in the surrounding atmosphere is reduced below a predetermined level.

PILOT. A small flame that is utilized to ignite the gas at the *main burner* or *burners*.

PIPING. Where used in this code, *"piping"* refers to either *pipe* or *tubing*, or both.

Pipe. A rigid conduit of iron, steel, copper, copper-alloy or plastic.

Tubing. Semirigid conduit of copper, copper-alloy, aluminum, plastic or steel.

PIPING SYSTEM. The fuel *piping,* valves and fittings from the outlet of the *point of delivery* to the outlets of the *appliance* shutoff valves.

PLASTIC, THERMOPLASTIC. A plastic that is capable of being repeatedly softened by increase of temperature and hardened by decrease of temperature.

POINT OF DELIVERY. For natural gas systems, the *point of delivery* is the outlet of the service meter assembly or the outlet of the service regulator or service shutoff valve where a meter is not provided. Where a valve is provided at the outlet of the service meter assembly, such valve shall be considered to be downstream of the *point of delivery*. For undiluted liquefied petroleum gas systems, the point of delivery shall be considered to be the outlet of the service pressure regulator, exclusive of line gas regulators, in the system.

PRESSURE DROP. The loss in pressure due to friction or obstruction in pipes, valves, fittings, *regulators* and *burners*.

PRESSURE TEST. An operation performed to verify the gas-tight integrity of *gas piping* following its installation or modification.

PURGE. To free a gas conduit of air or gas, or a mixture of gas and air.

READY ACCESS (TO). That which enables a device, *appliance* or *equipment* to be directly reached, without requiring the removal or movement of any panel, door or similar obstruction. (See "Access.")

REGULATOR. A device for controlling and maintaining a uniform gas supply pressure, either pounds-to-inches water column (MP regulator) or inches-to-inches water column (*appliance regulator*).

REGULATOR, GAS APPLIANCE. A *pressure regulator* for controlling pressure to the manifold of the gas *appliance*.

REGULATOR, LINE GAS PRESSURE. A device placed in a gas line between the *service pressure regulator* and the *appliance* for controlling, maintaining or reducing the pressure in that portion of the *piping system* downstream of the device.

REGULATOR, MEDIUM-PRESSURE (MP Regulator). A line *pressure regulator* that reduces gas pressure from the range of greater than 0.5 psig (3.4 kPa) and less than or equal to 5 psig (34.5 kPa) to a lower pressure.

INTERNATIONAL CODE COUNCIL®
Copyright © 2019 ICC & NYSDOS. ALL RIGHTS RESERVED. Accessed by Lauren Gualdino (lgualdino@briarcliffmanor.org), (-) Order Number #100880972 on May 08, 2020 07:05 AM (PDT) pursuant to License Agreement with ICC & NYSDOS. No further reproduction, no

100880972

REGULATOR, PRESSURE. A device placed in a gas line for reducing, controlling and maintaining the pressure in that portion of the *piping system* downstream of the device.

REGULATOR, SERVICE PRESSURE. For natural gas systems, a device installed by the serving gas supplier to reduce and limit the service line pressure to delivery pressure. For undiluted liquefied petroleum gas systems, the regulator located upstream from all line gas pressure regulators, where installed, and downstream from any first stage or a high pressure regulator in the system.

RELIEF OPENING. The opening provided in a *draft hood* to permit the ready escape to the atmosphere of the flue products from the *draft hood* in the event of no *draft*, backdraft or stoppage beyond the *draft hood*, and to permit air into the *draft hood* in the event of a strong chimney updraft.

RELIEF VALVE (DEVICE). A safety valve designed to forestall the development of a dangerous condition by relieving either pressure, temperature or vacuum in the hot water supply system.

RELIEF VALVE, PRESSURE. An *automatic valve* that opens and closes a relief vent, depending on whether the pressure is above or below a predetermined value.

RELIEF VALVE, TEMPERATURE.

Manual reset type. A valve that automatically opens a *relief* vent at a predetermined temperature and that must be manually returned to the closed position.

Reseating or self-closing type. An *automatic valve* that opens and closes a relief vent, depending on whether the temperature is above or below a predetermined value.

RELIEF VALVE, VACUUM. A valve that automatically opens and closes a vent for relieving a vacuum within the hot water supply system, depending on whether the vacuum is above or below a predetermined value.

RISER, GAS. A vertical *pipe* supplying fuel gas.

ROOM HEATER, UNVENTED. See *"Unvented room heater."*

ROOM HEATER, VENTED. A free-standing heating unit used for direct heating of the space in and adjacent to that in which the unit is located. (See "Vented room heater.")

SAFETY SHUTOFF DEVICE. See "Flame safeguard."

SHAFT. An enclosed space extending through one or more stories of a building, connecting vertical openings in successive floors, or floors and the roof.

SPECIFIC GRAVITY. As applied to gas, *specific gravity* is the ratio of the weight of a given volume to that of the same volume of air, both measured under the same condition.

THERMOSTAT.

Electric switch type. A device that senses changes in temperature and controls electrically, by means of separate components, the flow of gas to the *burner(s)* to maintain selected temperatures.

THIRD-PARTY CERTIFICATION AGENCY. An approved agency operating a product or material certification system that incorporates initial product testing, assessment and surveillance of a manufacturer's quality control system.

THIRD-PARTY CERTIFIED. Certification obtained by the manufacturer indicating that the function and performance characteristics of a product or material have been determined by testing and ongoing surveillance by an approved third-party certification agency. Assertion of certification is in the form of identification in accordance with the requirements of the third-party certification agency.

THIRD-PARTY TESTED. Procedure by which an approved testing laboratory provides documentation that a product, material or system conforms to specified requirements.

TOILET, GAS-FIRED. A packaged and completely assembled appliance containing a toilet that incinerates refuse instead of flushing it away with water.

TRANSITION FITTINGS, PLASTIC TO STEEL. An adapter for joining plastic *pipe* to steel *pipe*. The purpose of this fitting is to provide a permanent, pressure-tight connection between two materials that cannot be joined directly one to another.

UNIT HEATER. A self-contained, automatically controlled, vented, fuel-gas-burning, space-heating appliance, intended for installation in the space to be heated without the use of ducts, and having integral means for circulation of air.

UNVENTED ROOM HEATER. An unvented heating *appliance* designed for stationary installation and utilized to provide comfort heating. Such *appliances* provide radiant heat or convection heat by gravity or fan circulation directly from the heater and do not utilize ducts.

VALVE. A device used in *piping* to control the gas supply to any section of a system of *piping* or to an *appliance*.

Appliance shutoff. A *valve* located in the *piping system*, used to isolate individual *appliances* for purposes such as service or replacement.

Automatic. An automatic or semiautomatic device consisting essentially of a *valve* and an operator that control the gas supply to the *burner(s)* during operation of an *appliance*. The operator shall be actuated by application of gas pressure on a flexible diaphragm, by electrical means, by mechanical means or by other *approved* means.

Automatic gas shutoff. A *valve* used in conjunction with an automatic gas shutoff device to shut off the gas supply to a water-heating system. It shall be constructed integrally with the gas shutoff device or shall be a separate assembly.

Individual main burner. A *valve* that controls the gas supply to an individual *main burner*.

Main burner control. A *valve* that controls the gas supply to the *main burner* manifold.

Manual main gas-control. A manually operated *valve* in the gas line for the purpose of completely turning on or shutting off the gas supply to the *appliance*, except to *pilot* or pilots that are provided with independent shutoff.

INTERNATIONAL CODE COUNCIL®
Copyright © 2019 ICC & NYSDOS. ALL RIGHTS RESERVED. Accessed by Lauren Gualdino (lgualdino@briarcliffmanor.org), (-) Order Number #100880972 on May 08, 2020 07:05 AM (PDT) pursuant to License Agreement with ICC & NYSDOS. No further reproduction, no

100880972

Manual reset. An automatic shutoff valve installed in the gas supply *piping* and set to shut off when unsafe conditions occur. The device remains closed until manually reopened.

Service shutoff. A valve, installed by the serving gas supplier between the service meter or source of supply and the customer *piping system,* to shut off the entire *piping system.*

VENT. A *pipe* or other conduit composed of factory-made components, containing a passageway for conveying *combustion products* and air to the atmosphere, *listed* and *labeled* for use with a specific type or class of *appliance*.

Special gas vent. A vent *listed* and *labeled* for use with *listed* Category II, III and IV gas *appliances*.

Type B vent. A vent *listed* and *labeled* for use with *appliances* with *draft hoods* and other Category I *appliances* that are *listed* for use with Type B vents.

Type BW vent. A vent *listed* and *labeled* for use with wall *furnaces*.

Type L vent. A vent *listed* and *labeled* for use with *appliances* that are *listed* for use with Type L or Type B vents.

VENT CONNECTOR. See "Connector."

VENT PIPING.

Breather. *Piping* run from a pressure-regulating device to the outdoors, designed to provide a reference to *atmospheric pressure*. If the device incorporates an integral pressure *relief* mechanism, a breather vent can also serve as a *relief* vent.

Relief. *Piping* run from a pressure-regulating or pressure-limiting device to the outdoors, designed to provide for the safe venting of gas in the event of excessive pressure in the *gas piping system*.

VENTED APPLIANCE CATEGORIES. *Appliances* that are categorized for the purpose of vent selection are classified into the following four categories:

Category I. An *appliance* that operates with a nonpositive vent static pressure and with a vent gas temperature that avoids excessive *condensate* production in the vent.

Category II. An *appliance* that operates with a nonpositive *vent* static pressure and with a vent gas temperature that is capable of causing excessive *condensate* production in the vent.

Category III. An *appliance* that operates with a positive vent static pressure and with a vent gas temperature that avoids excessive *condensate* production in the vent.

Category IV. An *appliance* that operates with a positive vent static pressure and with a vent gas temperature that is capable of causing excessive *condensate* production in the vent.

VENTED ROOM HEATER. A vented self-contained, freestanding, nonrecessed *appliance* for furnishing warm air to the space in which it is installed, directly from the heater without duct connections.

VENTED WALL FURNACE. A self-contained vented *appliance* complete with grilles or equivalent, designed for incorporation in or permanent attachment to the structure of a building, mobile home or travel trailer, and furnishing heated air circulated by gravity or by a fan directly into the space to be heated through openings in the casing. This definition shall exclude *floor furnaces, unit heaters* and *central furnaces* as herein defined.

VENTING SYSTEM. A continuous open passageway from the *flue collar* or *draft hood* of an *appliance* to the outdoor atmosphere for the purpose of removing flue or vent gases. A venting system is usually composed of a vent or a chimney and *vent connector*, if used, assembled to form the open passageway.

WALL HEATER, UNVENTED TYPE. A room heater of the type designed for insertion in or attachment to a wall or partition. Such heater does not incorporate concealed venting arrangements in its construction and discharges all products of *combustion* through the front into the room being heated.

WATER HEATER. Any heating *appliance* or *equipment* that heats potable water and supplies such water to the potable hot water distribution system.

SECTION G2404 (301)
GENERAL

G2404.1 (301.1) Scope. This section shall govern the approval and installation of all *equipment* and *appliances* that comprise parts of the installations regulated by this *code* in accordance with Section G2401.

G2404.2 (301.1.1) Other fuels. The requirements for *combustion* and *dilution air* for gas-fired *appliances* shall be governed by Section G2407. The requirements for *combustion* and *dilution air* for *appliances* operating with fuels other than fuel gas shall be regulated by Chapter 17.

G2404.3 (301.3) Listed and labeled. *Appliances* regulated by this *code* shall be *listed* and *labeled* for the application in which they are used unless otherwise *approved* in accordance with Section R104.3. The approval of unlisted *appliances* in accordance with Section R104.3 shall be based on *approved* engineering evaluation.

G2404.4 (301.8) Vibration isolation. Where means for isolation of vibration of an *appliance* is installed, an *approved* means for support and restraint of that *appliance* shall be provided.

G2404.5 (301.9) Repair. Defective material or parts shall be replaced or repaired in such a manner so as to preserve the original approval or listing.

G2404.6 (301.10) Wind resistance. *Appliances* and supports that are exposed to wind shall be designed and installed to resist the wind pressures determined in accordance with this *code*.

G2404.7 (301.11) Flood hazard. For structures located in flood hazard areas, the appliance, equipment and system installations regulated by this code shall be located at or

INTERNATIONAL CODE COUNCIL®
Copyright © 2019 ICC & NYSDOS. ALL RIGHTS RESERVED. Accessed by Lauren Gualdino (lgualdino@briarcliffmanor.org), (-) Order Number #100880972 on May 08, 2020 07:05 AM (PDT) pursuant to License Agreement with ICC & NYSDOS. No further reproduction, no

100880972

above the elevation required by Section R322 for utilities and attendant equipment.

Exception: The appliance, equipment and system installations regulated by this code are permitted to be located below the elevation required by Section R322 for utilities and attendant equipment provided that they are designed and installed to prevent water from entering or accumulating within the components and to resist hydrostatic and hydrodynamic loads and stresses, including the effects of buoyancy, during the occurrence of flooding to such elevation.

G2404.8 (301.12) Seismic resistance. Where earthquake loads are applicable in accordance with this code, the supports shall be designed and installed for the seismic forces in accordance with this code.

G2404.9 (301.14) Rodentproofing. Buildings or structures and the walls enclosing habitable or occupiable rooms and spaces in which persons live, sleep or work, or in which feed, food or foodstuffs are stored, prepared, processed, served or sold, shall be constructed to protect against the entry of rodents.

G2404.10 (307.5) Auxiliary drain pan. Category IV condensing *appliances* shall be provided with an auxiliary drain pan where damage to any building component will occur as a result of stoppage in the *condensate* drainage system. Such pan shall be installed in accordance with the applicable provisions of Section M1411.

Exception: An auxiliary drain pan shall not be required for *appliances* that automatically shut down operation in the event of a stoppage in the *condensate* drainage system.

G2404.11 (307.6) Condensate pumps. Condensate pumps located in uninhabitable spaces, such as attics and crawl spaces, shall be connected to the *appliance* or *equipment* served such that when the pump fails, the *appliance* or *equipment* will be prevented from operating. Pumps shall be installed in accordance with the manufacturer's instructions.

SECTION G2405 (302)
STRUCTURAL SAFETY

G2405.1 (302.1) Structural safety. The building shall not be weakened by the installation of any gas *piping*. In the process of installing or repairing any gas *piping*, the finished floors, walls, ceilings, tile work or any other part of the building or premises that is required to be changed or replaced shall be left in a safe structural condition in accordance with the requirements of this code.

G2405.2 (302.4) Alterations to trusses. Truss members and components shall not be cut, drilled, notched, spliced or otherwise altered in any way without the written concurrence and approval of a registered design professional. *Alterations* resulting in the addition of loads to any member, such as HVAC equipment and water heaters, shall not be permitted without verification that the truss is capable of supporting such additional loading.

G2405.3 (302.3.1) Engineered wood products. Cuts, notches and holes bored in trusses, structural composite lumber, structural glued-laminated members and I-joists are prohibited except where permitted by the manufacturer's recommendations or where the effects of such *alterations* are specifically considered in the design of the member by a registered design professional.

SECTION G2406 (303)
APPLIANCE LOCATION

G2406.1 (303.1) General. *Appliances* shall be located as required by this section, specific requirements elsewhere in this code and the conditions of the *equipment* and *appliance* listing.

G2406.2 (303.3) Prohibited locations. *Appliances* shall not be located in sleeping rooms, bathrooms, toilet rooms, storage closets or surgical rooms, or in a space that opens only into such rooms or spaces, except where the installation complies with one of the following:

1. The *appliance* is a direct-vent *appliance* installed in accordance with the conditions of the listing and the manufacturer's instructions.
2. *Vented room heaters*, wall *furnaces*, vented decorative *appliances*, vented gas *fireplaces*, vented gas *fireplace* heaters and decorative *appliances* for installation in vented solid fuel-burning *fireplaces* are installed in rooms that meet the required volume criteria of Section G2407.5.
3. A single wall-mounted *unvented room heater* is installed in a bathroom and such *unvented room heater* is equipped as specified in Section G2445.6 and has an input rating not greater than 6,000 *Btu*/h (1.76 kW). The bathroom shall meet the required volume criteria of Section G2407.5.
4. A single wall-mounted *unvented room heater* is installed in a bedroom and such *unvented room heater* is equipped as specified in Section G2445.6 and has an input rating not greater than 10,000 *Btu*/h (2.93 kW). The bedroom shall meet the required volume criteria of Section G2407.5.
5. The *appliance* is installed in a room or space that opens only into a bedroom or bathroom, and such room or space is used for no other purpose and is provided with a solid weather-stripped door equipped with an *approved* self-closing device. *Combustion air* shall be taken directly from the outdoors in accordance with Section G2407.6.
6. A clothes dryer is installed in a residential bathroom or toilet room having a permanent opening with an area of not less than 100 square inches (0.06 m^2) that communicates with a space outside of a sleeping room, bathroom, toilet room or storage closet.

G2406.3 (303.6) Outdoor locations. *Appliances* installed in outdoor locations shall be either *listed* for outdoor installation or provided with protection from outdoor environmental factors that influence the operability, durability and safety of the *appliance*.

INTERNATIONAL CODE COUNCIL®
Copyright © 2019 ICC & NYSDOS. ALL RIGHTS RESERVED. Accessed by Lauren Gualdino (lgualdino@briarcliffmanor.org), (-) Order Number #100880972 on May 08, 2020 07:05 AM (PDT) pursuant to License Agreement with ICC & NYSDOS. No further reproduction, no

100880972

SECTION G2407 (304)
COMBUSTION, VENTILATION AND DILUTION AIR

G2407.1 (304.1) General. Air for *combustion*, ventilation and dilution of *flue gases* for *appliances* installed in buildings shall be provided by application of one of the methods prescribed in Sections G2407.5 through G2407.9. Where the requirements of Section G2407.5 are not met, outdoor air shall be introduced in accordance with one of the methods prescribed in Sections G2407.6 through G2407.9. *Direct-vent appliances*, gas *appliances* of other than *natural draft* design, vented gas *appliances* not designated as Category I and *appliances* equipped with power burners, shall be provided with *combustion*, ventilation and *dilution air* in accordance with the *appliance* manufacturer's instructions.

Exception: *Type 1 clothes dryers* that are provided with *makeup air* in accordance with Section G2439.5.

G2407.2 (304.2) Appliance location. *Appliances* shall be located so as not to interfere with proper circulation of *combustion*, ventilation and *dilution air*.

G2407.3 (304.3) Draft hood/regulator location. Where used, a *draft hood* or a *barometric draft regulator* shall be installed in the same room or enclosure as the *appliance* served to prevent any difference in pressure between the hood or regulator and the *combustion air* supply.

G2407.4 (304.4) Makeup air provisions. Where exhaust fans, *clothes dryers* and kitchen ventilation systems interfere with the operation of *appliances, makeup air* shall be provided.

G2407.5 (304.5) Indoor combustion air. The required volume of indoor air shall be determined in accordance with Section G2407.5.1 or G2407.5.2, except that where the air infiltration rate is known to be less than 0.40 air changes per hour (ACH), Section G2407.5.2 shall be used. The total required volume shall be the sum of the required volume calculated for all *appliances* located within the space. Rooms communicating directly with the space in which the *appliances* are installed through openings not furnished with doors, and through *combustion air* openings sized and located in accordance with Section G2407.5.3, are considered to be part of the required volume.

G2407.5.1 (304.5.1) Standard method. The minimum required volume shall be 50 cubic feet per 1,000 *Btu*/h (4.8 m^3/kW) of the appliance input rating.

G2407.5.2 (304.5.2) Known air-infiltration-rate method. Where the air infiltration rate of a structure is known, the minimum required volume shall be determined as follows:

For *appliances* other than fan-assisted, calculate volume using Equation 24-1

$$Required\ Volume_{other} \geq \frac{21\text{ft}^3}{ACH}\left(\frac{I_{other}}{1{,}000\ \text{Btu/h}}\right) \quad \textbf{(Equation 24-1)}$$

For fan-assisted *appliances*, calculate volume using Equation 24-2.

$$Required\ Volume_{fan} \geq \frac{15\text{ft}^3}{ACH}\left(\frac{I_{fan}}{1{,}000\ \text{Btu/hr}}\right) \quad \textbf{(Equation 24-2)}$$

where:

I_{other} = All *appliances* other than fan assisted (input in *Btu*/h).

I_{fan} = Fan-assisted *appliance* (input in *Btu*/h).

ACH = Air change per hour (percent of volume of space exchanged per hour, expressed as a decimal).

For purposes of this calculation, an infiltration rate greater than 0.60 *ACH* shall not be used in Equations 24-1 and 24-2.

G2407.5.3 (304.5.3) Indoor opening size and location. Openings used to connect indoor spaces shall be sized and located in accordance with Sections G2407.5.3.1 and G2407.5.3.2 (see Figure G2407.5.3).

G2407.5.3.1 (304.5.3.1) Combining spaces on the same story. Where combining spaces on the same story, each opening shall have a minimum free area of 1 square inch per 1,000 *Btu*/h (2,200 mm^2/kW) of the total input rating of all *appliances* in the space, but not less than 100 square inches (0.06 m^2). One permanent opening shall commence within 12 inches (305 mm) of the top and one permanent opening shall commence within 12 inches (305 mm) of the bottom of the enclosure. The minimum dimension of air openings shall be not less than 3 inches (76 mm).

G2407.5.3.2 (304.5.3.2) Combining spaces in different stories. The volumes of spaces in different stories shall be considered to be communicating spaces where such spaces are connected by one or more permanent openings in doors or floors having a total minimum free area of 2 square inches per 1,000 *Btu*/h (4402 mm^2/kW) of total input rating of all *appliances*.

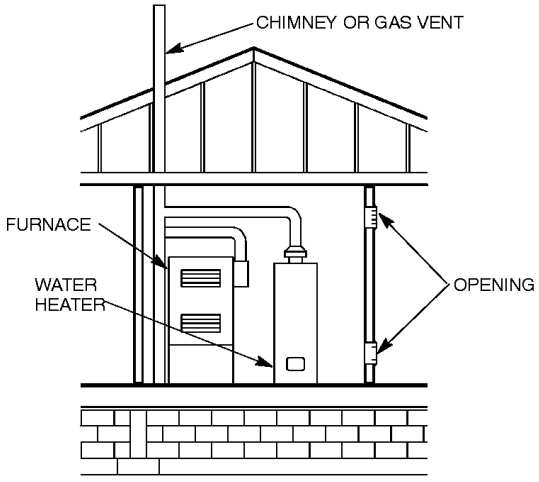

FIGURE G2407.5.3 (304.5.3)
ALL AIR FROM INSIDE THE BUILDING
(see Section G2407.5.3)

INTERNATIONAL CODE COUNCIL®
Copyright © 2019 ICC & NYSDOS. ALL RIGHTS RESERVED. Accessed by Lauren Gualdino (lgualdino@briarcliffmanor.org), (-) Order Number #100880972 on May 08, 2020 07:05 AM (PDT) pursuant to License Agreement with ICC & NYSDOS. No further reproduction, no

100880972

G2407.6 (304.6) Outdoor combustion air. Outdoor *combustion* air shall be provided through opening(s) to the outdoors in accordance with Section G2407.6.1 or G2407.6.2. The minimum dimension of air openings shall be not less than 3 inches (76 mm).

G2407.6.1 (304.6.1) Two-permanent-openings method. Two permanent openings, one commencing within 12 inches (305 mm) of the top and one commencing within 12 inches (305 mm) of the bottom of the enclosure, shall be provided. The openings shall communicate directly or by ducts with the outdoors or spaces that freely communicate with the outdoors.

Where directly communicating with the outdoors, or where communicating with the outdoors through vertical ducts, each opening shall have a minimum free area of 1 square inch per 4,000 *Btu*/h (550 mm^2/kW) of total input rating of all *appliances* in the enclosure [see Figures G2407.6.1(1) and G2407.6.1(2)].

Where communicating with the outdoors through horizontal ducts, each opening shall have a minimum free area of not less than 1 square inch per 2,000 *Btu*/h (1100 mm^2/kW) of total input rating of all *appliances* in the enclosure [see Figure G2407.6.1(3)].

G2407.6.2 (304.6.2) One-permanent-opening method. One permanent opening, commencing within 12 inches (305 mm) of the top of the enclosure, shall be provided. The *appliance* shall have *clearances* of not less than 1 inch (25 mm) from the sides and back and 6 inches (152 mm) from the front of the *appliance*. The opening shall directly communicate with the outdoors or through a vertical or horizontal duct to the outdoors, or spaces that freely communicate with the outdoors (see Figure G2407.6.2) and shall have a minimum free area of 1 square inch per 3,000 *Btu*/h (734 mm^2/kW) of the total input rating of all *appliances* located in the enclosure and not less than the sum of the areas of all *vent connectors* in the space.

G2407.7 (304.7) Combination indoor and outdoor combustion air. The use of a combination of indoor and outdoor *combustion air* shall be in accordance with Sections G2407.7.1 through G2407.7.3.

G2407.7.1 (304.7.1) Indoor openings. Where used, openings connecting the interior spaces shall comply with Section G2407.5.3.

G2407.7.2 (304.7.2) Outdoor opening location. Outdoor opening(s) shall be located in accordance with Section G2407.6.

G2407.7.3 (304.7.3) Outdoor opening(s) size. The outdoor opening(s) size shall be calculated in accordance with the following:

1. The ratio of interior spaces shall be the available volume of all communicating spaces divided by the required volume.

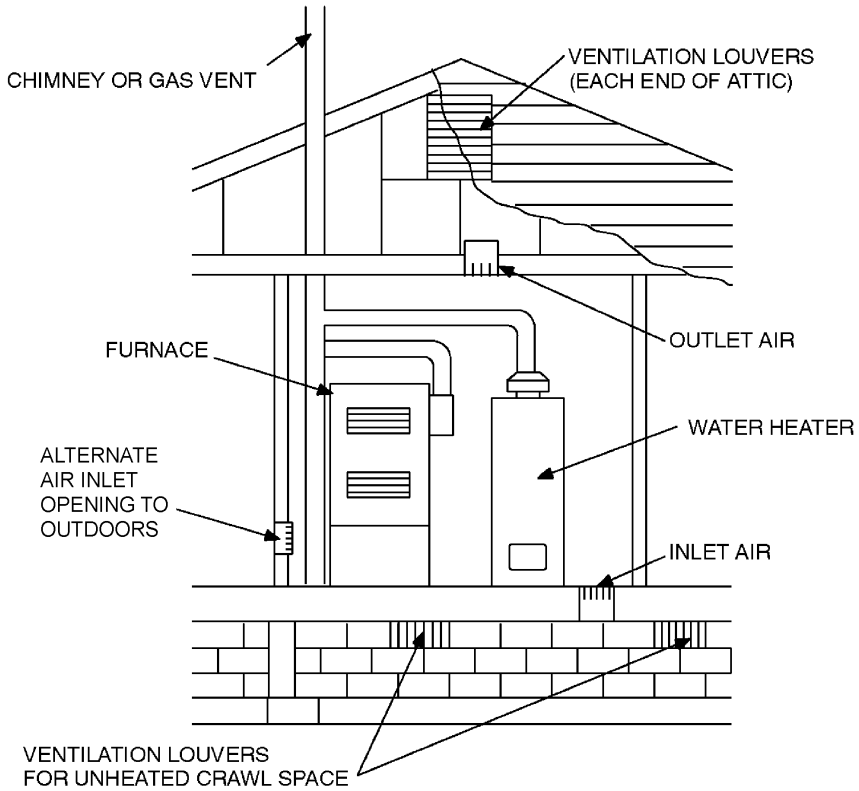

FIGURE G2407.6.1(1) [304.6.1(1)]
ALL AIR FROM OUTDOORS—INLET AIR FROM VENTILATED CRAWL SPACE AND OUTLET AIR TO VENTILATED ATTIC
(see Section G2407.6.1)

INTERNATIONAL CODE COUNCIL®
Copyright © 2019 ICC & NYSDOS. ALL RIGHTS RESERVED. Accessed by Lauren Gualdino (lgualdino@briarcliffmanor.org), (-) Order Number #100880972 on May 08, 2020 07:05 AM (PDT) pursuant to License Agreement with ICC & NYSDOS. No further reproduction, no

100880972

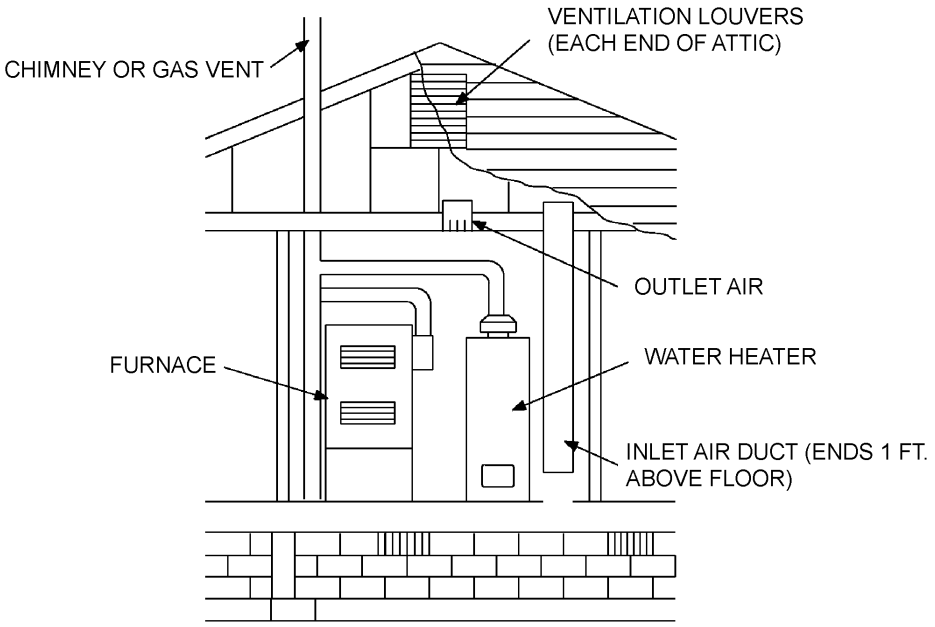

For SI: 1 foot = 304.8 mm.

FIGURE G2407.6.1(2) [304.6.1(2)]
ALL AIR FROM OUTDOORS THROUGH VENTILATED ATTIC (see Section G2407.6.1)

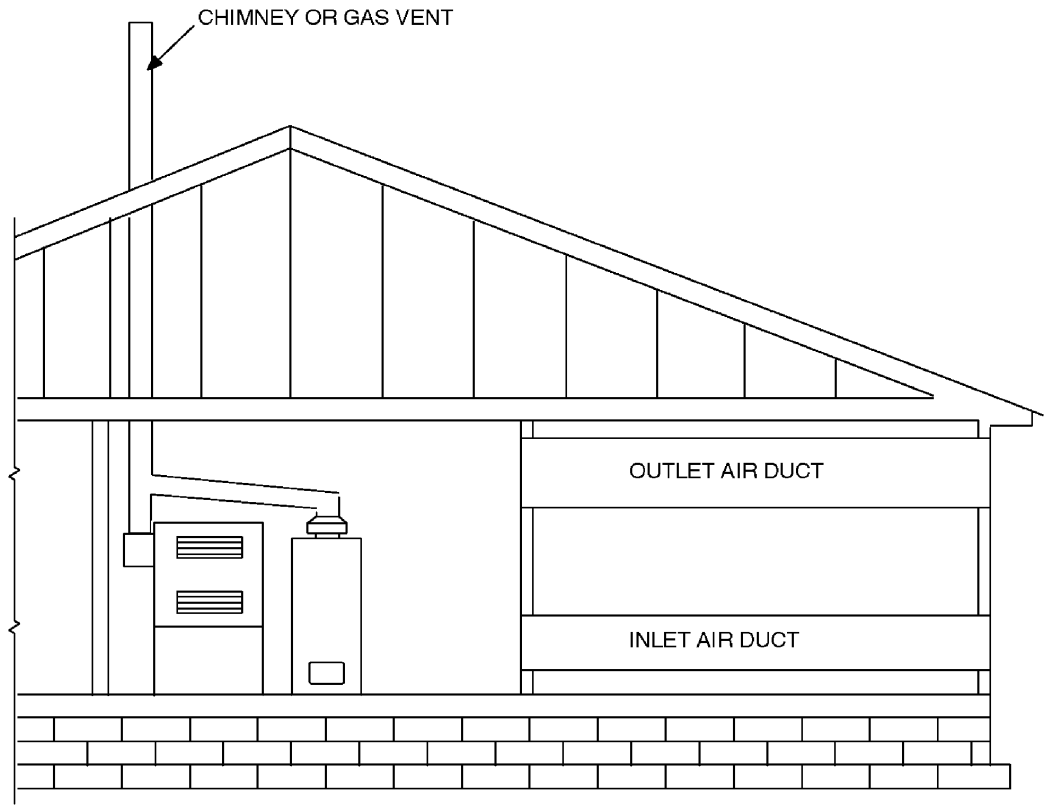

FIGURE G2407.6.1(3) [304.6.1(3)]
ALL AIR FROM OUTDOORS (see Section G2407.6.1)

INTERNATIONAL CODE COUNCIL®
Copyright © 2019 ICC & NYSDOS. ALL RIGHTS RESERVED. Accessed by Lauren Gualdino (lgualdino@briarcliffmanor.org), (-) Order Number #100880972 on May 08, 2020 07:05 AM (PDT) pursuant to License Agreement with ICC & NYSDOS. No further reproduction, no

100880972

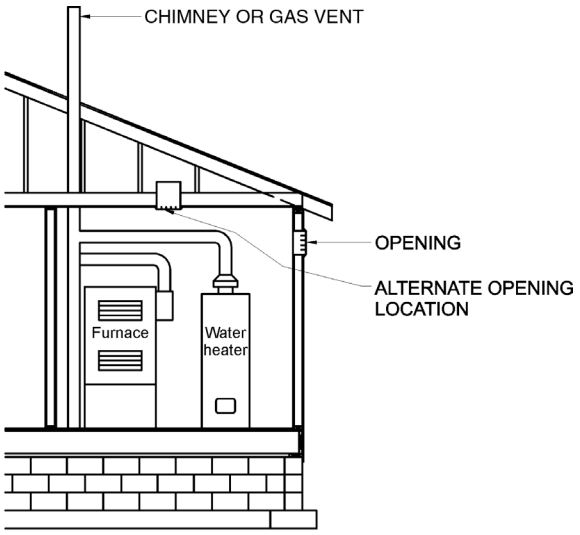

FIGURE G2407.6.2 (304.6.2)
SINGLE COMBUSTION AIR OPENING, ALL AIR FROM OUTDOORS
(see Section G2407.6.2)

2. The outdoor size reduction factor shall be one minus the ratio of interior spaces.
3. The minimum size of outdoor opening(s) shall be the full size of outdoor opening(s) calculated in accordance with Section G2407.6, multiplied by the reduction factor. The minimum dimension of air openings shall be not less than 3 inches (76 mm).

G2407.8 (304.8) Engineered installations. Engineered *combustion air* installations shall provide an adequate supply of *combustion*, ventilation and *dilution air* and shall be *approved*.

G2407.9 (304.9) Mechanical combustion air supply. Where all *combustion air* is provided by a mechanical air supply system, the *combustion air* shall be supplied from the outdoors at a rate not less than 0.35 cubic feet per minute per 1,000 *Btu*/h (0.034 m^3/min per kW) of total input rating of all *appliances* located within the space.

G2407.9.1 (304.9.1) Makeup air. Where exhaust fans are installed, *makeup air* shall be provided to replace the exhausted air.

G2407.9.2 (304.9.2) Appliance interlock. Each of the *appliances* served shall be interlocked with the mechanical air supply system to prevent *main burner* operation when the mechanical air supply system is not in operation.

G2407.9.3 (304.9.3) Combined combustion air and ventilation air system. Where *combustion air* is provided by the building's mechanical ventilation system, the system shall provide the specified *combustion air* rate in addition to the required ventilation air.

G2407.10 (304.10) Louvers and grilles. The required size of openings for *combustion*, ventilation and *dilution air* shall be based on the net free area of each opening. Where the free area through a design of louver, grille or screen is known, it shall be used in calculating the size opening required to provide the free area specified. Where the design and free area of louvers and grilles are not known, it shall be assumed that wood louvers will have 25-percent free area and metal louvers and grilles will have 75-percent free area. Screens shall have a mesh size not smaller than $^1/_4$ inch (6.4 mm). Nonmotorized louvers and grilles shall be fixed in the open position. Motorized louvers shall be interlocked with the *appliance* so that they are proven to be in the full open position prior to *main burner* ignition and during *main burner* operation. Means shall be provided to prevent the *main burner* from igniting if the louvers fail to open during *burner* start-up and to shut down the *main burner* if the louvers close during operation.

G2407.11 (304.11) Combustion air ducts. *Combustion air* ducts shall comply with all of the following:

1. Ducts shall be constructed of galvanized steel complying with Chapter 16 or of a material having equivalent corrosion resistance, strength and rigidity.

   Exception: Within dwellings units, unobstructed stud and joist spaces shall not be prohibited from conveying *combustion air*, provided that not more than one required fireblock is removed.
2. Ducts shall terminate in an unobstructed space allowing free movement of *combustion air* to the *appliances*.
3. Ducts shall serve a single enclosure.
4. Ducts shall not serve both upper and lower *combustion air* openings where both such openings are used. The separation between ducts serving upper and lower *combustion air* openings shall be maintained to the source of *combustion air*.
5. Ducts shall not be screened where terminating in an attic space.
6. Horizontal upper *combustion air* ducts shall not slope downward toward the source of *combustion air*.
7. The remaining space surrounding a *chimney* liner, gas vent, special gas vent or plastic *piping* installed within a masonry, metal or factory-built *chimney* shall not be used to supply *combustion air*.

   Exception: Direct-vent gas-fired *appliances* designed for installation in a solid fuel-burning *fireplace* where installed in accordance with the manufacturer's instructions.
8. *Combustion air* intake openings located on the exterior of a building shall have the lowest side of such openings located not less than 12 inches (305 mm) vertically from the adjoining finished ground level.

G2407.12 (304.12) Protection from fumes and gases. Where corrosive or flammable process fumes or gases, other than products of *combustion*, are present, means for the disposal of such fumes or gases shall be provided. Such fumes or gases include carbon monoxide, hydrogen sulfide, ammonia, chlorine and halogenated hydrocarbons.

INTERNATIONAL CODE COUNCIL®
Copyright © 2019 ICC & NYSDOS. ALL RIGHTS RESERVED. Accessed by Lauren Gualdino (lgualdino@briarcliffmanor.org), (-) Order Number #100880972 on May 08, 2020 07:05 AM (PDT) pursuant to License Agreement with ICC & NYSDOS. No further reproduction, no

100880972

In barbershops, beauty shops and other facilities where chemicals that generate corrosive or flammable products, such as aerosol sprays, are routinely used, nondirect vent-type *appliances* shall be located in a mechanical room separated or partitioned off from other areas with provisions for *combustion air* and *dilution air* from the outdoors. *Direct-vent appliances* shall be installed in accordance with the *appliance* manufacturer's instructions.

SECTION G2408 (305) INSTALLATION

G2408.1 (305.1) General. *Equipment* and *appliances* shall be installed as required by the terms of their approval, in accordance with the conditions of listing, the manufacturer's instructions and this code. Manufacturer's installation instructions shall be available on the job site at the time of inspection. Where a code provision is less restrictive than the conditions of the listing of the *equipment* or *appliance* or the manufacturer's installation instructions, the conditions of the listing and the manufacturer's installation instructions shall apply.

Unlisted *appliances approved* in accordance with Section G2404.3 shall be limited to uses recommended by the manufacturer and shall be installed in accordance with the manufacturer's instructions, the provisions of this code and the requirements determined by the *building official*.

G2408.2 (305.3) Elevation of ignition source. *Equipment* and *appliances* having an *ignition source* shall be elevated such that the source of ignition is not less than 18 inches (457 mm) above the floor in *hazardous locations* and public garages, private garages, repair garages, motor fuel-dispensing facilities and parking garages. For the purpose of this section, rooms or spaces that are not part of the *living space* of a *dwelling unit* and that communicate directly with a private garage through openings shall be considered to be part of the private garage.

Exception: Elevation of the *ignition source* is not required for *appliances* that are *listed* as flammable-vapor-ignition resistant.

G2408.2.1 (305.3.1) Installation in residential garages. In residential garages where *appliances* are installed in a separate, enclosed space having access only from outside of the garage, such *appliances* shall be permitted to be installed at floor level, provided that the required *combustion air* is taken from the exterior of the garage.

G2408.3 (305.5) Private garages. *Appliances* located in private garages shall be installed with a minimum *clearance* of 6 feet (1829 mm) above the floor.

Exception: The requirements of this section shall not apply where the *appliances* are protected from motor vehicle impact and installed in accordance with Section G2408.2.

G2408.4 (305.7) Clearances from grade. *Equipment* and *appliances* installed at grade level shall be supported on a level concrete slab or other *approved* material extending not less than 3 inches (76 mm) above adjoining grade or shall be suspended not less than 6 inches (152 mm) above adjoining grade. Such supports shall be installed in accordance with the manufacturer's instructions.

G2408.5 (305.8) Clearances to combustible construction. Heat-producing *equipment* and *appliances* shall be installed to maintain the required clearances to combustible construction as specified in the listing and manufacturer's instructions. Such *clearances* shall be reduced only in accordance with Section G2409. *Clearances* to combustibles shall include such considerations as door swing, drawer pull, overhead projections or shelving and window swing. Devices, such as door stops or limits and closers, shall not be used to provide the required *clearances*.

G2408.6 (305.12) Avoid strain on gas piping. *Appliances* shall be supported and connected to the *piping* so as not to exert undue strain on the connections.

SECTION G2409 (308) CLEARANCE REDUCTION

G2409.1 (308.1) Scope. This section shall govern the reduction in required clearances to *combustible materials*, including gypsum board, and *combustible assemblies* for chimneys, vents, appliances, devices and equipment. Clearance requirements for air-conditioning equipment and central heating boilers and furnaces shall comply with Sections G2409.3 and G2409.4.

G2409.2 (308.2) Reduction table. The allowable *clearance* reduction shall be based on one of the methods specified in Table G2409.2 or shall utilize a reduced *clearance* protective assembly *listed* and *labeled* in accordance with UL 1618. Where required *clearances* are not listed in Table G2409.2, the reduced clearances shall be determined by linear interpolation between the distances listed in the table. Reduced *clearances* shall not be derived by extrapolation below the range of the table. The reduction of the required *clearances* to combustibles for *listed* and *labeled appliances* and *equipment* shall be in accordance with the requirements of this section, except that such *clearances* shall not be reduced where reduction is specifically prohibited by the terms of the *appliance* or *equipment listing* [see Figures G2409.2(1) through 2409.2(3)].

G2409.3 (308.3) Clearances for indoor air-conditioning appliances. *Clearance* requirements for indoor air-conditioning *appliances* shall comply with Sections G2409.3.1 through G2409.3.4.

G2409.3.1 (308.3.1) Appliances clearances. Air-conditioning *appliances* shall be installed with clearances in accordance with the manufacturer's instructions.

G2409.3.2 (308.3.2) Clearance reduction. Air-conditioning appliances shall be permitted to be installed with reduced clearances to *combustible material*, provided that the *combustible material* or *appliance* is protected as described in Table G2409.2 and such reduction is allowed by the manufacturer's instructions.

G2409.3.3 (308.3.3) Plenum clearances. Where the *furnace plenum* is adjacent to plaster on metal lath or *noncombustible material* attached to *combustible material*, the *clearance* shall be measured to the surface of the plaster or other noncombustible finish where the *clearance* specified is 2 inches (51 mm) or less.

INTERNATIONAL CODE COUNCIL®
Copyright © 2019 ICC & NYSDOS. ALL RIGHTS RESERVED. Accessed by Lauren Gualdino (lgualdino@briarcliffmanor.org), (-) Order Number #100880972 on May 08, 2020 07:05 AM (PDT) pursuant to License Agreement with ICC & NYSDOS. No further reproduction, no

100880972

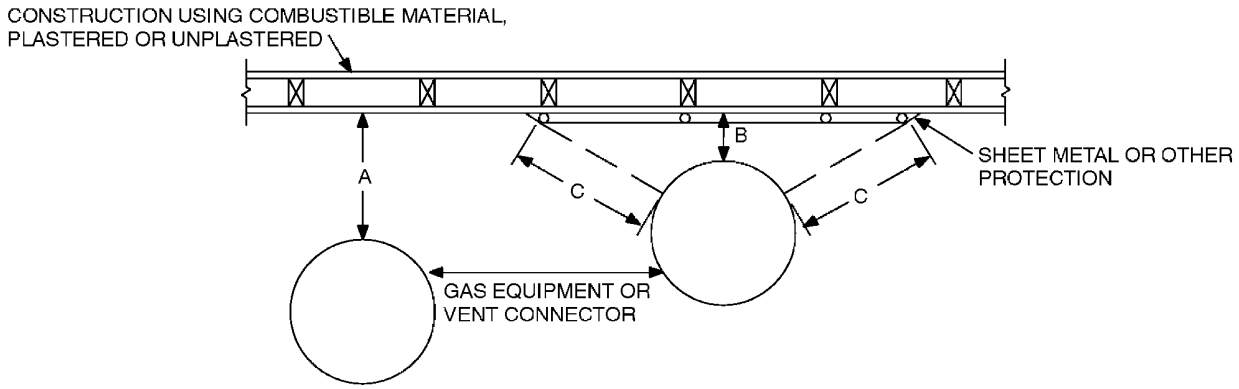

NOTES:

A = the *clearance* without protection.

B = the reduced *clearance* permitted in accordance with Table G2409.2. The protection applied to the construction using *combustible material* shall extend far enough in each direction to make "C" equal to "A."

FIGURE G2409.2(1) [308.2(1)]
EXTENT OF PROTECTION NECESSARY TO REDUCE CLEARANCES FROM GAS EQUIPMENT OR VENT CONNECTORS

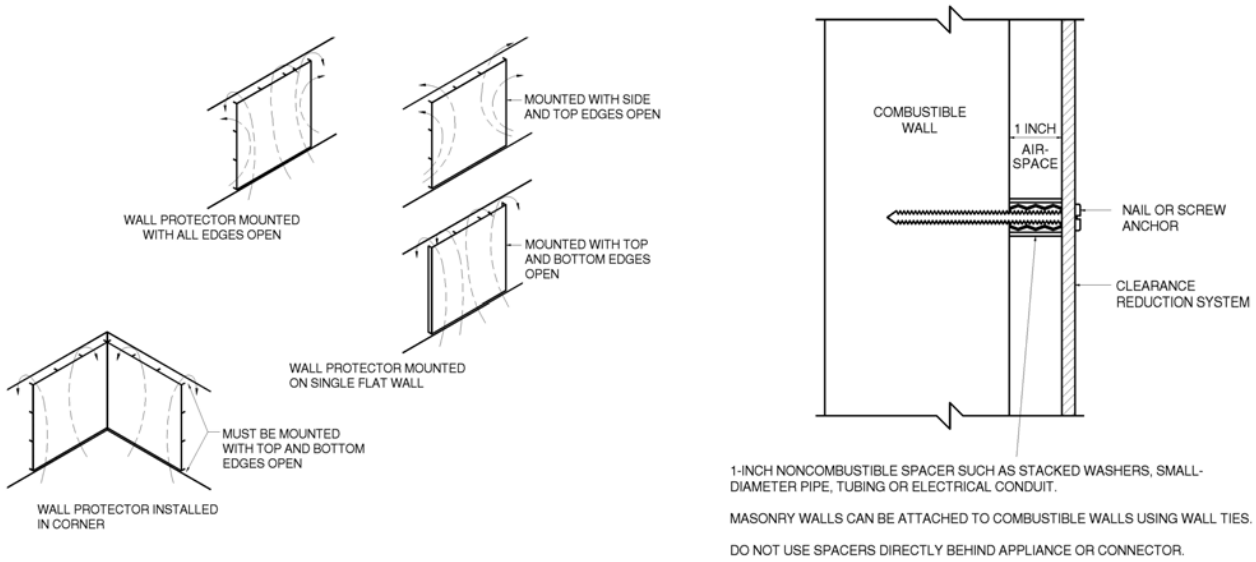

For SI: 1 inch = 25.4 mm.

FIGURE G2409.2(2) [308.2(2)]
WALL PROTECTOR CLEARANCE REDUCTION SYSTEM

G2409.3.4 (308.3.4) Clearance from supply ducts. Supply air ducts connecting to listed central heating furnaces shall have the same minimum clearance to combustibles as required for the furnace supply plenum for a distance of not less than 3 feet (914 mm) from the supply plenum. Clearance is not required beyond the 3-foot (914 mm) distance.

G2409.4 (308.4) Central-heating boilers and furnaces. *Clearance* requirements for central-heating boilers and *furnaces* shall comply with Sections G2409.4.1 through G2409.4.5. The *clearance* to these *appliances* shall not interfere with *combustion air*; *draft hood clearance* and relief; and accessibility for servicing.

G2409.4.1 (308.4.1) Appliances clearances. Central-heating furnaces and low-pressure boilers shall be installed with clearances in accordance with the manufacturer's instructions.

INTERNATIONAL CODE COUNCIL®
Copyright © 2019 ICC & NYSDOS. ALL RIGHTS RESERVED. Accessed by Lauren Gualdino (lgualdino@briarcliffmanor.org), (-) Order Number #100880972 on May 08, 2020 07:05 AM (PDT) pursuant to License Agreement with ICC & NYSDOS. No further reproduction, no

100880972

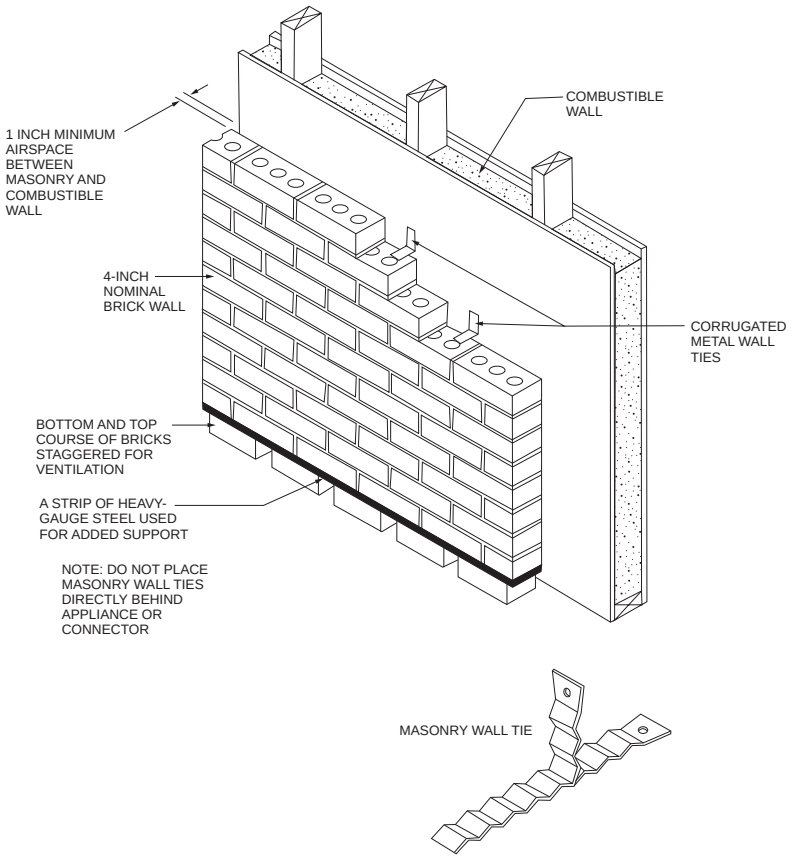

For SI: 1 inch = 25.4 mm.

FIGURE G2409.2(3) [308.2(3)]
MASONRY CLEARANCE REDUCTION SYSTEM

G2409.4.2 (308.4.2) Clearance reduction. Central-heating furnaces and low-pressure boilers shall be permitted to be installed with reduced clearances to *combustible material* provided that the *combustible material* or *appliance* is protected as described in Table G2409.2 and such reduction is allowed by the manufacturer's instructions.

G2409.4.3 (308.4.4) Plenum clearances. Where the *furnace plenum* is adjacent to plaster on metal lath or *noncombustible* material attached to *combustible material*, the *clearance* shall be measured to the surface of the plaster or other noncombustible finish where the *clearance* specified is 2 inches (51 mm) or less.

G2409.4.4 (308.4.5) Clearance from supply ducts. Supply air ducts connecting to listed central heating furnaces shall have the same minimum clearance to combustibles as required for the furnace supply plenum for a distance of not less than 3 feet (914 mm) from the supply plenum. Clearance is not required beyond the 3-foot (914 mm) distance.

G2409.4.5 (308.4.3) Clearance for servicing appliances. Front *clearance* shall be sufficient for servicing the *burner* and the *furnace* or boiler.

SECTION G2410 (309) ELECTRICAL

G2410.1 (309.1) Grounding. *Gas piping* shall not be used as a grounding electrode.

G2410.2 (309.2) Connections. Electrical connections between *appliances* and the building wiring, including the grounding of the *appliances*, shall conform to Chapters 34 through 43.

SECTION G2411 (310) ELECTRICAL BONDING

G2411.1 (310.1) Pipe and tubing other than CSST. Each above-ground portion of a *gas piping system* other than corrugated stainless steel tubing (CSST) that is likely to become energized shall be electrically continuous and bonded to an effective ground-fault current path. *Gas piping* other than CSST shall be considered to be bonded where it is connected to an *appliance* that is connected to the *equipment* grounding conductor of the circuit that supplies that *appliance*.

INTERNATIONAL CODE COUNCIL®
Copyright © 2019 ICC & NYSDOS. ALL RIGHTS RESERVED. Accessed by Lauren Gualdino (lgualdino@briarcliffmanor.org), (-) Order Number #100880972 on May 08, 2020 07:05 AM (PDT) pursuant to License Agreement with ICC & NYSDOS. No further reproduction, no

100880972

TABLE G2409.2 (308.2)[a through k]
REDUCTION OF CLEARANCES WITH SPECIFIED FORMS OF PROTECTION

TYPE OF PROTECTION APPLIED TO AND COVERING ALL SURFACES OF COMBUSTIBLE MATERIAL WITHIN THE DISTANCE SPECIFIED AS THE REQUIRED CLEARANCE WITH NO PROTECTION [see Figures G2409.2(1), G2409.2(2), and G2409.2(3)]	WHERE THE REQUIRED CLEARANCE WITH NO PROTECTION FROM APPLIANCE, VENT CONNECTOR, OR SINGLE-WALL METAL PIPE IS: (inches)									
	36		18		12		9		6	
	Allowable clearances with specified protection (inches)									
	Use Column 1 for clearances above appliance or horizontal connector. Use Column 2 for clearances from appliance, vertical connector and single-wall metal pipe.									
	Above Col. 1	Sides and rear Col. 2	Above Col. 1	Sides and rear Col. 2	Above Col. 1	Sides and rear Col. 2	Above Col. 1	Sides and rear Col. 2	Above Col. 1	Sides and rear Col. 2
1. $3^1/_2$-inch-thick masonry wall without ventilated airspace	—	24	—	12	—	9	—	6	—	5
2. $^1/_2$-inch insulation board over 1-inch glass fiber or mineral wool batts	24	18	12	9	9	6	6	5	4	3
3. 0.024-inch (nominal 24 gage) sheet metal over 1-inch glass fiber or mineral wool batts reinforced with wire on rear face with ventilated airspace	18	12	9	6	6	4	5	3	3	3
4. $3^1/_2$-inch-thick masonry wall with ventilated airspace	—	12	—	6	—	6	—	6	—	6
5. 0.024-inch (nominal 24 gage) sheet metal with ventilated airspace	18	12	9	6	6	4	5	3	3	2
6. $^1/_2$-inch-thick insulation board with ventilated airspace	18	12	9	6	6	4	5	3	3	3
7. 0.024-inch (nominal 24 gage) sheet metal with ventilated airspace over 0.024-inch (nominal 24 gage) sheet metal with ventilated airspace	18	12	9	6	6	4	5	3	3	3
8. 1-inch glass fiber or mineral wool batts sandwiched between two sheets 0.024-inch (nominal 24 gage) sheet metal with ventilated airspace	18	12	9	6	6	4	5	3	3	3

For SI: 1 inch = 25.4 mm, ºC = [(ºF - 32)/1.8], 1 pound per cubic foot = 16.02 kg/m^3, 1 Btu per inch per square foot per hour per ºF = 0.144 W/m^2 × K.

a. Reduction of clearances from combustible materials shall not interfere with combustion air, draft hood clearance and relief, and accessibility of servicing.

b. Clearances shall be measured from the outer surface of the combustible material to the nearest point on the surface of the appliance, disregarding any intervening protection applied to the combustible material.

c. Spacers and ties shall be of noncombustible material. A spacer or tie shall not be used directly opposite an appliance or connector.

d. For all clearance reduction systems using a ventilated airspace, adequate provision for air circulation shall be provided as described [see Figures G2409.2(2) and G2409.2(3)].

e. There shall be not less than 1 inch between clearance reduction systems and combustible walls and ceilings for reduction systems using ventilated airspace.

f. Where a wall protector is mounted on a single flat wall away from corners, it shall have a minimum 1-inch air gap. To provide air circulation, the bottom and top edges, or only the side and top edges, or all edges shall be left open.

g. Mineral wool batts (blanket or board) shall have a density of 8 pounds per cubic foot and a minimum melting point of 1500ºF.

h. Insulation material used as part of a clearance reduction system shall have a thermal conductivity of 1.0 Btu per inch per square foot per hour per ºF or less.

i. There shall be not less than 1 inch between the appliance and the protector. In no case shall the clearance between the appliance and the combustible surface be reduced below that allowed in this table.

j. Clearances and thicknesses are minimum; larger clearances and thicknesses are acceptable.

k. Listed single-wall connectors shall be installed in accordance with the manufacturer's instructions.

INTERNATIONAL CODE COUNCIL®
Copyright © 2019 ICC & NYSDOS. ALL RIGHTS RESERVED. Accessed by Lauren Gualdino (lgualdino@briarcliffmanor.org), (-) Order Number #100880972 on May 08, 2020 07:05 AM (PDT) pursuant to License Agreement with ICC & NYSDOS. No further reproduction, no

100880972

[NY] G2411.2 (310.2) Gas pipe bonding—CSST. A gas piping system that contains any CSST shall be electrically continuous and shall be directly bonded to the electrical service grounding electrode system. No portion of the gas piping system shall be used as or considered to be a grounding electrode or a grounding electrode conductor. CSST shall be installed and bonded in accordance with Section G2411.2, and the stricter of:

1. The requirements set forth in the CSST manufacturer's installation instructions, or
2. The requirements set forth in Sections G2411 and G2415.7 of this code.

Exception: Where all of the CSST contained in a gas piping system is listed AR-CSST and the gas piping system satisfies all of the other criteria set forth in Section G2411.3 of this code, such gas piping system shall comply with Section G2411.3 for AR-CSST.

[NY] G2411.2.1 (310.2.1) Bonding jumper. Where the electric service for the individual installation is 200 amperes or less, the bonding jumper shall not be smaller than 6 AWG copper wire or 4 AWG aluminum or copper-clad aluminum wire, and shall be permanently connected to the grounding electrode system. Where the electric service for the individual installation is more than 200 amperes, the bonding jumper size shall be determined in accordance with Table 250.66 and Sections 250.66(A) through 250.66(C) of NFPA 70, and shall be permanently connected to the grounding electrode system.

[NY] G2411.2.2 (310.2.2) Bonding clamp. The bonding jumper shall be connected to the gas piping system with a bonding clamp that is listed for the material of the bonding jumper and for the material of the component of the gas piping system to which the bonding clamp is attached. The bonding clamp shall be attached to the gas piping system on the downstream side of the gas meter or regulator, in an unconcealed and readily accessible space, as close as practicable to the point where the bonding jumper is connected to the electrical service grounding electrode system, and shall not exceed 75 feet (22.86 m). Any additional grounding electrodes used shall be bonded to the electrical service grounding electrode system.

[NY] G2411.2.2.1 (310.2.2.1) Bonding connections. Bonding connections shall be in accordance with NFPA 70.

[NY] G2411.2.2.2 (310.2.2.2) Connection devices. Devices used for making the bonding connections shall be listed for the application in accordance with UL 467.

[NY] G2411.2.3 (310.2.3) Prohibited uses. CSST shall not be supported on or by other electrically conductive systems including copper water pipe, electric power cables, air-conditioning and heating ducts, communication cables and structural steel beams. Electrical wiring, including the bonding conductor, shall be supported and secured independently of the CSST so that it does not come in contact with the CSST.

[NY] G2411.3 (310.3) Gas pipe bonding—listed AR-CSST.

Where:

1. All of the CSST contained in a gas piping system consists of listed AR-CSST,
2. Such gas piping system is electrically continuous, and
3. At least one appliance is connected to all of the following:
   - 3.1. Such gas piping system.
   - 3.2. A grounded electrical circuit.
   - 3.3. The equipment grounding conductor of such electrical circuit by a bonding conductor that is 14 AWG (or larger) copper.

Such gas piping system shall be installed and bonded in accordance with the stricter of either of the following:

1. The requirements set forth in the listed AR-CSST manufacturer's installation instructions.
2. The requirements set forth in Sections G2411.3.1, G2411.3.2, G2411.3.3, and G2415.7.

[NY] G2411.3.1 (310.3.1) Bonding. A gas piping system that contains only listed AR-CSST and satisfies all of the other criteria specified in Section G2411.3 of this code shall be considered to be bonded to an effective ground-fault current path, and shall not be required to be directly bonded as prescribed by Section G2411.2 of this code. However, nothing in this section shall prohibit the bonding of any such gas piping system in any manner described in Section 250.104(B) of NFPA 70.

Where no equipment grounding conductor is present, AR-CSST shall be bonded in accordance with Section G2411.2.

[NY] G2411.3.2 (310.3.2) Grounding electrodes. No portion of the gas piping system shall be used as or considered to be a grounding electrode or a grounding electrode conductor.

SECTION G2412 (401)
GENERAL

G2412.1 (401.1) Scope. This section shall govern the design, installation, modification and maintenance of *piping systems*. The applicability of this *code* to *piping systems* extends from the *point of delivery* to the connections with the *appliances* and includes the design, materials, components, fabrication, assembly, installation, testing, inspection, operation and maintenance of such *piping systems*.

G2412.1.1 (401.1.1) Utility piping systems located within buildings. Utility service *piping* located within buildings shall be installed in accordance with the structural safety and fire protection provisions of this code.

G2412.2 (401.2) Liquefied petroleum gas storage. The storage system for *liquefied petroleum gas* shall be designed

INTERNATIONAL CODE COUNCIL®
Copyright © 2019 ICC & NYSDOS. ALL RIGHTS RESERVED. Accessed by Lauren Gualdino (lgualdino@briarcliffmanor.org), (-) Order Number #100880972 on May 08, 2020 07:05 AM (PDT) pursuant to License Agreement with ICC & NYSDOS. No further reproduction, no

100880972

and installed in accordance with the *Fire Code of New York State* and NFPA 58.

G2412.3 (401.3) Modifications to existing systems. In modifying or adding to existing *piping systems*, sizes shall be maintained in accordance with this chapter.

G2412.4 (401.4) Additional appliances. Where an additional *appliance* is to be served, the existing *piping* shall be checked to determine if it has adequate capacity for all *appliances* served. If inadequate, the existing system shall be enlarged as required or separate *piping* of adequate capacity shall be provided.

G2412.5 (401.5) Identification. For other than steel *pipe*, exposed *piping* shall be identified by a yellow label marked "Gas" in black letters. The marking shall be spaced at intervals not exceeding 5 feet (1524 mm). The marking shall not be required on *pipe* located in the same room as the *appliance* served.

G2412.6 (401.6) Interconnections. Where two or more *meters* are installed on the same premises but supply separate consumers, the *piping systems* shall not be interconnected on the outlet side of the *meters*.

G2412.7 (401.7) Piping meter identification. *Piping* from multiple *meter* installations shall be marked with an *approved* permanent identification by the installer so that the *piping system* supplied by each *meter* is readily identifiable.

G2412.8 (401.8) Minimum sizes. *Pipe* utilized for the installation, extension and *alteration* of any *piping system* shall be sized to supply the full number of outlets for the intended purpose and shall be sized in accordance with Section G2413.

G2412.9 (401.9) Identification. Each length of pipe and tubing and each pipe fitting, utilized in a fuel gas system, shall bear the identification of the manufacturer.

Exceptions:

1. Steel pipe sections that are 2 feet (610 mm) and less in length and are cut from longer sections of pipe.
2. Steel pipe fittings 2 inches and less in size.
3. Where identification is provided on the product packaging or crating.
4. Where other approved documentation is provided.

G2412.10 (401.10) Piping materials standards. Piping, tubing and fittings shall be manufactured to the applicable referenced standards, specifications and performance criteria listed in Section G2414 and shall be identified in accordance with Section G2412.9.

SECTION G2413 (402) PIPE SIZING

G2413.1 (402.1) General considerations. *Piping systems* shall be of such size and so installed as to provide a supply of gas sufficient to meet the maximum *demand* and supply gas to each *appliance* inlet at not less than the minimum supply pressure required by the *appliance*.

G2413.2 (402.2) Maximum gas demand. The volumetric flow rate of gas to be provided shall be the sum of the maximum input of the *appliance*s served.

The total connected hourly load shall be used as the basis for pipe sizing, assuming that all appliances could be operating at full capacity simultaneously. Where a diversity of load can be established, pipe sizing shall be permitted to be based on such loads.

The volumetric flow rate of gas to be provided shall be adjusted for altitude where the installation is above 2,000 feet (610 m) in elevation.

G2413.3 (402.3) Sizing. *Gas piping* shall be sized in accordance with one of the following:

1. *Pipe* sizing tables or sizing equations in accordance with Section G2413.4 or G2413.5, as applicable.
2. The sizing tables included in a *listed piping* system's manufacturer's installation instructions.
3. Other *approved* engineering methods.

G2413.4 (402.4) Sizing tables and equations. This section applies to piping materials other than noncorrugated stainless steel tubing. Where Tables G2413.4(1) through G2413.4(21) are used to size *piping* or *tubing*, the *pipe* length shall be determined in accordance with Section G2413.4.1, G2413.4.2 or G2413.4.3.

Where Equations 24-3 and 24-4 are used to size *piping* or *tubing*, the *pipe* or *tubing* shall have smooth inside walls and the pipe length shall be determined in accordance with Section G2413.4.1, G2413.4.2 or G2413.4.3.

1. Low-pressure gas equation [Less than $1^1/_2$ pounds per square inch (psi) (10.3 kPa)]:

$$D = \frac{Q^{0.381}}{19.17\left(\frac{\Delta H}{C_r \times L}\right)^{0.206}} \qquad \textbf{(Equation 24-3)}$$

2. High-pressure gas equation [$1^1/_2$ psi (10.3 kPa) and above]:

$$D = \frac{Q^{0.381}}{18.93\left[\frac{(P_1^2 - P_2^2) \times Y}{C_r \times L}\right]^{0.206}} \qquad \textbf{(Equation 24-4)}$$

where:

D = Inside diameter of *pipe*, inches (mm).

Q = Input rate *appliance(s)*, cubic feet per hour at 60ºF (16ºC) and 30-inch mercury column.

P_1 = Upstream pressure, psia (P_1 + 14.7).

P_2 = Downstream pressure, psia (P_2 + 14.7).

L = Equivalent length of *pipe*, feet.

ΔH = *Pressure drop*, inch water column (27.7-inch water column = 1 psi).

INTERNATIONAL CODE COUNCIL®
Copyright © 2019 ICC & NYSDOS. ALL RIGHTS RESERVED. Accessed by Lauren Gualdino (lgualdino@briarcliffmanor.org), (-) Order Number #100880972 on May 08, 2020 07:05 AM (PDT) pursuant to License Agreement with ICC & NYSDOS. No further reproduction, no

100880972

TABLE G2413.4 (402.4)
C_r AND *Y* VALUES FOR NATURAL GAS AND UNDILUTED PROPANE AT STANDARD CONDITIONS

GAS	EQUATION FACTORS	
	C_r	*Y*
Natural gas	0.6094	0.9992
Undiluted propane	1.2462	0.9910

For SI: 1 cubic foot = 0.028 m^3, 1 foot = 305 mm,
1-inch water column = 0.249 kPa,
1 pound per square inch = 6.895 kPa,
1 British thermal unit per hour = 0.293 W.

G2413.4.1 (402.4.1) Longest length method. The *pipe* size of each section of *gas piping* shall be determined using the longest length of *piping* from the *point of delivery* to the most remote *outlet* and the load of the section.

G2413.4.2 (402.4.2) Branch length method. *Pipe* shall be sized as follows:

1. *Pipe* size of each section of the longest *pipe* run from the *point of delivery* to the most remote *outlet* shall be determined using the longest run of *piping* and the load of the section.
2. The *pipe* size of each section of branch *piping* not previously sized shall be determined using the length of *piping* from the *point of delivery* to the most remote *outlet* in each branch and the load of the section.

G2413.4.3 (402.4.3) Hybrid pressure. The *pipe* size for each section of higher pressure *gas piping* shall be determined using the longest length of *piping* from the *point of delivery* to the most remote line *pressure regulator*. The *pipe* size from the line *pressure regulator* to each *outlet* shall be determined using the length of *piping* from the *regulator* to the most remote outlet served by the *regulator*.

G2413.5 (402.5) Noncorrugated stainless steel tubing. Noncorrugated stainless steel tubing shall be sized in accordance with Equations 24-3 and 24-4 of Section 2413.4 in conjunction with Section 2413.4.1, 2413.4.2 or 2413.4.3.

G2413.6 (402.6) Allowable pressure drop. The design pressure loss in any *piping system* under maximum probable flow conditions, from the *point of delivery* to the inlet connection of the *appliance*, shall be such that the supply pressure at the *appliance* is greater than or equal to the minimum pressure required by the *appliance*.

G2413.7 (402.7) Maximum operating pressure. The maximum design operating pressure for *piping systems* located inside buildings shall not exceed 5 pounds per square inch gauge (psig) (34 kPa gauge) except where one or more of the following conditions are met:

1. The *piping* joints are welded or brazed.
2. The piping joints are flanged and pipe-to-flange connections are made by welding or brazing.
3. The *piping* is located in a ventilated chase or otherwise enclosed for protection against accidental gas accumulation.
4. The *piping* is a temporary installation for buildings under construction.

G2413.7.1 (402.7.1) Operation below -5°F (-21°C). LP-gas systems designed to operate below -5ºF (-21ºC) or with butane or a propane-butane mix shall be designed to either accommodate liquid LP-gas or prevent LP-gas vapor from condensing into a liquid.

SECTION G2414 (403) PIPING MATERIALS

G2414.1 (403.1) General. Materials used for *piping systems* shall comply with the requirements of this chapter or shall be *approved*.

G2414.2 (403.2) Used materials. *Pipe*, fittings, *valves* or other materials shall not be used again unless they are free from foreign materials and have been ascertained to be adequate for the service intended.

G2414.3 (403.3) Other materials. Material not covered by the standards specifications listed herein shall be investigated and tested to determine that it is safe and suitable for the proposed service, and, in addition, shall be recommended for that service by the manufacturer and shall be *approved* by the *building official*.

G2414.4 (403.4) Metallic pipe. Metallic *pipe* shall comply with Sections G2414.4.1 and G2414.4.2.

G2414.4.1 (403.4.1) Cast iron. Cast-iron *pipe* shall not be used.

G2414.4.2 (403.4.2) Steel. Steel, stainless steel and wrought-iron *pipe* shall not be lighter than Schedule 10 and shall comply with the dimensional standards of ASME B36.10, 10M and one of the following standards:

1. ASTM A53/A53M.
2. ASTM A106.
3. ASTM A312.

G2414.5 (403.5) Metallic tubing. *Tubing* shall not be used with gases corrosive to the tubing material.

G2414.5.1 (403.5.1) Steel tubing. Steel *tubing* shall comply with ASTM A254.

G2414.5.2 (403.5.2) Stainless steel. Stainless steel tubing shall comply with ASTM A268 or ASTM A269.

G2414.5.3 (403.5.3) Copper or copper-alloy tubing. Copper *tubing* shall comply with Standard Type K or L of ASTM B88 or ASTM B280.

Copper and copper-alloy *tubing* shall not be used if the gas contains more than an average of 0.3 grains of hydrogen sulfide per 100 standard cubic feet of gas (0.7 milligrams per 100 liters).

G2414.5.4 (403.5.5) Corrugated stainless steel tubing. Corrugated stainless steel *tubing* shall be *listed* in accordance with ANSI LC1/CSA 6.26.

G2414.6 (403.6) Plastic pipe, tubing and fittings. Polyethylene plastic pipe, tubing and fittings used to supply fuel gas shall conform to ASTM D2513. Such pipe shall be marked "Gas" and "ASTM D2513."

INTERNATIONAL CODE COUNCIL®
Copyright © 2019 ICC & NYSDOS. ALL RIGHTS RESERVED. Accessed by Lauren Gualdino (lgualdino@briarcliffmanor.org), (-) Order Number #100880972 on May 08, 2020 07:05 AM (PDT) pursuant to License Agreement with ICC & NYSDOS. No further reproduction, no

100880972

Polyamide pipe, tubing and fittings shall be identified and conform to ASTM F2945. Such pipe shall be marked "Gas" and "ASTM F2945."

Polyvinyl chloride (PVC) and chlorinated polyvinyl chloride (CPVC) plastic pipe, tubing and fittings shall not be used to supply fuel gas.

G2414.6.1 (403.6.1) Anodeless risers. Plastic pipe, tubing and anodeless risers shall comply with the following:

1. Factory-assembled anodeless risers shall be recommended by the manufacturer for the gas used and shall be leak tested by the manufacturer in accordance with written procedures.
2. Service head adapters and field-assembled anodeless risers incorporating service head adapters shall be recommended by the manufacturer for the gas used, and shall be designed and certified to meet the requirements of Category I of ASTM D2513, and U.S. Department of Transportation, Code of Federal Regulations, Title 49, Part 192.281(e). The manufacturer shall provide the user with qualified installation instructions as prescribed by the U.S. Department of Transportation, Code of Federal Regulations, Title 49, Part 192.283(b).

G2414.6.2 (403.6.2) LP-gas systems. The use of plastic pipe, tubing and fittings in undiluted liquefied petroleum gas *piping* systems shall be in accordance with NFPA 58.

G2414.6.3 (403.6.3) Regulator vent piping. Plastic pipe and fittings used to connect *regulator* vents to remote vent terminations shall be of PVC conforming to ANSI/UL 651. PVC vent *piping* shall not be installed indoors.

G2414.7 (403.7) Workmanship and defects. *Pipe, tubing* and fittings shall be clear and free from cutting burrs and defects in structure or threading, and shall be thoroughly brushed, and chip and scale blown.

Defects in *pipe*, *tubing* and fittings shall not be repaired. Defective *pipe*, *tubing* and fittings shall be replaced. (See Section G2417.1.2.)

G2414.8 (403.8) Protective coating. Where in contact with material or atmosphere exerting a corrosive action, metallic *piping* and fittings coated with a corrosion-resistant material shall be used. External or internal coatings or linings used on *piping* or components shall not be considered as adding strength.

G2414.9 (403.9) Metallic pipe threads. Metallic *pipe* and fitting threads shall be taper *pipe* threads and shall comply with ASME B1.20.1.

G2414.9.1 (403.9.1) Damaged threads. *Pipe* with threads that are stripped, chipped, corroded or otherwise damaged shall not be used. Where a weld opens during the operation of cutting or threading, that portion of the *pipe* shall not be used.

G2414.9.2 (403.9.2) Number of threads. Field threading of metallic *pipe* shall be in accordance with Table G2414.9.2.

TABLE G2414.9.2 (403.9.2)
SPECIFICATIONS FOR THREADING METALLIC PIPE

IRON PIPE SIZE (inches)	APPROXIMATE LENGTH OF THREADED PORTION (inches)	APPROXIMATE NO. OF THREADS TO BE CUT
1/2	3/4	10
3/4	3/4	10
1	7/8	10
1 1/4	1	11
1 1/2	1	11

For SI: 1 inch = 25.4 mm.

G2414.9.3 (403.9.3) Thread joint compounds. Thread joint compounds shall be resistant to the action of liquefied petroleum gas or to any other chemical constituents of the gases to be conducted through the *piping*.

G2414.10 (403.10) Metallic piping joints and fittings. The type of *piping* joint used shall be suitable for the pressure-temperature conditions and shall be selected giving consideration to joint tightness and mechanical strength under the service conditions. The joint shall be able to sustain the maximum end force caused by the internal pressure and any additional forces caused by temperature expansion or contraction, vibration, fatigue, or to the weight of the *pipe* and its contents.

G2414.10.1 (403.10.1) Pipe joints. Schedule 40 and heavier *pipe* joints shall be threaded, flanged, brazed, welded or assembled with press-connect fittings listed in accordance with ANSI LC4/CSA 6.32. Pipe lighter than Schedule 40 shall be connected using press-connect fittings, flanges, brazing or welding. Where nonferrous *pipe* is brazed, the *brazing* materials shall have a melting point in excess of 1,000ºF (538ºC). *Brazing* alloys shall not contain more than 0.05-percent phosphorus.

G2414.10.2 (403.10.2) Copper tubing joints. Copper *tubing* joints shall be assembled with *approved gas tubing* fittings, shall be brazed with a material having a melting point in excess of 1,000ºF (538ºC) or assembled with press-connect fittings listed in accordance with ANSI LC4/CSA 6.32. *Brazing alloys* shall not contain more than 0.05-percent phosphorus.

G2414.10.3 (403.10.3) Stainless steel tubing joints. Stainless steel tubing joints shall be welded, assembled with approved tubing fittings, brazed with a material having a melting point in excess of 1,000°F (538°C), or assembled with press-connect fittings listed in accordance with ANSI LC4/CSA 6.32.

G2414.10.4 (403.10.4) Flared joints. *Flared joints* shall be used only in systems constructed from nonferrous *pipe* and *tubing* where experience or tests have demonstrated that the joint is suitable for the conditions and where provisions are made in the design to prevent separation of the joints.

INTERNATIONAL CODE COUNCIL®
Copyright © 2019 ICC & NYSDOS. ALL RIGHTS RESERVED. Accessed by Lauren Gualdino (lgualdino@briarcliffmanor.org), (-) Order Number #100880972 on May 08, 2020 07:05 AM (PDT) pursuant to License Agreement with ICC & NYSDOS. No further reproduction, no

100880972

TABLE G2413.4(1) [402.4(2)]
SCHEDULE 40 METALLIC PIPE

Gas	Natural
Inlet Pressure	Less than 2 psi
Pressure Drop	0.5 in. w.c.
Specific Gravity	0.60

PIPE SIZE (inches)														
Nominal	**1/2**	**3/4**	**1**	**1 1/4**	**1 1/2**	**2**	**2 1/2**	**3**	**4**	**5**	**6**	**8**	**10**	**12**
Actual ID	**0.622**	**0.824**	**1.049**	**1.380**	**1.610**	**2.067**	**2.469**	**3.068**	**4.026**	**5.047**	**6.065**	**7.981**	**10.020**	**11.938**
Length (ft)	**Capacity in Cubic Feet of Gas per Hour**													
10	172	360	678	1,390	2,090	4,020	6,400	11,300	23,100	41,800	67,600	139,000	252,000	399,000
20	118	247	466	957	1,430	2,760	4,400	7,780	15,900	28,700	46,500	95,500	173,000	275,000
30	95	199	374	768	1,150	2,220	3,530	6,250	12,700	23,000	37,300	76,700	139,000	220,000
40	81	170	320	657	985	1,900	3,020	5,350	10,900	19,700	31,900	65,600	119,000	189,000
50	72	151	284	583	873	1,680	2,680	4,740	9,660	17,500	28,300	58,200	106,000	167,000
60	65	137	257	528	791	1,520	2,430	4,290	8,760	15,800	25,600	52,700	95,700	152,000
70	60	126	237	486	728	1,400	2,230	3,950	8,050	14,600	23,600	48,500	88,100	139,000
80	56	117	220	452	677	1,300	2,080	3,670	7,490	13,600	22,000	45,100	81,900	130,000
90	52	110	207	424	635	1,220	1,950	3,450	7,030	12,700	20,600	42,300	76,900	122,000
100	50	104	195	400	600	1,160	1,840	3,260	6,640	12,000	19,500	40,000	72,600	115,000
125	44	92	173	355	532	1,020	1,630	2,890	5,890	10,600	17,200	35,400	64,300	102,000
150	40	83	157	322	482	928	1,480	2,610	5,330	9,650	15,600	32,100	58,300	92,300
175	37	77	144	296	443	854	1,360	2,410	4,910	8,880	14,400	29,500	53,600	84,900
200	34	71	134	275	412	794	1,270	2,240	4,560	8,260	13,400	27,500	49,900	79,000
250	30	63	119	244	366	704	1,120	1,980	4,050	7,320	11,900	24,300	44,200	70,000
300	27	57	108	221	331	638	1,020	1,800	3,670	6,630	10,700	22,100	40,100	63,400
350	25	53	99	203	305	587	935	1,650	3,370	6,100	9,880	20,300	36,900	58,400
400	23	49	92	189	283	546	870	1,540	3,140	5,680	9,190	18,900	34,300	54,300
450	22	46	86	177	266	512	816	1,440	2,940	5,330	8,620	17,700	32,200	50,900
500	21	43	82	168	251	484	771	1,360	2,780	5,030	8,150	16,700	30,400	48,100
550	20	41	78	159	239	459	732	1,290	2,640	4,780	7,740	15,900	28,900	45,700
600	19	39	74	152	228	438	699	1,240	2,520	4,560	7,380	15,200	27,500	43,600
650	18	38	71	145	218	420	669	1,180	2,410	4,360	7,070	14,500	26,400	41,800
700	17	36	68	140	209	403	643	1,140	2,320	4,190	6,790	14,000	25,300	40,100
750	17	35	66	135	202	389	619	1,090	2,230	4,040	6,540	13,400	24,400	38,600
800	16	34	63	130	195	375	598	1,060	2,160	3,900	6,320	13,000	23,600	37,300
850	16	33	61	126	189	363	579	1,020	2,090	3,780	6,110	12,600	22,800	36,100
900	15	32	59	122	183	352	561	992	2,020	3,660	5,930	12,200	22,100	35,000
950	15	31	58	118	178	342	545	963	1,960	3,550	5,760	11,800	21,500	34,000
1,000	14	30	56	115	173	333	530	937	1,910	3,460	5,600	11,500	20,900	33,100
1,100	14	28	53	109	164	316	503	890	1,810	3,280	5,320	10,900	19,800	31,400
1,200	13	27	51	104	156	301	480	849	1,730	3,130	5,070	10,400	18,900	30,000
1,300	12	26	49	100	150	289	460	813	1,660	3,000	4,860	9,980	18,100	28,700
1,400	12	25	47	96	144	277	442	781	1,590	2,880	4,670	9,590	17,400	27,600
1,500	11	24	45	93	139	267	426	752	1,530	2,780	4,500	9,240	16,800	26,600
1,600	11	23	44	89	134	258	411	727	1,480	2,680	4,340	8,920	16,200	25,600
1,700	11	22	42	86	130	250	398	703	1,430	2,590	4,200	8,630	15,700	24,800
1,800	10	22	41	84	126	242	386	682	1,390	2,520	4,070	8,370	15,200	24,100
1,900	10	21	40	81	122	235	375	662	1,350	2,440	3,960	8,130	14,800	23,400
2,000	NA	20	39	79	119	229	364	644	1,310	2,380	3,850	7,910	14,400	22,700

For SI: 1 inch = 25.4 mm, 1 foot = 304.8 mm, 1 pound per square inch = 6.895 kPa, 1-inch water column = 0.2488 kPa, 1 British thermal unit per hour = 0.2931 W, 1 cubic foot per hour = 0.0283 m^3/h, 1 degree = 0.01745 rad.

Notes:

1. NA means a flow of less than 10 cfh.
2. Table entries have been rounded to three significant digits.

INTERNATIONAL CODE COUNCIL®
Copyright © 2019 ICC & NYSDOS. ALL RIGHTS RESERVED. Accessed by Lauren Gualdino (lgualdino@briarcliffmanor.org), (-) Order Number #100880972 on May 08, 2020 07:05 AM (PDT) pursuant to License Agreement with ICC & NYSDOS. No further reproduction, no

TABLE G2413.4(2) [402.4(5)]
SCHEDULE 40 METALLIC PIPE

Gas	Natural
Inlet Pressure	2.0 psi
Pressure Drop	1.0 psi
Specific Gravity	0.60

PIPE SIZE (inches)									
Nominal	**1/2**	**3/4**	**1**	**1 1/4**	**1 1/2**	**2**	**2 1/2**	**3**	**4**
Actual ID	**0.622**	**0.824**	**1.049**	**1.380**	**1.610**	**2.067**	**2.469**	**3.068**	**4.026**
Length (ft)	**Capacity in Cubic Feet of Gas per Hour**								
10	1,510	3,040	5,560	11,400	17,100	32,900	52,500	92,800	189,000
20	1,070	2,150	3,930	8,070	12,100	23,300	37,100	65,600	134,000
30	869	1,760	3,210	6,590	9,880	19,000	30,300	53,600	109,000
40	753	1,520	2,780	5,710	8,550	16,500	26,300	46,400	94,700
50	673	1,360	2,490	5,110	7,650	14,700	23,500	41,500	84,700
60	615	1,240	2,270	4,660	6,980	13,500	21,400	37,900	77,300
70	569	1,150	2,100	4,320	6,470	12,500	19,900	35,100	71,600
80	532	1,080	1,970	4,040	6,050	11,700	18,600	32,800	67,000
90	502	1,010	1,850	3,810	5,700	11,000	17,500	30,900	63,100
100	462	934	1,710	3,510	5,260	10,100	16,100	28,500	58,200
125	414	836	1,530	3,140	4,700	9,060	14,400	25,500	52,100
150	372	751	1,370	2,820	4,220	8,130	13,000	22,900	46,700
175	344	695	1,270	2,601	3,910	7,530	12,000	21,200	43,300
200	318	642	1,170	2,410	3,610	6,960	11,100	19,600	40,000
250	279	583	1,040	2,140	3,210	6,180	9,850	17,400	35,500
300	253	528	945	1,940	2,910	5,600	8,920	15,800	32,200
350	232	486	869	1,790	2,670	5,150	8,210	14,500	29,600
400	216	452	809	1,660	2,490	4,790	7,640	13,500	27,500
450	203	424	759	1,560	2,330	4,500	7,170	12,700	25,800
500	192	401	717	1,470	2,210	4,250	6,770	12,000	24,400
550	182	381	681	1,400	2,090	4,030	6,430	11,400	23,200
600	174	363	650	1,330	2,000	3,850	6,130	10,800	22,100
650	166	348	622	1,280	1,910	3,680	5,870	10,400	21,200
700	160	334	598	1,230	1,840	3,540	5,640	9,970	20,300
750	154	322	576	1,180	1,770	3,410	5,440	9,610	19,600
800	149	311	556	1,140	1,710	3,290	5,250	9,280	18,900
850	144	301	538	1,100	1,650	3,190	5,080	8,980	18,300
900	139	292	522	1,070	1,600	3,090	4,930	8,710	17,800
950	135	283	507	1,040	1,560	3,000	4,780	8,460	17,200
1,000	132	275	493	1,010	1,520	2,920	4,650	8,220	16,800
1,100	125	262	468	960	1,440	2,770	4,420	7,810	15,900
1,200	119	250	446	917	1,370	2,640	4,220	7,450	15,200
1,300	114	239	427	878	1,320	2,530	4,040	7,140	14,600
1,400	110	230	411	843	1,260	2,430	3,880	6,860	14,000
1,500	106	221	396	812	1,220	2,340	3,740	6,600	13,500
1,600	102	214	382	784	1,180	2,260	3,610	6,380	13,000
1,700	99	207	370	759	1,140	2,190	3,490	6,170	12,600
1,800	96	200	358	736	1,100	2,120	3,390	5,980	12,200
1,900	93	195	348	715	1,070	2,060	3,290	5,810	11,900
2,000	91	189	339	695	1,040	2,010	3,200	5,650	11,500

For SI: 1 inch = 25.4 mm, 1 foot = 304.8 mm, 1 pound per square inch = 6.895 kPa, 1-inch water column = 0.2488 kPa, 1 British thermal unit per hour = 0.2931 W, 1 cubic foot per hour = 0.0283 m^3/h, 1 degree = 0.01745 rad.

Note: Table entries have been rounded to three significant digits.

INTERNATIONAL CODE COUNCIL®
Copyright © 2019 ICC & NYSDOS. ALL RIGHTS RESERVED. Accessed by Lauren Gualdino (lgualdino@briarcliffmanor.org), (-) Order Number #100880972 on May 08, 2020 07:05 AM (PDT) pursuant to License Agreement with ICC & NYSDOS. No further reproduction, no

TABLE G2413.4(3) [402.4(9)]
SEMIRIGID COPPER TUBING

Gas	Natural
Inlet Pressure	Less than 2 psi
Pressure Drop	0.5 in. w.c.
Specific Gravity	0.60

TUBE SIZE (inches)										
Nominal	**K & L**	**1/4**	**3/8**	**1/2**	**5/8**	**3/4**	**1**	**1 1/4**	**1 1/2**	**2**
	ACR	**3/8**	**1/2**	**5/8**	**3/4**	**7/8**	**1 1/8**	**1 3/8**	**—**	**—**
Outside		**0.375**	**0.500**	**0.625**	**0.750**	**0.875**	**1.125**	**1.375**	**1.625**	**2.125**
Inside		**0.305**	**0.402**	**0.527**	**0.652**	**0.745**	**0.995**	**1.245**	**1.481**	**1.959**
Length (ft)		**Capacity in Cubic Feet of Gas per Hour**								
10		27	55	111	195	276	590	1,060	1,680	3,490
20		18	38	77	134	190	406	730	1,150	2,400
30		15	30	61	107	152	326	586	925	1,930
40		13	26	53	92	131	279	502	791	1,650
50		11	23	47	82	116	247	445	701	1,460
60		10	21	42	74	105	224	403	635	1,320
70		NA	19	39	68	96	206	371	585	1,220
80		NA	18	36	63	90	192	345	544	1,130
90		NA	17	34	59	84	180	324	510	1,060
100		NA	16	32	56	79	170	306	482	1,000
125		NA	14	28	50	70	151	271	427	890
150		NA	13	26	45	64	136	245	387	806
175		NA	12	24	41	59	125	226	356	742
200		NA	11	22	39	55	117	210	331	690
250		NA	NA	20	34	48	103	186	294	612
300		NA	NA	18	31	44	94	169	266	554
350		NA	NA	16	28	40	86	155	245	510
400		NA	NA	15	26	38	80	144	228	474
450		NA	NA	14	25	35	75	135	214	445
500		NA	NA	13	23	33	71	128	202	420
550		NA	NA	13	22	32	68	122	192	399
600		NA	NA	12	21	30	64	116	183	381
650		NA	NA	12	20	29	62	111	175	365
700		NA	NA	11	20	28	59	107	168	350
750		NA	NA	11	19	27	57	103	162	338
800		NA	NA	10	18	26	55	99	156	326
850		NA	NA	10	18	25	53	96	151	315
900		NA	NA	NA	17	24	52	93	147	306
950		NA	NA	NA	17	24	50	90	143	297
1,000		NA	NA	NA	16	23	49	88	139	289
1,100		NA	NA	NA	15	22	46	84	132	274
1,200		NA	NA	NA	15	21	44	80	126	262
1,300		NA	NA	NA	14	20	42	76	120	251
1,400		NA	NA	NA	13	19	41	73	116	241
1,500		NA	NA	NA	13	18	39	71	111	232
1,600		NA	NA	NA	13	18	38	68	108	224
1,700		NA	NA	NA	12	17	37	66	104	217
1,800		NA	NA	NA	12	17	36	64	101	210
1,900		NA	NA	NA	11	16	35	62	98	204
2,000		NA	NA	NA	11	16	34	60	95	199

For SI: 1 inch = 25.4 mm, 1 foot = 304.8 mm, 1 pound per square inch = 6.895 kPa, 1-inch water column = 0.2488 kPa, 1 British thermal unit per hour = 0.2931 W, 1 cubic foot per hour = 0.0283 m^3/h, 1 degree = 0.01745 rad.

Notes:

1. Table capacities are based on Type K copper tubing inside diameter (shown), which has the smallest inside diameter of the copper tubing products.
2. NA means a flow of less than 10 cfh.
3. Table entries have been rounded to three significant digits.

INTERNATIONAL CODE COUNCIL®
Copyright © 2019 ICC & NYSDOS. ALL RIGHTS RESERVED. Accessed by Lauren Gualdino (lgualdino@briarcliffmanor.org), (-) Order Number #100880972 on May 08, 2020 07:05 AM (PDT) pursuant to License Agreement with ICC & NYSDOS. No further reproduction, no

TABLE G2413.4(4) [402.4(12)]
SEMIRIGID COPPER TUBING

Gas	Natural
Inlet Pressure	2.0 psi
Pressure Drop	1.0 psi
Specific Gravity	0.60

TUBE SIZE (inches)										
Nominal	**K & L**	$^1/_4$	$^3/_8$	$^1/_2$	$^5/_8$	$^3/_4$	**1**	$1^1/_4$	$1^1/_2$	**2**
	ACR	$^3/_8$	$^1/_2$	$^5/_8$	$^3/_4$	$^7/_8$	$1^1/_8$	$1^3/_8$	—	—
Outside		**0.375**	**0.500**	**0.625**	**0.750**	**0.875**	**1.125**	**1.375**	**1.625**	**2.125**
Inside		**0.305**	**0.402**	**0.527**	**0.652**	**0.745**	**0.995**	**1.245**	**1.481**	**1.959**
Length (ft)		**Capacity in Cubic Feet of Gas per Hour**								
10		245	506	1,030	1,800	2,550	5,450	9,820	15,500	32,200
20		169	348	708	1,240	1,760	3,750	6,750	10,600	22,200
30		135	279	568	993	1,410	3,010	5,420	8,550	17,800
40		116	239	486	850	1,210	2,580	4,640	7,310	15,200
50		103	212	431	754	1,070	2,280	4,110	6,480	13,500
60		93	192	391	683	969	2,070	3,730	5,870	12,200
70		86	177	359	628	891	1,900	3,430	5,400	11,300
80		80	164	334	584	829	1,770	3,190	5,030	10,500
90		75	154	314	548	778	1,660	2,990	4,720	9,820
100		71	146	296	518	735	1,570	2,830	4,450	9,280
125		63	129	263	459	651	1,390	2,500	3,950	8,220
150		57	117	238	416	590	1,260	2,270	3,580	7,450
175		52	108	219	383	543	1,160	2,090	3,290	6,850
200		49	100	204	356	505	1,080	1,940	3,060	6,380
250		43	89	181	315	448	956	1,720	2,710	5,650
300		39	80	164	286	406	866	1,560	2,460	5,120
350		36	74	150	263	373	797	1,430	2,260	4,710
400		33	69	140	245	347	741	1,330	2,100	4,380
450		31	65	131	230	326	696	1,250	1,970	4,110
500		30	61	124	217	308	657	1,180	1,870	3,880
550		28	58	118	206	292	624	1,120	1,770	3,690
600		27	55	112	196	279	595	1,070	1,690	3,520
650		26	53	108	188	267	570	1,030	1,620	3,370
700		25	51	103	181	256	548	986	1,550	3,240
750		24	49	100	174	247	528	950	1,500	3,120
800		23	47	96	168	239	510	917	1,450	3,010
850		22	46	93	163	231	493	888	1,400	2,920
900		22	44	90	158	224	478	861	1,360	2,830
950		21	43	88	153	217	464	836	1,320	2,740
1,000		20	42	85	149	211	452	813	1,280	2,670
1,100		19	40	81	142	201	429	772	1,220	2,540
1,200		18	38	77	135	192	409	737	1,160	2,420
1,300		18	36	74	129	183	392	705	1,110	2,320
1,400		17	35	71	124	176	376	678	1,070	2,230
1,500		16	34	68	120	170	363	653	1,030	2,140
1,600		16	33	66	116	164	350	630	994	2,070
1,700		15	31	64	112	159	339	610	962	2,000
1,800		15	30	62	108	154	329	592	933	1,940
1,900		14	30	60	105	149	319	575	906	1,890
2,000		14	29	59	102	145	310	559	881	1,830

For SI: 1 inch = 25.4 mm, 1 foot = 304.8 mm, 1 pound per square inch = 6.895 kPa, 1-inch water column = 0.2488 kPa, 1 British thermal unit per hour = 0.2931 W, 1 cubic foot per hour = 0.0283 m^3/h, 1 degree = 0.01745 rad.

Notes:

1. Table capacities are based on Type K copper tubing inside diameter (shown), which has the smallest inside diameter of the copper tubing products.
2. Table entries have been rounded to three significant digits.

INTERNATIONAL CODE COUNCIL®
Copyright © 2019 ICC & NYSDOS. ALL RIGHTS RESERVED. Accessed by Lauren Gualdino (lgualdino@briarcliffmanor.org), (-) Order Number #100880972 on May 08, 2020 07:05 AM (PDT) pursuant to License Agreement with ICC & NYSDOS. No further reproduction, no

100880972

TABLE G2413.4(5) [402.4(15)]
CORRUGATED STAINLESS STEEL TUBING (CSST)

Gas	Natural
Inlet Pressure	Less than 2 psi
Pressure Drop	0.5 in. w.c.
Specific Gravity	0.60

TUBE SIZE (EHD)														
Flow Designation	**13**	**15**	**18**	**19**	**23**	**25**	**30**	**31**	**37**	**39**	**46**	**48**	**60**	**62**
Length (ft)	**Capacity in Cubic Feet of Gas per Hour**													
5	46	63	115	134	225	270	471	546	895	1,037	1,790	2,070	3,660	4,140
10	32	44	82	95	161	192	330	383	639	746	1,260	1,470	2,600	2,930
15	25	35	66	77	132	157	267	310	524	615	1,030	1,200	2,140	2,400
20	22	31	58	67	116	137	231	269	456	536	888	1,050	1,850	2,080
25	19	27	52	60	104	122	206	240	409	482	793	936	1,660	1,860
30	18	25	47	55	96	112	188	218	374	442	723	856	1,520	1,700
40	15	21	41	47	83	97	162	188	325	386	625	742	1,320	1,470
50	13	19	37	42	75	87	144	168	292	347	559	665	1,180	1,320
60	12	17	34	38	68	80	131	153	267	318	509	608	1,080	1,200
70	11	16	31	36	63	74	121	141	248	295	471	563	1,000	1,110
80	10	15	29	33	60	69	113	132	232	277	440	527	940	1,040
90	10	14	28	32	57	65	107	125	219	262	415	498	887	983
100	9	13	26	30	54	62	101	118	208	249	393	472	843	933
150	7	10	20	23	42	48	78	91	171	205	320	387	691	762
200	6	9	18	21	38	44	71	82	148	179	277	336	600	661
250	5	8	16	19	34	39	63	74	133	161	247	301	538	591
300	5	7	15	17	32	36	57	67	95	148	226	275	492	540

For SI: 1 inch = 25.4 mm, 1 foot = 304.8 mm, 1 pound per square inch = 6.895 kPa, 1-inch water column = 0.2488 kPa, 1 British thermal unit per hour = 0.2931 W, 1 cubic foot per hour = 0.0283 m^3/h, 1 degree = 0.01745 rad.

Notes:

1. Table includes losses for four 90-degree bends and two end fittings. Tubing runs with larger numbers of bends or fittings shall be increased by an equivalent length of tubing to the following equation: $L = 1.3n$, where L is additional length (feet) of tubing and n is the number of additional fittings or bends.
2. EHD—Equivalent Hydraulic Diameter, which is a measure of the relative hydraulic efficiency between different tubing sizes. The greater the value of EHD, the greater the gas capacity of the tubing.
3. Table entries have been rounded to three significant digits.

INTERNATIONAL CODE COUNCIL®
Copyright © 2019 ICC & NYSDOS. ALL RIGHTS RESERVED. Accessed by Lauren Gualdino (lgualdino@briarcliffmanor.org), (-) Order Number #100880972 on May 08, 2020 07:05 AM (PDT) pursuant to License Agreement with ICC & NYSDOS. No further reproduction, no

100880972

TABLE G2413.4(6) [402.4(18)]
CORRUGATED STAINLESS STEEL TUBING (CSST)

Gas	Natural
Inlet Pressure	2.0 psi
Pressure Drop	1.0 psi
Specific Gravity	0.60

TUBE SIZE (EHD)														
Flow Designation	**13**	**15**	**18**	**19**	**23**	**25**	**30**	**31**	**37**	**39**	**46**	**48**	**60**	**62**
Length (ft)	**Capacity in Cubic Feet of Gas Per Hour**													
10	270	353	587	700	1,100	1,370	2,590	2,990	4,510	5,037	9,600	10,700	18,600	21,600
25	166	220	374	444	709	876	1,620	1,870	2,890	3,258	6,040	6,780	11,900	13,700
30	151	200	342	405	650	801	1,480	1,700	2,640	2,987	5,510	6,200	10,900	12,500
40	129	172	297	351	567	696	1,270	1,470	2,300	2,605	4,760	5,380	9,440	10,900
50	115	154	266	314	510	624	1,140	1,310	2,060	2,343	4,260	4,820	8,470	9,720
75	93	124	218	257	420	512	922	1,070	1,690	1,932	3,470	3,950	6,940	7,940
80	89	120	211	249	407	496	892	1,030	1,640	1,874	3,360	3,820	6,730	7,690
100	79	107	189	222	366	445	795	920	1,470	1,685	3,000	3,420	6,030	6,880
150	64	87	155	182	302	364	646	748	1,210	1,389	2,440	2,800	4,940	5,620
200	55	75	135	157	263	317	557	645	1,050	1,212	2,110	2,430	4,290	4,870
250	49	67	121	141	236	284	497	576	941	1,090	1,890	2,180	3,850	4,360
300	44	61	110	129	217	260	453	525	862	999	1,720	1,990	3,520	3,980
400	38	52	96	111	189	225	390	453	749	871	1,490	1,730	3,060	3,450
500	34	46	86	100	170	202	348	404	552	783	1,330	1,550	2,740	3,090

For SI: 1 inch = 25.4 mm, 1 foot = 304.8 mm, 1 pound per square inch = 6.895 kPa, 1-inch water column = 0.2488 kPa, 1 British thermal unit per hour = 0.2931 W, 1 cubic foot per hour = 0.0283 m^3/h, 1 degree = 0.01745 rad.

Notes:

1. Table does not include effect of pressure drop across the line regulator. Where regulator loss exceeds $^3/_4$ psi, DO NOT USE THIS TABLE. Consult with the regulator manufacturer for pressure drops and capacity factors. Pressure drops across a regulator can vary with flow rate.
2. CAUTION: Capacities shown in the table might exceed maximum capacity for a selected regulator. Consult with the regulator or tubing manufacturer for guidance.
3. Table includes losses for four 90-degree bends and two end fittings. Tubing runs with larger numbers of bends or fittings shall be increased by an equivalent length of tubing to the following equation: $L = 1.3n$ where L is additional length (feet) of tubing and n is the number of additional fittings or bends.
4. EHD—Equivalent Hydraulic Diameter, which is a measure of the relative hydraulic efficiency between different tubing sizes. The greater the value of EHD, the greater the gas capacity of the tubing.
5. Table entries have been rounded to three significant digits.

INTERNATIONAL CODE COUNCIL®
Copyright © 2019 ICC & NYSDOS. ALL RIGHTS RESERVED. Accessed by Lauren Gualdino (lgualdino@briarcliffmanor.org), (-) Order Number #100880972 on May 08, 2020 07:05 AM (PDT) pursuant to License Agreement with ICC & NYSDOS. No further reproduction, no

100880972

TABLE G2413.4(7) [402.4(21)]
POLYETHYLENE PLASTIC PIPE

Gas	Natural
Inlet Pressure	Less than 2 psi
Pressure Drop	0.5 in. w.c.
Specific Gravity	0.60

PIPE SIZE (inches)						
Nominal OD	**1/2**	**3/4**	**1**	**1 1/4**	**1 1/2**	**2**
Designation	**SDR 9**	**SDR 11**	**SDR 11**	**SDR 10**	**SDR 11**	**SDR 11**
Actual ID	**0.660**	**0.860**	**1.077**	**1.328**	**1.554**	**1.943**
Length (ft)	**Capacity in Cubic Feet of Gas per Hour**					
10	201	403	726	1,260	1,900	3,410
20	138	277	499	865	1,310	2,350
30	111	222	401	695	1,050	1,880
40	95	190	343	594	898	1,610
50	84	169	304	527	796	1,430
60	76	153	276	477	721	1,300
70	70	140	254	439	663	1,190
80	65	131	236	409	617	1,110
90	61	123	221	383	579	1,040
100	58	116	209	362	547	983
125	51	103	185	321	485	871
150	46	93	168	291	439	789
175	43	86	154	268	404	726
200	40	80	144	249	376	675
250	35	71	127	221	333	598
300	32	64	115	200	302	542
350	29	59	106	184	278	499
400	27	55	99	171	258	464
450	26	51	93	160	242	435
500	24	48	88	152	229	411

For SI: 1 inch = 25.4 mm, 1 foot = 304.8 mm, 1 pound per square inch = 6.895 kPa, 1-inch water column = 0.2488 kPa, 1 British thermal unit per hour = 0.2931 W, 1 cubic foot per hour = 0.0283 m^3/h, 1 degree = 0.01745 rad.

Note: Table entries have been rounded to three significant digits.

INTERNATIONAL CODE COUNCIL®
Copyright © 2019 ICC & NYSDOS. ALL RIGHTS RESERVED. Accessed by Lauren Gualdino (lgualdino@briarcliffmanor.org), (-) Order Number #100880972 on May 08, 2020 07:05 AM (PDT) pursuant to License Agreement with ICC & NYSDOS. No further reproduction, no

TABLE G2413.4(8) [402.4(22)]
POLYETHYLENE PLASTIC PIPE

Gas	Natural
Inlet Pressure	2.0 psi
Pressure Drop	1.0 psi
Specific Gravity	0.60

PIPE SIZE (inches)						
Nominal OD	**1/2**	**3/4**	**1**	**1 1/4**	**1 1/2**	**2**
Designation	**SDR 9**	**SDR 11**	**SDR 11**	**SDR 10**	**SDR 11**	**SDR 11**
Actual ID	**0.660**	**0.860**	**1.077**	**1.328**	**1.554**	**1.943**
Length (ft)	**Capacity in Cubic Feet of Gas per Hour**					
10	1,860	3,720	6,710	11,600	17,600	31,600
20	1,280	2,560	4,610	7,990	12,100	21,700
30	1,030	2,050	3,710	6,420	9,690	17,400
40	878	1,760	3,170	5,490	8,300	14,900
50	778	1,560	2,810	4,870	7,350	13,200
60	705	1,410	2,550	4,410	6,660	12,000
70	649	1,300	2,340	4,060	6,130	11,000
80	603	1,210	2,180	3,780	5,700	10,200
90	566	1,130	2,050	3,540	5,350	9,610
100	535	1,070	1,930	3,350	5,050	9,080
125	474	949	1,710	2,970	4,480	8,050
150	429	860	1,550	2,690	4,060	7,290
175	395	791	1,430	2,470	3,730	6,710
200	368	736	1,330	2,300	3,470	6,240
250	326	652	1,180	2,040	3,080	5,530
300	295	591	1,070	1,850	2,790	5,010
350	272	544	981	1,700	2,570	4,610
400	253	506	913	1,580	2,390	4,290
450	237	475	856	1,480	2,240	4,020
500	224	448	809	1,400	2,120	3,800
550	213	426	768	1,330	2,010	3,610
600	203	406	733	1,270	1,920	3,440
650	194	389	702	1,220	1,840	3,300
700	187	374	674	1,170	1,760	3,170
750	180	360	649	1,130	1,700	3,050
800	174	348	627	1,090	1,640	2,950
850	168	336	607	1,050	1,590	2,850
900	163	326	588	1,020	1,540	2,770
950	158	317	572	990	1,500	2,690
1,000	154	308	556	963	1,450	2,610
1,100	146	293	528	915	1,380	2,480
1,200	139	279	504	873	1,320	2,370
1,300	134	267	482	836	1,260	2,270
1,400	128	257	463	803	1,210	2,180
1,500	124	247	446	773	1,170	2,100
1,600	119	239	431	747	1,130	2,030
1,700	115	231	417	723	1,090	1,960
1,800	112	224	404	701	1,060	1,900
1,900	109	218	393	680	1,030	1,850
2,000	106	212	382	662	1,000	1,800

For SI: 1 inch = 25.4 mm, 1 foot = 304.8 mm, 1 pound per square inch = 6.895 kPa, 1-inch water column = 0.2488 kPa, 1 British thermal unit per hour = 0.2931 W, 1 cubic foot per hour = 0.0283 m^3/h, 1 degree = 0.01745 rad.

Note: Table entries have been rounded to three significant digits.

INTERNATIONAL CODE COUNCIL®
Copyright © 2019 ICC & NYSDOS. ALL RIGHTS RESERVED. Accessed by Lauren Gualdino (lgualdino@briarcliffmanor.org), (-) Order Number #100880972 on May 08, 2020 07:05 AM (PDT) pursuant to License Agreement with ICC & NYSDOS. No further reproduction, no

100880972

TABLE G2413.4(9) [402.4(25)]
SCHEDULE 40 METALLIC PIPE

Gas	Undiluted Propane
Inlet Pressure	10.0 psi
Pressure Drop	1.0 psi
Specific Gravity	1.50

INTENDED USE	**Pipe sizing between first stage (high-pressure regulator) and second stage (low-pressure regulator).**								
	PIPE SIZE (inches)								
Nominal	**1/2**	**3/4**	**1**	**1 1/4**	**1 1/2**	**2**	**2 1/2**	**3**	**4**
Actual ID	**0.622**	**0.824**	**1.049**	**1.380**	**1.610**	**2.067**	**2.469**	**3.068**	**4.026**
Length (ft)	**Capacity in Thousands of Btu per Hour**								
10	3,320	6,950	13,100	26,900	40,300	77,600	124,000	219,000	446,000
20	2,280	4,780	9,000	18,500	27,700	53,300	85,000	150,000	306,000
30	1,830	3,840	7,220	14,800	22,200	42,800	68,200	121,000	246,000
40	1,570	3,280	6,180	12,700	19,000	36,600	58,400	103,000	211,000
50	1,390	2,910	5,480	11,300	16,900	32,500	51,700	91,500	187,000
60	1,260	2,640	4,970	10,200	15,300	29,400	46,900	82,900	169,000
70	1,160	2,430	4,570	9,380	14,100	27,100	43,100	76,300	156,000
80	1,080	2,260	4,250	8,730	13,100	25,200	40,100	70,900	145,000
90	1,010	2,120	3,990	8,190	12,300	23,600	37,700	66,600	136,000
100	956	2,000	3,770	7,730	11,600	22,300	35,600	62,900	128,000
125	848	1,770	3,340	6,850	10,300	19,800	31,500	55,700	114,000
150	768	1,610	3,020	6,210	9,300	17,900	28,600	50,500	103,000
175	706	1,480	2,780	5,710	8,560	16,500	26,300	46,500	94,700
200	657	1,370	2,590	5,320	7,960	15,300	24,400	43,200	88,100
250	582	1,220	2,290	4,710	7,060	13,600	21,700	38,300	78,100
300	528	1,100	2,080	4,270	6,400	12,300	19,600	34,700	70,800
350	486	1,020	1,910	3,930	5,880	11,300	18,100	31,900	65,100
400	452	945	1,780	3,650	5,470	10,500	16,800	29,700	60,600
450	424	886	1,670	3,430	5,140	9,890	15,800	27,900	56,800
500	400	837	1,580	3,240	4,850	9,340	14,900	26,300	53,700
550	380	795	1,500	3,070	4,610	8,870	14,100	25,000	51,000
600	363	759	1,430	2,930	4,400	8,460	13,500	23,900	48,600
650	347	726	1,370	2,810	4,210	8,110	12,900	22,800	46,600
700	334	698	1,310	2,700	4,040	7,790	12,400	21,900	44,800
750	321	672	1,270	2,600	3,900	7,500	12,000	21,100	43,100
800	310	649	1,220	2,510	3,760	7,240	11,500	20,400	41,600
850	300	628	1,180	2,430	3,640	7,010	11,200	19,800	40,300
900	291	609	1,150	2,360	3,530	6,800	10,800	19,200	39,100
950	283	592	1,110	2,290	3,430	6,600	10,500	18,600	37,900
1,000	275	575	1,080	2,230	3,330	6,420	10,200	18,100	36,900
1,100	261	546	1,030	2,110	3,170	6,100	9,720	17,200	35,000
1,200	249	521	982	2,020	3,020	5,820	9,270	16,400	33,400
1,300	239	499	940	1,930	2,890	5,570	8,880	15,700	32,000
1,400	229	480	903	1,850	2,780	5,350	8,530	15,100	30,800
1,500	221	462	870	1,790	2,680	5,160	8,220	14,500	29,600
1,600	213	446	840	1,730	2,590	4,980	7,940	14,000	28,600
1,700	206	432	813	1,670	2,500	4,820	7,680	13,600	27,700
1,800	200	419	789	1,620	2,430	4,670	7,450	13,200	26,900
1,900	194	407	766	1,570	2,360	4,540	7,230	12,800	26,100
2,000	189	395	745	1,530	2,290	4,410	7,030	12,400	25,400

For SI: 1 inch = 25.4 mm, 1 foot = 304.8 mm, 1 pound per square inch = 6.895 kPa, 1-inch water column = 0.2488 kPa, 1 British thermal unit per hour = 0.2931 W, 1 cubic foot per hour = 0.0283 m^3/h, 1 degree = 0.01745 rad.

Note: Table entries have been rounded to three significant digits.

INTERNATIONAL CODE COUNCIL®
Copyright © 2019 ICC & NYSDOS. ALL RIGHTS RESERVED. Accessed by Lauren Gualdino (lgualdino@briarcliffmanor.org), (-) Order Number #100880972 on May 08, 2020 07:05 AM (PDT) pursuant to License Agreement with ICC & NYSDOS. No further reproduction, no

TABLE G2413.4(10) [402.4(26)]
SCHEDULE 40 METALLIC PIPE

Gas	Undiluted Propane
Inlet Pressure	10.0 psi
Pressure Drop	3.0 psi
Specific Gravity	1.50

INTENDED USE	**Pipe sizing between first stage (high-pressure regulator) and second stage (low-pressure regulator).**								
	PIPE SIZE (inches)								
Nominal	**1/2**	**3/4**	**1**	**1 1/4**	**1 1/2**	**2**	**2 1/2**	**3**	**4**
Actual ID	**0.622**	**0.824**	**1.049**	**1.380**	**1.610**	**2.067**	**2.469**	**3.068**	**4.026**
Length (ft)	**Capacity in Thousands of Btu per Hour**								
10	5,890	12,300	23,200	47,600	71,300	137,000	219,000	387,000	789,000
20	4,050	8,460	15,900	32,700	49,000	94,400	150,000	266,000	543,000
30	3,250	6,790	12,800	26,300	39,400	75,800	121,000	214,000	436,000
40	2,780	5,810	11,000	22,500	33,700	64,900	103,000	183,000	373,000
50	2,460	5,150	9,710	19,900	29,900	57,500	91,600	162,000	330,000
60	2,230	4,670	8,790	18,100	27,100	52,100	83,000	147,000	299,000
70	2,050	4,300	8,090	16,600	24,900	47,900	76,400	135,000	275,000
80	1,910	4,000	7,530	15,500	23,200	44,600	71,100	126,000	256,000
90	1,790	3,750	7,060	14,500	21,700	41,800	66,700	118,000	240,000
100	1,690	3,540	6,670	13,700	20,500	39,500	63,000	111,000	227,000
125	1,500	3,140	5,910	12,100	18,200	35,000	55,800	98,700	201,000
150	1,360	2,840	5,360	11,000	16,500	31,700	50,600	89,400	182,000
175	1,250	2,620	4,930	10,100	15,200	29,200	46,500	82,300	167,800
200	1,160	2,430	4,580	9,410	14,100	27,200	43,300	76,500	156,100
250	1,030	2,160	4,060	8,340	12,500	24,100	38,400	67,800	138,400
300	935	1,950	3,680	7,560	11,300	21,800	34,800	61,500	125,400
350	860	1,800	3,390	6,950	10,400	20,100	32,000	56,500	115,300
400	800	1,670	3,150	6,470	9,690	18,700	29,800	52,600	107,300
450	751	1,570	2,960	6,070	9,090	17,500	27,900	49,400	100,700
500	709	1,480	2,790	5,730	8,590	16,500	26,400	46,600	95,100
550	673	1,410	2,650	5,450	8,160	15,700	25,000	44,300	90,300
600	642	1,340	2,530	5,200	7,780	15,000	23,900	42,200	86,200
650	615	1,290	2,420	4,980	7,450	14,400	22,900	40,500	82,500
700	591	1,240	2,330	4,780	7,160	13,800	22,000	38,900	79,300
750	569	1,190	2,240	4,600	6,900	13,300	21,200	37,400	76,400
800	550	1,150	2,170	4,450	6,660	12,800	20,500	36,200	73,700
850	532	1,110	2,100	4,300	6,450	12,400	19,800	35,000	71,400
900	516	1,080	2,030	4,170	6,250	12,000	19,200	33,900	69,200
950	501	1,050	1,970	4,050	6,070	11,700	18,600	32,900	67,200
1,000	487	1,020	1,920	3,940	5,900	11,400	18,100	32,000	65,400
1,100	463	968	1,820	3,740	5,610	10,800	17,200	30,400	62,100
1,200	442	923	1,740	3,570	5,350	10,300	16,400	29,000	59,200
1,300	423	884	1,670	3,420	5,120	9,870	15,700	27,800	56,700
1,400	406	849	1,600	3,280	4,920	9,480	15,100	26,700	54,500
1,500	391	818	1,540	3,160	4,740	9,130	14,600	25,700	52,500
1,600	378	790	1,490	3,060	4,580	8,820	14,100	24,800	50,700
1,700	366	765	1,440	2,960	4,430	8,530	13,600	24,000	49,000
1,800	355	741	1,400	2,870	4,300	8,270	13,200	23,300	47,600
1,900	344	720	1,360	2,780	4,170	8,040	12,800	22,600	46,200
2,000	335	700	1,320	2,710	4,060	7,820	12,500	22,000	44,900

For SI: 1 inch = 25.4 mm, 1 foot = 304.8 mm, 1 pound per square inch = 6.895 kPa, 1-inch water column = 0.2488 kPa, 1 British thermal unit per hour = 0.2931 W, 1 cubic foot per hour = 0.0283 m^3/h, 1 degree = 0.01745 rad.

Note: Table entries have been rounded to three significant digits.

INTERNATIONAL CODE COUNCIL®
Copyright © 2019 ICC & NYSDOS. ALL RIGHTS RESERVED. Accessed by Lauren Gualdino (lgualdino@briarcliffmanor.org), (-) Order Number #100880972 on May 08, 2020 07:05 AM (PDT) pursuant to License Agreement with ICC & NYSDOS. No further reproduction, no

100880972

TABLE G2413.4(11) [402.4(27)]
SCHEDULE 40 METALLIC PIPE

Gas	Undiluted Propane
Inlet Pressure	2.0 psi
Pressure Drop	1.0 psi
Specific Gravity	1.50

INTENDED USE	**Pipe sizing between 2 psig service and line pressure regulator.**								
	PIPE SIZE (inches)								
Nominal	**1/2**	**3/4**	**1**	**1 1/4**	**1 1/2**	**2**	**2 1/2**	**3**	**4**
Actual ID	**0.622**	**0.824**	**1.049**	**1.380**	**1.610**	**2.067**	**2.469**	**3.068**	**4.026**
Length (ft)	**Capacity in Thousands of Btu per Hour**								
10	2,680	5,590	10,500	21,600	32,400	62,400	99,500	176,000	359,000
20	1,840	3,850	7,240	14,900	22,300	42,900	68,400	121,000	247,000
30	1,480	3,090	5,820	11,900	17,900	34,500	54,900	97,100	198,000
40	1,260	2,640	4,980	10,200	15,300	29,500	47,000	83,100	170,000
50	1,120	2,340	4,410	9,060	13,600	26,100	41,700	73,700	150,000
60	1,010	2,120	4,000	8,210	12,300	23,700	37,700	66,700	136,000
70	934	1,950	3,680	7,550	11,300	21,800	34,700	61,400	125,000
80	869	1,820	3,420	7,020	10,500	20,300	32,300	57,100	116,000
90	815	1,700	3,210	6,590	9,880	19,000	30,300	53,600	109,000
100	770	1,610	3,030	6,230	9,330	18,000	28,600	50,600	103,000
125	682	1,430	2,690	5,520	8,270	15,900	25,400	44,900	91,500
150	618	1,290	2,440	5,000	7,490	14,400	23,000	40,700	82,900
175	569	1,190	2,240	4,600	6,890	13,300	21,200	37,400	76,300
200	529	1,110	2,080	4,280	6,410	12,300	19,700	34,800	71,000
250	469	981	1,850	3,790	5,680	10,900	17,400	30,800	62,900
300	425	889	1,670	3,440	5,150	9,920	15,800	27,900	57,000
350	391	817	1,540	3,160	4,740	9,120	14,500	25,700	52,400
400	364	760	1,430	2,940	4,410	8,490	13,500	23,900	48,800
450	341	714	1,340	2,760	4,130	7,960	12,700	22,400	45,800
500	322	674	1,270	2,610	3,910	7,520	12,000	21,200	43,200
550	306	640	1,210	2,480	3,710	7,140	11,400	20,100	41,100
600	292	611	1,150	2,360	3,540	6,820	10,900	19,200	39,200
650	280	585	1,100	2,260	3,390	6,530	10,400	18,400	37,500
700	269	562	1,060	2,170	3,260	6,270	9,990	17,700	36,000
750	259	541	1,020	2,090	3,140	6,040	9,630	17,000	34,700
800	250	523	985	2,020	3,030	5,830	9,300	16,400	33,500
850	242	506	953	1,960	2,930	5,640	9,000	15,900	32,400
900	235	490	924	1,900	2,840	5,470	8,720	15,400	31,500
950	228	476	897	1,840	2,760	5,310	8,470	15,000	30,500
1,000	222	463	873	1,790	2,680	5,170	8,240	14,600	29,700
1,100	210	440	829	1,700	2,550	4,910	7,830	13,800	28,200
1,200	201	420	791	1,620	2,430	4,680	7,470	13,200	26,900
1,300	192	402	757	1,550	2,330	4,490	7,150	12,600	25,800
1,400	185	386	727	1,490	2,240	4,310	6,870	12,100	24,800
1,500	178	372	701	1,440	2,160	4,150	6,620	11,700	23,900
1,600	172	359	677	1,390	2,080	4,010	6,390	11,300	23,000
1,700	166	348	655	1,340	2,010	3,880	6,180	10,900	22,300
1,800	161	337	635	1,300	1,950	3,760	6,000	10,600	21,600
1,900	157	327	617	1,270	1,900	3,650	5,820	10,300	21,000
2,000	152	318	600	1,230	1,840	3,550	5,660	10,000	20,400

For SI: 1 inch = 25.4 mm, 1 foot = 304.8 mm, 1 pound per square inch = 6.895 kPa, 1-inch water column = 0.2488 kPa, 1 British thermal unit per hour = 0.2931 W, 1 cubic foot per hour = 0.0283 m^3/h, 1 degree = 0.01745 rad.

Note: Table entries have been rounded to three significant digits.

INTERNATIONAL CODE COUNCIL®
Copyright © 2019 ICC & NYSDOS. ALL RIGHTS RESERVED. Accessed by Lauren Gualdino (lgualdino@briarcliffmanor.org), (-) Order Number #100880972 on May 08, 2020 07:05 AM (PDT) pursuant to License Agreement with ICC & NYSDOS. No further reproduction, no

100880972

TABLE G2413.4(12) [402.4(28)]
SCHEDULE 40 METALLIC PIPE

Gas	Undiluted Propane
Inlet Pressure	11.0 in. w.c.
Pressure Drop	0.5 in. w.c.
Specific Gravity	1.50

INTENDED USE	**Pipe sizing between single- or second-stage (low pressure) regulator and appliance.**								
	PIPE SIZE (inches)								
Nominal	**1/2**	**3/4**	**1**	**1 1/4**	**1 1/2**	**2**	**2 1/2**	**3**	**4**
Actual ID	**0.622**	**0.824**	**1.049**	**1.380**	**1.610**	**2.067**	**2.469**	**3.068**	**4.026**
Length (ft)	**Capacity in Thousands of Btu per Hour**								
10	291	608	1,150	2,350	3,520	6,790	10,800	19,100	39,000
20	200	418	787	1,620	2,420	4,660	7,430	13,100	26,800
30	160	336	632	1,300	1,940	3,750	5,970	10,600	21,500
40	137	287	541	1,110	1,660	3,210	5,110	9,030	18,400
50	122	255	480	985	1,480	2,840	4,530	8,000	16,300
60	110	231	434	892	1,340	2,570	4,100	7,250	14,800
80	101	212	400	821	1,230	2,370	3,770	6,670	13,600
100	94	197	372	763	1,140	2,200	3,510	6,210	12,700
125	89	185	349	716	1,070	2,070	3,290	5,820	11,900
150	84	175	330	677	1,010	1,950	3,110	5,500	11,200
175	74	155	292	600	899	1,730	2,760	4,880	9,950
200	67	140	265	543	814	1,570	2,500	4,420	9,010
250	62	129	243	500	749	1,440	2,300	4,060	8,290
300	58	120	227	465	697	1,340	2,140	3,780	7,710
350	51	107	201	412	618	1,190	1,900	3,350	6,840
400	46	97	182	373	560	1,080	1,720	3,040	6,190
450	42	89	167	344	515	991	1,580	2,790	5,700
500	40	83	156	320	479	922	1,470	2,600	5,300
550	37	78	146	300	449	865	1,380	2,440	4,970
600	35	73	138	283	424	817	1,300	2,300	4,700
650	33	70	131	269	403	776	1,240	2,190	4,460
700	32	66	125	257	385	741	1,180	2,090	4,260
750	30	64	120	246	368	709	1,130	2,000	4,080
800	29	61	115	236	354	681	1,090	1,920	3,920
850	28	59	111	227	341	656	1,050	1,850	3,770
900	27	57	107	220	329	634	1,010	1,790	3,640
950	26	55	104	213	319	613	978	1,730	3,530
1,000	25	53	100	206	309	595	948	1,680	3,420
1,100	25	52	97	200	300	578	921	1,630	3,320
1,200	24	50	95	195	292	562	895	1,580	3,230
1,300	23	48	90	185	277	534	850	1,500	3,070
1,400	22	46	86	176	264	509	811	1,430	2,930
1,500	21	44	82	169	253	487	777	1,370	2,800
1,200	24	50	95	195	292	562	895	1,580	3,230
1,300	23	48	90	185	277	534	850	1,500	3,070
1,400	22	46	86	176	264	509	811	1,430	2,930
1,500	21	44	82	169	253	487	777	1,370	2,800
1,600	20	42	79	162	243	468	746	1,320	2,690
1,700	19	40	76	156	234	451	719	1,270	2,590
1,800	19	39	74	151	226	436	694	1,230	2,500
1,900	18	38	71	146	219	422	672	1,190	2,420
2,000	18	37	69	142	212	409	652	1,150	2,350

For SI: 1 inch = 25.4 mm, 1 foot = 304.8 mm, 1 pound per square inch = 6.895 kPa, 1-inch water column = 0.2488 kPa, 1 British thermal unit per hour = 0.2931 W, 1 cubic foot per hour = 0.0283 m^3/h, 1 degree = 0.01745 rad.

Note: Table entries have been rounded to three significant digits.

INTERNATIONAL CODE COUNCIL®
Copyright © 2019 ICC & NYSDOS. ALL RIGHTS RESERVED. Accessed by Lauren Gualdino (lgualdino@briarcliffmanor.org), (-) Order Number #100880972 on May 08, 2020 07:05 AM (PDT) pursuant to License Agreement with ICC & NYSDOS. No further reproduction, no

100880972

TABLE G2413.4(13) [402.4(29)]
SEMIRIGID COPPER TUBING

Gas	Undiluted Propane
Inlet Pressure	10.0 psi
Pressure Drop	1.0 psi
Specific Gravity	1.50

INTENDED USE		**Sizing between first stage (high-pressure regulator) and second stage (low-pressure regulator).**								
TUBE SIZE (inches)										
Nominal	**K & L**	**1/4**	**3/8**	**1/2**	**5/8**	**3/4**	**1**	**1 1/4**	**1 1/2**	**2**
	ACR	**3/8**	**1/2**	**5/8**	**3/4**	**7/8**	**1 1/8**	**1 3/8**	—	—
Outside		**0.375**	**0.500**	**0.625**	**0.750**	**0.875**	**1.125**	**1.375**	**1.625**	**2.125**
Inside		**0.305**	**0.402**	**0.527**	**0.652**	**0.745**	**0.995**	**1.245**	**1.481**	**1.959**
Length (ft)		**Capacity in Thousands of Btu per Hour**								
10		513	1,060	2,150	3,760	5,330	11,400	20,500	32,300	67,400
20		352	727	1,480	2,580	3,670	7,830	14,100	22,200	46,300
30		283	584	1,190	2,080	2,940	6,290	11,300	17,900	37,200
40		242	500	1,020	1,780	2,520	5,380	9,690	15,300	31,800
50		215	443	901	1,570	2,230	4,770	8,590	13,500	28,200
60		194	401	816	1,430	2,020	4,320	7,780	12,300	25,600
70		179	369	751	1,310	1,860	3,980	7,160	11,300	23,500
80		166	343	699	1,220	1,730	3,700	6,660	10,500	21,900
90		156	322	655	1,150	1,630	3,470	6,250	9,850	20,500
100		147	304	619	1,080	1,540	3,280	5,900	9,310	19,400
125		131	270	549	959	1,360	2,910	5,230	8,250	17,200
150		118	244	497	869	1,230	2,630	4,740	7,470	15,600
175		109	225	457	799	1,130	2,420	4,360	6,880	14,300
200		101	209	426	744	1,060	2,250	4,060	6,400	13,300
250		90	185	377	659	935	2,000	3,600	5,670	11,800
300		81	168	342	597	847	1,810	3,260	5,140	10,700
350		75	155	314	549	779	1,660	3,000	4,730	9,840
400		70	144	292	511	725	1,550	2,790	4,400	9,160
450		65	135	274	480	680	1,450	2,620	4,130	8,590
500		62	127	259	453	643	1,370	2,470	3,900	8,120
550		59	121	246	430	610	1,300	2,350	3,700	7,710
600		56	115	235	410	582	1,240	2,240	3,530	7,350
650		54	111	225	393	558	1,190	2,140	3,380	7,040
700		51	106	216	378	536	1,140	2,060	3,250	6,770
750		50	102	208	364	516	1,100	1,980	3,130	6,520
800		48	99	201	351	498	1,060	1,920	3,020	6,290
850		46	96	195	340	482	1,030	1,850	2,920	6,090
900		45	93	189	330	468	1,000	1,800	2,840	5,910
950		44	90	183	320	454	970	1,750	2,750	5,730
1,000		42	88	178	311	442	944	1,700	2,680	5,580
1,100		40	83	169	296	420	896	1,610	2,540	5,300
1,200		38	79	161	282	400	855	1,540	2,430	5,050
1,300		37	76	155	270	383	819	1,470	2,320	4,840
1,400		35	73	148	260	368	787	1,420	2,230	4,650
1,500		34	70	143	250	355	758	1,360	2,150	4,480
1,600		33	68	138	241	343	732	1,320	2,080	4,330
1,700		32	66	134	234	331	708	1,270	2,010	4,190
1,800		31	64	130	227	321	687	1,240	1,950	4,060
1,900		30	62	126	220	312	667	1,200	1,890	3,940
2,000		29	60	122	214	304	648	1,170	1,840	3,830

For SI: 1 inch = 25.4 mm, 1 foot = 304.8 mm, 1 pound per square inch = 6.895 kPa, 1-inch water column = 0.2488 kPa,
1 British thermal unit per hour = 0.2931 W, 1 cubic foot per hour = 0.0283 m^3/h, 1 degree = 0.01745 rad.

Notes:

1. Table capacities are based on Type K copper tubing inside diameter (shown), which has the smallest inside diameter of the copper tubing products.
2. Table entries have been rounded to three significant digits.

INTERNATIONAL CODE COUNCIL®
Copyright © 2019 ICC & NYSDOS. ALL RIGHTS RESERVED. Accessed by Lauren Gualdino (lgualdino@briarcliffmanor.org), (-) Order Number #100880972 on May 08, 2020 07:05 AM (PDT) pursuant to License Agreement with ICC & NYSDOS. No further reproduction, no

TABLE G2413.4(14) [402.4(30)]
SEMIRIGID COPPER TUBING

Gas	Undiluted Propane
Inlet Pressure	11.0 in. w.c.
Pressure Drop	0.5 in. w.c.
Specific Gravity	1.50

INTENDED USE		**Sizing between single- or second-stage (low-pressure regulator) and appliance.**								
TUBE SIZE (inches)										
Nominal	**K & L**	$^1/_4$	$^3/_8$	$^1/_2$	$^5/_8$	$^3/_4$	1	$1^1/_4$	$1^1/_2$	2
	ACR	$^3/_8$	$^1/_2$	$^5/_8$	$^3/_4$	$^7/_8$	$1^1/_8$	$1^3/_8$	—	—
Outside		**0.375**	**0.500**	**0.625**	**0.750**	**0.875**	**1.125**	**1.375**	**1.625**	**2.125**
Inside		**0.305**	**0.402**	**0.527**	**0.652**	**0.745**	**0.995**	**1.245**	**1.481**	**1.959**
Length (ft)		**Capacity in Thousands of Btu per Hour**								
10		45	93	188	329	467	997	1,800	2,830	5,890
20		31	64	129	226	321	685	1,230	1,950	4,050
30		25	51	104	182	258	550	991	1,560	3,250
40		21	44	89	155	220	471	848	1,340	2,780
50		19	39	79	138	195	417	752	1,180	2,470
60		17	35	71	125	177	378	681	1,070	2,240
70		16	32	66	115	163	348	626	988	2,060
80		15	30	61	107	152	324	583	919	1,910
90		14	28	57	100	142	304	547	862	1,800
100		13	27	54	95	134	287	517	814	1,700
125		11	24	48	84	119	254	458	722	1,500
150		10	21	44	76	108	230	415	654	1,360
175		NA	20	40	70	99	212	382	602	1,250
200		NA	18	37	65	92	197	355	560	1,170
250		NA	16	33	58	82	175	315	496	1,030
300		NA	15	30	52	74	158	285	449	936
350		NA	14	28	48	68	146	262	414	861
400		NA	13	26	45	63	136	244	385	801
450		NA	12	24	42	60	127	229	361	752
500		NA	11	23	40	56	120	216	341	710
550		NA	11	22	38	53	114	205	324	674
600		NA	10	21	36	51	109	196	309	643
650		NA	NA	20	34	49	104	188	296	616
700		NA	NA	19	33	47	100	180	284	592
750		NA	NA	18	32	45	96	174	274	570
800		NA	NA	18	31	44	93	168	264	551
850		NA	NA	17	30	42	90	162	256	533
900		NA	NA	17	29	41	87	157	248	517
950		NA	NA	16	28	40	85	153	241	502
1,000		NA	NA	16	27	39	83	149	234	488
1,100		NA	NA	15	26	37	78	141	223	464
1,200		NA	NA	14	25	35	75	135	212	442
1,300		NA	NA	14	24	34	72	129	203	423
1,400		NA	NA	13	23	32	69	124	195	407
1,500		NA	NA	13	22	31	66	119	188	392
1,600		NA	NA	12	21	30	64	115	182	378
1,700		NA	NA	12	20	29	62	112	176	366
1,800		NA	NA	11	20	28	60	108	170	355
1,900		NA	NA	11	19	27	58	105	166	345
2,000		NA	NA	11	19	27	57	102	161	335

For SI: 1 inch = 25.4 mm, 1 foot = 304.8 mm, 1 pound per square inch = 6.895 kPa, 1-inch water column = 0.2488 kPa, 1 British thermal unit per hour = 0.2931 W, 1 cubic foot per hour = 0.0283 m^3/h, 1 degree = 0.01745 rad.

Notes:

1. Table capacities are based on Type K copper tubing inside diameter (shown), which has the smallest inside diameter of the copper tubing products.
2. NA means a flow of less than 10,000 Btu/hr.
3. Table entries have been rounded to three significant digits.

INTERNATIONAL CODE COUNCIL®
Copyright © 2019 ICC & NYSDOS. ALL RIGHTS RESERVED. Accessed by Lauren Gualdino (lgualdino@briarcliffmanor.org), (-) Order Number #100880972 on May 08, 2020 07:05 AM (PDT) pursuant to License Agreement with ICC & NYSDOS. No further reproduction, no

100880972

TABLE G2413.4(15) [402.4(31)]
SEMIRIGID COPPER TUBING

Gas	Undiluted Propane
Inlet Pressure	2.0 psi
Pressure Drop	1.0 psi
Specific Gravity	1.50

INTENDED USE		**Tube sizing between 2 psig service and line pressure regulator.**								
TUBE SIZE (inches)										
Nominal	**K & L**	$^1/_4$	$^3/_8$	$^1/_2$	$^5/_8$	$^3/_4$	1	$1^1/_4$	$1^1/_2$	2
	ACR	$^3/_8$	$^1/_2$	$^5/_8$	$^3/_4$	$^7/_8$	$1^1/_8$	$1^3/_8$	—	—
Outside		**0.375**	**0.500**	**0.625**	**0.750**	**0.875**	**1.125**	**1.375**	**1.625**	**2.125**
Inside		**0.305**	**0.402**	**0.527**	**0.652**	**0.745**	**0.995**	**1.245**	**1.481**	**1.959**
Length (ft)		**Capacity in Thousands of Btu per Hour**								
10		413	852	1,730	3,030	4,300	9,170	16,500	26,000	54,200
20		284	585	1,190	2,080	2,950	6,310	11,400	17,900	37,300
30		228	470	956	1,670	2,370	5,060	9,120	14,400	29,900
40		195	402	818	1,430	2,030	4,330	7,800	12,300	25,600
50		173	356	725	1,270	1,800	3,840	6,920	10,900	22,700
60		157	323	657	1,150	1,630	3,480	6,270	9,880	20,600
70		144	297	605	1,060	1,500	3,200	5,760	9,090	18,900
80		134	276	562	983	1,390	2,980	5,360	8,450	17,600
90		126	259	528	922	1,310	2,790	5,030	7,930	16,500
100		119	245	498	871	1,240	2,640	4,750	7,490	15,600
125		105	217	442	772	1,100	2,340	4,210	6,640	13,800
150		95	197	400	700	992	2,120	3,820	6,020	12,500
175		88	181	368	644	913	1,950	3,510	5,540	11,500
200		82	168	343	599	849	1,810	3,270	5,150	10,700
250		72	149	304	531	753	1,610	2,900	4,560	9,510
300		66	135	275	481	682	1,460	2,620	4,140	8,610
350		60	124	253	442	628	1,340	2,410	3,800	7,920
400		56	116	235	411	584	1,250	2,250	3,540	7,370
450		53	109	221	386	548	1,170	2,110	3,320	6,920
500		50	103	209	365	517	1,110	1,990	3,140	6,530
550		47	97	198	346	491	1,050	1,890	2,980	6,210
600		45	93	189	330	469	1,000	1,800	2,840	5,920
650		43	89	181	316	449	959	1,730	2,720	5,670
700		41	86	174	304	431	921	1,660	2,620	5,450
750		40	82	168	293	415	888	1,600	2,520	5,250
800		39	80	162	283	401	857	1,540	2,430	5,070
850		37	77	157	274	388	829	1,490	2,350	4,900
900		36	75	152	265	376	804	1,450	2,280	4,750
950		35	72	147	258	366	781	1,410	2,220	4,620
1,000		34	71	143	251	356	760	1,370	2,160	4,490
1,100		32	67	136	238	338	721	1,300	2,050	4,270
1,200		31	64	130	227	322	688	1,240	1,950	4,070
1,300		30	61	124	217	309	659	1,190	1,870	3,900
1,400		28	59	120	209	296	633	1,140	1,800	3,740
1,500		27	57	115	201	286	610	1,100	1,730	3,610
1,600		26	55	111	194	276	589	1,060	1,670	3,480
1,700		26	53	108	188	267	570	1,030	1,620	3,370
1,800		25	51	104	182	259	553	1,000	1,570	3,270
1,900		24	50	101	177	251	537	966	1,520	3,170
2,000		23	48	99	172	244	522	940	1,480	3,090

For SI: 1 inch = 25.4 mm, 1 foot = 304.8 mm, 1 pound per square inch = 6.895 kPa, 1-inch water column = 0.2488 kPa,
1 British thermal unit per hour = 0.2931 W, 1 cubic foot per hour = 0.0283 m^3/h, 1 degree = 0.01745 rad.

Notes:

1. Table capacities are based on Type K copper tubing inside diameter (shown), which has the smallest inside diameter of the copper tubing products.
2. Table entries have been rounded to three significant digits.

INTERNATIONAL CODE COUNCIL®
Copyright © 2019 ICC & NYSDOS. ALL RIGHTS RESERVED. Accessed by Lauren Gualdino (lgualdino@briarcliffmanor.org), (-) Order Number #100880972 on May 08, 2020 07:05 AM (PDT) pursuant to License Agreement with ICC & NYSDOS. No further reproduction, no

100880972

TABLE G2413.4(16) [402.4(32)]
CORRUGATED STAINLESS STEEL TUBING (CSST)

Gas	Undiluted Propane
Inlet Pressure	11.0 in. w.c.
Pressure Drop	0.5 in. w.c.
Specific Gravity	1.50

INTENDED USE: SIZING BETWEEN SINGLE OR SECOND STAGE (Low Pressure) REGULATOR AND THE APPLIANCE SHUTOFF VALVE.														
	TUBE SIZE (EHD)													
Flow Designation	**13**	**15**	**18**	**19**	**23**	**25**	**30**	**31**	**37**	**39**	**46**	**48**	**60**	**62**
Length (ft)	**Capacity in Thousands of Btu per Hour**													
5	72	99	181	211	355	426	744	863	1,420	1,638	2,830	3,270	5,780	6,550
10	50	69	129	150	254	303	521	605	971	1,179	1,990	2,320	4,110	4,640
15	39	55	104	121	208	248	422	490	775	972	1,620	1,900	3,370	3,790
20	34	49	91	106	183	216	365	425	661	847	1,400	1,650	2,930	3,290
25	30	42	82	94	164	192	325	379	583	762	1,250	1,480	2,630	2,940
30	28	39	74	87	151	177	297	344	528	698	1,140	1,350	2,400	2,680
40	23	33	64	74	131	153	256	297	449	610	988	1,170	2,090	2,330
50	20	30	58	66	118	137	227	265	397	548	884	1,050	1,870	2,080
60	19	26	53	60	107	126	207	241	359	502	805	961	1,710	1,900
70	17	25	49	57	99	117	191	222	330	466	745	890	1,590	1,760
80	15	23	45	52	94	109	178	208	307	438	696	833	1,490	1,650
90	15	22	44	50	90	102	169	197	286	414	656	787	1,400	1,550
100	14	20	41	47	85	98	159	186	270	393	621	746	1,330	1,480
150	11	15	31	36	66	75	123	143	217	324	506	611	1,090	1,210
200	9	14	28	33	60	69	112	129	183	283	438	531	948	1,050
250	8	12	25	30	53	61	99	117	163	254	390	476	850	934
300	8	11	23	26	50	57	90	107	147	234	357	434	777	854

For SI: 1 inch = 25.4 mm, 1 foot = 304.8 mm, 1 pound per square inch = 6.895 kPa, 1-inch water column = 0.2488 kPa, 1 British thermal unit per hour = 0.2931 W, 1 cubic foot per hour = 0.0283 m^3/h, 1 degree = 0.01745 rad.

Notes:

1. Table includes losses for four 90-degree bends and two end fittings. Tubing runs with larger numbers of bends or fittings shall be increased by an equivalent length of tubing to the following equation: $L = 1.3n$ where L is additional length (feet) of tubing and n is the number of additional fittings or bends.
2. EHD—Equivalent Hydraulic Diameter, which is a measure of the relative hydraulic efficiency between different tubing sizes. The greater the value of EHD, the greater the gas capacity of the tubing.
3. Table entries have been rounded to three significant digits.

INTERNATIONAL CODE COUNCIL®
Copyright © 2019 ICC & NYSDOS. ALL RIGHTS RESERVED. Accessed by Lauren Gualdino (lgualdino@briarcliffmanor.org), (-) Order Number #100880972 on May 08, 2020 07:05 AM (PDT) pursuant to License Agreement with ICC & NYSDOS. No further reproduction, no

100880972

TABLE G2413.4(17) [402.4(33)]
CORRUGATED STAINLESS STEEL TUBING (CSST)

Gas	Undiluted Propane
Inlet Pressure	2.0 psi
Pressure Drop	1.0 psi
Specific Gravity	1.50

INTENDED USE: SIZING BETWEEN 2 PSI SERVICE AND THE LINE PRESSURE REGULATOR.														
	TUBE SIZE (EHD)													
Flow Designation	**13**	**15**	**18**	**19**	**23**	**25**	**30**	**31**	**37**	**39**	**46**	**48**	**60**	**62**
Length (ft)	**Capacity in Thousands of Btu per Hour**													
10	426	558	927	1,110	1,740	2,170	4,100	4,720	7,130	7,958	15,200	16,800	29,400	34,200
25	262	347	591	701	1,120	1,380	2,560	2,950	4,560	5,147	9,550	10,700	18,800	21,700
30	238	316	540	640	1,030	1,270	2,330	2,690	4,180	4,719	8,710	9,790	17,200	19,800
40	203	271	469	554	896	1,100	2,010	2,320	3,630	4,116	7,530	8,500	14,900	17,200
50	181	243	420	496	806	986	1,790	2,070	3,260	3,702	6,730	7,610	13,400	15,400
75	147	196	344	406	663	809	1,460	1,690	2,680	3,053	5,480	6,230	11,000	12,600
80	140	189	333	393	643	768	1,410	1,630	2,590	2,961	5,300	6,040	10,600	12,200
100	124	169	298	350	578	703	1,260	1,450	2,330	2,662	4,740	5,410	9,530	10,900
150	101	137	245	287	477	575	1,020	1,180	1,910	2,195	3,860	4,430	7,810	8,890
200	86	118	213	248	415	501	880	1,020	1,660	1,915	3,340	3,840	6,780	7,710
250	77	105	191	222	373	448	785	910	1,490	1,722	2,980	3,440	6,080	6,900
300	69	96	173	203	343	411	716	829	1,360	1,578	2,720	3,150	5,560	6,300
400	60	82	151	175	298	355	616	716	1,160	1,376	2,350	2,730	4,830	5,460
500	53	72	135	158	268	319	550	638	1,030	1,237	2,100	2,450	4,330	4,880

For SI: 1 inch = 25.4 mm, 1 foot = 304.8 mm, 1 pound per square inch = 6.895 kPa, 1-inch water column = 0.2488 kPa, 1 British thermal unit per hour = 0.2931 W, 1 cubic foot per hour = 0.0283 m^3/h, 1 degree = 0.01745 rad.

Notes:

1. Table does not include effect of pressure drop across the line regulator. Where regulator loss exceeds $^1/_2$ psi (based on 13 in. w.c. outlet pressure), DO NOT USE THIS TABLE. Consult with the regulator manufacturer for pressure drops and capacity factors. Pressure drops across a regulator can vary with flow rate.
2. CAUTION: Capacities shown in the table might exceed maximum capacity for a selected regulator. Consult with the regulator or tubing manufacturer for guidance.
3. Table includes losses for four 90-degree bends and two end fittings. Tubing runs with larger numbers of bends or fittings shall be increased by an equivalent length of tubing to the following equation: $L = 1.3n$ where L is additional length (feet) of tubing and n is the number of additional fittings or bends.
4. EHD—Equivalent Hydraulic Diameter, which is a measure of the relative hydraulic efficiency between different tubing sizes. The greater the value of EHD, the greater the gas capacity of the tubing.
5. Table entries have been rounded to three significant digits.

INTERNATIONAL CODE COUNCIL®
Copyright © 2019 ICC & NYSDOS. ALL RIGHTS RESERVED. Accessed by Lauren Gualdino (lgualdino@briarcliffmanor.org), (-) Order Number #100880972 on May 08, 2020 07:05 AM (PDT) pursuant to License Agreement with ICC & NYSDOS. No further reproduction, no

100880972

TABLE G2413.4(18) [402.4(34)]
CORRUGATED STAINLESS STEEL TUBING (CSST)

Gas	Undiluted Propane
Inlet Pressure	5.0 psi
Pressure Drop	3.5 psi
Specific Gravity	1.50

TUBE SIZE (EHD)														
Flow Designation	**13**	**15**	**18**	**19**	**23**	**25**	**30**	**31**	**37**	**39**	**46**	**48**	**60**	**62**
Length (ft)	**Capacity in Thousands of Btu per Hour**													
10	826	1,070	1,710	2,060	3,150	4,000	7,830	8,950	13,100	14,441	28,600	31,200	54,400	63,800
25	509	664	1,090	1,310	2,040	2,550	4,860	5,600	8,400	9,339	18,000	19,900	34,700	40,400
30	461	603	999	1,190	1,870	2,340	4,430	5,100	7,680	8,564	16,400	18,200	31,700	36,900
40	396	520	867	1,030	1,630	2,030	3,820	4,400	6,680	7,469	14,200	15,800	27,600	32,000
50	352	463	777	926	1,460	1,820	3,410	3,930	5,990	6,717	12,700	14,100	24,700	28,600
75	284	376	637	757	1,210	1,490	2,770	3,190	4,920	5,539	10,300	11,600	20,300	23,400
80	275	363	618	731	1,170	1,450	2,680	3,090	4,770	5,372	9,990	11,200	19,600	22,700
100	243	324	553	656	1,050	1,300	2,390	2,760	4,280	4,830	8,930	10,000	17,600	20,300
150	196	262	453	535	866	1,060	1,940	2,240	3,510	3,983	7,270	8,210	14,400	16,600
200	169	226	393	464	755	923	1,680	1,930	3,050	3,474	6,290	7,130	12,500	14,400
250	150	202	352	415	679	828	1,490	1,730	2,740	3,124	5,620	6,390	11,200	12,900
300	136	183	322	379	622	757	1,360	1,570	2,510	2,865	5,120	5,840	10,300	11,700
400	117	158	279	328	542	657	1,170	1,360	2,180	2,498	4,430	5,070	8,920	10,200
500	104	140	251	294	488	589	1,050	1,210	1,950	2,247	3,960	4,540	8,000	9,110

For SI: 1 inch = 25.4 mm, 1 foot = 304.8 mm, 1 pound per square inch = 6.895 kPa, 1-inch water column = 0.2488 kPa, 1 British thermal unit per hour = 0.2931 W, 1 cubic foot per hour = 0.0283 m^3/h, 1 degree = 0.01745 rad.

Notes:

1. Table does not include effect of pressure drop across line regulator. Where regulator loss exceeds1 psi, DO NOT USE THIS TABLE. Consult with the regulator manufacturer for pressure drops and capacity factors. Pressure drop across regulator can vary with the flow rate.
2. CAUTION: Capacities shown in the table might exceed maximum capacity of selected regulator. Consult with the tubing manufacturer for guidance.
3. Table includes losses for four 90-degree bends and two end fittings. Tubing runs with larger numbers of bends or fittings shall be increased by an equivalent length of tubing to the following equation: $L = 1.3n$ where L is additional length (feet) of tubing and n is the number of additional fittings or bends.
4. EHD—Equivalent Hydraulic Diameter, which is a measure of the relative hydraulic efficiency between different tubing sizes. The greater the value of EHD, the greater the gas capacity of the tubing.
5. Table entries have been rounded to three significant digits.

INTERNATIONAL CODE COUNCIL®
Copyright © 2019 ICC & NYSDOS. ALL RIGHTS RESERVED. Accessed by Lauren Gualdino (lgualdino@briarcliffmanor.org), (-) Order Number #100880972 on May 08, 2020 07:05 AM (PDT) pursuant to License Agreement with ICC & NYSDOS. No further reproduction, no

100880972

TABLE G2413.4(19) [402.4(35)]
POLYETHYLENE PLASTIC PIPE

Gas	Undiluted Propane
Inlet Pressure	11.0 in. w.c.
Pressure Drop	0.5 in. w.c.
Specific Gravity	1.50

INTENDED USE	**PE pipe sizing between integral 2-stage regulator at tank or second stage (low-pressure regulator) and building.**					
	PIPE SIZE (inches)					
Nominal OD	**$^1/_2$**	**$^3/_4$**	**1**	**$1^1/_4$**	**$1^1/_2$**	**2**
Designation	**SDR 9**	**SDR 11**	**SDR 11**	**SDR 10**	**SDR 11**	**SDR 11**
Actual ID	**0.660**	**0.860**	**1.077**	**1.328**	**1.554**	**1.943**
Length (ft)	**Capacity in Thousands of Btu per Hour**					
10	340	680	1,230	2,130	3,210	5,770
20	233	468	844	1,460	2,210	3,970
30	187	375	677	1,170	1,770	3,180
40	160	321	580	1,000	1,520	2,730
50	142	285	514	890	1,340	2,420
60	129	258	466	807	1,220	2,190
70	119	237	428	742	1,120	2,010
80	110	221	398	690	1,040	1,870
90	103	207	374	648	978	1,760
100	98	196	353	612	924	1,660
125	87	173	313	542	819	1,470
150	78	157	284	491	742	1,330
175	72	145	261	452	683	1,230
200	67	135	243	420	635	1,140
250	60	119	215	373	563	1,010
300	54	108	195	338	510	916
350	50	99	179	311	469	843
400	46	92	167	289	436	784
450	43	87	157	271	409	736
500	41	82	148	256	387	695

For SI: 1 inch = 25.4 mm, 1 foot = 304.8 mm, 1 pound per square inch = 6.895 kPa, 1-inch water column = 0.2488 kPa, 1 British thermal unit per hour = 0.2931 W, 1 cubic foot per hour = 0.0283 m^3/h, 1 degree = 0.01745 rad.

Note: Table entries have been rounded to three significant digits.

INTERNATIONAL CODE COUNCIL®
Copyright © 2019 ICC & NYSDOS. ALL RIGHTS RESERVED. Accessed by Lauren Gualdino (lgualdino@briarcliffmanor.org), (-) Order Number #100880972 on May 08, 2020 07:05 AM (PDT) pursuant to License Agreement with ICC & NYSDOS. No further reproduction, no

TABLE G2413.4(20) [402.4(36)]
POLYETHYLENE PLASTIC PIPE

Gas	Undiluted Propane
Inlet Pressure	2.0 psi
Pressure Drop	1.0 psi
Specific Gravity	1.50

INTENDED USE	**PE pipe sizing between 2 psig service regulator and line pressure regulator.**					
	PIPE SIZE (inches)					
Nominal OD	$^1/_2$	$^3/_4$	1	$1^1/_4$	$1^1/_2$	2
Designation	**SDR 9**	**SDR 11**	**SDR 11**	**SDR 10**	**SDR 11**	**SDR 11**
Actual ID	**0.660**	**0.860**	**1.077**	**1.328**	**1.554**	**1.943**
Length (ft)	**Capacity in Thousands of Btu per Hour**					
10	3,130	6,260	11,300	19,600	29,500	53,100
20	2,150	4,300	7,760	13,400	20,300	36,500
30	1,730	3,450	6,230	10,800	16,300	29,300
40	1,480	2,960	5,330	9,240	14,000	25,100
50	1,310	2,620	4,730	8,190	12,400	22,200
60	1,190	2,370	4,280	7,420	11,200	20,100
70	1,090	2,180	3,940	6,830	10,300	18,500
80	1,010	2,030	3,670	6,350	9,590	17,200
90	952	1,910	3,440	5,960	9,000	16,200
100	899	1,800	3,250	5,630	8,500	15,300
125	797	1,600	2,880	4,990	7,530	13,500
150	722	1,450	2,610	4,520	6,830	12,300
175	664	1,330	2,400	4,160	6,280	11,300
200	618	1,240	2,230	3,870	5,840	10,500
250	548	1,100	1,980	3,430	5,180	9,300
300	496	994	1,790	3,110	4,690	8,430
350	457	914	1,650	2,860	4,320	7,760
400	425	851	1,530	2,660	4,020	7,220
450	399	798	1,440	2,500	3,770	6,770
500	377	754	1,360	2,360	3,560	6,390
550	358	716	1,290	2,240	3,380	6,070
600	341	683	1,230	2,140	3,220	5,790
650	327	654	1,180	2,040	3,090	5,550
700	314	628	1,130	1,960	2,970	5,330
750	302	605	1,090	1,890	2,860	5,140
800	292	585	1,050	1,830	2,760	4,960
850	283	566	1,020	1,770	2,670	4,800
900	274	549	990	1,710	2,590	4,650
950	266	533	961	1,670	2,520	4,520
1,000	259	518	935	1,620	2,450	4,400
1,100	246	492	888	1,540	2,320	4,170
1,200	234	470	847	1,470	2,220	3,980
1,300	225	450	811	1,410	2,120	3,810
1,400	216	432	779	1,350	2,040	3,660
1,500	208	416	751	1,300	1,960	3,530
1,600	201	402	725	1,260	1,900	3,410
1,700	194	389	702	1,220	1,840	3,300
1,800	188	377	680	1,180	1,780	3,200
1,900	183	366	661	1,140	1,730	3,110
2,000	178	356	643	1,110	1,680	3,020

For SI: 1 inch = 25.4 mm, 1 foot = 304.8 mm, 1 pound per square inch = 6.895 kPa, 1-inch water column = 0.2488 kPa, 1 British thermal unit per hour = 0.2931 W, 1 cubic foot per hour = 0.0283 m^3/h, 1 degree = 0.01745 rad.

Note: Table entries have been rounded to three significant digits.

INTERNATIONAL CODE COUNCIL®
Copyright © 2019 ICC & NYSDOS. ALL RIGHTS RESERVED. Accessed by Lauren Gualdino (lgualdino@briarcliffmanor.org), (-) Order Number #100880972 on May 08, 2020 07:05 AM (PDT) pursuant to License Agreement with ICC & NYSDOS. No further reproduction, no

100880972

TABLE G2413.4(21) [402.4(37)]
POLYETHYLENE PLASTIC TUBING

Gas	Undiluted Propane
Inlet Pressure	11.0 in. w.c.
Pressure Drop	0.5 in. w.c.
Specific Gravity	1.50

INTENDED USE: PE PIPE SIZING BETWEEN INTEGRAL 2-STAGE REGULATOR AT TANK OR SECOND STAGE (low-pressure regulator) AND BUILDING.		
Plastic Tubing Size (CTS) (inch)		
Nominal OD	**$^1/_2$**	**1**
Designation	**SDR 7**	**SDR 11**
Actual ID	**0.445**	**0.927**
Length (ft)	**Capacity in Cubic Feet of Gas per Hour**	
10	121	828
20	83	569
30	67	457
40	57	391
50	51	347
60	46	314
70	42	289
80	39	269
90	37	252
100	35	238
125	31	211
150	28	191
175	26	176
200	24	164
225	22	154
250	21	145
275	20	138
300	19	132
350	18	121
400	16	113
450	15	106
500	15	100

For SI: 1 inch = 25.4 mm, 1 foot = 304.8 mm, 1 pound per square inch = 6.895 kPa, 1-inch water column = 0.2488 kPa, 1 British thermal unit per hour = 0.2931 W, 1 cubic foot per hour = 0.0283 m^3/h, 1 degree = 0.01745 rad.

Note: Table entries have been rounded to three significant digits.

INTERNATIONAL CODE COUNCIL®
Copyright © 2019 ICC & NYSDOS. ALL RIGHTS RESERVED. Accessed by Lauren Gualdino (lgualdino@briarcliffmanor.org), (-) Order Number #100880972 on May 08, 2020 07:05 AM (PDT) pursuant to License Agreement with ICC & NYSDOS. No further reproduction, no

100880972

G2414.10.5 (403.10.5) Metallic fittings. Metallic fittings shall comply with the following:

1. Fittings used with steel, stainless steel or wrought-iron *pipe* shall be steel, stainless steel, copper alloy, malleable iron or cast iron.
2. Fittings used with copper or copper alloy *pipe* shall be copper or copper alloy.
3. Cast-iron bushings shall be prohibited.
4. Special fittings. Fittings such as couplings, proprietary-type joints, saddle tees, gland-type compression fittings, and flared, flareless and compression-type *tubing* fittings shall be: used within the fitting manufacturer's pressure-temperature recommendations; used within the service conditions anticipated with respect to vibration, fatigue, thermal expansion and contraction; and shall be *approved*.
5. Where pipe fittings are drilled and tapped in the field, the operation shall be in accordance with all of the following:
    5.1. The operation shall be performed on systems having operating pressures of 5 psi (34.5 kPa) or less.
    5.2. The operation shall be performed by the gas supplier or the gas supplier's designated representative.
    5.3. The drilling and tapping operation shall be performed in accordance with written procedures prepared by the gas supplier.
    5.4. The fittings shall be located outdoors.
    5.5. The tapped fitting assembly shall be inspected and proven to be free of leakage.

G2414.11 (403.11) Plastic piping, joints and fittings. Plastic *pipe, tubing* and fittings shall be joined in accordance with the manufacturers' instructions. Such joints shall comply with the following:

1. The joints shall be designed and installed so that the longitudinal pull-out resistance of the joint will be greater than or equal to the tensile strength of the plastic *piping* material.
2. Heat-fusion joints shall be made in accordance with qualified procedures that have been established and proven by test to produce gas-tight joints as strong as or stronger than the *pipe* or *tubing* being joined. Joints shall be made with the joining method recommended by the *pipe* manufacturer. Heat fusion fittings shall be marked "ASTM D2513."
3. Where compression-type *mechanical joints* are used, the gasket material in the fitting shall be compatible with the plastic *piping* and with the gas distributed by the system. An internal tubular rigid stiffener shall be used in conjunction with the fitting. The stiffener shall be flush with the end of the *pipe* or *tubing* and shall extend to or beyond the outside end of the compression fitting when installed. The stiffener shall be free of rough or sharp edges and shall not be a force-fit in the plastic. Split tubular stiffeners shall not be used.
4. Plastic *piping* joints and fittings for use in *liquefied petroleum gas piping systems* shall be in accordance with NFPA 58.

SECTION G2415 (404)
PIPING SYSTEM INSTALLATION

G2415.1 (404.1) Installation of materials. Materials used shall be installed in strict accordance with the standards under which the materials are accepted and approved. In the absence of such installation procedures, the manufacturer's instructions shall be followed. Where the requirements of referenced standards or manufacturer's instructions do not conform to minimum provisions of this code, the provisions of this code shall apply.

G2415.2 (404.2) CSST. CSST piping systems shall be installed in accordance with the terms of their approval, the conditions of listing, the manufacturer's instructions and this code.

G2415.3 (404.3) Prohibited locations. *Piping* shall not be installed in or through a ducted supply, return or exhaust, or a clothes chute, *chimney* or gas vent, dumbwaiter or elevator shaft. *Piping* installed downstream of the *point of delivery* shall not extend through any townhouse unit other than the unit served by such *piping.*

G2415.4 (404.4) Piping in solid partitions and walls. *Concealed piping* shall not be located in solid partitions and solid walls, unless installed in a chase or casing.

G2415.5 (404.5) Fittings in concealed locations. Fittings installed in concealed locations shall be limited to the following types:

1. Threaded elbows, tees and couplings.
2. Brazed fittings.
3. Welded fittings.
4. Fittings *listed* to ANSI LC1/CSA 6.26 or ANSI LC4/CSA 6.32.

G2415.6 (404.6) Underground penetrations prohibited. Gas *piping* shall not penetrate building foundation walls at any point below grade. Gas *piping* shall enter and exit a building at a point above grade and the annular space between the *pipe* and the wall shall be sealed.

[NY] G2415.7 (404.7) Protection against physical damage. In concealed locations, where piping other than black or galvanized steel is installed through holes or notches in wood studs, joists, rafters or similar members less than $1^3/_4$ inches (44.45 mm) from the nearest edge of the member, the pipe shall be protected by shield plates. Such shield plates shall comply with the requirements of Section G2415.7.1, shall cover the area of the pipe where the member is notched or bored, and shall extend a minimum of 4 inches (102 mm) above sole plates, below top plates and to each side of a stud, joist or rafter. The movement of piping made of CSST (including, but not limited to, piping made of listed AR-CSST) shall not be otherwise constrained by straps, clips or other support devices. In addition, where CSST (including, but not limited to, listed AR-CSST) is installed in a concealed location and parallel to any joist, rafter, or similar member,

INTERNATIONAL CODE COUNCIL®
Copyright © 2019 ICC & NYSDOS. ALL RIGHTS RESERVED. Accessed by Lauren Gualdino (lgualdino@briarcliffmanor.org), (-) Order Number #100880972 on May 08, 2020 07:05 AM (PDT) pursuant to License Agreement with ICC & NYSDOS. No further reproduction, no

100880972

the CSST shall be protected by shield plates in any area where the CSST is not:

1. Physically supported in a manner that ensures the CSST will always be at least $1^3/_4$ inches (44.45 mm) away from the nearest edge of any member, or
2. Encased in a protective metal pipe made of Schedule 40 steel or iron pipe or in a protective pipe sleeve made of a material approved by the *building official* as the equivalent of Schedule 40 steel or iron pipe.

Such shield plates shall comply with the requirements of Section G2415.7.1, shall cover the area the where the CSST is located, and shall extend a minimum of 4 inches (102 mm) to each side of the CSST.

[NY] G2415.7.1 (404.7.1) Shield plates. In all cases, shield plates shall be certified or listed as complying with ANSI LC-1. In addition, in the case of piping made of CSST, shield plates shall be listed for use with the manufacturer's CSST system.

[NY] G2415.7.2 (404.7.2) Reserved.

[NY] G2415.7.3 (404.7.3) Reserved.

G2415.8 (404.8) Piping in solid floors. *Piping* in solid floors shall be laid in channels in the floor and covered in a manner that will allow access to the *piping* with a minimum amount of damage to the building. Where such *piping* is subject to exposure to excessive moisture or corrosive substances, the *piping* shall be protected in an *approved* manner. As an alternative to installation in channels, the *piping* shall be installed in a conduit of Schedule 40 steel, wrought iron, PVC or ABS pipe in accordance with Section G2415.8.1 or G2415.8.2.

G2415.8.1 (404.8.1) Conduit with one end terminating outdoors. The conduit shall extend into an occupiable portion of the building and, at the point where the conduit terminates in the building, the space between the conduit and the *gas piping* shall be sealed to prevent the possible entrance of any gas leakage. The conduit shall extend not less than 2 inches (51 mm) beyond the point where the *pipe* emerges from the floor. If the end sealing is capable of withstanding the full pressure of the gas *pipe,* the conduit shall be designed for the same pressure as the *pipe*. Such conduit shall extend not less than 4 inches (102 mm) outside the building, shall be vented above grade to the outdoors and shall be installed so as to prevent the entrance of water and insects.

G2415.8.2 (404.8.2) Conduit with both ends terminating indoors. Where the conduit originates and terminates within the same building, the conduit shall originate and terminate in an accessible portion of the building and shall not be sealed. The conduit shall extend not less than 2 inches (51 mm) beyond the point where the pipe emerges from the floor.

G2415.9 (404.9) Above-ground piping outdoors. *Piping* installed outdoors shall be elevated not less than $3^1/_2$ inches (89 mm) above ground and where installed across roof surfaces, shall be elevated not less than $3^1/_2$ inches (89 mm) above the roof surface. *Piping* installed above ground, outdoors, and installed across the surface of roofs shall be securely supported and located where it will be protected from physical damage. Where passing through an outside wall, the *piping* shall be protected against corrosion by coating or wrapping with an inert material. Where *piping* is encased in a protective pipe sleeve, the annular space between the *piping* and the sleeve shall be sealed.

G2415.10 (404.10) Isolation. Metallic *piping* and metallic *tubing* that conveys *fuel gas* from an LP-gas storage container shall be provided with an *approved* dielectric fitting to electrically isolate the underground portion of the pipe or tube from the above-ground portion that enters a building. Such dielectric fitting shall be installed above ground, outdoors.

G2415.11 (404.11) Protection against corrosion. Steel pipe or *tubing* exposed to corrosive action, such as soil condition or moisture, shall be protected in accordance with Sections G2415.11.1 through G2415.11.5.

G2415.11.1 (404.11.1) Galvanizing. Zinc coating shall not be deemed adequate protection for underground gas piping.

G2415.11.2 (404.11.2) Protection methods. Underground piping shall comply with one or more of the following:

1. The piping shall be made of corrosion-resistant material that is suitable for the environment in which it will be installed.
2. Pipe shall have a factory-applied, electrically-insulating coating. Fittings and joints between sections of coated pipe shall be coated in accordance with the coating manufacturer's instructions.
3. The piping shall have a cathodic protection system installed and the system shall be monitored and maintained in accordance with an approved program.

G2415.11.3 (404.11.3) Dissimilar metals. Where dissimilar metals are joined underground, an insulating coupling or fitting shall be used.

G2415.11.4 (404.11.4) Protection of risers. Steel risers connected to plastic piping shall be cathodically protected by means of a welded anode, except where such risers are anodeless risers.

G2415.11.5 (404.11.5) Prohibited use. Uncoated threaded or socket-welded joints shall not be used in *piping* in contact with soil or where internal or external crevice corrosion is known to occur.

G2415.12 (404.12) Minimum burial depth. Underground *piping systems* shall be installed a minimum depth of 12 inches (305 mm) below grade, except as provided for in Section G2415.12.1.

G2415.12.1 (404.12.1) Individual outdoor appliances. Individual lines to outdoor lights, grills and other *appliances* shall be installed not less than 8 inches (203 mm) below finished grade, provided that such installation is *approved* and is installed in locations not susceptible to physical damage.

G2415.13 (404.13) Trenches. The trench shall be graded so that the pipe has a firm, substantially continuous bearing on the bottom of the trench.

INTERNATIONAL CODE COUNCIL®
Copyright © 2019 ICC & NYSDOS. ALL RIGHTS RESERVED. Accessed by Lauren Gualdino (lgualdino@briarcliffmanor.org), (-) Order Number #100880972 on May 08, 2020 07:05 AM (PDT) pursuant to License Agreement with ICC & NYSDOS. No further reproduction, no

100880972

G2415.14 (404.14) Piping underground beneath buildings. *Piping* installed underground beneath buildings is prohibited except where the *piping* is encased in a conduit of wrought iron, plastic pipe, steel pipe, a piping or encasement system listed for installation beneath buildings, or other *approved* conduit material designed to withstand the superimposed loads. The conduit shall be protected from corrosion in accordance with Section G2415.11 and shall be installed in accordance with Section G2415.14.1 or G2415.14.2.

G2415.14.1 (404.14.1) Conduit with one end terminating outdoors. The conduit shall extend into an occupiable portion of the building and, at the point where the conduit terminates in the building, the space between the conduit and the *gas piping* shall be sealed to prevent the possible entrance of any gas leakage. The conduit shall extend not less than 2 inches (51 mm) beyond the point where the *pipe* emerges from the floor. Where the end sealing is capable of withstanding the full pressure of the gas pipe, the conduit shall be designed for the same pressure as the pipe. Such conduit shall extend not less than 4 inches (102 mm) outside the building, shall be vented above grade to the outdoors and shall be installed so as to prevent the entrance of water and insects.

G2415.14.2 (404.14.2) Conduit with both ends terminating indoors. Where the conduit originates and terminates within the same building, the conduit shall originate and terminate in an accessible portion of the building and shall not be sealed. The conduit shall extend not less than 2 inches (51 mm) beyond the point where the pipe emerges from the floor.

G2415.15 (404.15) Outlet closures. Gas *outlets* that do not connect to *appliances* shall be capped gastight.

Exception: *Listed* and *labeled* flush-mounted-type quick-disconnect devices and *listed* and *labeled gas convenience outlets* shall be installed in accordance with the manufacturer's instructions.

G2415.16 (404.16) Location of outlets. The unthreaded portion of *piping outlets* shall extend not less than l inch (25 mm) through finished ceilings and walls and where extending through floors or outdoor patios and slabs, shall be not less than 2 inches (51 mm) above them. The *outlet* fitting or *piping* shall be securely supported. *Outlets* shall not be placed behind doors. *Outlets* shall be located in the room or space where the *appliance* is installed.

Exception: *Listed* and *labeled* flush-mounted-type quick-disconnect devices and *listed* and *labeled gas convenience outlets* shall be installed in accordance with the manufacturer's instructions.

G2415.17 (404.17) Plastic pipe. The installation of plastic *pipe* shall comply with Sections G2415.17.1 through G2415.17.3.

G2415.17.1 (404.17.1) Limitations. Plastic pipe shall be installed outdoors underground only. Plastic pipe shall not be used within or under any building or slab or be operated at pressures greater than 100 psig (689 kPa) for natural gas or 30 psig (207 kPa) for LP-gas.

Exceptions:

1. Plastic pipe shall be permitted to terminate above ground outside of buildings where installed in premanufactured *anodeless risers* or service head adapter risers that are installed in accordance with the manufacturer's instructions.
2. Plastic pipe shall be permitted to terminate with a wall head adapter within buildings where the plastic pipe is inserted in a *piping* material for *fuel gas* use in buildings.
3. Plastic pipe shall be permitted under outdoor patio, walkway and driveway slabs provided that the burial depth complies with Section G2415.12.

G2415.17.2 (404.17.2) Connections. Connections made outdoors and underground between metallic and plastic *piping* shall be made only with transition fittings conforming to ASTM D2513 Category I or ASTM F1973.

G2415.17.3 (404.17.3) Tracer. A yellow-insulated copper tracer wire or other *approved* conductor, or a product specifically designed for that purpose, shall be installed adjacent to underground nonmetallic *piping*. *Access* shall be provided to the tracer wire or the tracer wire shall terminate above ground at each end of the nonmetallic *piping*. The tracer wire size shall be not less than 18 AWG and the insulation type shall be suitable for direct burial.

G2415.18 (404.18) Pipe cleaning. The use of a flammable or combustible gas to clean or remove debris from a *piping system* shall be prohibited.

G2415.19 (404.19) Prohibited devices. A device shall not be placed inside the *piping* or fittings that will reduce the cross-sectional area or otherwise obstruct the free flow of gas.

Exceptions:

1. Approved gas filters.
2. An approved fitting or device where the *gas piping system* has been sized to accommodate the pressure drop of the fitting or device.

G2415.20 (404.20) Testing of piping. Before any system of *piping* is put in service or concealed, it shall be tested to ensure that it is gastight. Testing, inspection and purging of *piping systems* shall comply with Section G2417.

SECTION G2416 (405)
PIPING BENDS AND CHANGES IN DIRECTION

G2416.1 (405.1) General. Changes in direction of pipe shall be permitted to be made by the use of fittings, factory bends or field bends.

G2416.2 (405.2) Metallic pipe. Metallic pipe bends shall comply with the following:

1. Bends shall be made only with bending tools and procedures intended for that purpose.

INTERNATIONAL CODE COUNCIL®
Copyright © 2019 ICC & NYSDOS. ALL RIGHTS RESERVED. Accessed by Lauren Gualdino (lgualdino@briarcliffmanor.org), (-) Order Number #100880972 on May 08, 2020 07:05 AM (PDT) pursuant to License Agreement with ICC & NYSDOS. No further reproduction, no

100880972

2. Bends shall be smooth and free from buckling, cracks or other evidence of mechanical damage.
3. The longitudinal weld of the pipe shall be near the neutral axis of the bend.
4. Pipe shall not be bent through an arc of more than 90 degrees (1.6 rad).
5. The inside radius of a bend shall be not less than six times the outside diameter of the pipe.

G2416.3 (405.3) Plastic pipe. Plastic pipe bends shall comply with the following:

1. The pipe shall not be damaged and the internal diameter of the pipe shall not be effectively reduced.
2. Joints shall not be located in pipe bends.
3. The radius of the inner curve of such bends shall be not less than 25 times the inside diameter of the pipe.
4. Where the *piping* manufacturer specifies the use of special bending tools or procedures, such tools or procedures shall be used.

SECTION G2417 (406)
INSPECTION, TESTING AND PURGING

G2417.1 (406.1) General. Prior to acceptance and initial operation, all *piping* installations shall be visually inspected and pressure tested to determine that the materials, design, fabrication and installation practices comply with the requirements of this code.

G2417.1.1 (406.1.1) Inspections. Inspection shall consist of visual examination, during or after manufacture, fabrication, assembly or *pressure tests*.

G2417.1.2 (406.1.2) Repairs and additions. In the event repairs or additions are made after the *pressure test*, the affected *piping* shall be tested.

Minor repairs and additions are not required to be *pressure tested* provided that the work is inspected and connections are tested with a noncorrosive leak-detecting fluid or other *approved* leak-detecting methods.

G2417.1.3 (406.1.3) New branches. Where new branches are installed to new *appliances*, only the newly installed branches shall be required to be *pressure tested*. Connections between the new *piping* and the existing *piping* shall be tested with a noncorrosive leak-detecting fluid or other *approved* leak-detecting methods.

G2417.1.4 (406.1.4) Section testing. A *piping system* shall be permitted to be tested as a complete unit or in sections. A *valve* in a line shall not be used as a bulkhead between gas in one section of the *piping system* and test medium in an adjacent section, except where a double block and bleed valve system is installed. A valve shall not be subjected to the test pressure unless it can be determined that the valve, including the valve-closing mechanism, is designed to safely withstand the test pressure.

G2417.1.5 (406.1.5) Regulators and valve assemblies. *Regulator* and valve assemblies fabricated independently of the *piping system* in which they are to be installed shall be permitted to be tested with inert gas or air at the time of fabrication.

G2417.1.6 (406.1.6) Pipe clearing. Prior to testing, the interior of the pipe shall be cleared of all foreign material.

G2417.2 (406.2) Test medium. The test medium shall be air, nitrogen, carbon dioxide or an inert gas. Oxygen shall not be used as a test medium.

G2417.3 (406.3) Test preparation. *Pipe* joints, including welds, shall be left exposed for examination during the test.

Exception: Covered or *concealed pipe* end joints that have been previously tested in accordance with this *code*.

G2417.3.1 (406.3.1) Expansion joints. Expansion joints shall be provided with temporary restraints, if required, for the additional thrust load under test.

G2417.3.2 (406.3.2) Appliance and equipment isolation. *Appliances* and *equipment* that are not to be included in the test shall be either disconnected from the *piping* or isolated by blanks, blind flanges or caps.

G2417.3.3 (406.3.3) Appliance and equipment disconnection. Where the *piping system* is connected to *appliances* or *equipment* designed for operating pressures of less than the test pressure, such *appliances* or *equipment* shall be isolated from the *piping system* by disconnecting them and capping the *outlet(s)*.

G2417.3.4 (406.3.4) Valve isolation. Where the *piping system* is connected to *appliances* or *equipment* designed for operating pressures equal to or greater than the test pressure, such *appliances* or *equipment* shall be isolated from the *piping system* by closing the individual *appliance* or *equipment* shutoff valve(s).

G2417.3.5 (406.3.5) Testing precautions. Testing of *piping* systems shall be performed in a manner that protects the safety of employees and the public during the test.

G2417.4 (406.4) Test pressure measurement. Test pressure shall be measured with a manometer or with a pressure-measuring device designed and calibrated to read, record, or indicate a pressure loss caused by leakage during the *pressure test* period. The source of pressure shall be isolated before the *pressure tests* are made. Mechanical gauges used to measure test pressures shall have a range such that the highest end of the scale is not greater than five times the test pressure.

G2417.4.1 (406.4.1) Test pressure. The test pressure to be used shall be not less than $1^1/_2$ times the proposed maximum working pressure, but not less than 3 psig (20 kPa gauge), irrespective of design pressure. Where the test pressure exceeds 125 psig (862 kPa gauge), the test pressure shall not exceed a value that produces a hoop stress in the *piping* greater than 50 percent of the specified minimum yield strength of the pipe.

G2417.4.2 (406.4.2) Test duration. The test duration shall be not less than 10 minutes.

G2417.5 (406.5) Detection of leaks and defects. The *piping system* shall withstand the test pressure specified without showing any evidence of leakage or other defects. Any reduction of test pressures as indicated by pressure gauges shall be

INTERNATIONAL CODE COUNCIL®
Copyright © 2019 ICC & NYSDOS. ALL RIGHTS RESERVED. Accessed by Lauren Gualdino (lgualdino@briarcliffmanor.org), (-) Order Number #100880972 on May 08, 2020 07:05 AM (PDT) pursuant to License Agreement with ICC & NYSDOS. No further reproduction, no

100880972

deemed to indicate the presence of a leak unless such reduction can be readily attributed to some other cause.

G2417.5.1 (406.5.1) Detection methods. The leakage shall be located by means of an *approved* gas detector, a noncorrosive leak detection fluid or other *approved* leak detection methods.

G2417.5.2 (406.5.2) Corrections. Where leakage or other defects are located, the affected portion of the *piping system* shall be repaired or replaced and retested.

G2417.6 (406.6) Piping system and equipment leakage check. Leakage checking of systems and *equipment* shall be in accordance with Sections G2417.6.1 through G2417.6.4.

G2417.6.1 (406.6.1) Test gases. Leak checks using fuel gas shall be permitted in *piping systems* that have been pressure tested in accordance with Section G2417.

G2417.6.2 (406.6.2) Before turning gas on. During the process of turning gas on into a system of new *gas piping*, the entire system shall be inspected to determine that there are no open fittings or ends and that all *valves* at unused outlets are closed and plugged or capped.

G2417.6.3 (406.6.3) Leak check. Immediately after the gas is turned on into a new system or into a system that has been initially restored after an interruption of service, the *piping system* shall be checked for leakage. Where leakage is indicated, the gas supply shall be shut off until the necessary repairs have been made.

G2417.6.4 (406.6.4) Placing appliances and equipment in operation. *Appliance*s and *equipment* shall not be placed in operation until after the *piping system* has been checked for leakage in accordance with Section G2417.6.3, the *piping system* has been purged in accordance with Section G2417.7 and the connections to the *appliances* have been checked for leakage.

G2417.7 (406.7) Purging. The purging of *piping* shall be in accordance with Sections G2417.7.1 through 2417.7.3.

G2417.7.1 (406.7.1) Piping systems required to be purged outdoors. The purging of *piping systems* shall be in accordance with the provisions of Sections G2417.7.1.1 through G2417.7.1.4 where the *piping system* meets either of the following:

1. The design operating gas pressure is greater than 2 psig (13.79 kPa).
2. The *piping* being purged contains one or more sections of pipe or tubing meeting the size and length criteria of Table G2417.7.1.1.

G2417.7.1.1 (406.7.1.1) Removal from service. Where existing *gas piping* is opened, the section that is opened shall be isolated from the gas supply and the line pressure vented in accordance with Section G2417.7.1.3. Where *gas piping* meeting the criteria of Table G2417.7.1.1 is removed from service, the residual fuel gas in the *piping* shall be displaced with an inert gas.

TABLE G2417.7.1.1 (406.7.1.1)
SIZE AND LENGTH OF PIPING

NOMINAL PIPE SIZE (inches)[a]	LENGTH OF PIPING (feet)
≥ $2^1/_2$ < 3	> 50
≥ 3 < 4	> 30
≥ 4 < 6	> 15
≥ 6 < 8	> 10
≥ 8	Any length

For SI: 1 inch = 25.4 mm, 1 foot = 304.8 mm.

a. CSST EHD size of 62 is equivalent to nominal 2-inch pipe or tubing size.

G2417.7.1.2 (406.7.1.2) Placing in operation. Where *gas piping* containing air and meeting the criteria of Table G2417.7.1.1 is placed in operation, the air in the *piping* shall first be displaced with an inert gas. The inert gas shall then be displaced with fuel gas in accordance with Section G2417.7.1.3.

G2417.7.1.3 (406.7.1.3) Outdoor discharge of purged gases. The open end of a *piping* system being pressure vented or purged shall discharge directly to an outdoor location. Purging operations shall comply will all of the following requirements:

1. The point of discharge shall be controlled with a shutoff valve.
2. The point of discharge shall be located not less than 10 feet (3048 mm) from sources of ignition, not less than 10 feet (3048 mm) from building openings and not less than 25 feet (7620 mm) from mechanical air intake openings.
3. During discharge, the open point of discharge shall be continuously attended and monitored with a combustible gas indicator that complies with Section G2417.7.1.4.
4. Purging operations introducing fuel gas shall be stopped when 90 percent fuel gas by volume is detected within the pipe.
5. Persons not involved in the purging operations shall be evacuated from all areas within 10 feet (3048 mm) of the point of discharge.

G2417.7.1.4 (406.7.1.4) Combustible gas indicator. Combustible gas indicators shall be listed and shall be calibrated in accordance with the manufacturer's instructions. Combustible gas indicators shall numerically display a volume scale from zero percent to 100 percent in 1-percent or smaller increments.

G2417.7.2 (406.7.2) Piping systems allowed to be purged indoors or outdoors. The purging of *piping systems* shall be in accordance with the provisions of Section G2417.7.2.1 where the *piping system* meets both of the following:

1. The design operating gas pressure is 2 psig (13.79 kPa) or less.
2. The *piping* being purged is constructed entirely from pipe or tubing not meeting the size and length criteria of Table G2417.7.1.1.

INTERNATIONAL CODE COUNCIL®
Copyright © 2019 ICC & NYSDOS. ALL RIGHTS RESERVED. Accessed by Lauren Gualdino (lgualdino@briarcliffmanor.org), (-) Order Number #100880972 on May 08, 2020 07:05 AM (PDT) pursuant to License Agreement with ICC & NYSDOS. No further reproduction, no

100880972

G2417.7.2.1 (406.7.2.1) Purging procedure. The *piping system* shall be purged in accordance with one or more of the following:

1. The *piping* shall be purged with fuel gas and shall discharge to the outdoors.
2. The *piping* shall be purged with fuel gas and shall discharge to the indoors or outdoors through an *appliance* burner not located in a combustion chamber. Such burner shall be provided with a continuous source of ignition.
3. The *piping* shall be purged with fuel gas and shall discharge to the indoors or outdoors through a burner that has a continuous source of ignition and that is designed for such purpose.
4. The *piping* shall be purged with fuel gas that is discharged to the indoors or outdoors, and the point of discharge shall be monitored with a listed combustible gas detector in accordance with Section G2417.7.2.2. Purging shall be stopped when fuel gas is detected.
5. The *piping* shall be purged by the gas supplier in accordance with written procedures.

G2417.7.2.2 (406.7.2.2) Combustible gas detector. Combustible gas detectors shall be listed and shall be calibrated or tested in accordance with the manufacturer's instructions. Combustible gas detectors shall be capable of indicating the presence of fuel gas.

G2417.7.3 (406.7.3) Purging appliances and equipment. After the *piping system* has been placed in operation, *appliances* and *equipment* shall be purged before being placed into operation.

SECTION G2418 (407)
PIPING SUPPORT

G2418.1 (407.1) General. *Piping* shall be provided with support in accordance with Section G2418.2.

G2418.2 (407.2) Design and installation. *Piping* shall be supported with metal pipe hooks, metal pipe straps, metal bands, metal brackets, metal hangers or building structural components suitable for the size of *piping*, of adequate strength and quality, and located at intervals so as to prevent or damp out excessive vibration. *Piping* shall be anchored to prevent undue strains on connected *appliances* and shall not be supported by other *piping*. Pipe hangers and supports shall conform to the requirements of MSS SP-58 and shall be spaced in accordance with Section G2424. Supports, hangers and anchors shall be installed so as not to interfere with the free expansion and contraction of the *piping* between anchors. The components of the supporting *equipment* shall be designed and installed so that they will not be disengaged by movement of the supported *piping*.

SECTION G2419 (408)
DRIPS AND SLOPED PIPING

G2419.1 (408.1) Slopes. *Piping* for other than dry gas conditions shall be sloped not less than $^1/_4$ inch in 15 feet (6.3 mm in 4572 mm) to prevent traps.

G2419.2 (408.2) Drips. Where wet gas exists, a *drip* shall be provided at any point in the line of pipe where *condensate* could collect. A *drip* shall be provided at the outlet of the *meter* and shall be installed so as to constitute a trap wherein an accumulation of *condensate* will shut off the flow of gas before the *condensate* will run back into the *meter*.

G2419.3 (408.3) Location of drips. *Drips* shall be provided with *ready access* to permit cleaning or emptying. A *drip* shall not be located where the *condensate* is subject to freezing.

G2419.4 (408.4) Sediment trap. Where a sediment trap is not incorporated as part of the appliance, a sediment trap shall be installed downstream of the appliance shutoff valve as close to the inlet of the appliance as practical. The sediment trap shall be either a tee fitting having a capped nipple of any length installed vertically in the bottommost opening of the tee as illustrated in Figure G2419.4 or other device approved as an effective sediment trap. Illuminating appliances, ranges, clothes dryers, decorative vented appliances for installation in vented fireplaces, gas fireplaces and outdoor grills need not be so equipped.

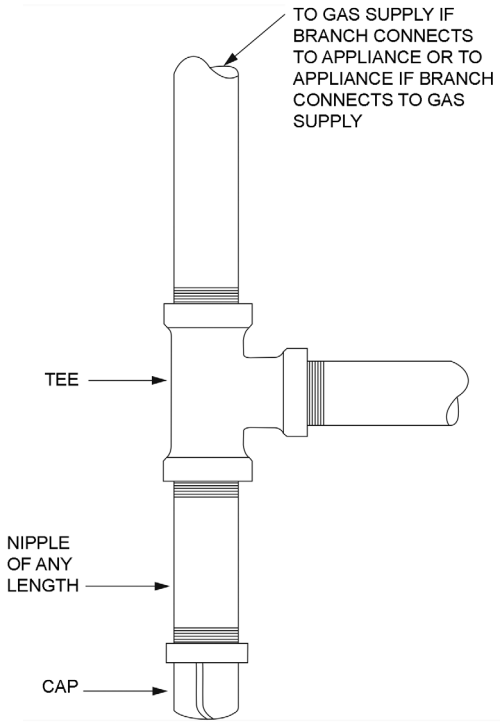

FIGURE G2419.4 (408.4)
METHOD OF INSTALLING A TEE FITTING SEDIMENT TRAP

INTERNATIONAL CODE COUNCIL®
Copyright © 2019 ICC & NYSDOS. ALL RIGHTS RESERVED. Accessed by Lauren Gualdino (lgualdino@briarcliffmanor.org), (-) Order Number #100880972 on May 08, 2020 07:05 AM (PDT) pursuant to License Agreement with ICC & NYSDOS. No further reproduction, no

100880972

SECTION G2420 (409)
SHUTOFF VALVES

G2420.1 (409.1) General. *Piping systems* shall be provided with shutoff valves in accordance with this section.

G2420.1.1 (409.1.1) Valve approval. Shutoff valves shall be of an *approved* type; shall be constructed of materials compatible with the *piping*; and shall comply with the standard that is applicable for the pressure and application, in accordance with Table G2420.1.1.

G2420.1.2 (409.1.2) Prohibited locations. Shutoff valves shall be prohibited in *concealed locations* and *furnace plenums*.

G2420.1.3 (409.1.3) Access to shutoff valves. Shutoff *valves* shall be located in places so as to provide access for operation and shall be installed so as to be protected from damage.

G2420.2 (409.2) Meter valve. Every *meter* shall be equipped with a shutoff valve located on the supply side of the *meter*.

G2420.3 (409.3.2) Individual buildings. In a common system serving more than one building, shutoff valves shall be installed outdoors at each building.

G2420.4 (409.4) MP regulator valves. A listed shutoff valve shall be installed immediately ahead of each MP *regulator*.

G2420.5 (409.5) Appliance shutoff valve. Each *appliance* shall be provided with a shutoff valve in accordance with Section G2420.5.1, G2420.5.2 or G2420.5.3.

G2420.5.1 (409.5.1) Located within same room. The shutoff valve shall be located in the same room as the *appliance*. The shutoff valve shall be within 6 feet (1829 mm) of the *appliance*, and shall be installed upstream of the union, connector or quick disconnect device it serves. Such shutoff *valves* shall be provided with *access*. Shutoff valves serving movable appliances, such as cooking appliances and clothes dryers, shall be considered to be provided with access where installed behind such appliances. *Appliance shutoff valves* located in the firebox of a *fireplace* shall be installed in accordance with the *appliance* manufacturer's instructions.

G2420.5.2 (409.5.2) Vented decorative appliances and room heaters. Shutoff valves for vented decorative *appliances*, room heaters and decorative *appliances* for installation in vented *fireplaces* shall be permitted to be installed in an area remote from the *appliances* where such valves are provided with *ready access*. Such *valves* shall be permanently identified and shall not serve another *appliance*. The *piping* from the shutoff valve to within 6 feet (1829 mm) of the *appliance* shall be designed, sized and installed in accordance with Sections G2412 through G2419.

G2420.5.3 (409.5.3) Located at manifold. Where the *appliance* shutoff valve is installed at a manifold, such shutoff valve shall be located within 50 feet (15 240 mm) of the *appliance* served and shall be readily accessible and permanently identified. The *piping* from the manifold to within 6 feet (1829 mm) of the *appliance* shall be designed, sized and installed in accordance with Sections G2412 through G2419.

G2420.6 (409.7) Shutoff valves in tubing systems. Shutoff valves installed in tubing systems shall be rigidly and securely supported independently of the tubing.

SECTION G2421 (410)
FLOW CONTROLS

G2421.1 (410.1) Pressure regulators. A line *pressure regulator* shall be installed where the *appliance* is designed to operate at a lower pressure than the supply pressure. *Line gas pressure regulators* shall be *listed* as complying with ANSI Z21.80/CSA 6.22. *Access* shall be provided to *pressure regulators*. *Pressure regulators* shall be protected from physical damage. *Regulators* installed on the exterior of the building shall be *approved* for outdoor installation.

G2421.2 (410.2) MP regulators. MP *pressure regulators* shall comply with the following:

1. The MP *regulator* shall be *approved* and shall be suitable for the inlet and outlet gas pressures for the application.
2. The MP *regulator* shall maintain a reduced outlet pressure under lock-up (no-flow) conditions.
3. The capacity of the MP *regulator*, determined by published ratings of its manufacturer, shall be adequate to supply the *appliances* served.
4. The MP *pressure regulator* shall be provided with *access*. Where located indoors, the *regulator* shall be vented to the outdoors or shall be equipped with a leak-limiting device, in either case complying with Section G2421.3.
5. A tee fitting with one opening capped or plugged shall be installed between the MP *regulator* and its upstream shutoff valve. Such tee fitting shall be positioned to allow connection of a pressure-measuring instrument and to serve as a sediment trap.

TABLE G2420.1.1 (409.1.1)
MANUAL GAS VALVE STANDARDS

VALVE STANDARDS	APPLIANCE SHUTOFF VALVE APPLICATION UP TO $^1/_2$ psig PRESSURE	OTHER VALVE APPLICATIONS			
		UP TO $^1/_2$ psig PRESSURE	UP TO 2 psig PRESSURE	UP TO 5 psig PRESSURE	UP TO 125 psig PRESSURE
ANSI Z21.15/CGA 9.1	X	—	—	—	—
ASME B16.44	X	X	X[a]	X[b]	—
ASME B16.33	X	X	X	X	X

For SI: 1 pound per square inch gauge = 6.895 kPa.

a. If labeled 2G.

b. If labeled 5G.

INTERNATIONAL CODE COUNCIL®
Copyright © 2019 ICC & NYSDOS. ALL RIGHTS RESERVED. Accessed by Lauren Gualdino (lgualdino@briarcliffmanor.org), (-) Order Number #100880972 on May 08, 2020 07:05 AM (PDT) pursuant to License Agreement with ICC & NYSDOS. No further reproduction, no

100880972

6. A tee fitting with one opening capped or plugged shall be installed not less than 10 pipe diameters downstream of the MP *regulator* outlet. Such tee fitting shall be positioned to allow connection of a pressure-measuring instrument. The tee fitting is not required where the MP regulator serves an appliance that has a pressure test port on the gas control inlet side and the appliance is located in the same room as the MP regulator.
7. Where connected to rigid *piping*, a union shall be installed within 1 foot (304 mm) of either side of the MP *regulator*.

G2421.3 (410.3) Venting of regulators. *Pressure regulators* that require a vent shall be vented directly to the outdoors. The vent shall be designed to prevent the entry of insects, water and foreign objects.

Exception: A vent to the outdoors is not required for *regulators* equipped with and *labeled* for utilization with an *approved* vent-limiting device installed in accordance with the manufacturer's instructions.

G2421.3.1 (410.3.1) Vent piping. Vent *piping* for relief vents and breather vents shall be constructed of materials allowed for *gas piping* in accordance with Section G2414. Vent *piping* shall be not smaller than the vent connection on the pressure-regulating device. Vent *piping* serving relief vents and combination relief and breather vents shall be run independently to the outdoors and shall serve only a single device vent. Vent *piping* serving only breather vents is permitted to be connected in a manifold arrangement where sized in accordance with an *approved* design that minimizes backpressure in the event of diaphragm rupture. *Regulator* vent *piping* shall not exceed the length specified in the *regulator* manufacturer's instructions.

G2421.4 (410.4) Excess flow valves. Where automatic *excess flow valves* are installed, they shall be listed in accordance with ANSI Z21.93/CSA 6.30 and shall be sized and installed in accordance with the manufacturer's instructions.

G2421.5 (410.5) Flashback arrestor check valve. Where fuel gas is used with oxygen in any hot work operation, a listed protective device that serves as a combination flashback arrestor and backflow check valve shall be installed at an *approved* location on both the fuel gas and oxygen supply lines. Where the pressure of the piped fuel gas supply is insufficient to ensure such safe operation, *approved* equipment shall be installed between the gas meter and the appliance that increases pressure to the level required for such safe operation.

SECTION G2422 (411)
APPLIANCE CONNECTIONS

G2422.1 (411.1) Connecting appliances. *Appliances* shall be connected to the *piping system* by one of the following:

1. Rigid metallic pipe and fittings.
2. Corrugated stainless steel *tubing* (CSST) where installed in accordance with the manufacturer's instructions.
3. *Listed* and *labeled appliance connectors* in compliance with ANSI Z21.24/CSA 6.10 and installed in accordance with the manufacturer's instructions and located entirely in the same room as the *appliance*.
4. *Listed* and *labeled* quick-disconnect devices used in conjunction with *listed* and *labeled appliance connectors*.
5. *Listed* and *labeled* convenience outlets used in conjunction with *listed* and *labeled appliance connectors*.
6. *Listed* and *labeled* outdoor *appliance connectors* in compliance with ANSI Z21.75/CSA 6.27 and installed in accordance with the manufacturer's instructions.
7. *Listed* outdoor gas hose connectors in compliance with ANSI Z21.54 used to connect portable outdoor *appliances*. The gas hose connection shall be made only in the outdoor area where the *appliance* is used, and shall be to the gas *piping* supply at an *appliance* shutoff valve, a *listed* quick-disconnect device or *listed* gas convenience outlet.

G2422.1.1 (411.1.2) Protection from damage. Connectors and *tubing* shall be installed so as to be protected against physical damage.

G2422.1.2 (411.1.3) Connector installation. *Appliance* fuel connectors shall be installed in accordance with the manufacturer's instructions and Sections G2422.1.2.1 through G2422.1.2.4.

G2422.1.2.1 (411.1.3.1) Maximum length. Connectors shall have an overall length not to exceed 6 feet (1829 mm). Measurement shall be made along the centerline of the connector. Only one connector shall be used for each *appliance*.

Exception: Rigid metallic *piping* used to connect an *appliance* to the *piping system* shall be permitted to have a total length greater than 6 feet (1829 mm), provided that the connecting pipe is sized as part of the *piping system* in accordance with Section G2413 and the location of the *appliance* shutoff valve complies with Section G2420.5.

G2422.1.2.2 (411.1.3.2) Minimum size. Connectors shall have the capacity for the total *demand* of the connected *appliance*.

G2422.1.2.3 (411.1.3.3) Prohibited locations and penetrations. Connectors shall not be concealed within, or extended through, walls, floors, partitions, ceilings or *appliance* housings.

Exceptions:

1. Connectors constructed of materials allowed for *piping systems* in accordance with Section G2414 shall be permitted to pass through walls, floors, partitions and ceilings where installed in accordance with Section G2420.5.2 or G2420.5.3.
2. Rigid steel pipe connectors shall be permitted to extend through openings in *appliance* housings.

INTERNATIONAL CODE COUNCIL®
Copyright © 2019 ICC & NYSDOS. ALL RIGHTS RESERVED. Accessed by Lauren Gualdino (lgualdino@briarcliffmanor.org), (-) Order Number #100880972 on May 08, 2020 07:05 AM (PDT) pursuant to License Agreement with ICC & NYSDOS. No further reproduction, no

100880972

3. *Fireplace* inserts that are factory equipped with grommets, sleeves or other means of protection in accordance with the listing of the *appliance*.
4. Semirigid *tubing* and *listed* connectors shall be permitted to extend through an opening in an *appliance* housing, cabinet or casing where the tubing or connector is protected against damage.

G2422.1.2.4 (411.1.3.4) Shutoff valve. A shutoff valve not less than the nominal size of the connector shall be installed ahead of the connector in accordance with Section G2420.5.

G2422.1.3 (411.1.5) Connection of gas engine-powered air conditioners. Internal combustion engines shall not be rigidly connected to the gas supply *piping*.

G2422.1.4 (411.1.6) Unions. A union fitting shall be provided for *appliances* connected by rigid metallic pipe. Such unions shall be accessible and located within 6 feet (1829 mm) of the *appliance*.

G2422.1.5 (411.1.4) Movable appliances. Where *appliances* are equipped with casters or are otherwise subject to periodic movement or relocation for purposes such as routine cleaning and maintenance, such *appliances* shall be connected to the supply system *piping* by means of an *appliance connector listed* as complying with ANSI Z21.69/CSA 6.16 or by means of Item 1 of Section G2422.1. Such flexible connectors shall be installed and protected against physical damage in accordance with the manufacturer's instructions.

G2422.2 (411.3) Suspended low-intensity infrared tube heaters. Suspended low-intensity infrared tube heaters shall be connected to the building *piping system* with a connector *listed* for the application complying with ANSI Z21.24/CGA 6.10. The connector shall be installed as specified by the tube heater manufacturer's instructions.

SECTION G2423 (413)
COMPRESSED NATURAL GAS MOTOR VEHICLE FUEL-DISPENSING FACILITIES

G2423.1 (413.1) General. Motor fuel-dispensing facilities for CNG fuel shall be in accordance with Section 413 of the *Fuel Gas Code of New York State.*

SECTION G2424 (415)
PIPING SUPPORT INTERVALS

G2424.1 (415.1) Interval of support. *Piping* shall be supported at intervals not exceeding the spacing specified in Table G2424.1. Spacing of supports for CSST shall be in accordance with the CSST manufacturer's instructions.

TABLE G2424.1 (415.1)
SUPPORT OF PIPING

STEEL PIPE, NOMINAL SIZE OF PIPE (inches)	SPACING OF SUPPORTS (feet)	NOMINAL SIZE OF TUBING SMOOTH-WALL (inch O.D.)	SPACING OF SUPPORTS (feet)
1/2	6	1/2	4
3/4 or 1	8	5/8 or 3/4	6
1 1/4 or larger (horizontal)	10	7/8 or 1 (horizontal)	8
1 1/4 or larger (vertical)	Every floor level	1 or larger (vertical)	Every floor level

For SI: 1 inch = 25.4 mm, 1 foot = 304.8 mm.

SECTION G2425 (501)
GENERAL

G2425.1 (501.1) Scope. This section shall govern the installation, maintenance, repair and approval of factory-built *chimneys, chimney* liners, vents and connectors and the utilization of masonry chimneys serving gas-fired *appliances.*

G2425.2 (501.2) General. Every *appliance* shall discharge the products of combustion to the outdoors, except for *appliances* exempted by Section G2425.8.

G2425.3 (501.3) Masonry chimneys. *Masonry chimneys* shall be constructed in accordance with Section G2427.5 and Chapter 10.

G2425.4 (501.4) Minimum size of chimney or vent. *Chimneys* and vents shall be sized in accordance with Sections G2427 and G2428.

G2425.5 (501.5) Abandoned inlet openings. Abandoned inlet openings in *chimneys* and vents shall be closed by an *approved* method.

G2425.6 (501.6) Positive pressure. Where an *appliance* equipped with a mechanical forced *draft* system creates a positive pressure in the venting system, the venting system shall be designed for positive pressure applications.

G2425.7 (501.7) Connection to fireplace. Connection of *appliances* to *chimney* flues serving *fireplaces* shall be in accordance with Sections G2425.7.1 through G2425.7.3.

G2425.7.1 (501.7.1) Closure and access. A noncombustible seal shall be provided below the point of connection to prevent entry of room air into the flue. Means shall be provided for *access* to the flue for inspection and cleaning.

G2425.7.2 (501.7.2) Connection to factory-built fireplace flue. An *appliance* shall not be connected to a flue serving a *factory-built fireplace* unless the *appliance* is specifically *listed* for such installation. The connection shall be made in accordance with the *appliance* manufacturer's installation instructions.

G2425.7.3 (501.7.3) Connection to masonry fireplace flue. A connector shall extend from the *appliance* to the flue serving a *masonry fireplace* such that the *flue gases* are exhausted directly into the flue. The connector shall be accessible or removable for inspection and cleaning of both the connector and the flue. *Listed* direct connection devices shall be installed in accordance with their listing.

INTERNATIONAL CODE COUNCIL®
Copyright © 2019 ICC & NYSDOS. ALL RIGHTS RESERVED. Accessed by Lauren Gualdino (lgualdino@briarcliffmanor.org), (-) Order Number #100880972 on May 08, 2020 07:05 AM (PDT) pursuant to License Agreement with ICC & NYSDOS. No further reproduction, no

100880972

G2425.8 (501.8) Appliances not required to be vented. The following *appliances* shall not be required to be vented:

1. Ranges.
2. Built-in domestic cooking units *listed* and marked for optional venting.
3. Hot plates and laundry stoves.
4. *Type 1 clothes dryers* (*Type 1 clothes dryers* shall be exhausted in accordance with the requirements of Section G2439).
5. Refrigerators.
6. Counter *appliances*.
7. Room heaters *listed* for unvented use.

Where the *appliances* listed in Items 5 through 7 are installed so that the aggregate input rating exceeds 20 Btu per hour per cubic foot (207 W/m^3) of volume of the room or space in which such *appliances* are installed, one or more shall be provided with venting *systems* or other *approved* means for conveying the *vent gases* to the outdoor atmosphere so that the aggregate input rating of the remaining *unvented appliances* does not exceed 20 Btu per hour per cubic foot (207 W/m^3). Where the room or space in which the *appliance* is installed is directly connected to another room or space by a doorway, archway or other opening of comparable size that cannot be closed, the volume of such adjacent room or space shall be permitted to be included in the calculations.

G2425.9 (501.9) Chimney entrance. Connectors shall connect to a *masonry chimney* flue at a point not less than 12 inches (305 mm) above the lowest portion of the interior of the *chimney* flue.

G2425.10 (501.10) Connections to exhauster. *Appliance* connections to a *chimney* or vent equipped with a power exhauster shall be made on the inlet side of the exhauster. Joints on the positive pressure side of the exhauster shall be sealed to prevent flue-gas leakage as specified by the manufacturer's installation instructions for the exhauster.

G2425.11 (501.11) Masonry chimneys. *Masonry chimneys* utilized to vent *appliances* shall be located, constructed and sized as specified in the manufacturer's installation instructions for the *appliances* being vented and Section G2427.

G2425.12 (501.12) Residential and low-heat appliances flue lining systems. *Flue lining* systems for use with residential-type and low-heat *appliances* shall be limited to the following:

1. Clay *flue lining* complying with the requirements of ASTM C315 or equivalent. Clay *flue lining* shall be installed in accordance with Chapter 10.
2. *Listed chimney* lining systems complying with UL 1777.
3. Other *approved* materials that will resist, without cracking, softening or corrosion, *flue gases* and *condensate* at temperatures up to 1,800ºF (982ºC).

G2425.13 (501.13) Category I appliance flue lining systems. *Flue lining* systems for use with Category I *appliances* shall be limited to the following:

1. *Flue lining* systems complying with Section G2425.12.
2. *Chimney* lining systems *listed* and *labeled* for use with gas *appliances* with *draft hoods* and other Category I gas *appliances listed* and *labeled* for use with Type B vents.

G2425.14 (501.14) Category II, III and IV appliance venting systems. The design, sizing and installation of vents for Category II, III and IV *appliances* shall be in accordance with the *appliance* manufacturer's instructions.

G2425.15 (501.15) Existing chimneys and vents. Where an *appliance* is permanently disconnected from an existing *chimney* or vent, or where an *appliance* is connected to an existing *chimney* or vent during the process of a new installation, the *chimney* or vent shall comply with Sections G2425.15.1 through G2425.15.4.

G2425.15.1 (501.15.1) Size. The *chimney* or vent shall be resized as necessary to control flue gas condensation in the interior of the *chimney* or vent and to provide the *appliance* or *appliances* served with the required *draft*. For Category I *appliances*, the resizing shall be in accordance with Section G2426.

G2425.15.2 (501.15.2) Flue passageways. The flue gas passageway shall be free of obstructions and combustible deposits and shall be cleaned if previously used for venting a solid or liquid fuel-burning *appliance* or *fireplace*. The *flue liner*, *chimney* inner wall or vent inner wall shall be continuous and shall be free of cracks, gaps, perforations, or other damage or deterioration that would allow the escape of *combustion products*, including gases, moisture and creosote.

G2425.15.3 (501.15.3) Cleanout. *Masonry chimney* flues shall be provided with a cleanout opening having a minimum height of 6 inches (152 mm). The upper edge of the opening shall be located not less than 6 inches (152 mm) below the lowest *chimney* inlet opening. The cleanout shall be provided with a tight-fitting, noncombustible cover.

G2425.15.4 (501.15.4) Clearances. *Chimneys* and vents shall have airspace *clearance* to combustibles in accordance with Chapter 10 and the *chimney* or vent manufacturer's installation instructions.

Exception: *Masonry chimneys* without the required airspace *clearances* shall be permitted to be used if lined or relined with a *chimney* lining system *listed* for use in *chimneys* with reduced *clearances* in accordance with UL 1777. The *chimney clearance* shall be not less than permitted by the terms of the *chimney* liner listing and the manufacturer's instructions.

G2425.15.4.1 (501.15.4.1) Fireblocking. Noncombustible fireblocking shall be provided in accordance with Chapter 10.

INTERNATIONAL CODE COUNCIL®
Copyright © 2019 ICC & NYSDOS. ALL RIGHTS RESERVED. Accessed by Lauren Gualdino (lgualdino@briarcliffmanor.org), (-) Order Number #100880972 on May 08, 2020 07:05 AM (PDT) pursuant to License Agreement with ICC & NYSDOS. No further reproduction, no

100880972

SECTION G2426 (502)
VENTS

G2426.1 (502.1) General. Vents, except as provided in Section G2427.7, shall be *listed* and *labeled*. Type B and BW vents shall be tested in accordance with UL 441. Type L vents shall be tested in accordance with UL 641. Vents for Category II and III *appliances* shall be tested in accordance with UL 1738. Plastic vents for Category IV *appliances* shall not be required to be *listed* and *labeled* where such vents are as specified by the *appliance* manufacturer and are installed in accordance with the *appliance* manufacturer's instructions.

G2426.2 (502.2) Connectors required. Connectors shall be used to connect *appliances* to the vertical *chimney* or vent, except where the *chimney* or vent is attached directly to the *appliance*. Vent *connector* size, material, construction and installation shall be in accordance with Section G2427.

G2426.3 (502.3) Vent application. The application of vents shall be in accordance with Table G2427.4.

G2426.4 (502.4) Insulation shield. Where vents pass through insulated assemblies, an insulation shield constructed of steel having a minimum thickness of 0.0187 inch (0.4712 mm) (No. 26 gage) shall be installed to provide *clearance* between the vent and the insulation material. The *clearance* shall be not less than the *clearance* to combustibles specified by the vent manufacturer's installation instructions. Where vents pass through attic space, the shield shall terminate not less than 2 inches (51 mm) above the insulation materials and shall be secured in place to prevent displacement. Insulation shields provided as part of a *listed* vent system shall be installed in accordance with the manufacturer's instructions.

G2426.5 (502.5) Installation. Vent systems shall be sized, installed and terminated in accordance with the vent and *appliance* manufacturer's installation instructions and Section G2427.

G2426.6 (502.6) Support of vents. All portions of vents shall be adequately supported for the design and weight of the materials employed.

G2426.7 (502.7) Protection against physical damage. In *concealed locations*, where a vent is installed through holes or notches in studs, joists, rafters or similar members less than $1^1/_2$ inches (38 mm) from the nearest edge of the member, the vent shall be protected by shield plates. Protective steel shield plates having a minimum thickness of 0.0575-inch (1.463 mm) (No. 16 gage) shall cover the area of the vent where the member is notched or bored and shall extend not less than 4 inches (102 mm) above sole plates, below top plates and to each side of a stud, joist or rafter.

G2426.7.1 (502.7.1) Door swing. Appliance and equipment vent terminals shall be located such that doors cannot swing within 12 inches (305 mm) horizontally of the vent terminal. Door stops or closures shall not be installed to obtain this clearance.

SECTION G2427 (503)
VENTING OF APPLIANCES

G2427.1 (503.1) General. The venting of appliances shall be in accordance with Sections G2427.2 through G2427.16.

G2427.2 (503.2) Venting systems required. Except as permitted in Sections G2425.8, G2427.2.1 and G2427.2.2, all *appliances* shall be connected to *venting systems*.

G2427.2.1 (503.2.3) Direct-vent appliances. *Listed direct-vent appliances* shall be installed in accordance with the manufacturer's instructions and Section G2427.8, Item 3.

G2427.2.2 (503.2.4) Appliances with integral vents. *Appliances* incorporating integral venting means shall be installed in accordance with the manufacturer's instructions and Section G2427.8, Items 1 and 2.

G2427.3 (503.3) Design and construction. *Venting systems* shall be designed and constructed so as to convey all flue and *vent gases* to the outdoors.

G2427.3.1 (503.3.1) Appliance draft requirements. A *venting system* shall satisfy the *draft* requirements of the *appliance* in accordance with the manufacturer's instructions.

G2427.3.2 (503.3.2) Design and construction. *Appliances* required to be vented shall be connected to a *venting system* designed and installed in accordance with the provisions of Sections G2427.4 through G2427.16.

G2427.3.3 (503.3.3) Mechanical draft systems. Mechanical *draft* systems shall comply with the following:

1. Mechanical *draft* systems shall be *listed* in accordance with UL 378 and shall be installed in accordance with the manufacturer's instructions for both the *appliance* and the mechanical *draft* system.
2. *Appliances* requiring venting shall be permitted to be vented by means of mechanical *draft* systems of either forced or induced *draft* design.
3. Forced *draft* systems and all portions of induced *draft* systems under positive pressure during operation shall be designed and installed so as to prevent leakage of flue or *vent gases* into a building.
4. *Vent connectors* serving *appliances* vented by natural *draft* shall not be connected into any portion of mechanical *draft* systems operating under positive pressure.
5. Where a mechanical *draft* system is employed, provisions shall be made to prevent the flow of gas to the *main burners* when the *draft* system is not performing so as to satisfy the operating requirements of the *appliance* for safe performance.
6. The exit terminals of mechanical *draft* systems shall be not less than 7 feet (2134 mm) above finished ground level where located adjacent to public walkways and shall be located as specified in Section G2427.8, Items 1 and 2.

INTERNATIONAL CODE COUNCIL®
Copyright © 2019 ICC & NYSDOS. ALL RIGHTS RESERVED. Accessed by Lauren Gualdino (lgualdino@briarcliffmanor.org), (-) Order Number #100880972 on May 08, 2020 07:05 AM (PDT) pursuant to License Agreement with ICC & NYSDOS. No further reproduction, no

100880972

G2427.3.4 (503.3.5) Air ducts and furnace plenums. *Venting systems* shall not extend into or pass through any fabricated air duct or *furnace plenum*.

G2427.3.5 (503.3.6) Above-ceiling air-handling spaces. Where a *venting system* passes through an above-ceiling air-handling space or other nonducted portion of an air-handling system, the *venting system* shall conform to one of the following requirements:

1. The *venting system* shall be a *listed* special gas vent; other *venting system* serving a Category III or Category IV *appliance*; or other positive pressure vent, with joints sealed in accordance with the *appliance* or vent manufacturer's instructions.
2. The *venting system* shall be installed such that fittings and joints between sections are not installed in the above-ceiling space.
3. The *venting system* shall be installed in a conduit or enclosure with sealed joints separating the interior of the conduit or enclosure from the ceiling space.

G2427.4 (503.4) Type of venting system to be used. The type of *venting system* to be used shall be in accordance with Table G2427.4.

G2427.4.1 (503.4.1) Plastic piping. Where plastic piping is used to vent an *appliance*, the *appliance* shall be *listed* for use with such venting materials and the *appliance* manufacturer's installation instructions shall identify the specific plastic piping material. The plastic pipe venting materials shall be *labeled* in accordance with the product standards specified by the *appliance* manufacturer or shall be *listed* in accordance with UL 1738.

G2427.4.1.1 (503.4.1.1) (IFGS) Plastic vent joints. Plastic *pipe* and fittings used to vent *appliances* shall be installed in accordance with the *appliance* manufacturer's instructions. Plastic pipe venting materials *listed* and *labeled* in accordance with UL 1738 shall be installed in accordance with the *vent* manufacturer's instructions. Where a primer is required, it shall be of a contrasting color.

G2427.4.2 (503.4.2) Special gas vent. Special gas *vent* shall be *listed* and *labeled* in accordance with UL 1738 and installed in accordance with the special gas *vent* manufacturer's instructions.

G2427.5 (503.5) Masonry, metal and factory-built chimneys. Masonry, metal and factory-built *chimneys* shall comply with Sections G2427.5.1 through G2427.5.10.

G2427.5.1 (503.5.1) Factory-built chimneys. Factory-built *chimneys* shall be *listed* in accordance with UL 103 and installed in accordance with the manufacturer's instructions. Factory-built *chimneys* used to vent *appliances* that operate at a positive vent pressure shall be *listed* for such application.

G2427.5.2 (503.5.3) Masonry chimneys. Masonry *chimneys* shall be built and installed in accordance with NFPA 211 and shall be lined with an *approved* clay *flue lining*, a *chimney* lining system *listed* and *labeled* in accordance with UL 1777 or other *approved* material that will resist corrosion, erosion, softening or cracking from vent gases at temperatures up to 1,800ºF (982ºC).

Exception: Masonry *chimney* flues serving *listed* gas *appliances* with *draft hoods*, Category I *appliances* and other gas *appliances listed* for use with Type B vents shall be permitted to be lined with a *chimney* lining system specifically *listed* for use only with such *appliances*. The liner shall be installed in accordance with the liner manufacturer's instructions. A permanent identifying label shall be attached at the point where the connection is to be made to the liner. The label shall read: "This *chimney* liner is for *appliances* that burn gas only. Do not connect to solid or liquid fuel-burning appliances or incinerators."

G2427.5.3 (503.5.4) Chimney termination. *Chimneys* for residential-type or low-heat *appliances* shall extend not less than 3 feet (914 mm) above the highest point where they pass through a roof of a building and not less than 2 feet (610 mm) higher than any portion of a building within a horizontal distance of 10 feet (3048 mm). *Chimneys* for medium-heat *appliances* shall extend not less than 10 feet (3048 mm) higher than any portion of any building within 25 feet (7620 mm). *Chimneys* shall extend not less than 5 feet (1524 mm) above the highest connected *appliance draft hood* outlet or *flue collar*. Decorative shrouds shall

TABLE G2427.4 (503.4)
TYPE OF VENTING SYSTEM TO BE USED

APPLIANCES	TYPE OF VENTING SYSTEM
Listed Category I *appliances* *Listed appliances* equipped with draft hood *Appliances* listed for use with Type B gas vent	Type B gas *vent* (Section G2427.6) *Chimney* (Section G2427.5) Single-wall metal pipe (Section G2427.7) *Listed* chimney lining system for gas venting (Section G2427.5.2) Special gas *vent* listed for these appliances (Section G2427.4.2)
Listed vented wall furnaces	Type B-W gas vent (Sections G2427.6, G2436)
Category II, Category III and Category IV *appliances*	As specified or furnished by manufacturers of *listed appliances* (Sections G2427.4.1, G2427.4.2)
Unlisted *appliances*	Chimney (Section G2427.5)
Decorative *appliances* in vented fireplaces	Chimney
Direct-vent *appliances*	See Section G2427.2.1
Appliances with integral vent	See Section G2427.2.2

INTERNATIONAL CODE COUNCIL®
Copyright © 2019 ICC & NYSDOS. ALL RIGHTS RESERVED. Accessed by Lauren Gualdino (lgualdino@briarcliffmanor.org), (-) Order Number #100880972 on May 08, 2020 07:05 AM (PDT) pursuant to License Agreement with ICC & NYSDOS. No further reproduction, no

100880972

not be installed at the termination of factory-built *chimneys* except where such shrouds are *listed* and *labeled* for use with the specific factory-built *chimney* system and are installed in accordance with the manufacturer's instructions.

G2427.5.4 (503.5.5) Size of chimneys. The effective area of a *chimney* venting system serving *listed appliances* with *draft hoods*, Category I *appliances*, and other *appliances listed* for use with Type B vents shall be determined in accordance with one of the following methods:

1. The provisions of Section G2428.
2. For sizing an individual *chimney* venting system for a single *appliance* with a *draft hood*, the effective areas of the *vent connector* and *chimney* flue shall be not less than the area of the *appliance flue collar* or *draft hood* outlet, nor greater than seven times the *draft hood* outlet area.
3. For sizing a *chimney* venting system connected to two *appliances* with *draft hoods*, the effective area of the *chimney* flue shall be not less than the area of the larger *draft hood* outlet plus 50 percent of the area of the smaller *draft hood* outlet, nor greater than seven times the smallest *draft hood* outlet area.
4. *Chimney venting systems* using mechanical *draft* shall be sized in accordance with *approved* engineering methods.
5. Other *approved* engineering methods.

G2427.5.5 (503.5.6) Inspection of chimneys. Before replacing an existing *appliance* or connecting a vent *connector* to a *chimney*, the *chimney* passageway shall be examined to ascertain that it is clear and free of obstructions and it shall be cleaned if previously used for venting solid or liquid fuel-burning appliances or *fireplaces.*

G2427.5.5.1 (503.5.6.1) Chimney lining. *Chimneys* shall be lined in accordance with NFPA 211.

Exception: Where an existing chimney complies with Sections G2427.5.5 through G2427.5.5.3 and its sizing is in accordance with Section G2427.5.4, its continued use shall be allowed where the *appliance* vented by such *chimney* is replaced by an *appliance* of similar type, input rating and efficiency.

G2427.5.5.2 (503.5.6.2) Cleanouts. Cleanouts shall be examined and where they do not remain tightly closed when not in use, they shall be repaired or replaced.

G2427.5.5.3 (503.5.6.3) Unsafe chimneys. Where inspection reveals that an existing *chimney* is not safe for the intended application, it shall be repaired, rebuilt, lined, relined or replaced with a vent or *chimney* to conform to NFPA 211 and it shall be suitable for the *appliances* to be vented.

G2427.5.6 (503.5.7) Chimneys serving appliances burning other fuels. *Chimneys* serving *appliances* burning other fuels shall comply with Sections G2427.5.6.1 through G2427.5.6.4.

G2427.5.6.1 (503.5.7.1) Solid fuel-burning appliances. An *appliance* shall not be connected to a *chimney* flue serving a separate *appliance* designed to burn solid fuel.

G2427.5.6.2 (503.5.7.2) Liquid fuel-burning appliances. Where one *chimney* flue serves gas *appliances* and liquid fuel-burning appliances, the appliances shall be connected through separate openings or shall be connected through a single opening where joined by a suitable fitting located as close as practical to the *chimney*. Where two or more openings are provided into one *chimney* flue, they shall be at different levels. Where the appliances are automatically controlled, they shall be equipped with *safety shutoff devices*.

G2427.5.6.3 (503.5.7.3) Combination gas- and solid fuel-burning appliances. A combination gas- and solid fuel-burning *appliance* shall be permitted to be connected to a single *chimney* flue where equipped with a manual reset device to shut off gas to the *main burner* in the event of sustained backdraft or flue gas spillage. The *chimney* flue shall be sized to properly vent the *appliance.*

G2427.5.6.4 (503.5.7.4) Combination gas- and oil fuel-burning appliances. Where a single *chimney* flue serves a *listed* combination gas- and oil fuel-burning *appliance,* such flue shall be sized in accordance with the *appliance* manufacturer's instructions.

G2427.5.7 (503.5.8) Support of chimneys. All portions of *chimneys* shall be supported for the design and weight of the materials employed. Factory-built *chimneys* shall be supported and spaced in accordance with the manufacturer's installation instructions.

G2427.5.8 (503.5.9) Cleanouts. Where a *chimney* that formerly carried flue products from liquid or solid fuel-burning appliances is used with an *appliance* using *fuel gas*, an accessible cleanout shall be provided. The cleanout shall have a tight-fitting cover and be installed so its upper edge is not less than 6 inches (152 mm) below the lower edge of the lowest *chimney* inlet opening.

G2427.5.9 (503.5.10) Space surrounding lining or vent. The remaining space surrounding a *chimney* liner, gas vent, special gas *vent* or plastic *piping* installed within a masonry *chimney* flue shall not be used to vent another *appliance*. The insertion of another liner or vent within the *chimney* as provided in this *code* and the liner or vent manufacturer's instructions shall not be prohibited.

The remaining space surrounding a *chimney* liner, gas vent, special gas vent or plastic *piping* installed within a masonry, metal or factory-built *chimney* shall not be used to supply *combustion air*. Such space shall not be prohibited from supplying *combustion air* to *direct-vent appliances* designed for installation in a solid fuel-burning *fireplace* and installed in accordance with the manufacturer's instructions.

G2427.5.10 (503.5.11) Insulation shield. Where a factory-built chimney passes through insulated assemblies, an insulation shield constructed of steel having a thickness of

INTERNATIONAL CODE COUNCIL®
Copyright © 2019 ICC & NYSDOS. ALL RIGHTS RESERVED. Accessed by Lauren Gualdino (lgualdino@briarcliffmanor.org), (-) Order Number #100880972 on May 08, 2020 07:05 AM (PDT) pursuant to License Agreement with ICC & NYSDOS. No further reproduction, no

100880972

not less than 0.0187 inch (0.475 mm) (nominal 26 gage) shall be installed to provide clearance between the chimney and the insulation material. The clearance shall be not less than the clearance to combustibles specified by the chimney manufacturer's installation instructions. Where chimneys pass through attic space, the shield shall terminate not less than 2 inches (51 mm) above the installation materials and shall be secured in place to prevent displacement. Insulation shields provided as part of a *listed* chimney system shall be installed in accordance with the manufacturer's installation instructions.

G2427.6 (503.6) Gas vents. Gas vents shall comply with Sections G2427.6.1 through G2427.6.12. (See Section G2403, General Definitions.)

G2427.6.1 (503.6.1) Materials. Type B and BW gas vents shall be *listed* in accordance with UL 441. Vents for *listed* combination gas- and oil-burning *appliances* shall be *listed* in accordance with UL 641.

G2427.6.2 (503.6.2) Installation, general. Gas vents shall be installed in accordance with the manufacturer's instructions.

G2427.6.3 (503.6.3) Type B-W vent capacity. A Type B-W gas vent shall have a listed capacity not less than that of the *listed vented wall furnace* to which it is connected.

G2427.6.4 (503.6.5) Gas vent terminations. A gas vent shall terminate in accordance with one of the following:

1. Gas vents that are 12 inches (305 mm) or less in size and located not less than 8 feet (2438 mm) from a vertical wall or similar obstruction shall terminate above the roof in accordance with Figure G2427.6.4.
2. Gas vents that are over 12 inches (305 mm) in size or are located less than 8 feet (2438 mm) from a vertical wall or similar obstruction shall terminate not less than 2 feet (610 mm) above the highest point where they pass through the roof and not less than 2 feet (610 mm) above any portion of a building within 10 feet (3048 mm) horizontally.
3. As provided for direct-vent systems in Section G2427.2.1.
4. As provided for *appliances* with integral vents in Section G2427.2.2.
5. As provided for mechanical *draft* systems in Section G2427.3.3.

G2427.6.4.1 (503.6.5.1) Decorative shrouds. Decorative shrouds shall not be installed at the termination of gas vents except where such shrouds are *listed* for use with the specific gas venting system and are installed in accordance with manufacturer's instructions.

G2427.6.5 (503.6.6) Minimum height. A Type B or L gas vent shall terminate not less than 5 feet (1524 mm) in vertical height above the highest connected *appliance draft hood* or *flue collar*. A Type B-W gas vent shall terminate not less than 12 feet (3658 mm) in vertical height above the bottom of the wall *furnace*.

G2427.6.6 (503.6.7) Roof terminations. Gas vents shall extend through the roof flashing, roof jack or roof thimble and terminate with a *listed* cap or *listed* roof assembly.

G2427.6.7 (503.6.8) Forced air inlets. Gas vents shall terminate not less than 3 feet (914 mm) above any forced air inlet located within 10 feet (3048 mm).

G2427.6.8 (503.6.9) Exterior wall penetrations. A gas *vent* extending through an exterior wall shall not terminate adjacent to the wall or below eaves or parapets, except as provided in Sections G2427.2.1 and G2427.3.3.

G2427.6.9 (503.6.10) Size of gas vents. *Venting systems* shall be sized and constructed in accordance with Sections G2427.6.9.1 through G2427.6.9.4 and the *appliance* manufacturer's installation instructions.

G2427.6.9.1 (503.6.10.1) Category I appliances. The sizing of *natural draft venting systems* serving one or more *listed appliances* equipped with a *draft hood* or *appliances listed* for use with Type B gas vent, installed in a single story of a building, shall be in accordance with one of the following methods:

1. The provisions of Section G2428.
2. For sizing an individual gas vent for a single, draft-hood-equipped *appliance*, the effective area of the vent *connector* and the gas vent shall be not less than the area of the *appliance draft hood* outlet, nor greater than seven times the *draft hood* outlet area.
3. For sizing a gas vent connected to two *appliances* with *draft hoods*, the effective area of the vent shall be not less than the area of the larger *draft hood* outlet plus 50 percent of the area of the smaller *draft hood* outlet, nor greater than seven times the smaller *draft hood* outlet area.
4. *Approved* engineering practices.

G2427.6.9.2 (503.6.10.2) Vent offsets. Type B and L vents sized in accordance with Item 2 or 3 of Section G2427.6.8.1 shall extend in a generally vertical direction with offsets not exceeding 45 degrees (0.79 rad), except that a vent system having not more than one 60-degree (1.04 rad) *offset* shall be permitted. Any angle greater than 45 degrees (0.79 rad) from the vertical is considered horizontal. The total horizontal distance of a vent plus the horizontal vent *connector* serving *draft-hood*-equipped *appliances* shall be not greater than 75 percent of the vertical height of the vent.

G2427.6.9.3 (503.6.10.3) Category II, III and IV appliances. The sizing of gas vents for Category II, III and IV appliances shall be in accordance with the *appliance* manufacturer's instructions. The sizing of plastic pipe that is specified by the appliance manufacturer as a venting material for Category II, III and IV appliances, shall be in accordance with the manufacturer's instructions.

G2427.6.9.4 (503.6.10.4) Mechanical draft. *Chimney venting systems* using mechanical *draft* shall be sized in accordance with *approved* engineering methods.

INTERNATIONAL CODE COUNCIL®
Copyright © 2019 ICC & NYSDOS. ALL RIGHTS RESERVED. Accessed by Lauren Gualdino (lgualdino@briarcliffmanor.org), (-) Order Number #100880972 on May 08, 2020 07:05 AM (PDT) pursuant to License Agreement with ICC & NYSDOS. No further reproduction, no

100880972

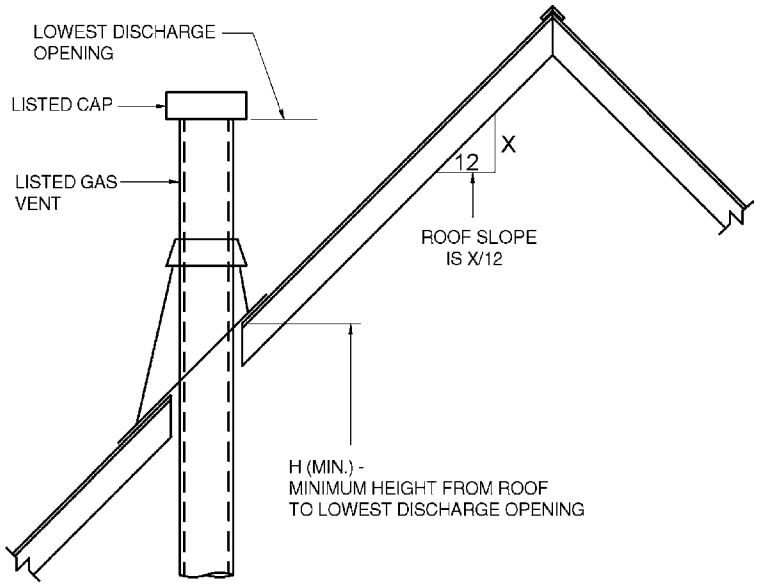

ROOF SLOPE	H (minimum) ft
Flat to $^{6}/_{12}$	1.0
Over $^{6}/_{12}$ to $^{7}/_{12}$	1.25
Over $^{7}/_{12}$ to $^{8}/_{12}$	1.5
Over $^{8}/_{12}$ to $^{9}/_{12}$	2.0
Over $^{9}/_{12}$ to $^{10}/_{12}$	2.5
Over $^{10}/_{12}$ to $^{11}/_{12}$	3.25
Over $^{11}/_{12}$ to $^{12}/_{12}$	4.0
Over $^{12}/_{12}$ to $^{14}/_{12}$	5.0
Over $^{14}/_{12}$ to $^{16}/_{12}$	6.0
Over $^{16}/_{12}$ to $^{18}/_{12}$	7.0
Over $^{18}/_{12}$ to $^{20}/_{12}$	7.5
Over $^{20}/_{12}$ to $^{21}/_{12}$	8.0

For SI: 1 inch = 25.4 mm, 1 foot = 304.8 mm.

FIGURE G2427.6.4 (503.6.5)
TERMINATION LOCATIONS FOR GAS VENTS WITH LISTED CAPS 12 INCHES OR LESS IN SIZE NOT LESS THAN 8 FEET FROM A VERTICAL WALL

G2427.6.10 (503.6.12) Support of gas vents. Gas vents shall be supported and spaced in accordance with the manufacturer's installation instructions.

G2427.6.11 (503.6.13) Marking. In those localities where solid and liquid fuels are used extensively, gas vents shall be permanently identified by a label attached to the wall or ceiling at a point where the *vent connector* enters the gas vent. The determination of where such localities exist shall be made by the *building official*. The label shall read:

"This gas vent is for appliances that burn gas. Do not connect to solid or liquid fuel-burning appliances or incinerators."

G2427.6.12 (503.6.14) Fastener penetrations. Screws, rivets and other fasteners shall not penetrate the inner wall of double-wall gas vents, except at the transition from an *appliance draft hood* outlet, a *flue collar* or a single-wall metal connector to a double-wall vent.

G2427.7 (503.7) Single-wall metal pipe. Single-wall metal *pipe* vents shall comply with Sections G2427.7.1 through G2427.7.13.

G2427.7.1 (503.7.1) Construction. Single-wall metal pipe shall be constructed of galvanized sheet steel not less than 0.0304 inch (0.7 mm) thick, or other *approved*, noncombustible, corrosion-resistant material.

G2427.7.2 (503.7.2) Cold climate. Uninsulated single-wall metal pipe shall not be used outdoors for venting *appliances* in regions where the 99-percent winter design temperature is below 32ºF (0ºC).

G2427.7.3 (503.7.3) Termination. Single-wall metal pipe shall terminate not less than 5 feet (1524 mm) in vertical height above the highest connected *appliance draft hood* outlet or *flue collar*. Single-wall metal pipe shall extend not less than 2 feet (610 mm) above the highest point where it passes through a roof of a building and not less

INTERNATIONAL CODE COUNCIL®
Copyright © 2019 ICC & NYSDOS. ALL RIGHTS RESERVED. Accessed by Lauren Gualdino (lgualdino@briarcliffmanor.org), (-) Order Number #100880972 on May 08, 2020 07:05 AM (PDT) pursuant to License Agreement with ICC & NYSDOS. No further reproduction, no

100880972

than 2 feet (610 mm) higher than any portion of a building within a horizontal distance of 10 feet (3048 mm). An *approved* cap or roof assembly shall be attached to the terminus of a single-wall metal pipe.

G2427.7.4 (503.7.4) Limitations of use. Single-wall metal pipe shall be used only for runs directly from the space in which the *appliance* is located through the roof or exterior wall to the outdoor atmosphere.

G2427.7.5 (503.7.5) Roof penetrations. A pipe passing through a roof shall extend without interruption through the roof flashing, roof jack or roof thimble. Where a single-wall metal pipe passes through a roof constructed of *combustible material*, a noncombustible, nonventilating thimble shall be used at the point of passage. The thimble shall extend not less than 18 inches (457 mm) above and 6 inches (152 mm) below the roof with the annular space open at the bottom and closed only at the top. The thimble shall be sized in accordance with Section G2427.7.7.

G2427.7.6 (503.7.6) Installation. Single-wall metal pipe shall not originate in any unoccupied attic or concealed space and shall not pass through any attic, inside wall, concealed space, or floor. The installation of a single-wall metal pipe through an exterior combustible wall shall comply with Section G2427.7.7.

G2427.7.7 (503.7.7) Single-wall penetrations of combustible walls. A single-wall metal pipe shall not pass through a combustible exterior wall unless guarded at the point of passage by a ventilated metal thimble not smaller than the following:

1. For *listed appliances* with *draft hoods* and *appliances listed* for use with Type B gas vents, the thimble shall be not less than 4 inches (102 mm) larger in diameter than the metal pipe. Where there is a run of not less than 6 feet (1829 mm) of metal pipe in the open between the *draft hood* outlet and the thimble, the thimble shall be permitted to be not less than 2 inches (51 mm) larger in diameter than the metal pipe.
2. For unlisted *appliances* having *draft hoods*, the thimble shall be not less than 6 inches (152 mm) larger in diameter than the metal pipe.
3. For residential and low-heat *appliances*, the thimble shall be not less than 12 inches (305 mm) larger in diameter than the metal pipe.

Exception: In lieu of thimble protection, all *combustible material* in the wall shall be removed a sufficient distance from the metal pipe to provide the specified *clearance* from such metal pipe to *combustible material*. Any material used to close up such opening shall be noncombustible.

G2427.7.8 (503.7.8) Clearances. Minimum *clearances* from single-wall metal pipe to *combustible material* shall be in accordance with Table G2427.10.5. The *clearance* from single-wall metal pipe to *combustible material* shall be permitted to be reduced where the *combustible material* is protected as specified for *vent connectors* in Table G2409.2.

G2427.7.9 (503.7.9) Size of single-wall metal pipe. A venting system constructed of single-wall metal pipe shall be sized in accordance with one of the following methods and the *appliance* manufacturer's instructions:

1. For a draft-hood-equipped *appliance*, in accordance with Section G2428.
2. For a venting system for a single *appliance* with a *draft hood*, the areas of the connector and the pipe each shall be not less than the area of the *appliance flue collar* or *draft hood* outlet, whichever is smaller. The vent area shall be not greater than seven times the *draft hood* outlet area.
3. Other *approved* engineering methods.

G2427.7.10 (503.7.10) Pipe geometry. Any shaped single-wall metal pipe shall be permitted to be used, provided that its equivalent effective area is equal to the effective area of the round pipe for which it is substituted, and provided that the minimum internal dimension of the pipe is not less than 2 inches (51 mm).

G2427.7.11 (503.7.11) Termination capacity. The vent cap or a roof assembly shall have a venting capacity of not less than that of the pipe to which it is attached.

G2427.7.12 (503.7.12) Support of single-wall metal pipe. All portions of single-wall metal pipe shall be supported for the design and weight of the material employed.

G2427.7.13 (503.7.13) Marking. Single-wall metal pipe shall comply with the marking provisions of Section G2427.6.11.

G2427.8 (503.8) Venting system termination location. The location of venting system terminations shall comply with the following (see Appendix C):

1. A mechanical *draft* venting system shall terminate not less than 3 feet (914 mm) above any forced-air inlet located within 10 feet (3048 mm).

   Exceptions:

   1. This provision shall not apply to the *combustion air* intake of a direct-vent *appliance*.
   2. This provision shall not apply to the separation of the integral outdoor air inlet and flue gas discharge of *listed* outdoor *appliances*.
2. A mechanical *draft* venting system, excluding *direct-vent appliances*, shall terminate not less than 4 feet (1219 mm) below, 4 feet (1219 mm) horizontally from, or 1 foot (305 mm) above any door, operable window or gravity air inlet into any building. The bottom of the vent terminal shall be located not less than 12 inches (305 mm) above finished ground level.
3. The clearances for through-the-wall, direct-vent terminals shall be in accordance with Table G2427.8.
4. Through-the-wall vents for Category II and IV *appliances* and noncategorized condensing *appliances* shall not terminate over public walkways or over an area where *condensate* or vapor could create a nuisance or hazard or could be detrimental to the operation of *regulators, relief valves* or other *equipment*. Where local

INTERNATIONAL CODE COUNCIL®
Copyright © 2019 ICC & NYSDOS. ALL RIGHTS RESERVED. Accessed by Lauren Gualdino (lgualdino@briarcliffmanor.org), (-) Order Number #100880972 on May 08, 2020 07:05 AM (PDT) pursuant to License Agreement with ICC & NYSDOS. No further reproduction, no

100880972

experience indicates that *condensate* is a problem with Category I and III *appliances*, this provision shall also apply. Drains for *condensate* shall be installed in accordance with the appliance and vent manufacturer's instructions.

5. Vent systems for Category IV appliances that terminate through an outside wall of a building and discharge flue gases perpendicular to the adjacent wall shall be located not less than 10 feet (3048 mm) horizontally from an operable opening in an adjacent building. This requirement shall not apply to vent terminals that are 2 feet (607 mm) or more above or 25 feet (7620 mm) or more below operable openings.

TABLE G2427.8 (503.8)
THROUGH-THE-WALL,
DIRECT-VENT TERMINATION CLEARANCES

DIRECT-VENT APPLIANCE INPUT RATING (Btu/hr)	THROUGH-THE-WALL VENT TERMINAL CLEARANCE FROM ANY AIR OPENING INTO THE BUILDING (inches)
< 10,000	6
≥ 10,000 ≤ 50,000	9
> 50,000 ≤ 150,000	12
> 150,000	In accordance with the appliance manufacturer's instructions and not less than the clearances specified in Section G2427.8, Item 2

For SI: 1 inch = 25.4 mm, 1 Btu/hr = 0.2931 W.

G2427.9 (503.9) Condensation drainage. Provisions shall be made to collect and dispose of *condensate* from *venting systems* serving Category II and IV *appliances* and noncategorized condensing *appliances* in accordance with Section G2427.8, Item 4. Where local experience indicates that condensation is a problem, provisions shall be made to drain off and dispose of *condensate* from *venting systems* serving Category I and III *appliances* in accordance with Section G2427.8, Item 4.

G2427.10 (503.10) Vent connectors for Category I appliances. Vent *connectors* for Category I *appliances* shall comply with Sections G2427.10.1 through G2427.10.13.

G2427.10.1 (503.10.1) Where required. A vent *connector* shall be used to connect an *appliance* to a gas vent, *chimney* or single-wall metal pipe, except where the gas vent, *chimney* or single-wall metal pipe is directly connected to the *appliance*.

G2427.10.2 (503.10.2) Materials. *Vent connectors* shall be constructed in accordance with Sections G2427.10.2.1 through G2427.10.2.4.

G2427.10.2.1 (503.10.2.1) General. A *vent connector* shall be made of noncombustible corrosion-resistant material capable of withstanding the vent gas temperature produced by the *appliance* and of sufficient thickness to withstand physical damage.

G2427.10.2.2 (503.10.2.2) Vent connectors located in unconditioned areas. Where the *vent connector* used for an *appliance* having a *draft hood* or a Category I *appliance* is located in or passes through attics, crawl spaces or other unconditioned spaces, that portion of the *vent connector* shall be *listed* Type B, Type L or listed vent material having equivalent insulation properties.

Exception: Single-wall metal pipe located within the exterior walls of the building in areas having a local 99-percent winter design temperature of 5ºF (-15ºC) or higher shall be permitted to be used in unconditioned spaces other than attics and crawl spaces.

G2427.10.2.3 (503.10.2.3) Residential-type appliance connectors. Where *vent connectors* for residential-type *appliances* are not installed in attics or other unconditioned spaces, connectors for *listed appliances* having *draft hoods, appliances* having *draft hoods* and equipped with *listed conversion burners* and Category I *appliances* shall be one of the following:

1. Type B or L vent material.
2. Galvanized sheet steel not less than 0.018 inch (0.46 mm) thick.
3. Aluminum (1100 or 3003 alloy or equivalent) sheet not less than 0.027 inch (0.69 mm) thick.
4. Stainless steel sheet not less than 0.012 inch (0.31 mm) thick.
5. Smooth interior wall metal pipe having resistance to heat and corrosion equal to or greater than that of Item 2, 3 or 4.
6. A *listed* vent *connector*.

Vent connectors shall not be covered with insulation.

Exception: *Listed* insulated *vent connectors* shall be installed in accordance with the manufacturer's instructions.

G2427.10.2.4 (503.10.2.4) Low-heat appliance. A *vent connector* for a nonresidential, low-heat *appliance* shall be a factory-built *chimney* section or steel *pipe* having resistance to heat and corrosion equivalent to that for the appropriate galvanized pipe as specified in Table G2427.10.2.4. Factory-built *chimney* sections shall be joined together in accordance with the *chimney* manufacturer's instructions.

TABLE G2427.10.2.4 (503.10.2.4)
MINIMUM THICKNESS FOR GALVANIZED STEEL VENT CONNECTORS FOR LOW-HEAT APPLIANCES

DIAMETER OF CONNECTOR (inches)	MINIMUM THICKNESS (inch)
Less than 6	0.019
6 to less than 10	0.023
10 to 12 inclusive	0.029
14 to 16 inclusive	0.034
Over 16	0.056

For SI: 1 inch = 25.4 mm.

G2427.10.3 (503.10.3) Size of vent connector. *Vent connectors* shall be sized in accordance with Sections G2427.10.3.1 through G2427.3.5.

G2427.10.3.1 (503.10.3.1) Single draft hood and fan-assisted. A *vent connector* for an *appliance* with a single *draft hood* or for a Category I fan-assisted *combus-*

INTERNATIONAL CODE COUNCIL®
Copyright © 2019 ICC & NYSDOS. ALL RIGHTS RESERVED. Accessed by Lauren Gualdino (lgualdino@briarcliffmanor.org), (-) Order Number #100880972 on May 08, 2020 07:05 AM (PDT) pursuant to License Agreement with ICC & NYSDOS. No further reproduction, no

100880972

tion system *appliance* shall be sized and installed in accordance with Section G2428 or other *approved* engineering methods.

G2427.10.3.2 (503.10.3.2) Multiple draft hood. For a single *appliance* having more than one *draft hood* outlet or *flue collar*, the manifold shall be constructed according to the instructions of the *appliance* manufacturer. Where there are no instructions, the manifold shall be designed and constructed in accordance with *approved* engineering practices. As an alternate method, the effective area of the manifold shall equal the combined area of the *flue collars* or *draft hood* outlets and the *vent connectors* shall have a minimum 1-foot (305 mm) rise.

G2427.10.3.3 (503.10.3.3) Multiple appliances. Where two or more *appliances* are connected to a common *vent* or *chimney*, each *vent connector* shall be sized in accordance with Section G2428 or other *approved* engineering methods.

As an alternative method applicable only where all of the *appliances* are *draft hood* equipped, each *vent connector* shall have an effective area not less than the area of the *draft hood* outlet of the *appliance* to which it is connected.

G2427.10.3.4 (503.10.3.4) Common connector/manifold. Where two or more *appliances* are vented through a common *vent connector* or vent manifold, the common *vent connector* or vent manifold shall be located at the highest level consistent with available headroom and the required *clearance* to *combustible materials* and shall be sized in accordance with Section G2428 or other *approved* engineering methods.

As an alternate method applicable only where there are two *draft hood*-equipped *appliances*, the effective area of the common *vent connector* or vent manifold and all junction fittings shall be not less than the area of the larger *vent connector* plus 50 percent of the area of the smaller *flue collar* outlet.

G2427.10.3.5 (503.10.3.5) Size increase. Where the size of a *vent connector* is increased to overcome installation limitations and obtain connector capacity equal to the *appliance* input, the size increase shall be made at the *appliance draft hood* outlet.

G2427.10.4 (503.10.4) Two or more appliances connected to a single vent or chimney. Where two or more *vent connectors* enter a common vent, *chimney* flue, or single-wall metal pipe, the smaller connector shall enter at the highest level consistent with the available headroom or *clearance* to *combustible material*. *Vent connectors* serving Category I *appliances* shall not be connected to any portion of a *mechanical draft* system operating under positive static pressure, such as those serving Category III or IV *appliances*.

G2427.10.4.1 (503.10.4.1) Two or more openings. Where two or more openings are provided into one *chimney* flue or vent, the openings shall be at different levels, or the connectors shall be attached to the vertical portion of the *chimney* or vent at an angle of 45 degrees (0.79 rad) or less relative to the vertical.

G2427.10.5 (503.10.5) Clearance. Minimum *clearances* from *vent connectors* to *combustible material* shall be in accordance with Table G2427.10.5.

Exception: The *clearance* between a *vent connector* and *combustible material* shall be permitted to be reduced where the *combustible material* is protected as specified for *vent connectors* in Table G2409.2.

G2427.10.6 (503.10.6) Joints. Joints between sections of connector *piping* and connections to *flue collars* and *draft hood* outlets shall be fastened by one of the following methods:

1. Sheet metal screws.
2. *Vent connectors* of *listed* vent material assembled and connected to *flue collars* or *draft hood* outlets in accordance with the manufacturer's instructions.
3. Other *approved* means.

G2427.10.7 (503.10.7) Slope. A *vent connector* shall be installed without dips or sags and shall slope upward toward the vent or *chimney* not less than $^1/_4$ inch per foot (21 mm/m).

Exception: *Vent connectors* attached to a mechanical *draft* system installed in accordance with the *appliance* and *draft* system manufacturers' instructions.

TABLE G2427.10.5 (503.10.5)
CLEARANCES FOR CONNECTORS[a]

APPLIANCE	MINIMUM DISTANCE FROM COMBUSTIBLE MATERIAL			
	Listed Type B gas vent material	Listed Type L vent material	Single-wall metal pipe	Factory-built chimney sections
Listed appliances with draft hoods and appliances listed for use with Type B gas vents	As listed	As listed	6 inches	As listed
Residential boilers and furnaces with listed gas conversion burner and with draft hood	6 inches	6 inches	9 inches	As listed
Residential appliances listed for use with Type L vents	Not permitted	As listed	9 inches	As listed
Listed gas-fired toilets	Not permitted	As listed	As listed	As listed
Unlisted residential appliances with draft hood	Not permitted	6 inches	9 inches	As listed
Residential and low-heat appliances other than above	Not permitted	9 inches	18 inches	As listed
Medium-heat appliances	Not permitted	Not permitted	36 inches	As listed

For SI: 1 inch = 25.4 mm.

a. These clearances shall apply unless the manufacturer's installation instructions for a listed appliance or connector specify different clearances, in which case the listed clearances shall apply.

INTERNATIONAL CODE COUNCIL®
Copyright © 2019 ICC & NYSDOS. ALL RIGHTS RESERVED. Accessed by Lauren Gualdino (lgualdino@briarcliffmanor.org), (-) Order Number #100880972 on May 08, 2020 07:05 AM (PDT) pursuant to License Agreement with ICC & NYSDOS. No further reproduction, no

100880972

G2427.10.8 (503.10.8) Length of vent connector. The maximum horizontal length of a single-wall connector shall be 75 percent of the height of the *chimney* or vent except for engineered systems. The maximum horizontal length of a Type B double-wall connector shall be 100 percent of the height of the *chimney* or vent except for engineered systems.

G2427.10.9 (503.10.9) Support. A *vent connector* shall be supported for the design and weight of the material employed to maintain *clearances* and prevent physical damage and separation of joints.

G2427.10.10 (503.10.10) Chimney connection. Where entering a flue in a masonry or metal *chimney*, the *vent connector* shall be installed above the extreme bottom to avoid stoppage. Where a thimble or slip joint is used to facilitate removal of the connector, the connector shall be firmly attached to or inserted into the thimble or slip joint to prevent the connector from falling out. Means shall be employed to prevent the connector from entering so far as to restrict the space between its end and the opposite wall of the *chimney* flue (see Section G2425.9).

G2427.10.11 (503.10.11) Inspection. The entire length of a *vent connector* shall be provided with *ready access* for inspection, cleaning and replacement.

G2427.10.12 (503.10.12) Fireplaces. A *vent connector* shall not be connected to a *chimney* flue serving a *fireplace* unless the *fireplace* flue opening is permanently sealed.

G2427.10.13 (503.10.13) Passage through ceilings, floors or walls. Single-wall metal pipe connectors shall not pass through any wall, floor or ceiling except as permitted by Section G2427.7.4.

G2427.11 (503.11) Vent connectors for Category II, III and IV appliances. *Vent connectors* for Category II, III and IV *appliances* shall be as specified for the *venting systems* in accordance with Section G2427.4.

G2427.12 (503.12) Draft hoods and draft controls. The installation of *draft hoods* and draft controls shall comply with Sections G2427.12.1 through G2427.12.7.

G2427.12.1 (503.12.1) Appliances requiring draft hoods. *Vented appliances* shall be installed with *draft hoods*.

Exception: Dual oven-type combination ranges; *direct-vent appliances*; fan-assisted *combustion* system *appliances*; *appliances* requiring *chimney draft* for operation; single firebox boilers equipped with *conversion burners* with inputs greater than 400,000 *Btu* per hour (117 kW); *appliances* equipped with blast, power or pressure *burners* that are not *listed* for use with *draft hoods*; and *appliances* designed for forced venting.

G2427.12.2 (503.12.2) Installation. A *draft hood* supplied with or forming a part of a *listed vented appliance* shall be installed without *alteration*, exactly as furnished and specified by the *appliance* manufacturer.

G2427.12.2.1 (503.12.2.1) Draft hood required. If a *draft hood* is not supplied by the *appliance* manufacturer where one is required, a *draft hood* shall be installed, shall be of a *listed* or *approved* type and, in the absence of other instructions, shall be of the same size as the *appliance flue* collar. Where a *draft hood* is required with a *conversion burner*, it shall be of a *listed* or *approved* type.

G2427.12.2.2 (503.12.2.2) Special design draft hood. Where it is determined that a *draft hood* of special design is needed or preferable for a particular installation, the installation shall be in accordance with the recommendations of the *appliance* manufacturer and shall be *approved*.

G2427.12.3 (503.12.3) Draft control devices. Where a *draft control* device is part of the *appliance* or is supplied by the *appliance* manufacturer, it shall be installed in accordance with the manufacturer's instructions. In the absence of manufacturer's instructions, the device shall be attached to the *flue collar* of the *appliance* or as near to the *appliance* as practical.

G2427.12.4 (503.12.4) Additional devices. *Appliances* requiring a controlled *chimney draft* shall be permitted to be equipped with a *listed* double-acting barometric-*draft regulator* installed and adjusted in accordance with the manufacturer's instructions.

G2427.12.5 (503.12.5) Location. *Draft hoods* and *barometric draft regulators* shall be installed in the same room or enclosure as the *appliance* in such a manner as to prevent any difference in pressure between the hood or *regulator* and the *combustion air* supply.

G2427.12.6 (503.12.6) Positioning. *Draft hoods* and *draft regulators* shall be installed in the position for which they were designed with reference to the horizontal and vertical planes and shall be located so that the *relief opening* is not obstructed by any part of the *appliance* or adjacent construction. The *appliance* and its *draft hood* shall be located so that the *relief opening* is accessible for checking *vent* operation.

G2427.12.7 (503.12.7) Clearance. A *draft hood* shall be located so its *relief opening* is not less than 6 inches (152 mm) from any surface except that of the *appliance* it serves and the venting system to which the *draft hood* is connected. Where a greater or lesser *clearance* is indicated on the *appliance* label, the *clearance* shall be not less than that specified on the label. Such *clearances* shall not be reduced.

G2427.13 (503.13) Manually operated dampers. A manually operated *damper* shall not be placed in the vent *connector* for any *appliance*. Fixed baffles shall not be classified as manually operated *dampers*.

G2427.14 (503.14) Automatically operated vent dampers. An automatically operated vent damper shall be of a *listed* type.

INTERNATIONAL CODE COUNCIL®
Copyright © 2019 ICC & NYSDOS. ALL RIGHTS RESERVED. Accessed by Lauren Gualdino (lgualdino@briarcliffmanor.org), (-) Order Number #100880972 on May 08, 2020 07:05 AM (PDT) pursuant to License Agreement with ICC & NYSDOS. No further reproduction, no

100880972

G2427.15 (503.15) Obstructions. Devices that retard the flow of *vent gases* shall not be installed in a *vent connector*, *chimney*, or vent. The following shall not be considered as obstructions:

1. *Draft regulators* and safety *controls* specifically *listed* for installation in *venting systems* and installed in accordance with the manufacturer's instructions.
2. *Approved draft regulators* and safety *controls* that are designed and installed in accordance with *approved* engineering methods.
3. Listed heat reclaimers and automatically operated vent dampers installed in accordance with the manufacturer's instructions.
4. *Approved* economizers, heat reclaimers and recuperators installed in *venting systems* of *appliances* not required to be equipped with *draft hoods*, provided that the *appliance* manufacturer's instructions cover the installation of such a device in the venting system and performance in accordance with Sections G2427.3 and G2427.3.1 is obtained.
5. Vent dampers serving *listed appliances* installed in accordance with Sections G2428.2.1 and G2428.3.1 or other *approved* engineering methods.

G2427.16 (503.16) (IFGS) Outside wall penetrations. Where vents, including those for *direct-vent appliances*, penetrate outside walls of buildings, the annular spaces around such penetrations shall be permanently sealed using *approved* materials to prevent entry of *combustion products* into the building.

SECTION G2428 (504)
SIZING OF CATEGORY I APPLIANCE VENTING SYSTEMS

G2428.1 (504.1) Definitions. The following definitions apply to the tables in this section.

APPLIANCE CATEGORIZED VENT DIAMETER/ AREA. The minimum vent area/diameter permissible for Category I *appliances* to maintain a nonpositive vent static pressure when tested in accordance with nationally recognized standards.

FAN-ASSISTED COMBUSTION SYSTEM. An *appliance* equipped with an integral mechanical means to either draw or force products of *combustion* through the *combustion chamber* or heat exchanger.

FAN Min. The minimum input rating of a Category I fan-assisted *appliance* attached to a vent or connector.

FAN Max. The maximum input rating of a Category I fan-assisted *appliance* attached to a vent or connector.

NAT Max. The maximum input rating of a Category I draft-hood-equipped *appliance* attached to a vent or connector.

FAN + FAN. The maximum combined *appliance* input rating of two or more Category I fan-assisted *appliances* attached to the common vent.

FAN + NAT. The maximum combined *appliance* input rating of one or more Category I fan-assisted *appliances* and one or more Category I draft-hood-equipped *appliances* attached to the common vent.

NA. Vent configuration is not allowed due to potential for *condensate* formation or pressurization of the venting system, or not applicable due to physical or geometric restraints.

NAT + NAT. The maximum combined *appliance* input rating of two or more Category I draft-hood-equipped *appliances* attached to the common vent.

G2428.2 (504.2) Application of single-appliance vent Tables G2428.2(1) and G2428.2(2). The application of Tables G2428.2(1) and G2428.2(2) shall be subject to the requirements of Sections G2428.2.1 through G2428.2.17.

G2428.2.1 (504.2.1) Vent obstructions. These venting tables shall not be used where obstructions, as described in Section G2427.15, are installed in the venting system. The installation of vents serving *listed appliances* with vent dampers shall be in accordance with the *appliance* manufacturer's instructions or in accordance with the following:

1. The maximum capacity of the vent system shall be determined using the "NAT Max" column.
2. The minimum capacity shall be determined as if the *appliance* were a fan-assisted *appliance*, using the "FAN Min" column to determine the minimum capacity of the vent system. Where the corresponding "FAN Min" is "NA," the vent configuration shall not be permitted and an alternative venting configuration shall be utilized.

G2428.2.2 (504.2.2) Minimum size. Where the vent size determined from the tables is smaller than the *appliance draft hood outlet* or *flue collar*, the smaller size shall be permitted to be used provided that all of the following requirements are met:

1. The total vent height (H) is not less than 10 feet (3048 mm).
2. Vents for *appliance draft hood* outlets or *flue collars* 12 inches (305 mm) in diameter or smaller are not reduced more than one table size.
3. Vents for *appliance draft hood* outlets or *flue collars* larger than 12 inches (305 mm) in diameter are not reduced more than two table sizes.
4. The maximum capacity listed in the tables for a fan-assisted *appliance* is reduced by 10 percent (0.90 × maximum table capacity).
5. The *draft hood* outlet is greater than 4 inches (102 mm) in diameter. Do not connect a 3-inch-diameter (76 mm) vent to a 4-inch-diameter (102 mm) *draft hood* outlet. This provision shall not apply to fan-assisted *appliances*.

G2428.2.3 (504.2.3) Vent offsets. Single-*appliance* venting configurations with zero (0) lateral lengths in Tables G2428.2(1) and G2428.2(2) shall not have elbows in the *venting system*. Single-*appliance* venting configurations with lateral lengths include two 90-degree (1.57 rad) elbows. For each additional elbow up to and including 45

INTERNATIONAL CODE COUNCIL®
Copyright © 2019 ICC & NYSDOS. ALL RIGHTS RESERVED. Accessed by Lauren Gualdino (lgualdino@briarcliffmanor.org), (-) Order Number #100880972 on May 08, 2020 07:05 AM (PDT) pursuant to License Agreement with ICC & NYSDOS. No further reproduction, no

TABLE G2428.2(1) [504.2(1)]
TYPE B DOUBLE-WALL GAS VENT

Number of Appliances	Single
Appliance Type	Category I
Appliance Vent Connection	Connected directly to vent

HEIGHT (*H*) (feet)	LATERAL (*L*) (feet)	VENT DIAMETER—(*D*) inches																				
		3			4			5			6			7			8			9		
		APPLIANCE INPUT RATING IN THOUSANDS OF BTU/H																				
		FAN		NAT	FAN		NAT	FAN		NAT	FAN		NAT	FAN		NAT	FAN		NAT	FAN		NAT
		Min	Max	Max	Min	Max	Max	Min	Max	Max	Min	Max	Max	Min	Max	Max	Min	Max	Max	Min	Max	Max
6	0	0	78	46	0	152	86	0	251	141	0	375	205	0	524	285	0	698	370	0	897	470
	2	13	51	36	18	97	67	27	157	105	32	232	157	44	321	217	53	425	285	63	543	370
	4	21	49	34	30	94	64	39	153	103	50	227	153	66	316	211	79	419	279	93	536	362
	6	25	46	32	36	91	61	47	149	100	59	223	149	78	310	205	93	413	273	110	530	354
8	0	0	84	50	0	165	94	0	276	155	0	415	235	0	583	320	0	780	415	0	1,006	537
	2	12	57	40	16	109	75	25	178	120	28	263	180	42	365	247	50	483	322	60	619	418
	5	23	53	38	32	103	71	42	171	115	53	255	173	70	356	237	83	473	313	99	607	407
	8	28	49	35	39	98	66	51	164	109	64	247	165	84	347	227	99	463	303	117	596	396
10	0	0	88	53	0	175	100	0	295	166	0	447	255	0	631	345	0	847	450	0	1,096	585
	2	12	61	42	17	118	81	23	194	129	26	289	195	40	402	273	48	533	355	57	684	457
	5	23	57	40	32	113	77	41	187	124	52	280	188	68	392	263	81	522	346	95	671	446
	10	30	51	36	41	104	70	54	176	115	67	267	175	88	376	245	104	504	330	122	651	427
15	0	0	94	58	0	191	112	0	327	187	0	502	285	0	716	390	0	970	525	0	1,263	682
	2	11	69	48	15	136	93	20	226	150	22	339	225	38	475	316	45	633	414	53	815	544
	5	22	65	45	30	130	87	39	219	142	49	330	217	64	463	300	76	620	403	90	800	529
	10	29	59	41	40	121	82	51	206	135	64	315	208	84	445	288	99	600	386	116	777	507
	15	35	53	37	48	112	76	61	195	128	76	301	198	98	429	275	115	580	373	134	755	491
20	0	0	97	61	0	202	119	0	349	202	0	540	307	0	776	430	0	1,057	575	0	1,384	752
	2	10	75	51	14	149	100	18	250	166	20	377	249	33	531	346	41	711	470	50	917	612
	5	21	71	48	29	143	96	38	242	160	47	367	241	62	519	337	73	697	460	86	902	599
	10	28	64	44	38	133	89	50	229	150	62	351	228	81	499	321	95	675	443	112	877	576
	15	34	58	40	46	124	84	59	217	142	73	337	217	94	481	308	111	654	427	129	853	557
	20	48	52	35	55	116	78	69	206	134	84	322	206	107	464	295	125	634	410	145	830	537

(continued)

Copyright © 2019 ICC & NYSDOS. ALL RIGHTS RESERVED. Accessed by Lauren Gualdino (lgualdino@briarcliffmanor.org). (-) Order Number #100880972 on May 08, 2020 07:05 AM (PDT) pursuant to License Agreement with ICC & NYSDOS. No further reproduction, no

100880972

TABLE G2428.2(1) [504.2(1)]—continued
TYPE B DOUBLE-WALL GAS VENT

Number of Appliances	Single
Appliance Type	Category I
Appliance Vent Connection	Connected directly to vent

HEIGHT (*H*) (feet)	LATERAL (*L*) (feet)	VENT DIAMETER—(*D*) inches																				
		3			4			5			6			7			8			9		
		APPLIANCE INPUT RATING IN THOUSANDS OF BTU/H																				
		FAN		NAT	FAN		NAT	FAN		NAT	FAN		NAT	FAN		NAT	FAN		NAT	FAN		NAT
		Min	Max	Max	Min	Max	Max	Min	Max	Max	Min	Max	Max	Min	Max	Max	Min	Max	Max	Min	Max	Max
30	0	0	100	64	0	213	128	0	374	220	0	587	336	0	853	475	0	1,173	650	0	1,548	855
	2	9	81	56	13	166	112	14	283	185	18	432	280	27	613	394	33	826	535	42	1,072	700
	5	21	77	54	28	160	108	36	275	176	45	421	273	58	600	385	69	811	524	82	1,055	688
	10	27	70	50	37	150	102	48	262	171	59	405	261	77	580	371	91	788	507	107	1,028	668
	15	33	64	NA	44	141	96	57	249	163	70	389	249	90	560	357	105	765	490	124	1,002	648
	20	56	58	NA	53	132	90	66	237	154	80	374	237	102	542	343	119	743	473	139	977	628
	30	NA	NA	NA	73	113	NA	88	214	NA	104	346	219	131	507	321	149	702	444	171	929	594
50	0	0	101	67	0	216	134	0	397	232	0	633	363	0	932	518	0	1,297	708	0	1,730	952
	2	8	86	61	11	183	122	14	320	206	15	497	314	22	715	445	26	975	615	33	1,276	813
	5	20	82	NA	27	177	119	35	312	200	43	487	308	55	702	438	65	960	605	77	1,259	798
	10	26	76	NA	35	168	114	45	299	190	56	471	298	73	681	426	86	935	589	101	1,230	773
	15	59	70	NA	42	158	NA	54	287	180	66	455	288	85	662	413	100	911	572	117	1,203	747
	20	NA	NA	NA	50	149	NA	63	275	169	76	440	278	97	642	401	113	888	556	131	1,176	722
	30	NA	NA	NA	69	131	NA	84	250	NA	99	410	259	123	605	376	141	844	522	161	1,125	670

For SI: 1 inch = 25.4 mm, 1 foot = 304.8 mm, 1 British thermal unit per hour = 0.2931 W.

Copyright © 2019 ICC & NYSDOS. ALL RIGHTS RESERVED. Accessed by Lauren Guaidino (lguaidino@briarcliffmanor.org). (-) Order Number #100880972 on May 08, 2020 07:05 AM (PDT) pursuant to License Agreement with ICC & NYSDOS. No further reproduction, no

100880972

TABLE G2428.2(2) [504.2(2)]
TYPE B DOUBLE-WALL GAS VENT

Number of Appliances	Single
Appliance Type	Category I
Appliance Vent Connection	Single-wall metal connector

HEIGHT (*H*) (feet)	LATERAL (*L*) (feet)	VENT DIAMETER—(*D*) inches																											
		3			4			5			6			7			8			9			10			12				
		APPLIANCE INPUT RATING IN THOUSANDS OF BTU/H																											
		FAN		NAT	FAN		NAT	FAN		NAT	FAN		NAT	FAN		NAT	FAN		NAT	FAN		NAT	FAN		NAT	FAN		NAT		
		Min	Max	Max	Min	Max	Max	Min	Max	Max	Min	Max	Max	Min	Max	Max	Min	Max	Max	Min	Max	Max	Min	Max	Max	Min	Max	Max		
6	0	38	77	45	59	151	85	85	249	140	126	373	204	165	522	284	211	695	369	267	894	469	371	1,118	569	537	1,639	849		
	2	39	51	36	60	96	66	85	156	104	123	231	156	159	320	213	201	423	284	251	541	368	347	673	453	498	979	648		
	4	NA	NA	33	74	92	63	102	152	102	146	225	152	187	313	208	237	416	277	295	533	360	409	664	443	584	971	638		
	6	NA	NA	31	83	89	60	114	147	99	163	220	148	207	307	203	263	409	271	327	526	352	449	656	433	638	962	627		
8	0	37	83	50	58	164	93	83	273	154	123	412	234	161	580	319	206	777	414	258	1,002	536	360	1,257	658	521	1,852	967		
	2	39	56	39	59	108	75	83	176	119	121	261	179	155	363	246	197	482	321	246	617	417	339	768	513	486	1,120	743		
	5	NA	NA	37	77	102	69	107	168	114	151	252	171	193	352	235	245	470	311	305	604	404	418	754	500	598	1,104	730		
	8	NA	NA	33	90	95	64	122	161	107	175	243	163	223	342	225	280	458	300	344	591	392	470	740	486	665	1,089	715		
10	0	37	87	53	57	174	99	82	293	165	120	444	254	158	628	344	202	844	449	253	1,093	584	351	1,373	718	507	2,031	1,057		
	2	39	61	41	59	117	80	82	193	128	119	287	194	153	400	272	193	531	354	242	681	456	332	849	559	475	1,242	848		
	5	52	56	39	76	111	76	105	185	122	148	277	186	190	388	261	241	518	344	299	667	443	409	834	544	584	1,224	825		
	10	NA	NA	34	97	100	68	132	171	112	188	261	171	237	369	241	296	497	325	363	643	423	492	808	520	688	1,194	788		
15	0	36	93	57	56	190	111	80	325	186	116	499	283	153	713	388	195	966	523	244	1,259	681	336	1,591	838	488	2,374	1,237		
	2	38	69	47	57	136	93	80	225	149	115	337	224	148	473	314	187	631	413	232	812	543	319	1,015	673	457	1,491	983		
	5	51	63	44	75	128	86	102	216	140	144	326	217	182	459	298	231	616	400	287	795	526	392	997	657	562	1,469	963		
	10	NA	NA	39	95	116	79	128	201	131	182	308	203	228	438	284	284	592	381	349	768	501	470	966	628	664	1,433	928		
	15	NA	NA	NA	NA	NA	72	158	186	124	220	290	192	272	418	269	334	568	367	404	742	484	540	937	601	750	1,399	894		
20	0	35	96	60	54	200	118	78	346	201	114	537	306	149	772	428	190	1,053	573	238	1,379	750	326	1,751	927	473	2,631	1,346		
	2	37	74	50	56	148	99	78	248	165	113	375	248	144	528	344	182	708	468	227	914	611	309	1,146	754	443	1,689	1,098		
	5	50	68	47	73	140	94	100	239	158	141	363	239	178	514	334	224	692	457	279	896	596	381	1,126	734	547	1,665	1,074		
	10	NA	NA	41	93	129	86	125	223	146	177	344	224	222	491	316	277	666	437	339	866	570	457	1,092	702	646	1,626	1,037		
	15	NA	NA	NA	NA	NA	80	155	208	136	216	325	210	264	469	301	325	640	419	393	838	549	526	1,060	677	730	1,587	1,005		
	20	NA	NA	NA	NA	NA	NA	186	192	126	254	306	196	309	448	285	374	616	400	448	810	526	592	1,028	651	808	1,550	973		

(continued)

Copyright © 2019 ICC & NYSDOS. ALL RIGHTS RESERVED. Accessed by Lauren Gualdino (lgualdino@briarcliffmanor.org). (-) Order Number #100880972 on May 08, 2020 07:05 AM (PDT) pursuant to License Agreement with ICC & NYSDOS. No further reproduction, no

100880972

TABLE G2428.2(2) [504.2(2)]—continued
TYPE B DOUBLE-WALL GAS VENT

Number of Appliances	Single
Appliance Type	Category I
Appliance Vent Connection	Single-wall metal connector

HEIGHT (*H*) (feet)	LATERAL (*L*) (feet)	VENT DIAMETER—(*D*) inches																								
		3			4			5			6			7			8			9			10			12		
		APPLIANCE INPUT RATING IN THOUSANDS OF BTU/H																								
		FAN		NAT	FAN		NAT	FAN		NAT	FAN		NAT	FAN		NAT	FAN		NAT	FAN		NAT	FAN		NAT	FAN		NAT
		Min	Max	Max	Min	Max	Max	Min	Max	Max	Min	Max	Max	Min	Max	Max	Min	Max	Max	Min	Max	Max	Min	Max	Max	Min	Max	Max
30	0	34	99	63	53	211	127	76	372	219	110	584	334	144	849	472	184	1,168	647	229	1,542	852	312	1,971	1,056	454	2,996	1,545
	2	37	80	56	55	164	111	76	281	183	109	429	279	139	610	392	175	823	533	219	1,069	698	296	1,346	863	424	1,999	1,308
	5	49	74	52	72	157	106	98	271	173	136	417	271	171	595	382	215	806	521	269	1,049	684	366	1,324	846	524	1,971	1,283
	10	NA	NA	NA	91	144	98	122	255	168	171	397	257	213	570	367	265	777	501	327	1,017	662	440	1,287	821	620	1,927	1,234
	15	NA	NA	NA	115	131	NA	151	239	157	208	377	242	255	547	349	312	750	481	379	985	638	507	1,251	794	702	1,884	1,205
	20	NA	NA	NA	NA	NA	NA	181	223	NA	246	357	228	298	524	333	360	723	461	433	955	615	570	1,216	768	780	1,841	1,166
	30	NA	NA	NA	NA	NA	NA	NA	NA	NA	NA	NA	NA	389	477	305	461	670	426	541	895	574	704	1,147	720	937	1,759	1,101
50	0	33	99	66	51	213	133	73	394	230	105	629	361	138	928	515	176	1,292	704	220	1,724	948	295	2,223	1,189	428	3,432	1,818
	2	36	84	61	53	181	121	73	318	205	104	495	312	133	712	443	168	971	613	209	1,273	811	280	1,615	1,007	401	2,426	1,509
	5	48	80	NA	70	174	117	94	308	198	131	482	305	164	696	435	204	953	602	257	1,252	795	347	1,591	991	496	2,396	1,490
	10	NA	NA	NA	89	160	NA	118	292	186	162	461	292	203	671	420	253	923	583	313	1,217	765	418	1,551	963	589	2,347	1,455
	15	NA	NA	NA	112	148	NA	145	275	174	199	441	280	244	646	405	299	894	562	363	1,183	736	481	1,512	934	668	2,299	1,421
	20	NA	NA	NA	NA	NA	NA	176	257	NA	236	420	267	285	622	389	345	866	543	415	1,150	708	544	1,473	906	741	2,251	1,387
	30	NA	NA	NA	NA	NA	NA	NA	NA	NA	315	376	NA	373	573	NA	442	809	502	521	1,086	649	674	1,399	848	892	2,159	1,318

For SI:1 inch = 25.4 mm, 1 foot = 304.8 mm, 1 British thermal unit per hour = 0.2931 W.

Copyright © 2019 ICC & NYSDOS. ALL RIGHTS RESERVED. Accessed by Lauren Gualdino (lgualdino@briarcliffmanor.org). (-) Order Number #100880972 on May 08, 2020 07:05 AM (PDT) pursuant to License Agreement with ICC & NYSDOS. No further reproduction, no

100880972

100880972

degrees (0.79 rad), the maximum capacity listed in the venting tables shall be reduced by 5 percent. For each additional elbow greater than 45 degrees (0.79 rad) up to and including 90 degrees (1.57 rad), the maximum capacity listed in the venting tables shall be reduced by 10 percent. Where multiple *offsets* occur in a vent, the total lateral length of all *offsets* combined shall not exceed that specified in Tables G2428.2(1) and G2428.2(2).

G2428.2.4 (504.2.4) Zero lateral. Zero (0) lateral (*L*) shall apply only to a straight vertical vent attached to a top outlet *draft hood* or *flue collar*.

G2428.2.5 (504.2.5) High-altitude installations. Sea-level input ratings shall be used when determining maximum capacity for high-altitude installation. Actual input, derated for altitude, shall be used for determining minimum capacity for high-altitude installation.

G2428.2.6 (504.2.6) Multiple input rate appliances. For *appliances* with more than one input rate, the minimum vent capacity (FAN Min) determined from the tables shall be less than the lowest *appliance* input rating, and the maximum vent capacity (FAN Max/NAT Max) determined from the tables shall be greater than the highest *appliance* rating input.

G2428.2.7 (504.2.7) Liner system sizing and connections. *Listed* corrugated metallic *chimney* liner systems in masonry *chimneys* shall be sized by using Table G2428.2(1) or G2428.2(2) for Type B vents with the maximum capacity reduced by 20 percent (0.80 × maximum capacity) and the minimum capacity as shown in Table G2428.2(1) or G2428.2(2). Corrugated metallic liner systems installed with bends or offsets shall have their maximum capacity further reduced in accordance with Section G2428.2.3. The 20-percent reduction for corrugated metallic *chimney* liner systems includes an allowance for one long-radius 90-degree (1.57 rad) turn at the bottom of the liner.

Connections between *chimney* liners and *listed* double-wall connectors shall be made with *listed* adapters designed for such purpose.

G2428.2.8 (504.2.8) Vent area and diameter. Where the vertical vent has a larger diameter than the *vent connector*, the vertical vent diameter shall be used to determine the minimum vent capacity, and the connector diameter shall be used to determine the maximum vent capacity. The flow area of the vertical vent shall not exceed seven times the flow area of the listed *appliance* categorized vent area, *flue collar* area, or *draft hood* outlet area unless designed in accordance with *approved* engineering methods.

G2428.2.9 (504.2.9) Chimney and vent locations. Tables G2428.2(1) and G2428.2(2) shall be used only for chimneys and vents not exposed to the outdoors below the roof line. A Type B vent or listed chimney lining system passing through an unused masonry chimney flue shall not be considered to be exposed to the outdoors. Where vents extend outdoors above the roof more than 5 feet (1524 mm) higher than required by Figure G2427.6.4, and where vents terminate in accordance with Section G2427.6.4, Item 2, the outdoor portion of the vent shall be enclosed as required by this section for vents not considered to be exposed to the outdoors or such venting system shall be engineered. A Type B vent shall not be considered to be exposed to the outdoors where it passes through an unventilated enclosure or chase insulated to a value of not less than R-8.

G2428.2.10 (504.2.10) Corrugated vent connector size. Corrugated *vent connectors* shall be not smaller than the listed *appliance* categorized *vent* diameter, *flue collar* diameter, or *draft hood* outlet diameter.

G2428.2.11 (504.2.11) Vent connector size limitation. *Vent connectors* shall not be increased in size more than two sizes greater than the listed *appliance* categorized vent diameter, *flue collar* diameter or *draft hood* outlet diameter.

G2428.2.12 (504.2.12) Component commingling. In a single run of vent or *vent connector*, different diameters and types of vent and connector components shall be permitted to be used, provided that all such sizes and types are permitted by the tables.

G2428.2.13 (504.2.13) Draft hood conversion accessories. *Draft hood* conversion accessories for use with *masonry chimneys* venting listed Category I fan-assisted *appliances* shall be listed and installed in accordance with the manufacturer's instructions for such listed accessories.

G2428.2.14 (504.2.14) Table interpolation. Interpolation shall be permitted in calculating capacities for vent dimensions that fall between the table entries.

G2428.2.15 (504.2.15) Extrapolation prohibited. Extrapolation beyond the table entries shall not be permitted.

G2428.2.16 (504.2.16) Engineering calculations. For *vent* heights less than 6 feet (1829 mm) and greater than shown in the tables, engineering methods shall be used to calculate *vent* capacities.

G2428.2.17 (504.2.17) Height entries. Where the actual height of a vent falls between entries in the height column of the applicable table in Tables G2428.2(1) and G2428.2(2), either interpolation shall be used or the lower appliance input rating shown in the table entries shall be used for FAN Max and NAT Max column values and the higher appliance input rating shall be used for the FAN Min column values.

G2428.3 (504.3) Application of multiple appliance vent Tables G2428.3(1) through G2428.3(4). The application of Tables G2428.3(1) through G2428.3(4) shall be subject to the requirements of Sections G2428.3.1 through G2428.3.24.

G2428.3.1 (504.3.1) Vent obstructions. These venting tables shall not be used where obstructions, as described in Section G2427.15, are installed in the venting system. The installation of vents serving listed *appliances* with vent dampers shall be in accordance with the *appliance* manufacturer's instructions or in accordance with the following:

1. The maximum capacity of the *vent connector* shall be determined using the NAT Max column.
2. The maximum capacity of the vertical vent or *chimney* shall be determined using the FAN+NAT column where the second *appliance* is a fan-assisted *appliance*, or the NAT+NAT column where the second *appliance* is equipped with a *draft hood*.

INTERNATIONAL CODE COUNCIL®
Copyright © 2019 ICC & NYSDOS. ALL RIGHTS RESERVED. Accessed by Lauren Gualdino (lgualdino@briarcliffmanor.org), (-) Order Number #100880972 on May 08, 2020 07:05 AM (PDT) pursuant to License Agreement with ICC & NYSDOS. No further reproduction, no

TABLE G2428.3(1) [504.3(1)]
TYPE B DOUBLE-WALL VENT

Number of Appliances	Two or more
Appliances Type	Category I
Appliances Vent Connection	Type B double-wall connector

VENT CONNECTOR CAPACITY

VENT HEIGHT (*H*) (feet)	CONNECTOR RISE (*R*) (feet)	TYPE B DOUBLE-WALL VENT AND CONNECTOR DIAMETER—(*D*) inches																							
		3			4			5			6			7			8			9			10		
		APPLIANCE INPUT RATING LIMITS IN THOUSANDS OF BTU/H																							
		FAN		NAT	FAN		NAT	FAN		NAT	FAN		NAT	FAN		NAT	FAN		NAT	FAN		NAT	FAN		NAT
		Min	Max	Max	Min	Max	Max	Min	Max	Max	Min	Max	Max	Min	Max	Max	Min	Max	Max	Min	Max	Max	Min	Max	Max
6	1	22	37	26	35	66	46	46	106	72	58	164	104	77	225	142	92	296	185	109	376	237	128	466	289
	2	23	41	31	37	75	55	48	121	86	60	183	124	79	253	168	95	333	220	112	424	282	131	526	345
	3	24	44	35	38	81	62	49	132	96	62	199	139	82	275	189	97	363	248	114	463	317	134	575	386
8	1	22	40	27	35	72	48	49	114	76	64	176	109	84	243	148	100	320	194	118	408	248	138	507	303
	2	23	44	32	36	80	57	51	128	90	66	195	129	86	269	175	103	356	230	121	454	294	141	564	358
	3	24	47	36	37	87	64	53	139	101	67	210	145	88	290	198	105	384	258	123	492	330	143	612	402
10	1	22	43	28	34	78	50	49	123	78	65	189	113	89	257	154	106	341	200	125	436	257	146	542	314
	2	23	47	33	36	86	59	51	136	93	67	206	134	91	282	182	109	374	238	128	479	305	149	596	372
	3	24	50	37	37	92	67	52	146	104	69	220	150	94	303	205	111	402	268	131	515	342	152	642	417
15	1	21	50	30	33	89	53	47	142	83	64	220	120	88	298	163	110	389	214	134	493	273	162	609	333
	2	22	53	35	35	96	63	49	153	99	66	235	142	91	320	193	112	419	253	137	532	323	165	658	394
	3	24	55	40	36	102	71	51	163	111	68	248	160	93	339	218	115	445	286	140	565	365	167	700	444
20	1	21	54	31	33	99	56	46	157	87	62	246	125	86	334	171	107	436	224	131	552	285	158	681	347
	2	22	57	37	34	105	66	48	167	104	64	259	149	89	354	202	110	463	265	134	587	339	161	725	414
	3	23	60	42	35	110	74	50	176	116	66	271	168	91	371	228	113	486	300	137	618	383	164	764	466
30	1	20	62	33	31	113	59	45	181	93	60	288	134	83	391	182	103	512	238	125	649	305	151	802	372
	2	21	64	39	33	118	70	47	190	110	62	299	158	85	408	215	105	535	282	129	679	360	155	840	439
	3	22	66	44	34	123	79	48	198	124	64	309	178	88	423	242	108	555	317	132	706	405	158	874	494

COMMON VENT CAPACITY

VENT HEIGHT (*H*) (feet)	TYPE B DOUBLE-WALL COMMON VENT DIAMETER (*D*)—inches																				
	4			5			6			7			8			9			10		
	COMBINED APPLIANCE INPUT RATING IN THOUSANDS OF BTU/H																				
	FAN +FAN	FAN +NAT	NAT +NAT	FAN +FAN	FAN +NAT	NAT +NAT	FAN +FAN	FAN +NAT	NAT +NAT	FAN +FAN	FAN +NAT	NAT +NAT	FAN +FAN	FAN +NAT	NAT +NAT	FAN +FAN	FAN +NAT	NAT +NAT	FAN +FAN	FAN +NAT	NAT +NAT
6	92	81	65	140	116	103	204	161	147	309	248	200	404	314	260	547	434	335	672	520	410
8	101	90	73	155	129	114	224	178	163	339	275	223	444	348	290	602	480	378	740	577	465
10	110	97	79	169	141	124	243	194	178	367	299	242	477	377	315	649	522	405	800	627	495
15	125	112	91	195	164	144	283	228	206	427	352	280	556	444	365	753	612	465	924	733	565
20	136	123	102	215	183	160	314	255	229	475	394	310	621	499	405	842	688	523	1,035	826	640
30	152	138	118	244	210	185	361	297	266	547	459	360	720	585	470	979	808	605	1,209	975	740
50	167	153	134	279	244	214	421	353	310	641	547	423	854	706	550	1,164	977	705	1,451	1,188	860

For SI: 1 inch = 25.4 mm, 1 foot = 304.8 mm, 1 British thermal unit per hour = 0.2931 W.

INTERNATIONAL CODE COUNCIL®
Copyright © 2019 ICC & NYSDOS. ALL RIGHTS RESERVED. Accessed by Lauren Gualdino (lgualdino@briarcliffmanor.org), (-) Order Number #100880972 on May 08, 2020 07:05 AM (PDT) pursuant to License Agreement with ICC & NYSDOS. No further reproduction, no

TABLE G2428.3(2) [504.3(2)]
TYPE B DOUBLE-WALL VENT

Number of Appliances	Two or more
Appliances Type	Category I
Appliances Vent Connection	Single-wall metal connector

VENT CONNECTOR CAPACITY

VENT HEIGHT (*H*) (feet)	CONNECTOR RISE (*R*) (feet)	SINGLE-WALL METAL VENT CONNECTOR DIAMETER—(*D*) inches																							
		3			4			5			6			7			8			9			10		
		APPLIANCE INPUT RATING LIMITS IN THOUSANDS OF BTU/H																							
		FAN		NAT	FAN		NAT	FAN		NAT	FAN		NAT	FAN		NAT	FAN		NAT	FAN		NAT	FAN		NAT
		Min	Max	Max	Min	Max	Max	Min	Max	Max	Min	Max	Max	Min	Max	Max	Min	Max	Max	Min	Max	Max	Min	Max	Max
6	1	NA	NA	26	NA	NA	46	NA	NA	71	NA	NA	102	207	223	140	262	293	183	325	373	234	447	463	286
	2	NA	NA	31	NA	NA	55	NA	NA	85	168	182	123	215	251	167	271	331	219	334	422	281	458	524	344
	3	NA	NA	34	NA	NA	62	121	131	95	175	198	138	222	273	188	279	361	247	344	462	316	468	574	385
8	1	NA	NA	27	NA	NA	48	NA	NA	75	NA	NA	106	226	240	145	285	316	191	352	403	244	481	502	299
	2	NA	NA	32	NA	NA	57	125	126	89	184	193	127	234	266	173	293	353	228	360	450	292	492	560	355
	3	NA	NA	35	NA	NA	64	130	138	100	191	208	144	241	287	197	302	381	256	370	489	328	501	609	400
10	1	NA	NA	28	NA	NA	50	119	121	77	182	186	110	240	253	150	302	335	196	372	429	252	506	534	308
	2	NA	NA	33	84	85	59	124	134	91	189	203	132	248	278	183	311	369	235	381	473	302	517	589	368
	3	NA	NA	36	89	91	67	129	144	102	197	217	148	257	299	203	320	398	265	391	511	339	528	637	413
15	1	NA	NA	29	79	87	52	116	138	81	177	214	116	238	291	158	312	380	208	397	482	266	556	596	324
	2	NA	NA	34	83	94	62	121	150	97	185	230	138	246	314	189	321	411	248	407	522	317	568	646	387
	3	NA	NA	39	87	100	70	127	160	109	193	243	157	255	333	215	331	438	281	418	557	360	579	690	437
20	1	49	56	30	78	97	54	115	152	84	175	238	120	233	325	165	306	425	217	390	538	276	546	664	336
	2	52	59	36	82	103	64	120	163	101	182	252	144	243	346	197	317	453	259	400	574	331	558	709	403
	3	55	62	40	87	107	72	125	172	113	190	264	164	252	363	223	326	476	294	412	607	375	570	750	457
30	1	47	60	31	77	110	57	112	175	89	169	278	129	226	380	175	296	497	230	378	630	294	528	779	358
	2	51	62	37	81	115	67	117	185	106	177	290	152	236	397	208	307	521	274	389	662	349	541	819	425
	3	54	64	42	85	119	76	122	193	120	185	300	172	244	412	235	316	542	309	400	690	394	555	855	482

COMMON VENT CAPACITY

VENT HEIGHT (*H*) (feet)	TYPE B DOUBLE-WALL COMMON VENT DIAMETER—(*D*) inches																				
	4			5			6			7			8			9			10		
	COMBINED APPLIANCE INPUT RATING IN THOUSANDS OF BTU/H																				
	FAN +FAN	FAN +NAT	NAT +NAT	FAN +FAN	FAN +NAT	NAT +NAT	FAN +FAN	FAN +NAT	NAT +NAT	FAN +FAN	FAN +NAT	NAT +NAT	FAN +FAN	FAN +NAT	NAT +NAT	FAN +FAN	FAN +NAT	NAT +NAT	FAN +FAN	FAN +NAT	NAT +NAT
6	NA	78	64	NA	113	99	200	158	144	304	244	196	398	310	257	541	429	332	665	515	407
8	NA	87	71	NA	126	111	218	173	159	331	269	218	436	342	285	592	473	373	730	569	460
10	NA	94	76	163	137	120	237	189	174	357	292	236	467	369	309	638	512	398	787	617	487
15	121	108	88	189	159	140	275	221	200	416	343	274	544	434	357	738	599	456	905	718	553
20	131	118	98	208	177	156	305	247	223	463	383	302	606	487	395	824	673	512	1,013	808	626
30	145	132	113	236	202	180	350	286	257	533	446	349	703	570	459	958	790	593	1,183	952	723
50	159	145	128	268	233	208	406	337	296	622	529	410	833	686	535	1,139	954	689	1,418	1,157	838

For SI: 1 inch = 25.4 mm, 1 foot = 304.8 mm, 1 British thermal unit per hour = 0.2931 W.

INTERNATIONAL CODE COUNCIL®
Copyright © 2019 ICC & NYSDOS. ALL RIGHTS RESERVED. Accessed by Lauren Gualdino (lgualdino@briarcliffmanor.org), (-) Order Number #100880972 on May 08, 2020 07:05 AM (PDT) pursuant to License Agreement with ICC & NYSDOS. No further reproduction, no

TABLE G2428.3(3) [504.3(3)]
MASONRY CHIMNEY

Number of Appliances	Two or more
Appliances Type	Category I
Appliances Vent Connection	Type B double-wall connector

VENT CONNECTOR CAPACITY

VENT HEIGHT (*H*) (feet)	CONNECTOR RISE (*R*) (feet)	TYPE B DOUBLE-WALL VENT CONNECTOR DIAMETER—(*D*) inches																							
		3			4			5			6			7			8			9			10		
		APPLIANCE INPUT RATING LIMITS IN THOUSANDS OF BTU/H																							
		FAN		NAT	FAN		NAT	FAN		NAT	FAN		NAT	FAN		NAT	FAN		NAT	FAN		NAT	FAN		NAT
		Min	Max	Max	Min	Max	Max	Min	Max	Max	Min	Max	Max	Min	Max	Max	Min	Max	Max	Min	Max	Max	Min	Max	Max
6	1	24	33	21	39	62	40	52	106	67	65	194	101	87	274	141	104	370	201	124	479	253	145	599	319
	2	26	43	28	41	79	52	53	133	85	67	230	124	89	324	173	107	436	232	127	562	300	148	694	378
	3	27	49	34	42	92	61	55	155	97	69	262	143	91	369	203	109	491	270	129	633	349	151	795	439
8	1	24	39	22	39	72	41	55	117	69	71	213	105	94	304	148	113	414	210	134	539	267	156	682	335
	2	26	47	29	40	87	53	57	140	86	73	246	127	97	350	179	116	473	240	137	615	311	160	776	394
	3	27	52	34	42	97	62	59	159	98	75	269	145	99	383	206	119	517	276	139	672	358	163	848	452
10	1	24	42	22	38	80	42	55	130	71	74	232	108	101	324	153	120	444	216	142	582	277	165	739	348
	2	26	50	29	40	93	54	57	153	87	76	261	129	103	366	184	123	498	247	145	652	321	168	825	407
	3	27	55	35	41	105	63	58	170	100	78	284	148	106	397	209	126	540	281	147	705	366	171	893	463
15	1	24	48	23	38	93	44	54	154	74	72	277	114	100	384	164	125	511	229	153	658	297	184	824	375
	2	25	55	31	39	105	55	56	174	89	74	299	134	103	419	192	128	558	260	156	718	339	187	900	432
	3	26	59	35	41	115	64	57	189	102	76	319	153	105	448	215	131	597	292	159	760	382	190	960	486
20	1	24	52	24	37	102	46	53	172	77	71	313	119	98	437	173	123	584	239	150	752	312	180	943	397
	2	25	58	31	39	114	56	55	190	91	73	335	138	101	467	199	126	625	270	153	805	354	184	1,011	452
	3	26	63	35	40	123	65	57	204	104	75	353	157	104	493	222	129	661	301	156	851	396	187	1,067	505

COMMON VENT CAPACITY

VENT HEIGHT (*H*) (feet)	MINIMUM INTERNAL AREA OF MASONRY CHIMNEY FLUE (square inches)																								
	12			19			28			38			50			63			78			113		
	COMBINED APPLIANCE INPUT RATING IN THOUSANDS OF BTU/H																								
	FAN +FAN	FAN +NAT	NAT +NAT	FAN +FAN	FAN +NAT	NAT +NAT	FAN +FAN	FAN +NAT	NAT +NAT	FAN +FAN	FAN +NAT	NAT +NAT	FAN +FAN	FAN +NAT	NAT +NAT	FAN +FAN	FAN +NAT	NAT +NAT	FAN +FAN	FAN +NAT	NAT +NAT	FAN +FAN	FAN +NAT	NAT +NAT
6	NA	74	25	NA	119	46	NA	178	71	NA	257	103	NA	351	143	NA	458	188	NA	582	246	1,041	853	NA
8	NA	80	28	NA	130	53	NA	193	82	NA	279	119	NA	384	163	NA	501	218	724	636	278	1,144	937	408
10	NA	84	31	NA	138	56	NA	207	90	NA	299	131	NA	409	177	606	538	236	776	686	302	1,226	1,010	454
15	NA	NA	36	NA	152	67	NA	233	106	NA	334	152	523	467	212	682	611	283	874	781	365	1,374	1,156	546
20	NA	NA	41	NA	NA	75	NA	250	122	NA	368	172	565	508	243	742	668	325	955	858	419	1,513	1,286	648
30	NA	NA	NA	NA	NA	NA	NA	270	137	NA	404	198	615	564	278	816	747	381	1,062	969	496	1,702	1,473	749
50	NA	NA	NA	NA	NA	NA	NA	NA	NA	NA	NA	NA	NA	620	328	879	831	461	1,165	1,089	606	1,905	1,692	922

For SI: 1 inch = 25.4 mm, 1 square inch = 645.16 mm^2, 1 foot = 304.8 mm, 1 British thermal unit per hour = 0.2931 W.

INTERNATIONAL CODE COUNCIL®
Copyright © 2019 ICC & NYSDOS. ALL RIGHTS RESERVED. Accessed by Lauren Gualdino (lgualdino@briarcliffmanor.org), (-) Order Number #100880972 on May 08, 2020 07:05 AM (PDT) pursuant to License Agreement with ICC & NYSDOS. No further reproduction, no

TABLE G2428.3(4) [504.3(4)]
MASONRY CHIMNEY

Number of Appliances	Two or more
Appliances Type	Category I
Appliances Vent Connection	Single-wall connector

VENT CONNECTOR CAPACITY

VENT HEIGHT (*H*) (feet)	CONNECTOR RISE (*R*) (feet)	SINGLE-WALL METAL VENT CONNECTOR DIAMETER (*D*)—inches																							
		3			4			5			6			7			8			9			10		
		APPLIANCE INPUT RATING LIMITS IN THOUSANDS OF BTU/H																							
		FAN		NAT	FAN		NAT	FAN		NAT	FAN		NAT	FAN		NAT	FAN		NAT	FAN		NAT	FAN		NAT
		Min	Max	Max	Min	Max	Max	Min	Max	Max	Min	Max	Max	Min	Max	Max	Min	Max	Max	Min	Max	Max	Min	Max	Max
6	1	NA	NA	21	NA	NA	39	NA	NA	66	179	191	100	231	271	140	292	366	200	362	474	252	499	594	316
	2	NA	NA	28	NA	NA	52	NA	NA	84	186	227	123	239	321	172	301	432	231	373	557	299	509	696	376
	3	NA	NA	34	NA	NA	61	134	153	97	193	258	142	247	365	202	309	491	269	381	634	348	519	793	437
8	1	NA	NA	21	NA	NA	40	NA	NA	68	195	208	103	250	298	146	313	407	207	387	530	263	529	672	331
	2	NA	NA	28	NA	NA	52	137	139	85	202	240	125	258	343	177	323	465	238	397	607	309	540	766	391
	3	NA	NA	34	NA	NA	62	143	156	98	210	264	145	266	376	205	332	509	274	407	663	356	551	838	450
10	1	NA	NA	22	NA	NA	41	130	151	70	202	225	106	267	316	151	333	434	213	410	571	273	558	727	343
	2	NA	NA	29	NA	NA	53	136	150	86	210	255	128	276	358	181	343	489	244	420	640	317	569	813	403
	3	NA	NA	34	97	102	62	143	166	99	217	277	147	284	389	207	352	530	279	430	694	363	580	880	459
15	1	NA	NA	23	NA	NA	43	129	151	73	199	271	112	268	376	161	349	502	225	445	646	291	623	808	366
	2	NA	NA	30	92	103	54	135	170	88	207	295	132	277	411	189	359	548	256	456	706	334	634	884	424
	3	NA	NA	34	96	112	63	141	185	101	215	315	151	286	439	213	368	586	289	466	755	378	646	945	479
20	1	NA	NA	23	87	99	45	128	167	76	197	303	117	265	425	169	345	569	235	439	734	306	614	921	347
	2	NA	NA	30	91	111	55	134	185	90	205	325	136	274	455	195	355	610	266	450	787	348	627	986	443
	3	NA	NA	35	96	119	64	140	199	103	213	343	154	282	481	219	365	644	298	461	831	391	639	1,042	496

COMMON VENT CAPACITY

VENT HEIGHT (*H*) (feet)	MINIMUM INTERNAL AREA OF MASONRY CHIMNEY FLUE (square inches)																								
	12			19			28			38			50			63			78			113			
	COMBINED APPLIANCE INPUT RATING IN THOUSANDS OF BTU/H																								
	FAN +FAN	FAN +NAT	NAT +NAT	FAN +FAN	FAN +NAT	NAT +NAT	FAN +FAN	FAN +NAT	NAT +NAT	FAN +FAN	FAN +NAT	NAT +NAT	FAN +FAN	FAN +NAT	NAT +NAT	FAN +FAN	FAN +NAT	NAT +NAT	FAN +FAN	FAN +NAT	NAT +NAT	FAN +FAN	FAN +NAT	NAT +NAT
6	NA	NA	25	NA	118	45	NA	176	71	NA	255	102	NA	348	142	NA	455	187	NA	579	245	NA	846	NA
8	NA	NA	28	NA	128	52	NA	190	81	NA	276	118	NA	380	162	NA	497	217	NA	633	277	1,136	928	405
10	NA	NA	31	NA	136	56	NA	205	89	NA	295	129	NA	405	175	NA	532	234	171	680	300	1,216	1,000	450
15	NA	NA	36	NA	NA	66	NA	230	105	NA	335	150	NA	400	210	677	602	280	866	772	360	1,359	1,139	540
20	NA	NA	NA	NA	NA	74	NA	247	120	NA	362	170	NA	503	240	765	661	321	947	849	415	1,495	1,264	640
30	NA	NA	NA	NA	NA	NA	NA	NA	135	NA	398	195	NA	558	275	808	739	377	1,052	957	490	1,682	1,447	740
50	NA	NA	NA	NA	NA	NA	NA	NA	NA	NA	NA	NA	NA	612	325	NA	821	456	1,152	1,076	600	1,879	1,672	910

For SI: 1 inch = 25.4 mm, 1 square inch = 645.16 mm^2, 1 foot = 304.8 mm, 1 British thermal unit per hour = 0.2931 W.

INTERNATIONAL CODE COUNCIL®
Copyright © 2019 ICC & NYSDOS. ALL RIGHTS RESERVED. Accessed by Lauren Gualdino (lgualdino@briarcliffmanor.org), (-) Order Number #100880972 on May 08, 2020 07:05 AM (PDT) pursuant to License Agreement with ICC & NYSDOS. No further reproduction, no

100880972

3. The minimum capacity shall be determined as if the *appliance* were a fan-assisted *appliance*.
    3.1. The minimum capacity of the *vent connector* shall be determined using the FAN Min column.
    3.2. The FAN+FAN column shall be used where the second *appliance* is a fan-assisted *appliance*, and the FAN+NAT column shall be used where the second *appliance* is equipped with a *draft hood*, to determine whether the vertical vent or *chimney* configuration is not permitted (NA). Where the vent configuration is NA, the vent configuration shall not be permitted and an alternative venting configuration shall be utilized.

G2428.3.2 (504.3.2) Connector length limit. The *vent connector* shall be routed to the vent utilizing the shortest possible route. Except as provided in Section G2428.3.3, the maximum *vent connector* horizontal length shall be $1^1/_2$ feet for each inch (18 mm per mm) of connector diameter as shown in Table G2428.3.2.

TABLE G2428.3.2 (504.3.2)
MAXIMUM VENT CONNECTOR LENGTH

CONNECTOR DIAMETER (inches)	CONNECTOR MAXIMUM HORIZONTAL LENGTH (feet)
3	$4^1/_2$
4	6
5	$7^1/_2$
6	9
7	$10^1/_2$
8	12
9	$13^1/_2$

For SI: 1 inch = 25.4 mm, 1 foot = 304.8 mm.

G2428.3.3 (504.3.3) Connectors with longer lengths. Connectors with longer horizontal lengths than those listed in Section G2428.3.2 are permitted under the following conditions:

1. The maximum capacity (FAN Max or NAT Max) of the *vent connector* shall be reduced 10 percent for each additional multiple of the length allowed by Section G2428.3.2. For example, the maximum length listed in Table G2428.3.2 for a 4-inch (102 mm) connector is 6 feet (1829 mm). With a connector length greater than 6 feet (1829 mm) but not exceeding 12 feet (3658 mm), the maximum capacity must be reduced by 10 percent (0.90 × maximum vent *connector* capacity). With a connector length greater than 12 feet (3658 mm), but not exceeding 18 feet (5486 mm), the maximum capacity must be reduced by 20 percent (0.80 × maximum vent capacity).
2. For a connector serving a fan-assisted *appliance*, the minimum capacity (FAN Min) of the connector shall be determined by referring to the corresponding single-*appliance* table. For Type B double-wall connectors, Table G2428.2(1) shall be used. For single-wall connectors, Table G2428.2(2) shall be used. The height (*H*) and lateral (*L*) shall be measured according to the procedures for a single-*appliance* vent, as if the other *appliances* were not present.

G2428.3.4 (504.3.4) Vent connector manifold. Where the *vent connectors* are combined prior to entering the vertical portion of the common vent to form a common vent manifold, the size of the common vent manifold and the common vent shall be determined by applying a 10-percent reduction (0.90 × maximum common vent capacity) to the common vent capacity part of the common vent tables. The length of the common *vent connector* manifold (L_m) shall not exceed $1^1/_2$ feet for each inch (18 mm per mm) of common *vent connector* manifold diameter (*D*).

G2428.3.5 (504.3.5) Common vertical vent offset. Where the common vertical vent is *offset*, the maximum capacity of the common vent shall be reduced in accordance with Section G2428.3.6. The horizontal length of the common vent *offset* (L_o) shall not exceed $1^1/_2$ feet for each inch (18 mm per mm) of common vent diameter (*D*). Where multiple *offsets* occur in a common vent, the total horizontal length of all *offsets* combined shall not exceed $1^1/_2$ feet for each inch (18 mm per mm) of the common vent diameter (*D*).

G2428.3.6 (504.3.6) Elbows in vents. For each elbow up to and including 45 degrees (0.79 rad) in the common vent, the maximum common vent capacity listed in the venting tables shall be reduced by 5 percent. For each elbow greater than 45 degrees (0.79 rad) up to and including 90 degrees (1.57 rad), the maximum common vent capacity listed in the venting tables shall be reduced by 10 percent.

G2428.3.7 (504.3.7) Elbows in connectors. The *vent connector* capacities listed in the common vent sizing tables include allowance for two 90-degree (1.57 rad) elbows. For each additional elbow up to and including 45 degrees (0.79 rad), the maximum *vent connector* capacity listed in the venting tables shall be reduced by 5 percent. For each elbow greater than 45 degrees (0.79 rad) up to and including 90 degrees (1.57 rad), the maximum *vent connector* capacity listed in the venting tables shall be reduced by 10 percent.

G2428.3.8 (504.3.8) Common vent minimum size. The cross-sectional area of the common vent shall be equal to or greater than the cross-sectional area of the largest connector.

G2428.3.9 (504.3.9) Common vent fittings. At the point where tee or wye fittings connect to a common vent, the opening size of the fitting shall be equal to the size of the common vent. Such fittings shall not be prohibited from having reduced-size openings at the point of connection of *appliance vent connectors*.

G2428.3.9.1 (504.3.9.1) Tee and wye fittings. Tee and wye fittings connected to a common gas vent shall be considered to be part of the common gas vent and shall be constructed of materials consistent with that of the common gas vent.

G2428.3.10 (504.3.10) High-altitude installations. Sea-level input ratings shall be used when determining maxi-

INTERNATIONAL CODE COUNCIL®
Copyright © 2019 ICC & NYSDOS. ALL RIGHTS RESERVED. Accessed by Lauren Gualdino (lgualdino@briarcliffmanor.org), (-) Order Number #100880972 on May 08, 2020 07:05 AM (PDT) pursuant to License Agreement with ICC & NYSDOS. No further reproduction, no

100880972

mum capacity for high-altitude installation. Actual input, derated for altitude, shall be used for determining minimum capacity for high-altitude installation.

G2428.3.11 (504.3.11) Connector rise measurement. Connector rise (*R*) for each *appliance connector* shall be measured from the *draft hood* outlet or *flue collar* to the centerline where the vent gas streams come together.

G2428.3.12 (504.3.12) Vent height measurement. For multiple *appliances* all located on one floor, available total height (*H*) shall be measured from the highest *draft hood* outlet or *flue collar* up to the level of the outlet of the common vent.

G2428.3.13 (504.3.17) Vertical vent maximum size. Where two or more *appliances* are connected to a vertical vent or *chimney*, the flow area of the largest section of vertical vent or *chimney* shall not exceed seven times the smallest listed *appliance* categorized vent areas, *flue collar* area, or *draft hood* outlet area unless designed in accordance with *approved* engineering methods.

G2428.3.14 (504.3.18) Multiple input rate appliances. For *appliances* with more than one input rate, the minimum *vent connector* capacity (FAN Min) determined from the tables shall be less than the lowest *appliance* input rating, and the maximum *vent connector* capacity (FAN Max or NAT Max) determined from the tables shall be greater than the highest *appliance* input rating.

G2428.3.15 (504.3.19) Liner system sizing and connections. Listed, corrugated metallic *chimney* liner systems in masonry *chimneys* shall be sized by using Table G2428.3(1) or G2428.3(2) for Type B vents, with the maximum capacity reduced by 20 percent (0.80 × maximum capacity) and the minimum capacity as shown in Table G2428.3(1) or G2428.3(2). Corrugated metallic liner systems installed with bends or offsets shall have their maximum capacity further reduced in accordance with Sections G2428.3.5 and G2428.3.6. The 20-percent reduction for corrugated metallic *chimney* liner systems includes an allowance for one long-radius 90-degree (1.57 rad) turn at the bottom of the liner. Where double-wall connectors are required, tee and wye fittings used to connect to the common vent *chimney* liner shall be listed double-wall fittings. Connections between *chimney* liners and listed double-wall fittings shall be made with listed adapter fittings designed for such purpose.

G2428.3.16 (504.3.20) Chimney and vent location. Tables G2428.3(1), G2428.3(2), G2428.3(3) and G2428.3(4) shall be used only for chimneys and vents not exposed to the outdoors below the roof line. A Type B vent or *listed* chimney lining system passing through an unused masonry chimney flue shall not be considered to be exposed to the outdoors. Where vents extend outdoors above the roof more than 5 feet (1524 mm) higher than required by Figure G2427.6.4 and where vents terminate in accordance with Section G2427.6.4, Item 2, the outdoor portion of the vent shall be enclosed as required by this section for vents not considered to be exposed to the outdoors or such venting system shall be engineered. A Type B vent shall not be considered to be exposed to the outdoors where it passes through an unventilated enclosure or chase insulated to a value of not less than R8.

G2428.3.17 (504.3.21) Connector maximum and minimum size. *Vent connectors* shall not be increased in size more than two sizes greater than the listed *appliance* categorized vent diameter, *flue collar* diameter or *draft hood* outlet diameter. *Vent connectors* for draft-hood-equipped *appliances* shall not be smaller than the *draft hood* outlet diameter. Where a *vent connector* size(s) determined from the tables for a fan-assisted *appliance(s)* is smaller than the *flue collar* diameter, the use of the smaller size(s) shall be permitted provided that the installation complies with all of the following conditions:

1. *Vent connectors* for fan-assisted *appliance flue collars* 12 inches (305 mm) in diameter or smaller are not reduced by more than one table size [for example, 12 inches to 10 inches (305 mm to 254 mm) is a one-size reduction] and those larger than 12 inches (305 mm) in diameter are not reduced more than two table sizes [for example, 24 inches to 20 inches (610 mm to 508 mm) is a two-size reduction].
2. The fan-assisted *appliance(s)* is common vented with a draft-hood-equipped *appliance(s)*.
3. The vent *connector* has a smooth interior wall.

G2428.3.18 (504.3.22) Component commingling. Combinations of pipe sizes and combinations of single-wall and double-wall metal pipe shall be allowed within any connector run(s) or within the common vent, provided that all of the appropriate tables permit all of the desired sizes and types of pipe, as if they were used for the entire length of the subject connector or vent. Where single-wall and Type B double-wall metal pipes are used for *vent connectors* within the same venting system, the common vent must be sized using Table G2428.3(2) or G2428.3(4), as appropriate.

G2428.3.19 (504.3.23) Draft hood conversion accessories. *Draft hood* conversion accessories for use with *masonry chimneys* venting listed Category I fan-assisted *appliances* shall be listed and installed in accordance with the manufacturer's instructions for such listed accessories.

G2428.3.20 (504.3.24) Multiple sizes permitted. Where a table permits more than one diameter of pipe to be used for a connector or vent, all of the permitted sizes shall be permitted to be used.

G2428.3.21 (504.3.25) Table interpolation. Interpolation shall be permitted in calculating capacities for vent dimensions that fall between table entries.

G2428.3.22 (504.3.26) Extrapolation prohibited. Extrapolation beyond the table entries shall not be permitted.

G2428.3.23 (504.3.27) Engineering calculations. For vent heights less than 6 feet (1829 mm) and greater than shown in the tables, engineering methods shall be used to calculate vent capacities.

G2428.3.24 (504.3.28) Height entries. Where the actual height of a vent falls between entries in the height column

INTERNATIONAL CODE COUNCIL®
Copyright © 2019 ICC & NYSDOS. ALL RIGHTS RESERVED. Accessed by Lauren Gualdino (lgualdino@briarcliffmanor.org), (-) Order Number #100880972 on May 08, 2020 07:05 AM (PDT) pursuant to License Agreement with ICC & NYSDOS. No further reproduction, no

100880972

of the applicable table in Tables G2428.3(1) through G2428.3(4), either interpolation shall be used or the lower appliance input rating shown in the table shall be used for FAN Max and NAT Max column values and the higher appliance input rating shall be used for the FAN Min column values.

SECTION G2429 (505)
DIRECT-VENT, INTEGRAL VENT, MECHANICAL VENT AND VENTILATION/EXHAUST HOOD VENTING

G2429.1 (505.1) General. The installation of direct-vent and integral vent *appliances* shall be in accordance with Section G2427. Mechanical *venting systems* shall be designed and installed in accordance with Section G2427.

SECTION G2430 (506)
FACTORY-BUILT CHIMNEYS

G2430.1 (506.1) Listing. Factory-built *chimneys* for building heating *appliances* producing *flue gases* having a temperature not greater than 1,000ºF (538ºC), measured at the entrance to the *chimney*, shall be *listed* and *labeled* in accordance with UL 103 and shall be installed and terminated in accordance with the manufacturer's instructions.

G2430.2 (506.2) Support. Where factory-built *chimneys* are supported by structural members, such as joists and rafters, such members shall be designed to support the additional load.

SECTION G2431 (601)
GENERAL

G2431.1 (601.1) Scope. Sections G2432 through G2454 shall govern the approval, design, installation, construction, maintenance, *alteration* and repair of the *appliances* and *equipment* specifically identified herein.

[NY] G2431.2 (601.2) Flame safeguard device. All fuel gas space heating appliances installed or used in a building occupied as a residence shall be equipped with an automatic flame safeguard device that shall shut off the fuel supply to the main burner or group of burners when the flame or pilot light thereof is extinguished.

SECTION G2432 (602)
DECORATIVE APPLIANCES FOR INSTALLATION IN FIREPLACES

G2432.1 (602.1) General. Decorative *appliances* for installation in *approved* solid fuel-burning *fireplaces* shall be tested in accordance with ANSI Z21.60/CSA 6.26 and shall be installed in accordance with the manufacturer's instructions. Manually lighted natural gas decorative *appliances* shall be tested in accordance with ANSI Z21.84.

G2432.2 (602.2) Flame safeguard device. Decorative *appliances* for installation in *approved* solid fuel-burning *fireplaces*, with the exception of those tested in accordance with ANSI Z21.84, shall utilize a direct ignition device, an ignitor or a *pilot* flame to ignite the fuel at the *main burner*, and shall be equipped with a *flame safeguard* device. The *flame safeguard* device shall automatically shut off the fuel supply to a *main burner* or group of *burners* when the means of ignition of such *burners* becomes inoperative.

G2432.3 (602.3) Prohibited installations. Decorative *appliances* for installation in *fireplaces* shall not be installed where prohibited by Section G2406.2.

SECTION G2433 (603)
LOG LIGHTERS

G2433.1 (603.1) General. Log lighters shall be tested in accordance with CSA 8 and shall be installed in accordance with the manufacturer's instructions.

SECTION G2434 (604)
VENTED GAS FIREPLACES (DECORATIVE APPLIANCES)

G2434.1 (604.1) General. Vented gas *fireplaces* shall be tested in accordance with ANSI Z21.50/CSA 2.22, shall be installed in accordance with the manufacturer's instructions and shall be designed and equipped as specified in Section G2432.2.

G2434.2 (604.2) Access. Panels, grilles and access doors that are required to be removed for normal servicing operations shall not be attached to the building.

SECTION G2435 (605)
VENTED GAS FIREPLACE HEATERS

G2435.1 (605.1) General. Vented gas *fireplace* heaters shall be installed in accordance with the manufacturer's instructions, shall be tested in accordance with ANSI Z21.88/CSA 2.33 and shall be designed and equipped as specified in Section G2432.2.

SECTION G2436 (608)
VENTED WALL FURNACES

G2436.1 (608.1) General. *Vented wall furnaces* shall be tested in accordance with ANSI Z21.86/CSA 2.32 and shall be installed in accordance with the manufacturer's instructions.

G2436.2 (608.2) Venting. *Vented wall furnaces* shall be vented in accordance with Section G2427.

G2436.3 (608.3) Location. *Vented wall furnaces* shall be located so as not to cause a fire hazard to walls, floors, combustible furnishings or doors. *Vented wall furnaces* installed between bathrooms and adjoining rooms shall not circulate air from bathrooms to other parts of the building.

G2436.4 (608.4) Door swing. *Vented wall furnaces* shall be located so that a door cannot swing within 12 inches (305 mm) of an air inlet or air outlet of such *furnace* measured at right angles to the opening. Doorstops or door closers shall not be installed to obtain this *clearance*.

INTERNATIONAL CODE COUNCIL®
Copyright © 2019 ICC & NYSDOS. ALL RIGHTS RESERVED. Accessed by Lauren Gualdino (lgualdino@briarcliffmanor.org), (-) Order Number #100880972 on May 08, 2020 07:05 AM (PDT) pursuant to License Agreement with ICC & NYSDOS. No further reproduction, no

100880972

G2436.5 (608.5) Ducts prohibited. Ducts shall not be attached to wall *furnaces*. Casing extension boots shall not be installed unless *listed* as part of the *appliance*.

G2436.6 (608.6) Access. *Vented wall furnaces* shall be provided with *access* for cleaning of heating surfaces, removal of *burners*, replacement of sections, motors, *controls*, filters and other working parts, and for adjustments and lubrication of parts requiring such attention. Panels, grilles and access doors that are required to be removed for normal servicing operations shall not be attached to the building construction.

SECTION G2437 (609)
FLOOR FURNACES

G2437.1 (609.1) General. *Floor furnaces* shall be tested in accordance with ANSI Z21.86/CSA 2.32 and shall be installed in accordance with the manufacturer's instructions.

G2437.2 (609.2) Placement. The following provisions apply to *floor furnaces*:

1. Floors. *Floor furnaces* shall not be installed in the floor of any doorway, stairway landing, aisle or passageway of any enclosure, public or private, or in an exitway from any such room or space.
2. Walls and corners. The register of a *floor furnace* with a horizontal warm air outlet shall not be placed closer than 6 inches (152 mm) to the nearest wall. A distance of not less than 18 inches (457 mm) from two adjoining sides of the *floor furnace* register to walls shall be provided to eliminate the necessity of occupants walking over the warm-air discharge. The remaining sides shall be permitted to be placed not closer than 6 inches (152 mm) to a wall. Wall-register models shall not be placed closer than 6 inches (152 mm) to a corner.
3. Draperies. The *furnace* shall be placed so that a door, drapery, or similar object cannot be nearer than 12 inches (305 mm) to any portion of the register of the *furnace*.
4. Floor construction. *Floor furnaces* shall not be installed in concrete floor construction built on grade.
5. *Thermostat.* The controlling *thermostat* for a *floor furnace* shall be located within the same room or space as the *floor furnace* or shall be located in an adjacent room or space that is permanently open to the room or space containing the *floor furnace*.

G2437.3 (609.3) Bracing. The floor around the *furnace* shall be braced and headed with a support framework designed in accordance with Chapter 5.

G2437.4 (609.4) Clearance. The lowest portion of the *floor furnace* shall have not less than a 6-inch (152 mm) *clearance* from the grade level; except where the lower 6-inch (152 mm) portion of the *floor furnace* is sealed by the manufacturer to prevent entrance of water, the minimum *clearance* shall be not less than 2 inches (51 mm). Where such *clearances* cannot be provided, the ground below and to the sides shall be excavated to form a pit under the *furnace* so that the required *clearance* is provided beneath the lowest portion of the *furnace*. A 12-inch (305 mm) minimum *clearance* shall be provided on all sides except the *control* side, which shall have an 18-inch (457 mm) minimum *clearance.*

G2437.5 (609.5) First-floor installation. Where the basement story level below the floor in which a *floor furnace* is installed is utilized as habitable space, such *floor furnaces* shall be enclosed as specified in Section G2437.6 and shall project into a nonhabitable space.

G2437.6 (609.6) Upper-floor installations. *Floor furnaces* installed in upper stories of buildings shall project below into nonhabitable space and shall be separated from the nonhabitable space by an enclosure constructed of *noncombustible materials*. The *floor furnace* shall be provided with *access*, *clearance* to all sides and bottom of not less than 6 inches (152 mm) and *combustion air* in accordance with Section G2407.

SECTION G2438 (613)
CLOTHES DRYERS

G2438.1 (613.1) General. *Clothes dryers* shall be tested in accordance with ANSI Z21.5.1/CSA 7.1 and shall be installed in accordance with the manufacturer's instructions.

SECTION G2439 (614)
CLOTHES DRYER EXHAUST

G2439.1 (614.1) Installation. *Clothes dryers* shall be exhausted in accordance with the manufacturer's instructions. Dryer exhaust systems shall be independent of all other systems and shall convey the moisture and any products of *combustion* to the outside of the building.

G2439.2 (614.2) Duct penetrations. Ducts that exhaust *clothes dryers* shall not penetrate or be located within any fireblocking, draftstopping or any wall, floor/ceiling or other assembly required by this *code* to be fire-resistance rated, unless such duct is constructed of galvanized steel or aluminum of the thickness specified in the mechanical provisions of this *code* and the fire-resistance rating is maintained in accordance with this *code*. Fire dampers shall not be installed in *clothes dryer* exhaust duct systems.

G2439.3 (614.4) Exhaust installation. Exhaust ducts for *clothes dryers* shall terminate on the outside of the building and shall be equipped with a backdraft *damper*. Screens shall not be installed at the duct termination. Ducts shall not be connected or installed with sheet metal screws or other fasteners that will obstruct the flow. *Clothes dryer* exhaust ducts shall not be connected to a *vent connector*, vent or *chimney*. *Clothes dryer* exhaust ducts shall not extend into or through ducts or plenums. Clothes dryer exhaust ducts shall be sealed in accordance with Section M1601.4.1.

G2439.3.1 (614.4.1) Exhaust termination outlet and passageway. The passageway of dryer exhaust duct terminals shall be undiminished in size and shall provide an open area of not less than 12.5 square inches (8065 mm^2).

INTERNATIONAL CODE COUNCIL®
Copyright © 2019 ICC & NYSDOS. ALL RIGHTS RESERVED. Accessed by Lauren Gualdino (lgualdino@briarcliffmanor.org), (-) Order Number #100880972 on May 08, 2020 07:05 AM (PDT) pursuant to License Agreement with ICC & NYSDOS. No further reproduction, no

100880972

G2439.4 (614.5) Dryer exhaust duct power ventilators. Domestic dryer exhaust duct power ventilators shall be *listed* and *labeled* to UL 705 for use in dryer exhaust duct systems. The dryer exhaust duct power ventilator shall be installed in accordance with the manufacturer's instructions.

G2439.5 (614.6) Makeup air. Installations exhausting more than 200 cfm (0.09 m^3/s) shall be provided with *makeup air*. Where a closet is designed for the installation of a *clothes dryer*, an opening having an area of not less than 100 square inches (0.0645 m^2) for *makeup air* shall be provided in the closet enclosure, or *makeup air* shall be provided by other *approved* means.

G2439.6 (614.7) Protection required. Protective shield plates shall be placed where nails or screws from finish or other work are likely to penetrate the *clothes dryer* exhaust duct. Shield plates shall be placed on the finished face of all framing members where there is less than $1^1/_4$ inches (32 mm) between the duct and the finished face of the framing member. Protective shield plates shall be constructed of steel, shall have a minimum thickness of 0.062 inch (1.6 mm) and shall extend not less than 2 inches (51 mm) above sole plates and below top plates.

G2439.7 (614.8) Domestic clothes dryer exhaust ducts. Exhaust ducts for domestic *clothes dryers* shall conform to the requirements of Sections G2439.7.1 through G2439.7.6.

G2439.7.1 (614.8.1) Material and size. Exhaust ducts shall have a smooth interior finish and shall be constructed of metal not less than 0.016 inch (0.4 mm) in thickness. The exhaust duct size shall be 4 inches (102 mm) nominal in diameter.

G2439.7.2 (614.8.2) Duct installation. Exhaust ducts shall be supported at 4-foot (1219 mm) intervals and secured in place. The insert end of the duct shall extend into the adjoining duct or fitting in the direction of airflow. Ducts shall not be joined with screws or similar fasteners that protrude more than $^1/_8$ inch (3.2 mm) into the inside of the duct. Where dryer exhaust ducts are enclosed in wall or ceiling cavities, such cavities shall allow the installation of the duct without deformation.

G2439.7.3 (614.8.3) Transition ducts. Transition ducts used to connect the dryer to the exhaust duct system shall be a single length that is *listed* and *labeled* in accordance with UL 2158A. Transition ducts shall be not more than 8 feet (2438 mm) in length and shall not be concealed within construction.

G2439.7.4 (614.8.4) Duct length. The maximum allowable exhaust duct length shall be determined by one of the methods specified in Sections G2439.7.4.1 through G2439.7.4.3.

G2439.7.4.1 (614.8.4.1) Specified length. The maximum length of the exhaust duct shall be 35 feet (10 668 mm) from the connection to the transition duct from the dryer to the outlet terminal. Where fittings are used, the maximum length of the exhaust duct shall be reduced in accordance with Table G2439.7.4.1.

TABLE G2439.7.4.1 (TABLE 614.8.4.1)
DRYER EXHAUST DUCT FITTING EQUIVALENT LENGTH

DRYER EXHAUST DUCT FITTING TYPE	EQUIVALENT LENGTH
4-inch radius mitered 45-degree elbow	2 feet, 6 inches
4-inch radius mitered 90-degree elbow	5 feet
6-inch radius smooth 45-degree elbow	1 foot
6-inch radius smooth 90-degree elbow	1 foot, 9 inches
8-inch radius smooth 45-degree elbow	1 foot
8-inch radius smooth 90-degree elbow	1 foot, 7 inches
10-inch radius smooth 45-degree elbow	9 inches
10-inch radius smooth 90-degree elbow	1 foot, 6 inches

For SI: 1 inch = 25.4 mm, 1 foot = 304.8 mm, 1 degree = 0.0175 rad.

G2439.7.4.2 (614.8.4.2) Manufacturer's instructions. The maximum length of the exhaust duct shall be determined by the dryer manufacturer's installation instructions. The *building official* shall be provided with a copy of the installation instructions for the make and model of the dryer. Where the exhaust duct is to be concealed, the installation instructions shall be provided to the *building official* prior to the concealment inspection. In the absence of fitting equivalent length calculations from the clothes dryer manufacturer, Table G2439.7.4.1 shall be utilized.

G2439.7.4.3 (614.8.4.3) Dryer exhaust duct power ventilator length. The maximum length of the exhaust duct shall be determined by the dryer exhaust duct power ventilator manufacturer's installation instructions.

G2439.7.5 (614.8.5) Length identification. Where the exhaust duct equivalent length exceeds 35 feet (10 668 mm), the equivalent length of the exhaust duct shall be identified on a permanent label or tag. The label or tag shall be located within 6 feet (1829 mm) of the exhaust duct connection.

G2439.7.6 (614.8.6) Exhaust duct required. Where space for a *clothes dryer* is provided, an exhaust duct system shall be installed.

Where the *clothes dryer* is not installed at the time of occupancy, the exhaust duct shall be capped at the location of the future dryer.

Exception: Where a *listed* condensing *clothes dryer* is installed prior to occupancy of the structure.

SECTION G2440 (615)
SAUNA HEATERS

G2440.1 (615.1) General. Sauna heaters shall be installed in accordance with the manufacturer's instructions.

G2440.2 (615.2) Location and protection. Sauna heaters shall be located so as to minimize the possibility of accidental contact by a person in the room.

G2440.2.1 (615.2.1) Guards. Sauna heaters shall be protected from accidental contact by an *approved* guard or barrier of material having a low coefficient of thermal con-

INTERNATIONAL CODE COUNCIL®
Copyright © 2019 ICC & NYSDOS. ALL RIGHTS RESERVED. Accessed by Lauren Gualdino (lgualdino@briarcliffmanor.org), (-) Order Number #100880972 on May 08, 2020 07:05 AM (PDT) pursuant to License Agreement with ICC & NYSDOS. No further reproduction, no

100880972

ductivity. The guard shall not substantially affect the transfer of heat from the heater to the room.

G2440.3 (615.3) Access. Panels, grilles and *access* doors that are required to be removed for normal servicing operations, shall not be attached to the building.

G2440.4 (615.4) Combustion and dilution air intakes. Sauna heaters of other than the direct-vent type shall be installed with the *draft hood* and *combustion air* intake located outside the sauna room. Where the *combustion air* inlet and the *draft hood* are in a dressing room adjacent to the sauna room, there shall be provisions to prevent physically blocking the *combustion air* inlet and the *draft hood* inlet, and to prevent physical contact with the *draft hood* and vent assembly, or warning notices shall be posted to avoid such contact. Any warning notice shall be easily readable, shall contrast with its background and the wording shall be in letters not less than $^1/_4$ inch (6.4 mm) high.

G2440.5 (615.5) Combustion and ventilation air. *Combustion air* shall not be taken from inside the sauna room. *Combustion* and ventilation air for a sauna heater not of the direct-vent type shall be provided to the area in which the *combustion air* inlet and *draft hood* are located in accordance with Section G2407.

G2440.6 (615.6) Heat and time controls. Sauna heaters shall be equipped with a *thermostat* that will limit room temperature to 194ºF (90ºC). If the *thermostat* is not an integral part of the sauna heater, the heat-sensing element shall be located within 6 inches (152 mm) of the ceiling. If the heat-sensing element is a capillary tube and bulb, the assembly shall be attached to the wall or other support, and shall be protected against physical damage.

G2440.6.1 (615.6.1) Timers. A timer, if provided to *control main burner* operation, shall have a maximum operating time of 1 hour. The *control* for the timer shall be located outside the sauna room.

G2440.7 (615.7) Sauna room. A ventilation opening into the sauna room shall be provided. The opening shall be not less than 4 inches by 8 inches (102 mm by 203 mm) located near the top of the door into the sauna room.

SECTION G2441 (617)
POOL AND SPA HEATERS

G2441.1 (617.1) General. Pool and spa heaters shall be tested in accordance with ANSI Z21.56/CSA 4.7 and shall be installed in accordance with the manufacturer's instructions.

SECTION G2442 (618)
FORCED-AIR WARM-AIR FURNACES

G2442.1 (618.1) General. Forced-air warm-air *furnaces* shall be tested in accordance with ANSI Z21.47/CSA 2.3 or UL 795 and shall be installed in accordance with the manufacturer's instructions.

G2442.2 (618.2) Dampers. Volume dampers shall not be placed in the air inlet to a *furnace* in a manner that will reduce the required air to the *furnace*.

G2442.3 (618.3) Prohibited sources. Outdoor or return air for forced-air heating and cooling systems shall not be taken from the following locations:

1. Closer than 10 feet (3048 mm) from an *appliance* vent outlet, a vent opening from a plumbing drainage system or the discharge outlet of an exhaust fan, unless the outlet is 3 feet (914 mm) above the outside air inlet.
2. Where there is the presence of objectionable odors, fumes or flammable vapors; or where located less than 10 feet (3048 mm) above the surface of any abutting public way or driveway; or where located at grade level by a sidewalk, street, alley or driveway.
3. A hazardous or insanitary location or a refrigeration machinery room as defined in the *Mechanical Code of New York State*.
4. A room or space, the volume of which is less than 25 percent of the entire volume served by such system. Where connected by a permanent opening having an area sized in accordance with this code, adjoining rooms or spaces shall be considered to be a single room or space for the purpose of determining the volume of such rooms or spaces.

   Exception: The minimum volume requirement shall not apply where the amount of return air taken from a room or space is less than or equal to the amount of supply air delivered to such room or space.
5. A room or space containing an *appliance* where such a room or space serves as the sole source of return air.

   Exception: This shall not apply where:

   1. The *appliance* is a direct-vent *appliance* or an *appliance* not requiring a vent in accordance with Section G2425.8.
   2. The room or space complies with the following requirements:

      2.1. The return air shall be taken from a room or space having a volume exceeding 1 cubic foot for each 10 Btu/h (9.6 L/W) of combined input rating of all fuel-burning appliances therein.

      2.2. The volume of supply air discharged back into the same space shall be approximately equal to the volume of return air taken from the space.

      2.3. Return-air inlets shall not be located within 10 feet (3048 mm) of a draft hood in the same room or space or the combustion chamber of any atmospheric burner *appliance* in the same room or space.
   3. Rooms or spaces containing solid fuel-burning appliances, provided that return-air inlets are located not less than 10 feet (3048 mm) from the firebox of such appliances.

INTERNATIONAL CODE COUNCIL®
Copyright © 2019 ICC & NYSDOS. ALL RIGHTS RESERVED. Accessed by Lauren Gualdino (lgualdino@briarcliffmanor.org), (-) Order Number #100880972 on May 08, 2020 07:05 AM (PDT) pursuant to License Agreement with ICC & NYSDOS. No further reproduction, no

100880972

6. A closet, bathroom, toilet room, kitchen, garage, boiler room, furnace room or unconditioned attic.

   Exceptions:

   1. Where return air intakes are located not less than 10 feet (3048 mm) from cooking appliances and serve only the kitchen area, taking return air from a kitchen area shall not be prohibited.
   2. Dedicated forced-air systems serving only a garage shall not be prohibited from obtaining return air from the garage.

7. A crawl space by means of direct connection to the return side of a forced-air system. Transfer openings in the crawl space enclosure shall not be prohibited.

G2442.4 (618.4) Screen. Required outdoor air inlets shall be covered with a screen having $^1/_4$-inch (6.4 mm) openings.

G2442.5 (618.5) Return-air limitation. Return air from one *dwelling unit* shall not be discharged into another *dwelling unit*.

G2442.6 (618.6) Furnace plenums and air ducts. Where a *furnace* is installed so that supply ducts carry air circulated by the *furnace* to areas outside of the space containing the *furnace*, the return air shall be handled by a duct(s) sealed to the *furnace* casing and terminating outside of the space containing the *furnace*.

SECTION G2443 (619)
CONVERSION BURNERS

G2443.1 (619.1) Conversion burners. The installation of *conversion burners* shall conform to ANSI Z21.8.

SECTION G2444 (620)
UNIT HEATERS

G2444.1 (620.1) General. *Unit heaters* shall be tested in accordance with ANSI Z83.8/CSA 2.6 and shall be installed in accordance with the manufacturer's instructions.

G2444.2 (620.2) Support. Suspended-type *unit heaters* shall be supported by elements that are designed and constructed to accommodate the weight and dynamic loads. Hangers and brackets shall be of noncombustible material.

G2444.3 (620.3) Ductwork. Ducts shall not be connected to a unit heater unless the heater is *listed* for such installation.

G2444.4 (620.4) Clearance. Suspended-type *unit heaters* shall be installed with *clearances* to *combustible materials* of not less than 18 inches (457 mm) at the sides, 12 inches (305 mm) at the bottom and 6 inches (152 mm) above the top where the unit heater has an internal *draft hood* or 1 inch (25 mm) above the top of the sloping side of the vertical *draft hood*.

Floor-mounted-type *unit heaters* shall be installed with *clearances* to *combustible materials* at the back and one side only of not less than 6 inches (152 mm). Where the *flue gases* are vented horizontally, the 6-inch (152 mm) *clearance* shall be measured from the *draft hood* or *vent* instead of the rear wall of the unit heater. Floor-mounted-type *unit heaters* shall not be installed on combustible floors unless *listed* for such installation.

Clearances for servicing all *unit heaters* shall be in accordance with the manufacturer's installation instructions.

Exception: *Unit heaters listed* for reduced *clearance* shall be permitted to be installed with such *clearances* in accordance with their listing and the manufacturer's instructions.

SECTION G2445 (621)
UNVENTED ROOM HEATERS

G2445.1 (621.1) General. *Unvented room heaters* shall be tested in accordance with ANSI Z21.11.2 and shall be installed in accordance with the conditions of the listing and the manufacturer's instructions.

G2445.2 (621.2) Prohibited use. One or more *unvented room heaters* shall not be used as the sole source of comfort heating in a *dwelling unit*.

G2445.3 (621.3) Input rating. *Unvented room heaters* shall not have an input rating in excess of 40,000 *Btu*/h (11.7 kW).

G2445.4 (621.4) Prohibited locations. The location of *unvented room heaters* shall comply with Section G2406.2.

G2445.5 (621.5) Room or space volume. The aggregate input rating of all *unvented appliances* installed in a room or space shall not exceed 20 *Btu*/h per *cubic foot* (207 W/m^3) of volume of such room or space. Where the room or space in which the *appliances* are installed is directly connected to another room or space by a doorway, archway or other opening of comparable size that cannot be closed, the volume of such adjacent room or space shall be permitted to be included in the calculations.

G2445.6 (621.6) Oxygen-depletion safety system. *Unvented room heaters* shall be equipped with an oxygen-depletion-sensitive safety shutoff system. The system shall shut off the gas supply to the main and *pilot burners* when the oxygen in the surrounding atmosphere is depleted to the percent concentration specified by the manufacturer, but not lower than 18 percent. The system shall not incorporate field adjustment means capable of changing the set point at which the system acts to shut off the gas supply to the room heater.

G2445.7 (621.7) Unvented decorative room heaters. An unvented decorative room heater shall not be installed in a *factory-built fireplace* unless the *fireplace* system has been specifically tested, *listed* and *labeled* for such use in accordance with UL 127.

G2445.7.1 (621.7.1) Ventless firebox enclosures. Ventless firebox enclosures used with unvented decorative room heaters shall be *listed* as complying with ANSI Z21.91.

SECTION G2446 (622)
VENTED ROOM HEATERS

G2446.1 (622.1) General. *Vented room heaters* shall be tested in accordance with ANSI Z21.86/CSA 2.32, shall be designed and equipped as specified in Section G2432.2 and shall be installed in accordance with the manufacturer's instructions.

INTERNATIONAL CODE COUNCIL®
Copyright © 2019 ICC & NYSDOS. ALL RIGHTS RESERVED. Accessed by Lauren Gualdino (lgualdino@briarcliffmanor.org), (-) Order Number #100880972 on May 08, 2020 07:05 AM (PDT) pursuant to License Agreement with ICC & NYSDOS. No further reproduction, no

100880972

SECTION G2447 (623)
COOKING APPLIANCES

G2447.1 (623.1) Cooking appliances. Cooking *appliances* that are designed for permanent installation, including ranges, ovens, stoves, broilers, grills, fryers, griddles, hot plates and barbecues, shall be tested in accordance with ANSI Z21.1 or ANSI Z21.58/CSA 1.6 and shall be installed in accordance with the manufacturer's instructions.

G2447.2 (623.2) Prohibited location. Cooking appliances designed, tested, *listed* and *labeled* for use in commercial occupancies shall not be installed within dwelling units or within any area where domestic cooking operations occur.

Exceptions:

1. Appliances that are also listed as domestic cooking appliances.
2. Where the installation is designed by a licensed Professional Engineer, in compliance with the manufacturer's installation instructions.

G2447.3 (623.3) Domestic appliances. Cooking *appliances* installed within *dwelling units* and within areas where domestic cooking operations occur shall be *listed* and *labeled* as household-type *appliances* for domestic use.

G2447.4 (623.4) Range installation. Ranges installed on combustible floors shall be set on their own bases or legs and shall be installed with *clearances* of not less than that shown on the label.

G2447.5 (623.7) Vertical clearance above cooking top. Household cooking *appliances* shall have a vertical *clearance* above the cooking top of not less than 30 inches (760 mm) to *combustible material* and metal cabinets. A minimum *clearance* of 24 inches (610 mm) is permitted where one of the following is installed:

1. The underside of the *combustible material* or metal cabinet above the cooking top is protected with not less than $^1/_4$-inch (6.4 mm) insulating millboard covered with sheet metal not less than 0.0122 inch (0.3 mm) thick.
2. A metal ventilating hood constructed of sheet metal not less than 0.0122 inch (0.3 mm) thick is installed above the cooking top with a *clearance* of not less than $^1/_4$ inch (6.4 mm) between the hood and the underside of the *combustible material* or metal cabinet. The hood shall have a width not less than the width of the *appliance* and shall be centered over the *appliance*.
3. A *listed* cooking *appliance* or microwave oven is installed over a *listed* cooking *appliance* and in compliance with the terms of the manufacturer's installation instructions for the upper *appliance*.

SECTION G2448 (624)
WATER HEATERS

G2448.1 (624.1) General. Water heaters shall be tested in accordance with ANSI Z21.10.1/CSA 4.1 and ANSI Z21.10.3/CSA 4.3 and shall be installed in accordance with the manufacturer's instructions.

G2448.1.1 (624.1.1) Installation requirements. The requirements for *water heaters* relative to sizing, *relief valves*, drain pans and scald protection shall be in accordance with this code.

G2448.2 (624.2) Water heaters utilized for space heating. *Water heaters* utilized both to supply potable hot water and provide hot water for space-heating applications shall be *listed* and *labeled* for such applications by the manufacturer and shall be installed in accordance with the manufacturer's instructions and this code.

SECTION G2449 (627)
AIR-CONDITIONING APPLIANCES

G2449.1 (627.1) General. Gas-fired air-conditioning *appliances* shall be tested in accordance with ANSI Z21.40.1/CSA 2.91 or ANSI Z21.40.2/CSA 2.92 and shall be installed in accordance with the manufacturer's instructions.

G2449.2 (627.2) Independent piping. *Gas piping* serving heating *appliances* shall be permitted to also serve cooling *appliances* where such heating and cooling *appliances* cannot be operated simultaneously (see Section G2413).

G2449.3 (627.3) Connection of gas-engine-powered air conditioners. To protect against the effects of normal vibration in service, gas engines shall not be rigidly connected to the gas supply *piping*.

G2449.4 (627.6) Installation. Air-conditioning *appliances* shall be installed in accordance with the manufacturer's instructions. Unless the *appliance* is *listed* for installation on a combustible surface such as a floor or roof, or unless the surface is protected in an *approved* manner, the *appliance* shall be installed on a surface of noncombustible construction with *noncombustible material* and surface finish, and *combustible material* shall not be against the underside thereof.

SECTION G2450 (628)
ILLUMINATING APPLIANCES

G2450.1 (628.1) General. Illuminating *appliances* shall be tested in accordance with ANSI Z21.42 and shall be installed in accordance with the manufacturer's instructions.

G2450.2 (628.2) Mounting on buildings. Illuminating *appliances* designed for wall or ceiling mounting shall be securely attached to substantial structures in such a manner that they are not dependent on the *gas piping* for support.

G2450.3 (628.3) Mounting on posts. Illuminating *appliances* designed for post mounting shall be securely and rigidly attached to a post. Posts shall be rigidly mounted. The strength and rigidity of posts greater than 3 feet (914 mm) in height shall be at least equivalent to that of a $2^1/_2$-inch-diameter (64 mm) post constructed of 0.064-inch-thick (1.6 mm) steel or a 1-inch (25 mm) Schedule 40 steel *pipe*. Posts 3 feet (914 mm) or less in height shall not be smaller than a $^3/_4$-inch (19.1 mm) Schedule 40 steel *pipe*. Drain openings shall be provided near the base of posts where there is a possibility of water collecting inside them.

INTERNATIONAL CODE COUNCIL®
Copyright © 2019 ICC & NYSDOS. ALL RIGHTS RESERVED. Accessed by Lauren Gualdino (lgualdino@briarcliffmanor.org), (-) Order Number #100880972 on May 08, 2020 07:05 AM (PDT) pursuant to License Agreement with ICC & NYSDOS. No further reproduction, no

100880972

G2450.4 (628.4) Appliance pressure regulators. Where an *appliance pressure regulator* is not supplied with an illuminating *appliance* and the service line is not equipped with a *service pressure regulator*, an *appliance pressure regulator* shall be installed in the line to the illuminating *appliance*. For multiple installations, one *regulator* of adequate capacity shall be permitted to serve more than one illuminating *appliance*.

SECTION G2451 (630)
INFRARED RADIANT HEATERS

G2451.1 (630.1) General. Infrared radiant heaters shall be tested in accordance with ANSI Z83.19 or Z83.20 and shall be installed in accordance with the manufacturer's instructions.

G2451.2 (630.2) Support. *Infrared radiant heaters* shall be fixed in a position independent of gas and electric supply lines. Hangers and brackets shall be of *noncombustible material*.

SECTION G2452 (631)
BOILERS

G2452.1 (631.1) Standards. Boilers shall be *listed* in accordance with the requirements of ANSI Z21.13/CSA 4.9 or UL 795. If applicable, the boiler shall be designed and constructed in accordance with the requirements of ASME CSD-1 and as applicable, the ASME *Boiler and Pressure Vessel Code*, Sections I, II, IV, V and IX and NFPA 85.

G2452.2 (631.2) Installation. In addition to the requirements of this code, the installation of boilers shall be in accordance with the manufacturer's instructions. Operating instructions of a permanent type shall be attached to the boiler. Boilers shall have all *controls* set, adjusted and tested by the installer. A complete *control* diagram together with complete boiler operating instructions shall be furnished by the installer. The manufacturer's rating data and the nameplate shall be attached to the boiler.

G2452.3 (631.3) Clearance to combustible material. *Clearances* to *combustible materials* shall be in accordance with Section G2409.4.

SECTION G2453 (634)
CHIMNEY DAMPER OPENING AREA

G2453.1 (634.1) Free opening area of chimney dampers. Where an unlisted decorative *appliance* for installation in a vented *fireplace* is installed, the *fireplace damper* shall have a permanent free opening equal to or greater than specified in Table G2453.1.

SECTION G2454 (636)
OUTDOOR DECORATIVE APPLIANCES

G2454.1 (636.1) General. Permanently fixed-in-place outdoor decorative appliances shall be tested in accordance with ANSI Z21.97 and shall be installed in accordance with the manufacturer's instructions.

TABLE G2453.1 (634.1)
FREE OPENING AREA OF CHIMNEY DAMPER FOR VENTING FLUE GASES FROM UNLISTED DECORATIVE APPLIANCES FOR INSTALLATION IN VENTED FIREPLACES

CHIMNEY HEIGHT (feet)	MINIMUM PERMANENT FREE OPENING (square inches)[a]						
	8	13	20	29	39	51	64
	Appliance input rating (Btu per hour)						
6	7,800	14,000	23,200	34,000	46,400	62,400	80,000
8	8,400	15,200	25,200	37,000	50,400	68,000	86,000
10	9,000	16,800	27,600	40,400	55,800	74,400	96,400
15	9,800	18,200	30,200	44,600	62,400	84,000	108,800
20	10,600	20,200	32,600	50,400	68,400	94,000	122,200
30	11,200	21,600	36,600	55,200	76,800	105,800	138,600

For SI: 1 inch = 25.4 mm, 1 foot = 304.8 mm, 1 square inch = 645.16 mm^2, 1,000 Btu per hour = 0.2931 kW.

a. The first six minimum permanent free openings (8 to 51 square inches) correspond approximately to the cross-sectional areas of chimneys having diameters of 3 through 8 inches, respectively. The 64-square-inch opening corresponds to the cross-sectional area of standard 8-inch by 8-inch chimney tile.

INTERNATIONAL CODE COUNCIL®
Copyright © 2019 ICC & NYSDOS. ALL RIGHTS RESERVED. Accessed by Lauren Gualdino (lgualdino@briarcliffmanor.org), (-) Order Number #100880972 on May 08, 2020 07:05 AM (PDT) pursuant to License Agreement with ICC & NYSDOS. No further reproduction, no

100880972

INTERNATIONAL CODE COUNCIL®
Copyright © 2019 ICC & NYSDOS. ALL RIGHTS RESERVED. Accessed by Lauren Gualdino (lgualdino@briarcliffmanor.org), (-) Order Number #100880972 on May 08, 2020 07:05 AM (PDT) pursuant to License Agreement with ICC & NYSDOS. No further reproduction, no

100880972

Part VII—Plumbing

CHAPTER 25

PLUMBING ADMINISTRATION

SECTION P2501
GENERAL

P2501.1 Scope. The provisions of this chapter shall establish the general administrative requirements applicable to plumbing systems and inspection requirements of this code.

P2501.2 Application. In addition to the general administration requirements of Chapter 1, the administrative provisions of this chapter shall apply to the plumbing requirements of Chapters 25 through 33.

SECTION P2502
EXISTING PLUMBING SYSTEMS

P2502.1 Existing building sewers and building drains. Where the entire sanitary drainage system of an existing building is replaced, existing *building drains* under concrete slabs and existing *building sewers* that will serve the new system shall be internally examined to verify that the piping is sloping in the correct direction, is not broken, is not obstructed and is sized for the drainage load of the new plumbing drainage system to be installed.

P2502.2 Additions, alterations or repairs. Additions, *alterations*, renovations or repairs to any plumbing system shall conform to that required for a new plumbing system without requiring the existing plumbing system to comply with the requirements of this code. Additions, *alterations* or repairs shall not cause an existing system to become unsafe, insanitary or overloaded.

Minor additions, *alterations*, renovations and repairs to existing plumbing systems shall be permitted in the same manner and arrangement as in the existing system, provided that such repairs or replacement are not hazardous and are *approved*.

SECTION P2503
INSPECTION AND TESTS

P2503.1 Inspection required. New plumbing work and parts of existing systems affected by new work or *alterations* shall be inspected by the *building official* to ensure compliance with the requirements of this code.

P2503.2 Concealment. A plumbing or drainage system, or part thereof, shall not be covered, concealed or put into use until it has been tested, inspected and *approved* by the *building official*.

P2503.3 Responsibility of permittee. Test equipment, materials and labor shall be furnished by the permittee.

P2503.4 Building sewer testing. The *building sewer* shall be tested by insertion of a test plug at the point of connection with the public sewer, filling the *building sewer* with water and pressurizing the sewer to not less than a 10-foot (3048 mm) head of water. The test pressure shall not decrease during a period of not less than 15 minutes. The *building sewer* shall be watertight at all points.

A forced sewer test shall consist of pressurizing the piping to a pressure of not less than 5 psi (34.5 kPa) greater than the pump rating and maintaining such pressure for not less than 15 minutes. The forced sewer shall be watertight at all points.

P2503.5 Drain, waste and vent systems testing. Rough-in and finished plumbing installations of drain, waste and vent systems shall be tested in accordance with Sections P2503.5.1 and P2503.5.2.

P2503.5.1 Rough plumbing. DWV systems shall be tested on completion of the rough piping installation by water or, for piping systems other than plastic, by air, without evidence of leakage. Either test shall be applied to the drainage system in its entirety or in sections after rough-in piping has been installed, as follows:

1. Water test. Each section shall be filled with water to a point not less than 5 feet (1524 mm) above the highest fitting connection in that section, or to the highest point in the completed system. Water shall be held in the section under test for a period of 15 minutes. The system shall prove leak free by visual inspection.
2. Air test. The portion under test shall be maintained at a gauge pressure of 5 pounds per square inch (psi) (34 kPa) or 10 inches of mercury column (34 kPa). This pressure shall be held without introduction of additional air for a period of 15 minutes.

P2503.5.2 Finished plumbing. After the plumbing fixtures have been set and their traps filled with water, their connections shall be tested and proved gas tight or watertight as follows:

1. Water tightness. Each fixture shall be filled and then drained. Traps and fixture connections shall be proven watertight by visual inspection.
2. Gas tightness. Where required by the local administrative authority, a final test for gas tightness of the DWV system shall be made by the smoke or peppermint test as follows:

    2.1. Smoke test. Introduce a pungent, thick smoke into the system. When the smoke appears at vent terminals, such terminals

INTERNATIONAL CODE COUNCIL®
Copyright © 2019 ICC & NYSDOS. ALL RIGHTS RESERVED. Accessed by Lauren Gualdino (lgualdino@briarcliffmanor.org), (-) Order Number #100880972 on May 08, 2020 07:05 AM (PDT) pursuant to License Agreement with ICC & NYSDOS. No further reproduction, no

100880972

shall be sealed and a pressure equivalent to a 1-inch water column (249 Pa) shall be applied and maintained for a test period of not less than 15 minutes.

2.2. Peppermint test. Introduce 2 ounces (59 mL) of oil of peppermint into the system. Add 10 quarts (9464 mL) of hot water and seal the vent terminals. The odor of peppermint shall not be detected at any trap or other point in the system.

P2503.6 Shower liner test. Where shower floors and receptors are made watertight by the application of materials required by Section P2709.2, the completed liner installation shall be tested. The pipe from the shower drain shall be plugged watertight for the test. The floor and receptor area shall be filled with potable water to a depth of not less than 2 inches (51 mm) measured at the threshold. Where a threshold of not less than 2 inches (51 mm) in height does not exist, a temporary threshold shall be constructed to retain the test water in the lined floor or receptor area to a level not less than 2 inches (51 mm) in depth measured at the threshold. The water shall be retained for a test period of not less than 15 minutes and there shall not be evidence of leakage.

P2503.7 Water-supply system testing. Upon completion of the water-supply system or a section of it, the system or portion completed shall be tested and proved tight under a water pressure of not less than the working pressure of the system or, for piping systems other than plastic, by an air test of not less than 50 psi (345 kPa). This pressure shall be held for not less than 15 minutes. The water used for tests shall be obtained from a potable water source.

Exception: For PEX piping systems, testing with a compressed gas shall be an alternative to hydrostatic testing where compressed air or other gas pressure testing is specifically authorized by the manufacturer's instructions for the PEX pipe and fittings products installed at the time the system is being tested, and compressed air or other gas testing is not otherwise prohibited by applicable codes, laws or regulations outside of this code.

P2503.8 Inspection and testing of backflow prevention devices. Inspection and testing of backflow prevention devices shall comply with Sections P2503.8.1 and P2503.8.2.

P2503.8.1 Inspections. Inspections shall be made of backflow prevention assemblies to determine whether they are operable.

P2503.8.2 Testing. Reduced pressure principle, double check, double check detector and pressure vacuum breaker backflow preventer assemblies shall be tested at the time of installation, immediately after repairs or relocation and every year thereafter.

P2503.9 Test gauges. Gauges used for testing shall be as follows:

1. Tests requiring a pressure of 10 psi or less shall utilize a testing gauge having increments of 0.10 psi (0.69 kPa) or less.
2. Tests requiring a pressure higher than 10 psi (0.69 kPa) but less than or equal to 100 psi (690 kPa) shall use a testing gauge having increments of 1 psi (6.9 kPa) or less.
3. Tests requiring a pressure higher than 100 psi (690 kPa) shall use a testing gauge having increments of 2 psi (14 kPa) or less.

INTERNATIONAL CODE COUNCIL®
Copyright © 2019 ICC & NYSDOS. ALL RIGHTS RESERVED. Accessed by Lauren Gualdino (lgualdino@briarcliffmanor.org), (-) Order Number #100880972 on May 08, 2020 07:05 AM (PDT) pursuant to License Agreement with ICC & NYSDOS. No further reproduction, no

100880972

CHAPTER 26

GENERAL PLUMBING REQUIREMENTS

SECTION P2601 GENERAL

P2601.1 Scope. The provisions of this chapter shall govern the installation of plumbing not specifically covered in other chapters applicable to plumbing systems. The installation of plumbing, *appliances, equipment* and systems not addressed by this code shall comply with the applicable provisions of the *Plumbing Code of New York State*.

P2601.2 Connections to drainage system. Plumbing fixtures, drains, appurtenances and *appliances* used to receive or discharge liquid wastes or sewage shall be directly connected to the sanitary drainage system of the building or premises, in accordance with the requirements of this code. This section shall not be construed to prevent indirect waste connections where required by the code.

Exception: Bathtubs, showers, lavatories, clothes washers and laundry trays shall not be required to discharge to the sanitary drainage system where such fixtures discharge to systems complying with Sections P2910 and P2911.

P2601.3 Flood hazard areas. In flood hazard areas as established by Table R301.2(1), plumbing fixtures, drains, and *appliances* shall be located or installed in accordance with Section R322.1.6.

SECTION P2602 INDIVIDUAL WATER SUPPLY AND SEWAGE DISPOSAL

[NY] P2602.1 General. The water-distribution system of any building or premises where plumbing fixtures are installed shall be connected to a public water supply. Where a public water-supply system is not available, or connection to the supply is not feasible, an individual water supply shall be provided. Individual water supplies shall be constructed and installed in accordance with the applicable state and local laws.

Sanitary drainage piping from plumbing fixtures in buildings and sanitary drainage piping systems from premises shall be connected to a public sewer. Where a public sewer is not available, the sanitary drainage piping and systems shall be connected to a private sewage disposal system in compliance with state or local requirements.

Exception: Sanitary drainage piping and systems that convey only the discharge from bathtubs, showers, lavatories, clothes washers and laundry trays shall not be required to connect to a public sewer or to a private sewage disposal system provided that the piping or systems are connected to a system in accordance with Section P2910 or P2911.

[NY] P2602.1.1 Individual water supplies. Individual water supplies (private wells) shall be installed by a well driller registered with the Department of Environmental Conservation and be in compliance with the provisions of Appendix 5-B of the New York State Department of Health regulations (10NYCRR Appendix 5-B.)

[NY] P2602.1.2 Individual sewage treatment system. Individual sewage treatment systems shall be constructed in conformance with the applicable requirements of:

1. Appendix 75-A (Wastewater Treatment Standards-Individual Household Systems) of the New York State Department of Health Sanitary Code (10 NYCRR).
2. New York State Department of Environmental Conservation, Design Standards for Intermediate Sized Wastewater Treatment Systems.
3. The New York City Department of Environmental Protection (Rules and Regulations for the Protection from Contamination, Degradation and Pollution of the New York City Water Supply and its Sources).
4. The Adirondack Park Agency.
5. Local county health departments.
6. Other applicable statutes, local laws, ordinances or regulations.

P2602.2 Flood-resistant installation. In flood hazard areas as established by Table R301.2(1):

1. Water supply systems shall be designed and constructed to prevent infiltration of floodwaters.
2. Pipes for sewage disposal systems shall be designed and constructed to prevent infiltration of floodwaters into the systems and discharges from the systems into floodwaters.

SECTION P2603 STRUCTURAL AND PIPING PROTECTION

P2603.1 General. In the process of installing or repairing any part of a plumbing and drainage installation, the finished floors, walls, ceilings, tile work or any other part of the building or premises that must be changed or replaced shall be left in a safe structural condition in accordance with the requirements of the building portion of this code.

P2603.2 Drilling and notching. Wood-framed structural members shall not be drilled, notched or altered in any manner except as provided in Sections R502.8, R602.6, R802.7 and R802.7.1. Holes in load-bearing members of cold-formed steel light-frame construction shall be made only in accordance with Sections R505.2.6, R603.2.6 and R804.2.6. In accordance with the provisions in Sections R505.3.5, R603.3.3 and R804.3.4, cutting and notching of flanges and lips of load-bearing members of cold-formed steel light-frame construction shall be prohibited. Structural insulated panels (SIPs) shall be drilled and notched or altered in accordance with the provisions of Section R613.7.

P2603.2.1 Protection against physical damage. In concealed locations, where piping, other than cast-iron or galvanized steel, is installed through holes or notches in studs, joists, rafters or similar members less than $1^{1}/_{4}$ inches (31.8

INTERNATIONAL CODE COUNCIL®
Copyright © 2019 ICC & NYSDOS. ALL RIGHTS RESERVED. Accessed by Lauren Gualdino (lgualdino@briarcliffmanor.org), (-) Order Number #100880972 on May 08, 2020 07:05 AM (PDT) pursuant to License Agreement with ICC & NYSDOS. No further reproduction, no

100880972

mm) from the nearest edge of the member, the pipe shall be protected by steel shield plates. Such shield plates shall have a thickness of not less than 0.0575 inch (1.463 mm) (No. 16 Gage). Such plates shall cover the area of the pipe where the member is notched or bored, and shall extend not less than 2 inches (51 mm) above sole plates and below top plates.

P2603.3 Protection against corrosion. Metallic piping, except for cast iron, ductile iron and galvanized steel, shall not be placed in direct contact with steel framing members, concrete or masonry. Metallic piping shall not be placed in direct contact with corrosive soil. Where sheathing is used to prevent direct contact, the sheathing material thickness shall be not less than 0.008 inch (8 mil) (0.203 mm) and shall be made of plastic. Where sheathing protects piping that penetrates concrete or masonry walls or floors, the sheathing shall be installed in a manner that allows movement of the piping within the sheathing.

P2603.4 Pipes through foundation walls. A pipe that passes through a foundation wall shall be provided with a relieving arch, or a pipe sleeve shall be built into the foundation wall. The sleeve shall be two pipe sizes greater than the pipe passing through the wall.

P2603.5 Freezing. In localities having a winter design temperature of 32°F (0°C) or lower as shown in Table R301.2(1) of this code, a water, soil or waste pipe shall not be installed outside of a building, in exterior walls, in *attics* or crawl spaces, or in any other place subjected to freezing temperature unless adequate provision is made to protect it from freezing by insulation or heat or both. Water service pipe shall be installed not less than 12 inches (305 mm) deep and not less than 6 inches (152 mm) below the frost line.

P2603.5.1 Sewer depth. *Building sewers* that connect to private sewage disposal systems shall be not less than **[NUMBER]** inches (mm) below finished grade at the point of septic tank connection. *Building sewers* shall be not less than **[NUMBER]** inches (mm) below grade.

SECTION P2604
TRENCHING AND BACKFILLING

P2604.1 Trenching and bedding. Where trenches are excavated such that the bottom of the trench forms the bed for the pipe, solid and continuous load-bearing support shall be provided between joints. Where over-excavated, the trench shall be backfilled to the proper grade with compacted earth, sand, fine gravel or similar granular material. Piping shall not be supported on rocks or blocks at any point. Rocky or unstable soil shall be over-excavated by two or more pipe diameters and brought to the proper grade with suitable compacted granular material.

P2604.2 Water service and building sewer in same trench. Where the water service piping and *building sewer* piping is installed in same trench, the installation shall be in accordance with Section P2906.4.1.

P2604.3 Backfilling. Backfill shall be free from discarded construction material and debris. Backfill shall be free from rocks, broken concrete and frozen chunks until the pipe is covered by not less than 12 inches (305 mm) of tamped earth. Backfill shall be placed evenly on both sides of the pipe and tamped to retain proper alignment. Loose earth shall be carefully placed in the trench in 6-inch (152 mm) layers and tamped in place.

P2604.4 Protection of footings. Trenching installed parallel to footings and walls shall not extend into the bearing plane of a footing or wall. The upper boundary of the bearing plane is a line that extends downward, at an angle of 45 degrees (0.79 rad) from horizontal, from the outside bottom edge of the footing or wall.

SECTION P2605
SUPPORT

P2605.1 General. Piping shall be supported in accordance with the following:

1. Piping shall be supported to ensure alignment and prevent sagging, and allow movement associated with the expansion and contraction of the piping system.
2. Piping in the ground shall be laid on a firm bed for its entire length, except where support is otherwise provided.
3. Hangers and anchors shall be of sufficient strength to maintain their proportional share of the weight of pipe and contents and of sufficient width to prevent distortion to the pipe. Hangers and strapping shall be of *approved* material that will not promote galvanic action.
4. Where horizontal pipes 4 inches (102 mm) and larger convey drainage or waste, and where a pipe fitting changes the flow direction greater than 45 degrees (0.79 rad), rigid bracing or other rigid support arrangements shall be installed to resist movement of the upstream pipe in the direction of flow. A change of flow direction into a vertical pipe shall not require the upstream pipe to be braced.
5. Piping shall be supported at distances not to exceed those indicated in Table P2605.1.

SECTION P2606
PENETRATIONS

P2606.1 Sealing of annular spaces. The annular space between the outside of a pipe and the inside of a pipe sleeve or between the outside of a pipe and an opening in a building envelope wall, floor, or ceiling assembly penetrated by a pipe shall be sealed with caulking material or foam sealant or closed with a gasketing system. The caulking material, foam sealant or gasketing system shall be designed for the conditions at the penetration location and shall be compatible with the pipe, sleeve and building materials in contact with the sealing materials. Annular spaces created by pipes penetrating fire-resistance-rated assemblies or membranes of such assemblies shall be sealed or closed in accordance with the building portion of this code.

INTERNATIONAL CODE COUNCIL®
Copyright © 2019 ICC & NYSDOS. ALL RIGHTS RESERVED. Accessed by Lauren Gualdino (lgualdino@briarcliffmanor.org), (-) Order Number #100880972 on May 08, 2020 07:05 AM (PDT) pursuant to License Agreement with ICC & NYSDOS. No further reproduction, no

100880972

TABLE P2605.1
PIPING SUPPORT

PIPING MATERIAL	MAXIMUM HORIZONTAL SPACING (feet)	MAXIMUM VERTICAL SPACING (feet)
ABS pipe	4	10[b]
Aluminum tubing	10	15
Cast-iron pipe	5[a]	15
Copper or copper-alloy pipe	12	10
Copper or copper-alloy tubing ($1^1/_4$ inches in diameter and smaller)	6	10
Copper or copper-alloy tubing ($1^1/_2$ inches in diameter and larger)	10	10
Cross-linked polyethylene (PEX) pipe, 1 inch and smaller	2.67 (32 inches)	10[b]
Cross-linked polyethylene (PEX) pipe, $1^1/_4$ inch and larger	4	10[b]
Cross-linked polyethylene/aluminum/cross-linked polyethylene (PEX-AL-PEX) pipe	2.67 (32 inches)	4[b]
CPVC pipe or tubing (1 inch in diameter and smaller)	3	10[b]
CPVC pipe or tubing ($1^1/_4$ inches in diameter and larger)	4	10[b]
Lead pipe	Continuous	4
PB pipe or tubing	2.67 (32 inches)	4
Polyethylene of raised temperature (PE-RT) pipe, 1 inch and smaller	2.67 (32 inches)	10[b]
Polyethylene of raised temperature (PE-RT) pipe, $1^1/_4$ inch and larger	4	10[b]
Polypropylene (PP) pipe or tubing (1 inch and smaller)	2.67 (32 inches)	10[b]
Polypropylene (PP) pipe or tubing ($1^1/_4$ inches and larger)	4	10[b]
PVC pipe	4	10[b]
Stainless steel drainage systems	10	10[b]
Steel pipe	12	15

For SI: 1 inch = 25.4 mm, 1 foot = 304.8 mm.

a. The maximum horizontal spacing of cast-iron pipe hangers shall be increased to 10 feet where 10-foot lengths of pipe are installed.

b. For sizes 2 inches and smaller, a guide shall be installed midway between required vertical supports. Such guides shall prevent pipe movement in a direction perpendicular to the axis of the pipe.

SECTION P2607
WATERPROOFING OF OPENINGS

P2607.1 Pipes penetrating roofs. Where a pipe penetrates a roof, a flashing of lead, copper, galvanized steel or an *approved* elastomeric material shall be installed in a manner that prevents water entry into the building. Counterflashing into the opening of pipe serving as a vent terminal shall not reduce the required internal cross-sectional area of the vent pipe to less than the internal cross-sectional area of one pipe size smaller.

P2607.2 Pipes penetrating exterior walls. Where a pipe penetrates an exterior wall, a waterproof seal shall be made on the exterior of the wall by one of the following methods:

1. A waterproof sealant applied at the joint between the wall and the pipe.
2. A flashing of an *approved* elastomeric material.

SECTION P2608
WORKMANSHIP

P2608.1 General. Valves, pipes and fittings shall be installed in correct relationship to the direction of the flow. Burred ends shall be reamed to the full bore of the pipe.

SECTION P2609
MATERIALS EVALUATION AND LISTING

P2609.1 Identification. Each length of pipe and each pipe fitting, trap, fixture, material and device utilized in a plumbing system shall bear the identification of the manufacturer and any markings required by the applicable referenced standards. Nipples created from the cutting and threading of *approved* pipe shall not be required to be identified.

Exception: Where the manufacturer identification cannot be marked on pipe fittings and pipe nipples because of the small size of such fittings, the identification shall be printed on the item packaging or on documentation provided with the item.

P2609.2 Installation of materials. Materials used shall be installed in strict accordance with the standards under which the materials are accepted and *approved*. In the absence of such installation procedures, the manufacturer's instructions shall be followed. Where the requirements of referenced standards or manufacturer's instructions do not conform to the minimum provisions of this code, the provisions of this code shall apply.

P2609.3 Plastic pipe, fittings and components. Plastic pipe, fittings and components shall be third-party certified as conforming to NSF 14.

INTERNATIONAL CODE COUNCIL®
Copyright © 2019 ICC & NYSDOS. ALL RIGHTS RESERVED. Accessed by Lauren Gualdino (lgualdino@briarcliffmanor.org), (-) Order Number #100880972 on May 08, 2020 07:05 AM (PDT) pursuant to License Agreement with ICC & NYSDOS. No further reproduction, no

100880972

P2609.4 Third-party certification. Plumbing products and materials required by the code to be in compliance with a referenced standard shall be *listed* by a third-party certification agency as complying with the referenced standards. Products and materials shall be identified in accordance with Section P2609.1.

P2609.5 Water supply systems. Water service pipes, water distribution pipes and the necessary connecting pipes, fittings, control valves, faucets and appurtenances used to dispense water intended for human ingestion shall be evaluated and *listed* as conforming to the requirements of NSF 61.

INTERNATIONAL CODE COUNCIL®
Copyright © 2019 ICC & NYSDOS. ALL RIGHTS RESERVED. Accessed by Lauren Gualdino (lgualdino@briarcliffmanor.org), (-) Order Number #100880972 on May 08, 2020 07:05 AM (PDT) pursuant to License Agreement with ICC & NYSDOS. No further reproduction, no

100880972

CHAPTER 27

PLUMBING FIXTURES

SECTION P2701
FIXTURES, FAUCETS AND FIXTURE FITTINGS

P2701.1 Quality of fixtures. Plumbing fixtures, faucets and fixture fittings shall have smooth impervious surfaces, shall be free from defects, shall not have concealed fouling surfaces, and shall conform to the standards indicated in Table P2701.1 and elsewhere in this code.

SECTION P2702
FIXTURE ACCESSORIES

P2702.1 Plumbing fixtures. Plumbing fixtures, other than water closets, shall be provided with *approved* strainers.

Exception: Hub drains receiving only clear water waste and standpipes shall not require strainers.

P2702.2 Waste fittings. Waste fittings shall conform to ASME A112.18.2/CSA B125.2, ASTM F409 or shall be made from pipe and pipe fittings complying with any of the standards indicated in Tables P3002.1(1) and P3002.3.

P2702.3 Plastic tubular fittings. Plastic tubular fittings shall conform to ASTM F409 as indicated in Table P2701.1.

P2702.4 Carriers for wall-hung water closets. Carriers for wall-hung water closets shall conform to ASME A112.6.2.

SECTION P2703
TAIL PIECES

P2703.1 Minimum size. Fixture tail pieces shall be not less than $1^1/_2$ inches (38 mm) in diameter for sinks, dishwashers, laundry tubs, bathtubs and similar fixtures, and not less than $1^1/_4$ inches (32 mm) in diameter for bidets, lavatories and similar fixtures.

SECTION P2704
SLIP-JOINT CONNECTIONS

P2704.1 Slip joints. Slip-joint connections shall be installed only for tubular waste piping and only between the trap outlet of a fixture and the connection to the drainage piping. Slip-joint connections shall be made with an *approved* elastomeric sealing gasket. Slip-joint connections shall be accessible. Such access shall provide an opening that is not less than 12 inches (305 mm) in its smallest dimension.

SECTION P2705
INSTALLATION

P2705.1 General. The installation of fixtures shall conform to the following:

1. Floor-outlet or floor-mounted fixtures shall be secured to the drainage connection and to the floor, where so designed, by screws, bolts, washers, nuts and similar fasteners of copper, copper alloy or other corrosion-resistant material.
2. Wall-hung fixtures shall be rigidly supported so that strain is not transmitted to the plumbing system.
3. Where fixtures come in contact with walls and floors, the contact area shall be watertight.
4. Plumbing fixtures shall be usable.
5. Water closets, lavatories and bidets. A water closet, lavatory or bidet shall not be set closer than 15 inches (381 mm) from its center to any side wall, partition or vanity or closer than 30 inches (762 mm) center-to-center between adjacent fixtures. There shall be a clearance of not less than 21 inches (533 mm) in front of a water closet, lavatory or bidet to any wall, fixture or door.
6. The location of piping, fixtures or equipment shall not interfere with the operation of windows or doors.
7. In flood hazard areas as established by Table R301.2(1), plumbing fixtures shall be located or installed in accordance with Section R322.1.6.
8. Integral fixture-fitting mounting surfaces on manufactured plumbing fixtures or plumbing fixtures constructed on site, shall meet the design requirements of ASME A112.19.2/CSA B45.1 or ASME A112.19.3/CSA B45.4.

SECTION P2706
WASTE RECEPTORS

P2706.1 General. For other than hub drains that receive only clear-water waste and standpipes, a removable strainer or basket shall cover the waste outlet of waste receptors. Waste receptors shall not be installed in concealed spaces. Waste receptors shall not be installed in plenums, attics, crawl spaces or interstitial spaces above ceilings and below floors. Waste receptors shall be *readily accessible*.

P2706.1.1 Hub drains. Hub drains shall be in the form of a hub or a pipe that extends not less than 1 inch (25 mm) above a water-impervious floor.

P2706.1.2 Standpipes. Standpipes shall extend not less than 18 inches (457 mm) and not greater than 42 inches (1067 mm) above the trap weir.

P2706.1.2.1 Laundry tray connection to standpipe. Where a laundry tray waste line connects into a standpipe for an automatic clothes washer drain, the standpipe shall extend not less than 30 inches (762 mm) above the standpipe trap weir and shall extend above the flood level rim of the laundry tray. The outlet of the laundry tray shall not be greater than 30 inches (762 mm) horizontally from the standpipe trap.

P2706.2 Prohibited waste receptors. Plumbing fixtures that are used for washing or bathing shall not be used to receive the discharge of indirect waste piping.

Exceptions:

1. A kitchen sink trap is acceptable for use as a receptor for a dishwasher.

INTERNATIONAL CODE COUNCIL®
Copyright © 2019 ICC & NYSDOS. ALL RIGHTS RESERVED. Accessed by Lauren Gualdino (lgualdino@briarcliffmanor.org), (-) Order Number #100880972 on May 08, 2020 07:05 AM (PDT) pursuant to License Agreement with ICC & NYSDOS. No further reproduction, no

100880972

TABLE P2701.1
PLUMBING FIXTURES, FAUCETS AND FIXTURE FITTINGS

MATERIAL	STANDARD
Air gap fittings for use with plumbing fixtures, appliances and appurtenances	ASME A112.1.3
Bathtub/whirlpool pressure-sealed doors	ASME A112.19.15
Diverters for faucets with hose spray, anti-syphon type, residential application	ASTM A112.18.1/CSA B125.1
Enameled cast-iron plumbing fixtures	ASME A112.19.1M/CSA B45.2
Floor drains	ASME A112.6.3
Framing-affixed supports for off-the-floor water closets with concealed tanks	ASME A112.6.2
Hose connection vacuum breaker	ASSE 1052
Hot water dispensers, household storage type, electrical	ASSE 1023
Household disposers	ASSE 1008
Hydraulic performance for water closets and urinals	ASME A112.19.2/CSA B45.1
Individual automatic compensating valves for individual fixture fittings	ASME A112.18.1/CSA B125.1
Individual shower control valves anti-scald	ASSE 1016/ASME A112.1016/CSA B125.16
Macerating toilet systems and related components	ASME A112.3.4/CSA B45.9
Nonvitreous ceramic plumbing fixtures	ASME A112.19.2/CSA B45.1
Plastic bathtub units	CSA B45.5/IAPMO Z124, ASME A112.19.2/CSA B45.1
Plastic lavatories	CSA B45.5/IAPMO Z124
Plastic shower receptors and shower stall	CSA B45.5/IAPMO Z124
Plastic sinks	CSA B45.5/IAPMO Z124
Plastic water closet bowls and tanks	CSA B45.5/IAPMO Z124
Plumbing fixture fittings	ASME A112.18.1/CSA B125.1
Plumbing fixture waste fittings	ASME A112.18.2/CSA B125.2, ASTM F409
Porcelain-enameled formed steel plumbing fixtures	ASME A112.19.1/CSA B45.2
Pressurized flushing devices for plumbing fixtures	ASSE 1037, CSA B125.3
Specification for copper sheet and strip for building construction	ASTM B370
Stainless steel plumbing fixtures	ASME A112.19.3/CSA B45.4
Suction fittings for use in whirlpool bathtub appliances	ASME A112.19.7 /CSA B45.10
Temperature-actuated, flow reduction valves to individual fixture fittings	ASSE 1062
Thermoplastic accessible and replaceable plastic tube and tubular fittings	ASTM F409
Trench drains	ASME A112.6.3
Trim for water closet bowls, tanks and urinals	ASME A112.19.5/CSA B45.15
Vacuum breaker wall hydrant-frost-resistant, automatic-draining type	ASSE 1019
Vitreous china plumbing fixtures	ASME A112.19.2/CSA B45.1
Wall-mounted and pedestal-mounted, adjustable and pivoting lavatory and sink carrier systems	ASME A112.19.12
Water closet flush tank fill valves	ASSE 1002/ASME A112.1002/CSA B125.12, CSA B125.3
Whirlpool bathtub appliances	ASME A112.19.7 /CSA B45.10

INTERNATIONAL CODE COUNCIL®
Copyright © 2019 ICC & NYSDOS. ALL RIGHTS RESERVED. Accessed by Lauren Gualdino (lgualdino@briarcliffmanor.org), (-) Order Number #100880972 on May 08, 2020 07:05 AM (PDT) pursuant to License Agreement with ICC & NYSDOS. No further reproduction, no

100880972

2. A laundry tray is acceptable for use as a receptor for a clothes washing machine.

SECTION P2707
DIRECTIONAL FITTINGS

P2707.1 Directional fitting required. *Approved* directional-type branch fittings shall be installed in fixture tailpieces receiving the discharge from food-waste disposer units or dishwashers.

SECTION P2708
SHOWERS

P2708.1 General. Shower compartments shall have not less than 900 square inches (0.6 m^2) of interior cross-sectional area. Shower compartments shall be not less than 30 inches (762 mm) in minimum dimension measured from the finished interior dimension of the shower compartment, exclusive of fixture valves, shower heads, soap dishes, and safety grab bars or rails. The minimum required area and dimension shall be measured from the finished interior dimension at a height equal to the top of the threshold and at a point tangent to its centerline and shall be continued to a height of not less than 70 inches (1778 mm) above the shower drain outlet. Hinged shower doors shall open outward. The wall area above built-in tubs having installed shower heads and in shower compartments shall be constructed in accordance with Section R702.4. Such walls shall form a water-tight joint with each other and with either the tub, receptor or shower floor.

Exceptions:

1. Fold-down seats shall be permitted in the shower, provided that the required 900-square-inch (0.6 m^2) dimension is maintained when the seat is in the folded-up position.
2. Shower compartments having not less than 25 inches (635 mm) in minimum dimension measured from the finished interior dimension of the compartment provided that the shower compartment has a cross-sectional area of not less than 1,300 square inches (0.838 m^2).

P2708.1.1 Access. The shower compartment access and egress opening shall have a clear and unobstructed finished width of not less than 22 inches (559 mm).

P2708.2 Shower drain. Shower drains shall have an outlet size of not less than $1^1/_2$ inches (38 mm) in diameter.

P2708.3 Water supply riser. Water supply risers from the shower valve to the shower head outlet, whether exposed or concealed, shall be attached to the structure using support devices designed for use with the specific piping material or fittings anchored with screws.

P2708.4 Shower control valves. Individual shower and tub/shower combination valves shall be equipped with control valves of the pressure-balance, thermostatic-mixing or combination pressure-balance/thermostatic-mixing valve types with a high limit stop in accordance with ASSE 1016/ASME A112.1016/CSA B125.16. The high limit stop shall be set to limit the water temperature to not greater than 120°F (49°C). In-line thermostatic valves shall not be used for compliance with this section.

P2708.5 Hand showers. Hand-held showers shall conform to ASME A112.18.1/CSA B125.1. Hand-held showers shall provide backflow protection in accordance with ASME A112.18.1/CSA B125.1 or shall be protected against backflow by a device complying with ASME A112.18.3.

SECTION P2709
SHOWER RECEPTORS

P2709.1 Construction. Where a shower receptor has a finished curb threshold, it shall be not less than 1 inch (25 mm) below the sides and back of the receptor. The curb shall be not less than 2 inches (51 mm) and not more than 9 inches (229 mm) deep when measured from the top of the curb to the top of the drain. The finished floor shall slope uniformly toward the drain not less than $^1/_4$ unit vertical in 12 units horizontal (2-percent slope) nor more than $^1/_2$ unit vertical per 12 units horizontal (4-percent slope) and floor drains shall be flanged to provide a water-tight joint in the floor.

P2709.2 Lining required. The adjoining walls and floor framing enclosing on-site built-up shower receptors shall be lined with one of the following materials:

1. Sheet lead.
2. Sheet copper.
3. Plastic liner material that complies with ASTM D4068 or ASTM D4551.
4. Hot mopping in accordance with Section P2709.2.3.
5. Sheet-applied load-bearing, bonded waterproof membranes that comply with ANSI A118.10.

The lining material shall extend not less than 2 inches (51 mm) beyond or around the rough jambs and not less than 2 inches (51 mm) above finished thresholds. Sheet-applied load bearing, bonded waterproof membranes shall be applied in accordance with the manufacturer's instructions.

P2709.2.1 PVC sheets. Plasticized polyvinyl chloride (PVC) sheet shall meet the requirements of ASTM D4551. Sheets shall be joined by solvent welding in accordance with the manufacturer's instructions.

P2709.2.2 Chlorinated polyethylene (CPE) sheets. Non-plasticized chlorinated polyethylene sheet shall meet the requirements of ASTM D4068. The liner shall be joined in accordance with the manufacturer's instructions.

P2709.2.3 Hot-mopping. Shower receptors lined by hot mopping shall be built-up with not less than three layers of standard grade Type 15 asphalt-impregnated roofing felt. The bottom layer shall be fitted to the formed subbase and each succeeding layer thoroughly hot-mopped to that below. Corners shall be carefully fitted and shall be made strong and watertight by folding or lapping, and each corner shall be reinforced with suitable webbing hot-mopped in place. Folds, laps and reinforcing webbing shall extend not less than 4 inches (102 mm) in all directions from the corner and webbing shall be of *approved* type and mesh,

INTERNATIONAL CODE COUNCIL®
Copyright © 2019 ICC & NYSDOS. ALL RIGHTS RESERVED. Accessed by Lauren Gualdino (lgualdino@briarcliffmanor.org), (-) Order Number #100880972 on May 08, 2020 07:05 AM (PDT) pursuant to License Agreement with ICC & NYSDOS. No further reproduction, no

100880972

producing a tensile strength of not less than 50 pounds per inch (893 kg/m) in either direction.

P2709.2.4 Liquid-type, trowel-applied, load-bearing, bonded waterproof materials. Liquid-type**,** trowel-applied, load-bearing, bonded waterproof materials shall meet the requirements of ANSI A118.10 and shall be applied in accordance with the manufacturer's instructions.

P2709.3 Installation. Lining materials shall be sloped one-fourth unit vertical in 12 units horizontal (2-percent slope) to weep holes in the subdrain by means of a smooth, solidly formed subbase, shall be properly recessed and fastened to *approved* backing so as not to occupy the space required for the wall covering, and shall not be nailed or perforated at any point less than 1 inch (25.4 mm) above the finished threshold.

P2709.3.1 Materials. Lead and copper linings shall be insulated from conducting substances other than the connecting drain by 15-pound (6.80 kg) asphalt felt or its equivalent. Sheet lead liners shall weigh not less than 4 pounds per square foot (19.5 kg/m^2). Sheet copper liners shall weigh not less than 12 ounces per square foot (3.7 kg/m^2). Joints in lead and copper pans or liners shall be burned or silver brazed, respectively. Joints in plastic liner materials shall be joined in accordance with the manufacturer's instructions.

P2709.4 Receptor drains. An *approved* flanged drain shall be installed with shower subpans or linings. The flange shall be placed flush with the subbase and be equipped with a clamping ring or other device to make a water-tight connection between the lining and the drain. The flange shall have weep holes into the drain.

SECTION P2710
SHOWER WALLS

P2710.1 Bathtub and shower spaces. Walls in shower compartments and walls above bathtubs that have a wall-mounted showerhead shall be finished in accordance with Section R307.2.

SECTION P2711
LAVATORIES

P2711.1 Approval. Lavatories shall conform to ASME A112.19.1/CSA B45.2, ASME A112.19.2/CSA B45.1, ASME A112.19.3/CSA B45.4 or CSA B45.5/IAPMO Z124.

P2711.2 Cultured marble lavatories. Cultured marble vanity tops with an integral lavatory shall conform to CSA B45.5/IAPMO Z124.

P2711.3 Lavatory waste outlets. Lavatories shall have waste outlets not less than $1^1/_4$ inch (32 mm) in diameter. A strainer, pop-up stopper, crossbar or other device shall be provided to restrict the clear opening of the waste outlet.

P2711.4 Movable lavatory systems. Movable lavatory systems shall comply with ASME A112.19.12.

SECTION P2712
WATER CLOSETS

P2712.1 Approval. Water closets shall conform to the water consumption requirements of Section P2903.2 and shall conform to ASME A112.19.2/CSA B45.1, ASME A112.19.3/CSA B45.4 or CSA B45.5/IAPMO Z124. Water closets shall conform to the hydraulic performance requirements of ASME A112.19.2/CSA B45.1. Water closet tanks shall conform to ASME A112.19.2/CSA B45.1, ASME A112.19.3/CSA B45.4 or CSA B45.5/IAPMO Z124. Water closets that have an invisible seal and unventilated space or walls that are not thoroughly washed at each discharge shall be prohibited. Water closets that allow backflow of the contents of the bowl into the flush tank shall be prohibited. Water closets equipped with a dual flushing device shall comply with ASME A112.19.14.

P2712.2 Flushing devices required. Water closets shall be provided with a flush tank, flushometer tank or flushometer valve designed and installed to supply water in sufficient quantity and flow to flush the contents of the fixture, to cleanse the fixture and refill the fixture trap in accordance with ASME A112.19.2/CSA B45.1.

P2712.3 Water supply for flushing devices. An adequate quantity of water shall be provided to flush and clean the fixture served. The water supply to flushing devices equipped for manual flushing shall be controlled by a float valve or other automatic device designed to refill the tank after each discharge and to completely shut off the water flow to the tank when the tank is filled to operational capacity. Provision shall be made to automatically supply water to the fixture so as to refill the trap after each flushing.

P2712.4 Flush valves in flush tanks. Flush valve seats in tanks for flushing water closets shall be not less than 1 inch (25 mm) above the flood-level rim of the bowl connected thereto, except an *approved* water closet and flush tank combination designed so that when the tank is flushed and the fixture is clogged or partially clogged, the flush valve will close tightly so that water will not spill continuously over the rim of the bowl or backflow from the bowl to the tank.

P2712.5 Overflows in flush tanks. Flush tanks shall be provided with overflows discharging to the water closet connected thereto and such overflow shall be of sufficient size to prevent flooding the tank at the maximum rate at which the tanks are supplied with water according to the manufacturer's design conditions.

P2712.6 Access. Parts in a flush tank shall be accessible for repair and replacement.

P2712.7 Water closet seats. Water closets shall be equipped with seats of smooth, nonabsorbent material and shall be properly sized for the water closet bowl type.

P2712.8 Flush tank lining. Sheet copper used for flush tank linings shall have a weight of not less than 10 ounces per square foot (3 kg/m^2).

P2712.9 Electro-hydraulic water closets. Electro-hydraulic water closets shall conform to ASME A112.19.2/CSA B45.1.

INTERNATIONAL CODE COUNCIL®
Copyright © 2019 ICC & NYSDOS. ALL RIGHTS RESERVED. Accessed by Lauren Gualdino (lgualdino@briarcliffmanor.org), (-) Order Number #100880972 on May 08, 2020 07:05 AM (PDT) pursuant to License Agreement with ICC & NYSDOS. No further reproduction, no

100880972

SECTION P2713
BATHTUBS

P2713.1 Bathtub waste outlets and overflows. Bathtubs shall be equipped with a waste outlet that is not less than $1^1/_2$ inches (38 mm) in diameter. The waste outlet shall be equipped with a water-tight stopper. Where an overflow is installed, the overflow shall be not less than $1^1/_2$ inches (38 mm) in diameter.

P2713.2 Bathtub enclosures. Doors within a bathtub enclosure shall conform to ASME A112.19.15.

P2713.3 Bathtub and whirlpool bathtub valves. Hot water supplied to bathtubs and whirlpool bathtubs shall be limited to a temperature of not greater than 120°F (49°C) by a water-temperature limiting device that conforms to ASSE 1070/ ASME A112.1070/CSA B125.70 or CSA B125.3, except where such protection is otherwise provided by a combination tub/shower valve in accordance with Section P2708.4.

SECTION P2714
SINKS

P2714.1 Sink waste outlets. Sinks shall be provided with waste outlets not less than $1^1/_2$ inches (38 mm) in diameter. A strainer, crossbar or other device shall be provided to restrict the clear opening of the waste outlet.

P2714.2 Movable sink systems. Movable sink systems shall comply with ASME A112.19.12.

SECTION P2715
LAUNDRY TUBS

P2715.1 Laundry tub waste outlet. Each compartment of a laundry tub shall be provided with a waste outlet not less than $1^1/_2$ inches (38 mm) in diameter. A strainer or crossbar shall restrict the clear opening of the waste outlet.

SECTION P2716
FOOD-WASTE DISPOSER

P2716.1 Food-waste disposer waste outlets. Food-waste disposers shall be connected to a drain of not less than $1^1/_2$ inches (38 mm) in diameter.

P2716.2 Water supply required. A sink equipped with a food-waste disposer shall be provided with a faucet.

SECTION P2717
DISHWASHING MACHINES

P2717.1 Protection of water supply. The water supply to a dishwasher shall be protected against backflow by an *air gap* complying with ASME A112.1.3 or A112.1.2 that is installed integrally within the machine or a backflow preventer in accordance with Section P2902.

P2717.2 Sink and dishwasher. The combined discharge from a dishwasher and a one- or two-compartment sink, with or without a food-waste disposer, shall be served by a trap of not less than $1^1/_2$ inches (38 mm) in outside diameter. The dishwasher discharge pipe or tubing shall rise to the underside of the counter and be fastened or otherwise held in that position before connecting to the head of the food-waste disposer or to a wye fitting in the sink tailpiece.

SECTION P2718
CLOTHES WASHING MACHINE

P2718.1 Waste connection. The discharge from a clothes washing machine shall be through an *air break*.

SECTION P2719
FLOOR DRAINS

P2719.1 Floor drains. Floor drains shall have waste outlets not less than 2 inches (51 mm) in diameter and a removable strainer. Floor drains shall be constructed so that the drain can be cleaned. Access shall be provided to the drain inlet. Floor drains shall not be located under or have their access restricted by permanently installed appliances.

SECTION P2720
WHIRLPOOL BATHTUBS

P2720.1 Access to pump. Access shall be provided to circulation pumps in accordance with the fixture or pump manufacturer's installation instructions. Where the manufacturer's instructions do not specify the location and minimum size of field-fabricated access openings, an opening of not less than 12 inches by 12 inches (305 mm by 305 mm) shall be installed for access to the circulation pump. Where pumps are located more than 2 feet (610 mm) from the access opening, an opening of not less than 18 inches by 18 inches (457 mm by 457 mm) shall be installed. A door or panel shall be permitted to close the opening. The access opening shall be unobstructed and be of the size necessary to permit the removal and replacement of the circulation pump.

P2720.2 Piping drainage. The circulation pump shall be accessibly located above the crown weir of the trap. The pump drain line shall be properly graded to ensure minimum water retention in the volute after fixture use. The circulation piping shall be installed to be self-draining.

P2720.3 Leak testing. Leak testing and pump operation shall be performed in accordance with the manufacturer's instructions.

P2720.4 Manufacturer's instructions. The product shall be installed in accordance with the manufacturer's instructions.

SECTION P2721
BIDET INSTALLATIONS

P2721.1 Water supply. The bidet shall be equipped with either an air-gap-type or vacuum-breaker-type fixture supply fitting.

P2721.2 Bidet water temperature. The discharge water temperature from a bidet fitting shall be limited to not greater than 110°F (43°C) by a water-temperature-limiting device conforming to ASSE 1070/ASME A112.1070/CSA B125.70 or CSA B125.3.

INTERNATIONAL CODE COUNCIL®
Copyright © 2019 ICC & NYSDOS. ALL RIGHTS RESERVED. Accessed by Lauren Gualdino (lgualdino@briarcliffmanor.org), (-) Order Number #100880972 on May 08, 2020 07:05 AM (PDT) pursuant to License Agreement with ICC & NYSDOS. No further reproduction, no

100880972

SECTION P2722
FIXTURE FITTING

P2722.1 General. Fixture supply valves and faucets shall comply with ASME A112.18.1/CSA B125.1 as indicated in Table P2701.1. Faucets and fixture fittings that supply drinking water for human ingestion shall conform to the requirements of NSF 61, Section 9. Flexible water connectors shall conform to the requirements of Section P2906.7.

P2722.2 Hot water. Fixture fittings supplied with both hot and cold water shall be installed and adjusted so that the left-hand side of the water temperature control represents the flow of hot water when facing the outlet.

> **Exception:** Shower and tub/shower mixing valves conforming to ASSE 1016/ASME A112.1016/CSA B125.16, where the water temperature control corresponds to the markings on the device.

P2722.3 Hose-connected outlets. Faucets and fixture fittings with hose-connected outlets shall conform to ASME A112.18.3 or ASME A112.18.1/CSA B125.1.

P2722.4 Individual pressure-balancing in-line valves for individual fixture fittings. Individual pressure-balancing in-line valves for individual fixture fittings shall comply with ASSE 1066. Such valves shall be installed in an accessible location and shall not be used as a substitute for the balanced pressure, thermostatic or combination shower valves required in Section P2708.4.

P2722.5 Water closet personal hygiene devices. Personal hygiene devices integral to water closets or water closet seats shall conform to ASME A112.4.2/CSA B45.16.

SECTION P2723
MACERATING TOILET SYSTEMS

P2723.1 General. Macerating toilet systems shall be installed in accordance with manufacturer's instructions.

P2723.2 Drain. The size of the drain from the macerating toilet system shall be not less than $^{3}/_{4}$ inch (19 mm) in diameter.

SECTION P2724
SPECIALTY TEMPERATURE CONTROL DEVICES AND VALVES

P2724.1 Temperature-actuated mixing valves. Temperature-actuated mixing valves, which are installed to reduce water temperatures to defined limits, shall comply with ASSE 1017. Such valves shall be installed at the hot water source.

P2724.2 Temperature-actuated, flow-reduction devices for individual fixtures. Temperature-actuated, flow-reduction devices, where installed for individual fixture fittings, shall conform to ASSE 1062. Such valves shall not be used as a substitute for the balanced pressure, thermostatic or combination shower valves required for showers in Section P2708.4.

SECTION P2725
NONLIQUID SATURATED TREATMENT SYSTEMS

P2725.1 General. Materials, design, construction and performance of nonliquid saturated treatment systems shall comply with NSF 41.

INTERNATIONAL CODE COUNCIL®
Copyright © 2019 ICC & NYSDOS. ALL RIGHTS RESERVED. Accessed by Lauren Gualdino (lgualdino@briarcliffmanor.org), (-) Order Number #100880972 on May 08, 2020 07:05 AM (PDT) pursuant to License Agreement with ICC & NYSDOS. No further reproduction, no

CHAPTER 28

WATER HEATERS

SECTION P2801
GENERAL

P2801.1 Required. *Hot water* shall be supplied to plumbing fixtures and plumbing appliances intended for bathing, washing or culinary purposes.

P2801.2 Drain valves. Drain valves for emptying shall be installed at the bottom of each tank-type water heater and *hot water* storage tank. The drain valve inlet shall be not less than $^3/_4$-inch (19.1 mm) nominal iron pipe size and the outlet shall be provided with a male hose thread.

P2801.3 Installation. Water heaters shall be installed in accordance with this chapter and Chapters 20 and 24.

P2801.4 Location. Water heaters and storage tanks shall be installed in accordance with Section M1305 and shall be located and connected to provide access for observation, maintenance, servicing and replacement.

P2801.5 Prohibited locations. Water heaters shall be located in accordance with Chapter 20.

P2801.6 Required pan. Where a storage tank-type water heater or a hot water storage tank is installed in a location where water leakage from the tank will cause damage, the tank shall be installed in a pan constructed of one of the following:

1. Galvanized steel or aluminum of not less than 0.0236 inch (0.6010 mm) in thickness.
2. Plastic not less than 0.036 inch (0.9 mm) in thickness.
3. Other *approved* materials.

A plastic pan beneath a gas-fired water heater shall be constructed of material having a flame spread index of 25 or less and a smoke-developed index of 450 or less when tested in accordance with ASTM E84 or UL 723.

P2801.6.1 Pan size and drain. The pan shall be not less than $1^1/_2$ inches (38 mm) deep and shall be of sufficient size and shape to receive dripping or condensate from the tank or water heater. The pan shall be drained by an indirect waste pipe of not less than $^3/_4$ inch (19 mm) diameter. Piping for safety pan drains shall be of those materials indicated in Table P2906.5. Where a pan drain was not previously installed, a pan drain shall not be required for a replacement water heater installation.

P2801.6.2 Pan drain termination. The pan drain shall extend full-size and terminate over a suitably located indirect waste receptor or shall extend to the exterior of the building and terminate not less than 6 inches (152 mm) and not more than 24 inches (610 mm) above the adjacent ground surface.

P2801.7 Water heaters installed in garages. Water heaters having an *ignition source* shall be elevated such that the source of ignition is not less than 18 inches (457 mm) above the garage floor.

Exception: Elevation of the *ignition source* is not required for appliances that are *listed* as flammable vapor ignition-resistant.

P2801.8 Water heater seismic bracing. In Seismic Design Categories D_0, D_1 and D_2 and *townhouses* in Seismic Design Category C, water heaters shall be anchored or strapped in the upper one-third and in the lower one-third of the appliance to resist a horizontal force equal to one-third of the operating weight of the water heater, acting in any horizontal direction, or in accordance with the appliance manufacturer's recommendations.

SECTION P2802
SOLAR WATER HEATING SYSTEMS

P2802.1 Water temperature control. Where heated water is discharged from a solar thermal system to a *hot water* distribution system, a thermostatic mixing valve complying with ASSE 1017 shall be installed to temper the water to a temperature of not greater than 140°F (60°C). Solar thermal systems supplying *hot water* for both space heating and domestic uses shall comply with Section P2803.2. A temperature-indicating device shall be installed to indicate the temperature of the water discharged from the outlet of the mixing valve. The thermostatic mixing valve required by this section shall not be a substitute for water-temperature limiting devices required by Chapter 27 for specific fixtures.

P2802.2 Isolation valves. Isolation valves in accordance with P2903.9.2 shall be provided on the cold water feed to the water heater. Isolation valves and associated piping shall be provided to bypass solar storage tanks where the system contains multiple storage tanks.

SECTION P2803
WATER HEATERS USED FOR SPACE HEATING

P2803.1 Protection of potable water. Piping and components connected to a water heater for space heating applications shall be suitable for use with potable water in accordance with Chapter 29. Water heaters that will be used to supply potable water shall not be connected to a heating system or components previously used with nonpotable-water heating *appliances*. Chemicals for boiler treatment shall not be introduced into the water heater.

INTERNATIONAL CODE COUNCIL®
Copyright © 2019 ICC & NYSDOS. ALL RIGHTS RESERVED. Accessed by Lauren Gualdino (lgualdino@briarcliffmanor.org), (-) Order Number #100880972 on May 08, 2020 07:05 AM (PDT) pursuant to License Agreement with ICC & NYSDOS. No further reproduction, no

100880972

P2803.2 Temperature control. Where a combination water heater-space heating system requires water for space heating at temperatures exceeding 140°F (60°C), a master thermostatic mixing valve complying with ASSE 1017 shall be installed to temper the water to a temperature of not greater than 140°F (60°C) for domestic uses.

SECTION P2804
RELIEF VALVES

P2804.1 Relief valves required. Appliances and equipment used for heating water or storing hot water shall be protected by one of the following:

1. A separate pressure-relief valve and a separate temperature-relief valve.
2. A combination pressure-and-temperature relief valve.

P2804.2 Rating. Relief valves shall have a minimum rated capacity for the equipment served and shall conform to ANSI Z21.22.

P2804.3 Pressure relief valves. Pressure relief valves shall have a relief rating adequate to meet the pressure conditions for the appliances or equipment protected. In tanks, they shall be installed directly into a tank tapping or in a water line close to the tank. They shall be set to open at not less than 25 psi (172 kPa) above the system pressure and not greater than 150 psi (1034 kPa). The relief-valve setting shall not exceed the rated working pressure of the tank.

P2804.4 Temperature relief valves. Temperature relief valves shall have a relief rating compatible with the temperature conditions of the appliances or equipment protected. The valves shall be installed such that the temperature-sensing element monitors the water within the top 6 inches (152 mm) of the tank. The valve shall be set to open at a temperature of not greater than 210°F (99°C).

P2804.5 Combination pressure-and-temperature relief valves. Combination-pressure-and-temperature relief valves shall comply with the requirements for separate pressure and temperature relief valves.

P2804.6 Installation of relief valves. A check or shutoff valve shall not be installed in any of the following locations:

1. Between a relief valve and the termination point of the relief valve discharge pipe.
2. Between a relief valve and a tank.
3. Between a relief valve and heating appliances or equipment.

P2804.6.1 Requirements for discharge pipe. The discharge piping serving a pressure relief valve, temperature relief valve or combination valve shall:

1. Not be directly connected to the drainage system.
2. Discharge through an *air gap* located in the same room as the water heater.
3. Not be smaller than the diameter of the outlet of the valve served and shall discharge full size to the *air gap*.
4. Serve a single relief device and shall not connect to piping serving any other relief device or equipment.
5. Discharge to the floor, to the pan serving the water heater or storage tank, to a waste receptor or to the outdoors.
6. Discharge in a manner that does not cause personal injury or structural damage.
7. Discharge to a termination point that is readily observable by the building occupants.
8. Not be trapped.
9. Be installed to flow by gravity.
10. Terminate not more than 6 inches (152 mm) and not less than two times the discharge pipe diameter above the floor or waste receptor flood level rim.
11. Not have a threaded connection at the end of the piping.
12. Not have valves or tee fittings.
13. Be constructed of those materials indicated in Section P2906.5 or materials tested, rated and *approved* for such use in accordance with ASME A112.4.1.
14. Be one nominal size larger than the size of the relief-valve outlet, where the relief-valve discharge piping is installed with insert fittings. The outlet end of such tubing shall be fastened in place.

P2804.7 Vacuum relief valve. Bottom fed tank-type water heaters and bottom fed tanks connected to water heaters shall have a vacuum relief valve installed that complies with ANSI Z21.22.

INTERNATIONAL CODE COUNCIL®
Copyright © 2019 ICC & NYSDOS. ALL RIGHTS RESERVED. Accessed by Lauren Gualdino (lgualdino@briarcliffmanor.org), (-) Order Number #100880972 on May 08, 2020 07:05 AM (PDT) pursuant to License Agreement with ICC & NYSDOS. No further reproduction, no

100880972

CHAPTER 29

WATER SUPPLY AND DISTRIBUTION

SECTION P2901
GENERAL

[NY] P2901.1 Potable water required. Potable water shall be supplied to plumbing fixtures and plumbing *appliances* except where treated rainwater, treated graywater or municipal reclaimed water is supplied to water closets, urinals and trap primers. The requirements of this section shall not be construed to require signage for water closets and urinals.

Exception: Owner-occupied one-family dwellings subject to approval by the *building official*.

P2901.2 Identification of nonpotable water systems. Where *nonpotable* water systems are installed, the piping conveying the nonpotable water shall be identified either by color marking, metal tags or tape in accordance with Sections P2901.2.1 through P2901.2.2.3.

P2901.2.1 Signage required. Nonpotable water outlets such as hose connections, open-ended pipes and faucets shall be identified with signage that reads as follows: "Nonpotable water is utilized for [application name]. CAUTION: NONPOTABLE WATER. DO NOT DRINK." The words shall be legibly and indelibly printed on a tag or sign constructed of corrosion-resistant waterproof material or shall be indelibly printed on the fixture. The letters of the words shall be not less than 0.5 inches (12.7 mm) in height and in colors in contrast to the background on which they are applied. In addition to the required wordage, the pictograph shown in Figure P2901.2.1 shall appear on the required signage.

P2901.2.2 Distribution pipe labeling and marking. Nonpotable distribution piping shall be purple in color and shall be embossed or integrally stamped or marked with the words: "CAUTION: NONPOTABLE WATER. DO NOT DRINK" or the piping shall be installed with a purple identification tape or wrap. Pipe identification shall include the contents of the piping system and an arrow indicating the direction of flow. Hazardous piping systems shall contain information addressing the nature of the hazard. Pipe identification shall be repeated at intervals not exceeding 25 feet (7620 mm) and at each point where the piping passes through a wall, floor or roof. Lettering shall be readily observable within the room or space where the piping is located.



FIGURE P2901.2.1
PICTOGRAPH—DO NOT DRINK

P2901.2.2.1 Color. The color of the pipe identification shall be discernable and consistent throughout the building. The color purple shall be used to identify reclaimed, rain and graywater distribution systems.

P2901.2.2.2 Lettering size. The size of the background color field and lettering shall comply with Table P2901.2.2.2.

P2901.2.2.3 Identification tape. Where used, identification tape shall be not less than 3 inches (76 mm) wide and have white or black lettering on a purple field stating "CAUTION: NONPOTABLE WATER—DO NOT DRINK." Identification tape shall be installed on top of nonpotable rainwater distribution pipes and fastened not greater than every 10 feet (3048 mm) to each pipe length, and run continuously the entire length of the pipe.

SECTION P2902
PROTECTION OF POTABLE WATER SUPPLY

[NY] P2902.1 General. A potable water supply system shall be designed and installed as to prevent contamination from nonpotable liquids, solids or gases being introduced into the potable water supply. Connections shall not be made to a potable water supply in a manner that could contaminate the water supply or provide a cross connection between the supply and a source of contamination unless an *approved* back-

TABLE P2901.2.2.2
SIZE OF PIPE IDENTIFICATION

PIPE DIAMETER (inches)	LENGTH OF BACKGROUND COLOR FIELD (inches)	SIZE OF LETTERS (inches)
$^3/_4$ to $1^1/_4$	8	0.5
$1^1/_2$ to 2	8	0.75
$2^1/_2$ to 6	12	1.25
8 to 10	2	2.5
over 10	32	3.5

For SI: 1 inch = 25.4 mm.

INTERNATIONAL CODE COUNCIL®
Copyright © 2019 ICC & NYSDOS. ALL RIGHTS RESERVED. Accessed by Lauren Gualdino (lgualdino@briarcliffmanor.org), (-) Order Number #100880972 on May 08, 2020 07:05 AM (PDT) pursuant to License Agreement with ICC & NYSDOS. No further reproduction, no

100880972

flow prevention device is provided. Cross connections between an individual water supply and a potable public water supply shall be prohibited, except where an appropriate cross control connection device is installed in accordance with Subpart 5-1.31 of the New York State Sanitary Code (10 NYCRR 5-1).

P2902.2 Plumbing fixtures. The supply lines and fittings for every plumbing fixture shall be installed so as to prevent backflow. Plumbing fixture fittings shall provide backflow protection in accordance with ASME A112.18.1/CSA B125.1.

[NY] P2902.3 Backflow protection. A means of protection against backflow shall be provided in accordance with Sections P2902.3.1 through P2902.3.7. Backflow prevention applications shall conform to Table P2902.3, except as specifically stated in Sections P2902.4 through P2902.5.5. On-site containment is regulated by Subpart 5-1.31 of the New York State Sanitary Code (10 NYCRR) and may be required by the provider of public water, depending on the degree of hazard, to protect public water systems through the use of appropriate backflow prevention device installations.

P2902.3.1 Air gaps. *Air gaps* shall comply with ASME A112.1.2 and *air gap* fittings shall comply with ASME A112.1.3. An *air gap* shall be measured vertically from the lowest end of a water outlet to the flood level rim of the fixture or receptor into which the water outlets discharges to the floor. The required *air gap* shall be not less than twice the diameter of the effective opening of the outlet and not less than the values specified in Table P2902.3.1.

P2902.3.2 Atmospheric-type vacuum breakers. Atmospheric-type vacuum breakers shall conform to ASSE 1001 or CSA B64.1.1. Hose-connection vacuum breakers shall conform to ASSE 1011, ASSE 1019, ASSE 1035, ASSE 1052, CSA B64.2, CSA B64.2.1, CSA B64.2.1.1, CSA B64.2.2 or CSA B64.7. Both types of vacuum breakers shall be installed with the outlet continuously open to the atmosphere. The critical level of the atmospheric vacuum breaker shall be set at not less than 6 inches (152 mm) above the highest elevation of downstream piping and the flood level rim of the fixture or device.

P2902.3.3 Backflow preventer with intermediate atmospheric vent. Backflow preventers with intermediate atmospheric vents shall conform to ASSE 1012 or CSA B64.3. These devices shall be permitted to be installed where subject to continuous pressure conditions. These devices shall be prohibited as a means of protection where any hazardous chemical additives are introduced downstream of the device. The relief opening shall discharge by *air gap* and shall be prevented from being submerged.

P2902.3.4 Pressure vacuum breaker assemblies. Pressure vacuum breaker assemblies shall conform to ASSE 1020 or CSA B64.1.2. Spill-resistant vacuum breaker assemblies shall comply with ASSE 1056. These assemblies are designed for installation under continuous pressure conditions where the critical level is installed at the required height. The critical level of a pressure vacuum breaker and a spill-resistant vacuum breaker assembly shall be set at not less than 12 inches (304 mm) above the highest elevation of downstream piping and the flood level rim of the fixture or device. Pressure vacuum breaker assemblies shall not be installed in locations where spillage could cause damage to the structure.

P2902.3.5 Reduced pressure principle backflow prevention assemblies. Reduced pressure principle backflow prevention assemblies and reduced pressure principle fire protection backflow prevention assemblies shall conform to ASSE 1013, AWWA C511, CSA B64.4 or CSA B64.4.1. Reduced pressure detector fire protection backflow prevention assemblies shall conform to ASSE 1047. These devices shall be permitted to be installed where subject to continuous pressure conditions. The relief opening shall discharge by *air gap* and shall be prevented from being submerged.

P2902.3.6 Double-check backflow prevention assemblies. Double-check backflow prevention assemblies shall conform to ASSE 1015, CSA B64.5, CSA B64.5.1 or AWWA C510. Double-check detector fire protection backflow prevention assemblies shall conform to ASSE 1048. These assemblies shall be capable of operating under continuous pressure conditions.

P2902.3.7 Dual check backflow preventer. Dual check backflow preventers shall conform with ASSE 1024 or CSA B64.6.

P2902.4 Protection of potable water outlets. Potable water openings and outlets shall be protected by an *air gap*, a reduced pressure principle backflow prevention assembly, an atmospheric vent, an atmospheric-type vacuum breaker, a pressure-type vacuum breaker assembly or a hose connection backflow preventer.

P2902.4.1 Fill valves. Flush tanks shall be equipped with an antisiphon fill valve conforming to ASSE 1002/ ASME A112.1002/CSA B125.12 or CSA B125.3. The critical level of the fill valve shall be located not less than 1 inch (25 mm) above the top of the flush tank overflow pipe.

P2902.4.2 Deck-mounted and integral vacuum breakers. *Approved* deck-mounted or equipment-mounted vacuum breakers and faucets with integral atmospheric vacuum breakers or spill–resistant vacuum breaker assemblies shall be installed in accordance with the manufacturer's instructions and the requirements for labeling. The critical level of the breakers and assemblies shall be located at not less than 1 inch (25 mm) above the *flood level rim*.

P2902.4.3 Hose connection. Sillcocks, hose bibbs, wall hydrants and other openings with a hose connection shall be protected by an atmospheric-type or pressure-type vacuum breaker, a pressure vacuum-breaker assembly or a permanently attached hose connection vacuum breaker.

Exceptions:

1. This section shall not apply to water heater and boiler drain valves that are provided with hose connection threads and that are intended only for tank or vessel draining.
2. This section shall not apply to water supply valves intended for connection of clothes wash-

INTERNATIONAL CODE COUNCIL®
Copyright © 2019 ICC & NYSDOS. ALL RIGHTS RESERVED. Accessed by Lauren Gualdino (lgualdino@briarcliffmanor.org), (-) Order Number #100880972 on May 08, 2020 07:05 AM (PDT) pursuant to License Agreement with ICC & NYSDOS. No further reproduction, no

100880972

TABLE P2902.3
APPLICATION FOR BACKFLOW PREVENTERS

DEVICE	DEGREE OF HAZARD[a]	APPLICATION[b]	APPLICABLE STANDARDS
Backflow Prevention Assemblies			
Double-check backflow prevention assembly and double-check fire protection backflow prevention assembly	Low hazard	Backpressure or backsiphonage Sizes $^3/_8$″ – 16″	ASSE 1015, AWWA C510, CSA B64.5, CSA B64.5.1
Double-check detector fire protection backflow prevention assemblies	Low hazard	Backpressure or backsiphonage Sizes 2″ – 16″	ASSE 1048
Pressure vacuum breaker assembly	High or low hazard	Backsiphonage only Sizes $^1/_2$″ – 2″	ASSE 1020, CSA B64.1.2
Reduced pressure principle backflow prevention assembly and reduced pressure principle fire protection backflow prevention assembly	High or low hazard	Backpressure or backsiphonage Sizes $^3/_8$″ – 16″	ASSE 1013, AWWA C511, CSA B64.4, CSA B64.4.1
Reduced pressure detector fire protection backflow prevention assemblies	High or low hazard	Backsiphonage or backpressure (Fire sprinkler systems)	ASSE 1047
Spill-resistant vacuum breaker	High or low hazard	Backsiphonage only Sizes $^1/_4$″ – 2″	ASSE 1056, CSA B64.1.3
Backflow Preventer Plumbing Devices			
Antisiphon-type fill valves for gravity water closet flush tanks	High hazard	Backsiphonage only	ASSE 1002/ ASME A112.1002/ CSA B125.12, CSA B125.3
Backflow preventer with intermediate atmospheric vents	Low hazard	Backpressure or backsiphonage Sizes $^1/_4$" – $^3/_8$″	ASSE 1012, CSA B64.3
Dual-check-valve-type backflow preventers	Low hazard	Backpressure or backsiphonage Sizes $^1/_4$″ – 1″	ASSE 1024, CSA B64.6
Hose-connection backflow preventer	High or low hazard	Low head backpressure, rated working pressure backpressure or backsiphonage Sizes $^1/_2$″ – 1″	ASSE 1052, CSA B64.2.1.1
Hose-connection vacuum breaker	High or low hazard	Low head backpressure or backsiphonage Sizes $^1/_2$″, $^3/_4$″, 1″	ASSE 1011, CSA B64.2, CSA B64.2.1
Laboratory faucet backflow preventer	High or low hazard	Low head backpressure and backsiphonage	ASSE 1035, CSA B64.7
Pipe-applied atmospheric-type vacuum breaker	High or low hazard	Backsiphonage only Sizes $^1/_4$″ – 4″	ASSE 1001, CSA B64.1.1
Vacuum breaker wall hydrants, frost-resistant, automatic-draining type	High or low hazard	Low head backpressure or backsiphonage Sizes $^3/_4$″ – 1″	ASSE 1019, CSA B64.2.2
Other Means Or Methods			
Air gap	High or low hazard	Backsiphonage only	ASME A112.1.2
Air gap fittings for use with plumbing fixtures, appliances and appurtenances	High or low hazard	Backsiphonage or backpressure	ASME A112.1.3

For SI: 1 inch = 25.4 mm.

a. Low hazard—See Pollution (Section R202). High hazard—See Contamination (Section R202).

b. See Backpressure (Section R202). See Backpressure, Low Head (Section R202). See Backsiphonage (Section R202).

ing machines where backflow prevention is otherwise provided or is integral with the machine.

P2902.5 Protection of potable water connections. Connections to the potable water shall conform to Sections P2902.5.1 through P2902.5.5.

P2902.5.1 Connections to boilers. Where chemicals will not be introduced into a boiler, the potable water supply to the boiler shall be protected from the boiler by a backflow preventer with an intermediate atmospheric vent complying with ASSE 1012 or CSA B64.3. Where chemicals will be introduced into a boiler, the potable water supply to the boiler shall be protected from the boiler by an *air gap* or a reduced pressure principle backflow prevention assembly complying with ASSE 1013, CSA B64.4 or AWWA C511.

P2902.5.2 Heat exchangers. Heat exchangers using an essentially toxic transfer fluid shall be separated from the potable water by double-wall construction. An *air gap* open to the atmosphere shall be provided between the two walls. Single-wall construction heat exchangers shall be used only where an *essentially nontoxic transfer fluid* is utilized.

P2902.5.3 Lawn irrigation systems. The potable water supply to lawn irrigation systems shall be protected against backflow by an atmospheric vacuum breaker, a pressure vacuum-breaker assembly or a reduced pressure principle backflow prevention assembly. Valves shall not be installed downstream from an atmospheric vacuum breaker. Where chemicals are introduced into the system, the potable water supply shall be protected against backflow by a reduced pressure principle backflow prevention assembly.

INTERNATIONAL CODE COUNCIL®
Copyright © 2019 ICC & NYSDOS. ALL RIGHTS RESERVED. Accessed by Lauren Gualdino (lgualdino@briarcliffmanor.org), (-) Order Number #100880972 on May 08, 2020 07:05 AM (PDT) pursuant to License Agreement with ICC & NYSDOS. No further reproduction, no

100880972

TABLE P2902.3.1
MINIMUM AIR GAPS

FIXTURE	MINIMUM AIR GAP	
	Away from a wall[a] (inches)	Close to a wall (inches)
Effective openings greater than 1 inch	Two times the diameter of the effective opening	Three times the diameter of the effective opening
Lavatories and other fixtures with effective opening not greater than $^1/_2$ inch in diameter	1	1.5
Over-rim bath fillers and other fixtures with effective openings not greater than 1 inch in diameter	2	3
Sink, laundry trays, gooseneck back faucets and other fixtures with effective openings not greater than $^3/_4$ inch in diameter	1.5	2.5

For SI: 1 inch = 25.4 mm.

a. Applicable where walls or obstructions are spaced from the nearest inside edge of the spout opening a distance greater than three times the diameter of the effective opening for a single wall, or a distance greater than four times the diameter of the effective opening for two intersecting walls.

P2902.5.4 Connections to automatic fire sprinkler systems. The potable water supply to automatic fire sprinkler systems shall be protected against backflow by a double-check backflow prevention assembly, a double-check fire protection backflow prevention assembly, a reduced pressure principle backflow prevention assembly or a reduced pressure principle fire protection backflow prevention assembly.

Exception: Where sprinkler systems are installed in accordance with Section P2904.1, backflow protection for the water supply system shall not be required.

P2902.5.4.1 Additives or nonpotable source. Where systems contain chemical additives or antifreeze, or where systems are connected to a nonpotable secondary water supply, the potable water supply shall be protected against backflow by a reduced pressure principle backflow prevention assembly or a reduced pressure principle fire protection backflow prevention assembly. Where chemical additives or antifreeze is added to only a portion of an automatic fire sprinkler or standpipe system, the reduced pressure principle fire protection backflow preventer shall be permitted to be located so as to isolate that portion of the system.

P2902.5.5 Solar thermal systems. Where a solar thermal system heats potable water to supply a potable *hot water* distribution or any other type of heating system, the solar thermal system shall be in accordance with Section P2902.5.5.1, P2902.5.5.2 or P2902.5.5.3 as applicable.

P2902.5.5.1 Indirect systems. Water supplies of any type shall not be connected to the solar heating loop of an indirect solar thermal *hot water* heating system. This requirement shall not prohibit the presence of inlets or outlets on the solar heating loop for the purposes of servicing the fluid in the solar heating loop.

P2902.5.5.2 Direct systems for potable water distribution systems. Where a solar thermal system directly heats potable water for a potable water distribution system, the pipe, fittings, valves and other components that are in contact with the potable water in the system shall comply with the requirements of Chapter 29.

P2902.5.5.3 Direct systems for other than potable water distribution systems. Where a solar thermal system directly heats water for a system other than a potable water distribution system, a potable water supply connected to such system shall be protected by a backflow preventer with an intermediate atmospheric vent complying with ASSE 1012. Where a solar thermal system directly heats chemically treated water for a system other than a potable water distribution system, a potable water supply connected to such system shall be protected by a reduced pressure principle backflow prevention assembly complying with ASSE 1013.

P2902.6 Location of backflow preventers. Access shall be provided to backflow preventers as specified by the manufacturer's installation instructions.

P2902.6.1 Outdoor enclosures for backflow prevention devices. Outdoor enclosures for backflow prevention devices shall comply with ASSE 1060.

P2902.6.2 Protection of backflow preventers. Backflow preventers shall not be located in areas subject to freezing except where they can be removed by means of unions, or are protected by heat, insulation or both.

P2902.6.3 Relief port piping. The termination of the piping from the relief port or air gap fitting of the backflow preventer shall discharge to an *approved* indirect waste receptor or to the outdoors where it will not cause damage or create a nuisance.

SECTION P2903
WATER SUPPLY SYSTEM

P2903.1 Water supply system design criteria. The water service and water distribution systems shall be designed and pipe sizes shall be selected such that under conditions of peak demand, the capacities at the point of outlet discharge shall be not less than shown in Table P2903.1.

P2903.2 Maximum flow and water consumption. The maximum water consumption flow rates and quantities for plumbing fixtures and fixture fittings shall be in accordance with Table P2903.2.

INTERNATIONAL CODE COUNCIL®
Copyright © 2019 ICC & NYSDOS. ALL RIGHTS RESERVED. Accessed by Lauren Gualdino (lgualdino@briarcliffmanor.org), (-) Order Number #100880972 on May 08, 2020 07:05 AM (PDT) pursuant to License Agreement with ICC & NYSDOS. No further reproduction, no

100880972

P2903.3 Minimum pressure. Where the water pressure supplied by the public water main or an individual water supply system is insufficient to provide for the minimum pressures and quantities for the plumbing fixtures in the building, the pressure shall be increased by means of an elevated water tank, a hydropnuematic pressure booster system or a water pressure booster pump.

P2903.3.1 Maximum pressure. The static water pressure shall be not greater than 80 psi (551 kPa). Where the main pressure exceeds 80 psi (551 kPa), an *approved* pressure-reducing valve conforming to ASSE 1003 or CSA B356 shall be installed on the domestic water branch main or riser at the connection to the water service pipe.

P2903.4 Thermal expansion control. A means for controlling increased pressure caused by thermal expansion shall be installed where required in accordance with Sections P2903.4.1 and P2903.4.2.

P2903.4.1 Pressure-reducing valve. For water service system sizes up to and including 2 inches (51 mm), a device for controlling pressure shall be installed where, because of thermal expansion, the pressure on the downstream side of a pressure-reducing valve exceeds the pressure-reducing valve setting.

P2903.4.2 Backflow prevention device or check valve. Where a backflow prevention device, check valve or other device is installed on a water supply system using storage water heating equipment such that thermal expansion causes an increase in pressure, a device for controlling pressure shall be installed.

P2903.5 Water hammer. The flow velocity of the water distribution system shall be controlled to reduce the possibility of water hammer. A water-hammer arrestor shall be installed where quick-closing valves are utilized. Water-hammer arrestors shall be installed in accordance with the manufacturer's instructions. Water-hammer arrestors shall conform to ASSE 1010.

P2903.6 Determining water supply fixture units. Supply loads in the building water distribution system shall be determined by total load on the pipe being sized, in terms of water supply fixture units (w.s.f.u.), as shown in Table P2903.6, and gallon per minute (gpm) flow rates [see Table P2903.6(1)]. For fixtures not listed, choose a w.s.f.u. value of a fixture with similar flow characteristics.

P2903.7 Size of water-service mains, branch mains and risers. The size of the water service pipe shall be not less than $^3/_4$ inch (19 mm) diameter. The size of water service mains,

TABLE P2903.1
REQUIRED CAPACITIES AT POINT OF OUTLET DISCHARGE

FIXTURE SUPPLY OUTLET SERVING	FLOW RATE (gpm)	FLOW PRESSURE (psi)
Bathtub, balanced-pressure, thermostatic or combination balanced-pressure/thermostatic mixing valve	4	20
Bidet, thermostatic mixing valve	2	20
Dishwasher	2.75	8
Laundry tray	4	8
Lavatory	0.8	8
Shower, balanced-pressure, thermostatic or combination balanced-pressure/thermostatic mixing valve	2.5[a]	20
Sillcock, hose bibb	5	8
Sink	1.75	8
Water closet, flushometer tank	1.6	20
Water closet, tank, close coupled	3	20
Water closet, tank, one-piece	6	20

For SI: 1 pound per square inch = 6.895 kPa, 1 gallon per minute = 3.785 L/m.

a. Where the shower mixing valve manufacturer indicates a lower flow rating for the mixing valve, the lower value shall be applied.

[NY] TABLE P2903.2
MAXIMUM FLOW RATES AND CONSUMPTION FOR PLUMBING FIXTURES AND FIXTURE FITTINGS[b]

PLUMBING FIXTURE OR FIXTURE FITTING	MAXIMUM FLOW RATE OR QUANTITY
Lavatory faucet	1.5 gpm at 60 psi
Shower head[a]	2.0 gpm at 80 psi
Sink faucet	2.2 gpm at 60 psi
Water closet	1.28 gallons per flushing cycle[c]

For SI: 1 gallon per minute = 3.785 L/m,
1 pound per square inch = 6.895 kPa.

a. A handheld shower spray shall be considered to be a shower head.

b. Consumption tolerances shall be determined from referenced standards.

c. [NY] The flush volume for a dual-flush water closet is defined as the composite, average flush volume of two reduced flushes and one full flush.

INTERNATIONAL CODE COUNCIL®
Copyright © 2019 ICC & NYSDOS. ALL RIGHTS RESERVED. Accessed by Lauren Gualdino (lgualdino@briarcliffmanor.org), (-) Order Number #100880972 on May 08, 2020 07:05 AM (PDT) pursuant to License Agreement with ICC & NYSDOS. No further reproduction, no

100880972

branch mains and risers shall be determined from the water supply demand [gpm (L/m)], available water pressure [psi (kPa)] and friction loss caused by the water meter and *developed length* of pipe [feet (m)], including *equivalent length* of fittings. The size of each water distribution system shall be determined according to design methods conforming to acceptable engineering practice, such as those methods in Appendix P and shall be *approved* by the *building official*.

P2903.8 Gridded and parallel water distribution systems. Hot water and cold water manifolds installed with parallel-connected individual distribution lines and cold water manifolds installed with gridded distribution lines to each fixture or fixture fitting shall be designed in accordance with Sections P2903.8.1 through P2903.8.5. Gridded systems for hot water distribution systems shall be prohibited.

P2903.8.1 Sizing of manifolds. Manifolds shall be sized in accordance with Table P2903.8.1. Total gallons per minute is the demand for all outlets.

TABLE P2903.8.1
MANIFOLD SIZING[a]

PLASTIC		METALLIC	
Nominal Size ID (inches)	Maximum[b] gpm	Nominal Size ID (inches)	Maximum[b] gpm
$^3/_4$	17	$^3/_4$	11
1	29	1	20
$1^1/_4$	46	$1^1/_4$	31
$1^1/_2$	66	$1^1/_2$	44

For SI: 1 inch = 25.4 mm, 1 gallon per minute = 3.785 L/m, 1 foot per second = 0.3048 m/s.

a. See Table P2903.6 for w.s.f.u and Table 2903.6(1) for gallon-per-minute (gpm) flow rates.

b. Based on velocity limitation: plastic-12 fps; metal-8 fps.

P2903.8.2 Minimum size. Where the *developed length* of the distribution line is 60 feet (18 288 mm) or less, and the available pressure at the meter is not less than 40 pounds per square inch (276 kPa), the size of individual distribution lines shall be not less than $^3/_8$ inch (10 mm) diameter. Certain fixtures such as one-piece water closets and whirlpool bathtubs shall require a larger size where specified by the manufacturer. Where a water heater is fed from the end of a cold water manifold, the manifold shall be one size larger than the water heater feed.

P2903.8.3 Support and protection. Plastic piping bundles shall be secured in accordance with the manufacturer's instructions and supported in accordance with Section P2605. Bundles that have a change in direction equal to or greater than 45 degrees (0.79 rad) shall be protected from chafing at the point of contact with framing members by sleeving or wrapping.

P2903.8.4 Valving. Fixture valves, when installed, shall be located either at the fixture or at the manifold. Valves installed at the manifold shall be labeled indicating the fixture served.

P2903.8.5 Hose bibb bleed. A *readily accessible* air bleed shall be installed in hose bibb supplies at the manifold or at the hose bibb exit point.

P2903.9 Valves. Valves shall be installed in accordance with Sections P2903.9.1 through P2903.9.5.

P2903.9.1 Service valve. Each *dwelling unit* shall be provided with an accessible main shutoff valve near the entrance of the water service. The valve shall be of a full-open type having nominal restriction to flow, with provision for drainage such as a bleed orifice or installation of a separate drain valve. Additionally, the water service shall be valved at the curb or lot line in accordance with local requirements.

P2903.9.2 Water heater valve. A *readily accessible* full-open valve shall be installed in the cold-water supply pipe to each water heater at or near the water heater.

P2903.9.3 Fixture valves and access. Shutoff valves shall be required on each fixture supply pipe to each plumbing appliance and to each plumbing fixture other than bathtubs and showers. Valves serving individual plumbing fixtures, *plumbing appliances,* risers and branches shall be accessible.

P2903.9.4 Valve requirements. Valves shall be compatible with the type of piping material installed in the system. Valves shall conform to one of the standards indicated in Table P2903.9.4 or shall be *approved*. Valves intended to supply drinking water shall meet the requirements of NSF 61.

P2903.9.5 Valves and outlets prohibited below grade. Potable water outlets and combination stop-and-waste valves shall not be installed underground or below grade. Freezeproof yard hydrants that drain the riser into the ground are considered to be stop-and-waste valves.

Exception: Installation of freezeproof yard hydrants that drain the riser into the ground shall be permitted if the potable water supply to such hydrants is protected upstream of the hydrants in accordance with Section P2902 and the hydrants are permanently identified as nonpotable outlets by *approved* signage that reads as follows: "CAUTION, NONPOTABLE WATER. DO NOT DRINK."

P2903.10 Hose bibb. Hose bibbs subject to freezing, including the "frostproof" type, shall be equipped with an accessible stop-and-waste-type valve inside the building so that they can be controlled and drained during cold periods.

Exception: Frostproof hose bibbs installed such that the stem extends through the building insulation into an open heated or semi*conditioned space* need not be separately valved (see Figure P2903.10).

P2903.11 Drain water heat recovery units. Drain water heat recovery units shall be in accordance with Section N1103.5.4.

INTERNATIONAL CODE COUNCIL®
Copyright © 2019 ICC & NYSDOS. ALL RIGHTS RESERVED. Accessed by Lauren Gualdino (lgualdino@briarcliffmanor.org), (-) Order Number #100880972 on May 08, 2020 07:05 AM (PDT) pursuant to License Agreement with ICC & NYSDOS. No further reproduction, no

100880972

TABLE P2903.6
WATER-SUPPLY FIXTURE-UNIT VALUES FOR VARIOUS PLUMBING FIXTURES AND FIXTURE GROUPS

TYPE OF FIXTURES OR GROUP OF FIXTURES	WATER-SUPPLY FIXTURE-UNIT VALUE (w.s.f.u.)		
	Hot	Cold	Combined
Bathtub (with/without overhead shower head)	1.0	1.0	1.4
Clothes washer	1.0	1.0	1.4
Dishwasher	1.4	—	1.4
Full-bath group with bathtub (with/without shower head) or shower stall	1.5	2.7	3.6
Half-bath group (water closet and lavatory)	0.5	2.5	2.6
Hose bibb (sillcock)[a]	—	2.5	2.5
Kitchen group (dishwasher and sink with or without food-waste disposer)	1.9	1.0	2.5
Kitchen sink	1.0	1.0	1.4
Laundry group (clothes washer standpipe and laundry tub)	1.8	1.8	2.5
Laundry tub	1.0	1.0	1.4
Lavatory	0.5	0.5	0.7
Shower stall	1.0	1.0	1.4
Water closet (tank type)	—	2.2	2.2

For SI: 1 gallon per minute = 3.785 L/m.

a. The fixture unit value 2.5 assumes a flow demand of 2.5 gpm, such as for an individual lawn sprinkler device. If a hose bibb or sill cock will be required to furnish a greater flow, the equivalent fixture-unit value may be obtained from this table or Table P2903.6(1).

TABLE P2903.6(1)
CONVERSIONS FROM WATER SUPPLY FIXTURE UNIT TO GALLON PER MINUTE FLOW RATES

SUPPLY SYSTEMS PREDOMINANTLY FOR FLUSH TANKS			SUPPLY SYSTEMS PREDOMINANTLY FOR FLUSHOMETER VALVES		
Load	Demand		Load	Demand	
(Water supply fixture units)	(Gallons per minute)	(Cubic feet per minute)	(Water supply fixture units)	(Gallons per minute)	(Cubic feet per minute)
1	3.0	0.04104	—	—	—
2	5.0	0.0684	—	—	—
3	6.5	0.86892	—	—	—
4	8.0	1.06944	—	—	—
5	9.4	1.256592	5	15.0	2.0052
6	10.7	1.430376	6	17.4	2.326032
7	11.8	1.577424	7	19.8	2.646364
8	12.8	1.711104	8	22.2	2.967696
9	13.7	1.831416	9	24.6	3.288528
10	14.6	1.951728	10	27.0	3.60936
11	15.4	2.058672	11	27.8	3.716304
12	16.0	2.13888	12	28.6	3.823248
13	16.5	2.20572	13	29.4	3.930192
14	17.0	2.27256	14	30.2	4.037136
15	17.5	2.3394	15	31.0	4.14408
16	18.0	2.90624	16	31.8	4.241024
17	18.4	2.459712	17	32.6	4.357968
18	18.8	2.513184	18	33.4	4.464912
19	19.2	2.566656	19	34.2	4.571856
20	19.6	2.620128	20	35.0	4.6788

(continued)

INTERNATIONAL CODE COUNCIL®
Copyright © 2019 ICC & NYSDOS. ALL RIGHTS RESERVED. Accessed by Lauren Gualdino (lgualdino@briarcliffmanor.org), (-) Order Number #100880972 on May 08, 2020 07:05 AM (PDT) pursuant to License Agreement with ICC & NYSDOS. No further reproduction, no

100880972

TABLE P2903.6(1)—continued
CONVERSIONS FROM WATER SUPPLY FIXTURE UNIT TO GALLON PER MINUTE FLOW RATES

SUPPLY SYSTEMS PREDOMINANTLY FOR FLUSH TANKS			SUPPLY SYSTEMS PREDOMINANTLY FOR FLUSHOMETER VALVES		
Load	Demand		Load	Demand	
(Water supply fixture units)	(Gallons per minute)	(Cubic feet per minute)	(Water supply fixture units)	(Gallons per minute)	(Cubic feet per minute)
25	21.5	2.87412	25	38.0	5.07984
30	23.3	3.114744	30	42.0	5.61356
35	24.9	3.328632	35	44.0	5.88192
40	26.3	3.515784	40	46.0	6.14928
45	27.7	3.702936	45	48.0	6.41664
50	29.1	3.890088	50	50.0	6.684

For SI: 1 gallon per minute = 3.785 L/m, 1 cubic foot per minute = 0.4719 L/s.

TABLE P2903.9.4
VALVES

MATERIAL	STANDARD
Chlorinated polyvinyl chloride (CPVC) plastic	ASME A112.4.14, ASME A112.18.1/CSA B125.1, ASTM F1970, CSA B125.3, MSS SP-122
Copper or copper alloy	ASME A112.4.14, ASME A112.18.1/CSA B125.1, ASME B16.34, CSA B125.3, MSS SP-67, MSS SP-80, MSS SP-110, MSS SP-139
Gray and ductile iron	ASTM A126, AWWA C500, AWWA C504, AWWA C507, MSS SP-42, MSS SP-67, MSS SP-70, MSS SP-71, MSS SP-72, MSS SP-78
Cross-linked polyethylene (PEX) plastic	ASME A112.4.14, ASME A112.18.1/CSA B125.1, CSA B125.3, NSF 359
Polypropylene (PP) plastic	ASME A112.4.14, ASTM F2389
Polyvinyl chloride (PVC) plastic	ASME A112.4.14, ASTM F1970, MSS SP-122

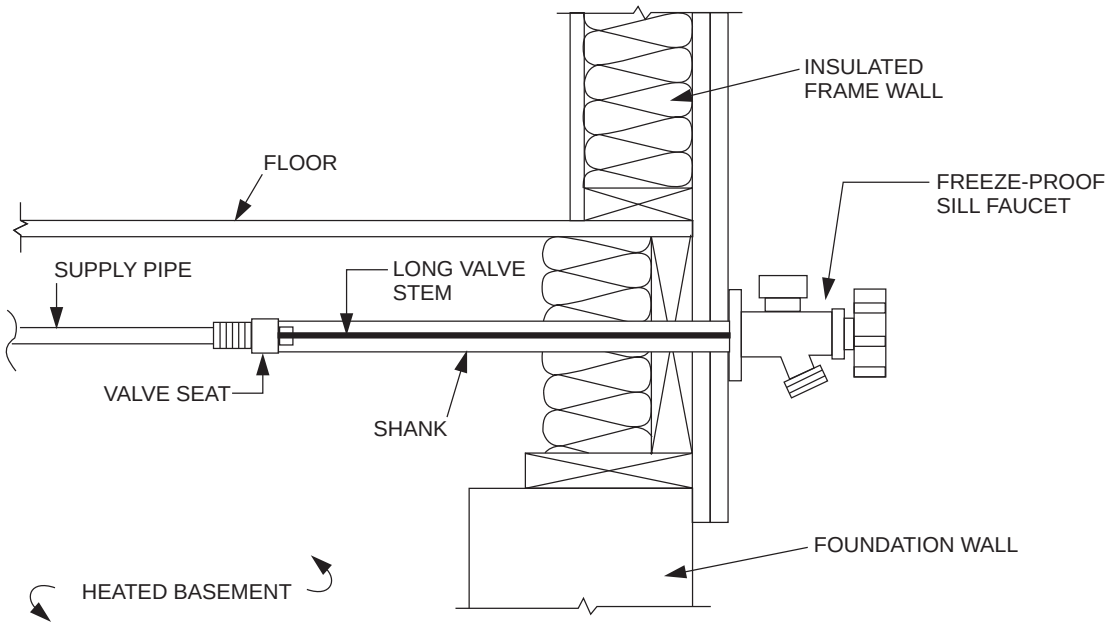

FIGURE P2903.10
TYPICAL FROSTPROOF HOSE BIBB INSTALLATION NOT REQUIRING SEPARATE VALVE

INTERNATIONAL CODE COUNCIL®
Copyright © 2019 ICC & NYSDOS. ALL RIGHTS RESERVED. Accessed by Lauren Gualdino (lgualdino@briarcliffmanor.org), (-) Order Number #100880972 on May 08, 2020 07:05 AM (PDT) pursuant to License Agreement with ICC & NYSDOS. No further reproduction, no

100880972

SECTION P2904
DWELLING UNIT FIRE SPRINKLER SYSTEMS

P2904.1 General. The design and installation of residential fire sprinkler systems shall be in accordance with NFPA 13D or Section P2904, which shall be considered to be equivalent to NFPA 13D. Partial residential sprinkler systems shall be permitted to be installed only in buildings not required to be equipped with a residential sprinkler system. Section P2904 shall apply to stand-alone and multipurpose wet-pipe sprinkler systems that do not include the use of antifreeze. A multipurpose fire sprinkler system shall provide domestic water to both fire sprinklers and plumbing fixtures. A stand-alone sprinkler system shall be separate and independent from the water distribution system. A backflow preventer shall not be required to separate a sprinkler system from the water distribution system, provided that the sprinkler system complies with all of the following:

1. The system complies with NFPA 13D or Section P2904.
2. The piping material complies with Section P2906.
3. The system does not contain antifreeze.
4. The system does not have a fire department connection.

P2904.1.1 Required sprinkler locations. Sprinklers shall be installed to protect all areas of a *dwelling unit*.

Exceptions:

1. Attics, crawl spaces and normally unoccupied concealed spaces that do not contain fuel-fired appliances do not require sprinklers. In *attics*, crawl spaces and normally unoccupied concealed spaces that contain fuel-fired equipment, a sprinkler shall be installed above the equipment; however, sprinklers shall not be required in the remainder of the space.
2. Clothes closets, linen closets and pantries not exceeding 24 square feet (2.2 m^2) in area, with the smallest dimension not greater than 3 feet (915 mm) and having wall and ceiling surfaces of gypsum board.
3. Bathrooms not more than 55 square feet (5.1 m^2) in area.
4. Garages; carports; exterior porches; unheated entry areas, such as mud rooms, that are adjacent to an exterior door; and similar areas.

P2904.2 Sprinklers. Sprinklers shall be new listed residential sprinklers and shall be installed in accordance with the sprinkler manufacturer's instructions.

P2904.2.1 Temperature rating and separation from heat sources. Except as provided for in Section P2904.2.2, sprinklers shall have a temperature rating of not less than 135°F (57°C) and not more than 170°F (77°C). Sprinklers shall be separated from heat sources as required by the sprinkler manufacturer's installation instructions.

P2904.2.2 Intermediate temperature sprinklers. Sprinklers shall have an intermediate temperature rating not less than 175°F (79°C) and not more than 225°F (107°C) where installed in the following locations:

1. Directly under skylights, where the sprinkler is exposed to direct sunlight.
2. In *attics*.
3. In concealed spaces located directly beneath a roof.
4. Within the distance to a heat source as specified in Table P2904.2.2.

P2904.2.3 Freezing areas. Piping shall be protected from freezing as required by Section P2603.5. Where sprinklers are required in areas that are subject to freezing, dry-side-

TABLE P2904.2.2
LOCATIONS WHERE INTERMEDIATE TEMPERATURE SPRINKLERS ARE REQUIRED

HEAT SOURCE	RANGE OF DISTANCE FROM HEAT SOURCE WITHIN WHICH INTERMEDIATE TEMPERATURE SPRINKLERS ARE REQUIRED[a, b] (inches)
Fireplace, side of open or recessed fireplace	12 to 36
Fireplace, front of recessed fireplace	36 to 60
Coal and wood burning stove	12 to 42
Kitchen range top	9 to 18
Oven	9 to 18
Vent connector or chimney connector	9 to 18
Heating duct, not insulated	9 to 18
Hot water pipe, not insulated	6 to 12
Side of ceiling or wall warm air register	12 to 24
Front of wall mounted warm air register	18 to 36
Water heater, furnace or boiler	3 to 6
Luminaire up to 250 watts	3 to 6
Luminaire 250 watts up to 499 watts	6 to 12

For SI: 1 inch = 25.4 mm.

a. Sprinklers shall not be located at distances less than the minimum table distance unless the sprinkler listing allows a lesser distance.

b. Distances shall be measured in a straight line from the nearest edge of the heat source to the nearest edge of the sprinkler.

INTERNATIONAL CODE COUNCIL®
Copyright © 2019 ICC & NYSDOS. ALL RIGHTS RESERVED. Accessed by Lauren Gualdino (lgualdino@briarcliffmanor.org), (-) Order Number #100880972 on May 08, 2020 07:05 AM (PDT) pursuant to License Agreement with ICC & NYSDOS. No further reproduction, no

100880972

wall or dry-pendent sprinklers extending from a nonfreezing area into a freezing area shall be installed.

P2904.2.4 Sprinkler coverage. Sprinkler coverage requirements and sprinkler obstruction requirements shall be in accordance with Sections P2904.2.4.1 and P2904.2.4.2.

P2904.2.4.1 Coverage area limit. The area of coverage of a single sprinkler shall not exceed 400 square feet (37 m^2) and shall be based on the sprinkler *listing* and the sprinkler manufacturer's installation instructions.

P2904.2.4.2 Obstructions to coverage. Sprinkler discharge shall not be blocked by obstructions unless additional sprinklers are installed to protect the obstructed area. Additional sprinklers shall not be required where the sprinkler separation from obstructions complies with either the minimum distance indicated in Figure P2904.2.4.2 or the minimum distances specified in the sprinkler manufacturer's instructions where the manufacturer's instructions permit a lesser distance.

P2904.2.4.2.1 Additional requirements for pendent sprinklers. Pendent sprinklers within 3 feet (915 mm) of the center of a ceiling fan, surface-mounted ceiling luminaire or similar object shall be considered to be obstructed, and additional sprinklers shall be installed.

P2904.2.4.2.2 Additional requirements for sidewall sprinklers. Sidewall sprinklers within 5 feet (1524 mm) of the center of a ceiling fan, surface-mounted ceiling luminaire or similar object shall be considered to be obstructed, and additional sprinklers shall be installed.

P2904.2.5 Sprinkler installation on systems assembled with solvent cement. The solvent cementing of threaded adapter fittings shall be completed and threaded adapters for sprinklers shall be verified as being clear of excess cement prior to the installation of sprinklers on systems assembled with solvent cement.

P2904.2.6 Sprinkler modifications prohibited. Painting, caulking or modifying of sprinklers shall be prohibited. Sprinklers that have been painted, caulked, modified or damaged shall be replaced with new sprinklers.

P2904.3 Sprinkler piping system. Sprinkler piping shall be supported in accordance with requirements for cold water distribution piping. Sprinkler piping shall comply with the requirements for cold water distribution piping. For multipurpose piping systems, the sprinkler piping shall connect to and be a part of the cold water distribution piping system.

Exception: For plastic piping, it shall be permissible to follow the manufacturer's installation instructions.

P2904.3.1 Nonmetallic pipe and tubing. Nonmetallic pipe and tubing, such as CPVC, PEX, and PE-RT shall be *listed* for use in residential fire sprinkler systems.

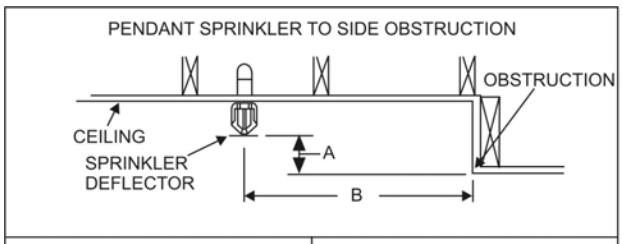

WHERE "A" IS LESS THAN OR EQUAL TO: (INCHES)	"B" MUST BE NOT LESS THAN: (FEET)
1	1½
3	3
5	4
7	4½
9	1½
11	6½
14	7

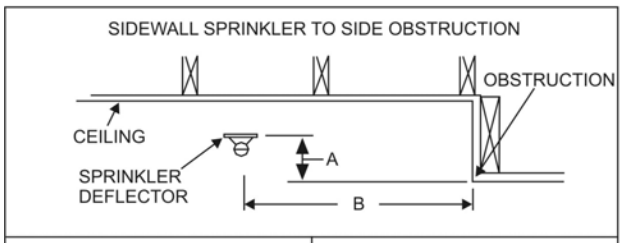

WHERE "A" IS LESS THAN OR EQUAL TO: (INCHES)	"B" MUST BE NOT LESS THAN: (FEET)
1	1½
3	3
5	4
7	4½
9	6
11	6½
14	7

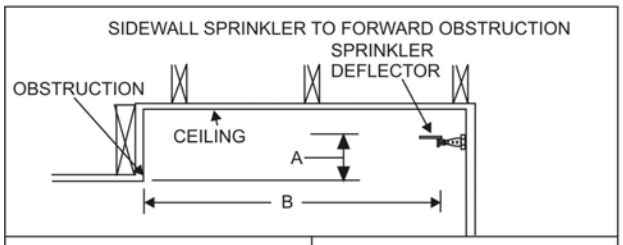

WHERE "A" IS LESS THAN OR EQUAL TO: (INCHES)	"B" MUST BE NOT LESS THAN: (FEET)
1	8
2	10
3	11
4	12
6	13
7	14
9	15
11	16
14	17

For SI: 1 inch = 25.4 mm, 1 foot = 304.8 mm.

FIGURE P2904.2.4.2
MINIMUM ALLOWABLE DISTANCE BETWEEN SPRINKLER AND OBSTRUCTION

INTERNATIONAL CODE COUNCIL®
Copyright © 2019 ICC & NYSDOS. ALL RIGHTS RESERVED. Accessed by Lauren Gualdino (lgualdino@briarcliffmanor.org), (-) Order Number #100880972 on May 08, 2020 07:05 AM (PDT) pursuant to License Agreement with ICC & NYSDOS. No further reproduction, no

100880972

P2904.3.1.1 Nonmetallic pipe protection. Nonmetallic pipe and tubing systems shall be protected from exposure to the living space by a layer of not less than $^3/_8$-inch-thick (9.5 mm) gypsum wallboard, $^1/_2$-inch-thick (13 mm) plywood, or other material having a 15-minute fire rating.

Exceptions:

1. Pipe protection shall not be required in areas that do not require protection with sprinklers as specified in Section P2904.1.1.
2. Pipe protection shall not be required where exposed piping is permitted by the pipe *listing*.

P2904.3.2 Shutoff valves prohibited. With the exception of shutoff valves for the entire water distribution system, valves shall not be installed in any location where the valve would isolate piping serving one or more sprinklers.

P2904.3.3 Single dwelling limit. Piping beyond the service valve located at the beginning of the water distribution system shall not serve more than one *dwelling*.

P2904.3.4 Drain. A means to drain the sprinkler system shall be provided on the system side of the water distribution shutoff valve.

P2904.4 Determining system design flow. The flow for sizing the sprinkler piping system shall be based on the flow rating of each sprinkler in accordance with Section P2904.4.1 and the calculation in accordance with Section P2904.4.2.

P2904.4.1 Determining required flow rate for each sprinkler. The minimum required flow for each sprinkler shall be determined using the sprinkler manufacturer's published data for the specific sprinkler model based on all of the following:

1. The area of coverage.
2. The ceiling configuration.
3. The temperature rating.
4. Any additional conditions specified by the sprinkler manufacturer.

P2904.4.2 System design flow rate. The design flow rate for the system shall be based on the following:

1. The design flow rate for a room having only one sprinkler shall be the flow rate required for that sprinkler, as determined by Section P2904.4.1.
2. The design flow rate for a room having two or more sprinklers shall be determined by identifying the sprinkler in that room with the highest required flow rate, based on Section P2904.4.1, and multiplying that flow rate by 2.
3. Where the sprinkler manufacturer specifies different criteria for ceiling configurations that are not smooth, flat and horizontal, the required flow rate for that room shall comply with the sprinkler manufacturer's instructions.
4. The design flow rate for the sprinkler system shall be the flow required by the room with the largest flow rate, based on Items 1, 2 and 3.
5. For the purpose of this section, it shall be permissible to reduce the design flow rate for a room by subdividing the space into two or more rooms, where each room is evaluated separately with respect to the required design flow rate. Each room shall be bounded by walls and a ceiling. Openings in walls shall have a lintel not less than 8 inches (203 mm) in depth and each lintel shall form a solid barrier between the ceiling and the top of the opening.

P2904.5 Water supply. The water supply shall provide not less than the required design flow rate for sprinklers in accordance with Section P2904.4.2 at a pressure not less than that used to comply with Section P2904.6.

P2904.5.1 Water supply from individual sources. Where a *dwelling unit* water supply is from a tank system, a private well system or a combination of these, the available water supply shall be based on the minimum pressure control setting for the pump.

P2904.5.2 Required capacity. The water supply shall have the capacity to provide the required design flow rate for sprinklers for a period of time as follows:

1. Seven minutes for *dwelling units* one *story* in height and less than 2,000 square feet (186 m^2) in area.
2. Ten minutes for *dwelling units* two or more stories in height or equal to or greater than 2,000 square feet (186 m^2) in area.

Where a well system, a water supply tank system or a combination thereof is used, any combination of well capacity and tank storage shall be permitted to meet the capacity requirement.

P2904.6 Pipe sizing. The piping to sprinklers shall be sized for the flow required by Section P2904.4.2. The flow required to supply the plumbing fixtures shall not be required to be added to the sprinkler design flow.

P2904.6.1 Method of sizing pipe. Piping supplying sprinklers shall be sized using the prescriptive method in Section P2904.6.2 or by hydraulic calculation in accordance with NFPA 13D. The minimum pipe size from the water supply source to any sprinkler shall be $^3/_4$ inch (19 mm) nominal. Threaded adapter fittings at the point where sprinklers are attached to the piping shall be not less than $^1/_2$ inch (13 mm) nominal.

P2904.6.2 Prescriptive pipe sizing method. Pipe shall be sized by determining the available pressure to offset friction loss in piping and identifying a piping material, diameter and length using the equation in Section P2904.6.2.1 and the procedure in Section P2904.6.2.2.

P2904.6.2.1 Available pressure equation. The pressure available to offset friction loss in the interior piping system (P_t) shall be determined in accordance with the Equation 29-1.

$$P_t = P_{sup} - PL_{svc} - PL_m - PL_d - PL_e - P_{sp} \quad \textbf{(Equation 29-1)}$$

where:

P_t = Pressure used in applying Tables P2904.6.2(4) through P2904.6.2(9).

INTERNATIONAL CODE COUNCIL®
Copyright © 2019 ICC & NYSDOS. ALL RIGHTS RESERVED. Accessed by Lauren Gualdino (lgualdino@briarcliffmanor.org), (-) Order Number #100880972 on May 08, 2020 07:05 AM (PDT) pursuant to License Agreement with ICC & NYSDOS. No further reproduction, no

100880972

P_{sup} = Pressure available from the water supply source.

PL_{svc} = Pressure loss in the water service pipe. [Table P2904.6.2(1)]

PL_m = Pressure loss in the water meter. [Table P2904.6.2(2)]

PL_d = Pressure loss from devices other than the water meter.

PL_e = Pressure loss associated with changes in elevation. [Table P2904.6.2(3)]

P_{sp} = Maximum pressure required by a sprinkler.

P2904.6.2.2 Calculation procedure. Determination of the required size for water distribution piping shall be in accordance with the following procedure:

Step 1—Determine P_{sup}

Obtain the static supply pressure that will be available from the water main from the water purveyor, or for an individual source, the available supply pressure shall be in accordance with Section P2904.5.1.

Step 2—Determine PL_{svc}

Use Table P2904.6.2(1) to determine the pressure loss in the water service pipe based on the selected size of the water service.

Step 3—Determine PL_m

Use Table P2904.6.2(2) to determine the pressure loss from the water meter, based on the selected water meter size.

Step 4—Determine PL_d

Determine the pressure loss from devices other than the water meter installed in the piping system supplying sprinklers, such as pressure-reducing valves, backflow preventers, water softeners or water filters. Device pressure losses shall be based on the device manufacturer's specifications. The flow rate used to determine pressure loss shall be the rate from Section P2904.4.2, except that 5 gpm (0.3 L/s) shall be added where the device is installed in a water service pipe that supplies more than one *dwelling*. As an alternative to deducting pressure loss for a device, an automatic bypass valve shall be installed to divert flow around the device when a sprinkler activates.

Step 5—Determine PL_e

Use Table P2904.6.2(3) to determine the pressure loss associated with changes in elevation. The elevation used in applying the table shall be the difference between the elevation where the water source pressure was measured and the elevation of the highest sprinkler.

Step 6—Determine P_{sp}

Determine the maximum pressure required by any individual sprinkler based on the flow rate from Section P2904.4.1. The required pressure is provided in the sprinkler manufacturer's published data for the specific sprinkler model based on the selected flow rate.

Step 7—Calculate P_t

Using Equation 29-1, calculate the pressure available to offset friction loss in water-distribution piping between the service valve and the sprinklers.

Step 8—Determine the maximum allowable pipe length

Use Tables P2904.6.2(4) through P2904.6.2(9) to select a material and size for water distribution piping. The piping material and size shall be acceptable if the *developed length* of pipe between the service valve and the most remote sprinkler does not exceed the maximum allowable length specified by the applicable table. Interpolation of P_t between the tabular values shall be permitted.

The maximum allowable length of piping in Tables P2904.6.2(4) through P2904.6.2(9) incorporates an adjustment for pipe fittings. Additional consideration of friction losses associated with pipe fittings shall not be required.

P2904.7 Instructions and signs. An owner's manual for the fire sprinkler system shall be provided to the owner. A sign or valve tag shall be installed at the main shutoff valve to the water distribution system stating the following: "Warning, the water system for this home supplies fire sprinklers that require certain flows and pressures to fight a fire. Devices that restrict the flow or decrease the pressure or automatically shut off the water to the fire sprinkler system, such as water softeners, filtration systems and automatic shutoff valves, shall not be added to this system without a review of the fire sprinkler system by a fire protection specialist. Do not remove this sign."

P2904.8 Inspections. The water distribution system shall be inspected in accordance with Sections P2904.8.1 and P2904.8.2.

P2904.8.1 Preconcealment inspection. The following items shall be verified prior to the concealment of any sprinkler system piping:

1. Sprinklers are installed in all areas as required by Section P2904.1.1.
2. Where sprinkler water spray patterns are obstructed by construction features, luminaires or ceiling fans, additional sprinklers are installed as required by Section P2904.2.4.2.
3. Sprinklers are the correct temperature rating and are installed at or beyond the required separation distances from heat sources as required by Sections P2904.2.1 and P2904.2.2.
4. The pipe size equals or exceeds the size used in applying Tables P2904.6.2(4) through P2904.6.2(9) or, if the piping system was hydraulically calculated in accordance with Section P2904.6.1, the size used in the hydraulic calculation.
5. The pipe length does not exceed the length permitted by Tables P2904.6.2(4) through P2904.6.2(9) or, if the piping system was hydraulically calculated in accordance with Section P2904.6.1, pipe lengths and

INTERNATIONAL CODE COUNCIL®
Copyright © 2019 ICC & NYSDOS. ALL RIGHTS RESERVED. Accessed by Lauren Gualdino (lgualdino@briarcliffmanor.org), (-) Order Number #100880972 on May 08, 2020 07:05 AM (PDT) pursuant to License Agreement with ICC & NYSDOS. No further reproduction, no

100880972

fittings do not exceed those used in the hydraulic calculation.

6. Nonmetallic piping that conveys water to sprinklers is *listed* for use with fire sprinklers.
7. Piping is supported in accordance with the pipe manufacturer's and sprinkler manufacturer's installation instructions.
8. The piping system is tested in accordance with Section P2503.7.

P2904.8.2 Final inspection. The following items shall be verified upon completion of the system:

1. Sprinklers are not painted, damaged or otherwise hindered from operation.
2. Where a pump is required to provide water to the system, the pump starts automatically upon system water demand.
3. Pressure-reducing valves, water softeners, water filters or other impairments to water flow that were not part of the original design have not been installed.
4. The sign or valve tag required by Section P2904.7 is installed and the owner's manual for the system is present.

SECTION P2905
HEATED WATER DISTRIBUTION SYSTEMS

P2905.1 Heated water circulation systems and heat trace systems. Circulation systems and heat trace systems that are installed to bring heated water in close proximity to one or more fixtures shall meet the requirements of Section N1103.5.1.

P2905.2 Demand recirculation systems. Demand recirculation water systems shall be in accordance with Section N1103.5.2.

SECTION P2906
MATERIALS, JOINTS AND CONNECTIONS

P2906.1 Soil and groundwater. The installation of water service pipe, water distribution pipe, fittings, valves, appurtenances and gaskets shall be prohibited in soil and groundwater that is contaminated with solvents, fuels, organic compounds or other detrimental materials that cause permeation, corrosion, degradation or structural failure of the water service or water distribution piping material.

P2906.1.1 Investigation required. Where detrimental conditions are suspected by or brought to the attention of the *building official*, a chemical analysis of the soil and groundwater conditions shall be required to ascertain the acceptability of the water service material for the specific installation.

TABLE P2904.6.2(1)
WATER SERVICE PRESSURE LOSS (PL_{svc})[a, b]

FLOW RATE[c] (gpm)	$^3/_4$-INCH WATER SERVICE PRESSURE LOSS (psi)				1-INCH WATER SERVICE PRESSURE LOSS (psi)				$1^1/_4$-INCH WATER SERVICE PRESSURE LOSS (psi)			
	Length of water service pipe (feet)				Length of water service pipe (feet)				Length of water service pipe (feet)			
	40 or less	41 to 75	76 to 100	101 to 150	40 or less	41 to 75	76 to 100	101 to 150	40 or less	41 to 75	76 to 100	101 to 150
8	5.1	8.7	11.8	17.4	1.5	2.5	3.4	5.1	0.6	1.0	1.3	1.9
10	7.7	13.1	17.8	26.3	2.3	3.8	5.2	7.7	0.8	1.4	2.0	2.9
12	10.8	18.4	24.9	NP	3.2	5.4	7.3	10.7	1.2	2.0	2.7	4.0
14	14.4	24.5	NP	NP	4.2	7.1	9.6	14.3	1.6	2.7	3.6	5.4
16	18.4	NP	NP	NP	5.4	9.1	12.4	18.3	2.0	3.4	4.7	6.9
18	22.9	NP	NP	NP	6.7	11.4	15.4	22.7	2.5	4.3	5.8	8.6
20	27.8	NP	NP	NP	8.1	13.8	18.7	27.6	3.1	5.2	7.0	10.4
22	NP	NP	NP	NP	9.7	16.5	22.3	NP	3.7	6.2	8.4	12.4
24	NP	NP	NP	NP	11.4	19.3	26.2	NP	4.3	7.3	9.9	14.6
26	NP	NP	NP	NP	13.2	22.4	NP	NP	5.0	8.5	11.4	16.9
28	NP	NP	NP	NP	15.1	25.7	NP	NP	5.7	9.7	13.1	19.4
30	NP	NP	NP	NP	17.2	NP	NP	NP	6.5	11.0	14.9	22.0
32	NP	NP	NP	NP	19.4	NP	NP	NP	7.3	12.4	16.8	24.8
34	NP	NP	NP	NP	21.7	NP	NP	NP	8.2	13.9	18.8	NP
36	NP	NP	NP	NP	24.1	NP	NP	NP	9.1	15.4	20.9	NP

For SI: 1 inch = 25.4 mm, 1 foot = 304.8 mm, 1 gallon per minute = 0.063 L/s, 1 pound per square inch = 6.895 kPa.

NP = Not Permitted. Pressure loss exceeds reasonable limits.

a. Values are applicable for underground piping materials listed in Table P2905.4 and are based on an SDR of 11 and a Hazen Williams C Factor of 150.

b. Values include the following length allowances for fittings: 25% length increase for actual lengths up to 100 feet and 15% length increase for actual lengths over 100 feet.

c. Flow rate from Section P2904.4.2. Add 5 gpm to the flow rate required by Section P2904.4.2 where the water service pipe supplies more than one dwelling.

INTERNATIONAL CODE COUNCIL®
Copyright © 2019 ICC & NYSDOS. ALL RIGHTS RESERVED. Accessed by Lauren Gualdino (lgualdino@briarcliffmanor.org), (-) Order Number #100880972 on May 08, 2020 07:05 AM (PDT) pursuant to License Agreement with ICC & NYSDOS. No further reproduction, no

100880972

TABLE P2904.6.2(2)
MINIMUM WATER METER PRESSURE LOSS (PL_m)[a]

FLOW RATE (gallons per minute, gpm)[b]	$^5/_8$-INCH METER PRESSURE LOSS (pounds per square inch, psi)	$^3/_4$-INCH METER PRESSURE LESS (pounds per square inch, psi)	1-INCH METER PRESSURE LOSS (pounds per square inch, psi)
8	2	1	1
10	3	1	1
12	4	1	1
14	5	2	1
16	7	3	1
18	9	4	1
20	11	4	2
22	NP	5	2
24	NP	5	2
26	NP	6	2
28	NP	6	2
30	NP	7	2
32	NP	7	3
34	NP	8	3
36	NP	8	3

For SI: 1 inch = 25.4 mm, 1 pound per square inch = 6.895 kPa, 1 gallon per minute = 0.063 L/s.

NP = Not permitted unless the actual water meter pressure loss is known.

a. Table P2904.6.2(2) establishes conservative values for water meter pressure loss or installations where the water meter loss is unknown. Where the actual water meter pressure loss is known, P_m shall be the actual loss.

b. Flow rate from Section P2904.4.2. Add 5 gpm to the flow rate required by Section P2904.4.2 where the water service pipe supplies more than one dwelling.

TABLE P2904.6.2(3)
ELEVATION LOSS (PL_e)

ELEVATION (feet)	PRESSURE LOSS (psi)
5	2.2
10	4.4
15	6.5
20	8.7
25	10.9
30	13
35	15.2
40	17.4

For SI: 1 foot = 304.8 mm, 1 pound per square inch = 6.895 kPa.

INTERNATIONAL CODE COUNCIL®
Copyright © 2019 ICC & NYSDOS. ALL RIGHTS RESERVED. Accessed by Lauren Gualdino (lgualdino@briarcliffmanor.org), (-) Order Number #100880972 on May 08, 2020 07:05 AM (PDT) pursuant to License Agreement with ICC & NYSDOS. No further reproduction, no

100880972

TABLE P2904.6.2(4)
ALLOWABLE PIPE LENGTH FOR $^3/_4$-INCH TYPE M COPPER WATER TUBING

SPRINKLER FLOW RATE[a] (gpm)	WATER DISTRIBUTION SIZE (inch)	AVAILABLE PRESSURE—P_t (psi)									
		15	20	25	30	35	40	45	50	55	60
		Allowable length of pipe from service valve to farthest sprinkler (feet)									
8	$^3/_4$	217	289	361	434	506	578	650	723	795	867
9	$^3/_4$	174	232	291	349	407	465	523	581	639	697
10	$^3/_4$	143	191	239	287	335	383	430	478	526	574
11	$^3/_4$	120	160	200	241	281	321	361	401	441	481
12	$^3/_4$	102	137	171	205	239	273	307	341	375	410
13	$^3/_4$	88	118	147	177	206	235	265	294	324	353
14	$^3/_4$	77	103	128	154	180	205	231	257	282	308
15	$^3/_4$	68	90	113	136	158	181	203	226	248	271
16	$^3/_4$	60	80	100	120	140	160	180	200	220	241
17	$^3/_4$	54	72	90	108	125	143	161	179	197	215
18	$^3/_4$	48	64	81	97	113	129	145	161	177	193
19	$^3/_4$	44	58	73	88	102	117	131	146	160	175
20	$^3/_4$	40	53	66	80	93	106	119	133	146	159
21	$^3/_4$	36	48	61	73	85	97	109	121	133	145
22	$^3/_4$	33	44	56	67	78	89	100	111	122	133
23	$^3/_4$	31	41	51	61	72	82	92	102	113	123
24	$^3/_4$	28	38	47	57	66	76	85	95	104	114
25	$^3/_4$	26	35	44	53	61	70	79	88	97	105
26	$^3/_4$	24	33	41	49	57	65	73	82	90	98
27	$^3/_4$	23	30	38	46	53	61	69	76	84	91
28	$^3/_4$	21	28	36	43	50	57	64	71	78	85
29	$^3/_4$	20	27	33	40	47	53	60	67	73	80
30	$^3/_4$	19	25	31	38	44	50	56	63	69	75
31	$^3/_4$	18	24	29	35	41	47	53	59	65	71
32	$^3/_4$	17	22	28	33	39	44	50	56	61	67
33	$^3/_4$	16	21	26	32	37	42	47	53	58	63
34	$^3/_4$	NP	20	25	30	35	40	45	50	55	60
35	$^3/_4$	NP	19	24	28	33	38	42	47	52	57
36	$^3/_4$	NP	18	22	27	31	36	40	45	49	54
37	$^3/_4$	NP	17	21	26	30	34	38	43	47	51
38	$^3/_4$	NP	16	20	24	28	32	36	40	45	49
39	$^3/_4$	NP	15	19	23	27	31	35	39	42	46
40	$^3/_4$	NP	NP	18	22	26	29	33	37	40	44

For SI: 1 inch = 25.4 mm, 1 foot = 304.8 mm, 1 pound per square inch = 6.895 kPa, 1 gallon per minute = 0.963 L/s.
NP = Not Permitted.
a. Flow rate from Section P2904.4.2.

INTERNATIONAL CODE COUNCIL®
Copyright © 2019 ICC & NYSDOS. ALL RIGHTS RESERVED. Accessed by Lauren Gualdino (lgualdino@briarcliffmanor.org), (-) Order Number #100880972 on May 08, 2020 07:05 AM (PDT) pursuant to License Agreement with ICC & NYSDOS. No further reproduction, no

100880972

TABLE P2904.6.2(5)
ALLOWABLE PIPE LENGTH FOR 1-INCH TYPE M COPPER WATER TUBING

SPRINKLER FLOW RATE[a] (gpm)	WATER DISTRIBUTION SIZE (inch)	AVAILABLE PRESSURE—P_t (psi)									
		15	20	25	30	35	40	45	50	55	60
		Allowable length of pipe from service valve to farthest sprinkler (feet)									
8	1	806	1075	1343	1612	1881	2149	2418	2687	2955	3224
9	1	648	864	1080	1296	1512	1728	1945	2161	2377	2593
10	1	533	711	889	1067	1245	1422	1600	1778	1956	2134
11	1	447	586	745	894	1043	1192	1341	1491	1640	1789
12	1	381	508	634	761	888	1015	1142	1269	1396	1523
13	1	328	438	547	657	766	875	985	1094	1204	1313
14	1	286	382	477	572	668	763	859	954	1049	1145
15	1	252	336	420	504	588	672	756	840	924	1008
16	1	224	298	373	447	522	596	671	745	820	894
17	1	200	266	333	400	466	533	600	666	733	799
18	1	180	240	300	360	420	479	539	599	659	719
19	1	163	217	271	325	380	434	488	542	597	651
20	1	148	197	247	296	345	395	444	493	543	592
21	1	135	180	225	270	315	360	406	451	496	541
22	1	124	165	207	248	289	331	372	413	455	496
23	1	114	152	190	228	267	305	343	381	419	457
24	1	106	141	176	211	246	282	317	352	387	422
25	1	98	131	163	196	228	261	294	326	359	392
26	1	91	121	152	182	212	243	273	304	334	364
27	1	85	113	142	170	198	226	255	283	311	340
28	1	79	106	132	159	185	212	238	265	291	318
29	1	74	99	124	149	174	198	223	248	273	298
30	1	70	93	116	140	163	186	210	233	256	280
31	1	66	88	110	132	153	175	197	219	241	263
32	1	62	83	103	124	145	165	186	207	227	248
33	1	59	78	98	117	137	156	176	195	215	234
34	1	55	74	92	111	129	148	166	185	203	222
35	1	53	70	88	105	123	140	158	175	193	210
36	1	50	66	83	100	116	133	150	166	183	199
37	1	47	63	79	95	111	126	142	158	174	190
38	1	45	60	75	90	105	120	135	150	165	181
39	1	43	57	72	86	100	115	129	143	158	172
40	1	41	55	68	82	96	109	123	137	150	164

For SI: 1 inch = 25.4 mm, 1 foot = 304.8 mm, 1 pound per square inch = 6.895 kPa, 1 gallon per minute = 0.963 L/s.
a. Flow rate from Section P2904.4.2.

INTERNATIONAL CODE COUNCIL®
Copyright © 2019 ICC & NYSDOS. ALL RIGHTS RESERVED. Accessed by Lauren Gualdino (lgualdino@briarcliffmanor.org), (-) Order Number #100880972 on May 08, 2020 07:05 AM (PDT) pursuant to License Agreement with ICC & NYSDOS. No further reproduction, no

100880972

TABLE P2904.6.2(6)
ALLOWABLE PIPE LENGTH FOR $^3/_4$-INCH CPVC PIPE

SPRINKLER FLOW RATE[a] (gpm)	WATER DISTRIBUTION SIZE (inch)	AVAILABLE PRESSURE—P_t (psi)									
		15	20	25	30	35	40	45	50	55	60
		Allowable length of pipe from service valve to farthest sprinkler (feet)									
8	$^3/_4$	348	465	581	697	813	929	1045	1161	1278	1394
9	$^3/_4$	280	374	467	560	654	747	841	934	1027	1121
10	$^3/_4$	231	307	384	461	538	615	692	769	845	922
11	$^3/_4$	193	258	322	387	451	515	580	644	709	773
12	$^3/_4$	165	219	274	329	384	439	494	549	603	658
13	$^3/_4$	142	189	237	284	331	378	426	473	520	568
14	$^3/_4$	124	165	206	247	289	330	371	412	454	495
15	$^3/_4$	109	145	182	218	254	290	327	363	399	436
16	$^3/_4$	97	129	161	193	226	258	290	322	354	387
17	$^3/_4$	86	115	144	173	202	230	259	288	317	346
18	$^3/_4$	78	104	130	155	181	207	233	259	285	311
19	$^3/_4$	70	94	117	141	164	188	211	234	258	281
20	$^3/_4$	64	85	107	128	149	171	192	213	235	256
21	$^3/_4$	58	78	97	117	136	156	175	195	214	234
22	$^3/_4$	54	71	89	107	125	143	161	179	197	214
23	$^3/_4$	49	66	82	99	115	132	148	165	181	198
24	$^3/_4$	46	61	76	91	107	122	137	152	167	183
25	$^3/_4$	42	56	71	85	99	113	127	141	155	169
26	$^3/_4$	39	52	66	79	92	105	118	131	144	157
27	$^3/_4$	37	49	61	73	86	98	110	122	135	147
28	$^3/_4$	34	46	57	69	80	92	103	114	126	137
29	$^3/_4$	32	43	54	64	75	86	96	107	118	129
30	$^3/_4$	30	40	50	60	70	81	91	101	111	121
31	$^3/_4$	28	38	47	57	66	76	85	95	104	114
32	$^3/_4$	27	36	45	54	63	71	80	89	98	107
33	$^3/_4$	25	34	42	51	59	68	76	84	93	101
34	$^3/_4$	24	32	40	48	56	64	72	80	88	96
35	$^3/_4$	23	30	38	45	53	61	68	76	83	91
36	$^3/_4$	22	29	36	43	50	57	65	72	79	86
37	$^3/_4$	20	27	34	41	48	55	61	68	75	82
38	$^3/_4$	20	26	33	39	46	52	59	65	72	78
39	$^3/_4$	19	25	31	37	43	50	56	62	68	74
40	$^3/_4$	18	24	30	35	41	47	53	59	65	71

For SI: 1 inch = 25.4 mm, 1 foot = 304.8 mm, 1 pound per square inch = 6.895 kPa, 1 gallon per minute = 0.963 L/s.

a. Flow rate from Section P2904.4.2.

INTERNATIONAL CODE COUNCIL®
Copyright © 2019 ICC & NYSDOS. ALL RIGHTS RESERVED. Accessed by Lauren Gualdino (lgualdino@briarcliffmanor.org), (-) Order Number #100880972 on May 08, 2020 07:05 AM (PDT) pursuant to License Agreement with ICC & NYSDOS. No further reproduction, no

100880972

TABLE P2904.6.2(7)
ALLOWABLE PIPE LENGTH FOR 1-INCH CPVC PIPE

SPRINKLER FLOW RATE[a] (gpm)	WATER DISTRIBUTION SIZE (inch)	AVAILABLE PRESSURE—P_t (psi)									
		15	20	25	30	35	40	45	50	55	60
		Allowable length of pipe from service valve to farthest sprinkler (feet)									
8	1	1049	1398	1748	2098	2447	2797	3146	3496	3845	4195
9	1	843	1125	1406	1687	1968	2249	2530	2811	3093	3374
10	1	694	925	1157	1388	1619	1851	2082	2314	2545	2776
11	1	582	776	970	1164	1358	1552	1746	1940	2133	2327
12	1	495	660	826	991	1156	1321	1486	1651	1816	1981
13	1	427	570	712	854	997	1139	1281	1424	1566	1709
14	1	372	497	621	745	869	993	1117	1241	1366	1490
15	1	328	437	546	656	765	874	983	1093	1202	1311
16	1	291	388	485	582	679	776	873	970	1067	1164
17	1	260	347	433	520	607	693	780	867	954	1040
18	1	234	312	390	468	546	624	702	780	858	936
19	1	212	282	353	423	494	565	635	706	776	847
20	1	193	257	321	385	449	513	578	642	706	770
21	1	176	235	293	352	410	469	528	586	645	704
22	1	161	215	269	323	377	430	484	538	592	646
23	1	149	198	248	297	347	396	446	496	545	595
24	1	137	183	229	275	321	366	412	458	504	550
25	1	127	170	212	255	297	340	382	425	467	510
26	1	118	158	197	237	276	316	355	395	434	474
27	1	111	147	184	221	258	295	332	368	405	442
28	1	103	138	172	207	241	275	310	344	379	413
29	1	97	129	161	194	226	258	290	323	355	387
30	1	91	121	152	182	212	242	273	303	333	364
31	1	86	114	143	171	200	228	257	285	314	342
32	1	81	108	134	161	188	215	242	269	296	323
33	1	76	102	127	152	178	203	229	254	280	305
34	1	72	96	120	144	168	192	216	240	265	289
35	1	68	91	114	137	160	182	205	228	251	273
36	1	65	87	108	130	151	173	195	216	238	260
37	1	62	82	103	123	144	165	185	206	226	247
38	1	59	78	98	117	137	157	176	196	215	235
39	1	56	75	93	112	131	149	168	187	205	224
40	1	53	71	89	107	125	142	160	178	196	214

For SI: 1 inch = 25.4 mm, 1 foot = 304.8 mm, 1 pound per square inch = 6.895 kPa, 1 gallon per minute = 0.963 L/s.
a. Flow rate from Section P2904.4.2.

INTERNATIONAL CODE COUNCIL®
Copyright © 2019 ICC & NYSDOS. ALL RIGHTS RESERVED. Accessed by Lauren Gualdino (lgualdino@briarcliffmanor.org), (-) Order Number #100880972 on May 08, 2020 07:05 AM (PDT) pursuant to License Agreement with ICC & NYSDOS. No further reproduction, no

100880972

TABLE P2904.6.2(8)
ALLOWABLE PIPE LENGTH FOR $^{3}/_{4}$-INCH PEX AND PE-RT TUBING

SPRINKLER FLOW RATE[a] (gpm)	WATER DISTRIBUTION SIZE (inch)	AVAILABLE PRESSURE—P_t (psi)									
		15	20	25	30	35	40	45	50	55	60
		Allowable length of pipe from service valve to farthest sprinkler (feet)									
8	$^{3}/_{4}$	93	123	154	185	216	247	278	309	339	370
9	$^{3}/_{4}$	74	99	124	149	174	199	223	248	273	298
10	$^{3}/_{4}$	61	82	102	123	143	163	184	204	225	245
11	$^{3}/_{4}$	51	68	86	103	120	137	154	171	188	205
12	$^{3}/_{4}$	44	58	73	87	102	117	131	146	160	175
13	$^{3}/_{4}$	38	50	63	75	88	101	113	126	138	151
14	$^{3}/_{4}$	33	44	55	66	77	88	99	110	121	132
15	$^{3}/_{4}$	29	39	48	58	68	77	87	96	106	116
16	$^{3}/_{4}$	26	34	43	51	60	68	77	86	94	103
17	$^{3}/_{4}$	23	31	38	46	54	61	69	77	84	92
18	$^{3}/_{4}$	21	28	34	41	48	55	62	69	76	83
19	$^{3}/_{4}$	19	25	31	37	44	50	56	62	69	75
20	$^{3}/_{4}$	17	23	28	34	40	45	51	57	62	68
21	$^{3}/_{4}$	16	21	26	31	36	41	47	52	57	62
22	$^{3}/_{4}$	NP	19	24	28	33	38	43	47	52	57
23	$^{3}/_{4}$	NP	17	22	26	31	35	39	44	48	52
24	$^{3}/_{4}$	NP	16	20	24	28	32	36	40	44	49
25	$^{3}/_{4}$	NP	NP	19	22	26	30	34	37	41	45
26	$^{3}/_{4}$	NP	NP	17	21	24	28	31	35	38	42
27	$^{3}/_{4}$	NP	NP	16	20	23	26	29	33	36	39
28	$^{3}/_{4}$	NP	NP	15	18	21	24	27	30	33	36
29	$^{3}/_{4}$	NP	NP	NP	17	20	23	26	28	31	34
30	$^{3}/_{4}$	NP	NP	NP	16	19	21	24	27	29	32
31	$^{3}/_{4}$	NP	NP	NP	15	18	20	23	25	28	30
32	$^{3}/_{4}$	NP	NP	NP	NP	17	19	21	24	26	28
33	$^{3}/_{4}$	NP	NP	NP	NP	16	18	20	22	25	27
34	$^{3}/_{4}$	NP	NP	NP	NP	NP	17	19	21	23	25
35	$^{3}/_{4}$	NP	NP	NP	NP	NP	16	18	20	22	24
36	$^{3}/_{4}$	NP	NP	NP	NP	NP	15	17	19	21	23
37	$^{3}/_{4}$	NP	NP	NP	NP	NP	NP	16	18	20	22
38	$^{3}/_{4}$	NP	NP	NP	NP	NP	NP	16	17	19	21
39	$^{3}/_{4}$	NP	NP	NP	NP	NP	NP	NP	16	18	20
40	$^{3}/_{4}$	NP	NP	NP	NP	NP	NP	NP	16	17	19

For SI: 1 inch = 25.4 mm, 1 foot = 304.8 mm, 1 pound per square inch = 6.895 kPa, 1 gallon per minute = 0.963 L/s.
NP = Not Permitted.
a. Flow rate from Section P2904.4.2.

INTERNATIONAL CODE COUNCIL®
Copyright © 2019 ICC & NYSDOS. ALL RIGHTS RESERVED. Accessed by Lauren Gualdino (lgualdino@briarcliffmanor.org), (-) Order Number #100880972 on May 08, 2020 07:05 AM (PDT) pursuant to License Agreement with ICC & NYSDOS. No further reproduction, no

100880972

TABLE P2904.6.2(9)
ALLOWABLE PIPE LENGTH FOR 1-INCH PEX AND PE-RT TUBING

SPRINKLER FLOW RATE[a] (gpm)	WATER DISTRIBUTION SIZE (inch)	AVAILABLE PRESSURE—P_t (psi)									
		15	20	25	30	35	40	45	50	55	60
		Allowable length of pipe from service valve to farthest sprinkler (feet)									
8	1	314	418	523	628	732	837	941	1046	1151	1255
9	1	252	336	421	505	589	673	757	841	925	1009
10	1	208	277	346	415	485	554	623	692	761	831
11	1	174	232	290	348	406	464	522	580	638	696
12	1	148	198	247	296	346	395	445	494	543	593
13	1	128	170	213	256	298	341	383	426	469	511
14	1	111	149	186	223	260	297	334	371	409	446
15	1	98	131	163	196	229	262	294	327	360	392
16	1	87	116	145	174	203	232	261	290	319	348
17	1	78	104	130	156	182	208	233	259	285	311
18	1	70	93	117	140	163	187	210	233	257	280
19	1	63	84	106	127	148	169	190	211	232	253
20	1	58	77	96	115	134	154	173	192	211	230
21	1	53	70	88	105	123	140	158	175	193	211
22	1	48	64	80	97	113	129	145	161	177	193
23	1	44	59	74	89	104	119	133	148	163	178
24	1	41	55	69	82	96	110	123	137	151	164
25	1	38	51	64	76	89	102	114	127	140	152
26	1	35	47	59	71	83	95	106	118	130	142
27	1	33	44	55	66	77	88	99	110	121	132
28	1	31	41	52	62	72	82	93	103	113	124
29	1	29	39	48	58	68	77	87	97	106	116
30	1	27	36	45	54	63	73	82	91	100	109
31	1	26	34	43	51	60	68	77	85	94	102
32	1	24	32	40	48	56	64	72	80	89	97
33	1	23	30	38	46	53	61	68	76	84	91
34	1	22	29	36	43	50	58	65	72	79	86
35	1	20	27	34	41	48	55	61	68	75	82
36	1	19	26	32	39	45	52	58	65	71	78
37	1	18	25	31	37	43	49	55	62	68	74
38	1	18	23	29	35	41	47	53	59	64	70
39	1	17	22	28	33	39	45	50	56	61	67
40	1	16	21	27	32	37	43	48	53	59	64

For SI: 1 inch = 25.4 mm, 1 foot = 304.8 mm, 1 pound per square inch = 6.895 kPa, 1 gallon per minute = 0.963 L/s.

a. Flow rate from Section P2904.4.2.

INTERNATIONAL CODE COUNCIL®
Copyright © 2019 ICC & NYSDOS. ALL RIGHTS RESERVED. Accessed by Lauren Gualdino (lgualdino@briarcliffmanor.org), (-) Order Number #100880972 on May 08, 2020 07:05 AM (PDT) pursuant to License Agreement with ICC & NYSDOS. No further reproduction, no

100880972

P2906.1.2 Detrimental condition. Where a detrimental condition exists, *approved* alternate materials or alternate routing shall be required.

P2906.2 Lead content. The lead content in pipe and fittings used in the water supply system shall be not greater than 8 percent.

P2906.2.1 Lead content of drinking water pipe and fittings. Pipe, pipe fittings, joints, valves, faucets and fixture fittings utilized to supply water for drinking or cooking purposes shall comply with NSF 372 and shall have a weighted average lead content of 0.25-percent lead or less.

P2906.3 Polyethylene plastic piping installation. Polyethylene pipe shall be cut square using a cutter designed for plastic pipe. Except where joined by heat fusion, pipe ends shall be chamfered to remove sharp edges. Pipe that has been kinked shall not be installed. For bends, the installed radius of pipe curvature shall be greater than 30 pipe diameters or the coil radius where bending with the coil. Coiled pipe shall not be bent beyond straight. Bends within 10 pipe diameters of any fitting or valve shall be prohibited. Joints between polyethylene plastic pipe and fittings shall comply with Section P2906.3.1 or P2906.3.2.

P2906.3.1 Heat-fusion joints. Joint surfaces shall be clean and free from moisture. Joint surfaces shall be heated to melting temperature and joined. The joint shall be undisturbed until cool. Joints shall be made in accordance with ASTM D2657.

P2906.3.2 Mechanical joints. Mechanical joints shall be installed in accordance with the manufacturer's instructions.

P2906.4 Water service pipe. Water service pipe shall conform to NSF 61 and shall conform to one of the standards indicated in Table P2906.4. Water service pipe or tubing, installed underground and outside of the structure, shall have a working pressure rating of not less than 160 pounds per square inch at 73°F (1103 kPa at 23°C). Where the water pressure exceeds 160 pounds per square inch (1103 kPa), piping material shall have a rated working pressure equal to or greater than the highest available pressure. Water service piping materials not third-party certified for water distribution shall terminate at or before the full open valve located at the entrance to the structure. Ductile iron water service piping shall be cement mortar lined in accordance with AWWA C104/A21.4.

P2906.4.1 Separation of water service and building sewer. Trenching, pipe installation and backfilling shall be in accordance with Section P2604. Where water service piping is located in the same trench with the building sewer, such sewer shall be constructed of materials listed in Table P3002.1(2). Where the building sewer piping is not constructed of materials indicated in Table P3002.1(2), the water service pipe and the building sewer shall be horizontally separated by not less than 5 feet (1524 mm) of undisturbed or compacted earth. The required separation distance shall not apply where a water service pipe crosses a sewer pipe, provided that the water service is sleeved to a point not less than 5 feet (1524 mm) horizontally from the sewer pipe centerline on both sides of such crossing. The sleeve shall be of pipe materials indicated in Table P2906.4, P3002.1(2) or P3002.2. The required separation distance shall not apply where the bottom of the water service pipe that is located within 5 feet (1524 mm) of the sewer is not less than 12 inches (305 mm) above the highest point of the top of the building sewer.

P2906.5 Water distribution pipe. Water distribution piping within *dwelling units* shall conform to NSF 61 and shall conform to one of the standards indicated in Table P2906.5. Water distribution pipe and tubing shall have a pressure rating of not less than 100 psi at 180°F (689 kPa at 82°C).

P2906.6 Fittings. Pipe fittings shall be *approved* for installation with the piping material installed and shall comply with the applicable standards indicated in Table P2906.6. Pipe fittings used in water supply systems shall comply with NSF 61.

P2906.6.1 Saddle tap fittings. The use of saddle tap fittings and combination saddle tap and valve fittings shall be prohibited.

P2906.7 Flexible water connectors. Flexible water connectors, exposed to continuous pressure, shall conform to ASME A112.18.6/CSA B125.6. Access shall be provided to flexible water connectors.

P2906.8 Joint and connection tightness. Joints and connections in the plumbing system shall be gastight and watertight for the intended use or required test pressure.

P2906.9 Plastic pipe joints. Joints in plastic piping shall be made with *approved* fittings by solvent cementing, heat fusion, corrosion-resistant metal clamps with insert fittings or compression connections. Flared joints for polyethylene pipe shall be permitted in accordance with Section P2906.10.1.

P2906.9.1 Solvent cementing. Solvent-cemented joints shall comply with Sections P2906.9.1.1 through P2906.9.1.4.

P2906.9.1.1 ABS plastic pipe. Solvent cement for ABS plastic pipe conforming to ASTM D2235 shall be applied to all joint surfaces.

P2906.9.1.2 CPVC plastic pipe. Joint surfaces shall be clean and free from moisture. Joints shall be made in accordance with the pipe, fitting or solvent cement manufacturer's installation instructions. Where such instructions require a primer to be used, an *approved* primer shall be applied, and a solvent cement, orange in color and conforming to ASTM F493, shall be applied to joint surfaces. Where such instructions allow for a one-step solvent cement, yellow or red in color and conforming to ASTM F493, to be used, the joint surfaces shall not require application of a primer before the solvent cement is applied. The joint shall be made while the cement is wet, and in accordance with ASTM D2846 or ASTM F493. Solvent cement joints shall be permitted above or below ground.

P2906.9.1.3 CPVC/AL/CPVC pipe. Joint surfaces shall be clean and free from moisture, and an *approved* primer shall be applied. Solvent cement, orange in color and conforming to ASTM F493, shall be applied

INTERNATIONAL CODE COUNCIL®
Copyright © 2019 ICC & NYSDOS. ALL RIGHTS RESERVED. Accessed by Lauren Gualdino (lgualdino@briarcliffmanor.org), (-) Order Number #100880972 on May 08, 2020 07:05 AM (PDT) pursuant to License Agreement with ICC & NYSDOS. No further reproduction, no

100880972

to all joint surfaces. The joint shall be made while the cement is wet, and in accordance with ASTM D2846 or ASTM F493. Solvent-cemented joints shall be installed above or below ground.

Exception: A primer shall not be required where all of the following conditions apply:

1. The solvent cement used is third-party certified as conforming to ASTM F493.
2. The solvent cement used is yellow in color.
3. The solvent cement is used only for joining $^{1}/_{2}$-inch (12.7 mm) through 1-inch (25 mm) diameter CPVC/AL/CPVC pipe and CPVC fittings.
4. The CPVC fittings are manufactured in accordance with ASTM D2846.

P2906.9.1.4 PVC plastic pipe. A purple primer, or other *approved* primer that conforms to ASTM F656 shall be applied to PVC solvent-cemented joints. Solvent cement for PVC plastic pipe conforming to ASTM D2564 shall be applied to all joint surfaces.

P2906.10 Cross-linked polyethylene plastic (PEX). Joints between cross-linked polyethylene plastic tubing or fittings shall comply with Section P2906.9.10.1 or Section P2906.9.10.2.

P2906.10.1 Flared joints. Flared pipe ends shall be made by a tool designed for that operation.

P2906.10.2 Mechanical joints. Mechanical joints shall be installed in accordance with the manufacturer's instructions. Fittings for cross-linked polyethylene (PEX) plastic tubing shall comply with the applicable standards indicated in Table P2906.6 and shall be installed in accordance with the manufacturer's instructions. PEX tubing shall be factory marked with the applicable standards for the fittings that the PEX manufacturer specifies for use with the tubing.

P2906.11 Polypropylene (PP) plastic. Joints between polypropylene plastic pipe and fittings shall comply with Section P2906.11.1 or P2906.11.2.

P2906.11.1 Heat-fusion joints. Heat fusion joints for polypropylene pipe and tubing joints shall be installed with socket-type heat-fused polypropylene fittings, butt-fusion polypropylene fittings or electrofusion polypropylene fittings. Joint surfaces shall be clean and free from moisture. The joint shall be undisturbed until cool. Joints shall be made in accordance with ASTM F2389.

P2906.11.2 Mechanical and compression sleeve joints. Mechanical and compression sleeve joints shall be installed in accordance with the manufacturer's instructions.

P2906.12 Cross-linked polyethylene/aluminum/cross-linked polyethylene. Joints between polyethylene/aluminum/polyethylene (PE-AL-PE) and cross-linked polyethylene/aluminum/cross-linked polyethylene (PEX-AL-PEX) pipe and fittings shall comply with Section P2906.12.1.

P2906.12.1 Mechanical joints. Mechanical joints shall be installed in accordance with the manufacturer's instructions. Fittings for PE-AL-PE and PEX-AL-PEX as described in ASTM F1974, ASTM F1281, ASTM F1282, CSA B137.9 and CSA B137.10 shall be installed in accordance with the manufacturer's instructions.

P2906.13 Stainless steel. Joints between stainless steel pipe and fittings shall comply with Section P2906.13.1 or P2906.13.2.

P2906.13.1 Mechanical joints. Mechanical joints shall be installed in accordance with the manufacturer's instructions.

P2906.13.2 Welded joints. Joint surfaces shall be cleaned. The joint shall be welded autogenously or with an *approved* filler metal in accordance with ASTM A312.

P2906.14 Threaded pipe joints. Threaded joints shall conform to American National Taper Pipe Thread specifications. Pipe ends shall be deburred and chips removed. Pipe joint compound shall be used only on male threads.

P2906.15 Soldered and brazed joints. Soldered joints in copper and copper alloy tubing shall be made with fittings approved for water piping and shall conform to ASTM B828. Surfaces to be soldered shall be cleaned bright. Fluxes for soldering shall be in accordance with ASTM B813. Brazing fluxes shall be in accordance with AWS A5.31M/A5.31. Solders and fluxes used in potable water-supply systems shall have a lead content of not greater than 0.2 percent.

P2906.16 Flared joints. Flared joints in water tubing shall be made with *approved* fittings. The tubing shall be reamed and then expanded with a flaring tool.

P2906.17 Above-ground joints. Joints within the building between copper pipe or CPVC tubing, in any combination with compatible outside diameters, shall be permitted to be made with the use of *approved* push-in mechanical fittings of a pressure-lock design.

P2906.18 Joints between different materials. Joints between different piping materials shall be made in accordance with Section P2906.18.1, P2906.18.2, P2906.18.3 or P2906.18.4, or with a mechanical joint of the compression or mechanical sealing type having an elastomeric seal conforming to ASTM D1869 or ASTM F477. Joints shall be installed in accordance with the manufacturer's instructions.

P2906.18.1 Copper or copper-alloy tubing to galvanized steel pipe. Joints between copper or copper-alloy tubing and galvanized steel pipe shall be made with a copper alloy fitting or dielectric fitting. The copper tubing shall be joined to the fitting in an *approved* manner, and the fitting shall be screwed to the threaded pipe.

P2906.18.2 Joint between PVC water service and CPVC water distribution. Where a PVC water service pipe connects to a CPVC pipe at the beginning of a water distribution system, the transition shall be by a mechanical fitting, an *approved* adapter fitting, a transition fitting or by a single, solvent-cemented transition joint. A single, solvent-cemented transition joint shall be in compliance with ASTM F493 and the pipe, fitting and solvent cement manufacturers' instructions. Solvent cement joint surfaces shall be clean, free from moisture and prepared with an

INTERNATIONAL CODE COUNCIL®
Copyright © 2019 ICC & NYSDOS. ALL RIGHTS RESERVED. Accessed by Lauren Gualdino (lgualdino@briarcliffmanor.org), (-) Order Number #100880972 on May 08, 2020 07:05 AM (PDT) pursuant to License Agreement with ICC & NYSDOS. No further reproduction, no

100880972

TABLE P2906.4
WATER SERVICE PIPE

MATERIAL	STANDARD
Acrylonitrile butadiene styrene (ABS) plastic pipe	ASTM D1527; ASTM D2282
Chlorinated polyvinyl chloride (CPVC) plastic pipe	ASTM D2846; ASTM F441; ASTM F442/F442M; CSA B137.6
Chlorinated polyvinyl chloride/aluminum/chlorinated polyvinyl chloride (CPVC/AL/CPVC) plastic pipe	ASTM F2855
Copper or copper-alloy pipe	ASTM B42; ASTM B43; ASTM B302
Copper or copper-alloy tubing (Type K, WK, L, WL, M or WM)	ASTM B75/B75M; ASTM B88; ASTM B251; ASTM B447
Cross-linked polyethylene/aluminum/cross-linked polyethylene (PEX-AL-PEX) pipe	ASTM F1281; ASTM F2262; CSA B137.10
Cross-linked polyethylene/aluminum/high-density polyethylene (PEX-AL-HDPE) pipe	ASTM F1986
Cross-linked polyethylene (PEX) plastic tubing	ASTM F876; AWWA C904; CSA B137.5
Ductile iron water pipe	AWWA C115/A21.15; AWWA C151/A21.51
Galvanized steel pipe	ASTM A53
Polyethylene/aluminum/polyethylene (PE-AL-PE) pipe	ASTM F1282; CSA B137.9
Polyethylene (PE) plastic pipe	ASTM D2104; ASTM D2239; AWWA C901; CSA B137.1
Polyethylene (PE) plastic tubing	ASTM D2737; AWWA C901; CSA B137.1
Polyethylene of raised temperature (PE-RT) plastic tubing	ASTM F2769; CSA B137.18
Polypropylene (PP) plastic tubing	ASTM F2389; CSA B137.11
Polyvinyl chloride (PVC) plastic pipe	ASTM D1785; ASTM D2241; ASTM D2672; CSA B137.3
Stainless steel (Type 304/304L) pipe	ASTM A312; ASTM A778
Stainless steel (Type 316/316L) pipe	ASTM A312; ASTM A778

TABLE P2906.5
WATER DISTRIBUTION PIPE

MATERIAL	STANDARD
Chlorinated polyvinyl chloride (CPVC) plastic pipe and tubing	ASTM D2846; ASTM F441; ASTM F442/ F442M; CSA B137.6
Chlorinated polyvinyl chloride/aluminum/chlorinated polyvinyl chloride (CPVC/AL/ CPVC) plastic pipe	ASTM F2855
Copper or copper-alloy pipe	ASTM B42; ASTM B43; ASTM B302
Copper or copper-alloy tubing (Type K, WK, L, WL, M or WM)	ASTM B75/B75M; ASTM B88; ASTM B251; ASTM B447
Cross-linked polyethylene (PEX) plastic tubing	ASTM F876; CSA B137.5
Cross-linked polyethylene/aluminum/cross-linked polyethylene (PEX-AL-PEX) pipe	ASTM F1281; ASTM F2262; CSA B137.10
Cross-linked polyethylene/aluminum/high-density polyethylene (PEX-AL-HDPE) pipe	ASTM F1986
Galvanized steel pipe	ASTM A53
Polyethylene/aluminum/polyethylene (PE-AL-PE) composite pipe	ASTM F1282
Polyethylene of raised temperature (PE-RT) plastic tubing	ASTM F2769; CSA B137.18
Polypropylene (PP) plastic pipe or tubing	ASTM F2389; CSA B137.11
Stainless steel (Type 304/304L) pipe	ASTM A312; ASTM A778

INTERNATIONAL CODE COUNCIL®
Copyright © 2019 ICC & NYSDOS. ALL RIGHTS RESERVED. Accessed by Lauren Gualdino (lgualdino@briarcliffmanor.org), (-) Order Number #100880972 on May 08, 2020 07:05 AM (PDT) pursuant to License Agreement with ICC & NYSDOS. No further reproduction, no

100880972

approved primer. Solvent cement conforming to ASTM F493 shall be applied to the joint surfaces and the joint assembled while the cement is wet.

P2906.18.3 Plastic pipe or tubing to other piping material. Joints between different types of plastic pipe or between plastic pipe and other piping material shall be made with an *approved* adapter fitting.

P2906.18.4 Stainless steel. Joints between stainless steel and different piping materials shall be made with a mechanical joint of the compression or mechanical-sealing type or a dielectric fitting.

P2906.19 Press-connected joints. Press-connected joints shall conform to one of the standards indicated in Table P2906.6. Press-type mechanical joints in copper tubing shall be made in accordance with the manufacturer's instructions. Cut tube ends shall be reamed to the full inside diameter of the tube end. Joint surfaces shall be cleaned. The tube shall be fully inserted into the press-connected fitting. Press-connected joints shall be pressed with a tool certified by the manufacturer.

P2906.20 Polyethylene of raised temperature plastic. Joints between polyethylene of raised temperature plastic tubing and fittings shall be in accordance with Sections P2906.20.1, P2906.20.2 and P2906.20.3.

P2906.20.1 Mechanical joints. Mechanical joints shall be installed in accordance with the manufacturer's instructions. Fittings for polyethylene of raised temperature plastic tubing shall comply with the applicable standards indicated in Table P2906.6 and shall be installed in accordance with the manufacturer's instructions. Polyethylene of raised temperature plastic tubing shall be factory marked with the applicable standards for the fittings that the manufacturer of the tubing specifies for use with the tubing.

P2906.20.2 Heat fusion joints. Joints shall be of the socket-fusion, saddle-fusion, or butt-fusion type, and shall be joined in accordance with ASTM D2657. Joint surfaces shall be clean and free of moisture. Joint surfaces shall be heated to melt temperatures and joined. The joint shall remain undisturbed until cool. Fittings shall be manufactured in accordance with ASTM D2683 or ASTM D3261.

P2906.20.3 Electrofusion joints. Joints shall be of the electrofusion type. Joint surfaces shall be clean and free of moisture and scoured to expose virgin resin. Joint surfaces shall be heated to melt temperatures for a period of time specified by the manufacturer and joined. The joint shall remain undisturbed until cool. Fittings shall be manufactured in accordance with ASTM F1055.

TABLE P2906.6
PIPE FITTINGS

MATERIAL	STANDARD
Acrylonitrile butadiene styrene (ABS) plastic	ASTM D2468
Cast-iron	ASME B16.4
Chlorinated polyvinyl chloride (CPVC) plastic	ASSE 1061; ASTM D2846; ASTM F437; ASTM F438; ASTM F439; CSA B137.6
Copper or copper alloy	ASME B16.15; ASME B16.18; ASME B16.22; ASME B16.26; ASME B16.51; ASSE 1061
Cross-linked polyethylene/aluminum/high-density polyethylene (PEX-AL-HDPE)	ASTM F1986
Fittings for cross-linked polyethylene (PEX) plastic tubing	ASSE 1061; ASTM F877; ASTM F1807; ASTM F1960; ASTM F2080; ASTM F2098; ASTM F2159; ASTM F2434; ASTM F2735; CSA B137.5
Gray iron and ductile iron	AWWA C110/A21.10; AWWA C153/A21.53
Malleable iron	ASME B16.3
Insert fittings for Polyethylene/aluminum/polyethylene (PE-AL-PE) and cross-linked polyethylene/aluminum/cross-linked polyethylene (PEX-AL-PEX)	ASTM F1281; ASTM F1282; ASTM F1974; CSA B137.9; CSA B137.10
Polyethylene (PE) plastic	ASTM D 2609; CSA B137.1
Fittings for polyethylene of raised temperature (PE-RT) plastic tubing	ASSE 1061; ASTM D2683; ASTM D3261; ASTM F1055; ASTM F1807; ASTM F2098; ASTM F 2159; ASTM F2735; ASTM F2769; CSA B137.18
Polypropylene (PP) plastic pipe or tubing	ASTM F2389; CSA B137.11
Polyvinyl chloride (PVC) plastic	ASTM D2464; ASTM D2466; ASTM D2467; CSA B137.2; CSA B137.3
Stainless steel (Type 304/304L) pipe	ASTM A312; ASTM A778
Stainless steel (Type 316/316L) pipe	ASTM A312; ASTM A778
Steel	ASME B16.9; ASME B16.11; ASME B16.28

INTERNATIONAL CODE COUNCIL®
Copyright © 2019 ICC & NYSDOS. ALL RIGHTS RESERVED. Accessed by Lauren Gualdino (lgualdino@briarcliffmanor.org), (-) Order Number #100880972 on May 08, 2020 07:05 AM (PDT) pursuant to License Agreement with ICC & NYSDOS. No further reproduction, no

100880972

P2906.21 Push-fit joints. Push-fit joints shall be used only on copper-tube-size outside diameter dimensioned CPVC, PEX and copper tubing. Push-fit joints shall conform to ASSE 1061 and shall be installed in accordance with the manufacturer's instructions.

SECTION P2907
CHANGES IN DIRECTION

P2907.1 Bends. Changes in direction in copper tubing shall be permitted to be made with bends having a radius of not less than four diameters of the tube, provided that such bends are made by use of forming equipment that does not deform or create loss in cross-sectional area of the tube.

SECTION P2908
SUPPORT

P2908.1 General. Pipe and tubing support shall conform to Section P2605.

SECTION P2909
DRINKING WATER TREATMENT UNITS

P2909.1 Design. Drinking water treatment units shall meet the requirements of NSF42, NSF 44, NSF 53, NSF 60 or CSA B483.1.

P2909.2 Reverse osmosis drinking water treatment units. Point-of-use reverse osmosis drinking water treatment units, designed for residential use, shall meet the requirements of CSA B483.1 or NSF 58. Waste or discharge from reverse osmosis drinking water treatment units shall enter the drainage system through an *air gap* or an *air gap* device that meets the requirements of NSF 58.

P2909.3 Connection tubing. The tubing to and from drinking water treatment units shall be of a size and material as recommended by the manufacturer. The tubing shall comply with NSF 14, NSF 42, NSF 44, NSF 53, NSF 58 or NSF 61.

SECTION P2910
NONPOTABLE WATER SYSTEMS

P2910.1 Scope. The provisions of this section shall govern the materials, design, construction and installation of systems for the collection, storage, treatment and distribution of nonpotable water. The use and application of nonpotable water shall comply with laws, rules and ordinances applicable in the *jurisdiction*.

P2910.2 Water quality. Nonpotable water for each end use application shall meet the minimum water quality requirements as established for the intended application by the laws, rules and ordinances applicable in the *jurisdiction*. Where nonpotable water from different sources is combined in a system, the system shall comply with the most stringent requirements of this code applicable to such sources.

P2910.2.1 Residual disinfectants. Where chlorine is used for disinfection, the nonpotable water shall contain not more than 4 ppm (4 mg/L) of chloramines or free chlorine. Where ozone is used for disinfection, the nonpotable water shall not contain gas bubbles having elevated levels of ozone at the point of use.

Exception: Reclaimed water sources shall not be required to comply with the requirements of this section.

P2910.2.2 Filtration required. Nonpotable water utilized for water closet and urinal flushing applications shall be filtered by a 100 micron or finer filter.

Exception: Reclaimed water sources shall not be required to comply with the requirements of this section.

P2910.3 Signage required. Nonpotable water outlets such as hose connections, open-ended pipes and faucets shall be identified at the point of use for each outlet with signage that reads as follows: "Nonpotable water is utilized for [application name]. CAUTION: NONPOTABLE WATER. DO NOT DRINK." The words shall be legibly and indelibly printed on a tag or sign constructed of corrosion-resistant, waterproof material or shall be indelibly printed on the fixture. The letters of the words shall be not less than 0.5 inches (12.7 mm) in height and in colors contrasting the background on which they are applied. In addition to the required wordage, the pictograph shown in Figure P2910.3 shall appear on the signage required by this section.



FIGURE P2910.3
PICTOGRAPH—DO NOT DRINK

P2910.4 Permits. *Permits* shall be required for the construction, installation, *alteration* and repair of nonpotable water systems. *Construction documents*, engineering calculations, diagrams and other such data pertaining to the nonpotable water system shall be submitted with each *permit* application.

P2910.5 Potable water connections. Where a potable system is connected to a nonpotable water system, the potable water supply shall be protected against backflow in accordance with Section P2902.

P2910.6 Approved components and materials. Piping, plumbing components and materials used in collection and conveyance systems shall be manufactured of material approved for the intended application and compatible with any disinfection and treatment systems used.

INTERNATIONAL CODE COUNCIL®
Copyright © 2019 ICC & NYSDOS. ALL RIGHTS RESERVED. Accessed by Lauren Gualdino (lgualdino@briarcliffmanor.org), (-) Order Number #100880972 on May 08, 2020 07:05 AM (PDT) pursuant to License Agreement with ICC & NYSDOS. No further reproduction, no

100880972

P2910.7 Insect and vermin control. The system shall be protected to prevent the entrance of insects and vermin into storage tanks and piping systems. Screen materials shall be compatible with contacting system components and shall not accelerate the corrosion of system components.

P2910.8 Freeze protection. Where sustained freezing temperatures occur, provisions shall be made to keep storage tanks and the related piping from freezing.

P2910.9 Nonpotable water storage tanks. Nonpotable water storage tanks shall comply with Sections P2910.9.1 through P2910.9.11.

P2910.9.1 Sizing. The holding capacity of the storage tank shall be sized in accordance with the anticipated demand.

P2910.9.2 Location. Storage tanks shall be installed above or below grade. Above-grade storage tanks shall be protected from direct sunlight and shall be constructed using opaque, UV-resistant materials such as, but not limited to, heavily tinted plastic, lined metal, concrete and wood; or painted to prevent algae growth; or shall have specially constructed sun barriers including, but not limited to, installation in garages, crawl spaces or sheds. Storage tanks and their manholes shall not be located directly under any soil piping, waste piping or any source of contamination.

P2910.9.3 Materials. Where collected on site, water shall be collected in an *approved* tank constructed of durable, nonabsorbent and corrosion-resistant materials. The storage tank shall be constructed of materials compatible with any disinfection systems used to treat water upstream of the tank and with any systems used to maintain water quality within the tank. Wooden storage tanks that are not equipped with a makeup water source shall be provided with a flexible liner.

P2910.9.4 Foundation and supports. Storage tanks shall be supported on a firm base capable of withstanding the weight of the storage tank when filled to capacity. Storage tanks shall be supported in accordance with this code.

P2910.9.4.1 Ballast. Where the soil can become saturated, an underground storage tank shall be ballasted or otherwise secured to prevent the tank from floating out of the ground when empty. The combined weight of the tank and hold-down ballast shall meet or exceed the buoyancy force of the tank. Where the installation requires a foundation, the foundation shall be flat and shall be designed to support the storage tank weight when full, consistent with the bearing capability of adjacent soil.

P2910.9.4.2 Structural support. Where installed below grade, storage tank installations shall be designed to withstand earth and surface structural loads without damage and with minimal deformation when empty or filled with water.

P2910.9.5 Makeup water. Where an uninterrupted nonpotable water supply is required for the intended application, potable or reclaimed water shall be provided as a source of makeup water for the storage tank. The makeup water supply shall be protected against backflow by means of an *air gap* not less than 4 inches (102 mm) above the overflow or an *approved* backflow device in accordance with Section P2902. A full-open valve located on the makeup water supply line to the storage tank shall be provided. Inlets to the storage tank shall be controlled by fill valves or other automatic supply valves installed to prevent the tank from overflowing and to prevent the water level from dropping below a predetermined point. Where makeup water is provided, the water level shall be prohibited from dropping below the source water inlet or the intake of any attached pump.

P2910.9.5.1 Inlet control valve alarm. Makeup water systems shall be fitted with a warning mechanism that alerts the user to a failure of the inlet control valve to close correctly. The alarm shall activate before the water within the storage tank begins to discharge into the overflow system.

P2910.9.6 Overflow. The storage tank shall be equipped with an overflow pipe having a diameter not less than that shown in Table P2910.9.6. The overflow outlet shall discharge at a point not less than 6 inches (152 mm) above the roof or roof drain; floor or floor drain; or over an open water-supplied fixture. The overflow outlet shall be covered with a corrosion-resistant screen of not less than 16 by 20 mesh per inch (630 by 787 mesh per m) and by $^1/_4$-inch (6.4 mm) hardware cloth or shall terminate in a horizontal angle seat check valve. Drainage from overflow pipes shall be directed to prevent freezing on roof walks. The overflow drain shall not be equipped with a shutoff valve. Not less than one cleanout shall be provided on each overflow pipe in accordance with Section P3005.2.

TABLE P2910.9.6
SIZE OF DRAIN PIPES FOR WATER TANKS

TANK CAPACITY (gallons)	DRAIN PIPE (inches)
Up to 750	1
751 to 1500	$1^1/_2$
1501 to 3000	2
3001 to 5000	$2^1/_2$
5001 to 7500	3
Over 7500	4

For SI: 1 gallon = 3.875 liters, 1 inch = 25.4 mm.

INTERNATIONAL CODE COUNCIL®
Copyright © 2019 ICC & NYSDOS. ALL RIGHTS RESERVED. Accessed by Lauren Gualdino (lgualdino@briarcliffmanor.org), (-) Order Number #100880972 on May 08, 2020 07:05 AM (PDT) pursuant to License Agreement with ICC & NYSDOS. No further reproduction, no

100880972

P2910.9.7 Access. Not less than one access opening shall be provided to allow inspection and cleaning of the tank interior. Access openings shall have an *approved* locking device or other *approved* method of securing access. Below-grade storage tanks, located outside of the building, shall be provided with a manhole either not less than 24 inches (610 mm) square or with an inside diameter not less than 24 inches (610 mm). Manholes shall extend not less than 4 inches (102 mm) above ground or shall be designed to prevent water infiltration. Finished grade shall be sloped away from the manhole to divert surface water. Manhole covers shall be secured to prevent unauthorized access. Service ports in manhole covers shall be not less than 8 inches (203 mm) in diameter and shall be not less than 4 inches (102 mm) above the finished grade level. The service port shall be secured to prevent unauthorized access.

Exception: Storage tanks under 800 gallons (3028 L) in volume installed below grade shall not be required to be equipped with a manhole, but shall have a service port not less than 8 inches (203 mm) in diameter.

P2910.9.8 Venting. Storage tanks shall be provided with a vent sized in accordance with Chapter 31 and based on the aggregate diameter of all tank influent pipes. The reservoir vent shall not be connected to sanitary drainage system vents. Vents shall be protected from contamination by means of an *approved* cap or a U-bend installed with the opening directed downward. Vent outlets shall extend not less than 4 inches (102 mm) above grade, or as necessary to prevent surface water from entering the storage tank. Vent openings shall be protected against the entrance of vermin and insects in accordance with the requirements of Section P2910.7.

P2910.9.9 Drain. A drain shall be located at the lowest point of the storage tank. The tank drain pipe shall discharge as required for overflow pipes and shall not be smaller in size than specified in Table P2910.9.6. Not less than one cleanout shall be provided on each drain pipe in accordance with Section P3005.2.

P2910.10 Marking and signage. Each nonpotable water storage tank shall be labeled with its rated capacity. The contents of storage tanks shall be identified with the words "CAUTION: NONPOTABLE WATER. DO NOT DRINK." Where an opening is provided that could allow the entry of personnel, the opening shall be marked with the words, "DANGER—CONFINED SPACE." Markings shall be indelibly printed on the tank, or on a tag or sign constructed of corrosion-resistant waterproof material that is mounted on the tank. The letters of the words shall be not less than 0.5 inches (12.7 mm) in height and shall be of a color in contrast with the background on which they are applied.

P2910.11 Storage tank tests. Storage tanks shall be tested in accordance with the following:

1. Storage tanks shall be filled with water to the overflow line prior to and during inspection. Seams and joints shall be left exposed and the tank shall remain watertight without leakage for a period of 24 hours.
2. After 24 hours, supplemental water shall be introduced for a period of 15 minutes to verify proper drainage of the overflow system and leaks do not exist.
3. Following a successful test of the overflow, the water level in the tank shall be reduced to a level that is 2 inches (51 mm) below the makeup water trigger point by using the tank drain. The tank drain shall be observed for proper operation. The makeup water system shall be observed for proper operation, and successful automatic shutoff of the system at the refill threshold shall be verified. Water shall not be drained from the overflow at any time during the refill test.

P2910.12 System abandonment. If the owner of an on-site nonpotable water reuse system or rainwater collection and conveyance system elects to cease use of or fails to properly maintain such system, the system shall be abandoned and shall comply with the following:

1. System piping connecting to a utility-provided water system shall be removed or disabled.
2. The distribution piping system shall be replaced with an *approved* potable water supply piping system. Where an existing potable water pipe system is already in place, the fixtures shall be connected to the existing system.
3. The storage tank shall be secured from accidental access by sealing or locking tank inlets and access points, or filled with sand or equivalent.

P2910.13 Separation requirements for nonpotable water piping. Nonpotable water collection and distribution piping and reclaimed water piping shall be separated from the *building sewer* and potable water piping underground by 5 feet (1524 mm) of undisturbed or compacted earth. Nonpotable water collection and distribution piping shall not be located in, under or above cesspools, septic tanks, septic tank drainage fields or seepage pits. Buried nonpotable water piping shall comply with the requirements of Section P2604.

Exceptions:

1. The required separation distance shall not apply where the bottom of the nonpotable water pipe within 5 feet (1524 mm) of the sewer is not less than 12 inches (305 mm) above the top of the highest point of the sewer and the pipe materials conforms to Table P3002.2.
2. The required separation distance shall not apply where the bottom of the potable water service pipe within 5 feet (1524 mm) of the nonpotable water pipe is not less than 12 inches (305 mm) above the top of the highest point of the nonpotable water pipe and the pipe materials comply with the requirements of Table P2906.5.
3. The required separation distance shall not apply where a nonpotable water pipe is located in the same trench with a *building sewer* that is constructed of materials that comply with the requirements of Table P3002.2.

INTERNATIONAL CODE COUNCIL®
Copyright © 2019 ICC & NYSDOS. ALL RIGHTS RESERVED. Accessed by Lauren Gualdino (lgualdino@briarcliffmanor.org), (-) Order Number #100880972 on May 08, 2020 07:05 AM (PDT) pursuant to License Agreement with ICC & NYSDOS. No further reproduction, no

100880972

4. The required separation distance shall not apply where a nonpotable water pipe crosses a sewer pipe provided that the nonpotable water pipe is sleeved to not less than 5 feet (1524 mm) horizontally from the sewer pipe centerline on both sides of such crossing, with pipe materials that comply with Table P3002.2.
5. The required separation distance shall not apply where a potable water service pipe crosses a nonpotable water pipe, provided that the potable water service pipe is sleeved for a distance of not less than 5 feet (1524 mm) horizontally from the centerline of the nonpotable pipe on both sides of such crossing, with pipe materials that comply with Table P3002.2.
6. The required separation distance shall not apply to irrigation piping located outside of a building and downstream of the backflow preventer where nonpotable water is used for outdoor applications.

P2910.14 Outdoor outlet access. Sillcocks, hose bibbs, wall hydrants, yard hydrants and other outdoor outlets supplied by nonpotable water shall be located in a locked vault or shall be operable only by means of a removable key.

SECTION P2911
ON-SITE NONPOTABLE WATER REUSE SYSTEMS

P2911.1 General. The provisions of this section shall govern the construction, installation, *alteration* and repair of on-site nonpotable water reuse systems for the collection, storage, treatment and distribution of on-site sources of nonpotable water as permitted by the *jurisdiction*.

P2911.2 Sources. On-site nonpotable water reuse systems shall collect waste discharge only from the following sources: bathtubs, showers, lavatories, clothes washers and laundry trays. Water from other *approved* nonpotable sources including swimming pool backwash operations, air conditioner condensate, rainwater, foundation drain water, fluid cooler discharge water and fire pump test water shall be permitted to be collected for reuse by on-site nonpotable water reuse systems, as *approved* by the *building official* and as appropriate for the intended application.

P2911.2.1 Prohibited sources. Reverse osmosis system reject water, water softener backwash water, kitchen sink wastewater, dishwasher wastewater and wastewater containing urine or fecal matter shall not be collected for reuse within an on-site nonpotable water reuse system.

P2911.3 Traps. Traps serving fixtures and devices discharging wastewater to on-site nonpotable water reuse systems shall comply with the Section P3201.2.

P2911.4 Collection pipe. On-site nonpotable water reuse systems shall utilize drainage piping *approved* for use within plumbing drainage systems to collect and convey untreated water for reuse. Vent piping *approved* for use within plumbing venting systems shall be utilized for vents within the graywater system. Collection and vent piping materials shall comply with Section P3002.

P2911.4.1 Installation. Collection piping conveying untreated water for reuse shall be installed in accordance with Section P3005.

P2911.4.2 Joints. Collection piping conveying untreated water for reuse shall utilize joints *approved* for use with the distribution piping and appropriate for the intended applications as specified in Section P3002.

P2911.4.3 Size. Collection piping conveying untreated water for reuse shall be sized in accordance with drainage sizing requirements specified in Section P3005.4.

P2911.4.4 Marking. Additional marking of collection piping conveying untreated water for reuse shall not be required beyond that required for sanitary drainage, waste and vent piping by Chapter 30.

P2911.5 Filtration. Untreated water collected for reuse shall be filtered as required for the intended end use. Filters shall be accessible for inspection and maintenance. Filters shall utilize a pressure gauge or other *approved* method to provide indication when a filter requires servicing or replacement. Filters shall be installed with shutoff valves immediately upstream and downstream to allow for isolation during maintenance.

P2911.6 Disinfection. Nonpotable water collected on site for reuse shall be disinfected, treated or both to provide the quality of water needed for the intended end-use application. Where the intended end-use application does not have requirements for the quality of water, disinfection and treatment of water collected on site for reuse shall not be required. Nonpotable water collected on site containing untreated graywater shall be retained in collection reservoirs for not more than 24 hours.

P2911.6.1 Graywater used for fixture flushing. Graywater used for flushing water closets and urinals shall be disinfected and treated by an on-site water reuse treatment system complying with NSF 350.

P2911.7 Storage tanks. Storage tanks utilized in on-site nonpotable water reuse systems shall comply with Section P2910.9 and Sections P2911.7.1 through P2911.7.3.

P2911.7.1 Location. Storage tanks shall be located with a minimum horizontal distance between various elements as indicated in Table P2911.7.1.

TABLE P2911.7.1
LOCATION OF NONPOTABLE WATER REUSE STORAGE TANKS

ELEMENT	MINIMUM HORIZONTAL DISTANCE FROM STORAGE TANK (feet)
Critical root zone (CRZ) of protected trees	2
Lot line adjoining private lots	5
Seepage pits	5
Septic tanks	5
Water wells	50
Streams and lakes	50
Water service	5
Public water main	10

For SI: 1 foot = 304.8 mm

INTERNATIONAL CODE COUNCIL®
Copyright © 2019 ICC & NYSDOS. ALL RIGHTS RESERVED. Accessed by Lauren Gualdino (lgualdino@briarcliffmanor.org), (-) Order Number #100880972 on May 08, 2020 07:05 AM (PDT) pursuant to License Agreement with ICC & NYSDOS. No further reproduction, no

100880972

P2911.7.2 Inlets. Storage tank inlets shall be designed to introduce water into the tank with minimum turbulence, and shall be located and designed to avoid agitating the contents of the storage tank.

P2911.7.3 Outlets. Outlets shall be located not less than 4 inches (102 mm) above the bottom of the storage tank, and shall not skim water from the surface.

P2911.8 Valves. Valves shall be supplied on on-site nonpotable water reuse systems in accordance with Sections P2911.8.1 and P2911.8.2.

P2911.8.1 Bypass valve. One three-way diverter valve certified to NSF 50 or other *approved* device shall be installed on collection piping upstream of each storage tank, or drainfield, as applicable, to divert untreated on-site reuse sources to the sanitary sewer to allow servicing and inspection of the system. Bypass valves shall be installed downstream of fixture traps and vent connections. Bypass valves shall be labeled to indicate the direction of flow, connection and storage tank or drainfield connection. Bypass valves shall be installed in accessible locations. Two shutoff valves shall not be installed to serve as a bypass valve.

P2911.8.2 Backwater valve. Backwater valves shall be installed on each overflow and tank drain pipe. Backwater valves shall be in accordance with Section P3008.

P2911.9 Pumping and control system. Mechanical equipment including pumps, valves and filters shall be accessible and removable in order to perform repair, maintenance and cleaning. The minimum flow rate and flow pressure delivered by the pumping system shall be appropriate for the application and in accordance with Section P2903.

P2911.10 Water pressure-reducing valve or regulator. Where the water pressure supplied by the pumping system exceeds 80 psi (552 kPa) static, a pressure-reducing valve shall be installed to reduce the pressure in the nonpotable water distribution system piping to 80 psi (552 kPa) static or less. Pressure-reducing valves shall be specified and installed in accordance with Section P2903.3.1.

P2911.11 Distribution pipe. Distribution piping utilized in on-site nonpotable water reuse systems shall comply with Sections P2911.11.1 through P2911.11.3.

Exception: Irrigation piping located outside of the building and downstream of a backflow preventer.

P2910.11.1 Materials, joints and connections. Distribution piping shall conform to the standards and requirements specified in Section P2906 for nonpotable water.

P2911.11.2 Design. On-site nonpotable water reuse distribution piping systems shall be designed and sized in accordance with Section P2903 for the intended application.

P2911.11.3 Marking. On-site nonpotable water distribution piping labeling and marking shall comply with Section P2901.2

P2911.12 Tests and inspections. Tests and inspections shall be performed in accordance with Sections P2911.12.1 through P2911.12.6.

P2911.12.1 Collection pipe and vent test. Drain, waste and vent piping used for on-site water reuse systems shall be tested in accordance with Section P2503.

P2911.12.2 Storage tank test. Storage tanks shall be tested in accordance with Section P2910.11.

P2911.12.3 Water supply system test. The testing of makeup water supply piping and distribution piping shall be conducted in accordance with Section P2503.7.

P2911.12.4 Inspection and testing of backflow prevention assemblies. The testing of backflow preventers and backwater valves shall be conducted in accordance with Section P2503.8.

P2911.12.5 Inspection of vermin and insect protection. Inlets and vents to the system shall be inspected to verify that each is protected to prevent the entrance of insects and vermin into the storage tank and piping systems in accordance with Section P2910.7.

P2911.12.6 Water quality test. The quality of the water for the intended application shall be verified at the point of use in accordance with the requirements of the *jurisdiction*.

P2911.13 Operation and maintenance manuals. Operation and maintenance materials shall be supplied with nonpotable on-site water reuse systems in accordance with Sections P2911.13.1 through P2911.13.4.

P2911.13.1 Manual. A detailed operations and maintenance manual shall be supplied in hard-copy form for each system.

P2911.13.2 Schematics. The manual shall include a detailed system schematic, the location of system components and a list of system components that includes the manufacturers and model numbers of the components.

P2911.13.3 Maintenance procedures. The manual shall provide a schedule and procedures for system components requiring periodic maintenance. Consumable parts including filters shall be noted along with part numbers.

P2911.13.4 Operations procedures. The manual shall include system startup and shutdown procedures. The manual shall include detailed operating procedures for the system.

SECTION P2912
NONPOTABLE RAINWATER COLLECTION AND DISTRIBUTION SYSTEMS

P2912.1 General. The provisions of this section shall govern the construction, installation, *alteration*, and repair of rainwater collection and conveyance systems for the collection, storage, treatment and distribution of rainwater for nonpotable applications, as permitted by the *jurisdiction*.

P2912.2 Collection surface. Rainwater shall be collected only from above-ground impervious roofing surfaces constructed from *approved* materials. Collection of water from vehicular parking or pedestrian walkway surfaces shall be prohibited except where the water is used exclusively for landscape irrigation. Overflow and bleed-off pipes from roof-

INTERNATIONAL CODE COUNCIL®
Copyright © 2019 ICC & NYSDOS. ALL RIGHTS RESERVED. Accessed by Lauren Gualdino (lgualdino@briarcliffmanor.org), (-) Order Number #100880972 on May 08, 2020 07:05 AM (PDT) pursuant to License Agreement with ICC & NYSDOS. No further reproduction, no

100880972

mounted *appliances* including, but not limited to, evaporative coolers, water heaters and solar water heaters shall not discharge onto rainwater collection surfaces.

P2912.3 Debris excluders. Downspouts and leaders shall be connected to a roof washer and shall be equipped with a debris excluder or equivalent device to prevent the contamination of collected rainwater with leaves, sticks, pine needles and similar material. Debris excluders and equivalent devices shall be self-cleaning.

P2912.4 Roof washer. An amount of rainwater shall be diverted at the beginning of each rain event, and not allowed to enter the storage tank, to wash accumulated debris from the collection surface. The amount of rainfall to be diverted shall be field adjustable as necessary to minimize storage tank water contamination. The roof washer shall not rely on manually operated valves or devices, and shall operate automatically. Diverted rainwater shall not be drained to the roof surface, and shall be discharged in a manner consistent with the stormwater runoff requirements of the *jurisdiction*. Roof washers shall be accessible for maintenance and service.

P2912.5 Roof gutters and downspouts. Gutters and downspouts shall be constructed of materials that are compatible with the collection surface and the rainwater quality for the desired end use. Joints shall be watertight.

P2912.5.1 Slope. Roof gutters, leaders and rainwater collection piping shall slope continuously toward collection inlets and shall be free of leaks. Gutters and downspouts shall have a slope of not less than $^1/_8$ inch per foot (10.4 mm/m) along their entire length. Gutters and downspouts shall be installed so that water does not pool at any point.

P2912.5.2 Cleanouts. Cleanouts shall be provided in the water conveyance system to allow access to filters, flushes, pipes and downspouts.

P2912.6 Drainage. Water drained from the roof washer or debris excluder shall not be drained to the sanitary sewer. Such water shall be diverted from the storage tank and shall discharge to a location that will not cause erosion or damage to property. Roof washers and debris excluders shall be provided with an automatic means of self-draining between rain events and shall not drain onto roof surfaces.

P2912.7 Collection pipe. Rainwater collection and conveyance systems shall utilize drainage piping *approved* for use within plumbing drainage systems to collect and convey captured rainwater. Vent piping *approved* for use within plumbing venting systems shall be utilized for vents within the rainwater system. Collection and vent piping materials shall comply with Section P3002.

P2912.7.1 Installation. Collection piping conveying captured rainwater shall be installed in accordance with Section P3005.3.

P2912.7.2 Joints. Collection piping conveying captured rainwater shall utilize joints *approved* for use with the distribution piping and appropriate for the intended applications as specified in Section P3003.

P2912.7.3 Size. Collection piping conveying captured rainwater shall be sized in accordance with drainage-sizing requirements specified in Section P3005.4.

P2912.7.4 Marking. Additional marking of collection piping conveying captured rainwater for reuse shall not be required beyond that required for sanitary drainage, waste, and vent piping by Chapter 30.

P2912.8 Filtration. Collected rainwater shall be filtered as required for the intended end use. Filters shall be accessible for inspection and maintenance. Filters shall utilize a pressure gauge or other *approved* method to provide indication when a filter requires servicing or replacement. Filters shall be installed with shutoff valves installed immediately upstream and downstream to allow for isolation during maintenance.

P2912.9 Disinfection. Where the intended application for rainwater requires disinfection or other treatment or both, it shall be disinfected as needed to ensure that the required water quality is delivered at the point of use.

P2912.10 Storage tanks. Storage tanks utilized in nonpotable rainwater collection and conveyance systems shall comply with Section P2910.9 and Sections P2912.10.1 through P2912.10.3.

P2912.10.1 Location. Storage tanks shall be located with a minimum horizontal distance between various elements as indicated in Table P2912.10.1.

P2912.10.2 Inlets. Storage tank inlets shall be designed to introduce collected rainwater into the tank with minimum turbulence, and shall be located and designed to avoid agitating the contents of the storage tank.

P2912.10.3 Outlets. Outlets shall be located not less than 4 inches (102 mm) above the bottom of the storage tank and shall not skim water from the surface.

P2912.11 Valves. Valves shall be supplied on rainwater collection and conveyance systems in accordance with Sections P2912.11.1 and P2912.11.2.

TABLE P2912.10.1
LOCATION OF RAINWATER STORAGE TANKS

ELEMENT	MINIMUM HORIZONTAL DISTANCE FROM STORAGE TANK (feet)
Critical root zone (CRZ) of protected trees	2
Lot line adjoining private lots	5
Seepage pits	5
Septic tanks	5

For SI: 1 foot = 304.8 mm

INTERNATIONAL CODE COUNCIL®
Copyright © 2019 ICC & NYSDOS. ALL RIGHTS RESERVED. Accessed by Lauren Gualdino (lgualdino@briarcliffmanor.org), (-) Order Number #100880972 on May 08, 2020 07:05 AM (PDT) pursuant to License Agreement with ICC & NYSDOS. No further reproduction, no

100880972

P2912.11.1 Influent diversion. A means shall be provided to divert storage tank influent to allow for maintenance and repair of the storage tank system.

P2912.11.2 Backwater valve. Backwater valves shall be installed on each overflow and tank drain pipe. Backwater valves shall be in accordance with Section P3008.

P2912.12 Pumping and control system. Mechanical equipment including pumps, valves and filters shall be easily accessible and removable in order to perform repair, maintenance and cleaning. The minimum flow rate and flow pressure delivered by the pumping system shall appropriate for the application and in accordance with Section P2903.

P2912.13 Water pressure-reducing valve or regulator. Where the water pressure supplied by the pumping system exceeds 80 psi (552 kPa) static, a pressure-reducing valve shall be installed to reduce the pressure in the rainwater distribution system piping to 80 psi (552 kPa) static or less. Pressure-reducing valves shall be specified and installed in accordance with Section P2903.3.1.

P2912.14 Distribution pipe. Distribution piping utilized in rainwater collection and conveyance systems shall comply with Sections P2912.14.1 through P2912.14.3.

Exception: Irrigation piping located outside of the building and downstream of a backflow preventer.

P2912.14.1 Materials, joints and connections. Distribution piping shall conform to the standards and requirements specified in Section P2906 for nonpotable water.

P2912.14.2 Design. Distribution piping systems shall be designed and sized in accordance with the Section P2903 for the intended application.

P2912.14.3 Labeling and marking. Nonpotable rainwater distribution piping labeling and marking shall comply with Section P2901.2.

P2912.15 Tests and inspections. Tests and inspections shall be performed in accordance with Sections P2912.15.1 through P2912.15.8.

P2912.15.1 Roof gutter inspection and test. Roof gutters shall be inspected to verify that the installation and slope is in accordance with Section P2912.5.1. Gutters shall be tested by pouring not less than 1 gallon of water (3.8 L) into the end of the gutter opposite the collection point. The gutter being tested shall not leak and shall not retain standing water.

P2912.15.2 Roofwasher test. Roofwashers shall be tested by introducing water into the gutters. Proper diversion of the first quantity of water in accordance with the requirements of Section P2912.4 shall be verified.

P2912.15.3 Collection pipe and vent test. Drain, waste and vent piping used for rainwater collection and conveyance systems shall be tested in accordance with Section P2503.

P2912.15.4 Storage tank test. Storage tanks shall be tested in accordance with the Section P2910.11.

P2912.15.5 Water supply system test. The testing of makeup water supply piping and distribution piping shall be conducted in accordance with Section P2503.7.

P2912.15.6 Inspection and testing of backflow prevention assemblies. The testing of backflow preventers and backwater valves shall be conducted in accordance with Section P2503.8.

P2912.15.7 Inspection of vermin and insect protection. Inlets and vents to the system shall be inspected to verify that each is protected to prevent the entrance of insects and vermin into the storage tank and piping systems in accordance with Section P2910.7.

P2912.15.8 Water quality test. The quality of the water for the intended application shall be verified at the point of use in accordance with the requirements of the *jurisdiction*.

P2912.16 Operation and maintenance manuals. Operation and maintenance manuals shall be supplied with rainwater collection and conveyance systems in accordance with Sections P2912.16.1 through P2912.16.4.

P2912.16.1 Manual. A detailed operations and maintenance manual shall be supplied in hard-copy form for each system.

P2912.16.2 Schematics. The manual shall include a detailed system schematic, the location of system components and a list of system components that includes the manufacturers and model numbers of the components.

P2912.16.3 Maintenance procedures. The manual shall provide a maintenance schedule and procedures for system components requiring periodic maintenance. Consumable parts, including filters, shall be noted along with part numbers.

P2912.16.4 Operations procedures. The manual shall include system startup and shutdown procedures, and detailed operating procedures.

SECTION P2913
RECLAIMED WATER SYSTEMS

P2913.1 General. The provisions of this section shall govern the construction, installation, *alteration* and repair of systems supplying nonpotable reclaimed water.

P2913.2 Water pressure-reducing valve or regulator. Where the reclaimed water pressure supplied to the building exceeds 80 psi (552 kPa) static, a pressure-reducing valve shall be installed to reduce the pressure in the reclaimed water distribution system piping to 80 psi (552 kPa) static or less. Pressure-reducing valves shall be specified and installed in accordance with Section P2903.3.1.

P2913.3 Reclaimed water systems. The design of the reclaimed water systems shall conform to accepted engineering practice.

P2913.3.1 Distribution pipe. Distribution piping shall comply with Sections P2913.3.1.1 through P2913.3.1.3.

Exception: Irrigation piping located outside of the building and downstream of a backflow preventer.

INTERNATIONAL CODE COUNCIL®
Copyright © 2019 ICC & NYSDOS. ALL RIGHTS RESERVED. Accessed by Lauren Gualdino (lgualdino@briarcliffmanor.org), (-) Order Number #100880972 on May 08, 2020 07:05 AM (PDT) pursuant to License Agreement with ICC & NYSDOS. No further reproduction, no

100880972

P2913.3.1.1 Materials, joints and connections. Distribution piping conveying reclaimed water shall conform to standards and requirements specified in Section P2906 for nonpotable water.

P2913.3.1.2 Design. Distribution piping systems shall be designed and sized in accordance with Section P2903 for the intended application.

P2913.3.1.3 Labeling and marking. Nonpotable rainwater distribution piping labeling and marking shall comply with Section P2901.2.

P2913.4 Tests and inspections. Tests and inspections shall be performed in accordance with Sections P2913.4.1 and P2913.4.2.

P2913.4.1 Water supply system test. The testing of makeup water supply piping and reclaimed water distribution piping shall be conducted in accordance with Section P2503.7.

P2913.4.2 Inspection and testing of backflow prevention assemblies. The testing of backflow preventers shall be conducted in accordance with Section P2503.8.

INTERNATIONAL CODE COUNCIL®
Copyright © 2019 ICC & NYSDOS. ALL RIGHTS RESERVED. Accessed by Lauren Gualdino (lgualdino@briarcliffmanor.org), (-) Order Number #100880972 on May 08, 2020 07:05 AM (PDT) pursuant to License Agreement with ICC & NYSDOS. No further reproduction, no

100880972

CHAPTER 30

SANITARY DRAINAGE

SECTION P3001 GENERAL

P3001.1 Scope. The provisions of this chapter shall govern the materials, design, construction and installation of sanitary drainage systems. Plumbing materials shall conform to the requirements of this chapter. The drainage, waste and vent (DWV) system shall consist of piping for conveying wastes from plumbing fixtures, appliances and appurtenances, including fixture traps; above-grade drainage piping; below-grade drains within the building, such as a *building drain*; below- and above-grade venting systems; and piping to the public sewer or private septic system.

P3001.2 Protection from freezing. Portions of the above-grade DWV system, other than vent terminals, shall not be located outside of a building, in *attics* or crawl spaces, concealed in outside walls, or in any other place subjected to freezing temperatures unless adequate provision is made to protect them from freezing by insulation or heat or both, except in localities having a winter design temperature greater than 32°F (0°C) (ASHRAE 97.5 percent column, winter, see Chapter 3).

P3001.3 Flood-resistant installation. In flood hazard areas as established by Table R301.2(1), drainage, waste and vent systems shall be located and installed to prevent infiltration of floodwaters into the systems and discharges from the systems into floodwaters.

SECTION P3002 MATERIALS

P3002.1 Piping within buildings. Drain, waste and vent (DWV) piping in buildings shall be as indicated in Tables P3002.1(1) and P3002.1(2) except that galvanized wrought-iron or galvanized steel pipe shall not be used underground and shall be maintained not less than 6 inches (152 mm) above ground. Allowance shall be made for the thermal expansion and contraction of plastic piping.

P3002.2 Building sewer. *Building sewer* piping shall be as indicated in Table P3002.2. Forced main sewer piping shall conform to one of the standards for ABS plastic pipe, copper or copper-alloy tubing, PVC plastic pipe or pressure-rated pipe indicated in Table P3002.2.

P3002.2.1 Building sewer pipe near the water service. The proximity of a *building sewer* to a water service shall comply with Section P2906.4.1.

P3002.3 Fittings. Pipe fittings shall be *approved* for installation with the piping material installed and shall comply with the applicable standards indicated in Table P3002.3.

P3002.3.1 Drainage. Drainage fittings shall have a smooth interior waterway of the same diameter as the piping served. Fittings shall conform to the type of pipe used. Drainage fittings shall not have ledges, shoulders or reductions that can retard or obstruct drainage flow in the piping. Threaded drainage pipe fittings shall be of the recessed drainage type, black or galvanized. Drainage fittings shall be designed to maintain one-fourth unit vertical in 12 units horizontal (2-percent slope) grade. This section shall not be applicable to tubular waste fittings used to convey vertical flow upstream of the trap seal liquid level of a fixture trap.

P3002.4 Other materials. Sheet lead, lead bends, lead traps and sheet copper shall comply with Sections P3002.4.1 through P3002.4.3.

TABLE P3002.1(1)
ABOVE-GROUND DRAINAGE AND VENT PIPE

MATERIAL	STANDARD
Acrylonitrile butadiene styrene (ABS) plastic pipe in IPS diameters, including schedule 40, DR 22 (PS 200) and DR 24 (PS 140); with a solid, cellular core or composite wall	ASTM D2661; ASTM F628; ASTM F1488; CSA B181.1
Cast-iron pipe	ASTM A74; ASTM A888; CISPI 301
Copper or copper-alloy pipe	ASTM B42; ASTM B43; ASTM B302
Copper or copper-alloy tubing (Type K, L, M or DWV)	ASTM B75/B75M; ASTM B88; ASTM B251; ASTM B306
Galvanized steel pipe	ASTM A53
Polyolefin pipe	CSA B181.3
Polyvinyl chloride (PVC) plastic pipe in IPS diameters, including schedule 40, DR 22 (PS 200) and DR 24 (PS 140); with a solid, cellular core or composite wall	ASTM D2665; ASTM F891; ASTM F1488; CSA B181.2
Polyvinyl chloride (PVC) plastic pipe with a 3.25 inch O.D. and a solid, cellular core or composite wall	ASTM D2949; ASTM F1488
Stainless steel drainage systems, Types 304 and 316L	ASME A112.3.1

For SI: 1 inch = 25.4 mm.

INTERNATIONAL CODE COUNCIL®
Copyright © 2019 ICC & NYSDOS. ALL RIGHTS RESERVED. Accessed by Lauren Gualdino (lgualdino@briarcliffmanor.org), (-) Order Number #100880972 on May 08, 2020 07:05 AM (PDT) pursuant to License Agreement with ICC & NYSDOS. No further reproduction, no

100880972

TABLE P3002.1(2)
UNDERGROUND BUILDING DRAINAGE AND VENT PIPE

PIPE	STANDARD
Acrylonitrile butadiene styrene (ABS) plastic pipe in IPS diameters, including schedule 40, DR 22 (PS 200) and DR 24 (PS 140); with a solid, cellular core or composite wall	ASTM D2661; ASTM F628; ASTM F1488; CSA B181.1
Cast-iron pipe	ASTM A74; ASTM A888; CISPI 301
Copper or copper-alloy tubing (Type K, L, M or DWV)	ASTM B75/B75M; ASTM B88; ASTM B251; ASTM B306
Polyethylene (PE) plastic pipe (SDR-PR)	ASTM F714
Polyolefin pipe	ASTM F714; ASTM F1412; CSA B181.3
Polyvinyl chloride (PVC) plastic pipe in IPS diameters, including schedule 40, DR 22 (PS 200) and DR 24 (PS 140); with a solid, cellular core or composite wall	ASTM D2665; ASTM F891; ASTM F1488; CSA B181.2
Polyvinyl chloride (PVC) plastic pipe with a 3.25 inch O.D. and a solid, cellular core or composite wall	ASTM D2949; ASTM F1488
Stainless steel drainage systems, Type 316L	ASME A112.3.1

For SI: 1 inch = 25.4 mm.

TABLE P3002.2
BUILDING SEWER PIPE

MATERIAL	STANDARD
Acrylonitrile butadiene styrene (ABS) plastic pipe in IPS diameters, including schedule 40, DR 22 (PS 200) and DR 24 (PS 140); with a solid, cellular core or composite wall	ASTM D2661; ASTM F628; ASTM F1488
Acrylonitrile butadiene styrene (ABS) plastic pipe in sewer and drain diameters, including SDR 42 (PS 20), PS35, SDR 35 (PS 45), PS50, PS100, PS140, SDR 23.5 (PS 150) and PS200; with a solid, cellular core or composite wall	ASTM D2751; ASTM F1488
Polyvinyl chloride (PVC) plastic pipe in sewer and drain diameters, including PS 25, SDR 41 (PS 28), PS 35, SDR 35 (PS 46), PS 50, PS 100, SDR 26 (PS 115), PS140 and PS 200; with a solid, cellular core or composite wall	ASTM D3034; ASTM F891; ASTM F1488; CSA B182.2; CSA B182.4
Cast-iron pipe	ASTM A74; ASTM A888; CISPI 301
Concrete pipe	ASTM C14; ASTM C76; CSA A257.1; CSA A257.2
Copper or copper-alloy tubing (Type K or L)	ASTM B75/B75M; ASTM B88; ASTM B251
Polyethylene (PE) plastic pipe (SDR-PR)	ASTM F714
Polyolefin pipe	ASTM F1412; CSA B181.3
Polyvinyl chloride (PVC) plastic pipe in IPS diameters, including schedule 40, DR 22 (PS 200) and DR 24 (PS 140); with solid, cellular core or composite wall	ASTM D2665; ASTM D2949; ASTM D3034; ASTM F1412; CSA B182.2; CSA B182.4
Polyvinyl chloride (PVC) plastic pipe with a 3.25 inch O.D. and a solid, cellular core or composite wall	ASTM D2949, ASTM F1488
Stainless steel drainage systems, Types 304 and 316L	ASME A112.3.1
Vitrified clay pipe	ASTM C425; ASTM C700

For SI: 1 inch = 25.4 mm.

INTERNATIONAL CODE COUNCIL®
Copyright © 2019 ICC & NYSDOS. ALL RIGHTS RESERVED. Accessed by Lauren Gualdino (lgualdino@briarcliffmanor.org), (-) Order Number #100880972 on May 08, 2020 07:05 AM (PDT) pursuant to License Agreement with ICC & NYSDOS. No further reproduction, no

100880972

TABLE P3002.3
PIPE FITTINGS

PIPE MATERIAL	FITTING STANDARD
Acrylonitrile butadiene styrene (ABS) plastic pipe in IPS diameters	ASTM D2661; ASTM D3311; ASTM F628; CSA B181.1
Acrylonotrile butadiene styrene (ABS) plastic pipe in sewer and drain diameters	ASTM D2751
Cast-iron	ASME B16.4; ASME B16.12; ASTM A74; ASTM A888; CISPI 301
Copper or copper alloy	ASME B16.15; ASME B16.18; ASME B16.22; ASME B16.23; ASME B16.26; ASME B16.29
Gray iron and ductile iron	AWWA C110/A21.10
Polyethylene	ASTM D2683
Polyolefin	ASTM F1412; CSA B181.3
Polyvinyl chloride (PVC) plastic in IPS diameters	ASTM D2665; ASTM D3311; ASTM F1866
Polyvinyl chloride (PVC) plastic pipe in sewer and drain diameters	ASTM D3034
Polyvinyl chloride (PVC) plastic pipe with a 3.25 inch O.D.	ASTM D2949
PVC fabricated fittings	ASTM F1866
Stainless steel drainage systems, Types 304 and 316L	ASME A112.3.1
Vitrified clay	ASTM C700

For SI: 1 inch = 25.4 mm.

P3002.4.1 Sheet lead. Sheet lead shall weigh not less than indicated for the following applications:

1. Flashing of vent terminals, 3 psf (15 kg/m^2).
2. Prefabricated flashing for vent pipes, $2^1/_2$ psf (12 kg/m^2).

P3002.4.2 Lead bends and traps. Lead bends and lead traps shall be not less than $^1/_8$-inch (3 mm) wall thickness.

P3002.4.3 Sheet copper. Sheet copper shall weigh not less than indicated for the following applications:

1. General use, 12 ounces per square feet (4 kg/m^2).
2. Flashing for vent pipes, 8 ounces per square feet (2.5 kg/m^2).

SECTION P3003
JOINTS AND CONNECTIONS

P3003.1 Tightness. Joints and connections in the DWV system shall be gastight and watertight for the intended use or pressure required by test.

P3003.1.1 Threaded joints, general. Pipe and fitting threads shall be tapered.

P3003.2 Prohibited joints. Running threads and bands shall not be used in the drainage system. Drainage and vent piping shall not be drilled, tapped, burned or welded.

The following types of joints and connections shall be prohibited:

1. Cement or concrete.
2. Mastic or hot-pour bituminous joints.
3. Joints made with fittings not *approved* for the specific installation.
4. Joints between different diameter pipes made with elastomeric rolling O-rings.
5. Solvent-cement joints between different types of plastic pipe except where provided for in Section P3003.13.4.
6. Saddle-type fittings.

P3003.3 ABS plastic. Joints between ABS plastic pipe or fittings shall comply with Sections P3003.3.1 through P3003.3.3.

P3003.3.1 Mechanical joints. Mechanical joints on drainage pipes shall be made with an elastomeric seal conforming to ASTM C1173, ASTM D3212 or CSA B602. Mechanical joints shall be installed only in underground systems unless otherwise *approved*. Joints shall be installed in accordance with the manufacturer's instructions.

P3003.3.2 Solvent cementing. Joint surfaces shall be clean and free from moisture. Solvent cement that conforms to ASTM D2235 or CSA B181.1 shall be applied to joint surfaces. The joint shall be made while the cement is wet. Joints shall be made in accordance with ASTM D2235, ASTM D2661, ASTM F628 or CSA B181.1. Solvent-cement joints shall be permitted above or below ground.

P3003.3.3 Threaded joints. Threads shall conform to ASME B1.20.1. Schedule 80 or heavier pipe shall be permitted to be threaded with dies specifically designed for plastic pipe. *Approved* thread lubricant or tape shall be applied on the male threads only.

P3003.4 Cast iron. Joints between cast-iron pipe or fittings shall comply with Sections P3003.4.1 through P3003.4.3.

P3003.4.1 Caulked joints. Joints for hub and spigot pipe shall be firmly packed with oakum or hemp. Molten lead

INTERNATIONAL CODE COUNCIL®
Copyright © 2019 ICC & NYSDOS. ALL RIGHTS RESERVED. Accessed by Lauren Gualdino (lgualdino@briarcliffmanor.org), (-) Order Number #100880972 on May 08, 2020 07:05 AM (PDT) pursuant to License Agreement with ICC & NYSDOS. No further reproduction, no

100880972

shall be poured in one operation to a depth of not less than 1 inch (25 mm). The lead shall not recede more than $^1/_8$ inch (3 mm) below the rim of the hub and shall be caulked tight. Paint, varnish or other coatings shall not be permitted on the jointing material until after the joint has been tested and *approved*. Lead shall be run in one pouring and shall be caulked tight.

P3003.4.2 Compression gasket joints. Compression gaskets for hub and spigot pipe and fittings shall conform to ASTM C564. Gaskets shall be compressed when the pipe is fully inserted.

P3003.4.3 Mechanical joint coupling. Mechanical joint couplings for hubless pipe and fittings shall consist of an elastomeric sealing sleeve and a metallic shield that comply with CISPI 310, ASTM C1277 or ASTM C1540. The elastomeric sealing sleeve shall conform to ASTM C564 or CSA B602 and shall have a center stop. Mechanical joint couplings shall be installed in accordance with the manufacturer's instructions.

P3003.5 Concrete joints. Joints between concrete pipe and fittings shall be made with an elastomeric seal conforming to ASTM C443, ASTM C1173, CSA A257.3 or CSA B602.

P3003.6 Copper and copper-alloy pipe and tubing. Joints between copper or copper-alloy pipe tubing or fittings shall comply with Sections P3003.6.1 through P3003.6.4.

P3003.6.1 Brazed joints. All joint surfaces shall be cleaned. An *approved* flux shall be applied where required. Brazing materials shall have a melting point in excess of 1,000ºF (538ºC). Brazing alloys filler metal shall be in accordance with AWS A5.8.

P3003.6.2 Mechanical joints. Mechanical joints shall be installed in accordance with the manufacturer's instructions.

P3003.6.3 Soldered joints. Copper and copper-alloy joints shall be soldered in accordance with ASTM B828. Cut tube ends shall be reamed to the full inside diameter of the tube end. Joint surfaces shall be cleaned. Fluxes for soldering shall be in accordance with ASTM B813 and shall become noncorrosive and nontoxic after soldering. The joint shall be soldered with a solder conforming to ASTM B32.

P3003.6.4 Threaded joints. Threads shall conform to ASME B1.20.1. Pipe-joint compound or tape shall be applied on the male threads only.

P3003.7 Steel. Joints between galvanized steel pipe or fittings shall comply with Sections P3003.7.1 and P3003.7.2.

P3003.7.1 Threaded joints. Threads shall conform to ASME B1.20.1. Pipe-joint compound or tape shall be applied on the male threads only.

P3003.7.2 Mechanical joints. Joints shall be made with an *approved* elastomeric seal. Mechanical joints shall be installed in accordance with the manufacturer's instructions.

P3003.8 Lead. Joints between lead pipe or fittings shall comply with Sections P3003.8.1 and P3003.8.2.

P3003.8.1 Burned. Burned joints shall be uniformly fused together into one continuous piece. The thickness of the joint shall be not less than the thickness of the lead being joined. The filler metal shall be of the same material as the pipe.

P3003.8.2 Wiped. Joints shall be fully wiped, with an exposed surface on each side of the joint not less than $^3/_4$ inch (19 mm). The joint shall be not less than $^3/_8$ inch (9.5 mm) thick at the thickest point.

P3003.9 PVC plastic. Joints between PVC plastic pipe or fittings shall comply with Sections P3003.9.1 through P3003.9.3.

P3003.9.1 Mechanical joints. Mechanical joints on drainage pipe shall be made with an elastomeric seal conforming to ASTM C1173, ASTM D3212 or CSA B602. Mechanical joints shall not be installed in above-ground systems, unless otherwise *approved*. Joints shall be installed in accordance with the manufacturer's instructions.

P3003.9.2 Solvent cementing. Joint surfaces shall be clean and free from moisture. A purple primer, or other *approved* primer, that conforms to ASTM F656 shall be applied. Solvent cement not purple in color and conforming to ASTM D2564, CSA B137.3 or CSA B181.2 shall be applied to all joint surfaces. The joint shall be made while the cement is wet, and shall be in accordance with ASTM D2855. Solvent-cement joints shall be installed above or below ground.

Exception: A primer shall not be required where all of the following conditions apply:

1. The solvent cement used is third-party certified as conforming to ASTM D2564.
2. The solvent cement is used only for joining PVC drain, waste and vent pipe and fittings in non-pressure applications in sizes up to and including 4 inches (102 mm) in diameter.

P3003.9.3 Threaded joints. Threads shall conform to ASME B1.20.1. Schedule 80 or heavier pipe shall be permitted to be threaded with dies specifically designed for plastic pipe. *Approved* thread lubricant or tape shall be applied on the male threads only.

P3003.10 Vitrified clay. Joints between vitrified clay pipe or fittings shall be made with an elastomeric seal conforming to ASTM C425, ASTM C1173 or CSA B602.

P3003.11 Polyolefin plastic. Joints between polyolefin plastic pipe and fittings shall comply with Sections P3003.11.1 and P3003.11.2.

P3003.11.1 Heat-fusion joints. Heat-fusion joints for polyolefin pipe and tubing joints shall be installed with socket-type heat-fused polyolefin fittings or electrofusion polyolefin fittings. Joint surfaces shall be clean and free from moisture. The joint shall be undisturbed until cool. Joints shall be made in accordance with ASTM F1412 or CSA B181.3.

P3003.11.2 Mechanical and compression sleeve joints. Mechanical and compression sleeve joints shall be installed in accordance with the manufacturer's instructions.

INTERNATIONAL CODE COUNCIL®
Copyright © 2019 ICC & NYSDOS. ALL RIGHTS RESERVED. Accessed by Lauren Gualdino (lgualdino@briarcliffmanor.org), (-) Order Number #100880972 on May 08, 2020 07:05 AM (PDT) pursuant to License Agreement with ICC & NYSDOS. No further reproduction, no

100880972

P3003.12 Polyethylene plastic pipe. Joints between polyethylene plastic pipe and fittings shall be underground and shall comply with Section P3003.12.1 or P3003.12.2.

P3003.12.1 Heat fusion joints. Joint surfaces shall be clean and free from moisture. Joint surfaces shall be cut, heated to melting temperature and joined using tools specifically designed for the operation. Joints shall be undisturbed until cool. Joints shall be made in accordance with ASTM D2657 and the manufacturer's instructions.

P3003.12.2 Mechanical joints. Mechanical joints in drainage piping shall be made with an elastomeric seal conforming to ASTM C1173, ASTM D3212 or CSA B602. Mechanical joints shall be installed in accordance with the manufacturer's instructions.

P3003.13 Joints between different materials. Joints between different piping materials shall be made with a mechanical joint of the compression or mechanical-sealing type conforming to ASTM C1173, ASTM C1460 or ASTM C1461. Connectors and adapters shall be *approved* for the application and such joints shall have an elastomeric seal conforming to ASTM C425, ASTM C443, ASTM C564, ASTM C1440, ASTM D1869, ASTM F477, CSA A257.3 or CSA B602, or as required in Sections P3003.13.1 through P3003.13.6. Joints between glass pipe and other types of materials shall be made with adapters having a TFE seal. Joints shall be installed in accordance with the manufacturer's instructions.

P3003.13.1 Copper pipe or tubing to cast-iron hub pipe. Joints between copper pipe or tubing and cast-iron hub pipe shall be made with a copper-alloy ferrule or compression joint. The copper pipe or tubing shall be soldered to the ferrule in an *approved* manner, and the ferrule shall be joined to the cast-iron hub by a caulked joint or a mechanical compression joint.

P3003.13.2 Copper pipe or tubing to galvanized steel pipe. Joints between copper pipe or tubing and galvanized steel pipe shall be made with a copper-alloy or dielectric fitting. The copper tubing shall be soldered to the fitting in an *approved* manner, and the fitting shall be screwed to the threaded pipe.

P3003.13.3 Cast-iron pipe to galvanized steel or copper-alloy pipe. Joints between cast-iron and galvanized steel or copper-alloy pipe shall be made by either caulked or threaded joints or with an *approved* adapter fitting.

P3003.13.4 Plastic pipe or tubing to other piping material. Joints between different types of plastic pipe shall be made with an *approved* adapter fitting or by a solvent-cement joint only where a single joint is made between ABS and PVC pipes at the end of a building drainage pipe and the beginning of a *building sewer* pipe using a solvent cement complying with ASTM D3138. Joints between plastic pipe and other piping material shall be made with an *approved* adapter fitting. Joints between plastic pipe and cast-iron hub pipe shall be made by a caulked joint or a mechanical compression joint.

P3003.13.5 Lead pipe to other piping material. Joints between lead pipe and other piping material shall be made by a wiped joint to a caulking ferrule, soldering nipple, or bushing or shall be made with an *approved* adapter fitting.

P3003.13.6 Stainless steel drainage systems to other materials. Joints between stainless steel drainage systems and other piping materials shall be made with *approved* mechanical couplings.

P3003.14 Joints between drainage piping and water closets. Joints between drainage piping and water closets or similar fixtures shall be made by means of a closet flange or a waste connector and sealing gasket compatible with the drainage system material, securely fastened to a structurally firm base. The joint shall be bolted, with an *approved* gasket flange to fixture connection complying with ASME A112.4.3 or setting compound between the fixture and the closet flange or waste connector and sealing gasket. The waste connector and sealing gasket joint shall comply with the joint-tightness test of ASME A112.4.3 and shall be installed in accordance with the manufacturer's instructions.

SECTION P3004
DETERMINING DRAINAGE FIXTURE UNITS

P3004.1 DWV system load. The load on DWV-system piping shall be computed in terms of drainage fixture unit (d.f.u.) values in accordance with Table P3004.1.

SECTION P3005
DRAINAGE SYSTEM

P3005.1 Drainage fittings and connections. Changes in direction in drainage piping shall be made by the appropriate use of sanitary tees, wyes, sweeps, bends or by a combination of these drainage fittings in accordance with Table P3005.1. Change in direction by combination fittings, heel or side inlets or increasers shall be installed in accordance with Table P3005.1 and Sections P3005.1.1 through P3005.1.4, based on the pattern of flow created by the fitting.

P3005.1.1 Horizontal to vertical (multiple connection fittings). Double fittings such as double sanitary tees and tee-wyes or *approved* multiple connection fittings and back-to-back fixture arrangements that connect two or more branches at the same level shall be permitted as long as directly opposing connections are the same size and the discharge into directly opposing connections is from similar fixture types or fixture groups. Double sanitary tee patterns shall not receive the discharge of back-to-back water closets and fixtures or appliances with pumping action discharge.

Exception: Back-to-back water closet connections to double sanitary tee patterns shall be permitted where the horizontal *developed length* between the outlet of the water closet and the connection to the double sanitary tee is 18 inches (457 mm) or greater.

P3005.1.2 Heel- or side-inlet quarter bends, drainage. Heel-inlet quarter bends shall be an acceptable means of connection, except where the quarter bends serves a water closet. A low-heel inlet shall not be used as a wet-vented connection. Side-inlet quarter bends shall be an acceptable means of connection for both drainage, wet venting and stack venting arrangements.

INTERNATIONAL CODE COUNCIL®
Copyright © 2019 ICC & NYSDOS. ALL RIGHTS RESERVED. Accessed by Lauren Gualdino (lgualdino@briarcliffmanor.org), (-) Order Number #100880972 on May 08, 2020 07:05 AM (PDT) pursuant to License Agreement with ICC & NYSDOS. No further reproduction, no

100880972

TABLE P3004.1
DRAINAGE FIXTURE UNIT (d.f.u.) VALUES FOR VARIOUS PLUMBING FIXTURES

TYPE OF FIXTURE OR GROUP OF FIXTURES	DRAINAGE FIXTURE UNIT VALUE (d.f.u.)[a]
Bar sink	1
Bathtub (with or without a shower head or whirlpool attachments)	2
Bidet	1
Clothes washer standpipe	2
Dishwasher	2
Floor drain[b]	0
Kitchen sink	2
Lavatory	1
Laundry tub	2
Shower stall	2
Water closet (1.6 gallons per flush)	3
Water closet (greater than 1.6 gallons per flush)	4
Full-bath group with bathtub (with 1.6 gallon per flush water closet, and with or without shower head and/or whirlpool attachment on the bathtub or shower stall)	5
Full-bath group with bathtub (water closet greater than 1.6 gallon per flush, and with or without shower head and/or whirlpool attachment on the bathtub or shower stall)	6
Half-bath group (1.6 gallon per flush water closet plus lavatory)	4
Half-bath group (water closet greater than 1.6 gallon per flush plus lavatory)	5
Kitchen group (dishwasher and sink with or without food-waste disposer)	2
Laundry group (clothes washer standpipe and laundry tub)	3
Multiple-bath groups[c]: 1.5 baths 2 baths 2.5 baths 3 baths 3.5 baths	 7 8 9 10 11

For SI: 1 gallon = 3.785 L, 1 gallon per minute = 3.785 L/m.

a. For a continuous or semicontinuous flow into a drainage system, such as from a pump or similar device, 1.5 fixture units shall be allowed per gpm of flow. For a fixture not listed, use the highest d.f.u. value for a similar listed fixture.

b. A floor drain itself does not add hydraulic load. Where used as a receptor, the fixture unit value of the fixture discharging into the receptor shall be applicable.

c. Add 2 d.f.u. for each additional full bath.

TABLE P3005.1
FITTINGS FOR CHANGE IN DIRECTION

TYPE OF FITTING PATTERN	CHANGE IN DIRECTION		
	Horizontal to vertical[c]	Vertical to horizontal	Horizontal to horizontal
Sixteenth bend	X	X	X
Eighth bend	X	X	X
Sixth bend	X	X	X
Quarter bend	X	X[a]	X[a]
Short sweep	X	X[a,b]	X[a]
Long sweep	X	X	X
Sanitary tee	X[c]	—	—
Wye	X	X	X
Combination wye and eighth bend	X	X	X

For SI: 1 inch = 25.4 mm.

a. The fittings shall only be permitted for a 2-inch or smaller fixture drain.

b. Three inches and larger.

c. For a limitation on multiple connection fittings, see Section P3005.1.1.

INTERNATIONAL CODE COUNCIL®
Copyright © 2019 ICC & NYSDOS. ALL RIGHTS RESERVED. Accessed by Lauren Gualdino (lgualdino@briarcliffmanor.org), (-) Order Number #100880972 on May 08, 2020 07:05 AM (PDT) pursuant to License Agreement with ICC & NYSDOS. No further reproduction, no

100880972

P3005.1.3 Heel- or side-inlet quarter bends, venting. Heel-inlet or side-inlet quarter bends, or any arrangement of pipe and fittings producing a similar effect, shall be acceptable as a dry vent where the inlet is placed in a vertical position. The inlet is permitted to be placed in a horizontal position only where the entire fitting is part of a dry vent arrangement.

P3005.1.4 Water closet connection between flange and pipe. One-quarter bends 3 inches (76 mm) in diameter shall be acceptable for water closet or similar connections, provided that a 4-inch by 3-inch (102 mm by 76 mm) flange is installed to receive the closet fixture horn. Alternately, a 4-inch by 3-inch (102 mm by 76 mm) elbow shall be acceptable with a 4-inch (102 mm) flange.

P3005.1.5 Provisions for future fixtures. Where drainage has been roughed-in for future fixtures, the drainage unit values of the future fixtures shall be considered in determining the required drain sizes. Such future installations shall be terminated with an accessible permanent plug or cap fitting.

P3005.1.6 Drainage piping size reduction in the direction of flow. The size of the drainage piping shall not be reduced in the direction of the flow. The following shall not be considered a reduction in size in the direction of flow:

1. A 4-inch by 3-inch (102 mm by 76 mm) water closet flange.
2. A water closet bend fitting having a 4-inch (102 mm) inlet and a 3-inch (76 mm) outlet provided that the 4-inch leg of the fitting is upright and below, but not necessarily directly connected to, the water closet flange.
3. An offset closet flange.

P3005.2 Cleanouts required. Cleanouts shall be provided for drainage piping in accordance with Sections P3005.2.1 through P3005.2.11.

P3005.2.1 Horizontal drains and building drains. Horizontal drainage pipes in buildings shall have cleanouts located at intervals of not more than 100 feet (30 480 mm). *Building drains* shall have cleanouts located at intervals of not more than 100 feet (30 480 mm) except where manholes are used instead of cleanouts, the manholes shall be located at intervals of not more than 400 feet (122 m). The interval length shall be measured from the cleanout or manhole opening, along the *developed length* of the piping to the next drainage fitting providing access for cleaning, the end of the horizontal drain or the end of the *building drain*.

Exception: Horizontal fixture drain piping serving a nonremovable trap shall not be required to have a cleanout for the section of piping between the trap and the vent connection for such trap.

P3005.2.2 Building sewers. *Building sewers* smaller than 8 inches (203 mm) shall have cleanouts located at intervals of not more than 100 feet (30 480 mm). *Building sewers* 8 inches (203 mm) and larger shall have a manhole located not more than 200 feet (60 960 mm) from the junction of the *building drain* and *building sewer* and at intervals of not more than 400 feet (122 m). The interval length shall be measured from the cleanout or manhole opening, along the *developed length* of the piping to the next drainage fitting providing access for cleaning, a manhole or the end of the *building sewer*.

P3005.2.3 Building drain and building sewer junction. The junction of the *building drain* and the *building sewer* shall be served by a cleanout that is located at the junction or within 10 feet (3048 mm) *developed length* of piping upstream of the junction. For the requirements of this section, removal of a water closet shall not be required to provide cleanout access.

P3005.2.4 Changes of direction. Where a horizontal drainage pipe, a *building drain* or a *building sewer* has a change of horizontal direction greater than 45 degrees (0.79 rad), a cleanout shall be installed at the change of direction. Where more than one change of horizontal direction greater than 45 degrees (0.79 rad) occurs within 40 feet (12 192 mm) of *developed length* of piping, the cleanout installed for the first change of direction shall serve as the cleanout for all changes in direction within that 40 feet (12 192 mm) of developed length of piping.

P3005.2.5 Cleanout size. Cleanouts shall be the same size as the piping served by the cleanout, except cleanouts for piping larger than 4 inches (102 mm) need not be larger than 4 inches (102 mm).

Exceptions:

1. A removable P-trap with slip- or ground-joint connections can serve as a cleanout for drain piping that is one size larger than the P-trap size.
2. Cleanouts located on stacks can be one size smaller than the stack size.
3. The size of cleanouts for cast-iron piping can be in accordance with the referenced standards for cast iron fittings as indicated in Table P3002.3.

P3005.2.6 Cleanout plugs. Cleanout plugs shall be copper alloy, plastic or other *approved* materials. Cleanout plugs for borosilicate glass piping systems shall be of borosilicate glass. Copper-alloy cleanout plugs shall conform to ASTM A74 and shall be limited for use only on metallic piping systems. Plastic cleanout plugs shall conform to the referenced standards for plastic pipe fittings as indicated in Table P3002.3. Cleanout plugs shall have a raised square head, a countersunk square head or a countersunk slot head. Where a cleanout plug will have a trim cover screw installed into the plug, the plug shall be manufactured with a blind end threaded hole for such purpose.

P3005.2.7 Manholes. Manholes and manhole covers shall be of an approved type. Manholes located inside of a building shall have gas-tight covers that require tools for removal.

INTERNATIONAL CODE COUNCIL®
Copyright © 2019 ICC & NYSDOS. ALL RIGHTS RESERVED. Accessed by Lauren Gualdino (lgualdino@briarcliffmanor.org), (-) Order Number #100880972 on May 08, 2020 07:05 AM (PDT) pursuant to License Agreement with ICC & NYSDOS. No further reproduction, no

100880972

P3005.2.8 Installation arrangement. The installation arrangement of a cleanout shall enable cleaning of drainage piping only in the direction of drainage flow.

Exceptions:

1. Test tees serving as cleanouts.
2. A two-way cleanout installation that is *approved* for meeting the requirements of Section P3005.2.3.

P3005.2.9 Required clearance. Cleanouts for 6-inch (153 mm) and smaller piping shall be provided with a clearance of not less than 18 inches (457 mm) from, and perpendicular to, the face of the opening to any obstruction. Cleanouts for 8-inch (203 mm) and larger piping shall be provided with a clearance of not less than 36 inches (914 mm) from, and perpendicular to, the face of the opening to any obstruction.

P3005.2.10 Cleanout access. Required cleanouts shall not be installed in concealed locations. For the purposes of this section, concealed locations include, but are not limited to, the inside of plenums, within walls, within floor/ceiling assemblies, below grade and in crawl spaces where the height from the crawl space floor to the nearest obstruction along the path from the crawl space opening to the cleanout location is less than 24 inches (610 mm). Cleanouts with openings at a finished wall shall have the face of the opening located within $1^1/_2$ inches (38 mm) of the finished wall surface. Cleanouts located below grade shall be extended to grade level so that the top of the cleanout plug is at or above grade. A cleanout installed in a floor or walkway that will not have a trim cover installed shall have a counter-sunk plug installed so the top surface of the plug is flush with the finished surface of the floor or walkway.

P3005.2.10.1 Cleanout plug trim covers. Trim covers and access doors for cleanout plugs shall be designed for such purposes. Trim cover fasteners that thread into cleanout plugs shall be corrosion resistant. Cleanout plugs shall not be covered with mortar, plaster or any other permanent material.

P3005.2.10.2 Floor cleanout assemblies. Where it is necessary to protect a cleanout plug from the loads of vehicular traffic, cleanout assemblies in accordance with ASME A112.36.2M shall be installed.

P3005.2.11 Prohibited use. The use of a threaded cleanout opening to add a fixture or extend piping shall be prohibited except where another cleanout of equal size is installed with the required access and clearance.

P3005.3 Horizontal drainage piping slope. Horizontal drainage piping shall be installed in uniform alignment at uniform slopes not less than $^1/_4$ unit vertical in 12 units horizontal (2-percent slope) for $2^1/_2$ inch (64 mm) diameter and less, and not less than $^1/_8$ unit vertical in 12 units horizontal (1-percent slope) for diameters of 3 inches (76 mm) or more.

P3005.4 Drain pipe sizing. Drain pipes shall be sized according to drainage fixture unit (d.f.u.) loads. The size of the drainage piping shall not be reduced in size in the direction of flow. The following general procedure is permitted to be used:

1. Draw an isometric layout or riser diagram denoting fixtures on the layout.
2. Assign d.f.u. values to each fixture group plus individual fixtures using Table P3004.1.
3. Starting with the top floor or most remote fixtures, work downstream toward the *building drain* accumulating d.f.u. values for fixture groups plus individual fixtures for each branch. Where multiple bath groups are being added, use the reduced d.f.u. values in Table P3004.1, which take into account probability factors of simultaneous use.
4. Size branches and stacks by equating the assigned d.f.u. values to pipe sizes shown in Table P3005.4.1.
5. Determine the pipe diameter and slope of the *building drain* and *building sewer* based on the accumulated d.f.u. values, using Table P3005.4.2.

P3005.4.1 Branch and stack sizing. Branches and stacks shall be sized in accordance with Table P3005.4.1. Below grade drain pipes shall be not less than $1^1/_2$ inches (38 mm) in diameter. Drain stacks shall be not smaller than the largest horizontal branch connected.

Exceptions:

1. A 4-inch by 3-inch (102 mm by 76 mm) closet bend or flange.
2. A 4-inch (102 mm) closet bend connected to a 3-inch (76 mm) stack tee shall not be prohibited.

TABLE P3005.4.1
MAXIMUM FIXTURE UNITS ALLOWED TO BE CONNECTED TO BRANCHES AND STACKS

NOMINAL PIPE SIZE (inches)	ANY HORIZONTAL FIXTURE BRANCH	ANY ONE VERTICAL STACK OR DRAIN
$1^1/_4$ [a, b]	—	—
$1^1/_2$ [b]	3	4
2 [b]	6	10
$2^1/_2$ [b]	12	20
3	20	48
4	160	240

For SI: 1 inch = 25.4 mm.

a. $1^1/_4$-inch pipe size limited to a single-fixture drain. See Table P3201.7.

b. Water closets prohibited.

P3005.4.2 Building drain and sewer size and slope. Pipe sizes and slope shall be determined from Table P3005.4.2 on the basis of drainage load in fixture units (d.f.u.) computed from Table P3004.1.

INTERNATIONAL CODE COUNCIL®
Copyright © 2019 ICC & NYSDOS. ALL RIGHTS RESERVED. Accessed by Lauren Gualdino (lgualdino@briarcliffmanor.org), (-) Order Number #100880972 on May 08, 2020 07:05 AM (PDT) pursuant to License Agreement with ICC & NYSDOS. No further reproduction, no

100880972

TABLE P3005.4.2
MAXIMUM NUMBER OF FIXTURE UNITS ALLOWED TO BE CONNECTED TO THE BUILDING DRAIN, BUILDING DRAIN BRANCHES OR THE BUILDING SEWER

DIAMETER OF PIPE (inches)	SLOPE PER FOOT		
	1/8 inch	1/4 inch	1/2 inch
1 1/2 [a, b]	—	Note a	Note a
2 [b]	—	21	27
2 1/2 [b]	—	24	31
3	36	42	50
4	180	216	250

For SI: 1 inch = 25.4 mm, 1 foot = 304.8 mm.

a. 1 1/2-inch pipe size limited to a building drain branch serving not more than two waste fixtures, or not more than one waste fixture if serving a pumped discharge fixture or food waste disposer discharge.

b. No water closets.

P3005.5 Connections to offsets and bases of stacks. Horizontal branches shall connect to the bases of stacks at a point located not less than 10 times the diameter of the drainage stack downstream from the stack. Horizontal branches shall connect to horizontal stack offsets at a point located not less than 10 times the diameter of the drainage stack downstream from the upper stack.

SECTION P3006
SIZING OF DRAIN PIPE OFFSETS

P3006.1 Vertical offsets. An offset in a vertical drain, with a change of direction of 45 degrees (0.79 rad) or less from the vertical, shall be sized as a straight vertical drain.

P3006.2 Horizontal offsets above the lowest branch. A stack with an offset of more than 45 degrees (0.79 rad) from the vertical shall be sized as follows:

1. The portion of the stack above the offset shall be sized as for a regular stack based on the total number of fixture units above the offset.
2. The offset shall be sized as for a *building drain* in accordance with Table P3005.4.2.
3. The portion of the stack below the offset shall be sized as for the offset or based on the total number of fixture units on the entire stack, whichever is larger.

P3006.3 Horizontal offsets below the lowest branch. In soil or waste stacks below the lowest horizontal branch, a change in diameter shall not be required if the offset is made at an angle not greater than 45 degrees (0.79 rad) from the vertical. If an offset greater than 45 degrees (0.79 rad) from the vertical is made, the offset and stack below it shall be sized as a *building drain* in accordance with Table P3005.4.2.

SECTION P3007
SUMPS AND EJECTORS

P3007.1 Building subdrains. Building subdrains that cannot be discharged to the sewer by gravity flow shall be discharged into a tightly covered and vented sump from which the liquid shall be lifted and discharged into the building gravity drainage system by automatic pumping equipment or other *approved* method. In other than existing structures, the sump shall not receive drainage from any piping within the building capable of being discharged by gravity to the *building sewer*.

P3007.2 Valves required. A check valve and a full open valve located on the discharge side of the check valve shall be installed in the pump or ejector discharge piping between the pump or ejector and the gravity drainage system. Access shall be provided to such valves. Such valves shall be located above the sump cover required by Section P3007.3.2 or, where the discharge pipe from the ejector is below grade, the valves shall be accessibly located outside the sump below grade in an access pit with a removable access cover.

P3007.3 Sump design. The sump pump, sump and discharge piping shall conform to the requirements of Sections P3007.3.1 through P3007.3.5.

P3007.3.1 Sump pump. The sump pump capacity and head shall be appropriate to anticipated use requirements.

P3007.3.2 Sump. The sump shall be not less than 18 inches (457 mm) in diameter and 24 inches (610 mm) deep, unless otherwise *approved*. The sump shall be accessible and located so that drainage flows into the sump by gravity. The sump shall be constructed of tile, concrete, steel, plastic or other *approved* materials. The sump bottom shall be solid and provide permanent support for the pump. The sump shall be fitted with a gas-tight removable cover that is installed not more than 2 inches (51 mm) below grade or floor level. The cover shall be adequate to support anticipated loads in the area of use. The sump shall be vented in accordance with Chapter 31.

P3007.3.3 Discharge pipe and fittings. Discharge pipe and fittings serving sump pumps and ejectors shall be constructed of materials in accordance with Sections P3007.3.3.1 and P3007.3.3.2.

P3007.3.3.1 Materials. Pipe and fitting materials shall be constructed of copper alloy, copper, CPVC, ductile iron, PE, or PVC.

P3007.3.3.2 Ratings. Pipe and fittings shall be rated for the maximum system operating pressure and temperature. Pipe fitting materials shall be compatible with the pipe material. Where pipe and fittings are buried in the earth, they shall be suitable for burial.

P3007.3.4 Maximum effluent level. The effluent level control shall be adjusted and maintained to at all times prevent the effluent in the sump from rising to within 2 inches (51 mm) of the invert of the gravity drain inlet into the sump.

P3007.3.5 Ejector connection to the drainage system. Pumps connected to the drainage system shall connect to a *building sewer, building drain*, soil stack, waste stack or horizontal branch drain. Where the discharge line connects into horizontal drainage piping, the connection shall be made through a wye fitting into the top of the drainage piping and such wye fitting shall be located not less than 10 pipe diameters from the base of any soil stack, waste stack or fixture drain.

INTERNATIONAL CODE COUNCIL®
Copyright © 2019 ICC & NYSDOS. ALL RIGHTS RESERVED. Accessed by Lauren Gualdino (lgualdino@briarcliffmanor.org), (-) Order Number #100880972 on May 08, 2020 07:05 AM (PDT) pursuant to License Agreement with ICC & NYSDOS. No further reproduction, no

100880972

P3007.4 Sewage pumps and sewage ejectors. A sewage pump or sewage ejector shall automatically discharge the contents of the sump to the building drainage system.

P3007.5 Macerating toilet systems and pumped waste systems. Macerating toilet systems and pumped waste systems shall comply with ASME A112.3.4/CSA B45.9 and shall be installed in accordance with the manufacturer's instructions.

P3007.6 Capacity. Sewage pumps and sewage ejectors shall have the capacity and head for the application requirements. Pumps and ejectors that receive the discharge of water closets shall be capable of handling spherical solids with a diameter of up to and including 2 inches (51 mm). Other pumps or ejectors shall be capable of handling spherical solids with a diameter of up to and including $^1/_2$ inch (13 mm). The minimum capacity of a pump or ejector based on the diameter of the discharge pipe shall be in accordance with Table 3007.6.

Exceptions:

1. Grinder pumps or grinder ejectors that receive the discharge of water closets shall have a discharge opening of not less than $1^1/_4$ inches (32 mm).
2. Macerating toilet assemblies that serve single water closets shall have a discharge opening of not less than $^3/_4$ inch (19 mm).

TABLE 3007.6
MINIMUM CAPACITY OF SEWAGE PUMP OR SEWAGE EJECTOR

DIAMETER OF THE DISCHARGE PIPE (inches)	CAPACITY OF PUMP OR EJECTOR (gpm)
2	21
$2^1/_2$	30
3	46

For SI: 1 inch = 25.4 mm, 1 gallon per minute = 3.785 L/m.

SECTION P3008
BACKWATER VALVES

P3008.1 Where required. Where the flood level rims of plumbing fixtures are below the elevation of the manhole cover of the next upstream manhole in the public sewer, the fixtures shall be protected by a backwater valve installed in the *building drain*, branch of the *building drain* or horizontal branch serving such fixtures.

P3008.2 Allowable installations. Where plumbing fixtures are installed on a floor with a finished floor elevation above the elevation of the manhole cover of the next upstream manhole in the public sewer, and a backwater valve is installed in the *building drain* or horizontal branch serving such fixtures, the backwater valve shall be of the normally open type.

Exception: Normally closed backwater valve installations for existing buildings shall not be prohibited.

P3008.3 Material. Backwater valves shall comply with ASME A112.14.1, CSA B181.1 or CSA B181.2.

P3008.4 Location. Backwater valves shall be installed so that access is provided to the working parts.

SECTION P3009
SUBSURFACE LANDSCAPE IRRIGATION SYSTEMS

P3009.1 Scope. The provisions of this section shall govern the materials, design, construction and installation of subsurface landscape irrigation systems connected to nonpotable water from on-site water reuse systems.

P3009.2 Materials. Above-ground drain, waste and vent piping for subsurface landscape irrigation systems shall conform to one of the standards indicated in Table P3002.1(1). Subsurface landscape irrigation, underground building drainage and vent pipe shall conform to one of the standards indicated in Table P3002.1(2).

P3009.3 Tests. Drain, waste and vent piping for subsurface landscape irrigation systems shall be tested in accordance with Section P2503.

P3009.4 Inspections. Subsurface landscape irrigation systems shall be inspected in accordance with Section R105.3.

P3009.5 Disinfection. Disinfection shall not be required for on-site nonpotable reuse water for subsurface landscape irrigation systems.

P3009.6 Coloring. On-site nonpotable reuse water used for subsurface landscape irrigation systems shall not be required to be dyed.

P3009.7 Sizing. The system shall be sized in accordance with the sum of the output of all water sources connected to the subsurface irrigation system. Where graywater collection piping is connected to subsurface landscape irrigation systems, graywater output shall be calculated according to the gallons-per-day-per-occupant (liters per day per occupant) number based on the type of fixtures connected. The graywater discharge shall be calculated by the following equation:

$$C = A \times B \qquad \textbf{(Equation 30-1)}$$

where:

A = Number of occupants:

Number of occupants shall be determined by the actual number of occupants, but not less than two occupants for one bedroom and one occupant for each additional bedroom.

B = Estimated flow demands for each occupant:

25 gallons (94.6 L) per day per occupant for showers, bathtubs and lavatories and 15 gallons (56.7 L) per day per occupant for clothes washers or laundry trays.

C = Estimated graywater discharge based on the total number of occupants.

P3009.8 Percolation tests. The permeability of the soil in the proposed absorption system shall be determined by percolation tests or permeability evaluation.

P3009.8.1 Percolation tests and procedures. Not less than three percolation tests in each system area shall be conducted. The holes shall be spaced uniformly in relation to the bottom depth of the proposed absorption system. More percolation tests shall be made where necessary, depending on system design.

INTERNATIONAL CODE COUNCIL®
Copyright © 2019 ICC & NYSDOS. ALL RIGHTS RESERVED. Accessed by Lauren Gualdino (lgualdino@briarcliffmanor.org), (-) Order Number #100880972 on May 08, 2020 07:05 AM (PDT) pursuant to License Agreement with ICC & NYSDOS. No further reproduction, no

100880972

P3009.8.1.1 Percolation test hole. The test hole shall be dug or bored. The test hole shall have vertical sides and a horizontal dimension of 4 inches to 8 inches (102 mm to 203 mm). The bottom and sides of the hole shall be scratched with a sharp-pointed instrument to expose the natural soil. Loose material shall be removed from the hole and the bottom shall be covered with 2 inches (51 mm) of gravel or coarse sand.

P3009.8.1.2 Test procedure, sandy soils. The hole shall be filled with clear water to not less than 12 inches (305 mm) above the bottom of the hole for tests in sandy soils. The time for this amount of water to seep away shall be determined, and this procedure shall be repeated if the water from the second filling of the hole seeps away in 10 minutes or less. The test shall proceed as follows: Water shall be added to a point not more than 6 inches (152 mm) above the gravel or coarse sand. Thereupon, from a fixed reference point, water levels shall be measured at 10-minute intervals for a period of 1 hour. Where 6 inches (152 mm) of water seeps away in less than 10 minutes, a shorter interval between measurements shall be used. The water depth shall not exceed 6 inches (152 mm). Where 6 inches (152 mm) of water seeps away in less than 2 minutes, the test shall be stopped and a rate of less than 3 minutes per inch (7.2 s/mm) shall be reported. The final water level drop shall be used to calculate the percolation rate. Soils not meeting these requirements shall be tested in accordance with Section P3009.8.1.3.

P3009.8.1.3 Test procedure, other soils. The hole shall be filled with clear water, and a minimum water depth of 12 inches (305 mm) shall be maintained above the bottom of the hole for a 4-hour period by refilling whenever necessary or by use of an automatic siphon. Water remaining in the hole after 4 hours shall not be removed. Thereafter, the soil shall be allowed to swell not less than 16 hours or more than 30 hours. Immediately after the soil swelling period, the measurements for determining the percolation rate shall be made as follows: any soil sloughed into the hole shall be removed and the water level shall be adjusted to 6 inches (152 mm) above the gravel or coarse sand. Thereupon, from a fixed reference point, the water level shall be measured at 30-minute intervals for a period of 4 hours, unless two successive water level drops do not vary by more than $^{1}/_{16}$ inch (1.59 mm). Not less than three water level drops shall be observed and recorded. The hole shall be filled with clear water to a point not more than 6 inches (152 mm) above the gravel or coarse sand whenever it becomes nearly empty. Adjustments of the water level shall not be made during the three measurement periods except to the limits of the last measured water level drop. When the first 6 inches (152 mm) of water seeps away in less than 30 minutes, the time interval between measurements shall be 10 minutes and the test run for 1 hour. The water depth shall not exceed 5 inches (127 mm) at any time during the measurement period. The drop that occurs during the final measurement period shall be used in calculating the percolation rate.

P3009.8.1.4 Mechanical test equipment. Mechanical percolation test equipment shall be of an *approved* type.

P3009.8.2 Permeability evaluation. Soil shall be evaluated for estimated percolation based on structure and texture in accordance with accepted soil evaluation practices. Borings shall be made in accordance with Section P3009.8.1.1 for evaluating the soil.

P3009.9 Subsurface landscape irrigation site location. The surface grade of soil absorption systems shall be located at a point lower than the surface grade of any water well or reservoir on the same or adjoining lot. Where this is not possible, the site shall be located so surface water drainage from the site is not directed toward a well or reservoir. The soil absorption system shall be located with a minimum horizontal distance between various elements as indicated in Table P3009.9. Private sewage disposal systems in compacted areas, such as parking lots and driveways, are prohibited. Surface water shall be diverted away from any soil absorption site on the same or neighboring lots.

TABLE P3009.9
LOCATION OF SUBSURFACE IRRIGATION SYSTEM

ELEMENT	MINIMUM HORIZONTAL DISTANCE	
	STORAGE TANK (feet)	IRRIGATION DISPOSAL FIELD (feet)
Buildings	5	2
Lot line adjoining private property	5	5
Water wells	50	100
Streams and lakes	50	50
Seepage pits	5	5
Septic tanks	0	5
Water service	5	5
Public water main	10	10

For SI: 1 foot = 304.8 mm.

P3009.10 Installation. Absorption systems shall be installed in accordance with Sections P3009.10.1 through P3009.11 to provide landscape irrigation without surfacing of water.

P3009.10.1 Absorption area. The total absorption area required shall be computed from the estimated daily graywater discharge and the design-loading rate based on the percolation rate for the site. The required absorption area equals the estimated graywater discharge divided by the design loading rate from Table P3009.10.1.

INTERNATIONAL CODE COUNCIL®
Copyright © 2019 ICC & NYSDOS. ALL RIGHTS RESERVED. Accessed by Lauren Gualdino (lgualdino@briarcliffmanor.org), (-) Order Number #100880972 on May 08, 2020 07:05 AM (PDT) pursuant to License Agreement with ICC & NYSDOS. No further reproduction, no

100880972

TABLE P3009.10.1
DESIGN LOADING RATE

PERCOLATION RATE (minutes per inch)	DESIGN LOADING FACTOR (gallons per square foot per day)
0 to less than 10	1.2
10 to less than 30	0.8
30 to less than 45	0.72
45 to 60	0.4

For SI: 1 minute per inch = min/25.4 mm,
1 gallon per square foot = 40.7 L/m^2.

P3009.10.2 Seepage trench excavations. Seepage trench excavations shall be not less than 1 foot (304 mm) in width and not greater than 5 feet (1524 mm) in width. Trench excavations shall be spaced not less than 2 feet (610 mm) apart. The soil absorption area of a seepage trench shall be computed by using the bottom of the trench area (width) multiplied by the length of pipe. Individual seepage trenches shall be not greater than 100 feet (30 480 mm) in developed length.

P3009.10.3 Seepage bed excavations. Seepage bed excavations shall be not less than 5 feet (1524 mm) in width and have more than one distribution pipe. The absorption area of a seepage bed shall be computed by using the bottom of the trench area. Distribution piping in a seepage bed shall be uniformly spaced not greater than 5 feet (1524 mm) and not less than 3 feet (914 mm) apart, and greater than 3 feet (914 mm) and not less than 1 foot (305 mm) from the sidewall or headwall.

P3009.10.4 Excavation and construction. The bottom of a trench or bed excavation shall be level. Seepage trenches or beds shall not be excavated where the soil is so wet that such material rolled between the hands forms a soil wire. Smeared or compacted soil surfaces in the sidewalls or bottom of seepage trench or bed excavations shall be scarified to the depth of smearing or compaction and the loose material removed. Where rain falls on an open excavation, the soil shall be left until sufficiently dry so a soil wire will not form when soil from the excavation bottom is rolled between the hands. The bottom area shall then be scarified and loose material removed.

P3009.10.5 Aggregate and backfill. Not less than 6 inches (150 mm) in depth of aggregate ranging in size from $^1/_2$ to $2^1/_2$ inches (12.7 mm to 64 mm) shall be laid into the trench below the distribution piping elevation. The aggregate shall be evenly distributed not less than 2 inches (51 mm) in depth over the top of the distribution pipe. The aggregate shall be covered with *approved* synthetic materials or 9 inches (229 mm) of uncompacted marsh hay or straw. Building paper shall not be used to cover the aggregate. Not less than 9 inches (229 mm) of soil backfill shall be provided above the covering.

P3009.11 Distribution piping. Distribution piping shall be not less than 3 inches (76 mm) in diameter. Materials shall comply with Table P3009.11. The top of the distribution pipe shall be not less than 8 inches (203 mm) below the original surface. The slope of the distribution pipes shall be not less than 2 inches (51 mm) and not greater than 4 inches (102 mm) per 100 feet (30 480 mm).

TABLE P3009.11
DISTRIBUTION PIPE

MATERIAL	STANDARD
Polyethylene (PE) plastic pipe	ASTM F405
Polyvinyl chloride (PVC) plastic pipe	ASTM D2729
Polyvinyl chloride (PVC) plastic pipe with a 3.5-inch O.D. and solid cellular core or composite wall	ASTM F1488

For SI: 1 inch = 25.4 mm.

P3009.11.1 Joints. Joints in distribution pipe shall be made in accordance with Section P3003 of this code.

SECTION P3010
REPLACEMENT OF UNDERGROUND BUILDING SEWERS AND BUILDING DRAINS BY PIPE BURSTING METHODS

P3010.1 General. This section shall govern the replacement of existing *building sewer* and *building drain* piping by pipe-bursting methods.

P3010.2 Applicability. The replacement of building sewer and *building drain* piping by pipe bursting methods shall be limited to gravity drainage piping of sizes 6 inches (150 mm) and smaller. The replacement piping shall be of the same nominal size as the existing piping.

P3010.3 Preinstallation inspection. The existing piping sections to be replaced shall be inspected internally by a recorded video camera survey. The survey shall include notations of the position of cleanouts and the depth of connections to the existing piping.

P3010.4 Pipe. The replacement pipe shall be made of a high-density polyethylene (HDPE) and shall be in compliance with ASTM F714.

P3010.5 Pipe fittings. Pipe fittings to be connected to the replacement pipe shall be made of high-density polyethylene (HDPE) and shall be in compliance with ASTM D2683.

P3010.6 Cleanouts. Where the existing *building sewer* or *building drain* did not have cleanouts meeting the requirements of this code, cleanout fittings shall be installed as required by this code.

P3010.7 Post-installation inspection. The completed replacement piping section shall be inspected internally by a recorded video camera survey. The video survey shall be reviewed and *approved* by the *building official* prior to pressure testing of the replacement piping system.

P3010.8 Pressure testing. The replacement piping system and the connections to the replacement piping shall be tested in accordance with Section P2503.4.

INTERNATIONAL CODE COUNCIL®
Copyright © 2019 ICC & NYSDOS. ALL RIGHTS RESERVED. Accessed by Lauren Gualdino (lgualdino@briarcliffmanor.org), (-) Order Number #100880972 on May 08, 2020 07:05 AM (PDT) pursuant to License Agreement with ICC & NYSDOS. No further reproduction, no

100880972

SECTION P3011
REPLACEMENT OF UNDERGROUND SEWERS BY PVC FOLD AND FORM METHODS

P3011.1 General. This section shall govern the replacement of existing *building sewer* piping by PVC fold and form methods.

P3011.2 Applicability. The replacement of *building sewer* piping by PVC fold and form methods shall be limited to gravity drainage piping 4 inches (102 mm) to 18 inches (457 mm). The replacement piping shall be of the same nominal size as the existing piping.

P3011.3 Preinstallation inspection. The existing piping sections to be replaced shall be inspected internally by a recorded video camera survey. The survey shall include notations of the position of cleanouts and the depth of connections to the existing piping.

P3011.4 Pipe. The replacement piping shall be manufactured in compliance with ASTM F1504 or ASTM F1871.

P3011.5 Installation. The piping sections to be replaced shall be cleaned and flushed. Remediation shall be performed where there is groundwater infiltration, roots, collapsed pipe, dropped joints, offsets more than 12 percent of the inside pipe diameter or other obstructions.

P3011.6 Cleanouts. Where the existing *building sewer* did not have cleanouts meeting the requirements of this code, cleanout fittings shall be installed as required by this code.

P3011.7 Post-installation inspection. The completed replacement piping shall be inspected internally by a recorded video camera survey. The video survey shall be reviewed and *approved* by the *building official* prior to pressure testing of the replacement piping system.

P3011.8 Pressure testing. The replacement piping system as well as the connections to the replacement piping shall be tested in accordance with Section P2503.4.

INTERNATIONAL CODE COUNCIL®
Copyright © 2019 ICC & NYSDOS. ALL RIGHTS RESERVED. Accessed by Lauren Gualdino (lgualdino@briarcliffmanor.org), (-) Order Number #100880972 on May 08, 2020 07:05 AM (PDT) pursuant to License Agreement with ICC & NYSDOS. No further reproduction, no

100880972

INTERNATIONAL CODE COUNCIL®
Copyright © 2019 ICC & NYSDOS. ALL RIGHTS RESERVED. Accessed by Lauren Gualdino (lgualdino@briarcliffmanor.org), (-) Order Number #100880972 on May 08, 2020 07:05 AM (PDT) pursuant to License Agreement with ICC & NYSDOS. No further reproduction, no

100880972

CHAPTER 31

VENTS

SECTION P3101
VENT SYSTEMS

P3101.1 General. This chapter shall govern the selection and installation of piping, tubing and fittings for vent systems. This chapter shall control the minimum diameter of vent pipes, circuit vents, branch vents and individual vents, and the size and length of vents and various aspects of vent stacks and stack vents. Additionally, this chapter regulates vent grades and connections, height above fixtures and relief vents for stacks and fixture traps, and the venting of sumps and sewers.

P3101.2 Trap seal protection. The plumbing system shall be provided with a system of vent piping that will allow the admission or emission of air so that the liquid seal of any fixture trap shall not be subjected to a pressure differential of more than 1 inch of water column (249 Pa).

P3101.2.1 Venting required. Every *trap* and trapped fixture shall be vented in accordance with one of the venting methods specified in this chapter.

P3101.3 Use limitations. The plumbing vent system shall not be used for purposes other than the venting of the plumbing system.

P3101.4 Extension outside a structure. In climates where the 97.5-percent value for outside design temperature is 0°F (-18°C) or less (ASHRAE 97.5-percent column, winter, see Chapter 3), vent pipes installed on the exterior of the structure shall be protected against freezing by insulation, heat or both. Vent terminals shall be protected from frost closure in accordance with Section P3103.2.

P3101.5 Flood resistance. In flood hazard areas as established by Table R301.2(1), vents shall be located at or above the elevation required in Section R322.1 (flood hazard areas including A Zones) or R322.2 (coastal high-hazard areas including V Zones).

SECTION P3102
VENT STACKS AND STACK VENTS

P3102.1 Required vent extension. The vent system serving each *building drain* shall have not less than one vent pipe that extends to the outdoors.

P3102.2 Installation. The required vent shall be a dry vent that connects to the *building drain* or an extension of a drain that connects to the *building drain*. Such vent shall not be an island fixture vent as permitted by Section P3112.

P3102.3 Size. The required vent shall be sized in accordance with Section P3113.1 based on the required size of the *building drain*.

SECTION P3103
VENT TERMINALS

P3103.1 Vent pipes terminating outdoors. Vent pipes terminating outdoors shall be extended to the outdoors through the roof or a sidewall of the building in accordance with one of the methods identified in Sections P3103.1.1 through P3103.1.4.

P3103.1.1 Roof extension. Open vent pipes that extend through a roof that do not meet the conditions of Section P3103.1.2 or P3103.1.3 shall terminate not less than 6 inches (150 mm) above the roof or 6 inches (150 mm) above the anticipated snow accumulation, whichever is greater.

P3103.1.2 Roof used for recreational purposes. Where a roof is to be used for assembly, as a promenade, observation deck or sunbathing deck, or for similar purposes, open vent pipes shall terminate not less than 7 feet (2134 mm) above the roof.

P3103.1.3 Roof extension covered. Where an open vent pipe terminates above a sloped roof and is covered by either a roof-mounted panel (such as a solar collector or photovoltaic panel mounted over the vent opening) or a roof element (such as an architectural feature or a decorative shroud), the vent pipe shall terminate not less than 2 inches (51 mm) above the roof surface. Such roof elements shall be designed to prevent the adverse effects of snow accumulation and wind on the function of the vent. The placement of a panel over a vent pipe and the design of a roof element covering the vent pipe shall provide for an open area for the vent pipe to the outdoors that is not less than the area of the pipe, as calculated from the inside diameter of the pipe. Such vent terminals shall be protected by a method that prevents birds and rodents from entering or blocking the vent pipe opening.

P3103.1.4 Sidewall vent terminal. Vent terminals extending through the wall shall terminate not less than 10 feet (3048 mm) from a lot line and not less than 10 feet (3048 mm) above the highest grade elevation within 10 feet (3048 mm) in any direction horizontally of the vent terminal. Vent pipes shall not terminate under the overhang of a structure where the overhang includes soffit vents. Such vent terminals shall be protected by a method that prevents birds and rodents from entering or blocking the vent pipe opening and that does not reduce the open area of the vent pipe.

P3103.2 Frost closure. Where the 97.5-percent value for outside design temperature is 0°F (-18°C) or less, vent extensions through a roof or wall shall be not less than 3 inches (76 mm) in diameter. Any increase in the size of the vent shall be made not less than 1 foot (304.8 mm) inside the thermal envelope of the building.

INTERNATIONAL CODE COUNCIL®
Copyright © 2019 ICC & NYSDOS. ALL RIGHTS RESERVED. Accessed by Lauren Gualdino (lgualdino@briarcliffmanor.org), (-) Order Number #100880972 on May 08, 2020 07:05 AM (PDT) pursuant to License Agreement with ICC & NYSDOS. No further reproduction, no

100880972

P3103.3 Flashings and sealing. The juncture of each vent pipe with the roof line shall be made watertight by an *approved* flashing. Vent extensions in walls and soffits shall be made weather tight by caulking.

P3103.4 Prohibited use. A vent terminal shall not be used for any purpose other than a vent terminal.

P3103.5 Location of vent terminal. An open vent terminal from a drainage system shall not be located less than 4 feet (1219 mm) directly beneath any door, openable window, or other air intake opening of the building or of an adjacent building, nor shall any such vent terminal be within 10 feet (3048 mm) horizontally of such an opening unless it is not less than 3 feet (914 mm) above the top of such opening.

SECTION P3104
VENT CONNECTIONS AND GRADES

P3104.1 Connection. Individual branch and circuit vents shall connect to a vent stack, stack vent or extend to the open air.

Exception: Individual, branch and circuit vents shall be permitted to terminate at an *air admittance valve* in accordance with Section P3114.

P3104.2 Grade. Vent and branch vent pipes shall be graded, connected and supported to allow moisture and condensate to drain back to the soil or waste pipe by gravity.

P3104.3 Vent connection to drainage system. A dry vent connecting to a horizontal drain shall connect above the centerline of the horizontal drain pipe.

P3104.4 Vertical rise of vent. A dry vent shall rise vertically to not less than 6 inches (152 mm) above the flood level rim of the highest trap or trapped fixture being vented.

P3104.5 Height above fixtures. A connection between a vent pipe and a vent stack or stack vent shall be made not less than 6 inches (152 mm) above the flood level rim of the highest fixture served by the vent. Horizontal vent pipes forming branch vents shall be not less than 6 inches (152 mm) above the flood level rim of the highest fixture served.

P3104.6 Vent for future fixtures. Where the drainage piping has been roughed-in for future fixtures, a rough-in connection for a vent, not less than one-half the diameter of the drain, shall be installed. The vent rough-in shall connect to the vent system or shall be vented by other means as provided in this chapter. The connection shall be identified to indicate that the connection is a vent.

SECTION P3105
FIXTURE VENTS

P3105.1 Distance of trap from vent. Each fixture trap shall have a protecting vent located so that the slope and the *developed length* in the *fixture drain* from the trap weir to the vent fitting are within the limits indicated in Table P3105.1.

Exception: The *developed length* of the *fixture drain* from the trap weir to the vent fitting for self-siphoning fixtures, such as water closets, shall not be limited.

TABLE P3105.1
MAXIMUM DISTANCE OF FIXTURE TRAP FROM VENT

SIZE OF TRAP (inches)	SLOPE (inch per foot)	DISTANCE FROM TRAP (feet)
$1^1/_4$	$^1/_4$	5
$1^1/_2$	$^1/_4$	6
2	$^1/_4$	8
3	$^1/_8$	12
4	$^1/_8$	16

For SI: 1 inch = 25.4 mm, 1 foot = 304.8 mm, 1 inch per foot = 83.3 mm/m.

P3105.2 Fixture drains. The total fall in a *fixture drain* resulting from pipe slope shall not exceed one pipe diameter, nor shall the vent pipe connection to a *fixture drain*, except for water closets, be below the weir of the trap.

P3105.3 Crown vent prohibited. A vent shall not be installed within two pipe diameters of the trap weir.

SECTION P3106
INDIVIDUAL VENT

P3106.1 Individual vent permitted. Each trap and trapped fixture shall be permitted to be provided with an individual vent. The individual vent shall connect to the *fixture drain* of the trap or trapped fixture being vented.

SECTION P3107
COMMON VENT

P3107.1 Individual vent as common vent. An individual vent shall be permitted to vent two traps or trapped fixtures as a common vent. The traps or trapped fixtures being common vented shall be located on the same floor level.

P3107.2 Connection at the same level. Where the *fixture drains* being common vented connect at the same level, the vent connection shall be at the interconnection of the *fixture drains* or downstream of the interconnection.

P3107.3 Connection at different levels. Where the *fixture drains* connect at different levels, the vent shall connect as a vertical extension of the vertical drain. The vertical drain pipe connecting the two *fixture drains* shall be considered to be the vent for the lower *fixture drain*, and shall be sized in accordance with Table P3107.3. The upper fixture shall not be a water closet.

TABLE P3107.3
COMMON VENT SIZES

PIPE SIZE (inches)	MAXIMUM DISCHARGE FROM UPPER FIXTURE DRAIN (d.f.u.)
$1^1/_2$	1
2	4
$2^1/_2$ to 3	6

For SI: 1 inch = 25.4 mm.

INTERNATIONAL CODE COUNCIL®
Copyright © 2019 ICC & NYSDOS. ALL RIGHTS RESERVED. Accessed by Lauren Gualdino (lgualdino@briarcliffmanor.org), (-) Order Number #100880972 on May 08, 2020 07:05 AM (PDT) pursuant to License Agreement with ICC & NYSDOS. No further reproduction, no

100880972

SECTION P3108
WET VENTING

P3108.1 Horizontal wet vent permitted. Any combination of fixtures within two *bathroom groups* located on the same floor level shall be permitted to be vented by a horizontal wet vent. The wet vent shall be considered to be the vent for the fixtures and shall extend from the connection of the dry vent along the direction of the flow in the drain pipe to the most downstream *fixture drain* connection. Each *fixture drain* shall connect horizontally to the horizontal branch being wet vented or shall have a dry vent. Each wet-vented *fixture drain* shall connect independently to the horizontal wet vent. Only the fixtures within the *bathroom groups* shall connect to the wet-vented horizontal branch drain. Any additional fixtures shall discharge downstream of the horizontal wet vent.

P3108.2 Dry vent connection. The required dry-vent connection for wet-vented systems shall comply with Sections P3108.2.1 and P3108.2.2.

P3108.2.1 Horizontal wet vent. The dry-vent connection for a horizontal wet-vent system shall be an individual vent or a common vent for any *bathroom group* fixture, except an emergency floor drain. Where the dry vent connects to a water closet *fixture drain*, the drain shall connect horizontally to the horizontal wet-vent system. Not more than one wet-vented *fixture drain* shall discharge upstream of the dry-vented *fixture drain* connection.

P3108.2.2 Vertical wet vent. The dry-vent connection for a vertical wet-vent system shall be an individual vent or common vent for the most upstream *fixture drain*.

P3108.3 Size. Horizontal and vertical wet vents shall be not less than the size as specified in Table P3108.3, based on the fixture unit discharge to the wet vent. The dry vent serving the wet vent shall be sized based on the largest required diameter of pipe within the wet-vent system served by the dry vent.

TABLE P3108.3
WET VENT SIZE

WET VENT PIPE SIZE (inches)	FIXTURE UNIT LOAD (d.f.u.)
$1^1/_2$	1
2	4
$2^1/_2$	6
3	12
4	32

For SI: 1 inch = 25.4 mm.

P3108.4 Vertical wet vent permitted. A combination of fixtures located on the same floor level shall be permitted to be vented by a vertical wet vent. The vertical wet vent shall be considered to be the vent for the fixtures and shall extend from the connection of the dry vent down to the lowest *fixture drain* connection. Each wet-vented fixture shall connect independently to the vertical wet vent. All water closet drains shall connect at the same elevation. Other *fixture drains* shall connect above or at the same elevation as the water closet *fixture drains*. The dry-vent connection to the vertical wet vent shall be an individual or common vent serving one or two fixtures.

P3108.5 Trap weir to wet-vent distances. The maximum *developed length* of wet-vented *fixture drains* shall comply with Table P3105.1.

SECTION P3109
WASTE STACK VENT

P3109.1 Waste stack vent permitted. A waste stack shall be considered to be a vent for all of the fixtures discharging to the stack where installed in accordance with the requirements of this section.

P3109.2 Stack installation. The waste stack shall be vertical, and both horizontal and vertical offsets shall be prohibited between the lowest *fixture drain* connection and the highest *fixture drain* connection to the stack. Every *fixture drain* shall connect separately to the waste stack. The stack shall not receive the discharge of water closets or urinals.

P3109.3 Stack vent. A stack vent shall be installed for the waste stack. The size of the stack vent shall be not less than the size of the waste stack. Offsets shall be permitted in the stack vent and shall be located not less than 6 inches (152 mm) above the flood level of the highest fixture, and shall be in accordance with Section P3104.5. The stack vent shall be permitted to connect with other stack vents and vent stacks in accordance with Section P3113.3.

P3109.4 Waste stack size. The waste stack shall be sized based on the total discharge to the stack and the discharge within a *branch interval* in accordance with Table P3109.4. The waste stack shall be the same size throughout the length of the waste stack.

TABLE P3109.4
WASTE STACK VENT SIZE

STACK SIZE (inches)	MAXIMUM NUMBER OF FIXTURE UNITS (d.f.u.)	
	Total discharge into one branch interval	Total discharge for stack
$1^1/_2$	1	2
2	2	4
$2^1/_2$	No limit	8
3	No limit	24
4	No limit	50

For SI: 1 inch = 25.4 mm.

SECTION P3110
CIRCUIT VENTING

P3110.1 Circuit vent permitted. Not greater than eight fixtures connected to a horizontal branch drain shall be permitted to be circuit vented. Each *fixture drain* shall connect horizontally to the horizontal branch being circuit vented. The horizontal branch drain shall be classified as a vent from the most downstream *fixture drain* connection to the most upstream *fixture drain* connection to the horizontal branch.

P3110.2 Vent connection. The circuit vent connection shall be located between the two most upstream *fixture drains*. The vent shall connect to the horizontal branch and shall be installed in accordance with Section P3104. The circuit vent pipe shall not receive the discharge of any soil or waste.

INTERNATIONAL CODE COUNCIL®
Copyright © 2019 ICC & NYSDOS. ALL RIGHTS RESERVED. Accessed by Lauren Gualdino (lgualdino@briarcliffmanor.org), (-) Order Number #100880972 on May 08, 2020 07:05 AM (PDT) pursuant to License Agreement with ICC & NYSDOS. No further reproduction, no

100880972

P3110.3 Slope and size of horizontal branch. The slope of the vent section of the horizontal branch drain shall be not greater than one unit vertical in 12 units horizontal (8-percent slope). The entire length of the vent section of the horizontal branch drain shall be sized for the total drainage discharge to the branch in accordance with Table P3005.4.1.

P3110.4 Additional fixtures. Fixtures, other than circuit-vented fixtures, shall be permitted to discharge to the horizontal branch drain. Such fixtures shall be located on the same floor as the circuit-vented fixtures and shall be either individually or common vented.

SECTION P3111
COMBINATION WASTE AND VENT SYSTEM

P3111.1 Type of fixtures. A combination waste and vent system shall only serve floor drains, sinks, lavatories and drinking fountains. A combination waste and vent system shall be considered to be the vent for those fixtures. The *developed length* of a *fixture drain* to the combination waste and vent system piping shall not exceed the limitations of Table P3105.1.

P3111.1.1 Single-fixture systems. A horizontal fixture drain shall be considered to be a combination waste and vent system provided that the fixture drain size complies with Table P3111.3.

P3111.2 Installation. The only vertical pipe of a combination waste and vent system shall be the connection between a *fixture drain* and a horizontal combination waste and vent pipe. The length of the vertical pipe shall be not greater than 8 feet (2438 mm).

P3111.2.1 Slope. The slope of horizontal combination waste and vent piping shall be not greater than $^1/_2$ unit vertical in 12 units horizontal (4-percent slope) and shall be not less than that indicated in Section P3005.2.

P3111.2.2 Vent connection. A combination waste and vent system shall be provided with a dry vent connected at any point within the system, or the system shall connect to a horizontal drain or *building drain* that serves vented fixtures located on the same floor. Combination waste and vent systems connecting to *building drains* receiving only the discharge from one or more stacks shall be provided with a dry vent. The dry vent connected to the combination waste and vent pipe shall extend vertically to a point not less than 6 inches (152 mm) above the flood level rim of the highest fixture being vented by the combination waste and vent system before horizontal offsets in the dry vent piping are allowed.

P3111.2.3 Vent size. The dry vent connected to the combination waste and vent system shall be sized for the total drainage fixture unit load in accordance with Section P3111.1.

P3111.3 Size and length. The size of a combination drain and vent piping shall be not less than that specified in Table P3111.3. The horizontal length of a combination drain and vent system shall be unlimited.

TABLE P3111.3
SIZE OF COMBINATION WASTE AND VENT PIPE

DIAMETER PIPE (inches)	MAXIMUM NUMBER OF FIXTURE UNITS (d.f.u.)	
	Connecting to a horizontal branch or stack	Connecting to a building drain or building subdrain
2	3	4
$2^1/_2$	6	26
3	12	31
4	20	50

For SI: 1 inch = 25.4 mm.

SECTION P3112
ISLAND FIXTURE VENTING

P3112.1 Limitation. Island fixture venting shall not be permitted for fixtures other than sinks and lavatories. Kitchen sinks with a dishwasher waste connection, a food waste disposer, or both, in combination with the kitchen sink waste, shall be permitted to be vented in accordance with this section.

P3112.2 Vent connection. The island fixture vent shall connect to the *fixture drain* as required for an individual or common vent. The vent shall rise vertically to above the drainage outlet of the fixture being vented before offsetting horizontally or vertically downward. The vent or branch vent for multiple island fixture vents shall extend not less than 6 inches (152 mm) above the highest island fixture being vented before connecting to the outside vent terminal.

P3112.3 Vent installation below the fixture flood level rim. The vent located below the flood level rim of the fixture being vented shall be installed as required for drainage piping in accordance with Chapter 30, except for sizing. The vent shall be sized in accordance with Section P3113.1. The lowest point of the island fixture vent shall connect full size to the drainage system. The connection shall be to a vertical drain pipe or to the top half of a horizontal drain pipe. Cleanouts shall be provided in the island fixture vent to permit rodding of all vent piping located below the flood level rim of the fixtures. Rodding in both directions shall be permitted through a cleanout.

SECTION P3113
VENT PIPE SIZING

P3113.1 Size of vents. The required diameter of individual vents, branch vents, circuit vents, vent stacks and stack vents shall be not less than one-half the required diameter of the drain served. The required size of the drain shall be determined in accordance with Chapter 30. Vent pipes shall be not less than $1^1/_4$ inches (32 mm) in diameter. Vents exceeding 40 feet (12 192 mm) in *developed length* shall be increased by one nominal pipe size for the entire *developed length* of the vent pipe.

P3113.2 Developed length. The *developed length* of individual, branch and circuit vents shall be measured from the farthest point of vent connection to the drainage system, to the point of connection to the vent stack, stack vent or termination outside of the building.

INTERNATIONAL CODE COUNCIL®
Copyright © 2019 ICC & NYSDOS. ALL RIGHTS RESERVED. Accessed by Lauren Gualdino (lgualdino@briarcliffmanor.org), (-) Order Number #100880972 on May 08, 2020 07:05 AM (PDT) pursuant to License Agreement with ICC & NYSDOS. No further reproduction, no

100880972

P3113.3 Branch vents. Where branch vents are connected to a common branch vent, the common branch vent shall be sized in accordance with this section, based on the size of the common horizontal drainage branch that is or would be required to serve the total drainage fixture unit (d.f.u.) load being vented.

P3113.4 Sump vents. Sump vent sizes shall be determined in accordance with Sections P3113.4.1 and P3113.4.2.

P3113.4.1 Sewage pumps and sewage ejectors other than pneumatic. Drainage piping below sewer level shall be vented in the same manner as that of a gravity system. Building sump vent sizes for sumps with sewage pumps or sewage ejectors, other than pneumatic, shall be determined in accordance with Table P3113.4.1.

P3113.4.2 Pneumatic sewage ejectors. The air pressure relief pipe from a pneumatic sewage ejector shall be connected to an independent vent stack terminating as required for vent extensions through the roof. The relief pipe shall be sized to relieve air pressure inside the ejector to atmospheric pressure, but shall be not less than $1^1/_4$ inches (32 mm) in size.

SECTION P3114
AIR ADMITTANCE VALVES

P3114.1 General. Vent systems using *air admittance valves* shall comply with this section. Individual and branch-type air admittance valves shall conform to ASSE 1051. Stack-type air admittance valves shall conform to ASSE 1050.

P3114.2 Installation. The valves shall be installed in accordance with the requirements of this section and the manufacturer's instructions. *Air admittance valves* shall be installed after the DWV testing required by Section P2503.5.1 or P2503.5.2 has been performed.

P3114.3 Where permitted. Individual vents, branch vents, circuit vents and stack vents shall be permitted to terminate with a connection to an *air admittance valve*. Individual and branch-type air admittance valves shall vent only fixtures that are on the same floor level and connect to a horizontal branch drain.

P3114.4 Location. Individual and branch *air admittance valves* shall be located not less than 4 inches (102 mm) above the horizontal branch drain or *fixture drain* being vented. Stack-type air admittance valves shall be located not less than 6 inches (152 mm) above the flood level rim of the highest fixture being vented. The *air admittance valve* shall be located within the maximum *developed length* permitted for the vent. The *air admittance valve* shall be installed not less than 6 inches (152 mm) above insulation materials where installed in *attics*.

P3114.5 Access and ventilation. Access shall be provided to *air admittance valves*. Such valves shall be installed in a location that allows air to enter the valve.

P3114.6 Size. The *air admittance valve* shall be rated for the size of the vent to which the valve is connected.

P3114.7 Vent required. Within each plumbing system, not less than one stack vent or a vent stack shall extend outdoors to the open air.

P3114.8 Prohibited installations. *Air admittance valves* shall not be used to vent sumps or tanks except where the vent system for the sump or tank has been designed by an engineer. *Air admittance valves* shall not be installed on outdoor vent terminals for the sole purpose of reducing clearances to gravity or mechanical air intakes.

TABLE P3113.4.1
SIZE AND LENGTH OF SUMP VENTS

DISCHARGE CAPACITY OF PUMP (gpm)	MAXIMUM DEVELOPED LENGTH OF VENT (feet)[a]				
	Diameter of vent (inches)				
	$1^1/_4$	$1^1/_2$	2	$2^1/_2$	3
10	No limit[b]	No limit	No limit	No limit	No limit
20	270	No limit	No limit	No limit	No limit
40	72	160	No limit	No limit	No limit
60	31	75	270	No limit	No limit

For SI: 1 inch = 25.4 mm, 1 foot = 304.8 mm, 1 gallon per minute (gpm) = 3.785 L/m.

a. Developed length plus an appropriate allowance for entrance losses and friction caused by fittings, changes in direction and diameter. Suggested allowances shall be obtained from NBS Monograph 31 or other approved sources. An allowance of 50 percent of the developed length shall be assumed if a more precise value is not available.

b. Actual values greater than 500 feet.

INTERNATIONAL CODE COUNCIL®
Copyright © 2019 ICC & NYSDOS. ALL RIGHTS RESERVED. Accessed by Lauren Gualdino (lgualdino@briarcliffmanor.org), (-) Order Number #100880972 on May 08, 2020 07:05 AM (PDT) pursuant to License Agreement with ICC & NYSDOS. No further reproduction, no

100880972

INTERNATIONAL CODE COUNCIL®
Copyright © 2019 ICC & NYSDOS. ALL RIGHTS RESERVED. Accessed by Lauren Gualdino (lgualdino@briarcliffmanor.org), (-) Order Number #100880972 on May 08, 2020 07:05 AM (PDT) pursuant to License Agreement with ICC & NYSDOS. No further reproduction, no

100880972

CHAPTER 32

TRAPS

SECTION P3201
FIXTURE TRAPS

P3201.1 Design of traps. Traps shall be of standard design, shall have smooth uniform internal waterways, shall be self-cleaning and shall not have interior partitions except where integral with the fixture. Traps shall be constructed of lead, cast iron, copper or copper alloy or *approved* plastic. Copper or copper-alloy traps shall be not less than No. 20 gage (0.8 mm) thickness. Solid connections, slip joints and couplings shall be permitted to be used on the trap inlet, trap outlet, or within the trap seal. Traps having slip-joint connections shall comply with Section P2704.1.

P3201.2 Trap seals. Each fixture trap shall have a liquid seal of not less than 2 inches (51 mm) and not more than 4 inches (102 mm).

P3201.2.1 Trap seal protection. Traps seals of emergency floor drain traps and traps subject to evaporation shall be protected by one of the methods in Sections P3201.2.1.1 through P3201.2.1.4.

P3201.2.1.1 Potable water-supplied trap seal primer valve. A potable water-supplied trap seal primer valve shall supply water to the trap. Water-supplied trap seal primer valves shall conform to ASSE 1018. The discharge pipe from the trap seal primer valve shall connect to the trap above the trap seal on the inlet side of the trap.

P3201.2.1.2 Reclaimed or graywater-supplied trap seal primer valve. A reclaimed or graywater-supplied trap seal primer valve shall supply water to the trap. Water-supplied trap seal primer valves shall conform to ASSE 1018. The quality of reclaimed or graywater supplied to trap seal primer valves shall be in accordance with the requirements of the manufacturer of the trap seal primer valve. The discharge pipe from the trap seal primer valve shall connect to the trap above the trap seal on the inlet side of the trap.

P3201.2.1.3 Wastewater-supplied trap primer device. A wastewater-supplied trap primer device shall supply water to the trap. Wastewater-supplied trap primer devices shall conform to ASSE 1044. The discharge pipe from the trap seal primer device shall connect to the trap above the trap seal on the inlet side of the trap.

P3201.2.1.4 Barrier-type trap seal protection device. A barrier-type trap seal protection device shall protect the floor drain trap seal from evaporation. Barrier-type floor drain trap seal protection devices shall conform to ASSE 1072. The devices shall be installed in accordance with the manufacturer's instructions.

P3201.3 Trap setting and protection. Traps shall be set level with respect to their water seals and shall be protected from freezing. Trap seals shall be protected from siphonage, aspiration or back pressure by an *approved* system of venting (see Section P3101).

P3201.4 Building traps. Building traps shall be prohibited.

P3201.5 Prohibited trap designs. The following types of traps are prohibited:

1. Bell traps.
2. Separate fixture traps with interior partitions, except those lavatory traps made of plastic, stainless steel or other corrosion-resistant material.
3. "S" traps.
4. Drum traps.
5. Trap designs with moving parts.

P3201.6 Number of fixtures per trap. Each plumbing fixture shall be separately trapped by a water seal trap. The vertical distance from the fixture outlet to the trap weir shall not exceed 24 inches (610 mm) and the horizontal distance shall not exceed 30 inches (762 mm) measured from the centerline of the fixture outlet to the centerline of the inlet of the trap. The height of a clothes washer standpipe above a trap shall conform to Section P2706.1.2. Fixtures shall not be double trapped.

Exceptions:

1. Fixtures that have integral traps.
2. A single trap shall be permitted to serve two or three like fixtures limited to kitchen sinks, laundry tubs and lavatories. Such fixtures shall be adjacent to each other and located in the same room with a continuous waste arrangement. The trap shall be installed at the center fixture where three fixtures are installed. Common trapped fixture outlets shall be not more than 30 inches (762 mm) apart.
3. Connection of a laundry tray waste line into a standpipe for the automatic clothes-washer drain shall be permitted in accordance with Section P2706.1.2.1.

P3201.7 Size of fixture traps. Trap sizes for plumbing fixtures shall be as indicated in Table P3201.7. Where the tailpiece of a plumbing fixture is larger than that indicated in Table P3201.7, the trap size shall be the same nominal size as the fixture tailpiece. A trap shall not be larger than the drainage pipe into which the trap discharges.

INTERNATIONAL CODE COUNCIL®
Copyright © 2019 ICC & NYSDOS. ALL RIGHTS RESERVED. Accessed by Lauren Gualdino (lgualdino@briarcliffmanor.org), (-) Order Number #100880972 on May 08, 2020 07:05 AM (PDT) pursuant to License Agreement with ICC & NYSDOS. No further reproduction, no

100880972

TABLE P3201.7
SIZE OF TRAPS FOR PLUMBING FIXTURES

PLUMBING FIXTURE	TRAP SIZE MINIMUM (inches)
Bathtub (with or without shower head and/or whirlpool attachments)	$1^1/_2$
Bidet	$1^1/_4$
Clothes washer standpipe	2
Dishwasher (on separate trap)	$1^1/_2$
Floor drain	2
Kitchen sink (one or two traps, with or without dishwasher and food waste disposer)	$1^1/_2$
Laundry tub (one or more compartments)	$1^1/_2$
Lavatory	$1^1/_4$
Shower (based on the total flow rate through showerheads and bodysprays) Flow rate: 5.7 gpm and less More than 5.7 gpm up to 12.3 gpm More than 12.3 gpm up to 25.8 gpm More than 25.8 gpm up to 55.6 gpm	 $1^1/_2$ 2 3 4

For SI: 1 inch = 25.4 mm, 1 gallon per minute = 3.785 L/m.

INTERNATIONAL CODE COUNCIL®
Copyright © 2019 ICC & NYSDOS. ALL RIGHTS RESERVED. Accessed by Lauren Gualdino (lgualdino@briarcliffmanor.org), (-) Order Number #100880972 on May 08, 2020 07:05 AM (PDT) pursuant to License Agreement with ICC & NYSDOS. No further reproduction, no

100880972

CHAPTER 33

STORM DRAINAGE

SECTION P3301
GENERAL

P3301.1 Scope. The provisions of this chapter shall govern the materials, design, construction and installation of storm drainage.

SECTION P3302
SUBSOIL DRAINS

P3302.1 Subsoil drains. Subsoil drains shall be open-jointed, horizontally split or perforated pipe conforming to one of the standards indicated in Table P3302.1. Such drains shall be not less than 4 inches (102 mm) in diameter. Where the building is subject to backwater, the subsoil drain shall be protected by an accessibly located backwater valve. Subsoil drains shall discharge to a trapped area drain, sump, dry well or *approved* location above ground. The subsoil sump shall not be required to have either a gas-tight cover or a vent. The sump and pumping system shall comply with Section P3303.

SECTION P3303
SUMPS AND PUMPING SYSTEMS

P3303.1 Pumping system. The sump pump, sump and discharge piping shall conform to Sections P3303.1.1 through P3303.1.4.

P3303.1.1 Pump capacity and head. The sump pump shall be of a capacity and head appropriate to anticipated use requirements.

P3303.1.2 Sump pit. The sump shall be not less than 18 inches (457 mm) in diameter and 24 inches (610 mm) deep, unless otherwise *approved*. The sump shall be *accessible* and located so that all drainage flows into the sump by gravity. The sump shall be constructed of tile, steel, plastic, cast iron, concrete or other *approved* material, with a removable cover adequate to support anticipated loads in the area of use. The sump floor shall be solid and provide permanent support for the pump.

P3303.1.3 Electrical. Electrical outlets shall meet the requirements of Chapters 34 through 43.

P3303.1.4 Piping. Discharge piping shall meet the requirements of Sections P3002.1, P3002.2, P3002.3 and P3003. Discharge piping shall include an *accessible* full flow check valve. Pipe and fittings shall be the same size as, or larger than, the pump discharge tapping.

TABLE P3302.1
SUBSOIL DRAIN PIPE

MATERIAL	STANDARD
Cast-iron pipe	ASTM A74; ASTM A888; CISPI 301
Polyethylene (PE) plastic pipe	ASTM F405; CSA B182.1; CSA B182.6; CSA B182.8
Polyvinyl chloride (PVC) plastic pipe (type sewer pipe, SDR 35, PS25, PS50 or PS100)	ASTM D2729; ASTM D3034; ASTM F891; CSA B182.2; CSA B182.4
Stainless steel drainage systems, Type 316L	ASME A112.3.1
Vitrified clay pipe	ASTM C4; ASTM C700

INTERNATIONAL CODE COUNCIL®
Copyright © 2019 ICC & NYSDOS. ALL RIGHTS RESERVED. Accessed by Lauren Gualdino (lgualdino@briarcliffmanor.org), (-) Order Number #100880972 on May 08, 2020 07:05 AM (PDT) pursuant to License Agreement with ICC & NYSDOS. No further reproduction, no

100880972

INTERNATIONAL CODE COUNCIL®
Copyright © 2019 ICC & NYSDOS. ALL RIGHTS RESERVED. Accessed by Lauren Gualdino (lgualdino@briarcliffmanor.org), (-) Order Number #100880972 on May 08, 2020 07:05 AM (PDT) pursuant to License Agreement with ICC & NYSDOS. No further reproduction, no

100880972

Part VIII—Electrical

CHAPTER 34

GENERAL REQUIREMENTS

This Electrical Part (Chapters 34 through 43) is produced and copyrighted by the National Fire Protection Association (NFPA) and is based on the 2017 *National Electrical Code*® (NEC®) (NFPA 70®-2017), copyright 2016, National Fire Protection Association, all rights reserved. Use of the Electrical Part is pursuant to license with the NFPA.

The title *National Electrical Code*®, the acronym NEC® and the document number NFPA 70® are registered trademarks of the National Fire Protection Association, Quincy, MA. The section numbers appearing in parentheses or brackets after IRC text are the section numbers of the corresponding text in the *National Electrical Code* (NFPA 70).

IMPORTANT NOTICE AND DISCLAIMER CONCERNING THE NEC AND THIS ELECTRICAL PART.

This Electrical Part is a compilation of provisions extracted from the 2017 edition of the *NEC*. The *NEC*, like all NFPA codes and standards, is developed through a consensus standards development process approved by the American National Standards Institute. This process brings together volunteers representing varied viewpoints and interests to achieve consensus on fire and other safety issues. While the NFPA administers the process and establishes rules to promote fairness in the development of consensus, it does not independently test, evaluate or verify the accuracy of any information or the soundness of any judgments contained in its codes and standards.

The NFPA disclaims liability for any personal injury, property or other damages of any nature whatsoever, whether special, indirect, consequential or compensatory, directly or indirectly resulting from the publication, use of, or reliance on the *NEC* or this Electrical Part. The NFPA also makes no guaranty or warranty as to the accuracy or completeness of any information published in these documents.

In issuing and making the *NEC* and this Electrical Part available, the NFPA is not undertaking to render professional or other services for or on behalf of any person or entity. Nor is the NFPA undertaking to perform any duty owed by any person or entity to someone else. Anyone using these documents should rely on his or her own independent judgment or, as appropriate, seek the advice of a competent professional in determining the exercise of reasonable care in any given circumstances.

The NFPA has no power, nor does it undertake, to police or enforce compliance with the contents of the *NEC* and this Electrical Part. Nor does the NFPA list, certify, test, or inspect products, designs, or installations for compliance with these documents. Any certification or other statement of compliance with the requirements of these documents shall not be attributable to the NFPA and is solely the responsibility of the certifier or maker of the statement.

For additional notices and disclaimers concerning NFPA codes and standards see http://www.nfpa.org/disclaimers.

SECTION E3401
GENERAL

E3401.1 Applicability. The provisions of Chapters 34 through 43 shall establish the general scope of the electrical system and equipment requirements of this code. Chapters 34 through 43 cover those wiring methods and materials most commonly encountered in the construction of one- and two-family dwellings and structures regulated by this code. Other wiring methods, materials and subject matter covered in NFPA 70 are also allowed by this code.

E3401.2 Scope. Chapters 34 through 43 shall cover the installation of electrical systems, equipment and components indoors and outdoors that are within the scope of this code, including services, power distribution systems, fixtures, appliances, devices and appurtenances. Services within the scope of this code shall be limited to 120/240-volt, 0- to 400-ampere, single-phase systems. These chapters specifically cover the equipment, fixtures, appliances, wiring methods and materials that are most commonly used in the construction or alteration of one- and two-family dwellings and accessory structures regulated by this code. The omission from these chapters of any material or method of construction provided for in the referenced standard NFPA 70 shall not be construed as prohibiting the use of such material or method of construction. Electrical systems, equipment or components not specifically covered in these chapters shall comply with the applicable provisions of NFPA 70.

[NY] E3401.2.1 Owner-occupied one-family dwellings. Owner-occupied one-family dwellings and accessory structures shall not be required to be provided with electrical power, wiring, devices and equipment, subject to the approval of the *building official*. If an on-site electrical power system is installed or used, all electrical wiring, devices and equipment in such system shall comply with Part VIII—Electrical of this code.

INTERNATIONAL CODE COUNCIL®
Copyright © 2019 ICC & NYSDOS. ALL RIGHTS RESERVED. Accessed by Lauren Gualdino (lgualdino@briarcliffmanor.org), (-) Order Number #100880972 on May 08, 2020 07:05 AM (PDT) pursuant to License Agreement with ICC & NYSDOS. No further reproduction, no

100880972

E3401.3 Not covered. Chapters 34 through 43 do not cover the following:

1. Installations, including associated lighting, under the exclusive control of communications utilities and electric utilities.
2. Services over 400 amperes.

E3401.4 Additions and alterations. Any addition or alteration to an existing electrical system shall be made in conformity to the provisions of Chapters 34 through 43. Where additions subject portions of existing systems to loads exceeding those permitted herein, such portions shall be made to comply with Chapters 34 through 43.

SECTION E3402
BUILDING STRUCTURE PROTECTION

E3402.1 Drilling and notching. Wood-framed structural members shall not be drilled, notched or altered in any manner except as provided for in this code.

E3402.2 Penetrations of fire-resistance-rated assemblies. Electrical installations in hollow spaces, vertical shafts and ventilation or air-handling ducts shall be made so that the possible spread of fire or products of combustion will not be substantially increased. Electrical penetrations into or through fire-resistance-rated walls, partitions, floors or ceilings shall be protected by approved methods to maintain the fire-resistance rating of the element penetrated. Penetrations of fire-resistance-rated walls shall be limited as specified in Section R302.4. (300.21)

E3402.3 Penetrations of firestops and draftstops. Penetrations through fire blocking and draftstopping shall be protected in an approved manner to maintain the integrity of the element penetrated.

SECTION E3403
INSPECTION AND APPROVAL

E3403.1 Approval. Electrical materials, components and equipment shall be approved. (110.2)

E3403.2 Inspection required. New electrical work and parts of existing systems affected by new work or alterations shall be inspected by the building official to ensure compliance with the requirements of Chapters 34 through 43.

E3403.3 Listing and labeling. Electrical materials, components, devices, fixtures and equipment shall be listed for the application, shall bear the label of an approved agency and shall be installed, and used, or both, in accordance with any instructions included in the listing and labeling. [110.3(B)]

SECTION E3404
GENERAL EQUIPMENT REQUIREMENTS

E3404.1 Voltages. Throughout Chapters 34 through 43, the voltage considered shall be that at which the circuit operates. The voltage rating of electrical equipment shall be not less than the nominal voltage of the circuit to which it is connected. (110.4)

E3404.2 Interrupting rating. Equipment intended to interrupt current at fault levels shall have a minimum interrupting rating of 10,000 amperes at the nominal circuit voltage. Equipment intended to interrupt current at levels other than fault levels shall have an interrupting rating at nominal circuit voltage of not less than the current that must be interrupted. (110.9)

E3404.3 Circuit characteristics. The overcurrent protective devices, total impedance, equipment short-circuit current ratings and other characteristics of the circuit to be protected shall be so selected and coordinated as to permit the circuit protective devices that are used to clear a fault to do so without extensive damage to the electrical equipment of the circuit. This fault shall be assumed to be either between two or more of the circuit conductors or between any circuit conductor and the equipment grounding conductors permitted in Section E3908.8. Listed equipment applied in accordance with its listing shall be considered to meet the requirements of this section. (110.10)

E3404.4 Enclosure types. Enclosures, other than surrounding fences or walls, of panelboards, meter sockets, enclosed switches, transfer switches, circuit breakers, pullout switches and motor controllers, rated not over 600 volts nominal and intended for such locations, shall be marked with an enclosure-type number as shown in Table E3404.4.

Table E3404.4 shall be used for selecting these enclosures for use in specific locations other than hazardous (classified) locations. The enclosures are not intended to protect against conditions such as condensation, icing, corrosion, or contamination that might occur within the enclosure or enter through the conduit or unsealed openings. (110.28)

E3404.5 Protection of equipment. Equipment not identified for outdoor use and equipment identified only for indoor use, such as "dry locations," "indoor use only" "damp locations," or enclosure Type 1, 2, 5, 12, 12K and 13, shall be protected against damage from the weather during construction. (110.11)

E3404.6 Unused openings. Unused openings, other than those intended for the operation of equipment, those intended for mounting purposes, and those permitted as part of the design for listed equipment, shall be closed to afford protection substantially equivalent to the wall of the equipment. Where metallic plugs or plates are used with nonmetallic enclosures they shall be recessed at least $^1/_4$ inch (6.4 mm) from the outer surface of the enclosure. [110.12(A)]

E3404.7 Integrity of electrical equipment. Internal parts of electrical equipment, including busbars, wiring terminals, insulators and other surfaces, shall not be damaged or contaminated by foreign materials such as paint, plaster, cleaners or abrasives, and corrosive residues. There shall not be any damaged parts that might adversely affect safe operation or mechanical strength of the equipment such as parts that are broken; bent; cut; deteriorated by corrosion, chemical action, or overheating. Foreign debris shall be removed from equipment. [110.12(B)]

E3404.8 Mounting. Electrical equipment shall be firmly secured to the surface on which it is mounted. Wooden plugs

INTERNATIONAL CODE COUNCIL®
Copyright © 2019 ICC & NYSDOS. ALL RIGHTS RESERVED. Accessed by Lauren Gualdino (lgualdino@briarcliffmanor.org), (-) Order Number #100880972 on May 08, 2020 07:05 AM (PDT) pursuant to License Agreement with ICC & NYSDOS. No further reproduction, no

100880972

driven into masonry, concrete, plaster, or similar materials shall not be used. [110.13(A)]

E3404.9 Energized parts guarded against accidental contact. Approved enclosures shall guard energized parts that are operating at 50 volts or more against accidental contact. [110.27(A)]

E3404.10 Prevent physical damage. In locations where electrical equipment is likely to be exposed to physical damage, enclosures or guards shall be so arranged and of such strength as to prevent such damage. [110.27(B)]

E3404.11 Equipment identification.

1. The manufacturer's name, trademark or other descriptive marking by which the organization responsible for the product can be identified shall be placed on all electric equipment. Other markings shall be provided that indicate voltage, current, wattage or other ratings as specified elsewhere in Chapters 34 through 43. The marking shall have the durability to withstand the environment involved. [110.21(A)(1)]
2. Reconditioned equipment shall be marked with the names, or trademark, or other descriptive marking by which the organization responsible for reconditioning the electrical equipment can be identified, along with the date of the reconditioning. [110.21(A)(2)]

E3404.12 Field-applied hazard markings. Where caution, warning, or danger signs or labels are required by this code, the labels shall meet the following requirements:

1. The marking shall warn of the hazard using effective words, colors, symbols or any combination thereof.
2. Labels shall be permanently affixed to the equipment or wiring method.

TABLE E3404.4 (Table 110.28)
ENCLOSURE SELECTION

PROVIDES A DEGREE OF PROTECTION AGAINST THE FOLLOWING ENVIRONMENTAL CONDITIONS	FOR OUTDOOR USE									
	Enclosure-type number									
	3	3R	3S	3X	3RX	3SX	4	4X	6	6P
Incidental contact with the enclosed equipment	X	X	X	X	X	X	X	X	X	X
Rain, snow and sleet	X	X	X	X	X	X	X	X	X	X
Sleet[a]	—	—	X	—	—	X	—	—	—	—
Windblown dust	X	—	X	X	—	X	X	X	X	X
Hosedown	—	—	—	—	—	—	X	X	X	X
Corrosive agents	—	—	—	X	X	X	—	X	—	X
Temporary submersion	—	—	—	—	—	—	—	—	X	X
Prolonged submersion	—	—	—	—	—	—	—	—	—	X
PROVIDES A DEGREE OF PROTECTION AGAINST THE FOLLOWING ENVIRONMENTAL CONDITIONS	**FOR INDOOR USE**									
	Enclosure-type number									
	1	**2**	**4**	**4X**	**5**	**6**	**6P**	**12**	**12K**	**13**
Incidental contact with the enclosed equipment	X	X	X	X	X	X	X	X	X	X
Falling dirt	X	X	X	X	X	X	X	X	X	X
Falling liquids and light splashing	—	X	X	X	X	X	X	X	X	X
Circulating dust, lint, fibers and flyings	—	—	X	X	—	X	X	X	X	X
Settling airborne dust, lint, fibers and flyings	—	—	X	X	X	X	X	X	X	X
Hosedown and splashing water	—	—	X	X	—	X	X	—	—	—
Oil and coolant seepage	—	—	—	—	—	—	—	X	X	X
Oil or coolant spraying and splashing	—	—	—	—	—	—	—	—	—	X
Corrosive agents	—	—	—	X	—	—	X	—	—	—
Temporary submersion	—	—	—	—	—	X	X	—	—	—
Prolonged submersion	—	—	—	—	—	—	X	—	—	—

a. Mechanism shall be operable when ice covered.

Note 1: The term raintight is typically used in conjunction with Enclosure Types 3, 3S, 3SX, 3X, 4, 4X, 6 and 6P. The term rainproof is typically used in conjunction with Enclosure Types 3R and 3RX. The term watertight is typically used in conjunction with Enclosure Types 4, 4X, 6 and 6P. The term driptight is typically used in conjunction with Enclosure Types 2, 5, 12, 12K and 13. The term dusttight is typically used in conjunction with Enclosure Types 3, 3S, 3SX, 3X, 5, 12, 12K and 13.

Note 2: Ingress protection (IP) ratings are found in ANSI/NEMA 60529, *Degrees of Protection Provided by Enclosures*. IP ratings are not a substitute for enclosure-type ratings.

INTERNATIONAL CODE COUNCIL®
Copyright © 2019 ICC & NYSDOS. ALL RIGHTS RESERVED. Accessed by Lauren Gualdino (lgualdino@briarcliffmanor.org), (-) Order Number #100880972 on May 08, 2020 07:05 AM (PDT) pursuant to License Agreement with ICC & NYSDOS. No further reproduction, no

100880972

3. Labels shall not be hand written except for portions of labels or markings that are variable, or that could be subject to changes. Labels shall be legible.
4. Labels shall be of sufficient durability to withstand the environment involved. [110.21(B)]

E3404.13 Identification of disconnecting means. Each disconnecting means shall be legibly marked to indicate its purpose, except where located and arranged so that the purpose is evident. The marking shall have the durability to withstand the environment involved. [110.22(A)]

SECTION E3405
EQUIPMENT LOCATION AND CLEARANCES

E3405.1 Working space and clearances. Access and working space shall be provided and maintained around all electrical equipment to permit ready and safe operation and maintenance of such equipment in accordance with this section and Figure E3405.1. (110.26)

E3405.2 Working clearances for energized equipment and panelboards. Except as otherwise specified in Chapters 34 through 43, the dimension of the working space in the direction of access to panelboards and live parts of other equipment likely to require examination, adjustment, servicing or maintenance while energized shall be not less than 36 inches (914 mm) in depth. Distances shall be measured from the energized parts where such parts are exposed or from the enclosure front or opening where such parts are enclosed. In addition to the 36-inch dimension (914 mm), the work space shall not be less than 30 inches (762 mm) wide in front of the electrical equipment and not less than the width of such equipment. The work space shall be clear and shall extend from the floor or platform to a height of 6.5 feet (1981 mm) or the height of the equipment, whichever is greater. In all cases, the work space shall allow at least a 90-degree (1.57 rad) opening of equipment doors or hinged panels. Equipment associated with the electrical installation located above or below the electrical equipment shall be permitted to extend not more than 6 inches (152 mm) beyond the front of the electrical equipment.

Where such equipment is required by installation instruction or function to be located in a space with limited access, all of the following shall apply:

1. Where the equipment is installed above a lay-in ceiling, there shall be an opening not smaller than 22 inches by 22 inches (559 mm by 559 mm), or in a crawl space, there shall be an accessible opening not smaller than 22 inches by 30 inches (559 mm by 762 mm).
2. The width of the working space shall be the width of the equipment enclosure or not less than 30 inches (762 mm), whichever is greater.
3. Enclosure doors and hinged panels shall be capable of opening not less than 90 degrees.
4. The space in front of the enclosure shall comply with the depth requirements of Table 110.26(A)(1) of NFPA 70. The maximum height of the working space shall be the height necessary to install the equipment in the limited space. A horizontal ceiling structural member or access panel shall be permitted in this space. [110.26(A) (1), (2), (3), (4)]

Exceptions:

1. In existing dwelling units, service equipment and panelboards that are not rated in excess of 200 amperes shall be permitted in spaces where the height of the working space is less than 6.5 feet (1981 mm). [110.26(A)(3) Exception No. 1]
2. Meters that are installed in meter sockets shall be permitted to extend beyond the other equipment. Meter sockets shall not be exempt from the requirements of this section. [110.26(A)(3) Exception No. 2]

E3405.3 Indoor dedicated panelboard space. The indoor space equal to the width and depth of the panelboard and extending from the floor to a height of 6 feet (1829 mm) above the panelboard, or to the structural ceiling, whichever is lower, shall be dedicated to the electrical installation. Piping, ducts, leak protection apparatus and other equipment foreign to the electrical installation shall not be installed in such dedicated space. The area above the dedicated space shall be permitted to contain foreign systems, provided that protection is installed to avoid damage to the electrical equipment from condensation, leaks and breaks in such foreign systems (see Figure E3405.1).

Exception: Suspended ceilings with removable panels shall be permitted within the 6-foot (1829 mm) dedicated space.

E3405.4 Outdoor dedicated panelboard space. The outdoor space equal to the width and depth of the panelboard, and extending from grade to a height of 6 feet (1829 mm) above the panelboard, shall be dedicated to the electrical installation. Piping and other equipment foreign to the electrical installation shall not be located in this zone.

E3405.5 Location of working spaces and equipment. Required working space shall not be designated for storage. Panelboards and overcurrent protection devices shall not be located in clothes closets, in bathrooms, or over the steps of a stairway. [110.26(B), 240.24(D), (E), (F)]

E3405.6 Access and entrance to working space. Access shall be provided to the required working space. [110.26(C)(1)]

E3405.7 Illumination. Artificial illumination shall be provided for all working spaces for service equipment and panelboards installed indoors and shall not be controlled by automatic means only. Additional lighting outlets shall not be required where the work space is illuminated by an adjacent light source or as permitted by Exception 1 of Section E3903.2 for switched receptacles. [110.26(D)]

SECTION E3406
ELECTRICAL CONDUCTORS AND CONNECTIONS

E3406.1 General. This section provides general requirements for conductors, connections and splices. These requirements do not apply to conductors that form an integral part of equipment, such as motors, appliances and similar equipment, or to conductors specifically provided for elsewhere in Chapters 34 through 43. (310.1)

INTERNATIONAL CODE COUNCIL®
Copyright © 2019 ICC & NYSDOS. ALL RIGHTS RESERVED. Accessed by Lauren Gualdino (lgualdino@briarcliffmanor.org), (-) Order Number #100880972 on May 08, 2020 07:05 AM (PDT) pursuant to License Agreement with ICC & NYSDOS. No further reproduction, no

100880972

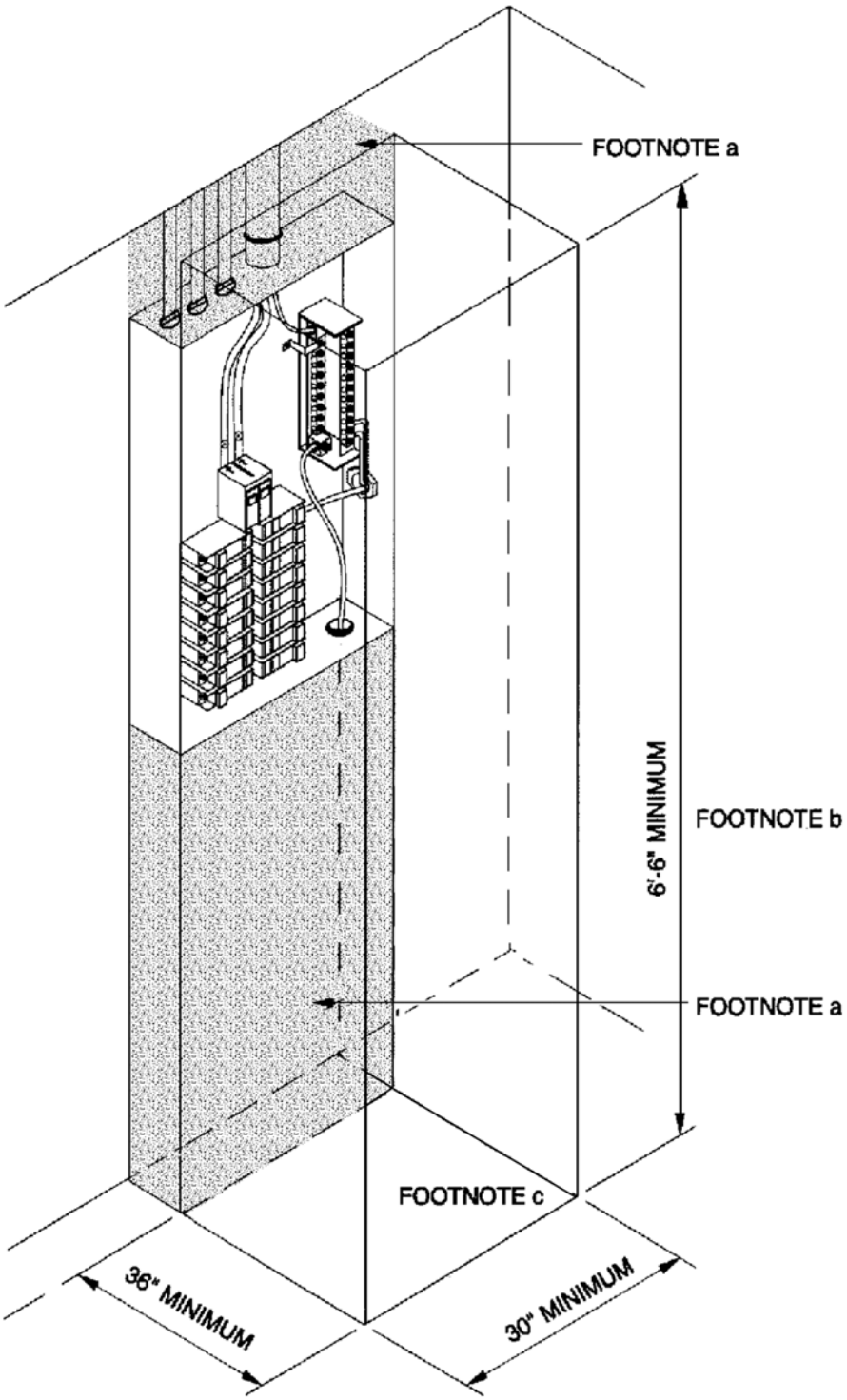

For SI: 1 inch = 25.4 mm, 1 foot = 304.8 mm.

a. Equipment, piping and ducts foreign to the electrical installation shall not be placed in the shaded areas extending from the floor to a height of 6 feet above the panelboard enclosure, or to the structural ceiling, whichever is lower.

b. The working space shall be clear and unobstructed from the floor to a height of 6.5 feet or the height of the equipment, whichever is greater.

c. The working space shall not be designated for storage.

d. Panelboards, service equipment and similar enclosures shall not be located in bathrooms, toilet rooms, clothes closets or over the steps of a stairway.

e. Such work spaces shall be provided with artificial lighting where located indoors and shall not be controlled by automatic means only.

FIGURE E3405.1[a, b, c, d, e]
WORKING SPACE AND CLEARANCES

INTERNATIONAL CODE COUNCIL®
Copyright © 2019 ICC & NYSDOS. ALL RIGHTS RESERVED. Accessed by Lauren Gualdino (lgualdino@briarcliffmanor.org), (-) Order Number #100880972 on May 08, 2020 07:05 AM (PDT) pursuant to License Agreement with ICC & NYSDOS. No further reproduction, no

100880972

E3406.2 Conductor material. Conductors used to conduct current shall be of copper or aluminum except as otherwise provided in Chapters 34 through 43. Where the conductor material is not specified, the material and the sizes given in these chapters shall apply to copper conductors. Where other materials are used, the conductor sizes shall be changed accordingly. (110.5)

E3406.3 Minimum size of conductors. The minimum size of conductors for feeders and branch circuits shall be 14 AWG copper and 12 AWG aluminum. The minimum size of service conductors shall be as specified in Chapter 36. The minimum size of Class 2 remote control, signaling and power-limited circuits conductors shall be as specified in Chapter 43. [310.106(A)]

E3406.4 Stranded conductors. Where installed in raceways, conductors 8 AWG and larger shall be stranded. A solid 8 AWG conductor shall be permitted to be installed in a raceway only to meet the requirements of Sections E3610.2 and E4204. [310.106(C)]

E3406.5 Individual conductor insulation. Except where otherwise permitted in Sections E3605.1 and E3908.9, and E4303, current-carrying conductors shall be insulated. Insulated conductors shall have insulation types identified as RHH, RHW, RHW-2, THHN, THHW, THW, THW-2, THWN, THWN-2, TW, UF, USE, USE-2, XHHW or XHHW-2. Insulation types shall be approved for the application. [310.10(B), (C), 310.104]

E3406.6 Conductors in parallel. Circuit conductors that are connected in parallel shall be limited to sizes 1/0 AWG and larger. Conductors in parallel shall: be of the same length; consist of the same conductor material; be the same circular mil area and have the same insulation type. Conductors in parallel shall be terminated in the same manner. Where run in separate raceways or cables, the raceway or cables shall have the same physical characteristics. Where conductors are in separate raceways or cables, the same number of conductors shall be used in each raceway or cable. [310.10(H)]

E3406.7 Conductors of the same circuit. All conductors of the same circuit and, where used, the grounded conductor and all equipment grounding conductors and bonding conductors shall be contained within the same raceway, cable or cord. [300.3(B)]

E3406.8 Aluminum and copper connections. Terminals and splicing connectors shall be identified for the material of the conductors joined. Conductors of dissimilar metals shall not be joined in a terminal or splicing connector where physical contact occurs between dissimilar conductors such as copper and aluminum, copper and copper-clad aluminum, or aluminum and copper-clad aluminum, except where the device is listed for the purpose and conditions of application. Materials such as inhibitors and compounds shall be suitable for the application and shall be of a type that will not adversely affect the conductors, installation or equipment. (110.14)

E3406.9 Fine stranded conductors. Connectors and terminals for conductors that are more finely stranded than Class B and Class C stranding as shown in Table E3406.9, shall be identified for the specific conductor class or classes. (110.14)

E3406.10 Terminals. Connection of conductors to terminal parts shall be made without damaging the conductors and shall be made by means of pressure connectors, including setscrew type, by means of splices to flexible leads, or for conductor sizes of 10 AWG and smaller, by means of wire binding screws or studs and nuts having upturned lugs or the equivalent. Terminals for more than one conductor and terminals for connecting aluminum conductors shall be identified for the application. [110.14(A)]

TABLE E3406.9 (Chapter 9, Table 10)
CONDUCTOR STRANDING[c]

CONDUCTOR SIZE		NUMBER OF STRANDS		
		Copper		Aluminum
AWG or kcmil	mm²	Class B	Class C	Class B
24-30	0.20-0.05	Note a	—	—
22	0.32	7	—	—
20	0.52	10	—	—
18	0.82	16	—	—
16	1.3	26	—	—
14-2	2.1-33.6	7	19	7[b]
1-4/0	42.4-107	19	37	19
250-500	127-253	37	61	37
600-1000	304-508	61	91	61
1250-1500	635-759	91	127	91
1750-2000	886-1016	127	271	127

a. Number of strands vary.

b. Aluminum 14 AWG (2.1 mm²) is not available.

c. With the permission of Underwriters Laboratories, Inc., this material is reproduced from UL Standard 486A-B, Wire Connectors, which is copyrighted by Underwriters Laboratories, Inc., Northbrook, Illinois. While use of this material has been authorized, UL shall not be responsible for the manner in which the information is presented, nor for any interpretations thereof.

INTERNATIONAL CODE COUNCIL®
Copyright © 2019 ICC & NYSDOS. ALL RIGHTS RESERVED. Accessed by Lauren Gualdino (lgualdino@briarcliffmanor.org), (-) Order Number #100880972 on May 08, 2020 07:05 AM (PDT) pursuant to License Agreement with ICC & NYSDOS. No further reproduction, no

100880972

E3406.11 Splices. Conductors shall be spliced or joined with splicing devices listed for the purpose. Splices and joints and the free ends of conductors shall be covered with an insulation equivalent to that of the conductors or with an insulating device listed for the purpose. Wire connectors or splicing means installed on conductors for direct burial shall be listed for such use. [110.14(B)]

E3406.11.1 Continuity. Conductors in raceways shall be continuous between outlets, boxes, and devices and shall be without splices or taps in the raceway.

Exception: Splices shall be permitted within surface-mounted raceways that have a removable cover. [300.13(A)]

E3406.11.2 Device connections. The continuity of a grounded conductor in multiwire branch circuits shall not be dependent on connection to devices such as receptacles and lampholders. The arrangement of grounding connections shall be such that the disconnection or the removal of a receptacle, luminaire or other device fed from the box does not interfere with or interrupt the grounding continuity. [300.13(B)]

E3406.11.3 Length of conductor for splice or termination. Where conductors are to be spliced, terminated or connected to fixtures or devices, a minimum length of 6 inches (152 mm) of free conductor shall be provided at each outlet, junction or switch point. The required length shall be measured from the point in the box where the conductor emerges from its raceway or cable sheath. Where the opening to an outlet, junction or switch point is less than 8 inches (200 mm) in any dimension, each conductor shall be long enough to extend at least 3 inches (75 mm) outside of such opening. (300.14)

E3406.12 Installation. Where a tightening torque is indicated as a numeric value on equipment or in installation instructions provided by the manufacturer, a calibrated torque tool shall be used to achieve the indicated torque value, except where the equipment manufacturer has provided installation instructions for an alternative method of achieving the required torque. [110.14 (D)]

E3406.13 Grounded conductor continuity. The continuity of a grounded conductor shall not depend on connection to a metallic enclosure, raceway or cable armor. [200.2(B)]

E3406.14 Connection of grounding and bonding equipment. The connection of equipment grounding conductors, grounding electrode conductors and bonding jumpers shall be in accordance with Sections E3406.14.1 and E3406.14.2.

E3406.14.1 Permitted methods. Equipment grounding conductors, grounding electrode conductors, and bonding jumpers shall be connected by one or more of the following means:

1. Listed pressure connectors.
2. Terminal bars.
3. Pressure connectors listed as grounding and bonding equipment.
4. Exothermic welding process.
5. Machine screw-type fasteners that engage not less than two threads or are secured with a nut.
6. Thread-forming machine screws that engage not less than two threads in the enclosure.
7. Connections that are part of a listed assembly.
8. Other listed means. [250.8 (A)]

E3406.14.2 Methods not permitted. Connection devices or fittings that depend solely on solder shall not be used. [250.8 (B)]

SECTION E3407
CONDUCTOR AND TERMINAL IDENTIFICATION

E3407.1 Grounded conductors. Insulated grounded conductors of sizes 6 AWG or smaller shall be identified by a continuous white or gray outer finish or by three continuous white or gray stripes on other than green insulation along the entire length of the conductors. Conductors of sizes 4 AWG or larger shall be identified either by a continuous white or gray outer finish or by three continuous white or gray stripes on other than green insulation along its entire length or at the time of installation by a distinctive white or gray marking at its terminations. This marking shall encircle the conductor or insulation. [200.6(A) & (B)]

E3407.2 Equipment grounding conductors. Equipment grounding conductors of sizes 6 AWG and smaller shall be identified by a continuous green color or a continuous green color with one or more yellow stripes on the insulation or covering, except where bare. Conductors with insulation or individual covering that is green, green with one or more yellow stripes, or otherwise identified as permitted by this section shall not be used for ungrounded or grounded circuit conductors. (250.119)

Equipment grounding conductors 4 AWG and larger AWG that are not identified as required for conductors of sizes 6 AWG and smaller shall, at the time of installation, be permanently identified as an equipment grounding conductor at each end and at every point where the conductor is accessible, except where such conductors are bare.

The required identification for conductors 4 AWG and larger shall encircle the conductor and shall be accomplished by one of the following:

1. Stripping the insulation or covering from the entire exposed length.
2. Coloring the exposed insulation or covering green at the termination.
3. Marking the exposed insulation or covering with green tape or green adhesive labels at the termination. [250.119(A)]

Exceptions:

1. Conductors 4 AWG and larger shall not be required to be identified in conduit bodies that do not contain splices or unused hubs. [250.119(A)(1) Exception]
2. Power-limited, Class 2 or Class 3 circuit cables containing only circuits operating at less than 50 volts shall be permitted to use a conductor with green insulation for other than equipment grounding purposes. [250.119 Exception No. 1]

INTERNATIONAL CODE COUNCIL®
Copyright © 2019 ICC & NYSDOS. ALL RIGHTS RESERVED. Accessed by Lauren Gualdino (lgualdino@briarcliffmanor.org), (-) Order Number #100880972 on May 08, 2020 07:05 AM (PDT) pursuant to License Agreement with ICC & NYSDOS. No further reproduction, no

100880972

E3407.3 Ungrounded conductors. Insulation on the ungrounded conductors shall be a continuous color other than white, gray and green. [310.110(C)]

Exception: An insulated conductor that is part of a cable or flexible cord assembly and that has a white or gray finish or a finish marking with three continuous white or gray stripes shall be permitted to be used as an ungrounded conductor where it is permanently reidentified to indicate its use as an ungrounded conductor by marking tape, painting, or other effective means at all terminations and at each location where the conductor is visible and accessible. Identification shall encircle the insulation and shall be a color other than white, gray, and green. [200.7(C)(1)]

Where used for single-pole, 3-way or 4-way switch loops, the reidentified conductor with white or gray insulation or three continuous white or gray stripes shall be used only for the supply to the switch, not as a return conductor from the switch to the outlet. [200.7(C)(2)]

E3407.4 Identification of terminals. Terminals for attachment to conductors shall be identified in accordance with Sections E3407.4.1 and E3407.4.2.

E3407.4.1 Device terminals. All devices excluding panelboards, provided with terminals for the attachment of conductors and intended for connection to more than one side of the circuit shall have terminals properly marked for identification, except where the terminal intended to be connected to the grounded conductor is clearly evident. [200.10(A)]

Exception: Terminal identification shall not be required for devices that have a normal current rating of over 30 amperes, other than polarized attachment caps and polarized receptacles for attachment caps as required in Section E3407.4.2. [200.10(A) Exception]

E3407.4.2 Receptacles, plugs and connectors. Receptacles, polarized attachment plugs and cord connectors for plugs and polarized plugs shall have the terminal intended for connection to the grounded (white) conductor identified. Identification shall be by a metal or metal coating substantially white in color or by the word “white” or the letter “W” located adjacent to the identified terminal. Where the terminal is not visible, the conductor entrance hole for the connection shall be colored white or marked with the word “white” or the letter “W.” [200.10(B)]

INTERNATIONAL CODE COUNCIL®
Copyright © 2019 ICC & NYSDOS. ALL RIGHTS RESERVED. Accessed by Lauren Gualdino (lgualdino@briarcliffmanor.org), (-) Order Number #100880972 on May 08, 2020 07:05 AM (PDT) pursuant to License Agreement with ICC & NYSDOS. No further reproduction, no

100880972

CHAPTER 35

ELECTRICAL DEFINITIONS

SECTION E3501
GENERAL

E3501.1 Scope. This chapter contains definitions that shall apply only to the electrical requirements of Chapters 34 through 43. Unless otherwise expressly stated, the following terms shall, for the purpose of this code, have the meanings indicated in this chapter. Words used in the present tense include the future; the singular number includes the plural and the plural the singular. Where terms are not defined in this section and are defined in Section R202 of this code, such terms shall have the meanings ascribed to them in that section. Where terms are not defined in these sections, they shall have their ordinarily accepted meanings or such as the context implies.

ACCESSIBLE. (As applied to equipment.) Admitting close approach; not guarded by locked doors, elevation or other effective means.

ACCESSIBLE. (As applied to wiring methods.) Capable of being removed or exposed without damaging the building structure or finish, or not permanently closed in by the structure or finish of the building.

ACCESSIBLE, READILY. Capable of being reached quickly for operation, renewal or inspections, without requiring those to whom ready access is requisite to take actions such as to use tools, other than keys, to climb over or under, to remove obstacles or to resort to portable ladders, etc.

AMPACITY. The maximum current in amperes that a conductor can carry continuously under the conditions of use without exceeding its temperature rating.

APPLIANCE. Utilization equipment, normally built in standardized sizes or types, that is installed or connected as a unit to perform one or more functions such as clothes washing, air conditioning, food mixing, deep frying, etc.

APPROVED. Acceptable to the authority having jurisdiction.

ARC-FAULT CIRCUIT INTERRUPTER. A device intended to provide protection from the effects of arc-faults by recognizing characteristics unique to arcing and by functioning to de-energize the circuit when an arc-fault is detected.

ATTACHMENT PLUG (PLUG CAP) (PLUG). A device that, by insertion into a receptacle, establishes connection between the conductors of the attached flexible cord and the conductors connected permanently to the receptacle.

AUTOMATIC. Performing a function without the necessity of human intervention.

BATHROOM. An area, including a basin, with one or more of the following: a toilet, a urinal, a tub, a shower, a bidet, or similar plumbing fixture.

BONDED (BONDING). Connected to establish electrical continuity and conductivity.

BONDING CONDUCTOR OR JUMPER. A reliable conductor to ensure the required electrical conductivity between metal parts required to be electrically connected.

BONDING JUMPER (EQUIPMENT). The connection between two or more portions of the equipment grounding conductor.

BONDING JUMPER, MAIN. The connection between the grounded circuit conductor and the equipment grounding conductor at the service.

BONDING JUMPER, SUPPLY-SIDE. A conductor installed on the supply side of a service or within a service equipment enclosure(s) that ensures the required electrical conductivity between metal parts required to be electrically connected.

BRANCH CIRCUIT. The circuit conductors between the final overcurrent device protecting the circuit and the outlet(s).

BRANCH CIRCUIT, APPLIANCE. A branch circuit that supplies energy to one or more outlets to which appliances are to be connected, and that has no permanently connected luminaires that are not a part of an appliance.

BRANCH CIRCUIT, GENERAL PURPOSE. A branch circuit that supplies two or more receptacle outlets or outlets for lighting and appliances.

BRANCH CIRCUIT, INDIVIDUAL. A branch circuit that supplies only one utilization equipment.

BRANCH CIRCUIT, MULTIWIRE. A branch circuit consisting of two or more ungrounded conductors having voltage difference between them, and a grounded conductor having equal voltage difference between it and each ungrounded conductor of the circuit, and that is connected to the neutral or grounded conductor of the system.

CABINET. An enclosure designed either for surface or flush mounting and provided with a frame, mat or trim in which a swinging door or doors are or may be hung.

CIRCUIT BREAKER. A device designed to open and close a circuit by nonautomatic means and to open the circuit automatically on a predetermined overcurrent without damage to itself when properly applied within its rating.

CLOTHES CLOSET. A nonhabitable room or space intended primarily for storage of garments and apparel.

CONCEALED. Rendered inaccessible by the structure or finish of the building.

CONDUCTOR.

Bare. A conductor having no covering or electrical insulation whatsoever.

INTERNATIONAL CODE COUNCIL®
Copyright © 2019 ICC & NYSDOS. ALL RIGHTS RESERVED. Accessed by Lauren Gualdino (lgualdino@briarcliffmanor.org), (-) Order Number #100880972 on May 08, 2020 07:05 AM (PDT) pursuant to License Agreement with ICC & NYSDOS. No further reproduction, no

100880972

Covered. A conductor encased within material of composition or thickness that is not recognized by this code as electrical insulation.

Insulated. A conductor encased within material of composition and thickness that is recognized by this code as electrical insulation.

CONDUIT BODY. A separate portion of a conduit or tubing system that provides access through a removable cover(s) to the interior of the system at a junction of two or more sections of the system or at a terminal point of the system. Boxes such as FS and FD or larger cast or sheet metal boxes are not classified as conduit bodies.

CONNECTOR, PRESSURE (SOLDERLESS). A device that establishes a connection between two or more conductors or between one or more conductors and a terminal by means of mechanical pressure and without the use of solder.

CONTINUOUS LOAD. A load where the maximum current is expected to continue for 3 hours or more.

COOKING UNIT, COUNTER-MOUNTED. A cooking appliance designed for mounting in or on a counter and consisting of one or more heating elements, internal wiring and built-in or separately mountable controls.

COPPER-CLAD ALUMINUM CONDUCTORS. Conductors drawn from a copper-clad aluminum rod with the copper metallurgically bonded to an aluminum core. The copper forms a minimum of 10 percent of the cross-sectional area of a solid conductor or each strand of a stranded conductor.

CUTOUT BOX. An enclosure designed for surface mounting and having swinging doors or covers secured directly to and telescoping with the walls of the box proper (see "Cabinet").

DEAD FRONT. Without live parts exposed to a person on the operating side of the equipment.

DEMAND FACTOR. The ratio of the maximum demand of a system, or part of a system, to the total connected load of a system or the part of the system under consideration.

DEVICE. A unit of an electrical system that carries or controls electrical energy as its principal function.

DISCONNECTING MEANS. A device, or group of devices, or other means by which the conductors of a circuit can be disconnected from their source of supply.

DWELLING.

Dwelling unit. A single unit, providing complete and independent living facilities for one or more persons, including permanent provisions for living, sleeping, cooking and sanitation.

One-family dwelling. A building consisting solely of one dwelling unit.

Two-family dwelling. A building consisting solely of two dwelling units.

EFFECTIVE GROUND-FAULT CURRENT PATH. An intentionally constructed, low-impedance electrically conductive path designed and intended to carry current under ground-fault conditions from the point of a ground fault on a wiring system to the electrical supply source and that facilitates the operation of the overcurrent protective device or ground-fault detectors.

ENCLOSED. Surrounded by a case, housing, fence or walls that will prevent persons from accidentally contacting energized parts.

ENCLOSURE. The case or housing of apparatus, or the fence or walls surrounding an installation, to prevent personnel from accidentally contacting energized parts or to protect the equipment from physical damage.

ENERGIZED. Electrically connected to, or is, a source of voltage.

EQUIPMENT. A general term including material, fittings, devices, appliances, luminaires, apparatus, machinery and the like used as a part of, or in connection with, an electrical installation.

EXPOSED. (As applied to live parts.) Capable of being inadvertently touched or approached nearer than a safe distance by a person.

EXPOSED. (As applied to wiring methods.) On or attached to the surface or behind panels designed to allow access.

EXTERNALLY OPERABLE. Capable of being operated without exposing the operator to contact with live parts.

FEEDER. All circuit conductors between the service equipment, or the source of a separately derived system, or other power supply source and the final branch-circuit overcurrent device.

FITTING. An accessory such as a locknut, bushing or other part of a wiring system that is intended primarily to perform a mechanical rather than an electrical function.

GROUND. The earth.

GROUNDED (GROUNDING). Connected (connecting) to ground or to a conductive body that extends the ground connection.

GROUNDED, EFFECTIVELY. Intentionally connected to earth through a ground connection or connections of sufficiently low impedance and having sufficient current-carrying capacity to prevent the buildup of voltages that may result in undue hazards to connected equipment or to persons.

GROUNDED CONDUCTOR. A system or circuit conductor that is intentionally grounded.

GROUNDING CONDUCTOR, EQUIPMENT (EGC). The conductive path(s) that provides a ground-fault current path and connects normally noncurrent-carrying metal parts of equipment together and, to the system grounded conductor, the grounding electrode conductor or both.

GROUNDING ELECTRODE. A conducting object through which a direct connection to earth is established.

GROUNDING ELECTRODE CONDUCTOR. A conductor used to connect the system grounded conductor or the equipment to a grounding electrode or to a point on the grounding electrode system.

GROUND-FAULT CIRCUIT INTERRUPTER. A device intended for the protection of personnel that functions to de-

INTERNATIONAL CODE COUNCIL®
Copyright © 2019 ICC & NYSDOS. ALL RIGHTS RESERVED. Accessed by Lauren Gualdino (lgualdino@briarcliffmanor.org), (-) Order Number #100880972 on May 08, 2020 07:05 AM (PDT) pursuant to License Agreement with ICC & NYSDOS. No further reproduction, no

100880972

energize a circuit or portion thereof within an established period of time when a current to ground exceeds the value for a Class A device.

GROUND-FAULT CURRENT PATH. An electrically conductive path from the point of a ground fault on a wiring system through normally noncurrent-carrying conductors, equipment, or the earth to the electrical supply source.

Examples of ground-fault current paths are any combination of equipment grounding conductors, metallic raceways, metallic cable sheaths, electrical equipment, and any other electrically conductive material such as metal, water, and gas piping; steel framing members; stucco mesh; metal ducting; reinforcing steel; shields of communications cables; and the earth itself.

GUARDED. Covered, shielded, fenced, enclosed or otherwise protected by means of suitable covers, casings, barriers, rails, screens, mats or platforms to remove the likelihood of approach or contact by persons or objects to a point of danger.

IDENTIFIED. (As applied to equipment.) Recognizable as suitable for the specific purpose, function, use, environment, application, etc., where described in a particular code requirement.

IN SIGHT FROM (Within sight from, within sight). Where this code specifies that one piece of equipment shall be "in sight from," "within sight from," "within sight of," or similarly stated from/of another piece of equipment, the specified equipment must be visible and not more than 50 feet (15.2 m) distant from the other.

INTERRUPTING RATING. The highest current at rated voltage that a device is identified to interrupt under standard test conditions.

INTERSYSTEM BONDING TERMINATION. A device that provides a means for connecting intersystem bonding conductors for communications systems to the grounding electrode system.

ISOLATED. (As applied to location.) Not readily accessible to persons unless special means for access are used.

KITCHEN. An area with a sink and permanent provisions for food preparation and cooking.

LABELED. Equipment or materials to which has been attached a label, symbol or other identifying mark of an organization acceptable to the authority having jurisdiction and concerned with product evaluation that maintains periodic inspection of production of labeled equipment or materials and by whose labeling the manufacturer indicates compliance with appropriate standards or performance in a specified manner.

LIGHTING OUTLET. An outlet intended for the direct connection of a lampholder or luminaire.

LIGHTING TRACK (Track Lighting). A manufactured assembly designed to support and energize luminaires that are capable of being readily repositioned on the track. Its length can be altered by the addition or subtraction of sections of track.

LISTED. Equipment, materials or services included in a list published by an organization that is acceptable to the authority having jurisdiction and concerned with evaluation of products or services, that maintains periodic inspection of production of listed equipment or materials or periodic evaluation of services, and whose listing states either that the equipment, material or services meets identified standards or has been tested and found suitable for a specified purpose.

LIVE PARTS. Energized conductive components.

LOCATION, DAMP. Location protected from weather and not subject to saturation with water or other liquids but subject to moderate degrees of moisture.

LOCATION, DRY. A location not normally subject to dampness or wetness. A location classified as dry may be temporarily subject to dampness or wetness, as in the case of a building under construction.

LOCATION, WET. Installations underground or in concrete slabs or masonry in direct contact with the earth and locations subject to saturation with water or other liquids, such as vehicle-washing areas, and locations exposed to weather.

LUMINAIRE. A complete lighting unit consisting of a light source such as a lamp or lamps together with the parts designed to position the light source and connect it to the power supply. A luminaire can include parts to protect the light source or the ballast or to distribute the light. A lampholder itself is not a luminaire.

MULTIOUTLET ASSEMBLY. A type of surface, or flush, or freestanding raceway; designed to hold conductors and receptacles, assembled in the field or at the factory.

NEUTRAL CONDUCTOR. The conductor connected to the neutral point of a system that is intended to carry current under normal conditions.

NEUTRAL POINT. The common point on a wye connection in a polyphase system or midpoint on a single-phase, 3-wire system, or midpoint of a single-phase portion of a 3-phase delta system, or a midpoint of a 3-wire, direct-current system.

OUTLET. A point on the wiring system at which current is taken to supply utilization equipment.

OVERCURRENT. Any current in excess of the rated current of equipment or the ampacity of a conductor. Such current might result from overload, short circuit or ground fault.

OVERLOAD. Operation of equipment in excess of normal, full-load rating, or of a conductor in excess of rated ampacity that, when it persists for a sufficient length of time, would cause damage or dangerous overheating. A fault, such as a short circuit or ground fault, is not an overload.

PANELBOARD. A single panel or group of panel units designed for assembly in the form of a single panel, including buses and automatic overcurrent devices, and equipped with or without switches for the control of light, heat or power circuits, designed to be placed in a cabinet or cutout box placed in or against a wall, partition or other support and accessible only from the front.

INTERNATIONAL CODE COUNCIL®
Copyright © 2019 ICC & NYSDOS. ALL RIGHTS RESERVED. Accessed by Lauren Gualdino (lgualdino@briarcliffmanor.org), (-) Order Number #100880972 on May 08, 2020 07:05 AM (PDT) pursuant to License Agreement with ICC & NYSDOS. No further reproduction, no

100880972

PLENUM. A compartment or chamber to which one or more air ducts are connected and that forms part of the air distribution system.

POWER OUTLET. An enclosed assembly that may include receptacles, circuit breakers, fuseholders, fused switches, buses and watt-hour meter mounting means, intended to supply and control power to mobile homes, recreational vehicles or boats, or to serve as a means for distributing power required to operate mobile or temporarily installed equipment.

PREMISES WIRING (SYSTEM). Interior and exterior wiring, including power, lighting, control and signal circuit wiring together with all of their associated hardware, fittings and wiring devices, both permanently and temporarily installed. This includes wiring from the service point or power source to the outlets and wiring from and including the power source to the outlets where there is no service point. Such wiring does not include wiring internal to appliances, luminaires, motors, controllers, and similar equipment.

QUALIFIED PERSON. One who has the skills and knowledge related to the construction and operation of the electrical equipment and installations and has received safety training to recognize and avoid the hazards involved.

RACEWAY. An enclosed channel expressly for holding wires, cables, or busbars, with additional functions as permitted in this code.

RAINPROOF. Constructed, protected or treated so as to prevent rain from interfering with the successful operation of the apparatus under specified test conditions.

RAINTIGHT. Constructed or protected so that exposure to a beating rain will not result in the entrance of water under specified test conditions.

RECEPTACLE. A contact device installed at the outlet for the connection of an attachment plug, or for the direct connection of electrical utilization equipment designed to mate with the corresponding contact device. A single receptacle is a single contact device with no other contact device on the same yoke. A multiple receptacle is two or more contact devices on the same yoke.

RECEPTACLE OUTLET. An outlet where one or more receptacles are installed.

SERVICE. The conductors and equipment for delivering energy from the serving utility to the wiring system of the premises served.

SERVICE CABLE. Service conductors made up in the form of a cable.

SERVICE CONDUCTORS. The conductors from the service point to the service disconnecting means.

SERVICE CONDUCTORS, OVERHEAD. The overhead conductors between the service point and the first point of connection to the service-entrance conductors at the building or other structure.

SERVICE CONDUCTORS, UNDERGROUND. The underground conductors between the service point and the first point of connection to the service-entrance conductors in a terminal box, meter, or other enclosure, inside or outside of the building wall.

SERVICE DROP. The overhead service conductors between the utility electric supply system and the service point.

SERVICE-ENTRANCE CONDUCTORS, OVERHEAD SYSTEM. The service conductors between the terminals of the service equipment and a point usually outside of the building, clear of building walls, where joined by tap or splice to the service drop or overhead service conductors.

SERVICE-ENTRANCE CONDUCTORS, UNDERGROUND SYSTEM. The service conductors between the terminals of the service equipment and the point of connection to the service lateral or underground service conductors.

SERVICE EQUIPMENT. The necessary equipment, usually consisting of a circuit breaker(s) or switch(es) and fuse(s), and their accessories, connected to the load end of the service conductors to a building or other structure, or an otherwise designated area, and intended to constitute the main control and cutoff of the supply.

SERVICE LATERAL. The underground service conductors between the electric utility supply system and the service point.

SERVICE POINT. The point of connection between the facilities of the serving utility and the premises wiring.

STRUCTURE. That which is built or constructed, other than equipment.

SWITCHES.

General-use switch. A switch intended for use in general distribution and branch circuits. It is rated in amperes and is capable of interrupting its rated current at its rated voltage.

General-use snap switch. A form of general-use switch constructed so that it can be installed in device boxes or on box covers or otherwise used in conjunction with wiring systems recognized by this code.

Isolating switch. A switch intended for isolating an electric circuit from the source of power. It has no interrupting rating and is intended to be operated only after the circuit has been opened by some other means.

Motor-circuit switch. A switch, rated in horsepower that is capable of interrupting the maximum operating overload current of a motor of the same horsepower rating as the switch at the rated voltage.

UNGROUNDED. Not connected to ground or to a conductive body that extends the ground connection.

UTILIZATION EQUIPMENT. Equipment that utilizes electric energy for electronic, electromechanical, chemical, heating, lighting or similar purposes.

VENTILATED. Provided with a means to permit circulation of air sufficient to remove an excess of heat, fumes or vapors.

VOLTAGE (OF A CIRCUIT). The greatest root-mean-square (rms) (effective) difference of potential between any two conductors of the circuit concerned.

INTERNATIONAL CODE COUNCIL®
Copyright © 2019 ICC & NYSDOS. ALL RIGHTS RESERVED. Accessed by Lauren Gualdino (lgualdino@briarcliffmanor.org), (-) Order Number #100880972 on May 08, 2020 07:05 AM (PDT) pursuant to License Agreement with ICC & NYSDOS. No further reproduction, no

100880972

VOLTAGE, NOMINAL. A nominal value assigned to a circuit or system for the purpose of conveniently designating its voltage class (e.g., 120/240). The actual voltage at which a circuit operates can vary from the nominal within a range that permits satisfactory operation of equipment.

VOLTAGE TO GROUND. For grounded circuits, the voltage between the given conductor and that point or conductor of the circuit that is grounded. For ungrounded circuits, the greatest voltage between the given conductor and any other conductor of the circuit.

WATERTIGHT. Constructed so that moisture will not enter the enclosure under specified test conditions.

WEATHERPROOF. Constructed or protected so that exposure to the weather will not interfere with successful operation.

INTERNATIONAL CODE COUNCIL®
Copyright © 2019 ICC & NYSDOS. ALL RIGHTS RESERVED. Accessed by Lauren Gualdino (lgualdino@briarcliffmanor.org), (-) Order Number #100880972 on May 08, 2020 07:05 AM (PDT) pursuant to License Agreement with ICC & NYSDOS. No further reproduction, no

100880972

INTERNATIONAL CODE COUNCIL®
Copyright © 2019 ICC & NYSDOS. ALL RIGHTS RESERVED. Accessed by Lauren Gualdino (lgualdino@briarcliffmanor.org), (-) Order Number #100880972 on May 08, 2020 07:05 AM (PDT) pursuant to License Agreement with ICC & NYSDOS. No further reproduction, no

100880972

CHAPTER 36

SERVICES

SECTION E3601
GENERAL SERVICES

E3601.1 Scope. This chapter covers service conductors and equipment for the control and protection of services and their installation requirements. (230.1)

E3601.2 Number of services. One- and two-family dwellings shall be supplied by only one service. (230.2)

E3601.3 One building or other structure not to be supplied through another. Service conductors supplying a building or other structure shall not pass through the interior of another building or other structure. (230.3)

E3601.4 Other conductors in raceway or cable. Conductors other than service conductors shall not be installed in the same service raceway or service cable in which the service conductors are installed. (230.7)

Exceptions:

1. Grounding electrode conductors or supply side bonding jumpers or conductors shall be permitted within service raceways.
2. Load management control conductors having overcurrent protection shall be permitted within service raceways.

E3601.5 Raceway seal. Where a service raceway enters from an underground distribution system, it shall be sealed in accordance with Section E3803.6. (230.8)

E3601.6 Service disconnect required. Means shall be provided to disconnect all conductors in a building or other structure from the service entrance conductors. (230.70)

E3601.6.1 Marking of service equipment and disconnects. Service disconnects shall be permanently marked as a service disconnect. [230.70(B)]

E3601.6.2 Service disconnect location. The service disconnecting means shall be installed at a readily accessible location either outside of a building or inside nearest the point of entrance of the service conductors. Service disconnecting means shall not be installed in bathrooms. Each occupant shall have access to the disconnect serving the dwelling unit in which they reside. [230.70(A)(1)(2), 230.72(C)]

E3601.7 Maximum number of disconnects. The service disconnecting means shall consist of not more than six switches or six sets of circuit breakers mounted in a single enclosure or in a group of separate enclosures. [230.71(A)]

SECTION E3602
SERVICE SIZE AND RATING

E3602.1 Ampacity of ungrounded conductors. Ungrounded service conductors shall have an ampacity of not less than the load served. For one-family dwellings, the ampacity of the ungrounded conductors shall be not less than 100 amperes, 3 wire. For all other installations, the ampacity of the ungrounded conductors shall be not less than 60 amperes. [230.42(B), 230.79(C) & (D)]

E3602.2 Service load. The minimum load for ungrounded service conductors and service devices that serve 100 percent of the dwelling unit load shall be computed in accordance with Table E3602.2. Ungrounded service conductors and service devices that serve less than 100 percent of the dwelling unit load shall be computed as required for feeders in accordance with Chapter 37. [220.82(A)]

E3602.2.1 Services under 100 amperes. Services that are not required to be 100 amperes shall be sized in accordance with Chapter 37. [230.42(A), (B), and (C)].

INTERNATIONAL CODE COUNCIL®
Copyright © 2019 ICC & NYSDOS. ALL RIGHTS RESERVED. Accessed by Lauren Gualdino (lgualdino@briarcliffmanor.org), (-) Order Number #100880972 on May 08, 2020 07:05 AM (PDT) pursuant to License Agreement with ICC & NYSDOS. No further reproduction, no

100880972

TABLE E3602.2
MINIMUM SERVICE LOAD CALCULATION [220.82(B) & (C)]

LOADS AND PROCEDURE
3 volt-amperes per square foot of floor area for general lighting and general use receptacle outlets.
Plus
1,500 volt-amperes multiplied by total number of 20-ampere-rated small appliance and laundry circuits.
Plus
The nameplate volt-ampere rating of all fastened-in-place, permanently connected or dedicated circuit-supplied appliances such as ranges, ovens, cooking units, clothes dryers not connected to the laundry branch circuit and water heaters.
Apply the following demand factors to the above subtotal:
The minimum subtotal for the loads above shall be 100 percent of the first 10,000 volt-amperes of the sum of the above loads plus 40 percent of any portion of the sum that is in excess of 10,000 volt-amperes.
Plus the largest of the following:
One-hundred percent of the nameplate rating(s) of the air-conditioning and cooling equipment.
One hundred percent of the nameplate rating(s) of the heat pump where a heat pump is used without any supplemental electric heating.
One-hundred percent of the nameplate rating of the electric thermal storage and other heating systems where the usual load is expected to be continuous at the full nameplate value. Systems qualifying under this selection shall not be figured under any other category in this table.
One-hundred percent of nameplate rating of the heat pump compressor and sixty-five percent of the supplemental electric heating load for central electric space-heating systems. If the heat pump compressor is prevented from operating at the same time as the supplementary heat, the compressor load does not need to be added to the supplementary heat load for the total central electric space-heating load.
Sixty-five percent of nameplate rating(s) of electric space-heating units if less than four separately controlled units.
Forty percent of nameplate rating(s) of electric space-heating units of four or more separately controlled units.
The minimum total load in amperes shall be the volt-ampere sum calculated above divided by 240 volts.

E3602.3 Rating of service disconnect. The combined rating of all individual service disconnects serving a single dwelling unit shall be not less than the load determined from Table E3602.2 and shall be not less than as specified in Section E3602.1. (230.79 & 230.80)

E3602.4 Voltage rating. Systems shall be three-wire, 120/240-volt, single-phase with a grounded neutral. [220.82(A)]

SECTION E3603
SERVICE, FEEDER AND GROUNDING ELECTRODE CONDUCTOR SIZING

E3603.1 Grounded and ungrounded service conductor size. Service and feeder conductors supplied by a single-phase, 120/240-volt system shall be sized in accordance with Sections E3603.1.1 through E3603.1.4 and Table 3705.1.

E3603.1.1 Ungrounded service conductors. For a service rated at 100 through 400 amperes, the service conductors supplying the entire load associated with a one-family dwelling, or the service conductors supplying the entire load associated with an individual dwelling unit in a two-family dwelling, shall have an ampacity of not less than 83 percent of the service rating. The service rating is based on the standard ampere ratings in Section E3705.6.

E3603.1.2 Ungrounded feeder conductors. For a feeder rated at 100 through 400 amperes, the feeder conductors supplying the entire load associated with a one-family dwelling, or the feeder conductors supplying the entire load associated with an individual dwelling unit in a two-family dwelling, shall have an ampacity of not less than 83 percent of the feeder rating. The feeder rating is based on the standard ampere ratings in Section E3705.6.

E3603.1.3 Feeder size relative to service size. A feeder for an individual dwelling unit shall not be required to have an ampacity greater than that specified in Sections E3603.1.1 and E3603.1.2.

E3603.1.4 Grounded conductors. The grounded conductor ampacity shall be not less than the maximum unbalance of the load and the size of the grounded conductor shall be not smaller than the required minimum grounding electrode conductor size specified in Table E3603.4. [310.15(B)(7)]

E3603.1.5 Adjustment/correction factors. Where correction or adjustment factors are required by Section E3705.2 or E3705.3, they shall be permitted to be applied to the ampacity associated with the temperature rating of the conductor.

E3603.2 Ungrounded service conductors for accessory buildings and structures. Ungrounded conductors for other than dwelling units shall have an ampacity of not less than 60 amperes and shall be sized as required for feeders in Chapter 37. [230.79(D)]

Exceptions:

1. For limited loads of a single branch circuit, the service conductors shall have an ampacity of not less than 15 amperes. [230.79(A)]
2. For loads consisting of not more than two two-wire branch circuits, the service conductors shall have an ampacity of not less than 30 amperes. [230.79(B)]

E3603.3 Overload protection. Each ungrounded service conductor shall have overload protection. (230.90)

E3603.3.1 Ungrounded conductor. Overload protection shall be provided by an overcurrent device installed in series with each ungrounded service conductor. The overcurrent device shall have a rating or setting not higher than the allowable service or feeder rating specified in Section E3603.1. A set of fuses shall be considered to be all of the fuses required to protect all of the ungrounded conductors of a circuit. Single pole circuit breakers, grouped in accordance with Section E3601.7, shall be considered as one protective device. [230.90(A)]

Exception: Two to six circuit breakers or sets of fuses shall be permitted as the overcurrent device to provide

INTERNATIONAL CODE COUNCIL®
Copyright © 2019 ICC & NYSDOS. ALL RIGHTS RESERVED. Accessed by Lauren Gualdino (lgualdino@briarcliffmanor.org), (-) Order Number #100880972 on May 08, 2020 07:05 AM (PDT) pursuant to License Agreement with ICC & NYSDOS. No further reproduction, no

100880972

the overload protection. The sum of the ratings of the circuit breakers or fuses shall be permitted to exceed the ampacity of the service conductors, provided that the calculated load does not exceed the ampacity of the service conductors. [230.90(A) Exception No. 3]

E3603.3.2 Not in grounded conductor. Overcurrent devices shall not be connected in series with a grounded service conductor except where a circuit breaker is used that simultaneously opens all conductors of the circuit. [230.90(B)]

E3603.3.3 Location. The service overcurrent device shall be an integral part of the service disconnecting means or shall be located immediately adjacent thereto. Where fuses are used as the service overcurrent device, the disconnecting means shall be located on the supply side of the fuses. (230.91)

E3603.4 Grounding electrode conductor size. The grounding electrode conductors shall be sized based on the size of the service entrance conductors as required in Table E3603.4. (250.66)

TABLE E3603.4
GROUNDING ELECTRODE CONDUCTOR SIZE[a, b, c, d, e, f]

SIZE OF LARGEST UNGROUNDED SERVICE-ENTRANCE CONDUCTOR OR EQUIVALENT AREA FOR PARALLEL CONDUCTORS (AWG/kcmil)		SIZE OF GROUNDING ELECTRODE CONDUCTOR (AWG/kcmil)	
Copper	Aluminum or copper-clad aluminum	Copper	Aluminum or copper-clad aluminum
2 or smaller	1/0 or smaller	8	6
1 or 1/0	2/0 or 3/0	6	4
2/0 or 3/0	4/0 or 250	4	2
Over 3/0 through 350	Over 250 through 500	2	1/0
Over 350 through 600	Over 500 through 900	1/0	3/0

a. If multiple sets of service-entrance conductors connect directly to a service drop, set of overhead service conductors, set of underground service conductors, or service lateral, the equivalent size of the largest service-entrance conductor shall be determined by the largest sum of the areas of the corresponding conductors of each set. (Table 250.66)

b. Where there are no service-entrance conductors, the grounding electrode conductor size shall be determined by the equivalent size of the largest service-entrance conductor required for the load to be served. (Table 250.66)

c. Where protected by a ferrous metal raceway, grounding electrode conductors shall be electrically bonded to the ferrous metal raceway at both ends. [250.64(E)(1)]

d. An 8 AWG grounding electrode conductor shall be protected with rigid metal conduit, intermediate metal conduit, rigid polyvinyl chloride (Type PVC) nonmetallic conduit, rigid thermosetting resin (Type RTRC) nonmetallic conduit, electrical metallic tubing or cable armor. [250.64(B)]

e. Where not protected, 6 AWG grounding electrode conductor shall closely follow a structural surface for physical protection. The supports shall be spaced not more than 24 inches on center and shall be within 12 inches of any enclosure or termination. [250.64(B)]

f. Where the grounding electrode conductor or bonding jumper connected to a single or multiple rod, pipe, or plate electrode(s) or any combination thereof, as described in Section E3608.3, does not extend on to other types of electrodes that require a larger size of conductor, the grounding electrode conductor shall not be required to be larger than 6 AWG copper or 4 AWG aluminum. Where the grounding electrode conductor or bonding jumper connected to a single or multiple concrete-encased electrode(s), as described in Section E3608.1.2, does not extend on to other types of electrodes that require a larger size of conductor, the grounding electrode conductor shall not be required to be larger than 4 AWG copper conductor. [250.66(A) and (B)]

E3603.5 Temperature limitations. Except where the equipment is marked otherwise, conductor ampacities used in determining equipment termination provisions shall be based on Table E3705.1. [110.14(C)(1)]

SECTION E3604
OVERHEAD SERVICE AND SERVICE-ENTRANCE CONDUCTOR INSTALLATION

E3604.1 Clearances on buildings. Open conductors and multiconductor cables without an overall outer jacket shall have a clearance of not less than 3 feet (914 mm) from the sides of doors, porches, decks, stairs, ladders, fire escapes and balconies, and from the sides and bottom of windows that open. See Figure E3604.1. [230.9(A)]

E3604.2 Vertical clearances. Overhead service conductors shall not have ready access and shall comply with Sections E3604.2.1 and E3604.2.2. (230.24)

E3604.2.1 Above roofs. Conductors shall have a vertical clearance of not less than 8 feet (2438 mm) above the roof surface. The vertical clearance above the roof level shall be maintained for a distance of not less than 3 feet (914 mm) in all directions from the edge of the roof. See Figure E3604.2.1. [230.24(A)]

Exceptions:

1. Conductors above a roof surface subject to pedestrian traffic shall have a vertical clearance from the roof surface in accordance with Section E3604.2.2. [230.24(A) Exception No. 1]
2. Where the roof has a slope of 4 inches (102 mm) in 12 inches (305 mm), or greater, the minimum clearance shall be 3 feet (914 mm). [230.24(A) Exception No. 2]
3. The minimum clearance above only the overhanging portion of the roof shall not be less than 18 inches (457 mm) where not more than 6 feet (1829 mm) of overhead service conductor length passes over 4 feet (1219 mm) or less of roof surface measured horizontally and such conductors are terminated at a through-the-roof raceway or approved support. [230.24(A) Exception No. 3]
4. The requirement for maintaining the vertical clearance for a distance of 3 feet (914 mm) from the edge of the roof shall not apply to the final conductor span where the service drop is attached to the side of a building. [230.24(A) Exception No. 4]
5. Where the voltage between conductors does not exceed 300 and the roof area is guarded or isolated, a reduction in clearance to 3 feet (914 mm) shall be permitted. [230.24(A) Exception No. 5]

E3604.2.2 Vertical clearance from grade. Overhead service conductors shall have the following minimum clearances from final grade:

1. For conductors supported on and cabled together with a grounded bare messenger wire, the minimum vertical clearance shall be 10 feet (3048 mm) at the

INTERNATIONAL CODE COUNCIL®
Copyright © 2019 ICC & NYSDOS. ALL RIGHTS RESERVED. Accessed by Lauren Gualdino (lgualdino@briarcliffmanor.org), (-) Order Number #100880972 on May 08, 2020 07:05 AM (PDT) pursuant to License Agreement with ICC & NYSDOS. No further reproduction, no

100880972

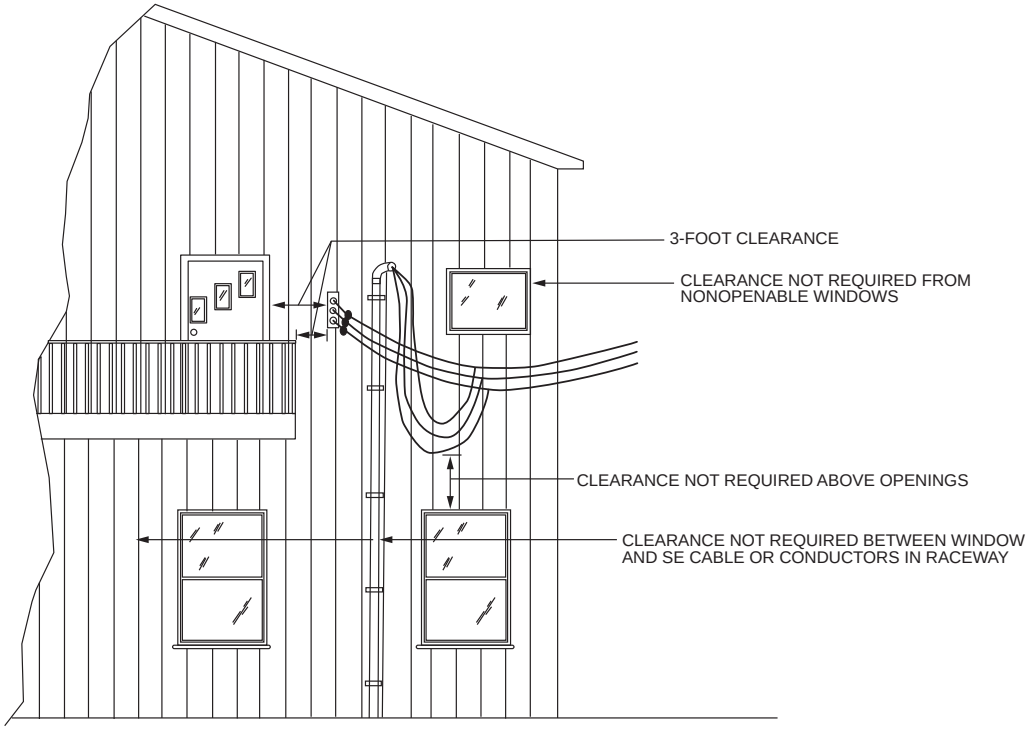

For SI: 1 foot = 304.8 mm.

FIGURE E3604.1
CLEARANCES FROM BUILDING OPENINGS

electric service entrance to buildings, at the lowest point of the drip loop of the building electric entrance, and above areas or sidewalks accessed by pedestrians only. Such clearance shall be measured from final grade or other accessible surfaces.

2. Twelve feet (3658 mm)—over residential property and driveways.
3. Eighteen feet (5486 mm)—over public streets, alleys, roads or parking areas subject to truck traffic. [(230.24(B)(1), (2), and (4)]

E3604.3 Point of attachment. The point of attachment of the overhead service conductors to a building or other structure shall provide the minimum clearances as specified in Sections E3604.1 through E3604.2.2. The point of attachment shall be not less than 10 feet (3048 mm) above finished grade. (230.26)

E3604.4 Means of attachment. Multiconductor cables used for overhead service conductors shall be attached to buildings or other structures by fittings approved for the purpose. (230.27)

E3604.5 Service masts as supports. A service mast used for the support of service-drop or overhead service conductors shall comply with Sections E3604.5.1 and E3604.5.2. Only power service drop or overhead service conductors shall be attached to a service mast.

E3604.5.1 Strength. The service mast shall be of adequate strength or shall be supported by braces or guys to safely withstand the strain imposed by the service-drop or overhead service conductors. Hubs intended for use with a conduit that serves as a service mast shall be identified for use with service-entrance equipment.

E3604.5.2 Attachment. Service-drop or overhead service conductors shall not be attached to a service mast at a point between a coupling and a weatherhead or the end of the conduit, where the coupling is located above the last point of securement of the building or other structure or is located above the building or other structure. [230.28(A) & (B)]

E3604.6 Supports over buildings. Service conductors passing over a roof shall be securely supported by a substantial structure. For a grounded system, where the substantial structure is metal, it shall be bonded by means of a bonding jumper and listed connector to the grounded overhead service conductor. Where practicable, such supports shall be independent of the building. (230.29)

INTERNATIONAL CODE COUNCIL®
Copyright © 2019 ICC & NYSDOS. ALL RIGHTS RESERVED. Accessed by Lauren Gualdino (lgualdino@briarcliffmanor.org), (-) Order Number #100880972 on May 08, 2020 07:05 AM (PDT) pursuant to License Agreement with ICC & NYSDOS. No further reproduction, no

100880972

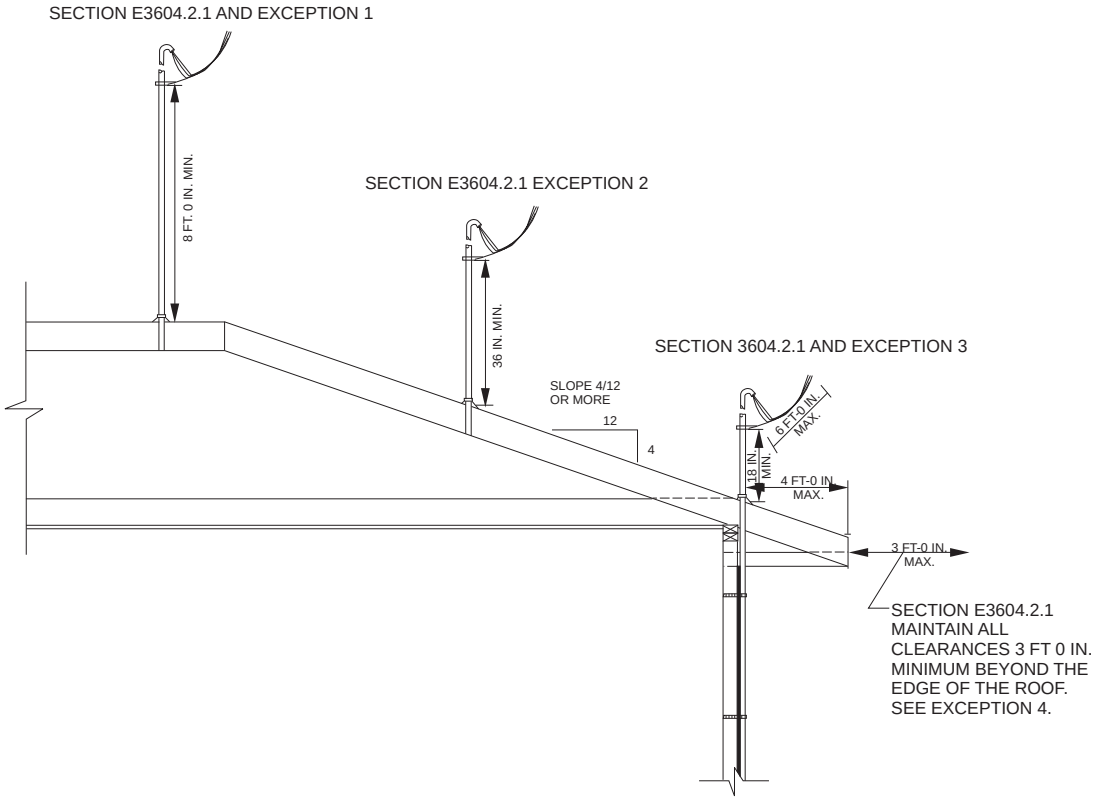

For SI: 1 inch = 25.4 mm, 1 foot = 304.8 mm.

FIGURE E3604.2.1
CLEARANCES FROM ROOFS

SECTION E3605
SERVICE-ENTRANCE CONDUCTORS

E3605.1 Insulation of service-entrance conductors. Service-entrance conductors entering or on the exterior of buildings or other structures shall be insulated in accordance with Section E3406.5. (230.41)

Exceptions:

1. A copper grounded conductor shall not be required to be insulated where it is:
   - 1.1. In a raceway or part of a service cable assembly,
   - 1.2. Directly buried in soil of suitable condition, or
   - 1.3. Part of a cable assembly listed for direct burial without regard to soil conditions.
2. An aluminum or copper-clad aluminum grounded conductor shall not be required to be insulated where part of a cable or where identified for direct burial or utilization in underground raceways. (230.41 Exception)

E3605.2 Wiring methods for services. Service-entrance wiring methods shall be installed in accordance with the applicable requirements in Chapter 38. (230.43)

E3605.3 Spliced conductors. Service-entrance conductors shall be permitted to be spliced or tapped. Splices shall be made in enclosures or, if directly buried, with listed underground splice kits. Conductor splices shall be made in accordance with Chapters 34, 37, 38 and 39. (230.33, 230.46)

E3605.4 Protection of underground service entrance conductors. Underground service-entrance conductors shall be protected against physical damage in accordance with Chapter 38. (230.32)

E3605.5 Protection of all other service cables. Aboveground service-entrance cables, where subject to physical damage, shall be protected by one or more of the following: rigid metal conduit, intermediate metal conduit, Schedule 80 PVC conduit, electrical metallic tubing, reinforced thermosetting resin conduit or other approved means. [230.50(1)]

E3605.6 Locations exposed to direct sunlight. Insulated conductors and cables used where exposed to direct rays of the sun shall comply with one of the following:

1. The conductors and cables shall be listed, or listed and marked, as being sunlight resistant.
2. The conductors and cables are covered with insulating material, such as tape or sleeving, that is listed, or listed and marked, as being sunlight resistant. [310.10(D)]

E3605.7 Mounting supports. Service-entrance cables shall be supported by straps or other approved means within 12 inches (305 mm) of every service head, gooseneck or connection to a raceway or enclosure and at intervals not exceeding 30 inches (762 mm). [230.51(A)]

INTERNATIONAL CODE COUNCIL®
Copyright © 2019 ICC & NYSDOS. ALL RIGHTS RESERVED. Accessed by Lauren Gualdino (lgualdino@briarcliffmanor.org), (-) Order Number #100880972 on May 08, 2020 07:05 AM (PDT) pursuant to License Agreement with ICC & NYSDOS. No further reproduction, no

100880972

E3605.8 Raceways to drain. Where exposed to the weather, raceways enclosing service-entrance conductors shall be listed or approved for use in wet locations and arranged to drain. Where embedded in masonry, raceways shall be arranged to drain. (230.53)

E3605.9 Overhead service locations. Connections at service heads shall be in accordance with Sections E3605.9.1 through E3605.9.7. (230.54)

E3605.9.1 Rain-tight service head. Service raceways shall be equipped with a service head at the point of connection to service-drop or overhead conductors. The service head shall be listed for use in wet locations. [230.54(A)]

E3605.9.2 Service cable, service head or gooseneck. Service-entrance cable shall be equipped with a service head or shall be formed into a gooseneck in an approved manner. The service head shall be listed for use in wet locations. [230.54(B)]

E3605.9.3 Service-head location. Service heads on raceways or service-entrance cables, and goosenecks in service-entrance cables, shall be located above the point of attachment of the service-drop or overhead service conductors to the building or other structure. [230.54(C)]

Exception: Where it is impracticable to locate the service head or gooseneck above the point of attachment, the service head or gooseneck location shall be not more than 24 inches (610 mm) from the point of attachment. [230.54(C) Exception]

E3605.9.4 Separately bushed openings. Service heads shall have conductors of different potential brought out through separately bushed openings. [230.54(E)]

E3605.9.5 Drip loops. Drip loops shall be formed on individual conductors. To prevent the entrance of moisture, service-entrance conductors shall be connected to the service-drop or overhead conductors either below the level of the service head or below the level of the termination of the service-entrance cable sheath. [230.54(F)]

E3605.9.6 Conductor arrangement. Service-entrance and overhead service conductors shall be arranged so that water will not enter service raceways or equipment. [230.54(G)]

E3605.9.7 Secured. Service-entrance cables shall be held securely in place. [230.54(D)]

SECTION E3606
SERVICE EQUIPMENT—GENERAL

E3606.1 Service equipment enclosures. Energized parts of service equipment shall be enclosed. (230.62)

E3606.2 Working space. The working space in the vicinity of service equipment shall be not less than that specified in Chapter 34. (110.26)

E3606.3 Available short-circuit current. Service equipment shall be suitable for the maximum fault current available at its supply terminals, but not less than 10,000 amperes. (110.9)

E3606.4 Marking. Service equipment shall be marked to identify it as being suitable for use as service equipment. Service equipment shall be listed or field labeled. Individual meter socket enclosures shall not be considered as service equipment but shall be listed and rated for the voltage and ampacity of the service. (230.66)

Exception: Meter sockets supplied by and under the exclusive control of an electric utility shall not be required to be listed. (230.66 Exception)

SECTION E3607
SYSTEM GROUNDING

E3607.1 System service ground. The premises wiring system shall be grounded at the service with a grounding electrode conductor connected to a grounding electrode system as required by this code. Grounding electrode conductors shall be sized in accordance with Table E3603.4. [250.20(B)(1) and 250.24(A)]

E3607.2 Location of grounding electrode conductor connection. The grounding electrode conductor shall be connected to the grounded service conductor at any accessible point from the load end of the overhead service conductors, service drop, underground service conductors, or service lateral to and including the terminal or bus to which the grounded service conductor is connected at the service disconnecting means. A grounding connection shall not be made to any grounded circuit conductor on the load side of the service disconnecting means, except as provided in Section E3607.3.2. [250.24(A)(1) and (A)(5)]

E3607.3 Buildings or structures supplied by feeder(s) or branch circuit(s). Buildings or structures supplied by feeder(s) or branch circuit(s) shall have a grounding electrode or grounding electrode system installed in accordance with Section E3608. The grounding electrode conductor(s) shall be connected in a manner specified in Section E3607.3.1 or, for existing premises wiring systems only, Section E3607.3.2. Where there is no existing grounding electrode, the grounding electrode(s) required in Section E3608 shall be installed. [250.32(A)]

Exception: A grounding electrode shall not be required where only one branch circuit, including a multiwire branch circuit, supplies the building or structure and the branch circuit includes an equipment grounding conductor for grounding the noncurrent-carrying parts of all equipment. For the purposes of this section, a multiwire branch circuit shall be considered as a single branch circuit. [250.32(A) Exception]

E3607.3.1 Equipment grounding conductor. An equipment grounding conductor as described in Section E3908 shall be run with the supply conductors and connected to the building or structure disconnecting means and to the grounding electrode(s). The equipment grounding conductor shall be used for grounding or bonding of equipment, structures or frames required to be grounded or bonded. The equipment grounding conductor shall be sized in accordance with Section E3908.12. Any installed grounded conductor shall not be connected to the equip-

INTERNATIONAL CODE COUNCIL®
Copyright © 2019 ICC & NYSDOS. ALL RIGHTS RESERVED. Accessed by Lauren Gualdino (lgualdino@briarcliffmanor.org), (-) Order Number #100880972 on May 08, 2020 07:05 AM (PDT) pursuant to License Agreement with ICC & NYSDOS. No further reproduction, no

100880972

ment grounding conductor or to the grounding electrode(s). [250.32(B) and Table 250.122]

E3607.3.2 Grounded conductor, existing premises. For installations made in compliance with previous editions of this code that permitted such connection and where an equipment grounding conductor is not run with the supply conductors to the building or structure, there are no continuous metallic paths bonded to the grounding system in both buildings or structures involved, and ground-fault protection of equipment has not been installed on the supply side of the feeder(s), the grounded conductor run with the supply to the buildings or structure shall be connected to the building or structure disconnecting means and to the grounding electrode(s) and shall be used for grounding or bonding of equipment, structures, or frames required to be grounded or bonded. Where used for grounding in accordance with this provision, the grounded conductor shall be not smaller than the larger of:

1. That required by Section E3704.3.
2. That required by Section E3908.12. [250.32(B)(1) Exception]

E3607.4 Grounding electrode conductor. A grounding electrode conductor shall be used to connect the equipment grounding conductors, the service equipment enclosures, and the grounded service conductor to the grounding electrode(s). This conductor shall be sized in accordance with Table E3603.4. [250.24(D)]

E3607.5 Main bonding jumper. An unspliced main bonding jumper shall be used to connect the equipment grounding conductor(s) and the service-disconnect enclosure to the grounded conductor of the system within the enclosure for each service disconnect. [250.24(B)]

E3607.6 Common grounding electrode. Where an AC system is connected to a grounding electrode in or at a building or structure, the same electrode shall be used to ground conductor enclosures and equipment in or on that building or structure. Where separate services, feeders or branch circuits supply a building and are required to be connected to a grounding electrode(s), the same grounding electrode(s) shall be used. Two or more grounding electrodes that are effectively bonded together shall be considered as a single grounding electrode system. (250.58)

SECTION E3608
GROUNDING ELECTRODE SYSTEM

E3608.1 Grounding electrode system. All electrodes specified in Sections E3608.1.1, E3608.1.2, E3608.1.3, E3608.1.4 E3608.1.5 and E3608.1.6 that are present at each building or structure served shall be bonded together to form the grounding electrode system. Where none of these electrodes are present, one or more of the electrodes specified in Sections E3608.1.3, E3608.1.4, E3608.1.5 and E3608.1.6 shall be installed and used. (250.50)

Exception: Concrete-encased electrodes of existing buildings or structures shall not be required to be part of the grounding electrode system where the steel reinforcing bars or rods are not accessible for use without disturbing the concrete. (250.50 Exception)

E3608.1.1 Metal underground water pipe. A metal underground water pipe that is in direct contact with the earth for 10 feet (3048 mm) or more, including any well casing effectively bonded to the pipe and that is electrically continuous, or made electrically continuous by bonding around insulating joints or insulating pipe to the points of connection of the grounding electrode conductor and the bonding conductors, shall be considered as a grounding electrode (see Section E3608.1). [250.52(A)(1)]

E3608.1.1.1 Interior metal water piping. Interior metal water piping located more than 5 feet (1524 mm) from the point of entrance into the building shall not be used as a conductor to interconnect electrodes of the grounding electrode system. [250.68(C)(1)]

E3608.1.1.2 Installation. Continuity of the grounding path or the bonding connection to interior piping shall not rely on water meters, filtering devices and similar equipment. A metal underground water pipe shall be supplemented by an additional electrode of a type specified in Sections E3608.1.2 through E3608.1.6. The supplemental electrode shall be bonded to the grounding electrode conductor, the grounded service-entrance conductor, a nonflexible grounded service raceway, any grounded service enclosure or to the equipment grounding conductor provided in accordance with Section E3607.3.1. Where the supplemental electrode is a rod, pipe or plate electrode in accordance with Section E3608.1.4 or E3608.1.5, it shall comply with Section E3608.4.

Where the supplemental electrode is a rod, pipe or plate electrode in accordance with Section E3608.1.4 or E3608.1.5, that portion of the bonding jumper that is the sole connection to the supplemental grounding electrode shall not be required to be larger than 6 AWG copper or 4 AWG aluminum wire. [250.53(D) and (E)]

E3608.1.2 Concrete-encased electrode. A concrete-encased electrode consisting of not less than 20 feet (6096 mm) of either of the following shall be considered as a grounding electrode:

1. One or more bare or zinc-galvanized or other electrically conductive coated steel reinforcing bars or rods not less than $^1/_2$ inch (13 mm) in diameter, installed in one continuous 20-foot (6096 mm) length, or if in multiple pieces connected together by the usual steel tie wires, exothermic welding, welding, or other effective means to create a 20-foot (6096 mm) or greater length.
2. A bare copper conductor not smaller than 4 AWG.

Metallic components shall be encased by at least 2 inches (51 mm) of concrete and shall be located horizontally within that portion of a concrete foundation or footing that is in direct contact with the earth or within vertical foundations or structural components or members that are in direct contact with the earth.

INTERNATIONAL CODE COUNCIL®
Copyright © 2019 ICC & NYSDOS. ALL RIGHTS RESERVED. Accessed by Lauren Gualdino (lgualdino@briarcliffmanor.org), (-) Order Number #100880972 on May 08, 2020 07:05 AM (PDT) pursuant to License Agreement with ICC & NYSDOS. No further reproduction, no

100880972

Where multiple concrete-encased electrodes are present at a building or structure, only one shall be required to be bonded into the grounding electrode system. [250.52(A)(3)]

E3608.1.3 Ground rings. A ground ring encircling the building or structure, in direct contact with the earth at a depth below the earth's surface of not less than 30 inches (762 mm), consisting of at least 20 feet (6096 mm) of bare copper conductor not smaller than 2 AWG shall be considered as a grounding electrode. [250.52(A)(4)]

E3608.1.4 Rod and pipe electrodes. Rod and pipe electrodes not less than 8 feet (2438 mm) in length and consisting of the following materials shall be considered as a grounding electrode:

1. Grounding electrodes of pipe or conduit shall not be smaller than trade size $^{3}/_{4}$ (metric designator 21) and, where of iron or steel, shall have the outer surface galvanized or otherwise metal-coated for corrosion protection.
2. Rod-type grounding electrodes of stainless steel and copper or zinc-coated steel shall be at least $^{5}/_{8}$ inch (15.9 mm) in diameter unless listed. [250.52(A)(5)]

E3608.1.4.1 Installation. The rod and pipe electrodes shall be installed such that at least 8 feet (2438 mm) of length is in contact with the soil. They shall be driven to a depth of not less than 8 feet (2438 mm) except that, where rock bottom is encountered, electrodes shall be driven at an oblique angle not to exceed 45 degrees (0.79 rad) from the vertical or shall be buried in a trench that is at least 30 inches (762 mm) deep. The upper end of the electrodes shall be flush with or below ground level except where the above-ground end and the grounding electrode conductor attachment are protected against physical damage. (250.53(G)]

E3608.1.5 Plate electrodes. A plate electrode that exposes not less than 2 square feet (0.186 m^2) of surface to exterior soil shall be considered as a grounding electrode. Electrodes of bare or electrically conductive coated iron or steel plates shall be not less than $^{1}/_{4}$ inch (6.4 mm) in thickness. Solid, uncoated electrodes of nonferrous metal shall be not less than 0.06 inch (1.5 mm) in thickness. Plate electrodes shall be installed not less than 30 inches (762 mm) below the surface of the earth. [250.52(A)(7)]

E3608.1.6 Other electrodes. In addition to the grounding electrodes specified in Sections E3608.1.1 through E3608.1.5, other listed grounding electrodes shall be permitted. [250.52(A)(6)]

E3608.2 Bonding jumper. The bonding jumper(s) used to connect the grounding electrodes together to form the grounding electrode system shall be installed in accordance with Sections E3610.2, and E3610.3, shall be sized in accordance with Section E3603.4, and shall be connected in the manner specified in Section E3611.1. [250.53(C)]

E3608.3 Rod, pipe and plate electrode requirements. Where practicable, rod, pipe and plate electrodes shall be embedded below permanent moisture level. Such electrodes shall be free from nonconductive coatings such as paint or enamel. Where more than one such electrode is used, each electrode of one grounding system shall be not less than 6 feet (1829 mm) from any other electrode of another grounding system. Two or more grounding electrodes that are effectively bonded together shall be considered as a single grounding electrode system. That portion of a bonding jumper that is the sole connection to a rod, pipe or plate electrode shall not be required to be larger than 6 AWG copper or 4 AWG aluminum wire. [250.53(A)(1), 250.53(B), 250.53(E)]

E3608.4 Supplemental electrode required. A single rod, pipe, or plate electrode shall be supplemented by an additional electrode of a type specified in Sections E3608.1.2 through E3608.1.6. The supplemental electrode shall be bonded to one of the following:

1. A rod, pipe, or plate electrode.
2. A grounding electrode conductor.
3. A grounded service-entrance conductor.
4. A nonflexible grounded service raceway.
5. A grounded service enclosure.

Where multiple rod, pipe, or plate electrodes are installed to meet the requirements of this section, they shall not be less than 6 feet (1829 mm) apart. [250.53(A)(2) and (A)(3)]

Exception: Where a single rod, pipe, or plate grounding electrode has a resistance to earth of 25 ohms or less, the supplemental electrode shall not be required. [250.53(A)(2) Exception]

E3608.5 Aluminum electrodes. Aluminum electrodes shall not be permitted. [250.52(B)(2)]

E3608.6 Metal underground gas piping system. A metal underground gas piping system shall not be used as a grounding electrode. [250.52(B)(1)]

E3608.7 Pool, spa and hot tub structures and structural reinforcing steel. The structures and structural reinforcing steel described in Section E4204.2, Items 1 and 2, shall not be used as a grounding electrode.

SECTION E3609
BONDING

E3609.1 General. Bonding shall be provided where necessary to ensure electrical continuity and the capacity to conduct safely any fault current likely to be imposed. (250.90)

E3609.2 Bonding of equipment for services. The noncurrent-carrying metal parts of the following equipment shall be effectively bonded together:

1. Raceways or service cable armor or sheath that enclose, contain, or support service conductors.
2. Service enclosures containing service conductors, including meter fittings, and boxes, interposed in the service raceway or armor. [250.92(A)]

E3609.3 Bonding for communications systems. Communications system bonding terminations shall be connected in accordance with Section E3609.3.1 or E3609.3.2. (250.94)

E3609.3.1 Intersystem bonding termination device. An intersystem bonding termination (IBT) for connecting

INTERNATIONAL CODE COUNCIL®
Copyright © 2019 ICC & NYSDOS. ALL RIGHTS RESERVED. Accessed by Lauren Gualdino (lgualdino@briarcliffmanor.org), (-) Order Number #100880972 on May 08, 2020 07:05 AM (PDT) pursuant to License Agreement with ICC & NYSDOS. No further reproduction, no

100880972

intersystem bonding conductors shall be provided external to enclosures at the service equipment or metering equipment enclosure and at the disconnecting means for any additional buildings or structures. An IBT shall comply with all of the following:

1. It shall be accessible for connection and inspection.
2. It shall consist of a set of terminals with the capacity for connection of not less than three intersystem bonding conductors.
3. It shall not interfere with opening of the enclosure for a service, building or structure disconnecting means, or metering equipment.
4. Where located at the service equipment, it shall be securely mounted and electrically connected to an enclosure for the service equipment, to the meter enclosure, or to an exposed nonflexible metallic service raceway, or shall be mounted at one of these enclosures and connected to the enclosure or to the grounding electrode conductor with a 6 AWG or larger copper conductor.
5. Where located at the disconnecting means for a building or structure, it shall be securely mounted and electrically connected to the metallic enclosure for the building or structure disconnecting means, or shall be mounted at the disconnecting means and connected to the metallic enclosure or to the grounding electrode conductor with a 6 AWG or larger copper conductor.
6. It shall be listed as grounding and bonding equipment. [250.94(A)]

Exception: Means for connecting intersystem bonding conductors are not required where communications systems are not likely to be used.

E3609.3.2 An aluminum or copper busbar not less than $^1/_4$ inch thick by 2 inches wide (6.4 mm by 51 mm) and of sufficient length to accommodate not fewer than three terminations for communications systems in addition to other connections shall be provided. The busbar shall be securely fastened and shall be installed in an accessible location. Connections shall be made by a listed connector. Where aluminum busbars are used, the installation shall comply with Section E3610.2.

Exception: Means for connecting intersystem bonding conductors are not required where communications systems are not likely to be used. [250.94(B)]

E3609.4 Method of bonding at the service. Bonding jumpers meeting the requirements of this chapter shall be used around impaired connections, such as reducing washers or oversized, concentric, or eccentric knockouts. Standard locknuts or bushings shall not be the only means for the bonding required by this section but shall be permitted to be installed to make mechanical connections of raceways. Electrical continuity at service equipment, service raceways and service conductor enclosures shall be ensured by one or more of the methods specified in Sections E3609.4.1 through E3609.4.4.

E3609.4.1 Grounded service conductor. Equipment shall be bonded to the grounded service conductor in a manner provided in this code.

E3609.4.2 Threaded connections. Equipment shall be bonded by connections using threaded couplings or threaded hubs on enclosures. Such connections shall be made wrench tight.

E3609.4.3 Threadless couplings and connectors. Equipment shall be bonded by threadless couplings and connectors for metal raceways and metal-clad cables. Such couplings and connectors shall be made wrench tight. Standard locknuts or bushings shall not be used for the bonding required by this section.

E3609.4.4 Other devices. Equipment shall be bonded by other listed devices, such as bonding-type locknuts, bushings and bushings with bonding jumpers. [250.92(B)]

E3609.5 Sizing supply-side bonding jumper and main bonding jumper. The bonding jumper shall not be smaller than the sizes shown in Table E3603.4 for grounding electrode conductors. Where the service-entrance conductors are paralleled in two or more raceways or cables, and an individual supply-side bonding jumper is used for bonding these raceways or cables, the supply-side bonding jumper for each raceway or cable shall be selected from Table E3603.4 based on the size of the ungrounded supply conductors in each raceway or cable. A single supply-side bonding jumper installed for bonding two or more raceways or cables shall be sized in accordance with Table E3603.4 based on the largest set of parallel ungrounded supply conductors. [250.102(C)]

E3609.6 Metal water piping bonding. The metal water piping system shall be bonded to the service equipment enclosure, the grounded conductor at the service, the grounding electrode conductor where of sufficient size, or to the one or more grounding electrodes used. The bonding jumper shall be sized in accordance with Table E3603.4. The points of attachment of the bonding jumper(s) shall be accessible. [250.104(A) and 250.104(A)(1)]

[NY] E3609.7 Bonding other metal piping. Where installed in or attached to a building or structure, metal piping systems, including gas piping, capable of becoming energized shall be bonded to the service equipment enclosure, the grounded conductor at the service, the grounding electrode conductor where of sufficient size, or to the one or more grounding electrodes used. The bonding conductor(s) or jumper(s) shall be sized in accordance with Table E3908.12 and equipment grounding conductors shall be sized in accordance with Table E3908.12 using the rating of the circuit capable of energizing the piping. The equipment grounding conductor for the circuit that is capable of energizing the piping shall be permitted to serve as the bonding means. The points of attachment of the bonding jumper(s) shall be accessible. [250.104(B)]

Exception: Gas piping systems that contain corrugated stainless steel tubing (CSST) shall be installed and bonded in accordance with Section G2411 of this code.

INTERNATIONAL CODE COUNCIL®
Copyright © 2019 ICC & NYSDOS. ALL RIGHTS RESERVED. Accessed by Lauren Gualdino (lgualdino@briarcliffmanor.org), (-) Order Number #100880972 on May 08, 2020 07:05 AM (PDT) pursuant to License Agreement with ICC & NYSDOS. No further reproduction, no

100880972

SECTION E3610
GROUNDING ELECTRODE CONDUCTORS

E3610.1 Continuous. The grounding electrode conductor shall be installed in one continuous length without splices or joints and shall run to any convenient grounding electrode available in the grounding electrode system where the other electrode(s), if any, are connected by bonding jumpers in accordance with Section E3608.2, or to one or more grounding electrode(s) individually. The grounding electrode conductor shall be sized for the largest grounding electrode conductor required among all of the electrodes connected to it. [250.64(C)]

Exception: Splicing of the grounding electrode conductor by irreversible compression-type connectors listed as grounding and bonding equipment or by the exothermic welding process shall not be prohibited. [250.64(C)(1)]

E3610.2 Securing and protection against physical damage. Where exposed, a grounding electrode conductor or its enclosure shall be securely fastened to the surface on which it is carried. Grounding electrode conductors shall be permitted to be installed on or through framing members. A 6 AWG or larger copper or aluminum grounding electrode conductor not exposed to physical damage shall be permitted to be run along the surface of the building construction without metal covering or protection. A 6 AWG or larger copper or aluminum grounding electrode exposed to physical damage shall be in rigid metal conduit, intermediate metal conduit, rigid polyvinyl chloride (PVC), nonmetallic conduit, reinforced thermosetting resin (RTRC-XW) nonmetallic conduit, electrical metallic tubing or cable armor. Grounding electrode conductors smaller than 6 AWG shall be in rigid metal conduit, intermediate metal conduit, rigid polyvinyl chloride (PVC) nonmetallic conduit, reinforced thermosetting resin (RTRC-XW) nonmetallic conduit, electrical metallic tubing or cable armor. Grounding electrode conductors and grounding electrode bonding jumpers in contact with the earth shall not be required to comply with Section E3803, but shall be buried or otherwise protected if subject to physical damage. [250.64(B)]

Bare aluminum or copper-clad aluminum grounding electrode conductors shall not be used where in direct contact with masonry or the earth or where subject to corrosive conditions. Where used outside, aluminum or copper-clad aluminum grounding electrode conductors shall not be installed within 18 inches (457 mm) of the earth. [250.64(A)]

E3610.3 Raceways and enclosures for grounding electrode conductors. Ferrous metal raceways and enclosures for grounding electrode conductors shall be electrically continuous from the point of attachment to cabinets or equipment to the grounding electrode, and shall be securely fastened to the ground clamp or fitting. Ferrous metal raceways and enclosures shall be bonded at each end of the raceway or enclosure to the grounding electrode or to the grounding electrode conductor to create an electrically parallel path. Nonferrous metal raceways and enclosures shall not be required to be electrically continuous. Bonding methods in compliance with Section E3609.4 for installations at service equipment locations and with Sections E3609.4.2 through E3609.4.4 for other than service equipment locations shall apply at each end and to all intervening ferrous raceways, boxes, and enclosures between the cabinets or equipment and the grounding electrode. The bonding jumper for a grounding electrode conductor raceway shall be the same size or larger than the required enclosed grounding electrode conductor.

Where a raceway is used as protection for a grounding conductor, the installation shall comply with the requirements of Chapter 38. [250.64(E)(1), (2), (3), (4)]

E3610.4 Prohibited use. An equipment grounding conductor shall not be used as a grounding electrode conductor. (250.121)

Exception: A wire-type equipment grounding conductor shall be permitted to serve as both an equipment grounding conductor and a grounding electrode conductor where installed in accordance with the applicable requirements for both the equipment grounding conductor and the grounding electrode conductor in Chapters 36 and 39. Where used as a grounding electrode conductor, the wire-type equipment grounding conductor shall be installed and arranged in a manner that will prevent objectionable current. [250.121 Exception, 250.6(A)]

SECTION E3611
GROUNDING ELECTRODE CONDUCTOR CONNECTION TO THE GROUNDING ELECTRODES

E3611.1 Methods of grounding conductor connection to electrodes. The grounding or bonding conductor shall be connected to the grounding electrode by exothermic welding, listed lugs, listed pressure connectors, listed clamps or other listed means. Connections depending on solder shall not be used. Ground clamps shall be listed for the materials of the grounding electrode and the grounding electrode conductor and, where used on pipe, rod or other buried electrodes, shall also be listed for direct soil burial or concrete encasement. Not more than one conductor shall be connected to the grounding electrode by a single clamp or fitting unless the clamp or fitting is listed for multiple conductors. One of the methods indicated in the following items shall be used:

1. A pipe fitting, pipe plug or other approved device screwed into a pipe or pipe fitting.
2. A listed bolted clamp of cast bronze or brass, or plain or malleable iron.
3. For indoor communications purposes only, a listed sheet metal strap-type ground clamp having a rigid metal base that seats on the electrode and having a strap of such material and dimensions that it is not likely to stretch during or after installation.
4. Other equally substantial approved means. (250.70)

E3611.2 Accessibility. All mechanical elements used to terminate a grounding electrode conductor or bonding jumper to the grounding electrodes that are not buried or concrete encased shall be accessible. [250.68(A) and 250.68(A) Exception]

E3611.3 Effective grounding path. The connection of the grounding electrode conductor or bonding jumper shall be made in a manner that will ensure a permanent and effective

INTERNATIONAL CODE COUNCIL®
Copyright © 2019 ICC & NYSDOS. ALL RIGHTS RESERVED. Accessed by Lauren Gualdino (lgualdino@briarcliffmanor.org), (-) Order Number #100880972 on May 08, 2020 07:05 AM (PDT) pursuant to License Agreement with ICC & NYSDOS. No further reproduction, no

100880972

grounding path. Where necessary to ensure effective grounding for a metal piping system used as a grounding electrode, effective bonding shall be provided around insulated joints and sections and around any equipment that is likely to be disconnected for repairs or replacement. Bonding jumpers shall be of sufficient length to permit removal of such equipment while retaining the integrity of the grounding path. [250.68(B)]

E3611.4 Interior metal water piping. Where grounding electrode conductors and bonding jumpers are connected to interior metal water piping as a means to extend the grounding electrode conductor connection to an electrode(s), such piping shall be located not more than 5 feet (1524 mm) from the point of entry into the building.

Where interior metal water piping is used as a conductor to interconnect electrodes that are part of the grounding electrode system, such piping shall be located not more than 5 feet (1524 mm) from the point of entry into the building. [250.68(C)(1)]

E3611.5 Rebar type concrete-encased electrode. Where a grounding electrode conductor or bonding jumper is connected to a rebar extended from the location of a rebar-type concrete-encased electrode installed in accordance with Section E3608.1.2, the point of connection to the rebar extension shall be in an accessible location that is not subject to corrosion of the rebar. The rebar extension shall not be exposed to contact with the earth without corrosion protection. [250.68 (C) (3)]

E3611.6 Protection of ground clamps and fittings. Ground clamps or other fittings shall be approved for applications without protection or shall be protected from physical damage by installing them where they are not likely to be damaged or by enclosing them in metal, wood or equivalent protective coverings. (250.10)

E3611.7 Clean surfaces. Nonconductive coatings (such as paint, enamel and lacquer) on equipment to be grounded shall be removed from threads and other contact surfaces to ensure good electrical continuity or shall be connected by fittings that make such removal unnecessary. (250.12)

INTERNATIONAL CODE COUNCIL®
Copyright © 2019 ICC & NYSDOS. ALL RIGHTS RESERVED. Accessed by Lauren Gualdino (lgualdino@briarcliffmanor.org), (-) Order Number #100880972 on May 08, 2020 07:05 AM (PDT) pursuant to License Agreement with ICC & NYSDOS. No further reproduction, no

100880972

INTERNATIONAL CODE COUNCIL®
Copyright © 2019 ICC & NYSDOS. ALL RIGHTS RESERVED. Accessed by Lauren Gualdino (lgualdino@briarcliffmanor.org), (-) Order Number #100880972 on May 08, 2020 07:05 AM (PDT) pursuant to License Agreement with ICC & NYSDOS. No further reproduction, no

100880972

CHAPTER 37

BRANCH CIRCUIT AND FEEDER REQUIREMENTS

SECTION E3701
GENERAL

E3701.1 Scope. This chapter covers branch circuits and feeders and specifies the minimum required branch circuits, the allowable loads and the required overcurrent protection for branch circuits and feeders that serve less than 100 percent of the total dwelling unit load. Feeder circuits that serve 100 percent of the dwelling unit load shall be sized in accordance with the procedures in Chapter 36. [310.15(B)(7)(2)]

E3701.2 Branch-circuit and feeder ampacity. Branch-circuit and feeder conductors shall have ampacities not less than the maximum load to be served. Where a branch circuit or a feeder supplies continuous loads or any combination of continuous and noncontinuous loads, the minimum branch-circuit or feeder conductor size, before the application of any adjustment or correction factors, shall have an allowable ampacity equal to or greater than the noncontinuous load plus 125 percent of the continuous load. [210.19(A)(1)(a) and 215.2(A)(1)(a)]

Exception: The grounded conductors of feeders that are not connected to an overcurrent device shall be permitted to be sized at 100 percent of the continuous and noncontinuous load. [215.1(A)(1) Exception No. 2]

E3701.3 Selection of ampacity. Where more than one calculated or tabulated ampacity could apply for a given circuit length, the lowest value shall be used. [310.15(A)(2)]

Exception: Where different ampacities apply to portions of a circuit, the higher ampacity shall be permitted to be used where the total portion(s) of the circuit with the lower ampacity does not exceed the lesser of 10 feet (3048 mm) or 10 percent of the total circuit. [310.15(A)(2) Exception]

E3701.4 Branch circuits with more than one receptacle. Conductors of branch circuits supplying more than one receptacle for cord-and-plug-connected portable loads shall have ampacities of not less than the rating of the branch circuit. [210.19(A)(2)]

E3701.5 Multiwire branch circuits. All conductors for multiwire branch circuits shall originate from the same panelboard or similar distribution equipment. Except where all ungrounded conductors are opened simultaneously by the branch-circuit overcurrent device, multiwire branch circuits shall supply only line-to-neutral loads or only one appliance. [210.4(A) and 210.4(C)]

E3701.5.1 Disconnecting means. Each multiwire branch circuit shall be provided with a means that will simultaneously disconnect all ungrounded conductors at the point where the branch circuit originates. [210.4(B)]

E3701.5.2 Grouping. The ungrounded and grounded circuit conductors of each multiwire branch circuit shall be grouped by wire markers, cable ties or similar means in at least one location within the panelboard or other point of origination. [200.4(B)]

Exception: Grouping shall not be required where the circuit conductors enter from a cable or raceway unique to the circuit, thereby making the grouping obvious, or where the conductors pass through a box or conduit body without a loop as described in Section E3905.12.2.1 or without a splice or termination. [200.4(B) Exception 1 and 2].

SECTION E3702
BRANCH CIRCUIT RATINGS

E3702.1 Branch-circuit voltage limitations. The voltage ratings of branch circuits that supply luminaires or receptacles for cord-and-plug-connected loads of up to 1,400 volt-amperes or of less than $^1/_4$ horsepower (0.186 kW) shall be limited to a maximum rating of 120 volts, nominal, between conductors.

Branch circuits that supply cord-and-plug-connected or permanently connected utilization equipment and appliances rated at over 1,440 volt-amperes or $^1/_4$ horsepower (0.186 kW) and greater shall be rated at 120 volts or 240 volts, nominal. [210.6(A), (B), and (C)]

E3702.2 Branch-circuit ampere rating. Branch circuits shall be rated in accordance with the maximum allowable ampere rating or setting of the overcurrent protection device. The rating for other than individual branch circuits shall be 15, 20, 30, 40 and 50 amperes. Where conductors of higher ampacity are used, the ampere rating or setting of the specified over-current device shall determine the circuit rating. (210.18)

E3702.3 Fifteen- and 20-ampere branch circuits. A 15- or 20-ampere branch circuit shall be permitted to supply lighting units, or other utilization equipment, or a combination of both. The rating of any one cord-and-plug-connected utilization equipment not fastened in place shall not exceed 80 percent of the branch-circuit ampere rating. The total rating of utilization equipment fastened in place, other than luminaires, shall not exceed 50 percent of the branch-circuit ampere rating where lighting units, cord-and-plug-connected utilization equipment not fastened in place, or both, are also supplied. [210.23(A)(1) and (2)]

E3702.4 Thirty-ampere branch circuits. A 30-ampere branch circuit shall be permitted to supply fixed utilization equipment. A rating of any one cord-and-plug-connected utilization equipment shall not exceed 80 percent of the branch-circuit ampere rating. [210.23(B)]

E3702.5 Branch circuits serving multiple loads or outlets. General-purpose branch circuits shall supply lighting outlets, appliances, equipment or receptacle outlets, and combinations of such. Multioutlet branch circuits serving lighting or

INTERNATIONAL CODE COUNCIL®
Copyright © 2019 ICC & NYSDOS. ALL RIGHTS RESERVED. Accessed by Lauren Gualdino (lgualdino@briarcliffmanor.org), (-) Order Number #100880972 on May 08, 2020 07:05 AM (PDT) pursuant to License Agreement with ICC & NYSDOS. No further reproduction, no

100880972

receptacles shall be limited to a maximum branch-circuit rating of 20 amperes. [210.23(A), (B), and (C)]

E3702.6 Branch circuits serving a single motor. Branch-circuit conductors supplying a single motor shall have an ampacity not less than 125 percent of the motor full-load current rating. [430.22(A)]

E3702.7 Branch circuits serving motor-operated and combination loads. For circuits supplying loads consisting of motor-operated utilization equipment that is fastened in place and that has a motor larger than $^1/_8$ horsepower (0.093 kW) in combination with other loads, the total calculated load shall be based on 125 percent of the largest motor load plus the sum of the other loads. [220.18(A)]

E3702.8 Branch-circuit inductive and LED lighting loads. For circuits supplying luminaires having ballasts or LED drivers, the calculated load shall be based on the total ampere ratings of such units and not on the total watts of the lamps. [220.18(B)]

E3702.9 Branch-circuit load for ranges and cooking appliances. It shall be permissible to calculate the branch-circuit load for one range in accordance with Table E3704.2(2). The branch-circuit load for one wall-mounted oven or one counter-mounted cooking unit shall be the nameplate rating of the appliance. The branch-circuit load for a counter-mounted cooking unit and not more than two wall-mounted ovens all supplied from a single branch circuit and located in the same room shall be calculated by adding the nameplate ratings of the individual appliances and treating the total as equivalent to one range. (220.55 Note 4)

E3702.9.1 Minimum branch circuit for ranges. Ranges with a rating of 8.75 kVA or more shall be supplied by a branch circuit having a minimum rating of 40 amperes. [210.19(A)(3)]

E3702.10 Branch circuits serving heating loads. Electric space-heating and water-heating appliances shall be considered to be continuous loads. Branch circuits supplying two or more outlets for fixed electric space-heating equipment shall be rated not over 30 amperes. [424.3(A)]

E3702.11 Branch circuits for air-conditioning and heat pump equipment. The ampacity of the conductors supplying multimotor and combination load equipment shall be not less than the minimum circuit ampacity marked on the equipment. The branch-circuit overcurrent device rating shall be the size and type marked on the appliance. [440.4(B), 440.35]

E3702.12 Branch circuits serving room air conditioners. A room air conditioner shall be considered as a single motor unit in determining its branch-circuit requirements where all the following conditions are met:

1. It is cord- and attachment plug-connected.
2. The rating is not more than 40 amperes and 250 volts; single phase.
3. Total rated-load current is shown on the room air-conditioner nameplate rather than individual motor currents.
4. The rating of the branch-circuit short-circuit and ground-fault protective device does not exceed the ampacity of the branch-circuit conductors, or the rating of the branch-circuit conductors, or the rating of the receptacle, whichever is less. [440.62(A)]

E3702.12.1 Where no other loads are supplied. The total marked rating of a cord- and attachment plug-connected room air conditioner shall not exceed 80 percent of the rating of a branch circuit where no other appliances are also supplied. [440.62(B)]

E3702.12.2 Where lighting units or other appliances are also supplied. The total marked rating of a cord- and attachment plug-connected room air conditioner shall not exceed 50 percent of the rating of a branch circuit where lighting or other appliances are also supplied. Where the circuitry is interlocked to prevent simultaneous operation of the room air conditioner and energization of other outlets on the same branch circuit, a cord- and attachment plug-connected room air conditioner shall not exceed 80 percent of the branch-circuit rating. [440.62(C)]

E3702.13 Electric vehicle branch circuit. Outlets installed for the purpose of charging electric vehicles shall be supplied by an individual branch circuit. Each circuit shall not supply other outlets. (625.40)

E3702.14 Branch-circuit requirement—summary. The requirements for circuits having two or more outlets, or receptacles, other than the receptacle circuits of Sections E3703.2, E3703.3 and E3703.4, are summarized in Table E3702.14. Branch circuits in dwelling units shall supply only loads within that dwelling unit or loads associated only with that dwelling unit. Branch circuits installed for the purpose of lighting, central alarm, signal, communications or other purposes for public or common areas of a two-family dwelling shall not be supplied from equipment that supplies an individual dwelling unit. (210.24 and 210.25)

TABLE E3702.14 (Table 210.24)
BRANCH-CIRCUIT REQUIREMENTS-SUMMARY[a, b]

	CIRCUIT RATING		
	15 amp	20 amp	30 amp
Conductors: Minimum size (AWG) circuit conductors	14	12	10
Maximum overcurrent-protection device rating Ampere rating	15	20	30
Outlet devices: Lampholders permitted Receptacle rating (amperes)	Any type 15 maximum	Any type 15 or 20	N/A 30
Maximum load (amperes)	15	20	30

a. These gages are for copper conductors.
b. N/A = Not Allowed.

SECTION E3703
REQUIRED BRANCH CIRCUITS

E3703.1 Branch circuits for heating. Central heating equipment other than fixed electric space heating shall be supplied by an individual branch circuit. Permanently connected air-conditioning equipment, and auxiliary equipment directly associated with the central heating equipment such as pumps, motorized valves, humidifiers and electrostatic air cleaners,

INTERNATIONAL CODE COUNCIL®
Copyright © 2019 ICC & NYSDOS. ALL RIGHTS RESERVED. Accessed by Lauren Gualdino (lgualdino@briarcliffmanor.org), (-) Order Number #100880972 on May 08, 2020 07:05 AM (PDT) pursuant to License Agreement with ICC & NYSDOS. No further reproduction, no

100880972

shall not be prohibited from connecting to the same branch circuit as the central heating equipment. (422.12 and 422.12 Exceptions No. 1 and No. 2)

E3703.2 Kitchen and dining area receptacles. A minimum of two 20-ampere-rated branch circuits shall be provided to serve all wall and floor receptacle outlets located in the kitchen, pantry, breakfast area, dining area or similar area of a dwelling. The kitchen countertop receptacles shall be served by a minimum of two 20-ampere-rated branch circuits, either or both of which shall also be permitted to supply other receptacle outlets in the same kitchen, pantry, breakfast and dining area including receptacle outlets for refrigeration appliances. [210.11(C)(1) and 210.52(B)(1) and (B)(2)]

Exception: The receptacle outlet for refrigeration appliances shall be permitted to be supplied from an individual branch circuit rated 15 amperes or greater. [210.52(B)(1) Exception No. 2]

E3703.3 Laundry circuit. A minimum of one 20-ampere-rated branch circuit shall be provided for receptacles located in the laundry area and shall serve only receptacle outlets located in the laundry area. [210.11(C)(2)]

E3703.4 Bathroom branch circuits. A minimum of one 20-ampere branch circuit shall be provided to supply bathroom receptacle outlet(s). Such circuits shall have no other outlets. [210.11(C)(3)]

Exception: Where the 20-ampere circuit supplies a single bathroom, outlets for other equipment within the same bathroom shall be permitted to be supplied in accordance with Section E3702. [210.11(C)(3) Exception]

E3703.5 Garage branch circuits. In addition to the number of branch circuits required by other parts of this section, not less than one 120-volt, 20-ampere branch circuit shall be installed to supply receptacle outlets in attached garages and in detached garages with electric power. This circuit shall not have other outlets.

Exception: This circuit shall be permitted to supply readily accessible outdoor receptacle outlets.

E3703.6 Number of branch circuits. The minimum number of branch circuits shall be determined from the total calculated load and the size or rating of the circuits used. The number of circuits shall be sufficient to supply the load served. In no case shall the load on any circuit exceed the maximum specified by Section E3702. [210.11(A)]

E3703.7 Branch-circuit load proportioning. Where the branch-circuit load is calculated on a volt-amperes-per-square-foot (m^2) basis, the wiring system, up to and including the branch-circuit panelboard(s), shall have the capacity to serve not less than the calculated load. This load shall be evenly proportioned among multioutlet branch circuits within the panelboard(s). Branch-circuit overcurrent devices and circuits shall only be required to be installed to serve the connected load. [210.11(B)]

SECTION E3704
FEEDER REQUIREMENTS

E3704.1 Conductor size. Feeder conductors that do not serve 100 percent of the dwelling unit load and branch-circuit conductors shall be of a size sufficient to carry the load as determined by this chapter. Feeder conductors shall not be required to be larger than the service-entrance conductors that supply the dwelling unit. The load for feeder conductors that serve as the main power feeder to a dwelling unit shall be determined as specified in Chapter 36 for services. [310.15(B)(7)(2) and (3)]

E3704.2 Feeder loads. The minimum load in volt-amperes shall be calculated in accordance with the load calculation procedure prescribed in Table E3704.2(1). The associated table demand factors shall be applied to the actual load to determine the minimum load for feeders. (220.40)

E3704.3 Feeder neutral load. The feeder neutral load shall be the maximum unbalance of the load determined in accordance with this chapter. The maximum unbalanced load shall be the maximum net calculated load between the neutral and any one ungrounded conductor. For a feeder or service supplying electric ranges, wall-mounted ovens, counter-mounted cooking units and electric dryers, the maximum unbalanced load shall be considered as 70 percent of the load on the ungrounded conductors. [220.61(A) and (B)]

E3704.4 Lighting and general use receptacle load. A unit load of not less than 3 volt-amperes shall constitute the minimum lighting and general use receptacle load for each square foot of floor area (33 VA for each square meter of floor area). The floor area for each floor shall be calculated from the outside dimensions of the building. The calculated floor area shall not include open porches, garages, or unused or unfinished spaces not adaptable for future use. [220.12, Table 220.12, and 220.14(J)]

E3704.5 Ampacity and calculated loads. The calculated load of a feeder shall be not less than the sum of the loads on the branch circuits supplied, as determined by Section E3704, after any applicable demand factors permitted by Section E3704 have been applied. (220.40)

E3704.6 Equipment grounding conductor. Where a feeder supplies branch circuits in which equipment grounding conductors are required, the feeder shall include or provide an equipment grounding conductor that is one or more or a combination of the types specified in Section E3908.8, to which the equipment grounding conductors of the branch circuits shall be connected. Where the feeder supplies a separate building or structure, the requirements of Section E3607.3.1 shall apply. (215.6)

INTERNATIONAL CODE COUNCIL®
Copyright © 2019 ICC & NYSDOS. ALL RIGHTS RESERVED. Accessed by Lauren Gualdino (lgualdino@briarcliffmanor.org), (-) Order Number #100880972 on May 08, 2020 07:05 AM (PDT) pursuant to License Agreement with ICC & NYSDOS. No further reproduction, no

100880972

TABLE E3704.2(1)
(Table 220.12, 220.14, Table 220.42, 220.50, 220.51, 220.52, 220.53, 220.54, 220.55, and 220.60)
FEEDER LOAD CALCULATION

LOAD CALCULATION PROCEDURE	APPLIED DEMAND FACTOR
Lighting and receptacles: A unit load of not less than 3 VA per square foot of total floor area shall constitute the lighting and 120-volt, 15- and 20-ampere general use receptacle load. 1,500 VA shall be added for each 20-ampere branch circuit serving receptacles in the kitchen, dining room, pantry, breakfast area and laundry area.	100 percent of first 3,000 VA or less and 35 percent of that in excess of 3,000 VA.
Plus	
Appliances and motors: The nameplate rating load of all fastened-in-place appliances other than dryers, ranges, air-conditioning and space-heating equipment.	100 percent of load for three or less appliances. 75 percent of load for four or more appliances.
Plus	
Fixed motors: Full-load current of motors plus 25 percent of the full load current of the largest motor.	
Plus	
Electric clothes dryer: The dryer load shall be 5,000 VA for each dryer circuit or the nameplate rating load of each dryer, whichever is greater.	
Plus	
Cooking appliances: The nameplate rating of ranges, wall-mounted ovens, counter-mounted cooking units and other cooking appliances rated in excess of 1.75 kVA shall be summed.	Demand factors shall be as allowed by Table E3704.2(2).
Plus the largest of either the heating or cooling load	
Largest of the following two selections: 1.100 percent of the nameplate rating(s) of the air conditioning and cooling, including heat pump compressors. 2.100 percent of the fixed electric space heating.	

For SI: 1 square foot = 0.0929 m^2.

TABLE E3704.2(2) (220.55 and Table 220.55)
DEMAND LOADS FOR ELECTRIC RANGES, WALL-MOUNTED OVENS, COUNTER-MOUNTED COOKING UNITS AND OTHER COOKING APPLIANCES OVER $1^3/_4$ kVA RATING[a, b]

NUMBER OF APPLIANCES	MAXIMUM DEMAND[b, c]	DEMAND FACTORS (percent)[d]	
	Column A maximum 12 kVA rating	Column B less than $3^1/_2$ kVA rating	Column C $3^1/_2$ to $8^3/_4$ kVA rating
1	8 kVA	80	80
2	11 kVA	75	65

a. Column A shall be used in all cases except as provided for in Footnote d.

b. For ranges all having the same rating and individually rated more than 12 kVA but not more than 27 kVA, the maximum demand in Column A shall be increased 5 percent for each additional kVA of rating or major fraction thereof by which the rating of individual ranges exceeds 12 kVA.

c. For ranges of unequal ratings and individually rated more than 8.75 kVA, but none exceeding 27 kVA, an average value of rating shall be computed by adding together the ratings of all ranges to obtain the total connected load (using 12 kVA for any ranges rated less than 12 kVA) and dividing by the total number of ranges; and then the maximum demand in Column A shall be increased 5 percent for each kVA or major fraction thereof by which this average value exceeds 12 kVA.

d. Over 1.75 kVA through 8.75 kVA. As an alternative to the method provided in Column A, the nameplate ratings of all ranges rated more than 1.75 kVA but not more than 8.75 kVA shall be added and the sum shall be multiplied by the demand factor specified in Column B or C for the given number of appliances.

SECTION E3705
CONDUCTOR SIZING AND OVERCURRENT PROTECTION

E3705.1 General. Ampacities for conductors shall be determined based in accordance with Table E3705.1 and Sections E3705.2 and E3705.3. [310.15(A)]

E3705.2 Correction factor for ambient temperatures. For ambient temperatures other than 30°C (86°F), multiply the allowable ampacities specified in Table E3705.1 by the appropriate correction factor shown in Table E3705.2. [310.15(B)(2)]

E3705.3 Adjustment factor for conductor proximity. Where the number of current-carrying conductors in a raceway or cable exceeds three, or where single conductors or multiconductor cables are stacked or bundled for distances greater than 24 inches (610 mm) without maintaining spacing and are not installed in raceways, the allowable ampacity of each conductor shall be reduced as shown in Table E3705.3. [310.15(B)(3)]

Exceptions:

1. Adjustment factors shall not apply to conductors in raceways having a length not exceeding 24 inches (610 mm). [310.15(B)(3)(2)]
2. Adjustment factors shall not apply to underground conductors entering or leaving an outdoor trench if those conductors have physical protection in the form of rigid metal conduit, intermediate metal conduit, or rigid nonmetallic conduit having a length not exceeding 10 feet (3048 mm) and the number of conductors does not exceed four. [310.15(B)(3)(3)]

INTERNATIONAL CODE COUNCIL®
Copyright © 2019 ICC & NYSDOS. ALL RIGHTS RESERVED. Accessed by Lauren Gualdino (lgualdino@briarcliffmanor.org), (-) Order Number #100880972 on May 08, 2020 07:05 AM (PDT) pursuant to License Agreement with ICC & NYSDOS. No further reproduction, no

100880972

3. Adjustment factors shall not apply to type AC cable or to type MC cable without an overall outer jacket meeting all of the following conditions:

   3.1. Each cable has not more than three current-carrying conductors.

   3.2. The conductors are 12 AWG copper.

   3.3. Not more than 20 current-carrying conductors are bundled, stacked or supported on bridle rings. [310.15(B)(3)(4)]

4. An adjustment factor of 60 percent shall be applied to Type AC cable and Type MC cable where all of the following conditions apply:

   4.1. The cables do not have an overall outer jacket.

   4.2. The number of current-carrying conductors exceeds 20.

   4.3. The cables are stacked or bundled longer than 24 inches (607 mm) without spacing being maintained. [310.15(B)(3)(4) Exception]

E3705.4 Temperature limitations. The temperature rating associated with the ampacity of a conductor shall be so selected and coordinated to not exceed the lowest temperature rating of any connected termination, conductor or device. Conductors with temperature ratings higher than specified for terminations shall be permitted to be used for ampacity adjustment, correction, or both. Except where the equipment is marked otherwise, conductor ampacities used in determining equipment termination provisions shall be based on Table E3705.1. [110.14(C)]

E3705.4.1 Conductors rated 60°C. Except where the equipment is marked otherwise, termination provisions of equipment for circuits rated 100 amperes or less, or marked for 14 AWG through 1 AWG conductors, shall be used only for one of the following:

1. Conductors rated 60°C (140°F);
2. Conductors with higher temperature ratings, provided that the ampacity of such conductors is determined based on the 60°C (140°F) ampacity of the conductor size used;
3. Conductors with higher temperature ratings where the equipment is listed and identified for use with such conductors; or

TABLE E3705.1
ALLOWABLE AMPACITIES

CONDUCTOR SIZE	CONDUCTOR TEMPERATURE RATING						CONDUCTOR SIZE
	60°C	75°C	90°C	60°C	75°C	90°C	
AWG kcmil	Types TW, UF	Types RHW, THHW, THW, THWN, USE, XHHW	Types RHW-2, THHN, THHW, THW-2, THWN-2, XHHW, XHHW-2, USE-2	Types TW, UF	Types RHW, THHW, THW, THWN, USE, XHHW	Types RHW-2, THHN, THHW, THW-2, THWN-2, XHHW, XHHW-2, USE-2	AWG kcmil
	Copper			Aluminum or copper-clad aluminum			
14[a]	15	20	25	—	—	—	—
12[a]	20	25	30	15	20	25	12[a]
10[a]	30	35	40	25	30	35	10[a]
8	40	50	55	35	40	45	8
6	55	65	75	40	50	55	6
4	70	85	95	55	65	75	4
3	85	100	115	65	75	85	3
2	95	115	130	75	90	100	2
1	110	130	145	85	100	115	1
1/0	125	150	170	100	120	135	1/0
2/0	145	175	195	115	135	150	2/0
3/0	165	200	225	130	155	175	3/0
4/0	195	230	260	150	180	205	4/0
250	215	255	290	170	205	230	250
300	240	285	320	195	230	260	300
350	260	310	350	210	250	280	350
400	280	335	380	225	270	305	400
500	320	380	430	260	310	350	500
600	350	420	475	285	340	385	600
700	385	460	520	315	375	425	700
750	400	475	535	320	385	435	750
800	410	490	555	330	395	445	800
900	435	520	585	355	425	480	900

For SI: °C = [(°F) - 32]/1.8.

a. See Table E3705.5.3 for conductor overcurrent protection limitations.

INTERNATIONAL CODE COUNCIL®
Copyright © 2019 ICC & NYSDOS. ALL RIGHTS RESERVED. Accessed by Lauren Gualdino (lgualdino@briarcliffmanor.org), (-) Order Number #100880972 on May 08, 2020 07:05 AM (PDT) pursuant to License Agreement with ICC & NYSDOS. No further reproduction, no

100880972

4. For motors marked with design letters B, C, or D conductors having an insulation rating of 75°C (167°F) or higher shall be permitted to be used provided that the ampacity of such conductors does not exceed the 75°C (167°F) ampacity. [110.14(C)(1)(a)]

E3705.4.2 Conductors rated 75°C. Termination provisions of equipment for circuits rated over 100 amperes, or marked for conductors larger than 1 AWG, shall be used only for:

1. Conductors rated 75°C (167°F).
2. Conductors with higher temperature ratings provided that the ampacity of such conductors does not exceed the 75°C (167°F) ampacity of the conductor size used, or provided that the equipment is listed and identified for use with such conductors. [110.14(C)(1)(b)]

E3705.4.3 Separately installed pressure connectors. Separately installed pressure connectors shall be used with conductors at the ampacities not exceeding the ampacity at the listed and identified temperature rating of the connector. [110.14(C)(2)]

E3705.4.4 Conductors of Type NM cable. Conductors in NM cable assemblies shall be rated at 90°C (194°F). Types NM, NMC, and NMS cable identified by the markings NM-B, NMC-B, and NMS-B meet this requirement. The allowable ampacity of Types NM, NMC, and NMS cable shall not exceed that of 60°C (140°F) rated conductors and shall comply with Section E3705.1 and Table E3705.5.3. The 90°C (194°F) rating shall be permitted to be used for ampacity adjustment and calculations provided that the final corrected or adjusted ampacity does not exceed that for a 60°C (140°F) rated conductor. Where more than two NM cables containing two or more current-carrying conductors are installed, without maintaining spacing between the cables, through the same opening in wood framing that is to be sealed with thermal insulation, caulk or sealing foam, the allowable ampacity of each conductor shall be adjusted in accordance with Table E3705.3. Where more than two NM cables containing two or more current-carrying conductors are installed in contact with thermal insulation without maintaining spacing between cables, the allowable ampacity of each conductor shall be adjusted in accordance with Table E3705.3. (334.80 and 334.112)

E3705.4.5 Conductors of Type SE cable. Where used as a branch circuit or feeder wiring method within the interior of a building and installed in thermal insulation, the ampacity of the conductors in Type SE cable assemblies with ungrounded conductor sizes 10 AWG and smaller shall be in accordance with the 60°C (140°F) conductor temperature rating. The maximum conductor temperature rating shall be permitted to be used for ampacity adjustment and correction purposes, provided that the final derated ampacity does not exceed that for a 60°C (140°F) rated conductor. [338.10(B)(4)(a)]

TABLE E3705.3 [Table 310.15(B)(3)(a)]
CONDUCTOR PROXIMITY ADJUSTMENT FACTORS

NUMBER OF CURRENT-CARRYING CONDUCTORS IN CABLE OR RACEWAY	PERCENT OF VALUES IN TABLE E3705.1
4-6	80
7-9	70
10-20	50
21-30	45
31-40	40
41 and above	35

TABLE E3705.2 [Table 310.15(B)(2)(a)]
AMBIENT TEMPERATURE CORRECTION FACTORS

For ambient temperatures other than 30°C (86°F), multiply the allowable ampacities specified in the ampacity tables by the appropriate correction factor shown below.				
Ambient Temperature (°C)	Temperature Rating of Conductor			Ambient Temperature (°F)
	60°C	75°C	90°C	
10 or less	1.29	1.20	1.15	50 or less
11-15	1.22	1.15	1.12	51-59
16-20	1.15	1.11	1.08	60-68
21-25	1.08	1.05	1.04	69-77
26-30	1.00	1.00	1.00	78-86
31-35	0.91	0.94	0.96	87-95
36-40	0.82	0.88	0.91	96-104
41-45	0.71	0.82	0.87	105-113
46-50	0.58	0.75	0.82	114-122
51-55	0.41	0.67	0.76	123-131
56-60	—	0.58	0.71	132-140
61-65	—	0.47	0.65	141-149
66-70	—	0.33	0.58	150-158
71-75	—	—	0.50	159-167
76-80	—	—	0.41	168-176
81-85	—	—	0.29	177-185

For SI: 1 °C = [(°F) - 32]/1.8.

INTERNATIONAL CODE COUNCIL®
Copyright © 2019 ICC & NYSDOS. ALL RIGHTS RESERVED. Accessed by Lauren Gualdino (lgualdino@briarcliffmanor.org), (-) Order Number #100880972 on May 08, 2020 07:05 AM (PDT) pursuant to License Agreement with ICC & NYSDOS. No further reproduction, no

100880972

E3705.5 Overcurrent protection required. All ungrounded branch-circuit and feeder conductors shall be protected against overcurrent by an overcurrent device installed at the point where the conductors receive their supply. Overcurrent devices shall not be connected in series with a grounded conductor. Overcurrent protection and allowable loads for branch circuits and for feeders that do not supply the entire load associated with a one-family dwelling or the entire load associated with an individual dwelling unit in a two-family dwelling shall be in accordance with this chapter.

Branch-circuit conductors and equipment shall be protected by overcurrent protective devices having a rating or setting not exceeding the allowable ampacity specified in Table E3705.1 and Sections E3705.2, E3705.3 and E3705.4 except where otherwise permitted or required in Sections E3705.5.1 through E3705.5.3. [240.4, 240.21, and 310.15(B)(7)(2)]

E3705.5.1 Cords. Cords shall be protected in accordance with Section E3909.2. [240.5(B)]

E3705.5.2 Overcurrent devices of the next higher rating. The next higher standard overcurrent device rating, above the ampacity of the conductors being protected, shall be permitted to be used, provided that all of the following conditions are met:

1. The conductors being protected are not part of a branch circuit supplying more than one receptacle for cord- and plug-connected portable loads.
2. The ampacity of conductors does not correspond with the standard ampere rating of a fuse or a circuit breaker without overload trip adjustments above its rating (but that shall be permitted to have other trip or rating adjustments).
3. The next higher standard device rating does not exceed 400 amperes. [240.4(B)]

E3705.5.3 Small conductors. Except as specifically permitted by Section E3705.5.4, the rating of overcurrent protection devices shall not exceed the ratings shown in Table E3705.5.3 for the conductors specified therein. [240.4(D)]

TABLE E3705.5.3 [240.4(D)]
OVERCURRENT-PROTECTION RATING

COPPER		ALUMINUM OR COPPER-CLAD ALUMINUM	
Size (AWG)	Maximum overcurrent-protection-device rating[a] (amps)	Size (AWG)	Maximum overcurrent-protection-device rating[a] (amps)
14	15	12	15
12	20	10	25
10	30	8	30

a. The maximum overcurrent-protection-device rating shall not exceed the conductor allowable ampacity determined by the application of the correction and adjustment factors in accordance with Sections E3705.2 and E3705.3.

E3705.5.4 Air-conditioning and heat pump equipment. Air-conditioning and heat pump equipment circuit conductors shall be permitted to be protected against overcurrent in accordance with Section E3702.11. [240.4(G)]

E3705.6 Fuses and fixed trip circuit breakers. The standard ampere ratings for fuses and inverse time circuit breakers shall be considered to be 15, 20, 25, 30, 35, 40, 45, 50, 60, 70, 80, 90, 100, 110, 125, 150, 175, 200, 225, 250, 300, 350 and 400 amperes. (240.6)

E3705.7 Location of overcurrent devices in or on premises. Circuit breakers and switches containing fuses shall:

1. Be readily accessible. [240.24(A)]
2. Not be located where they will be exposed to physical damage. [240.24(C)]
3. Not be located where they will be in the vicinity of easily ignitable material such as in clothes closets. [240.24(D)]
4. Not be located in bathrooms. [240.24(E)]
5. Not be located over steps of a stairway.
6. Be installed so that the center of the grip of the operating handle of the switch or circuit breaker, when in its highest position, is not more than 6 feet 7 inches (2007 mm) above the floor or working platform. [240.24(A)]

Exceptions:

1. This section shall not apply to supplementary overcurrent protection that is integral to utilization equipment. [240.24(A)(2)]
2. Overcurrent devices installed adjacent to the utilization equipment that they supply shall be permitted to be accessible by portable means. [240.24(A)(4)]

E3705.8 Ready access for occupants. Each occupant shall have ready access to all overcurrent devices protecting the conductors supplying that occupancy. [240.24(B)]

E3705.9 Enclosures for overcurrent devices. Overcurrent devices shall be enclosed in cabinets, cutout boxes, or equipment assemblies. The operating handle of a circuit breaker shall be permitted to be accessible without opening a door or cover. [240.30(A) and (B)]

SECTION E3706
PANELBOARDS

E3706.1 Panelboard rating. All panelboards shall have a rating not less than that of the minimum service or feeder capacity required for the calculated load. (408.30)

E3706.2 Panelboard circuit identification. All circuits and circuit modifications shall be legibly identified as to their clear, evident, and specific purpose or use. The identification shall include an approved degree of detail that allows each circuit to be distinguished from all others. Spare positions that contain unused overcurrent devices or switches shall be described accordingly. The identification shall be included in a circuit directory located on the face of the panelboard enclosure or inside the panel door. Circuits shall not be described in a manner that depends on transient conditions of occupancy. [408.4(A)]

INTERNATIONAL CODE COUNCIL®
Copyright © 2019 ICC & NYSDOS. ALL RIGHTS RESERVED. Accessed by Lauren Gualdino (lgualdino@briarcliffmanor.org), (-) Order Number #100880972 on May 08, 2020 07:05 AM (PDT) pursuant to License Agreement with ICC & NYSDOS. No further reproduction, no

100880972

E3706.3 Panelboard overcurrent protection. In addition to the requirement of Section E3706.1, a panelboard shall be protected by an overcurrent protective device having a rating not greater than that of the panelboard. Such overcurrent protective device shall be located within or at any point on the supply side of the panelboard. (408.36)

E3706.4 Grounded conductor terminations. Each grounded conductor shall terminate within the panelboard on an individual terminal that is not also used for another conductor, except that grounded conductors of circuits with parallel conductors shall be permitted to terminate on a single terminal where the terminal is identified for connection of more than one conductor. (408.41 and 408.41 Exception)

E3706.5 Back-fed devices. Plug-in-type overcurrent protection devices or plug-in-type main lug assemblies that are back-fed and used to terminate field-installed ungrounded supply conductors shall be secured in place by an additional fastener that requires other than a pull to release the device from the mounting means on the panel. [408.36(D)]

INTERNATIONAL CODE COUNCIL®
Copyright © 2019 ICC & NYSDOS. ALL RIGHTS RESERVED. Accessed by Lauren Gualdino (lgualdino@briarcliffmanor.org), (-) Order Number #100880972 on May 08, 2020 07:05 AM (PDT) pursuant to License Agreement with ICC & NYSDOS. No further reproduction, no

100880972

CHAPTER 38

WIRING METHODS

SECTION E3801
GENERAL REQUIREMENTS

E3801.1 Scope. This chapter covers the wiring methods for services, feeders and branch circuits for electrical power and distribution. (300.1)

E3801.2 Allowable wiring methods. The allowable wiring methods for electrical installations shall be those listed in Table E3801.2. Single conductors shall be used only where part of one of the recognized wiring methods listed in Table E3801.2. As used in this code, abbreviations of the wiring-method types shall be as indicated in Table E3801.2. [110.8, 300.3(A)]

TABLE E3801.2
ALLOWABLE WIRING METHODS

ALLOWABLE WIRING METHOD	DESIGNATED ABBREVIATION
Armored cable	AC
Electrical metallic tubing	EMT
Electrical nonmetallic tubing	ENT
Flexible metal conduit	FMC
Intermediate metal conduit	IMC
Liquidtight flexible conduit	LFC
Metal-clad cable	MC
Nonmetallic sheathed cable	NM
Rigid metallic conduit	RMC
Rigid polyvinyl chloride conduit (Type PVC)	RNC
Reinforced Thermosetting Resin Conduit (Type RTRC)	RTRC
Service entrance cable	SE
Surface raceways	SR
Underground feeder cable	UF
Underground service cable	USE

E3801.3 Circuit conductors. All conductors of a circuit, including equipment grounding conductors and bonding conductors, shall be contained in the same raceway, trench, cable or cord. [300.3(B)]

E3801.4 Wiring method applications. Wiring methods shall be applied in accordance with Table E3801.4. (Chapter 3 and 300.2)

SECTION E3802
ABOVE-GROUND INSTALLATION REQUIREMENTS

E3802.1 Installation and support requirements. Wiring methods shall be installed and supported in accordance with Table E3802.1. (Chapter 3 and 300.11)

E3802.2 Cables in accessible attics. Cables in attics or roof spaces provided with access shall be installed as specified in Sections E3802.2.1 and E3802.2.2. (320.3 and 334.23)

E3802.2.1 Across structural members. Where run across the top of floor joists, or run within 7 feet (2134 mm) of floor or floor joists across the face of rafters or studding, in attics and roof spaces that are provided with access, the cable shall be protected by substantial guard strips that are at least as high as the cable. Where such spaces are not provided with access by permanent stairs or ladders, protection shall only be required within 6 feet (1829 mm) of the nearest edge of the attic entrance. [320.23(A) and 334.23]

E3802.2.2 Cable installed through or parallel to framing members. Where cables are installed through or parallel to the sides of rafters, studs or floor joists, guard strips and running boards shall not be required, and the installation shall comply with Table E3802.1. [320.23(B) and 334.23]

E3802.3 Exposed cable. In exposed work, except as provided for in Sections E3802.2 and E3802.4, cable assemblies shall be installed as specified in Sections E3802.3.1 and E3802.3.2. (320.15, 330.15 and 334.15)

E3802.3.1 Surface installation. Cables shall closely follow the surface of the building finish or running boards. [334.15(A)]

E3802.3.2 Protection from physical damage. Where subject to physical damage, cables shall be protected by rigid metal conduit, intermediate metal conduit, electrical metallic tubing, Schedule 80 PVC conduit, RTRC-XW or other approved means. Where passing through a floor, the cable shall be enclosed in rigid metal conduit, intermediate metal conduit, electrical metallic tubing, Schedule 80 PVC conduit RTRC-XW or other approved means extending not less than 6 inches (152 mm) above the floor. [334.15(B)]

E3802.3.3 Locations exposed to direct sunlight. Insulated conductors and cables used where exposed to direct rays of the sun shall be listed or listed and marked, as being "sunlight resistant," or shall be covered with insulating material, such as tape or sleeving, that is listed or listed and marked as being "sunlight resistant." [310.10(D)]

E3802.4 In unfinished basements and crawl spaces. Where type NM or SE cable is run at angles with joists in unfinished basements and crawl spaces, cable assemblies containing two or more conductors of sizes 6 AWG and larger and assemblies containing three or more conductors of sizes 8 AWG and larger shall not require additional protection where attached directly to the bottom of the joists. Smaller cables shall be run either through bored holes in joists or on running boards. Type NM or SE cable installed on the wall of an unfinished basement shall be permitted to be installed in a listed conduit or tubing or shall be protected in accordance with Table E3802.1. Conduit or tubing shall be provided with a suitable insulating bushing or adapter at the point where the cable enters the raceway. The sheath of the Type NM or SE cable shall extend through the conduit or tubing and into the

INTERNATIONAL CODE COUNCIL®
Copyright © 2019 ICC & NYSDOS. ALL RIGHTS RESERVED. Accessed by Lauren Gualdino (lgualdino@briarcliffmanor.org), (-) Order Number #100880972 on May 08, 2020 07:05 AM (PDT) pursuant to License Agreement with ICC & NYSDOS. No further reproduction, no

100880972

outlet or device box not less than $^1/_4$ inch (6.4 mm). The cable shall be secured within 12 inches (305 mm) of the point where the cable enters the conduit or tubing. Metal conduit, tubing, and metal outlet boxes shall be connected to an equipment grounding conductor complying with Section E3908.13. [334.15(C)]

E3802.5 Bends. Bends shall be made so as not to damage the wiring method or reduce the internal diameter of raceways.

For types NM and SE cable, bends shall be so made, and other handling shall be such that the cable will not be damaged and the radius of the curve of the inner edge of any bend shall be not less than five times the diameter of the cable. (334.24 and 338.24)

E3802.6 Cable-securing means. Cables shall be supported and secured by staples; cable ties listed and identified for securement and support; or straps, hangers or similar fittings designed and installed so as not to damage the cable. [320.30 (A), 330.30 (A), 334.30, 338.10 (B) (4), 340.10 (4)]

E3802.7 Raceways exposed to different temperatures. Where portions of a raceway or sleeve are known to be subjected to different temperatures and where condensation is known to be a problem, as in cold storage areas of buildings or where passing from the interior to the exterior of a building, the raceway or sleeve shall be filled with an approved material to prevent the circulation of warm air to a colder section of the raceway or sleeve. [300.7(A)]

TABLE E3801.4 (Chapter 3 and 300.2)
ALLOWABLE APPLICATIONS FOR WIRING METHODS[a, b, c, d, e, f, g, h, i, j, k]

ALLOWABLE APPLICATIONS (application allowed where marked with an "A")	AC	EMT	ENT	FMC	IMC RMC RNC RTRC	LFC[a, g]	MC	NM	SR	SE	UF	USE
Services	—	A	A[h]	A[i]	A	A[i]	A	—	—	A	—	A
Feeders	A	A	A	A	A	A	A	A	—	A[b]	A	A[b]
Branch circuits	A	A	A	A	A	A	A	A	A	A[c]	A	—
Inside a building	A	A	A	A	A	A	A	A	A	A	A	—
Wet locations exposed to sunlight	—	A	A[h]	—	A	A	A	—	—	A	A[e]	A[e]
Damp locations	—	A	A	A[d]	A	A	A	—	—	A	A	A
Embedded in noncinder concrete in dry location	—	A	A	—	A	A[j]	—	—	—	—	—	—
In noncinder concrete in contact with grade	—	A[f]	A	—	A[f]	A[j]	—	—	—	—	—	—
Embedded in plaster not exposed to dampness	A	A	A	A	A	A	A	—	—	A	A	—
Embedded in masonry	—	A	A	—	A[f]	A	A	—	—	—	—	—
In masonry voids and cells exposed to dampness or below grade line	—	A[f]	A	A[d]	A[f]	A	A	—	—	A	A	—
Fished in masonry voids	A	—	—	A	—	A	A	A	—	A	A	—
In masonry voids and cells not exposed to dampness	A	A	A	A	A	A	A	A	—	A	A	—
Run exposed	A	A	A	A	A	A	A	A	A	A	A	—
Run exposed and subject to physical damage	—	—	—	—	A[g]	—	—	—	—	—	—	—
For direct burial	—	A[f]	—	—	A[f]	A	A[f]	—	—	—	A	A

For SI: 1 foot = 304.8 mm.

a. Liquid-tight flexible nonmetallic conduit without integral reinforcement within the conduit wall shall not exceed 6 feet in length.
b. Type USE cable shall not be used inside buildings.
c. The grounded conductor shall be insulated.
d. Conductors shall be a type approved for wet locations and the installation shall prevent water from entering other raceways.
e. Shall be listed as "Sunlight Resistant."
f. Metal raceways shall be protected from corrosion and approved for the application. Aluminum RMC requires approved supplementary corrosion protection.
g. RNC shall be Schedule 80. RTRC shall be RTRC-XW.
h. Shall be listed as "Sunlight Resistant" where exposed to the direct rays of the sun.
i. Conduit shall not exceed 6 feet in length.
j. Liquid-tight flexible nonmetallic conduit is permitted to be encased in concrete where listed for direct burial and only straight connectors listed for use with LFNC are used.
k. In wet locations under any of the following conditions:
   1. The metallic covering is impervious to moisture.
   2. A lead sheath or moisture-impervious jacket is provided under the metal covering.
   3. The insulated conductors under the metallic covering are listed for use in wet locations and a corrosion-resistant jacket is provided over the metallic sheath.

INTERNATIONAL CODE COUNCIL®
Copyright © 2019 ICC & NYSDOS. ALL RIGHTS RESERVED. Accessed by Lauren Gualdino (lgualdino@briarcliffmanor.org), (-) Order Number #100880972 on May 08, 2020 07:05 AM (PDT) pursuant to License Agreement with ICC & NYSDOS. No further reproduction, no

100880972

TABLE E3802.1 (Chapter 3)
GENERAL INSTALLATION AND SUPPORT REQUIREMENTS FOR WIRING METHODS[a, b, c, d, e, f, g, h, i, j, k]

INSTALLATION REQUIREMENTS (Requirement applicable only to wiring methods marked "A")	AC MC	EMT IMC RMC	ENT	FMC LFC	NM UF	RNC RTRC	SE	SR[a]	USE
Where run parallel with the framing member or furring strip, the wiring shall be not less than $1^1/_4$ inches from the edge of a furring strip or a framing member such as a joist, rafter or stud or shall be physically protected.	A	—	A	A	A	—	A	—	—
Bored holes in framing members for wiring shall be located not less than $1^1/_4$ inches from the edge of the framing member or shall be protected with a minimum 0.0625-inch steel plate or sleeve, a listed steel plate or other physical protection.	A[k]	—	A[k]	A[k]	A[k]	—	A[k]	—	—
Where installed in grooves, to be covered by wallboard, siding, paneling, carpeting, or similar finish, wiring methods shall be protected by 0.0625-inch-thick steel plate, sleeve, or equivalent, a listed steel plate or by not less than $1^1/_4$-inch free space for the full length of the groove in which the cable or raceway is installed.	A	—	A	A	A	—	A	A	A
Securely fastened bushings or grommets shall be provided to protect wiring run through openings in metal framing members.	—	—	A[j]	—	A[j]	—	A[j]	—	—
The maximum number of 90-degree bends shall not exceed four between junction boxes.	—	A	A	A	—	A	—	—	—
Bushings shall be provided where entering a box, fitting or enclosure unless the box or fitting is designed to afford equivalent protection.	A	A	A	A	—	A	—	A	—
Ends of raceways shall be reamed to remove rough edges.	—	A	A	A	—	A	—	A	—
Maximum allowable on center support spacing for the wiring method in feet.	4.5[b, c]	10	3[b]	4.5[b]	4.5[i]	3[d]	2.5[e]	—	2.5
Maximum support distance in inches from box or other terminations.	12[b, f]	36	36	12[b, g]	12[h, i]	36	12	—	—

For SI: 1 inch = 25.4 mm, 1 foot = 304.8 mm, 1 degree = 0.0175 rad.

a. Installed in accordance with listing requirements.
b. Supports not required in accessible ceiling spaces between light fixtures where lengths do not exceed 6 feet.
c. Six feet for MC cable.
d. Five feet for trade sizes $1^1/_4$ through 2 inches, 6 feet for trade sizes $2^1/_2$ through 3, 7 feet for trade sizes $3^1/_2$ through 5 inches, 8 feet for trade size 6 inches.
e. Two and one-half feet where used for service or outdoor feeder and 4.5 feet where used for branch circuit or indoor feeder.
f. Twenty-four inches for Type AC cable and 36 inches for interlocking Type MC cable where flexibility is necessary.
g. Where flexibility after installation is necessary, lengths of flexible metal conduit and liquidtight flexible metal conduit measured from the last point where the raceway is securely fastened shall not exceed: 36 inches for trade sizes $^1/_2$ through $1^1/_4$, 48 inches for trade sizes $1^1/_2$ through 2, and 5 feet for trade sizes $2^1/_2$ and larger.
h. Within 8 inches of boxes without cable clamps.
i. Flat cables shall not be stapled on edge.
j. Bushings and grommets shall remain in place and shall be listed for the purpose of cable protection.
k. See Sections R502.8 and R802.7 for additional limitations on the location of bored holes in horizontal framing members.

E3802.8 Raceways in wet locations above grade. Where raceways are installed in wet locations above grade, the interior of such raceways shall be considered to be a wet location. Insulated conductors and cables installed in raceways in wet locations above grade shall be listed for use in wet locations. (300.9)

SECTION E3803
UNDERGROUND INSTALLATION REQUIREMENTS

E3803.1 Minimum cover requirements. Direct buried cable or raceways shall be installed in accordance with the minimum cover requirements of Table E3803.1. [300.5(A)]

E3803.2 Warning ribbon. Underground service conductors that are not encased in concrete and that are buried 18 inches (457 mm) or more below grade shall have their location identified by a warning ribbon that is placed in the trench not less than 12 inches (305 mm) above the underground installation. [300.5(D)(3)]

E3803.3 Protection from damage. Direct buried conductors and cables emerging from the ground shall be protected by enclosures or raceways extending from the minimum cover distance below grade required by Section E3803.1 to a point at least 8 feet (2438 mm) above finished grade. In no case shall the protection be required to exceed 18 inches (457 mm) below finished grade. Conductors entering a building shall be protected to the point of entrance. Where the enclosure or raceway is subject to physical damage, the conductors shall be installed in electrical metallic tubing, rigid metal conduit, intermediate metal conduit, Schedule 80 PVC conduit, RTRC-XW or the equivalent. [300.5(D)(1)]

E3803.4 Splices and taps. Direct buried conductors or cables shall be permitted to be spliced or tapped without the use of splice boxes. The splices or taps shall be made by approved methods with materials listed for the application. [300.5(E)]

E3803.5 Backfill. Backfill containing large rock, paving materials, cinders, large or sharply angular substances, or corrosive material shall not be placed in an excavation where

INTERNATIONAL CODE COUNCIL®
Copyright © 2019 ICC & NYSDOS. ALL RIGHTS RESERVED. Accessed by Lauren Gualdino (lgualdino@briarcliffmanor.org), (-) Order Number #100880972 on May 08, 2020 07:05 AM (PDT) pursuant to License Agreement with ICC & NYSDOS. No further reproduction, no

100880972

such materials cause damage to raceways, cables or other substructures or prevent adequate compaction of fill or contribute to corrosion of raceways, cables or other substructures. Where necessary to prevent physical damage to the raceway or cable, protection shall be provided in the form of granular or selected material, suitable boards, suitable sleeves or other approved means. [300.5(F)]

E3803.6 Raceway seals. Conduits or raceways shall be sealed or plugged at either or both ends where moisture will enter and contact live parts. Spare or unused raceways shall also be sealed. Sealants shall be identified for the use with the cable insulation, conductor insulation, bare conductor or other components. [300.5(G)]

E3803.7 Bushing. A bushing, or terminal fitting, with an integral bushed opening shall be installed on the end of a conduit or other raceway that terminates underground where the conductors or cables emerge as a direct burial wiring method. A seal incorporating the physical protection characteristics of a bushing shall be considered equivalent to a bushing. [300.5(H)]

TABLE E3803.1 (Table 300.5)
MINIMUM COVER REQUIREMENTS, BURIAL IN INCHES[a, b, c, d, e]

LOCATION OF WIRING METHOD OR CIRCUIT	TYPE OF WIRING METHOD OR CIRCUIT				
	1 Direct burial cables or conductors	2 Rigid metal conduit or intermediate metal conduit	3 Nonmetallic raceways listed for direct burial without concrete encasement or other approved raceways	4 Residential branch circuits rated 120 volts or less with GFCI protection and maximum overcurrent protection of 20 amperes	5 Circuits for control of irrigation and landscape lighting limited to not more than 30 volts and installed with type UF or in other identified cable or raceway
All locations not specified below	24	6	18	12	6[f, g]
In trench below 2-inch-thick concrete or equivalent	18	6	12	6	6
Under a building	0 (In raceway only or Type MC identified for direct burial)	0	0	0 (In raceway only or Type MC identified for direct burial)	0 (In raceway only or Type MC identified for direct burial)
Under minimum of 4-inch-thick concrete exterior slab with no vehicular traffic and the slab extending not less than 6 inches beyond the underground installation	18	4	4	6 (Direct burial) 4 (In raceway)	6 (Direct burial) 4 (In raceway)
Under streets, highways, roads, alleys, driveways and parking lots	24	24	24	24	24
One- and two-family dwelling driveways and outdoor parking areas, and used only for dwelling-related purposes	18	18	18	12	18
In solid rock where covered by minimum of 2 inches concrete extending down to rock	2 (In raceway only)	2	2	2 (In raceway only)	2 (In raceway only)

For SI: 1 inch = 25.4 mm.

a. Raceways approved for burial only where encased concrete shall require concrete envelope not less than 2 inches thick.
b. Lesser depths shall be permitted where cables and conductors rise for terminations or splices or where access is otherwise required.
c. Where one of the wiring method types listed in columns 1 to 3 is combined with one of the circuit types in columns 4 and 5, the shallower depth of burial shall be permitted.
d. Where solid rock prevents compliance with the cover depths specified in this table, the wiring shall be installed in metal or nonmetallic raceway permitted for direct burial. The raceways shall be covered by a minimum of 2 inches of concrete extending down to the rock.
e. Cover is defined as the shortest distance in inches (millimeters) measured between a point on the top surface of any direct-buried conductor, cable, conduit or other raceway and the top surface of finished grade, concrete, or similar cover.
f. A lesser depth shall be permitted where specified in the installation instructions of a listed low-voltage lighting system.
g. A depth of 6 inches shall be permitted for pool, spa, and fountain lighting that is installed in a nonmetallic raceway, limited to not more than 30 volts and part of a listed low-voltage lighting system.

INTERNATIONAL CODE COUNCIL®
Copyright © 2019 ICC & NYSDOS. ALL RIGHTS RESERVED. Accessed by Lauren Gualdino (lgualdino@briarcliffmanor.org), (-) Order Number #100880972 on May 08, 2020 07:05 AM (PDT) pursuant to License Agreement with ICC & NYSDOS. No further reproduction, no

100880972

E3803.8 Single conductors. All conductors of the same circuit and, where present, the grounded conductor and all equipment grounding conductors shall be installed in the same raceway or shall be installed in close proximity in the same trench. [300.5(I)]

Exception: Conductors shall be permitted to be installed in parallel in raceways, multiconductor cables, and direct-buried single conductor cables. Each raceway or multiconductor cable shall contain all conductors of the same circuit, including equipment grounding conductors. Each direct-buried single conductor cable shall be located in close proximity in the trench to the other single conductor cables in the same parallel set of conductors in the circuit, including equipment grounding conductors. [300.5(I) Exception 1]

E3803.9 Earth movement. Where direct buried conductors, raceways or cables are subject to movement by settlement or frost, direct buried conductors, raceways or cables shall be arranged to prevent damage to the enclosed conductors or to equipment connected to the raceways. [300.5(J)]

E3803.10 Wet locations. The interior of enclosures or raceways installed underground shall be considered to be a wet location. Insulated conductors and cables installed in such enclosures or raceways in underground installations shall be listed for use in wet locations. [300.5(B)]

E3803.11 Under buildings. Underground cable and conductors installed under a building shall be in a raceway. [300.5(C)]

Exception: Type MC Cable shall be permitted under a building without installation in a raceway where the cable is listed and identified for direct burial or concrete encasement and one or more of the following applies:

1. The metallic covering is impervious to moisture.
2. A moisture-impervious jacket is provided under the metal covering.
3. The insulated conductors under the metallic covering are listed for use in wet locations. [300.5(C) Exception 2]

INTERNATIONAL CODE COUNCIL®
Copyright © 2019 ICC & NYSDOS. ALL RIGHTS RESERVED. Accessed by Lauren Gualdino (lgualdino@briarcliffmanor.org), (-) Order Number #100880972 on May 08, 2020 07:05 AM (PDT) pursuant to License Agreement with ICC & NYSDOS. No further reproduction, no

INTERNATIONAL CODE COUNCIL®
Copyright © 2019 ICC & NYSDOS. ALL RIGHTS RESERVED. Accessed by Lauren Gualdino (lgualdino@briarcliffmanor.org), (-) Order Number #100880972 on May 08, 2020 07:05 AM (PDT) pursuant to License Agreement with ICC & NYSDOS. No further reproduction, no

100880972

CHAPTER 39

POWER AND LIGHTING DISTRIBUTION

SECTION E3901
RECEPTACLE OUTLETS

E3901.1 General. Outlets for receptacles rated at 125 volts, 15- and 20-amperes shall be provided in accordance with Sections E3901.2 through E3901.11. Receptacle outlets required by this section shall be in addition to any receptacle that is:

1. Part of a luminaire or appliance;
2. Located within cabinets or cupboards;
3. Controlled by a wall switch in accordance with Section E3903.2, Exception 1; or
4. Located over 5.5 feet (1676 mm) above the floor.

Permanently installed electric baseboard heaters equipped with factory-installed receptacle outlets, or outlets provided as a separate assembly by the baseboard manufacturer shall be permitted as the required outlet or outlets for the wall space utilized by such permanently installed heaters. Such receptacle outlets shall not be connected to the heater circuits. (210.52)

E3901.2 General purpose receptacle distribution. In every kitchen, family room, dining room, living room, parlor, library, den, sun room, bedroom, recreation room, or similar room or area of dwelling units, receptacle outlets shall be installed in accordance with the general provisions specified in Sections E3901.2.1 through E3901.2.3 (see Figure E3901.2).

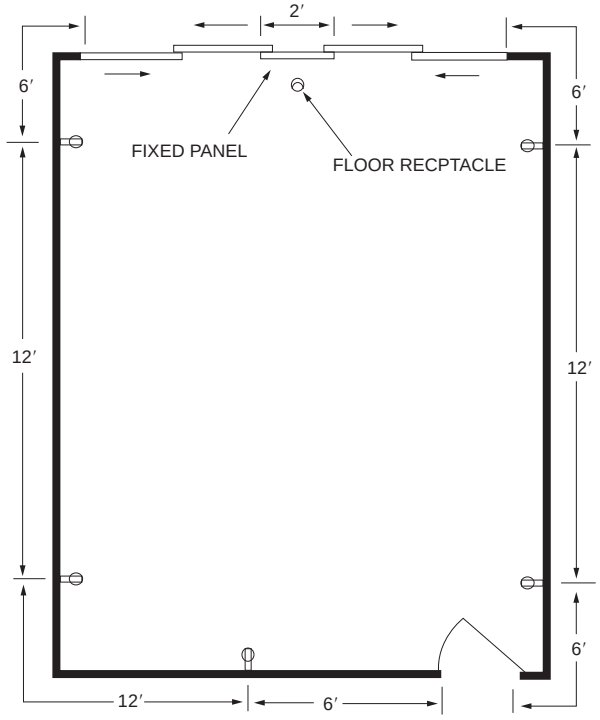

For SI: 1 foot = 304.8 mm.

FIGURE E3901.2
GENERAL USE RECEPTACLE DISTRIBUTION

E3901.2.1 Spacing. Receptacles shall be installed so that no point measured horizontally along the floor line of any wall space is more than 6 feet (1829 mm), from a receptacle outlet. [210.52(A)(1)]

E3901.2.2 Wall space. As used in this section, a wall space shall include the following: [210.52(A)(2)]

1. Any space that is 2 feet (610 mm) or more in width, including space measured around corners, and that is unbroken along the floor line by doorways and similar openings, fireplaces, and fixed cabinets that do not have countertops or similar work surfaces.
2. The space occupied by fixed panels in exterior walls, excluding sliding panels.
3. The space created by fixed room dividers such as railings and freestanding bar-type counters.

E3901.2.3 Floor receptacles. Receptacle outlets in floors shall not be counted as part of the required number of receptacle outlets except where located within 18 inches (457 mm) of the wall. [210.52(A)(3)]

E3901.2.4 Countertop and similar work surface receptacles outlets. Receptacles installed for countertop and similar work surfaces as specified in Section E3901.4 shall not be considered as the receptacle outlets required by Section E3901.2. [210.52(A)(4)]

E3901.3 Small appliance receptacles. In the kitchen, pantry, breakfast room, dining room, or similar area of a dwelling unit, the two or more 20-ampere small-appliance branch circuits required by Section E3703.2, shall serve all wall and floor receptacle outlets covered by Sections E3901.2 and E3901.4 and those receptacle outlets provided for refrigeration appliances. [210.52(B)(1)]

Exceptions:

1. In addition to the required receptacles specified by Sections E3901.1 and E3901.2, switched receptacles supplied from a general-purpose branch circuit as defined in Section E3903.2, Exception 1 shall be permitted. [210.52(B)(1) Exception No. 1]
2. In addition to the required receptacles specified by Section E3901.2, a receptacle outlet to serve a specific appliance shall be permitted to be supplied from an individual branch circuit rated at 15 amperes or greater. [210.52(B)(1) Exception No. 2]

E3901.3.1 Other outlets prohibited. The two or more small-appliance branch circuits specified in Section E3901.3 shall serve no other outlets. [210.52(B)(2)]

Exceptions:

1. A receptacle installed solely for the electrical supply to and support of an electric clock in any of the rooms specified in Section E3901.3. [210.52(B)(2) Exception No.1]

INTERNATIONAL CODE COUNCIL®
Copyright © 2019 ICC & NYSDOS. ALL RIGHTS RESERVED. Accessed by Lauren Gualdino (lgualdino@briarcliffmanor.org), (-) Order Number #100880972 on May 08, 2020 07:05 AM (PDT) pursuant to License Agreement with ICC & NYSDOS. No further reproduction, no

100880972

2. Receptacles installed to provide power for supplemental equipment and lighting on gas-fired ranges, ovens, and counter-mounted cooking units. [210.52(B)(2) Exception No. 2]

E3901.3.2 Limitations. Receptacles installed in a kitchen to serve countertop surfaces shall be supplied by not less than two small-appliance branch circuits, either or both of which shall also be permitted to supply receptacle outlets in the same kitchen and in other rooms specified in Section E3901.3. Additional small-appliance branch circuits shall be permitted to supply receptacle outlets in the kitchen and other rooms specified in Section E3901.3. A small-appliance branch circuit shall not serve more than one kitchen. [210.52(B)(3)]

E3901.4 Countertop and work surface receptacles. In kitchens pantries, breakfast rooms, dining rooms and similar areas of dwelling units, receptacle outlets for countertop and work surfaces shall be installed in accordance with Sections E3901.4.1 through E3901.4.5 (see Figure E3901.4). [210.52(C)]

E3901.4.1 Wall countertop space. A receptacle outlet shall be installed at each wall countertop and work surface that is 12 inches (305 mm) or wider. Receptacle outlets shall be installed so that no point along the wall line is more than 24 inches (610 mm), measured horizontally, from a receptacle outlet in that space. [210.52(C)(1)]

Exception: Receptacle outlets shall not be required on a wall directly behind a range, counter-mounted cooking unit or sink in the installation described in Figure E3901.4.1. [210.52(C)(1) Exception]

E3901.4.2 Island countertop spaces. At least one receptacle outlet shall be installed at each island countertop space with a long dimension of 24 inches (610 mm) or greater and a short dimension of 12 inches (305 mm) or greater. [210.52(C)(2)]

E3901.4.3 Peninsular countertop space. Not less than one receptacle outlet shall be installed at each peninsular countertop long dimension space having a long dimension of 24 inches (610 mm) or greater and a short dimension of 12 inches (305 mm) or greater. A peninsular countertop is measured from the connected perpendicular wall. [210.52(C)(3)]

E3901.4.4 Separate spaces. Countertop spaces separated by range tops, refrigerators, or sinks shall be considered as separate countertop spaces in applying the requirements of Sections E3901.4.1, E3901.4.2 and E3901.4.3.

Where a range, counter-mounted cooking unit, or sink is installed in an island or peninsular countertop and the depth of the countertop behind the range, counter-mounted cooking unit, or sink is less than 12 inches (305 mm), the range, counter-mounted cooking unit, or sink has divided the countertop space into two separate countertop spaces as defined in Section E3901.4.4. Each separate countertop space shall comply with the applicable requirements of this section. [210.52(C)(4)]

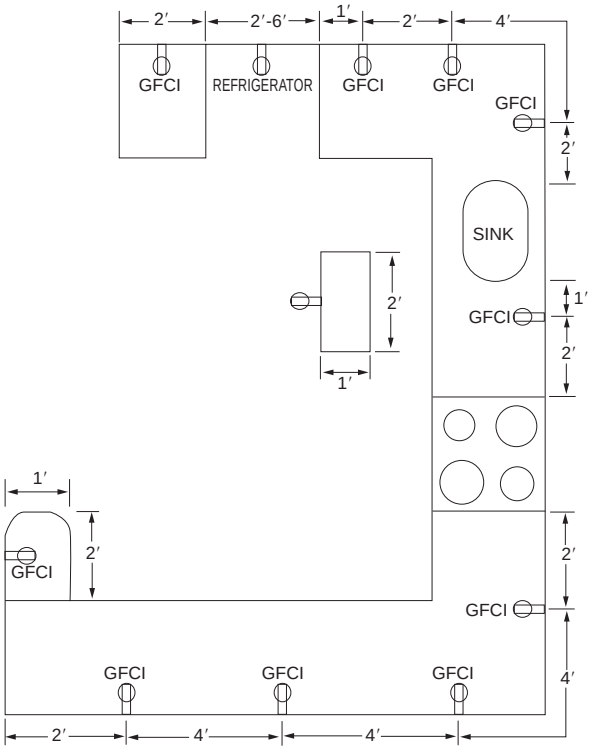

For SI: 1 foot = 304.8 mm.

FIGURE E3901.4
COUNTERTOP RECEPTACLES

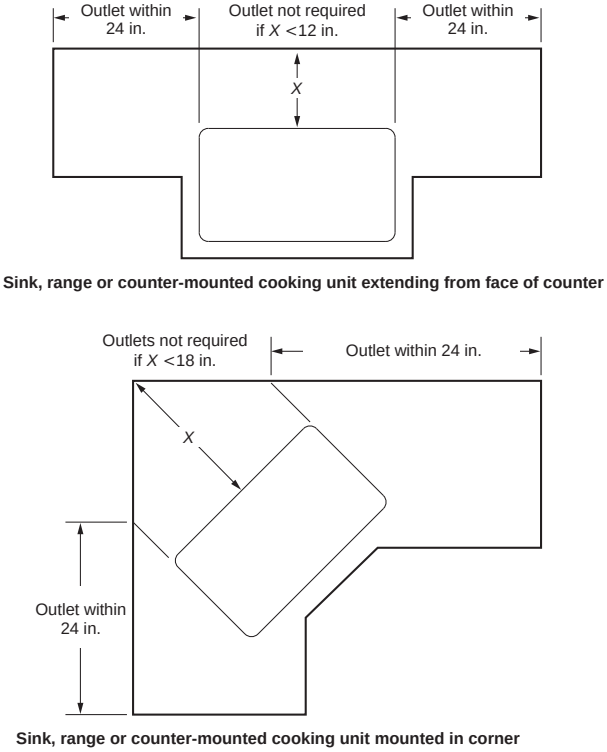

For SI: 1 inch = 25.4 mm.

FIGURE E3901.4.1
DETERMINATION OF AREA BEHIND SINK OR RANGE

INTERNATIONAL CODE COUNCIL®
Copyright © 2019 ICC & NYSDOS. ALL RIGHTS RESERVED. Accessed by Lauren Gualdino (lgualdino@briarcliffmanor.org), (-) Order Number #100880972 on May 08, 2020 07:05 AM (PDT) pursuant to License Agreement with ICC & NYSDOS. No further reproduction, no

100880972

E3901.4.5 Receptacle outlet location. Receptacle outlets shall be located not more than 20 inches (508 mm) above the countertop or work surface. Receptacle outlet assemblies installed in countertops and work surfaces shall be listed for use in countertops or work surfaces. Receptacle outlets rendered not readily accessible by appliances fastened in place, appliance garages, sinks or rangetops as addressed in the exception to Section E3901.4.1, or appliances occupying dedicated space shall not be considered as these required outlets. [210.52(C)(5)]

Exception: Receptacle outlets shall be permitted to be mounted not more than 12 inches (305 mm) below the countertop or work surface in construction designed for the physically impaired and for island and peninsular countertops or work surface where the surface is flat across its entire surface and there are no means to mount a receptacle within 20 inches (508 mm) above the countertop, such as in an overhead cabinet. Receptacles mounted below the countertop or work surface in accordance with this exception shall not be located where the countertop or work surface extends more than 6 inches (152 mm) beyond its support base. [210.52(C)(5) Exception]

E3901.5 Appliance receptacle outlets. Appliance receptacle outlets installed for specific appliances, such as laundry equipment, shall be installed within 6 feet (1829 mm) of the intended location of the appliance. (210.50(C)]

E3901.6 Bathroom. At least one receptacle outlet shall be installed in bathrooms and such outlet shall be located within 36 inches (914 mm) of the outside edge of each lavatory basin. The receptacle outlet shall be located on a wall or partition that is adjacent to the lavatory basin location, located on the countertop, or installed on the side or face of the basin cabinet. The receptacle shall be located not more than 12 inches (305 mm) below the top of the basin or basin countertop.

Receptacle outlet assemblies installed in countertops shall be listed for the application. [210.52(D)]

E3901.7 Outdoor outlets. Not less than one receptacle outlet that is readily accessible from grade level and located not more than 6 feet, 6 inches (1981 mm) above grade, shall be installed outdoors at the front and back of each dwelling unit having direct access to grade level. Balconies, decks, and porches that are accessible from inside of the dwelling unit shall have at least one receptacle outlet accessible from perimeter of the balcony, deck, or porch. The receptacle shall be located not more than 6 feet, 6 inches (1981 mm) above the balcony, deck, or porch surface. [210.52(E)]

E3901.8 Laundry areas. Not less than one receptacle outlet shall be installed in areas designated for the installation of laundry equipment.

E3901.9 Basements, garages and accessory buildings. Not less than one receptacle outlet, in addition to any provided for specific equipment, shall be installed in each separate unfinished portion of a basement; in each vehicle bay not more than 5.5 feet (1676 mm) above the floor in attached garages; in each vehicle bay not more than 5.5 feet (1676 mm) above the floor in detached garages that are provided with electric power and in accessory buildings that are provided with electric power. [210.52(G)(1), (2), and (3)]

E3901.10 Hallways. Hallways of 10 feet (3048 mm) or more in length shall have at least one receptacle outlet. The hall length shall be considered the length measured along the centerline of the hall without passing through a doorway. [210.52(H)]

E3901.11 Foyers. Foyers that are not part of a hallway in accordance with Section E3901.10 and that have an area that is greater than 60 square feet (5.57 m^2) shall have a receptacle(s) located in each wall space that is 3 feet (914 mm) or more in width. Doorways, door-side windows that extend to the floor, and similar openings shall not be considered as wall space. [210.52(H)]

E3901.12 HVAC outlet. A 125-volt, single-phase, 15- or 20-ampere-rated receptacle outlet shall be installed at an accessible location for the servicing of heating, air-conditioning and refrigeration equipment. The receptacle shall be located on the same level and within 25 feet (7620 mm) of the heating, air-conditioning and refrigeration equipment. The receptacle outlet shall not be connected to the load side of the HVAC equipment disconnecting means. (210.63)

Exception: A receptacle outlet shall not be required for the servicing of evaporative coolers. (210.63 Exception)

SECTION E3902
GROUND-FAULT AND ARC-FAULT CIRCUIT-INTERRUPTER PROTECTION

E3902.1 Bathroom receptacles. 125-volt, single-phase, 15- and 20-ampere receptacles installed in bathrooms shall have ground-fault circuit-interrupter protection for personnel. [210.8(A)(1)]

E3902.2 Garage and accessory building receptacles. 125-volt, single-phase, 15- or 20-ampere receptacles installed in garages and grade-level portions of unfinished accessory buildings used for storage or work areas shall have ground-fault circuit-interrupter protection for personnel. [210.8(A)(2)]

E3902.3 Outdoor receptacles. 125-volt, single-phase, 15- and 20-ampere receptacles installed outdoors shall have ground-fault circuit-interrupter protection for personnel. [210.8(A)(3)]

Exception: Receptacles as covered in Section E4101.7. [210.8(A)(3) Exception]

E3902.4 Crawl space receptacles and lighting outlets. Where a crawl space is at or below grade level, 125-volt, single-phase, 15- and 20-ampere receptacles installed in such spaces shall have ground-fault circuit-interrupter protection for personnel. Lighting outlets not exceeding 120 volts shall have ground-fault circuit-interrupter protection. [210.8(A)(4), 2108(E)]

INTERNATIONAL CODE COUNCIL®
Copyright © 2019 ICC & NYSDOS. ALL RIGHTS RESERVED. Accessed by Lauren Gualdino (lgualdino@briarcliffmanor.org), (-) Order Number #100880972 on May 08, 2020 07:05 AM (PDT) pursuant to License Agreement with ICC & NYSDOS. No further reproduction, no

100880972

E3902.5 Unfinished basement receptacles. 125-volt, single-phase, 15- and 20-ampere receptacles installed in unfinished basements shall have ground-fault circuit-interrupter protection for personnel. For purposes of this section, unfinished basements are defined as portions or areas of the basement not intended as habitable rooms. [210.8(A)(5)]

Exception: A receptacle supplying only a permanently installed fire alarm or burglar alarm system. Receptacles installed in accordance with this exception shall not be considered as meeting the requirement of Section E3901.9. [210.8(A)(5) Exception]

E3902.6 Kitchen receptacles. 125-volt, single-phase, 15- and 20-ampere receptacles that serve countertop surfaces shall have ground-fault circuit-interrupter protection for personnel. [210.8(A)(6)]

E3902.7 Sink receptacles. 125-volt, single-phase, 15- and 20-ampere receptacles that are located within 6 feet (1829 mm) of the top inside edge of the bowl of the sink shall have ground-fault circuit-interrupter protection for personnel. [210.8(A)(7)]

E3902.8 Bathtub or shower stall receptacles. 125-volt, single phase, 15- and 20-ampere receptacles that are located within 6 feet (1829 mm) of the outside edge of a bathtub or shower stall shall have ground-fault circuit-interrupter protection for personnel. [210.8(A)(8)]

E3902.9 Laundry areas. 125-volt, single-phase, 15- and 20-ampere receptacles installed in laundry areas shall have ground-fault circuit-interrupter protection for personnel. [210.8(A)(9)]

E3902.10 Kitchen dishwasher branch circuit. Ground-fault circuit-interrupter protection shall be provided for outlets that supply dishwashers in dwelling unit locations. [210.8(D)]

E3902.11 Boathouse receptacles. 125-volt, single-phase, 15- or 20-ampere receptacles installed in boathouses shall have ground-fault circuit-interrupter protection for personnel. [210.8(A)(8)]

E3902.12 Boat hoists. Ground-fault circuit-interrupter protection for personnel shall be provided for 240-volt and less outlets that supply boat hoists. [210.8(C)]

E3902.13 Electrically heated floors. Ground-fault circuit-interrupter protection for personnel shall be provided for electric heating cables embedded in concrete or poured masonry floors in bathrooms, kitchens and in hydromassage bathtub, spa and hot tub locations. Heating cables installed under floor coverings shall be provided with ground-fault circuit-interrupter protection for personnel. [424.44(E), 424.45(E)]

E3902.14 Location of ground-fault circuit interrupters. Ground-fault circuit interrupters shall be installed in a readily accessible location. When determining distance from receptacles, the distance shall be measured as the shortest path the cord of an appliance connected to the receptacle would follow without piercing a floor, wall, ceiling, or fixed barrier, or passing through a door, doorway or window. [210.8(A)]

E3902.15 Location of arc-fault circuit interrupters. Arc-fault circuit interrupters shall be installed in readily accessible locations.

E3902.16 Arc-fault circuit-interrupter protection. Branch circuits that supply 120-volt, single-phase, 15- and 20-ampere outlets installed in kitchens, family rooms, dining rooms, living rooms, parlors, libraries, dens, bedrooms, sunrooms, recreations rooms, closets, hallways, laundry areas and similar rooms or areas shall be protected by any of the following: [210.12(A)]

1. A listed combination-type arc-fault circuit interrupter, installed to provide protection of the entire branch circuit. [210.12(A)(1)]
2. A listed branch/feeder-type AFCI installed at the origin of the branch-circuit in combination with a listed outlet branch-circuit-type arc-fault circuit interrupter installed at the first outlet box on the branch circuit. The first outlet box in the branch circuit shall be marked to indicate that it is the first outlet of the circuit. [210.12(A)(2)]
3. A listed supplemental arc-protection circuit breaker installed at the origin of the branch circuit in combination with a listed outlet branch-circuit-type arc-fault circuit interrupter installed at the first outlet box on the branch circuit where all of the following conditions are met:
   - 3.1. The branch-circuit wiring shall be continuous from the branch-circuit overcurrent device to the outlet branch-circuit arc-fault circuit interrupter.
   - 3.2. The maximum length of the branch-circuit wiring from the branch-circuit overcurrent device to the first outlet shall not exceed 50 feet (15.2 m) for 14 AWG conductors and 70 feet (21.3 m) for 12 AWG conductors.
   - 3.3. The first outlet box on the branch circuit shall be marked to indicate that it is the first outlet on the circuit. [210.12(A)(3)]
4. A listed outlet branch-circuit-type arc-fault circuit interrupter installed at the first outlet on the branch circuit in combination with a listed branch-circuit overcurrent protective device where all of the following conditions are met:
   - 4.1. The branch-circuit wiring shall be continuous from the branch-circuit overcurrent device to the outlet branch-circuit arc-fault circuit interrupter.
   - 4.2. The maximum length of the branch-circuit wiring from the branch-circuit overcurrent device to the first outlet shall not exceed 50 feet (15.2 m) for 14 AWG conductors and 70 feet (21.3 m) for 12 AWG conductors.
   - 4.3. The first outlet box on the branch circuit shall be marked to indicate that it is the first outlet on the circuit.
   - 4.4. The combination of the branch-circuit overcurrent device and outlet branch-circuit AFCI shall be identified as meeting the requirements for a system combination-type AFCI and shall be listed as such. [210.12(A)(4)]

INTERNATIONAL CODE COUNCIL®
Copyright © 2019 ICC & NYSDOS. ALL RIGHTS RESERVED. Accessed by Lauren Gualdino (lgualdino@briarcliffmanor.org), (-) Order Number #100880972 on May 08, 2020 07:05 AM (PDT) pursuant to License Agreement with ICC & NYSDOS. No further reproduction, no

100880972

5. Where metal outlet boxes and junction boxes and RMC, IMC, EMT, Type MC or steel-armored Type AC cables meeting the requirements of Section E3908.8, metal wireways or metal auxiliary gutters are installed for the portion of the branch circuit between the branch-circuit overcurrent device and the first outlet, a listed outlet branch-circuit type AFCI installed at the first outlet shall be considered as providing protection for the remaining portion of the branch circuit. [210.12(A)(5)]
6. Where a listed metal or nonmetallic conduit or tubing or Type MC cable is encased in not less than 2 inches (50.8 mm) of concrete for the portion of the branch circuit between the branch-circuit overcurrent device and the first outlet, a listed outlet branch-circuit-type AFCI installed at the first outlet shall be considered as providing protection for the remaining portion of the branch circuit. [210.12(A)(6)]

Exception: AFCI protection is not required for an individual branch circuit supplying only a fire alarm system where the branch circuit is wired with metal outlet and junction boxes and RMC, IMC, EMT or steel-sheathed armored cable Type AC or Type MC meeting the requirements of Section E3908.8.

E3902.17 Arc-fault circuit-interrupter protection for branch circuit extensions or modifications. Where branch-circuit wiring is modified, replaced, or extended in any of the areas specified in Section E3902.16, the branch circuit shall be protected by one of the following:

1. A combination-type AFCI located at the origin of the branch circuit.
2. An outlet branch-circuit type AFCI located at the first receptacle outlet of the existing branch circuit. [210.12(B)]

Exception: AFCI protection shall not be required where the extension of the existing conductors is not more than 6 feet (1.8 m) in length and does not include any additional outlets or devices. [210.12(B) Exception]

SECTION E3903
LIGHTING OUTLETS

E3903.1 General. Lighting outlets shall be provided in accordance with Sections E3903.2 through E3903.4. [210.70(A)]

E3903.2 Habitable rooms. At least one wall switch-controlled lighting outlet shall be installed in every habitable room, kitchen and bathroom. [210.70(A)(1)]

Exceptions:

1. In other than kitchens and bathrooms, one or more receptacles controlled by a wall switch shall be considered equivalent to the required lighting outlet. [210.70(A)(1) Exception No. 1]
2. Lighting outlets shall be permitted to be controlled by occupancy sensors that are in addition to wall switches, or that are located at a customary wall switch location and equipped with a manual override that will allow the sensor to function as a wall switch. [210.70(A)(1) Exception No. 2]

E3903.3 Additional locations. At least one wall-switch-controlled lighting outlet shall be installed in hallways, stairways, attached garages, and detached garages with electric power. At least one wall-switch-controlled lighting outlet shall be installed to provide illumination on the exterior side of each outdoor egress door having grade level access, including outdoor egress doors for attached garages and detached garages with electric power. A vehicle door in a garage shall not be considered as an outdoor egress door.

E3903.3.1 Stairway lighting outlet control. Where one or more lighting outlets are installed for interior stairways, there shall be a wall switch at each floor level and landing level that includes an entryway to control the lighting outlets where the stairway between floor levels has six or more risers. Lighting outlets installed to meet this requirement shall not be controlled by the use of dimmer switches except where the dimmer switches provide the full range of dimming control at each switch location. [210.70(A)(2)]

Exception: In hallways, stairways, and at outdoor egress doors, remote, central, or automatic control of lighting shall be permitted. [210.70(A)(2) Exception]

E3903.4 Storage or equipment spaces. In attics, under-floor spaces, utility rooms and basements, at least one lighting outlet shall be installed where these spaces are used for storage or contain equipment requiring servicing. Such lighting outlet shall be controlled by a wall switch or shall have an integral switch. At least one point of control shall be at the usual point of entry to these spaces. The lighting outlet shall be provided at or near the equipment requiring servicing. [210.70(A)(3)]

SECTION E3904
GENERAL INSTALLATION REQUIREMENTS

E3904.1 Electrical continuity of metal raceways and enclosures. Metal raceways, cable armor and other metal enclosures for conductors shall be mechanically joined together into a continuous electric conductor and shall be connected to all boxes, fittings and cabinets so as to provide effective electrical continuity. Raceways and cable assemblies shall be mechanically secured to boxes, fittings cabinets and other enclosures. (300.10)

Exception: Short sections of raceway used to provide cable assemblies with support or protection against physical damage. (300.10 Exception No. 1)

E3904.2 Mechanical continuity—raceways and cables. Raceways, cable armors and cable sheaths shall be continuous between cabinets, boxes, fittings or other enclosures or outlets. (300.12)

Exception: Short sections of raceway used to provide cable assemblies with support or protection against physical damage. (300.12 Exception No. 1)

E3904.3 Securing and supporting. Raceways, cable assemblies, boxes, cabinets and fittings shall be securely fastened in place. (300.11)

E3904.3.1 Prohibited means of support. Cable wiring methods shall not be used as a means of support for other cables, raceways and nonelectrical equipment. [300.11(D)]

INTERNATIONAL CODE COUNCIL®
Copyright © 2019 ICC & NYSDOS. ALL RIGHTS RESERVED. Accessed by Lauren Gualdino (lgualdino@briarcliffmanor.org), (-) Order Number #100880972 on May 08, 2020 07:05 AM (PDT) pursuant to License Agreement with ICC & NYSDOS. No further reproduction, no

100880972

E3904.4 Raceways as means of support. Raceways shall be used as a means of support for other raceways, cables or nonelectric equipment only under the following conditions:

1. Where the raceway or means of support is identified as a means of support; or
2. Where the raceway contains power supply conductors for electrically controlled equipment and is used to support Class 2 circuit conductors or cables that are solely for the purpose of connection to the control circuits of the equipment served by such raceway; or
3. Where the raceway is used to support boxes or conduit bodies in accordance with Sections E3906.8.4 and E3906.8.5. [300.11(C)]

E3904.5 Raceway installations. Raceways shall be installed complete between outlet, junction or splicing points prior to the installation of conductors. (300.18)

Exception: Short sections of raceways used to contain conductors or cable assemblies for protection from physical damage shall not be required to be installed complete between outlet, junction, or splicing points. (300.18 Exception)

E3904.6 Conduit and tubing fill. The maximum number of conductors installed in conduit or tubing shall be in accordance with Tables E3904.6(1) through E3904.6(10). (300.17, Chapter 9, Table 1 and Annex C)

E3904.7 Air handling-stud cavity and joist spaces. Where wiring methods having a nonmetallic covering pass through stud cavities and joist spaces used for air handling, such wiring shall pass through such spaces perpendicular to the long dimension of the spaces. [300.22(C) Exception]

SECTION E3905
BOXES, CONDUIT BODIES AND FITTINGS

E3905.1 Box, conduit body or fitting—where required. A box or conduit body shall be installed at each conductor splice point, outlet, switch point, junction point and pull point except as otherwise permitted in Sections E3905.1.1 through E3905.1.6.

Fittings and connectors shall be used only with the specific wiring methods for which they are designed and listed. (300.15)

E3905.1.1 Equipment. An integral junction box or wiring compartment that is part of listed equipment shall be permitted to serve as a box or conduit body. [300.15(B)]

E3905.1.2 Protection. A box or conduit body shall not be required where cables enter or exit from conduit or tubing that is used to provide cable support or protection against physical damage. A fitting shall be provided on the end(s) of the conduit or tubing to protect the cable from abrasion. [300.15(C)]

E3905.1.3 Integral enclosure. A wiring device with integral enclosure identified for the use, having brackets that securely fasten the device to walls or ceilings of conventional on-site frame construction, for use with nonmetallic-sheathed cable, shall be permitted in lieu of a box or conduit body. [300.15(E)]

E3905.1.4 Fitting. A fitting identified for the use shall be permitted in lieu of a box or conduit body where such fitting is accessible after installation and does not contain spliced or terminated conductors. [300.15(F)]

E3905.1.5 Buried conductors. Splices and taps in buried conductors and cables shall not be required to be enclosed in a box or conduit body where installed in accordance with Section E3803.4.

E3905.1.6 Luminaires. Where a luminaire is listed to be used as a raceway, a box or conduit body shall not be required for wiring installed therein. [300.15(J)]

E3905.2 Metal boxes. Metal boxes shall be grounded. (314.4)

E3905.3 Nonmetallic boxes. Nonmetallic boxes shall be used only with cabled wiring methods with entirely nonmetallic sheaths, flexible cords and nonmetallic raceways. (314.3)

Exceptions:

1. Where internal bonding means are provided between all entries, nonmetallic boxes shall be permitted to be used with metal raceways and metal-armored cables. (314.3 Exception No. 1)
2. Where integral bonding means with a provision for attaching an equipment grounding jumper inside the box are provided between all threaded entries in nonmetallic boxes listed for the purpose, nonmetallic boxes shall be permitted to be used with metal raceways and metal-armored cables. (314.3 Exception No. 2)

E3905.3.1 Nonmetallic-sheathed cable and nonmetallic boxes. Where nonmetallic-sheathed cable is used, the cable assembly, including the sheath, shall extend into the box not less than $^1/_4$ inch (6.4 mm) through a nonmetallic-sheathed cable knockout opening. (314.7(C))

E3905.3.2 Securing to box. Wiring methods shall be secured to the boxes. [314.17(C)]

Exception: Where nonmetallic-sheathed cable is used with boxes not larger than a nominal size of $2^1/_4$ inches by 4 inches (57 mm by 102 mm) mounted in walls or ceilings, and where the cable is fastened within 8 inches (203 mm) of the box measured along the sheath, and where the sheath extends through a cable knockout not less than $^1/_4$ inch (6.4 mm), securing the cable to the box shall not be required. [314.17(C) Exception]

E3905.3.3 Conductor rating. Nonmetallic boxes shall be suitable for the lowest temperature-rated conductor entering the box. [314.17(C)]

E3905.4 Minimum depth of boxes for outlets, devices, and utilization equipment. Outlet and device boxes shall have an approved depth to allow equipment installed within them to be mounted properly and without the likelihood of damage to conductors within the box. (314.24)

INTERNATIONAL CODE COUNCIL®
Copyright © 2019 ICC & NYSDOS. ALL RIGHTS RESERVED. Accessed by Lauren Gualdino (lgualdino@briarcliffmanor.org), (-) Order Number #100880972 on May 08, 2020 07:05 AM (PDT) pursuant to License Agreement with ICC & NYSDOS. No further reproduction, no

100880972

TABLE E3904.6(1) (Annex C, Table C.1)
MAXIMUM NUMBER OF CONDUCTORS IN ELECTRICAL METALLIC TUBING (EMT)[a]

TYPE LETTERS	CONDUCTOR SIZE AWG/kcmil	TRADE SIZES (inches)					
		1/2	3/4	1	1 1/4	1 1/2	2
RHH, RHW, RHW-2	14	4	7	11	20	27	46
	12	3	6	9	17	23	38
	10	2	5	8	13	18	30
	8	1	2	4	7	9	16
	6	1	1	3	5	8	13
	4	1	1	2	4	6	10
	3	1	1	1	4	5	9
	2	1	1	1	3	4	7
	1	0	1	1	1	3	5
	1/0	0	1	1	1	2	4
	2/0	0	1	1	1	2	4
	3/0	0	0	1	1	1	3
	4/0	0	0	1	1	1	3
TW, THHW, THW, THW-2	14	8	15	25	43	58	96
	12	6	11	19	33	45	74
	10	5	8	14	24	33	55
	8	2	5	8	13	18	30
RHH[a], RHW[a], RHW-2[a]	14	6	10	16	28	39	64
	12	4	8	13	23	31	51
	10	3	6	10	18	24	40
	8	1	4	6	10	14	24
RHH[a], RHW[a], RHW-2[a], TW, THW, THHW, THW-2	6	1	3	4	8	11	18
	4	1	1	3	6	8	13
	3	1	1	3	5	7	12
	2	1	1	2	4	6	10
	1	1	1	1	3	4	7
	1/0	0	1	1	2	3	6
	2/0	0	1	1	1	3	5
	3/0	0	1	1	1	2	4
	4/0	0	0	1	1	1	3
THHN, THWN, THWN-2	14	12	22	35	61	84	138
	12	9	16	26	45	61	101
	10	5	10	16	28	38	63
	8	3	6	9	16	22	36
	6	2	4	7	12	16	26
	4	1	2	4	7	10	16
	3	1	1	3	6	8	13
	2	1	1	3	5	7	11
	1	1	1	1	4	5	8
	1/0	1	1	1	3	4	7
	2/0	0	1	1	2	3	6
	3/0	0	1	1	1	3	5
	4/0	0	1	1	1	2	4
XHH, XHHW, XHHW-2	14	8	15	25	43	58	96
	12	6	11	19	33	45	74
	10	5	8	14	24	33	55
	8	2	5	8	13	18	30
	6	1	3	6	10	14	22
	4	1	2	4	7	10	16
	3	1	1	3	6	8	14
	2	1	1	3	5	7	11
	1	1	1	1	4	5	8
	1/0	1	1	1	3	4	7
	2/0	0	1	1	2	3	6
	3/0	0	1	1	1	3	5
	4/0	0	1	1	1	2	4

For SI: 1 inch = 25.4 mm.

a. Types RHW, and RHW-2 without outer covering.

INTERNATIONAL CODE COUNCIL®
Copyright © 2019 ICC & NYSDOS. ALL RIGHTS RESERVED. Accessed by Lauren Gualdino (lgualdino@briarcliffmanor.org), (-) Order Number #100880972 on May 08, 2020 07:05 AM (PDT) pursuant to License Agreement with ICC & NYSDOS. No further reproduction, no

100880972

TABLE E3904.6(2) (Annex C, Table C.2)
MAXIMUM NUMBER OF CONDUCTORS IN ELECTRICAL NONMETALLIC TUBING (ENT)[a]

TYPE LETTERS	CONDUCTOR SIZE AWG/kcmil	TRADE SIZES (inches)					
		1/2	3/4	1	1 1/4	1 1/2	2
RHH, RHW, RHW-2	14	3	6	10	19	26	43
	12	2	5	9	16	22	36
	10	1	4	7	13	17	29
	8	1	1	3	6	9	15
	6	1	1	3	5	7	12
	4	1	1	2	4	6	9
	3	1	1	1	3	5	8
	2	0	1	1	3	4	7
	1	0	1	1	1	3	5
	1/0	0	0	1	1	2	4
	2/0	0	0	1	1	1	3
	3/0	0	0	1	1	1	3
	4/0	0	0	1	1	1	2
TW, THHW, THW, THW-2	14	7	13	22	40	55	92
	12	5	10	17	31	42	71
	10	4	7	13	23	32	52
	8	1	4	7	13	17	29
RHH[a], RHW[a], RHW-2[a]	14	4	8	15	27	37	61
	12	3	7	12	21	29	49
	10	3	5	9	17	23	38
	8	1	3	5	10	14	23
RHH[a], RHW[a], RHW-2[a], TW, THW, THHW, THW-2	6	1	2	4	7	10	17
	4	1	1	3	5	8	13
	3	1	1	2	5	7	11
	2	1	1	2	4	6	9
	1	0	1	1	3	4	6
	1/0	0	1	1	2	3	5
	2/0	0	1	1	1	3	5
	3/0	0	0	1	1	2	4
	4/0	0	0	1	1	1	3
THHN, THWN, THWN-2	14	10	18	32	58	80	132
	12	7	13	23	42	58	96
	10	4	8	15	26	36	60
	8	2	5	8	15	21	35
	6	1	3	6	11	15	25
	4	1	1	4	7	9	15
	3	1	1	3	5	8	13
	2	1	1	2	5	6	11
THHN, THWN, THWN-2	1	1	1	1	3	5	8
	1/0	0	1	1	3	4	7
	2/0	0	1	1	2	3	5
	3/0	0	1	1	1	3	4
	4/0	0	0	1	1	2	4
XHH, XHHW, XHHW-2	14	7	13	22	40	55	92
	12	5	10	17	31	42	71
	10	4	7	13	23	32	52
	8	1	4	7	13	17	29
	6	1	3	5	9	13	21
	4	1	1	4	7	9	15
	3	1	1	3	6	8	13
	2	1	1	2	5	6	11
	1	1	1	1	3	5	8
	1/0	0	1	1	3	4	7
	2/0	0	1	1	2	3	6
	3/0	0	1	1	1	3	5
	4/0	0	0	1	1	2	4

For SI: 1 inch = 25.4 mm.

a. Types RHW, and RHW-2 without outer covering.

INTERNATIONAL CODE COUNCIL®
Copyright © 2019 ICC & NYSDOS. ALL RIGHTS RESERVED. Accessed by Lauren Gualdino (lgualdino@briarcliffmanor.org), (-) Order Number #100880972 on May 08, 2020 07:05 AM (PDT) pursuant to License Agreement with ICC & NYSDOS. No further reproduction, no

100880972

TABLE E3904.6(3) (Annex C, Table C.3)
MAXIMUM NUMBER OF CONDUCTORS IN FLEXIBLE METALLIC CONDUIT (FMC)[a]

TYPE LETTERS	CONDUCTOR SIZE AWG/kcmil	TRADE SIZES (inches)					
		1/2	3/4	1	1 1/4	1 1/2	2
RHH, RHW, RHW-2	14	3	7	11	17	25	44
	12	3	6	9	14	21	37
	10	14	5	7	11	17	30
	8		2	4	6	9	15
	6	1	1	3	5	7	12
	4	1	1	2	4	5	10
	3	1	1	1	3	5	7
	2	1	1	1	3	4	7
	1	0	1	1	1	2	5
	1/0	0	1	1	1	2	4
	2/0	0	1	1	1	1	3
	3/0	0	0	1	1	1	3
TW, THHW, THW, THW-2	14	9	15	23	36	53	94
	12	7	11	18	28	41	72
	10	5	8	13	21	30	54
	8	3	5	7	11	17	30
RHH[a], RHW[a], RHW-2[a]	14	6	10	15	24	35	62
	12	5	8	12	19	28	50
	10	4	6	10	15	22	39
	8	1	4	6	9	13	23
RHH[a], RHW[a], RHW-2[a], TW, THW, THHW, THW-2	6	1	3	4	7	10	18
	4	1	1	3	5	7	13
	3	1	1	3	4	6	11
	2	1	1	2	4	5	10
	1	1	1	1	2	4	7
	1/0	0	1	1	1	3	6
	2/0	0	1	1	1	3	5
	3/0	0	1	1	1	2	4
	4/0	0	0	1	1	1	3
	4/0	0	0	1	1	1	2
THHN, THWN, THWN-2	14	13	22	33	52	76	134
	12	9	16	24	38	56	98
	10	6	10	15	24	35	62
	8	3	6	9	14	20	35
THHN, THWN, THWN-2	6	2	4	6	10	14	25
	4	1	2	4	6	9	16
	3	1	1	3	5	7	13
	2	1	1	3	4	6	11
	1	1	1	1	3	4	8
	1/0	1	1	1	2	4	7
	2/0	0	1	1	1	3	6
	3/0	0	1	1	1	2	5
	4/0	0	1	1	1	1	4
XHH, XHHW, XHHW-2	14	9	15	23	36	53	94
	12	7	11	18	28	41	72
	10	5	8	13	21	30	54
	8	3	5	7	11	17	30
	6	1	3	5	8	12	22
	4	1	2	4	6	9	16
	3	1	1	3	5	7	13
	2	1	1	3	4	6	11
	1	1	1	1	3	5	8
	1/0	1	1	1	2	4	7
	2/0	0	1	1	2	3	6
	3/0	0	1	1	1	3	5
	4/0	0	1	1	1	2	4

For SI: 1 inch = 25.4 mm.

a. Types RHW, and RHW-2 without outer covering.

INTERNATIONAL CODE COUNCIL®
Copyright © 2019 ICC & NYSDOS. ALL RIGHTS RESERVED. Accessed by Lauren Gualdino (lgualdino@briarcliffmanor.org), (-) Order Number #100880972 on May 08, 2020 07:05 AM (PDT) pursuant to License Agreement with ICC & NYSDOS. No further reproduction, no

100880972

TABLE E3904.6(4) (Annex C, Table C.4)
MAXIMUM NUMBER OF CONDUCTORS IN INTERMEDIATE METALLIC CONDUIT (IMC)[a]

TYPE LETTERS	CONDUCTOR SIZE AWG/kcmil	TRADE SIZES (inches)					
		1/2	3/4	1	1 1/4	1 1/2	2
RHH, RHW, RHW-2	14	4	8	13	22	30	49
	12	4	6	11	18	25	41
	10	3	5	8	15	20	33
	8	1	3	4	8	10	17
	6	1	1	3	6	8	14
	4	1	1	3	5	6	11
	3	1	1	2	4	6	9
	2	1	1	1	3	5	8
	1	0	1	1	2	3	5
	1/0	0	1	1	1	3	4
	2/0	0	1	1	1	2	4
	3/0	0	0	1	1	1	3
	4/0	0	0	1	1	1	3
TW, THHW, THW, THW-2	14	10	17	27	47	64	104
	12	7	13	21	36	49	80
	10	5	9	15	27	36	59
	8	3	5	8	15	20	33
RHH[a], RHW[a], RHW-2[a]	14	6	11	18	31	42	69
	12	5	9	14	25	34	56
	10	4	7	11	19	26	43
	8	2	4	7	12	16	26
RHH[a], RHW[a], RHW-2[a], TW, THW, THHW, THW-2	6	1	3	5	9	12	20
	4	1	2	4	6	9	15
	3	1	1	3	6	8	13
	2	1	1	3	5	6	11
	1	1	1	1	3	4	7
	1/0	1	1	1	3	4	6
	2/0	0	1	1	2	3	5
	3/0	0	1	1	1	3	4
	4/0	0	1	1	1	2	4
THHN, THWN, THWN-2	14	14	24	39	68	91	149
	12	10	17	29	49	67	109
	10	6	11	18	31	42	68
	8	3	6	10	18	24	39
	6	2	4	7	13	17	28
	4	1	3	4	8	10	17
	3	1	2	4	6	9	15
	2	1	1	3	5	7	12
	1	1	1	2	4	5	9
	1/0	1	1	1	3	4	8
	2/0	1	1	1	3	4	6
THHN, THWN, THWN-2	3/0	0	1	1	2	3	5
	2/0	0	1	1	1	2	4
XHH, XHHW, XHHW-2	14	10	17	27	47	64	104
	12	7	13	21	36	49	80
	10	5	9	15	27	36	59
	8	3	5	8	15	20	33
	6	1	4	6	11	15	24
	4	1	3	4	8	11	18
	3	1	2	4	7	9	15
	2	1	1	3	5	7	12
	1	1	1	2	4	5	9
	1/0	1	1	1	3	5	8
	2/0	1	1	1	3	4	6
	3/0	0	1	1	2	3	5
	4/0	0	1	1	1	2	4

For SI: 1 inch = 25.4 mm.

a. Types RHW, and RHW-2 without outer covering.

INTERNATIONAL CODE COUNCIL®
Copyright © 2019 ICC & NYSDOS. ALL RIGHTS RESERVED. Accessed by Lauren Gualdino (lgualdino@briarcliffmanor.org), (-) Order Number #100880972 on May 08, 2020 07:05 AM (PDT) pursuant to License Agreement with ICC & NYSDOS. No further reproduction, no

100880972

TABLE E3904.6(5) (Annex C, Table C.5)
MAXIMUM NUMBER OF CONDUCTORS IN LIQUID-TIGHT FLEXIBLE NONMETALLIC CONDUIT (FNMC-B)[a]

TYPE LETTERS	CONDUCTOR SIZE AWG/kcmil	TRADE SIZES (inches)						
		3/8	1/2	3/4	1	1 1/4	1 1/2	2
RHH, RHW, RHW-2	14	2	4	7	12	21	27	44
	12	1	3	6	10	17	22	36
	10	1	3	5	8	14	18	29
	8	1	1	2	4	7	9	1
	6	1	1	1	3	6	7	12
	4	0	1	1	2	4	6	9
	3	0	1	1	1	4	5	8
	2	0	1	1	1	3	4	7
	1	0	0	1	1	1	3	5
	1/0	0	0	1	1	1	2	4
	2/0	0	0	1	1	1	1	3
	3/0	0	0	0	1	1	1	3
	4/0	0	0	0	1	1	1	2
TW, THHW, THW, THW-2	14	5	9	15	25	44	57	93
	12	4	7	12	19	33	43	71
	10	3	5	9	14	25	32	53
	8	1	3	5	8	14	18	29
RHH[a], RHW[a], RGW-2[a]	14	3	6	10	16	29	38	62
	12	3	5	8	13	23	30	50
	10	1	3	6	10	18	23	39
	8	1	1	4	6	11	14	23
RHH[a], RHW[a], RHW-2[a], TW, THW, THHW, THW-2	6	1	1	3	5	8	11	18
	4	1	1	1	3	6	8	13
	3	1	1	1	3	5	7	11
	2	0	1	1	2	4	6	9
	1	0	1	1	1	3	4	7
	1/0	0	0	1	1	2	3	6
	2/0	0	0	1	1	2	3	5
	3/0	0	0	1	1	1	2	4
	4/0	0	0	0	1	1	1	3
THHN, THWN, THWN-2	14	8	13	22	36	63	81	133
	12	5	9	16	26	46	59	97
	10	3	6	10	16	29	37	61
	8	1	3	6	9	16	21	35
THHN, THWN, THWN-2	6	1	2	4	7	12	15	25
	4	1	1	2	4	7	9	15
	3	1	1	1	3	6	8	13
	2	1	1	1	3	5	7	11
	1	0	1	1	1	4	5	8
	1/0	0	1	1	1	3	4	7
	2/0	0	0	1	1	2	3	6
	3/0	0	0	1	1	1	3	5
	4/0	0	0	1	1	1	2	4
XHH, XHHW, XHHW-2	14	5	9	15	25	44	57	93
	12	4	7	12	19	33	43	71
	10	3	5	9	14	25	32	53
	8	1	3	5	8	14	18	29
	6	1	1	3	6	10	13	22
	4	1	1	2	4	7	9	16
	3	1	1	1	3	6	8	13
	2	1	1	1	3	5	7	11
	1	0	1	1	1	4	5	8
	1/0	0	1	1	1	3	4	7
	2/0	0	0	1	1	2	3	6
	3/0	0	0	1	1	1	3	5
	4/0	0	0	1	1	1	2	4

For SI: 1 inch = 25.4 mm.

a. Types RHW, and RHW-2 without outer covering.

INTERNATIONAL CODE COUNCIL®
Copyright © 2019 ICC & NYSDOS. ALL RIGHTS RESERVED. Accessed by Lauren Gualdino (lgualdino@briarcliffmanor.org), (-) Order Number #100880972 on May 08, 2020 07:05 AM (PDT) pursuant to License Agreement with ICC & NYSDOS. No further reproduction, no

100880972

TABLE E3904.6(6) (Annex C, Table C.6)
MAXIMUM NUMBER OF CONDUCTORS IN LIQUID-TIGHT FLEXIBLE NONMETALLIC CONDUIT (FNMC-A)[a]

TYPE LETTERS	CONDUCTOR SIZE AWG/kcmil	TRADE SIZES (inches)						
		3/8	1/2	3/4	1	1 1/4	1 1/2	2
RHH, RHW, RHW-2	14	2	4	7	11	20	27	45
	12	1	3	6	9	17	23	38
	10	1	3	5	8	13	18	30
	8	1	1	2	4	7	9	16
	6	1	1	1	3	5	7	13
	4	0	1	1	2	4	6	10
	3	0	1	1	1	4	5	8
	2	0	1	1	1	3	4	7
	1	0	0	1	1	1	3	5
	1/0	0	0	1	1	1	2	4
	2/0	0	0	1	1	1	1	4
	3/0	0	0	0	1	1	1	3
	4/0	0	0	0	1	1	1	3
TW, THHW, THW, THW-2	14	5	9	15	24	43	58	96
	12	4	7	12	19	33	44	74
	10	3	5	9	14	24	33	55
	8	1	3	5	8	13	18	30
RHH[a], RHW[a], RHW-2[a]	14	3	6	10	16	28	38	64
	12	3	4	8	13	23	31	51
	10	1	3	6	10	18	24	40
	8	1	1	4	6	10	14	24
RHH[a], RHW[a], RHW-2[a], TW, THW, THHW, THW-2	6	1	1	3	4	8	11	18
	4	1	1	1	3	6	8	13
	3	1	1	1	3	5	7	11
	2	0	1	1	2	4	6	10
	1	0	1	1	1	3	4	7
RHH[a], RHW[a], RHW-2[a], TW, THW, THHW, THW-2	1/0	0	0	1	1	2	3	6
	2/0	0	0	1	1	1	3	5
	3/0	0	0	1	1	1	2	4
	4/0	0	0	0	1	1	1	3
THHN, THWN, THWN-2	14	8	13	22	35	62	83	137
	12	5	9	16	25	45	60	100
	10	3	6	10	16	28	38	63
	8	1	3	6	9	16	22	36
	6	1	2	4	6	12	16	26
	4	1	1	2	4	7	9	16
	3	1	1	1	3	6	8	13
	2	1	1	1	3	5	7	11
	1	0	1	1	1	4	5	8
	1/0	0	1	1	1	3	4	7
	2/0	0	0	1	1	2	3	6
	3/0	0	0	1	1	1	3	5
	4/0	0	0	1	1	1	2	4
XHH, XHHW, XHHW-2	14	5	9	15	24	43	58	96
	12	4	7	12	19	33	44	74
	10	3	5	9	14	24	33	55
	8	1	3	5	8	13	18	30
	6	1	1	3	5	10	13	22
	4	1	1	2	4	7	10	16
	3	1	1	1	3	6	8	14
	2	1	1	1	3	5	7	11
	1	0	1	1	1	4	5	8
XHH, XHHW, XHHW-2	1/0	0	1	1	1	3	4	7
	2/0	0	0	1	1	2	3	6
	3/0	0	0	1	1	1	3	5
	4/0	0	0	1	1	1	2	4

For SI: 1 inch = 25.4 mm.

a. Types RHW, and RHW-2 without outer covering.

INTERNATIONAL CODE COUNCIL®
Copyright © 2019 ICC & NYSDOS. ALL RIGHTS RESERVED. Accessed by Lauren Gualdino (lgualdino@briarcliffmanor.org), (-) Order Number #100880972 on May 08, 2020 07:05 AM (PDT) pursuant to License Agreement with ICC & NYSDOS. No further reproduction, no

100880972

TABLE E3904.6(7) (Annex C, Table C.7)
MAXIMUM NUMBER OF CONDUCTORS IN LIQUID-TIGHT FLEXIBLE METAL CONDUIT (LFMC)[a]

TYPE LETTERS	CONDUCTOR SIZE AWG/kcmil	TRADE SIZES (inches)					
		1/2	3/4	1	1 1/4	1 1/2	2
RHH, RHW, RHW-2	14	4	7	12	21	27	44
	12	3	6	10	17	22	36
	10	3	5	8	14	18	29
	8	1	2	4	7	9	15
	6	1	1	3	6	7	12
	4	1	1	2	4	6	9
	3	1	1	1	4	5	8
	2	1	1	1	3	4	7
	1	0	1	1	1	3	5
	1/0	0	1	1	1	2	4
	2/0	0	1	1	1	1	3
	3/0	0	0	1	1	1	3
	4/0	0	0	1	1	1	2
TW, THHW, THW, THW-2	14	9	15	25	44	57	93
	12	7	12	19	33	43	71
	10	5	9	14	25	32	53
	8	3	5	8	14	18	29
RHH[a], RHW[a], RHW-2[a], THHW, THW, THW-2	14	6	10	16	29	38	62
	12	5	8	13	23	30	50
	10	3	6	10	18	23	39
	8	1	4	6	11	14	23
RHH[a], RHW[a], RHW-2[a], TW, THW, THHW, THW-2	6	1	3	5	8	11	18
	4	1	1	3	6	8	13
	3	1	1	3	5	7	11
	2	1	1	2	4	6	9
	1	1	1	1	3	4	7
	1/0	0	1	1	2	3	6
	2/0	0	1	1	2	3	5
	3/0	0	1	1	1	2	4
	4/0	0	0	1	1	1	3
THHN, THWN, THWN-2	14	13	22	36	63	81	133
	12	9	16	26	46	59	97
	10	6	10	16	29	37	61
	8	3	6	9	16	21	35
	6	2	4	7	12	15	25
	4	1	2	4	7	9	15
	3	1	1	3	6	8	13
	2	1	1	3	5	7	11
	1	1	1	1	4	5	8
	1/0	1	1	1	3	4	7
	2/0	0	1	1	2	3	6
	3/0	0	1	1	1	3	5
	4/0	0	1	1	1	2	4
XHH, XHHW, XHHW-2	14	9	15	25	44	57	93
	12	7	12	19	33	43	71
	10	5	9	14	25	32	53
	8	3	5	8	14	18	29
XHH, XHHW, XHHW-2	6	1	3	6	10	13	22
	4	1	2	4	7	9	16
	3	1	1	3	6	8	13
	2	1	1	3	5	7	11
	1	1	1	1	4	5	8
	1/0	1	1	1	3	4	7
	2/0	0	1	1	2	3	6
	3/0	0	1	1	1	3	5
	4/0	0	1	1	1	2	4

For SI: 1 inch = 25.4 mm.

a. Types RHW, and RHW-2 without outer covering.

INTERNATIONAL CODE COUNCIL®
Copyright © 2019 ICC & NYSDOS. ALL RIGHTS RESERVED. Accessed by Lauren Gualdino (lgualdino@briarcliffmanor.org), (-) Order Number #100880972 on May 08, 2020 07:05 AM (PDT) pursuant to License Agreement with ICC & NYSDOS. No further reproduction, no

100880972

TABLE E3904.6(8) (Annex C, Table C.8)
MAXIMUM NUMBER OF CONDUCTORS IN RIGID METAL CONDUIT (RMC)[a]

TYPE LETTERS	CONDUCTOR SIZE AWG/kcmil	TRADE SIZES (inches)					
		1/2	3/4	1	1 1/4	1 1/2	2
RHH, RHW, RHW-2	14	4	7	12	21	28	46
	12	3	6	10	17	23	38
	10	3	5	8	14	19	31
	8	1	2	4	7	10	16
	6	1	1	3	6	8	13
	4	1	1	2	4	6	10
	3	1	1	2	4	5	9
	2	1	1	1	3	4	7
	1	0	1	1	1	3	5
	1/0	0	1	1	1	2	4
	2/0	0	1	1	1	2	4
	3/0	0	0	1	1	1	3
	4/0	0	0	1	1	1	3
TW, THHW, THW, THW-2	14	9	15	25	44	59	98
	12	7	12	19	33	45	75
	10	5	9	14	25	34	56
	8	3	5	8	14	19	31
RHH[a], RHW[a], RHW-2[a]	14	6	10	17	29	39	65
	12	5	8	13	23	32	52
	10	3	6	10	18	25	41
	8	1	4	6	11	15	24
RHH[a], RHW[a], RHW-2[a], TW, THW, THHW, THW-2	6	1	3	5	8	11	18
	4	1	1	3	6	8	14
	3	1	1	3	5	7	12
	2	1	1	2	4	6	10
	1	1	1	1	3	4	7
	1/0	0	1	1	2	3	6
	2/0	0	1	1	2	3	5
	3/0	0	1	1	1	2	4
	4/0	0	0	1	1	1	3
THHN, THWN, THWN-2	14	13	22	36	63	85	140
	12	9	16	26	46	62	102
	10	6	10	17	29	39	64
	8	3	6	9	16	22	37
	6	2	4	7	12	16	27
	4	1	2	4	7	10	16
	3	1	1	3	6	8	14
	2	1	1	3	5	7	11
	1	1	1	1	4	5	8
THHN, THWN, THWN-2	1/0	1	1	1	3	4	7
	2/0	0	1	1	2	3	6
	3/0	0	1	1	1	3	5
	4/0	0	1	1	1	2	4
XHH, XHHW, XHHW-2	14	9	15	25	44	59	98
	12	7	12	19	33	45	75
	10	5	9	14	25	34	56
	8	3	5	8	14	19	31
	6	1	3	6	10	14	23
	4	1	2	4	7	10	16
	3	1	1	3	6	8	14
	2	1	1	3	5	7	12
	1	1	1	1	4	5	9
	1/0	1	1	1	3	4	7
	2/0	0	1	1	2	3	6
	3/0	0	1	1	1	3	5
	4/0	0	1	1	1	2	4

For SI: 1 inch = 25.4 mm.

a. Types RHW, and RHW-2 without outer covering.

INTERNATIONAL CODE COUNCIL®
Copyright © 2019 ICC & NYSDOS. ALL RIGHTS RESERVED. Accessed by Lauren Gualdino (lgualdino@briarcliffmanor.org), (-) Order Number #100880972 on May 08, 2020 07:05 AM (PDT) pursuant to License Agreement with ICC & NYSDOS. No further reproduction, no

100880972

TABLE E3904.6(9) (Annex C, Table C.9)
MAXIMUM NUMBER OF CONDUCTORS IN RIGID PVC CONDUIT, SCHEDULE 80 (PVC-80)[a]

TYPE LETTERS	CONDUCTOR SIZE AWG/kcmil	TRADE SIZES (inches)					
		1/2	3/4	1	1 1/4	1 1/2	2
RHH, RHW, RHW-2	14	3	5	9	17	23	39
	12	2	4	7	14	19	32
	10	1	3	6	11	15	26
	8	1	1	3	6	8	13
	6	1	1	2	4	6	11
	4	1	1	1	3	5	8
	3	0	1	1	3	4	7
	2	0	1	1	3	4	6
	1	0	1	1	1	2	4
	1/0	0	0	1	1	1	3
	2/0	0	0	1	1	1	3
	3/0	0	0	1	1	1	3
	4/0	0	0	0	1	1	2
TW, THHW, THW, THW-2	14	6	11	20	35	49	82
	12	5	9	15	27	38	63
	10	3	6	11	20	28	47
	8	1	3	6	11	15	26
RHH[a], RHW[a], RHW-2[a]	14	4	8	13	23	32	55
	12	3	6	10	19	26	44
	10	2	5	8	15	20	34
	8	1	3	5	9	12	20
RHH[a], RHW[a], RHW-2[a], TW, THW, THHW, THW-2	6	1	1	3	7	9	16
	4	1	1	3	5	7	12
	3	1	1	2	4	6	10
	2	1	1	1	3	5	8
	1	0	1	1	2	3	6
	1/0	0	1	1	1	3	5
RHH[a], RHW[a], RHW-2[a], TW, THW, THHW, THW-2	2/0	0	1	1	1	2	4
	3/0	0	0	1	1	1	3
	4/0	0	0	1	1	1	3
THHN, THWN, THWN-2	14	9	17	28	51	70	118
	12	6	12	20	37	51	86
	10	4	7	13	23	32	54
	8	2	4	7	13	18	31
	6	1	3	5	9	13	22
	4	1	1	3	6	8	14
	3	1	1	3	5	7	12
	2	1	1	2	4	6	10
	1	0	1	1	3	4	7
	1/0	0	1	1	2	3	6
	2/0	0	1	1	1	3	5
	3/0	0	1	1	1	2	4
	4/0	0	0	1	1	1	3
XHH, XHHW, XHHW-2	14	6	11	20	35	49	82
	12	5	9	15	27	38	63
	10	3	6	11	20	28	47
	8	1	3	6	118	15	26
	6	1	2	4		11	19

(continued)

INTERNATIONAL CODE COUNCIL®
Copyright © 2019 ICC & NYSDOS. ALL RIGHTS RESERVED. Accessed by Lauren Gualdino (lgualdino@briarcliffmanor.org), (-) Order Number #100880972 on May 08, 2020 07:05 AM (PDT) pursuant to License Agreement with ICC & NYSDOS. No further reproduction, no

100880972

TABLE E3904.6(9) (Annex C, Table C.9)—continued
MAXIMUM NUMBER OF CONDUCTORS IN RIGID PVC CONDUIT, SCHEDULE 80 (PVC-80)[a]

TYPE LETTERS	CONDUCTOR SIZE AWG/kcmil	TRADE SIZES (inches)					
		1/2	3/4	1	1 1/4	1 1/2	2
XHH, XHHW, XHHW-2	14	6	11	20	35	49	82
	12	5	9	15	27	38	63
	10	3	6	11	20	28	47
	8	1	3	6	11	15	26
	6	1	2	4	8	11	19
	4	1	1	3	6	8	14
	3	1	1	3	5	7	12
	2	1	1	2	4	6	10
	1	0	1	1	3	4	7
	1/0	0	1	1	2	3	6
	2/0	0	1	1	1	3	5
	3/0	0	1	1	1	2	4
	4/0	0	0	1	1	1	3

For SI: 1 inch = 25.4 mm.

a. Types RHW, and RHW-2 without outer covering.

INTERNATIONAL CODE COUNCIL®
Copyright © 2019 ICC & NYSDOS. ALL RIGHTS RESERVED. Accessed by Lauren Gualdino (lgualdino@briarcliffmanor.org), (-) Order Number #100880972 on May 08, 2020 07:05 AM (PDT) pursuant to License Agreement with ICC & NYSDOS. No further reproduction, no

100880972

TABLE E3904.6(10) (Annex C, Table C.10)
MAXIMUM NUMBER OF CONDUCTORS IN RIGID PVC CONDUIT SCHEDULE 40 (PVC-40)[a]

TYPE LETTERS	CONDUCTOR SIZE AWG/kcmil	TRADE SIZES (inches)					
		1/2	3/4	1	1 1/4	1 1/2	2
RHH, RHW, RHW-2	14	4	7	11	20	27	45
	12	3	5	9	16	22	37
	10	2	4	7	13	18	30
	8	1	2	4	7	9	15
	6	1	1	3	5	7	12
	4	1	1	2	4	6	10
	3	1	1	1	4	5	8
	2	1	1	1	3	4	7
	1	0	1	1	1	3	5
	1/0	0	1	1	1	2	4
	2/0	0	0	1	1	1	3
	3/0	0	0	1	1	1	3
	4/0	0	0	1	1	1	2
TW, THHW, THW, THW-2	14	8	14	24	42	57	94
	12	6	11	18	32	44	72
	10	4	8	13	24	32	54
	8	2	4	7	13	18	30
RHH[a], RHW[a], RHW-2[a]	14	5	9	16	28	38	63
	12	4	8	13	22	30	50
	10	3	6	10	17	24	39
	8	1	3	6	10	14	23
RHH[a], RHW[a], RHW-2[a], TW, THW, THHW, THW-2	6	1	2	4	8	11	18
	4	1	1	3	6	8	13
	3	1	1	3	5	7	11
	2	1	1	2	4	6	10
	1	0	1	1	3	4	7
	1/0	0	1	1	2	3	6
	2/0	0	1	1	1	3	5
	3/0	0	1	1	1	2	4
	4/0	0	0	1	1	1	3
THHN, THWN, THWN-2	14	11	21	34	60	82	135
	12	8	15	25	43	59	99
	10	5	9	15	27	37	62
	8	3	5	9	16	21	36
THHN, THWN, THWN-2	6	1	4	6	11	15	26
	4	1	2	4	7	9	16
	3	1	1	3	6	8	13
	2	1	1	3	5	7	11
	1	1	1	1	3	5	8
	1/0	1	1	1	3	4	7
	2/0	0	1	1	2	3	6
	3/0	0	1	1	1	3	5
	4/0	0	1	1	1	2	4
XHH, XHHW, XHHW-2	14	8	14	24	42	57	94
	12	6	11	18	32	44	72
	10	4	8	13	24	32	54
	8	2	4	7	13	18	30
	6	1	3	5	10	13	22
	4	1	2	4	7	9	16
	3	1	1	3	6	8	13
	2	1	1	3	5	7	11
	1	1	1	1	3	5	8
	1/0	1	1	1	3	4	7
	2/0	0	1	1	2	3	6
	3/0	0	1	1	1	3	5
	4/0	0	1	1	1	2	4

For SI: 1 inch = 25.4 mm.

a. Types RHW, and RHW-2 without outer covering.

INTERNATIONAL CODE COUNCIL®
Copyright © 2019 ICC & NYSDOS. ALL RIGHTS RESERVED. Accessed by Lauren Gualdino (lgualdino@briarcliffmanor.org), (-) Order Number #100880972 on May 08, 2020 07:05 AM (PDT) pursuant to License Agreement with ICC & NYSDOS. No further reproduction, no

100880972

E3905.4.1 Outlet boxes without enclosed devices or utilization equipment. Outlet boxes that do not enclose devices or utilization equipment shall have an internal depth of not less than $^1/_2$ inch (12.7 mm). [314.24(A)]

E3905.4.2 Utilization equipment. Outlet and device boxes that enclose devices or utilization equipment shall have a minimum internal depth that accommodates the rearward projection of the equipment and the size of the conductors that supply the equipment. The internal depth shall include that of any extension boxes, plaster rings, or raised covers. The internal depth shall comply with all of the applicable provisions that follow. [314.24(B)]

Exception: Utilization equipment that is listed to be installed with specified boxes.

1. Large equipment. Boxes that enclose devices or utilization equipment that projects more than $1^7/_8$ inches (48 mm) rearward from the mounting plane of the box shall have a depth that is not less than the depth of the equipment plus $^1/_4$ inch (6.4 mm). [314.24(B)(1)]
2. Conductors larger than 4 AWG. Boxes that enclose devices or utilization equipment supplied by conductors larger than 4 AWG shall be identified for their specific function. [314.24(B)(2)]
3. Conductors 8, 6, or 4 AWG. Boxes that enclose devices or utilization equipment supplied by 8, 6, or 4 AWG conductors shall have an internal depth that is not less than $2^1/_{16}$ inches (52.4 mm). [314.24(B)(3)]
4. Conductors 12 or 10 AWG. Boxes that enclose devices or utilization equipment supplied by 12 or 10 AWG conductors shall have an internal depth that is not less than $1^3/_{16}$ inches (30.2 mm). Where the equipment projects rearward from the mounting plane of the box by more than 1 inch (25.4 mm), the box shall have a depth that is not less than that of the equipment plus $^1/_4$ inch (6.4 mm). [314.24(B)(4)]
5. Conductors 14 AWG and smaller. Boxes that enclose devices or utilization equipment supplied by 14 AWG or smaller conductors shall have a depth that is not less than $^{15}/_{16}$ inch (23.8 mm). [314.24(B)(5)]

E3905.5 Boxes enclosing flush-mounted devices. Boxes enclosing flush-mounted devices shall be of such design that the devices are completely enclosed at the back and all sides and shall provide support for the devices. Screws for supporting the box shall not be used for attachment of the device contained therein. (314.19)

E3905.6 Boxes at luminaire outlets. Outlet boxes used at luminaire or lampholder outlets shall be designed for the support of luminaires and lampholders and shall be installed as required by Section E3904.3. [314.27(A)]

E3905.6.1 Vertical surface outlets. Boxes used at luminaire or lampholder outlets in or on a vertical surface shall be identified and marked on the interior of the box to indicate the maximum weight of the luminaire or lamp holder that is permitted to be supported by the box if other than 50 pounds (22.7 kg). [314.27(A)(1)]

Exception: A vertically mounted luminaire or lampholder weighing not more than 6 pounds (2.7 kg) shall be permitted to be supported on other boxes or plaster rings that are secured to other boxes, provided that the luminaire or its supporting yoke is secured to the box with not fewer than two No. 6 or larger screws. [314.27(A)(1) Exception]

E3905.6.2 Ceiling outlets. For outlets used exclusively for lighting, the box shall be designed or installed so that a luminaire or lampholder can be attached. Such boxes shall be capable of supporting a luminaire weighing up to 50 pounds (22.7 kg). A luminaire that weighs more than 50 pounds (22.7 kg) shall be supported independently of the outlet box, unless the outlet box is listed for not less than the weight to be supported. The interior of the box shall be marked by the manufacturer to indicate the maximum weight that the box is permitted to support. [314.27(A)(2)]

E3905.7 Floor boxes. Where outlet boxes for receptacles are installed in the floor, such boxes shall be listed specifically for that application. [314.27(B)]

E3905.8 Boxes at fan outlets. Outlet boxes and outlet box systems used as the sole support of ceiling-suspended fans (paddle) shall be marked by their manufacturer as suitable for this purpose and shall not support ceiling-suspended fans (paddle) that weigh more than 70 pounds (31.8 kg). For outlet boxes and outlet box systems designed to support ceiling-suspended fans (paddle) that weigh more than 35 pounds (15.9 kg), the required marking shall include the maximum weight to be supported.

Where spare, separately switched, ungrounded conductors are provided to a ceiling-mounted outlet box and such box is in a location acceptable for a ceiling-suspended (paddle) fan, the outlet box or outlet box system shall be listed for sole support of a ceiling-suspended (paddle) fan. [314.27(C)]

E3905.9 Utilization equipment. Boxes used for the support of utilization equipment other than ceiling-suspended (paddle) fans shall meet the requirements of Sections E3905.6.1 and E3905.6.2 for the support of a luminaire that is the same size and weight. [314.27(D)]

Exception: Utilization equipment weighing not more than 6 pounds (2.7 kg) shall be permitted to be supported on other boxes or plaster rings that are secured to other boxes, provided that the equipment or its supporting yoke is secured to the box with not fewer than two No. 6 or larger screws. [314.27(D) Exception]

E3905.10 Conduit bodies and junction, pull and outlet boxes to be accessible. Conduit bodies and junction, pull and outlet boxes shall be installed so that the wiring therein can be accessed without removing any part of the building or structure or, in underground circuits, without excavating sidewalks, paving, earth or other substance used to establish the finished grade. (314.29)

Exception: Boxes covered by gravel, light aggregate or noncohesive granulated soil shall be listed for the application, and the box locations shall be effectively identified

INTERNATIONAL CODE COUNCIL®
Copyright © 2019 ICC & NYSDOS. ALL RIGHTS RESERVED. Accessed by Lauren Gualdino (lgualdino@briarcliffmanor.org), (-) Order Number #100880972 on May 08, 2020 07:05 AM (PDT) pursuant to License Agreement with ICC & NYSDOS. No further reproduction, no

100880972

and access shall be provided for excavation. (314.29 Exception)

E3905.11 Damp or wet locations. In damp or wet locations, boxes, conduit bodies and fittings shall be placed or equipped so as to prevent moisture from entering or accumulating within the box, conduit body or fitting. Boxes, conduit bodies and fittings installed in wet locations shall be listed for use in wet locations.

Where drainage openings are installed in the field in boxes or conduit bodies listed for use in damp or wet locations, such openings shall be approved, not smaller than $^1/_8$ inch (3 mm) and not larger than $^1/_4$ inch (6.4 mm). For listed drain fittings, larger openings are permitted where installed in the field in accordance with the manufacturer's instructions. (314.15)

E3905.12 Number of conductors in outlet, device, and junction boxes, and conduit bodies. Boxes and conduit bodies shall be of an approved size to provide free space for all enclosed conductors. In no case shall the volume of the box, as calculated in Section E3905.12.1, be less than the box fill calculation as calculated in Section E3905.12.2. The minimum volume for conduit bodies shall be as calculated in Section E3905.12.3. The provisions of this section shall not apply to terminal housings supplied with motors or generators. (314.16)

E3905.12.1 Box volume calculations. The volume of a wiring enclosure (box) shall be the total volume of the assembled sections, and, where used, the space provided by plaster rings, domed covers, extension rings, etc., that are marked with their volume in cubic inches or are made from boxes the dimensions of which are listed in Table E3905.12.1. Where a box is provided with one or more securely installed barriers, the volume shall be apportioned to each of the resulting spaces. Each barrier, if not marked with its volume, shall be considered to take up to 0.5 cubic inch (8.2 cm^3) if metal, and 1.0 cubic inch (16.4 cm^3) if nonmetallic. [314.16(A)]

E3905.12.1.1 Standard boxes. The volumes of standard boxes that are not marked with a cubic-inch capacity shall be as given in Table E3905.12.1. [314.16(A)(1)]

E3905.12.1.2 Other boxes. Boxes 100 cubic inches (1640 cm^3) or less, other than those described in Table E3905.12.1, and nonmetallic boxes shall be durably and legibly marked by the manufacturer with their cubic-inch capacity. Boxes described in Table E3905.12.1 that have a larger cubic inch capacity than is designated in the table shall be permitted to have their cubic-inch capacity marked as required by this section. [314.16(A)(2)]

E3905.12.2 Box fill calculations. The volumes in Section E3905.12.2.1 through Section E3905.12.2.5, as applicable, shall be added together. No allowance shall be required for small fittings such as locknuts and bushings. Each space within a box installed with a barrier shall be calculated separately. [314.16(B)]

TABLE E3905.12.1 [Table 314.16(A)]
MAXIMUM NUMBER OF CONDUCTORS IN METAL BOXES[a]

BOX DIMENSIONS (inches trade size and type)	MAXIMUM CAPACITY (cubic inches)	MAXIMUM NUMBER OF CONDUCTORS[a]						
		18 Awg	16 Awg	14 Awg	12 Awg	10 Awg	8 Awg	6 Awg
4 × $1^1/_4$ round or octagonal	12.5	8	7	6	5	5	4	2
4 × $1^1/_2$ round or octagonal	15.5	10	8	7	6	6	5	3
4 × $2^1/_8$ round or octagonal	21.5	14	12	10	9	8	7	4
4 × $1^1/_4$ square	18.0	12	10	9	8	7	6	3
4 × $1^1/_2$ square	21.0	14	12	10	9	8	7	4
4 × $2^1/_8$ square	30.3	20	17	15	13	12	10	6
$4^{11}/_{16}$ × $1^1/_4$ square	25.5	17	14	12	11	10	8	5
$4^{11}/_{16}$ × $1^1/_2$ square	29.5	19	16	14	13	11	9	5
$4^{11}/_{16}$ × $2^1/_8$ square	42.0	28	24	21	18	16	14	8
3 × 2 × $1^1/_2$ device	7.5	5	4	3	3	3	2	1
3 × 2 × 2 device	10.0	6	5	5	4	4	3	2
3 × 2 × $2^1/_4$ device	10.5	7	6	5	4	4	3	2
3 × 2 × $2^1/_2$ device	12.5	8	7	6	5	5	4	2
3 × 2 × $2^3/_4$ device	14.0	9	8	7	6	5	4	2
3 × 2 × $3^1/_2$ device	18.0	12	10	9	8	7	6	3
4 × $2^1/_8$ × $1^1/_2$ device	10.3	6	5	5	4	4	3	2
4 × $2^1/_8$ × $1^7/_8$ device	13.0	8	7	6	5	5	4	2
4 × $2^1/_8$ × $2^1/_8$ device	14.5	9	8	7	6	5	4	2
$3^3/_4$ × 2 × $2^1/_2$ masonry box/gang	14.0	9	8	7	6	5	4	2
$3^3/_4$ × 2 × $3^1/_2$ masonry box/gang	21.0	14	12	10	9	8	7	4

For SI: 1 inch = 25.4 mm, 1 cubic inch = 16.4 cm^3.

a. Where volume allowances are not required by Sections E3905.12.2.2 through E3905.12.2.5.

INTERNATIONAL CODE COUNCIL®
Copyright © 2019 ICC & NYSDOS. ALL RIGHTS RESERVED. Accessed by Lauren Gualdino (lgualdino@briarcliffmanor.org), (-) Order Number #100880972 on May 08, 2020 07:05 AM (PDT) pursuant to License Agreement with ICC & NYSDOS. No further reproduction, no

100880972

E3905.12.2.1 Conductor fill. Each conductor that originates outside the box and terminates or is spliced within the box shall be counted once, and each conductor that passes through the box without splice or termination shall be counted once. Each loop or coil of unbroken conductor having a length equal to or greater than twice that required for free conductors by Section E3406.11.3, shall be counted twice. The conductor fill, in cubic inches, shall be computed using Table E3905.12.2.1. A conductor, no part of which leaves the box, shall not be counted. [314.16(B)(1)]

Exception: An equipment grounding conductor or not more than four fixture wires smaller than No. 14, or both, shall be permitted to be omitted from the calculations where such conductors enter a box from a domed fixture or similar canopy and terminate within that box. [314.16(B)(1) Exception]

TABLE E3905.12.2.1 [Table 314.16(B)]
VOLUME ALLOWANCE REQUIRED PER CONDUCTOR

SIZE OF CONDUCTOR	FREE SPACE WITHIN BOX FOR EACH CONDUCTOR (cubic inches)
18 AWG	1.50
16 AWG	1.75
14 AWG	2.00
12 AWG	2.25
10 AWG	2.50
8 AWG	3.00
6 AWG	5.00

For SI: 1 cubic inch = 16.4 cm^3.

E3905.12.2.2 Clamp fill. Where one or more internal cable clamps, whether factory or field supplied, are present in the box, a single volume allowance in accordance with Table E3905.12.2.1 shall be made based on the largest conductor present in the box. An allowance shall not be required for a cable connector having its clamping mechanism outside of the box.

A clamp assembly that incorporates a cable termination for the cable conductors shall be listed and marked for use with specific nonmetallic boxes. Conductors that originate within the clamp assembly shall be included in conductor fill calculations provided in Section E3905.12.2.1 as though they entered from outside of the box. The clamp assembly shall not require a fill allowance, but, the volume of the portion of the assembly that remains within the box after installation shall be excluded from the box volume as marked in accordance with Section E3905.12.1.2. [314.16(B)(2)]

E3905.12.2.3 Support fittings fill. Where one or more fixture studs or hickeys are present in the box, a single volume allowance in accordance with Table E3905.12.2.1 shall be made for each type of fitting based on the largest conductor present in the box. [314.16(B)(3)]

E3905.12.2.4 Device or equipment fill. For each yoke or strap containing one or more devices or equipment, a double volume allowance in accordance with Table E3905.12.2.1 shall be made for each yoke or strap based on the largest conductor connected to a device(s) or equipment supported by that yoke or strap. For a device or utilization equipment that is wider than a single 2-inch (51 mm) device box as described in Table E3905.12.1, a double volume allowance shall be made for each ganged portion required for mounting of the device or equipment. [314.16(B)(4)]

E3905.12.2.5 Equipment grounding conductor fill. Where one or more equipment grounding conductors or equipment bonding jumpers enters a box, a single volume allowance in accordance with Table E3905.12.2.1 shall be made based on the largest equipment grounding conductor or equipment bonding jumper present in the box. [314.16(B)(5)]

E3905.12.3 Conduit bodies. Conduit bodies enclosing 6 AWG conductors or smaller, other than short-radius conduit bodies, shall have a cross-sectional area not less than twice the cross-sectional area of the largest conduit or tubing to which they can be attached. The maximum number of conductors permitted shall be the maximum number permitted by Section E3904.6 for the conduit to which it is attached. [314.16(C)(1)]

E3905.12.3.1 Splices, taps or devices. Only those conduit bodies that are durably and legibly marked by the manufacturer with their cubic inch capacity shall be permitted to contain splices, taps or devices. The maximum number of conductors shall be calculated using the same procedure for similar conductors in other than standard boxes. [314.16(C)(2)]

E3905.12.3.2 Short-radius conduit bodies. Conduit bodies such as capped elbows and service-entrance elbows that enclose conductors 6 AWG or smaller and that are only intended to enable the installation of the raceway and the contained conductors, shall not contain splices, taps, or devices and shall be of sufficient size to provide free space for all conductors enclosed in the conduit body. [314.16(C)(3)]

SECTION E3906
INSTALLATION OF BOXES, CONDUIT BODIES AND FITTINGS

E3906.1 Conductors entering boxes, conduit bodies or fittings. Conductors entering boxes, conduit bodies or fittings shall be protected from abrasion. (314.17)

E3906.1.1 Insulated fittings. Where raceways contain 4 AWG or larger insulated circuit conductors and these conductors enter a cabinet, box enclosure, or raceway, the conductors shall be protected by an identified fitting providing a smoothly rounded insulating surface, unless the conductors are separated from the fitting or raceway by identified insulating material securely fastened in place. [300.4(G)]

Exception: Where threaded hubs or bosses that are an integral part of a cabinet, box enclosure, or raceway provide a smoothly rounded or flared entry for conductors. [300.4(G) Exception]

INTERNATIONAL CODE COUNCIL®
Copyright © 2019 ICC & NYSDOS. ALL RIGHTS RESERVED. Accessed by Lauren Gualdino (lgualdino@briarcliffmanor.org), (-) Order Number #100880972 on May 08, 2020 07:05 AM (PDT) pursuant to License Agreement with ICC & NYSDOS. No further reproduction, no

100880972

Conduit bushings constructed wholly of insulating material shall not be used to secure a fitting or raceway. The insulating fitting or insulating material shall have a temperature rating not less than the insulation temperature rating of the installed conductors. [330.4(G)]

E3906.2 Openings. Openings through which conductors enter shall be closed in an approved manner. [314.17(A)]

E3906.3 Metal boxes and conduit bodies. Where raceway or cable is installed with metal boxes, or conduit bodies, the raceway or cable shall be secured to such boxes and conduit bodies. Where nonmetallic-sheathed cable or multiconductor Type UF cable is used, the sheath shall extend not less than $^1/_4$ inch (6 mm) inside the box and beyond any cable clamp. [314.17(B)]

E3906.4 Unused openings. Unused openings other than those intended for the operation of equipment, those intended for mounting purposes, or those permitted as part of the design for listed equipment, shall be closed to afford protection substantially equivalent to that of the wall of the equipment. Metal plugs or plates used with nonmetallic boxes or conduit bodies shall be recessed at least $^1/_4$ inch (6.4 mm) from the outer surface of the box or conduit body. [110.12(A)]

E3906.5 Flush-mounted installations. Installations within or behind a surface of concrete, tile, gypsum, plaster or other noncombustible material, including boxes employing a flush-type cover or faceplate shall be made so that the front edge of the box, plaster ring, extension ring, or listed extender will be set back from the finished surface not more than $^1/_4$ inch (6.4 mm). Installations within a surface of wood or other combustible material, boxes, plaster rings, extension rings and listed extenders shall extend to the finished surface or project therefrom. (314.20)

E3906.6 Noncombustible surfaces. Openings in noncombustible surfaces that accommodate boxes employing a flush-type cover or faceplate shall be made so that there are no gaps or open spaces greater than $^1/_8$ inch (3.2 mm) around the edge of the box. (314.21)

E3906.7 Surface extensions. Surface extensions shall be made by mounting and mechanically securing an extension ring over the box. (314.22)

Exception: A surface extension shall be permitted to be made from the cover of a flush-mounted box where the cover is designed so it is unlikely to fall off, or be removed if its securing means becomes loose. The wiring method shall be flexible for an approved length that permits removal of the cover and provides access to the box interior and shall be arranged so that any bonding or grounding continuity is independent of the connection between the box and cover. (314.22 Exception)

E3906.8 Supports. Boxes and enclosures shall be supported in accordance with one or more of the provisions in Sections E3906.8.1 through E3906.8.6. (314.23)

E3906.8.1 Surface mounting. An enclosure mounted on a building or other surface shall be rigidly and securely fastened in place. If the surface does not provide rigid and secure support, additional support in accordance with other provisions of Section E3906.8 shall be provided. [314.23(A)]

E3906.8.2 Structural mounting. An enclosure supported from a structural member or from grade shall be rigidly supported either directly, or by using a metal, polymeric or wood brace. [314.23(B)]

E3906.8.2.1 Nails and screws. Nails and screws, where used as a fastening means, shall secure boxes by using brackets on the outside of the enclosure, or by using mounting holes in the back or in a single side of the enclosure, or they shall pass through the interior within $^1/_4$ inch (6.4 mm) of the back or ends of the enclosure. Screws shall not be permitted to pass through the box except where exposed threads in the box are protected by an approved means to avoid abrasion of conductor insulation. Mounting holes made in the field shall be field approved. [314.23(B)(1)]

E3906.8.2.2 Braces. Metal braces shall be protected against corrosion and formed from metal that is not less than 0.020 inch (0.508 mm) thick uncoated. Wood braces shall have a cross section not less than nominal 1 inch by 2 inches (25.4 mm by 51 mm). Wood braces in wet locations shall be treated for the conditions. Polymeric braces shall be identified as being suitable for the use. [314.23(B)(2)]

E3906.8.3 Mounting in finished surfaces. An enclosure mounted in a finished surface shall be rigidly secured there to by clamps, anchors, or fittings identified for the application. [314.23(C)]

E3906.8.4 Raceway supported enclosures without devices or fixtures. An enclosure that does not contain a device(s), other than splicing devices, or support a luminaire, lampholder or other equipment, and that is supported by entering raceways shall not exceed 100 cubic inches (1640 cm^3) in size. The enclosure shall have threaded entries or identified hubs. The enclosure shall be supported by two or more conduits threaded wrenchtight into the enclosure or hubs. Each conduit shall be secured within 3 feet (914 mm) of the enclosure, or within 18 inches (457 mm) of the enclosure if all entries are on the same side of the enclosure. [314.23(E)]

Exception: Rigid metal, intermediate metal, or rigid polyvinyl chloride nonmetallic conduit or electrical metallic tubing shall be permitted to support a conduit body of any size, provided that the conduit body is not larger in trade size than the largest trade size of the supporting conduit or electrical metallic tubing. [314.23(E) Exception]

E3906.8.5 Raceway supported enclosures, with devices or luminaire. An enclosure that contains a device(s), other than splicing devices, or supports a luminaire, lamp holder or other equipment and is supported by entering raceways shall not exceed 100 cubic inches (1640 cm^3) in size. The enclosure shall have threaded entries or identified hubs. The enclosure shall be supported by two or more conduits threaded wrench-tight into the enclosure or hubs. Each

INTERNATIONAL CODE COUNCIL®
Copyright © 2019 ICC & NYSDOS. ALL RIGHTS RESERVED. Accessed by Lauren Gualdino (lgualdino@briarcliffmanor.org), (-) Order Number #100880972 on May 08, 2020 07:05 AM (PDT) pursuant to License Agreement with ICC & NYSDOS. No further reproduction, no

100880972

conduit shall be secured within 18 inches (457 mm) of the enclosure. [314.23(F)]

Exceptions:

1. Rigid metal or intermediate metal conduit shall be permitted to support a conduit body of any size, provided that the conduit bodies are not larger in trade size than the largest trade size of the supporting conduit. [314.23(F) Exception No. 1]
2. An unbroken length(s) of rigid or intermediate metal conduit shall be permitted to support a box used for luminaire or lampholder support, or to support a wiring enclosure that is an integral part of a luminaire and used in lieu of a box in accordance with Section E3905.1.1, where all of the following conditions are met:
   - 2.1. The conduit is securely fastened at a point so that the length of conduit beyond the last point of conduit support does not exceed 3 feet (914 mm).
   - 2.2. The unbroken conduit length before the last point of conduit support is 12 inches (305 mm) or greater, and that portion of the conduit is securely fastened at some point not less than 12 inches (305 mm) from its last point of support.
   - 2.3. Where accessible to unqualified persons, the luminaire or lampholder, measured to its lowest point, is not less than 8 feet (2438 mm) above grade or standing area and at least 3 feet (914 mm) measured horizontally to the 8-foot (2438 mm) elevation from windows, doors, porches, fire escapes, or similar locations.
   - 2.4. A luminaire supported by a single conduit does not exceed 12 inches (305 mm) in any direction from the point of conduit entry.
   - 2.5. The weight supported by any single conduit does not exceed 20 pounds (9.1 kg).
   - 2.6. At the luminaire or lampholder end, the conduit(s) is threaded wrenchtight into the box, conduit body, or integral wiring enclosure, or into hubs identified for the purpose. Where a box or conduit body is used for support, the luminaire shall be secured directly to the box or conduit body, or through a threaded conduit nipple not over 3 inches (76 mm) long. [314.23(F) Exception No. 2]

E3906.8.6 Enclosures in concrete or masonry. An enclosure supported by embedment shall be identified as being suitably protected from corrosion and shall be securely embedded in concrete or masonry. [314.23(G)]

E3906.9 Covers and canopies. In completed installations, each box shall have a cover, faceplate, lampholder or luminaire canopy. Screws used for the purpose of attaching covers, or other equipment to the box shall be either machine screws matching the thread gauge or size that is integral to the box or shall be in accordance with the manufacturer's instructions. (314.25)

E3906.10 Covers and plates. Covers and plates shall be nonmetallic or metal. Metal covers and plates shall be grounded. [314.25(A)]

E3906.11 Exposed combustible finish. Combustible wall or ceiling finish exposed between the edge of a fixture canopy or pan and the outlet box shall be covered with noncombustible material where required by Section E4004.2. [314.25(B)]

E3906.12 Separable attachment fittings. Where outlet boxes required in Section E3905.6 support listed locking support and mounting receptacles used in combination with compatible attachment fittings, the combination shall be identified for the support of equipment within the weight and mounting orientation limits of the listing. Where the supporting receptacle is installed within a box, it shall be included in the fill calculation given in Section E3905.12.2.4.

SECTION E3907
CABINETS AND PANELBOARDS

E3907.1 Space within switch and overcurrent device enclosures. Where the wiring space of enclosures for switches or overcurrent devices contains conductors that are feeding through, spliced, or tapping off to other enclosures, switches, or overcurrent devices, all of the following conditions shall apply:

1. The total area of all conductors installed at any cross section of the wiring space shall not exceed 40 percent of the cross-sectional area of that space.
2. The total area of all conductors, splices, and taps installed at any cross section of the wiring space shall not exceed 75 percent of the cross-sectional area of that space.
3. A warning label shall be applied to the enclosure that identifies the closest disconnecting means for any feed-through conductors. (312.8)

E3907.1.1 Power monitoring equipment. Where the wiring space of enclosures for switches or overcurrent devices contains power monitoring equipment, all of the following conditions shall be met:

1. The power monitoring equipment shall be identified as a field installable accessory as part of the listed equipment, or shall be a listed kit evaluated for field installation in switch or overcurrent device enclosures.
2. The total area of all conductors, splices, taps and equipment at any cross section of the wiring space shall not exceed 75 percent of the cross-sectional area of that space.

E3907.2 Damp and wet locations. In damp or wet locations, cabinets and panelboards of the surface type shall be placed or equipped so as to prevent moisture or water from entering and accumulating within the cabinet, and shall be mounted to provide an airspace not less than $^1/_4$ inch (6.4 mm) between the enclosure and the wall or other supporting surface. Cabi-

INTERNATIONAL CODE COUNCIL®
Copyright © 2019 ICC & NYSDOS. ALL RIGHTS RESERVED. Accessed by Lauren Gualdino (lgualdino@briarcliffmanor.org), (-) Order Number #100880972 on May 08, 2020 07:05 AM (PDT) pursuant to License Agreement with ICC & NYSDOS. No further reproduction, no

100880972

nets installed in wet locations shall be weatherproof. For enclosures in wet locations, raceways and cables entering above the level of uninsulated live parts shall be installed with fittings listed for wet locations. (312.2)

Exception: Nonmetallic enclosures installed on concrete, masonry, tile, or similar surfaces shall not be required to be installed with an airspace between the enclosure and the wall or supporting surface. (312.2 Exception)

E3907.3 Position in wall. In walls of concrete, tile or other noncombustible material, cabinets and panelboards shall be installed so that the front edge of the cabinet will not set back of the finished surface more than $^1/_4$ inch (6.4 mm). In walls constructed of wood or other combustible material, cabinets shall be flush with the finished surface or shall project therefrom. (312.3)

E3907.4 Repairing noncombustible surfaces. Noncombustible surfaces that are broken or incomplete shall be repaired so that there will not be gaps or open spaces greater than $^1/_8$ inch (3.2 mm) at the edge of the cabinet or cutout box employing a flush-type cover. (312.4)

E3907.5 Unused openings. Unused openings, other than those intended for the operation of equipment, those intended for mounting purposes, and those permitted as part of the design for listed equipment, shall be closed to afford protection substantially equivalent to that of the wall of the equipment. Metal plugs and plates used with nonmetallic cabinets shall be recessed at least $^1/_4$ inch (6.4 mm) from the outer surface. Unused openings for circuit breakers and switches shall be closed using identified closures, or other approved means that provide protection substantially equivalent to the wall of the enclosure. (110.12(A)]

E3907.6 Conductors entering cabinets. Conductors entering cabinets and panelboards shall be protected from abrasion and shall comply with Section E3906.1.1. (312.5)

E3907.7 Openings to be closed. Openings through which conductors enter cabinets, panelboards and meter sockets shall be closed in an approved manner. [312.5(A)]

E3907.8 Cables. Where cables are used, each cable shall be secured to the cabinet, panelboard, cutout box, or meter socket enclosure. [312.5(C)]

Exception: Cables with entirely nonmetallic sheaths shall be permitted to enter the top of a surface-mounted enclosure through one or more sections of rigid raceway not less than 18 inches (457 mm) nor more than 10 feet (3048 mm) in length, provided all the following conditions are met:

1. Each cable is fastened within 12 inches (305 mm), measured along the sheath, of the outer end of the raceway.
2. The raceway extends directly above the enclosure and does not penetrate a structural ceiling.
3. A fitting is provided on each end of the raceway to protect the cable(s) from abrasion and the fittings remain accessible after installation.
4. The raceway is sealed or plugged at the outer end using approved means so as to prevent access to the enclosure through the raceway.
5. The cable sheath is continuous through the raceway and extends into the enclosure beyond the fitting not less than $^1/_4$ inch (6.4 mm).
6. The raceway is fastened at its outer end and at other points in accordance with Section E3802.1.
7. The allowable cable fill for conduit or tubing shall not exceed that permitted by Table E3907.8 and shall be considered as a complete conduit or tubing system. A multiconductor cable having two or more conductors shall be treated as a single conductor for calculating the percentage of conduit fill area. For cables that have elliptical cross sections, the cross-sectional area calculation shall be based on the major diameter of the ellipse as a circle diameter. [312.5(C) Exception]

TABLE E3907.8 (Chapter 9, Table 1)
PERCENT OF CROSS SECTION OF CONDUIT AND TUBING FOR CONDUCTORS

NUMBER OF CONDUCTORS	MAXIMUM PERCENT OF CONDUIT AND TUBING AREA FILLED BY CONDUCTORS
1	53
2	31
Over 2	40

E3907.9 Wire-bending space within an enclosure containing a panelboard. Wire-bending space within an enclosure containing a panelboard shall comply with the requirements of Sections E3907.9.1 through E3907.9.3.

E3907.9.1 Top and bottom wire-bending space. The top and bottom wire-bending space for a panelboard enclosure shall be sized in accordance with Table E3907.9.1(1) based on the largest conductor entering or leaving the enclosure. [408.55 (A)]

Exceptions:

1. For a panelboard rated at 225 amperes or less and designed to contain not more than 42 overcurrent devices, either the top or bottom wire-bending space shall be permitted to be sized in accordance with Table E3907.9.1(2). For the purposes of this exception, a 2-pole or a 3-pole circuit breaker shall be considered as two or three overcurrent devices, respectively. [408.55(A) Exception No. 1]
2. For any panelboard, either the top or bottom wire-bending space shall be permitted to be sized in accordance with Table E3907.9.1(2) where the wire-bending space on at least one side is sized in accordance with Table E3907.9.1(1) based on the largest conductor to be terminated in any side wire-bending space. [408.55(A) Exception No. 2]
3. Where the panelboard is designed and constructed for wiring using only a single 90-degree bend for each conductor, including the grounded circuit conductor, and the wiring diagram indicates and specifies the method of wiring that must be used, the top and bottom wire-bending space shall be permitted to be sized in accordance with Table E3907.9.1(2). [408.55(A) Exception No. 3]

INTERNATIONAL CODE COUNCIL®
Copyright © 2019 ICC & NYSDOS. ALL RIGHTS RESERVED. Accessed by Lauren Gualdino (lgualdino@briarcliffmanor.org), (-) Order Number #100880972 on May 08, 2020 07:05 AM (PDT) pursuant to License Agreement with ICC & NYSDOS. No further reproduction, no

100880972

4. Where there are no conductors terminated in that space, either the top or the bottom wire-bending space, shall be permitted to be sized in accordance with Table E3907.9.1(2). [408.55(A) Exception No. 4]

E3907.9.2 Side wire-bending space. Side wire-bending space shall be in accordance with Table E3907.9.1(2) based on the largest conductor to be terminated in that space. [408.55(B)]

E3907.9.3 Back wire-bending space. The distance between the center of the rear entry and the nearest termination for the entering conductors shall be not less than the distance given in Table E3907.9.1(1). Where a raceway or cable entry is in the wall of the enclosure, opposite a removable cover, the distance from that wall to the cover shall be permitted to comply with the distance required in Table E3907.9.1(2). [408.55 (C)]

SECTION E3908
GROUNDING

E3908.1 Metal enclosures. Metal enclosures of conductors, devices and equipment shall be connected to the equipment grounding conductor. (250.86)

Exceptions:

1. Short sections of metal enclosures or raceways used to provide cable assemblies with support or protection against physical damage. (250.86 Exception No. 2)
2. Metal components that are installed in an underground installation of rigid nonmetallic conduit and are isolated from possible contact by a minimum cover of 18 inches (457 mm) to any part of the metal components or that are isolated from possible contact by encasement in not less than 2 inches (51 mm) of concrete. (250.86 Exception No. 3)

TABLE E3907.9.1(1) [Table 312.6(B)]
MINIMUM WIRE-BENDING SPACE AT TERMINALS (see Note 1)

WIRE SIZE (AWG or kcmil)		WIRES PER TERMINAL			
All other conductors	Compact stranded AA-8000 aluminum alloy conductors (see Note 3)	One (see Note 2)		Two	
		inches	mm	inches	mm
14-10	12-8	Not specified	Not specified	—	—
8	6	1 1/2	38.1	—	—
6	4	2	50.8	—	—
4	2	3	76.2	—	—
3	1	3	76.2	—	—
2	1/0	3 1/2	88.9	—	—
1	2/0	4 1/2	114	—	—
1/0	3/0	5 1/2	140	5 1/2	140
2/0	4/0	6	152	6	152
3/0	250	6 1/2 [a]	165 [a]	6 1/2 [a]	165 [a]
4/0	300	7 [b]	178 [b]	7 1/2 [c]	190 [c]
250	350	8 1/2 [d]	216 [d]	8 1/2 [d]	229 [d]
300	400	10 [c]	254 [c]	10 [d]	254 [d]
350	500	12 [c]	305 [c]	12 [c]	305 [c]
400	600	13 [c]	330 [c]	13 [c]	330 [c]
500	700-750	14 [c]	356 [c]	14 [c]	356 [c]
600	800-900	15 [c]	381 [c]	16 [c]	406 [c]
700	1000	16 [c]	406 [c]	18 [c]	457 [c]

For SI: 1 inch = 25.4 mm, 1 foot = 304.8 mm.

1. Bending space at terminals shall be measured in a straight line from the end of the lug or wire connector in a direction perpendicular to the enclosure wall.
2. For removable and lay-in wire terminals intended for only one wire, bending space shall be permitted to be reduced by the following number of millimeters (inches):
   a. 1/2 inches (12.7 mm)
   b. 1 inches (25.4 mm)
   c. 1 1/2 inches (38.1 mm)
   d. 2 inches (50.8 mm)
3. This column shall be permitted to determine the required wire-bending space for compact stranded aluminum conductors in sizes up to 1000 kcmil and manufactured using AA-8000 series electrical grade aluminum alloy conductor material.

INTERNATIONAL CODE COUNCIL®
Copyright © 2019 ICC & NYSDOS. ALL RIGHTS RESERVED. Accessed by Lauren Gualdino (lgualdino@briarcliffmanor.org), (-) Order Number #100880972 on May 08, 2020 07:05 AM (PDT) pursuant to License Agreement with ICC & NYSDOS. No further reproduction, no

100880972

TABLE E3907.9.1(2) [Table 312.6(A)]
MINIMUM WIRE-BENDING SPACE AT TERMINALS AND MINIMUM WIDTH OF WIRING GUTTERS (see Note 1)

ALL OTHER CONDUCTORS	COMPACT STRANDED AA-8000 ALUMINUM ALLOY CONDUCTORS (see Note 2)	WIRES PER TERMINAL			
		One		Two	
		inches	mm	inches	mm
14-10	12-8	Not specified	Not specified	—	—
8-6	6-4	$1^1/_2$	38.1	—	—
4-3	2-1	2	50.8	—	—
2	1/0	$2^1/_2$	63.5	—	—
1	2/0	3	76.2	—	—
1/0-2/0	3/0-4/0	$3^1/_2$	88.9	5	127
3/0-4/0	250-300	4	102	6	152
250	350	$4^1/_2$	114	6	152
300-350	400-500	5	127	8	203
400-500	600-750	6	152	8	203
600-700	800-1000	8	203	10	254
750-900	—	8	203	12	305
1000-1250	—	10	254	—	—
1500-2000	—	12	305	—	—

Notes:

1. Bending space at terminals shall be measured in a straight line from the end of the lug or wire connector (in the direction that the wire leaves the terminal) to the wall, barrier, or obstruction.
2. This column shall be permitted to be used to determine the minimum wire-bending space for compact stranded aluminum conductors in sizes up to 1000 kcmil and manufactured using AA-8000 series electrical grade aluminum alloy conductor material in accordance with 310.106(B). The minimum width of the wire gutter space shall be determined using the all other conductors value in this table.

E3908.2 Equipment fastened in place or connected by permanent wiring methods (fixed). Exposed, normally non-current-carrying metal parts of fixed equipment supplied by or enclosing conductors or components that are likely to become energized shall be connected to the equipment grounding conductor where any of the following conditions apply:

1. Where within 8 feet (2438 mm) vertically or 5 feet (1524 mm) horizontally of earth or grounded metal objects and subject to contact by persons;
2. Where located in a wet or damp location and not isolated; or
3. Where in electrical contact with metal. (250.110)

E3908.3 Specific equipment fastened in place (fixed) or connected by permanent wiring methods. Exposed, normally noncurrent-carrying metal parts of the following equipment and enclosures shall be connected to an equipment grounding conductor:

1. Luminaires as provided in Chapter 40. [250.112(J)]
2. Motor-operated water pumps, including submersible types. Where a submersible pump is used in a metal well casing, the well casing shall be connected to the pump circuit equipment grounding conductor. [250.112(L)]

E3908.4 Effective ground-fault current path. Electrical equipment and wiring and other electrically conductive material likely to become energized shall be installed in a manner that creates a low-impedance circuit facilitating the operation of the overcurrent device or ground detector for high-impedance grounded systems. Such circuit shall be capable of safely carrying the maximum ground-fault current likely to be imposed on it from any point on the wiring system where a ground fault might occur to the electrical supply source. [250.(A)(5)]

E3908.5 Earth as a ground-fault current path. The earth shall not be considered as an effective ground-fault current path. [250.4(A)(5)]

E3908.6 Load-side grounded conductor neutral. A grounded conductor shall not be connected to normally non-current-carrying metal parts of equipment, to equipment grounding conductor(s), or be reconnected to ground on the load side of the service disconnecting means. [250.24(A)(5)]

E3908.7 Load-side equipment. A grounded circuit conductor shall not be used for grounding noncurrent-carrying metal parts of equipment on the load side of the service disconnecting means. [250.142(B)]

E3908.8 Types of equipment grounding conductors. The equipment grounding conductor run with or enclosing the circuit conductors shall be one or more or a combination of the following:

1. A copper, aluminum or copper-clad conductor. This conductor shall be solid or stranded; insulated, covered or bare; and in the form of a wire or a busbar of any shape. [250.118(1)]
2. Rigid metal conduit. [250.118(2)]
3. Intermediate metal conduit. [250.118(3)]
4. Electrical metallic tubing. [250.118(4)]
5. Armor of Type AC cable in accordance with Section E3908.4. [250.118(8)]
6. Type MC cable that provides an effective ground-fault current path in accordance with one or more of the following:
   - 6.1. It contains an insulated or uninsulated equipment grounding conductor in compliance with Item 1 of this section.
   - 6.2. The combined metallic sheath and uninsulated equipment grounding/bonding conductor of interlocked metal tape-type MC cable that is listed and identified as an equipment grounding conductor.
   - 6.3. The metallic sheath or the combined metallic sheath and equipment grounding conductors of the smooth or corrugated tube-type MC cable that is listed and identified as an equipment grounding conductor. [250.118(10)]
7. Other electrically continuous metal raceways and auxiliary gutters. [250.118(13)]

INTERNATIONAL CODE COUNCIL®
Copyright © 2019 ICC & NYSDOS. ALL RIGHTS RESERVED. Accessed by Lauren Gualdino (lgualdino@briarcliffmanor.org), (-) Order Number #100880972 on May 08, 2020 07:05 AM (PDT) pursuant to License Agreement with ICC & NYSDOS. No further reproduction, no

100880972

8. Surface metal raceways listed for grounding. [250.118(14)]

E3908.8.1 Flexible metal conduit. Flexible metal conduit shall be permitted as an equipment grounding conductor where all of the following conditions are met:

1. The conduit is terminated in listed fittings.
2. The circuit conductors contained in the conduit are protected by overcurrent devices rated at 20 amperes or less.
3. The size of the conduit does not exceed trade size $1^1/_4$.
4. The combined length of flexible metal conduit and flexible metallic tubing and liquid-tight flexible metal conduit in the same ground return path does not exceed 6 feet (1829 mm).

If used to connect equipment where flexibility is necessary to minimize the transmission of vibration from equipment or to provide flexibility for equipment that requires movement after installation, an equipment grounding conductor shall be installed. [250.118(5)]

E3908.8.2 Liquid-tight flexible metal conduit. Liquid-tight flexible metal conduit shall be permitted as an equipment grounding conductor where all of the following conditions are met:

1. The conduit is terminated in listed fittings.
2. For trade sizes $^3/_8$ through $^1/_2$ (metric designator 12 through 16), the circuit conductors contained in the conduit are protected by overcurrent devices rated at 20 amperes or less.
3. For trade sizes $^3/_4$ through $1^1/_4$ (metric designator 21 through 35), the circuit conductors contained in the conduit are protected by overcurrent devices rated at not more than 60 amperes and there is no flexible metal conduit, flexible metallic tubing, or liquid-tight flexible metal conduit in trade sizes $^3/_8$ inch or $^1/_2$ inch (9.5 mm through 12.7 mm) in the ground fault current path.
4. The combined length of flexible metal conduit and flexible metallic tubing and liquid-tight flexible metal conduit in the same ground return path does not exceed 6 feet (1829 mm).

If used to connect equipment where flexibility is necessary to minimize the transmission of vibration from equipment or to provide flexibility for equipment that requires movement after installation, an equipment grounding conductor shall be installed. [250.118(6)]

E3908.8.3 Nonmetallic sheathed cable (Type NM). In addition to the insulated conductors, the cable shall have an insulated, covered, or bare equipment grounding conductor. Equipment grounding conductors shall be sized in accordance with Table E3908.12. (334.108)

E3908.9 Equipment fastened in place or connected by permanent wiring methods. Noncurrent-carrying metal parts of equipment, raceways and other enclosures, where required to be grounded, shall be grounded by one of the following methods: (250.134)

1. By any of the equipment grounding conductors permitted by Sections E3908.8 through E3908.8.3. [250.134(A)]
2. By an equipment grounding conductor contained within the same raceway, cable or cord, or otherwise run with the circuit conductors. Equipment grounding conductors shall be identified in accordance with Section E3407.2. [250.134(B)]

E3908.10 Methods of equipment grounding. Fixtures and equipment shall be considered grounded where mechanically connected to an equipment grounding conductor as specified in Sections E3908.8 through E3908.8.3. Wire type equipment grounding conductors shall be sized in accordance with Section E3908.12. (250 Part VII)

E3908.11 Equipment grounding conductor installation. Where an equipment grounding conductor consists of a raceway, cable armor or cable sheath or where such conductor is a wire within a raceway or cable, it shall be installed in accordance with the provisions of this chapter and Chapters 34 and 38 using fittings for joints and terminations approved for installation with the type of raceway or cable used. All connections, joints and fittings shall be made tight using suitable tools. (250.120)

E3908.12 Equipment grounding conductor size. Copper, aluminum and copper-clad aluminum equipment grounding conductors of the wire type shall be not smaller than shown in Table E3908.12, but they shall not be required to be larger than the circuit conductors supplying the equipment. Where a raceway or a cable armor or sheath is used as the equipment grounding conductor, as provided in Section E3908.8, it shall comply with Section E3908.4. Where ungrounded conductors are increased in size from the minimum size that has sufficient ampacity for the intended installation, wire type equipment grounding conductors shall be increased proportionally according to the circular mil area of the ungrounded conductors. [250.122(A) and (B)]

E3908.12.1 Multiple circuits. Where a single equipment grounding conductor is run with multiple circuits in the same raceway or cable, it shall be sized for the largest overcurrent device protecting conductors in the raceway or cable. [250.122(C)]

E3908.13 Continuity and attachment of equipment grounding conductors to boxes. Where circuit conductors are spliced within a box or terminated on equipment within or supported by a box, all equipment grounding conductors associated with any of those circuit conductors shall be connected within the box or to the box with devices suitable for the use in accordance with Section E3406.13.1. Connections depending solely on solder shall not be used. Splices shall be made in accordance with Section E3406.10 except that insulation shall not be required. The arrangement of grounding connections shall be such that the disconnection or removal of a receptacle, luminaire or other device fed from the box will not interfere with or interrupt the grounding continuity. [250.148(A), (B) and (E)]

INTERNATIONAL CODE COUNCIL®
Copyright © 2019 ICC & NYSDOS. ALL RIGHTS RESERVED. Accessed by Lauren Gualdino (lgualdino@briarcliffmanor.org), (-) Order Number #100880972 on May 08, 2020 07:05 AM (PDT) pursuant to License Agreement with ICC & NYSDOS. No further reproduction, no

100880972

E3908.14 Connecting receptacle grounding terminal to box. An equipment bonding jumper, sized in accordance with Table E3908.12 based on the rating of the overcurrent device protecting the circuit conductors, shall be used to connect the grounding terminal of a grounding-type receptacle to a grounded box except where grounded in accordance with one of the following: (250.146)

1. Surface mounted box. Where the box is mounted on the surface, direct metal-to-metal contact between the device yoke and the box shall be permitted to ground the receptacle to the box. At least one of the insulating washers shall be removed from receptacles that do not have a contact yoke or device designed and listed to be used in conjunction with the supporting screws to establish the grounding circuit between the device yoke and flush-type boxes. This provision shall not apply to cover-mounted receptacles except where the box and cover combination are listed as providing satisfactory ground continuity between the box and the receptacle. A listed exposed work cover shall be considered to be the grounding and bonding means where the device is attached to the cover with at least two fasteners that are permanent, such as a rivet or have a thread locking or screw locking means and where the cover mounting holes are located on a flat nonraised portion of the cover. [250.146(A)]
2. Contact devices or yokes. Contact devices or yokes designed and listed for the purpose shall be permitted in conjunction with the supporting screws to establish equipment bonding between the device yoke and flush-type boxes. [250.146(B)]
3. Floor boxes. The receptacle is installed in a floor box designed for and listed as providing satisfactory ground continuity between the box and the device. [250.146(C)]

E3908.15 Metal boxes. A connection shall be made between the one or more equipment grounding conductors and a metal box by means of a grounding screw that shall be used for no other purpose, equipment listed for grounding or by means of a listed grounding device. Where screws are used to connect grounding conductors or connection devices to boxes, such screws shall be one or more of the following: [250.148(C)]

1. Machine screw-type fasteners that engage not less than two threads.
2. Machine screw-type fasteners that are secured with a nut.
3. Thread-forming machine screws that engage not less than two threads in the enclosure. [250.8(5) and (6)]

E3908.16 Nonmetallic boxes. One or more equipment grounding conductors brought into a nonmetallic outlet box shall be arranged to allow connection to fittings or devices installed in that box. [250.148(D)]

E3908.17 Clean surfaces. Nonconductive coatings such as paint, lacquer and enamel on equipment to be grounded shall be removed from threads and other contact surfaces to ensure electrical continuity or the equipment shall be connected by means of fittings designed so as to make such removal unnecessary. (250.12)

E3908.18 Bonding other enclosures. Metal raceways, cable armor, cable sheath, enclosures, frames, fittings and other metal noncurrent-carrying parts that serve as equipment grounding conductors, with or without the use of supplementary equipment grounding conductors, shall be effectively bonded where necessary to ensure electrical continuity and the capacity to conduct safely any fault current likely to be imposed on them. Any nonconductive paint, enamel and similar coating shall be removed at threads, contact points and contact surfaces, or connections shall be made by means of fittings designed so as to make such removal unnecessary. [250.96(A)]

E3908.19 Size of equipment bonding jumper on load side of an overcurrent device. The equipment bonding jumper on the load side of an overcurrent devices shall be sized, as a minimum, in accordance with Table E3908.12, but shall not be required to be larger than the circuit conductors supplying the equipment. An equipment bonding conductor shall be not smaller than No. 14 AWG.

A single common continuous equipment bonding jumper shall be permitted to connect two or more raceways or cables where the bonding jumper is sized in accordance with Table E3908.12 for the largest overcurrent device supplying circuits therein. [250.102(D) and 250.122]

E3908.20 Installation equipment bonding jumper. Bonding jumpers or conductors and equipment bonding jumpers shall be installed either inside or outside of a raceway or an enclosure in accordance with Sections E3908.20.1 and E3908.20.2. [250.102(E)]

TABLE E3908.12 (Table 250.122)
EQUIPMENT GROUNDING CONDUCTOR SIZING

RATING OR SETTING OF AUTOMATIC OVERCURRENT DEVICE IN CIRCUIT AHEAD OF EQUIPMENT, CONDUIT, ETC., NOT EXCEEDING THE FOLLOWING RATINGS (amperes)	MINIMUM SIZE	
	Copper wire No. (AWG)	Aluminum or copper-clad aluminum wire No. (AWG)
15	14	12
20	12	10
60	10	8
100	8	6
200	6	4
300	4	2
400	3	1

INTERNATIONAL CODE COUNCIL®
Copyright © 2019 ICC & NYSDOS. ALL RIGHTS RESERVED. Accessed by Lauren Gualdino (lgualdino@briarcliffmanor.org), (-) Order Number #100880972 on May 08, 2020 07:05 AM (PDT) pursuant to License Agreement with ICC & NYSDOS. No further reproduction, no

100880972

E3908.20.1 Inside raceway or enclosure. Where installed inside a raceway or enclosure, equipment bonding jumpers and bonding jumpers or conductors shall comply with the requirements of Sections E3407.2 and E3908.13. [250.102(E)(1)]

E3908.20.2 Outside raceway or enclosure. Where installed outside of a raceway or enclosure, the length of the bonding jumper or conductor or equipment bonding jumper shall not exceed 6 feet (1829 mm) and shall be routed with the raceway or enclosure. [250.102(E)(2)]

Equipment bonding jumpers and supply-side bonding jumpers installed for bonding grounding electrodes and installed at outdoor pole locations for the purpose of bonding or grounding isolated sections of metal raceways or elbows installed in exposed risers of metal conduit or other metal raceway, shall not be limited in length and shall not be required to be routed with a raceway or enclosure. [250.102(E)(2) Exception]

E3908.20.3 Protection. Bonding jumpers or conductors and equipment bonding jumpers shall be installed in accordance with Section E3610.2. [250.102(E)(3)]

SECTION E3909
FLEXIBLE CORDS

E3909.1 Where permitted. Flexible cords shall be used only for the connection of appliances where the fastening means and mechanical connections of such appliances are designed to permit ready removal for maintenance, repair or frequent interchange and the appliance is listed for flexible cord connection. Flexible cords shall not be installed as a substitute for the fixed wiring of a structure; shall not be run through holes in walls, structural ceilings, suspended ceilings, dropped ceilings or floors; shall not be concealed behind walls, floors, ceilings or located above suspended or dropped ceilings; and shall not be attached to building surfaces. (400.10 and 400.12)

E3909.2 Loading and protection. The ampere load of flexible cords serving fixed appliances shall be in accordance with Table E3909.2. This table shall be used in conjunction with applicable end use product standards to ensure selection of the proper size and type. Where flexible cord is approved for and used with a specific listed appliance, it shall be considered to be protected where applied within the appliance listing requirements. [240.4, 240.5(A), 240.5(B)(1), 400.5, and 400.16]

TABLE E3909.2 [Table 400.5(A)(1)]
MAXIMUM AMPERE LOAD FOR FLEXIBLE CORDS

CORD SIZE (AWG)	CORD TYPES S, SE, SEO, SJ, SJE, SJEO, SJO, SJOO, SJT, SJTO, SJTOO, SO, SOO, SRD, SRDE, SRDT, ST, STD, SV, SVO, SVOO, SVTO, SVTOO	
	Maximum ampere load	
	Three current-carrying conductors	Two current-carrying conductors
18	7	10
16	10	13
14	15	18
12	20	25

E3909.3 Splices. Flexible cord shall be used only in continuous lengths without splices or taps. (400.13)

E3909.4 Attachment plugs. Where used in accordance with Section E3909.1, each flexible cord shall be equipped with an attachment plug and shall be energized from a receptacle outlet. [400.10(B)]

INTERNATIONAL CODE COUNCIL®
Copyright © 2019 ICC & NYSDOS. ALL RIGHTS RESERVED. Accessed by Lauren Gualdino (lgualdino@briarcliffmanor.org), (-) Order Number #100880972 on May 08, 2020 07:05 AM (PDT) pursuant to License Agreement with ICC & NYSDOS. No further reproduction, no

100880972

CHAPTER 40

DEVICES AND LUMINAIRES

SECTION E4001
SWITCHES

E4001.1 Rating and application of snap switches. Switches shall be used within their ratings and shall control only the following loads:

1. Resistive and inductive loads not exceeding the ampere rating of the switch at the voltage involved.
2. Tungsten-filament lamp loads not exceeding the ampere rating of the switch at 120 volts.
3. Motor loads not exceeding 80 percent of the ampere rating of the switch at its rated voltage. [404.14(A)]

E4001.2 CO/ALR snap switches. Snap switches rated 20 amperes or less directly connected to aluminum conductors shall be marked CO/ALR. [404.14(C)]

E4001.3 Indicating. General-use and motor-circuit switches and circuit breakers shall clearly indicate whether they are in the open OFF or closed ON position. Where single-throw switches or circuit breaker handles are operated vertically rather than rotationally or horizontally, the up position of the handle shall be the closed (on) position.

E4001.4 Time switches and similar devices. Time switches and similar devices shall be of the enclosed type or shall be mounted in cabinets or boxes or equipment enclosures. A barrier shall be used around energized parts to prevent operator exposure when making manual adjustments or switching. (404.5)

E4001.5 Grounding of enclosures. Metal enclosures for switches or circuit breakers shall be connected to an equipment grounding conductor. Metal enclosures for switches or circuit breakers used as service equipment shall comply with the provisions of Section E3609.4. Where nonmetallic enclosures are used with metal raceways or metal-armored cables, provisions shall be made for connecting the equipment grounding conductor.

Nonmetallic boxes for switches shall be installed with a wiring method that provides or includes an equipment grounding conductor. (404.12)

E4001.6 Access. Switches and circuit breakers used as switches shall be located to allow operation from a readily accessible location. Such devices shall be installed so that the center of the grip of the operating handle of the switch or circuit breaker, when in its highest position, will not be more than 6 feet 7 inches (2007 mm) above the floor or working platform. [404.8(A)]

Exception: This section shall not apply to switches and circuit breakers that are accessible by portable means and are installed adjacent to the motors, appliances and other equipment that they supply. [404.8(A) Exception]

E4001.7 Damp or wet locations. A surface mounted switch or circuit breaker located in a damp or wet location or outside of a building shall be enclosed in a weatherproof enclosure or cabinet. A flush-mounted switch or circuit breaker in a damp or wet location shall be equipped with a weatherproof cover. Switches shall not be installed within wet locations in tub or shower spaces unless installed as part of a listed tub or shower assembly. [404.4(A), (B), and (C)]

E4001.8 Grounded conductors. Switches or circuit breakers shall not disconnect the grounded conductor of a circuit except where the switch or circuit breaker simultaneously disconnects all conductors of the circuit. [404.2(B)]

E4001.9 Switch connections. Three- and four-way switches shall be wired so that all switching occurs only in the ungrounded circuit conductor. Color coding of switch connection conductors shall comply with Section E3407.3. Where in metal raceways or metal-jacketed cables, wiring between switches and outlets shall be in accordance with Section E3406.7. [404.2(A)]

Exception: Switch loops do not require a grounded conductor. [404.2(A) Exception]

E4001.10 Box mounted. Flush-type snap switches mounted in boxes that are recessed from the finished wall surfaces as covered in Section E3906.5 shall be installed so that the extension plaster ears are seated against the surface of the wall. Flush-type snap switches mounted in boxes that are flush with the finished wall surface or project therefrom shall be installed so that the mounting yoke or strap of the switch is seated against the box.

Screws used for the purpose of attaching a snap switch to a box shall be of the type provided with a listed snap switch, or shall be machine screws having 32 threads per inch or part of listed assemblies or systems, in accordance with the manufacturer's instructions. [404.10(B)]

E4001.11 Snap switch faceplates. Faceplates provided for snap switches mounted in boxes and other enclosures shall be installed so as to completely cover the opening and, where the switch is flush mounted, seat against the finished surface. [404.9(A)]

E4001.11.1 Faceplate grounding. Snap switches, including dimmer and similar control switches, shall be connected to an equipment grounding conductor and shall provide a means to connect metal faceplates to the equipment grounding conductor, whether or not a metal faceplate is installed. Metal faceplates shall be grounded. Snap switches shall be considered to be part of an effective ground-fault current path if either of the following conditions is met:

1. The switch is mounted with metal screws to a metal box or metal cover that is connected to an equipment grounding conductor or to a nonmetallic box with integral means for connecting to an equipment grounding conductor.

INTERNATIONAL CODE COUNCIL®
Copyright © 2019 ICC & NYSDOS. ALL RIGHTS RESERVED. Accessed by Lauren Gualdino (lgualdino@briarcliffmanor.org), (-) Order Number #100880972 on May 08, 2020 07:05 AM (PDT) pursuant to License Agreement with ICC & NYSDOS. No further reproduction, no

100880972

2. An equipment grounding conductor or equipment bonding jumper is connected to an equipment grounding termination of the snap switch. [404.9(B)]

Exceptions:

1. Where a means to connect to an equipment grounding conductor does not exist within the snap-switch enclosure or where the wiring method does not include or provide an equipment grounding conductor, a snap switch without a grounding connection to an equipment grounding conductor shall be permitted for replacement purposes only. A snap switch wired under the provisions of this exception and located within 8 feet (2438 mm) vertically or 5 feet (1524 mm) horizontally of ground or exposed grounded metal objects, shall be provided with a faceplate of nonconducting noncombustible material with nonmetallic attachment screws, except where the switch-mounting strap or yoke is nonmetallic or the circuit is protected by a ground-fault circuit interrupter. [404.9(B) Exception No.1]
2. Listed kits or listed assemblies shall not be required to be connected to an equipment grounding conductor if all of the following conditions apply:
   2.1. The device is provided with a nonmetallic faceplate that cannot be installed on any other type of device.
   2.2. The device does not have mounting means to accept other configurations of faceplates.
   2.3. The device is equipped with a nonmetallic yoke.
   2.4. All parts of the device that are accessible after installation of the faceplate are manufactured of nonmetallic materials. [404.9(B) Exception No. 2]
3. Connection to an equipment grounding conductor shall not be required for snap switches that have an integral nonmetallic enclosure complying with Section E3905.1.3. [404.9(B) Exception No. 3]

E4001.12 Dimmer switches. General-use dimmer switches shall be used only to control permanently installed incandescent luminaires (lighting fixtures) except where listed for the control of other loads and installed accordingly. [404.14(E)]

E4001.13 Multipole snap switches. A multipole, general-use snap switch shall not be fed from more than a single circuit unless it is listed and marked as a two-circuit or three-circuit switch. [404.8(C)]

E4001.14 Cord-and-plug-connected loads. Where snap switches are used to control cord-and-plug-connected equipment on a general-purpose branch circuit, each snap switch controlling receptacle outlets or cord connectors that are supplied by permanently connected cord pendants shall be rated at not less than the rating of the maximum permitted ampere rating or setting of the overcurrent device protecting the receptacles or cord connectors, as provided in Sections E4002.1.1 and E4002.1.2. [404.14(F)]

E4001.15 Switches controlling lighting loads. The grounded circuit conductor for the controlled lighting circuit shall be installed at the location where switches control lighting loads that are supplied by a grounded general-purpose branch circuit serving bathrooms, hallways, stairways, or rooms suitable for human habitation or occupancy as defined in the code. Where multiple switch locations control the same lighting load such that the entire floor area of the room or space is visible from the single or combined switch locations, the grounded conductor shall be required only at one location. A grounded conductor shall not be required to be installed at lighting switch locations under any of the following conditions:

1. Where conductors enter the box enclosing the switch through a raceway, provided that the raceway is large enough for all contained conductors, including a grounded conductor.
2. Where the box enclosing the switch is accessible for the installation of an additional or replacement cable without removing finish materials.
3. Where snap switches with integral enclosures comply with Section E3905.1.3.
4. Where lighting in the area is controlled by automatic means.
5. Where a switch controls a receptacle load. [404.2(C)]

Effective January 1, 2020, the grounded conductor shall be extended to any switch location as necessary and shall be connected to switching devices that require line-to-neutral voltage to operate the electronics of the switch in the standby mode.

The requirement for connection to switching devices shall not apply to replacement or retrofit switches installed in locations prior to the adoption of Section E4001.15 and where the grounded conductor cannot be extended without removing finish materials. The number of electronic lighting control switches on a branch circuit shall not exceed five, and the number connected to any feeder on the load side of a system or main bonding jumper shall not exceed 25.

SECTION E4002
RECEPTACLES

E4002.1 Rating and type. Receptacles and cord connectors shall be rated at not less than 15 amperes, 125 volts, or 15 amperes, 250 volts, and shall not be a lampholder type. Receptacles shall be rated in accordance with this section. [406.3(B)]

E4002.1.1 Single receptacle. A single receptacle installed on an individual branch circuit shall have an ampere rating not less than that of the branch circuit. [210.21(B)(1)]

E4002.1.2 Two or more receptacles. Where connected to a branch circuit supplying two or more receptacles or outlets, receptacles shall conform to the values listed in Table E4002.1.2. [210.21(B)(3)]

INTERNATIONAL CODE COUNCIL®
Copyright © 2019 ICC & NYSDOS. ALL RIGHTS RESERVED. Accessed by Lauren Gualdino (lgualdino@briarcliffmanor.org), (-) Order Number #100880972 on May 08, 2020 07:05 AM (PDT) pursuant to License Agreement with ICC & NYSDOS. No further reproduction, no

100880972

TABLE E4002.1.2 [Table 210.21(B)(3)]
RECEPTACLE RATINGS FOR VARIOUS SIZE MULTI-OUTLET CIRCUITS

CIRCUIT RATING (amperes)	RECEPTACLE RATING (amperes)
15	15
20	15 or 20
30	30
40	40 or 50
50	50

E4002.2 Grounding type. Receptacles installed on 15- and 20-ampere-rated branch circuits shall be of the grounding type. [406.4(A)]

E4002.3 CO/ALR receptacles. Receptacles rated at 20 amperes or less and directly connected to aluminum conductors shall be marked CO/ALR. [406.3(C)]

E4002.4 Faceplates. Metal face plates shall be grounded. [406.6(B)]

E4002.5 Position of receptacle faces. After installation, receptacle faces shall be flush with or project from face plates of insulating material and shall project a minimum of 0.015 inch (0.381 mm) from metal face plates. Faceplates shall be installed so as to completely cover the opening and seat against the mounting surface.

Receptacle faceplates mounted inside of a box having a recess-mounted receptacle shall effectively close the opening and seat against the mounting surface. [406.5(D), 406.6]

Exception: Listed kits or assemblies encompassing receptacles and nonmetallic faceplates that cover the receptacle face, where the plate cannot be installed on any other receptacle, shall be permitted. [406.5(D) Exception]

E4002.6 Receptacle mounted in boxes. Receptacles mounted in boxes that are set back from the finished wall surface as permitted by Section E3906.5 shall be installed so that the mounting yoke or strap of the receptacle is held rigidly at the finished surface of the wall. Screws used for the purpose of attaching receptacles to a box shall be of the type provided with a listed receptacle, or shall be machine screws having 32 threads per inch or part of listed assemblies or systems, in accordance with the manufacturer's instructions. Receptacles mounted in boxes that are flush with the wall surface or project therefrom shall be so installed that the mounting yoke or strap is seated against the box or raised cover. [406.5(A) and (B)]

E4002.7 Receptacles mounted on covers. Receptacles mounted to and supported by a cover shall be held rigidly against the cover by more than one screw or shall be a device assembly or box cover listed and identified for securing by a single screw. [406.5(C)]

E4002.8 Damp locations. A receptacle installed outdoors in a location protected from the weather or in other damp locations shall have an enclosure for the receptacle that is weatherproof when the receptacle cover(s) is closed and an attachment plug cap is not inserted. An installation suitable for wet locations shall also be considered suitable for damp locations. A receptacle shall be considered to be in a location protected from the weather where located under roofed open porches, canopies and similar structures and not subject to rain or water runoff. Fifteen- and 20-ampere, 125- and 250-volt nonlocking receptacles installed in damp locations shall be listed a weather-resistant type. [406.9(A)]

E4002.9 Fifteen- and 20-ampere receptacles in wet locations. Where installed in a wet location, 15- and 20-ampere, 125- and 250-volt receptacles shall have an enclosure that is weatherproof whether or not the attachment plug cap is inserted. An outlet box hood installed for this purpose shall be listed and identified as "extra-duty."

Exception: 15- and 20-ampere, 125- through 250-volt receptacles installed in a wet location and subject to routine high-pressure spray washing need not have an enclosure that is weatherproof when the attachment plug is inserted.

Fifteen- and 20-ampere, 125- and 250-volt nonlocking receptacles installed in wet locations shall be listed and so identified as the weather-resistant type. [406.9(B)(1)]

E4002.10 Other receptacles in wet locations. Where a receptacle other than a 15- or 20-amp, 125- or 250-volt receptacle is installed in a wet location and where the product intended to be plugged into it is not attended while in use, the receptacle shall have an enclosure that is weatherproof both when the attachment plug cap is inserted and when it is removed. Where such receptacle is installed in a wet location and where the product intended to be plugged into it will be attended while in use, the receptacle shall have an enclosure that is weatherproof when the attachment plug cap is removed. [406.9(B)(2)]

E4002.11 Bathtub and shower space. A receptacle shall not be installed within or directly over a bathtub or shower stall. [406.9(C)]

E4002.12 Flush mounting with faceplate. In damp or wet locations, the enclosure for a receptacle installed in an outlet box flush-mounted in a finished surface shall be made weatherproof by means of a weatherproof faceplate assembly that provides a water-tight connection between the plate and the finished surface. [406.9(E)]

E4002.13 Exposed terminals. Receptacles shall be enclosed so that live wiring terminals are not exposed to contact. [406.5(I)]

E4002.14 Tamper-resistant receptacles. In areas specified in Section E3901.1, 15- and 20-ampere, 125- and 250-volt nonlocking-type receptacles shall be listed tamper-resistant receptacles. [406.12(A)]

Exception: Receptacles in the following locations shall not be required to be tamper resistant:

1. Receptacles located more than 5.5 feet (1676 mm) above the floor.
2. Receptacles that are part of a luminaire or appliance.
3. A single receptacle for a single appliance or a duplex receptacle for two appliances where such receptacles are located in spaces dedicated for the appliances served and, under conditions of normal use, the appliances are not easily moved from one place to another. The appliances shall be cord-and-plug-connected to such receptacles in accordance with Section E3909.4. [406.12(A) Exception]

INTERNATIONAL CODE COUNCIL®
Copyright © 2019 ICC & NYSDOS. ALL RIGHTS RESERVED. Accessed by Lauren Gualdino (lgualdino@briarcliffmanor.org), (-) Order Number #100880972 on May 08, 2020 07:05 AM (PDT) pursuant to License Agreement with ICC & NYSDOS. No further reproduction, no

100880972

E4002.15 Receptacles in countertops. Receptacle assemblies for installation in countertop surfaces shall be listed for countertop applications. Receptacle assemblies and GFCI receptacle assemblies installed in work surfaces shall be listed for work surface or countertop applications. [406.5 (E) and (F)]

E4002.16 Receptacle position. Receptacles shall not be installed in a face-up position in or on countertops surfaces or work surfaces except where the receptacles are listed for countertop or work surface applications. [406.5 (G)]

SECTION E4003
LUMINAIRES

E4003.1 Energized parts. Luminaires, lampholders, and lamps shall not have energized parts normally exposed to contact. (410.5)

E4003.2 Luminaires near combustible material. Luminaires shall be installed or equipped with shades or guards so that combustible material will not be subjected to temperatures in excess of 90°C (194°F). (410.11)

E4003.3 Exposed conductive parts. The exposed metal parts of luminaires shall be connected to an equipment grounding conductor or shall be insulated from the equipment grounding conductor and other conducting surfaces. Lamp tie wires, mounting screws, clips and decorative bands on glass spaced at least $1^{1}/_{2}$ inches (38 mm) from lamp terminals shall not be required to be grounded. (410.42)

E4003.4 Screw-shell type. Lampholders of the screw-shell type shall be installed for use as lampholders only. Where supplied by a circuit having a grounded conductor, the grounded conductor shall be connected to the screw shell. (410.90)

E4003.5 Recessed incandescent luminaires. Recessed incandescent luminaires shall have thermal protection and shall be listed as thermally protected. [410.115(C)]

Exceptions:

1. Thermal protection shall not be required in recessed luminaires listed for the purpose and installed in poured concrete. [410.115(C) Exception No. 1]
2. Thermal protection shall not be required in recessed luminaires having design, construction, and thermal performance characteristics equivalent to that of thermally protected luminaires, and such luminaires are identified as inherently protected. [410.115(C) Exception No. 2]

E4003.6 Thermal protection. The ballast of a fluorescent luminaire installed indoors shall have integral thermal protection. Replacement ballasts shall also have thermal protection integral with the ballast. A simple reactance ballast in a fluorescent luminaire with straight tubular lamps shall not be required to be thermally protected. [410.130(E)(1)]

E4003.7 High-intensity discharge luminaires. Recessed high-intensity luminaires designed to be installed in wall or ceiling cavities shall have thermal protection and be identified as thermally protected. Thermal protection shall not be required in recessed high-intensity luminaires having design, construction and thermal performance characteristics equivalent to that of thermally protected luminaires, and such luminaires are identified as inherently protected. Thermal protection shall not be required in recessed high-intensity discharge luminaires installed in and identified for use in poured concrete. A recessed remote ballast for a high-intensity discharge luminaire shall have thermal protection that is integral with the ballast and shall be identified as thermally protected. [410.130(F)(1), (2), (3), and (4)]

E4003.8 Metal halide lamp containment. Luminaires that use a metal halide lamp other than a thick-glass parabolic reflector lamp (PAR) shall be provided with a containment barrier that encloses the lamp, or shall be provided with a physical means that allows the use of only a lamp that is Type O. [410.130(F)(5)]

E4003.9 Wet or damp locations. Luminaires installed in wet or damp locations shall be installed so that water cannot enter or accumulate in wiring compartments, lampholders or other electrical parts. All luminaires installed in wet locations shall be marked "SUITABLE FOR WET LOCATIONS." All luminaires installed in damp locations shall be marked "SUITABLE FOR WET LOCATIONS" or "SUITABLE FOR DAMP LOCATIONS." (410.10)

E4003.10 Lampholders in wet or damp locations. Lampholders installed in wet locations shall be listed for use in wet locations. Lampholders installed in damp locations shall be listed for damp locations or shall be listed for wet locations. (410.96)

E4003.11 Bathtub and shower areas. Cord-connected luminaires, chain-, cable-, or cord-suspended-luminaires, lighting track, pendants, and ceiling-suspended (paddle) fans shall not have any parts located within a zone measured 3 feet (914 mm) horizontally and 8 feet (2438 mm) vertically from the top of a bathtub rim or shower stall threshold. This zone is all encompassing and includes the space directly over the tub or shower. Luminaires within the actual outside dimension of the bathtub or shower to a height of 8 feet (2438 mm) vertically from the top of the bathtub rim or shower threshold shall be marked for damp locations and where subject to shower spray, shall be marked for wet locations. [410.4(D)]

E4003.12 Luminaires in clothes closets. For the purposes of this section, storage space shall be defined as a volume bounded by the sides and back closet walls and planes extending from the closet floor vertically to a height of 6 feet (1829 mm) or the highest clothes-hanging rod and parallel to the walls at a horizontal distance of 24 inches (610 mm) from the sides and back of the closet walls respectively, and continuing vertically to the closet ceiling parallel to the walls at a horizontal distance of 12 inches (305 mm) or the width of the shelf, whichever is greater. For a closet that permits access to both sides of a hanging rod, the storage space shall include the volume below the highest rod extending 12 inches (305 mm) on either side of the rod on a plane horizontal to the floor extending the entire length of the rod (see Figure E4003.12). (410.2)

The types of luminaires installed in clothes closets shall be limited to surface-mounted or recessed incandescent or LED luminaires with completely enclosed light sources, surface-

INTERNATIONAL CODE COUNCIL®
Copyright © 2019 ICC & NYSDOS. ALL RIGHTS RESERVED. Accessed by Lauren Gualdino (lgualdino@briarcliffmanor.org), (-) Order Number #100880972 on May 08, 2020 07:05 AM (PDT) pursuant to License Agreement with ICC & NYSDOS. No further reproduction, no

100880972

mounted or recessed fluorescent luminaires, and surface-mounted fluorescent or LED luminaires identified as suitable for installation within the closet storage area. Incandescent luminaires with open or partially enclosed lamps and pendant luminaires or lamp-holders shall be prohibited. The minimum clearance between luminaires installed in clothes closets and the nearest point of a closet storage area shall be as follows: [410.16(A) and (B)]

1. Surface-mounted incandescent or LED luminaires with a completely enclosed light source shall be installed on the wall above the door or on the ceiling, provided that there is a minimum clearance of 12 inches (305 mm) between the fixture and the nearest point of a storage space.
2. Surface-mounted fluorescent luminaires shall be installed on the wall above the door or on the ceiling, provided that there is a minimum clearance of 6 inches (152 mm).
3. Recessed incandescent luminaires or LED luminaires with a completely enclosed light source shall be installed in the wall or the ceiling provided that there is a minimum clearance of 6 inches (152 mm).
4. Recessed fluorescent luminaires shall be installed in the wall or on the ceiling provided that there is a minimum clearance of 6 inches (152 mm) between the fixture and the nearest point of a storage space.
5. Surface-mounted fluorescent or LED luminaires shall be permitted to be installed within the closet storage space where identified for this use. [410.16(C)]

E4003.13 Luminaire wiring—general. Wiring on or within luminaires shall be neatly arranged and shall not be exposed to physical damage. Excess wiring shall be avoided. Conductors shall be arranged so that they are not subjected to temperatures above those for which the conductors are rated. (410.48)

E4003.13.1 Polarization of luminaires. Luminaires shall be wired so that the screw shells of lampholders will be connected to the same luminaire or circuit conductor or terminal. The grounded conductor shall be connected to the screw shell. (410.50)

E4003.13.2 Luminaires as raceways. Luminaires shall not be used as raceways for circuit conductors except where such luminaires are listed and marked for use as a raceway or are identified for through-wiring.

Luminaires designed for end-to-end connection to form a continuous assembly, and luminaires connected together by recognized wiring methods, shall not be required to be listed as a raceway where they contain the conductors of one 2-wire branch circuit or one multiwire branch circuit and such conductors supply the connected luminaires. One additional 2-wire branch circuit that separately supplies one or more of the connected luminaires shall also be permitted. [410.64(A), (B), and (C)]

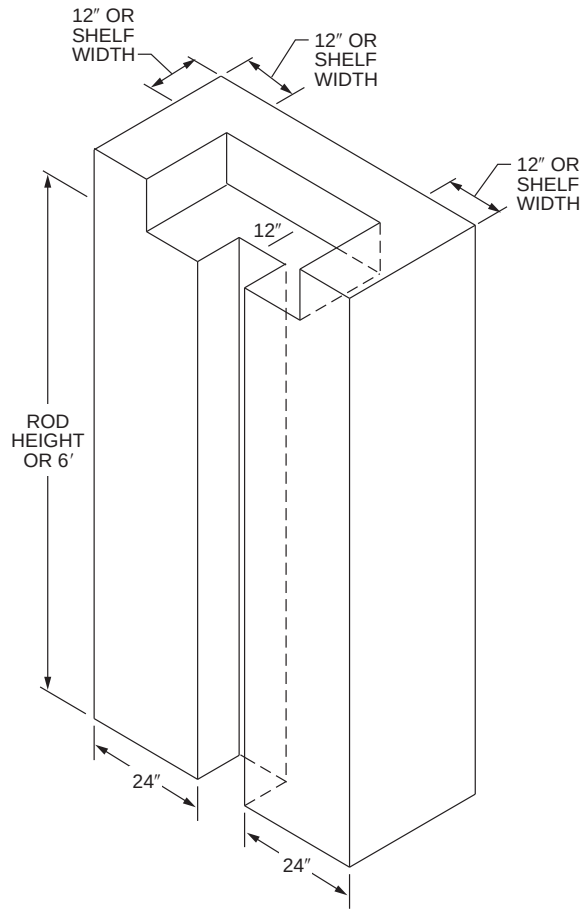

For SI: 1 inch = 25.4 mm, 1 foot = 304.8 mm.

FIGURE E4003.12
CLOSET STORAGE SPACE

SECTION E4004
LUMINAIRE INSTALLATION

E4004.1 Outlet box covers. In a completed installation, each outlet box shall be provided with a cover except where covered by means of a luminaire canopy, lampholder or device with a faceplate. (410.22)

E4004.2 Combustible material at outlet boxes. Combustible wall or ceiling finish exposed between the inside edge of a luminaire canopy or pan and the outlet box and having a surface area of 180 square inches (1160 mm^2) or more shall be covered with a noncombustible material. (410.23)

E4004.3 Access. Luminaires shall be installed so that the connections between the luminaire conductors and the circuit conductors can be accessed without requiring the disconnection of any part of the wiring. Luminaires that are connected by attachment plugs and receptacles meet the requirement of this section. (410.8)

E4004.4 Supports. Luminaires and lampholders shall be securely supported. A luminaire that weighs more than 6 pounds (2.72 kg) or exceeds 16 inches (406 mm) in any dimension shall not be supported by the screw shell of a lampholder. [410.30(A)]

INTERNATIONAL CODE COUNCIL®
Copyright © 2019 ICC & NYSDOS. ALL RIGHTS RESERVED. Accessed by Lauren Gualdino (lgualdino@briarcliffmanor.org), (-) Order Number #100880972 on May 08, 2020 07:05 AM (PDT) pursuant to License Agreement with ICC & NYSDOS. No further reproduction, no

100880972

E4004.5 Means of support. Outlet boxes or fittings installed as required by Sections E3905 and E3906 shall be permitted to support luminaires. [410.36(A)]

E4004.6 Exposed components. Luminaires having exposed ballasts, transformers, LED drivers or power supplies shall be installed so that such ballasts, transformers, LED drivers or power supplies are not in contact with combustible material unless listed for such condition. [410.136(A)]

E4004.7 Combustible low-density cellulose fiberboard. Where a surface-mounted luminaire containing a ballast, transformer, LED driver or power supply is installed on combustible low-density cellulose fiberboard, the luminaire shall be marked for this purpose or it shall be spaced not less than $1^1/_2$ inches (38 mm) from the surface of the fiberboard. Where such luminaires are partially or wholly recessed, the provisions of Sections E4004.8 and E4004.9 shall apply. [410.136(B)]

E4004.8 Recessed luminaire clearance. A recessed luminaire that is not identified for contact with insulation shall have all recessed parts spaced at least $^1/_2$ inch (12.7 mm) from combustible materials. The points of support and the finish trim parts at the opening in the ceiling, wall or other finished surface shall be permitted to be in contact with combustible materials. A recessed luminaire that is identified for contact with insulation, Type IC, shall be permitted to be in contact with combustible materials at recessed parts, points of support, and portions passing through the building structure and at finish trim parts at the opening in the ceiling or wall. [410.116(A)(1) and (A)(2)]

E4004.9 Recessed luminaire installation. Thermal insulation shall not be installed above a recessed luminaire or within 3 inches (76 mm) of the recessed luminaire's enclosure, wiring compartment, ballast, transformer, LED driver or power supply except where such luminaire is identified for contact with insulation, Type IC. [410.116(B)]

SECTION E4005
TRACK LIGHTING

E4005.1 Installation. Lighting track shall be permanently installed and permanently connected to a branch circuit having a rating not more than that of the track. [410.151(A) and (B)]

E4005.2 Fittings. Fittings identified for use on lighting track shall be designed specifically for the track on which they are to be installed. Fittings shall be securely fastened to the track, shall maintain polarization and connection to the equipment grounding conductor, and shall be designed to be suspended directly from the track. Only lighting track fittings shall be installed on lighting track. Lighting track fittings shall not be equipped with general-purpose receptacles. [410.151(A) and (B)]

E4005.3 Connected load. The connected load on lighting track shall not exceed the rating of the track. Lighting track shall be supplied by a branch circuit having a rating not greater than that of the track. [410.151(B)]

E4005.4 Prohibited locations. Lighting track shall not be installed in the following locations:

1. Where likely to be subjected to physical damage.
2. In wet or damp locations.
3. Where subject to corrosive vapors.
4. In storage battery rooms.
5. In hazardous (classified) locations.
6. Where concealed.
7. Where extended through walls or partitions.
8. Less than 5 feet (1524 mm) above the finished floor except where protected from physical damage or the track operates at less than 30 volts rms open-circuit voltage.
9. Where prohibited by Section E4003.11. [410.151(C)]

E4005.5 Fastening. Lighting track shall be securely mounted so that each fastening will be suitable for supporting the maximum weight of luminaires that can be installed. Except where identified for supports at greater intervals, a single section 4 feet (1219 mm) or shorter in length shall have two supports and, where installed in a continuous row, each individual section of not more than 4 feet (1219 mm) in length shall have one additional support. (410.154)

E4005.6 Grounding. Lighting track shall be grounded in accordance with Chapter 39, and the track sections shall be securely coupled to maintain continuity of the circuitry, polarization and grounding throughout. [410.155(B)]

INTERNATIONAL CODE COUNCIL®
Copyright © 2019 ICC & NYSDOS. ALL RIGHTS RESERVED. Accessed by Lauren Gualdino (lgualdino@briarcliffmanor.org), (-) Order Number #100880972 on May 08, 2020 07:05 AM (PDT) pursuant to License Agreement with ICC & NYSDOS. No further reproduction, no

100880972

CHAPTER 41

APPLIANCE INSTALLATION

SECTION E4101
GENERAL

E4101.1 Scope. This section covers installation requirements for appliances and fixed heating equipment. (422.1 and 424.1)

E4101.2 Installation. Appliances and equipment shall be installed in accordance with the manufacturer's installation instructions. Electrically heated appliances and equipment shall be installed with the required clearances to combustible materials. [110.3(B) and 422.17]

E4101.3 Flexible cords. Cord-and-plug-connected appliances shall use cords suitable for the environment and physical conditions likely to be encountered. Flexible cords shall be used only where the appliance is listed to be connected with a flexible cord. The cord shall be identified as suitable in the installation instructions of the appliance manufacturer. Receptacles for cord-and-plug-connected appliances shall be accessible and shall be located to avoid physical damage to the flexible cord. Except for a listed appliance marked to indicate that it is protected by a system of double-insulation, the flexible cord supplying an appliance shall terminate in a grounding-type attachment plug. The cord lengths specified for built-in dishwashers and trash compactors shall be measured from the face of the attachment plug to the plane of the rear of the appliance. A receptacle for a cord-and-plug-connected range hood shall be supplied by an individual branch circuit. A receptacle for a built-in dishwasher shall be located in a space adjacent to the space occupied by the dishwasher. Specific appliances have additional requirements as specified in Table E4101.3 (see Section E3909). [422.16(B)(1), (B)(2), (B)(4)]

TABLE E4101.3
FLEXIBLE CORD LENGTH

APPLIANCE	MINIMUM CORD LENGTH (inches)	MAXIMUM CORD LENGTH (inches)
Electrically operated in-sink waste disposal	18	36
Built-in dishwasher	36	78
Trash compactor	36	48
Range hoods	18	48

For SI: 1 inch = 25.4 mm.

E4101.4 Overcurrent protection. Each appliance shall be protected against overcurrent in accordance with the rating of the appliance and its listing. [110.3(B), 422.11(A)]

E4101.4.1 Single nonmotor-operated appliance. The overcurrent protection for a branch circuit that supplies a single nonmotor-operated appliance shall not exceed that marked on the appliance. Where the overcurrent protection rating is not marked and the appliance is rated at over 13.3 amperes, the overcurrent protection shall not exceed 150 percent of the appliance rated current. Where 150 percent of the appliance rating does not correspond to a standard overcurrent device ampere rating, the next higher standard rating shall be permitted. Where the overcurrent protection rating is not marked and the appliance is rated at 13.3 amperes or less, the overcurrent protection shall not exceed 20 amperes. [422.11(E)]

E4101.5 Disconnecting means. Each appliance shall be provided with a means to disconnect all ungrounded supply conductors. For fixed electric space-heating equipment, means shall be provided to disconnect the heater and any motor controller(s) and supplementary overcurrent-protective devices. Switches and circuit breakers used as a disconnecting means shall be of the indicating type. Disconnecting means shall be as set forth in Table E4101.5. (422.30, 422.35, and 424.19)

E4101.6 Support of ceiling-suspended paddle fans. Ceiling-suspended fans (paddle) shall be supported independently of an outlet box; by a listed outlet box or outlet box system identified for the use and installed in accordance with Section E3905.8; or by a listed outlet box system, a listed locking support and mounting receptacle, and a compatible factory-installed attachment fitting designed for support, identified for the use and installed in accordance with Section E3906.12. (422.18)

E4101.7 Snow-melting and deicing equipment protection. Outdoor receptacles that are not readily accessible and are supplied from a dedicated branch circuit for electric snow-melting or deicing equipment shall be permitted to be installed without ground-fault circuit-interrupter protection for personnel. However, ground-fault protection of equipment shall be provided for fixed outdoor electric deicing and snow-melting equipment. [210.8(A)(3) Exception, 426.28]

E4101.8 Lockable disconnecting means. Where a disconnecting means is required to be lockable, it shall be capable of being locked in the open position. The provisions for locking shall remain in place with or without the lock installed.

Exception: Locking provisions for a cord-and-plug connection shall not be required to remain in place without the lock installed.

INTERNATIONAL CODE COUNCIL®
Copyright © 2019 ICC & NYSDOS. ALL RIGHTS RESERVED. Accessed by Lauren Gualdino (lgualdino@briarcliffmanor.org), (-) Order Number #100880972 on May 08, 2020 07:05 AM (PDT) pursuant to License Agreement with ICC & NYSDOS. No further reproduction, no

100880972

TABLE E4101.5
DISCONNECTING MEANS [422.31(A), (B), and (C); 422.34; 422.35; 424.19; 424.20; and 440.14]

DESCRIPTION	ALLOWED DISCONNECTING MEANS
Permanently connected appliance rated at not over 300 volt-amperes or $^1/_8$ horsepower.	Branch-circuit overcurrent device where the switch or circuit breaker is *within sight* of the appliance or is capable of being locked in the open position in compliance with Section E4101.8.
Permanently connected appliances rated in excess of 300 volt-amperes.	Branch circuit switch or circuit breaker located *within sight* of the appliance or such devices in any location that are capable of being locked in the open position in compliance with Section E4101.8.
Motor-operated appliances rated over $^1/_8$ horsepower.	For permanently connected motor-operated appliances with motors rated over $^1/_8$ horsepower, the disconnecting means shall be *within sight* from the appliance or it shall be capable of being locked in the open position in compliance with Section E4101.8. The disconnecting means shall be one of the following types: a listed motor-circuit switch rated in horsepower, a listed molded case circuit breaker, a listed molded case switch, a listed manual motor controller additionally marked "Suitable as Motor Disconnect" where installed between the final motor branch-circuit short-circuit protective device and the motor. For stationary motors rated at 2 hp or less and 300 volts or less, the disconnecting means shall be permitted to be one of the following devices: 1. A general-use switch having an ampere rating not less than twice the full-load current rating of the motor. 2. On AC circuits, a general-use snap switch suitable only for use on AC, not general-use AC–DC snap switches, where the motor full-load current rating is not more than 80 percent of the ampere rating of the switch. 3. A listed manual motor controller having a horsepower rating not less than the rating of the motor and marked "Suitable as Motor Disconnect". The disconnecting means shall have an ampere rating not less than 115 percent of the full-load current rating of the motor except that a listed unfused motor-circuit switch having a horsepower rating not less than the motor horsepower shall be permitted to have an ampere rating less than 115 percent of the full-load current rating of the motor. **Exception:** Where an appliance of more than $^1/_8$ hp is provided with a unit switch with a marked-off position that is a part of the appliance and disconnects all ungrounded conductors, such unit switch shall be permitted as the disconnecting means and the switch or circuit breaker serving as the other disconnecting means shall be permitted to be not *within sight* from the appliance.
Appliances listed for cord-and-plug connection.	A separable connector or attachment plug and receptacle provided with access.

(continued)

INTERNATIONAL CODE COUNCIL®
Copyright © 2019 ICC & NYSDOS. ALL RIGHTS RESERVED. Accessed by Lauren Gualdino (lgualdino@briarcliffmanor.org), (-) Order Number #100880972 on May 08, 2020 07:05 AM (PDT) pursuant to License Agreement with ICC & NYSDOS. No further reproduction, no

100880972

TABLE E4101.5—continued
DISCONNECTING MEANS

DESCRIPTION	ALLOWED DISCONNECTING MEANS
Permanently installed heating equipment with motors rated at not over $^1/_8$ horsepower with supplementary overcurrent protection.	Disconnect, on the supply side of fuses, *in sight* from the supplementary overcurrent device, and *in sight* of the heating equipment or, in any location, where the disconnecting means is be capable of being locked in the open position in compliance with Section E4101.8.
Heating equipment containing motors rated over $^1/_8$ horsepower with supplementary overcurrent protection.	Disconnect permitted to serve as required disconnect for both the heating equipment and the controller where, on the supply side of fuses, and *in sight* from the supplementary overcurrent devices, if the disconnecting means is also *in sight* from the controller, or is capable of being locked in the open position in compliance with Section E4101.8 and simultaneously disconnects the heater, motor controller(s) and supplementary overcurrent protective devices from all ungrounded conductors. The disconnecting means shall have an ampere rating not less than 125 percent of the total load of the motors and the heaters.
Heating equipment containing no motor rated over $^1/_8$ horsepower without supplementary overcurrent protection.	Branch-circuit switch or circuit breaker where *within sight* from the heating equipment or capable of being locked in the open position in compliance with Section E4101.8 and simultaneously disconnects the heater, motor controller(s) and supplementary overcurrent protective devices from all ungrounded conductors. The provision for locking or adding a lock to the disconnecting means shall be installed on or at the switch or circuit breaker used as the disconnecting means and shall remain in place with or without the lock installed. The disconnecting means shall have an ampere rating not less than 125 percent of the total load of the motors and the heaters.
Heating equipment containing motors rated over $^1/_8$ horsepower without supplementary overcurrent protection.	Disconnecting means *in sight* from motor controller or is capable of being locked in the open position in compliance with Section E4101.8 and simultaneously disconnects the heater, motor controller(s) and supplementary overcurrent protective devices from all ungrounded conductors. The disconnecting means shall have an ampere rating not less than 125 percent of the total load of the motors and the heaters.
Air-conditioning condensing units and heat pump units.	A readily accessible disconnect *within sight* from unit as the only allowable means.[a]
Appliances and fixed heating equipment with unit switches having a marked OFF position.	Unit switch where an additional individual switch or circuit breaker serves as the other required disconnecting means.
Thermostatically controlled fixed heating equipment.	Thermostats with a marked OFF position that directly open all ungrounded conductors, which when manually placed in the OFF position are designed so that the circuit cannot be energized automatically and that are located *within sight* of the equipment controlled.

For SI: 1 horsepower = 0.746 kW.

a. The disconnecting means shall be permitted to be installed on or within the unit. It shall not be located on panels designed to allow access to the unit or located so as to obscure the air-conditioning equipment nameplate(s).

INTERNATIONAL CODE COUNCIL®
Copyright © 2019 ICC & NYSDOS. ALL RIGHTS RESERVED. Accessed by Lauren Gualdino (lgualdino@briarcliffmanor.org), (-) Order Number #100880972 on May 08, 2020 07:05 AM (PDT) pursuant to License Agreement with ICC & NYSDOS. No further reproduction, no

100880972

INTERNATIONAL CODE COUNCIL®
Copyright © 2019 ICC & NYSDOS. ALL RIGHTS RESERVED. Accessed by Lauren Gualdino (lgualdino@briarcliffmanor.org), (-) Order Number #100880972 on May 08, 2020 07:05 AM (PDT) pursuant to License Agreement with ICC & NYSDOS. No further reproduction, no

100880972

CHAPTER 42

SWIMMING POOLS

SECTION E4201
GENERAL

E4201.1 Scope. The provisions of this chapter shall apply to the construction and installation of electric wiring and equipment associated with all swimming pools, wading pools, decorative pools, fountains, hot tubs and spas, and hydromassage bathtubs, whether permanently installed or storable, and shall apply to metallic auxiliary equipment, such as pumps, filters and similar equipment. Sections E4202 through E4206 provide general rules for permanent pools, spas and hot tubs. Section E4207 provides specific rules for storable pools and storable/portable spas and hot tubs. Section E4208 provides specific rules for spas and hot tubs. Section E4209 provides specific rules for hydromassage bathtubs. (680.1)

E4201.2 Definitions. (680.2)

CORD-AND-PLUG-CONNECTED LIGHTING ASSEMBLY. A lighting assembly consisting of a cord-and-plug-connected transformer and a luminaire intended for installation in the wall of a spa, hot tub, or storable pool.

DRY-NICHE LUMINAIRE. A luminaire intended for installation in the floor or wall of a pool, spa or fountain in a niche that is sealed against the entry of water.

FORMING SHELL. A structure designed to support a wet-niche luminaire assembly and intended for mounting in a pool or fountain structure.

FOUNTAIN. Fountains, ornamental pools, display pools, and reflection pools. The definition does not include drinking fountains.

HYDROMASSAGE BATHTUB. A permanently installed bathtub equipped with a recirculating piping system, pump, and associated equipment. It is designed so it can accept, circulate and discharge water upon each use.

LOW-VOLTAGE CONTACT LIMIT. A voltage not exceeding the following values:

1. 15 volts (RMS) for sinusoidal ac.
2. 21.2 volts peak for nonsinusoidal ac.
3. 30 volts for continuous dc.
4. 12.4 volts peak for dc that is interrupted at a rate of 10 to 200 Hz.

MAXIMUM WATER LEVEL. The highest level that water can reach before it spills out.

NO-NICHE LUMINAIRE. A luminaire intended for installation above or below the water without a niche.

PACKAGED SPA OR HOT TUB EQUIPMENT ASSEMBLY. A factory-fabricated unit consisting of water-circulating, heating and control equipment mounted on a common base, intended to operate a spa or hot tub. Equipment may include pumps, air blowers, heaters, luminaires, controls and sanitizer generators.

PERMANENTLY INSTALLED SWIMMING, WADING, IMMERSION AND THERAPEUTIC POOLS. Those that are constructed in the ground or partially in the ground, and all others capable of holding water with a depth greater than 42 inches (1067 mm), and all pools installed inside of a building, regardless of water depth, whether or not served by electrical circuits of any nature.

POOL. Manufactured or field-constructed equipment designed to contain water on a permanent or semipermanent basis and used for swimming, wading, immersion, or therapeutic purposes.

POOL COVER, ELECTRICALLY OPERATED. Motor-driven equipment designed to cover and uncover the water surface of a pool by means of a flexible sheet or rigid frame.

SELF-CONTAINED SPA OR HOT TUB. A factory-fabricated unit consisting of a spa or hot tub vessel with all water-circulating, heating and control equipment integral to the unit. Equipment may include pumps, air blowers, heaters, luminaires, controls and sanitizer generators.

SPA OR HOT TUB. A hydromassage pool, or tub for recreational or therapeutic use, not located in health care facilities, designed for immersion of users, and usually having a filter, heater, and motor-driven blower. They are installed indoors or outdoors, on the ground or supporting structure, or in the ground or supporting structure. Generally, a spa or hot tub is not designed or intended to have its contents drained or discharged after each use.

STORABLE SWIMMING, WADING OR IMMERSION POOLS; OR STORABLE/PORTABLE SPAS AND HOT TUBS. Swimming, wading, or immersion pools that are intended to be stored when not in use, that are constructed on or above the ground and that are capable of holding water with a maximum depth of 42 inches (1067 mm), or a pool, spa, or hot tub that is constructed on or above the ground with nonmetallic, molded polymeric walls or inflatable fabric walls regardless of dimension.

THROUGH-WALL LIGHTING ASSEMBLY. A lighting assembly intended for installation above grade, on or through the wall of a pool, consisting of two interconnected groups of components separated by the pool wall.

WET-NICHE LUMINAIRE. A luminaire intended for installation in a forming shell mounted in a pool or fountain structure where the luminaire will be completely surrounded by water.

SECTION E4202
WIRING METHODS FOR POOLS, SPAS, HOT TUBS AND HYDROMASSAGE BATHTUBS

E4202.1 General. Wiring methods used in conjunction with permanently installed swimming pools, spas or hot tubs that are installed in corrosive environments described in Section E4202.2.1 shall comply with Table E4202.1, Sections

INTERNATIONAL CODE COUNCIL®
Copyright © 2019 ICC & NYSDOS. ALL RIGHTS RESERVED. Accessed by Lauren Gualdino (lgualdino@briarcliffmanor.org), (-) Order Number #100880972 on May 08, 2020 07:05 AM (PDT) pursuant to License Agreement with ICC & NYSDOS. No further reproduction, no

100880972

E4202.2 and E4205 and Chapter 38 except as otherwise stated in this section. Wiring methods used in conjunction with permanently installed swimming pools, spas or hot tubs that are not installed in corrosive environments shall comply with Chapter 38. Storable swimming pools shall comply with Section E4207. Hydromassage bathtubs shall comply with Section E4209. [680.7; 680.14 (A) and (B); 680.21(A); 680.23(B) and (F); 680.25(A); 680.42; 680.43; and 680.70]

E4202.2 Corrosive environment. Areas where pool sanitation chemicals are stored, areas with circulation pumps, automatic chlorinators or filters, open areas under decks adjacent to or abutting the pool structure and similar locations shall be considered to be corrosive environments. The air in such areas shall be considered to be laden with acid, chlorine and bromine vapors or any combination of acid, chlorine or bromine vapors; and any liquids or condensation in those areas shall be considered to be laden with acids, chlorine and bromine vapors, or any combination of acid, chlorine or bromine vapors. [680.14 (A)]

E4202.2.1 Wiring methods. Wiring methods in the areas described in Section E4202.2 shall be listed and identified for use is such areas. Rigid metal conduit (RMC), intermediate metal conduit (IMC), rigid polyvinyl chloride conduit (RNC) and reinforced thermosetting resin conduit shall be considered to be resistant to the corrosive environment specified in Section E4202.2. [680.14 (B)]

E4202.3 Flexible cords. Flexible cords used in conjunction with a pool, spa, hot tub or hydromassage bathtub shall be installed in accordance with the following:

1. For other than underwater luminaires, fixed or stationary equipment shall be permitted to be connected with a flexible cord to facilitate removal or disconnection for maintenance or repair. For other than storable pools, the flexible cord shall not exceed 3 feet (914 mm) in length. Cords that supply swimming pool equipment shall have a copper equipment grounding conductor not smaller than 12 AWG and shall terminate in a grounding-type attachment plug. [680.8(A), (B), and (C); 680.21(A)(5)]
2. Other than listed low-voltage lighting systems not requiring grounding, wet-niche luminaires that are supplied by a flexible cord or cable shall have all exposed noncurrent-carrying metal parts grounded by an insulated copper equipment grounding conductor that is an integral part of the cord or cable. Such grounding conductor shall be connected to a grounding terminal in the supply junction box, transformer enclosure, or other enclosure and shall be not smaller than the supply conductors and not smaller than 16 AWG. [680.23(B)(3)]
3. A listed packaged spa or hot tub installed outdoors that is GFCI protected shall be permitted to be cord-and-plug-connected provided that such cord does not exceed 15 feet (4572 mm) in length. [680.42(A)(2)]

TABLE E4202.1[a]
PERMITTED WIRING METHODS IN CORROSIVE ENVIRONMENTS

WIRING LOCATION OR PURPOSE (Application allowed where marked with an "A")	IMC[b], RMC[b], RNC[e]	LFMC	LFNMC	MC[g]	FLEX CORD
Panelboard(s) that supply pool equipment: from service equipment to panelboard	A[f]	—	A	—	—
Wet-niche and no-niche luminaires: from branch circuit OCPD to deck or junction box	A	—	A	—	—
Wet-niche and no-niche luminaires: from deck or junction box to forming shell	A[j]	—	A	—	A[d]
Dry niche: from branch circuit OCPD to luminaires	A	—	A	—	—
Pool-associated motors: from branch circuit OCPD to motor[h]	A	A[c]	A[c]	A	A[d]
Packaged or self-contained outdoor spas and hot tubs with underwater luminaire: from branch circuit OCPD to spa or hot tub	A	A	A	—	A[d]
Packaged or self-contained outdoor spas and hot tubs without underwater luminaire: from branch circuit OCPD to spa or hot tub	A	A	A	—	A[d]
Indoor spas and hot tubs, and other pool, spa or hot tub associated equipment: from branch circuit OCPD to equipment	A	A	A	—	A[d]
Connection at pool lighting transformers or power supplies	A	A[i]	A	—	—

For SI: 1 foot = 304.8 mm.

a. For all wiring methods, see Section E4205 for equipment grounding conductor requirements.
b. See Section E4202.2.1 for use of metal conduits in corrosive environments.
c. Limited to where necessary to employ flexible connections at or adjacent to a pool motor.
d. Flexible cord shall be installed in accordance with Section E4202.2.
e. Nonmetallic conduit shall be rigid polyvinyl chloride conduit Type PVC or reinforced thermosetting resin conduit Type RTRC.
f. Aluminum conduits shall not be permitted in the pool area where subject to corrosion.
g. Where installed as direct burial cable or in wet locations, Type MC cable shall be listed and identified for the location.
h. See Section E4202.3 for listed, double-insulated pool pump motors.
i. Limited to use in individual lengths not to exceed 6 feet. The total length of all individual runs of LFMC shall not exceed 10 feet.
j. Metal conduit shall be constructed of brass or other approved corrosion-resistant metal.

INTERNATIONAL CODE COUNCIL®
Copyright © 2019 ICC & NYSDOS. ALL RIGHTS RESERVED. Accessed by Lauren Gualdino (lgualdino@briarcliffmanor.org), (-) Order Number #100880972 on May 08, 2020 07:05 AM (PDT) pursuant to License Agreement with ICC & NYSDOS. No further reproduction, no

100880972

4. A listed packaged spa or hot tub rated at 20 amperes or less and installed indoors shall be permitted to be cord-and-plug-connected to facilitate maintenance and repair. (680.43 Exception No. 1)
5. For other than underwater and storable pool lighting luminaire, the requirements of Item 1 shall apply to any cord-equipped luminaire that is located within 16 feet (4877 mm) radially from any point on the water surface. [680.22(B)(5)]

E4202.4 Double insulated pool pumps. A listed cord- and plug-connected pool pump incorporating an approved system of double insulation that provides a means for grounding only the internal and nonaccessible, noncurrent-carrying metal parts of the pump shall be connected to any wiring method recognized in Chapter 38 that is suitable for the location. Where the bonding grid is connected to the equipment grounding conductor of the motor circuit in accordance with Section E4204.2, Item 6.1, the branch circuit wiring shall comply with Sections E4202.1 and E4205.5. [680.21(B)]

SECTION E4203
EQUIPMENT LOCATION AND CLEARANCES

E4203.1 Receptacle outlets. Receptacles outlets shall be installed and located in accordance with Sections E4203.1.1 through E4203.1.5. Distances shall be measured as the shortest path that an appliance supply cord connected to the receptacle would follow without penetrating a floor, wall, ceiling, doorway with hinged or sliding door, window opening, or other effective permanent barrier. [680.22(A)(5)]

E4203.1.1 Location. Receptacles that provide power for water-pump motors or other loads directly related to the circulation and sanitation system shall be of the grounding type, located not less than 6 feet (1829 mm) from the inside walls of pools and outdoor spas and hot tubs, and ground-fault circuit-interrupter protected.

E4203.1.2 Other receptacles. Other receptacles on the property shall be located not less than 6 feet (1829 mm) from the inside walls of pools and outdoor spas and hot tubs. [680.22 (A)(3)]

E4203.1.3 Where required. Not less than one 125-volt, 15- or 20-ampere receptacle supplied by a general-purpose branch circuit shall be located not less than 6 feet (1829 mm) from and not more than 20 feet (6096 mm) from the inside wall of permanently installed pools and outdoor spas and hot tubs. This receptacle shall be located not more than 6 feet, 6 inches (1981 mm) above the floor, platform or grade level serving the pool, spa or hot tub. [680.22(A)(1)]

E4203.1.4 GFCI protection. All 15- and 20-ampere, single phase, 125-volt receptacles located within 20 feet (6096 mm) of the inside walls of pools and outdoor spas and hot tubs shall be protected by a ground-fault circuit interrupter. Outlets supplying pool pump motors supplied from branch circuits rated at 120 volts through 240 volts, single phase, whether by receptacle or direct connection, shall be provided with ground-fault circuit-interrupter protection for personnel. [680.21(C) and 680.22(A)(4)]

E4203.1.5 Indoor locations. Receptacles shall be located not less than 6 feet (1829 mm) from the inside walls of indoor spas and hot tubs. A minimum of one 125-volt receptacle shall be located between 6 feet (1829 mm) and 10 feet (3048 mm) from the inside walls of indoor spas or hot tubs. [680.43(A) and 680.43(A)(1)]

E4203.1.6 Indoor GFCI protection. All 125-volt receptacles rated 30 amperes or less and located within 10 feet (3048 mm) of the inside walls of spas and hot tubs installed indoors, shall be protected by ground-fault circuit interrupters. [680.43(A)(2)]

E4203.2 Switching devices. Switching devices shall be located not less than 5 feet (1524 mm) horizontally from the inside walls of pools, spas and hot tubs except where separated from the pool, spa or hot tub by a solid fence, wall, or other permanent barrier or the switches are listed for use within 5 feet (1524 mm). Switching devices located in a room or area containing a hydromassage bathtub shall be located in accordance with the general requirements of this code. [680.22(C); 680.43(C); and 680.72]

E4203.3 Disconnecting means. One or more means to simultaneously disconnect all ungrounded conductors for all utilization equipment, other than lighting, shall be provided. Each of such means shall be readily accessible and within sight from the equipment it serves and shall be located at least 5 feet (1524 mm) horizontally from the inside walls of a pool, spa, or hot tub unless separated from the open water by a permanently installed barrier that provides a 5-foot (1524 mm) or greater reach path. This horizontal distance shall be measured from the water's edge along the shortest path required to reach the disconnect. (680.13)

E4203.4 Luminaires, equipment and ceiling fans. Lighting outlets, luminaires, equipment and ceiling-suspended paddle fans shall be installed and located in accordance with Sections E4203.4.1 through E4203.4.7. [680.22(B)]

E4203.4.1 Outdoor location. In outdoor pool, outdoor spas and outdoor hot tubs areas, luminaires, lighting outlets, and ceiling-suspended paddle fans shall not be installed over the pool or over the area extending 5 feet (1524 mm) horizontally from the inside walls of a pool except where no part of the luminaire or ceiling-suspended paddle fan is less than 12 feet (3658 mm) above the maximum water level. [680.22(B)(1)]

E4203.4.2 Indoor locations. In indoor pool areas, the limitations of Section E4203.4.1 shall apply except where the luminaires, lighting outlets and ceiling-suspended paddle fans comply with all of the following conditions:

1. The luminaires are of a totally enclosed type.
2. Ceiling-suspended paddle fans are identified for use beneath ceiling structures such as porches and patios.
3. A ground-fault circuit interrupter is installed in the branch circuit supplying the luminaires or ceiling-suspended paddle fans.
4. The distance from the bottom of the luminaire or ceiling-suspended paddle fan to the maximum water level is not less than 7 feet, 6 inches (2286 mm). [680.22(B)(2)]

INTERNATIONAL CODE COUNCIL®
Copyright © 2019 ICC & NYSDOS. ALL RIGHTS RESERVED. Accessed by Lauren Gualdino (lgualdino@briarcliffmanor.org), (-) Order Number #100880972 on May 08, 2020 07:05 AM (PDT) pursuant to License Agreement with ICC & NYSDOS. No further reproduction, no

100880972

E4203.4.3 Low-voltage luminaires. Listed low-voltage luminaires not requiring grounding, not exceeding the low-voltage contact limit, and supplied by listed transformers or power supplies that comply with Section E4206.1 shall be permitted to be located less than 5 feet (1.5 m) from the inside walls of the pool. [680.22(B)(6)]

E4203.4.4 Existing lighting outlets and luminaires. Existing lighting outlets and luminaires that are located within 5 feet (1524 mm) horizontally from the inside walls of pools and outdoor spas and hot tubs shall be permitted to be located not less than 5 feet (1524 mm) vertically above the maximum water level, provided that such luminaires and outlets are rigidly attached to the existing structure and are protected by a ground-fault circuit interrupter. [680.22(B)(3)]

E4203.4.5 Indoor spas and hot tubs.

1. Luminaires, lighting outlets, and ceiling-suspended paddle fans located over the spa or hot tub or within 5 feet (1524 mm) from the inside walls of the spa or hot tub shall be not less than 7 feet, 6 inches (2286 mm) above the maximum water level and shall be protected by a ground-fault circuit interrupter. [680.43(B)(1)(b)]

   Luminaires, lighting outlets, and ceiling-suspended paddle fans that are located 12 feet (3658 mm) or more above the maximum water level shall not require ground-fault circuit interrupter protection. [680.43(B)(1)(a)]

2. Luminaires protected by a ground-fault circuit interrupter and complying with Item 2.1 or 2.2 shall be permitted to be installed less than 7 feet, 6 inches (2286 mm) over a spa or hot tub.

   2.1. Recessed luminaires shall have a glass or plastic lens and nonmetallic or electrically isolated metal trim, and shall be suitable for use in damp locations.

   2.2. Surface-mounted luminaires shall have a glass or plastic globe and a nonmetallic body or a metallic body isolated from contact. Such luminaires shall be suitable for use in damp locations. [680.43(B)(1)(c)(1) and (2)]

E4203.4.6 GFCI protection in adjacent areas. Luminaires, lighting outlets and ceiling-suspended paddle fans that are installed in the area extending between 5 feet (1524 mm) and 10 feet (3048 mm) from the inside walls of pools and outdoor spas and hot tubs shall be protected by ground-fault circuit interrupters except where such luminaires, lighting outlets and ceiling-suspended paddle fans are installed not less than 5 feet (1524 mm) above the maximum water level and are rigidly attached to the structure. [680.22(B)(4)]

E4203.4.7 Low-voltage gas-fired luminaires, decorative fireplaces, fire pits and similar equipment. Listed low-voltage gas-fired luminaires, decorative fireplaces, fire pits and similar equipment that use low-voltage ignitors that do not require grounding, and that are supplied by listed transformers or power supplies that comply with Section E4206.1 with outputs that do not exceed the low-voltage contact limit, shall be permitted to be located less than 5 feet (1524 mm) from the inside walls of the pool. Metallic equipment shall be bonded in accordance with the requirements in Section E4204.2. Transformers and power supplies supplying this type of equipment shall be installed in accordance with the requirements of Section E4206.9.1. Metallic gas piping shall be bonded in accordance with the requirements of Sections E3609.7 and 4204.2(7). [680.22 (B) (7)]

E4203.5 Other outlets. Other outlets such as for remote control, signaling, fire alarm and communications shall be not less than 10 feet (3048 mm) from the inside walls of the pool. Measurements shall be determined in accordance with Section E4203.1. [680.22(D)]

E4203.6 Overhead conductor clearances. Except where installed with the clearances specified in Table E4203.6, the following parts of pools and outdoor spas and hot tubs shall not be placed under existing service-drop conductors, overhead service conductor, or any other open overhead wiring; nor shall such wiring be installed above the following:

1. Pools and the areas extending not less than 10 feet, (3048 mm) horizontally from the inside of the walls of the pool.
2. Diving structures and the areas extending not less than 10 feet (3048 mm) horizontally from the outer edge of such structures.

TABLE E4203.6 [Table 680.8(A)]
OVERHEAD CONDUCTOR CLEARANCES

	INSULATED SUPPLY OR SERVICE DROP CABLES, 0-750 VOLTS TO GROUND, SUPPORTED ON AND CABLED TOGETHER WITH AN EFFECTIVELY GROUNDED BARE MESSENGER OR EFFECTIVELY GROUNDED NEUTRAL CONDUCTOR (feet)	ALL OTHER SUPPLY OR SERVICE DROP CONDUCTORS (feet)	
		Voltage to ground	
		0-15 kV	Greater than 15 to 50 kV
A. Clearance in any direction to the water level, edge of water surface, base of diving platform, or permanently anchored raft	22.5	25	27
B. Clearance in any direction to the diving platform	14.5	17	18

For SI: 1 foot = 304.8 mm.

INTERNATIONAL CODE COUNCIL®
Copyright © 2019 ICC & NYSDOS. ALL RIGHTS RESERVED. Accessed by Lauren Gualdino (lgualdino@briarcliffmanor.org), (-) Order Number #100880972 on May 08, 2020 07:05 AM (PDT) pursuant to License Agreement with ICC & NYSDOS. No further reproduction, no

100880972

3. Observation stands, towers, and platforms and the areas extending not less than 10 feet (3048 mm) horizontally from the outer edge of such structures.

Overhead conductors of network-powered broadband communications systems shall comply with the provisions in Table E4203.6 for conductors operating at 0 to 750 volts to ground.

Utility-owned, -operated and -maintained communications conductors, community antenna system coaxial cables and the supporting messengers shall be permitted at a height of not less than 10 feet (3048 mm) above swimming and wading pools, diving structures, and observation stands, towers, and platforms. [680.8(A), (B), and (C)]

E4203.7 Underground wiring. Underground wiring shall not be installed under the pool except where this wiring is necessary to supply pool equipment permitted by this chapter. Underground wiring shall be installed in rigid metal conduit, intermediate metal conduit, rigid polyvinyl chloride conduit, reinforced thermosetting resin conduit or Type MC cable, suitable for the conditions subject to that location. The minimum cover depth shall be in accordance with Table E3803.1. (680.11)

SECTION E4204
BONDING

E4204.1 Performance. The equipotential bonding required by this section shall be installed to reduce voltage gradients in the prescribed areas of permanently installed swimming pools and spas and hot tubs other than the storable/portable type.

E4204.2 Bonded parts. The parts of pools, spas, and hot tubs specified in Items 1 through 7 shall be bonded together using insulated, covered or bare solid copper conductors not smaller than 8 AWG or using rigid metal conduit of brass or other identified corrosion-resistant metal. An 8 AWG or larger solid copper bonding conductor provided to reduce voltage gradients in the pool, spa, or hot tub area shall not be required to be extended or attached to remote panelboards, service equipment, or electrodes. Connections shall be made by exothermic welding, by listed pressure connectors or clamps that are labeled as being suitable for the purpose and that are made of stainless steel, brass, copper or copper alloy, machine screw-type fasteners that engage not less than two threads or are secured with a nut, thread-forming machine screws that engage not less than two-threads, or terminal bars. Connection devices or fittings that depend solely on solder shall not be used. Sheet metal screws shall not be used to connect bonding conductors or connection devices: [680.26(B)]

1. Conductive pool shells. Bonding to conductive pool shells shall be provided as specified in Item 1.1 or 1.2. Poured concrete, pneumatically applied or sprayed concrete, and concrete block with painted or plastered coatings shall be considered to be conductive materials because of their water permeability and porosity. Vinyl liners and fiberglass composite shells shall be considered to be nonconductive materials.

    1.1. Structural reinforcing steel. Unencapsulated structural reinforcing steel shall be bonded together by steel tie wires or the equivalent. Where structural reinforcing steel is encapsulated in a nonconductive compound, a copper conductor grid shall be installed in accordance with Item 1.2.

    1.2. Copper conductor grid. A copper conductor grid shall be provided and shall comply with Items 1.2.1 through 1.2.4:

        1.2.1. It shall be constructed of minimum 8 AWG bare solid copper conductors bonded to each other at all points of crossing.

        1.2.2. It shall conform to the contour of the pool.

        1.2.3. It shall be arranged in a 12-inch (305 mm) by 12-inch (305 mm) network of conductors in a uniformly spaced perpendicular grid pattern with a tolerance of 4 inches (102 mm).

        1.2.4. It shall be secured within or under the pool not more than 6 inches (152 mm) from the outer contour of the pool shell. [680.26(B)(1)]

2. Perimeter surfaces. The perimeter surface to be bonded shall be considered to extend for 3 feet (914 mm) horizontally beyond the inside walls of the pool and shall include unpaved surfaces, poured concrete surfaces and other types of paving. Perimeter surfaces that are separated from the pool by a permanent wall or building 5 feet (1524 mm) or more in height shall require equipotential bonding only on the pool side of the permanent wall or building. Bonding to perimeter surfaces shall be provided as specified in Item 2.1 or 2.2 and shall be attached to the pool, spa, or hot tub reinforcing steel or copper conductor grid at a minimum of four points uniformly spaced around the perimeter of the pool, spa, or hot tub. For nonconductive pool shells, bonding at four points shall not be required.

    Exceptions:

    1. Equipotential bonding of perimeter surfaces shall not be required for spas and hot tubs where all of the following conditions apply:

        1.1. The spa or hot tub is listed as a self-contained spa for above-ground use.

        1.2. The spa or hot tub is not identified as suitable only for indoor use.

        1.3. The installation is in accordance with the manufacturer's instructions and is located on or above grade.

        1.4. The top rim of the spa or hot tub is not less than 28 inches (711 mm) above all perimeter surfaces that are within 30 inches (762 mm), measured horizontally from the spa or hot tub. The height of nonconductive external steps for entry to or exit from the self-contained spa is not

INTERNATIONAL CODE COUNCIL®
Copyright © 2019 ICC & NYSDOS. ALL RIGHTS RESERVED. Accessed by Lauren Gualdino (lgualdino@briarcliffmanor.org), (-) Order Number #100880972 on May 08, 2020 07:05 AM (PDT) pursuant to License Agreement with ICC & NYSDOS. No further reproduction, no

100880972

used to reduce or increase this rim height measurement.

2. The equipotential bonding requirements for perimeter surfaces shall not apply to a listed self-contained spa or hot tub located indoors and installed above a finished floor.

2.1. Structural reinforcing steel. Structural reinforcing steel shall be bonded in accordance with Item 1.1.

2.2. Alternate means. Where structural reinforcing steel is not available or is encapsulated in a nonconductive compound, a copper conductor(s) shall be used in accordance with Items 2.2.1 through 2.2.5:

2.2.1. At least one minimum 8 AWG bare solid copper conductor shall be provided.

2.2.2. The conductors shall follow the contour of the perimeter surface.

2.2.3. Splices shall be listed.

2.2.4. The required conductor shall be 18 to 24 inches (457 to 610 mm) from the inside walls of the pool.

2.2.5. The required conductor shall be secured within or under the perimeter surface 4 to 6 inches (102 mm to 152 mm) below the subgrade. [680.26(B)(2)]

3. Metallic components. All metallic parts of the pool structure, including reinforcing metal not addressed in Item 1.1, shall be bonded. Where reinforcing steel is encapsulated with a nonconductive compound, the reinforcing steel shall not be required to be bonded. [680.26(B)(3)]

4. Underwater lighting. All metal forming shells and mounting brackets of no-niche luminaires shall be bonded. [680.26(B)(4)]

Exception: Listed low-voltage lighting systems with nonmetallic forming shells shall not require bonding. [680.26(B)(4) Exception]

5. Metal fittings. All metal fittings within or attached to the pool structure shall be bonded. Isolated parts that are not over 4 inches (102 mm) in any dimension and do not penetrate into the pool structure more than 1 inch (25.4 mm) shall not require bonding. [680.26(B)(5)]

6. Electrical equipment. Metal parts of electrical equipment associated with the pool water circulating system, including pump motors and metal parts of equipment associated with pool covers, including electric motors, shall be bonded. [680.26(B)(6)]

Exception: Metal parts of listed equipment incorporating an approved system of double insulation shall not be bonded. [680.26(B)(6) Exception]

6.1. Double-insulated water pump motors. Where a double-insulated water pump motor is installed under the provisions of this item, a solid 8 AWG copper conductor of sufficient length to make a bonding connection to a replacement motor shall be extended from the bonding grid to an accessible point in the vicinity of the pool pump motor. Where there is no connection between the swimming pool bonding grid and the equipment grounding system for the premises, this bonding conductor shall be connected to the equipment grounding conductor of the motor circuit. [680.26(B)(6)(a)]

6.2. Pool water heaters. For pool water heaters rated at more than 50 amperes and having specific instructions regarding bonding and grounding, only those parts designated to be bonded shall be bonded and only those parts designated to be grounded shall be grounded. [680.26(B)(6)(b)]

7. All fixed metal parts including, but not limited to, metal-sheathed cables and raceways, metal piping, metal awnings, metal fences and metal door and window frames. [680.26(B)(7)]

Exceptions:

1. Those separated from the pool by a permanent barrier that prevents contact by a person shall not be required to be bonded. [680.26(B)(7) Exception No. 1]

2. Those greater than 5 feet (1524 mm) horizontally from the inside walls of the pool shall not be required to be bonded. [680.26(B)(7) Exception No. 2]

3. Those greater than 12 feet (3658 mm) measured vertically above the maximum water level of the pool, or as measured vertically above any observation stands, towers, or platforms, or any diving structures, shall not be required to be bonded. [680.26(B)(7) Exception No. 3]

E4204.3 Pool water. Where none of the bonded parts is in direct connection with the pool water, the pool water shall be in direct contact with an approved corrosion-resistant conductive surface that exposes not less than 9 square inches (5800 mm^2) of surface area to the pool water at all times. The conductive surface shall be located where it is not exposed to physical damage or dislodgement during usual pool activities, and it shall be bonded in accordance with Section E4204.2.

E4204.4 Bonding of outdoor hot tubs and spas. Outdoor hot tubs and spas shall comply with the bonding requirements of Sections E4204.1 through E4204.3. Bonding by metal-to-metal mounting on a common frame or base shall be permitted. The metal bands or hoops used to secure wooden staves shall not be required to be bonded as required in Section E4204.2. [680.42 and 680.42(B)]

INTERNATIONAL CODE COUNCIL®
Copyright © 2019 ICC & NYSDOS. ALL RIGHTS RESERVED. Accessed by Lauren Gualdino (lgualdino@briarcliffmanor.org), (-) Order Number #100880972 on May 08, 2020 07:05 AM (PDT) pursuant to License Agreement with ICC & NYSDOS. No further reproduction, no

100880972

E4204.5 Bonding of indoor hot tubs and spas. The following parts of indoor hot tubs and spas shall be bonded together:

1. All metal fittings within or attached to the hot tub or spa structure. [680.43(D)(1)]
2. Metal parts of electrical equipment associated with the hot tub or spa water circulating system, including pump motors unless part of a listed self-contained spa or hot tub. [680.43(D)(2)]
3. Metal raceway and metal piping that are within 5 feet (1524 mm) of the inside walls of the hot tub or spa and that are not separated from the spa or hot tub by a permanent barrier. [680.43(D)(3)]
4. All metal surfaces that are within 5 feet (1524 mm) of the inside walls of the hot tub or spa and that are not separated from the hot tub or spa area by a permanent barrier. [680.43(D)(4)]

   Exception: Small conductive surfaces not likely to become energized, such as air and water jets and drain fittings, where not connected to metallic piping, towel bars, mirror frames, and similar nonelectrical equipment, shall not be required to be bonded. [680.43(D)(4) Exception]
5. Electrical devices and controls that are not associated with the hot tubs or spas and that are located less than 5 feet (1524 mm) from such units. [680.43(D)(5)]

E4204.5.1 Methods. All metal parts associated with the hot tub or spa shall be bonded by any of the following methods:

1. The interconnection of threaded metal piping and fittings. [680.43(E)(1)]
2. Metal-to-metal mounting on a common frame or base. [680.43(E)(2)]
3. The provision of an insulated, covered or bare solid copper bonding jumper not smaller than 8 AWG.It shall not be the intent to require that the 8 AWG or larger solid copper bonding conductor be extended or attached to any remote panelboard, service equipment, or any electrode, but only that it shall be employed to eliminate voltage gradients in the hot tub or spa area as prescribed. [680.43(E)(3)]

E4204.5.2 Connections. Connections to bonded parts shall be made in accordance with Section E3406.14.1.

SECTION E4205
GROUNDING

E4205.1 Equipment to be grounded. The following equipment shall be grounded:

1. Through-wall lighting assemblies and underwater luminaires other than those low-voltage lighting products listed for the application without a grounding conductor.
2. All electrical equipment located within 5 feet (1524 mm) of the inside wall of the pool, spa or hot tub.
3. All electrical equipment associated with the recirculating system of the pool, spa or hot tub.
4. Junction boxes.
5. Transformer and power supply enclosures.
6. Ground-fault circuit interrupters.
7. Panelboards that are not part of the service equipment and that supply any electrical equipment associated with the pool, spa or hot tub. (680.7)

E4205.2 Luminaires and related equipment. Where branch-circuit wiring on the supply side of enclosures and junction boxes connected to conduits run to underwater luminaires are installed in corrosive environments as described in Section E4202.2, the wiring method of that portion of the branch circuit shall be as required in Section E4202.2.1 or shall be liquid-tight flexible nonmetallic conduit (LFNMC). Where not installed in corrosive environments, branch circuits shall comply with Chapter 38. Wiring methods shall contain an insulated copper equipment grounding conductor sized in accordance with Table E3908.12 but not smaller than 12 AWG. The equipment grounding conductor between the wiring chamber of the secondary winding of a transformer and a junction box shall be sized in accordance with the overcurrent device in such circuit.

The insulated copper equipment grounding conductor shall be connected to all through-wall lighting assemblies, wet-niche, dry-niche, or no-niche luminaires other than listed low-voltage luminaires not requiring grounding. The junction box, transformer enclosure, or other enclosure in the supply circuit to a wet-niche or no-niche luminaire and the field-wiring chamber of a dry-niche luminaire shall be grounded to the equipment grounding terminal of the panelboard. The equipment grounding terminal shall be directly connected to the panelboard enclosure. The equipment grounding conductor shall be installed without joint or splice. [680.23(F)(1), (F)(2) and 680.23(F)(2) Exception]

Exceptions:

1. Where more than one underwater luminaire is supplied by the same branch circuit, the equipment grounding conductor, installed between the junction boxes, transformer enclosures, or other enclosures in the supply circuit to wet-niche luminaires, or between the field-wiring compartments of dry-niche luminaires, shall be permitted to be terminated on grounding terminals. [680.23(F)(2)(a)]
2. Where an underwater luminaire is supplied from a transformer, ground-fault circuit interrupter, clock-operated switch, or a manual snap switch that is located between the panelboard and a junction box connected to the conduit that extends directly to the underwater luminaire, the equipment grounding conductor shall be permitted to terminate on grounding terminals on the transformer, ground-fault circuit interrupter, clock-operated switch enclosure, or an outlet box used to enclose a snap switch. [680.23(F)(2)(b)]

INTERNATIONAL CODE COUNCIL®
Copyright © 2019 ICC & NYSDOS. ALL RIGHTS RESERVED. Accessed by Lauren Gualdino (lgualdino@briarcliffmanor.org), (-) Order Number #100880972 on May 08, 2020 07:05 AM (PDT) pursuant to License Agreement with ICC & NYSDOS. No further reproduction, no

100880972

E4205.3 Nonmetallic conduit. Where a nonmetallic conduit is installed between a forming shell and a junction box, transformer enclosure, or other enclosure, a 8 AWG insulated copper bonding jumper shall be installed in this conduit except where a listed low-voltage lighting system not requiring grounding is used. The bonding jumper shall be terminated in the forming shell, junction box or transformer enclosure, or ground-fault circuit-interrupter enclosure. The termination of the 8 AWG bonding jumper in the forming shell shall be covered with, or encapsulated in, a listed potting compound to protect such connection from the possible deteriorating effect of pool water. [680.23(B)(2)(b)]

E4205.4 Flexible cords. Other than listed low-voltage lighting systems not requiring grounding, wet-niche luminaires that are supplied by a flexible cord or cable shall have all exposed noncurrent-carrying metal parts grounded by an insulated copper equipment grounding conductor that is an integral part of the cord or cable. This grounding conductor shall be connected to a grounding terminal in the supply junction box, transformer enclosure, or other enclosure. The grounding conductor shall not be smaller than the supply conductors and not smaller than 16 AWG. [680.23(B)(3)]

E4205.5 Pool motors. Wiring methods installed in the corrosive environment described in Section E4202.2.1 shall comply with Section E4202.2.2 or shall be Type MC cable listed for that location. Wiring methods installed in corrosive environments described in Section E4202.2.1 shall contain an insulated copper equipment conductor sized in accordance with Table E3908.12 but not smaller than 12 AWG.

Where installed in noncorrosive environments, branch circuit wiring methods shall comply with Chapter 38. [680.21(A)(1)].

E4205.6 Feeders. These provisions shall apply to any feeder on the supply side of panelboards supplying branch circuits for pool equipment covered in this chapter and on the load side of the service equipment. Where feeders are installed in corrosive environments as described in Section E4202.2, the wiring method of that portion of the feeder shall comply with Section E4202.2.1 or shall be liquid-tight flexible nonmetallic conduit (LFNMC). Wiring methods installed in corrosive environments as described in Section E4202.2.1 shall contain an insulated copper equipment grounding conductor sized in accordance with Table E3908.12, but not smaller than 12 AWG.

Where installed in noncorrosive environments, feeder wiring methods shall comply with Chapter 38. [680.25(A)].

E4205.7 Cord-connected equipment. Where fixed or stationary equipment is connected with a flexible cord to facilitate removal or disconnection for maintenance, repair, or storage, as provided in Section E4202.3, the equipment grounding conductors shall be connected to a fixed metal part of the assembly. The removable part shall be mounted on or bonded to the fixed metal part. [680.7(C)]

E4205.8 Other equipment. Other electrical equipment shall be grounded in accordance with Section E3908. (Article 250, Parts V, VI, and VII; and 680.6)

E4205.9 Grounding and bonding terminals. Grounding and bonding terminals shall be identified for use in wet and corrosive environments. Field-installed grounding and bonding connections in a damp, wet or corrosive environment shall be composed of copper, copper alloy or stainless steel and shall be listed for direct burial use. (680.7)

SECTION E4206
EQUIPMENT INSTALLATION

E4206.1 Transformers and power supplies. Transformers and power supplies used for the supply of underwater luminaires, together with the transformer or power supply enclosure, shall be listed, labeled and identified for swimming pool and spa use. The transformer or power supply shall incorporate either a transformer of the isolated-winding type with an ungrounded secondary that has a grounded metal barrier between the primary and secondary windings, or a transformer that incorporates an approved system of double insulation between the primary and secondary windings. [680.23(A)(2)]

E4206.2 Ground-fault circuit interrupters. Ground-fault circuit interrupters shall be self-contained units, circuit-breaker types, receptacle types or other approved types. (680.5)

E4206.3 Wiring on load side of ground-fault circuit interrupters and transformers. For other than grounding conductors, conductors installed on the load side of a ground-fault circuit interrupter or transformer used to comply with the provisions of Section E4206.4, shall not occupy raceways, boxes, or enclosures containing other conductors except where the other conductors are protected by ground-fault circuit interrupters or are grounding conductors. Supply conductors to a feed-through type ground-fault circuit interrupter shall be permitted in the same enclosure. Ground-fault circuit-interrupters shall be permitted in a panelboard that contains circuits protected by other than ground-fault circuit interrupters. [680.23(F)(3)]

E4206.4 Underwater luminaires. The design of an underwater luminaire supplied from a branch circuit either directly or by way of a transformer or power supply meeting the requirements of Section E4206.1, shall be such that, where the fixture is properly installed without a ground-fault circuit interrupter, there is no shock hazard with any likely combination of fault conditions during normal use (not relamping). In addition, ground-fault circuit-interrupter protection for personnel shall be installed in the branch circuit supplying luminaires operating at voltages greater than the low-voltage contact limit to protect personnel performing lamping, relamping or servicing. The installation of the ground-fault circuit interrupter shall be such that there is no shock hazard with any likely fault-condition combination that involves a person in a conductive path from any ungrounded part of the branch circuit or the luminaire to ground. Compliance with this requirement shall be obtained by the use of a listed underwater luminaire and by installation of a listed ground-fault circuit-interrupter in the branch circuit or a listed transformer or power supply for luminaires operating at more than the low-voltage contact limit. Luminaires that depend on submersion for safe operation shall be inherently protected

INTERNATIONAL CODE COUNCIL®
Copyright © 2019 ICC & NYSDOS. ALL RIGHTS RESERVED. Accessed by Lauren Gualdino (lgualdino@briarcliffmanor.org), (-) Order Number #100880972 on May 08, 2020 07:05 AM (PDT) pursuant to License Agreement with ICC & NYSDOS. No further reproduction, no

100880972

against the hazards of overheating when not submerged. [680.23(A)(1), (A)(3), (A)(7) and (A)(8)]

E4206.4.1 Maximum voltage. Luminaires shall not be installed for operation on supply circuits over 150 volts between conductors. [680.23(A)(4)]

E4206.4.2 Luminaire location. Luminaires mounted in walls shall be installed with the top of the fixture lens not less than 18 inches (457 mm) below the normal water level of the pool, except where the luminaire is listed and identified for use at a depth of not less than 4 inches (102 mm) below the normal water level of the pool. A luminaire facing upward shall have the lens adequately guarded to prevent contact by any person or shall be listed for use without a guard. [680.23(A)(5) and (A)(6)]

E4206.5 Wet-niche luminaires. Forming shells shall be installed for the mounting of all wet-niche underwater luminaires and shall be equipped with provisions for conduit entries. Conduit shall extend from the forming shell to a suitable junction box or other enclosure located as provided in Section E4206.9. Metal parts of the luminaire and forming shell in contact with the pool water shall be of brass or other approved corrosion-resistant metal. [680.23(B)(1)]

The end of flexible-cord jackets and flexible-cord conductor terminations within a luminaire shall be covered with, or encapsulated in, a suitable potting compound to prevent the entry of water into the luminaire through the cord or its conductors. If present, the grounding connection within a luminaire shall be similarly treated to protect such connection from the deteriorating effect of pool water in the event of water entry into the luminaire. [680.23(B)(4)]

Luminaires shall be bonded to and secured to the forming shell by a positive locking device that ensures a low-resistance contact and requires a tool to remove the luminaire from the forming shell. [680.23(B)(5)]

E4206.5.1 Servicing. All wet-niche luminaires shall be removable from the water for inspection, relamping, or other maintenance. The forming shell location and length of cord in the forming shell shall permit personnel to place the removed luminaire on the deck or other dry location for such maintenance. The luminaire maintenance location shall be accessible without entering or going into the pool water. [680.23(B)(6)]

E4206.6 Dry-niche luminaires. Dry-niche luminaires shall have provisions for drainage of water. Other than listed low-voltage luminaires not requiring grounding, a dry-niche luminaire shall have means for accommodating one equipment grounding conductor for each conduit entry. Junction boxes shall not be required but, if used, shall not be required to be elevated or located as specified in Section E4206.9 if the luminaire is specifically identified for the purpose. [680.23(C)(1) and (C)(2)]

E4206.7 No-niche luminaires. No-niche luminaires shall be listed for the purpose and shall be installed in accordance with the requirements of Section E4206.5. Where connection to a forming shell is specified, the connection shall be to the mounting bracket. [680.23(D)]

E4206.8 Through-wall lighting assembly. A through-wall lighting assembly shall be equipped with a threaded entry or hub, or a nonmetallic hub, for the purpose of accommodating the termination of the supply conduit. A through-wall lighting assembly shall meet the construction requirements of Section E4205.4 and be installed in accordance with the requirements of Section E4206.5 Where connection to a forming shell is specified, the connection shall be to the conduit termination point. [680.23(E)]

E4206.9 Junction boxes and enclosures for transformers or ground-fault circuit interrupters. Junction boxes for underwater luminaires and enclosures for transformers and ground-fault circuit interrupters that supply underwater luminaires shall comply with Sections E4206.9.1 through E4206.9.5. [680.24(A)]

E4206.9.1 Junction boxes. A junction box connected to a conduit that extends directly to a forming shell or mounting bracket of a no-niche luminaire shall be:

1. Listed as a swimming pool junction box; [680.24(A)(1)]
2. Equipped with threaded entries or hubs or a nonmetallic hub; [680.24(A)(1)(1)]
3. Constructed of copper, brass, suitable plastic, or other approved corrosion-resistant material; [680.24(A)(1)(2)]
4. Provided with electrical continuity between every connected metal conduit and the grounding terminals by means of copper, brass, or other approved corrosion-resistant metal that is integral with the box; and [680.24(A)(1)(3)]
5. Located not less than 4 inches (102 mm), measured from the inside of the bottom of the box, above the ground level, or pool deck, or not less than 8 inches (203 mm) above the maximum pool water level, whichever provides the greatest elevation, and shall be located not less than 4 feet (1219 mm) from the inside wall of the pool, unless separated from the pool by a solid fence, wall or other permanent barrier. Where used on a lighting system operating at the low-voltage contact limit or less, a flush deck box shall be permitted provided that an approved potting compound is used to fill the box to prevent the entrance of moisture; and the flush deck box is located not less than 4 feet (1219 mm) from the inside wall of the pool. [680.24(A)(2)]

E4206.9.2 Other enclosures. An enclosure for a transformer, ground-fault circuit interrupter or a similar device connected to a conduit that extends directly to a forming shell or mounting bracket of a no-niche luminaire shall be:

1. Listed and labeled for the purpose, comprised of copper, brass, suitable plastic, or other approved corrosion-resistant material; [680.24(B)(1)]
2. Equipped with threaded entries or hubs or a nonmetallic hub; [680.24(B)(2)]
3. Provided with an approved seal, such as duct seal at the conduit connection, that prevents circulation of

INTERNATIONAL CODE COUNCIL®
Copyright © 2019 ICC & NYSDOS. ALL RIGHTS RESERVED. Accessed by Lauren Gualdino (lgualdino@briarcliffmanor.org), (-) Order Number #100880972 on May 08, 2020 07:05 AM (PDT) pursuant to License Agreement with ICC & NYSDOS. No further reproduction, no

100880972

air between the conduit and the enclosures; [680.24(B)(3)]

4. Provided with electrical continuity between every connected metal conduit and the grounding terminals by means of copper, brass or other approved corrosion-resistant metal that is integral with the enclosures; and [680.24(B)(4)]
5. Located not less than 4 inches (102 mm), measured from the inside bottom of the enclosure, above the ground level or pool deck, or not less than 8 inches (203 mm) above the maximum pool water level, whichever provides the greater elevation, and shall be located not less than 4 feet (1219 mm) from the inside wall of the pool, except where separated from the pool by a solid fence, wall or other permanent barrier. [680.24(B)(2)]

E4206.9.3 Protection of junction boxes and enclosures. Junction boxes and enclosures mounted above the grade of the finished walkway around the pool shall not be located in the walkway unless afforded additional protection, such as by location under diving boards or adjacent to fixed structures. [680.24(C)]

E4206.9.4 Grounding terminals. Junction boxes, transformer and power supply enclosures, and ground-fault circuit-interrupter enclosures connected to a conduit that extends directly to a forming shell or mounting bracket of a no-niche luminaire shall be provided with grounding terminals in a quantity not less than the number of conduit entries plus one. [680.24(D)]

E4206.9.5 Strain relief. The termination of a flexible cord of an underwater luminaire within a junction box, transformer or power supply enclosure, ground-fault circuit interrupter, or other enclosure shall be provided with a strain relief. [680.24(E)]

E4206.10 Underwater audio equipment. Underwater audio equipment shall be identified for the purpose. [680.27(A)]

E4206.10.1 Speakers. Each speaker shall be mounted in an approved metal forming shell, the front of which is enclosed by a captive metal screen, or equivalent, that is bonded to and secured to the forming shell by a positive locking device that ensures a low-resistance contact and requires a tool to open for installation or servicing of the speaker. The forming shell shall be installed in a recess in the wall or floor of the pool. [680.27(A)(1)]

E4206.10.2 Wiring methods. Rigid metal conduit of brass or other identified corrosion-resistant metal, rigid polyvinyl chloride conduit, rigid thermosetting resin conduit or liquid-tight flexible nonmetallic conduit (LFNC-B) shall extend from the forming shell to a suitable junction box or other enclosure as provided in Section E4206.9. Where rigid nonmetallic conduit or liquid-tight flexible nonmetallic conduit is used, an 8 AWG solid or stranded insulated copper bonding jumper shall be installed in this conduit with provisions for terminating in the forming shell and the junction box. The termination of the 8 AWG bonding jumper in the forming shell shall be covered with, or encapsulated in, a suitable potting compound to protect such connection from the possible deteriorating effect of pool water. [680.27(A)(2)]

E4206.10.3 Forming shell and metal screen. The forming shell and metal screen shall be of brass or other approved corrosion-resistant metal. Forming shells shall include provisions for terminating an 8 AWG copper conductor. [680.27(A)(3)]

E4206.11 Electrically operated pool covers. The electric motors, controllers, and wiring for pool covers shall be located not less than 5 feet (1524 mm) from the inside wall of the pool except where separated from the pool by a wall, cover, or other permanent barrier. Electric motors installed below grade level shall be of the totally enclosed type. The electric motor and controller shall be connected to a branch circuit protected by a ground-fault circuit interrupter. The device that controls the operation of the motor for an electrically operated pool cover shall be located so that the operator has full view of the pool.

Exceptions:

1. Motors that are part of listed systems with ratings not exceeding the low-voltage contact limit and that are supplied by listed transformers or power supplies that comply with Section E4206.1 shall be permitted to be located less than 5 feet (1524 mm) from the inside walls of the pool.
2. Motors that are part of listed systems with ratings not exceeding the low-voltage contact limit and that are supplied by listed transformers or power supplies that comply with Section E4206.1 shall not be required to be connected to a branch circuit protected by a ground fault circuit-interrupter. [680.27(B)(1) and (B)(2)]

E4206.12 Electric pool water heaters. Electric pool water heaters shall have the heating elements subdivided into loads not exceeding 48 amperes and protected at not more than 60 amperes. The ampacity of the branch-circuit conductors and the rating or setting of overcurrent protective devices shall be not less than 125 percent of the total nameplate load rating. (680.9)

E4206.13 Pool area heating. The provisions of Sections E4206.13.1 through E4206.13.3 shall apply to all pool deck areas, including a covered pool, where electrically operated comfort heating units are installed within 20 feet (6096 mm) of the inside wall of the pool. [680.27(C)]

E4206.13.1 Unit heaters. Unit heaters shall be rigidly mounted to the structure and shall be of the totally enclosed or guarded types. Unit heaters shall not be mounted over the pool or within the area extending 5 feet (1524 mm) horizontally from the inside walls of a pool. [680.27(C)(1)]

E4206.13.2 Permanently wired radiant heaters. Electric radiant heaters shall be suitably guarded and securely fastened to their mounting devices. Heaters shall not be installed over a pool or within the area extending 5 feet (1524 mm) horizontally from the inside walls of the pool and shall be mounted not less than 12 feet (3658 mm) vertically above the pool deck. [680.27(C)(2)]

INTERNATIONAL CODE COUNCIL®
Copyright © 2019 ICC & NYSDOS. ALL RIGHTS RESERVED. Accessed by Lauren Gualdino (lgualdino@briarcliffmanor.org), (-) Order Number #100880972 on May 08, 2020 07:05 AM (PDT) pursuant to License Agreement with ICC & NYSDOS. No further reproduction, no

100880972

E4206.13.3 Radiant heating cables prohibited. Radiant heating cables embedded in or below the deck shall be prohibited. [680.27(C)(3)]

SECTION E4207
STORABLE SWIMMING POOLS, STORABLE SPAS, AND STORABLE HOT TUBS

E4207.1 Pumps. A cord and plug-connected pool filter pump for use with storable pools shall incorporate an approved system of double insulation or its equivalent and shall be provided with means for grounding only the internal and nonaccessible noncurrent-carrying metal parts of the appliance.

The means for grounding shall be an equipment grounding conductor run with the power-supply conductors in a flexible cord that is properly terminated in a grounding-type attachment plug having a fixed grounding contact. Cord and plug-connected pool filter pumps shall be provided with a ground-fault circuit-interrupter that is an integral part of the attachment plug or located in the power supply cord within 12 inches (305 mm) of the attachment plug. (680.31)

E4207.2 Ground-fault circuit interrupters required. Electrical equipment, including power-supply cords, used with storable pools shall be protected by ground-fault circuit interrupters. 125-volt, 15- and 20-ampere receptacles located within 20 feet (6096 mm) of the inside walls of a storable pool, storable spa, or storable hot tub shall be protected by a ground-fault circuit interrupter. In determining these dimensions, the distance to be measured shall be the shortest path that the supply cord of an appliance connected to the receptacle would follow without passing through a floor, wall, ceiling, doorway with hinged or sliding door, window opening, or other effective permanent barrier. (680.32)

E4207.3 Luminaires. Luminaires for storable pools, storable spas, and storable hot tubs shall not have exposed metal parts and shall be listed for the purpose as an assembly. In addition, luminaires for storable pools shall comply with the requirements of Section E4207.3.1 or E4207.3.2. (680.33)

E4207.3.1 Within the low-voltage contact limit. A luminaire installed in or on the wall of a storable pool shall be part of a cord and plug-connected lighting assembly. The assembly shall:

1. Have a luminaire lamp that is suitable for the use at the supplied voltage;
2. Have an impact-resistant polymeric lens, luminaire body, and transformer enclosure;
3. Have a transformer meeting the requirements of section E4206.1 with a primary rating not over 150 volts; and
4. Have no exposed metal parts. [680.33(A)]

E4207.3.2 Over the low-voltage contact limit but not over 150 volts. A lighting assembly without a transformer or power supply, and with the luminaire lamp(s) operating at over the low-voltage contact limit, but not over 150 volts, shall be permitted to be cord and plug-connected where the assembly is listed as an assembly for the purpose and complies with all of the following:

1. It has an impact-resistant polymeric lens and luminaire body.
2. A ground-fault circuit interrupter with open neutral conductor protection is provided as an integral part of the assembly.
3. The luminaire lamp is permanently connected to the ground-fault circuit interrupter with open-neutral protection.
4. It complies with the requirements of Section E4206.4.
5. It has no exposed metal parts. [680.33(B)]

E4207.4 Receptacle locations. Receptacles shall be located not less than 6 feet (1829 mm) from the inside walls of a storable pool, storable spa or storable hot tub. In determining these dimensions, the distance to be measured shall be the shortest path that the supply cord of an appliance connected to the receptacle would follow without passing through a floor, wall, ceiling, doorway with hinged or sliding door, window opening, or other effective permanent barrier. (680.34)

E4207.5 Clearances. Overhead conductor installations shall comply with Section E4203.6 and underground conductor installations shall comply with Section E4203.7.

E4207.6 Disconnecting means. Disconnecting means for storable pools and storable/portable spas and hot tubs shall comply with Section E4203.3.

E4207.7 Ground-fault circuit interrupters. Ground fault circuit interrupters shall comply with Section E4206.2.

E4207.8 Grounding of equipment. Equipment shall be grounded as required by Section E4205.1.

E4207.9 Pool water heaters. Electric pool water heaters shall comply with Section E4206.12.

SECTION E4208
SPAS AND HOT TUBS

E4208.1 Ground-fault circuit interrupters. The outlet(s) that supplies a self-contained spa or hot tub, or a packaged spa or hot tub equipment assembly, or a field-assembled spa or hot tub with a heater load of 50 amperes or less, shall be protected by a ground-fault circuit interrupter. (680.44)

A listed self-contained unit or listed packaged equipment assembly marked to indicate that integral ground-fault circuit-interrupter protection is provided for all electrical parts within the unit or assembly, including pumps, air blowers, heaters, lights, controls, sanitizer generators and wiring, shall not require that the outlet supply be protected by a ground-fault circuit-interrupter. [680.44(A)]

E4208.2 Electric water heaters. Electric spa and hot tub water heaters shall be listed and shall have the heating elements subdivided into loads not exceeding 48 amperes and protected at not more than 60 amperes. The ampacity of the branch-circuit conductors, and the rating or setting of over-

INTERNATIONAL CODE COUNCIL®
Copyright © 2019 ICC & NYSDOS. ALL RIGHTS RESERVED. Accessed by Lauren Gualdino (lgualdino@briarcliffmanor.org), (-) Order Number #100880972 on May 08, 2020 07:05 AM (PDT) pursuant to License Agreement with ICC & NYSDOS. No further reproduction, no

100880972

current protective devices, shall be not less than 125 percent of the total nameplate load rating. (680.9)

E4208.3 Underwater audio equipment. Underwater audio equipment used with spas and hot tubs shall comply with the provisions of Section E4206.10. [680.43(G)]

E4208.4 Emergency switch for spas and hot tubs. A clearly labeled emergency shutoff or control switch for the purpose of stopping the motor(s) that provides power to the recirculation system and jet system shall be installed at a point that is readily accessible to the users, adjacent to and within sight of the spa or hot tub and not less than 5 feet (1524 mm) away from the spa or hot tub. This requirement shall not apply to one-family dwellings. (680.41)

SECTION E4209
HYDROMASSAGE BATHTUBS

E4209.1 General. Installations of hydromassage bathtubs shall be required to comply only with Section E4209. The branch circuit wiring method(s) supplying a hydromassage bathtub shall comply with Chapter 38.

E4209.2 Ground-fault circuit interrupters. Hydromassage bathtubs and their associated electrical components shall be supplied by an individual branch circuit(s) and protected by a readily accessible ground-fault circuit interrupter. All 125-volt, single-phase receptacles not exceeding 30 amperes and located within 6 feet (1829 mm) measured horizontally of the inside walls of a hydromassage tub shall be protected by a ground-fault circuit interrupter(s). (680.71)

E4209.3 Other electric equipment. Luminaires, switches, receptacles, and other electrical equipment located in the same room, and not directly associated with a hydromassage bathtub, shall be installed in accordance with the requirements of this code relative to the installation of electrical equipment in bathrooms. (680.72)

E4209.4 Accessibility. Hydromassage bathtub electrical equipment shall be accessible without damaging the building structure or building finish. Where the hydromassage bathtub is cord- and plug-connected with the supply receptacle accessible only through a service access opening, the receptacle shall be installed so that its face is within direct view and not more than 12 inches (305 mm) from the plane of the opening. (680.73)

E4209.5 Bonded parts. The following parts shall be bonded together:

1. Metal fittings within or attached to the tub structure that are in contact with the circulating water.
2. Metal parts of electrical equipment associated with the tub water circulating system, including the pump and blower motors.
3. Metal-sheathed cables and raceways and metal piping that are within 5 feet (1524 mm) of the inside walls of the tub and that are not separated from the tub area by a permanent barrier.
4. Exposed metal surfaces that are within 5 feet (1524 mm) of the inside walls of the tub and not separated from the tub area by a permanent barrier.
5. Electrical devices and controls that are not associated with the hydromassage tubs and that are located within 5 feet (1524 mm) from such units.

Exceptions:

1. Double-insulated motors and blowers shall not be bonded.
2. Small conductive surfaces not likely to become energized, such as air and water jets, supply valve assemblies and drain fittings not connected to metal piping, and towel bars, mirror frames and similar nonelectric equipment not connected to metal framing shall not be required to be bonded.

E4209.6 Method of bonding. Metal parts required to be bonded by this section shall be bonded together using a solid copper bonding jumper, insulated, covered or bare, not smaller than 8 AWG. The bonding jumper(s) shall be required for equipotential bonding in the area of the hydromassage bathtub and shall not be required to be extended or attached to any remote panelboard, service equipment, or electrode. In all installations, a bonding jumper long enough to terminate on a replacement nondouble-insulated pump or blower motor shall be provided and shall be terminated to the equipment grounding conductor of the branch circuit of the motor where a double-insulated circulating pump or blower motor is used. (680.74)

INTERNATIONAL CODE COUNCIL®
Copyright © 2019 ICC & NYSDOS. ALL RIGHTS RESERVED. Accessed by Lauren Gualdino (lgualdino@briarcliffmanor.org), (-) Order Number #100880972 on May 08, 2020 07:05 AM (PDT) pursuant to License Agreement with ICC & NYSDOS. No further reproduction, no

100880972

CHAPTER 43

CLASS 2 REMOTE-CONTROL, SIGNALING AND POWER-LIMITED CIRCUITS

SECTION E4301 GENERAL

E4301.1 Scope. This chapter contains requirements for power supplies and wiring methods associated with Class 2 remote-control, signaling, and power-limited circuits that are not an integral part of a device or appliance. Other classes of remote-control, signaling and power-limited conductors shall comply with Article 725 of NFPA 70. (725.1)

E4301.2 Definitions.

CLASS 2 CIRCUIT. That portion of the wiring system between the load side of a Class 2 power source and the connected equipment. Due to its power limitations, a Class 2 circuit considers safety from a fire initiation standpoint and provides acceptable protection from electric shock. (725.2)

REMOTE-CONTROL CIRCUIT. Any electrical circuit that controls any other circuit through a relay or an equivalent device. (Article 100)

SIGNALING CIRCUIT. Any electrical circuit that energizes signaling equipment. (Article 100)

SECTION E4302 POWER SOURCES

E4302.1 Power sources for Class 2 circuits. The power source for a Class 2 circuit shall be one of the following:

1. A listed Class 2 transformer.
2. A listed Class 2 power supply.
3. Other listed equipment marked to identify the Class 2 power source.
4. Listed audio/video information technology (computer) communications and industrial equipment limited power circuits.
5. A dry-cell battery provided that the voltage is 30 volts or less and the capacity is equal to or less than that available from series connected No. 6 carbon zinc cells. [725.121(A)]

E4302.2 Interconnection of power sources. A Class 2 power source shall not have its output connections paralleled or otherwise interconnected with another Class 2 power source except where listed for such interconnection. [725.121(B)]

SECTION E4303 WIRING METHODS

E4303.1 Wiring methods on supply side of Class 2 power source. Conductors and equipment on the supply side of the power source shall be installed in accordance with the appropriate requirements of Chapters 34 through 41. Transformers or other devices supplied from electric light or power circuits shall be protected by an over-current device rated at not over 20 amperes. The input leads of a transformer or other power source supplying Class 2 circuits shall be permitted to be smaller than 14 AWG, if not over 12 inches (305 mm) long and if the conductor insulation is rated at not less than 600 volts. In no case shall such leads be smaller than 18 AWG. (725.127 and 725.127 Exception)

E4303.2 Wiring methods and materials on load side of the Class 2 power source. Class 2 cables installed as wiring within buildings shall be listed as being resistant to the spread of fire and listed as meeting the criteria specified in Sections E4303.2.1 through E4303.2.3. Cables shall be marked in accordance with Section E4303.2.4. Cable substitutions as described in Table E4303.2 and wiring methods covered in Chapter 38 shall also be permitted. (725.130 (B); 725.133; 725.135 (A), (C), (G) and (M); 725.154; Table 725.154; Figure 725.154 (A); and 725.179)

TABLE E4303.2
CABLE USES AND PERMITTED SUBSTITUTIONS
[Figure 725.154(A)]

CABLE TYPE	USE	PERMITTED SUBSTITUTIONS[a]
CL2P	Class 2 Plenum Cable	CMP, CL3P
CL2R	Class 2 Plenum Cable	CMP, CL3P, CL2P, CMR, CL3R
CL2	Class 2 Cable	CMP, CL3P, CL2P, CMR, CL3R, CL2R CMG, CM, CL3
CL2X	Class 2 Cable, Limited Use	CMP, CL3P CL2P, CMR, CL3R, CL2R, CMG, CM, CL3, CL2, CMX, CL3X

a. For identification of cables other than Class 2 cables, see NFPA 70.

E4303.2.1 Type CL2P cables. Cables installed in ducts, plenums and other spaces for environmental air shall be Type CL2P cables listed as suitable for the use and listed as having adequate fire-resistant and low smoke-producing characteristics. [725.179(A)]

E4303.2.2 Type CL2 cables. Cables for general-purpose use, shall be listed as resistant to the spread of fire and listed for the use. [725.179 (C)]

E4303.2.3 Type CL2X cables. Type CL2X limited-use cable shall be listed as suitable for use in dwellings and raceways and shall be listed as resistant to flame spread. [725.179 (D)]

E4303.2.4 Type CL2R cables. Cables installed in a vertical run in a shaft or installed from floor to floor shall be listed as suitable for use in a vertical run in a shaft or from floor to floor and shall be listed as having fire-resistant

INTERNATIONAL CODE COUNCIL®
Copyright © 2019 ICC & NYSDOS. ALL RIGHTS RESERVED. Accessed by Lauren Gualdino (lgualdino@briarcliffmanor.org), (-) Order Number #100880972 on May 08, 2020 07:05 AM (PDT) pursuant to License Agreement with ICC & NYSDOS. No further reproduction, no

100880972

characteristics capable of preventing fire from being conveyed from floor to floor. [725.179(B)]

Exception: CL2X and CL3X cables with a diameter of less than $^1/_4$ inch (6.4 mm) and CL2P, CL3P, CL3R, CL2 and CL3 cables shall be permitted in risers in one- and two-family dwelling units. [725.133 (G)]

E4303.2.5 Marking. Cables shall be marked in accordance with Table E4303.2.5. Voltage ratings shall not be marked on cables.

Table E4303.2.5 [Table 725.179(J)]
CABLE MARKING

CABLE MARKING	TYPE
CL2P	Class 2 plenum cable
CL2R	Class 2 riser cable
CL2	Class 2 cable
CL2X	Class 2 cable, limited use

SECTION E4304
INSTALLATION REQUIREMENTS

E4304.1 Separation from other conductors. In cables, compartments, enclosures, outlet boxes, device boxes, and raceways, conductors of Class 2 circuits shall not be placed in any cable, compartment, enclosure, outlet box, device box, raceway, or similar fitting with conductors of electric light, power, Class 1 and nonpower-limited fire alarm circuits. (725.136)

Exceptions:

1. Where the conductors of the electric light, power, Class 1 and nonpower-limited fire alarm circuits are separated by a barrier from the Class 2 circuits. In enclosures, Class 2 circuits shall be permitted to be installed in a raceway within the enclosure to separate them from Class 1, electric light, power and nonpower-limited fire alarm circuits. [725.136(B)]
2. Class 2 conductors in compartments, enclosures, device boxes, outlet boxes and similar fittings where electric light, power, Class 1 or nonpower-limited fire alarm circuit conductors are introduced solely to connect to the equipment connected to the Class 2 circuits. The electric light, power, Class 1 and nonpower-limited fire alarm circuit conductors shall be routed to maintain a minimum of $^1/_4$ inch (6.4 mm) separation from the conductors and cables of the Class 2 circuits; or the electric light power, Class 1 and nonpower-limited fire alarm circuit conductors operate at 150 volts or less to ground and the Class 2 circuits are installed using Types CL3, CL3R, or CL3P or permitted substitute cables, and provided that these Class 3 cable conductors extending beyond their jacket are separated by a minimum of $^1/_4$ inch (6.4 mm) or by a nonconductive sleeve or nonconductive barrier from all other conductors. [725.136(D)]

E4304.2 Other applications. Conductors of Class 2 circuits shall be separated by not less than 2 inches (51 mm) from conductors of any electric light, power, Class 1 or nonpower-limited fire alarm circuits except where one of the following conditions is met:

1. All of the electric light, power, Class 1 and nonpower-limited fire alarm circuit conductors are in raceways or in metal-sheathed, metal-clad, nonmetallic-sheathed or Type UF cables.
2. All of the Class 2 circuit conductors are in raceways or in metal-sheathed, metal-clad, nonmetallic-sheathed or Type UF cables. [725.136(I)]

E4304.3 Class 2 circuits with communications circuits. Where Class 2 circuit conductors are in the same cable as communications circuits, the Class 2 circuits shall be classified as communications circuits and shall meet the requirements of Article 800 of NFPA 70. The cables shall be listed as communications cables or multipurpose cables.

Cables constructed of individually listed Class 2 and communications cables under a common jacket shall be permitted to be classified as communications cables. The fire-resistance rating of the composite cable shall be determined by the performance of the composite cable. [725.139 (D)(1)]

E4304.4 Class 2 cables with other circuit cables. Jacketed cables of Class 2 circuits shall be permitted in the same enclosure or raceway with jacketed cables of any of the following:

1. Power-limited fire alarm systems in compliance with Article 760 of NFPA 70.
2. Nonconductive and conductive optical fiber cables in compliance with Article 770 of NFPA 70.
3. Communications circuits in compliance with Article 800 of NFPA 70.
4. Community antenna television and radio distribution systems in compliance with Article 820 of NFPA 70.
5. Low-power, network-powered broadband communications in compliance with Article 830 of NFPA 70. [725.139(E)]

E4304.5 Installation of conductors and cables. Cables and conductors installed exposed on the surface of ceilings and sidewalls shall be supported by the building structure in such a manner that they will not be damaged by normal building use. Such cables shall be supported by straps, staples, hangers, cable ties or similar fittings designed so as to not damage the cable. Nonmetallic cable ties and other nonmetallic accessories used to secure and support cables located in stud cavity and joist space plenums shall be listed as having low smoke and heat release properties. The installation shall comply with Table E3802.1 regarding cables run parallel with framing members and furring strips. The installation of wires and cables shall not prevent access to equipment nor prevent removal of panels, including suspended ceiling panels. Raceways shall not be used as a means of support for Class 2 circuit conductors, except where the supporting raceway contains conductors supplying power to the functionally associated equipment controlled by the Class 2 conductors. [300.11 (C)(2), 300.22 (C) (1) and 725.24]

INTERNATIONAL CODE COUNCIL®
Copyright © 2019 ICC & NYSDOS. ALL RIGHTS RESERVED. Accessed by Lauren Gualdino (lgualdino@briarcliffmanor.org), (-) Order Number #100880972 on May 08, 2020 07:05 AM (PDT) pursuant to License Agreement with ICC & NYSDOS. No further reproduction, no

100880972

Part IX—Referenced Standards

CHAPTER 44

REFERENCED STANDARDS

User note:

This chapter lists the standards that are referenced in various sections of this document. The standards are listed herein by the promulgating agency of the standard, the standard identification, the effective date and title, and the section or sections of this document that reference the standard. The application of the referenced standards shall be as specified in Section R102.4.

**Denotes standards that have been incorporated by reference into 19 NYCRR Part 1220.*

AAMA

American Architectural Manufacturers Association
1827 Walden Office Square, Suite 550
Schaumburg, IL 60173

AAMA/WDMA/CSA 101/I.S.2/A440—17: North American Fenestration Standards/Specifications for Windows, Doors and Skylights
R308.6.9, R609.3, N1102.4.3

450—10: Voluntary Performance Rating Method for Mulled Fenestration Assemblies
R609.8

506—16: Voluntary Specifications for Hurricane Impact and Cycle Testing of Fenestration Products
R609.6.1

711—13: Voluntary Specification for Self-adhering Flashing Used for Installation of Exterior Wall Fenestration Products
R703.4

712—14: Voluntary Specification for Mechanically Attached Flexible Flashing
R703.4

714—15: Voluntary Specification for Liquid Applied Flashing Used to Create a Water-resistive Seal around Exterior Wall Openings in Buildings
R703.4

AAMA/NPEA/NSA 2100—12: Specifications for Sunrooms
R301.2.1.1.1

ACCA

Air Conditioning Contractors of America
2800 Shirlington Road, Suite 300
Arlington, VA 22206

***Manual D—2014: Residential Duct Systems**
Table R301.2(1), M1601.1, M1602.2

***Manual J—2011: Residential Load Calculation—Eighth Edition**
N1103.7, M1401.3

***Manual S—2014: Residential Equipment Selection**
N1103.7, M1401.3

ACI

American Concrete Institute
38800 Country Club Drive
Farmington Hills, MI 48331

***318—14: Building Code Requirements for Structural Concrete**
R301.2.2.2.5, R402.2, Table R404.1.2(2), Table R404.1.2(5), Table R404.1.2(6), Table R404.1.2(7), Table R404.1.2(8), R404.1.3, R404.1.3.1, R404.1.3.3, R404.1.3.4, R404.1.4.2, R404.5.1, R608.1, R608.1.1, R608.1.2, R608.2, R608.5.1, R608.6.1, R608.8.2, R608.9.2, R608.9.3

INTERNATIONAL CODE COUNCIL®
Copyright © 2019 ICC & NYSDOS. ALL RIGHTS RESERVED. Accessed by Lauren Gualdino (lgualdino@briarcliffmanor.org), (-) Order Number #100880972 on May 08, 2020 07:05 AM (PDT) pursuant to License Agreement with ICC & NYSDOS. No further reproduction, no

100880972

ACI—continued

***332—14: Residential Code Requirements for Structural Concrete**
R402.2, R403.1, R404.1.3, R404.1.3.4, R404.1.4.2, R506.1

AISI

American Iron and Steel Institute
25 Massachusetts Avenue, NW Suite 800
Washington, DC 20001

AISI S100—16: North American Specification for the Design of Cold-formed Steel Structural Members, 2016
R608.9.2, R608.9.3

AISI S220—15: North American Standard for Cold-formed Steel Framing—Nonstructural Members, 2015
R702.3.3

AISI S230—15: Standard for Cold-formed Steel Framing—Prescriptive Method for One- and Two-family Dwellings, 2015
R301.1.1, R301.2.1.1, R301.2.2.7, R301.2.2.8, R603.6, R603.9.4.1, R603.9.4.2, R608.9.2, R608.9.3, Figure 608.9(11), R608.10

AISI S240—15: North American Standard for Cold-Formed Steel Structural Framing
R505.1.3, R603.6, R702.3.3, R804.3.6

AMCA

Air Movement and Control Association International
30 West University Drive
Arlington Heights, IL 60004

ANSI/AMCA 210-ANSI/ASHRAE 51—07: Laboratory Methods of Testing Fans for Aerodynamic Performance Rating
Table M1505.3

ANCE

Association of the Electric Sector
Av. Lázaro Cardenas No. 869
Col. Nueva Industrial Vallejo
C.P. 07700 México D.F.

NMX-J-521/2-40-ANCE—2014/CAN/CSA-22.2 No. 60335-2-40—12/UL 60335-2-40: Safety of Household and Similar Electric Appliances, Part 2-40: Particular Requirements for Heat Pumps, Air-Conditioners and Dehumidifiers
M1403.1, M1412.1, M1413.1

ANSI

American National Standards Institute
25 West 43rd Street, 4th Floor
New York, NY 10036

***A108.1A—99: Installation of Ceramic Tile in the Wet-set Method, with Portland Cement Mortar**
R702.4.1

***A108.1B—99: Installation of Ceramic Tile, Quarry Tile on a Cured Portland Cement Mortar Setting Bed with Dry-set or Latex Portland Mortar**
R702.4.1

***A108.4—99: Installation of Ceramic Tile with Organic Adhesives or Water-Cleanable Tile-setting Epoxy Adhesive**
R702.4.1

***A108.5—99: Installation of Ceramic Tile with Dry-set Portland Cement Mortar or Latex Portland Cement Mortar**
R702.4.1

***A108.6—99: Installation of Ceramic Tile with Chemical-resistant, Water-cleanable Tile-setting and -grouting Epoxy**
R702.4.1

A108.11—99: Interior Installation of Cementitious Backer Units
R702.4.1

ANSI 117—2015: Standard Specifications for Structural Glued Laminated Timber of Softwood Species
R502.1.3, R602.1.3, R802.1.3

A118.1—16: American National Standard Specifications for Dry-set Portland Cement Mortar
R702.4.1

A118.3—13: American National Standard Specifications for Chemical-resistant, Water-cleanable Tile-setting and -grouting Epoxy, and Water-cleanable Tile-setting Epoxy Adhesive
R702.4.1

INTERNATIONAL CODE COUNCIL®
Copyright © 2019 ICC & NYSDOS. ALL RIGHTS RESERVED. Accessed by Lauren Gualdino (lgualdino@briarcliffmanor.org), (-) Order Number #100880972 on May 08, 2020 07:05 AM (PDT) pursuant to License Agreement with ICC & NYSDOS. No further reproduction, no

100880972

ANSI—continued

A118.4—16: American National Standard Specifications for Modified Dry-Set Cement Mortar
R606.2.11

A118.10—99: Specification for Load-bearing, Bonded, Waterproof Membranes for Thin-set Ceramic Tile and Dimension Stone Installation
P2709.2, P2709.2.4

A136.1—08: American National Standard Specifications for Organic Adhesives for Installation of Ceramic Tile
R702.4.1

A137.1—17: American National Standard Specifications for Ceramic Tile
R702.4.1

***LC1/CSA 6.26—18: Fuel Gas Piping Systems Using Corrugated Stainless Steel Tubing (CSST)**
G2414.5.4, G2411.3, G2415.5

LC4/CSA 6.32—12: Press-connect Metallic Fittings for Use in Fuel Gas Distribution Systems
G2414.10.1, G2414.10.2, G2414.10.3, G2415.5

Z21.1—2010: Household Cooking Gas Appliances
G2447.1, M1503.2

Z21.5.1/CSA 7.1—14: Gas Clothes Dryers—Volume I—Type I Clothes Dryers
G2438.1

***Z21.8—94 (R2002): Installation of Domestic Gas Conversion Burners**
G2443.1

Z21.10.1/CSA 4.1—12: Gas Water Heaters—Volume I—Storage Water Heaters with Input Ratings of 75,000 Btu per hour or Less
G2448.1

Z21.10.3/CSA 4.3—11: Gas Water Heaters—Volume III—Storage Water Heaters with Input Ratings above 75,000 Btu per hour, Circulating and Instantaneous
G2448.1

Z21.11.2—11: Gas-fired Room Heaters—Volume II—Unvented Room Heaters
G2445.1

Z21.13/CSA 4.9—11: Gas-fired Low-pressure Steam and Hot Water Boilers
G2452.1

Z21.15/CSA 9.1—09: Manually Operated Gas Valves for Appliances, Appliance Connector Valves and Hose End Valves
Table G2420.1.1

Z21.22—99 (R2003): Relief Valves for Hot Water Supply Systems—with Addenda Z21.22a—2000 (R2003) and 21.22b—2001 (R2003)
P2804.2, P2804.7

Z21.24/CSA 6.10—06: Connectors for Gas Appliances
G2422.1, G2422.2

Z21.40.1/CSA 2.91—96 (R2011): Gas-fired, Heat-activated Air-conditioning and Heat Pump Appliances
G2449.1

Z21.40.2/CSA 2.92—96 (R2011): Air-conditioning and Heat Pump Appliances (Thermal Combustion)
G2449.1

Z21.42—2014: Gas-fired Illuminating Appliances
G2450.1

Z21.47/CSA 2.3—12: Gas-fired Central Furnaces
G2442.1

Z21.50/CSA 2.22—16: Vented Gas Fireplaces
G2434.1

Z21.54—2009: Gas Hose Connectors for Portable Outdoor Gas-fired Appliances
G2422.1

Z21.56/CSA 4.7—17: Gas-fired Pool Heaters
G2441.1

Z21.58—95/CSA 1.6—13: Outdoor Cooking Gas Appliances
G2447.1

Z21.60/CSA 2.26—12: Decorative Gas Appliances for Installation in Solid Fuel-burning Fireplaces
G2432.1

INTERNATIONAL CODE COUNCIL®
Copyright © 2019 ICC & NYSDOS. ALL RIGHTS RESERVED. Accessed by Lauren Gualdino (lgualdino@briarcliffmanor.org), (-) Order Number #100880972 on May 08, 2020 07:05 AM (PDT) pursuant to License Agreement with ICC & NYSDOS. No further reproduction, no

100880972

ANSI—continued

Z21.69/CSA 6.16—09: Connectors for Movable Gas Appliances
G2422.1.5

Z21.75/CSA 6.27—07: Connectors for Outdoor Gas Appliances and Manufactured Homes
G2422.1

Z21.80/CSA 6.22—11: Line Pressure Regulators
G2421.1

ANSI/CSA FC 1—12: Stationary Fuel Cell Power Systems
M1903.1

Z21.84—12: Manually Listed, Natural Gas Decorative Gas Appliances for Installation in Solid Fuel-burning Fireplaces
G2432.1, G2432.2

Z21.86/CSA 2.32—08: Gas-fired Vented Space Heating Appliances
G2436.1, G2437.1, G2446.1

Z21.88/CSA 2.33—16: Vented Gas Fireplace Heaters
G2435.1

Z21.91—07: Ventless Firebox Enclosures for Gas-fired Unvented Decorative Room Heaters
G2445.7.1

Z21.93/CSA 6.30—13: Excess Flow Valves for Natural and LP Gas with Pressures up to 5 psig
G2421.4

Z21.97—12: Outdoor Decorative Appliances
G2454.1

Z83.6—90 (R1998): Gas-fired Infrared Heaters
G2451.1

Z83.8/CSA 2.6—09: Gas-fired Unit Heaters, Gas Packaged Heaters, Gas Utility Heaters and Gas-fired Duct Furnaces
G2444.1

Z83.19—01 (R2009): Gas-fuel High-intensity Infrared Heaters
G2451.1

Z83.20—08: Gas-fired Low-intensity Infrared Heaters Outdoor Decorative Appliances
G2451.1

Z97.1—2014: Safety Glazing Materials Used in Buildings—Safety Performance Specifications and Methods of Test
R308.1.1, R308.3.1, Table R303.3.1(2)

APA

APA—The Engineered Wood Association
7011 South 19th
Tacoma, WA 98466

ANSI/A190.1—2017: Structural Glued-laminated Timber
R502.1.3, R602.1.3, R802.1.2

ANSI/APA PRP 210—2014: Standard for Performance-rated Engineered Wood Siding
R604.1, Table R703.3(1), R703.3.4

ANSI/APA PRG 320—2017: Standard for Performance-rated Cross Laminated Timber
R502.1.6, R602.1.6, R802.1.6

ANSI/APA PRR 410—2016: Standard for Performance-rated Engineered Wood Rim Boards
R502.1.7, R602.1.7, R802.1.7

ANSI/APA PRS 610.1—2013: Standard for Performance-Rated Structural Insulated Panels in Wall Applications
R602.1.11, R610.3, R610.4

***APA E30—16: Engineered Wood Construction Guide**
Table R503.2.1.1(1), R503.2.2, R803.2.2, R803.2.3

INTERNATIONAL CODE COUNCIL®
Copyright © 2019 ICC & NYSDOS. ALL RIGHTS RESERVED. Accessed by Lauren Gualdino (lgualdino@briarcliffmanor.org), (-) Order Number #100880972 on May 08, 2020 07:05 AM (PDT) pursuant to License Agreement with ICC & NYSDOS. No further reproduction, no

100880972

APSP

Pool & Hot Tub Alliance
2111 Eisenhower Avenue, Suite 500
Alexandria, VA 22314

***ANSI/APSP/ICC 3—2014: American National Standard for Permanently Installed Residential Spas and Swim Spas**
R326.3.3

***ANSI/APSP/ICC 4—2012: American National Standard for Aboveground/Onground Residential Swimming Pools**
R326.3.2

***ANSI/APSP/ICC 5—2011: American National Standard for Residential Inground Swimming Pools**
R326.3.1

***ANSI/APSP/ICC 6—2013: American National Standard for Residential Portable Spas and Swim Spas**
R326.3.4

***ANSI/APSP/ICC 7—2013: American National Standard for Suction Entrapment Avoidance In Swimming Pools, Wading Pools, Spas, Hot Tubs, and Catch Basins**
R326.5.1, R326.6.1

ANSI/APSP/ICC 14—2014: American National Standard for Portable Electric Spa Energy Efficiency
N1103.11

ANSI/APSP/ICC 15a—2011: American National Standard for Residential Swimming Pool and Spa Energy Efficiency—includes Appendix A Approved January 9, 2013
N1103.12

ASCE/SEI

American Society of Civil Engineers
Structural Engineering Institute
1801 Alexander Bell Drive
Reston, VA 20191-4400

7—16: Minimum Design Loads and Associated Criteria for Buildings and Other Structures
R301.2.1.1, R301.2.1.2, R301.2.1.2.1, R301.2.1.5, R301.2.1.5.1, Table R608.6(1), Table R608.6(2), Table R608.6(3), Table R608.6(4), Table R608.7(1A), Table R608.7(1B), Table R608.7(1C), R608.9.2, R608.9.3, R609.2, R609.6.2, AH107.4.3

***24—14: Flood-resistant Design and Construction**
R301.2.4, R301.2.4.1, R322.1, R322.1.1, R322.1.6, R322.1.9, R322.2.2, R322.3.3

32—01: Design and Construction of Frost-protected Shallow Foundations
R403.1.4.1

ASHRAE

ASHRAE
1791 Tullie Circle NE
Atlanta, GA 30329

ASHRAE—2001: 2001 ASHRAE Fundamentals Handbook
Table N1105.5.2(1)

***ASHRAE—2017: 2017 ASHRAE Fundamentals Handbook**
N1102.1.5, P3001.2, P3101.4

ASHRAE 193—2010(RA 2014): Method of Test for Determining Air Tightness of HVAC Equipment
N1103.3.2.1

***34—2016: Designation and Safety Classification of Refrigerants**
M1411.1

ASME

American Society of Mechanical Engineers
Two Park Avenue
New York, NY 10016-5990

***ASME A17.1—2016/CSA B44—16: Safety Code for Elevators and Escalators**
R321.1

***A18.1—2014: Safety Standard for Platforms and Stairway Chair Lifts**
R321.2

INTERNATIONAL CODE COUNCIL®
Copyright © 2019 ICC & NYSDOS. ALL RIGHTS RESERVED. Accessed by Lauren Gualdino (lgualdino@briarcliffmanor.org), (-) Order Number #100880972 on May 08, 2020 07:05 AM (PDT) pursuant to License Agreement with ICC & NYSDOS. No further reproduction, no

100880972

ASME—continued

A112.1.2—2012: Air Gaps in Plumbing Systems (For Plumbing Fixtures and Water Connected Receptors)
P2717.1, Table P2902.3, P2902.3.1

A112.1.3—2000 (Reaffirmed 2015): Air Gap Fittings for Use with Plumbing Fixtures, Appliances and Appurtenances
Table P2701.1, P2717.1, Table P2902.3, P2902.3.1

A112.3.1—2007(R2012): Stainless Steel Drainage Systems for Sanitary, DWV, Storm and Vacuum Applications Above and Below Ground
Table P3002.1(1), Table P3002.1(2), Table P3002.2, Table P3002.3, Table P3302.1

A112.3.4—2013/CSA B45.9—13: Macerating Toilet Systems and Related Components
Table P2701.1, P3007.5

A112.4.1—2009: Water Heater Relief Valve Drain Tubes
P2804.6.1

ASME A112.4.2—2015/CSA B45.16—15: Water-closet Personal Hygiene Devices
P2722.5

A112.4.3—1999 (R2010): Plastic Fittings for Connecting Water Closets to the Sanitary Drainage System
P3003.14

A112.4.14—2004 (R2016): Manually Operated, Quarter-turn Shutoff Valves for Use in Plumbing Systems
Table P2903.9.4

A112.6.2—2000 (R2016): Framing-affixed Supports for Off-the-floor Water Closets with Concealed Tanks
Table P2701.1, P2702.4

A112.6.3—2001 (R2016): Floor and Trench Drains
Table P2701.1

A112.14.1—03(2012): Backwater Valves
P3008.3

A112.18.1—2017/CSA B125.1—2017: Plumbing Supply Fittings
Table P2701.1, P2708.5, P2722.1, P2722.3, P2727.2, P2902.2, Table P2903.9.4

A112.18.2—2015/CSA B125.2—2015: Plumbing Waste Fittings
Table P2701.1, P2702.2

A112.18.3—2002(R2012): Performance Requirements for Backflow Protection Devices and Systems in Plumbing Fixture Fittings
P2708.5, P2722.3

A112.18.6—2017/CSA B125.6—17: Flexible Water Connectors
P2906.7

A112.19.1—2013/CSA B45.2—2013: Enameled Cast-iron and Enameled Steel Plumbing Fixtures
Table P2701.1, P2711.1

A112.19.2—2013/CSA B45.1—2013: Ceramic Plumbing Fixtures
Table P2701.1, P2705.1, P2711.1, P2712.1, P2712.2, P2712.9

A112.19.3—2008/CSA B45.4—08 (R2013): Stainless Steel Plumbing Fixtures
Table P2701.1, P2705.1, P2711.1, P2712.1

A112.19.5—2017/CSA B45.15—2017: Flush Valves and Spuds for Water-closets, Urinals and Tanks
Table P2701.1

A112.19.7—2017/CSA B45.10—2017: Hydromassage Bathtub Systems
Table P2701.1

***A112.19.8—2007: Suction Fittings for Use in Swimming Pools, Wading Pools, Spas, Hot Tubs and Whirlpool Bathing Appliances:**
R326.6.2

A112.19.12—2014: Wall-mounted and Pedestal-mounted, Adjustable, Elevating, Tilting, and Pivoting Lavatory and Sink, and Shampoo Bowl Carrier Systems and Drain Waste Systems
Table P2701.1, P2711.4, P2714.2

A112.19.14—2013: Six-Liter Water Closets Equipped with Dual Flushing Device
P2712.1

A112.19.15—2012: Bathtub/Whirlpool Bathtubs with Pressure-sealed Doors
Table P2701.1, P2713.2

INTERNATIONAL CODE COUNCIL®
Copyright © 2019 ICC & NYSDOS. ALL RIGHTS RESERVED. Accessed by Lauren Gualdino (lgualdino@briarcliffmanor.org), (-) Order Number #100880972 on May 08, 2020 07:05 AM (PDT) pursuant to License Agreement with ICC & NYSDOS. No further reproduction, no

100880972

ASME—continued

***A112.19.17—2002: Manufacturers Safety Vacuum Release Systems (SVRS) for Residential and Commercial Swimming Pool, Spa, Hot Tub and Wading Pool Suction System**
R326.6.3

A112.36.2m—1991 (R2012): Cleanouts
P3005.2.10.2

ASSE 1002—2015/ASME A112.1002—2015/CSA B125.12—15: Anti-Siphon Fill Valves
Table P2701.1, Table P2902.3, P2902.4.1

B1.20.1—2013: Pipe Threads, General-purpose (Inch)
G2414.9, P3003.3.3, P3003.6.4, P3003.7.1, P3003.9.3

B16.3—2016: Malleable-iron-threaded Fittings, 150 and 300
Table P2906.6

B16.4—2016: Gray-iron-threaded Fittings
Table P2906.6, Table P3002.3

B16.9—2012: Factory-made, Wrought-steel Buttwelding Fittings
Table P2906.6

B16.11—2016: Forged Fittings, Socket-welding and Threaded
Table P2906.6

B16.12—2009 (R2014): Cast-iron-threaded Drainage Fittings
Table P3002.3

B16.15—2013: Cast-Alloy-threaded Fittings: Classes 125 and 250
Table P2906.6, Table P3002.3

B16.18—2012: Cast-copper-alloy Solder Joint Pressure Fittings
Table P2906.6, Table P3002.3

B16.22—2013: Wrought-copper and Copper-alloy Solder Joint Pressure Fittings
Table P2906.6, Table P3002.3

B16.23—2016: Cast-copper-alloy Solder Joint Drainage Fittings (DWV)
Table P3002.3

B16.26—2016: Cast-copper-alloy Fittings for Flared Copper Tubes
Table P2906.6, Table P3002.3

B16.28—1994: Wrought-steel Buttwelding Short Radius Elbows and Returns
Table P2906.6

B16.29—2012: Wrought-copper and Wrought-copper-alloy Solder Joint Drainage Fittings (DWV)
Table P3002.3

B16.33—2012: Manually Operated Metallic Gas Valves for Use in Gas Piping Systems up to 125 psig (Sizes $^{1}/_{2}$ through 2)
Table G2420.1.1

B16.34—2015: Valves—Flanged, Threaded and Welding End
Table P2903.9.4

B16.44—2012: Manually Operated Metallic Gas Valves for Use in Above-ground Piping Systems up to 5 psi
Table G2420.1.1

B16.51—2013: Copper and Copper Alloy Press-Connect Pressure Fittings
Table M2101.1, M2103.3, Table P2906.6

B36.10M—2004(R2015): Welded and Seamless Wrought-steel Pipe
G2414.4.2

BPVC—2015: ASME Boiler and Pressure Vessel Code (Sections I, II, IV, V, VI and VIII)
M2001.1.1, G2452.1

CSD-1—2016: Controls and Safety Devices for Automatically Fired Boilers
M2001.1.1, G2452.1

ASSE 1016—2017/ASME 112.1016—2017/CSA B125.16—2017: Performance Requirements for Automatic Compensating Valves for Individual Showers and Tub/Shower Combinations
Table P2701.1, P2708.4, P2722.2

ASSE 1070—2015/ASME A112.1070—2015/CSA B125.70—15: Performance Requirements for Water-temperature-limiting Devices
P2713.3, P2721.2

INTERNATIONAL CODE COUNCIL®
Copyright © 2019 ICC & NYSDOS. ALL RIGHTS RESERVED. Accessed by Lauren Gualdino (lgualdino@briarcliffmanor.org), (-) Order Number #100880972 on May 08, 2020 07:05 AM (PDT) pursuant to License Agreement with ICC & NYSDOS. No further reproduction, no

100880972

ASSE

ASSE International
18927 Hickory Creek Drive, Suite 220
Mokena, IL 60448

1001—2016: Performance Requirements for Atmospheric-type Vacuum Breakers
Table P2902.3, P2902.3.2

ASSE 1002—2015/ASME A112.1002—2015/CSA B125.12—15: Anti-Siphon Fill Valves
Table P2701.1, Table P2902.3, P2902.4.1

1003—2009: Performance Requirements for Water-pressure-reducing Valves for Domestic Water Distribution Systems
P2903.3.1

1008—2006: Performance Requirements for Plumbing Aspects of Residential Food Waste Disposer Units
Table P2701.1

1010—2004: Performance Requirements for Water Hammer Arresters
P2903.5

1011—2016: Performance Requirements for Hose Connection Vacuum Breakers
Table P2902.3, P2902.3.2

1012—2009: Performance Requirements for Backflow Preventers with Intermediate Atmospheric Vent
Table P2902.3, P2902.3.3, P2902.5.1, P2902.5.5.3

1013—2017: Performance Requirements for Reduced Pressure Principle Backflow Preventers and Reduced Pressure Principle Fire Protection Backflow Preventers
Table P2902.3, P2902.3.5, P2902.5.1, P2902.5.5.3

1015—2017: Performance Requirements for Double Check Backflow Prevention Assemblies and Double Check Fire Protection Backflow Prevention Assemblies
Table P2902.3, P2902.3.6

ASSE 1016—2017/ASME 112.1016—2017/CSA B125.16—2017: Performance Requirements for Automatic Compensating Valves for Individual Showers and Tub/Shower Combinations
Table P2701.1, P2708.4, P2722.2

1017—2010: Performance Requirements for Temperature-actuated Mixing Valves for Hot Water Distribution Systems
P2724.1, P2802.1, P2803.2

1018—2017: Performance Requirements for Trap Seal Primer Valves; Potable Water Supplied
P3201.2.1, P3201.2.2

1019—2016: Performance Requirements for Freeze-resistant, Wall Hydrants, Vacuum Breaker, Draining Types
Table P2701.1, Table P2902.3, P2902.3.2

1020—2004: Performance Requirements for Pressure Vacuum Breaker Assembly
Table P2902.3, P2902.3.4

1023—2016: Performance Requirements for Hot Water Dispensers, Household-storage-type—Electrical
Table P2701.1

1024—2016: Performance Requirements for Dual Check Backflow Preventers, Anti-siphon-type, Residential Applications
Table P2902.3, P2902.3.7

1035—2008: Performance Requirements for Laboratory Faucet Backflow Preventers
Table P2902.3, P2902.3.2

ASSE 1037—2015/ASME A112.1037—2015/CSA B125.37—15: Performance Requirements for Pressurized Flushing Devices for Plumbing Fixtures
Table P2701.1

1044—2010: Performance Requirements for Trap Seal Primer Devices Drainage Types and Electronic Design Types
P3201.2.1.3

1047—2017: Performance Requirements for Reduced Pressure Detector Fire Protection Backflow Prevention Assemblies
Table P2902.3, P2902.3.5

1048—2017: Performance Requirements for Double Check Detector Fire Protection Backflow Prevention Assemblies
Table P2902.3, P2902.3.6

1050—2009: Performance Requirements for Stack Air Admittance Valves for Sanitary Drainage Systems
P3114.1

1051—2009: Performance Requirements for Individual and Branch-type Air Admittance Valves for Plumbing Drainage Systems
P3114.1

INTERNATIONAL CODE COUNCIL®
Copyright © 2019 ICC & NYSDOS. ALL RIGHTS RESERVED. Accessed by Lauren Gualdino (lgualdino@briarcliffmanor.org), (-) Order Number #100880972 on May 08, 2020 07:05 AM (PDT) pursuant to License Agreement with ICC & NYSDOS. No further reproduction, no

100880972

ASSE—continued

1052—2016: Performance Requirements for Hose Connection Backflow Preventers
Table P2701.1, Table P2902.3, P2902.3.2

1056—2013: Performance Requirements for Spill-resistant Vacuum Breakers
Table P2902.3, P2902.3.4

1060—2016: Performance Requirements for Outdoor Enclosures for Fluid-conveying Components
P2902.6.1

1061—2015: Performance Requirements for Push Fit Fittings
Table P2906.6, P2906.21

1062—2016: Performance Requirements for Temperature-actuated, Flow Reduction (TAFR) Valves for Individual Supply Fittings
Table P2701.1, P2724.2

1066—2016: Performance Requirements for Individual Pressure Balancing In-line Valves for Individual Fixture Fittings
P2722.4

ASSE 1070—2015/ASME A112.1070—2015/CSA B125.70—15 : Performance Requirements for Water-temperature-limiting Devices
P2713.3, P2721.2, P2724.1

1072—2007: Performance Requirements for Barrier-type Floor Drain Trap Seal Protection Devices
P3201.2.1.4

ASTM

ASTM International
100 Barr Harbor Drive, P.O. Box C700
West Conshohocken, PA 19428

A36/A36M—14: Specification for Carbon Structural Steel
R606.15, R608.5.2.2

A53/A53M—12: Specification for Pipe, Steel, Black and Hot-dipped, Zinc-coated Welded and Seamless
R407.3, Table M2101.1, G2414.4.2, Table P2906.4, Table P2906.5, Table P3002.1(1)

A74—15: Specification for Cast-iron Soil Pipe and Fittings
Table P3002.1(1), Table P3002.1(2), Table P3002.2, Table P3002.3, P3005.2.6, Table P3302.1

A106/A106M—14: Specification for Seamless Carbon Steel Pipe for High-temperature Service
Table M2101.1, G2414.4.2

A123/A123M—15: Standard Specification for Zinc (Hot-Dip Galvanized) Coatings on Iron and Steel Products
Table 507.2.3

A126—04(2014): Gray Iron Castings for Valves, Flanges and Pipe Fittings
Table P2903.9.4

A153/A153M—09: Specification for Zinc Coating (Hot Dip) on Iron and Steel Hardware
R317.3, Table 507.2.3, Table R606.3.4.1, R703.6.3, R905.7.5, R905.8.6

A167—99(2009): Specification for Stainless and Heat-resisting Chromium-nickel Steel Plate, Sheet and Strip
Table R606.3.4.1

A240/A240M—15A: Standard Specification for Chromium and Chromium-nickel Stainless Steel Plate, Sheet and Strip for Pressure Vessels and for General Applications
Table R905.10.3(1)

A254—12: Specification for Copper Brazed Steel Tubing
Table M2101.1, G2414.5.1

A268—2010: Standard Specification for Seamless and Welded Ferritic and Martensitic Stainless Steel Tubing for General Service
G2414.5.2

A269—2015: Standard Specification for Seamless and Welded Austenitic Stainless Steel Tubing for General Service
G2414.5.2

A307—14: Specification for Carbon Steel Bolts and Studs, 60,000 psi Tensile Strength
R608.5.2.2, Table R507.2.3

A312/A312M—15A: Specification for Seamless, Welded and Heavily Cold Worked Austenitic Stainless Steel Pipes
Table P2906.4, Table P2906.5, Table P2906.6, P2906.13.2

A463/A463M—15: Standard Specification for Steel Sheet, Aluminum-coated by the Hot-dip Process
Table R905.10.3(2)

INTERNATIONAL CODE COUNCIL®
Copyright © 2019 ICC & NYSDOS. ALL RIGHTS RESERVED. Accessed by Lauren Gualdino (lgualdino@briarcliffmanor.org), (-) Order Number #100880972 on May 08, 2020 07:05 AM (PDT) pursuant to License Agreement with ICC & NYSDOS. No further reproduction, no

100880972

ASTM—continued

A539—99: Specification for Electric-resistance-welded Coiled Steel Tubing for Gas and Fuel Oil Lines
M2202.1

A563—15: Standard Specification for Carbon and Alloy Steel Nuts
Table R507.2.3

A615/A615M—2015aE1: Specification for Deformed and Plain Carbon-steel Bars for Concrete Reinforcement
R402.3.1, R403.1.3.5.1, R404.1.3.3.7.1, R608.5.2.1

A641/A641M—09a(2014): Specification for Zinc-coated (Galvanized) Carbon Steel Wire
Table R606.3.4.1

A653/A653M—15: Specification for Steel Sheet, Zinc-coated (Galvanized) or Zinc-iron Alloy-coated (Galvannealed) by the Hot-dip Process
R317.3.1, R505.2.2, Table R507.2.3, R603.2.2, Table R606.3.4.1, R608.5.2.3, R804.2.2, R804.2.3, Table R905.10.3(1), Table R905.10.3(2), M1601.1.1

A706/A706M—15: Specification for Low-alloy Steel Deformed and Plain Bars for Concrete Reinforcement
R402.3.1, R403.1.3.5.1, R404.1.3.3.7.1, R608.5.2.1

A755/A755M—2015: Specification for Steel Sheet, Metallic Coated by the Hot-dip Process and Prepainted by the Coil-coating Process for Exterior Exposed Building Products
Table R905.10.3(2)

A778/A778M—15: Specification for Welded Unannealed Austenitic Stainless Steel Tubular Products
Table P2906.4, Table P2906.5, Table P2906.6

A792/A792M—10(2015): Specification for Steel Sheet, 55% Aluminum-zinc Alloy-coated by the Hot-dip Process
R505.2.2, R603.2.2, R608.5.2.3, R804.2.2, Table 905.10.3(2)

A875/A875M—13: Specification for Steel Sheet, Zinc-5%, Aluminum Alloy-coated by the Hot-dip Process
R608.5.2.3, Table R905.10.3(2)

A888—15: Specification for Hubless Cast Iron Soil Pipe and Fittings for Sanitary and Storm Drain, Waste and Vent Piping Application
Table P3002.1(1), Table P3002.1(2), Table P3002.2, Table P3002.3, Table P3302.1

A924/A924M—14: Standard Specification for General Requirements for Steel Sheet, Metallic-coated by the Hot-dip Process
Table R905.10.3(1)

A996/A996M—15: Specifications for Rail-steel and Axle-steel Deformed Bars for Concrete Reinforcement
R403.1.3.5.1, R403.2.1, Table R404.1.2(9), R404.1.3.3.7.1, R608.5.2.1, Table R608.5.4(2)

A1003/A1003M—15: Standard Specification for Steel Sheet, Carbon, Metallic and Nonmetallic-coated for Cold-formed Framing Members
R505.2.1, R505.2.2, R603.2.1, R603.2.2, R804.2.1, R804.2.2

B32—08(2014): Specification for Solder Metal
P3003.6.3

B42—2015A: Specification for Seamless Copper Pipe, Standard Sizes
Table M2101.1, Table P2906.4, Table P2906.5, Table P3002.1(1)

B43—15: Specification for Seamless Red Brass Pipe, Standard Sizes
Table M2101.1, Table P2906.4, Table P2906.5, Table P3002.1(1)

B75/B75M—11: Specification for Seamless Copper Tube
Table M2101.1, Table P2906.4, Table P2906.5, Table P3002.1(1), Table P3002.1(2), Table P3002.2

B88—14: Specification for Seamless Copper Water Tube
Table M2101.1, G2414.5.2, Table P2906.4, Table P2906.5, Table P3002.1(1), Table P3002.1(2), Table P3002.2

B101—12: Specification for Lead-coated Copper Sheet and Strip for Building Construction
Table R905.2.8.2, Table R905.10.3(1)

B135—10: Specification for Seamless Brass Tube
Table M2101.1

B209—14: Specification for Aluminum and Aluminum-alloy Sheet and Plate
Table 905.10.3(1)

B251—10: Specification for General Requirements for Wrought Seamless Copper and Copper-alloy Tube
Table M2101.1, Table P2906.4, Table P2906.5, Table P3002.1(1), Table P3002.1(2), Table P3002.2

INTERNATIONAL CODE COUNCIL®
Copyright © 2019 ICC & NYSDOS. ALL RIGHTS RESERVED. Accessed by Lauren Gualdino (lgualdino@briarcliffmanor.org), (-) Order Number #100880972 on May 08, 2020 07:05 AM (PDT) pursuant to License Agreement with ICC & NYSDOS. No further reproduction, no

100880972

ASTM—continued

B302—12: Specification for Threadless Copper Pipe, Standard Sizes
Table M2101.1, Table P2906.4, Table P2906.5, Table P3002.1(1)

B306—13: Specification for Copper Drainage Tube (DWV)
Table M2101.1, Table P3002.1(1), Table P3002.1(2)

B370—12: Specification for Copper Sheet and Strip for Building Construction
Table R905.2.8.2, Table R905.10.3(1), Table P2701.1

B447—12a: Specification for Welded Copper Tube
Table P2906.4, Table P2906.5

B695—04(2009): Standard Specification for Coatings of Zinc Mechanically Deposited on Iron and Steel
R317.3.1, R317.3.3, Table R507.2.3

B813—10: Specification for Liquid and Paste Fluxes for Soldering Applications of Copper and Copper Alloy Tube
Table M2101.1, M2103.3, P2906.15, P3003.6.3

B828—02(2010): Practice for Making Capillary Joints by Soldering of Copper and Copper Alloy Tube and Fittings
M2103.3, P2906.15, P3003.6.3

C4—04(2014): Specification for Clay Drain Tile and Perforated Clay Drain Tile
Table P3302.1

C5—10: Specification for Quicklime for Structural Purposes
R702.2.1

C14—15a: Specification for Non-reinforced Concrete Sewer, Storm Drain and Culvert Pipe
Table P3002.2

C22/C22M—2015: Specification for Gypsum
R702.2.1, R702.3.1

C27—98(2013): Specification for Standard Classification of Fireclay and High-alumina Refractory Brick
R1001.5

C28/C28M—10(2015): Specification for Gypsum Plasters
R702.2.1

C33/C33M—13: Specification for Concrete Aggregates
R403.4.1

C34—13: Specification for Structural Clay Load-bearing Wall Tile
Table R301.2(1), R606.2.2

C35/C35M—(2014): Specification for Inorganic Aggregates for Use in Gypsum Plaster
R702.2.1

C55—2014A: Specification for Concrete Building Brick
R202, Table R301.2(1), R606.2.1

C56—13: Standard Specification for Structural Clay Nonloadbearing Tile
R606.2.2

C59/C59M—00(2015): Specification for Gypsum Casting Plaster and Molding Plaster
R702.2.1

C61/C61M—00(2015): Specification for Gypsum Keene's Cement
R702.2.1

C62—13A: Standard Specification for Building Brick (Solid Masonry Units Made from Clay or Shale)
R202, Table R301.2(1), R606.2.2

C73—14: Specification for Calcium Silicate Face Brick (Sand Lime Brick)
R202, Table R301.2(1), R606.2.1

C76—15A: Specification for Reinforced Concrete Culvert, Storm Drain and Sewer Pipe
Table P3002.2

C90—14: Specification for Load-bearing Concrete Masonry Units
Table R301.2(1), 606.2.1

C91/C91M—12: Specification for Masonry Cement
R702.2.2, R703.7.2

C94/C94M—15A: Standard Specification for Ready-mixed Concrete
R404.1.3.3.2, R608.5.1.2

INTERNATIONAL CODE COUNCIL®
Copyright © 2019 ICC & NYSDOS. ALL RIGHTS RESERVED. Accessed by Lauren Gualdino (lgualdino@briarcliffmanor.org), (-) Order Number #100880972 on May 08, 2020 07:05 AM (PDT) pursuant to License Agreement with ICC & NYSDOS. No further reproduction, no

100880972

ASTM—continued

C126—15: Standard Specification for Ceramic Glazed Structural Clay Facing Tile, Facing Brick, and Solid Masonry Units
R606.2.2

C129—14A: Specification for Nonload-bearing Concrete Masonry Units
Table R301.2(1)

***C143/C143M—12: Test Method for Slump of Hydraulic Cement Concrete**
R404.1.3.3.4, R608.5.1.4

C145—85: Specification for Solid Load-bearing Concrete Masonry Units
R202, Table R301.2(1)

C150/C150M—15: Specification for Portland Cement
R608.5.1.1, R702.7.2

C199—84(2011): Test Method for Pier Test for Refractory Mortar
R1001.5, R1001.8, R1003.12

C203—05a(2012): Standard Test Methods for Breaking Load and Flexural Properties of Block-type Thermal Insulation
Table R610.3.1

C207—06(2011): Specification for Hydrated Lime for Masonry Purposes
Table R606.2.8

C208—12: Specification for Cellulosic Fiber Insulating Board
R602.1.10, Table R602.3(1), Table R906.2

C212—14: Standard Specification for Structural Clay Facing Tile
R602.2.2

C216—15: Specification for Facing Brick (Solid Masonry Units Made from Clay or Shale)
R202, Table R301.2(1), R606.2.2

C270—14A: Specification for Mortar for Unit Masonry
R606.2.8, Table R606.2.8, R606.2.11

C315—07(2011): Specification for Clay Flue Liners and Chimney Pots
R1001.8, R1003.11.1, Table R1003.14(1), G2425.12

C406/C406M—2015: Specifications for Roofing Slate
R905.6.4

C411—11: Test Method for Hot-surface Performance of High-temperature Thermal Insulation
M1601.3

C425—04(2013): Specification for Compression Joints for Vitrified Clay Pipe and Fittings
Table P3002.2, P3003.10, P3003.13

C443—12: Specification for Joints for Concrete Pipe and Manholes, Using Rubber Gaskets
P3003.5, P3003.13

C475/C475M—15: Specification for Joint Compound and Joint Tape for Finishing Gypsum Wallboard
R702.3.1

C476—10: Specification for Grout for Masonry
R606.2.12

C503/C503M—2010: Standard Specification for Marble Dimension Stone
R606.2.4

C514—04(2014): Specification for Nails for the Application of Gypsum Wallboard
R702.3.1

C552—15: Standard Specification for Cellular Glass Thermal Insulation
Table R906.2

C557—03(2009)e01: Specification for Adhesives for Fastening Gypsum Wallboard to Wood Framing
R702.3.1.1

C564—14: Specification for Rubber Gaskets for Cast Iron Soil Pipe and Fittings
P3003.4.2, P3003.4.3, P3003.13

C568/C568M—2010: Standard Specification for Limestone Dimension Stone
R606.2.4

INTERNATIONAL CODE COUNCIL®
Copyright © 2019 ICC & NYSDOS. ALL RIGHTS RESERVED. Accessed by Lauren Gualdino (lgualdino@briarcliffmanor.org), (-) Order Number #100880972 on May 08, 2020 07:05 AM (PDT) pursuant to License Agreement with ICC & NYSDOS. No further reproduction, no

100880972

ASTM—continued

C578—15: Specification for Rigid, Cellular Polystyrene Thermal Insulation
R316.8, R403.3, Table 703.8.4(2), Table R703.15.1, Table R703.15.2, Table R703.16.1, Table R703.16.2, Table R906.2

C587—04(2014): Specification for Gypsum Veneer Plaster
R702.2.1

C595/C595M—14E1: Specification for Blended Hydraulic Cements
R608.5.1.1, R702.2.2, R703.7.2

C615/C615M—11: Standard Specification for Granite Dimension Stone
R606.2.4

C616/C616M—10: Standard Specification for Quartz-based Dimension Stone
R606.2.4

C629/C629M—10: Standard Specification for Slate Dimension Stone
R606.2.4

C631—09(2014): Specification for Bonding Compounds for Interior Gypsum Plastering
R702.2.1

C645—14: Specification for Nonstructural Steel Framing Members
R702.3.3

C652—15: Specification for Hollow Brick (Hollow Masonry Units Made from Clay or Shale)
R202, Table R301.2(1), R606.2.2

C685/C685M—14: Specification for Concrete Made by Volumetric Batching and Continuous Mixing
R404.1.3.3.2, R608.5.1.2

C700—13: Specification for Vitrified Clay Pipe, Extra Strength, Standard Strength and Perforated
Table P3002.2, Table P3002.3, Table P3302.1

C726—12: Standard Specification for Mineral Wool Roof Insulation Board
Table R906.2

C728—15: Standard Specification for Perlite Thermal Insulation Board
Table R906.2

C744—14: Standard Specification for Prefaced Concrete and Calcium Silicate Masonry Units
R606.2.1

C836/C836M—15: Specification for High Solids Content, Cold Liquid-applied Elastomeric Waterproofing Membrane for Use with Separate Wearing Course
R905.15.2

***C841—03(2008 E): Standard Specification for Installation of Interior Lathing and Furring**
R702.2.1

***C842—05(2010 E): Standard Specification for Application of Interior Gypsum Plaster**
R702.2.1

***C843—99(2012): Specification for Application of Gypsum Veneer Plaster**
R702.2.1

***C844—2010: Specification for Application of Gypsum Base to Receive Gypsum Veneer Plaster**
R702.2.1

C847—14A: Specification for Metal Lath
R702.2.1, R702.2.2

C887—13: Specification for Packaged, Dry, Combined Materials for Surface Bonding Mortar
R406.1, R606.2.9

C897—15: Specification for Aggregate for Job-mixed Portland Cement-based Plasters
R702.2.2

C920—14A: Standard Specification for Elastomeric Joint Sealants
R406.4.1

***C926—13: Specification for Application of Portland Cement-based Plaster**
R702.2.2, R702.2.2.1, R703.7, R703.7.2, R703.7.2.1, R703.7.4

C933—14: Specification for Welded Wire Lath
R702.2.1, R702.2.2

INTERNATIONAL CODE COUNCIL®
Copyright © 2019 ICC & NYSDOS. ALL RIGHTS RESERVED. Accessed by Lauren Gualdino (lgualdino@briarcliffmanor.org), (-) Order Number #100880972 on May 08, 2020 07:05 AM (PDT) pursuant to License Agreement with ICC & NYSDOS. No further reproduction, no

100880972

ASTM—continued

***C946—10: Standard Practice for Construction of Dry-Stacked, Surface-Bonded Walls**
R606.2.9

C954—15: Specification for Steel Drill Screws for the Application of Gypsum Panel Products or Metal Plaster Bases to Steel Studs from 0.033 in (0.84 mm) or to 0.112 in. (2.84 mm) in Thickness
R505.2.5, R603.2.5, R702.3.5.1, R804.2.5

C957/C957M—15: Specification for High-solids Content, Cold Liquid-applied Elastomeric Waterproofing Membrane for Use with Integral Wearing Surface
R905.15.2

C1002—14: Specification for Steel Self-piercing Tapping Screws for the Application of Gypsum Panel Products or Metal Plaster Bases to Wood Studs or Steel Studs
R702.3.1, R702.3.5.1

C1029—15: Specification for Spray-applied Rigid Cellular Polyurethane Thermal Insulation
R905.14.2

C1032—14: Specification for Woven Wire Plaster Base
R702.2.1, R702.2.2

C1047—14a: Specification for Accessories for Gypsum Wallboard and Gypsum Veneer Base
R702.2.1, R702.2.2, R702.3.1

***C1063—14d: Specification for Installation of Lathing and Furring to Receive Interior and Exterior Portland Cement-based Plaster**
R702.2.2, R703.7, R703.7.1

C1088—14: Standard Specification for Thin Veneer Brick Units Made from Clay or Shale
R606.2.2

C1107/C1107M—14A: Standard Specification for Packaged Dry, Hydraulic-cement Grout (Nonshrink)
R402.3.1

C1116/C116M—10(2015): Standard Specification for Fiber-reinforced Concrete and Shotcrete
R402.3.1

C1157—11/C1157M—11: Standard Performance Specification for Hydraulic Cement
R608.5.1.1, R703.7.2

C1167—11: Specification for Clay Roof Tiles
R905.3.4

C1173—10(2014): Specification for Flexible Transition Couplings for Underground Piping Systems
P3003.3.1, P3003.5, P3003.9.1, P3003.10, P3003.12.2, P3003.13

C1177/C1177M—13: Specification for Glass Mat Gypsum Substrate for Use as Sheathing
R702.3.1, Table 906.2

C1178/C1178M—13: Specification for Glass Mat Water-resistant Gypsum Backing Panel
R702.3.1, R702.3.7, Table R702.4.2

C1186—08(2012): Specification for Flat Fiber Cement Sheets
R703.10.1, R703.10.2

C1261—13: Specification for Firebox Brick for Residential Fireplaces
R1001.5, R1001.8

C1277—15: Specification for Shielded Couplings Joining Hubless Cast Iron Soil Pipe and Fittings
P3003.4.3

C1278/C1278M—07a(2011): Specification for Fiber-reinforced Gypsum Panels
R702.3.1, R702.3.7, Table R702.4.2, Table R906.2

***C1283—11: Practice for Installing Clay Flue Lining**
R1003.9.1, R1003.12

C1288—14: Standard Specification for Discrete Nonasbestos Fiber-cement Interior Substrate Sheets
Table R503.2.1.1(1), Table R503.2.1.1(2), Table 602.3(2), Table R702.4.2

C1289—15: Standard Specification for Faced Rigid Cellular Polyisocyanurate Thermal Insulation Board
R316.8, Table R703.15.1, Table R703.15.2, Table R703.16.1, Table R703.16.2, R708.8.4(2), Table R906.2

C1325—14: Standard Specification for Nonasbestos Fiber-mat Reinforced Cement Interior Substrate Sheets Backer Units
Table R702.4.2

INTERNATIONAL CODE COUNCIL®
Copyright © 2019 ICC & NYSDOS. ALL RIGHTS RESERVED. Accessed by Lauren Gualdino (lgualdino@briarcliffmanor.org), (-) Order Number #100880972 on May 08, 2020 07:05 AM (PDT) pursuant to License Agreement with ICC & NYSDOS. No further reproduction, no

100880972

ASTM—continued

C1328/C1328M—12: Specification for Plastic (Stucco) Cement
R702.2.2, R703.7.2

C1363—11: The Standard Test Method for Thermal Performance of Building Materials and Envelope Assemblies by Means of a Hot Box Apparatus
N1101.10.4.1

C1364—10B: Standard Specification for Architectural Cast Stone
R606.2.5

C1396/C1396M—2014A: Specification for Gypsum Board
Table R602.3(1), R702.2.1, R702.2.2, R702.3.1, R702.3.7

C1405—15: Standard Specification for Glazed Brick (Single Fired, Brick Units)
R606.2.2

C1440—08(2013): Specification for Thermoplastic Elastomeric (TPE) Gasket Materials for Drain, Waste and Vent (DWV), Sewer, Sanitary and Storm Plumbing Systems
P3003.13

C1460—2012: Specification for Shielded Transition Couplings for Use with Dissimilar DWV Pipe and Fittings Above Ground
P3003.13

C1461—08(2013): Specification for Mechanical Couplings Using Thermoplastic Elastomeric (TPE) Gaskets for Joining Drain, Waste and Vent (DWV) Sewer, Sanitary and Storm Plumbing Systems for Above and Below Ground Use
P3003.13

C1492—03(2009): Specification for Concrete Roof Tile
R905.3.5

C1513—2013: Standard Specification for Steel Tapping Screws for Cold-formed Steel Framing Connections
R505.2.5, R603.2.5, R702.3.5.1, Table R703.3(2), Table R703.16.1, Table R703.16.2, R804.2.5

C1540—15: Specification for Heavy Duty Shielded Couplings Joining Hubless Cast-iron Soil Pipe and Fittings
P3003.4.3

C1634—15: Standard Specification for Concrete Facing Brick
R606.2.1

C1658/C1658M—13: Standard Specification for Glass Mat Gypsum Panels
R702.3.1

C1668—13a: Standard Specification for Externally Applied Reflective Insulation Systems on Rigid Duct in Heating, Ventilation, and Air Conditioning (HVAC) Systems
M1601.3

C1670/1670M—16: Standard Specification for Adhered Manufactured Stone Masonry Veneer Units
R606.2.6

C1691—11: Standard Specification for Unreinforced Autoclaved Aerated Concrete (AAC) Masonry Units
R606.2.3

C1693—11: Standard Specification for Autoclaved Aerated Concrete (AAC)
R606.2.3

C1766—13: Standard Specification for Factory-Laminated Gypsum Panel Products
R702.3.1

D41/D41M—2011: Specification for Asphalt Primer Used in Roofing, Dampproofing and Waterproofing
Table R905.9.2, Table R905.11.2

D43/D43M—2000(2012)E1: Specification for Coal Tar Primer Used in Roofing, Dampproofing and Waterproofing
Table R905.9.2

D226/D226M—09: Specification for Asphalt-saturated (Organic Felt) Used in Roofing and Waterproofing
R703.2, R905.1.1, Table R905.1.1(1), R905.8.4, Table R905.9.2

D227/D227M—03(2011)e1: Specification for Coal Tar Saturated (Organic Felt) Used in Roofing and Waterproofing
Table R905.9.2

D312/D321M—15: Specification for Asphalt Used in Roofing
Table R905.9.2

D422—63(2007)E2: Test Method for Particle-size Analysis of Soils
R403.1.8.1

INTERNATIONAL CODE COUNCIL®
Copyright © 2019 ICC & NYSDOS. ALL RIGHTS RESERVED. Accessed by Lauren Gualdino (lgualdino@briarcliffmanor.org), (-) Order Number #100880972 on May 08, 2020 07:05 AM (PDT) pursuant to License Agreement with ICC & NYSDOS. No further reproduction, no

100880972

ASTM—continued

D449/D449M—03(2014)E1: Specification for Asphalt Used in Dampproofing and Waterproofing
R406.2

D450/D450M—07(2013)E1: Specification for Coal-tar Pitch Used in Roofing, Dampproofing and Waterproofing
Table R905.9.2

D1227—13: Specification for Emulsified Asphalt Used as a Protective Coating for Roofing
Table R905.9.2, Table R905.11.2, R905.15.2

D1248—12: Specification for Polyethylene Plastics Extrusion Materials for Wire and Cable
M1601.1.2

D1527—99(2005): Specification for Acrylonitrile-butadiene-styrene (ABS) Plastic Pipe, Schedules 40 and 80
Table P2906.4

D1693—15: Test Method for Environmental Stress-cracking of Ethylene Plastics
Table M2101.1

D1784—11: Standard Specification for Rigid Poly (Vinyl Chloride) (PVC) Compounds and Chlorinated Poly (Vinyl Chloride) (CPVC) Compounds
M1601.1.2

D1785—15: Specification for Poly (Vinyl Chloride) (PVC) Plastic Pipe, Schedules 40, 80 and 120
Table P2906.4, Table AG101.1

D1863/D1863M—05(2011)e1: Specification for Mineral Aggregate Used in Built-up Roofs
Table R905.9.2

D1869—15: Specification for Rubber Rings for Fiber-Reinforced Cement Pipe
P2906.18, P3003.13

D1970/D1970M—2015A: Specification for Self-adhering Polymer Modified Bitumen Sheet Materials Used as Steep Roofing Underlayment for Ice Dam Protection
R905.1.1, R905.2.8.2, R905.11.2.1

D2104—03: Specification for Polyethylene (PE) Plastic Pipe, Schedule 40
Table P2906.4

D2178/D2178M—15: Specification for Asphalt Glass Felt Used in Roofing and Waterproofing
Table R905.9.2

D2235—04(2011): Specification for Solvent Cement for Acrylonitrile-butadiene-styrene (ABS) Plastic Pipe and Fittings
P2906.9.1.1, P3003.3.2

D2239—12A: Specification for Polyethylene (PE) Plastic Pipe (SIDR-PR) Based on Controlled Inside Diameter
Table P2906.4, Table AG101.1

D2241—15: Specification for Poly (Vinyl Chloride) (PVC) Pressure-rated Pipe (SDR-Series)
Table P2906.4, Table AG101.1

D2282—99(2005): Specification for Acrylonitrile-butadiene-styrene (ABS) Plastic Pipe (SDR-PR)
Table P2905.4

D2412—11: Test Method for Determination of External Loading Characteristics of Plastic Pipe by Parallel-plate Loading
M1601.1.2

D2447—03: Specification for Polyethylene (PE) Plastic Pipe Schedules 40 and 80, Based on Outside Diameter
Table M2101.1

D2464—15: Specification for Threaded Poly (Vinyl Chloride) (PVC) Plastic Pipe Fittings, Schedule 80
Table P2906.6

D2466—15: Specification for Poly (Vinyl Chloride) (PVC) Plastic Pipe Fittings, Schedule 40
Table P2906.6

D2467—15: Specification for Poly (Vinyl Chloride) (PVC) Plastic Pipe Fittings, Schedule 80
Table P2906.6

D2468—96a: Specification for Acrylonitrile-butadiene-styrene (ABS) Plastic Pipe Fittings, Schedule 40
Table P2906.6

D2513—2014e1: Specification for Gas Pressure Pipe, Tubing and Fittings
Table M2101.1, G2414.6, G2414.6.1, G2414.11, G2415.17.2

D2564—12: Specification for Solvent Cements for Poly (Vinyl Chloride) (PVC) Plastic Piping Systems
P2906.9.1.4, P3003.9.2

INTERNATIONAL CODE COUNCIL®
Copyright © 2019 ICC & NYSDOS. ALL RIGHTS RESERVED. Accessed by Lauren Gualdino (lgualdino@briarcliffmanor.org), (-) Order Number #100880972 on May 08, 2020 07:05 AM (PDT) pursuant to License Agreement with ICC & NYSDOS. No further reproduction, no

100880972

ASTM—continued

D2609—15: Specification for Plastic Insert Fittings for Polyethylene (PE) Plastic Pipe
Table P2906.6

D2626/D2626M—04 (2012)e1: Specification for Asphalt-saturated and Coated Organic Felt Base Sheet Used in Roofing
Table R905.1.1(1), Table R905.9.2

***D2657—07: Standard Practice for Heat Fusion-joining of Polyolefin Pipe Fittings**
M2105.11.1, P2906.3.1, P2906.20.2, P3003.12.1

D2661—14: Specification for Acrylonitrile-butadiene-styrene (ABS) Schedule 40 Plastic Drain, Waste, and Vent Pipe and Fittings
Table P3002.1(1), Table P3002.1(2), Table P3002.2, Table P3002.3, P3003.3.2

D2665—14: Specification for Poly (Vinyl Chloride) (PVC) Plastic Drain, Waste and Vent Pipe and Fittings
Table P3002.1(1), Table P3002.1(2), Table P3002.2, Table P3002.3, Table AG101.1

D2672—14: Specification for Joints for IPS PVC Pipe Using Solvent Cement
Table P2906.4

D2683—14: Specification for Socket-type Polyethylene Fittings for Outside Diameter-controlled Polyethylene Pipe and Tubing
Table M2105.5, M2105.11.1, Table P2606.6, P2906.20.2, P3002.3, P3010.5

D2729—11: Specification for Poly (Vinyl Chloride) (PVC) Sewer Pipe and Fittings
P3009.11, Table P3302.1, Table AG101.1

D2737—2012A: Specification for Polyethylene (PE) Plastic Tubing
Table P2906.4, Table AG101.1

D2751—05: Specification for Acrylonitrile-butadiene-styrene (ABS) Sewer Pipe and Fittings
Table P3002.2, Table P3002.3

D2822/D2822M—05(2011)e1: Specification for Asphalt Roof Cement, Asbestos Containing
Table R905.9.2

D2823/D2823M—05(2011)e1: Specification for Asphalt Roof Coatings, Asbestos Containing
Table R905.9.2

D2824/D2824M—2013: Specification for Aluminum-pigmented Asphalt Roof Coatings, Nonfibered, Asbestos Fibered and Fibered without Asbestos
Table R905.9.2, Table R905.11.2

D2846/D2846M—14: Specification for Chlorinated Poly (Vinyl Chloride) (CPVC) Plastic Hot- and Cold-water Distribution Systems
Table M2101.1, Table P2906.4, Table P2906.5, Table P2906.6, P2906.9.1.2, P2906.9.1.3, Table AG101.1

***D2855—96(2010): Standard Practice for Making Solvent-cemented Joints with Poly (Vinyl Chloride) (PVC) Pipe and Fittings**
P3003.9.2

D2898—10: Test Methods for Accelerated Weathering of Fire-retardant-treated Wood for Fire Testing
R802.1.5.4, R802.1.5.8

D2949—10: Specification for 3.25-in. Outside Diameter Poly (Vinyl Chloride) (PVC) Plastic Drain, Waste and Vent Pipe and Fittings
Table P3002.1(1), Table P3002.1(2), Table P3002.2, Table P3002.3, Table AG101.1

D3019—08: Specification for Lap Cement Used with Asphalt Roll Roofing, Nonfibered, Asbestos Fibered and Nonasbestos Fibered
Table R905.9.2, Table R905.11.2

D3034—14a: Specification for Type PSM Poly (Vinyl Chloride) (PVC) Sewer Pipe and Fittings
Table P3002.2, Table P3002.3, Table P3202.1, Table AG101.1

D3035—15: Specification for Polyethylene (PE) Plastic Pipe (DR-PR) Based On Controlled Outside Diameter
Table M2105.4, Table AG101.1

D3138—04(2011): Standard Specification for Solvent Cements for Transition Joints Between Acrylonitrile-Butadiene-Styrene (ABS) and Poly (Vinyl Chloride) (PVC) Non-Pressure Piping Components
P3003.13.4

D3161/D3161M—15: Test Method for Wind-Resistance of Steep Slope Roofing Products (Fan Induced Method)
R905.2.4.1, Table R905.2.4.1, R905.16.6

D3201/D3201M—2013: Test Method for Hygroscopic Properties of Fire-retardant Wood and Wood-base Products
R802.1.5.9

D3212—07(2013): Specification for Joints for Drain and Sewer Plastic Pipes Using Flexible Elastomeric Seals
P3003.3.1, P3003.9.1, P3003.12.2

D3261—12E1: Specification for Butt Heat Fusion Polyethylene (PE) Plastic Fittings for Polyethylene (PE) Plastic Pipe and Tubing
Table M2101.1, Table M2105.5, M2105.11.1, M2105.13.3, Table P2606.6, P2906.20.2

INTERNATIONAL CODE COUNCIL®
Copyright © 2019 ICC & NYSDOS. ALL RIGHTS RESERVED. Accessed by Lauren Gualdino (lgualdino@briarcliffmanor.org), (-) Order Number #100880972 on May 08, 2020 07:05 AM (PDT) pursuant to License Agreement with ICC & NYSDOS. No further reproduction, no

100880972

ASTM—continued

D3309—96a(2002): Specification for Polybutylene (PB) Plastic Hot- and Cold-water Distribution System
Table M2101.1

D3311—11: Specification for Drain, Waste and Vent (DWV) Plastic Fittings Patterns
P3002.3

D3350—14: Specification for Polyethylene Plastic Pipe and Fitting Materials
Table M2101.1

D3462/D3462M—10A: Specification for Asphalt Shingles Made From Glass Felt and Surfaced with Mineral Granules
R905.2.4

D3468/D3468M—99(2013)E1: Specification for Liquid-applied Neoprene and Chlorosulfanated Polyethylene Used in Roofing and Waterproofing
R905.15.2

D3679—13: Specification for Rigid Poly (Vinyl Chloride) (PVC) Siding
R703.11

D3737—2012: Practice for Establishing Allowable Properties for Structural Glued Laminated Timber (Glulam)
R502.1.3, R602.1.3, R802.1.2

D3747—79(2007): Specification for Emulsified Asphalt Adhesive for Adhering Roof Insulation
Table R905.9.2, Table R905.11.2

D3909/D3909M—14: Specification for Asphalt Roll Roofing (Glass Felt) Surfaced with Mineral Granules
R905.2.8.2, R905.5.4, Table R905.9.2

D4022/D4022M—2007(2012)e1: Specification for Coal Tar Roof Cement, Asbestos Containing
Table R905.9.2

D4068—15: Specification for Chlorinated Polyethylene (CPE) Sheeting for Concealed Water Containment Membrane
P2709.2, P2709.2.2

D4318—10E1: Test Methods for Liquid Limit, Plastic Limit and Plasticity Index of Soils
R403.1.8.1

D4434/D4434M—12: Specification for Poly (Vinyl Chloride) Sheet Roofing
R905.13.2

D4479/D4479M—07(2012)e1: Specification for Asphalt Roof Coatings—asbestos-free
Table R905.9.2

D4551—12: Specification for Poly (Vinyl Chloride) (PVC) Plastic Flexible Concealed Water-containment Membrane
P2709.2, P2709.2.1

D4586/D4586M—07(2012)e1: Specification for Asphalt Roof Cement—asbestos-free
Table R905.9.2

D4601/D4601M—04(2012)e1: Specification for Asphalt-coated Glass Fiber Base Sheet Used in Roofing
Table R905.9.2, R905.11.2.1

D4637/D4637M—14E1: Specification for EPDM Sheet Used in Single-ply Roof Membrane
R905.12.2

D4829—11: Test Method for Expansion Index of Soils
R403.1.8.1

D4869/D4869M—15: Specification for Asphalt-saturated (Organic Felt) Underlayment Used in Steep Slope Roofing
R905.1.1, Table R905.1.1(1)

D4897/D4897M—01(2009): Specification for Asphalt Coated Glass-fiber Venting Base Sheet Used in Roofing
Table R905.9.2

D4990—1997a(2013): Specification for Coal Tar Glass Felt Used in Roofing and Waterproofing
Table R905.9.2

D5019—07a: Specification for Reinforced Nonvulcanized Polymeric Sheet Used in Roofing Membrane
R905.12.2

D5055—13E1: Specification for Establishing and Monitoring Structural Capacities of Prefabricated Wood I-joists
R502.1.2, R802.1.8

D5456—14B: Standard Specification for Evaluation of Structural Composite Lumber Products
R502.1.5, R602.1.5, R802.1.4

INTERNATIONAL CODE COUNCIL®
Copyright © 2019 ICC & NYSDOS. ALL RIGHTS RESERVED. Accessed by Lauren Gualdino (lgualdino@briarcliffmanor.org), (-) Order Number #100880972 on May 08, 2020 07:05 AM (PDT) pursuant to License Agreement with ICC & NYSDOS. No further reproduction, no

100880972

ASTM—continued

D5516—09: Test Method for Evaluating the Flexural Properties of Fire-retardant-treated Softwood Plywood Exposed to the Elevated Temperatures
R802.1.5.6

D5643/D5643M—06(2012)e1: Specification for Coal Tar Roof Cement Asbestos-free
Table R905.9.2

D5664—10: Test Methods For Evaluating the Effects of Fire-retardant Treatments and Elevated Temperatures on Strength Properties of Fire-retardant-treated Lumber
R802.1.5.7

D5665/D5665M—99a(2014)E1: Specification for Thermoplastic Fabrics Used in Cold-applied Roofing and Waterproofing
Table R905.9.2

D5726—98(2013): Specification for Thermoplastic Fabrics Used in Hot-applied Roofing and Waterproofing
Table R905.9.2

D6083—05e01: Specification for Liquid-applied Acrylic Coating Used in Roofing
Table R905.9.2, Table R905.11.2, Table R905.14.3, R905.15.2

D6162/D6162M—2000a(2015)E1: Specification for Styrene Butadiene Styrene (SBS) Modified Bituminous Sheet Materials Using a Combination of Polyester and Glass Fiber Reinforcements
Table R905.11.2

D6163/D6163M—2000(2015)E1: Specification for Styrene Butadiene Styrene (SBS) Modified Bituminous Sheet Materials Using Glass Fiber Reinforcements
Table R905.11.2

D6164/D6164M—11: Specification for Styrene Butadiene Styrene (SBS) Modified Bituminous Sheet Materials Using Polyester Reinforcements
Table R905.11.2

D6222/D6222M—11: Specification for Atactic Polypropylene (APP) Modified Bituminous Sheet Materials Using Polyester Reinforcements
Table R905.11.2

D6223/D6223M—02(2009)E1: Specification for Atactic Polypropylene (APP) Modified Bituminous Sheet Materials Using a Combination of Polyester and Glass Fiber Reinforcement
Table R905.11.2

D6298—13: Specification for Fiberglass-reinforced Styrene Butadiene Styrene (SBS) Modified Bituminous Sheets with a Factory Applied Metal Surface
Table R905.11.2

D6305—08(2015)E1: Practice for Calculating Bending Strength Design Adjustment Factors for Fire-retardant-treated Plywood Roof Sheathing
R802.1.5.6

D6380/D6380—03(2013)E1: Standard Specification for Asphalt Roll Roofing (Organic Felt)
Table R905.1.1(1), R905.2.8.2, R905.5.4

D6464—03a(2009)e1: Standard Specification for Expandable Foam Adhesives for Fastening Gypsum Wallboard to Wood Framing
R702.3.1.1

D6694/D6694M—08(2013)E1: Standard Specification for Liquid-applied Silicone Coating Used in Spray Polyurethane Foam Roofing Systems
Table R905.14.3, R905.15.2

D6754/D6754M—10: Standard Specification for Ketone-ethylene-ester-based Sheet Roofing
R905.13.2

D6757—2013: Specification for Underlayment Felt Containing Inorganic Fibers Used with Steep Slope Roofing
Table R905.1.1(1), R905.1.1

D6841—08: Standard Practice for Calculating Design Value Treatment Adjustment Factors for Fire-retardant-treated Lumber
R802.1.5.7

D6878/D6878M—13: Standard Specification for Thermoplastic-polyolefin-based Sheet Roofing
R905.13.2

D6947/D6947M—07(2013)E1: Standard Specification for Liquid Applied Moisture Cured Polyurethane Coating Used in Spray Polyurethane Foam Roofing System
Table R905.14.3, R905.15.2

INTERNATIONAL CODE COUNCIL®
Copyright © 2019 ICC & NYSDOS. ALL RIGHTS RESERVED. Accessed by Lauren Gualdino (lgualdino@briarcliffmanor.org), (-) Order Number #100880972 on May 08, 2020 07:05 AM (PDT) pursuant to License Agreement with ICC & NYSDOS. No further reproduction, no

100880972

ASTM—continued

D7032—14: Standard Specification for Establishing Performance Ratings for Wood-plastic Composite Deck Boards and Guardrail Systems (Guards or Handrails)
R507.2.2, R507.2.2.1, 507.2.2.3, 507.2.2.4

D7158—D7158M—2016: Standard Test Method for Wind Resistance of Asphalt Shingles (Uplift Force/Uplift Resistance Method)
R905.2.4.1, Table R905.2.4.1

D7254—15: Standard Specification for Polypropylene (PP) siding
Table R703.3(1), R703.14

D7425/D7425M—13: Standard Specification for Spray Polyurethane Foam Used for Roofing Application
R905.14.2

D7672—14: Standard Specification for Evaluating Structural Capacities of Rim Board Products and Assemblies
R502.1.7, R602.1.7, R802.1.7

D7793—13: Standard Specification for Insulated Vinyl Siding
R703.13, Table R703.3(1)

E84—2016: Standard Test Method for Surface Burning Characteristics of Building Materials
R202, R302.9.3, R302.9.4, R302.10.1, R302.10.2, R316.3, R316.5.9, R316.5.11, R507.2.2.2, R703.14.3, R802.1.5, M1601.3, M1601.5.2, P2801.6

***E96/E96M—2000: Test Method for Water Vapor Transmission of Materials**
R202, Table R806.5, M1411.6, M1601.4.6

E108—2016: Test Methods for Fire Tests of Roof Coverings
R302.2.4, R902.1

E119—2016: Test Methods for Fire Tests of Building Construction and Materials
Table R302.1(1), Table R302.1(2), R302.2.1, R302.2.2, R302.3, R302.4.1, R302.11.1, R606.2.2

E136—2016: Test Method for Behavior of Materials in a Vertical Tube Furnace at 750°C
R202, R302.11

E283—04(2012): Test Method for Determining the Rate of Air Leakage through Exterior Windows, Curtain Walls and Doors Under Specified Pressure Differences across the Specimen
R202, N1102.4.5

E330/E330M—14: Test Method for Structural Performance of Exterior Windows, Curtain Walls and Doors by Uniform Static Air Pressure Difference
R609.4, R609.5, R609.6.2, R703.1.2

E331—00(2009): Test Method for Water Penetration of Exterior Windows, Skylights, Doors and Curtain Walls by Uniform Static Air Pressure Difference
R703.1.1

***E779—10: Standard Test Method for Determining Air Leakage Rate by Fan Pressurization**
N1102.4.1.2

E814—2013A: Standard Test Method for Fire Tests of Penetration Firestop Systems
R302.4.1.2

E970—14: Standard Test Method for Critical Radiant Flux of Exposed Attic Floor Insulation Using a Radiant Heat Energy Source
R302.10.5

E1509—12: Standard Specification for Room Heaters, Pellet Fuel-burning Type
M1410.1

***E1602—03e1: Guide for Construction of Solid Fuel Burning Masonry Heaters**
R1002.2

E1827—11: Standard Test Methods for Determining Airtightness of Building Using an Orifice Blower Door
N1102.4.1.2

E1886—13A: Test Method for Performance Impact Protective Systems Impacted by Missile(s) and Exposed to Cyclic Pressure Differentials
R301.2.1.2, R609.6.1, R609.6.2, Table R703.11.2

E1996—2014a: Standard Specification for Performance of Exterior Windows, Curtain Walls, Doors and Impact Protective Systems Impacted by Windborne Debris in Hurricanes
R301.2.1.2, R301.2.1.2.1, R609.6.1, R609.6.2

E2178—2013: Standard Test Method for Air Permeance of Building Materials
R202

INTERNATIONAL CODE COUNCIL®
Copyright © 2019 ICC & NYSDOS. ALL RIGHTS RESERVED. Accessed by Lauren Gualdino (lgualdino@briarcliffmanor.org), (-) Order Number #100880972 on May 08, 2020 07:05 AM (PDT) pursuant to License Agreement with ICC & NYSDOS. No further reproduction, no

100880972

ASTM—continued

E2231—15: Standard Practice for Specimen Preparation and Mounting of Pipe and Duct Insulation Materials to Assess Surface Burning Characteristics
M1601.3

E2273—03(2011): Standard Test Method for Determining the Drainage Efficiency of Exterior Insulation and Finish Systems (EIFS) Clad Wall Assemblies
R703.9.2

E2568—09e1: Standard Specification for PB Exterior Insulation and Finish Systems
R703.9.1, R703.9.2

E2570/E2570M—07(2014)E1: Standard Test Methods for Evaluating Water-resistive Barrier (WRB) Coatings Used Under Exterior Insulation and Finish Systems (EIFS) or EIFS with Drainage
R703.9.2

E2634—11(2015): Standard Specification for Flat Wall Insulating Concrete Form (ICF) Systems
R404.1.3.3.6.1, R608.4.4

F405—05: Specification for Corrugated Polyethylene (PE) Pipe and Fittings
Table P3009.11, Table P3302.1, Table AG101.1

F409—12: Specification for Thermoplastic Accessible and Replaceable Plastic Tube and Tubular Fittings
Table P2701.1, P2702.2, P2702.3

F437—15: Specification for Threaded Chlorinated Poly (Vinyl Chloride) (CPVC) Plastic Pipe Fittings, Schedule 80
Table P2906.6

F438—15: Specification for Socket-type Chlorinated Poly (Vinyl Chloride) (CPVC) Plastic Pipe Fittings, Schedule 40
Table P2906.6

F439—13: Specification for Chlorinated Poly (Vinyl Chloride) (CPVC) Plastic Pipe Fittings, Schedule 80
Table P2906.6

F441/F441M—15: Specification for Chlorinated Poly (Vinyl Chloride) (CPVC) Plastic Pipe, Schedules 40 and 80
Table P2906.4, Table P2906.5, Table AG101.1

F442/F442M—13E1: Specification for Chlorinated Poly (Vinyl Chloride) (CPVC) Plastic Pipe (SDR-PR)
Table P2906.4, Table P2906.5, Table AG101.1

F477—14: Specification for Elastomeric Seals (Gaskets) for Joining Plastic Pipe
P2906.18, P3003.13

F493—14: Specification for Solvent Cements for Chlorinated Poly (Vinyl Chloride) (CPVC) Plastic Pipe and Fittings
P2906.9.1.2, P2906.9.1.3, P2906.18.2

F628—12E1: Specification for Acrylonitrile-butadiene-styrene (ABS) Schedule 40 Plastic Drain, Waste and Vent Pipe with a Cellular Core
Table P3002.1(1), Table P3002.1(2), Table P3002.2, Table P3002.3, P3003.3.2, Table AG101.1

F656—15: Specification for Primers for Use in Solvent Cement Joints of Poly (Vinyl Chloride)(PVC) Plastic Pipe and Fittings
P2906.9.1.4, P3003.9.2

F714—13: Specification for Polyethylene (PE) Plastic Pipe (SDR-PR) Based on Outside Diameter
Table P3002.2, Table P3002.1(2), P3010.4

F844—07a(2013): Standard Specification for Washers, Steel, Plain (Flat), Unhardened for General Use
Table R507.2.3

F876—15A: Specification for Cross-linked Polyethylene (PEX) Tubing
Table M2101.1, Table P2906.4, Table P2906.5, Table AG101.1

F877—2011A: Specification for Cross-linked Polyethylene (PEX) Plastic Hot- and Cold-water Distribution Systems
Table M2101.1, Table P2906.6

F891—10: Specification for Coextruded Poly (Vinyl Chloride) (PVC) Plastic Pipe with a Cellular Core
Table P3002.1(1), Table P3002.1(2), Table P3002.2, Table P3302.1, Table AG101.1

F1055—13: Specification for Electrofusion Type Polyethylene Fittings for Outside Diameter Controlled Polyethylene and Crosslinked Polyethylene Pipe and Tubing
Table M2105.5, M2105.11.2, Table P2606.6, P2906.20.2

F1281—11: Specification for Cross-linked Polyethylene/Aluminum/Cross-linked Polyethylene (PEX-AL-PEX) Pressure Pipe
Table M2101.1, Table P2906.4, Table P2906.5, Table P2906.6, P2506.12.1, Table AG101.1

INTERNATIONAL CODE COUNCIL®
Copyright © 2019 ICC & NYSDOS. ALL RIGHTS RESERVED. Accessed by Lauren Gualdino (lgualdino@briarcliffmanor.org), (-) Order Number #100880972 on May 08, 2020 07:05 AM (PDT) pursuant to License Agreement with ICC & NYSDOS. No further reproduction, no

100880972

ASTM—continued

F1282—10: Specification for Polyethylene/Aluminum/Polyethylene (PE-AL-PE) Composite Pressure Pipe
Table M2101.1, Table P2906.4, Table P2906.5, Table P2906.6, P2906.12.1, Table AG101.1

F1412—09: Specification for Polyolefin Pipe and Fittings for Corrosive Waste Drainage
Table P3002.1(2), Table P3002.2, Table P3002.3, P3003.11.1

F1488—14: Specification for Coextruded Composite Pipe
Table P3002.1(1), Table P3002.1(2), Table P3002.2, Table P3009.11

F1504—2014: Standard Specification for Folded Poly (Vinyl Chloride) (PVC) for Existing Sewer and Conduit Rehabilitation
P3011.4

F1554—15: Specification for Anchor Bolts, Steel, 36, 55 and 105-ksi Yield Strength
R608.5.2.2

F1667—15: Specification for Driven Fasteners, Nails, Spikes and Staples
R317.3, Table R507.2.3, Table R602.3(1), R703.3.3, R703.6.3, Table R703.15.1, Table R703.15.2, R905.2.5

F1807—15: Specification for Metal Insert Fittings Utilizing a Copper Crimp Ring for SDR9 Cross-linked Polyethylene (PEX) Tubing and SDR9 Polyethylene of Raised Temperature (PE-RT) Tubing
Table M2101.1, Table P2906.6

F1866—13: Specification for Poly (Vinyl Chloride) (PVC) Plastic Schedule 40 Drainage and DWV Fabricated Fittings
Table P3002.3

F1871—2011: Standard Specification for Folded/Formed Poly (Vinyl Chloride) Pipe Type A for Existing Sewer and Conduit Rehabilitation
P3011.4

F1924—12: Standard Specification for Plastic Mechanical Fittings for Use on Outside Diameter Controlled Polyethylene Gas Distribution Pipe and Tubing
M2105.11.1

F1960—15: Specification for Cold Expansion Fittings with PEX Reinforcing Rings for Use with Cross-linked Polyethylene (PEX) Tubing
Table M2101.1, Table P2906.6

F1970—12E1: Standard Specification for Special Engineered Fittings, Appurtenances or Valves for Use in Poly (Vinyl Chloride) (PVC) or Chlorinated Poly (Vinyl Chloride) (CPVC) Systems
M2105.5, Table 2903.9.4

F1973—13E1: Standard Specification for Factory Assembled Anodeless Risers and Transition Fittings in Polyethylene (PE) and Polyamide 11 (PA 11) Fuel Gas Distribution Systems
G2415.15.2

F1974—09(2015): Specification for Metal Insert Fittings for Polyethylene/Aluminum/Polyethylene and Cross-linked Polyethylene/Aluminum/Cross-linked Polyethylene Composite Pressure Pipe
Table P2906.6, P2906.12.1

F1986—01(2011): Multilayer Pipe Type 2, Compression Joints for Hot and Cold Drinking Water Systems
Table P2906.4, Table P2906.5, Table P2906.6

F2080—15: Specification for Cold-expansion Fittings with Metal Compression-sleeves for Cross-linked Polyethylene (PEX) Pipe
Table P2906.6

F 2090—17: Specification for Window Fall Prevention Devices with Emergency Escape (Egress) Release Mechanisms
R310.1.1, R312.2.1, R312.2.2

F2098—08: Standard Specification for Stainless Steel Clamps for Securing SDR9 Cross-linked Polyethylene (PEX) Tubing to Metal Insert and Plastic Insert Fittings
Table M2101.1, Table P2906.6

F2159—14: Standard Specification for Plastic Insert Fittings Utilizing a Copper Crimp Ring for SDR9 Cross-linked Polyethylene (PEX) Tubing and SDR9 Polyethylene of Raised Temperature (PE-RT) Tubing
Table P2906.6

F2208—14: Standard Safety Specifications for Residential Pool Alarms: R326.7

F2262—09: Standard Specification for Cross-linked Polyethylene/Aluminum/Cross-linked Polyethylene Tubing OD Controlled SDR9
Table P2906.4, Table P2906.5

INTERNATIONAL CODE COUNCIL®
Copyright © 2019 ICC & NYSDOS. ALL RIGHTS RESERVED. Accessed by Lauren Gualdino (lgualdino@briarcliffmanor.org), (-) Order Number #100880972 on May 08, 2020 07:05 AM (PDT) pursuant to License Agreement with ICC & NYSDOS. No further reproduction, no

100880972

ASTM—continued

F2389—15: Standard for Pressure-rated Polypropylene (PP) Piping Systems
Table M2105.12.1, Table P2906.4, Table P2906.5, Table P2906.6, P2906.11.1, Table AG101.1

F2434—14: Standard Specification for Metal Insert Fittings Utilizing a Copper Crimp Ring for Polyethylene/Aluminum/Cross-linked Polyethylene (PEX-AL-PEX) Tubing
Table P2906.6

F2623—14: Standard Specification for Polyethylene of Raised Temperature (PE-RT) SDRG Tubing
Table M2101.1, Table AG101.1

F2735—09: Standard Specification for Plastic Insert Fittings for SDR9 Cross-linked Polyethylene (PEX) and Polyethylene of Raised Temperature (PE-RT) Tubing
Table M2101.1, Table P2906.6

F2769—14: Polyethylene or Raised Temperature (PE-RT) Plastic Hot and Cold-Water Tubing and Distribution Systems
Table M2101.1, Table P2906.4, Table P2906.5, Table P2906.6, Table AG101.1

F2806—10(2015): Standard Specification for Acrylonitrile-butadiene-styrene (ABS) Plastic Pipe (Metric SDR-PR)
Table M2101.1

F2855—12: Standard Specification for Chlorinated Poly (Vinyl Chloride)/Aluminum/Chlorinated Poly (Vinyl Chloride) (CPVC AL CPVC) Composite Pressure Tubing
Table P2906.4, Table P2906.5, Table AG101.1

F2945—2015: Standard Specification for Polyamide 11 Gas Pressure Pipe, Tubing and Fittings
G2414.6

F2969—12: Standard Specification for Acrylonitrile-butadiene-styrene (ABS) IPS Dimensioned Pressure Pipe
Table M2101.1

AWC

American Wood Council
222 Catoctin Circle SE, Suite 201
Leesburg, VA 20175

***AWC STJR—2015: Span Tables for Joists and Rafters**
R502.3, R802.4.1, R802.5.1

***ANSI/AWC WFCM—2018: Wood Frame Construction Manual for One- and Two-family Dwellings**
R301.1.1, R301.2.1.1, R602.10.8.2, R608.9.2, Figure R608.9(9), R608.9.3, R608.10

***ANSI/AWC NDS—2018: National Design Specification (NDS) for Wood Construction—with 2018 Supplement**
R404.2.2, R502.2, Table R503.1, R507.2.1, R602.3, R608.9.2, R608.9.3, Table R703.15.1, Table R703.15.2, R802.2

***ANSI/AWC PWF—2015: Permanent Wood Foundation Design Specification**
R317.3.2, R401.1, R404.2.3

AWPA

American Wood Protection Association
P.O. Box 361784
Birmingham, AL 35236-1784

C1—03: All Timber Products—Preservative Treatment by Pressure Processes
R902.2

M4—15: Standard for the Care of Preservative-treated Wood Products
R317.1.1, R318.1.2

U1—16: USE CATEGORY SYSTEM: User Specification for Treated Wood Except Commodity Specification H
R317.1, R402.1.2, R504.3, R703.6.3, R905.7.5, Table R905.8.5, R905.8.6

AWS

American Welding Society
8669 NW 36 Street, #130
Miami, FL 33166

A5.8M/A5.8—2011: Specifications for Filler Metals for Brazing and Braze Welding
P3003.6.1

ANSI/AWS A5.31M/A5.31—2012: Specification for Fluxes for Brazing and Braze Welding Edition: 2nd
M2103.3, M2202.2, P2906.15

INTERNATIONAL CODE COUNCIL®
Copyright © 2019 ICC & NYSDOS. ALL RIGHTS RESERVED. Accessed by Lauren Gualdino (lgualdino@briarcliffmanor.org), (-) Order Number #100880972 on May 08, 2020 07:05 AM (PDT) pursuant to License Agreement with ICC & NYSDOS. No further reproduction, no

100880972

AWWA

American Water Works Association
6666 West Quincy Avenue
Denver, CO 80235

C104/A21.4—13: Cement-mortar Lining for Ductile-iron Pipe and Fittings
P2906.4

C110/A21.10—12: Ductile-iron and Gray-iron Fittings
Table P2906.6, P3002.3

C115/A21.15—11: Flanged Ductile-iron Pipe with Ductile-iron or Gray-iron Threaded Flanges
Table P2906.4

C151/A21.51—09: Ductile-iron Pipe, Centrifugally Cast, for Water
Table P2906.4

C153/A21.53—11: Ductile-iron Compact Fittings for Water Service
Table P2906.6

C500—09: Standard for Metal-seated Gate Valves for Water Supply Service
Table P2903.9.4

C504—10: Standard for Rubber-seated Butterfly Valves
Table P2903.9.4

C507—15: Standard for Ball Valves, 6 In. Through 60 In. (150 mm through 1,500 mm)
Table P2903.9.4

C510—07: Double Check Valve Backflow Prevention Assembly
Table P2902.3, P2902.3.6

C511—07: Reduced-pressure Principle Backflow Prevention Assembly
Table P2902.3, P2902.3.5, P2902.5.1

C901—16: Polyethylene (PE) Pressure Pipe and Tubing $^1/_2$ in. (13 mm) through 3 in. (76 mm) for Water Service
P2906.4, Table AG101.1

C903—16: Polyethylene-aluminum-polyethylene (PE-AL-PE) Composite Pressure Pipe, 12 mm ($^1/_2$ in.) through 50 mm (2 in.), for Water Service
Table M2101

C904—16: Cross-linked Polyethylene (PEX) Pressure Tubing, $^1/_2$ in. (13 mm) through 3 in. (76 mm) for Water Service
P2906.4, Table AG101.1

CEN

European Committee for Standardization (EN)
Central Secretariat
Rue de Stassart 36
B-10 50 Brussels

EN 15250-2007: Slow Heat Release Appliances Fired by Solid Fuel Requirements and Test Methods
R1002.2

CISPI

Cast Iron Soil Pipe Institute
2401 Fieldcrest Drive
Mundelein, IL 60060

301—12: Standard Specification for Hubless Cast Iron Soil Pipe and Fittings for Sanitary and Storm Drain, Waste and Vent Piping Applications
Table P3002.1(1), Table P3002.1(2), Table P3002.2, Table P3002.3, Table P3302.1

310—12: Standard Specification for Coupling for Use in Connection with Hubless Cast Iron Soil Pipe and Fittings for Sanitary and Storm Drain, Waste and Vent Piping Applications
P3003.4.3

INTERNATIONAL CODE COUNCIL®
Copyright © 2019 ICC & NYSDOS. ALL RIGHTS RESERVED. Accessed by Lauren Gualdino (lgualdino@briarcliffmanor.org), (-) Order Number #100880972 on May 08, 2020 07:05 AM (PDT) pursuant to License Agreement with ICC & NYSDOS. No further reproduction, no

100880972

CPA

Composite Panel Association
19465 Deerfield Avenue, Suite 306
Leesburg, VA 20176

ANSI A135.4—2012: Basic Hardboard
Table R602.3(2)

ANSI A135.5—2012: Prefinished Hardboard Paneling
R702.5

ANSI A135.6—2012: Engineered Wood Siding
R703.5

ANSI A135.7—2012: Engineered Wood Trim
R703.5

A208.1—2016: Particleboard
R503.3.1, R602.1.9, R605.1

CPSC

Consumer Product Safety Commission
4330 East-West Highway
Bethesda, MD 20814

16 CFR, Part 1201—(2002): Safety Standard for Architectural Glazing
R308.1.1, R308.3.1, Table R308.3.1(1)

16 CFR, Part 1209—(2002): Interim Safety Standard for Cellulose Insulation
R302.10.3

16 CFR, Part 1404—(2002): Cellulose Insulation
R302.10.3

CSA

CSA Group
8501 East Pleasant Valley Road
Cleveland, OH 44131-5516

AAMA/WDMA/CSA 101/I.S.2/A440—17: North American Fenestration Standard/Specification for Windows, Doors and Unit Skylights
R308.6.9, R609.3, N1102.4.3

ANSI/CSA FC I—2014: Fuel Cell Technologies—Part 3-100; Stationary fuel cell power systems-Safety
M1903.1

ASME A112.3.4—2013/CSA B45.9—13: Macerating Toilet Systems and Related Components
Table P2701.1, P3007.5

ASME A112.4.2—2015/CSA B45.16—15: Water-closet Personal Hygiene Device
P2722.5

ASME A112.18.1—2017/CSA B125.1—2017: Plumbing Supply Fittings
Table P2701.1, P2708.4, P2708.5, P2722.1, P2722.3, P2902.2, Table P2903.9.4

ASME A112.18.2—2015/CSA B125.2—2015: Plumbing Waste Fittings
Table P2701.1, P2702.2

A112.18.6—2017/CSA B125.6—2017: Flexible Water Connectors
P2906.7

ASME A112.19.1—2013/CSA B45.2—13: Enameled Cast-iron and Enameled Steel Plumbing Fixtures
Table P2701.1, P2711.1

ASME A112.19.2—2013/CSA B45.1—13: Ceramic Plumbing Fixtures
Table P2701.1, P2705.1, P2711.1, P2712.1, P2712.2, P2712.9

ASME A112.19.3—2008/CSA B45.4—08 (R2013): Stainless Steel Plumbing Fixtures
Table P2701.1, P2705.1, P2711.1, P2712.1

ASSE 1002—2015/ASME A112.1002—2015/CSA B125.12—15: Anti-Siphon Fill Valves
Table P2701.1, Table P2902.3, P2902.4.1

INTERNATIONAL CODE COUNCIL®
Copyright © 2019 ICC & NYSDOS. ALL RIGHTS RESERVED. Accessed by Lauren Gualdino (lgualdino@briarcliffmanor.org), (-) Order Number #100880972 on May 08, 2020 07:05 AM (PDT) pursuant to License Agreement with ICC & NYSDOS. No further reproduction, no

100880972

CSA—continued

ASSE 1016—2017/ASME 112.1016—2017/CSA B125.16—2017: Performance Requirements for Automatic Compensating Valves for Individual Showers and Tub/Shower Combinations
Table P2701.1, P2708.4, P2722.2

ASSE 1070—2015/ASME A112.1070—2015/CSA B125.70—15: Performance Requirements for Water-temperature-limiting Devices
P2713.3, P2721.2, P2724.1

A112.19.5—2011/CSA B45.15—2011: Flush Valves and Spuds for Water-closets, Urinals and Tanks
Table P2701.1

A112.19.7—2017/CSA B45.10—2017: Hydromassage Bathtub Systems
Table P2701.1

***ASME A17.1/CSA B44—2016: Safety Code for Elevators and Escalators**
R321.1

CSA 8—93: Requirements for Gas Fired Log Lighters for Wood Burning Fireplaces
G2433.1

CSA A257.1—2014: Non-reinforced Circular Concrete Culvert, Storm Drain, Sewer Pipe and Fittings
Table P3002.2

A257.2—14: Reinforced Circular Concrete Culvert, Storm Drain, Sewer Pipe and Fittings
Table P3002.2, P3003.13

A257.3—14: Joints for Circular Concrete Sewer and Culvert Pipe, Manhole Sections and Fittings Using Rubber Gaskets
P3003.5, P3003.13

B55.1—2015: Test Method for Measuring Efficiency and Pressure Loss of Drain Water Heat Recovery Units
N1103.5.4

B55.2—2015: Drain Water Heat Recovery Units
N1103.5.4

B64.1.1—16: Vacuum Breakers, Atmospheric Type (AVB)
Table P2902.3, P2902.3.2

B64.1.2—16: Pressure Vacuum Breakers (PVB)
Table P2902.3, P2902.3.4

B64.1.3—16: Spill Resistant Pressure Vacuum Breakers (SRPVB)
Table P2902.3

B64.2—16: Vacuum Breakers, Hose Connection Type (HCVB)
Table P2902.3, P2902.3.2

B64.2.1—16: Hose Connection Vacuum Breakers (HCVB) with Manual Draining Feature
Table P2902.3, P2902.3.2

B64.2.1.1—16: Hose Connection Dual Check Vacuum Breakers (HCDVB)
Table P2902.3, P2902.3.2

B64.2.2—16: Vacuum Breakers, Hose Connection Type (HCVB) with Automatic Draining Feature
Table P2902.3, P2902.3.2

B64.3—16: Dual Check Backflow Preventers with Atmospheric Port (DCAP)
Table P2902.3, P2902.3.2, P2902.5.1

B64.4—16: Backflow Preventers, Reduced Pressure Principle Type (RP)
Table P2902.3, P2902.3.5, P2903.5.1

B64.4.1—16: Reduced Pressure Principle for Fire Sprinklers (RPF)
Table P2902.3, P2902.3.5

B64.5—16: Double Check Backflow Preventers (DCVA)
Table P2902.3, P2902.3.6

B64.5.1—16: Double Check Valve Backflow Preventers, Type for Fire Systems (DCVAF)
Table P2902.3, P2902.3.6

B64.6—16: Dual Check Valve Backflow Preventers (DuC)
Table P2902.3, P2902.3.7

B64.7—16: Laboratory Faucet Vacuum Breakers (LFVB)
Table P2902.3, P2902.3.2

INTERNATIONAL CODE COUNCIL®
Copyright © 2019 ICC & NYSDOS. ALL RIGHTS RESERVED. Accessed by Lauren Gualdino (lgualdino@briarcliffmanor.org), (-) Order Number #100880972 on May 08, 2020 07:05 AM (PDT) pursuant to License Agreement with ICC & NYSDOS. No further reproduction, no

100880972

CSA—continued

B125.3—12: Plumbing Fittings
Table P2701.1, P2713.3, P2721.2, Table P2902.3, P2902.4.1, Table P2903.9.4

B137.1—16: Polyethylene (PE) Pipe, Tubing and Fittings for Cold Water Pressure Services
Table P2906.4, Table P2906.6

B137.2—16: Polyvinylchloride PVC Injection-moulded Gasketed Fittings for Pressure Applications
Table P2906.6

B137.3—16: Rigid Poly (Vinyl Chloride) (PVC) Pipe for Pressure Applications
Table P2906.4, Table P2906.6, P3003.9.2, Table AG101.1

B137.5—16: Cross-linked Polyethylene (PEX) Tubing Systems for Pressure Applications
Table P2906.4, Table P2906.5, Table P2906.6, Table AG101.1

B137.6—16: Chlorinated polyvinylchloride CPVC Pipe, Tubing and Fittings For Hot- and Cold-water Distribution Systems
Table P2906.4, Table P2906.5, Table 2906.6, Table AG101.1

B137.9—16: Polyethylene/Aluminum/Polyethylene (PE-AL-PE) Composite Pressure Pipe Systems
Table M2101.1, Table P2906.4, P9506.12.1

B137.10—13: Cross-linked Polyethylene/Aluminum/Cross-linked Polyethylene (PE-AL-PE) Composite Pressure Pipe Systems
Table M2101.1, Table P2906.4, Table P2906.5, Table P2906.6, P2906.12.1

B137.11—16: Polypropylene (PP-R) Pipe and Fittings for Pressure Applications
Table P2906.4, Table P2906.5, Table P2906.6, Table AG101.1

B137.18—13: Polyethylene of Raised Temperature (PE-RT) Tubing Systems for Pressure Applications
Table M2101.1, Table M2105.4, Table M2105.5, Table P2906.4, Table P2906.5, Table P2906.6

B181.1—15: Acrylonitrile-butadiene-styrene (ABS) Drain, Waste and Vent Pipe and Pipe Fittings
Table P3002.1(1), Table P3002.1(2), Table P3002.3, P3003.3.2

B181.2—15: Polyvinylchloride (PVC) and chlorinated polyvinylchloride (CPVC) Drain, Waste and Vent Pipe and Pipe Fittings
Table P3002.1(1), Table P3002.1(2), P3003.9.2, P3008.3

B181.3—15: Polyolefin and polyvinylidene (PVDF) Laboratory Drainage Systems
Table P3002.1(1), Table P3002.1(2), Table P3002.2, Table P3002.3, P3003.11.1

B182.2—11: PSM Type polyvinylchloride (PVC) Sewer Pipe and Fittings
Table P3002.2, Table P3302.1

B182.4—15: Profile polyvinylchloride (PVC) Sewer Pipe & Fittings
Table P3002.2, Table P3302.1

B182.6—15: Profile Polyethylene (PE) Sewer Pipe and Fittings for leak-proof Sewer Applications
Table P3302.1

B182.8—15: Profile Polyethylene (PE) Storm Sewer and Drainage Pipe and Fittings
Table P3302.1

B356—10: Water Pressure Reducing Valves for Domestic Water Supply Systems
P2903.3.1

B483.1—07(R2012): Drinking Water Treatment Systems
P2909.1, P2909.2

B602—15: Mechanical Couplings for Drain, Waste and Vent Pipe and Sewer Pipe
P3003.3.1, P3003.4.3,P3003.5, P3003.9.1, P3003.10, P3003.12.2, P3003.13

CSA B45.5—17/IAPMO Z124—17: Plastic Plumbing Fixtures
Table P2701.1, P2711.1, P2711.2, P2712.1

C22.2 No. 218.1—M89(R2011): Spas, Hot Tubs and Associated Equipment
M2006.1

C22.2 No. 236—15: Heating and Cooling Equipment
M2006.1

CSA C448 Series—16: Design and Installation of Earth Energy Systems
Table M2105.4, Table M2105.5

CSA O325—07: Construction Sheathing
R503.2.1, R602.1.8, R604.1, R803.2.1

O437-Series—93: Standards on OSB and Waferboard (Reaffirmed 2006)
R503.2.1, R602.1.8, R604.1, R803.2.1

INTERNATIONAL CODE COUNCIL®
Copyright © 2019 ICC & NYSDOS. ALL RIGHTS RESERVED. Accessed by Lauren Gualdino (lgualdino@briarcliffmanor.org), (-) Order Number #100880972 on May 08, 2020 07:05 AM (PDT) pursuant to License Agreement with ICC & NYSDOS. No further reproduction, no

100880972

CSA—continued

CAN/CSA/C22.2 No. 60335-2-40—2012: Safety of Household and Similar Electrical Appliances, Part 2-40: Particular Requirements for Electrical Heat Pumps, Air-Conditioners and Dehumidifiers
M1403.1, M1412.1, M1413.1

CSSB

Cedar Shake & Shingle Bureau
P.O. Box 1178
Sumas, WA 98295-1178

CSSB—97: Grading and Packing Rules for Western Red Cedar Shakes and Western Red Shingles of the Cedar Shake and Shingle Bureau
R702.6, R703.6

DASMA

Door & Access Systems Manufacturers Association International
1300 Sumner Avenue
Cleveland, OH 44115-2851

105—2016: Test Method for Thermal Transmittance and Air Infiltration of Garage Doors and Rolling Doors
N1101.10.3

108—2017: Standard Method for Testing Garage Doors, Rolling Doors and Flexible Doors; Determination of Structural Performance Under Uniform Static Air Pressure Difference
R609.4

115—2016: Standard Method for Testing Sectional Garage Doors, Rolling Doors and Flexible Doors: Determination of Structural Performance Under Missile Impact and Cyclic Wind Pressure
R301.2.1.2

DOC

United States Department of Commerce
1401 Constitution Avenue, NW
Washington, DC 20230

PS 1—09: Structural Plywood
R404.2.1, Table R404.2.3, R503.2.1, R602.1.8, R604.1, R803.2.1

PS 2—10: Performance Standard for Wood-based Structural-use Panels
R404.2.1, Table R404.2.3, R503.2.1, R602.1.8, R604.1, R803.2.1

PS 20—05: American Softwood Lumber Standard
R404.2.1, R502.1.1, R602.1.1, R802.1.1

DOTn

U.S. Department of Transportation
1200 New Jersey Avenue SE
East Building, 2nd floor
Washington, DC 20590

49 CFR, Parts 192.281(e) & 192.283 (b) (2009): Transportation of Natural and Other Gas by Pipeline: Minimum Federal Safety Standards
G2414.6.1

FEMA

Federal Emergency Management Agency
500 C Street SW
Washington, DC 20472

***FEMA TB-2—08: Flood Damage-resistant Materials Requirements**
R322.1.8

***FEMA TB-11—01: Crawlspace Construction for Buildings Located in Special Flood Hazard Area**
R408.7

INTERNATIONAL CODE COUNCIL®
Copyright © 2019 ICC & NYSDOS. ALL RIGHTS RESERVED. Accessed by Lauren Gualdino (lgualdino@briarcliffmanor.org), (-) Order Number #100880972 on May 08, 2020 07:05 AM (PDT) pursuant to License Agreement with ICC & NYSDOS. No further reproduction, no

100880972

FM

FM Approvals
Headquarters Office
1151 Boston-Providence Turnpike
P.O. Box 9102
Norwood, MA 02062

4450—(1989): Approval Standard for Class 1 Insulated Steel Deck Roofs—with Supplements through July 1992
R906.1

4880—(2015): Approval Standard for Class 1 Rating of Building Panels or Interior Finish Materials
R316.6

GA

Gypsum Association
962 Wayne Ave, Suite 620
Silver Springs, MD 20910

***GA-253—2012: Application of Gypsum Sheathing**
Table R602.3(1)

HPVA

Hardwood Plywood & Veneer Association
1825 Michael Faraday Drive
Reston, Virginia 20190

ANSI/HPVA HP-1—2016: American National Standard for Hardwood and Decorative Plywood
R702.5

HUD

U.S. Department of Housing and Urban Development
451 7th Street SW
Washington, DC 20410

***24 CFR Part 3285 (2016): Model Manufactured Home Installation Standards, with modifications through 2016**
AE401.2, AE401.3, AE402.4

HVI

Home Ventilating Institute
1000 North Rand Road Suite 214
Wauconda, Il 60084

916—09 Airflow Test Procedure
Table N1103.6.1

IAPMO

IAPMO Group
4755 E. Philadelphia Street
Ontario, CA 91761-USA

CSA B45.5—17/IAPMO Z124—2017: Plastic Plumbing Fixtures
Table P2701.1, P2711.1, P2711.2, P2712.1

ICC

International Code Council, Inc.
500 New Jersey Avenue NW
6th Floor
Washington, DC 20001

***ANSI/RESNET/ICC 301—2014: Standard for the Calculation and Labeling of the Energy Performance of Low-Rise Residential Buildings using the Energy Rating Index, First published March 7, 2014. Republished 2016, including Addenda D, E, G and K.**
N1106.3

***ANSI/RESNET/ICC 380—2016: Standard for Testing Airtightness of Building Enclosures, Airtightness of Heating and Cooling Air Distribution and Airflow of Mechanical Ventilation Systems**
N1102.4.1.2

INTERNATIONAL CODE COUNCIL®
Copyright © 2019 ICC & NYSDOS. ALL RIGHTS RESERVED. Accessed by Lauren Gualdino (lgualdino@briarcliffmanor.org), (-) Order Number #100880972 on May 08, 2020 07:05 AM (PDT) pursuant to License Agreement with ICC & NYSDOS. No further reproduction, no

100880972

ICC—continued

***BCNYS—20: Building Code of New York State**
R101.2, R202, R301.1.1, R301.1.3, R301.2.1.1, R301.2.2.1.1, R301.2.2.1.2, Table R302.1(1), Table R302.1(2), R301.3, R302.2.1, R302.2.2, R302.3, R308.5, R320.1, R320.1.1, R321.3, R403.1.8, Table R602.10.3(3), Table R606.12.2.1, R609.2, R802.1.5.4, R905.10.3, G2402.3

***EBCNYS—20: Existing Building Code of New York State**
R101.1.1

***ECCCNYS—20: Energy Conservation Construction Code of New York State**
N1101.1, N1101.13.1, N1103.8, Table N1105.5.2(1)

***ECCCNYS—2010: Energy Conservation Construction Code of New York State (2010 edition)**
R406.2

***FCNYS—20: Fire Code of New York State**
R324.2, M2201.7, G2402.3, G2412.2

***FGCNYS—20: Fuel Gas Code of New York State**
G2401.1, G2402.3, G2423.1

***ICC A117.1—09: Accessible and Usable Buildings and Facilities**
R321.3

***ICC 400—17: Standard on the Design and Construction of Log Structures**
R301.1.1, R502.1.4, R602.1.4, R703.1, R802.1.3, N1102.1, Table N1102.4.1.1

***ICC 500—14: ICC/NSSA Standard on the Design and Construction of Storm Shelters**
R323.1

***ICC 600—14: Standard for Residential Construction in High-wind Regions**
R301.2.1.1

ICC 900/SRCC 300—2015: Solar Thermal System Standard
M2301.2.2.2, M2301.2.3, M2301.2.6, M2301.2.7, M2301.2.8, M2301.2.10, M2301.4

ICC 901/SRCC 100—2015: Solar Thermal Collector Standard
M2301.3.1

IECC—06: International Energy Conservation Code®
N1101.6

IPSDC—18: International Private Sewage Disposal Code®
R322.1.7

IRC—15: International Residential Code, second printing: May 30th 2014
Table N1106.4

ISPSC—18: International Swimming Pool and Spa Code®
R326.1

***MCNYS—20: Mechanical Code of New York State**
G2402.3

***PCNYS—20: Plumbing Code of New York State**
Table R301.2(1), R903.4.1, G2402.3, P2601.1

***PMCNYS—20: Property Maintenance Code of New York State**
R101.1.1

IEEE

Institute of Electrical and Electronic Engineers, Inc.
3 Park Avenue, 17th Floor
New York, NY 10016-5997

515.1—2012: IEEE Standard for the Testing, Design, Installation and Maintenance of Electrical Resistance Trace Heating for Commercial Applications
N1103.5.1.2

INTERNATIONAL CODE COUNCIL®
Copyright © 2019 ICC & NYSDOS. ALL RIGHTS RESERVED. Accessed by Lauren Gualdino (lgualdino@briarcliffmanor.org), (-) Order Number #100880972 on May 08, 2020 07:05 AM (PDT) pursuant to License Agreement with ICC & NYSDOS. No further reproduction, no

100880972

ISO

International Organization for Standardization
Chemin de Blandonnet 8
CP 401
1214 Vernier
Geneva, Switzerland

8336—2009: Fibre-cement Flat Sheets-product Specification and Test Methods
Table R503.2.1.1(1), Table R503.2.1.1(2), Table R602.3(2), Table R702.4.2, R703.10.1, R703.10.2

15874—2002: Polypropylene Plastic Piping Systems for Hot and Cold Water Installations
Table M2101.1

MSS

Manufacturers Standardization Society of the Valve and Fittings Industry
127 Park Street, NE
Vienna, VA 22180

SP-42—2013: Corrosion Resistant Gate, Globe, Angle and Check Valves with Flanged and Butt Weld Ends (Glasses 150, 300 & 600)
Table P2903.9.4

***SP-58—09: Pipe Hangers and Supports—Materials, Design, Manufacture, Selection, Application and Installation**
G2418.2

SP-67—11: Butterfly Valves
Table P2903.9.4

SP-70—2011: Gray Iron Gate Valves, Flanged and Threaded Ends
Table P2903.9.4

SP-71—2013: Gray Iron Swing Check Valves, Flanged and Threaded Ends
Table P2903.9.4

SP-72—2010a: Ball Valves with Flanged or Butt-Welding Ends for General Service
P2903.9.4

SP-78—2011: Cast Iron Plug Valves, Flanged and Threaded Ends
Table P2903.9.4

SP-80—2013: Bronze Gate, Globe, Angle and Check Valves
Table P2903.9.4

SP-110—2010a: Ball Valves, Threaded, Socket Welded, Solder Joint, Grooved and Flared Ends
Table P2903.9.4

SP-122—2012: Plastic Industrial Ball Valves
Table P2903.9.4

SP-139—2014: Copper Alloy Gate, Globe, Angle, and Check Valves for Low Pressure/ Low Temperature Plumbing Applications
Table P2903.9.4

NAIMA

North American Insulation Manufacturers Association
11 Canal Center Plaza, Suite 101
Alexandria, VA 22314

AH 116—09: Fibrous Glass Duct Construction Standards, Fifth Edition
M1601.1.1

NFPA

National Fire Protection Association
1 Batterymarch Park
Quincy, MA 02169-7471

***13—16: Standard for Installation of Sprinkler Systems**
R302.3

***13D—16: Standard for the Installation of Sprinkler Systems in One- and Two-family Dwellings and Manufactured Homes**
R313.1.1, R313.2.1, P2904.1, P2904.6.1

***13R—16: Standard for the Installation of Sprinkler Systems in Low-Rise Residential Occupancies**
R325.5

INTERNATIONAL CODE COUNCIL®
Copyright © 2019 ICC & NYSDOS. ALL RIGHTS RESERVED. Accessed by Lauren Gualdino (lgualdino@briarcliffmanor.org), (-) Order Number #100880972 on May 08, 2020 07:05 AM (PDT) pursuant to License Agreement with ICC & NYSDOS. No further reproduction, no

100880972

NFPA—continued

***31—16: Standard for the Installation of Oil-burning Equipment**
M1701.1, M1801.3.1, M1805.3, M2201.2

***58—17: Liquefied Petroleum Gas Code**
G2412.2, G2414.6.2

***70—17: National Electrical Code**
R324.3, R327.2, R327.4, E3401.1, E3401.2, E4301.1, Table E4303.2, E4304.3, E4304.4

***72—16: National Fire Alarm and Signaling Code**
R314.1, R314.7.1

***85—15: Boiler and Combustion Systems Hazards Code**
G2452.1

***211—16: Standard for Chimneys, Fireplaces, Vents and Solid Fuel Burning Appliances**
R1002.5, G2427.5.5.1

***225—17: Model Manufactured Home Installation Standard**
AE401.2, AE401.5

***259—18: Standard for Test Method for Potential Heat of Building Materials**
R316.5.7, R316.5.8

***275—17: Standard Method of Fire Tests for the Evaluation of Thermal Barriers**
R316.4

***286—15: Standard Methods of Fire Tests for Evaluating Contribution of Wall and Ceiling Interior Finish to Room Fire Growth**
R302.9.4, R316.6

***501—17: Standard on Manufactured Housing**
R202

***720—15: Standard for the Installation of Carbon Monoxide (CO) Detectors and Warning Equipment**
R315.7.1, R315.7.2

***853—15: Standard on the Installation of Stationary Fuel Cell Power Systems**
M1903.1

NFRC

National Fenestration Rating Council, Inc.
6305 Ivy Lane, Suite 140
Greenbelt, MD 20770

100—2017: Procedure for Determining Fenestration Products *U*-Factors
N1101.10.3

200—2017: Procedure for Determining Fenestration Product Solar Heat Gain Coefficients and Visible Transmittance at Normal Incidence
N1101.10.3

400—2017: Procedure for Determining Fenestration Product Air Leakage
N1102.4.3

NGWA

National Ground Water Association
601 Dempsey Road
Westerville, OH 43081

ANSI/NGWA 01—14: Water Well Construction Standard
P2602.1

NSF

NSF International
789 N. Dixboro Road
P.O. Box 130140
Ann Arbor, MI 48105

14—2015: Plastics Piping System Components and Related Materials
M1301.4, P2609.3, P2909.3

INTERNATIONAL CODE COUNCIL®
Copyright © 2019 ICC & NYSDOS. ALL RIGHTS RESERVED. Accessed by Lauren Gualdino (lgualdino@briarcliffmanor.org), (-) Order Number #100880972 on May 08, 2020 07:05 AM (PDT) pursuant to License Agreement with ICC & NYSDOS. No further reproduction, no

100880972

NSF—continued

41—2011: Nonliquid Saturated Treatment Systems (Composting Toilets)
P2725.1

42—2015: Drinking Water Treatment Units—Anesthetic Effects
P2909.1, P2909.3

44—2015: Residential Cation Exchange Water Softeners
P2909.1, P2909.3

50—2015: Equipment for Swimming Pools, Hot Tubs and Other Recreational Water Facilities
P2911.8.1

53—2015: Drinking Water Treatment Units—Health Effects
P2909.1, P2909.3

58—2015: Reverse Osmosis Drinking Water Treatment Systems
P2909.2, P2909.3

61—2015: Drinking Water System Components—Health Effects
P2609.5, P2722.1, P2903.9.4, P2906.4, P2906.5, P2906.6, P2909.3

350—2014: Onsite Residential and Commercial Water Reuse Treatment Systems
P2911.6.1

358-1—2014: Polyethylene Pipe and Fittings for Water-based Ground Source "Geothermal" Heat Pump Systems
M2105.4, M2105.5, Table AG101.1

358-2—2012: Polypropylene Pipe and Fittings for Water-based Ground Source "Geothermal" Heat Pump Systems
Table M2105.4, M2105.5

359—2012: Valves for Crosslinked Polyethylene (PEX) Water Distribution Tubing Systems
Table P2903.9.4

372—2011: Drinking Water Systems Components—Lead Content
P2906.2.1

PCA

Portland Cement Association
5420 Old Orchard Road
Skokie, IL 60077

***100—12: Prescriptive Design of Exterior Concrete Walls for One- and Two-family Dwellings (Pub. No. EB241)**
R301.2.2.5, R301.2.2.3.4, R404.1.3, R404.1.3.2.1, R404.1.3.2.2, R404.1.3.4, R404.1.4.2, R608.1, R608.2, R608.5.1, R608.9.2, R608.9.3

SBCA

Structural Building Components Association
6300 Enterprise Lane
Madison, WI 53719

BCSI—2013 (Updated March 2015): Building Component Safety Information Guide to Good Practice for Handling, Installing, Restraining & Bracing of Metal Plate Connected Wood Trusses
R502.11.2, R802.10.3

CFS-BCSI—2008: Cold-formed Steel Building Component Safety Information (CFSBCSI) Guide to Good Practice for Handling, Installing & Bracing of Cold-formed Steel Trusses
R505.1.3, R804.3.6

FS100—12: Standard Requirements for Wind Pressure Resistance of Foam Plastic Insulating Sheathing Used in Exterior Wall Covering Assemblies
R316.8

SMACNA

Sheet Metal & Air Conditioning Contractors National Assoc. Inc.
4021 Lafayette Center Road
Chantilly, VA 22021

***SMACNA—10: Fibrous Glass Duct Construction Standards (2003)**
M1601.1.1, M1601.4.1

***SMACNA/ANSI—2005: HVAC Duct Construction Standards—Metal and Flexible 3rd Edition (ANSI) 2005**
M1601.4.1

INTERNATIONAL CODE COUNCIL®
Copyright © 2019 ICC & NYSDOS. ALL RIGHTS RESERVED. Accessed by Lauren Gualdino (lgualdino@briarcliffmanor.org), (-) Order Number #100880972 on May 08, 2020 07:05 AM (PDT) pursuant to License Agreement with ICC & NYSDOS. No further reproduction, no

100880972

TMS

The Masonry Society
105 South Sunset Street, Suite Q
Longmont, CO 80501

402—2016: Building Code Requirements for Masonry Structures
R404.1.2, R606.1, R606.1.1, R606.12.1, R606.12.2.3.1, R606.12.3.1, R703.12

403—2017: Direct Design Handbook for Masonry Structures
R606.1, R606.1.1, R606.12.1, R606.12.3.1

TMS—continued

404—2016: Standard for the Design of Architectural Cast Stone
R606.1

602—2016: Specification for Masonry Structures
R606.2.10, R606.2.13, R703.12

TPI

Truss Plate Institute
218 N. Lee Street, Suite 312
Alexandria, VA 22314

TPI 1—2014: National Design Standard for Metal-plate-connected Wood Truss Construction
R502.11.1, R802.10.2

UL

UL LLC
333 Pfingsten Road
Northbrook, IL 60062

17—2008: Vent or Chimney Connector Dampers for Oil-fired Appliances—with revisions through September 2013
M1802.2.2

55A—04: Materials for Built-up Roof Coverings
R905.9.2

58—96: Steel Underground Tanks for Flammable and Combustible Liquids—with Revisions through July 1998
M2201.1

80—2007: Steel Tanks for Oil-burner Fuel—with revisions through January 2014
M2201.1

103—2010: Factory-built Chimneys for Residential Type and Building Heating Appliances—with revisions through July 2012
R202, R1005.3, G2430.1

127—2011: Factory-built Fireplaces—with revisions through May 2015
R1001.11, R1004.1, R1004.4, R1004.5, R1005.4, N1102.4.2, G2445.7

174—04: Household Electric Storage Tank Water Heaters—with revisions through April 2015
M2005.1

180—2012: Liquid-level Indicating Gauges for Oil Burner Fuels and Other Combustible Liquids
M2201.5

181—05: Factory-made Air Ducts and Air Connectors—with revisions through May 2003
M1601.1.1, M1601.4.1

181A—2013: Closure Systems for Use with Rigid Air Ducts and Air Connectors—with revisions through December 1998
M1601.2, M1601.4.1

181B—2013: Closure Systems for Use with Flexible Air Ducts and Air Connectors—with revisions through August 2003
M1601.4.1

217—06: Single- and Multiple-station Smoke Alarms—with revisions through October 2015
R314.1.1, R315.1.1

263—2011: Standards for Fire Test of Building Construction and Materials—with revisions through June 2015
Table 302.1(1), Table R302.1(2), R302.2, R302.2.1, R302.2.2, R302.4.1, R302.11.1, Table R312.1(1), R606.2.2

268—2009: Smoke Detectors for Fire Alarm Systems
R314.7.1, R314.7.4, R315.7.4

INTERNATIONAL CODE COUNCIL®
Copyright © 2019 ICC & NYSDOS. ALL RIGHTS RESERVED. Accessed by Lauren Gualdino (lgualdino@briarcliffmanor.org), (-) Order Number #100880972 on May 08, 2020 07:05 AM (PDT) pursuant to License Agreement with ICC & NYSDOS. No further reproduction, no

100880972

UL—continued

325—02: Door, Drapery, Gate, Louver and Window Operations and Systems—with revisions through May 2015
R309.4

343—2008: Pumps for Oil-burning Appliances—with revisions through June 2013
M2204.1

378—06: Draft Equipment—with revisions through June 12, 2014
M1804.2.6, G2427.3.3

441—10: Gas Vents—with revisions through June 12, 2014
G2426.1, G2427.6.1

507—99: Standard for Electric Fans
M1503.2

508—99: Industrial Control Equipment—with revisions through October 2013
M1411.3.1

815—11: Electrical Resistance Heat Tracing for Commercial and Industrial Applications Including Revisions through July 2015
N1103.5.1.2

536—97: Flexible Metallic Hose—with revisions through December 2014
M2202.3

641—2010: Type L, Low-temperature Venting Systems—with revisions through June 2013
R202, R1003.11.5, M1804.2.4, G2426.1, G2427.6.1

651—2011: Schedule 40 and Schedule 80 Rigid PVC Conduit and Fittings—with revisions through May 2014
G2414.6.3

705—04: Standard for Power Ventilators—with revisions through December 2013
M1502.4.4

723—08: Standard for Test for Surface Burning Characteristics of Building Materials—with revisions through August 2013
R202, R302.9.3, R302.9.4, R302.10.1, R302.10.2, R316.3, R316.5.9, R316.5.11, R507.2.2.2, R703.14.3, R802.1.5, M1601.3, M1601.5.2, P2801.6

726—95: Oil-fired Boiler Assemblies—with revisions through October 2013
M2001.1.1, M2006.1

727—06: Oil-fired Central Furnaces—with revisions through October 2013
M1402.1

729—03: Oil-fired Floor Furnaces—with revisions through October 2013
M1408.1

730—03: Oil-fired Wall Furnaces—with revisions through October 2013
M1409.1

732—95: Oil-fired Storage Tank Water Heaters—with revisions through October 2013
M2005.1

737—2011: Fireplaces Stoves—with revisions through August 2015
M1414.1, M1901.2

790—04: Standard Test Methods for Fire Tests of Roof Coverings—with revisions through July 2014
R302.2.4, R902.1

795—2011: Commercial-industrial Gas Heating Equipment—with revisions through November 2013
G2442.1, G2452.1

834—04: Heating, Water Supply and Power Boilers—Electric—with revisions through December 2013
M2001.1.1

842—07: Valves for Flammable Fluids—with revisions through May 2015
M2204.2

858—05: Household Electric Ranges—with revisions through June 2015
M1901.2, M1503.2

875—09: Electric Dry-bath Heaters—with revisions through December 2013
M1902.2

896—93: Oil-burning Stoves—with revisions through November 2013
M1410.1

INTERNATIONAL CODE COUNCIL®
Copyright © 2019 ICC & NYSDOS. ALL RIGHTS RESERVED. Accessed by Lauren Gualdino (lgualdino@briarcliffmanor.org), (-) Order Number #100880972 on May 08, 2020 07:05 AM (PDT) pursuant to License Agreement with ICC & NYSDOS. No further reproduction, no

100880972

UL—continued

923—2013: Microwave Cooking Appliances—with revisions through June 2015
M1504.1, M1503.2, M1901.2

959—2010: Medium Heat Appliance Factory-built Chimneys—with revisions through June 2014
R1005.6

1026—2012: Electric Household Cooking and Food Serving Appliances—with revisions through August 2015
M1901.2

1040—96: Fire Test of Insulated Wall Construction—with revisions through October 2012
R316.6

1042—2009: Electric Baseboard Heating Equipment—with revisions through September 2014
M1405.1

1256—02: Fire Test of Roof Deck Construction—with revisions through July 2013
R906.1

1261—01: Electric Water Heaters for Pools and Tubs—with revisions through July 2012
M2006.1

1479—03: Fire Tests of Through-Penetration Firestops—with revisions through June 2015
R302.4.1.2

1482—2011: Solid-Fuel-type Room Heaters—with revisions through August 2015
R1002.2, R1002.5, M1410.1

1563—2009: Standard for Electric Spas, Hot Tubs and Associated Equipment—with revisions through March 2015
M2006.1

1618—09: Wall Protectors, Floor Protectors, and Hearth Extensions—with revisions through October 2015
R1004.2, M1410.2

1693—2010: Electric Radiant Heating Panels and Heating Panel Sets—with revisions through October 2011
M1406.1

1703—02: Flat-plate Photovoltaic Modules and Panels—with revisions through October 2015
R324.3.1, R902.4, R905.16.4, R907.17.5

1715—97: Fire Test of Interior Finish Material—with revisions through January 2013
R316.6

1738—2010: Venting Systems for Gas-burning Appliances, Categories II, III and IV—with revisions through November 2014
G2426.1, G2427.4.1, G2427.4.1.1, G2427.4.2

1741—2010: Inverters, Converters, Controllers and Interconnection System Equipment with Distributed Energy Resources—with revisions through January 2015
R324.3.1, R327.4

1777—07: Chimney Liners—with revisions through October 2015
R1003.11.1, R1003.18, G2425.12, G2425.15.4, M1801.3.4, G2427.5.1, G2427.5.2

1897—12: Uplift Tests for Roof Covering Systems—with revisions through September 2015
R905.17.7

1995—2011: Heating and Cooling Equipment—with revisions through July 2015
M1402.1, M1403.1, M1407.1, M1412.1, M1413.1, M2006.1

1996—2009: Electric Duct Heaters—with revisions through June 2014
M1402.1, M1407.1

2034—08: Standard for Single- and Multiple-station Carbon Monoxide Alarms—with revisions through March 2015
R314.1.1, R315.1.1

2075—2013: Standard for Gas and Vapor Detectors and Sensors
R314.7.4, R315.7.1, R315.7.4

2158A—2010: Outline of Investigation for Clothes Dryer Transition Duct
M1502.4.3, G2439.7.3

2523—09: Standard for Solid Fuel-fired Hydronic Heating Appliances, Water Heaters and Boilers—with revisions through February 2013
M2005.1, M2001.1.1

2703—14: Mounting Systems, Mounting Devices, Clamping/Retention Devices and Ground Lugs for Use with Flat-Plate Photovoltaic Modules and Panels
R902.4

INTERNATIONAL CODE COUNCIL®
Copyright © 2019 ICC & NYSDOS. ALL RIGHTS RESERVED. Accessed by Lauren Gualdino (lgualdino@briarcliffmanor.org), (-) Order Number #100880972 on May 08, 2020 07:05 AM (PDT) pursuant to License Agreement with ICC & NYSDOS. No further reproduction, no

100880972

UL—continued

9540—14: Outline of Investigation for Energy Storage Systems and Equipment
R327.2, R327.4

UL/CSA/ANCE 60335-2-40—2012: Standard for Household and Similar Electrical Appliances, Part 2: Particular Requirements for Motor-compressors
M1403.1, M1412.1, M1413.1

ULC

ULC
13775 Commerce Parkway
Richmond, BC V6V 2V4

CAN/ULC S 102.2—2010: Standard Methods for Test for Surface Burning Characteristics of Building Materials and Assemblies
R302.10.1, R302.10.2

US-FTC

United States-Federal Trade Commission
600 Pennsylvania Avenue NW
Washington, DC 20580

CFR Title 16(2015): R-value Rule
N1101.10.4

WDMA

Window and Door Manufacturers Association
2025 M Street NW, Suite 800
Washington, DC 20036-3309

AAMA/WDMA/CSA 101/I.S2/A440—17: North American Fenestration Standard/Specifications for Windows, Doors and Skylights
R308.6.9, R609.3, N1102.4.3

I.S. 11—13: Industry Standard Analytical Method for Design Pressure (DP) Ratings of Fenestration Products
R308.6.9.1, R609.3.1

WMA

World Millwork Alliance (formerly Association of Millwork Distributors Standards AMD)
10047 Robert Trent Parkway
New Port Richey, FL 34655-4649

ANSI WMA 100—2016: Standard Method of Determining Structural Performance Ratings of Side Hinged Exterior Door Systems and Procedures for Component Substitution
R609.3

INTERNATIONAL CODE COUNCIL®
Copyright © 2019 ICC & NYSDOS. ALL RIGHTS RESERVED. Accessed by Lauren Gualdino (lgualdino@briarcliffmanor.org), (-) Order Number #100880972 on May 08, 2020 07:05 AM (PDT) pursuant to License Agreement with ICC & NYSDOS. No further reproduction, no

INTERNATIONAL CODE COUNCIL®
Copyright © 2019 ICC & NYSDOS. ALL RIGHTS RESERVED. Accessed by Lauren Gualdino (lgualdino@briarcliffmanor.org), (-) Order Number #100880972 on May 08, 2020 07:05 AM (PDT) pursuant to License Agreement with ICC & NYSDOS. No further reproduction, no

100880972

APPENDIX A

SIZING AND CAPACITIES OF GAS PIPING

This appendix is informative and is not part of the code. This appendix is an excerpt from the 2018 International Fuel Gas Code, *coordinated with the section numbering of the* International Residential Code.

A.1 General piping considerations. The first goal of determining the pipe sizing for a fuel gas *piping* system is to make sure that there is sufficient gas pressure at the inlet to each *appliance*. The majority of systems are residential and the appliances will all have the same, or nearly the same, requirement for minimum gas pressure at the *appliance* inlet. This pressure will be about 5-inch water column (w.c.) (1.25 kPa), which is enough for proper operation of the *appliance* regulator to deliver about 3.5-inches water column (w.c.) (875 kPa) to the burner itself. The pressure drop in the *piping* is subtracted from the source delivery pressure to verify that the minimum is available at the *appliance*.

There are other systems, however, where the required inlet pressure to the different appliances is quite varied. In such cases, the greatest inlet pressure required must be satisfied, as well as the farthest *appliance*, which is almost always the critical *appliance* in small systems.

There is an additional requirement to be observed besides the capacity of the system at 100-percent flow. That requirement is that at minimum flow, the pressure at the inlet to any *appliance* does not exceed the pressure rating of the *appliance* regulator. This would seldom be of concern in small systems if the source pressure is $^1/_2$ psi (14-inch w.c.) (3.5 kPa) or less but it should be verified for systems with greater gas pressure at the point of supply.

To determine the size of *piping* used in a gas *piping* system, the following factors must be considered:

(1) Allowable loss in pressure from *point of delivery* to *appliance*.
(2) Maximum gas demand.
(3) Length of *piping* and number of fittings.
(4) Specific gravity of the gas.
(5) Diversity factor.

For any gas *piping* system or special *appliance*, or for conditions other than those covered by the tables provided in this code such as longer runs, greater gas demands or greater pressure drops, the size of each gas *piping* system should be determined by standard engineering practices acceptable to the *building official*.

A.2 Description of tables.

A.2.1 General. The quantity of gas to be provided at each *outlet* should be determined, whenever possible, directly from the manufacturer's gas input Btu/h rating of the *appliance* that will be installed. In case the ratings of the appliances to be installed are not known, Table 402.2 shows the approximate consumption (in Btu per hour) of certain types of typical household appliances.

To obtain the cubic feet per hour of gas required, divide the total Btu/h input of all appliances by the average Btu heating value per cubic feet of the gas. The average Btu per cubic feet of the gas in the area of the installation can be obtained from the serving gas supplier.

A.2.2 Low pressure natural gas tables. Capacities for gas at low pressure [less than 2.0 psig (13.8 kPa gauge)] in cubic feet per hour of 0.60 specific gravity gas for different sizes and lengths are shown in Tables 402.4(1) and 402.4(2) for iron pipe or equivalent rigid pipe; in Tables 402.4(8) through 402.4(11) for smooth wall semirigid tubing; and in Tables 402.4(15) through 402.4(17) for corrugated stainless steel tubing. Tables 402.4(1) and 402.4(6) are based on a pressure drop of 0.3-inch w.c. (75 Pa), whereas Tables 402.4(2), 402.4(9) and 402.4(15) are based on a pressure drop of 0.5-inch w.c. (125 Pa). Tables 402.4(3), 402.4(4), 402.4(10), 402.4(11), 402.4(16) and 402.4(17) are special low-pressure applications based on pressure drops greater than 0.5-inch w.c. (125 Pa). In using these tables, an allowance (in equivalent length of pipe) should be considered for any *piping* run with four or more fittings (see Table A.2.2).

A.2.3 Undiluted liquefied petroleum tables. Capacities in thousands of Btu per hour of undiluted liquefied petroleum gases based on a pressure drop of 0.5-inch w.c. (125 Pa) for different sizes and lengths are shown in Table 402.4(28) for iron pipe or equivalent rigid pipe, in Table 402.4(30) for smooth wall semi-rigid tubing, in Table 402.4(32) for corrugated stainless steel tubing, and in Tables 402.4(35) and 402.4(37) for polyethylene plastic pipe and tubing. Tables 402.4(33) and 402.4(34) for corrugated stainless steel tubing and Table 402.4(36) for polyethylene plastic pipe are based on operating pressures greater than $1^1/_2$ pounds per square inch (psi) (3.5 kPa) and pressure drops greater than 0.5-inch w.c. (125 Pa). In using these tables, an allowance (in equivalent length of pipe) should be considered for any *piping* run with four or more fittings [see Table A.2.2].

A.2.4 Natural gas specific gravity. Gas *piping* systems that are to be supplied with gas of a specific gravity of 0.70 or less can be sized directly from the tables provided in this code, unless the *building official* specifies that a gravity factor be applied. Where the specific gravity of the gas is greater than 0.70, the gravity factor should be applied.

Application of the gravity factor converts the figures given in the tables provided in this code to capacities for another gas of different specific gravity. Such application is accomplished by multiplying the capacities given in the tables by the multipliers shown in Table A.2.4. In case the exact specific gravity does not appear in the table, choose the next higher value specific gravity shown.

INTERNATIONAL CODE COUNCIL®
Copyright © 2019 ICC & NYSDOS. ALL RIGHTS RESERVED. Accessed by Lauren Gualdino (lgualdino@briarcliffmanor.org), (-) Order Number #100880972 on May 08, 2020 07:05 AM (PDT) pursuant to License Agreement with ICC & NYSDOS. No further reproduction, no

100880972

TABLE A.2.2
EQUIVALENT LENGTHS OF PIPE FITTINGS AND VALVES

		SCREWED FITTINGS[1]				90° WELDING ELBOWS AND SMOOTH BENDS[2]					
		45°/Ell	90°/Ell	180°close return bends	Tee	R/d = 1	R/d = $1^1/_3$	R/d = 2	R/d = 4	R/d = 6	R/d = 8
k factor =		0.42	0.90	2.00	1.80	0.48	0.36	0.27	0.21	0.27	0.36
L/d' ratio[4] *n* =		1 4	30	67	60	16	12	9	7	9	12
Nominal pipe size, inches	Inside diameter d, inches, Schedule 40[6]	L = Equivalent Length In Feet of Schedule 40 (Standard-weight) Straight Pipe[6]									
$^1/_2$	0.622	0.73	1.55	3.47	3.10	0.83	0.62	0.47	0.36	0.47	0.62
$^3/_4$	0.824	0.96	2.06	4.60	4.12	1.10	0.82	0.62	0.48	0.62	0.82
1	1.049	1.22	2.62	5.82	5.24	1.40	1.05	0.79	0.61	0.79	1.05
$1^1/_4$	1.380	1.61	3.45	7.66	6.90	1.84	1.38	1.03	0.81	1.03	1.38
$1^1/_2$	1.610	1.88	4.02	8.95	8.04	2.14	1.61	1.21	0.94	1.21	1.61
2	2.067	2.41	5.17	11.5	10.3	2.76	2.07	1.55	1.21	1.55	2.07
$2^1/_2$	2.469	2.88	6.16	13.7	12.3	3.29	2.47	1.85	1.44	1.85	2.47
3	3.068	3.58	7.67	17.1	15.3	4.09	3.07	2.30	1.79	2.30	3.07
4	4.026	4.70	10.1	22.4	20.2	5.37	4.03	3.02	2.35	3.02	4.03
5	5.047	5.88	12.6	28.0	25.2	6.72	5.05	3.78	2.94	3.78	5.05
6	6.065	7.07	15.2	33.8	30.4	8.09	6.07	4.55	3.54	4.55	6.07
8	7.981	9.31	20.0	44.6	40.0	10.6	7.98	5.98	4.65	5.98	7.98
10	10.02	11.7	25.0	55.7	50.0	13.3	10.0	7.51	5.85	7.51	10.0
12	11.94	13.9	29.8	66.3	59.6	15.9	11.9	8.95	6.96	8.95	11.9
14	13.13	15.3	32.8	73.0	65.6	17.5	13.1	9.85	7.65	9.85	13.1
16	15.00	17.5	37.5	83.5	75.0	20.0	15.0	11.2	8.75	11.2	15.0
18	16.88	19.7	42.1	93.8	84.2	22.5	16.9	12.7	9.85	12.7	16.9
20	18.81	22.0	47.0	105.0	94.0	25.1	18.8	14.1	11.0	14.1	18.8
24	22.63	26.4	56.6	126.0	113.0	30.2	22.6	17.0	13.2	17.0	22.6

(continued)

INTERNATIONAL CODE COUNCIL®
Copyright © 2019 ICC & NYSDOS. ALL RIGHTS RESERVED. Accessed by Lauren Gualdino (lgualdino@briarcliffmanor.org), (-) Order Number #100880972 on May 08, 2020 07:05 AM (PDT) pursuant to License Agreement with ICC & NYSDOS. No further reproduction, no

100880972

TABLE A.2.2—continued
EQUIVALENT LENGTHS OF PIPE FITTINGS AND VALVES

		MITER ELBOWS[3] (No. of miters)					WELDING TEES		VALVES (screwed, flanged, or welded)			
		1-45°	1-60°	1-90°	2-90°[5]	3-90°[5]	Forged	Miter[3]	Gate	Globe	Angle	Swing Check
k factor =		0.45	0.90	1.80	0.60	0.45	1.35	1.80	0.21	10	5.0	2.5
L/d' ratio[4] n =		15	30	60	20	15	45	60	7	333	167	83
Nominal pipe size, inches	Inside diameter d, inches, Schedule 40[6]	L = Equivalent Length In Feet of Schedule 40 (Standard-weight) Straight Pipe[6]										
1/2	0.622	0.78	1.55	3.10	1.04	0.78	2.33	3.10	0.36	17.3	8.65	4.32
3/4	0.824	1.03	2.06	4.12	1.37	1.03	3.09	4.12	0.48	22.9	11.4	5.72
1	1.049	1.31	2.62	5.24	1.75	1.31	3.93	5.24	0.61	29.1	14.6	7.27
1 1/4	1.380	1.72	3.45	6.90	2.30	1.72	5.17	6.90	0.81	38.3	19.1	9.58
1 1/2	1.610	2.01	4.02	8.04	2.68	2.01	6.04	8.04	0.94	44.7	22.4	11.2
2	2.067	2.58	5.17	10.3	3.45	2.58	7.75	10.3	1.21	57.4	28.7	14.4
2 1/2	2.469	3.08	6.16	12.3	4.11	3.08	9.25	12.3	1.44	68.5	34.3	17.1
3	3.068	3.84	7.67	15.3	5.11	3.84	11.5	15.3	1.79	85.2	42.6	21.3
4	4.026	5.04	10.1	20.2	6.71	5.04	15.1	20.2	2.35	112.0	56.0	28.0
5	5.047	6.30	12.6	25.2	8.40	6.30	18.9	25.2	2.94	140.0	70.0	35.0
6	6.065	7.58	15.2	30.4	10.1	7.58	22.8	30.4	3.54	168.0	84.1	42.1
8	7.981	9.97	20.0	40.0	13.3	9.97	29.9	40.0	4.65	222.0	111.0	55.5
10	10.02	12.5	25.0	50.0	16.7	12.5	37.6	50.0	5.85	278.0	139.0	69.5
12	11.94	14.9	29.8	59.6	19.9	14.9	44.8	59.6	6.96	332.0	166.0	83.0
14	13.13	16.4	32.8	65.6	21.9	16.4	49.2	65.6	7.65	364.0	182.0	91.0
16	15.00	18.8	37.5	75.0	25.0	18.8	56.2	75.0	8.75	417.0	208.0	104.0
18	16.88	21.1	42.1	84.2	28.1	21.1	63.2	84.2	9.85	469.0	234.0	117.0
20	18.81	23.5	47.0	94.0	31.4	23.5	70.6	94.0	11.0	522.0	261.0	131.0
24	22.63	28.3	56.6	113.0	37.8	28.3	85.0	113.0	13.2	629.0	314.0	157.0

For SI: 1 foot = 305 mm, 1 degree = 0.01745 rad.

Note: Values for welded fittings are for conditions where bore is not obstructed by weld spatter or backing rings. If appreciably obstructed, use values for "Screwed Fittings."

1. Flanged fittings have three-fourths the resistance of screwed elbows and tees.
2. Tabular figures give the extra resistance due to curvature alone to which should be added the full length of travel.
3. Small size socket-welding fittings are equivalent to miter elbows and miter tees.
4. Equivalent resistance in number of diameters of straight pipe computed for a value of (f - 0.0075) from the *relation* (n - k/4f).
5. For condition of minimum resistance where the centerline length of each miter is between d and 2 1/2d.
6. For pipe having other inside diameters, the equivalent resistance can be computed from the n values.

Source: Crocker, S. *Piping Handbook*, 4th ed., Table XIV, pp. 100-101. Copyright 1945 by McGraw-Hill, Inc. Used by permission of McGraw-Hill Book Company.

INTERNATIONAL CODE COUNCIL®
Copyright © 2019 ICC & NYSDOS. ALL RIGHTS RESERVED. Accessed by Lauren Gualdino (lgualdino@briarcliffmanor.org), (-) Order Number #100880972 on May 08, 2020 07:05 AM (PDT) pursuant to License Agreement with ICC & NYSDOS. No further reproduction, no

100880972

TABLE A.2.4
MULTIPLIERS TO BE USED WITH TABLES 402.4(1) THROUGH 402.4(22) WHERE THE SPECIFIC GRAVITY OF THE GAS IS OTHER THAN 0.60

SPECIFIC GRAVITY	MULTIPLIER	SPECIFIC GRAVITY	MULTIPLIER
0.35	1.31	1.00	0.78
0.40	1.23	1.10	0.74
0.45	1.16	1.20	0.71
0.50	1.10	1.30	0.68
0.55	1.04	1.40	0.66
0.60	1.00	1.50	0.63
0.65	0.96	1.60	0.61
0.70	0.93	1.70	0.59
0.75	0.90	1.80	0.58
0.80	0.87	1.90	0.56
0.85	0.84	2.00	0.55
0.90	0.82	2.10	0.54

A.2.5 Higher pressure natural gas tables. Capacities for gas at pressures 2.0 psig (13.8 kPa) or greater in cubic feet per hour of 0.60 specific gravity gas for different sizes and lengths are shown in Tables 402.4(5) through 402.4(7) for iron pipe or equivalent rigid pipe; Tables 402.4(12) to 402.4(14) for semirigid tubing; Tables 402.4(18) and 402.4(19) for corrugated stainless steel tubing; and Table 402.4(22) for polyethylene plastic pipe.

A.3 Use of capacity tables.

A.3.1 Longest length method. This sizing method is conservative in its approach by applying the maximum operating conditions in the system as the norm for the system and by setting the length of pipe used to size any given part of the *piping* system to the maximum value.

To determine the size of each section of gas *piping* in a system within the range of the capacity tables, proceed as follows (also see sample calculations included in this Appendix):

(1) Divide the *piping* system into appropriate segments consistent with the presence of tees, branch lines and main runs. For each segment, determine the gas load (assuming all appliances operate simultaneously) and its overall length. An allowance (in equivalent length of pipe) as determined from Table A.2.2 shall be considered for *piping* segments that include four or more fittings.

(2) Determine the gas demand of each *appliance* to be attached to the *piping* system. Where Tables 402.4(1) through 402.4(24) are to be used to select the *piping* size, calculate the gas demand in terms of cubic feet per hour for each *piping* system *outlet*. Where Tables 402.4(25) through 402.4(37) are to be used to select the *piping* size, calculate the gas demand in terms of thousands of Btu per hour for each *piping* system *outlet*.

(3) Where the *piping* system is for use with other than undiluted liquefied petroleum gases, determine the design system pressure, the allowable loss in pressure (pressure drop), and specific gravity of the gas to be used in the *piping* system.

(4) Determine the length of *piping* from the *point of delivery* to the most remote *outlet* in the building/*piping* system.

(5) In the appropriate capacity table, select the row showing the measured length or the next longer length if the table does not give the exact length. This is the only length used in determining the size of any section of gas *piping*. If the gravity factor is to be applied, the values in the selected row of the table are multiplied by the appropriate multiplier from Table A.2.4.

(6) Use this horizontal row to locate ALL gas demand figures for this particular system of *piping*.

(7) Starting at the most remote *outlet*, find the gas demand for that *outlet* in the horizontal row just selected. If the exact figure of demand is not shown, choose the next larger figure left in the row.

(8) Opposite this demand figure, in the first row at the top, the correct size of gas *piping* will be found.

(9) Proceed in a similar manner for each *outlet* and each section of gas *piping*. For each section of *piping*, determine the total gas demand supplied by that section.

Where a large number of *piping* components (such as elbows, tees and valves) are installed in a pipe run, additional pressure loss can be accounted for by the use of equivalent lengths. Pressure loss across any *piping* component can be equated to the pressure drop through a length of pipe. The equivalent length of a combination of only four elbows/tees can result in a jump to the next larger length row, resulting in a significant reduction in capacity. The equivalent lengths in feet shown in Table A.2.2 have been computed on a basis that the inside diameter corresponds to that of Schedule 40 (standard-weight) steel pipe, which is close enough for most purposes involving other schedules of pipe. Where a more specific solution for equivalent length is desired, this can be made by multiplying the actual inside diameter of the pipe in inches by $n/12$, or the actual inside diameter in feet by n (n can be read from the table heading). The equivalent length values can be used with reasonable accuracy for copper or brass fittings and bends although the resistance per foot of copper or brass pipe is less than that of steel. For copper or brass valves, however, the equivalent length of pipe should be taken as 45 percent longer than the values in the table, which are for steel pipe.

A.3.2 Branch length method. This sizing method reduces the amount of conservatism built into the traditional Longest Length Method. The longest length as measured from the meter to the farthest remote *appliance* is only used to size the initial parts of the overall *piping* system. The Branch Length Method is applied in the following manner:

(1) Determine the gas load for each of the connected appliances.

(2) Starting from the meter, divide the *piping* system into a number of connected segments, and determine the

INTERNATIONAL CODE COUNCIL®
Copyright © 2019 ICC & NYSDOS. ALL RIGHTS RESERVED. Accessed by Lauren Gualdino (lgualdino@briarcliffmanor.org), (-) Order Number #100880972 on May 08, 2020 07:05 AM (PDT) pursuant to License Agreement with ICC & NYSDOS. No further reproduction, no

100880972

length and amount of gas that each segment would carry assuming that all appliances were operated simultaneously. An allowance (in equivalent length of pipe) as determined from Table A.2.2 should be considered for piping segments that include four or more fittings.

(3) Determine the distance from the *outlet* of the gas meter to the *appliance* farthest removed from the meter.

(4) Using the longest distance (found in Step 3), size each *piping* segment from the meter to the most remote *appliance outlet*.

(5) For each of these *piping* segments, use the longest length and the calculated gas load for all of the connected appliances for the segment and begin the sizing process in Steps 6 through 8.

(6) Referring to the appropriate sizing table (based on operating conditions and *piping* material), find the longest length distance in the first column or the next larger distance if the exact distance is not listed. The use of alternative operating pressures or pressure drops will require the use of a different sizing table, but will not alter the sizing methodology. In many cases, the use of alternative operating pressures or pressure drops will require the approval of both the *building official* and the local gas serving utility.

(7) Trace across this row until the gas load is found or the closest larger capacity if the exact capacity is not listed.

(8) Read up the table column and select the appropriate pipe size in the top row. Repeat Steps 6, 7 and 8 for each pipe segment in the longest run.

(9) Size each remaining section of branch *piping* not previously sized by measuring the distance from the gas meter location to the most remote *outlet* in that branch, using the gas load of attached appliances and following the procedures of Steps 2 through 8.

A.3.3 Hybrid pressure method. The sizing of a 2 psi (13.8 kPa) gas *piping* system is performed using the traditional Longest Length Method but with modifications. The 2 psi (13.8 kPa) system consists of two independent pressure zones, and each zone is sized separately. The Hybrid Pressure Method is applied as follows:

The sizing of the 2 psi (13.8 kPa) section (from the meter to the line regulator) is as follows:

(1) Calculate the gas load (by adding up the name plate ratings) from all connected appliances. (In certain circumstances the installed gas load can be increased up to 50 percent to accommodate future addition of appliances.) Ensure that the line regulator capacity is adequate for the calculated gas load and that the required pressure drop (across the regulator) for that capacity does not exceed $^3/_4$ psi (5.2 kPa) for a 2 psi (13.8 kPa) system. If the pressure drop across the regulator is too high (for the connected gas load), select a larger regulator.

(2) Measure the distance from the meter to the line regulator located inside the building.

(3) If there are multiple line regulators, measure the distance from the meter to the regulator farthest removed from the meter.

(4) The maximum allowable pressure drop for the 2 psi (13.8 kPa) section is 1 psi (6.9 kPa).

(5) Referring to the appropriate sizing table (based on *piping* material) for 2 psi (13.8 kPa) systems with a 1 psi (6.9 kPa) pressure drop, find this distance in the first column, or the closest larger distance if the exact distance is not listed.

(6) Trace across this row until the gas load is found or the closest larger capacity if the exact capacity is not listed.

(7) Read up the table column to the top row and select the appropriate pipe size.

(8) If there are multiple regulators in this portion of the *piping* system, each line segment must be sized for its actual gas load, but using the longest length previously determined in steps 2 and 3.

The low pressure section (all *piping* downstream of the line regulator) is sized as follows:

(1) Determine the gas load for each of the connected appliances.

(2) Starting from the line regulator, divide the piping system into a number of connected segments or independent parallel piping segments, and determine the amount of gas that each segment would carry assuming that all appliances were operated simultaneously. An allowance (in equivalent length of pipe) as determined from Table A.2.2 should be considered for piping segments that include four or more fittings.

(3) For each piping segment, use the actual length or longest length (if there are sub-branchlines) and the calculated gas load for that segment and begin the sizing process as follows:

(a) Referring to the appropriate sizing table (based on operating pressure and piping material), find the longest length distance in the first column or the closest larger distance if the exact distance is not listed. The use of alternative operating pressures or pressure drops will require the use of a different sizing table, but will not alter the sizing methodology. In many cases, the use of alternative operating pressures or pressure drops can require the approval of the *building official*.

(b) Trace across this row until the appliance gas load is found or the closest larger capacity if the exact capacity is not listed.

(c) Read up the table column to the top row and select the appropriate pipe size.

(d) Repeat this process for each segment of the piping system.

INTERNATIONAL CODE COUNCIL®
Copyright © 2019 ICC & NYSDOS. ALL RIGHTS RESERVED. Accessed by Lauren Gualdino (lgualdino@briarcliffmanor.org), (-) Order Number #100880972 on May 08, 2020 07:05 AM (PDT) pursuant to License Agreement with ICC & NYSDOS. No further reproduction, no

100880972

A.3.4 Pressure drop per 100 feet method. This sizing method is less conservative than the others, but it allows the designer to immediately see where the largest pressure drop occurs in the system. With this information, modifications can be made to bring the total drop to the critical *appliance* within the limitations that are presented to the designer.

Follow the procedures described in the Longest Length Method for Steps (1) through (4) and (9).

For each *piping* segment, calculate the pressure drop based on pipe size, length as a percentage of 100 feet (30 480 mm) and gas flow. Table A.3.4 shows pressure drop per 100 feet (30 480 mm) for pipe sizes from $^1/_2$ inch (12.7 mm) through 2 inches (51 mm). The sum of pressure drops to the critical *appliance* is subtracted from the supply pressure to verify that sufficient pressure will be available. If not, the layout can be examined to find the high drop section(s) and sizing selections modified.

Note: Other values can be obtained by using the following equation:

$$\text{Desired Value} = MBH \times \sqrt{\frac{\text{Desired Drop}}{\text{Table Drop}}}$$

For example, if it is desired to get flow through $^3/_4$-inch (19.1 mm) pipe at 2 inches/100 feet, multiply the capacity of $^3/_4$-inch (19.1 mm) pipe at 1 inch/100 feet by the square root of the pressure ratio:

$$147\ MBH \times \sqrt{\frac{2''\ \text{w.c.}}{1''\ \text{w.c.}}} = 147 \times 1.414 = 208\ MBH$$

(MBH = 1000 Btu/h)

A.4 Use of sizing equations. Capacities of smooth wall pipe or tubing can be determined by using the following formulae:

(1) High Pressure [1.5 psi (10.3 kPa) and above]:

$$Q = 181.6 \sqrt{\frac{D^5 \times (P_1^2 - P_2^2) \times Y}{C_r \times fba \times L}}$$

$$= 2237\ D^{2.623} \left[\frac{(P_1^2 - P_2^2) \times Y}{C_r \times L}\right]^{0.541}$$

(2) Low Pressure [Less than 1.5 psi (10.3 kPa)]:

$$Q = 187.3 \sqrt{\frac{D^5 \times \Delta H}{C_r \times fba \times L}}$$

$$= 2313 D^{2.623} \left(\frac{\Delta H}{C_r \times L}\right)^{0.541}$$

where:

Q = Rate, cubic feet per hour at 60°F and 30-inch mercury column

D = Inside diameter of pipe, in.

P_1 = Upstream pressure, psia

P_2 = Downstream pressure, psia

Y = Superexpansibility factor = 1/supercompressibility factor

C_r = Factor for viscosity, density and temperature*

$$= 0.00354\ ST \left(\frac{Z}{S}\right)^{0.152}$$

*Note: See Table 402.4 for Y and C_r for natural gas and propane.

S = Specific gravity of gas at 60°F and 30-inch mercury column (0.60 for natural gas, 1.50 for propane), or = 1488μ

T = Absolute temperature, °F or = t + 460

t = Temperature, °F

Z = Viscosity of gas, centipoise (0.012 for natural gas, 0.008 for propane), or = 1488μ

fba = Base friction factor for air at 60°F (CF = 1)

L = Length of pipe, ft

ΔH = Pressure drop, in. w.c. (27.7 in. H_2O = 1 psi)

(For SI, see Section 402.4)

A.5 Pipe and tube diameters. Where the internal diameter is determined by the formulas in Section 402.4, Tables A.5.1 and A.5.2 can be used to select the nominal or standard pipe size based on the calculated internal diameter.

TABLE A.3.4
THOUSANDS OF BTU/H (MBH) OF NATURAL GAS PER 100 FEET OF PIPE AT VARIOUS PRESSURE DROPS AND PIPE DIAMETERS

PRESSURE DROP PER 100 FEET IN INCHES W.C.	PIPE SIZES (inch)					
	$^1/_2$	$^3/_4$	1	$1^1/_4$	$1^1/_2$	2
0.2	31	64	121	248	372	716
0.3	38	79	148	304	455	877
0.5	50	104	195	400	600	1160
1.0	71	147	276	566	848	1640

For SI: 1 inch = 25.4 mm, 1 foot = 304.8 mm.

INTERNATIONAL CODE COUNCIL®
Copyright © 2019 ICC & NYSDOS. ALL RIGHTS RESERVED. Accessed by Lauren Gualdino (lgualdino@briarcliffmanor.org), (-) Order Number #100880972 on May 08, 2020 07:05 AM (PDT) pursuant to License Agreement with ICC & NYSDOS. No further reproduction, no

100880972

TABLE A.5.1
SCHEDULE 40 STEEL PIPE STANDARD SIZES

NOMINAL SIZE (inch)	INTERNAL DIAMETER (inch)	NOMINAL SIZE (inch)	INTERNAL DIAMETER (inch)
1/4	0.364	1 1/2	1.610
3/8	0.493	2	2.067
1/2	0.622	2 1/2	2.469
3/4	0.824	3	3.068
1	1.049	3 1/2	3.548
1 1/4	1.380	4	4.026

For SI: 1 inch = 25.4 mm.

A.6 Examples of piping system design and sizing.

A.6.1 Example 1: Longest length method. Determine the required pipe size of each section and *outlet* of the *piping* system shown in Figure A.6.1, with a designated pressure drop of 0.5-inch w.c. (125 Pa) using the Longest Length Method. The gas to be used has 0.60 specific gravity and a heating value of 1,000 Btu/ft^3 (37.5 MJ/m^3).

Solution:

(1) Maximum gas demand for *Outlet* A:

$$\frac{\text{Consumption (rating plate input) or Table 402.2 if necessary}}{\text{Btu of gas}} =$$

$$\frac{\text{35,000 Btu per hour rating}}{\text{1,000 Btu per cubic foot}} = 35 \text{ cubic feet per hour} = 35 \text{ cfh}$$

Maximum gas demand for *Outlet* B:

$$\frac{\text{Consumption}}{\text{Btu of gas}} = \frac{75{,}000}{1{,}000} = 75 \text{ cfh}$$

Maximum gas demand for *Outlet* C:

$$\frac{\text{Consumption}}{\text{Btu of gas}} = \frac{35{,}000}{1{,}000} = 35 \text{ cfh}$$

Maximum gas demand for *Outlet* D:

$$\frac{\text{Consumption}}{\text{Btu of gas}} = \frac{100{,}000}{1{,}000} = 100 \text{ cfh}$$

(2) The length of pipe from the *point of delivery* to the most remote *outlet* (A) is 60 feet (18 288 mm). This is the only distance used.

(3) Using the row marked 60 feet (18 288 mm) in Table 402.4(2):

(a) *Outlet* A, supplying 35 cfh (0.99 m^3/hr), requires 1/2-inch pipe.

(b) *Outlet* B, supplying 75 cfh (2.12 m^3/hr), requires 3/4-inch pipe.

(c) Section 1, supplying *Outlets* A and B, or 110 cfh (3.11 m^3/hr), requires 3/4-inch pipe.

(d) Section 2, supplying *Outlets* C and D, or 135 cfh (3.82 m^3/hr), requires 3/4-inch pipe.

(e) Section 3, supplying *Outlets* A, B, C and D, or 245 cfh (6.94 m^3/hr), requires 1-inch pipe.

(4) If a different gravity factor is applied to this example, the values in the row marked 60 feet (18 288 mm) of Table 402.4(2) would be multiplied by the appropriate multiplier from Table A.2.4 and the resulting cubic feet per hour values would be used to size the *piping*.

TABLE A.5.2
COPPER TUBE STANDARD SIZES

TUBE TYPE	NOMINAL OR STANDARD SIZE (inches)	INTERNAL DIAMETER (inches)
K	1/4	0.305
L	1/4	0.315
ACR (D)	3/8	0.315
ACR (A)	3/8	0.311
K	3/8	0.402
L	3/8	0.430
ACR (D)	1/2	0.430
ACR (A)	1/2	0.436
K	1/2	0.527
L	1/2	0.545
ACR (D)	5/8	0.545
ACR (A)	5/8	0.555
K	5/8	0.652
L	5/8	0.666
ACR (D)	3/4	0.666
ACR (A)	3/4	0.680
K	3/4	0.745
L	3/4	0.785
ACR	7/8	0.785
K	1	0.995
L	1	1.025
ACR	1 1/8	1.025
K	1 1/4	1.245
L	1 1/4	1.265
ACR	1 3/8	1.265
K	1 1/2	1.481
L	1 1/2	1.505
ACR	1 5/8	1.505
K	2	1.959
L	2	1.985
ACR	2 1/8	1.985
K	2 1/2	2.435
L	2 1/2	2.465
ACR	2 5/8	2.465
K	3	2.907
L	3	2.945
ACR	3 1/8	2.945

For SI: 1 inch = 25.4 mm.

INTERNATIONAL CODE COUNCIL®
Copyright © 2019 ICC & NYSDOS. ALL RIGHTS RESERVED. Accessed by Lauren Gualdino (lgualdino@briarcliffmanor.org), (-) Order Number #100880972 on May 08, 2020 07:05 AM (PDT) pursuant to License Agreement with ICC & NYSDOS. No further reproduction, no

100880972

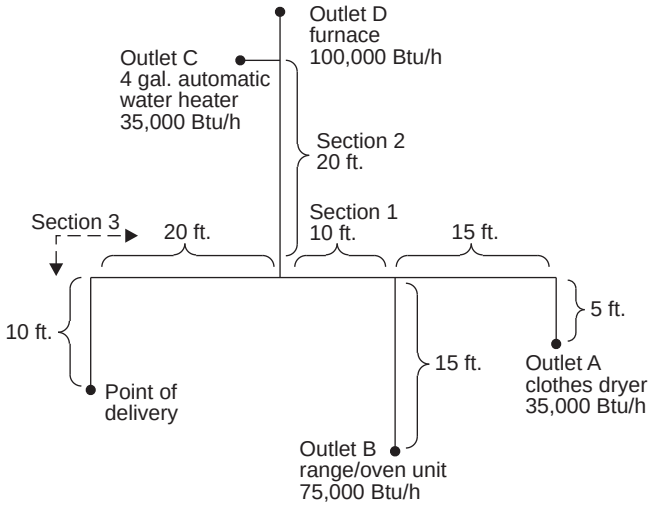

FIGURE A.6.1
PIPING PLAN SHOWING A STEEL PIPING SYSTEM

A.6.2 Example 2: Hybrid or dual pressure systems. Determine the required CSST size of each section of the *piping* system shown in Figure A.6.2, with a designated pressure drop of 1 psi (6.9 kPa) for the 2 psi (13.8 kPa) section and 3-inch w.c. (0.75 kPa) pressure drop for the 13-inch w.c. (2.49 kPa) section. The gas to be used has 0.60 specific gravity and a heating value of 1,000 Btu/ft^3 (37.5 MJ/m^3).

Solution:

(1) Size 2 psi (13.8 kPa) line using Table 402.4(18).

(2) Size 10-inch w.c. (2.5 kPa) lines using Table 402.4(16).

(3) Using the following, determine if sizing tables can be used.

  (a) Total gas load shown in Figure A.6.2 equals 110 cfh (3.11 m^3/hr).

  (b) Determine pressure drop across regulator [see notes in Table 402.4(18)].

  (c) If pressure drop across regulator exceeds $^3/_4$ psig (5.2 kPa), Table 402.4(18) cannot be used. Note: If pressure drop exceeds $^3/_4$ psi (5.2 kPa), then a larger regulator must be selected or an alternative sizing method must be used.

  (d) Pressure drop across the line regulator [for 110 cfh (3.11 m^3/hr)] is 4-inch w.c. (0.99 kPa) based on manufacturer's performance data.

  (e) Assume the CSST manufacturer has tubing sizes or EHDs of 13, 18, 23 and 30.

(4) Section A [2 psi (13.8 kPa) zone]

  (a) Distance from meter to regulator = 100 feet (30 480 mm).

  (b) Total load supplied by A = 110 cfh (3.11 m^3/hr) (furnace + water heater + dryer).

  (c) Table 402.4(18) shows that EHD size 18 should be used.

  Note: It is not unusual to oversize the supply line by 25 to 50 percent of the as-installed load. EHD size 18 has a capacity of 189 cfh (5.35 m^3/hr).

(5) Section B (low pressure zone)

  (a) Distance from regulator to furnace is 15 feet (4572 mm).

  (b) Load is 60 cfh (1.70 m^3/hr).

  (c) Table 402.4(16) shows that EHD size 13 should be used.

(6) Section C (low pressure zone)

  (a) Distance from regulator to water heater is 10 feet (3048 mm).

  (b) Load is 30 cfh (0.85 m^3/hr).

  (c) Table 402.4(16) shows that EHD size 13 should be used.

(7) Section D (low pressure zone)

  (a) Distance from regulator to dryer is 25 feet (7620 mm).

  (b) Load is 20 cfh (0.57 m^3/hr).

  (c) Table 402.4(16) shows that EHD size 13 should be used.

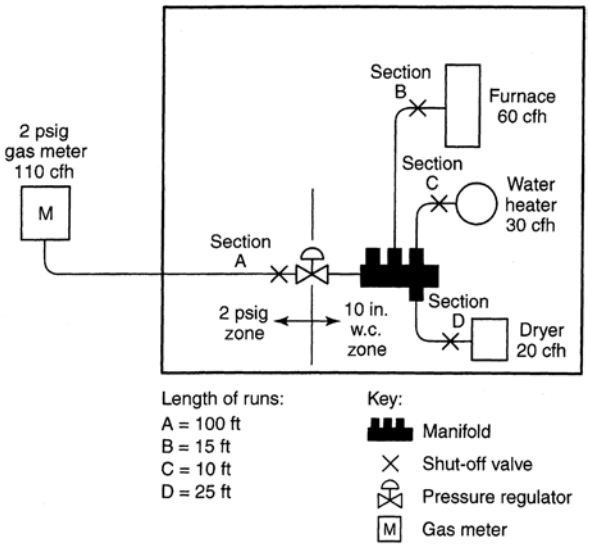

FIGURE A.6.2
PIPING PLAN SHOWING A CSST SYSTEM

INTERNATIONAL CODE COUNCIL®
Copyright © 2019 ICC & NYSDOS. ALL RIGHTS RESERVED. Accessed by Lauren Gualdino (lgualdino@briarcliffmanor.org), (-) Order Number #100880972 on May 08, 2020 07:05 AM (PDT) pursuant to License Agreement with ICC & NYSDOS. No further reproduction, no

100880972

A.6.3 Example 3: Branch length method. Determine the required semirigid copper tubing size of each section of the *piping* system shown in Figure A.6.3, with a designated pressure drop of 1-inch w.c. (250 Pa) (using the Branch Length Method). The gas to be used has 0.60 specific gravity and a heating value of 1,000 Btu/ft^3 (37.5 MJ/m^3).

Solution:

(1) Section A
  (a) The length of tubing from the *point of delivery* to the most remote *appliance* is 50 feet (15 240 mm), A + C.
  (b) Use this longest length to size Sections A and C.
  (c) Using the row marked 50 feet (15 240 mm) in Table 402.4(10), Section A, supplying 220 cfh (6.2 m^3/hr) for four appliances requires 1-inch tubing.

(2) Section B
  (a) The length of tubing from the *point of delivery* to the range/oven at the end of Section B is 30 feet (9144 mm), A + B.
  (b) Use this branch length to size Section B only.
  (c) Using the row marked 30 feet (9144 mm) in Table 402.4(10), Section B, supplying 75 cfh (2.12 m^3/hr) for the range/oven requires $^1/_2$-inch tubing.

(3) Section C
  (a) The length of tubing from the *point of delivery* to the dryer at the end of Section C is 50 feet (15 240 mm), A + C.
  (b) Use this branch length to size Section C.
  (c) Using the row marked 50 feet (15 240 mm) in Table 402.4(10), Section C, supplying 30 cfh (0.85 m^3/hr) for the dryer requires $^3/_8$-inch tubing.

(4) Section D
  (a) The length of tubing from the *point of delivery* to the water heater at the end of Section D is 30 feet (9144 mm), A + D.
  (b) Use this branch length to size Section D only.
  (c) Using the row marked 30 feet (9144 mm) in Table 402.4(10), Section D, supplying 35 cfh (0.99 m^3/hr) for the water heater requires $^3/_8$-inch tubing.

(5) Section E
  (a) The length of tubing from the *point of delivery* to the furnace at the end of Section E is 30 feet (9144 mm), A + E.
  (b) Use this branch length to size Section E only.
  (c) Using the row marked 30 feet (9144 mm) in Table 402.4(10), Section E, supplying 80 cfh (2.26 m^3/hr) for the furnace requires $^1/_2$-inch tubing.

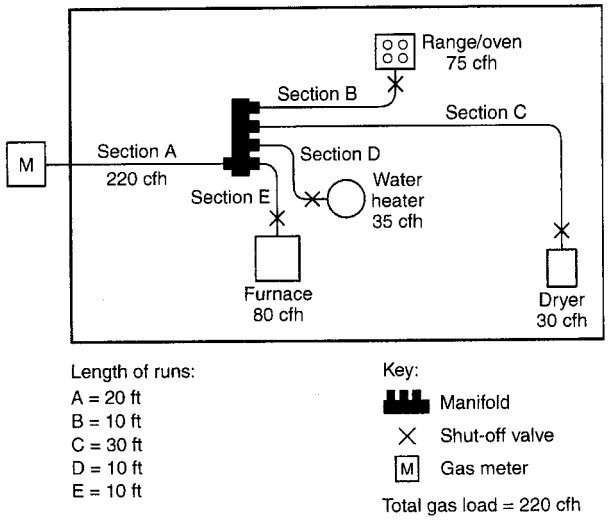

FIGURE A.6.3
PIPING PLAN SHOWING A COPPER TUBING SYSTEM

A.6.4 Example 4: Modification to existing piping system. Determine the required CSST size for Section G (retrofit application) of the *piping* system shown in Figure A.6.4, with a designated pressure drop of 0.5-inch w.c. (125 Pa) using the branch length method. The gas to be used has 0.60 specific gravity and a heating value of 1,000 Btu/ft^3 (37.5 MJ/m^3).

Solution:

(1) The length of pipe and CSST from the *point of delivery* to the retrofit *appliance* (barbecue) at the end of Section G is 40 feet (12 192 mm), A + B + G.

(2) Use this branch length to size Section G.

(3) Assume the CSST manufacturer has tubing sizes or EHDs of 13, 18, 23 and 30.

(4) Using the row marked 40 feet (12 192 mm) in Table 402.4(15), Section G, supplying 40 cfh (1.13 m^3/hr) for the barbecue requires EHD 18 CSST.

(5) The sizing of Sections A, B, F and E must be checked to ensure adequate gas carrying capacity since an *appliance* has been added to the *piping* system (see A.6.1 for details).

INTERNATIONAL CODE COUNCIL®
Copyright © 2019 ICC & NYSDOS. ALL RIGHTS RESERVED. Accessed by Lauren Gualdino (lgualdino@briarcliffmanor.org), (-) Order Number #100880972 on May 08, 2020 07:05 AM (PDT) pursuant to License Agreement with ICC & NYSDOS. No further reproduction, no

100880972

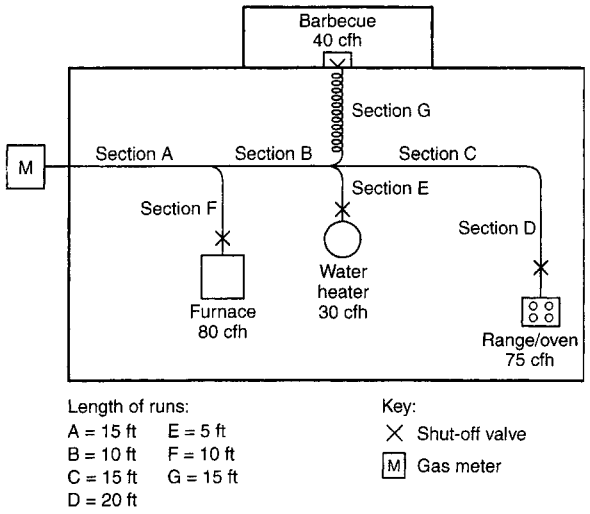

FIGURE A.6.4
PIPING PLAN SHOWING A MODIFICATION TO EXISTING PIPING SYSTEM

A.6.5 Example 5: Calculating pressure drops due to temperature changes. A test *piping* system is installed on a warm autumn afternoon when the temperature is 70°F (21°C). In accordance with local custom, the new *piping* system is subjected to an air pressure test at 20 psig (138 kPa). Overnight, the temperature drops and when the inspector shows up first thing in the morning the temperature is 40°F (4°C).

If the volume of the *piping* system is unchanged, then the formula based on Boyle's and Charles' law for determining the new pressure at a reduced temperature is as follows:

$$\frac{T_1}{T_2} = \frac{P_1}{P_2}$$

where:

T_1 = Initial temperature, absolute (T_1 + 459)

T_2 = Final temperature, absolute (T_2 + 459)

P_1 = Initial pressure, psia (P_1 + 14.7)

P_2 = Final pressure, psia (P_2 + 14.7)

$$\frac{(70+459)}{(40+459)} = \frac{(20+14.7)}{(P_2+14.7)}$$

$$\frac{529}{499} = \frac{34.7}{(P_2+14.7)}$$

$$(P_2+14.7)\times\frac{529}{499} = 34.7$$

$$(P_2+14.7)\times\frac{34.7}{1.060}$$

P_2 =32.7 - 14.7

P_2 =18 *psig*

Therefore, the gauge could be expected to register 18 psig (124 kPa) when the ambient temperature is 40°F (4°C).

A.6.6 Example 6: Pressure drop per 100 feet of pipe method. Using the layout shown in Figure A.6.1 and ΔH = pressure drop, in w.c. (27.7 in. H_2O = 1 psi), proceed as follows:

(1) Length to A = 20 feet, with 35,000 Btu/hr.

For $^1/_2$-inch pipe, $\Delta H = {}^{20\text{ feet}}/_{100\text{ feet}} \times 0.3$ inch w.c. = 0.06 in w.c.

(2) Length to B = 15 feet, with 75,000 Btu/hr.

For $^3/_4$-inch pipe, $\Delta H = {}^{15\text{ feet}}/_{100\text{ feet}} \times 0.3$ inch w.c. = 0.045 in w.c.

(3) Section 1 = 10 feet, with 110,000 Btu/hr. Here there is a choice:

For 1-inch pipe: $\Delta H = {}^{10\text{ feet}}/_{100\text{ feet}} \times 0.2$ inch w.c. = 0.02 in w.c.

For $^3/_4$-inch pipe: $\Delta H = {}^{10\text{ feet}}/_{100\text{ feet}} \times [0.5$ inch w.c. + ${}^{(110{,}000\text{ Btu/hr-}104{,}000\text{ Btu/hr})}/_{(147{,}000\text{ Btu/hr-}104{,}000\text{ Btu/hr})} \times (1.0$ inches w.c. - 0.5 inch w.c.)] = 0.1 × 0.57 inch w.c.≈ 0.06 inch w.c.

Note that the pressure drop between 104,000 Btu/hr and 147,000 Btu/hr has been interpolated as 110,000 Btu/hr.

(4) Section 2 = 20 feet, with 135,000 Btu/hr. Here there is a choice:

For 1-inch pipe: $\Delta H = {}^{20\text{ feet}}/_{100\text{ feet}} \times [0.2$ inch w.c. + ${}^{(14{,}000\text{ Btu/hr})}/_{(27{,}000\text{ Btu/hr})} \times 0.1$ inch w.c.] = 0.05 inch w.c.

For $^3/_4$-inch pipe: $\Delta H = {}^{20\text{ feet}}/_{100\text{ feet}} \times 1.0$ inch w.c. = 0.2 inch w.c.

Note that the pressure drop between 121,000 Btu/hr and 148,000 Btu/hr has been interpolated as 135,000 Btu/hr, but interpolation for the ¾-inch pipe (trivial for 104,000 Btu/hr to 147,000 Btu/hr) was not used.

(5) Section 3 = 30 feet, with 245,000 Btu/hr. Here there is a choice:

For 1-inch pipe: $\Delta H = {}^{30\text{ feet}}/_{100\text{ feet}} \times 1.0$ inches w.c. = 0.3 inch w.c.

For $1^1/_4$-inch pipe: $\Delta H = {}^{30\text{ feet}}/_{100\text{ feet}} \times 0.2$ inch w.c. = 0.06 inch w.c.

Note that interpolation for these options is ignored since the table values are close to the 245,000 Btu/hr carried by that section.

(6) The total pressure drop is the sum of the section approaching A, Sections 1 and 3, or either of the following, depending on whether an absolute minimum is needed or the larger drop can be accommodated.

Minimum pressure drop to farthest *appliance*:

ΔH = 0.06 inch w.c. + 0.02 inch w.c. + 0.06 inch w.c. = 0.14 inch w.c.

Larger pressure drop to the farthest *appliance*:

ΔH = 0.06 inch w.c. + 0.06 inch w.c. + 0.3 inch w.c. = 0.42 inch w.c.

INTERNATIONAL CODE COUNCIL®
Copyright © 2019 ICC & NYSDOS. ALL RIGHTS RESERVED. Accessed by Lauren Gualdino (lgualdino@briarcliffmanor.org), (-) Order Number #100880972 on May 08, 2020 07:05 AM (PDT) pursuant to License Agreement with ICC & NYSDOS. No further reproduction, no

100880972

Notice that Section 2 and the run to B do not enter into this calculation, provided that the appliances have similar input pressure requirements.

For SI units: 1 Btu/hr = 0.293 W, 1 cubic foot = 0.028 m^3, 1 foot = 0.305 m, 1 inch w.c. = 249 Pa.

INTERNATIONAL CODE COUNCIL®
Copyright © 2019 ICC & NYSDOS. ALL RIGHTS RESERVED. Accessed by Lauren Gualdino (lgualdino@briarcliffmanor.org), (-) Order Number #100880972 on May 08, 2020 07:05 AM (PDT) pursuant to License Agreement with ICC & NYSDOS. No further reproduction, no

100880972

INTERNATIONAL CODE COUNCIL®
Copyright © 2019 ICC & NYSDOS. ALL RIGHTS RESERVED. Accessed by Lauren Gualdino (lgualdino@briarcliffmanor.org), (-) Order Number #100880972 on May 08, 2020 07:05 AM (PDT) pursuant to License Agreement with ICC & NYSDOS. No further reproduction, no

100880972

APPENDIX B

SIZING OF VENTING SYSTEMS SERVING APPLIANCES EQUIPPED WITH DRAFT HOODS, CATEGORY I APPLIANCES AND APPLIANCES LISTED FOR USE WITH TYPE B VENTS

This appendix is informative and is not part of the code. This appendix is an excerpt from the 2018 International Fuel Gas Code, *coordinated with the section numbering of the* International Residential Code.

EXAMPLES USING SINGLE APPLIANCE VENTING TABLES

Example 1: Single draft-hood-equipped appliance.

An installer has a 120,000 British thermal unit (Btu) per hour input *appliance* with a 5-inch-diameter draft hood outlet that needs to be vented into a 10-foot-high Type B vent system. What size vent should be used assuming (a) a 5-foot lateral single-wall metal vent connector is used with two 90-degree elbows, or (b) a 5-foot lateral single-wall metal vent connector is used with three 90-degree elbows in the vent system?

Solution:

Table 504.2(2) should be used to solve this problem, because single-wall metal vent connectors are being used with a Type B vent.

(a) Read down the first column in Table 504.2(2) until the row associated with a 10-foot height and 5-foot lateral is found. Read across this row until a vent capacity greater than 120,000 Btu per hour is located in the shaded columns *labeled* "NAT Max" for draft-hood-equipped appliances. In this case, a 5-inch-diameter vent has a capacity of 122,000 Btu per hour and can be used for this application.

(b) If three 90-degree elbows are used in the vent system, then the maximum vent capacity listed in the tables must be reduced by 10 percent (see Section 504.2.3 for single *appliance* vents). This implies that the 5-inch-diameter vent has an adjusted capacity of only 110,000 Btu per hour. In this case, the vent system must be increased to 6 inches in diameter (see the following calculations).

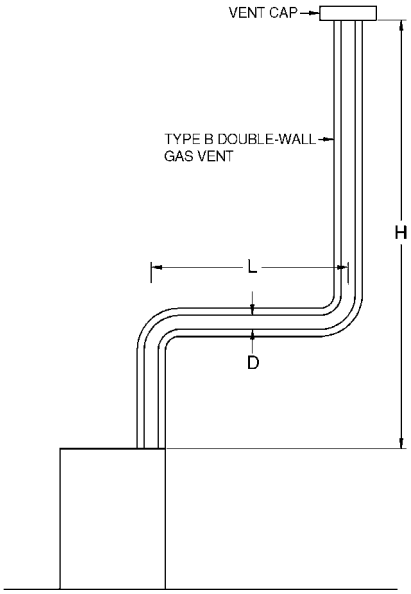

For SI: 1 foot = 304.8 mm, 1 British thermal unit per hour = 0.2931 W.

Table 504.2(1) is used where sizing Type B double-wall gas vent connected directly to the appliance.

Note: The appliance may be either Category I draft hood equipped or fan-assisted type.

FIGURE B-1
TYPE B DOUBLE-WALL VENT SYSTEM SERVING A SINGLE APPLIANCE WITH A TYPE B DOUBLE-WALL VENT

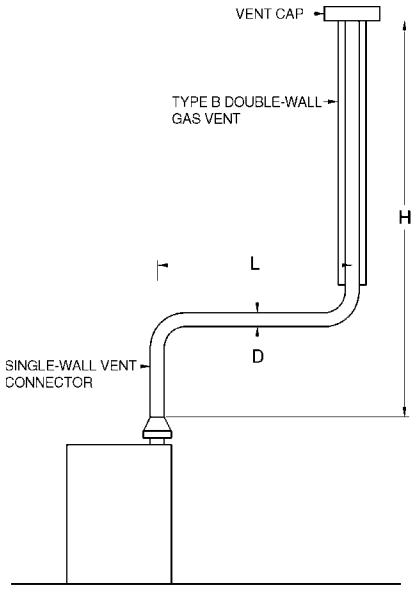

For SI: 1 foot = 304.8 mm, 1 British thermal unit per hour = 0.2931 W.

Table 504.2(2) is used where sizing a single-wall metal vent connector attached to a Type B double-wall gas vent.

Note: The appliance may be either Category I draft hood equipped or fan-assisted type.

FIGURE B-2
TYPE B DOUBLE-WALL VENT SYSTEM SERVING A SINGLE APPLIANCE WITH A SINGLE-WALL METAL VENT CONNECTOR

INTERNATIONAL CODE COUNCIL®
Copyright © 2019 ICC & NYSDOS. ALL RIGHTS RESERVED. Accessed by Lauren Gualdino (lgualdino@briarcliffmanor.org), (-) Order Number #100880972 on May 08, 2020 07:05 AM (PDT) pursuant to License Agreement with ICC & NYSDOS. No further reproduction, no

100880972

APPENDIX B—SIZING OF VENTING SYSTEMS SERVING APPLIANCES EQUIPPED WITH DRAFT HOODS, CATEGORY I APPLIANCES AND APPLIANCES LISTED FOR USE WITH TYPE B VENTS

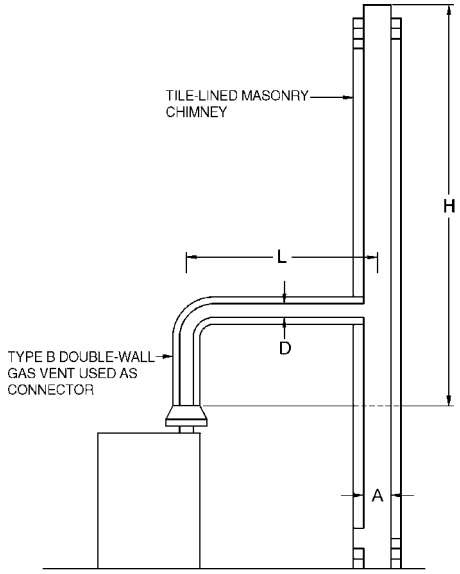

Table 504.2(3) is used where sizing a Type B double-wall gas vent connector attached to a tile-lined masonry chimney.

Note: "A" is the equivalent cross-sectional area of the tile liner.

Note: The appliance can be either Category I draft hood equipped or fan-assisted type.

FIGURE B-3
VENT SYSTEM SERVING A SINGLE APPLIANCE WITH A MASONRY CHIMNEY OF TYPE B DOUBLE-WALL VENT CONNECTOR

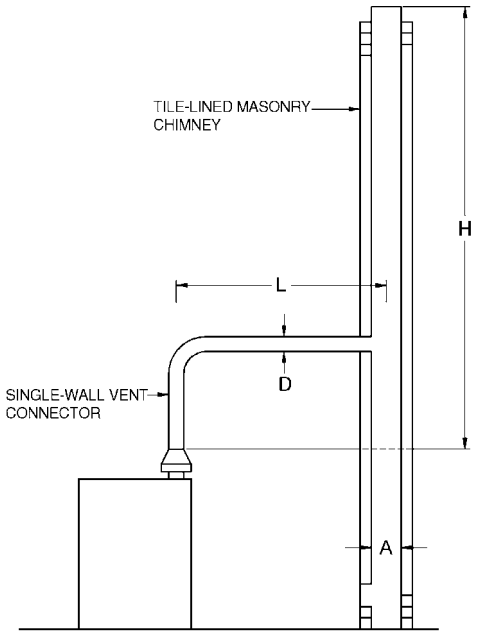

Table 504.2(4) is used where sizing a single-wall vent connector attached to a tile-lined masonry chimney.

Note: "A" is the equivalent cross-sectional area of the tile liner.

Note: The appliance can be either Category I draft hood equipped or fan-assisted type.

FIGURE B-4
VENT SYSTEM SERVING A SINGLE APPLIANCE USING A MASONRY CHIMNEY AND A SINGLE-WALL METAL VENT CONNECTOR

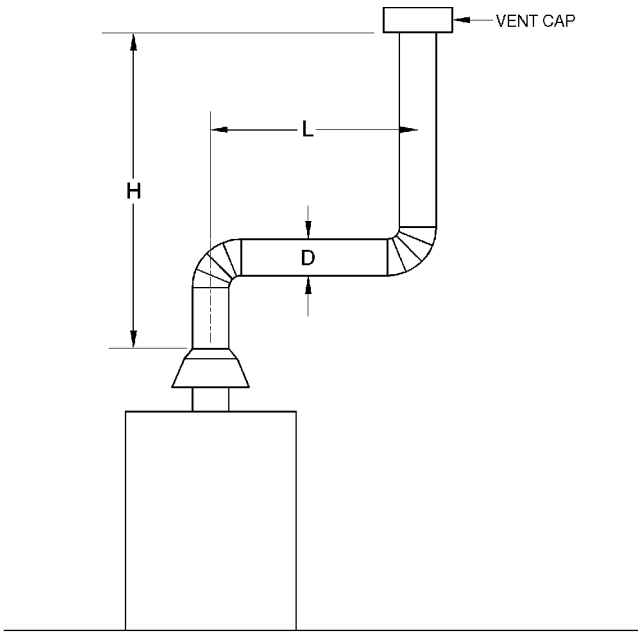

Asbestos cement Type B or single-wall metal vent serving a single draft-hood-equipped appliance [see Table 504.2(5)].

FIGURE B-5
ASBESTOS CEMENT TYPE B OR SINGLE-WALL METAL VENT SYSTEM SERVING A SINGLE DRAFT-HOOD-EQUIPPED APPLIANCE

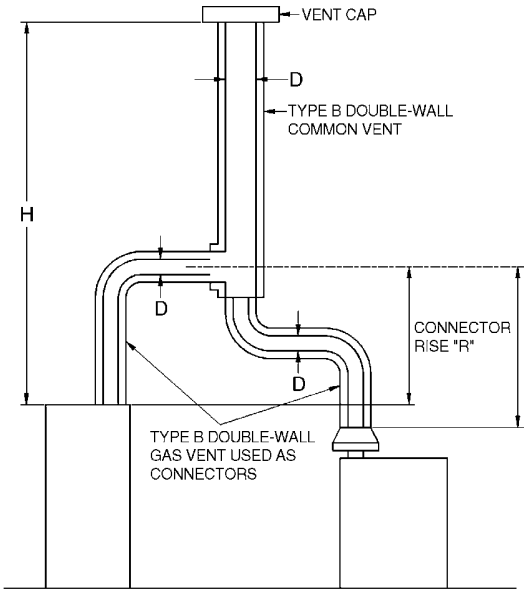

Table 504.3(1) is used where sizing Type B double-wall vent connectors attached to a Type B double-wall common vent.

Note: Each appliance can be either Category I draft hood equipped or fan-assisted type.

FIGURE B-6
VENT SYSTEM SERVING TWO OR MORE APPLIANCES WITH TYPE B DOUBLE-WALL VENT AND TYPE B DOUBLE-WALL VENT CONNECTOR

INTERNATIONAL CODE COUNCIL®
Copyright © 2019 ICC & NYSDOS. ALL RIGHTS RESERVED. Accessed by Lauren Gualdino (lgualdino@briarcliffmanor.org), (-) Order Number #100880972 on May 08, 2020 07:05 AM (PDT) pursuant to License Agreement with ICC & NYSDOS. No further reproduction, no

100880972

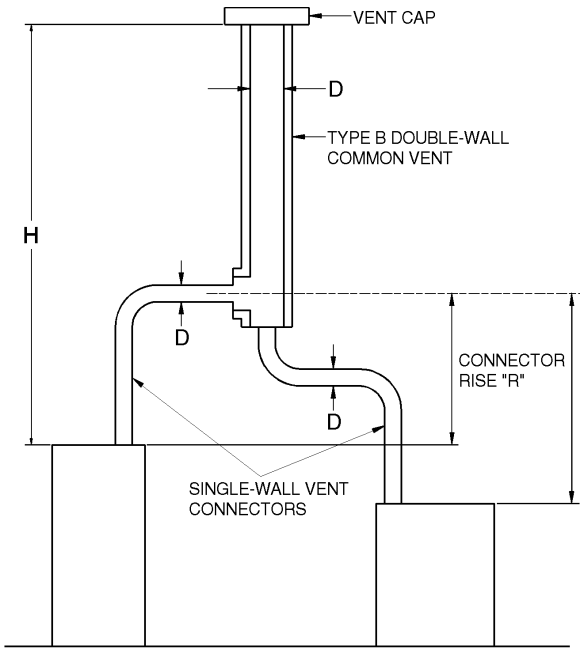

Table 504.3(2) is used where sizing single-wall vent connectors attached to a Type B double-wall common vent.

Note: Each appliance can be either Category I draft hood equipped or fan-assisted type.

FIGURE B-7
VENT SYSTEM SERVING TWO OR MORE APPLIANCES WITH TYPE B DOUBLE-WALL VENT AND SINGLE-WALL METAL VENT CONNECTORS

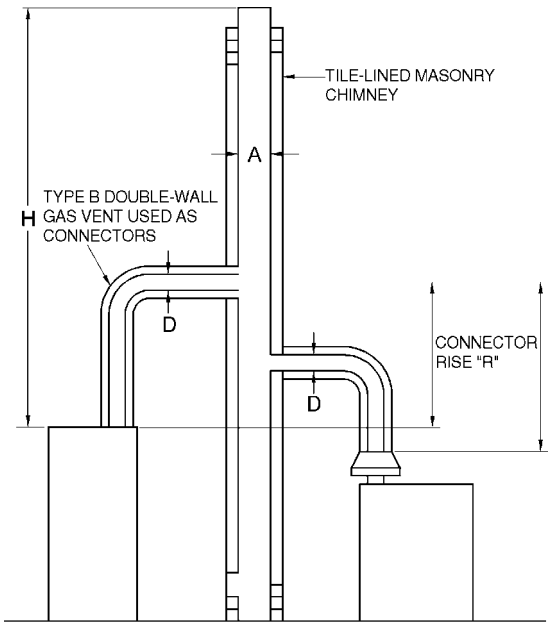

Table 504.3(3) is used where sizing Type B double-wall vent connectors attached to a tile-lined masonry chimney.

Note: "A" is the equivalent cross-sectional area of the tile liner.

Note: Each appliance can be either Category I draft hood equipped or fan-assisted type.

FIGURE B-8
MASONRY CHIMNEY SERVING TWO OR MORE APPLIANCES WITH TYPE B DOUBLE-WALL VENT CONNECTOR

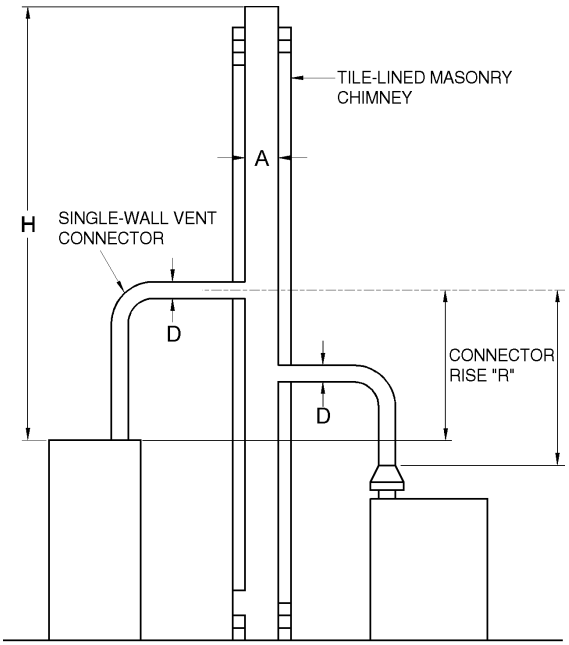

Table 504.3(4) is used where sizing single-wall metal vent connectors attached to a tile-lined masonry chimney.

Note: "A" is the equivalent cross-sectional area of the tile liner.

Note: Each appliance can be either Category I draft hood equipped or fan-assisted type.

FIGURE B-9
MASONRY CHIMNEY SERVING TWO OR MORE APPLIANCES WITH SINGLE-WALL METAL VENT CONNECTORS

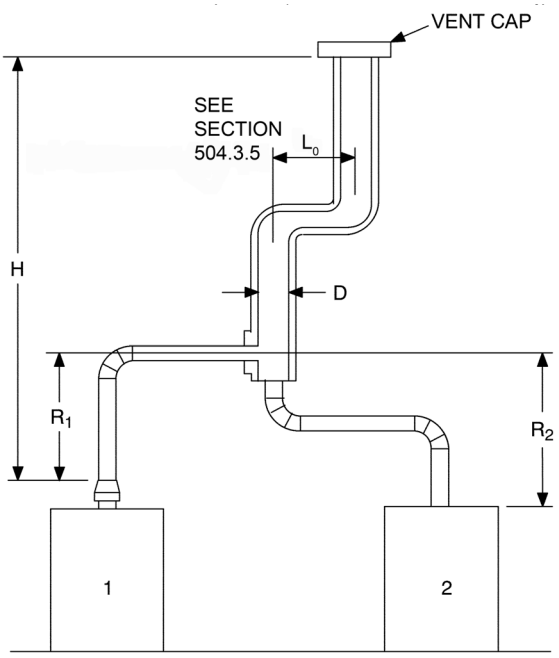

Asbestos cement Type B or single-wall metal pipe vent serving two or more draft-hood-equipped appliances [see Table 504.3(5)].

FIGURE B-10
ASBESTOS CEMENT TYPE B OR SINGLE-WALL METAL VENT SYSTEM SERVING TWO OR MORE DRAFT-HOOD-EQUIPPED APPLIANCES

INTERNATIONAL CODE COUNCIL®
Copyright © 2019 ICC & NYSDOS. ALL RIGHTS RESERVED. Accessed by Lauren Gualdino (lgualdino@briarcliffmanor.org), (-) Order Number #100880972 on May 08, 2020 07:05 AM (PDT) pursuant to License Agreement with ICC & NYSDOS. No further reproduction, no

APPENDIX B—SIZING OF VENTING SYSTEMS SERVING APPLIANCES EQUIPPED WITH DRAFT HOODS, CATEGORY I APPLIANCES AND APPLIANCES LISTED FOR USE WITH TYPE B VENTS

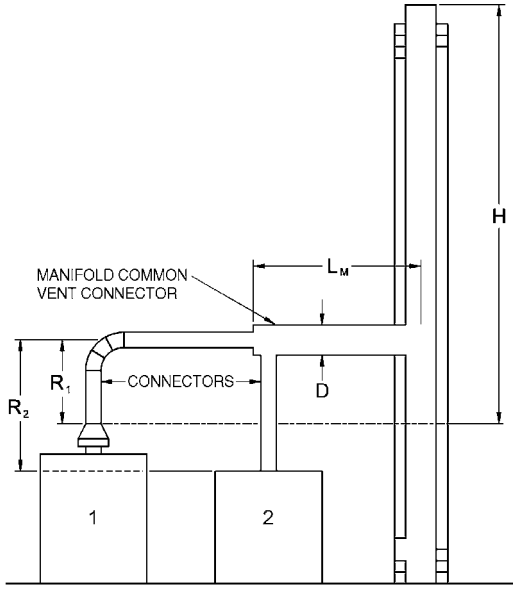

Example: Manifolded Common Vent Connector L_M shall be no greater than 18 times the common vent connector manifold inside diameter; i.e., a 4-inch (102 mm) inside diameter common vent connector manifold shall not exceed 72 inches (1829 mm) in length (see Section 504.3.4).

Note: This is an illustration of a typical manifolded vent connector. Different appliance, vent connector, or common vent types are possible. Consult Section 502.3.

FIGURE B-11
USE OF MANIFOLD COMMON VENT CONNECTOR

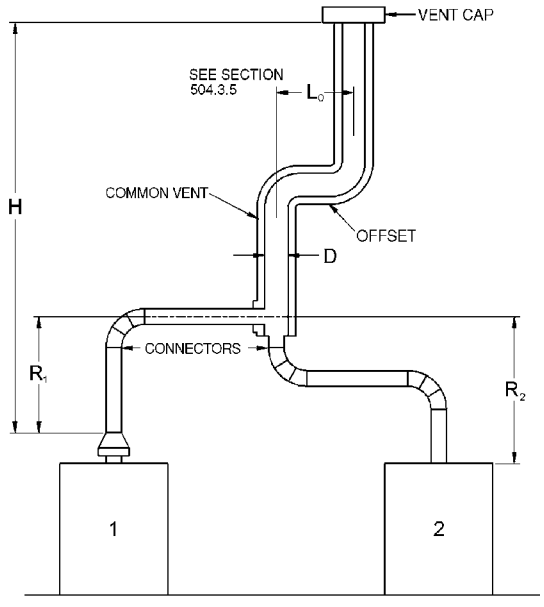

Example: Offset Common Vent

Note: This is an illustration of a typical offset vent. Different appliance, vent connector, or vent types are possible. Consult Sections 504.2 and 504.3.

FIGURE B-12
USE OF OFFSET COMMON VENT

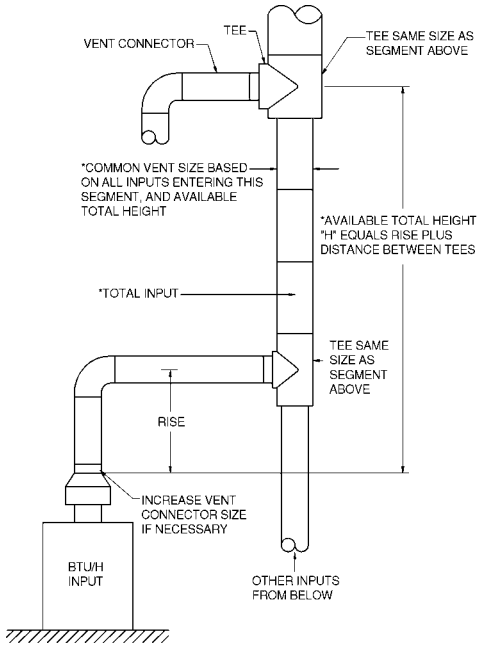

Vent connector size depends on: Common vent size depends on:

- Input• Combined inputs
- Rise• Available total height "H"
- Available total height "H"• Table 504.3(1) common vent
- Table 504.3(1) connectors

FIGURE B-13
MULTISTORY GAS VENT DESIGN PROCEDURE FOR EACH SEGMENT OF SYSTEM

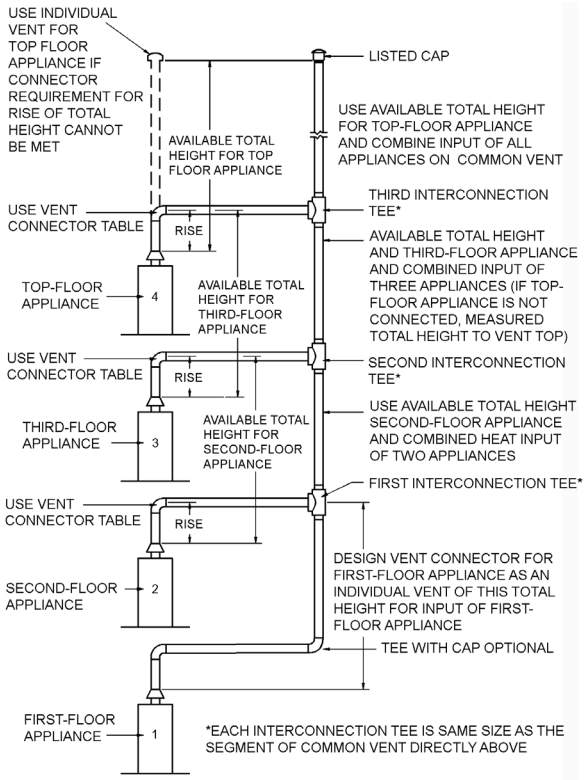

Principles of design of multistory vents using vent connector and common vent design tables (see Sections 504.3.11 through 504.3.17).

FIGURE B-14
MULTISTORY VENT SYSTEMS

INTERNATIONAL CODE COUNCIL®
Copyright © 2019 ICC & NYSDOS. ALL RIGHTS RESERVED. Accessed by Lauren Gualdino (lgualdino@briarcliffmanor.org), (-) Order Number #100880972 on May 08, 2020 07:05 AM (PDT) pursuant to License Agreement with ICC & NYSDOS. No further reproduction, no

100880972

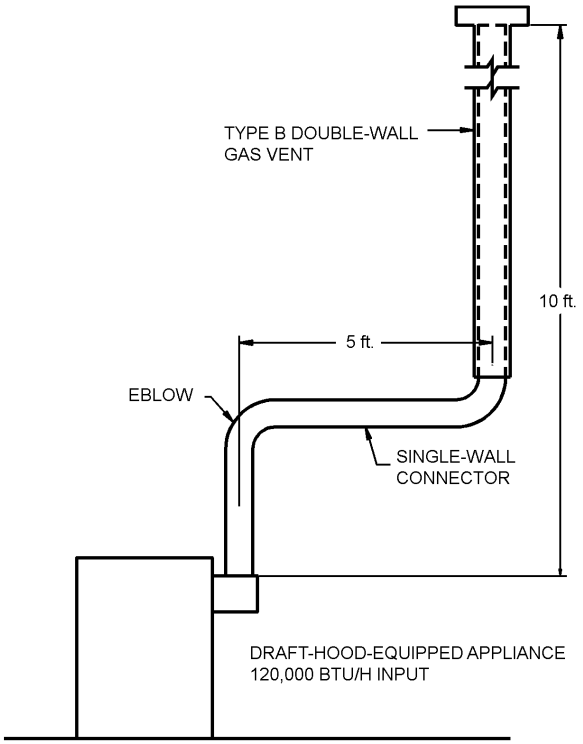

For SI: 1 foot = 304.8 mm, 1 British thermal unit per hour = 0.2931 W.

FIGURE B-15 (EXAMPLE 1)
SINGLE DRAFT-HOOD-EQUIPPED APPLIANCE

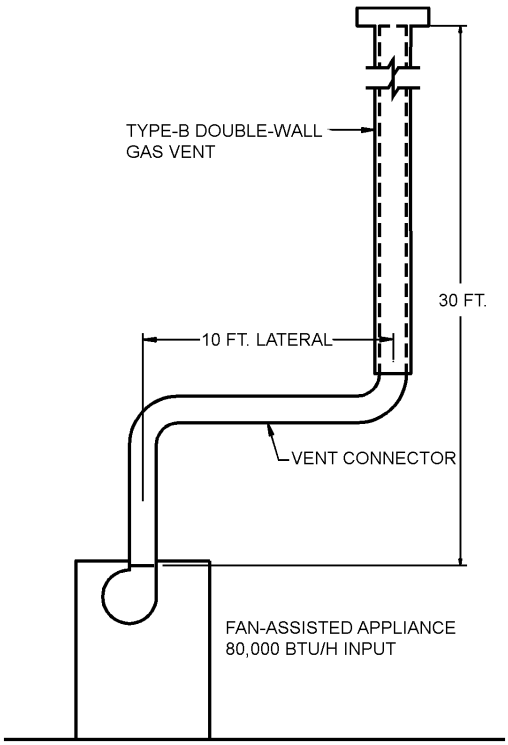

For SI: 1 foot = 304.8 mm, 1 British thermal unit per hour = 0.2931 W.

FIGURE B-16 (EXAMPLE 2)
SINGLE FAN-ASSISTED APPLIANCE

122,000 (0.90) = 110,000 for 5-inch vent
From Table 504.2(2), Select 6-inch vent
186,000 (0.90) = 167,000; This is greater than the required 120,000. Therefore, use a 6-inch vent and connector where three elbows are used.

Example 2: Single fan-assisted appliance.

An installer has an 80,000 Btu per hour input fan-assisted *appliance* that must be installed using 10 feet of lateral connector attached to a 30-foot-high Type B vent. Two 90-degree elbows are needed for the installation. Can a single-wall metal vent connector be used for this application?

Solution:

Table 504.2(2) refers to the use of single-wall metal vent connectors with Type B vent. In the first column find the row associated with a 30-foot height and a 10-foot lateral. Read across this row, looking at the FAN Min and FAN Max columns, to find that a 3-inch-diameter single-wall metal vent connector is not recommended. Moving to the next larger size single wall connector (4 inches), note that a 4-inch-diameter single-wall metal connector has a recommended minimum vent capacity of 91,000 Btu per hour and a recommended maximum vent capacity of 144,000 Btu per hour. The 80,000 Btu per hour fan-assisted *appliance* is outside this range, so the conclusion is that a single-wall metal vent connector cannot be used to vent this *appliance* using 10 feet of lateral for the connector.

However, if the 80,000 Btu per hour input *appliance* could be moved to within 5 feet of the vertical vent, then a 4-inch single-wall metal connector could be used to vent the *appliance*. Table 504.2(2) shows the acceptable range of vent capacities for a 4-inch vent with 5 feet of lateral to be between 72,000 Btu per hour and 157,000 Btu per hour.

If the *appliance* cannot be moved closer to the vertical vent, then Type B vent could be used as the connector material. In this case, Table 504.2(1) shows that for a 30-foot-high vent with 10 feet of lateral, the acceptable range of vent capacities for a 4-inch-diameter vent attached to a fan-assisted *appliance* is between 37,000 Btu per hour and 150,000 Btu per hour.

Example 3: Interpolating between table values.

An installer has an 80,000 Btu per hour input *appliance* with a 4-inch-diameter draft hood outlet that needs to be vented into a 12-foot-high Type B vent. The vent connector has a 5-foot lateral length and is also Type B. Can this *appliance* be vented using a 4-inch-diameter vent?

Solution:

Table 504.2(1) is used in the case of an all Type B vent system. However, since there is no entry in Table 504.2(1) for a height of 12 feet, interpolation must be used. Read down the

INTERNATIONAL CODE COUNCIL®
Copyright © 2019 ICC & NYSDOS. ALL RIGHTS RESERVED. Accessed by Lauren Gualdino (lgualdino@briarcliffmanor.org), (-) Order Number #100880972 on May 08, 2020 07:05 AM (PDT) pursuant to License Agreement with ICC & NYSDOS. No further reproduction, no

100880972

4-inch diameter NAT Max column to the row associated with 10-foot height and 5-foot lateral to find the capacity value of 77,000 Btu per hour. Read further down to the 15-foot height, 5-foot lateral row to find the capacity value of 87,000 Btu per hour. The difference between the 15-foot height capacity value and the 10-foot height capacity value is 10,000 Btu per hour. The capacity for a vent system with a 12-foot height is equal to the capacity for a 10-foot height plus $^{2}/_{5}$ of the difference between the 10-foot and 15-foot height values, or 77,000 + $^{2}/_{5}$ (10,000) = 81,000 Btu per hour. Therefore, a 4-inch-diameter vent can be used in the installation.

EXAMPLES USING COMMON VENTING TABLES

Example 4: Common venting two draft-hood-equipped appliances.

A 35,000 Btu per hour water heater is to be common vented with a 150,000 Btu per hour furnace using a common vent with a total height of 30 feet. The connector rise is 2 feet for the water heater with a horizontal length of 4 feet. The connector rise for the furnace is 3 feet with a horizontal length of 8 feet. Assume single-wall metal connectors will be used with Type B vent. What size connectors and combined vent should be used in this installation?

Solution:

Table 504.3(2) should be used to size single-wall metal vent connectors attached to Type B vertical vents. In the vent connector capacity portion of Table 504.3(2), find the row associated with a 30-foot vent height. For a 2-foot rise on the vent connector for the water heater, read the shaded columns for draft-hood-equipped appliances to find that a 3-inch-diameter vent connector has a capacity of 37,000 Btu per hour. Therefore, a 3-inch single-wall metal vent connector can be used with the water heater. For a draft-hood-equipped furnace with a 3-foot rise, read across the appropriate row to find that a 5-inch-diameter vent connector has a maximum capacity of 120,000 Btu per hour (which is too small for the furnace) and a 6-inch-diameter vent connector has a maximum vent capacity of 172,000 Btu per hour. Therefore, a 6-inch-diameter vent connector should be used with the 150,000 Btu per hour furnace. Since both vent connector horizontal lengths are less than the maximum lengths *listed* in Section 504.3.2, the table values can be used without adjustments.

In the common vent capacity portion of Table 504.3(2), find the row associated with a 30-foot vent height and read over to the NAT + NAT portion of the 6-inch-diameter column to find a maximum combined capacity of 257,000 Btu per hour. Since the two appliances total only 185,000 Btu per hour, a 6-inch common vent can be used.

Example 5a: Common venting a draft-hood-equipped water heater with a fan-assisted furnace into a Type B vent.

In this case, a 35,000 Btu per hour input draft-hood-equipped water heater with a 4-inch-diameter draft hood *outlet*, 2 feet of connector rise, and 4 feet of horizontal length is to be common vented with a 100,000 Btu per hour fan-assisted furnace with a 4-inch-diameter flue collar, 3 feet of connector rise,

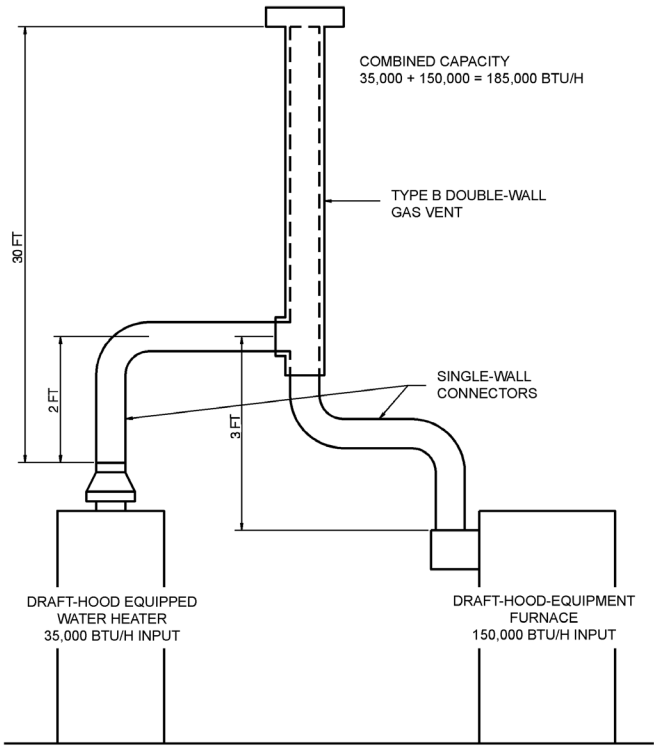

FIGURE B-17 (EXAMPLE 4)
COMMON VENTING TWO DRAFT-HOOD-EQUIPPED APPLIANCES

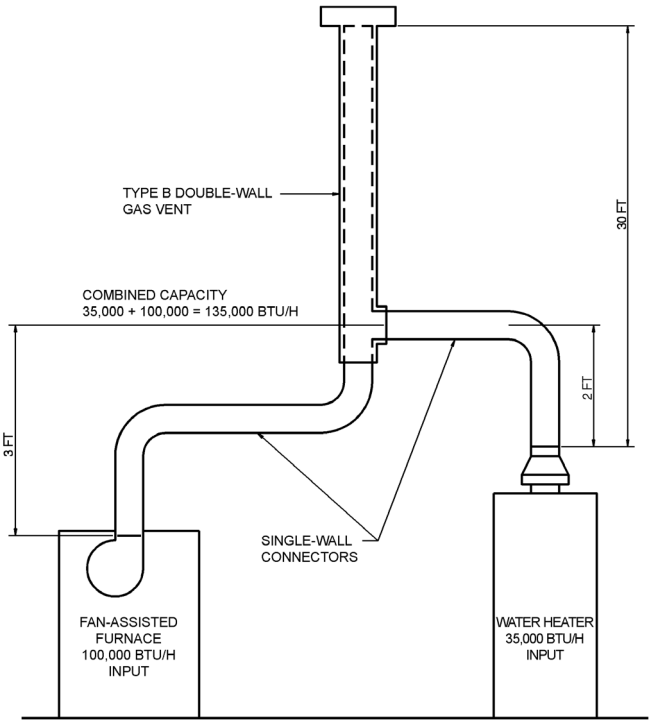

FIGURE B-18 (EXAMPLE 5A)
COMMON VENTING A DRAFT HOOD WITH A FAN-ASSISTED FURNACE INTO A TYPE B DOUBLE-WALL COMMON VENT

INTERNATIONAL CODE COUNCIL®
Copyright © 2019 ICC & NYSDOS. ALL RIGHTS RESERVED. Accessed by Lauren Gualdino (lgualdino@briarcliffmanor.org), (-) Order Number #100880972 on May 08, 2020 07:05 AM (PDT) pursuant to License Agreement with ICC & NYSDOS. No further reproduction, no

100880972

and 6 feet of horizontal length. The common vent consists of a 30-foot height of Type B vent. What are the recommended vent diameters for each connector and the common vent? The installer would like to use a single-wall metal vent connector.

Solution: [Table 504.3(2)].

Water Heater Vent Connector Diameter. Since the water heater vent connector horizontal length of 4 feet is less than the maximum value listed in Section 504.3.2, the venting table values can be used without adjustments. Using the Vent Connector Capacity portion of Table 504.3(2), read down the Total Vent Height (*H*) column to 30 feet and read across the 2-foot Connector Rise (*R*) row to the first Btu per hour rating in the NAT Max column that is equal to or greater than the water heater input rating. The table shows that a 3-inch vent connector has a maximum input rating of 37,000 Btu per hour. Although this is greater than the water heater input rating, a 3-inch vent connector is prohibited by Section 504.3.21. A 4-inch vent connector has a maximum input rating of not more than 67,000 Btu per hour and is equal to the draft hood *outlet* diameter. A 4-inch vent connector is selected. Since the water heater is equipped with a draft hood, there are no minimum input rating restrictions.

Furnace Vent Connector Diameter. Using the Vent Connector Capacity portion of Table 504.3(2), read down the Total Vent Height (*H*) column to 30 feet and across the 3-foot Connector Rise (*R*) row. Since the furnace has a fan-assisted combustion system, find the first FAN Max column with a Btu per hour rating greater than the furnace input rating. The 4-inch vent connector has a maximum input rating of 119,000 Btu per hour and a minimum input rating of 85,000 Btu per hour. The 100,000 Btu per hour furnace in this example falls within this range, so a 4-inch connector is adequate. Since the furnace vent connector horizontal length of 6 feet does not exceed the maximum value listed in Section 504.3.2, the venting table values can be used without adjustment. If the furnace had an input rating of 80,000 Btu per hour, then a Type B vent connector [see Table 504.3(1)] would be needed in order to meet the minimum capacity limit.

Common Vent Diameter. The total input to the common vent is 135,000 Btu per hour. Using the Common Vent Capacity portion of Table 504.3(2), read down the Total Vent Height (*H*) column to 30 feet and across this row to find the smallest vent diameter in the FAN + NAT column that has a Btu per hour rating equal to or greater than 135,000 Btu per hour. The 4-inch common vent has a capacity of 132,000 Btu per hour and the 5-inch common vent has a capacity of 202,000 Btu per hour. Therefore, the 5-inch common vent should be used in this example.

Summary. In this example, the installer can use a 4-inch-diameter, single-wall metal vent connector for the water heater and a 4-inch-diameter, single-wall metal vent connector for the furnace. The common vent should be a 5-inch-diameter Type B vent.

Example 5b: Common venting into a masonry chimney.

In this case, the water heater and fan-assisted furnace of Example 5a are to be common vented into a clay tile-lined masonry chimney with a 30-foot height. The chimney is not exposed to the outdoors below the roof line. The internal dimensions of the clay tile liner are nominally 8 inches by 12 inches. Assuming the same vent connector heights, laterals, and materials found in Example 5a, what are the recommended vent connector diameters, and is this an acceptable installation?

Solution:

Table 504.3(4) is used to size common venting installations involving single-wall connectors into masonry chimneys.

Water Heater Vent Connector Diameter. Using Table 504.3(4), Vent Connector Capacity, read down the Total Vent Height (*H*) column to 30 feet, and read across the 2-foot Connector Rise (*R*) row to the first Btu per hour rating in the NAT Max column that is equal to or greater than the water heater input rating. The table shows that a 3-inch vent connector has a maximum input of only 31,000 Btu per hour while a 4-inch vent connector has a maximum input of 57,000 Btu per hour. A 4-inch vent connector must therefore be used.

Furnace Vent Connector Diameter. Using the Vent Connector Capacity portion of Table 504.3(4), read down the Total Vent Height (*H*) column to 30 feet and across the 3-foot Connector Rise (*R*) row. Since the furnace has a fan-assisted combustion system, find the first FAN Max column with a Btu per hour rating greater than the furnace input rating. The 4-inch vent connector has a maximum input rating of 127,000 Btu per hour and a minimum input rating of 95,000 Btu per hour. The 100,000 Btu per hour furnace in this example falls within this range, so a 4-inch connector is adequate.

Masonry Chimney. From Table B-1, the equivalent area for a nominal liner size of 8 inches by 12 inches is 63.6 square inches. Using Table 504.3(4), Common Vent Capacity, read down the FAN + NAT column under the Minimum Internal Area of Chimney value of 63 to the row for 30-foot height to find a capacity value of 739,000 Btu per hour. The combined input rating of the furnace and water heater, 135,000 Btu per hour, is less than the table value, so this is an acceptable installation.

Section 504.3.17 requires the common vent area to be not greater than seven times the smallest *listed appliance* categorized vent area, flue collar area, or draft hood outlet area. Both appliances in this installation have 4-inch-diameter outlets. From Table B-1, the equivalent area for an inside diameter of 4 inches is 12.2 square inches. Seven times 12.2 equals 85.4, which is greater than 63.6, so this configuration is acceptable.

Example 5c: Common venting into an exterior masonry chimney.

In this case, the water heater and fan-assisted furnace of Examples 5a and 5b are to be common vented into an exterior masonry chimney. The chimney height, clay tile liner dimensions, and vent connector heights and laterals are the same as in Example 5b. This system is being installed in Charlotte, North Carolina. Does this exterior masonry chimney need to be relined? If so, what corrugated metallic liner size is recommended? What vent connector diameters are recommended?

Solution:

INTERNATIONAL CODE COUNCIL®
Copyright © 2019 ICC & NYSDOS. ALL RIGHTS RESERVED. Accessed by Lauren Gualdino (lgualdino@briarcliffmanor.org), (-) Order Number #100880972 on May 08, 2020 07:05 AM (PDT) pursuant to License Agreement with ICC & NYSDOS. No further reproduction, no

100880972

In accordance with Section 504.3.20, Type B vent connectors are required to be used with exterior masonry chimneys. Use Tables 504.3(7a), (7b) to size FAN+NAT common venting installations involving Type-B double wall connectors into exterior masonry chimneys.

The local 99-percent winter design temperature needed to use Table 504.3(7b) can be found in the ASHRAE *Handbook of Fundamentals*. For Charlotte, North Carolina, this design temperature is 19°F.

Chimney Liner Requirement. As in Example 5b, use the 63 square inch Internal Area columns for this size clay tile liner. Read down the 63 square inch column of Table 504.3(7a) to the 30-foot height row to find that the combined *appliance* maximum input is 747,000 Btu per hour. The combined input rating of the appliances in this installation, 135,000 Btu per hour, is less than the maximum value, so this criterion is satisfied. Table 504.3(7b), at a 19°F design temperature, and at the same vent height and internal area used above, shows that the minimum allowable input rating of a space-heating appliance is 470,000 Btu per hour. The furnace input rating of 100,000 Btu per hour is less than this minimum value. So this criterion is not satisfied, and an alternative venting design needs to be used, such as a Type B vent shown in Example 5a or a *listed* chimney liner system shown in the remainder of the example.

In accordance with Section 504.3.19, Table 504.3(1) or 504.3(2) is used for sizing corrugated metallic liners in masonry chimneys, with the maximum common vent capacities reduced by 20 percent. This example will be continued assuming Type B vent connectors.

Water Heater Vent Connector Diameter. Using Table 504.3(1), Vent Connector Capacity, read down the Total Vent Height (*H*) column to 30 feet, and read across the 2-foot Connector Rise (*R*) row to the first Btu/h rating in the NAT Max column that is equal to or greater than the water heater input rating. The table shows that a 3-inch vent connector has a maximum capacity of 39,000 Btu/h. Although this rating is greater than the water heater input rating, a 3-inch vent connector is prohibited by Section 504.3.21. A 4-inch vent connector has a maximum input rating of 70,000 Btu/h and is equal to the draft hood outlet diameter. A 4-inch vent connector is selected.

Furnace Vent Connector Diameter. Using Table 504.3(1), Vent Connector Capacity, read down the Vent Height (*H*) column to 30 feet, and read across the 3-foot Connector Rise (*R*) row to the first Btu per hour rating in the FAN Max column that is equal to or greater than the furnace input rating. The 100,000 Btu per hour furnace in this example falls within this range, so a 4-inch connector is adequate.

Chimney Liner Diameter. The total input to the common vent is 135,000 Btu per hour. Using the Common Vent Capacity Portion of Table 504.3(1), read down the Vent Height (*H*) column to 30 feet and across this row to find the smallest vent diameter in the FAN+NAT column that has a Btu per hour rating greater than 135,000 Btu per hour. The 4-inch common vent has a capacity of 138,000 Btu per hour. Reducing the maximum capacity by 20 percent (Section 504.3.19) results in a maximum capacity for a 4-inch corrugated liner of 110,000 Btu per hour, less than the total input of 135,000 Btu per hour. So a larger liner is needed. The 5-inch common vent capacity *listed* in Table 504.3(1) is 210,000 Btu per hour, and after reducing by 20 percent is

TABLE B-1
MASONRY CHIMNEY LINER DIMENSIONS WITH CIRCULAR EQUIVALENTS[a]

NOMINAL LINER SIZE (inches)	INSIDE DIMENSIONS OF LINER (inches)	INSIDE DIAMETER OR EQUIVALENT DIAMETER (inches)	EQUIVALENT AREA (square inches)
4 × 8	$2^1/_2 \times 6^1/_2$	4	12.2
		5	19.6
		6	28.3
		7	38.3
8 × 8	$6^3/_4 \times 6^3/_4$	7.4	42.7
		8	50.3
8 × 12	$6^1/_2 \times 10^1/_2$	9	63.6
		10	78.5
12 × 12	$9^3/_4 \times 9^{\ 3}/_4$	10.4	83.3
		11	95
12 × 16	$9^1/_2 \times 13^1/_2$	11.8	107.5
		12	113.0
		14	153.9
16 × 16	$13^1/_4 \times 13^1/_4$	14.5	162.9
		15	176.7
16 × 20	13 × 17	16.2	206.1
		18	254.4
20 × 20	$16^3/_4 \times 16^3/_4$	18.2	260.2
		20	314.1
20 × 24	$16^1/_2 \times 20^1/_2$	20.1	314.2
		22 ×	380.1
24 × 24	$20^1/_4 \times 20^1/_4$	22.1	380.1
		24	452.3
24 × 28	$20^1/_4 \times 20^1/_4$	24.1	456.2
28 × 28	$24^1/_4 \times 24^1/_4$	26.4	543.3
		27	572.5
30 × 30	$25^1/_2 \times 25^1/_2$	27.9	607
		30	706.8
30 × 36	$25^1/_2 \times 31^1/_2$	30.9	749.9
		33	855.3
36 × 36	$31^1/_2 \times 31^1/_2$	34.4	929.4
		36	1017.9

For SI: 1 inch = 25.4 mm, 1 square inch = 645.16 m^2.

a. Where liner sizes differ dimensionally from those shown in Table B-1, equivalent diameters can be determined from published tables for square and rectangular ducts of equivalent carrying capacity or by other engineering methods.

INTERNATIONAL CODE COUNCIL®
Copyright © 2019 ICC & NYSDOS. ALL RIGHTS RESERVED. Accessed by Lauren Gualdino (lgualdino@briarcliffmanor.org), (-) Order Number #100880972 on May 08, 2020 07:05 AM (PDT) pursuant to License Agreement with ICC & NYSDOS. No further reproduction, no

100880972

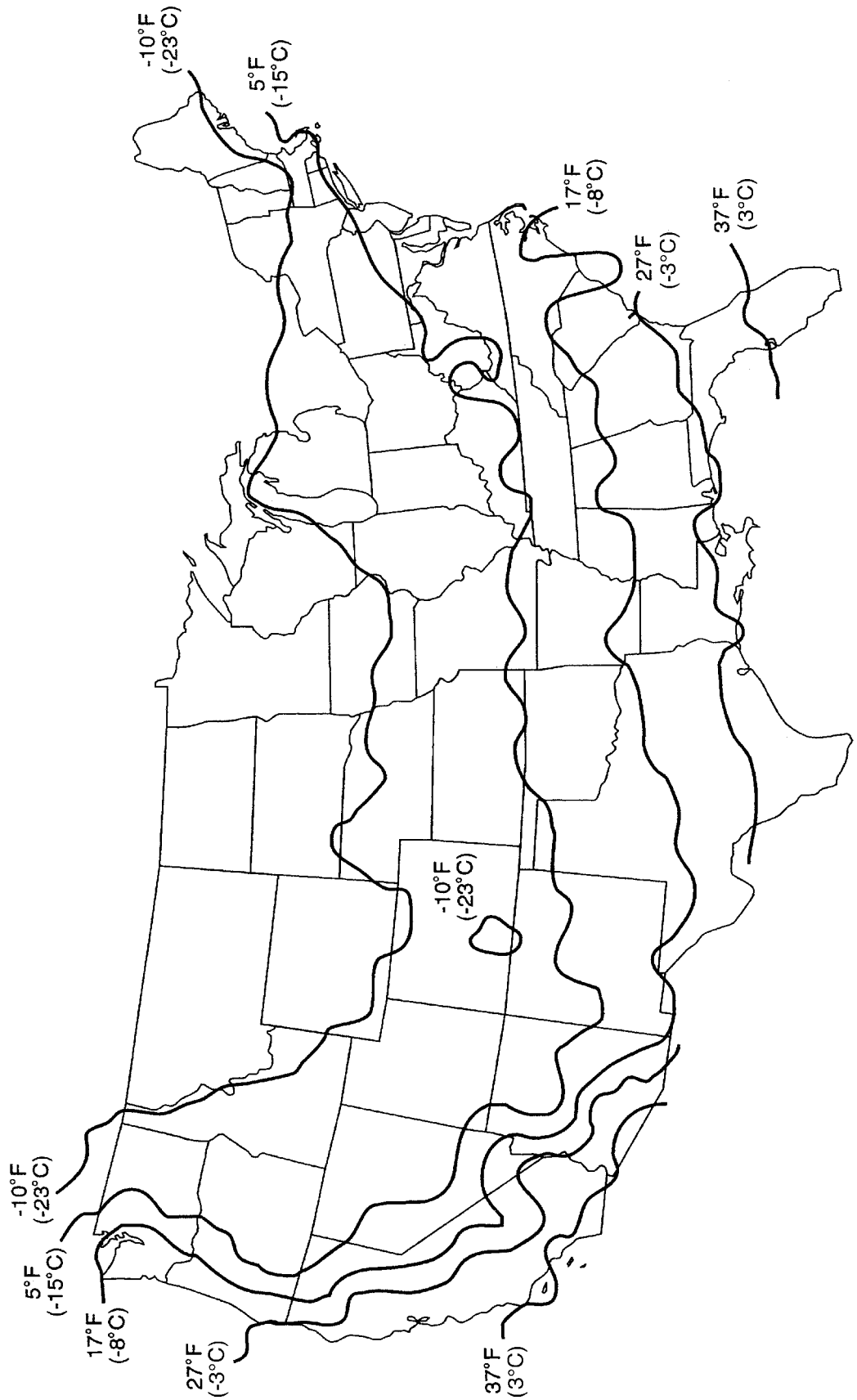

FIGURE B-19

NFGC:
99% Winter Design Temperatures for the Contiguous United States

This map is a necessarily generalized guide to temperatures in the contiguous United States. Temperatures shown for areas such as mountainous regions and large urban centers are not necessarily accurate.

The climate data used to develop this map are from the *ASHRAE Handbook*—Fundamentals (Climate Conditions for the United States).

For 99% winter design temperature in Alaska, consult the *ASHRAE Handbook*—Fundamentals.

99% winter design temperatures for Hawaii are greater than 37°F.

INTERNATIONAL CODE COUNCIL®
Copyright © 2019 ICC & NYSDOS. ALL RIGHTS RESERVED. Accessed by Lauren Gualdino (lgualdino@briarcliffmanor.org), (-) Order Number #100880972 on May 08, 2020 07:05 AM (PDT) pursuant to License Agreement with ICC & NYSDOS. No further reproduction, no

100880972

168,000 Btu per hour. Therefore, a 5-inch corrugated metal liner should be used in this example.

Single-Wall Connectors. Once it has been established that relining the chimney is necessary, Type B double-wall vent connectors are not specifically required. This example could be redone using Table 504.3(2) for single-wall vent connectors. For this case, the vent connector and liner diameters would be the same as found above with Type B double-wall connectors.

INTERNATIONAL CODE COUNCIL®
Copyright © 2019 ICC & NYSDOS. ALL RIGHTS RESERVED. Accessed by Lauren Gualdino (lgualdino@briarcliffmanor.org), (-) Order Number #100880972 on May 08, 2020 07:05 AM (PDT) pursuant to License Agreement with ICC & NYSDOS. No further reproduction, no

100880972

APPENDIX C

EXIT TERMINALS OF MECHANICAL DRAFT AND DIRECT-VENT VENTING SYSTEMS

This appendix is informative and is not part of the code. This appendix is an excerpt from the 2018 International Fuel Gas Code, *coordinated with the section numbering of the* International Residential Code.

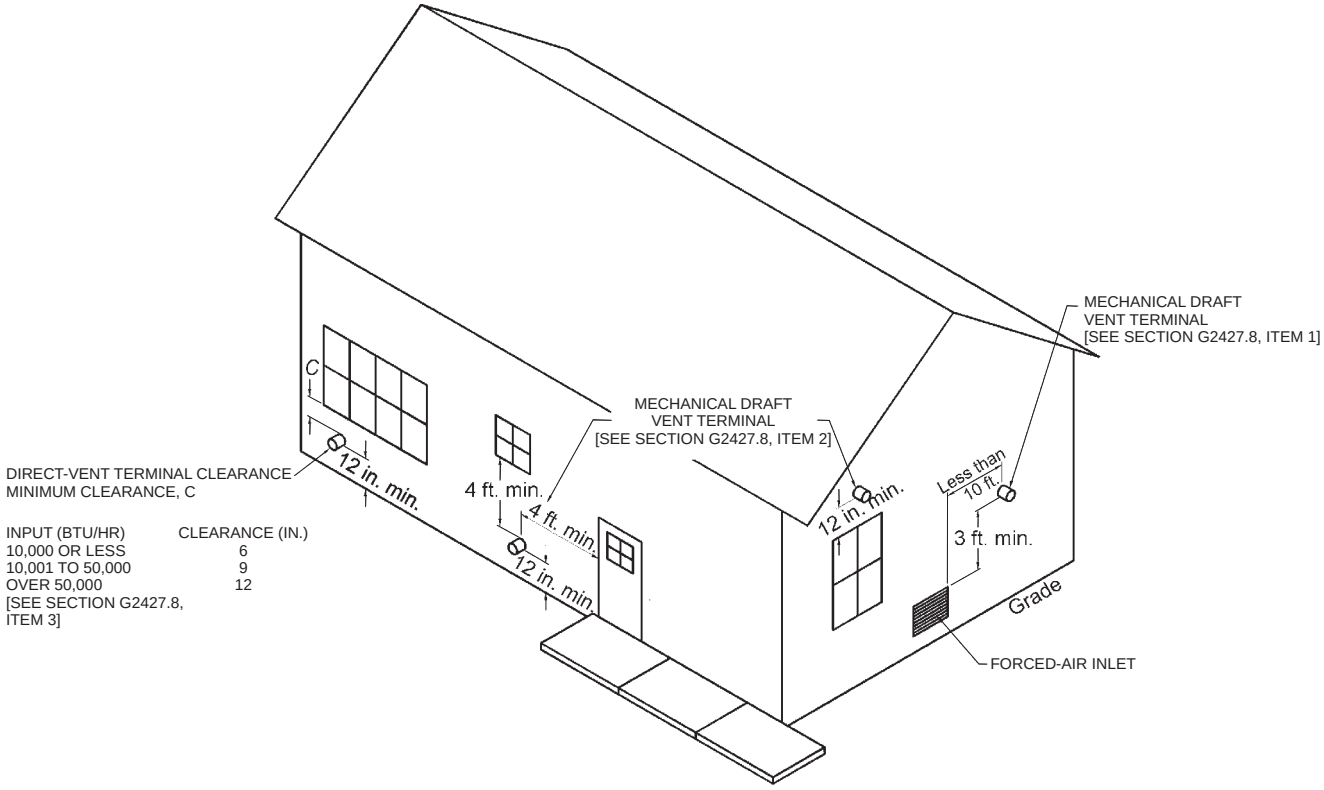

For SI: 1 inch = 25.4 mm, 1 foot = 304.8 mm, 1 British thermal unit per hour = 0.2931 W.

INTERNATIONAL CODE COUNCIL®
Copyright © 2019 ICC & NYSDOS. ALL RIGHTS RESERVED. Accessed by Lauren Gualdino (lgualdino@briarcliffmanor.org), (-) Order Number #100880972 on May 08, 2020 07:05 AM (PDT) pursuant to License Agreement with ICC & NYSDOS. No further reproduction, no

100880972

INTERNATIONAL CODE COUNCIL®
Copyright © 2019 ICC & NYSDOS. ALL RIGHTS RESERVED. Accessed by Lauren Gualdino (lgualdino@briarcliffmanor.org), (-) Order Number #100880972 on May 08, 2020 07:05 AM (PDT) pursuant to License Agreement with ICC & NYSDOS. No further reproduction, no

100880972

APPENDIX D

RECOMMENDED PROCEDURE FOR SAFETY INSPECTION OF AN EXISTING APPLIANCE INSTALLATION

This appendix is informative and is not part of this code.
This appendix is an excerpt from the 2018 International Fuel Gas Code,
coordinated with the section numbering of the 2018 International Residential Code.

D.1 General. The following procedure is intended as a guide to aid in determining that an appliance is properly installed and is in a safe condition for continued use. Where a gas supplier performs an inspection, their written procedures should be followed.

D.1.1 Application. This procedure is intended for existing residential installations of a furnace, boiler, room heater, water heater, cooking appliance, fireplace appliance and clothes dryer. This procedure should be performed prior to any attempt to modify the appliance installation or building envelope.

D.1.2 Weatherization Programs. Before a building envelope is to be modified as part of a weatherization program, the existing appliance installation should be inspected in accordance with these procedures. After all unsafe conditions are repaired, and immediately after the weatherization is complete, the appliance inspections in D.5.2 are to be repeated.

D.1.3 Inspection Procedure. The safety of the building occupant and inspector are to be determined as the first step as described in D.2. Only after the ambient environment is found to be safe should inspections of gas piping and appliances be undertaken. It is recommended that all inspections described in D.3, D.4, and D.6, where the appliance is in the off mode, be completed and any unsafe conditions repaired or corrected before continuing with inspections of an operating appliance described in D.5 and D.6.

D.1.4 Manufacturer Instructions. Where available, the manufacturer's installation and operating instructions for the installed appliances should be used as part of these inspection procedures to determine if it is installed correctly and is operating properly.

D.1.5 Instruments. The inspection procedures include measuring for fuel gas and carbon monoxide (CO) and will require the use of a combustible gas detector (CGD) and a CO detector. It is recommended that both types of detectors be listed. Prior to any inspection, the detectors should be calibrated or tested in accordance with the manufacturer's instructions. In addition, it is recommended that the detectors have the following minimum specifications.

(1) Gas Detector*:* The CGD should be capable of indicating the presence of the type of fuel gas for which it is to be used, for example, natural gas or propane. The combustible gas detector should be capable of the following:

   a. *PPM:* Numeric display with a parts per million (ppm) scale from 1ppm to 900 ppm in 1 ppm increments.

   b. *LEL:* Numeric display with a percent lower explosive limit (% LEL) scale from 0 percent to 100 percent in 1 percent increments.

   c. *Audio:* An audio sound feature to locate leaks.

(2) CO Detector: The CO detector should be capable of the following functions and have a numeric display scale as follows:

   a. *PPM:* For measuring ambient room and appliance emissions a display scale in parts per million (ppm) from 0 to 1,000 ppm in 1 ppm increments.

   b. *Alarm:* A sound alarm function where hazardous levels of ambient CO is found (see D.2 for alarm levels)

   c. *Air Free:* Capable of converting CO measurements to an air free level in ppm. Where a CO detector is used without an air free conversion function, the CO air free can be calculated in accordance with Note 3 in Table D.6.

D.2 Occupant and Inspector Safety. Prior to entering a building, the inspector should have both a combustible gas detector (CGD) and CO detector turned on, calibrated, and operating. Immediately upon entering the building, a sample of the ambient atmosphere should be taken. Based on CGD and CO detector readings, the inspector should take the following actions:

(1) The CO detector indicates a carbon monoxide level of 70 ppm or greater[1]. The inspector should immediately notify the occupant of the need for themselves and any building occupant to evacuate; the inspector shall immediately evacuate and call 911.

(2) Where the CO detector indicates a reading between 30 ppm and 70 ppm[1]. The inspector should advise the occupant that high CO levels have been found and recommend that all possible sources of CO should be turned off immediately and windows and doors

[1] U.S. Consumer Product Safety Commission, *Responding to Residential Carbon Monoxide Incidents, Guidelines For Fire and Other Emergency Response Personnel*, Approved 7/23/02

INTERNATIONAL CODE COUNCIL®
Copyright © 2019 ICC & NYSDOS. ALL RIGHTS RESERVED. Accessed by Lauren Gualdino (lgualdino@briarcliffmanor.org), (-) Order Number #100880972 on May 08, 2020 07:05 AM (PDT) pursuant to License Agreement with ICC & NYSDOS. No further reproduction, no

100880972

opened. Where it appears that the source of CO is a permanently installed appliance, advise the occupant to keep the appliance off and have the appliance serviced by a qualified servicing agent.

(3) Where CO detector indicates CO below 30 ppm[1] the inspection can continue.

(4) The CGD indicates a combustible gas level of 20-percent LEL or greater. The inspector should immediately notify the occupant of the need for themselves and any building occupant to evacuate; the inspector shall immediately evacuate and call 911.

(5) The CGD indicates a combustible gas level below 20-percent LEL, the inspection can continue.

If during the inspection process it is determined a condition exists that could result in unsafe appliance operation, shut off the appliance and advise the owner of the unsafe condition. Where a gas leak is found that could result in an unsafe condition, advise the owner of the unsafe condition and call the gas supplier to turn off the gas supply. The inspector should not continue a safety inspection on an operating appliance, venting system, and piping system until repairs have been made.

D.3 Gas Piping and Connection Inspections.

(1) Leak Checks. Conduct a test for gas leakage using either a noncorrosive leak detection solution or a CGD confirmed with a leak detection solution.

The preferred method for leak checking is by use of gas leak detection solution applied to all joints. This method provides a reliable visual indication of significant leaks.

The use of a CGD in its audio sensing mode can quickly locate suspect leaks but can be overly sensitive indicating insignificant and false leaks. Suspect leaks found through the use of a CGD should be confirmed using a leak detection solution.

Where gas leakage is confirmed, the owner should be notified that repairs must be made. The inspection should include the following components:

a. Gas piping fittings located within the appliance space.

b. Appliance connector fittings.

c. Appliance gas valve/regulator housing and connections.

(2) *Appliance Connector*. Verify that the appliance connection type is compliant with Section G2422 of the *International Fuel Gas Code*. Inspect flexible appliance connections to determine if they are free of cracks, corrosion and signs of damage. Verify that there are no uncoated brass connectors. Where connectors are determined to be unsafe or where an uncoated brass connector is found, the appliance shut-off valve should be placed in the off position and the owner notified that the connector must be replaced.

(3) *Piping Support*. Inspect piping to determine that it is adequately supported, that there is no undue stress on the piping, and if there are any improperly capped pipe openings.

(4) *Bonding*. Verify that the electrical bonding of gas piping is compliant with Section G2411 of the *International Fuel Gas Code*.

D.4 Inspections to be performed with the Appliance Not Operating. The following safety inspection procedures are performed on appliances that are not operating. These inspections are applicable to all appliance installations.

(1) *Preparing for Inspection*. Shut off all gas and electrical power to the appliances located in the same room being inspected. For gas supply, use the shutoff valve in the supply line or at the manifold serving each appliance. For electrical power, place the circuit breaker in the off position or remove the fuse that serves each appliance. A lock type device or tag should be installed on each gas shutoff valve and at the electrical panel to indicate that the service has been shut off for inspection purposes.

(2) *Vent System Size and Installation*. Verify that the existing venting system size and installation are compliant with Chapter 5 of the *International Fuel Gas Code*. The size and installation of venting systems for other than natural draft and Category I appliances should be in compliance with the manufacturer's installation instructions. Inspect the venting system to determine that it is free of blockage, restriction, leakage, corrosion, and other deficiencies that could cause an unsafe condition. Inspect masonry chimneys to determine if they are lined. Inspect plastic venting system to determine that it is free of sagging and it is sloped in an upward direction to the outdoor vent termination.

(3) *Combustion Air Supply*. Inspect provisions for combustion air as follows:

a. *Nondirect-vent Appliances*. Determine that non-direct vent appliance installations are compliant with the combustion air requirements in Section G2407 of the *International Fuel Gas Code*. Inspect any interior and exterior combustion air openings and any connected combustion air ducts to determine that there is no blockage, restriction, corrosion or damage. Inspect to determine that the upper horizontal combustion air duct is not sloped in a downward direction toward the air supply source.

[1] U.S. Consumer Product Safety Commission, *Responding to Residential Carbon Monoxide Incidents, Guidelines For Fire and Other Emergency Response Personnel,* Approved 7/23/02

INTERNATIONAL CODE COUNCIL®
Copyright © 2019 ICC & NYSDOS. ALL RIGHTS RESERVED. Accessed by Lauren Gualdino (lgualdino@briarcliffmanor.org), (-) Order Number #100880972 on May 08, 2020 07:05 AM (PDT) pursuant to License Agreement with ICC & NYSDOS. No further reproduction, no

100880972

b. *Direct Vent Appliances*. Verify that the combustion air supply ducts and pipes are securely fastened to direct vent appliance and determine that there are no separations, blockage, restriction, corrosion or other damage. Determine that the combustion air source is located in the outdoors or to areas that freely communicate to the outdoors.

c. *Unvented Appliances*. Verify that the total input of all unvented room heaters and gas-fired refrigerators installed in the same room or rooms that freely communicate with each other does not exceed 20 Btu/hr/ft^3.

(4) *Flooded Appliances*. Inspect for flood damage to the appliance. Signs of flooding include a visible water submerge line on the appliance housing, excessive surface or component rust, deposited debris on internal components, and mildew-like odor. Inform the owner that any part of the appliance control system and any appliance gas control that has been under water must be replaced. Flood-damaged plumbing, heating, cooling and electrical appliances should be replaced.

(5) *Flammable Vapors*. Inspect the room/space where the appliance is installed to determine if the area is free of the storage of gasoline or any flammable products such as oil-based solvents, varnishes or adhesives. Where the appliance is installed where flammable products will be stored or used, such as a garage, verify that the appliance burner(s) is not less than 18 inches above the floor unless the appliance is listed as flammable vapor ignition resistant.

(6) *Clearances to Combustibles*. Inspect the immediate location where the appliance is installed to determine if the area is free of rags, paper or other combustibles. Verify that the appliance and venting system are compliant with clearances to combustible building components in accordance with Sections G2408.5, G2425.15.4, G2426.5, G2427.6.2, G2427.10.5 and other applicable sections of Section G2427.

(7) *Appliance Components.* Inspect internal components by removing access panels or other components for the following:

a. Inspect burners and crossovers for blockage and corrosion. The presence of soot, debris, and signs of excessive heating are potential indicators of incomplete combustion caused by blockage or improper burner adjustments.

b. Metallic and nonmetallic hoses for signs of cracks, splitting, corrosion, and lose connections.

c. Signs of improper or incomplete repairs

d. Modifications that override controls and safety systems

e. Electrical wiring for loose connections; cracks, missing or worn electrical insulation; and indications of excessive heat or electrical shorting. Appliances requiring an external electrical supply should be inspected for proper electrical connection in accordance with the National Electric Code.

(8) *Placing Appliances Back in Operation*. Return all inspected appliances and systems to their preexisting state by reinstalling any removed access panels and components. Turn on the gas supply and electricity to each appliance found in safe condition. Proceed to the operating inspections in D.5 through D.6.

D.5 Inspections to be performed with the Appliance Operating. The following safety inspection procedures are to be performed on appliances that are operating where there are no unsafe conditions or where corrective repairs have been completed.

D.5.1 General Appliance Operation.

(1) *Initial Startup*. Adjust the thermostat or other control device to start the appliance. Verify that the appliance starts up normally and is operating properly.

Determine that the pilot(s), where provided, is burning properly and that the main burner ignition is satisfactory, by interrupting and re-establishing the electrical supply to the appliance in any convenient manner. If the appliance is equipped with a continuous pilot(s), test all pilot safety devices to determine whether they are operating properly by extinguishing the pilot(s) when the main burner(s) is off and determining, after 3 minutes, that the main burner gas does not flow upon a call for heat. If the appliance is not provided with a pilot(s), test for proper operation of the ignition system in accordance with the appliance manufacturer's lighting and operating instructions.

(2) *Flame Appearance*. Visually inspect the flame appearance for proper color and appearance. Visually determine that the main burner gas is burning properly (i.e., without floating, lifting or flashback). Adjust the primary air shutter as required. If the appliance is equipped with high and low flame controlling or flame modulation, check for proper main burner operation at low flame.

(3) *Appliance Shutdown*. Adjust the thermostat or other control device to shut down the appliance. Verify that the appliance shuts off properly.

D.5.2 Test for Combustion Air and Vent Drafting for Natural Draft and Category I Appliances. Combustion air and vent draft procedures are for natural draft and category I appliances equipped with a draft hood and connected to a natural draft venting system.

(1) *Preparing for Inspection*. Close all exterior building doors and windows and all interior doors between the space in which the appliance is located and other spaces of the building that can be closed. Turn on any clothes dryer. Turn on any exhaust fans, such as range hoods and bathroom exhausts, so they will operate at maximum speed. Do not operate a summer exhaust fan. Close fireplace dampers and any fireplace doors.

INTERNATIONAL CODE COUNCIL®
Copyright © 2019 ICC & NYSDOS. ALL RIGHTS RESERVED. Accessed by Lauren Gualdino (lgualdino@briarcliffmanor.org), (-) Order Number #100880972 on May 08, 2020 07:05 AM (PDT) pursuant to License Agreement with ICC & NYSDOS. No further reproduction, no

100880972

(2) *Placing the Appliance in Operation*. Place the appliance being inspected in operation. Adjust the thermostat or control so the appliance will operate continuously.

(3) *Spillage Test*. Verify that all appliances located within the same room are in their standby mode and ready for operation. Follow lighting instructions for each appliance as necessary. Test for spillage at the draft hood relief opening as follows:

a. After 5 minutes of main burner operation, check for spillage using smoke.

b. Immediately after the first check, turn on all other fuel gas burning appliances within the same room so they will operate at their full inputs and repeat the spillage test.

c. Shut down all appliances to their standby mode and wait for 15 minutes.

d. Repeat the spillage test steps a through c on each appliance being inspected.

(4) Additional Spillage Tests: Determine if the appliance venting is impacted by other door and air handler settings by performing the following tests.

a. Set initial test condition in accordance with D.5.2 (1).

b. Place the appliance(s) being inspected in operation. Adjust the thermostat or control so the appliance(s) will operate continuously.

c. Open the door between the space in which the appliance(s) is located and the rest of the building. After 5 minutes of main burner operation, check for spillage at each appliance using smoke.

d. Turn on any other central heating or cooling air handler fan that is located outside of the area where the appliances are being inspected. After 5 minutes of main burner operation, check for spillage at each appliance using smoke. The test should be conducted with the door between the space in which the appliance(s) is located and the rest of the building in the open and in the closed position.

(5) Return doors, windows, exhaust fans, fireplace dampers, and any other fuel gas burning appliance to their previous conditions of use.

(6) If, after completing the spillage test it is believed sufficient combustion air is not available, the owner should be notified that an alternative combustion air source is needed in accordance with Section G2407 of the *International Fuel Gas Code*. Where it is believed that the venting system does not provide adequate natural draft, the owner should be notified that alternative vent sizing, design or configuration is needed in accordance with Chapter 24 of the *International Fuel Gas Code*. If spillage occurs, the owner should be notified as to its cause, be instructed as to which position of the door (open or closed) would lessen its impact, and that corrective action by a HVAC professional should be taken.

D.6 Appliance-Specific Inspections. The following appliance-specific inspections are to be performed as part of a complete inspection. These inspections are performed either with the appliance in the off or standby mode (indicated by "*OFF*") or on an appliance that is operating (indicated by "*ON*"). The CO measurements are to be undertaken only after the appliance is determined to be properly venting. The CO detector should be capable of calculating CO emissions in ppm air free.

(1) Forced Air Furnaces:

a. OFF. Verify that an air filter is installed and that it is not excessively blocked with dust.

b. OFF. Inspect visible portions of the furnace combustion chamber for cracks, ruptures, holes, and corrosion. A heat exchanger leakage test should be conducted.

c. ON. Verify both the limit control and the fan control are operating properly. Limit control operation can be checked by blocking the circulating air inlet or temporarily disconnecting the electrical supply to the blower motor and determining that the limit control acts to shut off the main burner gas.

d. ON. Verify that the blower compartment door is properly installed and can be properly resecured if opened. Verify that the blower compartment door safety switch operates properly.

e. *ON*. Check for flame disturbance before and after blower comes on which can indicate heat exchanger leaks.

f. *ON*. Measure the CO in the vent after 5 minutes of main burner operation. The CO should not exceed threshold in Table D.6.

(2) Boilers:

a. OFF and ON. Inspect for evidence of water leaks around boiler and connected piping.

b. ON. Verify that the water pumps are in operating condition. Test low water cutoffs, automatic feed controls, pressure and temperature limit controls, and relief valves in accordance with the manufacturer's recommendations to determine that they are in operating condition.

c. ON. Measure the CO in the vent after 5 minutes of main burner operation. The CO should not exceed threshold in Table D.6.

(3) Water Heaters:

a. *OFF*. Verify that the pressure-temperature relief valve is in operating condition. Water in the heater should be at operating temperature.

b. OFF. Verify that inspection covers, glass, and gaskets are intact and in place on a flammable vapor ignition resistant (FVIR) type water heater.

INTERNATIONAL CODE COUNCIL®
Copyright © 2019 ICC & NYSDOS. ALL RIGHTS RESERVED. Accessed by Lauren Gualdino (lgualdino@briarcliffmanor.org), (-) Order Number #100880972 on May 08, 2020 07:05 AM (PDT) pursuant to License Agreement with ICC & NYSDOS. No further reproduction, no

100880972

c. ON. Verify that the thermostat is set in accordance with the manufacturer's operating instructions and measure the water temperature at the closest tub or sink to verify that it is not greater than 120ºF.

d. OFF. Where required by the local building code in earthquake prone locations, inspect that the water heater is secured to the wall studs in two locations (high and low) using appropriate metal strapping and bolts.

e. ON. Measure the CO in the vent after 5 minutes of main burner operation. The CO should not exceed threshold in Table D.6.

(4) Cooking Appliances

a. *OFF*. Inspect oven cavity and range-top exhaust vent for blockage with aluminum foil or other materials.

b. *OFF*. Inspect cook top to verify that it is free from a build-up of grease.

c. *ON*. Measure the CO above each burner and at the oven exhaust vents after 5 minutes of burner operation. The CO should not exceed threshold in Table D.6.

(5) Vented Room Heaters

a. OFF. For built-in room heaters and wall furnaces, inspect that the burner compartment is free of lint and debris.

b. OFF. Inspect that furnishings and combustible building components are not blocking the heater.

c. ON. Measure the CO in the vent after 5 minutes of main burner operation. The CO should not exceed threshold in Table D.6.

(6) Vent-Free (unvented) Heaters

a. OFF. Verify that the heater input is not more than 40,000 Btu input, but not more than 10,000 Btu where installed in a bedroom, and 6,000 Btu where installed in a bathroom.

b. OFF. Inspect the ceramic logs provided with gas log type vent free heaters that they are properly located and aligned.

c. OFF. Inspect the heater that it is free of excess lint build-up and debris.

d. OFF. Verify that the oxygen depletion safety shutoff system has not been altered or bypassed.

e. ON. Verify that the main burner shuts down within 3 minutes by extinguishing the pilot light. The test is meant to simulate the operation of the oxygen depletion system (ODS).

f. ON. Measure the CO after 5 minutes of main burner operation. The CO should not exceed threshold in Table D.6.

(7) Gas Log Sets and Gas Fireplaces

a. OFF. For gas logs installed in wood burning fireplaces equipped with a damper, verify that the fireplace damper is in a fixed open position.

b. ON. Measure the CO in the firebox (log sets installed in wood burning fireplaces or in the vent (gas fireplace) after 5 minutes of main burner operation. The CO should not exceed threshold in Table D.6.

(8) Gas Clothes Dryer

a. *OFF*. Where installed in a closet, verify that a source of make-up air is provided and inspect that any make-up air openings, louvers, and ducts are free of blockage.

b. OFF. Inspect for excess amounts of lint around the dryer and on dryer components. Inspect that there is a lint trap properly installed and it does not have holes or tears. Verify that it is in a clean condition.

c. OFF. Inspect visible portions of the exhaust duct and connections for loose fittings and connections, blockage, and signs of corrosion. Verify that the duct termination is not blocked and that it terminates in an outdoor location. Verify that only approved metal vent ducting material is installed (plastic and vinyl materials are not approved for gas dryers).

d. ON. Verify mechanical components including drum and blower are operating properly.

e. ON. Operate the clothes dryer and verify that exhaust system is intact and exhaust is exiting the termination.

f. ON. Measure the CO at the exhaust duct or termination after 5 minutes of main burner operation. The CO should not exceed threshold in Table D.6.

INTERNATIONAL CODE COUNCIL®
Copyright © 2019 ICC & NYSDOS. ALL RIGHTS RESERVED. Accessed by Lauren Gualdino (lgualdino@briarcliffmanor.org), (-) Order Number #100880972 on May 08, 2020 07:05 AM (PDT) pursuant to License Agreement with ICC & NYSDOS. No further reproduction, no

100880972

TABLE D.6
CO THRESHOLDS

Boilers (all categories)	400 ppm air free
Central Furnace (all categories)	400 ppm[1] air free[2, 3]
Floor Furnace	400 ppm air free
Gravity Furnace	400 ppm air free
Wall Furnace (BIV)	200 ppm air free
Wall Furnace (Direct Vent)	400 ppm air free
Vented Room Heater	200 ppm air free
Vent-Free Room Heater	200 ppm air free
Water Heater	200 ppm air free
Oven/Broiler	225 ppm as measured
Top Burner	25 ppm as measured (per burner)
Clothes Dryer	400 ppm air free
Refrigerator	25 ppm as measured
Gas Log (gas fireplace)	25 ppm as measured in vent
Gas Log (installed in wood burning fireplace)	400 ppm air free in firebox

1. Parts per million
2. Air free emission levels are based on a mathematical equation (involving carbon monoxide and oxygen or carbon dioxide readings) to convert an actual diluted flue gas carbon monoxide testing sample to an undiluted air free flue gas carbon monoxide level utilized in the appliance certification standards. For natural gas or propane, using as-measured CO ppm and O_2 percentage:

$$CO_{AFppm} = \left(\frac{20.9}{20.9 - O_2}\right) \times CO_{ppm}$$

where:

CO_{AFppm} = Carbon monoxide, air-free ppm

CO_{ppm} = As-measured combustion gas carbon monoxide ppm

O_2 = Percentage of oxygen in combustion gas, as a percentage

3. An alternate method of calculating the CO air free when access to an oxygen meter is not available:

$$CO_{AFppm} = \left(\frac{UCO_2}{CO_2}\right) \times CO$$

where:

UCO_2 = Ultimate concentration of carbon dioxide for the fuel being burned in percent for natural gas (12.2 percent) and propane (14.0 percent)

CO_2 = Measured concentration of carbon dioxide in combustion products in percent

CO = Measured concentration of carbon monoxide in combustion products in percent

INTERNATIONAL CODE COUNCIL®
Copyright © 2019 ICC & NYSDOS. ALL RIGHTS RESERVED. Accessed by Lauren Gualdino (lgualdino@briarcliffmanor.org), (-) Order Number #100880972 on May 08, 2020 07:05 AM (PDT) pursuant to License Agreement with ICC & NYSDOS. No further reproduction, no

100880972

[NY] APPENDIX E

MANUFACTURED HOUSING USED AS DWELLINGS

[NY] SECTION AE101 SCOPE

[NY] AE101.1 General. These provisions shall be applicable only to a *manufactured home* used as a single *dwelling unit* and shall apply to the following:

1. Construction, *alteration* and repair of any foundation system that is necessary to provide for the installation of a *manufactured home* unit.
2. Construction, installation, *addition, alteration*, repair or maintenance of the building service *equipment* that is necessary for connecting *manufactured homes* to water, fuel, or power supplies and sewage systems.
3. *Alterations, additions* or repairs to existing *manufactured homes*. The construction, *alteration*, moving, demolition, repair and use of accessory buildings and structures, and their building service *equipment*, shall comply with the requirements of this code.

These provisions shall not be applicable to the design and construction of *manufactured homes* and shall not be deemed to authorize either modifications or *additions* to *manufactured homes* where otherwise prohibited. The design and construction criteria of Manufactured Homes shall be in accordance with those defined in the Manufactured Home Construction and Safety Standards (24 CFR 3280).

[NY] AE101.2 Flood hazard areas. New and replacement manufactured homes to be installed in flood hazard areas as established in Table R301.2(1) shall meet the applicable requirements of Section R322.

[NY] SECTION AE102 APPLICATION TO EXISTING MANUFACTURED HOMES AND BUILDING SERVICE EQUIPMENT

[NY] AE102.1 General. *Manufactured homes* and their building service *equipment* to which *additions*, *alterations* or repairs are made shall comply with all the requirements of these provisions for new facilities, except as specifically provided in this section. Any addition, alteration, or repair made to an existing manufactured home shall not create a hazard to life, health, or safety.

[NY] AE102.2 Additions. *Additions* made to a *manufactured home* shall conform to one of the following:

1. Be certified under the National Manufactured Housing Construction and Safety Standards Act of 1974 (42 U.S.C. Section 5401, et seq.).
2. Be designed and constructed to comply with the applicable provisions of the National Manufactured Housing Construction and Safety Standards Act of 1974 (42 U.S.C. Section 5401, et seq.).
3. Be designed and constructed in compliance with the code adopted by this jurisdiction.

[NY] AE102.2.1 Structural separation. Building *additions* and accessory structures shall not be structurally supported by the *manufactured home*.

> **Exception:** Building additions and accessory structures supported by a manufactured home shall be in accordance with designs provided by the home manufacturer or with designs prepared by a registered design professional in accordance with acceptable engineering practice.

[NY] AE102.3 Alterations and repairs. *Alterations* or repairs may be made to any *manufactured home* or to its building service *equipment* without requiring the existing manufactured home or its building service equipment to comply with all the requirements of these provisions, provided that the *alteration* or repair conforms to Appendix J of this code.

[NY] AE102.3.1 Materials. *Alterations* or repairs to an existing *manufactured home*, which are nonstructural and do not adversely affect any structural member or any part of the building or structure having required fire protection, shall be made with materials equivalent to those of which the *manufactured home* structure is constructed, subject to approval by the *building official*.

> **Exception:** The installation or replacement of glass shall be in conformance with the fenestration rating requirements for new installations.

[NY] AE102.4 Existing installations. Building service *equipment* lawfully in existence at the time of the adoption of this code shall have their use, maintenance or repair continued if the use, maintenance or repair is in accordance with the original design and hazard to life, health or property has not been created by such building service *equipment*.

[NY] AE102.5 Existing occupancy. *Manufactured homes* that are in existence at the time of the adoption of these provisions shall have their existing use or occupancy continued if such use or occupancy was legal at the time of the adoption of these provisions, provided that such continued use is not dangerous to life, health and safety.

The use or occupancy of any existing *manufactured home* shall not be changed unless change in use or occupancy is made to conform to all applicable provisions of this code. Upon any change in use or occupancy, the *manufactured home* shall cease to be classified as such within the intent of these provisions.

[NY] AE102.6 Maintenance. *Manufactured homes* and their building service *equipment*, existing and new, and all parts thereof, shall be maintained in a safe and sanitary condition. Devices or safeguards that are required by applicable codes or by the Manufactured Home Standards shall be maintained in conformance to the code or standard under which it was installed. The owner or the owner's designated agent shall be responsible for the maintenance of *manufactured homes*, accessory buildings, structures and their building service

INTERNATIONAL CODE COUNCIL®
Copyright © 2019 ICC & NYSDOS. ALL RIGHTS RESERVED. Accessed by Lauren Gualdino (lgualdino@briarcliffmanor.org), (-) Order Number #100880972 on May 08, 2020 07:05 AM (PDT) pursuant to License Agreement with ICC & NYSDOS. No further reproduction, no

100880972

equipment. To determine compliance with this section, the *building official* may cause any *manufactured home*, accessory building or structure to be reinspected.

[NY] AE102.7 Relocation. Manufactured homes that are to be relocated shall have a manufacturer's label certifying compliance with applicable Department of Housing and Urban Development (HUD) Manufactured Home Construction and Safety Standards and a data plate affixed in the manufacturing facility bearing not less than the following information:

1. The statement: "This manufactured home is designed to comply with the federal mobile home construction and safety standards in force at the time of manufacture."
2. Reference to the structural zone and wind zone for which the home is designed.
3. Data relative to the heating and insulation zone and outdoor design temperature.

   Exception: Mobile homes manufactured before June 15, 1976, need not comply with these provisions provided that they have been inspected by an agency or individual acceptable to the *building official* to determine that they are:

   1. Structurally sound.
   2. Free of heating and electrical system hazards.

Written documentation signed by the agency or individual performing the inspection shall be submitted to the *building official*.

[NY] SECTION AE103
PERMITS AND INSPECTIONS

[NY] AE103.1 Permit required. A permit shall be obtained to install, alter, remodel, repair or add accessory buildings or structures to a manufactured home as required in Section R105.2 of this code.

[NY] AE103.2 Application for permit. To obtain a permit for the work described in Section AE103.1, the applicant shall first file an application, in writing, on a form furnished by the *authority having jurisdiction* and in accordance with Section R105.2.2 of this code. Such application shall include the identity of the person or entity certified pursuant to Part 1210 (Manufactured Housing) of the New York State Department of State Manufactured Home Regulations (19 NYCRR Part 1210).

[NY] AE103.3 Inspections. All work subject to the permit shall be inspected in accordance with Section R105.3 of this code. Inspections shall include, and not be limited to, the foundation, support, anchorage, connection of multi-sectional homes, and building service equipment.

[NY] SECTION AE201
DEFINITIONS

[NY] AE201.1 General. For the purpose of these provisions, certain abbreviations, terms, phrases, words and their derivatives shall be construed as defined or specified herein.

ACCESSORY BUILDING. Any building or structure, or portion thereto, located on the same property as a *manufactured home*, which does not qualify as a *manufactured home* as defined herein.

BUILDING SERVICE EQUIPMENT. Refers to the plumbing, mechanical and electrical *equipment*, including piping, wiring, fixtures and other accessories that provide sanitation, lighting, heating, ventilation, cooling, fire protection and facilities essential for the habitable occupancy of a *manufactured home* or accessory building or structure for its designated use and occupancy.

DESIGN APPROVAL PRIMARY INSPECTION AGENCY (DAPIA). Refers to any state agency or other private organization that has been accepted by the Secretary of HUD, in accordance with the requirements the Manufactured Home Standards, to evaluate and approve manufactured home design, quality control procedures, and installation manuals.

HUD. The United States Department of Housing and Urban Development.

INSTALLATION INSTRUCTIONS. Means DAPIA approved instructions provided by the home manufacturer that accompany each manufactured home and detail the home manufacturer requirements for support and anchoring systems and other work completed at the installation site.

MANUFACTURED HOME INSTALLATION (AND SETTING). Construction that is required for the installation of a *manufactured home*, including the construction of the foundation system, required structural connections thereto and the installation of on-site water, gas, electrical and sewer systems and connections thereto that are necessary for the normal operation of the *manufactured home*.

MANUFACTURED HOME STANDARDS. The *Manufactured Home Construction and Safety Standards* as promulgated by the HUD.

MANUFACTURER'S CERTIFICATION LABEL. The permanent label that is required by the Manufactured Home Standards to be affixed to each transportable section of each manufactured home.

MOBILE HOME. A moveable or portable dwelling unit that was built prior to June 15, 1976, and designed and constructed to be towed on its own chassis, composed of frame and wheels, connected to utilities, and designed and constructed without a permanent foundation for year-round living, excluding travel trailers. For the purpose of these provisions, a mobile home shall be considered a manufactured home.

[NY] SECTION AE301
OCCUPANCY CLASSIFICATION

[NY] AE301.1 Manufactured homes. A *manufactured home* shall be limited in use to a single *dwelling unit*.

[NY] AE301.2 Accessory buildings. Accessory buildings shall be classified as to occupancy by the *building official* as set forth in this code.

INTERNATIONAL CODE COUNCIL®
Copyright © 2019 ICC & NYSDOS. ALL RIGHTS RESERVED. Accessed by Lauren Gualdino (lgualdino@briarcliffmanor.org), (-) Order Number #100880972 on May 08, 2020 07:05 AM (PDT) pursuant to License Agreement with ICC & NYSDOS. No further reproduction, no

100880972

[NY] SECTION AE302
LOCATION ON PROPERTY

[NY] AE302.1 General. *Manufactured homes* and accessory buildings shall be located on the property in accordance with Section R302.1 of this code or any other law or regulation regarding separation distances, whichever is more restrictive.

[NY] SECTION AE401
DESIGN

[NY] AE401.1 New manufactured homes. New manufactured homes shall be installed on a foundation system in accordance with the installation instructions provided by the manufacturer.

> **Exception:** When a foundation or anchoring system is provided that is an alternative to that which is provided in the installation instructions, the alternative shall be in accordance with Section AE402.4.

[NY] AE401.2 Relocated manufactured homes. Relocated Manufactured Homes shall be installed on a foundation system constructed in accordance with the installation instructions provided by the manufacturer. Where the installation instructions are not available, foundation and anchorage systems which are constructed in accordance with the provisions of 24 CFR 3285 "Model Manufactured Home Installation Standards" or provisions of NFPA 225 shall be deemed to meet the requirements of this code.

[NY] AE401.3 Installation instructions. The installation instructions and any amendments or addendums as provided by the manufacturer of the *manufactured home* shall be used to determine permissible points of support for vertical loads and points of attachment for anchorage systems used to resist horizontal and uplift forces, completion and assembly of all systems necessary to make the manufactured home habitable, and attachment or completion of any special or optional features of the manufactured home. When an existing manufactured home is relocated and where installation instructions are not available, foundation and anchorage systems that are constructed in accordance with the provisions of 24 CFR 3285 "Model Manufactured Home Installation Standards" or provisions of NFPA 225 shall be deemed to meet the requirements of this code.

[NY] SECTION AE402
FOUNDATION SYSTEMS

[NY] AE402.1 General. Foundation systems designed and constructed in accordance with this section shall be considered a permanent installation.

[NY] AE402.2 Soil classification. The classification of the soil at each *manufactured home* site shall be determined in accordance with the requirements of Section R401 of this code.

> **Exception:** When soil classification has been determined in accordance with the installation instructions provided by the manufacturer, such classification shall be deemed to meet the requirements of this code.

[NY] AE402.3 Footings and foundations. Footings and foundations shall be constructed of materials specified by this code for the intended use and in all cases shall extend below the frost line, as specified in Table R301.2(1). Footings of concrete and masonry shall be of solid material.

> **Exception:** Where a foundation system is designed by a registered design professional in accordance with the design requirements of the Manufactured Home Standards and the provisions of this code such that it will otherwise be protected from the effects of frost, such foundation system shall not be required to extend below the frost line.

Piers and bearing walls shall be supported on masonry or concrete foundations or piles, or other systems identified in the installation instructions included in the consumer manual(s) provided by the manufacturer, or other alternative foundation systems of sufficient capacity to support all loads and designed by a licensed design professional.

All cast-in-place concrete shall have a specified minimum compressive strength of 3,000 psi (20,684 kPa) at 28 days.

[NY] AE402.4 Alternative foundation and/or anchoring system design. Where a design is provided that is an alternative to the installation instructions provided by the manufacturer, the foundation system shall be designed in accordance with the applicable structural provisions of this code and shall be designed to minimize differential settlement. Where a design is not provided, the minimum foundation requirements shall be as set forth in this code.

Any alternative foundation shall be designed and constructed to conform to the applicable provisions of the "Model Manufactured Home Installation Standards" (24 CFR 3285).

[NY] AE402.5 Drainage. The site shall be graded to prevent surface drainage from accumulating under the home in accordance with the requirements of Section R401.3 of this code.

> **Exception:** When site grading has been determined in accordance with the installation instructions provided by the manufacturer, such grading shall be deemed to meet the requirements of this code.

[NY] AE402.6 Under-floor clearances—ventilation and access. A minimum clearance of 12 inches (305 mm) shall be maintained beneath the lowest member of the main frame (I-beam or channel beam) and the finish grade under all areas of the home. Under-floor spaces between the lowest member of the main frame and the finish grade under all areas of the home shall have a 6-mil polyethylene ground vapor barrier placed on the ground surface covering the entire area under the home. Under-floor spaces shall be ventilated; the minimum net area of ventilation opening shall be not less than 1 square foot (0.0929 m^2) for each 1,500 square feet (140 m^2) of under-floor space area. One ventilation opening shall be within 3 feet (914 mm) of each corner of the home. Dryer vents and combustion air inlets must pass through the skirting to the outside. Water discharge from furnace, air conditioning, and water heater drains must pass through the skirting to the outside and be directed away from the under-floor space.

Under-floor access openings shall be provided. Such openings shall be not less than 18 inches (457 mm) in width by 24

INTERNATIONAL CODE COUNCIL®
Copyright © 2019 ICC & NYSDOS. ALL RIGHTS RESERVED. Accessed by Lauren Gualdino (lgualdino@briarcliffmanor.org), (-) Order Number #100880972 on May 08, 2020 07:05 AM (PDT) pursuant to License Agreement with ICC & NYSDOS. No further reproduction, no

100880972

inches (610 mm) in height and not less than 3 square feet (0.279 m^2) in area, and shall be located so that any water supply and sewer drain connections located under the manufactured home are accessible.

[NY] SECTION AE403
SKIRTING AND PERIMETER ENCLOSURES

[NY] AE403.1 Skirting and permanent perimeter enclosures. Skirting and permanent perimeter enclosures shall be installed only where specifically required by other laws or ordinances. Skirting, when installed, shall provide for the required ventilation and access, shall be of material suitable for exterior exposure and contact with the ground. Permanent perimeter enclosures shall be constructed of materials as required by this code for regular foundation construction.

Skirting shall be installed in accordance with the skirting manufacturer's installation instructions included in the consumer manual(s) provided by the manufacturer or referenced standards. Skirting shall be adequately secured to ensure stability, minimize vibration and susceptibility to wind damage, and compensate for possible frost heave.

[NY] AE403.2 Retaining walls. Where retaining walls are used as a permanent perimeter enclosure, they shall resist the lateral displacements of soil or other materials and shall conform to this code as specified for foundation walls. Retaining walls and foundation walls shall be constructed of *approved* treated wood, concrete, masonry or other *approved* materials or combination of materials as for foundations as specified in this code. Siding materials shall extend below the top of the exterior of the retaining or foundation wall, or the joint between the siding and enclosure wall shall be flashed in accordance with this code.

[NY] SECTION AE404
BUILDING SERVICE EQUIPMENT

[NY] AE404.1 General. The installation, *alteration,* repair, replacement, *addition* to or maintenance of the building service *equipment* within the *manufactured home* shall conform to regulations set forth in the Manufactured Home Standards. Such work that is located outside the *manufactured home* shall comply with this code.

[NY] SECTION AE405
EXITS

[NY] AE405.1 Site development. Exterior stairways and ramps that provide egress to the public way shall comply with AE102.1.2.1 and all other applicable provisions of this code.

[NY] AE405.2 Accessory buildings. Every accessory building or portion thereof shall be provided with exits as required by this code.

[NY] SECTION AE406
OCCUPANCY, FIRE SAFETY AND ENERGY CONSERVATION STANDARDS

[NY] AE406.1 General. *Alterations* made to a *manufactured home* subsequent to its initial installation shall conform to the occupancy, fire safety and energy conservation requirements set forth in the Manufactured Home Standards.

INTERNATIONAL CODE COUNCIL®
Copyright © 2019 ICC & NYSDOS. ALL RIGHTS RESERVED. Accessed by Lauren Gualdino (lgualdino@briarcliffmanor.org), (-) Order Number #100880972 on May 08, 2020 07:05 AM (PDT) pursuant to License Agreement with ICC & NYSDOS. No further reproduction, no

100880972

APPENDIX F

RADON CONTROL METHODS

This appendix is informative and is not part of this code.

SECTION AF101 SCOPE

AF101.1 General. This appendix contains requirements for new construction in *jurisdictions* where radon-resistant construction is required.

Inclusion of this appendix by jurisdictions shall be determined through the use of locally available data or determination of Zone 1 designation in Figure AF101 and Table AF101(1).

SECTION AF102 DEFINITIONS

AF102.1 General. For the purpose of these requirements, the terms used shall be defined as follows:

DRAIN TILE LOOP. A continuous length of drain tile or perforated pipe extending around all or part of the internal or external perimeter of a *basement* or crawl space footing.

RADON GAS. A naturally occurring, chemically inert, radioactive gas that is not detectable by human senses. As a gas, it can move readily through particles of soil and rock, and can accumulate under the slabs and foundations of homes where it can easily enter into the living space through construction cracks and openings.

SOIL-GAS-RETARDER. A continuous membrane of 6-mil (0.15 mm) polyethylene or other equivalent material used to retard the flow of soil gases into a building.

SUBMEMBRANE DEPRESSURIZATION SYSTEM. A system designed to achieve lower submembrane air pressure relative to crawl space air pressure by use of a vent drawing air from beneath the soil-gas-retarder membrane.

SUBSLAB DEPRESSURIZATION SYSTEM (Active). A system designed to achieve lower subslab air pressure relative to indoor air pressure by use of a fan-powered vent drawing air from beneath the slab.

SUBSLAB DEPRESSURIZATION SYSTEM (Passive). A system designed to achieve lower subslab air pressure relative to indoor air pressure by use of a vent pipe routed through the *conditioned space* of a building and connecting the subslab area with outdoor air, thereby relying on the convective flow of air upward in the vent to draw air from beneath the slab.

SECTION AF103 REQUIREMENTS

AF103.1 General. The following construction techniques are intended to resist radon entry and prepare the building for post-construction radon mitigation, if necessary (see Figure AF103). These techniques are required in areas where designated by the *jurisdiction*.

AF103.2 Subfloor preparation. A layer of gas-permeable material shall be placed under all concrete slabs and other floor systems that directly contact the ground and are within the walls of the living spaces of the building, to facilitate future installation of a subslab depressurization system, if needed. The gas-permeable layer shall consist of one of the following:

1. A uniform layer of clean aggregate, not less than 4 inches (102 mm) thick. The aggregate shall consist of material that will pass through a 2-inch (51 mm) sieve and be retained by a $^1/_4$-inch (6.4 mm) sieve.
2. A uniform layer of sand (native or fill), not less than 4 inches (102 mm) thick, overlain by a layer or strips of geotextile drainage matting designed to allow the lateral flow of soil gases.
3. Other materials, systems or floor designs with demonstrated capability to permit depressurization across the entire subfloor area.

AF103.3 Soil-gas-retarder. A minimum 6-mil (0.15 mm) [or 3-mil (0.075 mm) cross-laminated] polyethylene or equivalent flexible sheeting material shall be placed on top of the gas-permeable layer prior to casting the slab or placing the floor assembly to serve as a soil-gas-retarder by bridging any cracks that develop in the slab or floor assembly, and to prevent concrete from entering the void spaces in the aggregate base material. The sheeting shall cover the entire floor area with separate sections of sheeting lapped not less than 12 inches (305 mm). The sheeting shall fit closely around any pipe, wire or other penetrations of the material. Punctures or tears in the material shall be sealed or covered with additional sheeting.

AF103.4 Entry routes. Potential radon entry routes shall be closed in accordance with Sections AF103.4.1 through AF103.4.10.

INTERNATIONAL CODE COUNCIL®
Copyright © 2019 ICC & NYSDOS. ALL RIGHTS RESERVED. Accessed by Lauren Gualdino (lgualdino@briarcliffmanor.org), (-) Order Number #100880972 on May 08, 2020 07:05 AM (PDT) pursuant to License Agreement with ICC & NYSDOS. No further reproduction, no

100880972

AF103.4.1 Floor openings. Openings around bathtubs, showers, water closets, pipes, wires or other objects that penetrate concrete slabs, or other floor assemblies, shall be filled with a polyurethane caulk or equivalent sealant applied in accordance with the manufacturer's recommendations.

AF103.4.2 Concrete joints. Control joints, isolation joints, construction joints, and any other joints in concrete slabs or between slabs and foundation walls shall be sealed with a caulk or sealant. Gaps and joints shall be cleared of loose material and filled with polyurethane caulk or other elastomeric sealant applied in accordance with the manufacturer's recommendations.

AF103.4.3 Condensate drains. Condensate drains shall be trapped or routed through nonperforated pipe to daylight.

AF103.4.4 Sumps. Sump pits open to soil or serving as the termination point for subslab or exterior drain tile loops shall be covered with a gasketed or otherwise sealed lid. Sumps used as the suction point in a subslab depressurization system shall have a lid designed to accommodate the vent pipe. Sumps used as a floor drain shall have a lid equipped with a trapped inlet.

AF103.4.5 Foundation walls. Hollow block masonry foundation walls shall be constructed with either a continuous course of *solid masonry*, one course of masonry grouted solid, or a solid concrete beam at or above finished ground surface to prevent the passage of air from the interior of the wall into the living space. Where a brick veneer or other masonry ledge is installed, the course immediately below that ledge shall be sealed. Joints, cracks or other openings around all penetrations of both exterior and interior surfaces of masonry block or wood foundation walls below the ground surface shall be filled with polyurethane caulk or equivalent sealant. Penetrations of concrete walls shall be filled.

AF103.4.6 Dampproofing. The exterior surfaces of portions of concrete and masonry block walls below the ground surface shall be dampproofed in accordance with Section R406.

AF103.4.7 Air-handling units. Air-handling units in crawl spaces shall be sealed to prevent air from being drawn into the unit.

Exception: Units with gasketed seams or units that are otherwise sealed by the manufacturer to prevent leakage.

AF103.4.8 Ducts. Ductwork passing through or beneath a slab shall be of seamless material unless the air-handling system is designed to maintain continuous positive pressure within such ducting. Joints in such ductwork shall be sealed to prevent air leakage.

Ductwork located in crawl spaces shall have seams and joints sealed by closure systems in accordance with Section M1601.4.1.

AF103.4.9 Crawl space floors. Openings around all penetrations through floors above crawl spaces shall be caulked or otherwise filled to prevent air leakage.

AF103.4.10 Crawl space access. Access doors and other openings or penetrations between *basements* and adjoining crawl spaces shall be closed, gasketed or otherwise filled to prevent air leakage.

AF103.5 Passive submembrane depressurization system. In buildings with crawl space foundations, the following components of a passive submembrane depressurization system shall be installed during construction.

Exception: Buildings in which an *approved* mechanical crawl space ventilation system or other equivalent system is installed.

AF103.5.1 Ventilation. Crawl spaces shall be provided with vents to the exterior of the building. The minimum net area of ventilation openings shall comply with Section R408.1.

AF103.5.2 Soil-gas-retarder. The soil in crawl spaces shall be covered with a continuous layer of minimum 6-mil (0.15 mm) polyethylene soil-gas-retarder. The ground cover shall be lapped not less than 12 inches (305 mm) at joints and shall extend to all foundation walls enclosing the crawl space area.

AF103.5.3 Vent pipe. A plumbing tee or other *approved* connection shall be inserted horizontally beneath the sheeting and connected to a 3- or 4-inch-diameter (76 or 102 mm) fitting with a vertical vent pipe installed through the sheeting. The vent pipe shall be extended up through the building floors, and terminate not less than 12 inches (305 mm) above the roof in a location not less than 10 feet (3048 mm) away from any window or other opening into the *conditioned spaces* of the building that is less than 2 feet (610 mm) below the exhaust point, and 10 feet (3048 mm) from any window or other opening in adjoining or adjacent buildings.

AF103.6 Passive subslab depressurization system. In *basement* or slab-on-grade buildings, the following components of a passive subslab depressurization system shall be installed during construction.

AF103.6.1 Vent pipe. A minimum 3-inch-diameter (76 mm) ABS, PVC or equivalent gas-tight pipe shall be embedded vertically into the subslab aggregate or other permeable material before the slab is cast. A "T" fitting or equivalent method shall be used to ensure that the pipe opening remains within the subslab permeable material. Alternatively, the 3-inch (76 mm) pipe shall be inserted directly into an interior perimeter drain tile loop or through a sealed sump cover where the sump is exposed to the subslab aggregate or connected to it through a drainage system.

The pipe shall be extended up through the building floors, and terminate not less than 12 inches (305 mm) above the surface of the roof in a location not less than 10 feet (3048 mm) away from any window or other opening into the *conditioned spaces* of the building that is less than 2 feet (610 mm) below the exhaust point, and 10 feet (3048 mm) from any window or other opening in adjoining or adjacent buildings.

INTERNATIONAL CODE COUNCIL®
Copyright © 2019 ICC & NYSDOS. ALL RIGHTS RESERVED. Accessed by Lauren Gualdino (lgualdino@briarcliffmanor.org), (-) Order Number #100880972 on May 08, 2020 07:05 AM (PDT) pursuant to License Agreement with ICC & NYSDOS. No further reproduction, no

100880972

AF103.6.2 Multiple vent pipes. In buildings where interior footings or other barriers separate the subslab aggregate or other gas-permeable material, each area shall be fitted with an individual vent pipe. Vent pipes shall connect to a single vent that terminates above the roof or each individual vent pipe shall terminate separately above the roof.

AF103.7 Vent pipe drainage. Components of the radon vent pipe system shall be installed to provide positive drainage to the ground beneath the slab or soil-gas-retarder.

AF103.8 Vent pipe accessibility. Radon vent pipes shall be accessible for future fan installation through an *attic* or other area outside the *habitable space*.

Exception: The radon vent pipe need not be accessible in an *attic* space where an *approved* roof-top electrical supply is provided for future use.

AF103.9 Vent pipe identification. Exposed and visible interior radon vent pipes shall be identified with not less than one *label* on each floor and in accessible *attics*. The *label* shall read: "Radon Reduction System."

AF103.10 Combination foundations. Combination *basement*/crawl space or slab-on-grade/crawl space foundations shall have separate radon vent pipes installed in each type of foundation area. Each radon vent pipe shall terminate above the roof or shall be connected to a single vent that terminates above the roof.

AF103.11 Building depressurization. Joints in air ducts and plenums in un*conditioned spaces* shall meet the requirements of Section M1601. Thermal envelope air infiltration requirements shall comply with the energy conservation provisions in Chapter 11. Fireblocking shall meet the requirements contained in Section R302.11.

AF103.12 Power source. To provide for future installation of an active submembrane or subslab depressurization system, an electrical circuit terminated in an *approved* box shall be installed during construction in the *attic* or other anticipated location of vent pipe fans. An electrical supply shall be accessible in anticipated locations of system failure alarms.

INTERNATIONAL CODE COUNCIL®
Copyright © 2019 ICC & NYSDOS. ALL RIGHTS RESERVED. Accessed by Lauren Gualdino (lgualdino@briarcliffmanor.org), (-) Order Number #100880972 on May 08, 2020 07:05 AM (PDT) pursuant to License Agreement with ICC & NYSDOS. No further reproduction, no

100880972

FIGURE AF101
EPA MAP OF RADON ZONES

a. pCi/L standard for picocuries per liter of radon gas. The U.S. Environmental Protection Agency (EPA) recommends that homes that measure 4 pCi/L and greater be mitigated.

The EPA and the U.S. Geological Survey have evaluated the radon potential in the United States and have developed a map of radon zones designed to assist *building officials* in deciding whether radon-resistant features are applicable in new construction.

The map assigns each of the 3,141 counties in the United States to one of three zones based on radon potential. Each zone designation reflects the average short-term radon measurement that can be expected to be measured in a building without the implementation of radon-control methods. The radon zone designation of highest priority is Zone 1. Table AF101 lists the Zone 1 counties illustrated on the map. More detailed information can be obtained from state-specific booklets (EPA-402-R-93-021 through 070) available through State Radon Offices or from EPA Regional Offices.

INTERNATIONAL CODE COUNCIL®
Copyright © 2019 ICC & NYSDOS. ALL RIGHTS RESERVED. Accessed by Lauren Gualdino (lgualdino@briarcliffmanor.org), (-) Order Number #100880972 on May 08, 2020 07:05 AM (PDT) pursuant to License Agreement with ICC & NYSDOS. No further reproduction, no

100880972

TABLE AF101(1)
HIGH RADON-POTENTIAL (ZONE 1) COUNTIES[a]

ALABAMA
Calhoun
Clay
Cleburne
Colbert
Coosa
Franklin
Jackson
Lauderdale
Lawrence
Limestone
Madison
Morgan
Talladega

CALIFORNIA
Santa Barbara
Ventura

COLORADO
Adams
Arapahoe
Baca
Bent
Boulder
Chaffee
Cheyenne
Clear Creek
Crowley
Custer
Delta
Denver
Dolores
Douglas
El Paso
Elbert
Fremont
Garfield
Gilpin
Grand
Gunnison
Huerfano
Jackson
Jefferson
Kiowa
Kit Carson
Lake
Larimer
Las Animas
Lincoln
Logan
Mesa
Moffat
Montezuma
Montrose
Morgan
Otero
Ouray
Park
Phillips
Pitkin
Prowers
Pueblo
Rio Blanco
San Miguel
Summit
Teller
Washington
Weld
Yuma

CONNECTICUT
Fairfield
Middlesex
New Haven
New London

GEORGIA
Cobb
De Kalb
Fulton
Gwinnett

IDAHO
Benewah
Blaine
Boise
Bonner
Boundary
Butte
Camas
Clark
Clearwater
Custer
Elmore
Fremont
Gooding
Idaho
Kootenai
Latah
Lemhi
Shoshone
Valley

ILLINOIS
Adams
Boone
Brown
Bureau
Calhoun
Carroll
Cass
Champaign
Coles
De Kalb
De Witt
Douglas
Edgar
Ford
Fulton
Greene
Grundy
Hancock
Henderson
Henry
Iroquois
Jersey
Jo Daviess
Kane
Kendall
Knox
La Salle
Lee
Livingston
Logan
Macon
Marshall
Mason
McDonough
McLean
Menard
Mercer
Morgan
Moultrie
Ogle
Peoria
Piatt
Pike
Putnam
Rock Island
Sangamon
Schuyler
Scott
Stark
Stephenson
Tazewell
Vermilion
Warren
Whiteside
Winnebago
Woodford

INDIANA
Adams
Allen
Bartholomew
Benton
Blackford
Boone
Carroll
Cass
Clark
Clinton
De Kalb
Decatur
Delaware
Elkhart
Fayette
Fountain
Fulton
Grant
Hamilton
Hancock
Harrison
Hendricks
Henry
Howard
Huntington
Jay
Jennings
Johnson
Kosciusko
LaGrange
Lawrence
Madison
Marion
Marshall
Miami
Monroe
Montgomery
Noble
Orange
Putnam
Randolph
Rush
Scott
Shelby
St. Joseph
Steuben
Tippecanoe
Tipton
Union
Vermillion
Wabash
Warren
Washington
Wayne
Wells
White
Whitley

IOWA
All Counties

KANSAS
Atchison
Barton
Brown
Cheyenne
Clay
Cloud
Decatur
Dickinson
Douglas
Ellis
Ellsworth
Finney
Ford
Geary
Gove
Graham
Grant
Gray
Greeley
Hamilton
Haskell
Hodgeman
Jackson
Jewell
Johnson
Kearny
Kingman
Kiowa
Lane
Leavenworth
Lincoln
Logan
Marion
Marshall
McPherson
Meade
Mitchell
Nemaha
Ness
Norton
Osborne
Ottawa
Pawnee
Phillips
Pottawatomie
Pratt
Rawlins
Republic
Rice
Riley
Rooks
Rush
Saline
Scott
Sheridan
Sherman
Smith
Stanton
Thomas
Trego
Wallace
Washington
Wichita
Wyandotte

KENTUCKY
Adair
Allen
Barren
Bourbon
Boyle
Bullitt
Casey
Clark
Cumberland
Fayette
Franklin
Green
Harrison
Hart
Jefferson
Jessamine
Lincoln
Marion
Mercer
Metcalfe
Monroe
Nelson
Pendleton
Pulaski
Robertson
Russell
Scott
Taylor
Warren
Woodford

MAINE
Androscoggin
Aroostook
Cumberland
Franklin
Hancock
Kennebec
Lincoln
Oxford
Penobscot
Piscataquis
Somerset
York

MARYLAND
Baltimore
Calvert
Carroll
Frederick
Harford
Howard
Montgomery
Washington

MASS.
Essex
Middlesex
Worcester

MICHIGAN
Branch
Calhoun
Cass
Hillsdale
Jackson
Kalamazoo
Lenawee
St. Joseph
Washtenaw

MINNESOTA
Becker
Big Stone
Blue Earth
Brown
Carver
Chippewa
Clay
Cottonwood
Dakota
Dodge
Douglas
Faribault
Fillmore
Freeborn
Goodhue
Grant
Hennepin
Houston
Hubbard
Jackson
Kanabec
Kandiyohi
Kittson
Lac Qui Parle
Le Sueur
Lincoln
Lyon
Mahnomen
Marshall
Martin
McLeod
Meeker
Mower
Murray
Nicollet
Nobles
Norman
Olmsted
Otter Tail
Pennington
Pipestone
Polk
Pope
Ramsey
Red Lake
Redwood
Renville
Rice
Rock
Roseau
Scott
Sherburne
Sibley
Stearns
Steele
Stevens
Swift
Todd
Traverse
Wabasha
Wadena
Waseca
Washington
Watonwan
Wilkin
Winona
Wright
Yellow Medicine

MISSOURI
Andrew
Atchison
Buchanan
Cass
Clay
Clinton
Holt
Iron
Jackson
Nodaway
Platte

MONTANA
Beaverhead
Big Horn
Blaine
Broadwater
Carbon
Carter
Cascade
Chouteau
Custer
Daniels
Dawson
Deer Lodge
Fallon
Fergus
Flathead
Gallatin
Garfield
Glacier
Granite
Hill
Jefferson
Judith Basin
Lake
Lewis and Clark
Madison
McCone
Meagher
Missoula
Park
Phillips
Pondera
Powder River
Powell
Prairie
Ravalli
Richland
Roosevelt
Rosebud
Sanders
Sheridan
Silver Bow
Stillwater
Teton
Toole
Valley
Wibaux
Yellowstone

(continued)

INTERNATIONAL CODE COUNCIL®
Copyright © 2019 ICC & NYSDOS. ALL RIGHTS RESERVED. Accessed by Lauren Gualdino (lgualdino@briarcliffmanor.org), (-) Order Number #100880972 on May 08, 2020 07:05 AM (PDT) pursuant to License Agreement with ICC & NYSDOS. No further reproduction, no

APPENDIX F—RADON CONTROL METHODS

TABLE AF101(1)—continued
HIGH RADON-POTENTIAL (ZONE 1) COUNTIES[a]

NEBRASKA
Adams
Boone
Boyd
Burt
Butler
Cass
Cedar
Clay
Colfax
Cuming
Dakota
Dixon
Dodge
Douglas
Fillmore
Franklin
Frontier
Furnas
Gage
Gosper
Greeley
Hamilton
Harlan
Hayes
Hitchcock
Hurston
Jefferson
Johnson
Kearney
Knox
Lancaster
Madison
Nance
Nemaha
Nuckolls
Otoe
Pawnee
Phelps
Pierce
Platte
Polk
Red Willow
Richardson
Saline
Sarpy
Saunders
Seward
Stanton
Thayer
Washington
Wayne
Webster
York

NEVADA
Carson City
Douglas
Eureka
Lander
Lincoln
Lyon
Mineral
Pershing
White Pine

NEW HAMPSHIRE
Carroll

NEW JERSEY
Hunterdon
Mercer
Monmouth
Morris
Somerset
Sussex
Warren

NEW MEXICO
Bernalillo
Colfax
Mora
Rio Arriba
San Miguel
Santa Fe
Taos

NEW YORK
Albany
Allegany
Broome
Cattaraugus
Cayuga
Chautauqua
Chemung
Chenango
Columbia
Cortland
Delaware
Dutchess
Erie
Genesee
Greene
Livingston
Madison
Onondaga
Ontario
Orange
Otsego
Putnam
Rensselaer
Schoharie
Schuyler
Seneca
Steuben
Sullivan
Tioga
Tompkins
Ulster
Washington
Wyoming
Yates

N. CAROLINA
Alleghany
Buncombe
Cherokee
Henderson
Mitchell
Rockingham
Transylvania
Watauga

N. DAKOTA
All Counties

OHIO
Adams
Allen
Ashland
Auglaize
Belmont
Butler
Carroll
Champaign
Clark
Clinton
Columbiana
Coshocton
Crawford
Darke
Delaware
Fairfield
Fayette
Franklin
Greene
Guernsey
Hamilton
Hancock
Hardin
Harrison
Holmes
Huron
Jefferson
Knox
Licking
Logan
Madison
Marion
Mercer
Miami
Montgomery
Morrow
Muskingum
Perry
Pickaway
Pike
Preble
Richland
Ross
Seneca
Shelby
Stark
Summit
Tuscarawas
Union
Van Wert
Warren
Wayne
Wyandot

PENNSYLVANIA
Adams
Allegheny
Armstrong
Beaver
Bedford
Berks
Blair
Bradford
Bucks
Butler
Cameron
Carbon
Centre
Chester
Clarion
Clearfield
Clinton
Columbia
Cumberland
Dauphin
Delaware
Franklin
Fulton
Huntingdon
Indiana
Juniata
Lackawanna
Lancaster
Lebanon
Lehigh
Luzerne
Lycoming
Mifflin
Monroe
Montgomery
Montour
Northampton
Northumberland
Perry
Schuylkill
Snyder
Sullivan
Susquehanna
Tioga
Union
Venango
Westmoreland
Wyoming
York

RHODE ISLAND
Kent
Washington

S. CAROLINA
Greenville

S. DAKOTA
Aurora
Beadle
Bon Homme
Brookings
Brown
Brule
Buffalo
Campbell
Charles Mix
Clark
Clay
Codington
Corson
Davison
Day
Deuel
Douglas
Edmunds
Faulk
Grant
Hamlin
Hand
Hanson
Hughes
Hutchinson
Hyde
Jerauld
Kingsbury
Lake
Lincoln
Lyman
Marshall
McCook
McPherson
Miner
Minnehaha
Moody
Perkins
Potter
Roberts
Sanborn
Spink
Stanley
Sully
Turner
Union
Walworth
Yankton

TENNESEE
Anderson
Bedford
Blount
Bradley
Claiborne
Davidson
Giles
Grainger
Greene
Hamblen
Hancock
Hawkins
Hickman
Humphreys
Jackson
Jefferson
Knox
Lawrence
Lewis
Lincoln
Loudon
Marshall
Maury
McMinn
Meigs
Monroe
Moore
Perry
Roane
Rutherford
Smith
Sullivan
Trousdale
Union
Washington
Wayne
Williamson
Wilson

UTAH
Carbon
Duchesne
Grand
Piute
Sanpete
Sevier
Uintah

VIRGINIA
Alleghany
Amelia
Appomattox
Augusta
Bath
Bland
Botetourt
Bristol
Brunswick
Buckingham
Buena Vista
Campbell
Chesterfield
Clarke
Clifton Forge
Covington
Craig
Cumberland
Danville
Dinwiddie
Fairfax
Falls Church
Fluvanna
Frederick
Fredericksburg
Giles
Goochland
Harrisonburg
Henry
Highland
Lee
Lexington
Louisa
Martinsville
Montgomery
Nottoway
Orange
Page
Patrick
Pittsylvania
Powhatan
Pulaski
Radford
Roanoke
Rockbridge
Rockingham
Russell
Salem
Scott
Shenandoah
Smyth
Spotsylvania
Stafford
Staunton
Tazewell
Warren
Washington
Waynesboro
Winchester
Wythe

WASHINGTON
Clark
Ferry
Okanogan
Pend Oreille
Skamania
Spokane
Stevens

W. VIRGINIA
Berkeley
Brooke
Grant
Greenbrier
Hampshire
Hancock
Hardy
Jefferson
Marshall
Mercer
Mineral
Monongalia
Monroe
Morgan
Ohio
Pendleton
Pocahontas
Preston
Summers
Wetzel

WISCONSIN
Buffalo
Crawford
Dane
Dodge
Door
Fond du Lac
Grant
Green
Green Lake
Iowa
Jefferson
Lafayette
Langlade
Marathon
Menominee
Pepin
Pierce
Portage
Richland
Rock
Shawano
St. Croix
Vernon
Walworth
Washington
Waukesha
Waupaca
Wood

WYOMING
Albany
Big Horn
Campbell
Carbon
Converse
Crook
Fremont
Goshen
Hot Springs
Johnson
Laramie
Lincoln
Natrona
Niobrara
Park
Sheridan
Sublette
Sweetwater
Teton
Uinta
Washakie

a. The EPA recommends that this county listing be supplemented with other available State and local data to further understand the radon potential of a Zone 1 area.

INTERNATIONAL CODE COUNCIL®
Copyright © 2019 ICC & NYSDOS. ALL RIGHTS RESERVED. Accessed by Lauren Gualdino (lgualdino@briarcliffmanor.org), (-) Order Number #100880972 on May 08, 2020 07:05 AM (PDT) pursuant to License Agreement with ICC & NYSDOS. No further reproduction, no

100880972

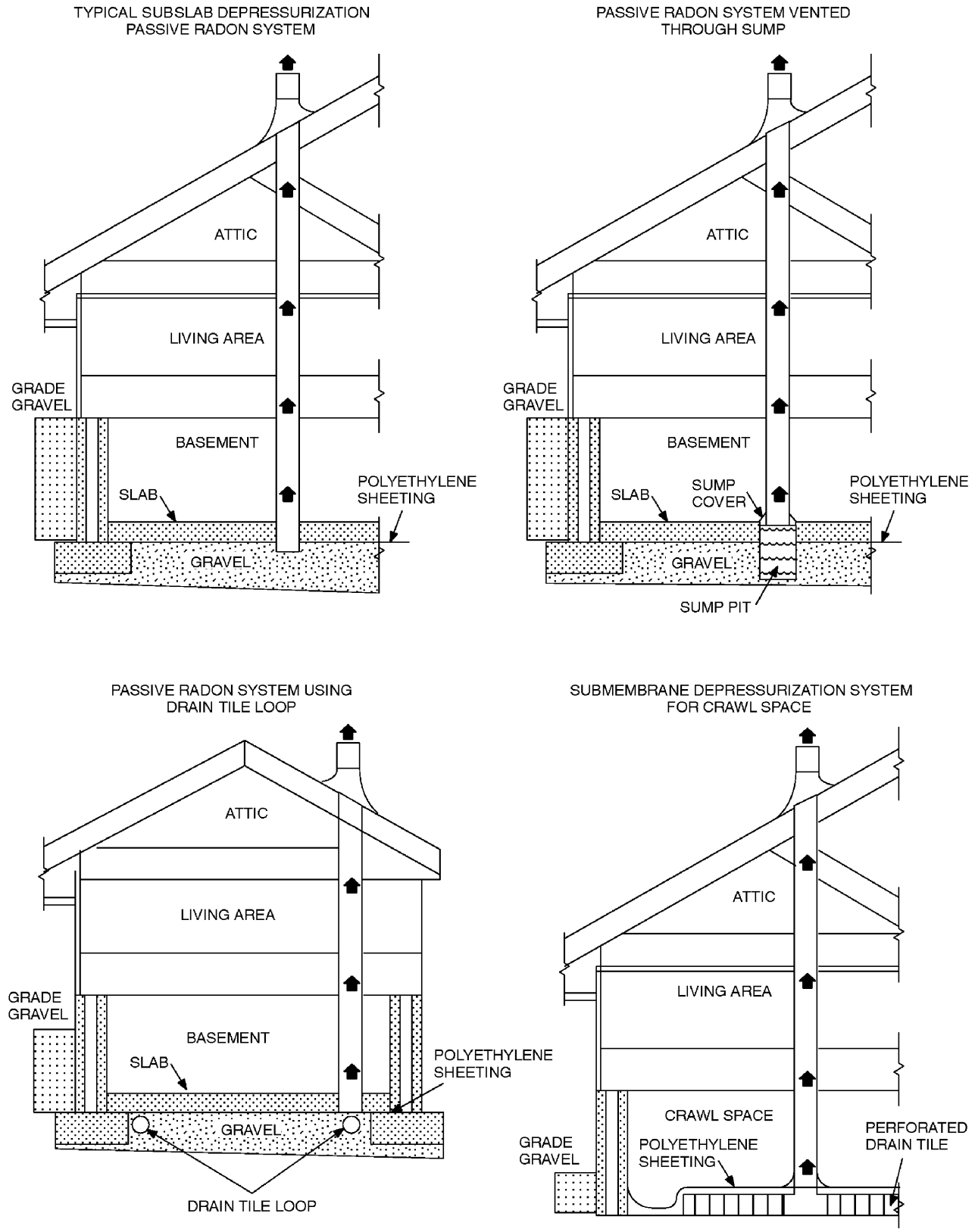

FIGURE AF103
RADON-RESISTANT CONSTRUCTION DETAILS FOR FOUR FOUNDATION TYPES

INTERNATIONAL CODE COUNCIL®
Copyright © 2019 ICC & NYSDOS. ALL RIGHTS RESERVED. Accessed by Lauren Gualdino (lgualdino@briarcliffmanor.org), (-) Order Number #100880972 on May 08, 2020 07:05 AM (PDT) pursuant to License Agreement with ICC & NYSDOS. No further reproduction, no

100880972

INTERNATIONAL CODE COUNCIL®
Copyright © 2019 ICC & NYSDOS. ALL RIGHTS RESERVED. Accessed by Lauren Gualdino (lgualdino@briarcliffmanor.org), (-) Order Number #100880972 on May 08, 2020 07:05 AM (PDT) pursuant to License Agreement with ICC & NYSDOS. No further reproduction, no

100880972

APPENDIX G

PIPING STANDARDS FOR VARIOUS APPLICATIONS

This appendix is informative and is not part of this code.

SECTION AG101
PLASTIC PIPING STANDARDS

AG101.1 Plastic piping. Table AG101.1 provides a list of plastic piping product standards for various applications.

INTERNATIONAL CODE COUNCIL®
Copyright © 2019 ICC & NYSDOS. ALL RIGHTS RESERVED. Accessed by Lauren Gualdino (lgualdino@briarcliffmanor.org), (-) Order Number #100880972 on May 08, 2020 07:05 AM (PDT) pursuant to License Agreement with ICC & NYSDOS. No further reproduction, no

100880972

APPENDIX G—PIPING STANDARDS FOR VARIOUS APPLICATIONS

TABLE AG101.1
PLASTIC PIPING STANDARDS FOR VARIOUS APPLICATIONS[a, b]

APPLICATION	LOCATION	TYPE OF PLASTIC PIPING								
		ABS	CPVC	PE	PE-AL-PE	PE-RT	PEX	PEX-AL-PEX	PP	PVC
Central vacuum	System piping	—	—	—	—	—	—	—	—	ASTM F2158
Foundation drainage	System piping	ASTM F628	—	ASTM F405	—	—	—	—	—	ASTM D2665 ASTM D2729 ASTM D3034
Geothermal ground loop	System piping	—	ASTM D2846 ASTM F441 ASTM F442 ASTM F2855 CSA B137.6	ASTM D2239 ASTM D2737 ASTM D3035	ASTM F1282	ASTM F2623 ASTM F2769	ASTM F876 CSA B137.5	ASTM F1281	ASTM F2389 CSA B137.11	ASTM D1785 ASTM D2241 CSA B137.3
	Loop piping	—	—	ASTM D2239 ASTM D2737 ASTM D3035 NSF 358-1	ASTM F1282	ASTM F2623 ASTM F2769	ASTM F876 CSA B137.5	—	ASTM F2389 CSA B137.11	—
Graywater	Nonpressure distribution/ collection	ASTM F628	—	ASTM D2239 ASTM D2737 ASTM D3035 ASTM F2306	—	—	—	—	ASTM F2389 CSA B137.11	ASTM D1785 ASTM D2729 ASTM D2949 ASTM D3034 ASTM F891 ASTM F1760 CSA B137.3

(continued)

INTERNATIONAL CODE COUNCIL®
Copyright © 2019 ICC & NYSDOS. ALL RIGHTS RESERVED. Accessed by Lauren Gualdino (lgualdino@briarcliffmanor.org), (-) Order Number #100880972 on May 08, 2020 07:05 AM (PDT) pursuant to License Agreement with ICC & NYSDOS. No further reproduction, no

100880972

TABLE AG101.1—continued
PLASTIC PIPING STANDARDS FOR VARIOUS APPLICATIONS[a, b]

APPLICATION	LOCATION	TYPE OF PLASTIC PIPING								
		ABS	CPVC	PE	PE-AL-PE	PE-RT	PEX	PEX-AL-PEX	PP	PVC
Graywater	Pressure/ distribution	—	ASTM D2846 ASTM F441 ASTM F442 ASTM F2855 CSA B137.6	ASTM D2239 ASTM D2737 ASTM D3035	ASTM F1282	ASTM F2623 ASTM F2769	ASTM F876 CSA B137.5	ASTM F1281	ASTM F2389 CSA B137.11	ASTM D1785 ASTM D2241 CSA B137.3
Radiant cooling	Loop piping	—	ASTM D2846 ASTM F441 ASTM F442 ASTM F2855	ASTM D2239 ASTM D2737 ASTM D3035	ASTM F1282	ASTM F2623 ASTM F2769	ASTM F876 CSA B137.5	ASTM F1281	ASTM F2389 CSA B137.11	—
Radiant heating	Loop piping	—	ASTM D2846 ASTM F441 ASTM F442 ASTM F2855	—	ASTM F1282	ASTM F2623 ASTM F2769	ASTM F876 CSA B137.5	ASTM F1281	ASTM F2389 CSA B137.11	—
Rainwater harvesting	Nonpressure/ collection	ASTM F628	—	ASTM F1901	—	—	—	—	ASTM F2389 CSA B137.11	ASTM D1785 ASTM D2729 ASTM D2949 ASTM F891 ASTM F1760 CSA B137.3
	Pressure/ distribution	—	ASTM D2846 ASTM F441 ASTM F442 ASTM F2855 CSA B137.6	ASTM D2239 ASTM D2737 ASTM D3035	ASTM F1282	ASTM F2623 ASTM F2769	ASTM F876 CSA B137.5	ASTM F1281	ASTM F2389 CSA B137.11	ASTM D1785 ASTM D2241 CSA B137.3

(continued)

INTERNATIONAL CODE COUNCIL®
Copyright © 2019 ICC & NYSDOS. ALL RIGHTS RESERVED. Accessed by Lauren Gualdino (lgualdino@briarcliffmanor.org), (-) Order Number #100880972 on May 08, 2020 07:05 AM (PDT) pursuant to License Agreement with ICC & NYSDOS. No further reproduction, no

100880972

TABLE AG101.1—continued
PLASTIC PIPING STANDARDS FOR VARIOUS APPLICATIONS[a, b]

APPLICATION	LOCATION	TYPE OF PLASTIC PIPING								
		ABS	CPVC	PE	PE-AL-PE	PE-RT	PEX	PEX-AL-PEX	PP	PVC
Radon venting	System piping	ASTM F628	—	—	—	—	—	—	—	ASTM D1785 ASTM F891 ASTM F1760
Reclaimed water	Main to building service	—	ASTM D2846 ASTM F441 ASTM F442 ASTM F2855 CSA B137.6	ASTM D3035 AWWA C901 CSA B137.1	ASTM F1282	ASTM F2623 ASTM F2769	ASTM F876 AWWA C904 CSA B137.5	—	ASTM F2389 CSA B137.11	ASTM D1785 ASTM D2241 AWWA C905 CSA B137.3
	Pressure/ distribution/ irrigation	—	ASTM D2846 ASTM F441 ASTM F442 ASTM F2855 CSA B137.6	ASTM D2239 ASTM D2737 ASTM D3035	ASTM F1282	ASTM F2623 ASTM F2769	ASTM F876 CSA B137.5	ASTM F1281	ASTM F2389 AWWA C900 CSA B137.11	ASTM D1785 ASTM D2241 AWWA C900
Residential fire sprinklers[c]	Sprinkler piping	—	ASTM F441 ASTM F442 CSA B137.6 UL 1821	—	—	ASTM F2769	ASTM F876 CSA B137.5 UL 1821	—	ASTM F2389 CSA B137.11	—
Solar heating	Pressure/ distribution	—	ASTM D2846 ASTM F441 ASTM F442 ASTM F2855	—	—	ASTM F2623 ASTM F2769	ASTM F876 CSA B137.5	ASTM F1281	ASTM F2389 CSA B137.11	—

a. This table indicates manufacturing standards for plastic piping materials that are suitable for use in the applications indicated. Such applications support green and sustainable building practices. The system designer or the installer of piping shall verify that the piping chosen for an application complies with local codes and the recommendations of the manufacturer of the piping.

b. Fittings applicable for the piping shall be as recommended by the manufacturer of the piping.

c. Piping systems for fire sprinkler applications shall be listed for the application.

INTERNATIONAL CODE COUNCIL®
Copyright © 2019 ICC & NYSDOS. ALL RIGHTS RESERVED. Accessed by Lauren Gualdino (lgualdino@briarcliffmanor.org), (-) Order Number #100880972 on May 08, 2020 07:05 AM (PDT) pursuant to License Agreement with ICC & NYSDOS. No further reproduction, no

100880972

SECTION AG102
REFERENCED STANDARDS

ASTM D1785—15	Specification for Poly (Vinyl Chloride) (PVC) Plastic Pipe, Schedules 40, 80 and 120	Table AG101.1
ASTM D2239—12A	Specification for Polyethylene (PE) Plastic Pipe (SIDR-PR) Based on Controlled Inside Diameter	Table AG101.1
ASTM D2241—15	Specification for Poly (Vinyl Chloride) (PVC) Pressure-rated Pipe (SDR-Series)	Table AG101.1
ASTM D2665—14	Specification for Poly (Vinyl Chloride) (PVC) Plastic Drain, Waste and Vent Pipe and Fittings	Table AG101.1
ASTM D2729—11	Specification for Poly (Vinyl Chloride) (PVC) Sewer Pipe and Fittings	Table AG101.1
ASTM D2737—2012A	Specification for Polyethylene (PE) Plastic Tubing	Table AG101.1
ASTM D2846—14	Specification for Chlorinated Poly (Vinyl Chloride) (CPVC) Plastic Hot- and Cold-water Distribution Systems	Table AG101.1
ASTM D2949—10	Specification for 3.25-in. Outside Diameter Poly (Vinyl Chloride) (PVC) Plastic Drain, Waste and Vent Pipe and Fittings	Table AG101.1
ASTM D3034—14a	Specification for Type PSM Poly (Vinyl Chloride) (PVC) Sewer Pipe and Fittings	Table AG101.1
ASTM D3035—15	Specification for Polyethylene (PE) Plastic Pipe (DR-PR) Based On Controlled Outside Diameter	Table AG101.1
ASTM F405—05	Specification for Corrugated Polyethylene (PE) Pipe and Fittings	Table AG101.1
ASTM F441—15	Specification for Chlorinated Poly (Vinyl Chloride) (CPVC) Plastic Pipe, Schedules 40 and 80	Table AG101.1
ASTM F442—13E1	Specification for Chlorinated Poly (Vinyl Chloride) (CPVC) Plastic Pipe (SDR-PR)	Table AG101.1
ASTM F628—12E1	Specification for Acrylonitrile-butadiene-styrene (ABS) Schedule 40 Plastic Drain, Waste and Vent Pipe with a Cellular Core	Table AG101.1
ASTM F876—15A	Specification for Cross-linked Polyethylene (PEX) Tubing	Table AG101.1
ASTM F891—10	Specification for Coextruded Poly (Vinyl Chloride) (PVC) Plastic Pipe with a Cellular Core	Table AG101.1
ASTM F1281—11	Specification for Cross-linked Polyethylene/ Aluminum/Cross-linked Polyethylene (PEX-AL-PEX) Pressure Pipe	Table AG101.1
ASTM F1282—10	Specification for Polyethylene/ Aluminum/Polyethylene (PE-AL-PE) Composite Pressure Pipe	Table AG101.1
ASTM F1760—01 (2011)	Standard Specification for Coextruded Poly (Vinyl Chloride) (PVC) Non-Pressure Plastic Pipe Having Reprocessed-Recycled Content	Table AG101.1
ASTM F1901—10	Standard Specification for Polyethylene (PE) Pipe and Fittings for Roof Drain Systems	Table AG101.1
ASTM F2158—08 (2016)	Standard for Residential Central-vacuum Tube and Fittings	Table AG101.1
ASTM F2306/ F2306M—14E1	12″ to 60″ Annular Corrugated Profile-wall Polyethylene (PE) Pipe and Fittings for Gravity Flow Storm Sewer and Sub-surface Drainage Applications	Table AG101.1
ASTM F2389—15	Standard for Pressure-rated Polypropylene (PP) Piping Systems	Table AG101.1
ASTM F2623—14	Standard Specification for Polyethylene of Raised Temperature (PE-RT) SDRG Tubing	Table AG101.1

INTERNATIONAL CODE COUNCIL®
Copyright © 2019 ICC & NYSDOS. ALL RIGHTS RESERVED. Accessed by Lauren Gualdino (lgualdino@briarcliffmanor.org), (-) Order Number #100880972 on May 08, 2020 07:05 AM (PDT) pursuant to License Agreement with ICC & NYSDOS. No further reproduction, no

100880972

ASTM F2769—14	Polyethylene or Raised Temperature (PE-RT) Plastic Hot and Cold-Water Tubing and Distribution Systems	Table AG101.1
ASTM F2855—12	Standard Specification for Chlorinated Poly (Vinyl Chloride)/ Aluminum/Chlorinated Poly (Vinyl Chloride) (CPVC AL CPVC) Composite Pressure Tubing	Table AG101.1
AWWA 900—07	Polyvinyl chloride (PVC) Pressure Pipe and Fabricated Fittings, 4 in. through 12 in. (350 mm through 1200 mm), for Water Transmission and Distribution	Table AG101.1
AWWA C901—16	Polyethylene (PE) Pressure Pipe and Tubing $^1/_2$ in. (13 mm) through 3 in. (76 mm) for Water Service	Table AG101.1
AWWA C904—16	Cross-linked Polyethylene (PEX) Pressure Tubing, $^1/_2$ in. (13 mm) through 3 in. (76 mm) for Water Service	Table AG101.1
AWWA 905—10	Polyvinyl chloride (PVC) Pressure Pipe and Fabricated Fittings, 14 in. through 48 in. (100 mm through 300 mm)	Table AG101.1
CSA B137.1—16	Polyethylene (PE) Pipe, Tubing and Fittings for Cold Water Pressure Services	Table AG101.1
CSA B137.3—16	Rigid Poly (Vinyl Chloride) (PVC) Pipe for Pressure Applications	Table AG101.1
CSA B137.5—16	Cross-linked Polyethylene (PEX) Tubing Systems for Pressure Applications	Table AG101.1
CSA B137.6—16	Chlorinated polyvinylchloride CPVC Pipe, Tubing and Fittings for Hot- and Cold-water Distribution Systems	Table AG101.1
CSA B137.11—16 16	Polypropylene (PP-R) Pipe and Fittings for Pressure Applications	Table AG101.1
NSF 358-1—2014	Polyethylene Pipe and Fittings for Water-based Ground Source “Geothermal” Heat Pump Systems	Table AG101.1
UL 1821—2011	Standard for Thermoplastic Sprinkler Pipe and Fittings for Fire Protection Service with revisions through August 2015	Table AG101.1

INTERNATIONAL CODE COUNCIL®
Copyright © 2019 ICC & NYSDOS. ALL RIGHTS RESERVED. Accessed by Lauren Gualdino (lgualdino@briarcliffmanor.org), (-) Order Number #100880972 on May 08, 2020 07:05 AM (PDT) pursuant to License Agreement with ICC & NYSDOS. No further reproduction, no

100880972

APPENDIX H

PATIO COVERS

SECTION AH101 GENERAL

AH101.1 Scope. Patio covers shall conform to the requirements of Sections AH101 through AH106.

AH101.2 Permitted uses. Patio covers detached from or attached to *dwelling units* shall be used only for recreational, outdoor living purposes, and not as carports, garages, storage rooms or habitable rooms.

SECTION AH102 DEFINITION

AH102.1 General. The following word and term shall, for the purposes of this appendix, have the meaning shown herein.

PATIO COVER. A structure with open or glazed walls that is used for recreational, outdoor living purposes associated with a dwelling unit.

SECTION AH103 EXTERIOR WALLS AND OPENINGS

AH103.1 Enclosure walls. Enclosure walls shall be permitted to be of any configuration, provided that the open or glazed area of the longer wall and one additional wall is not less than 65 percent of the area below 6 feet, 8 inches (2032 mm) of each wall, measured from the floor. Openings shall be enclosed with any of the following:

1. Insect screening.
2. Approved translucent or transparent plastic not more than 0.125 inch (3.2 mm) in thickness.
3. Glass conforming to the provisions of Section R308.
4. Any combination of the foregoing.

AH103.2 Light, ventilation and emergency egress. Exterior openings required for light and ventilation into a patio structure conforming to Section AH101 shall be unenclosed where such openings serve as emergency egress or rescue openings from sleeping rooms. Where such exterior openings serve as an exit from the *dwelling unit*, the patio structure, unless unenclosed, shall be provided with exits conforming to the provisions of Section R311 of this code.

SECTION AH104 HEIGHT

AH104.1 Height. Patio covers are limited to one-story structures not exceeding 12 feet (3657 mm) in height.

SECTION AH105 STRUCTURAL PROVISIONS

AH105.1 Design loads. Patio covers shall be designed and constructed to sustain, within the stress limits of this code, all dead loads plus a vertical live load of not less than 10 pounds per square foot (0.48 kN/m^2), except that snow loads shall be used where such snow loads exceed this minimum. Such covers shall be designed to resist the minimum wind loads set forth in Section R301.2.1.

AH105.2 Footings. In areas with a frostline depth of zero as specified in Table R301.2(1), for patio covers supported on a slab-on-*grade* without footings, the slab shall conform to the provisions of Section R506, shall be not less than 3.5 inches (89 mm) thick and the columns shall not support live and dead loads in excess of 750 pounds (3.34 kN) per column.

SECTION AH106 SPECIAL PROVISIONS FOR ALUMINUM SCREEN ENCLOSURES IN HURRICANE-PRONE REGIONS

AH106.1 General. Screen enclosures in *hurricane-prone regions* shall be in accordance with the provisions of this section.

AH106.1.1 Habitable spaces. Screen enclosures shall not be considered *habitable spaces*.

AH106.1.2 Minimum ceiling height. Screen enclosures shall have a ceiling height of not less than 7 feet (2134 mm).

AH106.2 Definition. The following word and term shall, for the purposes of this appendix, have the meaning shown herein.

SCREEN ENCLOSURE. A building or part thereof, in whole or in part self-supporting, and having walls of insect screening, and a roof of insect screening, plastic, aluminum or similar lightweight material.

AH106.3 Screen enclosures. Screen enclosures shall comply with Sections AH106.3.1 and AH106.3.2.

AH106.3.1 Thickness. Actual wall thickness of extruded aluminum members shall be not less than 0.040 inch (1.02 mm).

AH106.3.2 Density. Screen density shall be not more than 20 threads per inch by 20 threads per inch mesh.

AH106.4 Design. The structural design of screen enclosures shall comply with Sections AH106.4.1 through AH106.4.3.

AH106.4.1 Wind load. Structural members supporting screen enclosures shall be designed to support the minimum wind loads given in Tables AH106.4(1) and

INTERNATIONAL CODE COUNCIL®
Copyright © 2019 ICC & NYSDOS. ALL RIGHTS RESERVED. Accessed by Lauren Gualdino (lgualdino@briarcliffmanor.org), (-) Order Number #100880972 on May 08, 2020 07:05 AM (PDT) pursuant to License Agreement with ICC & NYSDOS. No further reproduction, no

AH106.4(2) for the ultimate design wind speed, V_{ult}, determined from Figure AH106.4.1. Where any value is less than 10 pounds per square foot (psf) (0.479 kN/m^2) use 10 pounds per square foot (0.479 kN/m^2).

AH106.4.2 Deflection limit. For members supporting screen surfaces only, the total load deflection shall not exceed *l*/60. Screen surfaces shall be permitted to include not more than 25-percent solid flexible finishes.

AH106.4.3 Roof live load. The roof live load shall be not less than 10 psf (0.479 kN/m^2).

AH106.5 Footings. In areas with a frost line depth of zero, screen enclosures supported on a concrete slab-on-*grade* without footings shall conform to the provisions of Section R506, be not less than $3^1/_2$ inches (89 mm) thick and the columns shall not support loads in excess of 750 pounds (3.36 kN) per column.

TABLE AH106.4(2)
ADJUSTMENT FACTOR FOR BUILDING HEIGHT AND EXPOSURE

MEAN ROOF HEIGHT (feet)	EXPOSURE		
	B	C	D
15	1.00	1.21	1.47
20	1.00	1.29	1.55
25	1.00	1.35	1.61
30	1.00	1.40	1.66
35	1.05	1.45	1.70
40	1.09	1.49	1.74
45	1.12	1.53	1.78
50	1.16	1.56	1.81
55	1.19	1.59	1.84
60	1.22	1.62	1.87

For SI: 1 foot = 304.8 mm.

TABLE AH106.4(1)
DESIGN WIND PRESSURES FOR SCREEN ENCLOSURE FRAMING[a, b, e, f, g, h]

LOAD CASE	WALL	ULTIMATE DESIGN WIND SPEED, V_{ult} (mph)									
		100	105	110	120	130	140	150	160	170	180
		Exposure Category B Design Pressure (psf)									
A[c]	Windward and leeward walls (flow thru) and windward wall (nonflow thru) *L/W* = 0-1	6	7	8	9	11	13	14	16	18	21
A[c]	Windward and leeward walls (flow thru) and windward wall (nonflow thru) *L/W* = 2	7	8	9	11	12	14	16	19	21	24
B[d]	Windward: Nongable roof	9	10	11	13	15	18	21	23	26	30
B[d]	Windward: Gable roof	11	13	14	16	19	22	26	29	33	37
	ROOF										
All[e]	Roof-screen	2	3	3	3	4	4	5	6	7	7
All[e]	Roof-solid	7	8	8	10	12	13	15	18	20	22

For SI: 1 inch = 25.4 mm, 1 mile per hour = 0.44 m/s, 1 pound per square foot = 0.0479 kPa, 1 foot = 304.8 mm.

a. Design pressure shall be not less than 10 psf in accordance with Section AH106.4.1.

b. Loads are applicable to screen enclosures with a mean roof height of 30 feet or less in Exposure B. For screen enclosures of different heights or exposure, the pressures given shall be adjusted by multiplying the table pressure by the adjustment factor given in Table AH106.4(2).

c. For Load Case A flow thru condition, the pressure given shall be applied simultaneously to both the upwind and downwind screen walls acting in the same direction as the wind. The structure shall be analyzed for wind coming from the opposite direction. For the nonflow thru condition, the screen enclosure wall shall be analyzed for the load applied acting toward the interior of the enclosure.

d. For Load Case B, the table pressure multiplied by the projected frontal area of the screen enclosure is the total drag force, including drag on screen surfaces parallel to the wind, that must be transmitted to the ground. Use Load Case A for members directly supporting the screen surface perpendicular to the wind. Load Case B loads shall be applied only to structural members that carry wind loads from more than one surface.

e. The roof structure shall be analyzed for the pressure given occurring both upward and downward.

f. Table pressures are MWFRS loads. The design of solid roof panels and their attachments shall be based on component and cladding loads for enclosed or partially enclosed structures as appropriate.

g. Table pressures apply to 20-inch by 20-inch by 0.013-inch mesh screen. For 18-inch by 14-inch by 0.013-inch mesh screen, pressures on screen surfaces shall be permitted to be multiplied by 0.88. For screen densities greater than 20 inches by 20 inches by 0.013 inch, pressures for enclosed buildings shall be used.

h. Linear interpolation shall be permitted.

INTERNATIONAL CODE COUNCIL®
Copyright © 2019 ICC & NYSDOS. ALL RIGHTS RESERVED. Accessed by Lauren Gualdino (lgualdino@briarcliffmanor.org), (-) Order Number #100880972 on May 08, 2020 07:05 AM (PDT) pursuant to License Agreement with ICC & NYSDOS. No further reproduction, no

100880972

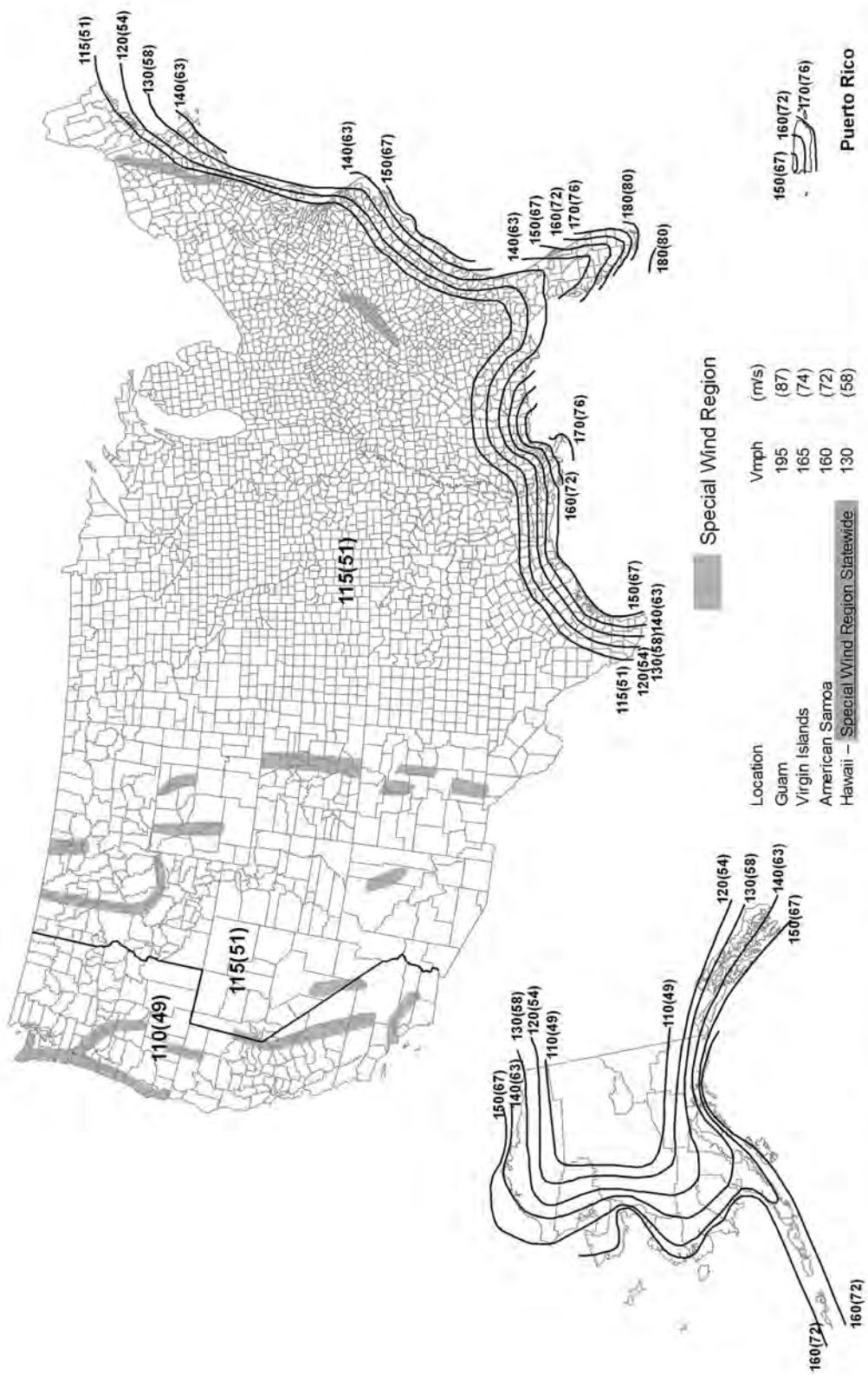

FIGURE AH106.4.1
ULTIMATE DESIGN WIND SPEEDS FOR PATIO COVERS AND SCREEN ENCLOSURES

Notes:

1. Values are nominal design 3-second gust wind speeds in miles per hour (m/s) at 33 ft (10m) above ground for Exposure C category.
2. Linear interpolation between contours is permitted.
3. Islands and coastal areas outside the last contour shall use the last wind speed contour of the coastal area.
4. Mountainous terrain, gorges, ocean promontories, and special wind regions shall be examined for unusual wind conditions.
5. Wind speeds correspond to approximately a 7% probability of exceedance in 50 years (Annual Exceedance Probability = 0.00143, MRI = 700 Years).

INTERNATIONAL CODE COUNCIL®
Copyright © 2019 ICC & NYSDOS. ALL RIGHTS RESERVED. Accessed by Lauren Gualdino (lgualdino@briarcliffmanor.org), (-) Order Number #100880972 on May 08, 2020 07:05 AM (PDT) pursuant to License Agreement with ICC & NYSDOS. No further reproduction, no

100880972

INTERNATIONAL CODE COUNCIL®
Copyright © 2019 ICC & NYSDOS. ALL RIGHTS RESERVED. Accessed by Lauren Gualdino (lgualdino@briarcliffmanor.org), (-) Order Number #100880972 on May 08, 2020 07:05 AM (PDT) pursuant to License Agreement with ICC & NYSDOS. No further reproduction, no

[NY] APPENDIX I

RESERVED

INTERNATIONAL CODE COUNCIL®
Copyright © 2019 ICC & NYSDOS. ALL RIGHTS RESERVED. Accessed by Lauren Gualdino (lgualdino@briarcliffmanor.org), (-) Order Number #100880972 on May 08, 2020 07:05 AM (PDT) pursuant to License Agreement with ICC & NYSDOS. No further reproduction, no

100880972

INTERNATIONAL CODE COUNCIL®
Copyright © 2019 ICC & NYSDOS. ALL RIGHTS RESERVED. Accessed by Lauren Gualdino (lgualdino@briarcliffmanor.org), (-) Order Number #100880972 on May 08, 2020 07:05 AM (PDT) pursuant to License Agreement with ICC & NYSDOS. No further reproduction, no

100880972

[NY] APPENDIX J

EXISTING BUILDINGS AND STRUCTURES

[NY] SECTION AJ101 PURPOSE AND INTENT

[NY] AJ101.1 General. The purpose of these provisions is to encourage the continued use or reuse of legally existing buildings and structures. These provisions are intended to permit work in existing buildings that is consistent with the purpose of this code. Compliance with these provisions shall be deemed to meet the requirements of this code.

[NY] AJ101.2 Scope. The provisions of this appendix shall apply to the repair, alteration, change of occupancy, addition and relocation of existing buildings.

[NY] AJ101.1.1 Buildings not previously occupied. A building or portion of a building that has not been previously occupied or used for its intended purpose shall comply with the provisions of this code for new construction.

[NY] AJ101.1.2 Compliance with other codes. Repairs, alterations, change of occupancy, existing buildings to which additions are made, historic buildings and relocated buildings complying with the provisions of the *Uniform Code*, as applicable, shall be considered in compliance with the provisions of this appendix.

[NY] SECTION AJ102 COMPLIANCE

[NY] AJ102.1 Existing buildings. The legal occupancy of any building existing on the date of adoption of this code shall be permitted to continue without change, except as is specifically covered in this code, the *Fire Code of New York State* or the *Property Maintenance Code of New York State*.

[NY] AJ102.1.1 Additions, alterations and repairs. Additions, alterations or repairs to any structure shall conform to that required by this code without requiring the existing structure to comply with all the requirements of this code, unless otherwise stated. Additions, alterations or repairs shall not cause an existing structure to become unsafe or adversely affect the performance of the building.

[NY] AJ102.2 Existing installations. Provisions in this code shall not require the removal, alteration or abandonment of, or prevent the continued use and maintenance of, an existing building envelope, mechanical, service water-heating, electrical distribution or illumination system lawfully in existence at the time of the adoption of this code.

[NY] AJ102.3 Nonconforming features. Nothing in this appendix shall be construed to permit the continuation of existing building features which were installed in conflict with any codes or laws in effect at the time of construction or installation. Additions or alterations shall not be made to an existing building or structure which will cause the existing building or structure to be in violation with any of the provisions of this code.

[NY] AJ102.4 Correction of violations of other codes. Repairs or alterations mandated by any property, housing or fire safety maintenance code or mandated by any licensing rule or ordinance adopted pursuant to law shall conform only to the requirements of that code, rule or ordinance and shall not be required to conform to this code unless the code requiring such repair or alteration so provides.

[NY] AJ102.5 Home occupations. It shall be prohibited to conduct a home occupation in a dwelling unit except as provided for in Section AJ102.5.1. A home occupation shall be conducted wholly within the primary structure on the premises. No provision of this section shall be construed to repeal, modify or constitute an alternative to any lawful zoning regulation which is more restrictive than this section.

[NY] AJ102.5.1 Conditions.

1. The home occupation shall meet all requirements for habitable space and shall not exceed 15 percent of the floor area of the primary structure.
2. No more than one person not residing in the dwelling unit may be employed in the home occupation.
3. Inventory and supplies shall not occupy more than 50 percent of the area permitted to be used as a home occupation.
4. The home occupation shall not involve any operation considered to be hazardous.

[NY] AJ102.6. Lead-based paint. In addition to requirements of this code, 40 CFR 745 (titled "Lead-based Paint Poisoning Prevention in Certain Residential Structures"), a regulation issued and enforced by the Federal Environmental Protection Agency, applies to certain activities in buildings that may contain lead-based paint, including renovations performed for compensation in "target housing" and "child-occupied facilities," "abatement" of lead-based paint hazards and other "lead-based paint activities" (as those terms are defined in 40 CFR Part 745).

[NY] AJ102.7 Evacuation notices. In addition to but not in limitation of any other requirement of this Section, all one-family dwellings converted for use as a bed and breakfast dwelling and all existing bed and breakfast dwellings undergoing an alteration or addition to create an additional guest room or rooms shall have a fire-safety notice affixed to the occupied side of the entrance door of each converted, altered, or new guest room for transient use indicating:

1. Location of nearest exits and fire alarms;
2. Procedures to be followed when a fire or smoke detector gives warning; and
3. Procedures to be followed in the event of fire or smoke development.

INTERNATIONAL CODE COUNCIL®
Copyright © 2019 ICC & NYSDOS. ALL RIGHTS RESERVED. Accessed by Lauren Gualdino (lgualdino@briarcliffmanor.org), (-) Order Number #100880972 on May 08, 2020 07:05 AM (PDT) pursuant to License Agreement with ICC & NYSDOS. No further reproduction, no

100880972

[NY] SECTION AJ103 APPLICABILITY

[NY] AJ103.1 General. Where, in any specific case, different sections of this appendix specify different materials, methods of construction or other requirements, the most restrictive shall govern. Where there is a conflict between a general requirement and a specific requirement, the specific requirement shall be applicable.

[NY] AJ103.2 Other laws. The provisions of this appendix shall not be deemed to nullify any provisions of local, state or federal law.

[NY] AJ103.3 Referenced codes and standards. The codes and standards referenced in this appendix shall be considered part of the requirements of this appendix to the prescribed extent of each such reference. Where differences occur between provisions of this appendix and referenced codes and standards, the provisions of this appendix shall apply.

[NY] AJ103.4 Partial invalidity. In the event that any part or provision of this appendix is held to be illegal or void, this shall not have the effect of making void or illegal any of the other parts or provisions.

[NY] SECTION AJ104 ENERGY EFFICIENCY

[NY] AJ104.1 Additions, alterations, or renovations. Additions, alterations, or renovations to an existing building, building system or portion thereof shall conform to the provisions of Section N1107 of this code as they relate to new construction without requiring the unaltered portion(s) of the existing building or building system to comply with this chapter. An addition shall be deemed to comply with this chapter if the addition alone complies or if the existing building and addition comply with this chapter as a single building. Additions, alterations, or renovations shall not create an unsafe or hazardous condition or overload existing building systems.

[NY] AJ104.2 Change in occupancy or use. Spaces undergoing a change in occupancy that would result in an increase in demand for either fossil fuel or electrical energy shall comply with Section N1111 of this code.

[NY] AJ104.3 Change in space conditioning. Any non-conditioned space that is altered to become conditioned space shall comply with Section N1109.2 of this code.

[NY] SECTION AJ105 PRELIMINARY MEETING

[NY] AJ105.1 General. The *building official* is authorized to require that the prospective applicant meet to discuss plans for any proposed work or change of occupancy under these provisions prior to the issuance of the *permit.* The purpose of this preliminary meeting is for the *building official* to gain an understanding of the prospective applicant's intentions for the proposed work, and to determine, together with the prospective applicant, the specific applicability of this appendix.

[NY] SECTION AJ106 EVALUATION OF AN EXISTING BUILDING

[NY] AJ106.1 General. The *building official* shall have the authority to require an existing building to be investigated and evaluated by a registered *design professional* based upon the circumstances agreed upon at the preliminary meeting to determine the existence of any potential nonconformance with the provisions of this code. The building evaluation shall include, but shall not be limited to, structural, mechanical, plumbing and electrical systems. The evaluation shall be limited to those areas of the existing dwelling that are directly affected by the type of work under consideration. The building evaluation shall be certified by the design professional.

The evaluation shall use the following sources of information, as applicable:

1. Available documentation of the existing building.
2. Field surveys.
3. Tests (nondestructive and destructive).
4. Laboratory analysis.

[NY] SECTION AJ201 DEFINITIONS

[NY] AJ201.1 General. For purposes of this appendix, the terms used are defined as follows.

ADDITION. An extension or increase in floor area, number of stories, or height of a building or structure.

ALTERATION. Any construction or renovation to an existing structure other than repair or addition. Alterations are classified as Level 1 and Level 2.

CARPORT. An open-sided structure that is used for parking, storage, or repair of equipment and/or vehicles, and consists of a roof and at least two sides that are open to the atmosphere.

CHANGE OF OCCUPANCY. A change in the occupancy or use of a building, such as a change from a one-family dwelling to a two-family dwelling, or from an occupancy regulated by the *Building Code of New York State* to a detached one-or two-family dwelling or multiple single-family dwellings (townhouses) regulated by this code.

CONVERSION. A change of occupancy or use of a building from a one-family dwelling to a bed and breakfast dwelling.

DANGEROUS. Any building or structure or any individual member with any of the structural conditions or defects described below shall be deemed dangerous:

1. The stress in a member or portion thereof due to all factored dead and live loads is more than one and one third the nominal strength allowed in this code for new buildings of similar structure, purpose or location.
2. Any portion, member or appurtenance thereof likely to fail, or to become detached or dislodged, or to collapse and thereby injure persons.
3. Any portion of a building, or any member, appurtenance or ornamentation on the exterior thereof is not of sufficient strength or stability, or is not anchored,

INTERNATIONAL CODE COUNCIL®
Copyright © 2019 ICC & NYSDOS. ALL RIGHTS RESERVED. Accessed by Lauren Gualdino (lgualdino@briarcliffmanor.org), (-) Order Number #100880972 on May 08, 2020 07:05 AM (PDT) pursuant to License Agreement with ICC & NYSDOS. No further reproduction, no

100880972

attached or fastened in place so as to be capable of resisting a wind pressure of two thirds of that specified in this code for new buildings of similar structure, purpose or location without exceeding the nominal strength permitted in this code for such buildings.

4. The building, or any portion thereof, is likely to collapse partially or completely because of dilapidation, deterioration or decay; construction in violation of the *Uniform Code*; the removal, movement or instability of any portion of the ground necessary for the purpose of supporting such building; the deterioration, decay or inadequacy of its foundation; damage due to fire, earthquake, wind or flood; or any other similar cause.
5. The exterior walls or other vertical structural members list, lean or buckle to such an extent that a plumb line passing through the center of gravity does not fall inside the middle one third of the base.

EQUIPMENT OR FIXTURE. Any plumbing, heating, electrical, ventilating, air-conditioning, refrigerating and fire protection *equipment*; and elevators, dumb waiters, boilers, pressure vessels, and other mechanical facilities or installations that are related to building services.

EXISTING BUILDING. A building or structure that has been issued a certificate of occupancy or has been legally occupied.

FLOOD HAZARD AREA. The greater of the following two areas:

1. The area within a flood plain subject to a 1-percent or greater chance of flooding in any year.
2. The area designated as a flood hazard area on a community's flood hazard map, or otherwise legally designated.

FUEL-BURNING APPLIANCE. Any appliance, equipment, device, machine, or system that may emit carbon monoxide. Examples of fuel-burning appliances include, but are not limited to, fireplaces, wood stoves, fuel-fired furnaces, fuel-fired boilers, space heaters with pilot lights or open flames, kerosene heaters, stoves, ovens, ranges, gas powered clothes dryers, refrigerators that use gas or liquid fuel, generators, engines, torches, forklifts, compressors, pumps, welding equipment, pressure washers, and fuel-powered tools.

HOME OCCUPATION. The use of a portion of a dwelling unit for nonresidential purposes by a resident thereof.

LOAD-BEARING ELEMENT. Any column, girder, beam, joist, truss, rafter, wall, floor or roof sheathing that supports any vertical load in addition to its own weight, or any lateral load.

MATERIALS AND METHODS REQUIREMENTS. Those requirements in this code that specify material standards; details of installation and connection; joints; penetrations; and continuity of any element, component or system in the building. The required quantity, fire resistance, flame spread, acoustic or thermal performance, or other performance attribute is specifically excluded from materials and methods requirements.

MOTOR VEHICLE RELATED OCCUPANCY. A building or portion thereof that is used for parking, storage, or repair of equipment and/or vehicles. The term motor vehicle related occupancy shall exclude structures that meet the definition of a carport or an open parking garage.

RECONFIGURATION OF SPACE. A reconfiguration of space includes a change of a space from nonhabitable to habitable, the installation or removal of walls, or partitions, or any other division of space, or the change in use of a space in which the new use could be considered an increase in hazard as determined by the authority having jurisdiction.

REHABILITATION. Any repair, renovation, *alteration* or reconstruction work undertaken in an existing building.

RELOCATION. Relocated buildings include any building or structure which is relocated from its existing foundation to a new foundation.

REPAIR. The restoration of materials, elements, components, *equipment* or fixtures for the purposes of maintaining those materials, elements, components, *equipment* or fixtures in good or sound condition.

REPLACEMENT. The reconstruction of a building on an existing foundation or support system.

SUBSTANTIAL DAMAGE. For the purpose of determining compliance with the flood provisions of this code, damage of any origin sustained by a structure whereby the cost of restoring the structure to its before-damaged condition would equal or exceed 50 percent of the market value of the structure before the damage occurred.

SUBSTANTIAL IMPROVEMENT. For the purpose of determining compliance with the flood provisions of this code, any repair, alteration, addition or improvement of a building or structure, the cost of which equals or exceeds 50 percent of the market value of the structure before the improvement or repair is started. If the structure has sustained substantial damage, any repairs are considered substantial improvement regardless of the actual repair work performed. The term does not, however, include either:

1. Any project for improvement of a building required to correct existing health, sanitary or safety code violations identified by the *building official* and that is the minimum necessary to assure safe living conditions, or
2. Any alteration of a historic structure provided that the alteration will not preclude the structure's continued designation as a historic structure.

SUBSTANTIAL STRUCTURAL DAMAGE. A condition where:

1. In any story, the vertical elements of the lateral-force-resisting system, in any direction and taken as a whole, have suffered damage such that the lateral load-carrying capacity has been reduced by more than 20 percent from its predamaged condition, or
2. The vertical load-carrying components supporting more than 30 percent of the structure's floor or roof area have suffered a reduction in vertical load-carrying capacity to below 75 percent of the required strength levels of this code.

INTERNATIONAL CODE COUNCIL®
Copyright © 2019 ICC & NYSDOS. ALL RIGHTS RESERVED. Accessed by Lauren Gualdino (lgualdino@briarcliffmanor.org), (-) Order Number #100880972 on May 08, 2020 07:05 AM (PDT) pursuant to License Agreement with ICC & NYSDOS. No further reproduction, no

100880972

UNSAFE BUILDINGS OR EQUIPMENT. Buildings or existing equipment that is insanitary or deficient because of inadequate means of egress facilities, inadequate light and ventilation, or that constitutes a fire hazard, or that is otherwise dangerous to human life or the public welfare or that involves illegal or improper occupancy or inadequate maintenance, shall be deemed an unsafe condition.

WORK AREA. That portion or portions of a building affected by any renovation, *alteration* or reconstruction work as initially intended by the owner and indicated as such in the *permit*. Work area excludes other portions of the building where incidental work entailed by the intended work must be performed, and portions of the building where work not initially intended by the owner is specifically required by this appendix.

[NY] SECTION AJ301 CLASSIFICATION OF WORK

[NY] AJ301.1 Scope. The work performed on an existing building shall be classified in accordance with this section.

[NY] AJ301.2 Work area. The work area, as defined in Section AJ201, shall be identified on the construction documents.

[NY] AJ301.3 Repairs. Repairs, as defined in Section AJ201, include the patching or restoration of materials, elements, equipment, or fixtures for the purpose of maintaining such materials, elements, equipment or fixtures in good or sound condition. Repairs shall comply with the provisions of Section AJ401.

[NY] AJ301.4 Alterations—Level 1. Level 1 alterations include the removal and replacement or the covering of existing materials, elements, equipment or fixtures using new materials, elements, equipment or fixtures that serve the same purpose, without reconfiguring the space. Level 1 alterations shall comply with the provisions of Section AJ501.

[NY] AJ301.5 Alterations—Level 2. Level 2 alterations include the reconfiguration of space, the addition or elimination of any door or window, the reconfiguration or extension of any system, or the installation of any additional equipment. Level 2 alterations shall comply with the provisions of Section AJ501 for Level 1 alterations as well as the provisions of Section AJ601.

> **Exception:** Work areas in which the alteration work is exclusively plumbing, mechanical or electrical shall not be included in the computation of total area of all work areas.

[NY] AJ301.6 Change of occupancy. Change of occupancy provisions apply where the activity is classified as a change of occupancy as defined in Section AJ201. Changes of occupancy shall comply with the provisions of Section AJ701.

[NY] AJ301.7 Additions. Provisions for additions shall apply where work is classified as an addition as defined in Section AJ201. Additions to existing buildings shall comply with the provisions of Section AJ801.

[NY] AJ301.8 Historic buildings. Historic building provisions shall apply to buildings classified as historic as defined in Section AJ201. Except as specifically provided for in Section AJ901, historic buildings shall comply with applicable provisions of this appendix for the type of work being performed.

[NY] AJ301.9 Relocated buildings. Relocated building provisions shall apply to relocated buildings as defined in Section AJ201. Relocated buildings shall comply with the provisions of Section AJ1001.

[NY] AJ301.10 Replacement. Replaced building provisions shall apply to replaced buildings as defined in Section AJ201. Replaced buildings shall comply with the provisions of Section AJ1101.

[NY] SECTION AJ401 REPAIRS

[NY] AJ401.1 Scope. Repairs as described in Section AJ301 shall comply with the requirements of this section. Repairs to historic buildings shall comply with this section, except as modified in Section AJ901.

[NY] AJ401.2 Permitted materials. Except as otherwise required herein, work shall be done using materials permitted by the applicable code for new construction or using like materials such that no hazard to life, health or property is created.

[NY] AJ401.2.1 Hazardous materials. Hazardous materials that are no longer permitted, such as asbestos and lead-based paint, not be used.

[NY] AJ401.2.2 Glazing in hazardous locations. Replacement glazing in hazardous locations shall comply with the safety glazing requirements of Section R308 as applicable.

Exceptions:

1. Glass block walls, louvered windows, and jalousies repaired with like materials.
2. Replacement glazing in historic buildings.

[NY] AJ401.2.3 Reroofing. Existing roof assemblies undergoing repair shall comply with the applicable requirements of Section AJ501.4.4 of this appendix.

[NY] AJ401.3 Plumbing. Repairs to existing plumbing systems shall be permitted in the same manner and arrangement as in the existing system, provided that such repairs or replacement are not hazardous and are approved.

The following plumbing materials and supplies shall not be used:

1. All-purpose solvent cement, unless listed for the specific application;
2. Flexible traps and tailpieces, unless listed for the specific application; and
3. Solder having more than 0.2-percent lead in the repair of potable water systems.

[NY] AJ401.4 Water closet replacement. When any water closet is replaced, the replacement water closet shall comply with Section P2903.2

INTERNATIONAL CODE COUNCIL®
Copyright © 2019 ICC & NYSDOS. ALL RIGHTS RESERVED. Accessed by Lauren Gualdino (lgualdino@briarcliffmanor.org), (-) Order Number #100880972 on May 08, 2020 07:05 AM (PDT) pursuant to License Agreement with ICC & NYSDOS. No further reproduction, no

100880972

[NY] AJ401.5 Electrical. Existing electrical wiring and equipment undergoing repair shall be allowed to be repaired or replaced with like material.

Exceptions:

1. Replacement of electrical receptacles shall comply with the applicable requirements of the NFPA 70 or Chapter 39 of this code.
2. Plug fuses of the Edison-base type shall be used for replacements only where there is no evidence of over fusing or tampering and shall comply with requirements of Chapter 37 of this code applying for conductor sizing and overcurrent protection code.
3. For replacement of nongrounding-type receptacles with grounding-type receptacles and for branch circuits that do not have an equipment grounding conductor in the branch circuitry, the grounding conductor of a grounding-type receptacle outlet shall be permitted to be grounded to any accessible point on the grounding electrode system, or to any accessible point on the grounding electrode conductor as allowed and described in Part VIII—Electrical of this code.
4. Frames of electric ranges, wall-mounted ovens, counter-mounted cooking units, clothes dryers, and outlet or junction boxes that are part of the existing branch circuit for these appliances shall be permitted to be grounded to the grounded circuit conductor in accordance with Part VIII —Electrical of this code.

[NY] AJ401.6 Mechanical. Repairs to existing mechanical systems shall be permitted in the same manner and arrangement as in the existing system, provided that such repairs or replacement are not hazardous and are approved.

[NY] AJ401.7 Flood hazard areas. In flood hazard areas, repairs that constitute substantial improvement shall require that the building comply with Section R322 of this code.

[NY] AJ401.8 Fire and life safety protection. Repairs shall be done in a manner that maintains the level of fire protection provided.

[NY] AJ401.8.1 Smoke alarms. When repairs requiring a permit occur, the individual dwelling unit shall be provided with smoke alarms located as required for new dwellings; the smoke alarms shall be interconnected in accordance with Section R314.4.

Exceptions:

1. Repairs to the exterior surfaces of dwellings are exempt from the requirements of this section.
2. In other than bed and breakfast dwellings, smoke alarms in existing areas shall not be required to be interconnected and hard wired where interior wall or ceiling finishes are not removed to expose the structure.

[NY] AJ401.8.2 Power source. Smoke alarms shall be permitted to be battery operated when installed in buildings without commercial power or an on-site electrical power system, or in buildings where existing interior wall or ceiling finishes are not removed to expose the structure.

[NY] AJ401.8.3 Interconnection. Smoke alarms shall not be required to be interconnected where battery-operated alarms are permitted.

[NY] AJ401.9 Structural. Repairs of structural elements shall comply with this section.

[NY] AJ401.9.1 Reduction of strength. Repairs shall not reduce the structural strength or stability of the building, structure or any individual member thereof.

Exception: Such reduction shall be allowed, provided the capacity is not reduced to below the levels required by this code.

[NY] AJ401.9.2 Damaged buildings. Damaged buildings shall be repaired in accordance with this section.

[NY] AJ401.9.2.1 New structural frame members. New structural frame members used in the repair of damaged buildings, including anchorage and connections, shall comply with this code.

[NY] AJ401.9.2.2 Substantial structural damage. Buildings that have sustained substantial structural damage shall comply with this section.

[NY] AJ401.9.2.2.1 Engineering evaluation and analysis. An engineering evaluation and analysis that establishes the structural adequacy of the damaged building shall be prepared by a registered design professional and submitted to the *building official*. The evaluation and analysis may assume that all damaged structural elements and systems have their original strength and stiffness.

[NY] AJ401.9.2.2.2 Extent of repair. The evaluation and analysis shall demonstrate that the building, once repaired, complies with the applicable wind and seismic provisions of this code.

[NY] AJ401.9.2.3 Below substantial structural damage. Repairs to buildings damaged to a level below the substantial structural damage level as defined in Section AJ201 shall be allowed to be made with the materials, methods and strengths in existence prior to the damage unless such existing conditions are dangerous as defined in Section AJ201. New structural frame members as defined in Section AJ201 shall comply with Section AJ401.9.2.1.

[NY] AJ404.3.4 Other uncovered structural elements. Where in the course of conducting repairs other uncovered structural elements are found to be unsound or otherwise structurally deficient, such elements shall be made to conform to the requirements of Section AJ401.9.2.1.2.

[NY] AJ404.3.5 Flood hazard areas. In flood hazard areas, damaged buildings that sustain substantial damage shall be brought into compliance with provisions of this code for flood resistant construction of new structures.

INTERNATIONAL CODE COUNCIL®
Copyright © 2019 ICC & NYSDOS. ALL RIGHTS RESERVED. Accessed by Lauren Gualdino (lgualdino@briarcliffmanor.org), (-) Order Number #100880972 on May 08, 2020 07:05 AM (PDT) pursuant to License Agreement with ICC & NYSDOS. No further reproduction, no

100880972

[NY] SECTION AJ501
ALTERATIONS—LEVEL 1

[NY] AJ501.1 Scope. Level 1 alterations as described in Section AJ301 shall comply with the requirements of this section. Level 1 alterations to historic buildings shall comply with this section, except as modified in Section AJ901.

[NY] AJ501.2 Conformance. An existing building or portion thereof shall not be altered such that the building becomes less safe than its existing condition.

Exception: Where the current level of safety or sanitation is proposed to be reduced, the portion altered shall conform to the requirements of this code.

[NY] AJ501.3 Flood hazard areas. In flood hazard areas, alterations that constitute substantial improvement shall require that the building comply with Section R322 of this code.

[NY] AJ501.4 Building elements and materials. Building elements and materials used for Alterations—Level 1 shall comply with this section.

[NY] AJ501.4.1 Interior finishes. All newly installed interior finishes shall comply with the flame spread and smoke developed index requirements of Chapter 3 of this code.

[NY] AJ501.4.2 Materials and methods. All new work shall comply with materials and methods requirements of this code.

[NY] AJ501.4.3 Replacement door and window dimensions. Minor reductions in the clear opening dimensions of replacement doors and windows that result from the use of different materials shall be allowed.

[NY] AJ501.4.3.1 Replacement windows. The replacement of emergency escape and rescue opening windows in conformance with the code in effect at the time of construction shall not require compliance with Section R310 of this code.

[NY] AJ501.4.4 Reroofing. Where alteration work includes recovering or replacing an existing roof covering, the provisions of this section shall apply. Reroofing shall be in accordance with Section R908 of this code.

[NY] AJ501.5 Means of egress. Means of egress for buildings undergoing alteration shall comply with the requirements of Section 702 of the *Property Maintenance Code of New York State*.

[NY] AJ501.6 Fire and life-safety protection. Alterations shall be done in a manner that maintains the level of fire protection provided and shall comply with this section.

[NY] AJ501.6.1 Smoke alarms. When interior alterations occur in existing dwellings, the individual dwelling unit shall be provided with smoke alarms located as required for new dwellings; the smoke alarms shall be interconnected in accordance with Section R314.4.

Exception: In other than bed and breakfast dwellings, smoke alarms in existing areas shall not be required to be interconnected and hard wired where interior wall or ceiling finishes are not removed to expose the structure.

[NY] AJ501.6.1.1 Power source. Smoke alarms shall be permitted to be battery operated when installed in buildings without commercial power or an on-site electrical power system, or in buildings where existing interior wall or ceiling finishes are not removed to expose the structure.

[NY] AJ501.6.1.2 Interconnection. Smoke alarms shall not be required to be interconnected where battery-operated alarms are permitted.

[NY] AJ501.7 Structural. Where alteration work includes replacement of equipment that is supported by the building, the structural provisions of this section shall apply.

[NY] AJ501.7.1 Design criteria. Existing structural components supporting alteration work shall comply with this section.

[NY] AJ501.7.1.1 Replacement of equipment. Where replacement of equipment results in additional dead loads, structural components supporting such equipment shall comply with the load requirements of this code.

Exception: Buildings constructed in accordance with this code and where the additional dead load from the equipment is not increased by more than 5 percent.

[NY] AJ501.7.2 Reroofing structural and construction loads. The structural roof components shall be capable of supporting the roof covering system and the material and equipment loads that will be encountered during installation of the roof covering system.

[NY] AJ501.8 Mechanical. Alterations to any mechanical system shall conform to the requirements of Chapter 12 of this code for a new mechanical system without requiring the existing mechanical system to comply with all of the requirements of this code.

[NY] AJ501.9 Plumbing. Alterations to any plumbing system shall conform to the requirements for a new plumbing system without requiring the existing plumbing system to comply with all the requirements of this code.

[NY] AJ501.9.1 Materials. The following plumbing materials and supplies shall not be used:

1. All-purpose solvent cement, unless listed for the specific application;
2. Flexible traps and tailpieces, unless listed for the specific application; and
3. Solder having more than 0.2-percent lead in the repair of potable water systems.

[NY] AJ501.9.2 Water closet replacement. When any water closet is replaced, the replacement water closet shall comply with Section P2903.2.

[NY] AJ501.10 Electrical. Any alteration to an existing electrical system shall be made in conformity with the provisions of Chapter E34 through Chapter E43 of this code.

INTERNATIONAL CODE COUNCIL®
Copyright © 2019 ICC & NYSDOS. ALL RIGHTS RESERVED. Accessed by Lauren Gualdino (lgualdino@briarcliffmanor.org), (-) Order Number #100880972 on May 08, 2020 07:05 AM (PDT) pursuant to License Agreement with ICC & NYSDOS. No further reproduction, no

100880972

[NY] SECTION AJ601
ALTERATIONS—LEVEL 2

[NY] AJ601.1 Scope. Level 2 alterations as described in Section AJ301 shall comply with the requirements of this section. Level 2 alterations to historic buildings shall comply with this section, except as modified in Section AJ901. The requirements of this section are limited to work areas in which Level 2 alterations are being performed, and shall apply beyond the work area where specified.

[NY] AJ601.2 Alteration Level 1 compliance. In addition to the requirements of this section, all work shall comply with the requirements of Section AJ501.

[NY] AJ601.3 Compliance. All newly constructed elements, components, systems and spaces shall comply with the requirements of this code.

Exceptions:

1. Space created in basements may have a ceiling that projects to within 6 feet 8 inches (2032 mm) of the finished floor; and beams, girders and ducts in such space or other obstructions may project to within 6 feet 4 inches (1930 mm) of the finished floor. Existing finished ceiling heights in spaces in basements shall not be reduced.
2. Existing stairs not otherwise being altered shall be permitted to maintain their current clear width at, above, and below existing handrails.
3. Existing stairs not otherwise being altered shall be permitted to maintain their current riser heights and tread depths.
4. Headroom height on existing stairs being altered shall not be reduced below the existing stairway finished headroom. Existing stairs not otherwise being altered shall be permitted to maintain the current finished headroom.
5. Landings for existing stairs not otherwise being altered shall be permitted to maintain their current width.

[NY] AJ601.4 Nonconformities. The work performed shall not increase the extent of noncompliance with the requirements of this code or create nonconformity with those requirements which did not previously exist.

[NY] AJ601.5 Flood hazard areas. In flood hazard areas, alterations that constitute substantial improvement shall require that the building comply with Section R322 of this code.

[NY] AJ601.6 Building elements and materials. Building elements and materials used for Alterations—Level 2 shall comply with this section.

[NY] AJ601.6.1 Separation required. Where the work area is in a two-family dwelling or multiple single-family dwelling (townhouse) and exceeds 50 percent of the aggregate area of the dwelling unit, all walls separating dwelling units that are not continuous from the foundation to the underside of the roof sheathing shall be constructed to provide a continuous fire separation using construction materials consistent with the existing wall or complying with the requirements for new structures. Work shall only be required to be performed on the side of the wall of the dwelling unit that is part of the work area.

Exception: Where alterations or repairs do not result in the removal of wall or ceiling finishes exposing the structure, walls are not required to be continuous through concealed floor spaces.

[NY] AJ601.6.2 Wall and ceiling finish. Where the work area exceeds 50 percent of the aggregate area of the dwelling, the interior finish of walls and ceilings in any work area shall comply with the requirements of Section R302.9. All existing interior finish materials that do not comply with those requirements shall be removed or shall be treated with an approved fire retardant coating in accordance with the manufacturer's instructions to secure compliance with the requirements of this section.

[NY] AJ601.6.3 Guards. In work areas, guards designed and installed in accordance with Section R312 shall be provided on every open portion of a floor, stair, landing, porch, deck, porch or deck enclosed with insect screening, or balcony that is more than 30 inches (762 mm) above the floor or grade below, or where the existing guards are judged to be in danger of collapsing.

[NY] AJ601.7 Means of egress. The means of egress in work areas where alterations are being performed shall comply with the requirements of this section.

[NY] AJ601.7.1 Exit doors. Exit doors in any work area shall comply with Section R311.1 and R311.2.

[NY] AJ601.7.2 Handrails. Every stairway having four or more risers from a work area floor shall be provided with handrails designed and installed in accordance with Section R311.7.8.

[NY] AJ601.7.3 Emergency escape and rescue openings. An emergency escape and rescue opening complying with Section R310 shall be provided in existing basements undergoing a reconfiguration of space to create habitable space.

[NY] AJ601.8 Fire and life safety protection. Alterations shall be done in a manner that maintains the level of fire protection provided and shall comply with this section.

[NY] AJ601.8.1 Smoke alarms. When interior alterations occur, or when one or more sleeping rooms are added or created in existing dwellings, the individual dwelling unit shall be provided with smoke alarms located as required for new dwellings; the smoke alarms shall be interconnected in accordance with Section R314.4.

Exception: In other than bed and breakfast dwellings, smoke alarms in existing areas shall not be required to be interconnected and hard wired where interior wall or ceiling finishes are not removed to expose the structure.

[NY] AJ601.8.1.1 Power source. Smoke alarms shall be permitted to be battery operated when installed in buildings without commercial power or an on-site electrical power system, or in buildings where existing interior wall or ceiling finishes are not removed to expose the structure.

INTERNATIONAL CODE COUNCIL®
Copyright © 2019 ICC & NYSDOS. ALL RIGHTS RESERVED. Accessed by Lauren Gualdino (lgualdino@briarcliffmanor.org), (-) Order Number #100880972 on May 08, 2020 07:05 AM (PDT) pursuant to License Agreement with ICC & NYSDOS. No further reproduction, no

100880972

[NY] AJ601.8.1.2 Interconnection. Smoke alarms shall not be required to be interconnected where battery operated alarms are permitted.

[NY] AJ601.8.2 Carbon monoxide alarms. Where a Level 2 alteration is made to an existing dwelling unit, the dwelling unit shall be provided with carbon monoxide alarms that comply with the requirements for new construction.

Exceptions:

1. Alterations involving the exterior surfaces of buildings, such as the replacement of roofing or siding, or the addition or replacement of windows or doors.
2. Installation of, or alteration to, plumbing or mechanical systems, other than fuel-burning appliances.

[NY] AJ601.8.2.1 New or relocated fuel-burning appliance. When a new fuel-burning appliance is added to, installed in, or attached to an existing dwelling unit, or when an existing fuel-burning appliance is relocated to a different room or space in an existing dwelling unit, the unit shall be provided with additional carbon monoxide alarms to accommodate the new or relocated fuel-burning appliance. The selection, design, and location of the additional carbon monoxide alarms shall comply with the requirements for new construction.

[NY] AJ601.8.2.2 Power supply and interconnection. Carbon monoxide alarms powered by a 10-year battery shall be allowed and interconnection of alarms shall not be required in:

1. Work areas where the alteration does not result in the removal or exposure of interior wall or ceiling finishes that reveal the structure, unless there is an attic, crawl space, basement, or similar space available that could provide access for power and interconnection without the removal of such interior finishes.
2. Existing portions of a dwelling unit that are provided with additional carbon monoxide alarms as required by AJ601.8.2.1, and dwelling units without commercial power.

[NY] AJ601.8.3 Automatic sprinkler systems. An existing attic may be altered to create a habitable attic above the second story above grade plane without requiring the installation of a sprinkler system throughout the entire dwelling, provided all of the following conditions are met:

1. The habitable attic and its means of egress to the exterior are equipped with a limited area sprinkler system installed in accordance with NFPA 13D or Section P2904 of this code.
2. The habitable attic is provided with emergency escape and rescue openings, meeting the requirements of Section R310 of this code.
3. The entire dwelling is equipped with a fire alarm system in compliance with Section R314.7 of this code and monitored by an approved supervising station in accordance with NFPA 72.

[NY] AJ601.9 Structural. The minimum design criteria for existing portions of the structure shall be the loads applicable at the time the building was constructed, provided that no dangerous condition is created. Structural elements which are uncovered during the course of the alteration and which are found to be unsound or dangerous shall be made to comply with the applicable requirements of this code.

[NY] AJ601.9.1 Increased loads. Where alteration work includes installation of additional equipment that is structurally supported by the building or reconfiguration of space such that portions of the building become subjected to higher dead or live loads, all structural members affected by such increase shall meet the load requirements of this code.

Exception: Structural elements whose stress is not increased by more than 5 percent.

[NY] AJ601.9.2 Reduction of strength. Alterations shall not reduce the structural strength or stability of the building, structure or any individual member thereof.

Exception: Such reduction shall be allowed as long as the strength and the stability of the building are not reduced to below the levels required by this code.

[NY] AJ601.9.3 New structural members. New structural members in alterations, including connections and anchorage, shall comply with this code.

[NY] AJ601.10 Mechanical. Alterations to any mechanical system shall conform to the requirements of Chapter 12 for a new mechanical system without requiring the existing mechanical system to comply with all the requirements of this code. Alterations shall not cause an existing mechanical system to become unsafe, hazardous or overloaded.

[NY] AJ601.10.1 Reconfigured spaces. Mechanically ventilated reconfigured spaces shall comply with Section M1505 as applicable.

[NY] AJ601.11 Plumbing. Alterations to any plumbing system shall conform to the requirements for a new plumbing system without requiring the existing plumbing system to comply with all the requirements of this code. Alterations shall not cause an existing system to become unsafe, unsanitary or overloaded.

[NY] AJ601.11.1 Increased demand. Where any alteration subjects any portion of an existing plumbing system to increased loads, such portion shall be made to comply with Chapters 25 through 33.

[NY] AJ601.12 Electrical. Any alteration to an existing electrical system relating to work done in any work area shall be made in conformity with the provisions of Chapters 34 through 43.

[NY] AJ601.12.1 Increased loads. Where alterations subject portions of existing electrical systems to increased loads, such portions shall be made to comply with Chapter 34 through Chapter 43.

[NY] AJ601.12.2 Electrical service. Service to dwelling units shall be a minimum of 100 ampere, three-wire capac-

INTERNATIONAL CODE COUNCIL®
Copyright © 2019 ICC & NYSDOS. ALL RIGHTS RESERVED. Accessed by Lauren Gualdino (lgualdino@briarcliffmanor.org), (-) Order Number #100880972 on May 08, 2020 07:05 AM (PDT) pursuant to License Agreement with ICC & NYSDOS. No further reproduction, no

100880972

ity, and service equipment shall be dead front having no live parts exposed whereby accidental contact could be made. Type "S" fuses shall be installed when fused equipment is used.

Exception: Existing service of 60 ampere, three-wire capacity, and feeders of 30 ampere or larger two-or three-wire capacity shall be accepted if adequate for the electrical load being served.

[NY] AJ601.12.2.1 Clearance. Clearance for electrical service equipment shall be provided in accordance with Section E3405.

[NY] AJ601.12.3 Ground-fault and arc-fault circuit-interrupter protection. Ground-fault and arc-fault circuit-interrupter protection shall be provided on newly installed receptacle outlets as required by Section E3902.

[NY] AJ601.12.4 Additional electrical requirements. When the work area includes any of the following areas within a dwelling unit, the requirements of Sections AJ608.5.1 through AJ608.5.3 shall apply.

[NY] AJ601.12.4.1 Enclosed areas. All enclosed areas other than closets, kitchens, basements, garages, hallways, laundry areas and bathrooms shall have a minimum of two duplex receptacle outlets, or one duplex receptacle outlet and one ceiling or wall type lighting outlet.

[NY] AJ601.12.4.2 Kitchen and laundry areas. Kitchen areas shall have a minimum of two duplex receptacle outlets. Laundry areas shall have a minimum of one duplex receptacle outlet located near the laundry equipment and installed on an independent circuit.

[NY] AJ601.12.4.3 Bathrooms, hallways, stairways, attached and detached garages. At least one lighting outlet shall be provided in every bathroom, hallway, stairway, attached garage and detached garage with electric power to illuminate outdoor entrances and exits, and in utility rooms and basements where these spaces are used for storage or contain equipment requiring service.

[NY] SECTION AJ701
CHANGE OF OCCUPANCY

[NY] AJ701.1 Scope. Where the character or use of an existing building is changed, as described in Section AJ301, to a one- or two-family dwelling or multiple single-family dwelling (townhouse) not more than three stories above grade plane in height with a separate means of egress, or where an owner-occupied one-family dwelling is converted for use as a Bed and Breakfast Dwelling, the building shall comply with this section.

Alterations performed in connection with a change of occupancy shall comply with Section AJ501 or AJ601 as applicable. Changes of occupancy to historic buildings shall comply with this section, except as modified by Section AJ901. Owner-occupied one-family dwellings converted for use as a bed and breakfast dwellings shall also comply with Section AJ702.

[NY] AJ701.2 Compliance. The building shall comply with the provisions of this code.

Exception: Compliance with the provisions of this code is not required where the change of occupancy is from a two-family dwelling to a one-family dwelling; smoke alarms and carbon monoxide alarms shall be provided as required in Section AJ701.3.

[NY] AJ701.2.1 Existing emergency escape and rescue openings. Emergency escape and rescue openings need not meet the requirements of this code where such openings were lawfully in existence at the time of the adoption of this code.

[NY] AJ701.2.2 Existing stairs. Existing stairs are permitted to remain, provided all of the following conditions are met:

1. The product obtained by multiplying the height of the riser by the depth of the tread shall be not less than 70 inches (1778 mm) nor more than 80 inches (2032 mm). Riser height shall not exceed 9 inches (229 mm).
2. Stairs shall have minimum headroom of 6 feet 6 inches (1981 mm), except that stairs for occasional use to basements and attics are permitted to have minimum headroom of 6 feet 4 inches (1930 mm).
3. Variations in riser height in a run of stairs shall not exceed $^3/_8$ inch (9.5 mm).
4. Width shall be not less than 30 inches (762 mm).

[NY] AJ701.2.3 Existing ceiling heights. Existing ceiling heights shall be permitted to remain if they equal or exceed the following:

1. Habitable space shall have a ceiling height of not less than 6 feet 8 inches (2032 mm), measured from the finished floor to the lowest projection from the ceiling.
2. Space, other than habitable, shall have a ceiling height of not less than 6 feet 6 inches (1981 mm), measured from the finished floor to the lowest projection from the ceiling.

[NY] AJ701.2.4 Existing foundations. Existing foundations are permitted to remain where the change in use will increase the soil bearing pressure by no more than 5 percent.

[NY] AJ701.2.5 Seismic load provisions. Specific seismic load detailing provisions required for new structures are not required to be met where it can be shown that an acceptable level of performance and seismic safety is obtained for the applicable seismic design category.

[NY] AJ701.3 Fire and life safety protection. Fire and life safety protection shall comply with this section.

[NY] AJ701.3.1 Smoke alarms. Smoke alarms, located as required for new dwellings, shall be provided; the smoke alarms shall be interconnected in accordance with Section R314.4.

Exception: In other than bed and breakfast dwellings, smoke alarms in existing areas shall not be required to

INTERNATIONAL CODE COUNCIL®
Copyright © 2019 ICC & NYSDOS. ALL RIGHTS RESERVED. Accessed by Lauren Gualdino (lgualdino@briarcliffmanor.org), (-) Order Number #100880972 on May 08, 2020 07:05 AM (PDT) pursuant to License Agreement with ICC & NYSDOS. No further reproduction, no

100880972

be interconnected and hard wired where interior wall or ceiling finishes are not removed to expose the structure.

[NY] AJ701.3.1.1 Power source. Smoke alarms shall be permitted to be battery operated when installed in buildings without commercial power or an on-site electrical power system, or in buildings where existing interior wall or ceiling finishes are not removed to expose the structure.

[NY] AJ701.3.1.2 Interconnection. Smoke alarms shall not be required to be interconnected where battery operated alarms are permitted.

[NY] AJ701.3.2 Carbon monoxide alarms. Where a building undergoes a change of occupancy to a dwelling unit, carbon monoxide alarms shall be provided throughout the dwelling unit. The selection, design, and location of carbon monoxide alarms shall comply with the requirements for new construction.

[NY] AJ701.3.2.1 Power supply and interconnection. Carbon monoxide alarms powered by a 10-year battery shall be allowed and interconnection of alarms shall not be required in:

1. Buildings that undergo a change of occupancy unless otherwise required by other applicable provisions of the *Uniform Code*.
2. Dwelling units without commercial power.

[NY] AJ701.3.3 Automatic fire sprinkler system. An automatic sprinkler system as required for new dwellings shall be provided.

[NY] SECTION AJ702
BED AND BREAKFAST DWELLINGS

[NY] AJ702.1 Scope. Owner-occupied one-family dwellings converted for use as bed and breakfast dwellings as defined in Section AJ201 shall comply with this section and Section AJ701.

[NY] AJ702.2 Occupancy. A residence converted to a bed and breakfast dwelling shall have no more than five sleeping rooms for accommodating up to 10 transient lodgers.

[NY] AJ702.3 Special conditions. A one-family dwelling is permitted to be converted for use as a bed and breakfast dwelling under the following conditions:

1. No sleeping rooms for transient use shall be located above the second story above grade plane.
2. A fire-safety notice shall be affixed to the occupied side of the entrance door of each bedroom for transient use indicating all of the following:
   a. Means of egress.
   b. Location of means for transmitting fire alarms, if any.
   c. Evacuation procedures to be followed in the event of a fire or smoke condition or upon activation of a fire or smoke-detecting or other alarm device.

[NY] AJ702.4 Means of egress. Means of egress shall include at least one of the following alternatives:

1. A limited area sprinkler system installed in conformance with NFPA 13D or P2904 protecting all interior stairs serving as a means of egress;
2. An exterior stair conforming to the requirements of R311.7 of this code, providing a second means of egress from all above grade stories or levels; and
3. An opening for emergency use conforming to the requirements of Section R310 of this code within each bedroom for transient use, such opening to have a sill not more than 14 feet above level grade directly below and, as permanent equipment, a portable escape ladder that attaches securely to such sill. Such ladder shall be constructed with rigid rungs designed to stand off from the building wall, shall be capable of sustaining a minimum load of 1,000 pounds (455 kg), and shall extend to and provide unobstructed egress to open space at grade.

[NY] SECTION AJ801
ADDITIONS

[NY] AJ801.1 Scope. Additions as described in Section AJ301 shall comply with the requirements of this section.

[NY] AJ801.2 Compliance. Additions shall comply with the provisions of this code. Except where required by this section, unaltered portions of the existing building shall not be required to comply with this code.

[NY] AJ801.2.1 Creation or extension of nonconformity. An addition shall not create or extend any nonconformity in the existing building to which the addition is being made with regard to height, structural strength, fire safety, means of egress, or the capacity of mechanical, plumbing or electrical systems.

[NY] A801.2.2 Other work. Any repair or alteration work within an existing building to which an addition is being made shall comply with the applicable requirements for the work as classified in Section AJ301.

[NY] AJ801.3 Fire and life safety protection. Fire and life safety protection shall comply with this section.

[NY] AJ801.3.1 Smoke alarms. When additions requiring a permit occur, the individual dwelling unit shall be provided with smoke alarms located as required for new dwellings; the smoke alarms shall be interconnected in accordance with Section R314.4.

Exceptions:

1. Exterior additions to dwellings, such as decks, are exempt from the requirements of this section.
2. In other than bed and breakfast dwellings, smoke alarms in existing areas shall not be required to be interconnected and hard wired where interior wall or ceiling finishes are not removed to expose the structure.

INTERNATIONAL CODE COUNCIL®
Copyright © 2019 ICC & NYSDOS. ALL RIGHTS RESERVED. Accessed by Lauren Gualdino (lgualdino@briarcliffmanor.org), (-) Order Number #100880972 on May 08, 2020 07:05 AM (PDT) pursuant to License Agreement with ICC & NYSDOS. No further reproduction, no

100880972

[NY] AJ801.3.1.1 Power source. Smoke alarms shall be permitted to be battery operated when installed in buildings without commercial power or an on-site electrical power system, or in existing areas of buildings where existing interior wall or ceiling finishes are not removed to expose the structure.

[NY] AJ801.3.1.2 Interconnection. Smoke alarms shall not be required to be interconnected where battery operated alarms are permitted.

[NY] AJ801.3.2 Carbon monoxide alarms. Where an addition is made to a dwelling unit, the addition shall be provided with carbon monoxide alarms that comply with the requirements for new construction.

[NY] AJ801.3.2.1 New fuel-burning appliance or motor vehicle related occupancy. When a new fuel-burning appliance is installed or located in an addition, or when a new motor vehicle related occupancy is added to a dwelling unit, the existing portion of the dwelling unit shall be provided with additional carbon monoxide alarms as necessitated by the new fuel-burning appliance or motor vehicle related occupancy. The selection, design, and location of the additional carbon monoxide alarms shall comply with the requirements for new construction.

[NY] AJ801.3.2.1.1 Power supply and interconnection. Carbon monoxide alarms powered by a 10-year battery shall be allowed and interconnection of alarms shall not be required in:

1. Existing portions of a dwelling unit that are provided with additional carbon monoxide alarms as required by Section AJ801.3.2.1, unless otherwise required by the *Uniform Code*.
2. Buildings without commercial power.

[NY] AJ801.3.3 Automatic sprinkler systems. Buildings shall be equipped throughout with an automatic sprinkler system installed in accordance with NFPA 13D or Section P2904 of this code whenever any of the following occur:

1. An addition is made to a building to create a third story above grade plane.
2. A habitable attic is added to a building creating a third story above grade plane.
3. The floor area of a legally existing third story above grade plane is increased by more than 10 percent.

   Exception: Installation of a sprinkler system throughout the entire dwelling would not be required, provided all of the following conditions are met:

   1. The third story or habitable attic story and its means of egress to the exterior are equipped with a limited area sprinkler system installed in accordance with NFPA 13D or Section P2904 of this code.
   2. The third story or habitable attic story is provided with emergency escape and rescue openings meeting the requirements of Section R310 of this code.
   3. The entire dwelling is equipped with a fire alarm system in compliance with Section R314.7 of this code and monitored by an approved supervising station in accordance with NFPA 72.

[NY] AJ801.4 Structural. Existing structural elements supporting any additional loads as a result of additions shall comply with this code.

Exception: Structural elements whose stress is not increased by more than 5 percent.

[NY] AJ801.5 Flood hazard areas. Additions and foundations in flood hazard areas shall comply with the following requirements:

1. For horizontal additions that are structurally interconnected to the existing building:
   1.1. If the addition and all other proposed work, when combined, constitute substantial improvement, the existing building and the addition shall comply with Section R322 of this code.
   1.2. If the addition constitutes substantial improvement, the existing building and the addition shall comply with Section R322.
2. For horizontal additions that are not structurally interconnected to the existing building:
   2.1. The addition shall comply with Section R322.
   2.2. If the addition and all other proposed work, when combined, constitute substantial improvement, the existing building and the addition shall comply with Section R322.
3. For vertical additions and all other proposed work that, when combined, constitute substantial improvement, the existing building shall comply with Section R322.
4. For a new, replacement, raised, or extended foundation, if the foundation work and all other proposed work, when combined, constitute substantial improvement, the existing building shall comply with Section R322.

[NY] AJ801.6 Mechanical. Additions to any mechanical system shall conform to the requirements of Chapter 12 for a new mechanical system without requiring the existing mechanical system to comply with all of the requirements of this code. The existing mechanical system shall be evaluated for adequacy by qualified industry personnel or a registered design professional. Additions shall not cause an existing system to become unsafe, hazardous or overloaded.

[NY] AJ801.7 Plumbing. Additions to any plumbing system shall conform to the requirements for a new plumbing system without requiring the existing plumbing system to comply with all the requirements of this code. Additions shall not cause an existing system to become unsafe, insanitary or overloaded.

[NY] AJ801.7.1 Sanitary disposal system. Where an addition results in an increase in the number of bedrooms, the capacity of the existing sanitary disposal system shall

INTERNATIONAL CODE COUNCIL®
Copyright © 2019 ICC & NYSDOS. ALL RIGHTS RESERVED. Accessed by Lauren Gualdino (lgualdino@briarcliffmanor.org), (-) Order Number #100880972 on May 08, 2020 07:05 AM (PDT) pursuant to License Agreement with ICC & NYSDOS. No further reproduction, no

100880972

be determined and any required expansion or replacement shall comply with this code.

[NY] AJ801.8 Electrical. Any addition to an existing electrical system shall be made in conformity with the provisions of Chapters 34 through 43. Where additions subject portions of existing systems to loads exceeding those permitted herein, such portions shall be made to comply with Chapters 34 through 43.

[NY] SECTION AJ901 HISTORIC BUILDINGS

[NY] AJ901.1 Scope. It is the intent of this section to provide means for the preservation of historic buildings. Historical buildings as described in Section AJ301 shall comply with the provisions of this section relating to their repair, alteration, change of occupancy or relocation.

[NY] AJ901.2 Report. A historic building undergoing repair, alteration or change of occupancy shall be investigated and evaluated. If it is intended that the building meet the requirements of this section, a written report shall be prepared and filed with the *building official* by a registered design professional when such a report is necessary in the opinion of the *building official*. Such report shall identify each required safety feature that is in compliance with this section and where compliance with other sections of these provisions would be damaging to the contributing historic features. The report shall describe each feature that is not in compliance with these provisions and shall demonstrate how the intent of these provisions is complied with in providing an equivalent level of safety.

[NY] AJ901.3 Flood hazard areas. In flood hazard areas, if all proposed work, including repairs, work required because of a change of occupancy, and alterations, constitutes substantial improvement, then the existing building shall comply with Section R322.

Exception: If a historic building will continue to be a historic building after the proposed work is completed, then the proposed work is not considered a substantial improvement.

[NY] AJ901.4 Dangerous buildings. When a historic building is determined to be dangerous, no work shall be required except as necessary to correct identified unsafe conditions.

[NY] AJ901.5 Fire and life safety protection. Historic buildings undergoing repairs, alterations, changes of occupancy or that are relocated shall comply with this section.

[NY] AJ901.5.1 Smoke alarms. Smoke alarms, located as required for new dwellings, shall be provided; the smoke alarms shall be interconnected in accordance with Section R314.4.

Exception: In other than bed and breakfast dwellings, smoke alarms in existing areas shall not be required to be interconnected and hard wired where interior wall or ceiling finishes are not removed to expose the structure.

[NY] AJ901.5.1.1 Power source. Smoke alarms shall be permitted to be battery operated when installed in buildings without commercial power or an on-site electrical power system, or in buildings where existing interior wall or ceiling finishes are not removed to expose the structure.

[NY] AJ901.5.1.2 Interconnection. Smoke alarms shall not be required to be interconnected where battery-operated alarms are permitted.

[NY] AJ901.5.2 Carbon monoxide alarms. Historic buildings undergoing alterations, changes of occupancy, or additions shall be provided with carbon monoxide alarms when required by other applicable requirements of this appendix and the *Uniform Code*.

[NY] AJ901.6 Building elements and materials. Building elements and materials within historic buildings shall comply with this section.

[NY] AJ901.6.1 Means of egress. Existing door openings and corridor and stairway widths less than those specified elsewhere in this code may be approved, provided that there is sufficient width and height for a person to pass through the opening or traverse the corridor or stairway.

[NY] AJ901.6.2 Interior finishes. The existing finishes of walls and ceilings shall be accepted when it is demonstrated that they are the historic finishes.

[NY] AJ901.6.3 Fire-resistant assemblies. Where fire-resistance-rated construction is required by this code, it need not be provided where the existing wall and ceiling finish is wood or metal lath and plaster.

[NY] AJ901.6.4 Stairway railings. Stairways shall be accepted without complying with the handrail and guard requirements. Existing handrails and guards at all stairs shall be permitted to remain, provided they are not structurally dangerous.

[NY] AJ901.6.5 Guard openings. The spacing between existing intermediate railings or openings in existing ornamental patterns shall be accepted. Missing elements or members of a guard may be replaced in a manner that will preserve the historic appearance of the building or structure.

[NY] AJ901.7 Structural. Historic buildings shall comply with the applicable structural provisions for the work as classified in Section AJ301.

Exception: The *building official* shall be authorized to accept existing floors and approve operational controls that limit the live load on any such floor.

[NY] AJ901.7.1 Unsafe structural elements. Where the *building official* determines that a component or a portion of a building or structure is dangerous as defined in this code and is in need of repair, strengthening or replacement by provisions of this code, only that specific component or portion shall be required to be repaired, strengthened or replaced.

INTERNATIONAL CODE COUNCIL®
Copyright © 2019 ICC & NYSDOS. ALL RIGHTS RESERVED. Accessed by Lauren Gualdino (lgualdino@briarcliffmanor.org), (-) Order Number #100880972 on May 08, 2020 07:05 AM (PDT) pursuant to License Agreement with ICC & NYSDOS. No further reproduction, no

100880972

[NY] AJ901.8 Repairs. Repairs to any portion of a historic building or structure shall be permitted with original or like materials and original methods of construction, subject to the provisions of this section.

[NY] AJ901.8.1 Compliance. Historic buildings undergoing repairs shall comply with all of the applicable requirements of Section AJ401.

Exception: Replacement of existing or missing features using original materials shall be permitted. Partial replacement for repairs that match the original in configuration, height and size shall be permitted. Such replacements shall not be required to meet the materials and methods requirements of Section AJ401.2.

[NY] AJ901.9 Level 1 alterations. Historic buildings undergoing Level 1 alterations as described in Section AJ301 shall comply with the applicable provisions of Section AJ501, except as specifically permitted in Section AJ901.

[NY] AJ901.10 Level 2 alterations. Historic buildings undergoing Level 2 alterations as described in Section AJ301 shall comply with the applicable provisions of Section AJ601, except as specifically permitted in Section AJ901.

[NY] AJ901.11 Change of occupancy. Historic buildings undergoing a change of occupancy shall comply with the applicable provisions of Section AJ701, except as specifically permitted in this section.

[NY] AJ901.11.1 Location on property. Historic structures undergoing a change of use or occupancy may use alternative methods to comply with the requirements of Section R302. Such alternatives shall comply with Section AJ901.2.

[NY] AJ901.11.2 Dwelling unit separation. Required dwelling unit separations may be omitted when the building is equipped throughout with an approved automatic sprinkler system.

[NY] AJ901.11.3 Light, ventilation and heating. When it is determined by the *building official* that compliance with the light, ventilation and heating requirements of Section R303 will lead to loss of historic character or historic materials in the building, the existing level of light, ventilation and heating shall be considered acceptable.

[NY] AJ901.12 Relocated historic buildings. Relocated historic buildings shall continue to be considered historic buildings for the purposes of this code.

[NY] AJ901.12.1 Compliance. Historic buildings shall comply with the applicable provisions for the work as classified in Section AJ301, except as specifically permitted in Section AJ901.

[NY] AJ901.12.2 Location on the lot. Relocated historic buildings and structures shall be sited so that exterior walls and openings comply with Section R302 of this code.

[NY] AJ901.12.3 Foundation. Foundations of relocated historic buildings and structures shall comply with this code.

[NY] SECTION AJ1001
RELOCATED OR MOVED BUILDINGS

[NY] AJ1001.1 Scope. Relocated or moved buildings as described in Section AJ301 shall comply with this section. Relocated or moved historic buildings shall comply with Section AJ901.

[NY] AJ1001.2 Compliance. The building shall comply with the provisions of the *Fire Code of New York State* and the *Property Maintenance Code of New York State* as applicable. Any repair, alteration, or change of occupancy undertaken within the moved structure shall comply with the requirements of this appendix applicable to the work being performed. Any field-fabricated elements shall comply with the requirements of this code as applicable.

[NY] AJ1001.3 Location on the lot. The building shall be located on the lot in accordance with the requirements of Section R302.

[NY] AJ1001.4 Flood hazard areas. If relocated or moved into a flood hazard area, buildings shall comply with Section R322.

[NY] AJ1001.5 Foundation. The foundation system of relocated buildings shall comply with this code as applicable.

[NY] AJ1001.5.1 Connection to the foundation. The connection of the relocated building to the foundation shall comply with this code as applicable.

[NY] AJ1001.6 Fire and life safety protection. Relocated or moved buildings shall comply with this section.

[NY] AJ1001.6.1 Smoke alarms. Smoke alarms, located as required for new dwellings, shall be provided; the smoke alarms shall be interconnected in accordance with Section R314.4.

Exception: In other than bed and breakfast dwellings, smoke alarms in existing areas shall not be required to be interconnected and hard wired where interior wall or ceiling finishes are not removed to expose the structure.

[NY] AJ1001.6.1.1 Power source. Smoke alarms shall be permitted to be battery operated when installed in buildings without commercial power or an on-site electrical power system, or in buildings where existing interior wall or ceiling finishes are not removed to expose the structure.

[NY] AJ1001.6.1.2 Interconnection. Smoke alarms shall not be required to be interconnected where battery-operated alarms are permitted.

[NY] AJ1001.6.2 Carbon monoxide alarms. Relocated or moved buildings shall be provided with carbon monoxide alarms when required by other applicable requirements of this appendix and the *Uniform Code*.

[NY] AJ1001.7 Structural. Relocated or moved buildings shall comply with this section.

[NY] AJ1001.7.1 Required inspection and repairs. The *building official* shall be authorized to inspect, or to require approved professionals to inspect at the expense of the owner, the various structural parts of a relocated building to verify that structural components and connections

INTERNATIONAL CODE COUNCIL®
Copyright © 2019 ICC & NYSDOS. ALL RIGHTS RESERVED. Accessed by Lauren Gualdino (lgualdino@briarcliffmanor.org), (-) Order Number #100880972 on May 08, 2020 07:05 AM (PDT) pursuant to License Agreement with ICC & NYSDOS. No further reproduction, no

100880972

have not sustained structural damage. Any repairs required by the *building official* as a result of such inspection shall be made prior to the final approval.

[NY] AJ1001.7.2 Wind loads. Buildings shall comply with the wind provisions of this code as applicable.

Exceptions:

1. Detached one- and two-family dwellings where wind loads at the new location are not higher than those at the previous location.
2. Structural elements whose stress is not increased by more than 5 percent.

[NY] AJ1001.7.3 Seismic loads. Buildings shall comply with the seismic provisions of this code at the new location as applicable.

Exceptions:

1. Where the seismic loads at the new location are not higher than those at the previous location.
2. Structural elements whose stress is not increased by more than 5 percent.

[NY] AJ1001.7.4 Snow loads. Buildings shall comply with the snow loads provisions of this code as applicable where snow loads at the new location are higher than those at the previous location.

Exception: Structural elements whose stress is not increased by more than 5 percent.

[NY] SECTION AJ1101 REPLACEMENT

[NY] AJ1101.1 Scope. Buildings that are replaced as described in Section AJ301 shall comply with the requirements of this section.

[NY] AJ1101.2 Compliance. Buildings that are replaced shall comply with the provisions of this code.

[NY] AJ1101.3 Sanitary disposal system. Where a building replacement results in an increase in the number of bedrooms, the capacity of the existing sanitary disposal system shall be determined and any required expansion or replacement shall comply with this code

INTERNATIONAL CODE COUNCIL®
Copyright © 2019 ICC & NYSDOS. ALL RIGHTS RESERVED. Accessed by Lauren Gualdino (lgualdino@briarcliffmanor.org), (-) Order Number #100880972 on May 08, 2020 07:05 AM (PDT) pursuant to License Agreement with ICC & NYSDOS. No further reproduction, no

100880972

APPENDIX K

SOUND TRANSMISSION

This appendix is informative and is not part of this code.

SECTION AK101
GENERAL

AK101.1 General. Wall and floor-ceiling assemblies separating *dwelling units*, including those separating adjacent *townhouse* units, shall provide airborne sound insulation for walls, and both airborne and impact sound insulation for floor-ceiling assemblies.

SECTION AK102
AIRBORNE SOUND

AK102.1 General. Airborne sound insulation for wall and floor-ceiling assemblies shall meet a sound transmission class (STC) rating of 45 when tested in accordance with ASTM E90. Penetrations or openings in construction assemblies for piping; electrical devices; recessed cabinets; bathtubs; soffits; or heating, ventilating or exhaust ducts shall be sealed, lined, insulated or otherwise treated to maintain the required ratings. *Dwelling unit* entrance doors, which share a common space, shall be tight fitting to the frame and sill.

AK102.1.1 Masonry. The sound transmission class of concrete masonry and clay masonry assemblies shall be calculated in accordance with TMS 0302 or determined through testing in accordance with ASTM E90.

SECTION AK103
STRUCTURAL-BORNE SOUND

AK103.1 General. Floor/ceiling assemblies between *dwelling units*, or between a *dwelling unit* and a public or service area within a structure, shall have an impact insulation class (IIC) rating of not less than 45 when tested in accordance with ASTM E492.

SECTION AK104
REFERENCED STANDARDS

ASTM E90—09	Test Method for Laboratory Measurement of Airborne Sound Transmission Loss of Building Partitions and Elements	AK102.1 AK102.1.1
ASTM E492—09	Specification for Laboratory Measurement of Impact Sound Transmission through Floor-ceiling Assemblies Using the Tapping Machine	AK103.1
TMS 0302—12	Standard for Determining the Sound Transmission Class Rating for Masonry Walls	AK102.1.1

INTERNATIONAL CODE COUNCIL®
Copyright © 2019 ICC & NYSDOS. ALL RIGHTS RESERVED. Accessed by Lauren Gualdino (lgualdino@briarcliffmanor.org), (-) Order Number #100880972 on May 08, 2020 07:05 AM (PDT) pursuant to License Agreement with ICC & NYSDOS. No further reproduction, no

100880972

INTERNATIONAL CODE COUNCIL®
Copyright © 2019 ICC & NYSDOS. ALL RIGHTS RESERVED. Accessed by Lauren Gualdino (lgualdino@briarcliffmanor.org), (-) Order Number #100880972 on May 08, 2020 07:05 AM (PDT) pursuant to License Agreement with ICC & NYSDOS. No further reproduction, no

100880972

APPENDIX L

RESERVED

INTERNATIONAL CODE COUNCIL®
Copyright © 2019 ICC & NYSDOS. ALL RIGHTS RESERVED. Accessed by Lauren Gualdino (lgualdino@briarcliffmanor.org), (-) Order Number #100880972 on May 08, 2020 07:05 AM (PDT) pursuant to License Agreement with ICC & NYSDOS. No further reproduction, no

100880972

INTERNATIONAL CODE COUNCIL®
Copyright © 2019 ICC & NYSDOS. ALL RIGHTS RESERVED. Accessed by Lauren Gualdino (lgualdino@briarcliffmanor.org), (-) Order Number #100880972 on May 08, 2020 07:05 AM (PDT) pursuant to License Agreement with ICC & NYSDOS. No further reproduction, no

[NY] APPENDIX M

RESERVED

INTERNATIONAL CODE COUNCIL®
Copyright © 2019 ICC & NYSDOS. ALL RIGHTS RESERVED. Accessed by Lauren Gualdino (lgualdino@briarcliffmanor.org), (-) Order Number #100880972 on May 08, 2020 07:05 AM (PDT) pursuant to License Agreement with ICC & NYSDOS. No further reproduction, no

100880972

INTERNATIONAL CODE COUNCIL®
Copyright © 2019 ICC & NYSDOS. ALL RIGHTS RESERVED. Accessed by Lauren Gualdino (lgualdino@briarcliffmanor.org), (-) Order Number #100880972 on May 08, 2020 07:05 AM (PDT) pursuant to License Agreement with ICC & NYSDOS. No further reproduction, no

100880972

APPENDIX N
VENTING METHODS

This appendix is informative and is not part of the code. This appendix provides examples of various venting methods.

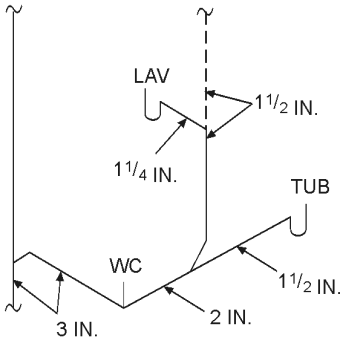

A. TYPICAL SINGLE-BATH ARRANGEMENT

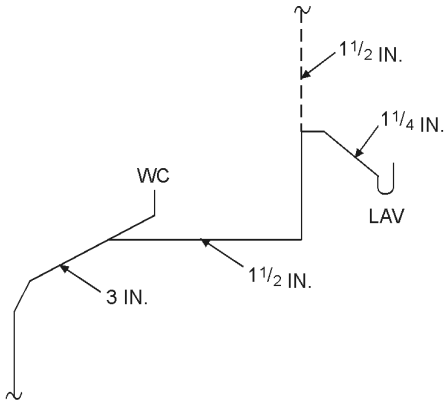

B. TYPICAL POWDER ROOM

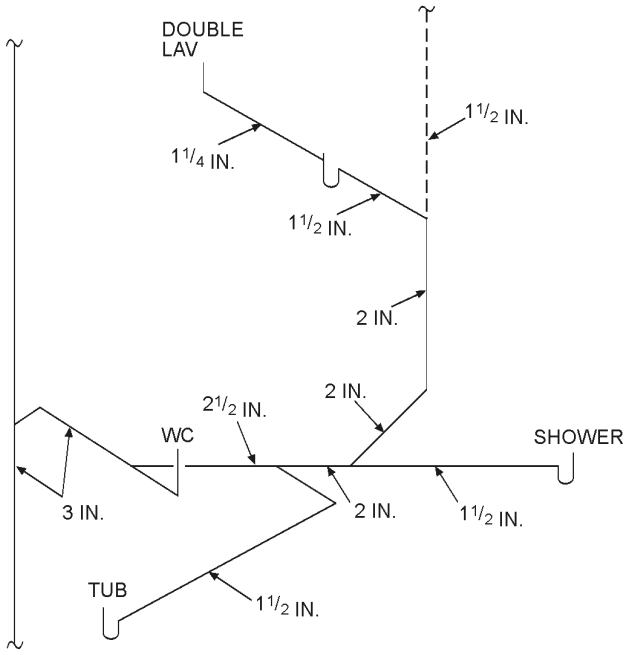

C. MORE ELABORATE SINGLE-BATH ARRANGEMENT

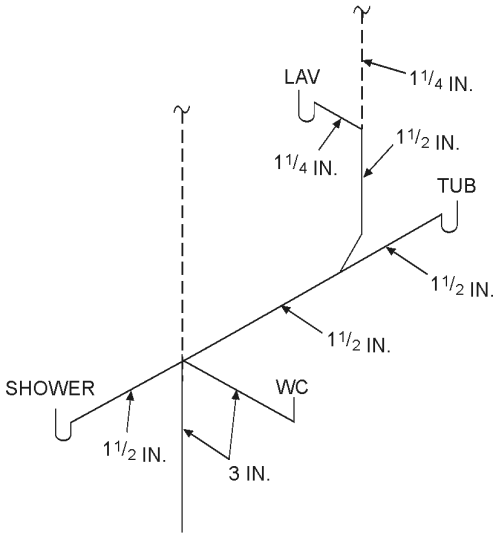

D. COMBINATION WET AND STACK VENTING WITH STACK FITTING

For SI: 1 inch = 25.4 mm.

FIGURE N1
TYPICAL SINGLE-BATH WET-VENT ARRANGEMENTS

INTERNATIONAL CODE COUNCIL®
Copyright © 2019 ICC & NYSDOS. ALL RIGHTS RESERVED. Accessed by Lauren Gualdino (lgualdino@briarcliffmanor.org), (-) Order Number #100880972 on May 08, 2020 07:05 AM (PDT) pursuant to License Agreement with ICC & NYSDOS. No further reproduction, no

100880972

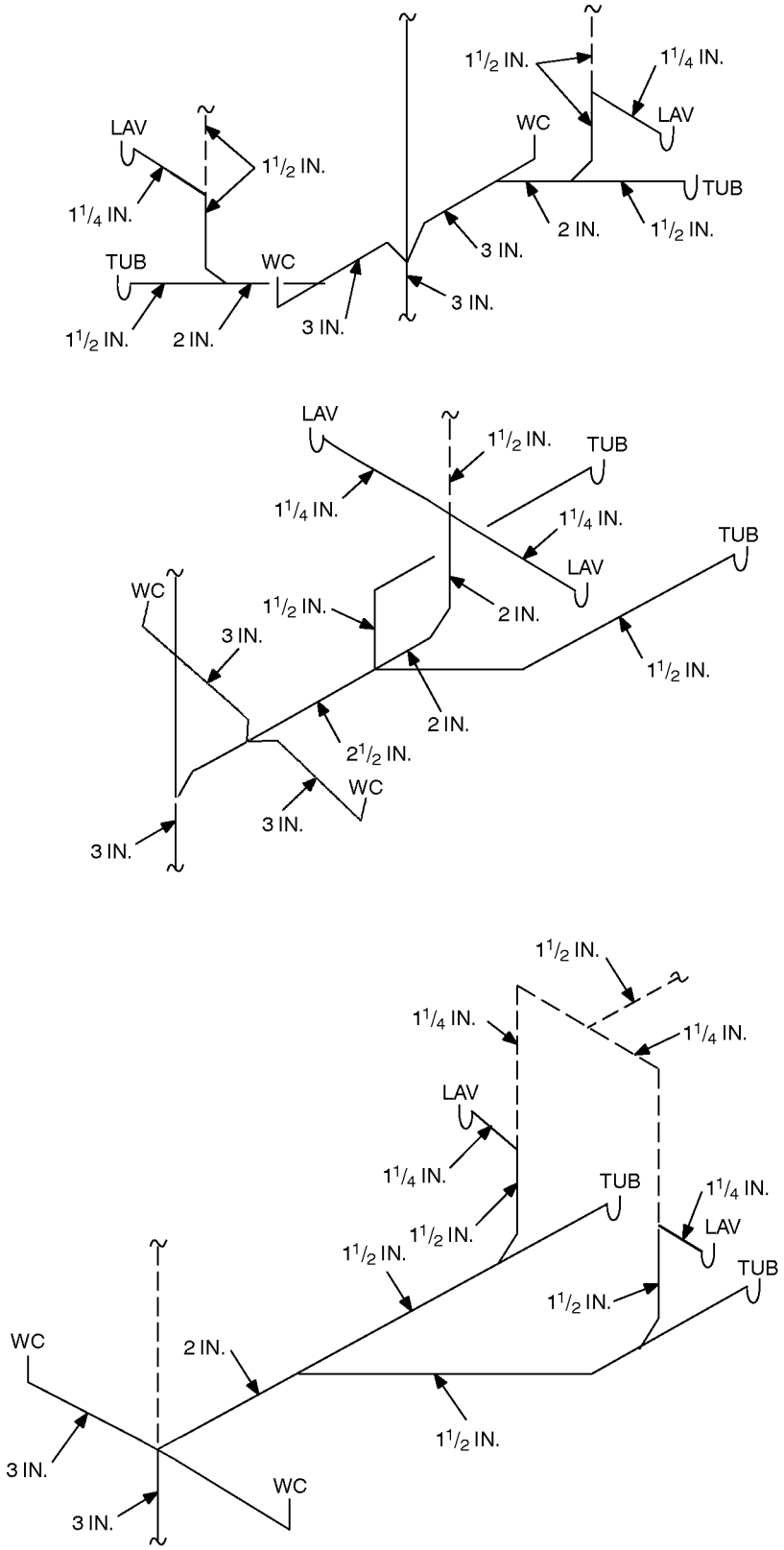

For SI: 1 inch = 25.4 mm.

FIGURE N2
TYPICAL DOUBLE-BATH WET-VENT ARRANGEMENTS

INTERNATIONAL CODE COUNCIL®
Copyright © 2019 ICC & NYSDOS. ALL RIGHTS RESERVED. Accessed by Lauren Gualdino (lgualdino@briarcliffmanor.org), (-) Order Number #100880972 on May 08, 2020 07:05 AM (PDT) pursuant to License Agreement with ICC & NYSDOS. No further reproduction, no

100880972

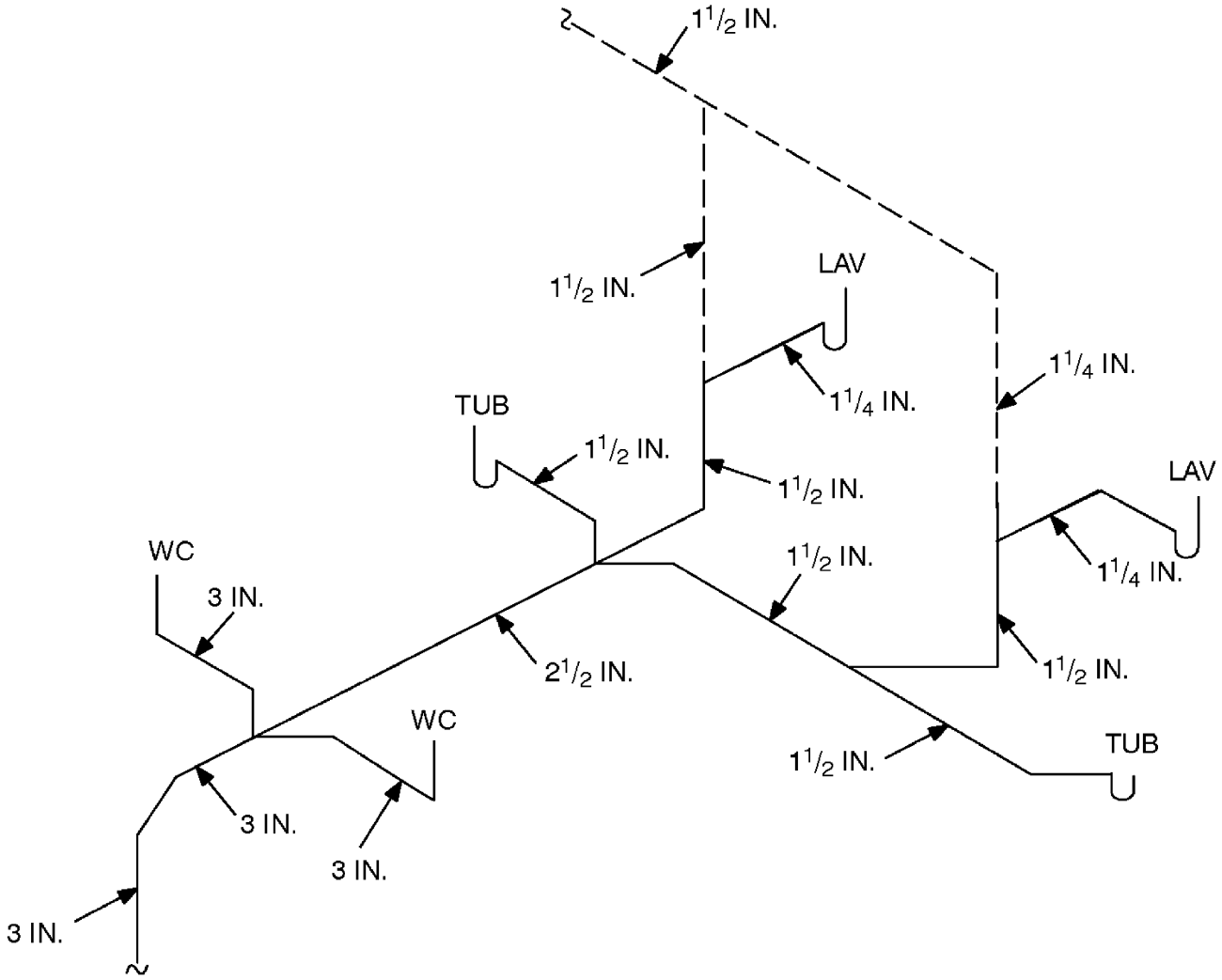

For SI: 1 inch = 25.4 mm.

FIGURE N3
TYPICAL HORIZONTAL WET VENTING

INTERNATIONAL CODE COUNCIL®
Copyright © 2019 ICC & NYSDOS. ALL RIGHTS RESERVED. Accessed by Lauren Gualdino (lgualdino@briarcliffmanor.org), (-) Order Number #100880972 on May 08, 2020 07:05 AM (PDT) pursuant to License Agreement with ICC & NYSDOS. No further reproduction, no

100880972

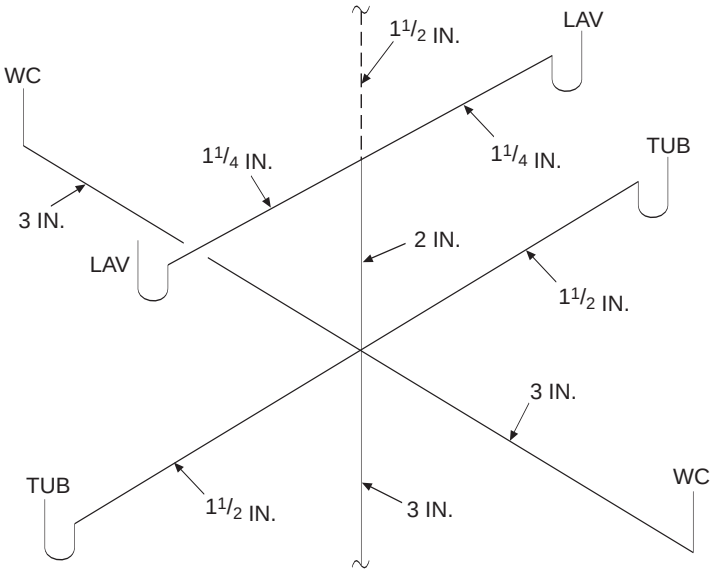

A. VERTICAL WET VENTING

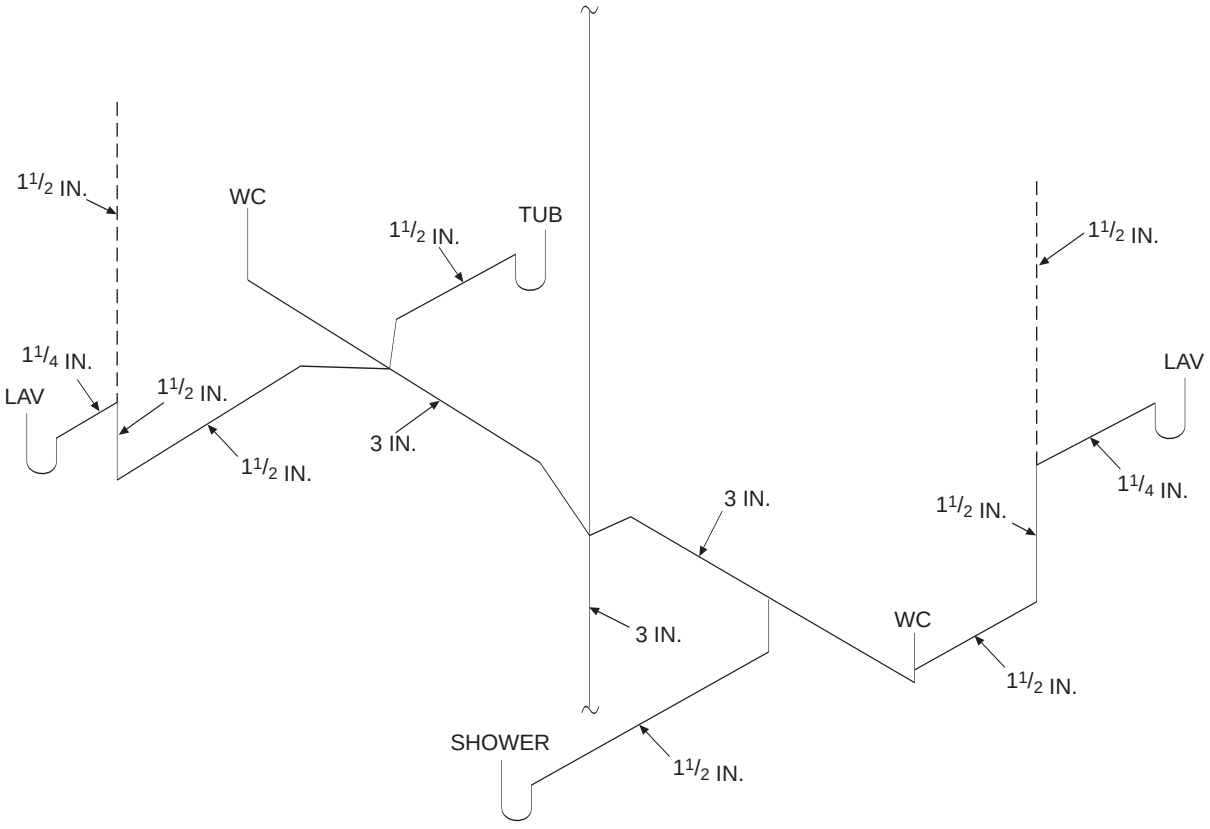

B. HORIZONTAL WET VENTING

For SI: 1 inch = 25.4 mm.

FIGURE N4
TYPICAL METHODS OF WET VENTING

INTERNATIONAL CODE COUNCIL®
Copyright © 2019 ICC & NYSDOS. ALL RIGHTS RESERVED. Accessed by Lauren Gualdino (lgualdino@briarcliffmanor.org), (-) Order Number #100880972 on May 08, 2020 07:05 AM (PDT) pursuant to License Agreement with ICC & NYSDOS. No further reproduction, no

100880972

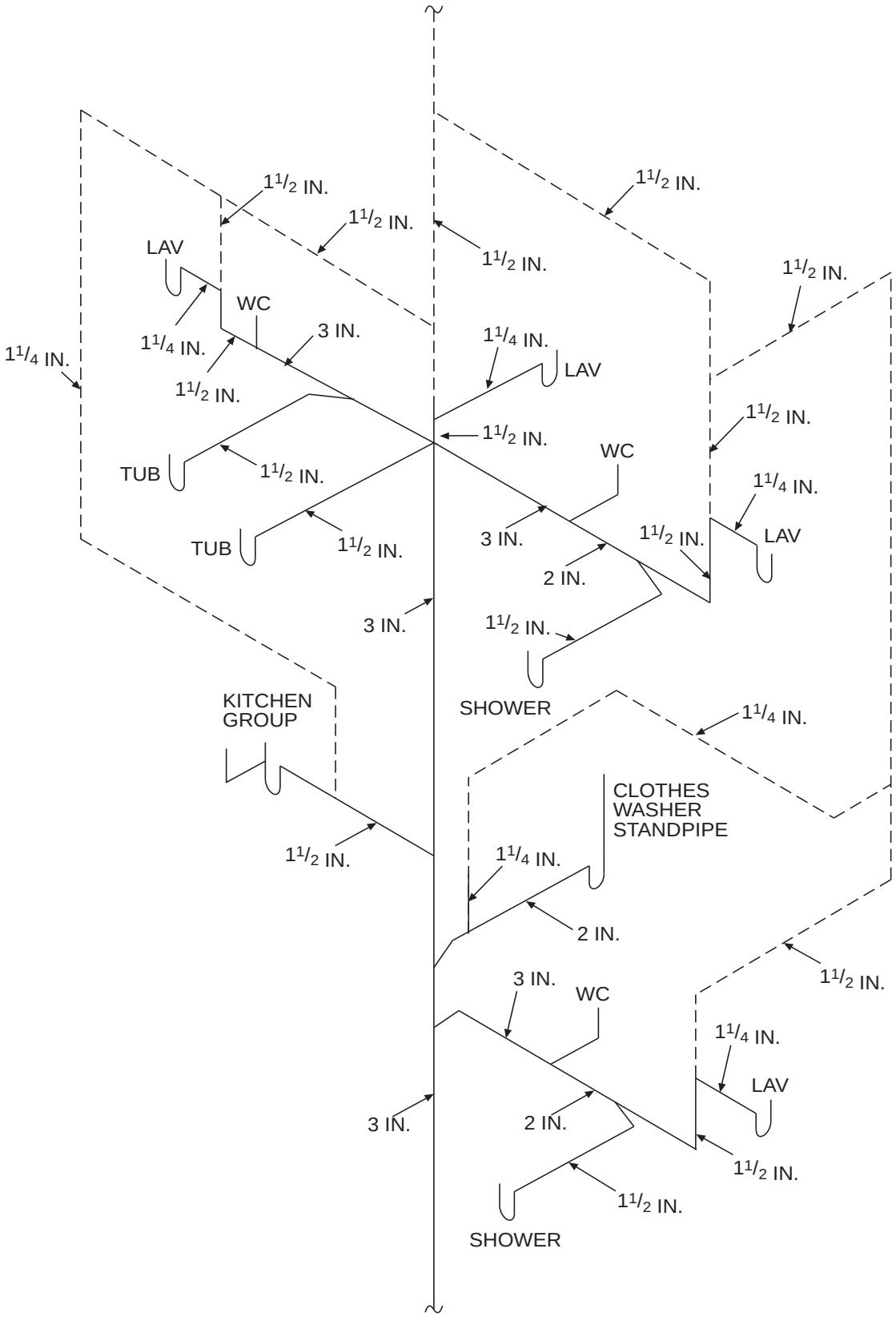

For SI: 1 inch = 25.4 mm.

FIGURE N5
SINGLE STACK SYSTEM FOR A TWO-STORY DWELLING

INTERNATIONAL CODE COUNCIL®
Copyright © 2019 ICC & NYSDOS. ALL RIGHTS RESERVED. Accessed by Lauren Gualdino (lgualdino@briarcliffmanor.org), (-) Order Number #100880972 on May 08, 2020 07:05 AM (PDT) pursuant to License Agreement with ICC & NYSDOS. No further reproduction, no

100880972

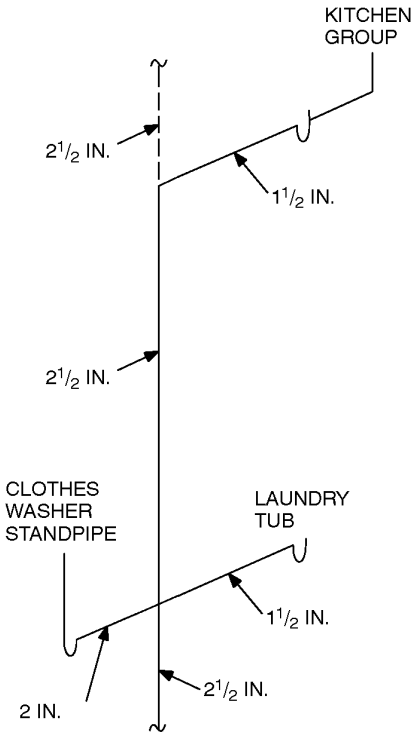

For SI: 1 inch = 25.4 mm.

FIGURE N6
WASTE STACK VENTING

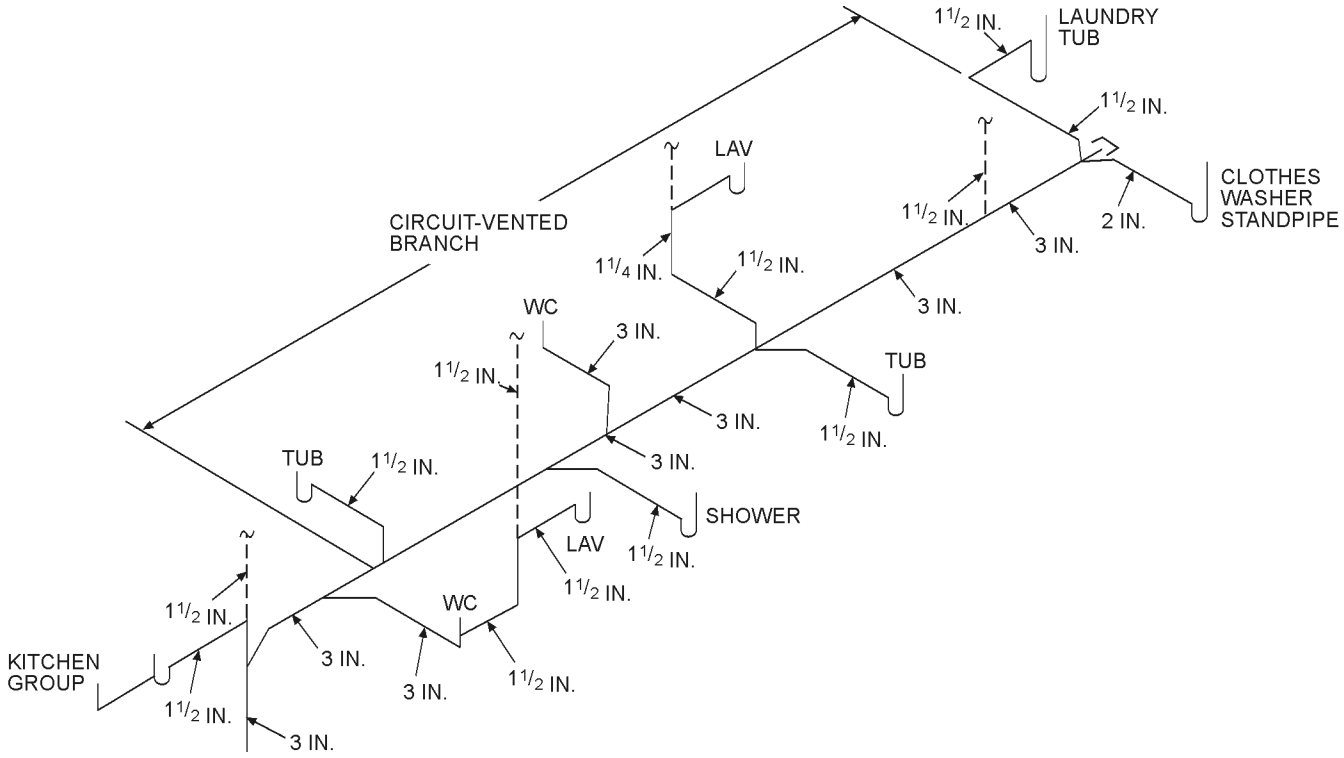

For SI: 1 inch = 25.4 mm.

FIGURE N7
CIRCUIT VENT WITH ADDITIONAL NONCIRCUIT-VENTED BRANCH

INTERNATIONAL CODE COUNCIL®
Copyright © 2019 ICC & NYSDOS. ALL RIGHTS RESERVED. Accessed by Lauren Gualdino (lgualdino@briarcliffmanor.org), (-) Order Number #100880972 on May 08, 2020 07:05 AM (PDT) pursuant to License Agreement with ICC & NYSDOS. No further reproduction, no

100880972

APPENDIX O
AUTOMATIC VEHICULAR GATES

This appendix is informative and is not part of this code.

SECTION AO101
GENERAL

AO101.1 General. The provisions of this appendix shall control the design and construction of automatic vehicular gates installed on the lot of a one- or two-family dwelling.

SECTION AO102
DEFINITION

AO102.1 General. The following term shall, for the purposes of this appendix, have the meaning shown herein.

VEHICULAR GATE. A gate that is intended for use at a vehicular entrance or exit to the lot of a one- or two-family dwelling, and that is not intended for use by pedestrian traffic.

SECTION AO103
AUTOMATIC VEHICULAR GATES

AO103.1 Vehicular gates intended for automation. Vehicular gates intended for automation shall be designed, constructed and installed to comply with the requirements of ASTM F2200.

AO103.2 Vehicular gate openers. Vehicular gate openers, where provided, shall be listed in accordance with UL 325.

SECTION AO104
REFERENCED STANDARDS

ASTM F2200—14	Standard Specification for Automated Vehicular Gate Construction	AO103.1
UL 325—02	Door, Drapery, Gate, Louver and Window Operations and Systems—with revisions through May 2015	AO103.2

INTERNATIONAL CODE COUNCIL®
Copyright © 2019 ICC & NYSDOS. ALL RIGHTS RESERVED. Accessed by Lauren Gualdino (lgualdino@briarcliffmanor.org), (-) Order Number #100880972 on May 08, 2020 07:05 AM (PDT) pursuant to License Agreement with ICC & NYSDOS. No further reproduction, no

100880972

INTERNATIONAL CODE COUNCIL®
Copyright © 2019 ICC & NYSDOS. ALL RIGHTS RESERVED. Accessed by Lauren Gualdino (lgualdino@briarcliffmanor.org), (-) Order Number #100880972 on May 08, 2020 07:05 AM (PDT) pursuant to License Agreement with ICC & NYSDOS. No further reproduction, no

100880972

APPENDIX P
SIZING OF WATER PIPING SYSTEM

This appendix is informative and is not part of this code.

SECTION AP101
GENERAL

AP101.1 Scope.

AP101.1.1 This appendix outlines two procedures for sizing a water piping system (see Sections AP103.3 and AP201.1). The design procedures are based on the minimum static pressure available from the supply source, the head changes in the system caused by friction and elevation, and the rates of flow necessary for operation of various fixtures.

AP101.1.2 Because of the variable conditions encountered in hydraulic design, it is impractical to specify definite and detailed rules for sizing of the water piping system. Accordingly, other sizing or design methods conforming to good engineering practice standards are acceptable alternatives to those presented herein.

SECTION AP102
INFORMATION REQUIRED

AP102.1 Preliminary. Obtain the necessary information regarding the minimum daily static service pressure in the area where the building is to be located. If the building supply is to be metered, obtain information regarding friction loss relative to the rate of flow for meters in the range of sizes likely to be used. Friction loss data can be obtained from most manufacturers of water meters.

AP102.2 Demand load.

AP102.2.1 Estimate the supply demand of the building main and the principal branches and risers of the system by totaling the corresponding demand from the applicable part of Table AP103.3(3).

AP102.2.2 Estimate continuous supply demands, in gallons per minute (gpm) (L/m) such as for lawn sprinklers and air conditioners, and add the sum to the total demand for fixtures. The result is the estimated supply demand for the building supply.

SECTION AP103
SELECTION OF PIPE SIZE

AP103.1 General. Decide from Table P2903.1 what is the desirable minimum residual pressure that should be maintained at the highest fixture in the supply system. If the highest group of fixtures contains flushometer valves, the pressure for the group should be not less than 15 pounds per square inch (psi) (103.4 kPa) flowing. For flush tank supplies, the available pressure should be not less than 8 psi (55.2 kPa) flowing, except blowout action fixtures must not be less than 25 psi (172.4 kPa) flowing.

AP103.2 Pipe sizing.

AP103.2.1 Pipe sizes can be selected using the following procedure or by use of other design methods conforming to acceptable engineering practice that are *approved* by the *building official*. The sizes selected must not be less than the minimum required by this code.

AP103.2.2 Water pipe sizing procedures are based on a system of pressure requirements and losses, the sum of which must not exceed the minimum pressure available at the supply source. These pressures are as follows:

1. Pressure required at fixture to produce required flow. See Sections P2903.1 of this code and Section 604.3 of the *International Plumbing Code*.
2. Static pressure loss or gain (due to head) is computed at 0.433 psi per foot (9.8 kPa/m) of elevation change.

   Example: Assume that the highest fixture supply outlet is 20 feet (6096 mm) above or below the supply source. This produces a static pressure differential of 8.66 psi (59.8 kPa) loss [20 feet by 0.433 psi per foot (2096 mm by 9.8 kPa/m)].
3. Loss through water meter. The friction or pressure loss can be obtained from meter manufacturers.
4. Loss through taps in water main.
5. Loss through special devices, such as filters, softeners, backflow prevention devices and pressure regulators. These values must be obtained from the manufacturer.

INTERNATIONAL CODE COUNCIL®
Copyright © 2019 ICC & NYSDOS. ALL RIGHTS RESERVED. Accessed by Lauren Gualdino (lgualdino@briarcliffmanor.org), (-) Order Number #100880972 on May 08, 2020 07:05 AM (PDT) pursuant to License Agreement with ICC & NYSDOS. No further reproduction, no

100880972

6. Loss through valves and fittings. Losses for these items are calculated by converting to the *equivalent length* of piping and adding to the total pipe length.
7. Loss caused by pipe friction can be calculated where the pipe size, pipe length and flow through the pipe are known. With these three items, the friction loss can be determined. For piping flow charts not included, use manufacturers' tables and velocity recommendations.

Note: For all examples, the following metric conversions are applicable.

1 cubic foot per minute = 0.4719 L/s.

1 square foot = 0.0929 m^2.

1 degree = 0.0175 rad.

1 pound per square inch = 6.895 kPa.

1 inch = 25.4 mm.

1 foot = 304.8 mm.

1 gallon per minute = 3.785 L/m.

AP103.3 Segmented loss method. The size of water service mains, branch mains and risers by the segmented loss method, must be determined by knowing the water supply demand [gpm (L/m)], available water pressure [psi (kPa)] and friction loss caused by the water meter and *developed length* of pipe [feet (m)], including the *equivalent length* of fittings. This design procedure is based on the following parameters:

1. The calculated friction loss through each length of pipe.
2. A system of pressure losses, the sum of which must not exceed the minimum pressure available at the street main or other source of supply.
3. Pipe sizing based on estimated peak demand, total pressure losses caused by difference in elevation, equipment, *developed length* and pressure required at the most remote fixture; loss through taps in water main; losses through fittings, filters, backflow prevention devices, valves and pipe friction.

Because of the variable conditions encountered in hydraulic design, it is impractical to specify definite and detailed rules for the sizing of the water piping system. Current sizing methods do not address the differences in the probability of use and flow characteristics of fixtures between types of occupancies. Creating an exact model of predicting the demand for a building is impossible and final studies assessing the impact of water conservation on demand are not yet complete. The following steps are necessary for the segmented loss method.

1. **Preliminary.** Obtain the necessary information regarding the minimum daily static service pressure in the area where the building is to be located. If the building supply is to be metered, obtain information regarding friction loss relative to the rate of flow for meters in the range of sizes to be used. Friction loss data can be obtained from manufacturers of water meters. Enough pressure must be available to overcome all system losses caused by friction and elevation so that plumbing fixtures operate properly. Section 604.6 of the *International Plumbing Code* requires that the water distribution system be designed for the minimum pressure available taking into consideration pressure fluctuations. The lowest pressure must be selected to guarantee a continuous, adequate supply of water. The lowest pressure in the public main usually occurs in the summer because of lawn sprinkling and supplying water for air-conditioning cooling towers. Future demands placed on the public main as a result of large growth or expansion should be considered. The available pressure will decrease as additional loads are placed on the public system.
2. **Demand load.** Estimate the supply demand of the building main and the principal branches and risers of the system by totaling the corresponding demand from the applicable part of Table AP103.3(3). When estimating peak demand, sizing methods typically use water supply fixture units (w.s.f.u.) [see Table AP103.3(2)]. This numerical factor measures the load-producing effect of a single plumbing fixture of a given kind. The use of fixture units can be applied to a single basic probability curve (or table), found in the various sizing methods [see Table AP103.3(3)]. The fixture units are then converted into a gpm (L/m) flow rate for estimating demand.
   2.1. Estimate continuous supply demand in gpm (L/m) such as for lawn sprinklers, air conditioners, etc., and add the sum to the total demand for fixtures. The result is the estimated supply demand for the building supply. Fixture units cannot be applied to constant-use fixtures, such as hose bibbs, lawn sprinklers and air conditioners. These types of fixtures must be assigned the gpm (L/m) value.
3. **Selection of pipe size.** This water pipe sizing procedure is based on a system of pressure requirements and losses, the sum of which must not exceed the minimum pressure available at the supply source. These pressures are as follows:
   3.1. Pressure required at the fixture to produce required flow. See Section P2903.1 of this code and Section 604.3 of the *International Plumbing Code*.
   3.2. Static pressure loss or gain (because of head) is computed at 0.433 psi per foot (9.8 kPa/m) of elevation change.
   3.3. Loss through a water meter. The friction or pressure loss can be obtained from the manufacturer.
   3.4. Loss through taps in water main [see Table AP103.3(4)].
   3.5. Loss through special devices, such as filters, softeners, backflow prevention devices and pressure regulators. These values must be obtained from the manufacturers.
   3.6. Loss through valves and fittings [see Tables AP103.3(5) and AP103.3(6)]. Losses for these items are calculated by converting to the *equiv-*

INTERNATIONAL CODE COUNCIL®
Copyright © 2019 ICC & NYSDOS. ALL RIGHTS RESERVED. Accessed by Lauren Gualdino (lgualdino@briarcliffmanor.org), (-) Order Number #100880972 on May 08, 2020 07:05 AM (PDT) pursuant to License Agreement with ICC & NYSDOS. No further reproduction, no

100880972

alent length of piping and adding to the total pipe length.

3.7. Loss caused by pipe friction can be calculated where the pipe size, pipe length and flow through the pipe are known. With these three items, the friction loss can be determined using Figures AP103.3(2) through AP103.3(7). Where using charts, use pipe inside diameters. For piping flow charts not included, use manufacturers' tables and velocity recommendations. Before attempting to size any water supply system, it is necessary to gather preliminary information including available pressure, piping material, select design velocity, elevation differences and *developed length* to the most remote fixture. The water supply system is divided into sections at major changes in elevation or where branches lead to fixture groups. The peak demand must be determined in each part of the hot and cold water supply system. The expected flow through each section is determined in w.s.f.u. and converted to gpm (L/m) flow rate. Sizing methods require determination of the "most hydraulically remote" fixture to compute the pressure loss caused by pipe and fittings. The hydraulically remote fixture represents the most downstream fixture along the circuit of piping requiring the most available pressure to operate properly. Consideration must be given to all pressure demands and losses, such as friction caused by pipe, fittings and equipment; elevation; and the residual pressure required by Table P2903.1. The two most common and frequent complaints about water supply system operation are lack of adequate pressure and noise.

Problem: What size Type L copper water pipe, service and distribution will be required to serve a two-story factory building having on each floor, back-to-back, two toilet rooms each equipped with hot and cold water? The highest fixture is 21 feet above the street main, which is tapped with a 2-inch corporation cock at which point the minimum pressure is 55 psi. In the building *basement*, a 2-inch meter with a pressure drop of not more than 11 psi and 3-inch reduced pressure principle backflow preventer with a pressure drop of not more than 9 psi are to be installed. The system is shown in Figure AP103.3(1). To be determined are the pipe sizes for the service main, and the cold and hot water distribution pipes.

Solution: A tabular arrangement such as shown in Table AP103.3(1) should first be constructed. The steps to be followed are indicated by the tabular arrangement itself as they are in sequence, Columns 1 through 10 and Lines A through L.

Step 1

Columns 1 and 2: Divide the system into sections breaking at major changes in elevation or where branches lead to fixture groups. After Point B [see Figure AP103.3(1)], separate consideration will be given to the hot and cold water piping. Enter the sections to be considered in the service and cold water piping in Column 1 of the tabular arrangement. Column 1 of Table AP103.3(1) provides a line-by-line, recommended tabular arrangement for use in solving pipe sizing.

The objective in designing the water supply system is to ensure an adequate water supply and pressure to all fixtures and equipment. Column 2 provides the psi (kPa) to be considered separately from the minimum pressure available at the main. Losses to take into consideration are the following: the differences in elevations between the water supply source and the highest water supply outlet; meter pressure losses; the tap in main loss; special fixture devices, such as water softeners and backflow prevention devices; and the pressure required at the most remote fixture outlet.

The difference in elevation can result in an increase or decrease in available pressure at the main. Where the water supply outlet is located above the source, this results in a loss in the available pressure and is subtracted from the pressure at the water source. Where the highest water supply outlet is located below the water supply source, there will be an increase in pressure that is added to the available pressure of the water source.

Column 3: Using Table AP103.3(3), determine the gpm (L/m) of flow to be expected in each section of the system. These flows range from 28.6 to 108 gpm. Load values for fixtures must be determined as w.s.f.u. and then converted to a gpm rating to determine peak demand. Where calculating peak demands, the w.s.f.u. are added and then converted to the gpm rating. For continuous flow fixtures, such as hose bibbs and lawn sprinkler systems, add the gpm demand to the intermittent demand of fixtures. For example, a total of 120 w.s.f.u. is converted to a demand of 48 gpm. Two hose bibbs × 5 gpm demand = 10 gpm. Total gpm rating = 48.0 gpm + 10 gpm = 58.0 gpm demand.

Step 2

Line A: Enter the minimum pressure available at the main source of supply in Column 2. This is 55 psi (379.2 kPa). The local water authorities generally keep records of pressures at different times of the day and year. The available pressure can be checked from nearby buildings or from fire department hydrant checks.

Line B: Determine from Table P2903.1 the highest pressure required for the fixtures on the system, which is 15 psi (103.4 kPa), to operate a flushometer valve. The most remote fixture outlet is necessary to compute the pressure loss caused by pipe and fittings, and represents the most downstream fixture along the circuit of piping requiring the available pressure to operate properly as indicated by Table P2903.1.

Line C: Determine the pressure loss for the meter size given or assumed. The total water flow from the main through the service as determined in Step 1 will serve to aid in the meter selected. There are three common types of water meters; the pressure losses are determined by the American Water Works Association Standards for displacement type, compound type and turbine type. The

INTERNATIONAL CODE COUNCIL®
Copyright © 2019 ICC & NYSDOS. ALL RIGHTS RESERVED. Accessed by Lauren Gualdino (lgualdino@briarcliffmanor.org), (-) Order Number #100880972 on May 08, 2020 07:05 AM (PDT) pursuant to License Agreement with ICC & NYSDOS. No further reproduction, no

100880972

maximum pressure loss of such devices takes into consideration the meter size, safe operating capacity [gpm (L/m)] and maximum rates for continuous operations [gpm (L/m)]. Typically, equipment imparts greater pressure losses than piping.

Line D: Select from Table AP103.3(4) and enter the pressure loss for the tap size given or assumed. The loss of pressure through taps and tees in psi (kPa) is based on the total gpm (L/m) flow rate and size of the tap.

Line E: Determine the difference in elevation between the main and source of supply and the highest fixture on the system. Multiply this figure, expressed in feet (mm), by 0.43 psi. Enter the resulting psi (kPa) loss on Line E. The difference in elevation between the water supply source and the highest water supply outlet has a significant impact on the sizing of the water supply system. The difference in elevation usually results in a loss in the available pressure because the water supply outlet is generally located above the water supply source. The loss is caused by the pressure required to lift the water to the outlet. The pressure loss is subtracted from the pressure at the water source. Where the highest water supply outlet is located below the water source, there will be an increase in pressure that is added to the available pressure of the water source.

Lines F, G and H: The pressure losses through filters, backflow prevention devices or other special fixtures must be obtained from the manufacturer or estimated and entered on these lines. Equipment, such as backflow prevention devices, check valves, water softeners, instantaneous, or tankless water heaters, filters and strainers, can impart a much greater pressure loss than the piping. The pressure losses can range from 8 to 30 psi.

Step 3

Line I: The sum of the pressure requirements and losses that affect the overall system (Lines B through H) is entered on this line. Summarizing the steps, all of the system losses are subtracted from the minimum water pressure. The remainder is the pressure available for friction, defined as the energy available to push the water through the pipes to each fixture. This force can be used as an average pressure loss, as long as the pressure available for friction is not exceeded. Saving a certain amount for available water supply pressures as an area incurs growth, or because of the aging of the pipe or equipment added to the system is recommended.

Step 4

Line J: Subtract Line I from Line A. This gives the pressure that remains available from overcoming friction losses in the system. This figure is a guide to the pipe size that is chosen for each section, incorporating the total friction losses to the most remote outlet (measured length is called *developed length*).

Exception: Where the main is above the highest fixture, the resulting psi (kPa) must be considered a pressure gain (static head gain) and omitted from the sums of Lines B through H and added to Line J.

The maximum friction head loss that can be tolerated in the system during peak demand is the difference between the static pressure at the highest and most remote outlet at no-flow conditions and the minimum flow pressure required at that outlet. If the losses are within the required limits, every run of pipe will be within the required friction head loss. Static pressure loss is at the most remote outlet in feet × 0.433 = loss in psi caused by elevation differences.

Step 5

Column 4: Enter the length of each section from the main to the most remote outlet (at Point E). Divide the water supply system into sections breaking at major changes in elevation or where branches lead to fixture groups.

Step 6

Column 5: Where selecting a trial pipe size, the length from the water service or meter to the most remote fixture outlet must be measured to determine the *developed length*. However, in systems having a flushometer valve or temperature-controlled shower at the topmost floors, the *developed length* would be from the water meter to the most remote flushometer valve on the system. A rule of thumb is that size will become progressively smaller as the system extends farther from the main source of supply. A trial pipe size can be arrived at by the following formula:

Line J: (Pressure available to overcome pipe friction) × 100/*equivalent length* of run total *developed length* to most remote fixture × percentage factor of 1.5 (Note: a percentage factor is used only as an estimate for friction losses imposed for fittings for initial trial pipe size) = psi (average pressure drop per 100 feet of pipe).

For trial pipe size, see Figure AP103.3(3) (Type L copper) based on 2.77 psi and 108 gpm = $2^{1}/_{2}$ inches. To determine the *equivalent length* of run to the most remote outlet, the *developed length* is determined and added to the friction losses for fittings and valves. The *developed lengths* of the designated pipe sections are as follows:

A-B	54 feet
B-C	8 feet
C-D	13 feet
D-E	150 feet

Total *developed length* = 225 feet

The *equivalent length* of the friction loss in fittings and valves must be added to the *developed length* (most remote outlet). Where the size of fittings and valves is not known, the added friction loss should be approximated. A general rule that has been used is to add 50 percent of the *developed length* to allow for fittings and valves. For example, the *equivalent length* of run equals the *developed length* of run (225 feet × 1.5 = 338 feet). The total *equivalent length* of run for determining a trial pipe size is 338 feet.

Example: 9.36 (pressure available to overcome pipe friction) × 100/338 (*equivalent length* of run = 225 × 1.5) = 2.77 psi (average pressure drop per 100 feet of pipe).

INTERNATIONAL CODE COUNCIL®
Copyright © 2019 ICC & NYSDOS. ALL RIGHTS RESERVED. Accessed by Lauren Gualdino (lgualdino@briarcliffmanor.org), (-) Order Number #100880972 on May 08, 2020 07:05 AM (PDT) pursuant to License Agreement with ICC & NYSDOS. No further reproduction, no

100880972

Step 7

Column 6: Select from Table AP103.3(6) the *equivalent lengths* for the trial pipe size of fittings and valves on each pipe section. Enter the sum for each section in Column 6. (The number of fittings to be used in this example must be an estimate). The *equivalent length* of piping is the *developed length* plus the *equivalent lengths* of pipe corresponding to the friction head losses for fittings and valves. Where the size of fittings and valves is not known, the added friction head losses must be approximated. An estimate for this example is found in Table AP.1.

Step 8

Column 7: Add the figures from Columns 4 and 6, and enter in Column 7. Express the sum in hundreds of feet.

Step 9

Column 8: Select from Figure AP103.3(3) the friction loss per 100 feet of pipe for the gpm flow in a section (Column 3) and trial pipe size (Column 5). Maximum friction head loss per 100 feet is determined on the basis of the total pressure available for friction head loss and the longest *equivalent length* of run. The selection is based on the gpm demand, uniform friction head loss and maximum design velocity. Where the size indicated by the hydraulic table indicates a velocity in excess of the selected velocity, a size must be selected that produces the required velocity.

Step 10

Column 9: Multiply the figures in Columns 7 and 8 for each section and enter in Column 9.

Total friction loss is determined by multiplying the friction loss per 100 feet for each pipe section in the total *developed length* by the pressure loss in fittings expressed as *equivalent length* in feet (mm). Note: Section C-F should be considered in the total pipe friction losses only if greater loss occurs in Section C-F than in pipe Section D-E. Section C-F is not considered in the total *developed length*. Total friction loss in *equivalent length* is determined in Table AP.2.

Step 11

Line K: Enter the sum of the values in Column 9. The value is the total friction loss in *equivalent length* for each designated pipe section.

Step 12

Line L: Subtract Line J from Line K and enter in Column 10.

The result should always be a positive or plus figure. If it is not, repeat the operation using Columns 5, 6, 8 and 9 until a balance or near balance is obtained. If the difference between Lines J and K is a high positive number, it is an indication that the pipe sizes are too large and should be reduced, thus saving materials. In such a case, the operations using Columns 5, 6, 8 and 9 should be repeated.

The total friction losses are determined and subtracted from the pressure available to overcome pipe friction for the trial pipe size. This number is critical because it provides a guide to whether the pipe size selected is too large and the process should be repeated to obtain an economically designed system.

Answer: The final figures entered in Column 5 become the design pipe size for the respective sections. Repeating this operation a second time using the same sketch but considering the demand for hot water, it is possible to size the hot

TABLE AP.1

COLD WATER PIPE SECTION	FITTINGS/VALVES	PRESSURE LOSS EXPRESSED AS EQUIVALENT LENGTH OF TUBE (feet)	HOT WATER PIPE SECTION	FITTINGS/VALVES	PRESSURE LOSS EXPRESSED AS EQUIVALENT OF TUBE (feet)
A-B	3 – $2^1/_2$″ Gate valves	3	A-B	3 – $2^1/_2$″ Gate valves	3
	1 – $2^1/_2$″ Side branch tee	12	—	1 – $2^1/_2$″ Side branch tee	12
B-C	1 – $2^1/_2$″ Straight run tee	0.5	B-C	1 – 2″ Straight run tee	7
	—	—	—	1 – 2″ 90-degree ell	0.5
C-F	1 – $2^1/_2$″ Side branch tee	12	C-F	1 – $1^1/_2$″ Side branch tee	7
C-D	1 – $2^1/_2$″ 90-degree ell	7	C-D	1 – $^1/_2$″ 90-degree ell	4
D-E	1 – $2^1/_2$″ Side branch tee	12	D-E	1 – $1^1/_2$″ Side branch tee	7

For SI: 1 inch = 25.4 mm, 1 foot = 304.8 mm, 1 degree = 0.01745 rad.

TABLE AP.2

PIPE SECTIONS	FRICTION LOSS EQUIVALENT LENGTH (feet)	
	Cold Water	Hot Water
A-B	0.69 × 3.2 = 2.21	0.69 × 3.2 = 2.21
B-C	0.085 × 3.1 = 0.26	0.16 × 1.4 = 0.22
C-D	0.20 × 1.9 = 0.38	0.17 × 3.2 = 0.54
D-E	1.62 × 1.9 = 3.08	1.57 × 3.2 = 5.02
Total pipe friction losses (Line K)	5.93	7.99

For SI: 1 foot = 304.8 mm.

INTERNATIONAL CODE COUNCIL®
Copyright © 2019 ICC & NYSDOS. ALL RIGHTS RESERVED. Accessed by Lauren Gualdino (lgualdino@briarcliffmanor.org), (-) Order Number #100880972 on May 08, 2020 07:05 AM (PDT) pursuant to License Agreement with ICC & NYSDOS. No further reproduction, no

100880972

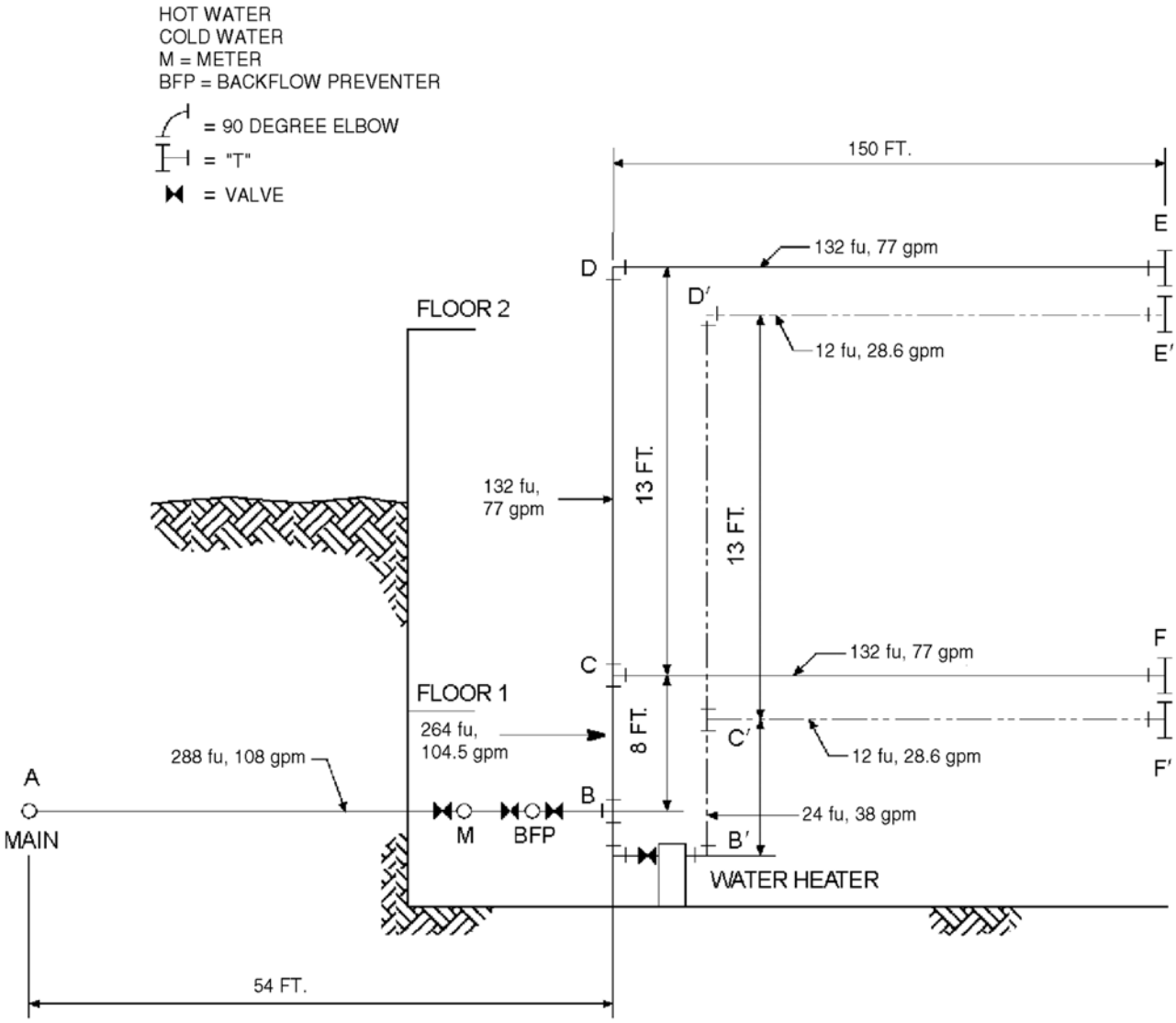

For SI: 1 foot = 304.8 mm, 1 gallon per minute = 3.785 L/m.

FIGURE AP103.3(1)
EXAMPLE—SIZING

INTERNATIONAL CODE COUNCIL®
Copyright © 2019 ICC & NYSDOS. ALL RIGHTS RESERVED. Accessed by Lauren Gualdino (lgualdino@briarcliffmanor.org), (-) Order Number #100880972 on May 08, 2020 07:05 AM (PDT) pursuant to License Agreement with ICC & NYSDOS. No further reproduction, no

TABLE AP103.3(1)
RECOMMENDED TABULAR ARRANGEMENT FOR USE IN SOLVING PIPE SIZING PROBLEMS

COLUMN	1		2	3	4	5	6	7	8	9	10
Line	Description		Pounds per square inch	Gallons per min through section	Length of section (feet)	Trial pipe size (inches)	Equivalent length of fittings and valves (feet)	Total equivalent length [(Col. 4 + Col. 6)/100 feet)]	Friction loss per 100 feet of trial size pipe (psi)	Friction loss in equivalent length Column 8 x Column 7 (psi)	Excess pressure over friction losses (psi)
A	Service and cold water distribution piping[a]	Minimum pressure available at main	55.00								
B		Highest pressure required at a fixture (see Table P2903.1)	15.00								
C		Meter loss 2″ meter	11.00								
D		Tap in main loss 2″ tap [see Table AP103.3(4)]	1.61								
E		Static head loss 21 ft × 0.43 psi/ft	9.03								
F		Special fixture loss backflow preventer	9.00	—	—	—	—	—	—	—	—
G		Special fixture loss—Filter	0.00								
H		Special fixture loss—Other	0.00								
I		Total overall losses and requirements (Sum of Lines B through H)	45.64								
J		Pressure available to overcome pipe friction (Line A minus Line I)	9.36								
	Pipe section (from diagram) cold water distribution piping	A-B	.288	108.0	54	$2^1/_2$	15.00	0.69	3.2	2.21	—
		B-C	.264	104.5	8	$2^1/_2$	0.5	0.085	3.1	0.26	—
		C-D	.132	77.0	13	$2^1/_2$	7.00	0.20	1.9	0.38	—
		C-F[b]	.132	77.0	150	$2^1/_2$	12.00	1.62	1.9	3.08	—
		D-E[b]	.132	77.0	150	$2^1/_2$	12.00	1.62	1.9	3.08	—
K	Total pipe friction losses (cold)			—	—	—	—	—	—	5.93	—
L	Difference (Line J minus Line K)			—	—	—	—	—	—	—	3.43
	Pipe section (from diagram) Hot water Distribution Piping	A′B′	.288	108.0	54	$2^1/_2$	12.00	0.69	3.3	2.21	—
		B′C′	.24	38.0	8	2	7.5	0.16	1.4	0.22	—
		C′D′	.12	28.6	13	$1^1/_2$	4.0	0.17	3.2	0.54	—
		C′F′[b]	.12	28.6	150	$1^1/_2$	7.00	1.57	3.2	5.02	—
		D′E′[b]	.12	28.6	150	$1^1/_2$	7.00	1.57	3.2	5.02	—
K	Total pipe friction losses (hot)			—	—	—	—	—	—	7.99	—
L	Difference (Line J minus Line K)			—	—	—	—	—	—	—	1.37

For SI: 1 inch = 25.4 mm, 1 foot = 304.8 mm, 1 pound per square inch = 6.895 kPa, 1 gallon per minute = 3.785 L/m.

a. To be considered as pressure gain for fixtures below main (to consider separately, omit from "I" and add to "J").

b. To consider separately, in Line K use Section C-F only if greater loss than the loss in Section D-E.

INTERNATIONAL CODE COUNCIL®
Copyright © 2019 ICC & NYSDOS. ALL RIGHTS RESERVED. Accessed by Lauren Gualdino (lgualdino@briarcliffmanor.org). (-) Order Number #100880972 on May 08, 2020 07:05 AM (PDT) pursuant to License Agreement with ICC & NYSDOS. No further reproduction, no
100880972

100880972

TABLE AP103.3(2)
LOAD VALUES ASSIGNED TO FIXTURES[a]

FIXTURE	OCCUPANCY	TYPE OF SUPPLY CONTROL	LOAD VALUES, IN WATER SUPPLY FIXTURE UNITS (w.s.f.u.)		
			Cold	Hot	Total
Bathroom group	Private	Flush tank	2.7	1.5	3.6
Bathroom group	Private	Flushometer valve	6.0	3.0	8.0
Bathtub	Private	Faucet	1.0	1.0	1.4
Bathtub	Public	Faucet	3.0	3.0	4.0
Bidet	Private	Faucet	1.5	1.5	2.0
Combination fixture	Private	Faucet	2.25	2.25	3.0
Dishwashing machine	Private	Automatic	—	1.4	1.4
Drinking fountain	Offices, etc.	$^3/_8$″ valve	0.25	—	0.25
Kitchen sink	Private	Faucet	1.0	1.0	1.4
Kitchen sink	Hotel, restaurant	Faucet	3.0	3.0	4.0
Laundry trays (1 to 3)	Private	Faucet	1.0	1.0	1.4
Lavatory	Private	Faucet	0.5	0.5	0.7
Lavatory	Public	Faucet	1.5	1.5	2.0
Service sink	Offices, etc.	Faucet	2.25	2.25	3.0
Shower head	Public	Mixing valve	3.0	3.0	4.0
Shower head	Private	Mixing valve	1.0	1.0	1.4
Urinal	Public	1″ flushometer valve	10.0	—	10.0
Urinal	Public	$^3/_4$″ flushometer valve	5.0	—	5.0
Urinal	Public	Flush tank	3.0	—	3.0
Washing machine (8 lb)	Private	Automatic	1.0	1.0	1.4
Washing machine (8 lb)	Public	Automatic	2.25	2.25	3.0
Washing machine (15 lb)	Public	Automatic	3.0	3.0	4.0
Water closet	Private	Flushometer valve	6.0	—	6.0
Water closet	Private	Flush tank	2.2	—	2.2
Water closet	Public	Flushometer valve	10.0	—	10.0
Water closet	Public	Flush tank	5.0	—	5.0
Water closet	Public or private	Flushometer tank	2.0	—	2.0

For SI: 1 inch = 25.4 mm, 1 pound = 0.454 kg.

a. For fixtures not listed, loads should be assumed by comparing the fixture to one listed using water in similar quantities and at similar rates. The assigned loads for fixtures with both hot and cold water supplies are given for separate hot and cold water loads, and for total load. The separate hot and cold water loads are three-fourths of the total load for the fixture in each case.

INTERNATIONAL CODE COUNCIL®
Copyright © 2019 ICC & NYSDOS. ALL RIGHTS RESERVED. Accessed by Lauren Gualdino (lgualdino@briarcliffmanor.org), (-) Order Number #100880972 on May 08, 2020 07:05 AM (PDT) pursuant to License Agreement with ICC & NYSDOS. No further reproduction, no

100880972

TABLE AP103.3(3)
TABLE FOR ESTIMATING DEMAND

SUPPLY SYSTEMS PREDOMINANTLY FOR FLUSH TANKS			SUPPLY SYSTEMS PREDOMINANTLY FOR FLUSHOMETERS		
Load	Demand		Load	Demand	
(w.s.f.u.)	(gpm)	(cfm)	(w.s.f.u.)	(gpm)	(cfm)
1	3.0	0.04104	—	—	—
2	5.0	0.0684	—	—	—
3	6.5	0.86892	—	—	—
4	8.0	1.06944	—	—	—
5	9.4	1.256592	5	15.0	2.0052
6	10.7	1.430376	6	17.4	2.326032
7	11.8	1.577424	7	19.8	2.646364
8	12.8	1.711104	8	22.2	2.967696
9	13.7	1.831416	9	24.6	3.288528
10	14.6	1.951728	10	27.0	3.60936
11	15.4	2.058672	11	27.8	3.716304
12	16.0	2.13888	12	28.6	3.823248
13	16.5	2.20572	13	29.4	3.930192
14	17.0	2.27256	14	30.2	4.037136
15	17.5	2.3394	15	31.0	4.14408
16	18.0	2.90624	16	31.8	4.241024
17	18.4	2.459712	17	32.6	4.357968
18	18.8	2.513184	18	33.4	4.464912
19	19.2	2.566656	19	34.2	4.571856
20	19.6	2.620128	20	35.0	4.6788
25	21.5	2.87412	25	38.0	5.07984
30	23.3	3.114744	30	42.0	5.61356
35	24.9	3.328632	35	44.0	5.88192
40	26.3	3.515784	40	46.0	6.14928
45	27.7	3.702936	45	48.0	6.41664
50	29.1	3.890088	50	50.0	6.684
60	32.0	4.27776	60	54.0	7.21872
70	35.0	4.6788	70	58.0	7.75344
80	38.0	5.07984	80	61.2	8.181216
90	41.0	5.48088	90	64.3	8.595624
100	43.5	5.81508	100	67.5	9.0234
120	48.0	6.41664	120	73.0	9.75864
140	52.5	7.0182	140	77.0	10.29336
160	57.0	7.61976	160	81.0	10.82808
180	61.0	8.15448	180	85.5	11.42964
200	65.0	8.6892	200	90.0	12.0312
225	70.0	9.3576	225	95.5	12.76644

(continued)

INTERNATIONAL CODE COUNCIL®
Copyright © 2019 ICC & NYSDOS. ALL RIGHTS RESERVED. Accessed by Lauren Gualdino (lgualdino@briarcliffmanor.org), (-) Order Number #100880972 on May 08, 2020 07:05 AM (PDT) pursuant to License Agreement with ICC & NYSDOS. No further reproduction, no

100880972

TABLE AP103.3(3)—continued
TABLE FOR ESTIMATING DEMAND

SUPPLY SYSTEMS PREDOMINANTLY FOR FLUSH TANKS			SUPPLY SYSTEMS PREDOMINANTLY FOR FLUSHOMETERS		
Load	Demand		Load	Demand	
(w.s.f.u.)	(gpm)	(cfm)	(w.s.f.u.)	(gpm)	(cfm)
250	75.0	10.026	250	101.0	13.50168
275	80.0	10.6944	275	104.5	13.96956
300	85.0	11.3628	300	108.0	14.43744
400	105.0	14.0364	400	127.0	16.97736
500	124.0	16.57632	500	143.0	19.11624
750	170.0	22.7256	750	177.0	23.66136
1,000	208.0	27.80544	1,000	208.0	27.80544
1,250	239.0	31.94952	1,250	239.0	31.94952
1,500	269.0	35.95992	1,500	269.0	35.95992
1,750	297.0	39.70296	1,750	297.0	39.70296
2,000	325.0	43.446	2,000	325.0	43.446
2,500	380.0	50.7984	2,500	380.0	50.7984
3,000	433.0	57.88344	3,000	433.0	57.88344
4,000	535.0	70.182	4,000	525.0	70.182
5,000	593.0	79.27224	5,000	593.0	79.27224

For SI: 1 gallon per minute = 3.785 L/m, 1 cubic foot per minute = 0.000471 m^3/s.

TABLE AP103.3(4)
LOSS OF PRESSURE THROUGH TAPS AND TEES IN POUNDS PER SQUARE INCH (psi)

GALLONS PER MINUTE	SIZE OF TAP OR TEE (inches)						
	$^5/_8$	$^3/_4$	1	$1^1/_4$	$1^1/_2$	2	3
10	1.35	0.64	0.18	0.08	—	—	—
20	5.38	2.54	0.77	0.31	0.14	—	—
30	12.10	5.72	1.62	0.69	0.33	0.10	—
40	—	10.20	3.07	1.23	0.58	0.18	—
50	—	15.90	4.49	1.92	0.91	0.28	—
60	—	—	6.46	2.76	1.31	0.40	—
70	—	—	8.79	3.76	1.78	0.55	0.10
80	—	—	11.50	4.90	2.32	0.72	0.13
90	—	—	14.50	6.21	2.94	0.91	0.16
100	—	—	17.94	7.67	3.63	1.12	0.21
120	—	—	25.80	11.00	5.23	1.61	0.30
140	—	—	35.20	15.00	7.12	2.20	0.41
150	—	—	—	17.20	8.16	2.52	0.47
160	—	—	—	19.60	9.30	2.92	0.54
180	—	—	—	24.80	11.80	3.62	0.68
200	—	—	—	30.70	14.50	4.48	0.84
225	—	—	—	38.80	18.40	5.60	1.06
250	—	—	—	47.90	22.70	7.00	1.31
275	—	—	—	—	27.40	7.70	1.59
300	—	—	—	—	32.60	10.10	1.88

For SI: 1 inch = 25.4 mm, 1 pound per square inch = 6.895 kPa, 1 gallon per minute = 3.785 L/m.

INTERNATIONAL CODE COUNCIL®
Copyright © 2019 ICC & NYSDOS. ALL RIGHTS RESERVED. Accessed by Lauren Gualdino (lgualdino@briarcliffmanor.org), (-) Order Number #100880972 on May 08, 2020 07:05 AM (PDT) pursuant to License Agreement with ICC & NYSDOS. No further reproduction, no

100880972

TABLE AP103.3(5)
ALLOWANCE IN EQUIVALENT LENGTHS OF PIPE FOR FRICTION LOSS IN VALVES AND THREADED FITTINGS (feet)

FITTING OR VALVE	PIPE SIZE (inches)							
	1/2	3/4	1	1 1/4	1 1/2	2	2 1/2	3
45-degree elbow	1.2	1.5	1.8	2.4	3.0	4.0	5.0	6.0
90-degree elbow	2.0	2.5	3.0	4.0	5.0	7.0	8.0	10.0
Tee, run	0.6	0.8	0.9	1.2	1.5	2.0	2.5	3.0
Tee, branch	3.0	4.0	5.0	6.0	7.0	10.0	12.0	15.0
Gate valve	0.4	0.5	0.6	0.8	1.0	1.3	1.6	2.0
Balancing valve	0.8	1.1	1.5	1.9	2.2	3.0	3.7	4.5
Plug-type cock	0.8	1.1	1.5	1.9	2.2	3.0	3.7	4.5
Check valve, swing	5.6	8.4	11.2	14.0	16.8	22.4	28.0	33.6
Globe valve	15.0	20.0	25.0	35.0	45.0	55.0	65.0	80.0
Angle valve	8.0	12.0	15.0	18.0	22.0	28.0	34.0	40.0

For SI: 1 inch = 25.4 mm, 1 foot = 304.8 mm, 1 degree = 0.0175 rad.

TABLE AP103.3(6)
PRESSURE LOSS IN FITTINGS AND VALVES EXPRESSED AS EQUIVALENT LENGTH OF TUBE[a] (feet)

NOMINAL OR STANDARD SIZE (inches)	FITTINGS				Coupling	VALVES			
	Standard Ell		90-degree Tee			Ball	Gate	Butterfly	Check
	90 Degree	45 Degree	Side Branch	Straight Run					
3/8	0.5	—	1.5	—	—	—	—	—	1.5
1/2	1	0.5	2	—	—	—	—	—	2
5/8	1.5	0.5	2	—	—	—	—	—	2.5
3/4	2	0.5	3	—	—	—	—	—	3
1	2.5	1	4.5	—	—	0.5	—	—	4.5
1 1/4	3	1	5.5	0.5	0.5	0.5	—	—	5.5
1 1/2	4	1.5	7	0.5	0.5	0.5	—	—	6.5
2	5.5	2	9	0.5	0.5	0.5	0.5	7.5	9
2 1/2	7	2.5	12	0.5	0.5	—	1	10	11.5
3	9	3.5	15	1	1	—	1.5	15.5	14.5
3 1/2	9	3.5	14	1	1	—	2	—	12.5
4	12.5	5	21	1	1	—	2	16	18.5
5	16	6	27	1.5	1.5	—	3	11.5	23.5
6	19	7	34	2	2	—	3.5	13.5	26.5
8	29	11	50	3	3	—	5	12.5	39

For SI: 1 inch = 25.4 mm, 1 foot = 304.8 mm, 1 degree = 0.01745 rad.

a. Allowances are for streamlined soldered fittings and recessed threaded fittings. For threaded fittings, double the allowances shown in the table. The equivalent lengths presented in the table are based on a C factor of 150 in the Hazen-Williams friction loss formula. The lengths shown are rounded to the nearest half-foot.

INTERNATIONAL CODE COUNCIL®
Copyright © 2019 ICC & NYSDOS. ALL RIGHTS RESERVED. Accessed by Lauren Gualdino (lgualdino@briarcliffmanor.org), (-) Order Number #100880972 on May 08, 2020 07:05 AM (PDT) pursuant to License Agreement with ICC & NYSDOS. No further reproduction, no

100880972

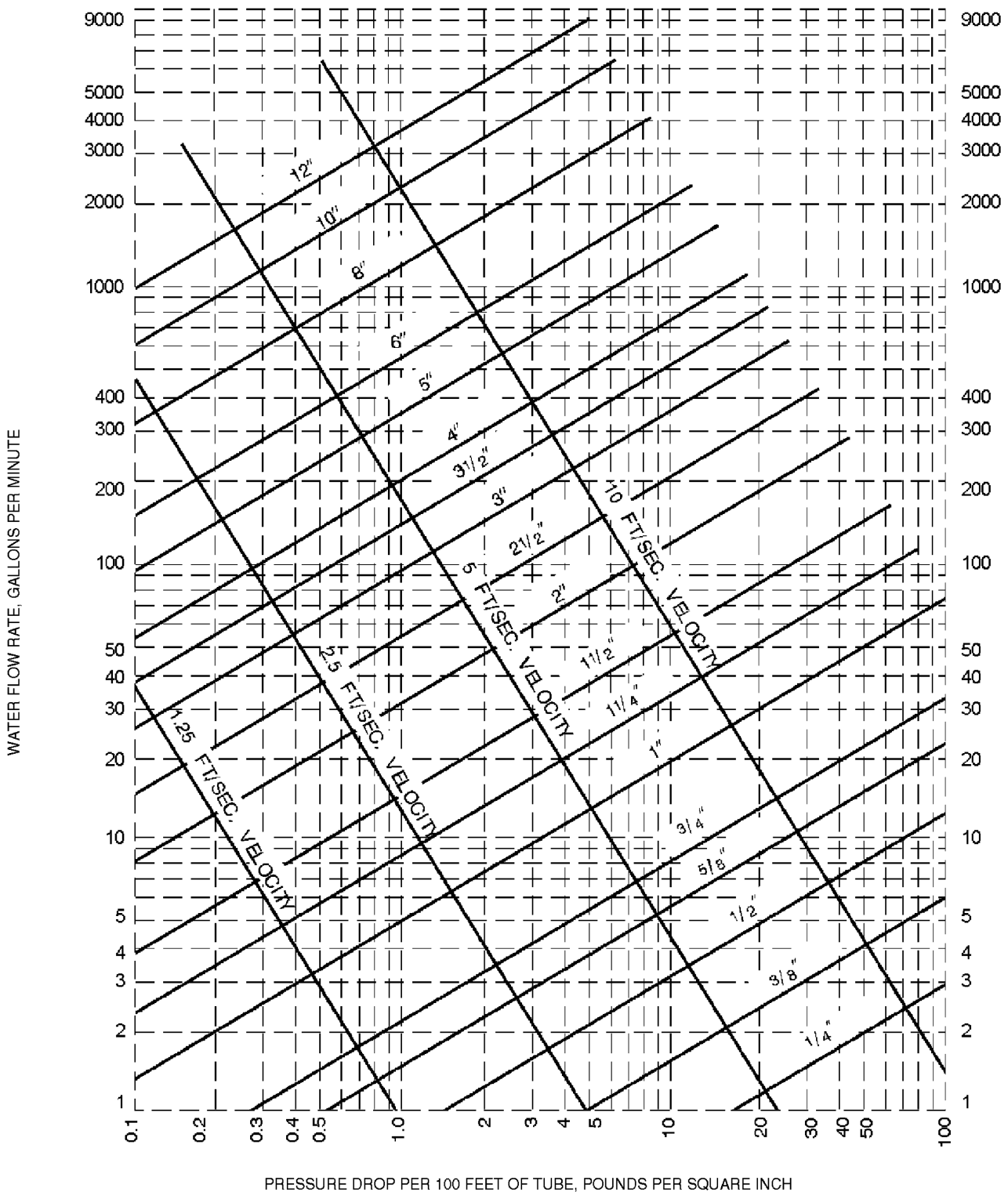

Note: Fluid velocities in excess of 5 to 8 feet per second are not usually recommended.

For SI: 1 inch = 25.4 mm, 1 foot = 304.8 mm, 1 gallon per minute = 3.785 L/m, 1 pound per square inch = 6.895 kPa, 1 foot per second = 0.305 m/s.

a. This figure applies to smooth new copper tubing with recessed (streamline) soldered joints and to the actual sizes of types indicated on the diagram.

FIGURE AP103.3(2)
FRICTION LOSS IN SMOOTH PIPE[a]
(TYPE K, ASTM B88 COPPER TUBING)

INTERNATIONAL CODE COUNCIL®
Copyright © 2019 ICC & NYSDOS. ALL RIGHTS RESERVED. Accessed by Lauren Gualdino (lgualdino@briarcliffmanor.org), (-) Order Number #100880972 on May 08, 2020 07:05 AM (PDT) pursuant to License Agreement with ICC & NYSDOS. No further reproduction, no

100880972

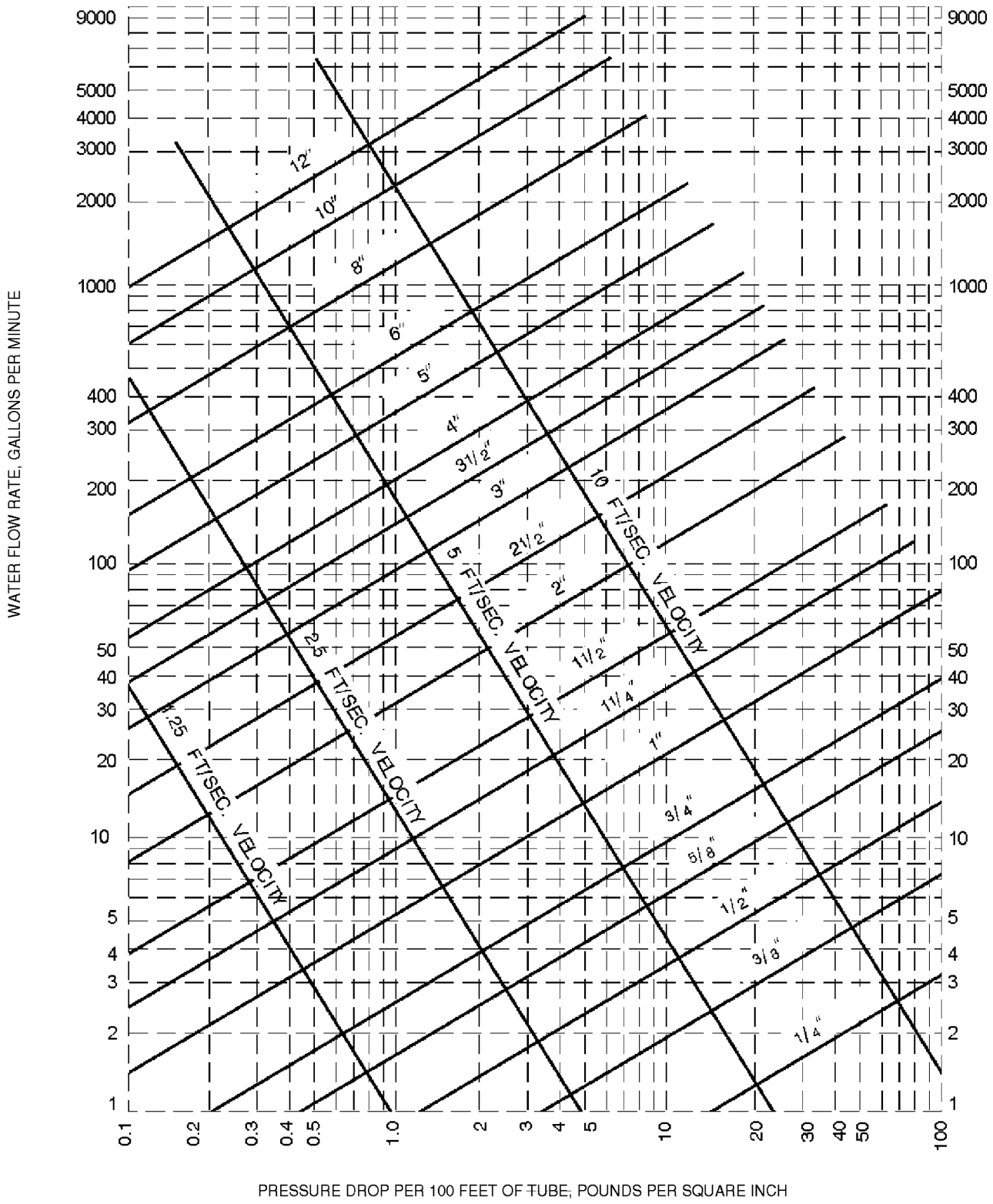

Note: Fluid velocities in excess of 5 to 8 feet per second are not usually recommended.

For SI: 1 inch = 25.4 mm, 1 foot = 304.8 mm, 1 gallon per minute = 3.785 L/m, 1 pound per square inch = 6.895 kPa, 1 foot per second = 0.305 m/s.

a. This figure applies to smooth new copper tubing with recessed (streamline) soldered joints and to the actual sizes of types indicated on the diagram.

FIGURE AP103.3(3)
FRICTION LOSS IN SMOOTH PIPE[a]
(TYPE L, ASTM B88 COPPER TUBING)

INTERNATIONAL CODE COUNCIL®
Copyright © 2019 ICC & NYSDOS. ALL RIGHTS RESERVED. Accessed by Lauren Gualdino (lgualdino@briarcliffmanor.org), (-) Order Number #100880972 on May 08, 2020 07:05 AM (PDT) pursuant to License Agreement with ICC & NYSDOS. No further reproduction, no

100880972

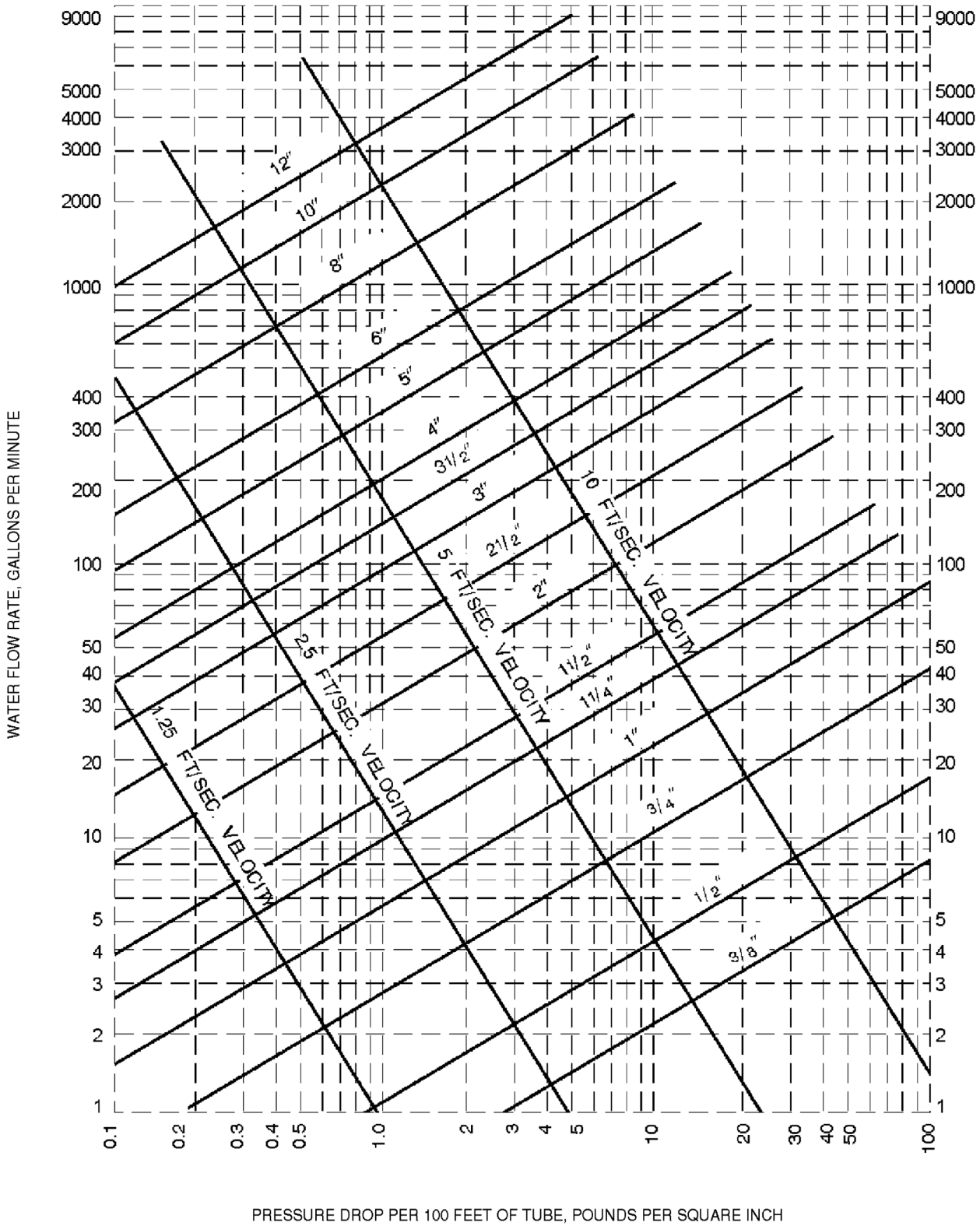

Note: Fluid velocities in excess of 5 to 8 feet per second are not usually recommended.

For SI: 1 inch = 25.4 mm, 1 foot = 304.8 mm, 1 gallon per minute = 3.785 L/m, 1 pound per square inch = 6.895 kPa, 1 foot per second = 0.305 m/s.

a. This figure applies to smooth new copper tubing with recessed (streamline) soldered joints and to the actual sizes of types indicated on the diagram.

FIGURE AP103.3(4)
FRICTION LOSS IN SMOOTH PIPE[a]
(TYPE M, ASTM B88 COPPER TUBING)

INTERNATIONAL CODE COUNCIL®
Copyright © 2019 ICC & NYSDOS. ALL RIGHTS RESERVED. Accessed by Lauren Gualdino (lgualdino@briarcliffmanor.org), (-) Order Number #100880972 on May 08, 2020 07:05 AM (PDT) pursuant to License Agreement with ICC & NYSDOS. No further reproduction, no

100880972

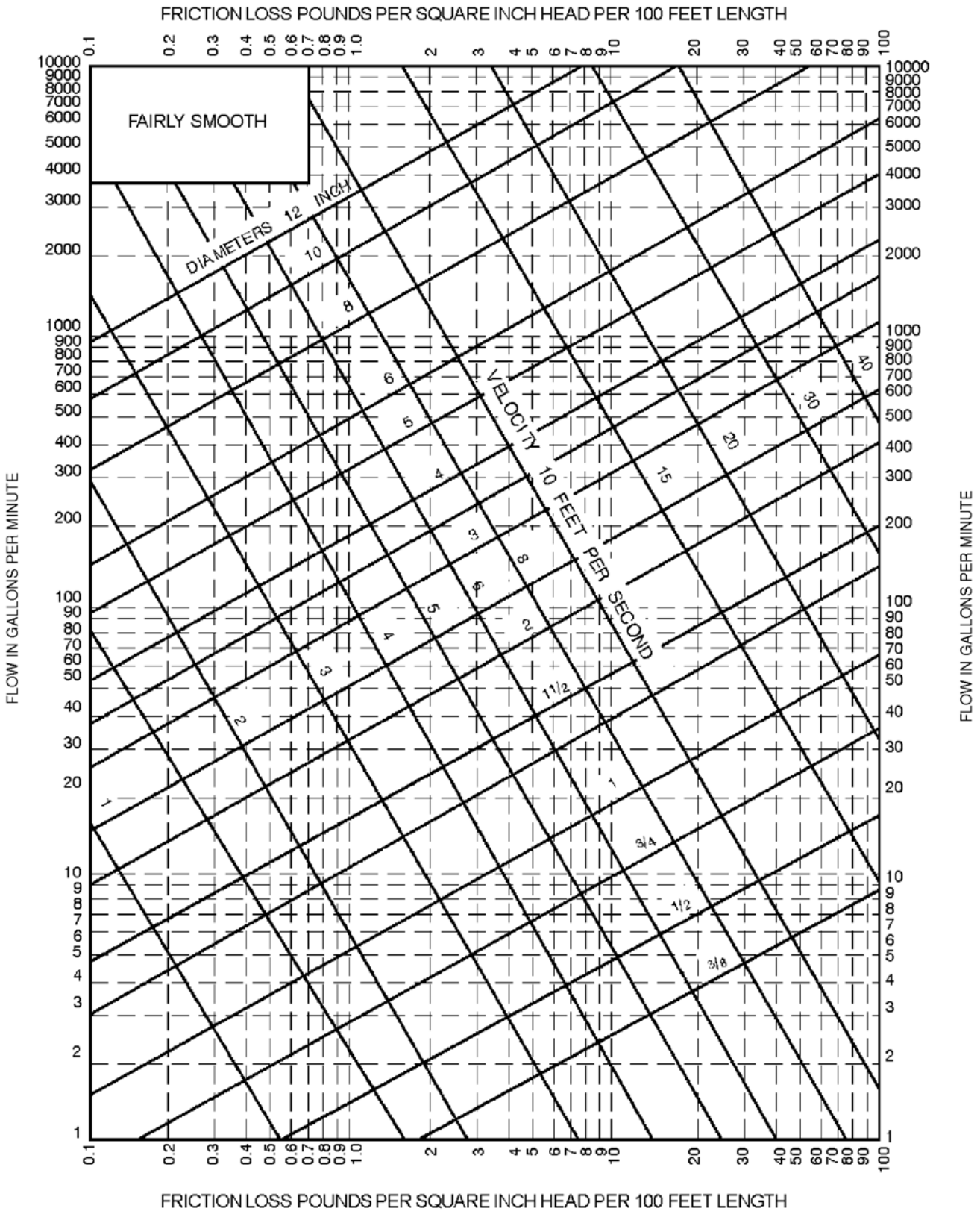

For SI: 1 inch = 25.4 mm, 1 foot = 304.8 mm, 1 gallon per minute = 3.785 L/m, 1 pound per square inch = 6.895 kPa, 1 foot per second = 0.305 m/s.
a. This figure applies to smooth new steel (fairly smooth) pipe and to actual diameters of standard-weight pipe.

FIGURE AP103.3(5)
FRICTION LOSS IN FAIRLY SMOOTH PIPE[a]

INTERNATIONAL CODE COUNCIL®
Copyright © 2019 ICC & NYSDOS. ALL RIGHTS RESERVED. Accessed by Lauren Gualdino (lgualdino@briarcliffmanor.org), (-) Order Number #100880972 on May 08, 2020 07:05 AM (PDT) pursuant to License Agreement with ICC & NYSDOS. No further reproduction, no

100880972

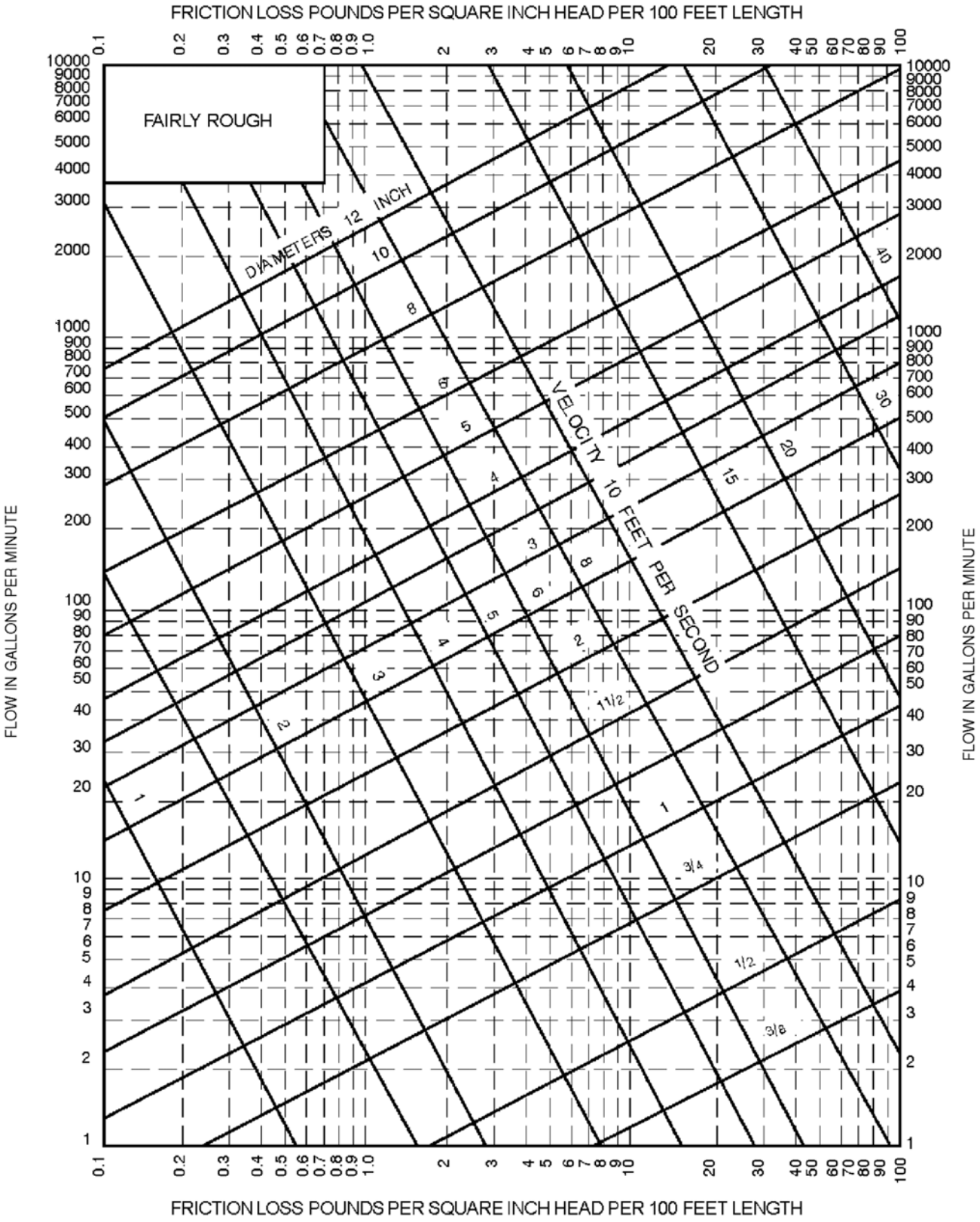

For SI: 1 inch = 25.4 mm, 1 foot = 304.8 mm, 1 gallon per minute = 3.785 L/m, 1 pound per square inch = 6.895 kPa, 1 foot per second = 0.305 m/s.

a. This figure applies to fairly rough pipe and to actual diameters, which, in general, will be less than the actual diameters of the new pipe of the same kind.

FIGURE AP103.3(6)
FRICTION LOSS IN FAIRLY ROUGH PIPE[a]

INTERNATIONAL CODE COUNCIL®
Copyright © 2019 ICC & NYSDOS. ALL RIGHTS RESERVED. Accessed by Lauren Gualdino (lgualdino@briarcliffmanor.org), (-) Order Number #100880972 on May 08, 2020 07:05 AM (PDT) pursuant to License Agreement with ICC & NYSDOS. No further reproduction, no

100880972

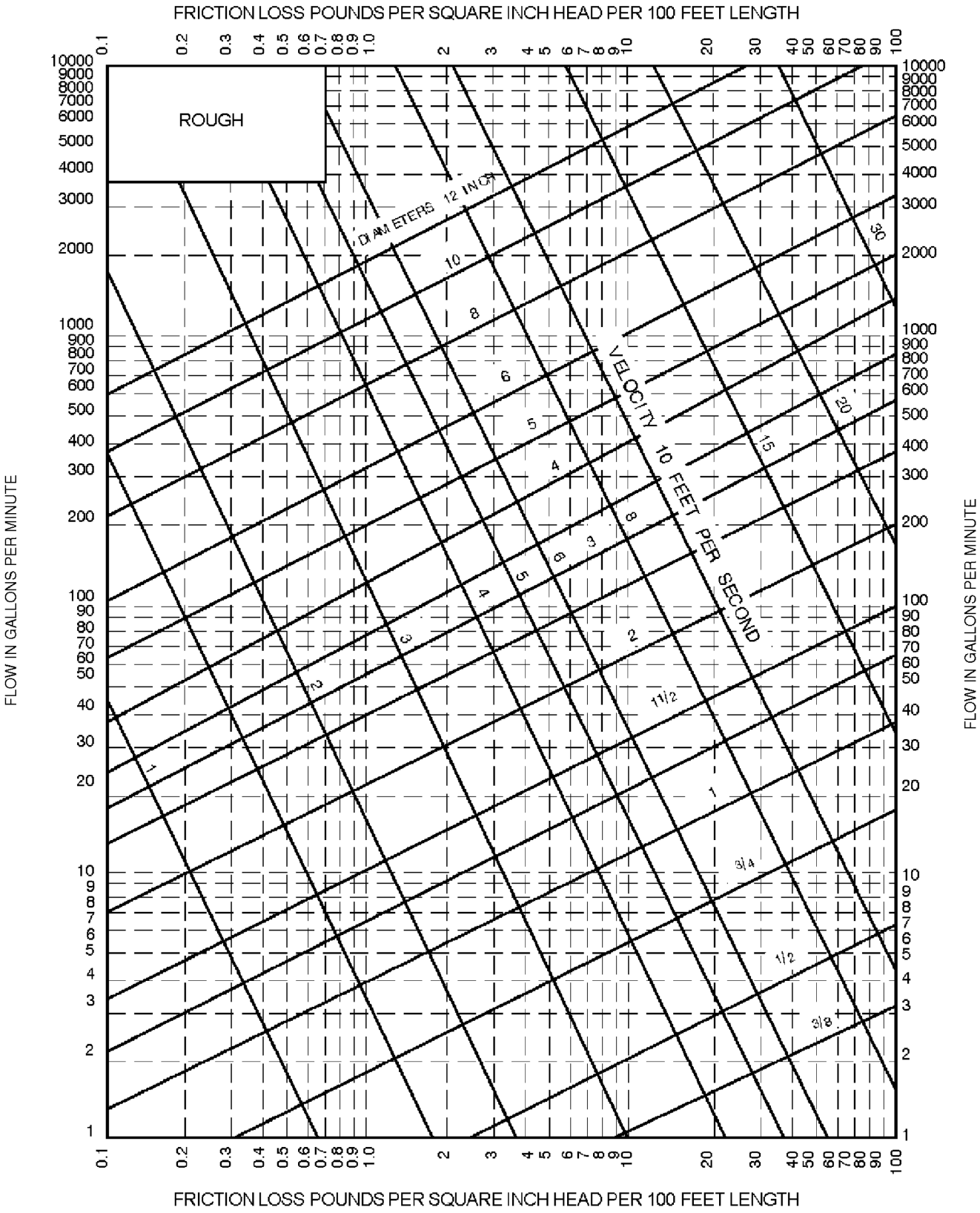

For SI: 1 inch = 25.4 mm, 1 foot = 304.8 mm, 1 gallon per minute = 3.785 L/m, 1 pound per square inch = 6.895 kPa, 1 foot per second = 0.305 m/s.

a. This figure applies to very rough pipe and existing pipe, and to their actual diameters.

FIGURE AP103.3(7)
FRICTION LOSS IN ROUGH PIPE[a]

INTERNATIONAL CODE COUNCIL®
Copyright © 2019 ICC & NYSDOS. ALL RIGHTS RESERVED. Accessed by Lauren Gualdino (lgualdino@briarcliffmanor.org), (-) Order Number #100880972 on May 08, 2020 07:05 AM (PDT) pursuant to License Agreement with ICC & NYSDOS. No further reproduction, no

100880972

water distribution piping. This has been worked up as a part of the overall problem in the tabular arrangement used for sizing the service and water distribution piping. Note that consideration must be given to the pressure losses from the street main to the water heater (Section A-B) in determining the hot water pipe sizes.

SECTION AP201
SELECTION OF PIPE SIZE

AP201.1 Size of water-service mains, branch mains and risers. The minimum size water service pipe shall be $^3/_4$ inch (19.1 mm). The size of water service mains, branch mains and risers shall be determined according to water supply demand [gpm (L/m)], available water pressure [psi (kPa)] and friction loss caused by the water meter and *developed length* of pipe [feet (m)], including the *equivalent length* of fittings. The size of each water distribution system shall be determined according to the procedure outlined in this section or by other design methods conforming to acceptable engineering practice and *approved* by the *building official*:

1. Supply load in the building water distribution system shall be determined by the total load on the pipe being sized, in terms of w.s.f.u., as shown in Table AP103.3(2). For fixtures not listed, choose a w.s.f.u. value of a fixture with similar flow characteristics.
2. Obtain the minimum daily static service pressure [psi (kPa)] available (as determined by the local water authority) at the water meter or other source of supply at the installation location. Adjust this minimum daily static pressure [psi (kPa)] for the following conditions:
   2.1. Determine the difference in elevation between the source of supply and the highest water supply outlet. Where the highest water supply outlet is located above the source of supply, deduct 0.5 psi (3.4 kPa) for each foot (0.3 m) of difference in elevation. Where the highest water supply outlet is located below the source of supply, add 0.5 psi (3.4 kPa) for each foot (0.3 m) of difference in elevation.
   2.2. Where a water pressure-reducing valve is installed in the water distribution system, the minimum daily static water pressure available is 80 percent of the minimum daily static water pressure at the source of supply or the set pressure downstream of the water pressure-reducing valve, whichever is smaller.
   2.3. Deduct all pressure losses caused by special equipment, such as a backflow preventer, water filter and water softener. Pressure loss data for each piece of equipment shall be obtained through the manufacturer of the device.
   2.4. Deduct the pressure in excess of 8 psi (55 kPa) resulting from the installation of the special plumbing fixture, such as temperature-controlled shower and flushometer tank water closet. Using the resulting minimum available pressure, find the corresponding pressure range in Table AP201.1.
3. The maximum *developed length* for water piping is the actual length of pipe between the source of supply and the most remote fixture, including either hot (through the water heater) or cold water branches multiplied by a factor of 1.2 to compensate for pressure loss through fittings. Select the appropriate column in Table AP201.1 equal to or greater than the calculated maximum *developed length*.
4. To determine the size of the water service pipe, meter and main distribution pipe to the building using the appropriate table, follow down the selected "maximum *developed length*" column to a fixture unit equal to or greater than the total installation demand calculated by using the "combined" w.s.f.u. column of Table AP201.1. Read the water service pipe and meter sizes in the first left-hand column and the main distribution pipe to the building in the second left-hand column on the same row.
5. To determine the size of each water distribution pipe, start at the most remote outlet on each branch (either hot or cold branch) and, working back toward the main distribution pipe to the building, add up the w.s.f.u. demand passing through each segment of the distribution system using the related hot or cold column of Table AP201.1. Knowing demand, the size of each segment shall be read from the second left-hand column of the same table and the maximum *developed length* column selected in Steps 1 and 2, under the same or next smaller size meter row. The size of any branch or main need never be larger than the size of the main distribution pipe to the building established in Step 4.

INTERNATIONAL CODE COUNCIL®
Copyright © 2019 ICC & NYSDOS. ALL RIGHTS RESERVED. Accessed by Lauren Gualdino (lgualdino@briarcliffmanor.org), (-) Order Number #100880972 on May 08, 2020 07:05 AM (PDT) pursuant to License Agreement with ICC & NYSDOS. No further reproduction, no

100880972

TABLE AP201.1
MINIMUM SIZE OF WATER METERS, MAINS AND DISTRIBUTION PIPING BASED ON WATER SUPPLY FIXTURE UNIT VALUES (w.s.f.u.)

METER AND SERVICE PIPE (inches)	DISTRIBUTION PIPE (inches)	MAXIMUM DEVELOPMENT LENGTH (feet)									
Pressure Range 30 to 39 psi		40	60	80	100	150	200	250	300	400	500
3/4	1/2[a]	2.5	2	1.5	1.5	1	1	0.5	0.5	0	0
3/4	3/4	9.5	7.5	6	5.5	4	3.5	3	2.5	2	1.5
3/4	1	32	25	20	16.5	11	9	7.8	6.5	5.5	4.5
1	1	32	32	27	21	13.5	10	8	7	5.5	5
3/4	1 1/4	32	32	32	32	30	24	20	17	13	10.5
1	1 1/4	80	80	70	61	45	34	27	22	16	12
1 1/2	1 1/4	80	80	80	75	54	40	31	25	17.5	13
1	1 1/2	87	87	87	87	84	73	64	56	45	36
1 1/2	1 1/2	151	151	151	151	117	92	79	69	54	43
2	1 1/2	151	151	151	151	128	99	83	72	56	45
1	2	87	87	87	87	87	87	87	87	87	86
1 1/2	2	275	275	275	275	258	223	196	174	144	122
2	2	365	365	365	365	318	266	229	201	160	134
2	2 1/2	533	533	533	533	533	495	448	409	353	311

METER AND SERVICE PIPE (inches)	DISTRIBUTION PIPE (inches)	MAXIMUM DEVELOPMENT LENGTH (feet)									
Pressure Range 40 to 49 psi		40	60	80	100	150	200	250	300	400	500
3/4	1/2[a]	3	2.5	2	1.5	1.5	1	1	0.5	0.5	0.5
3/4	3/4	9.5	9.5	8.5	7	5.5	4.5	3.5	3	2.5	2
3/4	1	32	32	32	26	18	13.5	10.5	9	7.5	6
1	1	32	32	32	32	21	15	11.5	9.5	7.5	6.5
3/4	1 1/4	32	32	32	32	32	32	32	27	21	16.5
1	1 1/4	80	80	80	80	65	52	42	35	26	20
1 1/2	1 1/4	80	80	80	80	75	59	48	39	28	21
1	1 1/2	87	87	87	87	87	87	87	78	65	55
1 1/2	1 1/2	151	151	151	151	151	130	109	93	75	63
2	1 1/2	151	151	151	151	151	139	115	98	77	64
1	2	87	87	87	87	87	87	87	87	87	87
1 1/2	2	275	275	275	275	275	275	264	238	198	169
2	2	365	365	365	365	365	349	304	270	220	185
2	2 1/2	533	533	533	533	533	533	533	528	456	403

(continued)

INTERNATIONAL CODE COUNCIL®
Copyright © 2019 ICC & NYSDOS. ALL RIGHTS RESERVED. Accessed by Lauren Gualdino (lgualdino@briarcliffmanor.org), (-) Order Number #100880972 on May 08, 2020 07:05 AM (PDT) pursuant to License Agreement with ICC & NYSDOS. No further reproduction, no

100880972

TABLE AP201.1—continued
MINIMUM SIZE OF WATER METERS, MAINS AND DISTRIBUTION PIPING BASED ON WATER SUPPLY FIXTURE UNIT VALUES (w.s.f.u.)

METER AND SERVICE PIPE (inches)	DISTRIBUTION PIPE (inches)	MAXIMUM DEVELOPMENT LENGTH (feet)									
Pressure Range 50 to 60 psi		40	60	80	100	150	200	250	300	400	500
3/4	1/2[a]	3	3	2.5	2	1.5	1	1	1	0.5	0.5
3/4	3/4	9.5	9.5	9.5	8.5	6.5	5	4.5	4	3	2.5
3/4	1	32	32	32	32	25	18.5	14.5	12	9.5	8
1	1	32	32	32	32	30	22	16.5	13	10	8
3/4	1 1/4	32	32	32	32	32	32	32	32	29	24
1	1 1/4	80	80	80	80	80	68	57	48	35	28
1 1/2	1 1/4	80	80	80	80	80	75	63	53	39	29
1	1 1/2	87	87	87	87	87	87	87	87	82	70
1 1/2	1 1/2	151	151	151	151	151	151	139	120	94	79
2	1 1/2	151	151	151	151	151	151	146	126	97	81
1	2	87	87	87	87	87	87	87	87	87	87
1 1/2	2	275	275	275	275	275	275	275	275	247	213
2	2	365	365	365	365	365	365	365	329	272	232
2	2 1/2	533	533	533	533	533	533	533	533	533	486

METER AND SERVICE PIPE (inches)	DISTRIBUTION PIPE (inches)	MAXIMUM DEVELOPMENT LENGTH (feet)									
Pressure Range Over 60		40	60	80	100	150	200	250	300	400	500
3/4	1/2[a]	3	3	3	2.5	2	1.5	1.5	1	1	0.5
3/4	3/4	9.5	9.5	9.5	9.5	7.5	6	5	4.5	3.5	3
3/4	1	32	32	32	32	32	24	19.5	15.5	11.5	9.5
1	1	32	32	32	32	32	28	28	17	12	9.5
3/4	1 1/4	32	32	32	32	32	32	32	32	32	30
1	1 1/4	80	80	80	80	80	80	69	60	46	36
1 1/2	1 1/4	80	80	80	80	80	80	76	65	50	38
1	1 1/2	87	87	87	87	87	87	87	87	87	84
1 1/2	1 1/2	151	151	151	151	151	151	151	144	114	94
2	1 1/2	151	151	151	151	151	151	151	151	118	97
1	2	87	87	87	87	87	87	87	87	87	87
1 1/2	2	275	275	275	275	275	275	275	275	275	252
2	2	365	368	368	368	368	368	368	368	318	273
2	2 1/2	533	533	533	533	533	533	533	533	533	533

For SI: 1 inch = 25.4, 1 foot = 304.8 mm, 1 pound per square inch = 6.895 kPa.
a. Minimum size for building supply is a 3/4-inch pipe.

INTERNATIONAL CODE COUNCIL®
Copyright © 2019 ICC & NYSDOS. ALL RIGHTS RESERVED. Accessed by Lauren Gualdino (lgualdino@briarcliffmanor.org), (-) Order Number #100880972 on May 08, 2020 07:05 AM (PDT) pursuant to License Agreement with ICC & NYSDOS. No further reproduction, no

100880972

APPENDIX Q

TINY HOUSES

SECTION AQ101 GENERAL

AQ101.1 Scope. This appendix shall be applicable to *tiny houses* used as single *dwelling units*. *Tiny houses* shall comply with this code except as otherwise stated in this appendix.

SECTION AQ102 DEFINITIONS

AQ102.1 General. The following words and terms shall, for the purposes of this appendix, have the meanings shown herein. Refer to Chapter 2 of this code for general definitions.

EGRESS ROOF ACCESS WINDOW. A *skylight* or roof window designed and installed to satisfy the emergency escape and rescue opening requirements of Section R310.2.

LANDING PLATFORM. A landing provided as the top step of a stairway accessing a *loft*.

LOFT. A floor level located more than 30 inches (762 mm) above the main floor, open to the main floor on one or more sides with a ceiling height of less than 6 feet 8 inches (2032 mm) and used as a living or sleeping space.

TINY HOUSE. A *dwelling* that is 400 square feet (37 m^2) or less in floor area excluding *lofts*.

SECTION AQ103 CEILING HEIGHT

AQ103.1 Minimum ceiling height. *Habitable space* and hallways in *tiny houses* shall have a ceiling height of not less than 6 feet 8 inches (2032 mm). Bathrooms, toilet rooms and kitchens shall have a ceiling height of not less than 6 feet 4 inches (1930 mm). Obstructions including, but not limited to, beams, girders, ducts and lighting, shall not extend below these minimum ceiling heights.

Exception: Ceiling heights in *lofts* are permitted to be less than 6 feet 8 inches (2032 mm).

SECTION AQ104 LOFTS

AQ104.1 Minimum loft area and dimensions. *Lofts* used as a sleeping or living space shall meet the minimum area and dimension requirements of Sections AQ104.1.1 through AQ104.1.3.

AQ104.1.1 Minimum area. *Lofts* shall have a floor area of not less than 35 square feet (3.25 m^2).

AQ104.1.2 Minimum dimensions. *Lofts* shall be not less than 5 feet (1524 mm) in any horizontal dimension.

AQ104.1.3 Height effect on loft area. Portions of a *loft* with a sloped ceiling measuring less than 3 feet (914 mm) from the finished floor to the finished ceiling shall not be considered as contributing to the minimum required area for the loft.

Exception: Under gable roofs with a minimum slope of 6 units vertical in 12 units horizontal (50-percent slope), portions of a *loft* with a sloped ceiling measuring less than 16 inches (406 mm) from the finished floor to the finished ceiling shall not be considered as contributing to the minimum required area for the *loft*.

AQ104.2 Loft access. The access to and primary egress from *lofts* shall be of any type described in Sections AQ104.2.1 through AQ104.2.4.

AQ104.2.1 Stairways. Stairways accessing *lofts* shall comply with this code or with Sections AQ104.2.1.1 through AQ104.2.1.5.

AQ104.2.1.1 Width. Stairways accessing a *loft* shall not be less than 17 inches (432 mm) in clear width at or above the handrail. The width below the handrail shall be not less than 20 inches (508 mm).

AQ104.2.1.2 Headroom. The headroom in stairways accessing a *loft* shall be not less than 6 feet 2 inches (1880 mm), as measured vertically, from a sloped line connecting the tread or landing platform nosings in the middle of their width.

AQ104.2.1.3 Treads and risers. Risers for stairs accessing a *loft* shall be not less than 7 inches (178 mm) and not more than 12 inches (305 mm) in height. Tread depth and riser height shall be calculated in accordance with one of the following formulas:

1. The tread depth shall be 20 inches (508 mm) minus four-thirds of the riser height.
2. The riser height shall be 15 inches (381 mm) minus three-fourths of the tread depth.

AQ104.2.1.4 Landing platforms. The top tread and riser of stairways accessing *lofts* shall be constructed as a *landing platform* where the *loft* ceiling height is less than 6 feet 2 inches (1880 mm) where the stairway meets the *loft*. The *landing platform* shall be 18 inches to 22 inches (457 to 559 mm) in depth measured from the nosing of the landing platform to the edge of the *loft*, and 16 to 18 inches (406 to 457 mm) in height measured from the *landing platform* to the *loft* floor.

AQ104.2.1.5 Handrails. Handrails shall comply with Section R311.7.8.

AQ104.2.1.6 Stairway guards. Guards at open sides of stairways shall comply with Section R312.1.

AQ104.2.2 Ladders. Ladders accessing *lofts* shall comply with Sections AQ104.2.1 and AQ104.2.2.

AQ104.2.2.1 Size and capacity. Ladders accessing *lofts* shall have a rung width of not less than 12 inches (305 mm), and 10-inch (254 mm) to 14-inch (356 mm)

INTERNATIONAL CODE COUNCIL®
Copyright © 2019 ICC & NYSDOS. ALL RIGHTS RESERVED. Accessed by Lauren Gualdino (lgualdino@briarcliffmanor.org), (-) Order Number #100880972 on May 08, 2020 07:05 AM (PDT) pursuant to License Agreement with ICC & NYSDOS. No further reproduction, no

100880972

spacing between rungs. Ladders shall be capable of supporting a 200-pound (75 kg) load on any rung. Rung spacing shall be uniform within $^{3}/_{8}$ inch (9.5 mm).

AQ104.2.2.2 Incline. Ladders shall be installed at 70 to 80 degrees from horizontal.

AQ104.2.3 Alternating tread devices. Alternating tread devices accessing *lofts* shall comply with Sections R311.7.11.1 and R311.7.11.2. The clear width at and below the handrails shall be not less than 20 inches (508 mm).

AQ104.2.4 Ship's ladders. Ship's ladders accessing *lofts* shall comply with Sections R311.7.12.1 and R311.7.12.2. The clear width at and below handrails shall be not less than 20 inches (508 mm).

AQ104.2.5 Loft Guards. *Loft* guards shall be located along the open side of *lofts*. *Loft* guards shall be not less than 36 inches (914 mm) in height or one-half of the clear height to the ceiling, whichever is less.

SECTION AQ105
EMERGENCY ESCAPE AND RESCUE OPENINGS

AQ105.1 General. *Tiny houses* shall meet the requirements of Section R310 for emergency escape and rescue openings.

Exception: *Egress roof access windows* in *lofts* used as sleeping rooms shall be deemed to meet the requirements of Section R310 where installed such that the bottom of the opening is not more than 44 inches (1118 mm) above the *loft* floor, provided the egress roof access window complies with the minimum opening area requirements of Section R310.2.1.

INTERNATIONAL CODE COUNCIL®
Copyright © 2019 ICC & NYSDOS. ALL RIGHTS RESERVED. Accessed by Lauren Gualdino (lgualdino@briarcliffmanor.org), (-) Order Number #100880972 on May 08, 2020 07:05 AM (PDT) pursuant to License Agreement with ICC & NYSDOS. No further reproduction, no

100880972

APPENDIX R
LIGHT STRAW-CLAY CONSTRUCTION

This appendix is informative and is not part of this code.

SECTION AR101
GENERAL

AR101.1 Scope. This appendix shall govern the use of light straw-clay as a nonbearing building material and wall infill system in Seismic Design Categories A and B. Use of light straw-clay in Seismic Design Categories C, D_0, D_1 and D_2 shall require an *approved* engineered design by a registered *design professional* in accordance with Section R301.1.3.

SECTION AR102
DEFINITIONS

AR102.1 General. The following words and terms shall, for the purposes of this appendix, have the meanings shown herein. Refer to Chapter 2 for general definitions.

CLAY. Inorganic soil with particle sizes of less than 0.00008 inch (0.002 mm) having the characteristics of high to very high dry strength and medium to high plasticity.

CLAY SLIP. A suspension of clay subsoil in water.

CLAY SUBSOIL. Subsoil sourced directly from the earth or refined, containing clay and free from organic matter.

INFILL. Light straw-clay that is placed between the structural and nonstructural members of a building.

LIGHT STRAW-CLAY. A mixture of straw and clay slip compacted and dried to form insulation and plaster substrate between or around structural and nonstructural members in a wall.

NONBEARING. Not bearing the weight of the building other than the weight of the light straw-clay itself and its finish.

STRAW. The dry stems of cereal grains after the seed heads have been removed.

VOID. Any space in a light straw-clay wall wider than $^1/_4$ inch (6 mm), greater than 2 inches (51 mm) in horizontal length and greater than 2 inches (51 mm) in depth.

SECTION AR103
NONBEARING LIGHT STRAW-CLAY CONSTRUCTION

AR103.1 General. Light straw-clay shall be limited to infill between or around structural and nonstructural wall framing members.

AR103.2 Structure. The structure of buildings using light straw-clay shall be in accordance with the *International Residential Code* or shall be in accordance with an *approved* design by a registered *design professional*.

AR103.2.1 Number of stories. Use of light straw-clay infill shall be limited to buildings that are not more than one *story above grade plane*.

Exception: Buildings using light straw-clay infill that are greater than one *story above grade plane* shall be in accordance with an approved design by a registered *design professional*.

AR103.2.2 Bracing. Bracing for buildings with light straw-clay infill shall be in accordance with Section R602.10. Walls with light straw-clay infill shall use Method LIB and shall not be sheathed with solid sheathing. Walls without light straw-clay infill shall comply with any bracing method prescribed by this code.

AR103.2.3 Requirements and properties of light straw-clay mixtures. The requirements and properties of light straw-clay mixtures shall be in accordance with Table AR103.2.3.

AR103.2.4 Stabilization of light straw-clay. Light straw-clay shall be stabilized as follows, or shall be in accordance with an *approved* design by a registered *design professional*:

1. Vertical stabilization shall be of structural or nonstructural wood framing in accordance with Figure AR103.2.4(1), AR103.2.4(2) or AR103.2.4(3). Framing members that are both load-bearing and stabilization members shall meet the requirements of Section R602 and this section. Nonstructural stabilization members shall be not more than 32 inches (813 mm) on center.
2. Horizontal stabilization shall be installed at not more than 24 inches (610 mm) on center and in accordance with Figure AR103.2.4(1), AR103.2.4(2) or AR103.2.4(3). Horizontal stabilization shall be of any of the following with the stated minimum dimensions: $^3/_4$-inch (19.1 mm) bamboo, $^1/_2$-inch (12.7 mm) fiberglass rod, 1-inch (25 mm) wood dowel or nominal 1-inch by 2-inch (25 mm by 51 mm) wood.

AR103.3 Materials. The materials used in light straw-clay construction shall be in accordance with Sections AR103.3.1 through AR103.3.3.

AR103.3.1 Straw requirements. Straw shall be stems of wheat, rye, oats, rice or barley, and shall be free of visible decay, insects and green plant material.

INTERNATIONAL CODE COUNCIL®
Copyright © 2019 ICC & NYSDOS. ALL RIGHTS RESERVED. Accessed by Lauren Gualdino (lgualdino@briarcliffmanor.org), (-) Order Number #100880972 on May 08, 2020 07:05 AM (PDT) pursuant to License Agreement with ICC & NYSDOS. No further reproduction, no

100880972

AR103.3.2 Clay subsoil requirements. Suitability of clay subsoil shall be determined in accordance with Table AR103.2.3.

AR103.3.3 Light straw-clay mixture. A light straw-clay mixture shall consist of loose straw mixed and coated with clay slip such that there is not more than 5 percent uncoated straw, and shall be in accordance with Table AR103.2.3.

TABLE AR103.2.3
REQUIREMENTS AND PROPERTIES OF LIGHT STRAW-CLAY MIXTURES[a]

Density (pcf)	Straw (pcf)	Subsoil (pcf)	Water (gal/cf)[b]	Min.% clay in subsoil	Minimum clay: silt ratio	Subsoil testing method[c, d]	Max. wall thickness, inches	R-value (hr/F°/cf/BTU/inch)
10	6.7	3.3	1.55	70	3.5:1	A	15	1.80
12	6.7	5.3	1.63	46	1.7:1	A	15	1.72
13	6.7	6.3	1.67	40	1.33:1	A	15	1.69
15	6.7	8.3	1.74	35	0.95:1	A	15	1.63
20	6.7	13.3	1.93	30	0.60:1	A	12	1.48
30	6.7	23.3	2.31	NA	NA	B	12	1.22
40	6.7	33.3	2.70	NA	NA	B	12	1.01
50	6.7	43.3	3.08	NA	NA	B	12	0.84

©Douglas Piltingsrud and StrawClay.org. Used by permission.

a. Interpolation permitted. Extrapolation not permitted.
b. Water mixed with subsoil equals clay slip.
c. Subsoil Testing Methods:
   A. Lab test for percent of clay, silt and sand via hydrometer method.
   B. Ribbon Test or the Figure 3 Ball Test in the Appendix of ASTM E2392/E2392M.
d. Trace amounts of organic materials are acceptable.

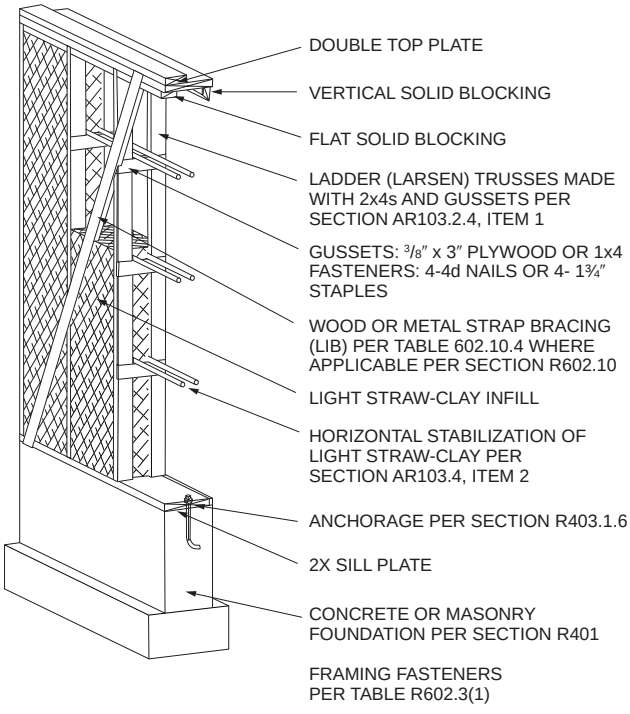

FIGURE AR103.2.4(1)
LIGHT STRAW-CLAY WALL WITH LARSEN TRUSSES

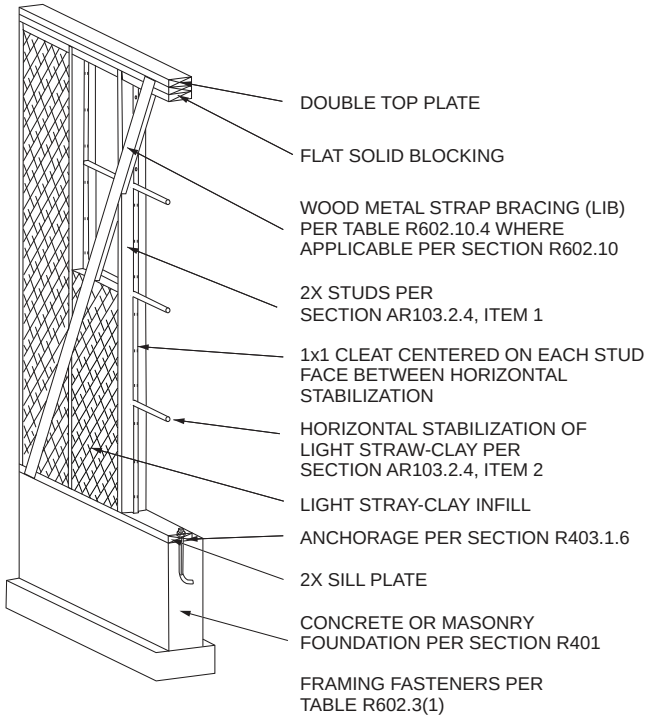

FIGURE AR103.2.4(2)
LIGHT STRAW-CLAY WALL SINGLE STUD WIDTH

INTERNATIONAL CODE COUNCIL®
Copyright © 2019 ICC & NYSDOS. ALL RIGHTS RESERVED. Accessed by Lauren Gualdino (lgualdino@briarcliffmanor.org), (-) Order Number #100880972 on May 08, 2020 07:05 AM (PDT) pursuant to License Agreement with ICC & NYSDOS. No further reproduction, no

100880972

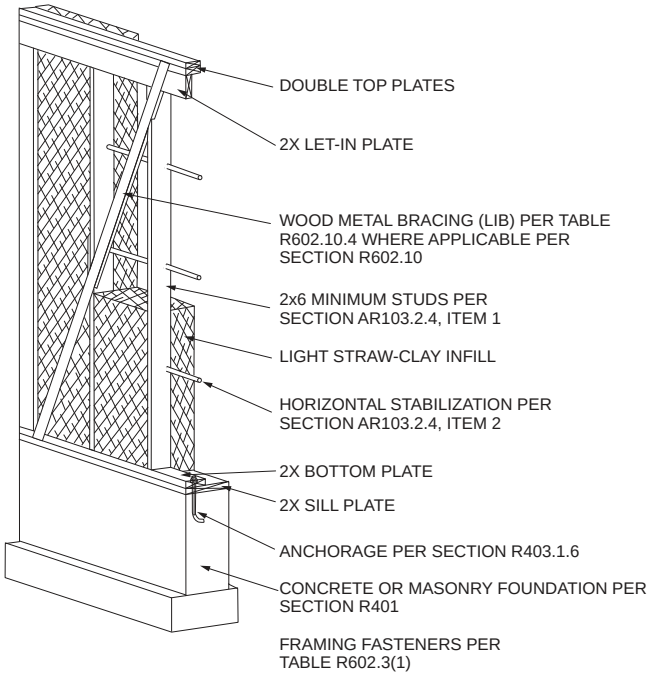

FIGURE AR103.2.4(3)
LIGHT STRAW-CLAY WALL WITH BLIND STUDS

AR103.4 Wall construction. Light straw-clay wall construction shall be in accordance with the requirements of Sections AR103.4.1 through AR103.4.7.

AR103.4.1 Light straw-clay maximum thickness. The maximum thickness of light straw-clay shall be in accordance with Table AR103.2.3.

AR103.4.2 Distance above grade. Light straw-clay and its exterior finish shall be not less than 8 inches (203 mm) above exterior finished *grade*.

AR103.4.3 Moisture barrier. An *approved* moisture barrier shall separate the bottom of light straw-clay walls from any masonry or concrete foundation or slab that directly supports the walls. Penetrations and joints in the barrier shall be sealed with an *approved* sealant.

AR103.4.4 Contact with wood members. Light straw-clay shall be permitted to be in contact with untreated wood members.

AR103.4.5 Contact with nonwood structural members. Nonwood structural members in contact with light straw-clay shall be resistant to corrosion or shall be coated to prevent corrosion with an *approved* coating.

AR103.4.6 Installation. Light straw-clay shall be installed in accordance with the following:

1. Formwork shall be sufficiently strong to resist bowing where the light straw-clay is compacted into the forms.
2. Light straw-clay shall be uniformly placed into forms and evenly tamped to achieve stable walls free of voids. Light straw-clay shall be placed in lifts of not more than 6 inches (152 mm) and shall be thoroughly tamped before additional material is added.
3. Temporary formwork shall be removed from walls within 24 hours after tamping, and walls shall remain exposed until moisture content is in accordance with Section AR103.5.1. Visible voids shall be filled with light straw-clay or other insulative material prior to plastering.

AR103.4.7 Openings in walls. Openings in walls shall be in accordance with the following:

1. Rough framing for doors and windows shall be fastened to structural members in accordance with the *International Residential Code*. Windows and doors shall be flashed in accordance with the *International Residential Code*.
2. An *approved* moisture barrier shall be installed at window sills in light straw-clay walls prior to installation of windows.

AR103.5 Wall finishes. The interior and exterior surfaces of light straw-clay walls shall be protected with a finish in accordance with Sections AR103.5.1 through AR103.5.5.

AR103.5.1 Dimensional stability of light straw-clay prior to application of plaster finish. Light straw-clay infill having a density of 30 pounds per cubic foot (480.6 kg/m^3) or greater shall be dry to a moisture content of not more than 20 percent at a depth of 4 inches (102 mm), as measured from each side of the wall. Light straw-clay infill having a density of less than 30 pounds per cubic foot (480.6 kg/m^3) shall be sufficiently dry such that the overall shrinkage of the light straw-clay is dimensionally stable.

AR103.5.2 Plaster finish. Exterior plaster shall be clay plasters or lime plasters. Interior plasters shall be clay plasters, lime plasters or gypsum plasters. Plasters shall be permitted to be applied directly to the surface of the light straw-clay walls without reinforcement, except that the juncture of dissimilar substrates shall be in accordance with Section AR103.5.4. Plasters shall have a thickness of not less than $^1/_2$ inch (12.7 mm) and not more than 1 inch (25 mm) and shall be installed in not less than two coats. Rain-exposed clay plasters shall be finished with a lime-based or silicate-mineral coating.

AR103.5.3 Separation of wood and plaster. Where wood framing occurs in light straw-clay walls, such wood surfaces shall be separated from exterior plaster with No.15 asphalt felt, Grade D paper or other approved material except where the wood is preservative treated or naturally durable.

Exception: Exterior clay plasters shall not be required to be separated from wood.

AR103.5.4 Bridging across dissimilar substrates. Bridging shall be installed across dissimilar substrates prior to the application of plaster. Acceptable bridging materials include: expanded metal lath, woven wire mesh, welded wire mesh, fiberglass mesh, reed matting or burlap. Bridging shall extend not less than 4 inches (102 mm), on both sides of the juncture.

INTERNATIONAL CODE COUNCIL®
Copyright © 2019 ICC & NYSDOS. ALL RIGHTS RESERVED. Accessed by Lauren Gualdino (lgualdino@briarcliffmanor.org), (-) Order Number #100880972 on May 08, 2020 07:05 AM (PDT) pursuant to License Agreement with ICC & NYSDOS. No further reproduction, no

100880972

AR103.5.5 Exterior cladding. Exterior cladding shall be spaced not less than $^1/_2$ inch (12.7 mm) from the light straw-clay such that a ventilation space is created to allow for moisture diffusion. Furring strips that create this ventilation space shall be securely fastened to the stabilization members or framing. The cladding shall be fastened to the wood furring strips in accordance with the manufacturer's instructions. Insect screening shall be provided at the top and bottom of the ventilation space.

SECTION AR104
THERMAL PERFORMANCE

AR104.1 Thermal characteristics. Walls with light straw-clay infill of densities of greater than or equal to 20 pounds per cubic foot (480.6 kg/m^3) shall be classified as mass walls in accordance with Section N1102.2.5 (R402.2.5) and shall meet the R-value requirements for mass walls in Table N1102.1.2 (R402.1.2). Walls with light straw-clay infill of densities less than 20 pounds per cubic foot (480.6 kg/m^3) shall meet the R-value requirements for wood frame walls in Table N1102.1.2 (R402.1.2).

AR104.2 Thermal resistance. Light straw-clay shall be deemed to have a thermal resistance as specified in Table AR103.2.3.

SECTION AR105
REFERENCED STANDARDS

ASTM E2392/ E2392M—10	Standard Guide for Design of Earthen Wall Building Systems	AR103.3.2

INTERNATIONAL CODE COUNCIL®
Copyright © 2019 ICC & NYSDOS. ALL RIGHTS RESERVED. Accessed by Lauren Gualdino (lgualdino@briarcliffmanor.org), (-) Order Number #100880972 on May 08, 2020 07:05 AM (PDT) pursuant to License Agreement with ICC & NYSDOS. No further reproduction, no

100880972

APPENDIX S
STRAWBALE CONSTRUCTION

This appendix is informative and is not part of this code.

SECTION AS101
GENERAL

AS101.1 Scope. This appendix provides prescriptive and performance-based requirements for the use of baled *straw* as a building material. Other methods of *strawbale* construction shall be subject to approval in accordance with Section R104.3 of this code. *Buildings* using *strawbale* walls shall comply with this code except as otherwise stated in this appendix.

AS101.2 Strawbale wall systems. *Strawbale* wall systems include those shown in Figure AS101.2 and *approved* variations.

SECTION AS102
DEFINITIONS

AS102.1 Definitions. The following words and terms shall, for the purposes of this appendix, have the meanings shown herein. Refer to Chapter 2 of the *International Residential Code* for general definitions.

BALE. Equivalent to *straw bale.*

CLAY. Inorganic soil with particle sizes less than 0.00008 inch (0.002 mm) having the characteristics of high to very high dry strength and medium to high plasticity.

CLAY SLIP. A suspension of *clay subsoil* in water.

CLAY SUBSOIL. Subsoil sourced directly from the earth or refined, containing *clay* and free of organic matter.

FINISH. Completed compilation of materials on the interior or exterior faces of stacked *bales*.

FLAKE. An intact section of compressed *straw* removed from an untied *bale*.

LAID FLAT. The orientation of a *bale* with its largest faces horizontal, its longest dimension parallel with the wall plane, its *ties* concealed in the unfinished wall and its *straw* lengths oriented predominantly across the thickness of the wall. See Figure AS102.1.

LOAD-BEARING WALL. A *strawbale* wall that supports more than 100 pounds per linear foot (1459 N/m) of vertical load in addition its own weight.

MESH. An openwork fabric of linked strands of metal, plastic, or natural or synthetic fiber.

NONSTRUCTURAL WALL. Walls other than *load-bearing* walls or shear walls.

ON-EDGE. The orientation of a *bale* with its largest faces vertical, its longest dimension parallel with the wall plane, its *ties* on the face of the wall and its *straw* lengths oriented predominantly vertically. See Figure AS102.1.

ON-END. The orientation of a *bale* with its longest dimension vertical. For use in *nonstructural strawbale* walls only. See Figure AS102.1.

PIN. A vertical metal rod, wood dowel or bamboo, driven into the center of stacked *bales*, or placed on opposite surfaces of stacked *bales* and through-tied.

PLASTER. Gypsum plaster, cement plaster, *clay* plaster, soil-cement plaster, lime plaster or cement-lime plaster as described in Section AS104.

PRECOMPRESSION. Vertical compression of stacked *bales* before the application of finish.

REINFORCED PLASTER. A *plaster* containing mesh reinforcement.

RUNNING BOND. The placement of *straw bales* such that the head joints in successive courses are offset not less than one-quarter the bale length.

SHEAR WALL. A *strawbale* wall designed and constructed to resist lateral seismic and wind forces parallel to the plane of the wall in accordance with Section AS106.13.

SKIN. The compilation of *plaster* and reinforcing, if any, applied to the surface of stacked *bales*.

STRUCTURAL WALL. A wall that meets the definition for a *load-bearing* wall or shear wall.

STACK BOND. The placement of *straw bales* such that head joints in successive courses are vertically aligned.

STRAW. The dry stems of cereal grains after the seed heads have been removed.

STRAW BALE. A rectangular compressed block of *straw*, bound by *ties*.

STRAWBALE. The adjective form of *straw bale*.

STRAW-CLAY. Loose *straw* mixed and coated with *clay* slip.

TIE. A synthetic fiber, natural fiber or metal wire used to confine a *straw bale*.

TRUTH WINDOW. An area of a *strawbale* wall left without its finish, to allow view of the *straw* otherwise concealed by its finish.

SECTION AS103
BALES

AS103.1 Shape. *Bales* shall be rectangular in shape.

AS103.2 Size. *Bales* shall have a height and thickness of not less than 12 inches (305 mm), except as otherwise permitted or required in this appendix. *Bales* used within a continuous wall shall be of consistent height and thickness to ensure even distribution of loads within the wall system. See Figure

INTERNATIONAL CODE COUNCIL®
Copyright © 2019 ICC & NYSDOS. ALL RIGHTS RESERVED. Accessed by Lauren Gualdino (lgualdino@briarcliffmanor.org), (-) Order Number #100880972 on May 08, 2020 07:05 AM (PDT) pursuant to License Agreement with ICC & NYSDOS. No further reproduction, no

100880972

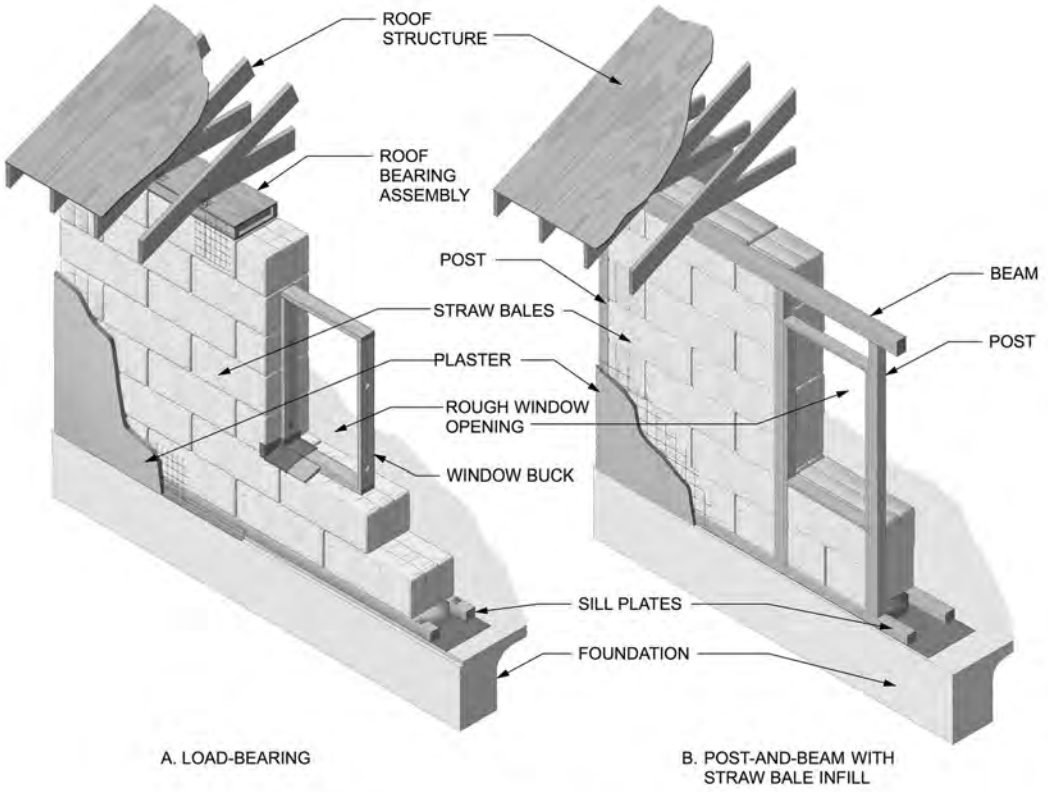

NOTE: SEE FIGURES AS105.1(1) THROUGH AS105.1(4) FOR DETAILED VIEWS AND SECTION REFERENCES. OTHER STRAWBALE WALL SYSTEMS OR VARIATIONS ARE PERMITTED AS *APPROVED*.

FIGURE AS101.2
TYPICAL STRAWBALE WALL SYSTEMS

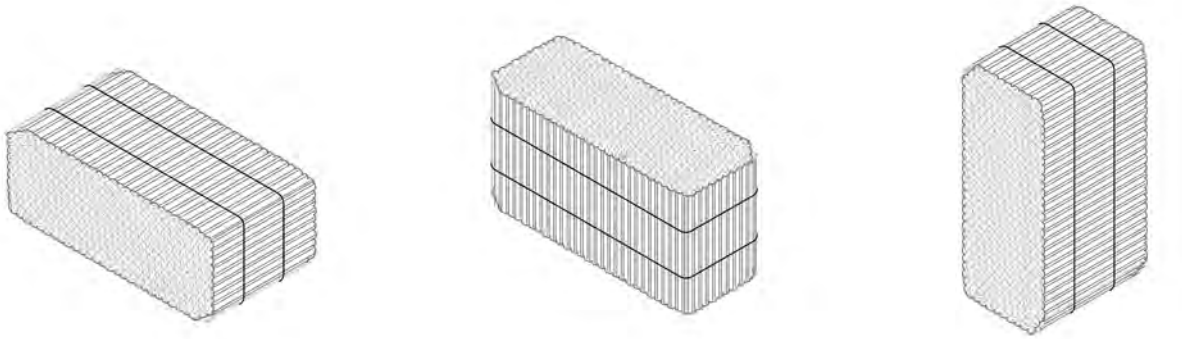

NOTE: ILLUSTRATIONS ALSO SHOW THE PREDOMINANT DIRECTION OF THE LENGTHS OF STRAW IN A TYPICAL STRAW BALE. HOWEVER, SOME RANDOMNESS OF DIRECTION IS NORMAL.

For SI: 1 inch - 25.4 mm.

FIGURE AS102.1
BALE ORIENTATIONS

INTERNATIONAL CODE COUNCIL®
Copyright © 2019 ICC & NYSDOS. ALL RIGHTS RESERVED. Accessed by Lauren Gualdino (lgualdino@briarcliffmanor.org), (-) Order Number #100880972 on May 08, 2020 07:05 AM (PDT) pursuant to License Agreement with ICC & NYSDOS. No further reproduction, no

100880972

AS103.2 for approximate dimensions of common *straw bales*.

AS103.3 Ties. *Bales* shall be confined by synthetic fiber, natural fiber or metal *ties* sufficient to maintain required *bale* density. *Ties* shall be not less than 3 inches (76 mm) and not more than 6 inches (152 mm) from the two faces without *ties* and shall be spaced not more than 12 inches (305 mm) apart. *Bales* with broken *ties* shall be retied with sufficient tension to maintain required bale density.

AS103.4 Moisture content. The moisture content of *bales* at the time of application of the first coat of *plaster* or the installation of another finish shall not exceed 20 percent of the weight of the *bale*. The moisture content of *bales* shall be determined with a moisture meter designed for use with *baled straw* or hay, equipped with a probe of sufficient length to reach the center of the *bale*. Not less than 5 percent and not fewer than 10 bales shall be randomly selected and tested.

AS103.5 Density. *Bales* shall have a dry density of not less than 6.5 pounds per cubic foot (104 kg/cubic meter). The dry density shall be calculated by subtracting the weight of the moisture in pounds (kg) from the actual *bale* weight and dividing by the volume of the *bale* in cubic feet (cubic meters). Not less than 2 percent and not fewer than five *bales* shall be randomly selected and tested on site.

AS103.6 Partial bales. Partial *bales* made after original fabrication shall be retied with *ties* complying with Section AS103.3.

AS103.7 Types of straw. *Bales* shall be composed of *straw* from wheat, rice, rye, barley or oat.

AS103.8 Other baled material. The dry stems of other cereal grains shall be acceptable where *approved* by the building official.

SECTION AS104
FINISHES

AS104.1 General. Finishes applied to *strawbale* walls shall be any type permitted by this code, and shall comply with this section and with Chapters 3 and 7 unless stated otherwise in this section.

AS104.2 Purpose, and where required. *Strawbale* walls shall be finished so as to provide mechanical protection, fire resistance and protection from weather and to restrict the passage of air through the *bales*, in accordance with this appendix and this code. Vertical *strawbale* wall surfaces shall receive a coat of *plaster* not less than $^3/_8$ inch (10 mm) thick, or greater where required elsewhere in this appendix, or shall fit tightly against a solid wall panel or dense-packed cellulose insulation with a density of not less than 3.5 pounds per cubic foot (56 kg/m^3) blown into an adjacent framed wall. The tops of *strawbale* walls shall receive a coat of *plaster* not less than $^3/_8$ inch (10 mm) thick where *straw* would otherwise be exposed.

Exception: *Truth windows* shall be permitted where a fire-resistance rating is not required. Weather-exposed *truth windows* shall be fitted with a weather-tight cover. Interior truth windows in Climate Zones 5, 6, 7, 8 and Marine 4 shall be fitted with an air-tight cover.

AS104.3 Vapor retarders. Class I and II vapor retarders shall not be used on a *strawbale wall*, nor shall any other material be used that has a vapor permeance rating of less than 3 perms, except as permitted or required elsewhere in this appendix.

AS104.4 Plaster. *Plaster* applied to *bales* shall be any type described in this section, and as required or limited in this appendix. *Plaster* thickness shall not exceed 2 inches (51 mm).

AS104.4.1 Plaster and membranes. *Plaster* shall be applied directly to *strawbale* walls to facilitate transpiration of moisture from the *bales*, and to secure a mechanical bond between the *skin* and the *bales*, except where a membrane is allowed or required elsewhere in this appendix.

AS104.4.2 Lath and mesh for plaster. The surface of the *straw bales* functions as lath, and other lath or *mesh* shall not be required, except as required for out-of-plane resistance by Table AS105.4 or for structural walls by Tables AS106.12 and AS106.13(1).

AS104.4.3 Clay plaster. *Clay plaster* shall comply with Sections AS104.4.3.1 through AS104.4.3.6.

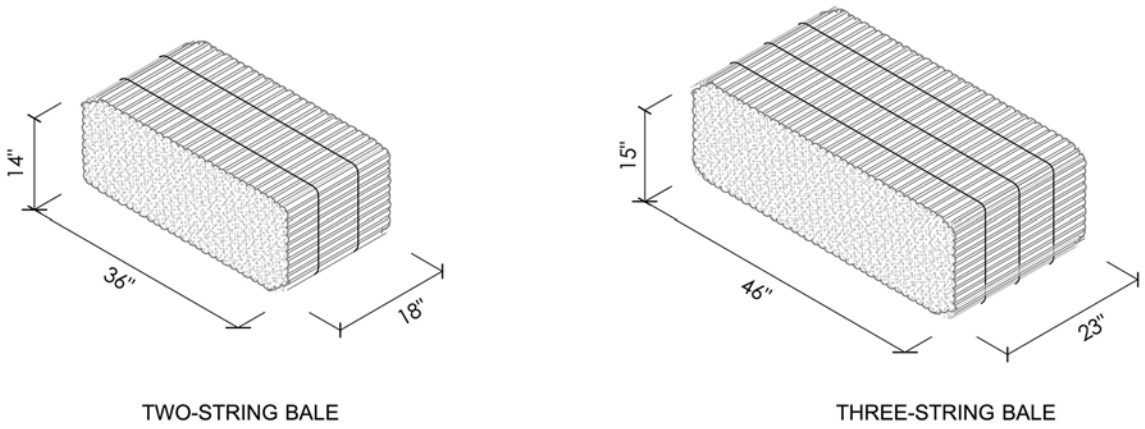

FIGURE AS103.2
APPROXIMATE DIMENSIONS OF COMMON STRAW BALES

INTERNATIONAL CODE COUNCIL®
Copyright © 2019 ICC & NYSDOS. ALL RIGHTS RESERVED. Accessed by Lauren Gualdino (lgualdino@briarcliffmanor.org), (-) Order Number #100880972 on May 08, 2020 07:05 AM (PDT) pursuant to License Agreement with ICC & NYSDOS. No further reproduction, no

100880972

AS104.4.3.1 General. *Clay plaster* shall be any plaster having a clay or *clay subsoil* binder. Such plaster shall contain sufficient clay to fully bind the sand or other inert granular material, and shall be permitted to contain reinforcing fibers. Acceptable reinforcing fibers include chopped straw, sisal and animal hair.

AS104.4.3.2 Clay subsoil requirements. The suitability of *clay subsoil* shall be determined in accordance with the Figure 2 Ribbon Test or the Figure 3 Ball Test in the appendix of ASTM E2392/E2392M.

AS104.4.3.3 Thickness and coats. *Clay plaster* shall be not less than 1 inch (25 mm) thick, except where required to be thicker for structural walls as described elsewhere in this appendix, and shall be applied in not less than two coats.

AS104.4.3.4 Rain-exposed. *Clay plaster,* where exposed to rain, shall be finished with lime wash, lime plaster, linseed oil or other *approved* erosion-resistant finish.

AS104.4.3.5 Prohibited finish coat. *Plaster* containing Portland cement shall not be permitted as a finish coat over *clay plasters.*

AS104.4.3.6 Plaster additives. Additives shall be permitted to increase *plaster* workability, durability, strength or water resistance.

AS104.4.4 Soil-cement plaster. Soil-cement plaster shall comply with Sections AS104.4.4.1 through AS104.4.4.3.

AS104.4.4.1 General. Soil-cement *plaster* shall be composed of *clay subsoil*, sand and not less than 10 percent and not more than 20 percent Portland cement by volume, and shall be permitted to contain reinforcing fibers.

AS104.4.4.2 Lath and mesh. Soil-cement *plaster* shall use any corrosion-resistant lath or *mesh* permitted by this code, or as required in Section AS106 where used on structural walls.

AS104.4.4.3 Thickness. Soil-cement *plaster* shall be not less than 1 inch (25 mm) thick.

AS104.4.5 Gypsum plaster. Gypsum *plaster* shall comply with Section R702.2.1. Gypsum *plaster* shall be limited to use on interior surfaces of *nonstructural* walls, and as an interior *finish* coat over a structural *plaster* that complies with this appendix.

AS104.4.6 Lime plaster. Lime *plaster* shall comply with Sections AS104.4.6.1 through AS104.4.6.3.

AS104.4.6.1 General. Lime *plaster* is any *plaster* with a binder that is composed of calcium hydroxide (CaOH) including Type N or S hydrated lime, hydraulic lime, natural hydraulic lime or quicklime. Hydrated lime shall comply with ASTM C206. Hydraulic lime shall comply with ASTM C1707. Natural hydraulic lime shall comply with ASTM C141 and EN 459. Quicklime shall comply with ASTM C5.

AS104.4.6.2 Thickness and coats. Lime *plaster* shall be not less than $^{7}/_{8}$ inch (22 mm) thick, and shall be applied in not less than three coats.

AS104.4.6.3 On structural walls. Lime *plaster* on *strawbale* structural walls in accordance with Table AS106.12 or Table AS106.13(1) shall use a binder of hydraulic or natural hydraulic lime.

AS104.4.7 Cement-lime plaster. Cement-lime plaster shall be *plaster* mixes CL, F or FL, as described in ASTM C926.

AS104.4.8 Cement plaster. Cement *plaster* shall conform to ASTM/C926 and shall comply with Sections R703.7.4 and R703.7.5, except that the amount of lime in plaster coats shall be not less than 1 part lime to 6 parts cement to allow a minimum acceptable vapor permeability. The combined thickness of *plaster* coats shall be not more than $1^{1}/_{2}$ inches (38 mm) thick.

SECTION AS105
STRAWBALE WALLS—GENERAL

AS105.1 General. *Strawbale walls* shall be designed and constructed in accordance with this section and with Figures AS105.1(1) through AS105.1(4) or an *approved* alternative design. *Strawbale structural walls* shall be in accordance with the additional requirements of Section AS106.

AS105.2 Building limitations and requirements for use of strawbale nonstructural walls. *Buildings* using *strawbale nonstructural walls* shall be subject to the following limitations and requirements:

1. Number of stories: not more than one, except that two stories shall be allowed with an *approved* engineered design.
2. *Building* height: not more than 25 feet (7620 mm), except that greater heights shall be allowed with an *approved* engineered design.
3. Wall height: in accordance with Table AS105.4.
4. Braced wall panel lengths: in accordance with Section R602.10.3, with the additional requirements that Table R602.10.3(3) shall apply to all *buildings* in Seismic Design Category C, and the minimum total length of braced wall panels in Table R602.10.3(3) shall be increased by 60 percent for *buildings* in Seismic Design Categories C, D_0, D_1 and D_2.

AS105.3 Sill plates. Sill plates shall be installed in accordance with Figure AS105.1(1) or AS105.1(2). Sill plates shall support and be flush with each face of the *straw bales* above and shall be of naturally durable or preservative-treated wood where required by this code. Sill plates shall be not less than nominal 2 inches by 4 inches (51 mm by 102 mm) with anchoring complying with Section R403.1.6 and the additional requirements of Tables AS105.4 and AS106.6(1), where applicable.

AS105.3.1 Exterior sill plate flashing. Exterior sill plates shall receive flashing across the plate to slab or foundation joints.

AS105.4 Out-of-plane resistance methods and unrestrained wall dimension limits. *Strawbale* walls shall employ a method of out-of-plane load resistance in accor-

INTERNATIONAL CODE COUNCIL®
Copyright © 2019 ICC & NYSDOS. ALL RIGHTS RESERVED. Accessed by Lauren Gualdino (lgualdino@briarcliffmanor.org), (-) Order Number #100880972 on May 08, 2020 07:05 AM (PDT) pursuant to License Agreement with ICC & NYSDOS. No further reproduction, no

100880972

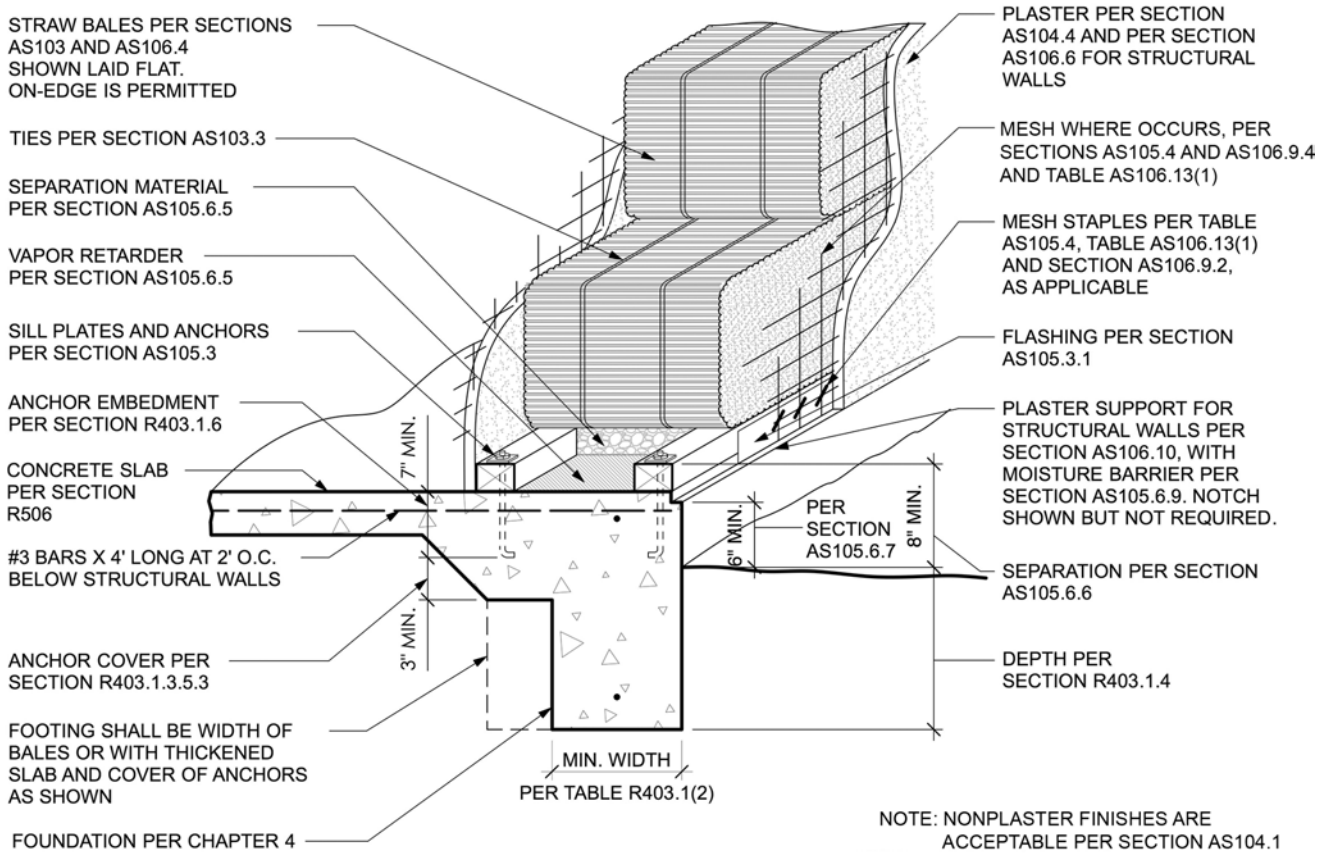

For SI: 1 inch = 25.4 mm.

FIGURE AS105.1(1)
TYPICAL BASE OF PLASTERED STRAWBALE WALL ON CONCRETE SLAB AND FOOTING

INTERNATIONAL CODE COUNCIL®
Copyright © 2019 ICC & NYSDOS. ALL RIGHTS RESERVED. Accessed by Lauren Gualdino (lgualdino@briarcliffmanor.org), (-) Order Number #100880972 on May 08, 2020 07:05 AM (PDT) pursuant to License Agreement with ICC & NYSDOS. No further reproduction, no

100880972

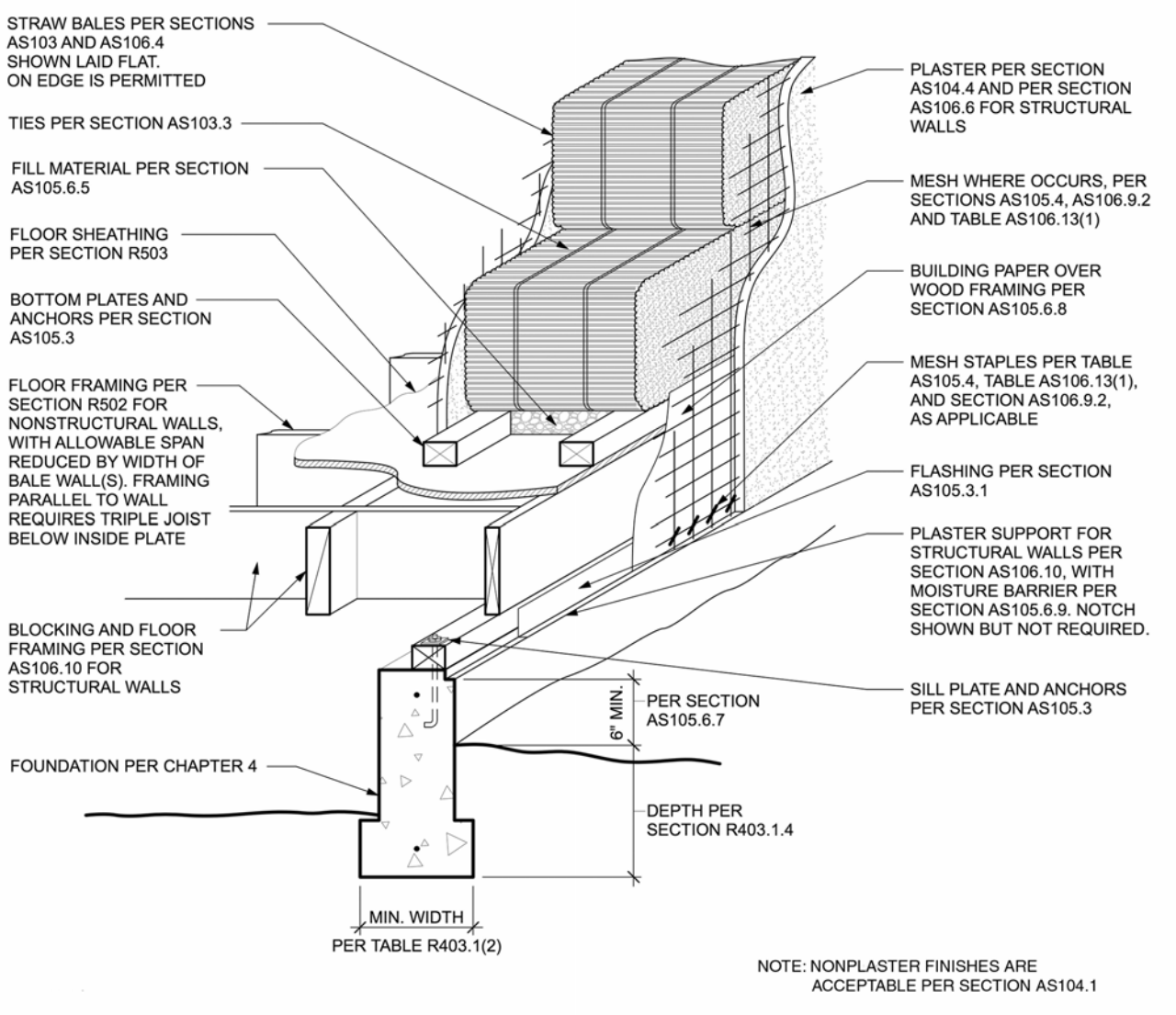

For SI: 1 inch = 25.4 mm.

FIGURE AS105.1(2)
TYPICAL BASE OF PLASTERED STRAWBALE WALL OVER RAISED FLOOR

INTERNATIONAL CODE COUNCIL®
Copyright © 2019 ICC & NYSDOS. ALL RIGHTS RESERVED. Accessed by Lauren Gualdino (lgualdino@briarcliffmanor.org), (-) Order Number #100880972 on May 08, 2020 07:05 AM (PDT) pursuant to License Agreement with ICC & NYSDOS. No further reproduction, no

100880972

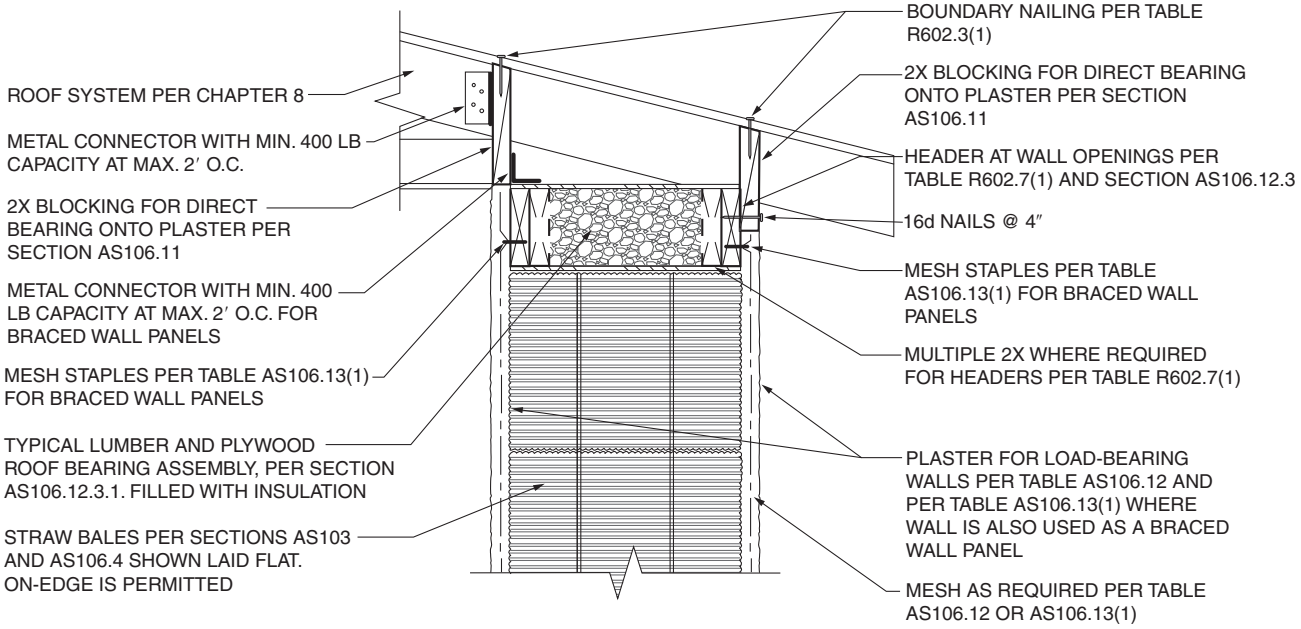

For SI: 1 inch = 25.4 mm, 1 pound = 2.2 kg.

FIGURE AS105.1(3)
TYPICAL TOP OF LOAD-BEARING STRAWBALE WALL

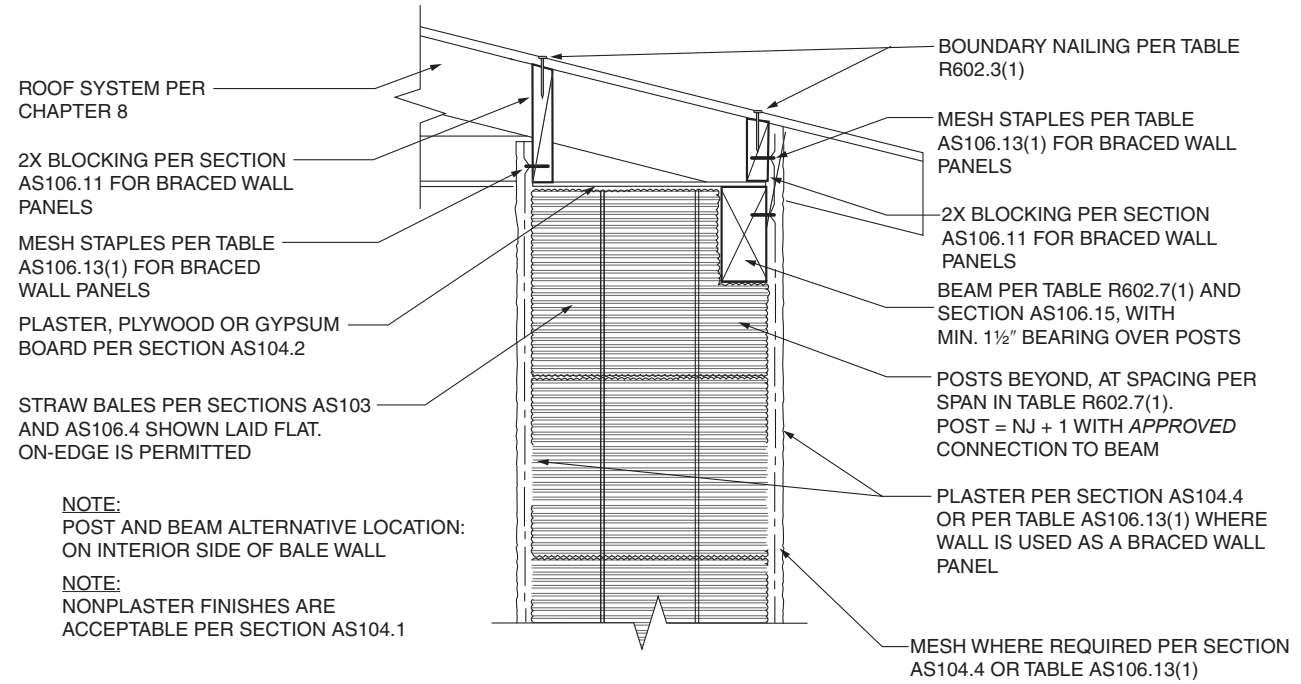

For SI: 1 inch = 25.4 mm.

FIGURE AS105.1(4)
TYPICAL TOP OF POST-AND-BEAM WALL WITH PLASTERED STRAWBALE INFILL

INTERNATIONAL CODE COUNCIL®
Copyright © 2019 ICC & NYSDOS. ALL RIGHTS RESERVED. Accessed by Lauren Gualdino (lgualdino@briarcliffmanor.org), (-) Order Number #100880972 on May 08, 2020 07:05 AM (PDT) pursuant to License Agreement with ICC & NYSDOS. No further reproduction, no

100880972

dance with Table AS105.4, and comply with its associated limits and requirements.

AS105.4.1 Determination of out-of-plane loading. Out-of-plane loading for the use of Table AS105.4 shall be in terms of the ultimate design wind speed and seismic design category as determined in accordance with Sections R301.2.1 and R301.2.2.

AS105.4.2 Pins. *Pins* used for out-of-plane resistance shall comply with the following or shall be in accordance with an *approved* engineered design. *Pins* shall be external, internal or a combination of the two.

1. *Pins* shall be $^1/_2$-inch-diameter (12.7 mm) steel, $^3/_4$-inch-diameter (19.1 mm) wood or $^1/_2$-inch-diameter (12.7 mm) bamboo.
2. External *pins* shall be installed vertically on both sides of the wall at a spacing of not more than 24 inches (610 mm) on center. External *pins* shall have full lateral bearing on the sill plate and the top plate or roof-bearing element, and shall be tightly tied through the wall to an opposing *pin* with *ties* spaced not more than 32 inches (813 mm) apart and not more than 8 inches (203 mm) from each end of the *pins*.
3. Internal *pins* shall be installed vertically within the center third of the *bales*, at spacing of not more than 24 inches (610 mm) and shall extend from top course to bottom course. The bottom course shall be connected to its support and the top course shall be connected to the roof- or floor-bearing member above with *pins* or other *approved* means. Internal *pins* shall be continuous or shall overlap through not less than one *bale* course.

AS105.5 Connection of light-framed walls to strawbale walls. *Light-framed* walls perpendicular to, or at an angle to a

TABLE AS105.4
OUT-OF-PLANE RESISTANCE METHODS AND UNRESTRAINED WALL DIMENSION LIMITS

METHOD OF OUT-OF-PLANE LOAD RESISTANCE[a]	FOR ULTIMATE DESIGN WIND SPEEDS (mph)	FOR SEISMIC DESIGN CATEGORIES	UNRESTRAINED WALL DIMENSIONS, H[b]		MESH STAPLE SPACING AT BOUNDARY RESTRAINTS
			Absolute limit in feet	Limit based on bale thickness T[c] in feet (mm)	
Nonplaster finish or unreinforced plaster	≤ 130	A, B, C, D_0	$H \le 8$	$H \le 5T$	None required
Pins per Section AS105.4.2	≤ 130	A, B, C, D_0	$H \le 12$	$H \le 8T$	None required
Pins per Section AS105.4.2	≤ 140	A, B, C, D_0, D_1, D_2	$H \le 10$	$H \le 7T$	None required
Reinforced[d] clay plaster	≤ 140	A, B, C, D_0, D_1, D_2	$H \le 10$	$H \le 8T^{0.5}$ ($H \le 140T^{0.5}$)	≤ 6 inches
Reinforced[d] clay plaster	≤ 140	A, B, C, D_0, D_1, D_2	$10 < H \le 12$	$H \le 8T^{0.5}$ ($H \le 140T^{0.5}$)	≤ 4 inches[e]
Reinforced[d] cement, cement-lime, lime or soil-cement plaster	≤ 140	A, B, C, D_0, D_1, D_2	$H \le 10$	$H \le 9T^{0.5}$ ($H \le 157T^{0.5}$)	≤ 6 inches
Reinforced[d] cement, cement-lime, lime or soil-cement plaster	≤ 155	A, B, C, D_0, D_1, D_2	$H \le 12$	$H \le 9T^{0.5}$ ($H \le 157T^{0.5}$)	≤ 4 inches[e]
2x6 load-bearing studs[f] at max. 6′ o.c.	≤ 140	A, B, C, D_0, D_1, D_2	$H^g \le 9$	N/A	None required
2x6 load-bearing studs[f] at max. 4′ o.c.	≤ 140	A, B, C, D_0, D_1, D_2	$H^g \le 10$	N/A	None required
2x6 load-bearing studs[f] at max. 2′ o.c.	≤ 140	A, B, C, D_0, D_1, D_2	$H^g \le 12$	N/A	None required
2x4 load-bearing studs[f] at max. 2′ o.c.	≤ 140	A, B, C, D_0, D_1, D_2	$H^g \le 10$	N/A	None required
2x6 nonload-bearing studs[f] at max. 6′ o.c.	≤ 140	A, B, C, D_0, D_1, D_2	$H^g \le 12$	N/A	None required

For SI: 1 inch = 25.4 mm, 1 foot = 304.8 mm, 1 mile per hour = 0.447 m/s.

N/A = Not Applicable

a. Finishes applied to both sides of stacked bales. Where different finishes are used on opposite sides of a wall, the more restrictive requirements shall apply.

b. H = Stacked bale height in feet (mm) between sill plate and top plate or other approved horizontal restraint, or the horizontal distance in feet (mm) between *approved* vertical restraints. For load-bearing walls, H refers to vertical height only.

c. T = Bale thickness in feet (mm).

d. Plaster reinforcement shall be any mesh allowed in Table AS106.16 for the matching plaster type, and with staple spacing in accordance with this table. Mesh shall be installed in accordance with Section AS106.9.

e. Sill plate attachment shall be with $^5/_8$-inch anchor bolts or approved equivalent at not more than 48 inches on center where staple spacing is required to be ≤ 4 inches.

f. Bales shall be attached to the studs by an approved method. Horizontal framing and attachment at top and bottom of studs shall be in accordance with Section R602 or an *approved* alternative. Table R602.7(1) shall be used to determine the top framing member where load-bearing stud spacing exceeds 24 inches o.c.

g. H is vertical height only.

INTERNATIONAL CODE COUNCIL®
Copyright © 2019 ICC & NYSDOS. ALL RIGHTS RESERVED. Accessed by Lauren Gualdino (lgualdino@briarcliffmanor.org), (-) Order Number #100880972 on May 08, 2020 07:05 AM (PDT) pursuant to License Agreement with ICC & NYSDOS. No further reproduction, no

100880972

strawbale wall assembly, shall be fastened to the bottom and top wood members of the *strawbale* wall in accordance with requirements for wood or cold-formed steel *light-framed* walls in this code, or the abutting stud shall be connected to alternating *strawbale* courses with a $^1/_2$-inch diameter (12.7 mm) steel, $^3/_4$-inch-diameter (19.1 mm) wood or $^5/_8$-inch-diameter (15.9 mm) bamboo dowel, with not less than 8-inch (203 mm) penetration.

AS105.6 Moisture control. *Strawbale* walls shall be protected from moisture intrusion and damage in accordance with Sections AS105.6.1 through AS105.6.9.

AS105.6.1 Water-resistant barriers and vapor permeance ratings. *Plastered bale* walls shall be constructed without any membrane barrier between *straw* and *plaster* to facilitate transpiration of moisture from the *bales*, and to secure a structural bond between *straw* and *plaster*, except as permitted or required elsewhere in this appendix. Where a water-resistant barrier is placed behind an exterior finish, it shall have a vapor permeance rating of not less than 5 perms, except as permitted or required elsewhere in this appendix.

AS105.6.2 Vapor retarders. Wall *finishes* shall have an equivalent vapor permeance rating of a Class III vapor retarder on the interior side of exterior *strawbale walls* in Climate Zones 5, 6, 7, 8 and Marine 4, as defined in Chapter 11. *Bales* in walls enclosing showers or steam rooms shall be protected on the interior side by a Class I or Class II vapor retarder.

AS105.6.3 Penetrations in exterior strawbale walls. Penetrations in exterior *strawbale* walls shall be sealed with an *approved* sealant or gasket on the exterior side of the wall in all climate zones, and on the interior side of the wall in Climate Zones 5, 6, 7, 8 and Marine 4, as defined in Chapter 11.

AS105.6.4 Horizontal surfaces. *Bale* walls and other *bale* elements shall be provided with a water-resistant barrier at weather-exposed horizontal surfaces. The water-resistant barrier shall be of a material and installation that will prevent water from entering the wall system. Horizontal surfaces shall include exterior window sills, sills at exterior niches and buttresses. Horizontal surfaces shall be sloped not less than 1 unit vertical in 12 units horizontal (8-percent slope) and shall drain away from *bale* walls and elements. Where the water-resistant barrier is below the finish material, it shall be sloped not less than 1 unit vertical in 12 units horizontal (8-percent slope) and shall drain to the outside surface of the *bale* wall's vertical finish.

AS105.6.5 Separation of bales and concrete. A sheet or liquid-applied Class II *vapor retarder* shall be installed between bales and supporting concrete or masonry. The bales shall be separated from the vapor retarder by not less than $^3/_4$ inch (19.1 mm), and that space shall be filled with an insulating material such as wood or rigid insulation, or a material that allows vapor dispersion such as gravel, or other approved insulating or vapor dispersion material. Sill plates shall be installed at this interface in accordance with Section AS105.3. Where bales abut a concrete or masonry wall that retains earth, a Class II vapor retarder shall be provided between such wall and the bales.

AS105.6.6 Separation of bales and earth. *Bales* shall be separated from earth by not less than 8 inches (203 mm).

AS105.6.7 Separation of exterior plaster and earth. Exterior plaster applied to *straw bales* shall be located not less than 6 inches (102 mm) above earth or 3 inches (51 mm) above paved areas.

AS105.6.8 Separation of wood and plaster. Where wood framing or wood sheathing occurs at the exterior face of *strawbale* walls, such wood surfaces shall be separated from exterior plaster with two layers of Grade D paper, No. 15 asphalt felt or other *approved* material in accordance with Section R703.7.3.

Exceptions:

1. Where the wood is preservative treated or *naturally durable* and is not greater than $1^1/_2$ inches (38 mm) in width.
2. Clay plaster shall not be required to be separated from untreated wood that is not greater than $1^1/_2$ inches (38 mm) in width.

AS105.6.9 Separation of exterior plaster and foundation. Exterior plaster shall be separated from the building foundation with a moisture barrier.

AS105.7 Inspections. The *building official* shall inspect the following aspects of *strawbale* construction in accordance with Section R105.3:

1. Sill plate anchors, as part of and in accordance with Section R105.3.
2. Mesh placement and attachment, where mesh is required by this appendix.
3. *Pins*, where required by and in accordance with Section AS105.4.

AS105.8 Voids and stuffing. Voids between *bales* and between *bales* and framing members shall not exceed 4 inches (102 mm) in width, and such voids shall be tightly stuffed with *flakes*, loose straw or *straw-clay* before application of finish.

SECTION AS106
STRAWBALE WALLS—STRUCTURAL

AS106.1 General. Plastered *strawbale* walls shall be permitted to be used as structural walls in accordance with the prescriptive provisions of this section.

AS106.2 Building limitations and requirements for use of strawbale structural walls. *Buildings* using strawbale *structural* walls shall be subject to the following limitations and requirements:

1. Number of stories: Not more than one.
2. *Building* height: Not more than 25 feet (7620 mm).
3. Wall height: In accordance with Table AS105.4, AS106.13(2) or AS106.13(3) as applicable, whichever is most restrictive.

INTERNATIONAL CODE COUNCIL®
Copyright © 2019 ICC & NYSDOS. ALL RIGHTS RESERVED. Accessed by Lauren Gualdino (lgualdino@briarcliffmanor.org), (-) Order Number #100880972 on May 08, 2020 07:05 AM (PDT) pursuant to License Agreement with ICC & NYSDOS. No further reproduction, no

100880972

4. Braced wall panel lengths: The greater of the values determined in accordance with Tables AS106.13(2) and AS106.13(3) for *buildings* using strawbale braced wall panels, or in accordance with Item 4 of Section AS105.2 for *buildings* with *load-bearing strawbale walls* that do not use *strawbale* braced wall panels.

AS106.3 Loads and other limitations. Live and dead loads and other limitations shall be in accordance with Section R301. *Strawbale* wall dead loads shall not exceed 60 psf (2872 N/m^2) per face area of wall.

AS106.4 Foundations. Foundations for plastered *strawbale* walls shall be in accordance with Chapter 4, Figure AS105.1(1) or Figure AS105.1(2).

AS106.5 Configuration of bales. *Bales* in *strawbale* structural walls shall be laid flat or on-edge and in a running bond or stack bond, except that bales in structural walls with unreinforced plasters shall be laid in a running bond only.

AS106.6 Plaster on structural walls. Plaster on *load-bearing* walls shall be in accordance with Table AS106.12. Plaster on shear walls shall be in accordance with Table AS106.13(1).

AS106.6.1 Compressive strength. For plaster on *strawbale* structural walls, the *building official* is authorized to require a 2-inch (51mm) cube test conforming to ASTM C109 to demonstrate a minimum compressive strength in accordance with Table AS106.6.1.

TABLE AS106.6.1
MINIMUM COMPRESSIVE STRENGTH FOR PLASTERS ON STRUCTURAL WALLS

PLASTER TYPE	MINIMUM COMPRESSIVE STRENGTH (psi)
Clay	100
Soil-cement	1000
Lime	600
Cement-lime	1000
Cement	1400

For SI: 1 pound per square inch = 6894.76 N/m^2.

AS106.7 Straightness of plaster. Plaster on *strawbale* structural walls shall be straight, as a function of the bale wall surfaces they are applied to, in accordance with all of the following:

1. As measured across the face of a *bale*, *straw* bulges shall not protrude more than $^3/_4$ inch (19.1 mm) across 2 feet (610 mm) of its height or length.
2. As measured across the face of a *bale* wall, *straw* bulges shall not protrude from the vertical plane of a *bale* wall more than 2 inches (51 mm) over 8 feet (2438 mm).
3. The vertical faces of adjacent *bales* shall not be offset more than $^3/_8$ inch (9.5 mm).

AS106.8 Plaster and membranes. *Strawbale* structural walls shall not have a membrane between straw and plaster, or shall have attachment through the *bale* wall from one plaster skin to the other in accordance with an *approved* engineered design.

AS106.9 Mesh. Mesh in plasters on *strawbale* structural walls, and where required by Table AS105.4, shall be installed in accordance with Sections AS106.9.1 through AS106.9.4.

AS106.9.1 Mesh laps. Mesh required by Table AS105.4 or AS106.12 shall be installed with not less than 4-inch (102 mm) laps. Mesh required by Table AS106.13(1) or in walls designed to resist wind uplift of more than 100 plf (1459 N/m), shall run continuous vertically from sill plate to the top plate or roof-bearing element, or shall lap not less than 8 inches (203 mm). Horizontal laps in such mesh shall be not less than 4 inches (102 mm).

AS106.9.2 Mesh attachment. Mesh shall be attached with staples to top plates or roof-bearing elements and to sill plates in accordance with all of the following:

1. **Staples.** Staples shall be pneumatically driven, stainless steel or electro-galvanized, 16 gage with $1^1/_2$-inch (38 mm) legs, $^7/_{16}$-inch (11.1 mm) crown; or manually driven, galvanized, 15 gage with 1-inch (25 mm) legs. Other staples shall be as designed by a registered design professional. Staples into preservative-treated wood shall be stainless steel.
2. **Staple orientation.** Staples shall be firmly driven diagonally across mesh intersections at the required spacing.
3. **Staple spacing.** Staples shall be spaced not more than 4 inches (102 mm) on center, except where a lesser spacing is required by Table AS106.13(1) or Section AS106.14, as applicable.

AS106.9.3 Steel mesh. Steel mesh shall be galvanized, and shall be separated from preservative-treated wood by Grade D paper, No. 15 roofing felt or other *approved* barrier.

AS106.9.4 Mesh in plaster. Required mesh shall be embedded in the plaster except where staples fasten the mesh to horizontal boundary elements.

AS106.10 Support of plaster skins. Plaster *skins* on *strawbale* structural walls shall be continuously supported along their bottom edge. Acceptable supports include: a concrete or masonry stem wall, a concrete slab-on-grade, a wood-framed floor in accordance with Figure AS105.1(2) and an *approved* engineered design or a steel angle anchored with an *approved* engineered design. A weep screed as described in Section R702.7.2.1 is not an acceptable support.

AS106.11 Transfer of loads to and from plaster skins. Where plastered *strawbale* walls are used to support superimposed vertical loads, such loads shall be transferred to the plaster *skins* by continuous direct bearing in accordance with Figure AS105.1(3) or by an *approved* engineered design. Where plastered *strawbale* walls are used to resist in-plane lateral loads, such loads shall be transferred to the reinforcing mesh from the structural member or assembly above in accordance with Figure AS105.1(3) or AS105.1(4) and to the sill plate in accordance with Figure AS105.1(1) or AS105.1(2) and with Table AS106.13(1).

AS106.12 Load-bearing walls. Bearing capacities for plastered *strawbale* walls used as load-bearing walls in one-*story*

INTERNATIONAL CODE COUNCIL®
Copyright © 2019 ICC & NYSDOS. ALL RIGHTS RESERVED. Accessed by Lauren Gualdino (lgualdino@briarcliffmanor.org), (-) Order Number #100880972 on May 08, 2020 07:05 AM (PDT) pursuant to License Agreement with ICC & NYSDOS. No further reproduction, no

100880972

buildings to support vertical loads imposed in accordance with Section R301 shall be in accordance with Table AS106.12.

AS106.12.1 Precompression of load-bearing strawbale walls. Prior to application of plaster, walls designed to be load-bearing shall be precompressed by a uniform load of not less than 100 plf (1459 N/m).

AS106.12.2 Concentrated loads. Concentrated loads shall be distributed by structural elements capable of distributing the loads to the bearing wall within the allowable bearing capacity listed in Table AS106.12 for the plaster type used.

AS106.12.3 Roof-bearing assembly. Roof-bearing assemblies shall be of nominal 2-inch by 6-inch (51 mm by 152 mm) lumber with $^{15}/_{32}$-inch (12 mm) plywood or OSB panels fastened with 8d nails at 6 inches (152 mm) on center in accordance with Figure AS105.1(3) and Items 1 through 6, or be of an *approved* engineered design.

1. Assembly shall be a box assembly on the top course of *bales*, with the panels horizontal.
2. Assembly shall be the width of the *strawbale* wall and shall comply with Section AS106.11.
3. Discontinuous lumber shall be spliced with a metal strap with not less than a 500-pound (2224 N) allowable wind or seismic load tension capacity. Where the wall line includes a braced wall panel the strap shall have not less than a 2,000-pound (8896 N) capacity.
4. Panel joints shall be blocked.
5. Roof and ceiling framing shall be attached to the roof-bearing assembly in accordance with Table R602.3(1), Items 2 and 6.
6. Where the roof-bearing assembly spans wall openings, it shall comply with Section AS106.12.3.1

AS106.12.3.1 Roof-bearing assembly spanning openings. Roof-bearing assemblies that span openings in *strawbale* walls shall comply with the following at each opening:

1. Lumber on each side of the assembly shall be of the dimensions and quantity required to span each opening in accordance with Table R602.7(1).
2. The required lumber in the assembly shall be supported at each side of the opening by the number of jack studs required by Table R602.7(1), or shall shall extend beyond the opening on both sides a distance, D, using the following formula:

$$D = S \times R/2 / (1\text{-}R) \qquad \textbf{(Equation AS-1)}$$

where:

D = Minimum distance (in feet) for required spanning lumber to extend beyond the opening

S = Span in feet

$R = B_L / B_C$

B_L = Design load on the wall (in pounds per lineal foot) in accordance with Sections R301.4 and R301.6

B_C = Allowable bearing capacity of the wall in accordance with Table AS106.12

AS106.13 Braced wall panels. Plastered *strawbale* walls used as braced wall panels for one-story *buildings* shall be in accordance with Section R602.10 and Tables AS106.13(1), AS106.13(2) and AS106.13(3). Wind design criteria shall be in accordance with Section R301.2.1. Seismic design criteria shall be in accordance with Section R301.2.2.

AS106.13.1 Bale wall thickness. The thickness of *strawbale* braced wall panels without their plaster shall be not less than 15 inches (381 mm).

AS106.13.2 Sill plates. Sill plates shall be in accordance with Table AS106.13(1).

AS106.13.3 Sill plate fasteners. Sill plates shall be fastened with not less than $^{5}/_{8}$-inch-diameter (15.9 mm) steel anchor bolts with 3-inch by 3-inch by $^{3}/_{16}$-inch (76.2 mm by 76.2 mm by 4.8 mm) steel washers, with not less than 7-inch (177.8 mm) embedment in a concrete or masonry foundation, or shall be an *approved* equivalent, with the spacing shown in Table AS106.13(1). Anchor bolts or other fasteners into framed floors shall be of an *approved* engineered design.

TABLE AS106.12
ALLOWABLE SUPERIMPOSED VERTICAL LOADS (LBS/FOOT) FOR PLASTERED LOAD-BEARING STRAWBALE WALLS

WALL DESIGNATION	PLASTER[a] (both sides) Minimum thickness in inches each side	MESH[b]	STAPLES[c]	ALLOWABLE BEARING CAPACITY[d] (plf)
A	Clay $1^{1}/_{2}$	None required	None required	400
B	Soil-cement 1	Required	Required	800
C	Lime $^{7}/_{8}$	Required	Required	500
D	Cement-lime $^{7}/_{8}$	Required	Required	800
E	Cement $^{7}/_{8}$	Required	Required	800

For SI: 1 inch = 25.4mm, 1 pound per foot = 14.5939 N/m.

a. Plasters shall conform to Sections AS104.4.3 through AS104.4.8, AS106.7 and AS106.10.

b. Any metal mesh allowed by this appendix and installed in accordance with Section AS106.9.

c. In accordance with Section AS106.9.2, except as required to transfer roof loads to the plaster skins in accordance with Section AS106.11.

d. For walls with a different plaster on each side, the lower value shall be used.

INTERNATIONAL CODE COUNCIL®
Copyright © 2019 ICC & NYSDOS. ALL RIGHTS RESERVED. Accessed by Lauren Gualdino (lgualdino@briarcliffmanor.org), (-) Order Number #100880972 on May 08, 2020 07:05 AM (PDT) pursuant to License Agreement with ICC & NYSDOS. No further reproduction, no

100880972

AS106.14 Resistance to wind uplift forces. Plaster mesh in *skins* of *strawbale walls* that resist uplift forces from the roof assembly, as determined in accordance with Section R802.11, shall be in accordance with all of the following:

1. Plaster shall be any type and thickness allowed in Section AS104.
2. Mesh shall be any type allowed in Table AS106.13(1), and shall be attached to top plates or roof-bearing elements and to sill plates in accordance with Section AS106.9.2.
3. Sill plates shall be not less than nominal 2-inch by 4-inch (51 mm by 102 mm) with anchoring complying with Section R403.1.6.
4. Mesh attached with staples at 4 inches (51 mm) on center shall be considered to be capable of resisting uplift forces of 100 plf (1459 N/m) for each plaster skin.
5. Mesh attached with staples at 2 inches (51 mm) on center shall be considered to be capable of resisting uplift forces of 200 plf (2918 N/m) for each plaster skin.

AS106.15 Post-and-beam with strawbale infill. Post-and-beam with *strawbale* infill systems shall be in accordance with Figure AS105.1(4) and Items 1 through 6, or be of an *approved* engineered design.

1. Beams shall be of the dimensions and number of members in accordance with Table R602.7(1), where the space between posts equals the span in the table.
2. Beam ends shall bear over posts not less than $1^1/_2$ inches (38 mm) or be supported by a framing anchor in accordance with Table R602.7(1).
3. Discontinuous beam ends shall be spliced with a metal strap with not less than 1,000-pound (454 kg) wind or seismic load tension capacity. Where the wall line includes a braced wall panel, the strap shall have not less than a 4,000-pound (1814 kg) capacity.
4. Each post shall equal NJ + 1 in accordance with Table R602.7(1), where the space between posts equals the span in the table.
5. Posts shall be connected to the beam by an *approved* means.
6. Roof and ceiling framing shall be attached to the beam in accordance with Table R602.3(1), Items 2 and 6.

SECTION AS107
FIRE RESISTANCE

AS107.1 Fire-resistance rating. *Strawbale* walls shall not be considered to exhibit a fire-resistance rating, except for walls constructed in accordance with Section AS107.1.1 or AS107.1.2. Alternately, fire-resistance ratings of strawbale walls shall be determined in accordance with Section R302.

AS107.1.1 One-hour-rated clay-plastered wall. One-hour fire-resistance-rated nonload-bearing clay plastered *strawbale* walls shall comply with all of the following:

1. *Bales* shall be laid flat or on-edge in a running bond.
2. *Bales* shall maintain thickness of not less than 18 inches (457 mm).
3. *Bales* shall have a minimum density of 7.5 pounds per cubic foot (120 kg/m^3).
4. Gaps shall be stuffed with *straw-clay*.
5. *Clay* plaster on each side of the wall shall be not less than 1 inch (25 mm) thick and shall be composed of a mixture of 3 parts clay, 2 parts chopped straw and 6 parts sand, or an alternative approved *clay* plaster.

TABLE AS106.13(1)
PLASTERED STRAWBALE BRACED WALL PANEL TYPES

WALL DESIGNATION	PLASTER[a] (both sides)		SILL PLATES[b] (nominal size in inches)	ANCHOR BOLT[c] SPACING (inches on center)	MESH[d] (inches)	STAPLE SPACING[e] (inches on center)
	Type	Thickness (minimum in inches each side)				
A1	Clay	1.5	2 × 4	32	None	None
A2	Clay	1.5	2 × 4	32	2 × 2 high-density polypropylene	2
A3	Clay	1.5	2 × 4	32	2 × 2 × 14 gage	4
B	Soil-cement	1	4 × 4	24	2 × 2 × 14 gage	2
C1	Lime	$^7/_8$	2 × 4	32	17-gage woven wire	3
C2	Lime	$^7/_8$	4 × 4	24	2 × 2 × 14 gage	2
D1	Cement-lime	$^7/_8$	4 × 4	32	17 gage woven wire	2
D2	Cement-lime	$^7/_8$	4 × 4	24	2 × 2 × 14 gage	2
E1	Cement	$^7/_8$	4 × 4	32	2 × 2 × 14 gage	2
E2	Cement	1.5	4 × 4	24	2 × 2 × 14 gage	2

For SI: 1 inch = 25.4 mm.

a. Plasters shall comply with Sections AS104.4.3 through AS104.4.8, AS106.7, AS106.8 and AS106.12.

b. Sill plates shall be Douglas fir-larch or southern pine and shall be preservative treated where required by the *International Residential Code.*

c. Anchor bolts shall be in accordance with Section AS106.13.3 at the spacing shown in this table.

d. Installed in accordance with Section AS106.9.

e. Staples shall be in accordance with Section AS106.9.2 at the spacing shown in this table.

INTERNATIONAL CODE COUNCIL®
Copyright © 2019 ICC & NYSDOS. ALL RIGHTS RESERVED. Accessed by Lauren Gualdino (lgualdino@briarcliffmanor.org), (-) Order Number #100880972 on May 08, 2020 07:05 AM (PDT) pursuant to License Agreement with ICC & NYSDOS. No further reproduction, no

100880972

TABLE AS106.13(2)
BRACING REQUIREMENTS FOR STRAWBALE-BRACED WALL PANELS BASED ON WIND SPEED

• EXPOSURE CATEGORY B[d] • 25-FOOT MEAN ROOF HEIGHT • 10-FOOT EAVE-TO-RIDGE HEIGHT[d] • 10-FOOT WALL HEIGHT[d] • 2 BRACED WALL LINES[d]			MINIMUM TOTAL LENGTH (FEET) OF STRAWBALE BRACED WALL PANELS REQUIRED ALONG EACH BRACED WALL LINE[a, b, c, d]		
Ultimate design wind speed (mph)	**Story location**	**Braced wall line spacing (feet)**	**Strawbale-braced wall panel[e] A2, A3**	**Strawbale-braced wall panel[e] C1, C2, D1**	**Strawbale-braced wall panel[e] B, D2, E1, E2**
≤ 110	One-story building	10	6.4	3.8	3.0
		20	8.5	5.1	4.0
		30	10.2	6.1	4.8
		40	13.3	6.9	5.5
		50	16.3	7.7	6.1
		60	19.4	8.3	6.6
≤ 115	One-story building	10	6.4	3.8	3.0
		20	8.5	5.1	4.0
		30	11.2	6.4	5.1
		40	14.3	7.2	5.7
		50	18.4	8.1	6.5
		60	21.4	8.8	7.0
≤ 120	One-story building	10	7.1	4.3	3.4
		20	9.0	5.4	4.3
		30	12.2	6.6	5.3
		40	16.3	7.7	6.1
		50	19.4	8.3	6.6
		60	23.5	9.2	7.3
≤ 130	One-story building	10	7.1	4.3	3.4
		20	10.2	6.1	4.8
		30	14.3	7.2	5.7
		40	18.4	8.1	6.5
		50	22.4	9.0	7.1
		60	26.5	9.8	7.8
≤ 140	One-story building	10	7.8	4.7	3.7
		20	11.2	6.4	5.1
		30	16.3	7.7	6.1
		40	21.4	8.8	7.0
		50	26.5	9.8	7.8
		60	30.6	11.0	8.3

For SI: 1 inch = 25.4 mm, 1 foot = 305 mm, 1 mile per hour = 0.447 m/s.

a. Linear interpolation shall be permitted.

b. All braced wall panels shall be without openings and shall have an aspect ratio (H:L) ≤ 2:1.

c. Tabulated minimum total lengths are for braced wall lines using single-braced wall panels with an aspect ratio (H:L) ≤ 2:1, or using multiple braced wall panels with aspect ratios (H:L) ≤ 1:1. For braced wall lines using two or more braced wall panels with an aspect ratio (H:L) > 1:1, the minimum total length shall be multiplied by the largest aspect ratio (H:L) of braced wall panels in that line.

d. Subject to applicable wind adjustment factors associated with "All methods" in Table R602.10.3(2)

e. Strawbale braced panel types indicated shall comply with Sections AS106.13.1 through AS106.13.3 and with Table AS106.13(1).

INTERNATIONAL CODE COUNCIL®
Copyright © 2019 ICC & NYSDOS. ALL RIGHTS RESERVED. Accessed by Lauren Gualdino (lgualdino@briarcliffmanor.org), (-) Order Number #100880972 on May 08, 2020 07:05 AM (PDT) pursuant to License Agreement with ICC & NYSDOS. No further reproduction, no

100880972

TABLE AS106.13(3)
BRACING REQUIREMENTS FOR STRAWBALE-BRACED WALL PANELS BASED ON SEISMIC DESIGN CATEGORY

• SOIL CLASS D[f] • WALL HEIGHT = 10 FEET[d] • 15 PSF ROOF-CEILING DEAD LOAD[d] • BRACED WALL LINE SPACING ≤ 25 FEET[d]			MINIMUM TOTAL LENGTH (FEET) OF STRAWBALE-BRACED WALL PANELS REQUIRED ALONG EACH BRACED WALL LINE[a, b, c, d]	
Seismic Design Category	**Story location**	**Braced wall line length (feet)**	**Strawbale-braced wall panel[e] A2, C1, C2, D1**	**Strawbale-braced wall panel[e] B, D2, E1, E2**
C	One-story building	10	5.7	4.6
		20	8.0	6.5
		30	9.8	7.9
		40	12.9	9.1
		50	16.1	10.4
D_0	One-story building	10	6.0	4.8
		20	8.5	6.8
		30	10.9	8.4
		40	14.5	9.7
		50	18.1	11.7
D_1	One-story building	10	6.3	5.1
		20	9.0	7.2
		30	12.1	8.8
		40	16.1	10.4
		50	20.1	13.0
D_2	One-story building	10	7.1	5.7
		20	10.1	8.1
		30	15.1	9.9
		40	20.1	13.0
		50	25.1	16.3

For SI: 1 inch = 25.4 mm, 1 foot = 305 mm, 1 pound per square foot = 0.0479 kPa.

a. Linear interpolation shall be permitted.

b. Braced wall panels shall be without openings and shall have an aspect ratio (H:L) ≤ 2:1.

c. Tabulated minimum total lengths are for braced wall lines using single braced wall panels with an aspect ratio (H:L) ≤ 2:1, or using multiple braced wall panels with aspect ratios (H:L) ≤ 1:1. For braced wall lines using two or more braced wall panels with an aspect ratio (H:L) > 1:1, the minimum total length shall be multiplied by the largest aspect ratio (H:L) of braced wall panels in that line.

d. Subject to applicable seismic adjustment factors associated with "All methods" in Table R602.10.3(4), except "Wall dead load."

e. Strawbale braced wall panel types indicated shall comply with Sections AS106.13.1 through AS106.13.3 and Table AS106.13(1).

f. Wall bracing lengths are based on a soil site class "D." Interpolation of bracing lengths between S_{ds} values associated with the seismic design categories is allowable where a site-specific S_{ds} value is determined in accordance with Section 1613.3 of the *International Building Code*.

6. Plaster application shall be in accordance with Section AS104.4.3.3 for the number and thickness of coats.

AS107.1.2 Two-hour-rated cement-plastered wall. Two-hour fire-resistance-rated nonload-bearing cement-plastered strawbale walls shall comply with all of the following:

1. Bales shall be laid flat or on-edge in a running bond.
2. Bales shall maintain a thickness of not less than 14 inches (356 mm).
3. *Bales* shall have a minimum density of 7.5 pounds per cubic foot (120 kg/m^3).
4. Gaps shall be stuffed with *straw-clay*.
5. A single section of $^1/_2$-inch (38 mm) by 17-gage galvanized woven wire mesh shall be attached to wood members with $1^1/_2$-inch (38 mm) staples at 6 inches (152 mm) on center. 9 gage U-pins with not less than 8-inch (203 mm) legs shall be installed at 18 inches (457 mm) on center to fasten the mesh to the *bales*.
6. Cement plaster on each side of the wall shall be not less than 1 inch (25 mm) thick.
7. Plaster application shall be in accordance with Section AS104.4.8 for the number and thickness of coats.

AS107.2 Openings in rated walls. Openings and penetrations in *bale* walls required to have a fire-resistance rating shall satisfy the same requirements for openings and penetrations as prescribed in this code.

AS107.3 Clearance to fireplaces and chimneys. *Strawbale* surfaces adjacent to fireplaces or chimneys shall be finished with not less than $^3/_8$-inch-thick (10 mm) plaster of any type permitted by this appendix. Clearance from the face of such plaster to fireplaces and chimneys shall be maintained as required from fireplaces and chimneys to combustibles in Chapter 10, or as required by manufacturer's instructions, whichever is more restrictive.

INTERNATIONAL CODE COUNCIL®
Copyright © 2019 ICC & NYSDOS. ALL RIGHTS RESERVED. Accessed by Lauren Gualdino (lgualdino@briarcliffmanor.org), (-) Order Number #100880972 on May 08, 2020 07:05 AM (PDT) pursuant to License Agreement with ICC & NYSDOS. No further reproduction, no

100880972

SECTION AS108
THERMAL INSULATION

AS108.1 R-value. The unit *R*-value of a *strawbale* wall with bales laid flat is R-1.55 for each inch of *bale* thickness. The unit *R*-value of a *strawbale* wall with *bales* on-edge is R-1.85 for each inch of *bale* thickness.

AS108.2 Compliance with Section R302.10.1. *Straw bales* meet the requirements for insulation materials in Section R302.10.1 for flame spread index and smoke-developed index as tested in accordance with ASTM E84.

SECTION AS109
REFERENCED STANDARDS

ASTM C5—10	Standard Specification for Quicklime for Structural Purposes	AS104.4.6.1
ASTM C109/C 109M—2015el	Standard Test Method for Compressive Strength of Hydraulic Cement Mortars	AS106.6.1
ASTM C141/C 141M—14	Standard Specification for Hydrated Hydraulic Lime for Structural Purposes	AS104.4.6.1
ASTM C206—14	Standard Specification for Finishing Hydrated Lime	AS104.4.6.1
ASTM C926—15B	Standard Specification for Application of Portland Cement Based Plaster	AS104.4.7 AS104.4.8
ASTM C1707—11	Standard Specification for Pozzolanic Hydraulic Lime for Structural Purposes	AS104.4.6.1
ASTM E2392/ ASTM E2392M —10	Standard Guide for Design of Earthen Wall Building Systems	AS104.4.3.2
ASTM BS1 ASTM BS EN 459 —2015	Part 1: Building Lime. Definitions, Specifications and Conformity Criteria; Part 2: Test Methods	AS104.4.6.1

INTERNATIONAL CODE COUNCIL®
Copyright © 2019 ICC & NYSDOS. ALL RIGHTS RESERVED. Accessed by Lauren Gualdino (lgualdino@briarcliffmanor.org), (-) Order Number #100880972 on May 08, 2020 07:05 AM (PDT) pursuant to License Agreement with ICC & NYSDOS. No further reproduction, no

100880972

INTERNATIONAL CODE COUNCIL®
Copyright © 2019 ICC & NYSDOS. ALL RIGHTS RESERVED. Accessed by Lauren Gualdino (lgualdino@briarcliffmanor.org), (-) Order Number #100880972 on May 08, 2020 07:05 AM (PDT) pursuant to License Agreement with ICC & NYSDOS. No further reproduction, no

100880972

APPENDIX T [RE]

SOLAR-READY PROVISIONS—DETACHED ONE- AND TWO-FAMILY DWELLINGS AND TOWNHOUSES

This appendix is informative and is not part of this code.

SECTION T101 SCOPE

T101.1 (RA101.1) General. These provisions shall be applicable for new construction where solar-ready provisions are required.

SECTION T102 (RA102) GENERAL DEFINITION

T102.1 General. The following term shall, for the purpose of this appendix, have the meaning shown herein.

SOLAR-READY ZONE. A section or sections of the roof or building overhang designated and reserved for the future installation of a solar photovoltaic or solar thermal system.

SECTION T103 (RA103) SOLAR-READY ZONE

T103.1 General. New detached one- and two-family dwellings, and townhouses with not less than 600 square feet (55.74 m^2) of roof area oriented between 90 degrees and 270 degrees of true north, shall comply with Sections T103.2 through T103.10.

Exceptions:

1. New residential buildings with a permanently installed on-site renewable energy system.
2. A building where all areas of the roof that would otherwise meet the requirements of Section T103 are in full or partial shade for more than 70 percent of daylight hours annually.

T103.2 (RA103.2) Construction document requirements for solar-ready zone. Construction documents shall indicate the solar-ready zone.

T103.3 (RA103.3) Solar-ready zone area. The total solar-ready zone area shall be not less than 300 square feet (27.87 m^2) exclusive of mandatory access or setback areas as required by the *International Fire Code*. New townhouses three stories or less in height above grade plane and with a total floor area less than or equal to 2,000 square feet (185.8 m^2) per dwelling shall have a solar-ready zone area of not less than 150 square feet (13.94 m^2). The solar-ready zone shall be composed of areas not less than 5 feet (1524 mm) in width and not less than 80 square feet (7.44 m^2) exclusive of access or set-back areas as required by the *International Fire Code*.

T103.4 (RA103.4) Obstructions. Solar-ready zones shall be free from obstructions, including but not limited to vents, chimneys, and roof-mounted equipment.

T103.5 Shading. The solar-ready zone shall be set back from any existing or new, permanently affixed object on the building or site that is located south, east or west of the solar zone a distance not less than two times the object's height above the nearest point on the roof surface. Such objects include, but are not limited to, taller portions of the building itself, parapets, chimneys, antennas, signage, rooftop equipment, trees and roof plantings.

T103.6 Capped roof penetration sleeve. A capped roof penetration sleeve shall be provided adjacent to a solar-ready zone located on a roof slope of not greater than 1 unit vertical in 12 units horizontal (8-percent slope). The capped roof penetration sleeve shall be sized to accommodate the future photovoltaic system conduit, but shall have an inside diameter of not less than $1^1/_4$ inches (32 mm).

T103.7 (RA103.5) Roof load documentation. The structural design loads for roof dead load and roof live load shall be clearly indicated on the construction documents.

T103.8 (RA103.6) Interconnection pathway. Construction documents shall indicate pathways for routing of conduit or plumbing from the solar-ready zone to the electrical service panel or service hot water system.

T103.9 (RA103.7) Electrical service reserved space. The main electrical service panel shall have a reserved space to allow installation of a dual pole circuit breaker for future solar electric installation and shall be labeled "For Future Solar Electric." The reserved space shall be positioned at the opposite (load) end from the input feeder location or main circuit location.

T103.10 (RA103.8) Construction documentation certificate. A permanent certificate, indicating the solar-ready zone and other requirements of this section, shall be posted near the electrical distribution panel, water heater or other conspicuous location by the builder or registered design professional.

INTERNATIONAL CODE COUNCIL®
Copyright © 2019 ICC & NYSDOS. ALL RIGHTS RESERVED. Accessed by Lauren Gualdino (lgualdino@briarcliffmanor.org), (-) Order Number #100880972 on May 08, 2020 07:05 AM (PDT) pursuant to License Agreement with ICC & NYSDOS. No further reproduction, no

100880972

INTERNATIONAL CODE COUNCIL®
Copyright © 2019 ICC & NYSDOS. ALL RIGHTS RESERVED. Accessed by Lauren Gualdino (lgualdino@briarcliffmanor.org), (-) Order Number #100880972 on May 08, 2020 07:05 AM (PDT) pursuant to License Agreement with ICC & NYSDOS. No further reproduction, no

100880972

INDEX

A

ABSORPTION COOLING EQUIPMENT M1412
ACCESS (TO)
Definition R202
To appliances M1305
To attic R807
To crawl space R408.4
To equipment M1401.2
To floor furnace M1408.4
To plumbing connections P2704
To plumbing fixtures P2705
To whirlpool pumps P2720.1
ACCESS HATCHES N1102.2.4
ACCESSIBILITY R320
ACCESSIBLE
Definition E3501
Readily accessible, definition E3501
ACCESSORY STRUCTURE
Definition R202
ADDRESS (SITE) R319
ADDITIONS
Defined N1101.6
Requirements N1107.1.1, N1108
ADMINISTRATIVE . . . . . Chapter 1
Applicability R102
Certificate of occupancy R105.5
Construction documents R106
Inspections R105.3
Intent R101.8
Permits R105.2
Service utilities R107
Stop work order R105.4
Violations R105.6
AIR
Combustion . . . . . Chapter 17, G2407
Combustion air, definition R202
Return M1602
AIR BARRIER
Installation . . . . . N1102.4.1.1, Table N1102.4.1.1
Testing N1102.4.1.2
AIR CONDITIONERS
Branch circuits E3702.11
Room air conditioners E3702.12
AIR INFILTRATION
Requirements N1102.4.1.2
AIR LEAKAGE N1102.4, N1103.3.3, N1103.3.4
ALLOWABLE SPANS
Of floor joists R502.3, R505.3.2
Of headers R602.7, R603.6, R610.10
Of rafters and ceiling joists R802.4, R802.5, R804.3.1, R804.3.2
ALTERATIONS
Defined N1101.6
Requirements N1108, N1109
ALTERNATIVE MATERIALS (see MATERIALS) R104.3
AMPACITY E3501
ANCHOR BOLTS R403.1.6
APPEAL
Right of R103.3
APPLIANCE
Access to M1305
Attic M1305.1.3
Clearance for M1306
Connectors, fuel-gas . . . . . Chapter 24
Definition R202
Definition applied to electrical equipment E3501
Electrical appliance disconnection means E4101.5
Electrical appliance installation E4101
Equipment (general) . . . . . Chapter 14
Floor furnace M1408
Flue area R1003.14
Fuel-burning . . . . . Chapter 24
Heating and cooling . . . . . Chapter 14
Installation M1307
Labeling M1303
Open-top broiler units M1505.1
Outdoor G2454
Ranges M1901
Room heaters M1410
Special fuel-burning equipment . . . . . Chapter 19
Vented (decorative) . . . . . Chapter 24
Wall furnace M1409
Warm-air furnace M1402
Water heaters . . . . . Chapter 20, Chapter 24
APPLICATION
Plywood R703.3
APPROVAL
Mechanical M1302
APPROVED
Agent (definition) R202
Definition R202

INTERNATIONAL CODE COUNCIL®
Copyright © 2019 ICC & NYSDOS. ALL RIGHTS RESERVED. Accessed by Lauren Gualdino (lgualdino@briarcliffmanor.org), (-) Order Number #100880972 on May 08, 2020 07:05 AM (PDT) pursuant to License Agreement with ICC & NYSDOS. No further reproduction, no

100880972

Definition applied to electrical equipment E3501
Source (definition) R202
ARC-FAULT CIRCUIT INTERRUPTER E3902
AREA
Disposal, private sewage disposal. P2602
Flue (appliances) R1003.14
Flue masonry R1003.15
Room, minimum. R304
ARMORED CABLE . . . . . .Table E3801.2
ASPHALT SHINGLES R905.2
ATTACHMENT PLUG (PLUG CAP) (CAP)
Definition E3501
ATTIC
Access R807
Appliances M1305.1.2
AUTOMATIC. N1101.6
AUTOMATIC FIRE SPRINKLER SYSTEMS R313

B

BACKFILL
For piping. P2604
BACKFLOW, DRAINAGE
Definition R202
BACKWATER VALVE
Allowed types. P3008.2
Defined R202
Required P3008.1
BASEMENT WALL
Definition R202, N1101.6
Requirements . . . . . Table N1102.1.2, N1102.2.9, Table N1105.5.2(1)
BATH, TOILET AND SHOWER SPACES R307
BATHROOM
Exhaust M1507.4
Group. . . . . R202, Table P3004.1
BATHTUB
Enclosure. P2713.2
Finish R307.2
Hydromassage. E4209
Outlets for P2713.1
Space required R307.1
Whirlpool P2720
BEAM SUPPORTS. R606.14
BEARING
Of joists R502.6
BIDETS. P2721
BOILER
Definition R202
Outdoor temperature setback control N1103.2
Requirements . . . . . Chapter 20
BONDING E3609, E4204
Definition applied to electrical installations E3501
BONDING JUMPER E3501
Bonding of service equipment E3609.2
Bonding to other systems. E3609.3
Main bonding jumper E3607.5
Metal water piping bonding E3608.1.1
Sizing bonding jumpers E3609.5
BORED HOLES (see NOTCHING)
BOXES E3906
Nonmetallic boxes E3905.3
Support of boxes E3904.3
Where required E3905.1
BRANCH CIRCUIT . . . . . E3501, Chapter 37
Ampacity E3701.2
Ratings. E3702
Required. E3703
BUILDING
Definition R202, N1101.6
Drain, definition R202
Existing, definition R202
Sewer, definition. R202
BUILDING OFFICIAL
Definition R202
Inspection and tests of fuel-gas piping . . . . . Chapter 24
BUILDING PLANNING
Accessibility R320
Automatic fire sprinkler systems R313
Carbon monoxide alarms. R315
Ceiling height R305
Design criteria R301
Elevators and platform lifts. R321
Emergency escape R310
Exterior wall R302.1
Fire-resistant construction R302
Flood-resistant construction. R322
Foam plastic. R316
Garages and carports R309
Glazing. R308
Guardrails. R312
Handrails R311.7.8, R311.8.3
Insulation R302.10
Landing R311.3, R311.3.1, R311.3.2, R311.5.1
Light, ventilation and heating R303
Means of egress. R311
Mezzanines R325
Minimum room area R304
Planning. . . . . Chapter 3

INTERNATIONAL CODE COUNCIL®
Copyright © 2019 ICC & NYSDOS. ALL RIGHTS RESERVED. Accessed by Lauren Gualdino (lgualdino@briarcliffmanor.org), (-) Order Number #100880972 on May 08, 2020 07:05 AM (PDT) pursuant to License Agreement with ICC & NYSDOS. No further reproduction, no

100880972

Plumbing fixture clearances R307
Protection of wood against decay. R317
Radon protection . . . . . Appendix F
Ramps R311.8
Sanitation R306
Site address R319
Smoke alarms. R314
Solar energy systems R324
Stairways R311.7
Stationary storage battery systems R327
Storm shelters R323
Swimming pools, spas and hot tub. R326
Termite protection. R318
Toilet, bath and shower spaces R307

BUILDING THERMAL ENVELOPE
Air tightness N1102.4.1
Compliance documentation N1101.5, N1101.14
Definition. R202
Insulation N1101.10.1
Insulation and fenestration criteria N1102.1.2
Performance method . . . . . Table N1105.5.2(1)
Requirements N1102

BUILDING-INTEGRATED PHOTOVOLTAIC ROOF PANEL
As roof covering R324.5.2
Definition. R202

BUILT-UP GIRDERS (see GIRDERS)

BUILT-UP ROOFING (see ROOFING)

C

CABINETS AND PANELBOARDS. E3907

CAPACITY
Expansion tank M2003.2

CARBON MONOXIDE ALARMS R315
Definition. R202

CARPORTS. R309.2

CATHODIC PROTECTION G2415.11.2

CEILING
Finishes R302.9, R805
Height R305

CEILING FANS E4203.4

CEILINGS N1102.2.1, N1102.2.2
For standard reference design . . . Table N1105.5.2(1)

CENTRAL FURNACES (see FURNACES)

CERTIFICATE N1101.14

CERTIFICATE OF OCCUPANCY R105.5

CHASES R606.8

CHANGE OF OCCUPANCY
Definition. R202
Energy use considerations N1111

CHIMNEYS
And fireplaces . . . . . Chapter 10
Caps R1003.9.1
Clearance R1003.18
Corbeling. R1003.5
Crickets R1003.20
Design (masonry) R1003.1
Factory-built R1005
Fireblocking. R1003.19
Flue area. R1003.14, R1003.15
Flue lining R1003.11
Inspections R108
Load R1003.8
Masonry and factory-built, size M1805
Multiple flue. R1003.14
Rain caps 1003.9.3
Spark arrestors R1003.9.2
Termination R1003.9
Wall thickness. R1003.10

CIRCUIT BREAKER
Definition E3501

CIRCULATION SYSTEMS N1103.5.1

CLASS 2 CIRCUITS
Class 2 remote-control, signaling and power-limited circuits . . . . . Chapter 43

CLAY
Tiles R905.3

CLEANOUT
Definition R202
Drainage P3005.2
Masonry chimney R1003.17

CLEARANCE
Above cooking top M1901.1
For appliances M1306.1
For chimneys R1003.18
Reduction methods. M1306.2
Vent connector M1803.3.4

CLEARANCES
Around electrical equipment E3405.1, E3604.1, E3604.2, E3604.3

CLIMATE ZONES . . . . . N1101.7, Table N1101.7

CLOTHES CLOSETS
Lighting fixtures. E4003.12

CLOTHES DRYERS . . . . . M1502, Chapter 24

CLOTHES WASHING MACHINES P2718

COLUMNS. R407

COMBUSTIBLE
Materials R202

COMBUSTION AIR
Air . . . . . Chapter 17, Chapter 24
Definition R202

INTERNATIONAL CODE COUNCIL®
Copyright © 2019 ICC & NYSDOS. ALL RIGHTS RESERVED. Accessed by Lauren Gualdino (lgualdino@briarcliffmanor.org), (-) Order Number #100880972 on May 08, 2020 07:05 AM (PDT) pursuant to License Agreement with ICC & NYSDOS. No further reproduction, no

100880972

COMMON VENT
Definition R202
Requirements M1801.11
COMPLIANCE REPORT N1105.4.2.2
COMPOSTING TOILET SYSTEM P2725.1
CONCRETE
Compressive Strength R402.2
Floors (on ground) R506
Tile (roof) R905.3
Weathering . . . . . Figure R301.2(4), R402.2
CONCRETE-ENCASED ELECTRODE E3608.1.2
CONDITIONED FLOOR AREA R202
CONDITIONED SPACE R202
CONDUCTOR. E3406
Ampacity E3705.1
Definition E3501
Identification. E3407
Insulation E3406.5
Material E3406.2
Parallel. E3406.6
Size E3406.3, E3704.1
Ungrounded E3603.1
CONDUIT BODY
Definition E3501
CONNECTION
Access to connections P2704
For fuel-burning appliances . . . . . Chapter 24
For fuel-oil piping M2202
Joints P2904
Plumbing fixture P2601.2
To water supply P2902.1
CONNECTIONS
Aluminum. E3406.8
Device E3406.11.2
CONNECTOR
Chimney and vent M1803
Vent, definition R202
CONNECTOR, PRESSURE (SOLDERLESS)
Definition E3501
CONSTRUCTION
Cavity wall masonry. R608
Flood-resistant R322
Floors. . . . . Chapter 5
Footings R403
Foundation material R402
Foundation walls R404
Foundations . . . . . Chapter 4
Masonry R606, R607, R608, R610
Roofs . . . . . Chapter 8
Steel framing R505, R603, R804
Wood framing. R502, R602, R802
Walls . . . . . Chapter 6
CONSTRUCTION DOCUMENTS R106, N1101.5
Thermal envelope depiction N1101.5.1
CONTINUOUS AIR BARRIER R202
CONTINUOUS LOAD
Definition E3501
CONTINUOUS WASTE
Definition R202
CONTROL
Devices . . . . . Chapter 24
CONTROLS
For forced-air furnaces. . . . . Chapter 24
For heat pumps N1103.1.2
For heating and cooling N1103.1
For service water heating. N1103.5
COOKING UNIT, COUNTER-MOUNTED
Definition E3501
COOLING
Absorption cooling equipment M1412
Access to equipment M1401.2
Evaporative cooling equipment M1413
Installation M1401.1
Loads for energy calculation N1101.9
Refrigeration cooling equipment M1404
Return air-supply source M1602
COPPER-CLAD ALUMINUM CONDUCTORS
Definition E3501
CORDS
Flexible. E4101.3, E4202.2
CORROSION
Protection of metallic piping P2603.3
COURT
Definition R202
COVER REQUIREMENTS E3803.1

COVERING
Exterior. R703
Interior R702
Roof . . . . . Chapter 9
Wall . . . . . Chapter 7
CRAWL SPACE R408
Energy conservation requirements. . . . . Table N1102.1.2, N1101.11.1, N1102.2.11, Table N1105.5.2(1)
Wall (definition) R202
CROSS CONNECTION
Definition R202
CSST G2411.2, G2411.3, G2414.5.4, G2415.2

INTERNATIONAL CODE COUNCIL®
Copyright © 2019 ICC & NYSDOS. ALL RIGHTS RESERVED. Accessed by Lauren Gualdino (lgualdino@briarcliffmanor.org), (-) Order Number #100880972 on May 08, 2020 07:05 AM (PDT) pursuant to License Agreement with ICC & NYSDOS. No further reproduction, no

100880972

D

DAMPER, VOLUME
Definition R202
DAMPROOFING R406
DECAY
Protection against R317
DECK
Supported by exterior wall R507
Wood/plastic composite boards R507.2.2
DECORATIVE APPLIANCES
Outdoor G2454
Vented . . . . . Chapter 24
DEFAULT DISTRIBUTION SYSTEM EFFICIENCES . . . . . Table N1105.5.2(2)
DEFINITIONS
Building R202
Electrical E3501
Mechanical system R202
Plumbing R202
DEMAND RECIRCULATION WATER SYSTEM
Defined N1101.6
Requirements N1103.5.1.1
DESIGN CONDITIONS, INTERIOR N1101.9
DESIGN CRITERIA R301
Alternative provisions R301.1.1
Application R301.1
Climatic and geographic R301.2
Dead load R301.4
Deflection R301.6
Engineered design R301.1.3
Live load R301.5
Nominal sizes R301.8
Roof load R301.6
Seismic R301.2.2
Snow loads R301.2.3
Story height R301.3
Sunrooms R301.2.1.1.1
Wind R301.2.1
DIRECTIONAL
Fittings, plumbing P2707
DISCONNECTING MEANS
Definition E3501
DISHWASHING MACHINES P2717
DOORS
Attics N1102.2.4
Crawl space N1102.2.4
Default *U*-factor . . . . . Table N1101.10.3(2)
Egress R311.2
Exterior R311.3, R609
Opaque N1102.3.4
Performance requirements . . . . . Table N1105.5.2.(1)
SHGC values . . . . . Table N1102.1.2
U-factors . . . . . Table N1102.1.4
DRAFT HOOD
Definition R202
DRAFTSTOPPING R302.12, R502.12
DRAIN
Floor P2719
Shower receptors P2709
DRAINAGE
Cleanouts P3005.2
Foundation R405
Inspection and tests P2503
Storm drainage . . . . . Chapter 33
DRILLING AND NOTCHING (see NOTCHING)
DRINKING WATER TREATMENT P2909
DRIP LOOPS E3605.9.5
DRYERS
Domestic clothes M1502
DUCTS . . . . . Chapter 16
Defined R202
Dwelling-garage wall and ceiling penetration R302.5.2
Installation M1601.4
Insulation M1601.3, N1101.5, N1101.14, N1103.3.1, N1103.3.6, N1103.3.6.1, N1103.3.7
Material M1601
Sealing M1601.4.1, N1101.5, N1103.3.2
System, definition R202
Tightness verification N1103.3.3
Within unconditioned space N1103.3.1
DWELLING
Definition R202, E3501
DWELLING UNIT
Definition R202, E3501
Multiple units N1103.8
Separation R302.2, R302.3
DYNAMIC GLAZING N1102.3.2

E

EAVE BAFFLE
Installation N1102.2.3
EJECTORS (see SUMPS AND EJECTORS)
ELECTRICAL
Appliance (labeling) M1303
Inspection E3403
Vehicle charging E3702.13
ELECTRICAL METALLIC TUBING . . . Table E3904.6

INTERNATIONAL CODE COUNCIL®
Copyright © 2019 ICC & NYSDOS. ALL RIGHTS RESERVED. Accessed by Lauren Gualdino (lgualdino@briarcliffmanor.org), (-) Order Number #100880972 on May 08, 2020 07:05 AM (PDT) pursuant to License Agreement with ICC & NYSDOS. No further reproduction, no

100880972

ELECTRICAL NONMETALLIC TUBING . . . . . Table E3904.6
ELECTRICAL POWER AND LIGHTING N1104
ELECTRICAL RESISTANCE HEATERS
Baseboard convectors M1405
Duct heaters M1407
Radiant heating M1406
ELECTRODES
Grounding E3608
ELEVATORS AND PLATFORM LIFTS R321
EMERGENCY ESCAPE AND RESCUE OPENINGS R310
Area wells R310.3.2
At additions R310.5
At existing basements R310.6
Bars, grilles, covers and screens R310.4
Definition R202
Dimensions R310.2
Doors R310.3
Replacement window sill height R310.2.5
Under decks and porches R310.2.4
Where required R310.1
ENCLOSURE
Definition E3501
ENERGY ANALYSIS, ANNUAL
Defined R202
Documentation N1105.4
Requirements N1105.3
ENERGY CONSERVATION . . . . . Chapter 11
ENERGY COST
Defined R202
Energy rating index R202, N1106.3
Energy rating index compliance alternative . . . N1106
ERI-based compliance N1106.4
ENERGY PERFORMANCE ANALYSIS N1105
ENERGY RECOVERY VENTILATION SYSTEMS
Requirements . . . . . Table N1105.5.2(1)
ENERGY SIMULATION TOOL
Defined N1101.6
ENERGY STORAGE SYSTEM R327
Definition R202
ENVELOPE, BUILDING THERMAL
Defined R202
ENVELOPE DESIGN PROCEDURES N1102
EQUIPMENT
Definition applied to electrical equipment E3501
Efficiencies N1101.5, N1101.14
General, mechanical . . . . . Chapter 14
Heating and cooling . . . . . Chapter 14
Room for fuel-burning appliances N1102.4.4
EXCAVATIONS
For appliance installation M1305.1.4.2
EXHAUST
Domestic cooking M1503
General . . . . . Chapter 15
EXISTING BUILDINGS N1107
EXISTING PLUMBING SYSTEMS P2502
EXTERIOR
Covering R703
Insulation finish systems R703.9
Lath R703.7.1
Plaster R703.7
EXTERIOR WALL
Construction R302.1
Defined R202
Fire-resistance rating R302.1
Thermal performance . . . . . N1102, N1102.1.2, Table N1105.5.2(1)

F

FACEPLATES E4001.11, E4002.4
FACTORY BUILT
Chimneys R1005, M1805
Fireplace stoves R1005.3
Fireplaces R1004
FASTENING . . . . . Table R602.3(1)
FAUCETS P2701
Handle orientation P2722.2
Requirements P2701
FEEDER
Ampacity E3704.5
Conductor size E3704.1
Feeder neutral load E3704.3
Loads E3704.2
Requirements E3704
FENESTRATION N1101.10.3, N1102.3, N1102.3.2, N1102.4.3
Default *U*-factors . . . . . Table N1101.10.3(1)
Defined R202
Rating and labeling N1101.10.3, N1102.1.2
Replacement N1102.3.5
Requirements . . . . . Table N1102.1.2
FENESTRATION, SITE-BUILT
Defined R202
FINISHES
Flame spread and smoke density R302.9
For ceilings R805
Interior R302.9, R315, R702

INTERNATIONAL CODE COUNCIL®
Copyright © 2019 ICC & NYSDOS. ALL RIGHTS RESERVED. Accessed by Lauren Gualdino (lgualdino@briarcliffmanor.org), (-) Order Number #100880972 on May 08, 2020 07:05 AM (PDT) pursuant to License Agreement with ICC & NYSDOS. No further reproduction, no

100880972

FIRE SPRINKLER SYSTEM R313, P2904
Inspections of P2904.8
Sizing of P2904.6
Sprinkler location P2904.1.1
FIREBLOCKING
Barrier between stories. R302.11, R602.8
Chimney R1003.19
Fireplace. R1001.12
FIREPLACES . . . . . Chapter 10
Clearance R1001.11
Corbeling R1001.8
Doors for. N1102.4.2
Factory-built R1004
Fireblocking R1001.12
Walls. R1001.5
FIRE-RESISTANT CONSTRUCTION R302
Draftstopping R302.1
Dwelling-garage fire separation R302.6
Dwelling-garage opening and penetration . . . R302.5
Exterior walls R302.1
Fireblocking R302.11
Floors R302.13
Foam plastics R302.8
Insulation R302.10, R302.14
Penetrations R302.4
Townhouse separation R302.2
Two-family dwellings R302.3
Under-stair protection R302.7
Wall and ceiling finishes R302.9
FIRE-SEPARATION DISTANCE
Definition. R202
Exterior walls and wall projections R302.1
Ground-mounted photovoltaic systems R324.7
FITTING
Definition applied to electrical installations E3501
FITTINGS
DWV piping. P3002.3
Prohibited joints P3003.2
Water supply. P2906.6
FIXTURE UNIT
Drainage, definition. R202
Water supply, definition R202
FIXTURES
Clearance R307.1
Plumbing fixture, definition R202
Plumbing fixture, general . . . . . Chapter 27
Trap seals. P3201.2
FLAME SPREAD INDEX. R302.9, R302.10
FLASHING. R703.8.5, R703.4, R903.2, R905
FLEXIBLE CORDS E3909, E4101.3, E4202.2
FLEXIBLE METAL CONDUIT E3801.1, E3908.8.1
FLOOD-RESISTANT CONSTRUCTION
General and structural R301.2.4, R322
Plumbing systems. P2601.3
FLOOR DRAIN P2719
FLOOR FURNACE M1408
FLOORS
Above-grade . . . . . Table N1105.5.2(1)
Bathtub and shower R307.2
Concrete (on ground) R506
Insulation for steel framed. N1102.2.6
Loads R301, R501.2
Slab-on-grade insulation requirements . . . N1102.2.10
Steel framing. R505
Treated-wood (on ground) R504
Wood framing R502
FLUE
Area R1003.14, R1003.15
Lining R1003.11, R1003.12
Multiple R1003.13
FOAM PLASTICS R316
FOOD-WASTE DISPOSERS
Discharge connection to sink tailpiece P2707.1
General P2716
FOOTINGS R403
Excavation for piping near P2604.4
Requirements R403
FORCED MAIN SEWER
Materials P3002.2
Testing P2503.4
FOUNDATIONS. . . . . Chapter 4
Cripple walls R602.9, R602.10.9, R602.11.2
Frost protection. R403.1.4.1
Inspection R105.3
Insulation requirements. . . . . Table N1102.4.1.1, Table N1105.5.2(1)
Walls. R404
FREEZE PROTECTION OF PLUMBING P2603.6
FUEL GAS. . . . . Chapter 24
FUEL OIL
Oil tanks M2201
Piping, fittings and connections M2202
Pumps and valves. M2204
FUEL-BURNING APPLIANCES (see APPLIANCE, definition)
Identification . . . . . Chapter 24
FURNACES
Clearance of warm-air furnaces M1402.2
Efficiency. . . . . Table N1105.5.2(1)
Exterior M1401.4
Floor (see Floor Furnace)

INTERNATIONAL CODE COUNCIL®
Copyright © 2019 ICC & NYSDOS. ALL RIGHTS RESERVED. Accessed by Lauren Gualdino (lgualdino@briarcliffmanor.org), (-) Order Number #100880972 on May 08, 2020 07:05 AM (PDT) pursuant to License Agreement with ICC & NYSDOS. No further reproduction, no

100880972

Wall (see Wall Furnace)
Warm-air . . . . . M1402, Chapter 24
FUSES E3705.6

G

GARAGES AND CARPORTS R309
GAS
Appliance labeling . . . . . Chapter 24
GAS PIPING SYSTEM NOT TO BE USED AS GROUNDING ELECTRODE. . . . . Chapter 24
GIRDERS R502.5
GLAZED FENESTRATION N1102.3.2, N1102.3.3
GLAZING
Aggregate area R303.1
Greenhouses, glass in R308.6.6
Protection of openings R301.2.1.2
Required glazed openings R303.9
Safety glazing and hazardous locations R308
Site-built R308.5
Skylights and sloped R202, R308.6
GRADE
Definition R202
Of lumber R502.1.1, R602.1.1, R802.1.1
Plane, definition R202
Slope of piping, definition. R202
GRAYWATER
For subsurface irrigation P3009
Identification for P2901.2
Supply to fixtures P2901.1
GROUND
Definition of electrical. E3501
Floors (on ground) R504, R506
Joint connection. P2906.8
GROUNDED
Definition E3501
GROUNDED, EFFECTIVELY
Definition E3501
GROUNDED CONDUCTOR
Definition E3501
Identification. E3407
GROUND-FAULT CIRCUIT-INTERRUPTER PROTECTION. E3902, E4203, E4206, E4207.2, E4208
GROUNDING
Effective grounding path E3611.3
Of equipment E3908, E4205.1
GROUNDING CONDUCTOR
Definition E3501
Equipment E3501, E3607.3.1, E3908
GROUNDING ELECTRODE CONDUCTOR E3607.4
Connection. E3607.2, E3611
Definition E3501
Size E3603.4
GROUNDING ELECTRODE SYSTEM. E3608
GROUNDING ELECTRODES E3608, E3608.1
Resistance of E3608
GROUND-SOURCE HEAT PUMP M2105
GUARDED
Definition applied to electrical equipment E3501
GUARDING OF ENERGIZED PARTS E3404.9
GUARDS. R312
Definition R202
GYPSUM
Wallboard. R702.3

H

HABITABLE SPACE
Definition R202
HALLWAYS R311.6
HANDRAILS R311.7.8, R311.8.3
Definition R202
HAND SHOWER (see SHOWER)
HEADERS
SIP R610.8
Steel. R603.6
Wood R602.7
HEARTH R1001.9
Extension R1001.9, R1001.10
HEATED SLAB
Defined. R202
HEATERS
Baseboard M1405
Central furnaces. M1402
Duct M1407
Heat pumps M1403, N1103.1.2
Masonry R1002
Pool . . . . . .M2006, Chapter 24
Radiant. M1406
Sauna. . . . . Chapter 24
Unvented G2445
Vented room. . . . . .M1410, Chapter 24
Water . . . . . Chapter 20, Chapter 28
HEATING
Load for calculation of energy N1101.9
Required. R303.10
HEATING EQUIPMENT . . . . . Chapter 14
HEIGHT
Ceiling R305

INTERNATIONAL CODE COUNCIL®
Copyright © 2019 ICC & NYSDOS. ALL RIGHTS RESERVED. Accessed by Lauren Gualdino (lgualdino@briarcliffmanor.org), (-) Order Number #100880972 on May 08, 2020 07:05 AM (PDT) pursuant to License Agreement with ICC & NYSDOS. No further reproduction, no

100880972

HIGH-EFFICACY LAMPS
Defined R202
HISTORIC BUILDING
Definition R202
Energy conservation requirements N1107.6
HOLLOW-UNIT MASONRY (see MASONRY) R606.3.2.2, 606.13.1.2
HORIZONTAL
Pipe, definition R202
Vent length M1803.3.2
HOT TUBS . . . . . R326, E4201, Appendix G
HOT WATER
Definition R202
Distribution pipe rating P2906.5
Distribution systems P2905
Energy conservation measures N1103.5
Heaters . . . . . M2005, Chapter 24
Piping insulation N1103.5.3
Supplied to bathtubs P2713
Temperature actuated valves for P2724
HUB DRAIN (See WASTE RECEPTOR)
HVAC SYSTEM
Leakage tests N1103.3.4
HYDROGEN GENERATING AND REFUELING M1307.4
HYDRONIC HEATING SYSTEMS
Baseboard convectors M2102
Boilers M2001
Expansion tanks M2003
Floor heating systems M2103
Operating and safety controls M2002
Piping systems installation M2101

I

IDENTIFICATION
Materials, systems and equipment for energy compliance N1101.10
IDENTIFIED
Definition applied to electrical equipment E3501
INDIRECTLY CONDITIONED SPACE (see CONDITIONED SPACE)
INDIVIDUAL
Branch circuit, definition E3501
Sewage disposal systems R202, P2602
Water supply and sewage disposal systems P2602
INFILTRATION
Air leakage . . . . . N102.4, Table N1105.5.2(1)
Defined R202
INLET
To masonry chimneys R1003.16
INSPECTION
Excavation for piping P2604.1
Fuel-supply system . . . . . Chapter 24
Of plumbing system P2503
On-site R105.3
INSTALLATION
Of appliances M1307
Of cooling and heating equipment M1401.1
Of ducts M1601.4
Of flue liners R1003.12
Of plumbing fixtures P2705
Of wall furnaces M1409.3
INSULATING SHEATHING
Defined R202
Requirements . . . . . N1102.1.2, Table N1102.1.2
INSULATION
Above-deck R906
Air-impermeable . . . . . R202, Table N1102.1.1
Basement wall N1102.2.9
Ceilings with attic spaces N1102.2.1
Ceilings without attic spaces N1102.2.2
Crawl space walls N1102.2.10
Duct N1103.3.1
Eave baffle for N1102.2.3
Flame spread R302.10
Floors N1102.2.6, N1102.2.8
Foam plastic R316
Hot water piping N1103.5.3
Identification of N1101.10, N1101.10.2
Installation of . . . . . N1101.10.1, N1101.10.2, N1101.11, Table N1102.4.1.1
Masonry veneer support N1102.2.12
Mass wall as N1102.2.5
Mechanical system piping N1103.4
Product rating of N1101.10.4
Protection of exposed foundation N1101.11.1
Protection of insulation on piping N1103.4.1
Requirements N1102.1.3, N1102.2
Slab-on-grade floors N1102.2.10
Steel-framed ceiling walls and floors . . . . N1102.2.6, Table N1102.2.6
Sunroom N1102.2.13
INTERIOR
Lath R702.2.3
Other finishes R702.5
Plaster R702.2
Wall covering . . . . . Chapter 7

INTERNATIONAL CODE COUNCIL®
Copyright © 2019 ICC & NYSDOS. ALL RIGHTS RESERVED. Accessed by Lauren Gualdino (lgualdino@briarcliffmanor.org), (-) Order Number #100880972 on May 08, 2020 07:05 AM (PDT) pursuant to License Agreement with ICC & NYSDOS. No further reproduction, no

100880972

INTERMEDIATE METAL CONDUIT . . . E3801, E3904
INTERRUPTING RATING E3404.2
Definition E3501
IRRIGATION (see SUBSURFACE IRRIGATION)

J

JOINTS, PIPE
And connections P2906, P3003
Slip. P2704.1
JOIST
Bearing R502.6, R606.6.3.1
JUMPERS
Bonding E3609
JUNCTION BOXES E3905, E4206.9.1

K

KITCHEN
Definition R202
KITCHEN RECEPTACLES E3703.2, E3901

L

L VENT TERMINATION M1804.2.4
LABELED
Definition R202
Definition applied to electrical equipment E3501
LABELING
Appliances M1303
Definition R202
Fenestration product N1101.10.3, N1102.4.3
LAMPHOLDERS E4003, E4004
LANDINGS R311.3, R311.3.1, R311.3.2, R311.7.6, R311.8.2
LATERAL SUPPORT R502.7, R606.6.4, R607.5.2
LATH
Exterior R703.7.1
Interior R702.2.3
LAUNDRY CIRCUIT E3703.3
LAUNDRY TUBS
Drain connection to standpipe P2706.1.2.1
Requirements P2715
LAVATORIES P2711
Clearances. R307
Waste outlets P2711.3
LEAD
Allowable amount, potable water components P2906.2
Bends and traps. P3002.4.2
Caulked joints P3003.4.1
Flashing P3002.4.1
LIGHT, VENTILATION AND HEATING R303
LIGHTING
Adjoining rooms R303.2
Bathrooms R303.3
Exterior stairs R303.8
Habitable rooms R303.1
Interior stairs R303.7
Luminaire in clothes closets E4003.12
Luminaire installation E4004
Luminaries E4003, E4004, E4206
Recessed N1104.1, N1102.4.5
Required glazed openings R303.9
Systems N1104
LIGHTING OUTLETS
Definition E3501
Required lighting outlets. E3903
LINING
Flue R1003.11, R1003.12
LINTEL R606.10, R608.8, R703.8.3, R1001.7
LIQUID-TIGHT FLEXIBLE CONDUIT. E3801.4, E3908.8.2
LISTED
Definition applied to electrical equipment. E3501
LISTED AND LISTING
Definition applied to building and mechanical provisions R202
Mechanical appliances. M1302.1
Potable water components. P2609
LOAD
Additional R1003.8
Dead load. R301.4
Definition, dead and live. R202
Live load. R301.5
Roof R301.6
Seismic risk map . . . . . .Figure R301.2(2)
Snow load map . . . . . .Figure R301.2(5)
Wind speed map . . . . . Figure R301.2(5)A
LOADS
Branch circuit loads E3702, E3703.6
Feeder load E3704.2
Feeder neutral load E3704.3
Horizontal load AE602.1
Service load E3602.2
LOCATION
Of furnaces. M1408.3, M1409.2
LOCATION (DAMP) (DRY) (WET)
Definitions E3501
LOG HOMES . . . . . .N1102.1, Table N1102.4.1.1
LUMBER
Grade R502.1.1, R602.1.1, R802.1.1

INTERNATIONAL CODE COUNCIL®
Copyright © 2019 ICC & NYSDOS. ALL RIGHTS RESERVED. Accessed by Lauren Gualdino (lgualdino@briarcliffmanor.org), (-) Order Number #100880972 on May 08, 2020 07:05 AM (PDT) pursuant to License Agreement with ICC & NYSDOS. No further reproduction, no

100880972

LUMINAIRE E4004
Clearances E4004.8

M

MACERATING TOILET P2723
MAKEUP AIR M1503.4
MANUFACTURED HOME
Definition R202
Provisions . . . . . Appendix E
MASONRY
Anchorage R606.11
Cavity wall R606.13
Chases R606.8
General R606
Hollow unit R202, R606.3.2.2, R606.13.1.2
Inspection R105.3
Seismic requirements R606.12
Solid, definition R202
Veneer R703.8
Veneer attachment R703.3
MASS WALLS . . . . . Table N1102.1.2, N1102.2.5
MATERIALS
Alternative R104.3
Combustible R202, R1001.11, R1001.12, R1003.18, R1003.19
For ducts M1601
For fixture accessories P2702
For flue liners R1003.11
For fuel-supply systems . . . . . Chapter 24
For hearth extension R1001.9
For siding R703.5
Hydronic pipe M2101, M2103, M2104
Plumbing pipe P2906, P3002
MEANS OF EGRESS R311
Attachment of landings, decks, balconies and stairs R311.5
Door R311.2
Floors and landings at exterior doors R311.3
Hallways R311.6
Ramps R311.8
Stairways R311.7
Vertical egress R311.4
MECHANICAL
Inspection R105.3
System requirements . . . . . Chapter 13, N1103
MEDIUM PRESSURE FUEL-GAS PIPING SYSTEM . . . . . Chapter 24
MEMBRANE
Penetration R302.4.2
Polyethylene R504.2.2, R506.2.3
Waterproofing R406.2
Water-resistive R703.2
METAL
Ducts . . . . . Chapter 16
Roof panels R905.10
Roof shingles R905.4
METAL-CLAD CABLE . . . . . Table E3701.2
METHODS
Water distribution pipe sizing . . . . . Appendix P
MEZZANINES R325
MOISTURE CONTROL R702.7
MORTAR
Joints R606.3.1
MOTORS
Motor branch circuits E3702.6, E3702.7
MULTIPLE
Appliance venting systems M1801.11
Flues R1003.13
MULTIWIRE BRANCH CIRCUITS E3701.5

N

NONCOMBUSTIBLE MATERIAL
Definition R202
NONMETALLIC BOXES E3905.3, E3908.16
NONMETALLIC RIGID CONDUIT E3801.4
NONMETALLIC-SHEATHED CABLE E3705.4.4, E3801.4, E3905.3.1, E3908.8.3
NONPOTABLE WATER SYSTEMS . . . P2910, P2911, P2912, P2913
NOTCHING
Electrical E3402.1
For mechanical systems M1308
For plumbing piping P2603.2
Steel joists R505.2.5, R505.3.5, R804.2.5, R804.3.3
Steel studs R603.2.6, R603.3.4
Wood joists R502.8, R802.7.1
Wood studs R602.6
Wood top plates R602.6.1

O

OCCUPIED SPACE
Definition R202
OIL
Piping and connections M2202
Supply pumps and valves M2204
Tanks M2201

INTERNATIONAL CODE COUNCIL®
Copyright © 2019 ICC & NYSDOS. ALL RIGHTS RESERVED. Accessed by Lauren Gualdino (lgualdino@briarcliffmanor.org), (-) Order Number #100880972 on May 08, 2020 07:05 AM (PDT) pursuant to License Agreement with ICC & NYSDOS. No further reproduction, no

100880972

OPENING
Protection. R302.5
Requirements, combustion air . . . . . .Chapter 17, Chapter 24
Waterproofing of piping penetrations. P2606.1
OPEN-TOP GAS BROILER UNITS M1505.1
OUTLET
Definition . . . . . Chapter 24, E3501
OVEN, WALL-MOUNTED
Definition applied to electrical provisions. E3501
OVERCURRENT
Definition E3501
OVERCURRENT PROTECTION E3705
OVERCURRENT-PROTECTION RATING. E3705
OVERLOAD
Definition E3501

P

PANELBOARD. E3706
Clearance and dedicated space E3405.2, E3405.3
Definition E3501
Headroom E3405.3
PARAPETS. R302.2.2, R606.4.4
PARTICLEBOARD
Floor. R503.3
Walls R605
PENETRATIONS R302.4, R302.5
PERMITS R105.2
PHOTOVOLTAIC PANEL SYSYTEMS R907
PIERS R606.7
Masonry R404.1.9
PIPE
Fittings P2906.6, P3002.3
Materials listing . . . . . Table M2101.1, P2609
Protection. P2603
Standards, drain, waste and vent . . . . . Table P3002.1(1), Table P3002.1(2)
Standards, sewer. . . . . .Table P3002.2
Standards, water supply P2906
PIPING
Connections and materials . . Table M2101.1, P2906
Drain, waste and vent P3002.1
Excavations next to footings P2604.4
Fuel-gas size determination. . . . . Chapter 24
Penetrations. P2606
Protection. P2603
Sizing methods, water distribution P2903.7
Support. . . . . M2101.9, Chapter 24, P2605
PITS
Appliance location M1305.1.3.2
PLANNING
Building . . . . . Chapter 3
PLANS R106
PLASTER
Exterior. R703.7
Interior R702.2
PLATFORM LIFTS AND ELEVATORS R321
PLENUM
Definition R202
Definition, electrical installations E3501
PLUMBING
Fixture clearances R307
Fixtures . . . . . Chapter 27
Inspection. R105.3
Materials. P2702.2, P2905, P3002
Requirements and definitions. R202
System, definition. R202
Third-party certification. P2609.4
Traps . . . . . Chapter 32
Vents . . . . . Chapter 31
PLYWOOD
Application R703.5
Materials, walls. R604
POTABLE WATER
Definition R202
Piping listing. P2609.4
PRECAST CONCRETE
Footings R403.4
Foundation material R402.3.1
Foundation walls R404.5
PRESSURE, WATER SUPPLY
Maximum P2903.3.1
Minimum. P2903.3
PROHIBITED
Receptors. P2706
Return air sources M1602.2
Traps P3201.5
Valves below grade P2903.9.5
Water closets P2712.1
PROPOSED DESIGN (ENERGY). R202, N1105.3
PROTECTION
Against decay and termites R317, R318
Against radon. . . . . Appendix F
Of backflow preventers P2902.6
Of ferrous gas piping . . . . . Chapter 24
Of potable water supply P2902
PURLINS. R802.4.5

INTERNATIONAL CODE COUNCIL®
Copyright © 2019 ICC & NYSDOS. ALL RIGHTS RESERVED. Accessed by Lauren Gualdino (lgualdino@briarcliffmanor.org), (-) Order Number #100880972 on May 08, 2020 07:05 AM (PDT) pursuant to License Agreement with ICC & NYSDOS. No further reproduction, no

100880972

R

RACEWAY
Definition E3501
Raceway installations E3904
Raceway seals E3601.5, E3803.6
Raceways as means of support E3904.4
RADON
Map . . . . . Appendix F
RAFTERS
Grade of lumber R802.1
Spans . . . . . R802.1.1, Tables R802.4.1(1) – R802.4.1(8)
RAIN TIGHT
Definition applied to electrical provisions E3501
RAINPROOF
Definition applied to electrical provisions E3501
RAINWATER
Identification for P2901.2
Supply to fixtures P2901.1
RAMPS R311.8
RANGES
Branch circuits for ranges E3702.9
RANGES AND OVENS
Vertical clearance above cooking top M1901.1
READILY ACCESSIBLE
Definition R202
Definition, electrical installations E3501
RECEPTACLE
Definition E3501
RECEPTACLE OUTLET
Definition E3501
Required outlets E3901
RECEPTACLES
Rating, type and installation E4002
RECEPTORS
Plumbing fixtures and traps . . . . . Chapter 27
Site-built shower P2709.2
Waste P2706
RECESSED LUMINAIRES E4003.5, E4003.12, E4004.8, E4004.9
RECLAIMED WATER
Identification for P2901.2
Supply to fixtures P2901.1
REPAIR
Defined R202
Requirements, energy conservation N1110
REQUIREMENTS
Connections for fuel-burning appliances . . . . . Chapter 24
Return air M1602
RESISTANCE TO GROUND
Electrodes E3608.4
RESISTANT SIDING MATERIAL (see MATERIALS)
RETURN-AIR M1602
RIDGE BOARD R802.4
RIGID METALLIC CONDUIT E3908
RIGID NONMETALLIC CONDUIT E3801.4
ROOF
Coverings R905
Drainage R903.4
Fire classification R902
Flashing R703.4, R903.2, R905
Materials R904
Reroofing R908
Rooftop-mounted solar energy systems R324.3, R324.6
Steel framing R804
Wood framing R802
ROOF ASSEMBLY
Defined R202
Insulation installation N1101.10.1.1
ROOF-CEILING CONSTRUCTION (see CONSTRUCTION) . . . . . Chapter 8
Wind uplift R802.11, R804.3.8
ROOFING
Built-up R905.9
Liquid-applied coating R905.15
Modified bitumen R905.11
Sprayed polyurethane foam R905.14
Thermoplastic single-ply R905.13
Thermoset single-ply R905.12
ROOM
Area, height and dimensions R304, R305
Heaters, vented . . . . . M1410, Chapter 24
Minimum Sizes R304
***R*-VALUE**
Definition R202
Computation N1102.1.3

S

SANITATION R306
SEISMIC RISK MAP . . . . . Figure R301.2(2), Figure R301.2(3)
SEPTIC TANK
Definition R202
SERVICE
Definition E3501
SERVICE CABLE
Definition E3501

INTERNATIONAL CODE COUNCIL®
Copyright © 2019 ICC & NYSDOS. ALL RIGHTS RESERVED. Accessed by Lauren Gualdino (lgualdino@briarcliffmanor.org), (-) Order Number #100880972 on May 08, 2020 07:05 AM (PDT) pursuant to License Agreement with ICC & NYSDOS. No further reproduction, no

100880972

SERVICE CONDUCTORS
Definition E3501
Drip loops. E3605.9.5
Insulation E3605.1
Overload protection E3603.3
Rating of ungrounded service conductors E3602.1
Size E3603.1
SERVICE DISCONNECT
Location E3601.6.2
Marking of E3601.6.1
Maximum number of E3601.7
Rating of E3602.3
Required E3601.6
SERVICE DROP
Clearances. E3604.1, E3604.2
Definition E3501
Point of attachment E3604.3
SERVICE EQUIPMENT
Definition E3501
SERVICE LATERAL
Definition E3501
SERVICE LOAD E3602.2
SERVICE POINT
Definition E3501
SERVICE UTILITIES R107
SERVICE VOLTAGE RATING E3602.4
SERVICE-ENTRANCE CONDUCTORS, OVERHEAD SYSTEM
Definition E3501
SERVICE-ENTRANCE CONDUCTORS, UNDERGOUND SYSTEM
Definition E3501
SERVICES . . . . . Chapter 36
SEWAGE
Disposal, private P2602
SEWER, BUILDING
Definition R202
Replacement by PVC fold and form method . . . P3011
Separation from water service P2604.2, P2906.4.1
Size P3005.4.2
Testing. P2503.4
SHAKES
Wood R702.6, R703.6, R905.8
SHINGLE
Asphalt shingles. R905.2
Metal R905.4
Slate. R905.6
Wood R905.7
SHOWER
Compartment R307.2
Control valve P2708.4
Control valve riser to shower head. P2708.3
Drain size P2708.2
Finishes R307.2
Hand. P2708.5
Receptor. P2709
Space required. R307.1
Stall dimensions. P2708
Walls P2710
SHUTOFF VALVE (see VALVES)
SIDING
Exterior coverings R703
SINKS P2714
SITE
Address R319
Preparation. R408.5, R504.2, R506.2
SIZE
Of combustion air openings . . . . . Chapter 17
Of rooms R304
Of trap P3201.7
SIZING METHODS
Water piping. P2903.7
SKYLIGHTS R308.6
SLATE SHINGLES R905.6
SMOKE ALARMS. R314
SMOKE-DEVELOPED INDEX R302.9, R302.10
SNOW LOAD MAP . . . . . .Figure R301.2(5)
SNOW MELT SYSTEMS N1103.9
SOILS
Collapsible (definition) R202
Compressible (definition) R202
Expansive (definition). R202
SOLAR ENERGY SYSTEMS R324, M2301
Building-integrated photovoltaic systems. . . . R324.5
Definition R202
Ground-mounted photovoltaic systems R324.7
Photovoltaic systems R324.3
Roof access and pathways R324.6
Rooftop-mounted photovoltaic systems. R324.3
Solar thermal systems . . . . . R202, Chapter 23
SOLAR HEAT GAIN COEFFICIENT (SHGC)
Default . . . . . .Table N1101.10.3(1)
Defined. R202
Requirements. N1101.10.3
SPANS
Steel (allowable). R505.3.2, R804.3.2.1
Wood (allowable) R502.3, R802.5
SPAS. R326, E4208

INTERNATIONAL CODE COUNCIL®
Copyright © 2019 ICC & NYSDOS. ALL RIGHTS RESERVED. Accessed by Lauren Gualdino (lgualdino@briarcliffmanor.org), (-) Order Number #100880972 on May 08, 2020 07:05 AM (PDT) pursuant to License Agreement with ICC & NYSDOS. No further reproduction, no

100880972

SPLICES E3406.11
SPLICES AND TAPS E3803.4
SPRINKLER (see FIRE SPRINKLER SYSTEMS)
STAIRWAYS R311.7
Alternating tread devices R311.7.11
Bulkhead enclosure R311.7.10.2
Handrails R311.7.8
Headroom. R311.7.2
Illumination R311.7.9
Landings for R311.7.6
Nosings. R311.7.5.3
Ship's ladders R311.7.12
Spiral R311.7.10
Treads and risers R311.7.5, R311.7.5.4
Vertical rise. R311.7.3
Walking surface slope R311.7.7
Walkline R311.7.4
Width R311.7.1
Winder treads R311.7.5.2.1
STANDARD REFERENCE DESIGN
Defined R202
Requirements . . . . . N1105, Table N1105.5.2(1)
STANDARDS . . . . . .Chapter 44, Appendix G
STANDPIPE (see WASTE RECEPTOR)
STATIONARY STORAGE BATTERY SYSTEMS R327
Definition. R202
STEEL
Fireplace units R1001.5.1
Floor construction R505
Framing, insulation requirements N1102.2.6
Roof-ceiling construction R804
Walls. R603
STOP WORK ORDER. R105.4
STORM SHELTERS R323
STORY
Definition. R202
STOVES
Factory-built fireplace M1414
STRUCTURAL AND PIPING PROTECTION . . . P2603
STRUCTURAL INSULATED PANEL (SIP) R610
STUDS
Spacing. R602.3.1
Steel R603.2, R603.3
Wood R602.2, R602.3
SUBSURFACE IRRIGATION SYSTEMS P3009
SUMP PUMPS. P3007.3.2, P3303
SUMPS AND EJECTORS. P3007
SUNROOMS R301.2.1.1.1, R303.9.1
Defined R202
Fenestration N1102.3.5
Insulation. N1102.2.13
SUPPLY
Combustion air . . . . . Chapter 17, Chapter 24
Fuel systems. . . . . Chapter 24
Oil supply pumps and valves M2204
Required gas. . . . . Chapter 24
Return air M1602
Water . . . . . Chapter 29
SUPPORT
Of decks R507.9.1.2
Of ducts. M1601.4.4
Of floor joists. R502.6, R505.3.2
Of masonry chimneys R1003.2, R1003.3, R1003.4
Of pipe . . . . . .M2101.9, Chapter 24, P2605
SUPPORT REQUIREMENTS FOR WIRING METHODS. E3802.1
SWIMMING POOLS, SPAS AND HOT TUBS . . . . . R326, N1103.10, Chapter 42, Appendix G
SWITCHES
Definition. E3501
Rating and application E4001
SYSTEMS
Mechanical venting . . . . . Chapter 18, Chapter 24
Plumbing, drainage, waste and venting . . . . . Chapter 25, Chapter 30, Chapter 31, Chapter 33

T

TAIL PIECES, PLUMBING FIXTURE P2703
TANK
For fuel oil-burning appliances M2201
Septic, definition R202
TEMPERATURE ISOLINES . . . . . Figure R301.2(1)
TEMPERATURE LIMITATIONS E3705.4
TERMINALS E3406.10
TERMINATION
Of chimneys R1003.9
Of vents (general) M1804.2
TERMITES
Infestation probability map . . . . . Figure R301.2(6)
Protection R318
TEST
For leaks in supply piping . . . . . Chapter 24
Of backflow preventers P2503.8
Of building sewers P2503.4
Of plumbing systems P2503
Of shower liner P2503.6

INTERNATIONAL CODE COUNCIL®
Copyright © 2019 ICC & NYSDOS. ALL RIGHTS RESERVED. Accessed by Lauren Gualdino (lgualdino@briarcliffmanor.org), (-) Order Number #100880972 on May 08, 2020 07:05 AM (PDT) pursuant to License Agreement with ICC & NYSDOS. No further reproduction, no

100880972

THERMAL ISOLATION
Defined R202
Requirements N1102.2.13
THERMAL RESISTANCE (see *R*-VALUE)
THERMAL TRANSMITANCE (see *U*-FACTOR)
THERMOSTAT
Controls N1103.1
Defined R202
Programmable N1103.1.1
THICKNESS
Of chimney walls R1003.10
TIES
Veneer R703.8.4
TILE
Shingles (clay and concrete) R905.3
TIME SWITCH, PUMPS FOR POOLS N1103.10.2
TOILET, BATH AND SHOWER SPACES R307
TOWNHOUSE
Definition R202
Parapet construction R302.2.5
Scope. R101.2
Separation R302.2
Structural independence R302.2.6
TRACK LIGHTING E4005
TRAP . . . . . Chapter 32
Arm, definition R202
Building P3201.4
Seal protection. P3201.2.1
TRENCHING AND BACKFILLING. P2604
TRUSSES
Steel. R505.1.3, R804.3.6
Wood R502.11, R802.10
TWO-FAMILY DWELLINGS. R302.3
TYPE OF VENTING SYSTEMS REQUIRED . . . . .Chapter 18, Chapter 24

U

***U*-FACTOR**
Definition R202
Requirements . . . . . Chapter 11
UNDER FLOOR
Access to furnaces M1305.1.4
Plenums. M1601.5
Space. R408
UNDERGROUND INSTALLATION REQUIREMENTS
Duct systems M1601.1.2
Electrical cable. E3803
Wiring. E4203.7
UNDER-STAIR PROTECTION. R302.7
UNVENTED ATTIC ASSEMBLIES R806.5
UTILIZATION EQUIPMENT
Definition E3401

V

VALVES
Backwater P3008
Meter . . . . . Chapter 24
Oil-supply M2204
Plumbing fixture P2903.9.3
Relief, water heater P2804
Shut off, water heaters. P2903.9.2
Shut off, water supply. P2903.9
Shutoff, fuel-gas . . . . . Chapter 24
Shutoff, fuel-oil M2204.2
VAPOR RETARDERS R702.7
Definition R202
VENEER
Masonry R703.7
VENT
B or BW vent . . . . . Chapter 24
Definition . . . . . Chapter 24
L vent . . . . . .M1804.2.4, Chapter 24
Plumbing system, definition R202
Termination M1804.2, M2203.5, P3103.5
VENTED
Decorative appliances . . . . . Chapter 24
Floor furnaces M1408
Room heaters. M1410
Wall furnaces M1409
VENTILATION
Adjoining rooms R303.2
Bathroom and kitchen R303.3, M1505
For hydrogen systems M1307.4
Habitable rooms. R303.1
Roof R806
Under floor R408.1
Whole house M1505.4, N1103.6
VENTING (MECHANICAL)
Chimney and vent connectors . . . . . R1006, M1803, Chapter 24
Components. . . . . .M1802, Chapter 24
Fireplace R1006
General . . . . . .M1801, Chapter 24
Required. . . . . .M1801, M2203.4, Chapter 24
Systems . . . . . Chapter 18, Chapter 24
VENTING (PLUMBING)
Air admittance valves. P3114
Circuit. P3110
Combination waste and vent system P3111

INTERNATIONAL CODE COUNCIL®
Copyright © 2019 ICC & NYSDOS. ALL RIGHTS RESERVED. Accessed by Lauren Gualdino (lgualdino@briarcliffmanor.org), (-) Order Number #100880972 on May 08, 2020 07:05 AM (PDT) pursuant to License Agreement with ICC & NYSDOS. No further reproduction, no

100880972

Common P3107
Connections and grades P3104
Fixture P3105
Individual P3106
Island fixture P3112
Pipe sizing P3113
Stacks and stack vents P3102
Systems P3101
Terminals P3103
Waste stack P3109
Wet P3108

VERTICAL
Clearances above cooking top M1901.1
Pipe, definition R202

VIOLATIONS
And penalties R105.6

VISIBLE TRANMITTANCE (VT)
Default glazed fenestration N1101.10.3
Defined R202

VOLTAGE
Definition E3501

VOLTAGE RATING (SERVICES) E3602.4

VOLTAGE TO GROUND
Definition E3501

VOLTAGES E3404.1

W

WALL FURNACE (see APPLIANCE)
General M1409.1
Installation M1409.3
Location M1409.2

WALLBOARD
Gypsum R702.3

WALLS
Above-grade, defined R202
Basement, defined R202
Bathtub compartments R307.2, P2710
Bracing, steel R603.9
Bracing, wood R602.10
Construction . . . . . Chapter 6
Covering . . . . . Chapter 7
Crawl space, defined R202
Cripple R602.9
Deflection R301.7
Exterior, defined R202
Exterior covering R703
Finishes R307.2, R702
Fireplace R1001.5
Foundation R404
Insulating concrete form R608.3, R608.4, R608.5.3
Shower compartments P2710
Steel framing R603
Structural insulated panels (SIP) R610
Thickness, masonry chimneys R1003.10
Wood framing R602

WARM-AIR FURNACES M1402
Access to M1401.2
Clearance from M1402.2

WASTE
Clear water P2706.1
Continuous, definition R202

WASTE RECEPTOR
Hub drain P2706.1.1
Prohibited types P2706.2
Standpipe P2706.1.2

WATER
Distribution system, definition R202
Heater, definition R202
Heaters . . . . . Chapter 20, Chapter 24, Chapter 28
Individual supply and sewage disposal P2602
Piping sizing methods P2903
Pressure P2903.3
Service, separation from sewer P2604.2
Supply and distribution . . . . . Chapter 29
Supply system, definition R202

WATER CLOSET
Carriers for wall hung P2702.4
Clearances for R307.1
Dual flushing P2712.1
Personal hygiene devices P2722.5
Seats P2712.7
Standards P2712.1

WATER HEATER
Drain water heater heat recovery units P2903.11
In garages P2801.7
Location P2801.3, P2801.4, P2801.5
Pan P2801.6
Plumbing requirements . . . . . Chapter 28
Relief valves P2804
Seismic bracing P2801.7
Solar thermal P2802, P2902.5.5
Thermal expansion from P2903.4
Used for space heating P2803

WATER TIGHT
Definition applied to electrical provisions E3501

WATERPROOFING
And dampproofing R406
Of openings through roofs and walls P2607

INTERNATIONAL CODE COUNCIL®
Copyright © 2019 ICC & NYSDOS. ALL RIGHTS RESERVED. Accessed by Lauren Gualdino (lgualdino@briarcliffmanor.org), (-) Order Number #100880972 on May 08, 2020 07:05 AM (PDT) pursuant to License Agreement with ICC & NYSDOS. No further reproduction, no

100880972

WEATHERPROOF
Definition applied to electrical provisions E3501
WELLS (see INDIVIDUAL WATER SUPPLY)
WHIRLPOOL BATHTUBS P2720
WHOLE-HOUSE VENTILATION M1505.4
WIND
Design criteria R301.2
Speed maps. . . . . Figure R301.2(5)A, Figure R301.2(5)B
WINDOW R609
EERO replacement sill height R310.2.5
Fall protection R312.2
Opening limiting devices R312.2.2
WIRING METHODS . . . . . Chapter 37
WOOD
Floor construction R502
Foundation walls R404.2
Protection against decay R317
Roof-ceiling construction R802
Shakes. R905.8
Shingles R905.7
Trusses R502.11, R802.10
Walls R602
WORKING SPACE. E3606.2
Around electrical equipment E3405.1, E3405.2
WORKMANSHIP, PLUMBING. P2608

Y

YARD
Definition R202

INTERNATIONAL CODE COUNCIL®
Copyright © 2019 ICC & NYSDOS. ALL RIGHTS RESERVED. Accessed by Lauren Gualdino (lgualdino@briarcliffmanor.org), (-) Order Number #100880972 on May 08, 2020 07:05 AM (PDT) pursuant to License Agreement with ICC & NYSDOS. No further reproduction, no

100880972

ICC INTERNATIONAL CODE COUNCIL®

People Helping People Build a Safer World®

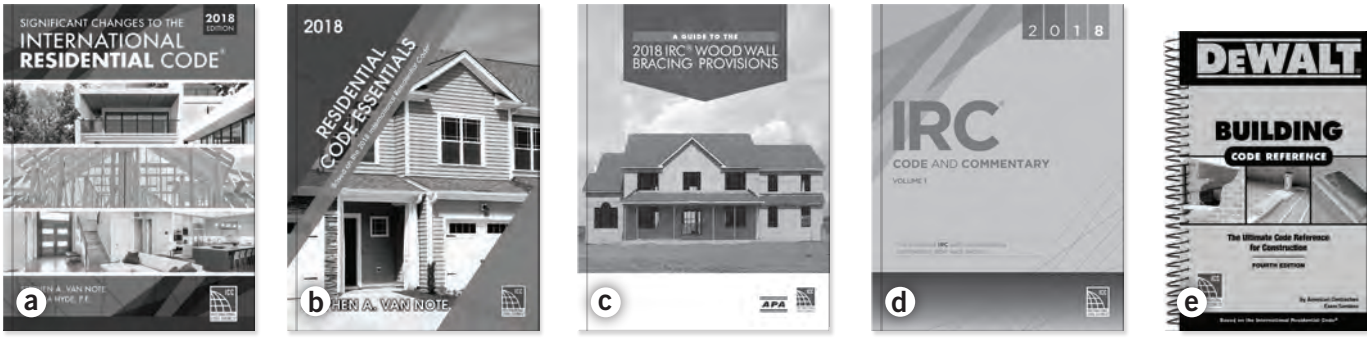

Helpful tools for Your Residential Code

a. Significant Changes to the International Residential Code, 2018 Edition

This must-have guide provides comprehensive, yet practical, analysis of the critical changes made between the 2015 and 2018 editions of the IRC. Key changes are identified then followed by in-depth discussion of how the change affects real-world application.

Features:

- A quick summary, detailed illustration, and discussion accompanies each change
- Key insights into the IRC's content, meaning and implications

SOFT COVER #7101S18
PDF DOWNLOAD #8950P787

b. Residential Code Essentials: Based on the 2018 IRC

Detailed full-color illustrations enhance comprehension of code provisions

Explores those code provisions essential to understanding the application of the IRC in a straightforward and easy-to-read format. The user-friendly approach of the text simplifies critical concepts so that users can achieve a more complete understanding of the code's intent. Full-color illustrations, examples and simplified tables assist the reader in visualizing the code requirements. This up-to-date, step-by-step guide's topic organization reflects the intent of the IRC and facilitates understanding and application of the code provisions.

SOFT COVER #4131S18
PDF DOWNLOAD #8951P013

FROM APA & ICC!

c. A Guide to the 2018 IRC Wood Wall Bracing Provisions

Although it is of critical importance when designing, performing plan review, building or inspecting a structure, wall bracing is a common source of confusion and misapplication. This illustrative guide was developed to help building designers, builders, building officials and others using the code in the application of the lateral bracing requirements of the 2018 IRC.

SOFT COVER #7102S18
PDF DOWNLOAD #8799P18

d. 2018 IRC® Code and Commentary, Volumes 1 & 2 (Chapters 1–44)

This helpful set contains the full text of 2018 IRC, including tables and figures, followed by corresponding commentary at the end of each section to help code users understand the intent of the code provisions and learn how to apply them effectively. Volumes also sold separately.

SOFT COVER #3110S18
PDF DOWNLOAD #871P18
SOFT + PDF COMBO #3110SP18

e. DeWALT Building Code Reference, Fourth Edition

A simple, easy-to-understand approach to the 2018 IRC that provides illustrations and clear, concise text. Coverage ranges from wall, floor, and roof framing to foundations and footings, containing all the information you need to be successful in the industry in a compact, easy-to-use reference guide. Packaged in a conveniently-sized, durable format, it will withstand a variety of on-the-job trainings and ultimately the wear and tear of jobsites.

SOFT COVER #9511S18

19-16922

Order Your Residential Code Tools Today! 1-800-786-4452 | www.iccsafe.org/books

This insert is not part of the official text of the New York State Uniform Fire Prevention and Building Code or New York State Energy Conservation Construction Code.

INTERNATIONAL CODE COUNCIL®

Copyright © 2019 ICC & NYSDOS. ALL RIGHTS RESERVED. Accessed by Lauren Gualdino (lgualdino@briarcliffmanor.org), (-) Order Number #100880972 on May 08, 2020 07:05 AM (PDT) pursuant to License Agreement with ICC & NYSDOS. No further reproduction, no

ICC EVALUATION SERVICE

In Cooperation with Innovation RESEARCH LABS

Specify and Approve with

CONFIDENCE



When facing new or unfamiliar materials, look for an ICC-ES Evaluation Report or Listing before approving for installation.

ICC-ES® **Evaluation Reports** are the most widely accepted and trusted technical reports for code compliance.

ICC-ES **Building Product Listings** and **PMG Listings** show product compliance with applicable standard(s) referenced in the building and plumbing codes as well as other applicable codes.

When you specify or approve products or materials with an ICC-ES report, building product listing or PMG listing, you avoid delays on projects and improve your bottom line.

ICC-ES is a subsidiary of ICC®, the publisher of the codes used throughout the U.S. and many global markets, so you can be confident in their code expertise.

www.icc-es.org | 800-423-6587

ANSI ACCREDITED ISO/IEC 17065 Product Certification Body #1000

SCC Accredited CB-P/S OCPS Accrédité CCN

EPA WaterSense LICENSED CERTIFYING BODY

Look for the Trusted Marks of Conformity

ICC ES · ICC ES LISTED · ICC ES PMG · ICC ES SAVE

ICC INTERNATIONAL CODE COUNCIL®

19-17591

This insert is not part of the official text of the New York State Uniform Fire Prevention and Building Code or New York State Energy Conservation Construction Code.

INTERNATIONAL CODE COUNCIL®
Copyright © 2019 ICC & NYSDOS. ALL RIGHTS RESERVED. Accessed by Lauren Gualdino (lgualdino@briarcliffmanor.org), (-) Order Number #100880972 on May 08, 2020 07:05 AM (PDT) pursuant to License Agreement with ICC & NYSDOS. No further reproduction, no

100880972



ICC INTERNATIONAL CODE COUNCIL®

People Helping People Build a Safer World®

Get FREE access to hundreds of ICC resources and view the largest collection of code titles

ICC's Digital Codes Library (codes.iccsafe.org) conveniently provides access to the latest code text while on the go, at home or in the office, in an easy-to-navigate format.



Available anywhere 24/7

Use on any mobile or digital device

View over 800+ ICC titles

19-17447

Learn how to use this powerful tool at *codes.iccsafe.org*

This insert is not part of the official text of the New York State Uniform Fire Prevention and Building Code or New York State Energy Conservation Construction Code.

INTERNATIONAL CODE COUNCIL®

Copyright © 2019 ICC & NYSDOS. ALL RIGHTS RESERVED. Accessed by Lauren Gualdino (lgualdino@briarcliffmanor.org), (-) Order Number #100880972 on May 08, 2020 07:05 AM (PDT) pursuant to License Agreement with ICC & NYSDOS. No further reproduction, no



The ICC Assessment Center (formerly known as ICC Certification & Testing) provides nationally recognized credentials that demonstrate a confirmed commitment to protect public health, safety, and welfare. Raise the professionalism of your department and further your career by pursuing an ICC Certification.

ICC Certifications offer:

- Nationwide recognition
- Increased earning potential
- Career advancement
- Superior knowledge
- Validation of your expertise
- Personal and professional satisfaction

Exams are developed and maintained to the highest standards, which includes continuous peer review by national committees of experienced, practicing professionals. ICC is continually evolving exam offerings, testing options, and technology to ensure that all building and fire safety officials have access to the tools and resources needed to advance in today's fast-paced and rapidly-changing world.

Enhancing Exam Options

Effective July 2018, the Assessment Center enhanced and streamlined exam options and now offers only computer based testing (CBT) at a test site and PRONTO. We no longer offer paper/pencil exams.

Proctored Remote Online Testing Option (PRONTO)

Taking your next ICC certification exam is more convenient, more comfortable and more efficient than ever before with PRONTO.

PRONTO provides a convenient testing experience that is accessible 24 hours a day, 7 days a week, 365 days a year. Required hardware/software is minimal – you will need a webcam and microphone, as well as a reasonably recent operating system.

pronto
ICC ONLINE EXAMS

Whether testing in your office or in the comfort of your home, your ICC exam will continue to maintain its credibility while offering more convenience, allowing you to focus on achieving your professional goals. The Assessment Center continues to add exams to the PRONTO exam catalog regularly.

18-15617

Checkout all the ICC Assessment Center has to offer at iccsafe.org/certification

This insert is not part of the official text of the New York State Uniform Fire Prevention and Building Code or New York State Energy Conservation Construction Code.

INTERNATIONAL CODE COUNCIL®

Copyright © 2019 ICC & NYSDOS. ALL RIGHTS RESERVED. Accessed by Lauren Gualdino (lgualdino@briarcliffmanor.org), (-) Order Number #100880972 on May 08, 2020 07:05 AM (PDT) pursuant to License Agreement with ICC & NYSDOS. No further reproduction, no

100880972

ANDREW M. CUOMO GOVERNOR
ROSSANA ROSADO SECRETARY OF STATE



2020 FIRE CODE of NEW YORK STATE

NEW YORK STATE OF OPPORTUNITY.

Building Standards and Codes

ICC INTERNATIONAL CODE COUNCIL®

INTERNATIONAL CODE COUNCIL®

Copyright © 2019 ICC & NYSDOS. ALL RIGHTS RESERVED. Accessed by Lauren Gualdino (lgualdino@briarcliffmanor.org), (-) Order Number #100880972 on May 08, 2020 07:05 AM (PDT) pursuant to License Agreement with ICC & NYSDOS. No further reproduction, no

100880972

ANDREW M. CUOMO GOVERNOR
ROSSANA ROSADO SECRETARY OF STATE

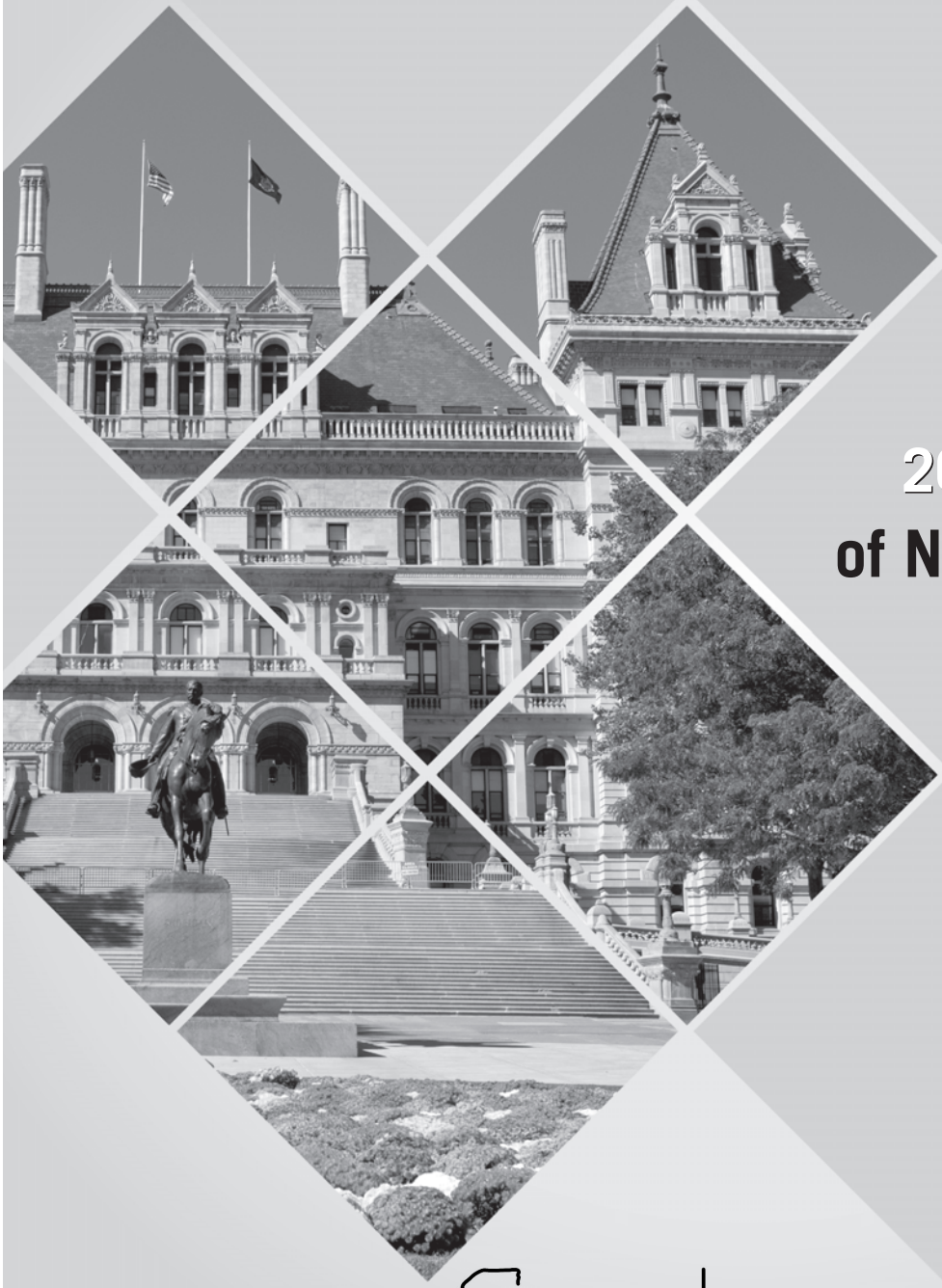

2020 FIRE CODE of NEW YORK STATE

NEW YORK STATE OF OPPORTUNITY.

Building Standards and Codes

ICC INTERNATIONAL CODE COUNCIL®

INTERNATIONAL CODE COUNCIL®

Copyright © 2019 ICC & NYSDOS. ALL RIGHTS RESERVED. Accessed by Lauren Gualdino (lgualdino@briarcliffmanor.org), (-) Order Number #100880972 on May 08, 2020 07:05 AM (PDT) pursuant to License Agreement with ICC & NYSDOS. No further reproduction, no

100880972

2020 Fire Code of New York State

Publication Date: November 2019

ISBN: 978-1-60983-914-7

COPYRIGHT © 2019
by
INTERNATIONAL CODE COUNCIL, INC.
and
NEW YORK STATE DEPARTMENT OF STATE

ALL RIGHTS RESERVED. This 2020 *Fire Code of New York State* is a copyrighted work owned by the International Code Council, Inc., ("ICC"). This work contains: (1) portions of the ICC International Codes® (I-Codes®); (2) material that is a derivative of the I-Codes; and (3) wholly original materials prepared by the New York State Department of State (NYDOS) or by the New York State Fire Prevention and Building Code Council (the "Code Council"). The International Code Council, Inc., has copyright ownership of the I-Codes. The International Code Council and the New York State Department of State have joint copyright ownership of the material that is a derivative of the I-Codes. The New York State Department of State has copyright ownership of the wholly original materials prepared by the New York State Department of State and/ or by the Code Council. As to the ICC International Codes, all rights, including the right of reproduction in whole or in part in any form, are reserved to the International Code Council. As to the material that is derivative of the I-Codes, all rights, including the right of reproduction in whole or in part in any form, are reserved to the International Code Council and the New York State Department of State, jointly. As to the wholly original materials prepared by the New York State Department of State or by the Code Council, all rights, including the right of reproduction in whole or in part in any form, are reserved to the New York State Department of State. Without advance written permission from the copyright owner, no part of this book may be reproduced, distributed or transmitted in any form or by any means, including, without limitation, electronic, optical or mechanical means (by way of example, and not limitation, photocopying or recording by or in an information storage retrieval system). For information on use rights and permissions, please contact: ICC Publications, 4051 Flossmoor Road, Country Club Hills, IL 60478. Phone 1-888-ICC-SAFE (422-7233).

Trademarks: "International Code Council," the "International Code Council" logo, "ICC," the "ICC" logo, "International Fire Code," "IFC" and other names and trademarks appearing in this book are registered trademarks of the International Code Council, Inc., and/or its licensors (as applicable), and may not be used without permission.

T024582

PRINTED IN THE USA

INTERNATIONAL CODE COUNCIL®

Copyright © 2019 ICC & NYSDOS. ALL RIGHTS RESERVED. Accessed by Lauren Gualdino (lgualdino@briarcliffmanor.org), (-) Order Number #100880972 on May 08, 2020 07:05 AM (PDT) pursuant to License Agreement with ICC & NYSDOS. No further reproduction, no

100880972

ACKNOWLEDGMENTS

With gratitude, the Department of State acknowledges the contributions of the following individuals in the creation of the 2020 Codes of New York State:

STATE FIRE PREVENTION AND BUILDING CODE COUNCIL

Rossana Rosado	Chair – Secretary of State, New York State Department of State Designee - Matthew W. Tebo, Esq.
Francis J. Nerney, Jr.	State Fire Administrator, Office of Fire Prevention and Control Designee - Paul Martin
RuthAnne Visnauskas	Commissioner, Division of Housing and Community Renewal Designee - Michael Weber Designee - Joseph Palozzola
Roberta Reardon	Commissioner, New York State Department of Labor Designee - Vincent R. Rapacciuolo
Honorable Bill de Blasio	Mayor, City of New York Designee - Keith Wen, NYC Department of Buildings
Honorable Michael R. Sabatino, Jr.	Councilmember, City of Yonkers
Claudia K. Braymer, Esq.	County Board of Supervisors, Warren County
David A. Seeley	Supervisor, Town of Irondequoit
Timothy DeRuyscher, P.E. FSFPE	Professional Engineer Representative
Patrick Dolan	Trade Union Representative, Steamfitters Union, 638
Shawn Hamlin, R.A.	Registered Architect Representative, Hamlin Design Group
Robert Hughes	Code Enforcement Representative, Village of Pleasantville
Dominic Marinelli	Persons with Disabilities Representative, United Spinal Association
Joseph J. Toomey	Fire Service Representative, Albany Fire Department
William W. Tuyn	Builders Representative, Forbes Capretto Homes

DEPARTMENT OF STATE

Rossana Rosado	Secretary of State
Brendan Hughes	Executive Deputy Secretary of State
James W. Leary, Esq.	Assistant Executive Deputy Secretary of State
Mark P. Pattison	Deputy Secretary of State for Local Government
Matthew W. Tebo, Esq.	Deputy Secretary of State for Agency Transformation and External Affairs
John R. Addario, P.E.	Director of the Division of Building Standards and Codes
Brian Tollisen, P.E.	Deputy Director of the Division of Building Standards and Codes
Gerard A. Hathaway, R.A.	Assistant Director for Code Development
Kevin Duerr-Clark, P.E.	Assistant Director for Technical Support
Francis “Nick” McAndrew, P.E.	Assistant Director for Educational Services
Joseph Hill, R.A.	Assistant Director for Code Administration
Jeffrey M. Hinderliter, P.E.	Professional Engineer
Emma Gonzalez-Laders, R.A., LEED AP	Senior Architect
Daniel Carroll	Code Compliance Specialist I
Janet Miller	Program Aide
Joseph P. Ball, Esq.	Supervising Attorney
Panagiota K. Hyde, Esq.	Senior Attorney

IN MEMORIAM

John H. Flanagan	Code Enforcement Representative, Code Council Member (2003–2017)
Honorable Judith Kennedy	Mayor, City of Newburgh, Code Council Member (2013–2018)
Brendan Fitzgerald	Executive Deputy Secretary of State (2016–2018)

INTERNATIONAL CODE COUNCIL®
Copyright © 2019 ICC & NYSDOS. ALL RIGHTS RESERVED. Accessed by Lauren Gualdino (lgualdino@briarcliffmanor.org), (-) Order Number #100880972 on May 08, 2020 07:05 AM (PDT) pursuant to License Agreement with ICC & NYSDOS. No further reproduction, no

100880972

INTERNATIONAL CODE COUNCIL®
Copyright © 2019 ICC & NYSDOS. ALL RIGHTS RESERVED. Accessed by Lauren Gualdino (lgualdino@briarcliffmanor.org), (-) Order Number #100880972 on May 08, 2020 07:05 AM (PDT) pursuant to License Agreement with ICC & NYSDOS. No further reproduction, no

PREFACE

Introduction

The *Fire Code of New York State* (FCNYS) establishes minimum requirements for fire prevention and fire protection systems using prescriptive and performance-related provisions. It is founded on broad-based principles that make possible the use of new materials and new system designs. This 2020 edition is a derivative work of the 2018 edition of the *International Fire Code*® (IFC®) published by the International Code Council® (ICC®).

Intention

This code is founded on principles intended to establish provisions consistent with the scope of a fire code that adequately protects public health, safety and welfare; provisions that do not unnecessarily increase construction costs; provisions that do not restrict the use of new materials, products or methods of construction; and provisions that do not give preferential treatment to particular types or classes of materials, products or methods of construction.

Letter Designations in Front of Section Numbers

The bracketed letter designations for the party responsible for portions of this code are as follows:

[A] = Administrative Code Development Committee;

[BE] = IBC—Egress Code Development Committee;

[BF] = IBC—Fire Safety Code Development Committee;

[BG] = IBC—General Code Development Committee;

[BS] = IBC—Structural Code Development Committee;

[EB] = International Existing Building Code Development Committee;

[FG] = International Fuel Gas Code Development Committee;

[M] = International Mechanical Code Development Committee; and

[P] = International Plumbing Code Development Committee.

New York State Code Development

[NY] = New York State Department of State

INTERNATIONAL CODE COUNCIL®
Copyright © 2019 ICC & NYSDOS. ALL RIGHTS RESERVED. Accessed by Lauren Gualdino (lgualdino@briarcliffmanor.org), (-) Order Number #100880972 on May 08, 2020 07:05 AM (PDT) pursuant to License Agreement with ICC & NYSDOS. No further reproduction, no

100880972

Marginal Markings

Solid vertical lines in the margins within the body of the code indicate a technical change from the requirements of the 2015 edition of the I-Codes®. Deletion indicators in the form of an arrow (➡) are provided in the margin where an entire section, paragraph, exception or table has been deleted or an item in a list of items or a table has been deleted.

A single asterisk [*] placed in the margin indicates that text or a table has been relocated within the code. A double asterisk [**] placed in the margin indicates that the text or table immediately following it has been relocated there from elsewhere in the code. The following table indicates such relocations in the 2020 edition of the *Fire Code of New York State*.

2015 LOCATION	2020 LOCATION
606.12.1 and 606.12.1.1	605.1.1 and 605.1.2
806.2	807.4.1
904.12.5	906.4
908.3–908.7	916
605.11	1204
604	1203
608	1206.2
3104.5–3104.22	3107
5003.2.2.1, Item 6	5005.1.12

Italicized Terms

Words and terms defined in Chapter 2, Definitions, are italicized where they appear in code text and the Chapter 2 definition applies. Where such words and terms are not italicized, common-use definitions apply. The words and terms selected have code-specific definitions that the user should read carefully to facilitate better understanding of the code.

INTERNATIONAL CODE COUNCIL®
Copyright © 2019 ICC & NYSDOS. ALL RIGHTS RESERVED. Accessed by Lauren Gualdino (lgualdino@briarcliffmanor.org), (-) Order Number #100880972 on May 08, 2020 07:05 AM (PDT) pursuant to License Agreement with ICC & NYSDOS. No further reproduction, no

100880972

EFFECTIVE USE OF THE FIRE CODE OF NEW YORK STATE

The *Fire Code of New York State* (FCNYS) is a code that regulates minimum fire safety requirements for new and existing buildings, facilities, storage and processes. The FCNYS addresses fire prevention, fire protection, life safety and safe storage and use of hazardous materials in new and existing buildings, facilities and processes. The FCNYS provides a total approach of controlling hazards in all buildings and sites, regardless of the hazard being indoors or outdoors.

The FCNYS is a design document. For example, before one constructs a building, the site must be provided with an adequate water supply for fire-fighting operations and a means of building access for emergency responders in the event of a medical emergency, fire or natural or technological disaster. Depending on the building's occupancy and uses, the FCNYS regulates the various hazards that may be housed within the building, including refrigeration systems, application of flammable finishes, fueling of motor vehicles, high-piled combustible storage and the storage and use of hazardous materials. The FCNYS sets forth minimum requirements for these and other hazards and contains requirements for maintaining the life safety of building occupants, the protection of emergency responders, and to limit the damage to a building and its contents as the result of a fire, explosion or unauthorized hazardous material discharge.

As described, the FCNYS has many types of requirements for buildings and facilities. The applicability of these requirements varies. An understanding of the applicability of requirements, is necessary. Generally, the construction and design provisions only apply to new buildings or existing buildings and occupancies as addressed by Chapter 11. The administrative, maintenance and operational requirements are applicable to all buildings and facilities whether new or existing

Arrangement and Format of the 2020 FCNYS

Before applying the requirements of the FCNYS, it is beneficial to understand its arrangement and format. The FCNYS, like other codes published by the International Code Council, is arranged and organized to follow sequential steps that generally occur during a plan review or inspection. This edition of the FCNYS is organized into seven parts as illustrated in the tables below. Each part represents a broad subject matter and includes the chapters that logically fit under the subject matter of each part. It is also foreseeable that additional chapters will need to be added in the future as regulations for new processes or operations are developed. Accordingly, this organization was designed to accommodate such future chapters by providing reserved (unused) chapters in several of the parts. This will allow the subject matter parts to be conveniently and logically expanded without requiring a major renumbering of the FCNYS chapters.

ORGANIZATION OF THE FCNYS	
Parts and Chapters	**Subject Matter**
Part I—Chapters 1 and 2	Administrative and definitions
Part II—Chapters 3 and 4	General safety provisions
Part III—Chapters 5 through 12	Building and equipment design features
Part III—Chapters 13 through 19	Reserved for future use
Part IV—Chapters 20 through 40	Special occupancies and operations
Part IV—Chapters 41 through 49; 52	Reserved for future use
Part V—Chapters 50, 51 and 53 through 67	Hazardous materials
Part V—Chapters 68 through 79	Reserved for future use
Part VI—Chapter 80	Referenced standards
Part VII—Appendices A through N	Adoptable and informational appendices

INTERNATIONAL CODE COUNCIL®
Copyright © 2019 ICC & NYSDOS. ALL RIGHTS RESERVED. Accessed by Lauren Gualdino (lgualdino@briarcliffmanor.org), (-) Order Number #100880972 on May 08, 2020 07:05 AM (PDT) pursuant to License Agreement with ICC & NYSDOS. No further reproduction, no

100880972

The FCNYS requirements for fire-resistive construction, interior finish, fire protection systems, means of egress and construction safeguards are directly correlated to the chapters containing parallel requirements in the IBC, as follows:

FCNYS Chapter	Subject
7	Fire and smoke protection features
8	Interior finish, decorative materials and furnishings
9	Fire protection and life safety systems
10	Means of egress
33	Fire safety during construction and demolition

The following is a chapter-by-chapter synopsis of the scope and intent of the provisions of the *Fire Code of New York State*:

PART I–ADMINISTRATIVE

Chapter 1 Scope and Administration. This chapter contains provisions for the application, enforcement and administration of subsequent requirements of the code. In addition to establishing the scope of the code, Chapter 1 identifies which buildings and structures come under its purview.

Chapter 2 Definitions. All terms that are defined in the code are listed alphabetically in Chapter 2. While a defined term may be used in one chapter or another, the meaning provided in Chapter 2 is applicable throughout the code.

Where understanding of a term's definition is especially key to or necessary for understanding of a particular code provision, the term is shown in *italics* wherever it appears in the code. This is true only for those terms that have a meaning that is unique to the code. In other words, the generally understood meaning of a term or phrase might not be sufficient or consistent with the meaning prescribed by the code; therefore, it is essential that the code-defined meaning be known.

Guidance regarding tense, gender and plurality of defined terms as well as guidance regarding terms not defined in this code are also provided.

PART II–GENERAL SAFETY PROVISIONS

Chapter 3 General Requirements. The open burning, ignition source, vacant building, miscellaneous storage, roof gardens and landscaped roofs, outdoor pallet storage and hazards to fire fighters requirements and precautions, among other general regulations contained in this chapter, are intended to improve premises safety for everyone, including construction workers, tenants, operations and maintenance personnel, and emergency response personnel. As with other chapters of the *Fire Code of New York State,* Section 302 contains a list of terms that are defined in Chapter 2 and are applicable to the chapter contents.

Chapter 4 Emergency Planning and Preparedness. This chapter addresses the human contribution to life safety in buildings when a fire or other emergency occurs. The requirements for continuous training and scheduled fire, evacuation and lockdown drills can be as important as the required periodic inspections and maintenance of built-in fire protection features. The level of preparation by the occupants also improves the emergency responders' abilities during an emergency. The *Building Code of New York State* (BCNYS) focuses on built-in fire protection features, such as automatic sprinkler systems, fire-resistance-rated construction and properly designed egress systems, whereas this chapter fully addresses the human element. As with other chapters of the *Fire Code of New York State*, Section 402 contains a list of terms that are defined in Chapter 2 and are applicable to the chapter contents.

INTERNATIONAL CODE COUNCIL®
Copyright © 2019 ICC & NYSDOS. ALL RIGHTS RESERVED. Accessed by Lauren Gualdino (lgualdino@briarcliffmanor.org), (-) Order Number #100880972 on May 08, 2020 07:05 AM (PDT) pursuant to License Agreement with ICC & NYSDOS. No further reproduction, no

100880972

PART III–BUILDING AND EQUIPMENT DESIGN FEATURES

Chapter 5 Fire Service Features. The requirements of this chapter apply to all buildings and occupancies and pertain to access roads; access to building openings and roofs; premises identification; key boxes; fire protection water supplies; fire command centers; fire department access to equipment and emergency responder radio coverage in buildings. As with other chapters of the *Fire Code of New York State,* Section 502 contains a list of terms that are defined in Chapter 2 and are applicable to the chapter contents.

Chapter 6 Building Services and Systems. This chapter focuses on building systems and services as they relate to potential safety hazards and when and how they should be installed. This chapter brings together all building system- and service-related issues for convenience and provides a more systematic view of buildings. The following building services and systems are addressed: fuel-fired appliances (Section 603), electrical equipment, wiring and hazards (Section 604), mechanical refrigeration (Section 605), elevator operation, maintenance and fire service keys (Section 606), commercial kitchen hoods (Section 607), commercial kitchen cooking oil storage (Section 608) and hyperbaric facilities (Section 609). As with other chapters of the *Fire Code of New York State,* Section 602 contains a list of terms that are defined in Chapter 2 and are applicable to the chapter contents. Note that building systems focused on energy systems and components are addressed by Chapter 12.

Chapter 7 Fire and Smoke Protection Features. The maintenance of assemblies required to be fire-resistance rated is a key component in a passive fire protection philosophy. Chapter 7 sets forth requirements to maintain required fire-resistance ratings of building elements and limit fire spread. Section 701 addresses the basics of what construction elements such as fire barriers and smoke barriers need to be maintained as well as defining the owner's responsibility. The rest of the chapter, Sections 703 through 706, deals with various fire and smoke protection features that must also be maintained. These features include penetrations, joint protection, door and window openings and duct and air transfer opening protection. As with other chapters of the *Fire Code of New York State*, Section 702 contains a list of terms that are defined in Chapter 2 and are applicable to the chapter contents.

Chapter 8 Interior Finish, Decorative Materials and Furnishings. The overall purpose of Chapter 8 is to regulate interior finishes, decorative materials and furnishings in new and existing buildings so that they do not significantly add to or create fire hazards within buildings. The provisions tend to focus on occupancies with specific risk characteristics, such as vulnerability of occupants, density of occupants, lack of familiarity with the building and societal expectations of importance. This chapter is consistent with Chapter 8 of the *Building Code of New York State*, which regulates the interior finishes of new buildings. As with other chapters of the *Fire Code of New York State*, Section 802 contains a list of terms that are defined in Chapter 2 and are applicable to the chapter contents.

Chapter 9 Fire Protection and Life Safety Systems. Chapter 9 prescribes the minimum requirements for active systems of fire protection equipment to perform the functions of detecting a fire, alerting the occupants or fire department of a fire emergency, controlling smoke and controlling or extinguishing the fire. There are provisions relating to gas detection and associated alarms. Mass notification systems are also addressed. Generally, the requirements are based on the occupancy, the height and the area of the building, because these are the factors that most affect fire-fighting capabilities and the relative hazard of a specific building or portion thereof. This chapter parallels and is substantially duplicated in Chapter 9 of the *Building Code of New York State*; however, this chapter also contains periodic testing criteria that are not contained in the IBC. In addition, the special fire protection system requirements based on use and occupancy found in Chapter 4 of the BCNYS are duplicated in Chapter 9 of the FCNYS as a user convenience. As with other chapters of the *Fire Code of New York State*, Section 902 contains a list of terms that are defined in Chapter 2 and are applicable to the chapter contents.

Chapter 10 Means of Egress. The general criteria set forth in Chapter 10 regulating the design of the means of egress are established as the primary method for protection of people in buildings by allowing timely relocation or evacuation of building occupants. Both prescriptive and performance language is utilized in this chapter to provide for a basic approach in the determination of a safe exiting system for all occupancies. It addresses all portions of the egress system (i.e., exit access, exits and exit discharge) and includes design requirements as well as provisions regulating

INTERNATIONAL CODE COUNCIL®
Copyright © 2019 ICC & NYSDOS. ALL RIGHTS RESERVED. Accessed by Lauren Gualdino (lgualdino@briarcliffmanor.org), (-) Order Number #100880972 on May 08, 2020 07:05 AM (PDT) pursuant to License Agreement with ICC & NYSDOS. No further reproduction, no

100880972

individual components. The requirements detail the size, arrangement, number and protection of means of egress components. Functional and operational characteristics also are specified for the components that will permit their safe use without special knowledge or effort. The means of egress protection requirements work in coordination with other sections of the code, such as protection of vertical openings (see Chapter 7), interior finish (see Chapter 8), fire suppression and detection systems (see Chapter 9) and numerous others, all having an impact on life safety. Sections 1002 through 1030 duplicate text from Chapter 10 of the BCNYS; however, the FCNYS contains an additional Section 1031 on maintenance of the means of egress system in existing buildings.

Chapter 11 Construction Requirements for Existing Buildings. Chapter 11 applies to existing buildings, as described in the scope provision, and intends to provide a minimum degree of fire and life safety to persons occupying existing buildings by providing for alterations to such buildings that do not comply with the minimum requirements of the *Building Code of New York State*. As with other chapters of the *Fire Code of New York State*, Section 1102 contains a list of terms that are defined in Chapter 2 and are applicable to the chapter contents.

Chapter 12 Energy Systems. Chapter 12 was added to address the current energy systems found in the FCNYS. It introduces a wide range of systems that generate and store energy in, on and adjacent to buildings and facilities. The expansion of such energy systems is related to meeting today's energy, environmental and economic challenges. Ensuring appropriate criteria to address the safety of such systems in building and fire codes is an important part of protecting the public at large, building occupants and emergency responders. Previously, requirements for energy systems, such as standby power systems, PV systems and stationary battery systems, were scattered about in various locations in Chapter 6, which addresses building services and systems. However, with the addition of fuel cells and capacitor energy storage systems to the FCNYS, a chapter dedicated to such related issues needed to be created. This chapter provides an appropriate location for the addition of future energy systems.

Chapters 13 through 19. Reserved for future use.

PART IV—SPECIAL OCCUPANCIES AND OPERATIONS

Chapter 20 Aviation Facilities. Chapter 20 specifies minimum requirements for the fire-safe operation of airports, heliports and helistops. The principal nonflight operational hazards associated with aviation involve fuel, facilities and operations. Therefore, safe use of flammable and combustible liquids during fueling and maintenance operations is emphasized. Availability of portable Class B:C-rated fire extinguishers for prompt control or suppression of incipient fires is required. As with other chapters of the *Fire Code of New York State*, Section 2002 contains a list of terms that are defined in Chapter 2 and are applicable to the chapter contents.

Chapter 21 Dry Cleaning. The provisions of Chapter 21 are intended to reduce hazards associated with use of flammable and combustible dry cleaning solvents. These materials, like all volatile organic chemicals, generate significant quantities of static electricity and are thus readily ignitable. Many flammable and nonflammable dry cleaning solvents also possess health hazards when involved in a fire. As with other chapters of the *Fire Code of New York State*, Section 2102 contains a list of terms that are defined in Chapter 2 and are applicable to the chapter contents.

Chapter 22 Combustible Dust-producing Operations. The requirements of Chapter 22 seek to reduce the likelihood of dust explosions by managing the hazards of ignitable suspensions of combustible dusts associated with a variety of operations including woodworking, mining, food processing, agricultural commodity storage and handling and pharmaceutical manufacturing, among others. Ignition source control and good housekeeping practices in occupancies containing dust producing operations are emphasized. As with other chapters of the *Fire Code of New York State*, Section 2202 contains a list of terms that are defined in Chapter 2 and are applicable to the chapter contents.

INTERNATIONAL CODE COUNCIL®
Copyright © 2019 ICC & NYSDOS. ALL RIGHTS RESERVED. Accessed by Lauren Gualdino (lgualdino@briarcliffmanor.org), (-) Order Number #100880972 on May 08, 2020 07:05 AM (PDT) pursuant to License Agreement with ICC & NYSDOS. No further reproduction, no

100880972

Chapter 23 Motor Fuel-dispensing Facilities and Repair Garages. This chapter provides provisions that regulate the storage and dispensing of both liquid and gaseous motor fuels at public and private automotive, marine and aircraft motor fuel-dispensing facilities, fleet vehicle motor fuel-dispensing facilities and repair garages. As with other chapters of the *Fire Code of New York State,* Section 2302 contains a list of terms that are defined in Chapter 2 and are applicable to the chapter contents.

Chapter 24 Flammable Finishes. Chapter 24 requirements govern operations where flammable or combustible finishes are applied by spraying, dipping, powder coating or flow-coating processes. As with all operations involving flammable or combustible liquids and combustible dusts or vapors, controlling ignition sources and methods of reducing or controlling flammable vapors or combustible dusts at or near these operations are emphasized. As with other chapters of the *Fire Code of New York State*, Section 2402 contains a list of terms that are defined in Chapter 2 and are applicable to the chapter contents.

Chapter 25 Fruit and Crop Ripening. Chapter 25 provides guidance that is intended to reduce the likelihood of explosions resulting from improper use or handling of ethylene gas used for cropripening and coloring processes. This is accomplished by regulating ethylene gas generation; storage and distribution systems and controlling ignition sources. Design and construction of facilities for this use are regulated by the *Building Code of New York State* to reduce the impact of potential accidents on people and buildings.

Chapter 26 Fumigation and Insecticidal Fogging. This chapter regulates fumigation and insecticidal fogging operations which use toxic pesticide chemicals to kill insects, rodents and other vermin. Fumigants and insecticidal fogging agents pose little hazard if properly applied; however, the inherent toxicity of all these agents and the potential flammability of some makes special precautions necessary when they are used. Requirements of this chapter are intended to protect both the public and fire fighters from hazards associated with these products. As with other chapters of the *Fire Code of New York State*, Section 2602 contains a list of terms that are defined in Chapter 2 and are applicable to the chapter contents.

Chapter 27 Semiconductor Fabrication Facilities. The requirements of this chapter are intended to control hazards associated with the manufacture of electrical circuit boards or microchips, commonly called semiconductors. Though the finished product possesses no unusual hazards, materials commonly associated with semiconductor manufacturing are often quite hazardous and include flammable liquids, pyrophoric and flammable gases, toxic substances and corrosives. The requirements of this chapter are concerned with both life safety and property protection. However, the fire code official should recognize that the risk of extraordinary property damages is far more common than the risk of personal injuries from fire. As with other chapters of the *Fire Code of New York State*, Section 2702 contains a list of terms that are defined in Chapter 2 and are applicable to the chapter contents.

Chapter 28 Lumber Yards and Agro-industrial, Solid Biomass and Woodworking Facilities. Provisions of this chapter are intended to prevent fires and explosions, facilitate fire control and reduce exposures to and from facilities storing, selling or processing wood and forest products, including sawdust, wood chips, shavings, bark mulch, shorts, finished planks, sheets, posts, poles, timber and raw logs and the hazard they represent once ignited. Also included are solid biomass feedstock and raw products associated with agro-industrial facilities, the outdoor storage of pallets and manufacturing and recycling facilities. This chapter requires active and passive fire protection features to reduce on- and off-site exposures, limit fire size and development and facilitate fire fighting by employees and the fire service. As with other chapters of the *Fire Code of New York State*, Section 2802 contains a list of terms that are defined in Chapter 2 and are applicable to the chapter contents.

INTERNATIONAL CODE COUNCIL®
Copyright © 2019 ICC & NYSDOS. ALL RIGHTS RESERVED. Accessed by Lauren Gualdino (lgualdino@briarcliffmanor.org), (-) Order Number #100880972 on May 08, 2020 07:05 AM (PDT) pursuant to License Agreement with ICC & NYSDOS. No further reproduction, no

100880972

Chapter 29 Manufacture of Organic Coatings. This chapter regulates materials and processes associated with the manufacture of paints as well as bituminous, asphaltic and other diverse compounds formulated to protect buildings, machines and objects from the effects of weather, corrosion and hostile environmental exposures. Paint for decorative, architectural and industrial uses comprises the bulk of organic coating production. Painting and processes related to the manufacture of nonflammable and noncombustible or water-based products are exempt from the provisions of this chapter. The application of organic coatings is covered by Chapter 24. Elimination of ignition sources, maintenance of fire protection equipment and isolation or segregation of hazardous operations are emphasized. As with other chapters of the *Fire Code of New York State*, Section 2902 contains a term that is defined in Chapter 2 and is applicable to the chapter contents.

Chapter 30 Industrial Ovens. This chapter addresses the fuel supply, ventilation, emergency shutdown equipment, fire protection and the operation and maintenance of industrial ovens, which are sometimes referred to as industrial heat enclosures or industrial furnaces. Compliance with this chapter is intended to reduce the likelihood of fires involving industrial ovens which are usually the result of the fuel in use or volatile vapors given off by the materials being heated or to manage the impact if a fire should occur. As with other chapters of the *Fire Code of New York State*, Section 3002 contains a list of terms that are defined in Chapter 2 and are applicable to the chapter contents.

Chapter 31 Tents, Temporary Special Event Structures and Other Membrane Structures. The requirements in this chapter are intended to protect temporary as well as permanent tents and air-supported and other membrane structures and temporary special event structures from fire and similar hazards by regulating structure location and access, anchorage, egress, heat-producing equipment, hazardous materials and operations, combustible vegetation, ignition sources, waste accumulation and requiring regular inspections and certifying continued compliance with fire safety regulations. This chapter also addresses outdoor assembly events, which are not limited to those events where tents or other membrane structures are used but are regulated due to the number of people, density of those people and hazards associated with large outdoor events related to egress, fire hazards from cooking and other related concerns. As with other chapters of the *Fire Code of New York State*, Section 3102 contains a list of terms that are defined in Chapter 2 and are applicable to the chapter contents.

Chapter 32 High-piled Combustible Storage. This chapter provides guidance for reasonable protection of life from hazards associated with the storage of combustible materials in closely packed piles or on pallets, in racks or on shelves where the top of storage is greater than 12 feet in height. It provides requirements for identifying various classes of commodities; general fire and life safety features including storage arrangements, smoke and heat venting, and fire department access; and housekeeping and maintenance requirements. The chapter attempts to define the potential fire severity and, in turn, determine fire and life safety protection measures needed to control, and in some cases suppress, a potential fire. This chapter does not cover miscellaneous combustible materials storage regulated in Section 315. As with other chapters of the *Fire Code of New York State*, Section 3202 contains a list of terms that are defined in Chapter 2 and are applicable to the chapter contents.

Chapter 33 Fire Safety during Construction and Demolition. Chapter 33 outlines general fire safety precautions for all structures and all occupancies during construction and demolition operations. In general, these requirements seek to maintain required levels of fire protection, limit fire spread, establish the appropriate operation of equipment and promote prompt response to fire emergencies. Features regulated include fire protection systems, fire fighter access to the site and building, means of egress, hazardous materials storage and use and temporary heating equipment and other ignition sources. This chapter correlates with Chapter 33 of the BCNYS.

Chapter 34 Tire Rebuilding and Tire Storage. The requirements of Chapter 34 are intended to prevent or control fires and explosions associated with the remanufacture and storage of tires and tire byproducts. Additionally, the requirements are intended to minimize the impact of indoor and outdoor tire storage fires by regulating pile volume and location, segregating the various operations, providing for fire department access and a water supply and controlling ignition sources.

INTERNATIONAL CODE COUNCIL®
Copyright © 2019 ICC & NYSDOS. ALL RIGHTS RESERVED. Accessed by Lauren Gualdino (lgualdino@briarcliffmanor.org), (-) Order Number #100880972 on May 08, 2020 07:05 AM (PDT) pursuant to License Agreement with ICC & NYSDOS. No further reproduction, no

100880972

Chapter 35 Welding and Other Hot Work. This chapter covers requirements for safety in welding and other types of hot work by reducing the potential for fire ignitions that usually result in large losses. Several different types of hot work would fall under the requirements found in Chapter 35, including both gas and electric arc methods and any open-torch operations. Many of the activities of this chapter focus on the actions of the occupants. As with other chapters of the *Fire Code of New York State*, Section 3502 contains a list of terms that are defined in Chapter 2 and are applicable to the chapter contents.

Chapter 36 Marinas. Chapter 36 addresses the fire protection and prevention requirements for marinas. It was developed in response to the complications encountered by a number of fire departments responsible for the protection of marinas as well as fire loss history in marinas that lacked fire protection. Compliance with this chapter intends to establish safe practices in marina areas, provide an identification method for mooring spaces in the marina, and provide fire fighters with safe operational areas and fire protection methods to extend hose lines in a safe manner. As with other chapters of the *Fire Code of New York State*, Section 3602 contains a list of terms that are defined in Chapter 2 and are applicable to the chapter contents.

Chapter 37 Combustible Fibers. Chapter 37 establishes the requirements for storage and handling of combustible fibers, including animal, vegetable and synthetic fibers, whether woven into textiles, baled, packaged or loose. Operations involving combustible fibers are typically associated with salvage, paper milling, recycling, cloth manufacturing, carpet and textile mills and agricultural operations, among others. The primary hazard associated with these operations is the abundance of materials and their ready ignitability. As with other chapters of the *Fire Code of New York State*, Section 3702 contains a list of terms that are defined in Chapter 2 and are applicable to the chapter contents.

Chapter 38 Higher Education Laboratories. Chapter 38 is a new chapter addressing the unique needs of laboratories in higher education academic institutions. The advancement of technologies, science, medicine and our knowledge of the world often relies on having vibrant and successful academic institutions. These academic institutions often have chemistry, biology, medical, engineering and other laboratories where hazardous materials are used. The chapter addresses both new and existing buildings and new and existing laboratories. Applying the general hazardous material provisions has been difficult because of the ways these laboratories operate. Often there are many small laboratories that use very small quantities of hazardous materials that individually do not exceed the MAQs. However, in aggregate the quantities will exceed the MAQs and could result in the need for a Group H occupancy classification. It is believed that the lower density of hazardous materials often mitigates the overall risk. Therefore, this lower density along with a package of additional requirements (including the concept of laboratory suites with fire-resistance-rated separations) renders a Group H occupancy classification not necessary. This chapter also addresses the use of certain materials typically prohibited for existing buildings where located in buildings not protected throughout with a sprinkler system. These allowances come with certain safety measures such as the use of storage cabinets and fume hoods.

Chapter 39 Processing and Extraction Facilities. Chapter 39 is a new chapter focused on the processing and extraction of oils and fats from various plants. This process includes the extraction by use of solvent, desolventizing of the raw material and production of the miscella, and distillation of the solvent from the miscella and solvent recovery. The processes used are not necessarily typical hazardous material processes and often the systems and equipment associated with such processes are not listed. Due to the typical lack of listings, the systems and equipment need specific approvals for each installation. This chapter provides the tools to appropriately enforce the FCNYS to meet the unique needs of industry while providing the appropriate level of safety. This chapter has provisions for a technical report prepared by a registered design professional. This chapter also requires site inspections to make sure equipment and systems are installed as designed and approved.

Chapter 40 Sugarhouse Alternative Activity Provisions. This chapter contains the general requirements for when alternative activities, (such as tours, product sampling, or pancake breakfasts) are conducted in sugarhouses. Section 4002 contains a list of terms that are defined and are applicable to the chapter contents.

Chapters 41 through 49. Reserved for future use.

INTERNATIONAL CODE COUNCIL®
Copyright © 2019 ICC & NYSDOS. ALL RIGHTS RESERVED. Accessed by Lauren Gualdino (lgualdino@briarcliffmanor.org), (-) Order Number #100880972 on May 08, 2020 07:05 AM (PDT) pursuant to License Agreement with ICC & NYSDOS. No further reproduction, no

100880972

PART V—HAZARDOUS MATERIALS

Chapter 50 Hazardous Materials—General Provisions. This chapter contains the general requirements for all hazardous chemicals in all occupancies. Hazardous chemicals are defined as those that pose an unreasonable risk to the health and safety of operating or emergency personnel, the public and the environment if not properly controlled during handling, storage, manufacture, processing, packaging, use, disposal or transportation. The general provisions of this chapter are intended to be companion provisions with the specific requirements of Chapters 51 through 67 regarding a given hazardous material. As with other chapters of the *Fire Code of New York State*, Section 5002 contains a list of terms that are defined in Chapter 2 and are applicable to the chapter contents.

Chapter 51 Aerosols. Chapter 51 addresses the prevention, control and extinguishment of fires and explosions in facilities where retail aerosol products are displayed or stored. It is concerned with both life safety and property protection from a fire; however, historically, aerosol product fires have caused property loss more frequently than loss of life. Requirements for storing aerosol products are dependent on the level of aerosol product, level of sprinkler protection, type of storage condition and quantity of aerosol products. As with other chapters of the *Fire Code of New York State*, Section 5102 contains a list of terms that are defined in Chapter 2 and are applicable to the chapter contents.

Chapter 52. Reserved for future use.

Chapter 53 Compressed Gases. This chapter regulates the storage, use and handling of all flammable and nonflammable compressed gases, such as those that are used in medical facilities, air separation plants, industrial plants, agricultural equipment facilities and similar occupancies. Standards for the design, construction and marking of compressed gas cylinders and pressure vessels are referenced. Compressed gases used in welding and cutting, cryogenic liquids and liquefied petroleum gases are also regulated under Chapters 35, 55 and 61, respectively. Compressed gases that are classified as hazardous materials are also regulated in Chapter 50, which includes general requirements. As with other chapters of the *Fire Code of New York State*, Section 5302 contains a list of terms that are defined in Chapter 2 and are applicable to the chapter contents.

Chapter 54 Corrosive Materials. Chapter 54 addresses the hazards of corrosive materials that have a destructive effect on living tissues. Although corrosive gases exist, most corrosive materials are solid or liquid and classified as either acids or bases (alkalis). These materials may pose a wide range of hazards other than corrosivity, such as combustibility, reactivity or oxidizing hazards, and must conform to the requirements of this code with respect to all known hazards. The focus of this chapter is on materials whose primary hazard is corrosivity; that is, the ability to destroy or irreparably damage living tissue on contact. As with other chapters of the *Fire Code of New York State*, Section 5402 contains a list of terms that are defined in Chapter 2 and are applicable to the chapter contents.

Chapter 55 Cryogenic Fluids. This chapter regulates the hazards associated with the storage, use and handling of cryogenic fluids through regulation of such things as pressure relief mechanisms and proper container storage. These hazards are in addition to the code requirements that address the other hazards of cryogenic fluids such as flammability and toxicity. These other characteristics are dealt with in Chapter 50 and other chapters, such as Chapter 58 dealing with flammable gases. Cryogens are hazardous because they are held at extremely low temperatures and high pressures. Many cryogenic fluids, however, are actually inert gases and would not be regulated elsewhere in this code. Cryogens are used for many applications but specifically have had widespread use in the biomedical field and in space programs. As with other chapters of the *Fire Code of New York State*, Section 5502 contains a list of terms that are defined in Chapter 2 and are applicable to the chapter contents.

INTERNATIONAL CODE COUNCIL®
Copyright © 2019 ICC & NYSDOS. ALL RIGHTS RESERVED. Accessed by Lauren Gualdino (lgualdino@briarcliffmanor.org), (-) Order Number #100880972 on May 08, 2020 07:05 AM (PDT) pursuant to License Agreement with ICC & NYSDOS. No further reproduction, no

100880972

Chapter 56 Explosives and Fireworks. This chapter prescribes minimum requirements for the safe manufacture, storage, handling and use of explosives, ammunition and blasting agents for commercial and industrial occupancies. These provisions are intended to protect the general public, emergency responders and individuals who handle explosives. Chapter 56 also regulates the manufacturing, retail sale, display and wholesale distribution of fireworks, establishing the requirements for obtaining approval to manufacture, store, sell, discharge or conduct a public display, and references national standards for regulations governing manufacture, storage and public displays. As with other chapters of the *Fire Code of New York State*, Section 5602 contains a list of terms that are defined in Chapter 2 and are applicable to the chapter contents.

Chapter 57 Flammable and Combustible Liquids. The requirements of this chapter are intended to reduce the likelihood of fires involving the storage, handling, use or transportation of flammable and combustible liquids. Adherence to these practices may also limit damage in the event of an accidental fire involving these materials. These liquids are used for fuel, lubricants, cleaners, solvents, medicine and even drinking. The danger associated with flammable and combustible liquids is that the vapors from these liquids, when combined with air in their flammable range, will burn or explode at temperatures near normal living and working environment. The protection provided by this code is to prevent the flammable and combustible liquids from being ignited. As with other chapters of the *Fire Code of New York State*, Section 5702 contains a list of terms that are defined in Chapter 2 and are applicable to the chapter contents.

Chapter 58 Flammable Gases and Flammable Cryogenic Fluids. Chapter 58 sets requirements for the storage and use of flammable gases. For safety purposes, there is a limit on the quantities of flammable gas allowed per control area. Exceeding these limitations increases the possibility of damage to both property and individuals. The principal hazard posed by flammable gas is its ready ignitability, or even explosivity, when mixed with air in the proper proportions. Consequently, occupancies storing or handling large quantities of flammable gas are classified as Group H-2 (high hazard) by the *Building Code of New York State*. As with other chapters of the *Fire Code of New York State*, Section 5802 contains a list of terms that are defined in Chapter 2 and are applicable to the chapter contents.

Chapter 59 Flammable Solids. This chapter addresses general requirements for storage and handling of flammable solids, especially magnesium; however, it is important to note that several other solid materials, primarily metals including, but not limited to, titanium, zirconium, hafnium, calcium, zinc, sodium, lithium, potassium, sodium/potassium alloys, uranium, thorium and plutonium, can be explosion hazards under the right conditions. Some of these metals are almost exclusively laboratory materials but because of where they are used, fire service personnel must be trained to handle emergency situations. Because uranium, thorium and plutonium are also radioactive materials, they present still more specialized problems for fire service personnel. As with other chapters of the *Fire Code of New York State*, Section 5902 contains a list of terms that are defined in Chapter 2 and are applicable to the chapter contents.

Chapter 60 Highly Toxic and Toxic Materials. The main purpose of this chapter is to protect occupants, emergency responders and those in the immediate area of the building and facility from short-term, acute hazards associated with a release or general exposure to toxic and highly toxic materials. This chapter deals with all three states of toxic and highly toxic materials: solids, liquids and gases. This code does not address long-term exposure effects of these materials, which are addressed by agencies such as the Environmental Protection Agency (EPA) and Occupational Safety and Health Administration (OSHA). As with other chapters of the *Fire Code of New York State*, Section 6002 contains a list of terms that are defined in Chapter 2 and are applicable to the chapter contents.

Chapter 61 Liquefied Petroleum Gases. Chapter 61 establishes requirements for the safe handling, storing and use of LP-gas to reduce the possibility of damage to containers, accidental releases of LP-gas and exposure of flammable concentrations of LP-gas to ignition sources. LP-gas (notably propane) is well known as a camping fuel for cooking, lighting, heating and refrigerating and also remains a popular standby fuel supply for auxiliary generators as well as being widely used as an alternative motor vehicle fuel. Its characteristic as a clean-burning fuel has resulted in the addition of propane dispensers to service stations throughout the country. As with other chapters of the *Fire Code of New York State*, Section 6102 contains a list of terms that are defined in Chapter 2 and are applicable to the chapter contents.

INTERNATIONAL CODE COUNCIL®
Copyright © 2019 ICC & NYSDOS. ALL RIGHTS RESERVED. Accessed by Lauren Gualdino (lgualdino@briarcliffmanor.org), (-) Order Number #100880972 on May 08, 2020 07:05 AM (PDT) pursuant to License Agreement with ICC & NYSDOS. No further reproduction, no

100880972

Chapter 62 Organic Peroxides. This chapter addresses the hazards associated with the storage, handling and use of organic peroxides and intends to manage the fire and oxidation hazards of organic peroxides by preventing their uncontrolled release. These chemicals possess the characteristics of flammable or combustible liquids and are also strong oxidizers. This unusual combination of properties requires special storage and handling precautions to prevent uncontrolled release, contamination, hazardous chemical reactions, fires or explosions. The requirements of this chapter pertain to industrial applications in which significant quantities of organic peroxides are stored or used; however, smaller quantities of organic peroxides still pose a significant hazard and, therefore, must be stored and used in accordance with the applicable provisions of this chapter and Chapter 50. As with other chapters of the *Fire Code of New York State*, Section 6202 contains a list of terms that are defined in Chapter 2 and are applicable to the chapter contents.

Chapter 63 Oxidizers, Oxidizing Gases and Oxidizing Cryogenic Fluids. Chapter 63 addresses the hazards associated with solid, liquid, gaseous and cryogenic fluid oxidizing materials, including oxygen in home use, and establishes criteria for their safe storage and protection in indoor and outdoor storage facilities, minimizing the potential for uncontrolled releases and contact with fuel sources. Although oxidizers themselves do not burn, they pose unique fire hazards because of their ability to support combustion by breaking down and giving off oxygen. As with other chapters of the *Fire Code of New York State*, Section 6302 contains a list of terms that are defined in Chapter 2 and are applicable to the chapter contents.

Chapter 64 Pyrophoric Materials. This chapter regulates the hazards associated with pyrophoric materials, which are capable of spontaneously igniting in the air at or below a temperature of 130°F (54°C). Many pyrophoric materials also pose severe flammability or reactivity hazards. This chapter addresses only the hazards associated with pyrophoric materials. Materials that pose multiple hazards must conform to the requirements of the code with respect to all hazards. As with other chapters of the *Fire Code of New York State*, Section 6402 contains a list of terms that are defined in Chapter 2 and are applicable to the chapter contents.

Chapter 65 Pyroxylin (Cellulose Nitrate) Plastics. This chapter addresses the significant hazards associated with pyroxylin (cellulose nitrate) plastics, which are the most dangerous and unstable of all plastic compounds. The chemically bound oxygen in their structure permits them to burn vigorously in the absence of atmospheric oxygen at a rate 15 times greater than comparable common combustibles. Strict compliance with the provisions of this chapter, along with proper housekeeping and storage arrangements, helps to reduce the hazards associated with pyroxylin (cellulose nitrate) plastics in a fire or other emergencies.

Chapter 66 Unstable (Reactive) Materials. This chapter addresses the hazards of unstable (reactive) liquid and solid materials as well as unstable (reactive) compressed gases. In addition to their unstable reactivity, these materials may pose other hazards, such as toxicity, corrosivity, explosivity, flammability or oxidizing potential. This chapter, however, intends to address those materials whose primary hazard is unstable reactivity. Materials that pose multiple hazards must conform to the requirements of the code with respect to all hazards. Strict compliance with the provisions of this chapter, along with proper housekeeping and storage arrangements, help reduce the exposure hazards associated with unstable (reactive) materials in a fire or other emergency. As with other chapters of the *Fire Code of New York State*, Section 6602 contains a list of terms that are defined in Chapter 2 and are applicable to the chapter contents.

Chapter 67 Water-reactive Solids and Liquids. This chapter addresses the hazards associated with water-reactive materials that are solid or liquid at normal temperatures and pressures. In addition to their water reactivity, these materials may pose a wide range of other hazards, such as toxicity, flammability, corrosiveness or oxidizing potential. This chapter addresses only those materials whose primary hazard is water reactivity. Materials that pose multiple hazards must conform to the requirements of the code with respect to all hazards. Strict compliance with the requirements of this chapter, along with proper housekeeping and storage arrangements, helps to reduce the exposure hazards associated with water-reactive materials in a fire or other emergency. As with other chapters of the *Fire Code of New York State*, Section 6702 contains a list of terms that are defined in Chapter 2 and are applicable to the chapter contents.

Chapters 68 through 79. Reserved for future use.

INTERNATIONAL CODE COUNCIL®
Copyright © 2019 ICC & NYSDOS. ALL RIGHTS RESERVED. Accessed by Lauren Gualdino (lgualdino@briarcliffmanor.org), (-) Order Number #100880972 on May 08, 2020 07:05 AM (PDT) pursuant to License Agreement with ICC & NYSDOS. No further reproduction, no

100880972

PART VI—REFERENCED STANDARDS

Chapter 80 Referenced Standards. This code contains several references to standards that are used to regulate materials and methods of construction. Chapter 80 contains a comprehensive list of all standards that are referenced in this code. The standards are part of the code to the extent of the reference to the standard. Compliance with the referenced standard is necessary for compliance with this code. By providing specifically adopted standards, the construction and installation requirements necessary for compliance with this code can be readily determined. The basis for code compliance is, therefore, established and available on an equal basis to the building official, contractor, designer and owner.

Chapter 80 is organized in a manner that makes it easy to locate specific standards. It lists all of the referenced standards alphabetically by acronym of the promulgating agency of the standard. Each agency's standards are then listed in either alphabetical or numeric order based upon the standard identification. The list also contains the title of the standard; the edition (date) of the standard referenced; any addenda; and the section or sections of this code that reference the standard.

PART VII—APPENDICES

Appendix A Reserved.

Appendix B Fire-flow Requirements for Buildings. This appendix is informative and not part of the code. This appendix provides a tool for the use of jurisdictions in establishing a policy for determining fire-flow requirements in accordance with Section 507.3. The determination of required fire flow is not an exact science, but having some level of information provides a consistent way of choosing the appropriate fire flow for buildings throughout a jurisdiction. The primary tool used in this appendix is a table that presents fire flow based on construction type and building area based on the correlation of the Insurance Services Office (ISO) method and the construction types used in the *Building Code of New York State*. Note that the provisions contained in this appendix are not mandatory unless specifically referenced in the adopting ordinance.

Appendix C Fire Hydrant Locations and Distribution. This appendix is informative and not part of the code. This appendix focuses on the location and spacing of fire hydrants, which is important to the success of fire-fighting operations. The difficulty with determining the spacing of fire hydrants is that every situation is unique and has unique challenges. Finding one methodology for determining hydrant spacing is difficult. This particular appendix gives one methodology based on the required fire flow that fire departments can work with to set a policy for hydrant distribution around new buildings and facilities in conjunction with Section 507.5. Note that the provisions contained in this appendix are not mandatory unless specifically referenced in the adopting ordinance.

Appendix D Fire Apparatus Access Roads. This appendix contains more detailed elements for use with the basic access requirements found in Section 503, which gives some minimum criteria, such as a maximum length of 150 feet and a minimum width of 20 feet, but in many cases does not state specific criteria. This appendix, like Appendices B and C, is a tool for jurisdictions looking for guidance in establishing access requirements and includes criteria for multiple-family residential developments, large one- and two-family subdivisions, specific examples for various types of turnarounds for fire department apparatus and parking regulatory signage.

Appendix E Hazard Categories. This appendix is informative and not part of the code. This appendix contains guidance for designers, engineers, architects, building officials, plans reviewers and inspectors in the classifying of hazardous materials so that proposed designs can be evaluated intelligently and accurately. The descriptive materials and explanations of hazardous materials and how to report and evaluate them on a Material Safety Data Sheet (MSDS) are intended to be instructional as well as informative.

INTERNATIONAL CODE COUNCIL®
Copyright © 2019 ICC & NYSDOS. ALL RIGHTS RESERVED. Accessed by Lauren Gualdino (lgualdino@briarcliffmanor.org), (-) Order Number #100880972 on May 08, 2020 07:05 AM (PDT) pursuant to License Agreement with ICC & NYSDOS. No further reproduction, no

100880972

Appendix F Hazard Ranking. This appendix is informative and not part of the code. The information in this appendix is intended to be a companion to the specific requirements of Chapters 51 through 67, which regulate the storage, handling and use of all hazardous materials classified as either physical or health hazards. These materials pose diverse hazards, including instability, reactivity, flammability, oxidizing potential or toxicity; therefore, identifying them by hazard ranking is essential. This appendix lists the various hazardous materials categories that are defined in this code, along with the NFPA 704 hazard ranking for each. Note that the provisions contained in this appendix are not mandatory unless specifically referenced in the adopting ordinance.

Appendix G Cryogenic Fluids—Weight and Volume Equivalents. This appendix is informative and not part of the code. This appendix gives the fire code official and design professional a ready reference tool for the conversion of the liquid weight and volume of cryogenic fluid to their corresponding volume of gas and vice versa and is a companion to the provisions of Chapter 55 of this code.

Appendix H Hazardous Materials Management Plan (HMMP) and Hazardous Materials Inventory Statement (HMIS) Instructions. This appendix is informative and not part of the code. This appendix is intended to assist businesses in establishing a Hazardous Materials Management Plan (HMMP) and Hazardous Materials Inventory Statement (HMIS) based on the classification and quantities of materials that would be found on-site, in storage or in use. The sample forms and available Safety Data Sheets (SDS) provide the basis for the evaluations. It is also a companion to FCNYS Sections 407.5 and 407.6, which provide the requirement that the HMIS and HMMP be submitted when required by the fire code official. Note that the provisions contained in this appendix are not mandatory unless specifically referenced in the adopting ordinance.

Appendix I Fire Protection Systems—Noncompliant Conditions. This appendix is informative and not part of the code. The purpose of this appendix, which was developed by the ICC Hazard Abatement in Existing Buildings Committee, is to provide the fire code official with a list of conditions that are readily identifiable by the inspector during the course of an inspection utilizing the *International Fire Code*. The specific conditions identified in this appendix are primarily derived from applicable NFPA standards and pose a hazard to the proper operation of the respective systems. While these do not represent all of the conditions that pose a hazard or otherwise may impair the proper operation of fire protection systems, their identification in this adoptable appendix will provide a more direct path for enforcement by the fire code official. Note that the provisions contained in this appendix are not mandatory unless specifically referenced in the adopting ordinance.

Appendix J Building Information Sign. This appendix is informative and not part of the code. This appendix provides design, installation and maintenance requirements for a Building Information Sign (BIS), a fire service tool to be utilized in the crucial, initial response of fire fighters to a structure fire. The BIS placard is designed to be utilized within the initial response time frame of an incident to assist fire fighters in their tactical size-up of a situation as soon as possible after arrival on the scene of a fire emergency. The BIS design is in the shape of a fire service Maltese Cross and includes five spaces (the four wings plus the centerpiece of the cross symbol) in which information is placed about the tactical considerations of construction type and hourly rating, fire protection systems, occupancy type, content hazards and special features that could affect tactical decisions and operations. Note that the provisions contained in this appendix are not mandatory unless specifically referenced in the adopting ordinance.

Appendix K Reserved.

Appendix L Requirements for Fire Fighter Air Replenishment Systems. This appendix is informative and not part of the code. This appendix provides for the design, installation and maintenance of permanently installed fire fighter breathing air systems in buildings designated by the jurisdiction. Breathing air is critical for fire-fighting operations. Historically, fire departments have

INTERNATIONAL CODE COUNCIL®
Copyright © 2019 ICC & NYSDOS. ALL RIGHTS RESERVED. Accessed by Lauren Gualdino (lgualdino@briarcliffmanor.org), (-) Order Number #100880972 on May 08, 2020 07:05 AM (PDT) pursuant to License Agreement with ICC & NYSDOS. No further reproduction, no

100880972

supplied air bottles by means of a “bottle brigade,” whereby fire fighters manually transport air bottles up stairways, which is an extraordinarily fire fighter-intensive process and takes fire fighters away from their primary mission of rescue and fire fighting. Technology now exists to address the issue using in-building air supply systems. Fire fighter breathing air systems were introduced in the late 1980s and are now required in a number of communities throughout the United States. The system has been called a “standpipe for air” and consists of stainless steel, high-pressure piping that is supplied by on-site air storage or fire department air supply units. Air filling stations are then strategically located throughout the building allowing fire fighters to refill breathing air cylinders inside the fire building, negating the required “bottle brigade,” and making more fire fighters available for search, rescue and fire suppression operations. Note that the provisions contained in this appendix are not mandatory unless specifically referenced in the adopting ordinance.

Appendix M Reserved.

Appendix N Indoor Trade Shows and Exhibitions. This appendix is informative and not part of the code. This appendix was created to address the hazards that are associated with larger, more complex trade shows and exhibitions. Although many of these requirements are already included in various locations in this code, some of the more important items, such as requirements for covered booths and multiple-story booths, are not. The intent is to have the requirements covering these events in a single location. The provisions are essentially a series of pointers to other locations within this code. This assists those organizing exhibitions and individual exhibitors unfamiliar with the fire code. The appendix can be adopted by jurisdictions looking for specific regulations on this subject or used as a guide where it is not. Note that the provisions contained in this appendix are not mandatory unless specifically referenced in the adopting ordinance.

INTERNATIONAL CODE COUNCIL®
Copyright © 2019 ICC & NYSDOS. ALL RIGHTS RESERVED. Accessed by Lauren Gualdino (lgualdino@briarcliffmanor.org), (-) Order Number #100880972 on May 08, 2020 07:05 AM (PDT) pursuant to License Agreement with ICC & NYSDOS. No further reproduction, no

100880972

INTERNATIONAL CODE COUNCIL®

Copyright © 2019 ICC & NYSDOS. ALL RIGHTS RESERVED. Accessed by Lauren Gualdino (lgualdino@briarcliffmanor.org), (-) Order Number #100880972 on May 08, 2020 07:05 AM (PDT) pursuant to License Agreement with ICC & NYSDOS. No further reproduction, no

100880972

TABLE OF CONTENTS

Part I—Administrative 1

CHAPTER 1 SCOPE AND ADMINISTRATION 1

Section

101 Title, Scope and Purpose 1
102 Applicability 1
103 Administration and Enforcement 3
104 Materials, Equipment, and Methods of Construction 4
105 Building Permits, Construction Inspections, Stop Work Orders, Certificates of Occupancy, and Operating Permits 4
106 Submittal Documents 6
107 Maintenance of Equipment and Systems 7
108 Unsafe Structures and Equipment 7
109 Emergency Measures 8
110 Service Utilities 8
111 Temporary Structures 8
112 Fire Department Notification 8
113 Inspection of Solid Fuel-Burning Heating Appliances, Chimneys and Flues 8

CHAPTER 2 DEFINITIONS 11

Section

201 General 11
202 General Definitions 11

Part II—General Safety Provisions 47

CHAPTER 3 GENERAL REQUIREMENTS 47

Section

301 General 47
302 Definitions 47
303 Asphalt Kettles 47
304 Combustible Waste Material 47
305 Ignition Sources 48
306 Motion Picture Projection Rooms and Film 48
307 Open Burning, Recreational Fires and Portable Outdoor Fireplaces 49
308 Open Flames 49
309 Powered Industrial Trucks and Equipment 51
310 Smoking 51
311 Vacant Premises 52
312 Vehicle Impact Protection 53
313 Fueled Equipment 53
314 Indoor Displays 53
315 General Storage 54
316 Hazards to Fire Fighters 55
317 Rooftop Gardens and Landscaped Roofs 56
318 Laundry Carts 57
319 Mobile Food Preparation Vehicles 57
320 Live Fire Training Facilities 58

CHAPTER 4 EMERGENCY PLANNING AND PREPAREDNESS 59

Section

401 General 59
402 Definitions 59
403 Emergency Preparedness Requirements 59
404 Fire Safety, Evacuation and Lockdown Plans 65
405 Emergency Evacuation Drills 67
406 Employee Training and Response Procedures 67
407 Hazard Communication 68

Part III—Building and Equipment Design Features . . . 69

CHAPTER 5 FIRE SERVICE FEATURES 69

Section

501 General 69
502 Definitions 69
503 Fire Apparatus Access Roads 69
504 Access to Building Openings and Roofs 70
505 Premises Identification 71
506 Key Boxes 71
507 Fire Protection Water Supplies 71
508 Fire Command Center 72
509 Fire Protection and Utility Equipment Identification and Access 73
510 Emergency Responder Radio Coverage 73
511 Emergency Vehicle Access 76

CHAPTER 6 BUILDING SERVICES AND SYSTEMS 77

Section

601 General 77
602 Definitions 77

INTERNATIONAL CODE COUNCIL®
Copyright © 2019 ICC & NYSDOS. ALL RIGHTS RESERVED. Accessed by Lauren Gualdino (lgualdino@briarcliffmanor.org), (-) Order Number #100880972 on May 08, 2020 07:05 AM (PDT) pursuant to License Agreement with ICC & NYSDOS. No further reproduction, no

100880972

603 Fuel-fired Appliances 77
604 Electrical Equipment, Wiring and Hazards 80
605 Mechanical Refrigeration 81
606 Elevator Operation, Maintenance and Fire Service Keys. 84
607 Commercial Kitchen Hoods 85
608 Commercial Kitchen Cooking Oil Storage 86
609 Hyperbaric Facilities 86

CHAPTER 7 FIRE AND SMOKE PROTECTION FEATURES 87

Section
701 General 87
702 Definitions 87
703 Penetrations 87
704 Joints and Voids 87
705 Door and Window Openings 88
706 Duct and Air Transfer Openings 88
707 Concealed Spaces 88

CHAPTER 8 INTERIOR FINISH, DECORATIVE MATERIALS AND FURNISHINGS 89

Section
801 General 89
802 Definitions 89
803 Interior Wall and Ceiling Finish in Existing Buildings 89
804 Interior Wall and Ceiling Trim and Interior Floor Finish in New and Existing Buildings 91
805 Upholstered Furniture and Mattresses in New and Existing Buildings. 92
806 Natural Decorative Vegetation in New and Existing Buildings 95
807 Decorative Materials and Artificial Decorative Vegetation in New and Existing Buildings 95
808 Furnishings Other than Upholstered Furniture and Mattresses or Decorative Materials in New and Existing Buildings. 97

CHAPTER 9 FIRE PROTECTION AND LIFE SAFETY SYSTEMS. 99

Section
901 General 99
902 Definitions 101
903 Automatic Sprinkler Systems 102
904 Alternative Automatic Fire-extinguishing Systems 109
905 Standpipe Systems 112
906 Portable Fire Extinguishers 115
907 Fire Alarm and Detection Systems 117
908 Emergency Alarm Systems 129
909 Smoke Control Systems. 129
910 Smoke and Heat Removal 136
911 Explosion Control 137
912 Fire Department Connections 138
913 Fire Pumps 139
914 Fire Protection Based on Special Detailed Requirements of Use and Occupancy 140
915 Carbon Monoxide Detection 143
916 Gas Detection Systems 147
917 Mass Notification Systems 148

CHAPTER 10 MEANS OF EGRESS. 149

Section
1001 Administration 149
1002 Definitions 149
1003 General Means of Egress 149
1004 Occupant Load 150
1005 Means of Egress Sizing. 152
1006 Numbers of Exits and Exit Access Doorways . . . 153
1007 Exit and Exit Access Doorway Configuration . . . 156
1008 Means of Egress Illumination 156
1009 Accessible Means of Egress 157
1010 Doors, Gates and Turnstiles 160
1011 Stairways. 168
1012 Ramps 172
1013 Exit Signs 173
1014 Handrails. 174
1015 Guards. 175
1016 Exit Access 177
1017 Exit Access Travel Distance 177
1018 Aisles 178
1019 Exit Access Stairways and Ramps 179
1020 Corridors 179
1021 Egress Balconies 181
1022 Exits 181
1023 Interior Exit Stairways and Ramps 181
1024 Exit Passageways 183
1025 Luminous Egress Path Markings 184
1026 Horizontal Exits 185

INTERNATIONAL CODE COUNCIL®
Copyright © 2019 ICC & NYSDOS. ALL RIGHTS RESERVED. Accessed by Lauren Gualdino (lgualdino@briarcliffmanor.org), (-) Order Number #100880972 on May 08, 2020 07:05 AM (PDT) pursuant to License Agreement with ICC & NYSDOS. No further reproduction, no

100880972

1027 Exterior Exit Stairways and Ramps. 186
1028 Exit Discharge 187
1029 Assembly 188
1030 Emergency Escape and Rescue 195
1031 Maintenance of the Means of Egress 196

CHAPTER 11 CONSTRUCTION REQUIREMENTS FOR EXISTING BUILDINGS 199

Section
1101 General 199
1102 Definitions 199
1103 Fire Safety Requirements for Existing Buildings 199
1104 Means of Egress for Existing Buildings 205
1105 Construction Requirements for Existing Group I-2 210
1106 Requirements for Outdoor Operations 214

CHAPTER 12 ENERGY SYSTEMS. 215

Section
1201 General 215
1202 Definitions 215
1203 Emergency and Standby Power Systems 215
1204 Solar Photovoltaic Power Systems 217
1205 Stationary Fuel Cell Power Systems 219
1206 Electrical Energy Storage Systems 220

CHAPTERS 13 through 19 RESERVED 235

Part IV—Special Occupancies and Operations 237

CHAPTER 20 AVIATION FACILITIES 237

Section
2001 General 237
2002 Definitions 237
2003 General Precautions. 237
2004 Aircraft Maintenance. 237
2005 Portable Fire Extinguishers 238
2006 Aircraft Fueling 238
2007 Helistops and Heliports 243

CHAPTER 21 DRY CLEANING 245

Section
2101 General 245
2102 Definitions 245
2103 Classifications 245
2104 General Requirements. 245
2105 Operating Requirements 245
2106 Spotting and Pretreating 246
2107 Dry Cleaning Systems. 247
2108 Fire Protection. 247

CHAPTER 22 COMBUSTIBLE DUST-PRODUCING OPERATIONS 249

Section
2201 General 249
2202 Definition 249
2203 Precautions 249
2204 Additional Requirements 249

CHAPTER 23 MOTOR FUEL-DISPENSING FACILITIES AND REPAIR GARAGES. 251

Section
2301 General 251
2302 Definitions. 251
2303 Location of Dispensing Devices 251
2304 Dispensing Operations 251
2305 Operational Requirements 252
2306 Flammable and Combustible Liquid Motor Fuel-dispensing Facilities 253
2307 Liquefied Petroleum Gas Motor Fuel-dispensing Facilities 258
2308 Compressed Natural Gas Motor Fuel-dispensing Facilities 259
2309 Hydrogen Motor Fuel-dispensing and Generation Facilities 260
2310 Marine Motor Fuel-dispensing Facilities 262
2311 Repair Garages 263

CHAPTER 24 FLAMMABLE FINISHES 267

Section
2401 General 267
2402 Definitions. 267
2403 Protection of Operations 267
2404 Spray Finishing 269
2405 Dipping Operations. 273
2406 Powder Coating. 274
2407 Electrostatic Apparatus 275
2408 Organic Peroxides and Dual-component Coatings 276

INTERNATIONAL CODE COUNCIL®
Copyright © 2019 ICC & NYSDOS. ALL RIGHTS RESERVED. Accessed by Lauren Gualdino (lgualdino@briarcliffmanor.org), (-) Order Number #100880972 on May 08, 2020 07:05 AM (PDT) pursuant to License Agreement with ICC & NYSDOS. No further reproduction, no

100880972

2409 Indoor Manufacturing of Reinforced Plastics 276
2410 Floor Surfacing and Finishing Operations 277

CHAPTER 25 FRUIT AND CROP RIPENING 279

Section
2501 General 279
2502 Definitions 279
2503 Ethylene Gas 279
2504 Sources of Ignition 279
2505 Combustible Waste 279
2506 Ethylene Generators 279
2507 Warning Signs 279

CHAPTER 26 FUMIGATION AND INSECTICIDAL FOGGING 281

Section
2601 General 281
2602 Definitions 281
2603 Fire Safety Requirements 281

CHAPTER 27 SEMICONDUCTOR FABRICATION FACILITIES 283

Section
2701 General 283
2702 Definitions 283
2703 General Safety Provisions 283
2704 Storage 287
2705 Use and Handling 288

CHAPTER 28 LUMBER YARDS AND AGRO-INDUSTRIAL, SOLID BIOMASS AND WOODWORKING FACILITIES . . . 293

Section
2801 General 293
2802 Definitions 293
2803 General Requirements 293
2804 Fire Protection 293
2805 Plywood, Veneer and Composite Board Mills 294
2806 Log Storage Areas 294
2807 Storage of Wood Chips and Hogged Material Associated with Timber and Lumber Production Facilities 294
2808 Storage and Processing of Wood Chips, Hogged Material, Fines, Compost, Solid Biomass Feedstock and Raw Product Associated with Yard Waste, Agro-industrial and Recycling Facilities 294
2809 Exterior Storage of Finished Lumber and Solid Biofuel Products 295
2810 Outdoor Storage of Pallets at Pallet Manufacturing and Recycling Facilities 295

CHAPTER 29 MANUFACTURE OF ORGANIC COATINGS 297

Section
2901 General 297
2902 Definition 297
2903 General Precautions 297
2904 Electrical Equipment and Protection 297
2905 Process Structures 298
2906 Process Mills and Kettles 298
2907 Process Piping 298
2908 Raw Materials in Process Areas 299
2909 Raw Materials and Finished Products 299

CHAPTER 30 INDUSTRIAL OVENS 301

Section
3001 General 301
3002 Definitions 301
3003 Location 301
3004 Fuel Piping 301
3005 Interlocks 301
3006 Fire Protection 301
3007 Operation and Maintenance 301

CHAPTER 31 TENTS, TEMPORARY SPECIAL EVENT STRUCTURES AND OTHER MEMBRANE STRUCTURES 303

Section
3101 General 303
3102 Definitions 303
3103 Temporary Tents and Membrane Structures 303
3104 Temporary and Permanent Tents and Membrane Structures 305
3105 Temporary Special Event Structures 306

INTERNATIONAL CODE COUNCIL®
Copyright © 2019 ICC & NYSDOS. ALL RIGHTS RESERVED. Accessed by Lauren Gualdino (lgualdino@briarcliffmanor.org), (-) Order Number #100880972 on May 08, 2020 07:05 AM (PDT) pursuant to License Agreement with ICC & NYSDOS. No further reproduction, no

100880972

3106 Outdoor Assembly Events 307
3107 Operational Requirements 308

CHAPTER 32 HIGH-PILED COMBUSTIBLE STORAGE 311

Section
3201 General 311
3202 Definitions 311
3203 Commodity Classification 312
3204 Designation of High-piled Storage Areas 323
3205 Housekeeping and Maintenance 323
3206 General Fire Protection and Life Safety Features 323
3207 Solid-piled and Shelf Storage 326
3208 Rack Storage 326
3209 Automated Storage 327
3210 Specialty Storage 328

CHAPTER 33 FIRE SAFETY DURING CONSTRUCTION AND DEMOLITION 329

Section
3301 General 329
3302 Definitions 329
3303 Temporary Heating Equipment 329
3304 Precautions Against Fire 329
3305 Flammable and Combustible Liquids 330
3306 Flammable Gases 330
3307 Explosive Materials 330
3308 Owner's Responsibility for Fire Protection 330
3309 Fire Reporting 331
3310 Access for Fire Fighting 331
3311 Means of Egress 331
3312 Water Supply for Fire Protection 331
3313 Standpipes 331
3314 Automatic Sprinkler System 332
3315 Portable Fire Extinguishers 332
3316 Motorized Construction Equipment 332
3317 Safeguarding Roofing Operations 332

CHAPTER 34 TIRE REBUILDING AND TIRE STORAGE 333

Section
3401 General 333
3402 Definitions 333
3403 Tire Rebuilding 333
3404 Precautions Against Fire 333
3405 Outdoor Storage 333
3406 Fire Department Access 334
3407 Fencing 334
3408 Fire Protection 334
3409 Indoor Storage Arrangement 334

CHAPTER 35 WELDING AND OTHER HOT WORK 335

Section
3501 General 335
3502 Definitions 335
3503 General Requirements 335
3504 Fire Safety Requirements 335
3505 Gas Welding and Cutting 336
3506 Electric Arc Hot Work 337
3507 Calcium Carbide Systems 337
3508 Acetylene Generators 337
3509 Piping Manifolds and Hose Systems for Fuel Gases and Oxygen 337
3510 Hot Work on Flammable and Combustible Liquid Storage Tanks 338

CHAPTER 36 MARINAS 339

Section
3601 Scope 339
3602 Definitions 339
3603 General Precautions 339
3604 Fire Protection Equipment 339
3605 Marine Motor Fuel-dispensing Facilities 340

CHAPTER 37 COMBUSTIBLE FIBERS 341

Section
3701 General 341
3702 Definitions 341
3703 General Precautions 341
3704 Loose Fiber Storage 341
3705 Baled Storage 342

CHAPTER 38 HIGHER EDUCATION LABORATORIES 343

Section
3801 General 343
3802 Definitions 343
3803 General Safety Provisions 343
3804 Laboratory Suite Construction 344
3805 Nonsprinklered Laboratories 345
3806 Existing Sprinklered Laboratories 345

INTERNATIONAL CODE COUNCIL®
Copyright © 2019 ICC & NYSDOS. ALL RIGHTS RESERVED. Accessed by Lauren Gualdino (lgualdino@briarcliffmanor.org), (-) Order Number #100880972 on May 08, 2020 07:05 AM (PDT) pursuant to License Agreement with ICC & NYSDOS. No further reproduction, no

100880972

CHAPTER 39 PROCESSING AND EXTRACTION FACILITITES 347

Section

3901 General 347
3902 Definitions 347
3903 Processing and Extraction 347
3904 Systems and Equipment 347
3905 Safety Systems 348

CHAPTER 40 SUGARHOUSE ALTERNATIVE ACTIVITY PROVISIONS 349

Section

4001 General 349
4002 Definitions 350
4003 General Fire Protection and Life Safety Features 350
4004 Toilet Facilities 354
4005 Accessibility 354

CHAPTERS 41 through 49 RESERVED 355

Part V—Hazardous Materials 357

CHAPTER 50 HAZARDOUS MATERIALS—GENERAL PROVISIONS 357

Section

5001 General 357
5002 Definitions 359
5003 General Requirements 360
5004 Storage 374
5005 Use, Dispensing and Handling 377

CHAPTER 51 AEROSOLS 383

Section

5101 General 383
5102 Definitions 383
5103 Classification of Aerosol Products 383
5104 Inside Storage of Aerosol Products 383
5105 Outside Storage 386
5106 Retail Display 386
5107 Manufacturing Facilities 388

CHAPTER 52 RESERVED 389

CHAPTER 53 COMPRESSED GASES 391

Section

5301 General 391
5302 Definitions 391
5303 General Requirements 391
5304 Storage of Compressed Gases 395
5305 Use and Handling of Compressed Gases 395
5306 Medical Gases 395
5307 Compressed Gases Not Otherwise Regulated 396

CHAPTER 54 CORROSIVE MATERIALS 399

Section

5401 General 399
5402 Definition 399
5403 General Requirements 399
5404 Storage 399
5405 Use 399

CHAPTER 55 CRYOGENIC FLUIDS 401

Section

5501 General 401
5502 Definitions 401
5503 General Requirements 401
5504 Storage 403
5505 Use and Handling 404

CHAPTER 56 EXPLOSIVES AND FIREWORKS 407

Section

5601 General 407
5602 Definitions 410
5603 Record Keeping and Reporting 410
5604 Explosive Materials Storage and Handling 411
5605 Manufacture, Assembly and Testing of Explosives, Explosive Materials and Fireworks 417
5606 Small Arms Ammunition and Small Arms Ammunition Components 420
5607 Blasting 421
5608 Fireworks Display 422
5609 Temporary Storage of Consumer Fireworks 423
5610 Sparkling Devices 423

INTERNATIONAL CODE COUNCIL®

Copyright © 2019 ICC & NYSDOS. ALL RIGHTS RESERVED. Accessed by Lauren Gualdino (lgualdino@briarcliffmanor.org), (-) Order Number #100880972 on May 08, 2020 07:05 AM (PDT) pursuant to License Agreement with ICC & NYSDOS. No further reproduction, no

100880972

CHAPTER 57 FLAMMABLE AND COMBUSTIBLE LIQUIDS 427

Section

5701 General 427
5702 Definitions 427
5703 General Requirements 428
5704 Storage 432
5705 Dispensing, Use, Mixing and Handling 452
5706 Special Operations 458
5707 Reserved 467

CHAPTER 58 FLAMMABLE GASES AND FLAMMABLE CRYOGENIC FLUIDS 469

Section

5801 General 469
5802 Definitions 469
5803 General Requirements 469
5804 Storage 470
5805 Use 470
5806 Flammable Cryogenic Fluids 470
5807 Metal Hydride Storage Systems 471
5808 Hydrogen Fuel Gas Rooms 472

CHAPTER 59 FLAMMABLE SOLIDS 475

Section

5901 General 475
5902 Definitions 475
5903 General Requirements 475
5904 Storage 475
5905 Use 475
5906 Magnesium 475

CHAPTER 60 HIGHLY TOXIC AND TOXIC MATERIALS 477

Section

6001 General 477
6002 Definitions 477
6003 Highly Toxic and Toxic Solids and Liquids 477
6004 Highly Toxic and Toxic Compressed Gases 478
6005 Ozone Gas Generators 482

CHAPTER 61 LIQUEFIED PETROLEUM GASES 485

Section

6101 General 485
6102 Definitions 485
6103 Installation of Equipment 485
6104 Location of LP-gas Containers 486
6105 Prohibited Use of LP-gas 486
6106 Dispensing and Overfilling 486
6107 Safety Precautions and Devices 486
6108 Fire Protection 486
6109 Storage of Portable LP-gas Containers Awaiting Use or Resale 487
6110 LP-gas Containers Not in Service 489
6111 Parking and Garaging of LP-gas Tank Vehicles 489

CHAPTER 62 ORGANIC PEROXIDES 491

Section

6201 General 491
6202 Definition 491
6203 General Requirements 491
6204 Storage 491
6205 Use 493

CHAPTER 63 OXIDIZERS, OXIDIZING GASES AND OXIDIZING CRYOGENIC FLUIDS 495

Section

6301 General 495
6302 Definitions 495
6303 General Requirements 495
6304 Storage 496
6305 Use 497
6306 Liquid Oxygen in Home Health Care 497

CHAPTER 64 PYROPHORIC MATERIALS 499

Section

6401 General 499
6402 Definition 499
6403 General Requirements 499
6404 Storage 499
6405 Use 500

CHAPTER 65 PYROXYLIN (CELLULOSE NITRATE) PLASTICS 501

Section

6501 General 501
6502 Definitions 501
6503 General Requirements 501
6504 Storage and Handling 501

INTERNATIONAL CODE COUNCIL®
Copyright © 2019 ICC & NYSDOS. ALL RIGHTS RESERVED. Accessed by Lauren Gualdino (lgualdino@briarcliffmanor.org), (-) Order Number #100880972 on May 08, 2020 07:05 AM (PDT) pursuant to License Agreement with ICC & NYSDOS. No further reproduction, no

100880972

CHAPTER 66 UNSTABLE (REACTIVE) MATERIALS 503

Section

6601 General 503
6602 Definition. 503
6603 General Requirements 503
6604 Storage. 503
6605 Use. 504

CHAPTER 67 WATER-REACTIVE SOLIDS AND LIQUIDS. 505

Section

6701 General 505
6702 Definition. 505
6703 General Requirements 505
6704 Storage. 505
6705 Use. 506

CHAPTERS 68 through 79 RESERVED 507

Part VI—Referenced Standards 509

CHAPTER 80 REFERENCED STANDARDS 509

Part VII—Appendices 525

APPENDIX A RESERVED 525

APPENDIX B FIRE-FLOW REQUIREMENTS FOR BUILDINGS 527

Section

B101 General 527
B102 Definitions 527
B103 Modifications. 527
B104 Fire-flow Calculation Area 527
B105 Fire-flow Requirements for Buildings 527
B106 Referenced Standards 527

APPENDIX C FIRE HYDRANT LOCATIONS AND DISTRIBUTION 531

Section

C101 General 531
C102 Number of Fire Hydrants 531
C103 Fire Hydrant Spacing. 531
C104 Consideration of Existing Fire Hydrants. 532
C105 Referenced Standard 532

APPENDIX D FIRE APPARATUS ACCESS ROADS 533

Section

D101 General 533
D102 Required Access 533
D103 Minimum Specifications. 533
D104 Commercial and Industrial Developments 534
D105 Aerial Fire Apparatus Access Roads 534
D106 Multiple-family Residential Developments 534
D107 One- or Two-family Residential Developments . . 535
D108 Referenced Standards 535

APPENDIX E HAZARD CATEGORIES 537

Section

E101 General 537
E102 Hazard Categories. 537
E103 Evaluation of Hazards. 541
E104 Referenced Standards 542

APPENDIX F HAZARD RANKING. 543

Section

F101 General 543
F102 Referenced Standard. 543

APPENDIX G CRYOGENIC FLUIDS—WEIGHT AND VOLUME EQUIVALENTS 545

Section

G101 General 545

APPENDIX H HAZARDOUS MATERIALS MANAGEMENT PLAN (HMMP) AND HAZARDOUS MATERIALS INVENTORY STATEMENT (HMIS) INSTRUCTIONS 547

Section

H101 HMMP 547
H102 HMIS 547
H103 Emergency Plan 548
H104 Referenced Standard. 548

APPENDIX I FIRE PROTECTION SYSTEMS—NONCOMPLIANT CONDITIONS. 555

Section

I101 Noncompliant Conditions. 555
I102 Referenced Standards 556

INTERNATIONAL CODE COUNCIL®

Copyright © 2019 ICC & NYSDOS. ALL RIGHTS RESERVED. Accessed by Lauren Gualdino (lgualdino@briarcliffmanor.org), (-) Order Number #100880972 on May 08, 2020 07:05 AM (PDT) pursuant to License Agreement with ICC & NYSDOS. No further reproduction, no

100880972

APPENDIX J BUILDING INFORMATION SIGN 557

Section

J101 General 557

J102 Referenced Standards 559

APPENDIX K RESERVED 561

APPENDIX L REQUIREMENTS FOR FIRE FIGHTER AIR REPLENISHMENT SYSTEMS 563

Section

L101 General 563

L102 Definitions 563

L103 Permits 563

L104 Design and Installation 563

L105 Acceptance Tests 565

L106 Inspection, Testing and Maintenance 565

L107 Referenced Standards 565

APPENDIX M RESERVED 567

APPENDIX N INDOOR TRADE SHOWS AND EXHIBITIONS 569

Section

N101 General 569

N102 Definitions 569

N103 Public Safety for Events 569

N104 Interior Finish and Decorative Materials 570

N105 Multiple-level Booths 570

N106 Covered Booths 570

N107 Display and Storage of Hazardous and Combustible Materials 570

N108 Means of Egress 571

N109 Referenced Standards 571

INDEX 573

INTERNATIONAL CODE COUNCIL®

Copyright © 2019 ICC & NYSDOS. ALL RIGHTS RESERVED. Accessed by Lauren Gualdino (lgualdino@briarcliffmanor.org), (-) Order Number #100880972 on May 08, 2020 07:05 AM (PDT) pursuant to License Agreement with ICC & NYSDOS. No further reproduction, no

100880972

INTERNATIONAL CODE COUNCIL®

Copyright © 2019 ICC & NYSDOS. ALL RIGHTS RESERVED. Accessed by Lauren Gualdino (lgualdino@briarcliffmanor.org), (-) Order Number #100880972 on May 08, 2020 07:05 AM (PDT) pursuant to License Agreement with ICC & NYSDOS. No further reproduction, no

100880972

Part I—Administrative

[NY] CHAPTER 1
SCOPE AND ADMINISTRATION

[NY] SECTION 101
TITLE, SCOPE AND PURPOSE

[NY] 101.1 Title. This publication shall be known as the 2020 edition of the *Fire Code of New York State* hereinafter referred to as "this code." This code is part of the New York State Uniform Fire Prevention and Building Code (the "Uniform Code").

[NY] 101.1.1 Amendments of New York State code books. In Chapter 1, the term "New York State code books" shall include the *Residential Code of New York State*, the *Building Code of New York State*, the *Plumbing Code of New York State*, the *Mechanical Code of New York State*, the *Fuel Gas Code of New York State*, the *Fire Code of New York State* (i.e., this publication), the *Property Maintenance Code of New York State*, the *Existing Building Code of New York State*, and the *Energy Conservation Construction Code of New York State*. Provisions in any one or more of the New York State code books may be amended from time to time by provisions in 19 NYCRR Parts 1220 to 1227 or 19 NYCRR Part 1240, as currently in effect and as hereafter amended from time to time. If this publication is now or hereafter so amended, references in this publication to "this code" shall be deemed to be references to this publication as so amended. If any other New York State code book is now or hereafter so amended, references in this code to such other New York State code book shall be deemed to be references to such New York State code book as so amended.

[NY] 101.2 Scope. This code establishes regulations affecting or relating to structures, processes, premises and safeguards regarding all of the following:

1. The hazard of fire and explosion arising from the storage, handling or use of structures, materials or devices.
2. Conditions hazardous to life, property or public welfare in the occupancy of structures or premises.
3. Fire hazards in the structure or on the premises from occupancy or operation.
4. Matters related to the construction, extension, repair, alteration or removal of fire suppression or alarm systems.
5. Conditions affecting the safety of fire fighters and emergency responders during emergency operations.

[**NY] 101.2.1 Appendices.** Provisions in the following appendix have been adopted and are part of this code:

Appendix D	Fire Apparatus Access Roads

In addition, the following appendices are included for informational purposes:

Appendix B	Fire-Flow Requirements for Buildings
Appendix C	Fire Hydrant Locations and Distribution
Appendix E	Hazard Categories
Appendix F	Hazard Ranking
Appendix G	Cryogenic Fluids—Weight and Volume Equivalents
Appendix H	Hazardous Materials Management Plan and Hazardous Materials Inventory Statement Instructions
Appendix I	Fire Protection Systems—Noncompliant Conditions
Appendix J	Building Information Sign
Appendix L	Requirements for Fire Fighter Air Replenishment Systems
Appendix N	Indoor Trade Shows and Exhibitions

[NY] 101.3 Intent. The purpose of this code is to establish the minimum requirements consistent with nationally recognized good practice for providing a reasonable level of life safety and property protection from the hazards of fire, explosion or dangerous conditions in new and existing buildings, structures and premises, and to provide a reasonable level of safety to fire fighters and emergency responders during emergency operations.

[NY] SECTION 102
APPLICABILITY

[NY] 102.1 General. Where there is a conflict between a general requirement and a specific requirement, the specific requirement shall be applicable. Where, in any specific case, different sections of this code specify different materials, methods of construction or other requirements, the most restrictive shall govern.

[NY] 102.2 Construction and design provisions. The construction and design provisions of this code shall apply to:

1. Structures, facilities and conditions arising after the adoption of this code.

INTERNATIONAL CODE COUNCIL®
Copyright © 2019 ICC & NYSDOS. ALL RIGHTS RESERVED. Accessed by Lauren Gualdino (lgualdino@briarcliffmanor.org), (-) Order Number #100880972 on May 08, 2020 07:05 AM (PDT) pursuant to License Agreement with ICC & NYSDOS. No further reproduction, no

100880972

2. Existing structures, facilities and conditions not legally in existence at the time of adoption of this code.
3. Existing structures, facilities and conditions where identified in this code.

Exception: *Agricultural buildings,* including barns, sheds, poultry houses and other buildings and equipment on the premises that are used directly and solely for agricultural purposes, shall not be subject to the construction-related provisions of this code.

[NY] 102.3 Administrative, operational and maintenance provisions. The administrative, operational and maintenance provisions of this code shall apply to:

1. Conditions and operations arising after the adoption of this code.
2. Existing conditions and operations.

[NY] 102.4 Change of use or occupancy. No change shall be made in the use or occupancy of any building or *structure* unless such *building* or *structure* is made to comply with (1) the applicable requirements of this code, (2) the requirements of the *Existing Building Code of New York State*, (3) other applicable provisions of the *Uniform Code* and (4) the applicable provisions of the *Energy Code*.

[NY] 102.5 Application of the Building Code of New York State. The design and construction of new structures shall comply with the *Building Code of New York State*, and any *alterations*, additions, changes in use or changes in structures required by this code, which are within the scope of the *Building Code of New York State*, shall be made in accordance therewith.

[NY] 102.6 Application of the Residential Code of New York State. Where *structures* are designed and constructed in accordance with the *Residential Code of New York State*, the construction and design provisions of this code pertaining to the exterior of the structure shall apply including, but not limited to, premises identification, fire apparatus access, and water supplies.

[NY] 102.7 Other laws and regulations. This code is part of the New York State Uniform Fire Prevention and Building Code (the *Uniform Code*) promulgated pursuant to Article 18 of the New York State Executive Law. The provisions of this code shall not be deemed to nullify any federal, state or local law, ordinance, administrative code, rule or regulation relating to any matter as to which the *Uniform Code* does not provide.

However:

1. Pursuant to Section 383(1) of the Executive Law, and except as otherwise provided in paragraphs a, b, and c of Section 383(1) of the Executive Law, the provisions of the *Uniform Code* supersede any other provision of a general, special or local law, ordinance, administrative code, rule or regulation inconsistent or in conflict with the *Uniform Code*.
2. Pursuant to Section 379(3) of the Executive Law, no city, town, village, county or other municipality shall have the power to supersede, void, repeal, or make less restrictive any provision of the *Uniform Code*.
3. The ability of any city, town, or village, or the County of Nassau, to enact or adopt, and to enforce, a local law or ordinance imposing higher or more restrictive standards for construction within the jurisdiction of such city, town, village, or county that are applicable generally to such city, town, village, or county in the *Uniform Code* is subject to the provisions and requirements of Section 379 of the Executive Law.

Nothing in Section 102.7 shall be construed as:

1. Affecting the authority of the State Labor Department to enforce a safety or health standard issued under provisions of Sections 27 and 27-a of the Labor Law;
2. Relieving a person from complying with a stricter standard issued pursuant to the Occupational Safety and Health Act of 1970, as amended; or
3. Superseding, limiting, impairing or otherwise affecting any provision the *Uniform Code*, as now in effect and as hereafter amended from time to time.

[NY] 102.7.1 Other New York Codes, Rules and Regulations (NYCRR). Additional New York Codes, Rules and Regulations exist that may affect new and *existing buildings*, *structures*, systems and equipment. Such regulations include, but are not limited to:

1. 19 NYCRR Part 300 (Universal Symbol of Access),
2. 19 NYCRR Part 1261 (Recordkeeping – Smoke Detectors in Multiple Dwellings),
3. 19 NYCRR Part 1264 (Identification of Buildings Utilizing Truss Type Construction), and
4. 19 NYCRR Part 1265 (Residential Structures with Truss Type Construction, Pre-Engineered Wood Construction and/or Timber Construction).

[NY] 102.8 Application of references. References to chapter or section numbers, or to provisions not specifically identified by number, shall be construed to refer to such chapter, section or provision of this code.

[NY] 102.9 Referenced codes and standards. The codes and standards referenced in this code shall be considered to be part of the requirements of this code to the prescribed extent of each such reference and as further regulated in Sections 102.9.1 and 102.9.2.

[NY] 102.9.1 Conflicts. Where conflicts occur between provisions of this code and referenced codes and standards, the provisions of this code shall apply.

[NY] 102.9.2 Provisions in referenced codes and standards. Where the extent of the reference to a referenced code or standard includes subject matter that is within the

INTERNATIONAL CODE COUNCIL®
Copyright © 2019 ICC & NYSDOS. ALL RIGHTS RESERVED. Accessed by Lauren Gualdino (lgualdino@briarcliffmanor.org), (-) Order Number #100880972 on May 08, 2020 07:05 AM (PDT) pursuant to License Agreement with ICC & NYSDOS. No further reproduction, no

100880972

scope of this code, the provisions of this code as applicable, shall take precedence over the provisions in the referenced code or standard.

[NY] 102.10 Partial invalidity. In the event that any part or provision of this code is held by a court of competent jurisdiction to be illegal or void, this shall not have the effect of making void or illegal any of the other parts or provisions.

[NY] 102.11 Existing structures. The legal occupancy of any structure existing on the date of adoption of this code shall be permitted to continue without change, except as otherwise specifically provided in this code, the *Existing Building Code of New York State*, the *Property Maintenance Code of New York State,* or any other applicable provision of the *Uniform Code*. For the purposes of this Section, the "effective date of this code" shall be deemed to be 90th day after the date on which the Notice of Adoption of the rule incorporating this code by reference in Part 1225 of the New York Codes, Rules, and Regulations shall have been published in the State Register.

[NY] SECTION 103
ADMINISTRATION AND ENFORCEMENT

[NY] 103.1 Administration and enforcement. The *Uniform Code* shall be administered and enforced by the *authority having jurisdiction*. The identity of the *authority having jurisdiction* in a given situation is determined in accordance with Article 18 of the Executive Law and the regulations promulgated by the Secretary of State pursuant to Executive Law Section 381(1). In general, the *authority having jurisdiction* is the local government (city, town or village) in which the *building* or *structure* is located. In certain situations, the *authority having jurisdiction* may be the county in which the *building* or *structure* is located. In certain other cases, the State, the Secretary of State (acting through the Department of State) or some other State agency may be the *authority having jurisdiction*. The *authority having jurisdiction* responsible for administration and enforcement of the *Uniform Code* is also responsible for administration and enforcement of the *Energy Code.*

Administration and enforcement of the *Uniform Code* and *Energy Code* shall be in accordance with the following, as applicable:

1. Where a city, town, village or county is the *authority having jurisdiction*:
   - 1.1. Such city, town, village or county shall provide for administration and enforcement of the *Uniform Code* and *Energy Code* by local law, ordinance, other appropriate regulation, or combination thereof;
   - 1.2. The *Code Enforcement Program* established by such local law, ordinance, other appropriate regulation, or combination thereof, must include, at a minimum, the features described in *Part 1203* and must satisfy all other requirements of *Part 1203.*
   - 1.3. Such city, town, village or county shall administer and enforce the *Uniform Code* in accordance with the *Code Enforcement Program* established by such local law, ordinance or other appropriate regulation, or combination thereof.
2. Where the State is the *authority having jurisdiction* pursuant to 19 NYCRR Section 1201.2(d):
   - 2.1. The *Code Enforcement Program* shall be as established by *Part 1204*.
   - 2.2. The State, acting through one or more State agencies, shall administer and enforce the *Uniform Code* and *Energy Code* in accordance with *Part 1204*.
3. Where the Department of State is the *authority having jurisdiction*:
   - 3.1. The *Code Enforcement Program* shall be as established by *Part 1202*.
   - 3.2. The Department of State shall administer and enforce the *Uniform Code* and *Energy Code* in accordance with *Part 1202*.
4. Where any governmental unit or agency not included in paragraphs 1, 2, and 3 above is the *authority having jurisdiction*:
   - 4.1. Such governmental unit or agency shall provide for administration and enforcement of the *Uniform Code* and *Energy Code* by regulation.
   - 4.2. The *Code Enforcement Program* established by such regulation must include, at a minimum, the features described *Part 1203* and must satisfy all other requirements of *Part 1203*.
   - 4.3. Such governmental unit or agency shall administer and enforce the *Uniform Code* and *Energy Code* in accordance with the *Code Enforcement Program* established by such regulation.

Every governmental unit or agency thereof charged with administration and enforcement of the *Uniform Code* shall exercise its powers in due and proper manner so as to extend to the public protection from the hazards of fire and inadequate building construction.

Any person or entity constructing or renovating a *building* or *structure*, changing the use or occupancy of a *building* or *structure*, or engaging in any other activity that is subject to the provisions of the *Code Enforcement Program* of the *authority having jurisdiction* responsible for administration and enforcement of the *Uniform Code* with respect to such *building* shall comply with all applicable provisions of such *Code Enforcement Program.*

In addition, persons and entities who construct, renovate, use and occupy *buildings* and *structures* shall comply with all applicable provisions of Section 105 of this code.

[NY] 103.2 Due process. Nothing in Chapter 1, or elsewhere in this code, or elsewhere in the *Uniform Code*, or in any regulation promulgated pursuant to Executive Law Section 381(1), shall be construed as authorizing any *authority having jurisdiction* to administer and enforce the *Uniform Code* in a manner that deprives any person or entity of due process of law. In particular, but not by way of limitation, nothing in Chapter 1, or elsewhere in this code or elsewhere in the *Uni-*

INTERNATIONAL CODE COUNCIL®
Copyright © 2019 ICC & NYSDOS. ALL RIGHTS RESERVED. Accessed by Lauren Gualdino (lgualdino@briarcliffmanor.org), (-) Order Number #100880972 on May 08, 2020 07:05 AM (PDT) pursuant to License Agreement with ICC & NYSDOS. No further reproduction, no

100880972

form Code, or in any regulation promulgated pursuant to Executive Law Section 381(1), relating to posting, placarding and/or condemnation of *buildings* or *structures* that are unsafe, unfit for human occupancy or unlawful shall be construed as authorizing any *authority having jurisdiction* to post, placard or condemn any such *building* or *structure* and/or to remove any *owner* or occupant or cause any *owner* or occupant to be removed from any such *building* or *structure* without providing such notice and opportunity to be heard (and, if applicable, right of appeal) as may be required under the applicable circumstances by applicable Constitutional provisions.

[NY] 103.2.1 Imminent danger. In cases of imminent danger, posting, placarding, and condemning a *building* or *structure* and removing *owners* and occupants or causing *owners* and occupants to be removed without first providing an opportunity to be heard shall be permitted to the extent consistent with applicable Constitutional provisions, provided that the affected persons and entities are afforded the opportunity for a post-action hearing to the extent required by applicable Constitutional provisions.

[NY] 103.3 Application for variance or appeal. An application for a variance or modification of any provision or requirement of *Uniform Code* shall be in accordance with the provisions of *Part 1205*. An appeal of any order or determination, or the failure within a reasonable time to make an order or determination, of an administrative official charged to enforce or purporting to enforce the *Uniform Code* may be made in accordance with the provisions of *Part 1205*.

[NY] SECTION 104
MATERIALS, EQUIPMENT, AND METHODS OF CONSTRUCTION

[NY] 104.1 Approved materials and equipment. Materials, equipment, and devices *approved* by the *building official* shall be constructed and installed in accordance with such approval. Materials, equipment and devices tested by an *approved* testing laboratory shall be permitted to be constructed and installed in accordance with such approval.

[NY] 104.1.1 Used materials and equipment. Used materials, equipment, and devices shall not be reused unless they meet the requirements of this code for new materials.

[NY] 104.2 Waivers, variances, and modifications. Nothing in this code shall be construed as permitting any *building official* or any *authority having jurisdiction* to waive, vary, modify, or otherwise alter any provision or requirement of this code or any other provision or requirement of the *Uniform Code*. Provisions or requirements of the *Uniform Code* may be varied or modified only in accordance with procedures established by *Part 1205* or by such other regulations as may hereafter be promulgated by the Secretary of State pursuant to Section 381(1)(f) of the Executive Law.

[NY] 104.3 Alternative materials, equipment, appliances, designs, and methods of construction. The provisions of this code are not intended to prevent the installation of any materials, *equipment*, or *appliances* not specifically prescribed by this code, or to prohibit any designs or methods of construction not specifically prescribed by this code, provided that such alternative materials, *equipment*, *appliances*, designs, or methods of construction: (1) are not specifically prohibited by any provision of this code, by any other provision of the *Uniform Code*, or by the *Energy Code,* and (2) shall have been *approved*, in writing, by the *building official*. Alternative materials, *equipment*, *appliances*, designs, or methods of construction may be *approved* only when the *building official* shall have determined, in writing, that such alternative is:

1. Satisfactory and complies with the intent of the provisions and requirements of the *Uniform Code*.
2. Not less than the equivalent of that prescribed in the *Uniform Code* in quality, strength, effectiveness, fire resistance, durability, and safety.

Nothing in this section shall be construed as permitting any *building official* or any *authority having jurisdiction* to waive, vary, modify or otherwise alter any provision or requirement of this code or any other provision or requirement of the *Uniform Code*. Provisions or requirements of the *Uniform Code* may be varied or modified only pursuant to procedures established in *Part 1205* or by such other regulations as may hereafter be promulgated by the Secretary of State pursuant to Section 381(1)(f) of the Executive Law.

[NY] 104.4 Workmanship. Repairs, maintenance work, alterations or installations which are caused directly or indirectly by the enforcement of the *Uniform Code* shall be executed and installed in a *workmanlike* manner in accordance with *Uniform Code* and the manufacturer's installation instructions.

[NY] SECTION 105
BUILDING PERMITS, CONSTRUCTION INSPECTIONS, STOP WORK ORDERS, CERTIFICATES OF OCCUPANCY, AND OPERATING PERMITS

[NY] 105.1 Purpose. The purpose of Section 105 is to include in the *Uniform Code* provisions requiring persons and entities who construct, renovate, use and occupy buildings and structures to apply for and obtain *building permits,* to facilitate construction inspections, to obey stop work orders, to obtain *certificates of occupancy*, and to obtain *operating permits*. The provisions in Section 105 are considered to be integral parts of the *Uniform Code's* standards for construction, maintenance, and fire protection equipment and systems.

[NY] 105.1.1 Definition. For the purpose of Section 105, the term "other applicable law" shall include the *authority having jurisdiction's Code Enforcement Program*; any local law, ordinance, or regulation establishing the *authority having jurisdiction's Code Enforcement Program*; and any other applicable statute, regulation, rule, local law, or ordinance.

[NY] 105.2 Building permits. No person or entity shall commence, perform, or continue any work that must conform with the *Uniform Code* and/or *Energy Code* unless:

INTERNATIONAL CODE COUNCIL®
Copyright © 2019 ICC & NYSDOS. ALL RIGHTS RESERVED. Accessed by Lauren Gualdino (lgualdino@briarcliffmanor.org), (-) Order Number #100880972 on May 08, 2020 07:05 AM (PDT) pursuant to License Agreement with ICC & NYSDOS. No further reproduction, no

100880972

1. Such person or entity has applied to the *authority having jurisdiction* for a *building permit*;
2. The *authority having jurisdiction* has issued a *building permit* authorizing such work,
3. Such *building permit* has not been revoked or suspended, and
4. Such *building permit* has not expired.

[NY] 105.2.1 Work exempt from building permit requirement. A building permit shall not be required for work in any category that is excluded from the *building permit* requirement by the *authority having jurisdiction's Code Enforcement Program*, provided that *Part 1203* allows an *authority having jurisdiction* to exclude such category of work from the building permit requirement. Exemptions from *building permit* requirements shall not be deemed to grant authorization for any work to be done in any manner in violation of any provision of the *Uniform Code*, any provision of the *Energy Code*, or any provision of any other applicable law.

[NY] 105.2.2 Applications for building permits. A person or entity applying for a *building permit* shall submit an application to the *authority having jurisdiction.* An application for a *building permit* shall include:

1. *Construction documents* that satisfy the requirements of Section 106.2;
2. Any and all other submittal documents required by Section 106;
3. Any and all other information and documentation that may be required by the stricter of the *authority having jurisdiction's Code Enforcement Program* or a *Part 1203—Compliant Code Enforcement Program*; and
4. Such other information and documentation as the *authority having jurisdiction* may determine to be necessary to allow the *authority having jurisdiction* to determine whether the proposed work conforms with the *Uniform Code*, the *Energy Code*, and other applicable laws.

[NY] 105.2.3Approval of construction documents. When the *authority having jurisdiction* issues a *building permit*, the *authority having jurisdiction* shall approve the *construction documents* in writing. Work shall be installed in accordance with the *approved construction documents* and the terms and conditions, if any, of the *building permit*.

[NY] 105.2.4 Validity of building permit. The issuance or granting of a *building permit* shall not be construed to be a *permit* for, or an approval of, any violation of any provision of the *Uniform Code*, the *Energy Code*, or any other applicable law. A *building permit* purporting to give authority to violate or cancel any provision of the *Uniform Code*, the *Energy Code*, or any other applicable law shall not be valid. The issuance of a *permit* based on *construction documents* and other data shall not prevent the *building official* from requiring the correction of errors in the *construction documents* and other data.

[NY] 105.2.5 Suspension or revocation of building permit. The *authority having jurisdiction* is authorized to suspend or revoke a *building permit* wherever the *building permit* is issued in error or on the basis of incorrect, inaccurate or incomplete information; or in violation of any provision of the *Uniform Code*, the *Energy Code*, or any other applicable law. Any such suspension or revocation shall be in writing, signed by an authorized agent of the *authority having jurisdiction.*

[NY] 105.2.6 Placement of building permit and approved construction documents. The *building permit*, or a copy thereof, and at least one set of *approved construction documents* shall be kept on the site of the work until the completion of the project. The *approved construction documents* shall be open to inspection by any authorized representative of the *authority having jurisdiction*.

[NY] 105.3 Construction inspections. Any person or entity performing work for which a *building permit* has been issued shall keep work accessible and exposed until the work has been inspected and accepted by the *authority having jurisdiction*, or its authorized agent, at each element of the construction process that is applicable to the work and specified in the stricter of the *authority having jurisdiction's Code Enforcement Program* or a *Part 1203—Compliant Code Enforcement Program*.

[NY] 105.3.1 Inspection requests. It shall be the duty of the holder of the *building permit* or their duly authorized agent to notify the *building official* when work is ready for inspection. It shall be the duty of the *building permit* holder to provide access to and means for inspections of such work that are required by this code.

[NY] 105.4 Stop work orders. The *authority having jurisdiction* is authorized to issue a stop work order to halt work that is being performed without a required *building permit*; work that is being performed after a required *building permit* has been revoked or suspended or has expired*;* work that is being conducted in a dangerous or unsafe manner; or work that is contrary to provisions of the *Uniform Code*, the *Energy Code*, the *approved construction documents*, or the terms and conditions (if any) of the *building permit*. No person or entity shall commence, perform or continue any work if the *authority having jurisdiction* has issued a stop work order with respect to such work.

[NY] 105.5 Certificates of occupancy. Where the stricter of the *authority having jurisdiction's Code Enforcement Program* or a *Part 1203—Compliant Code Enforcement Program* requires a *certificate of occupancy* for permission to use or occupy a *building* or *structure*, or any portion thereof, no person or entity shall use or occupy such *building* or *structure*, or such portion thereof, unless:

1. The *authority having jurisdiction* has issued such *certificate of occupancy*,
2. Such *certificate of occupancy* has not been revoked or suspended, and
3. In the case of temporary *certificate of occupancy*, such temporary *certificate of occupancy* has not expired.

INTERNATIONAL CODE COUNCIL®
Copyright © 2019 ICC & NYSDOS. ALL RIGHTS RESERVED. Accessed by Lauren Gualdino (lgualdino@briarcliffmanor.org), (-) Order Number #100880972 on May 08, 2020 07:05 AM (PDT) pursuant to License Agreement with ICC & NYSDOS. No further reproduction, no

100880972

[NY] 105.5.1 Authorized uses and occupancies. Where a *certificate of occupancy* has been issued for a *building* or *structure*, or any portion thereof, no person or entity shall use or occupy such *building* or *structure*, or such portion thereof, for any use or occupancy other than that authorized by such *certificate of occupancy*.

[NY] 105.5.2 Change in use or occupancy. Without regard to whether a *certificate of occupancy* shall have been issued, no person or entity shall convert the use or occupancy of a *building* or *structure*, or any portion thereof, from one use or occupancy to another without first obtaining a *building permit* to perform the work, if any, required for such conversion; performing such work, if any; and obtaining a *certificate of occupancy* from the *authority having jurisdiction.*

[NY] 105.6 Operating permits. Where the stricter of the *authority having jurisdiction's Code Enforcement Program* or a *Part 1203—Compliant Code Enforcement Program* requires an operating *permit* to conduct an activity or to use a category of *building*, no person or entity shall conduct such activity or use such category of *building* without obtaining an operating *permit* from the *authority having jurisdiction*. The procedures for applying for, issuing, revoking, and suspending operating *permits* shall be as set forth in the stricter of the *authority having jurisdiction's Code Enforcement Program* or a *Part 1203—Compliant Code Enforcement Program*.

[NY] 105.7 Violations. Any violation of any provision set forth in Sections 105.2 through 105.6 shall be a violation of the *Uniform Code*, and any person or entity violating any such provision shall be subject to the penalties prescribed in Executive Law Section 382(2). In addition, to the extent that any act or omission that violates any provision set forth in Sections 105.2 through 105.6 is also a violation of any other applicable law, any person or entity guilty of such act or omission shall also be subject to the penalties prescribed in or otherwise applicable to a violation of such other applicable law.

[NY] SECTION 106
SUBMITTAL DOCUMENTS

[NY] 106.1 General. Submittal documents consisting of *construction documents*, statements of *special inspections*, geotechnical reports and other data shall be submitted with each application for a *building permit*.

[NY] 106.2 Construction documents. *Construction documents* shall be in accordance with Sections 106.2.1 through 106.2.9.

[NY] 106.2.1 Information on construction documents. *Construction documents* (1) shall define the scope of the proposed work; (2) shall be of sufficient clarity to indicate the location, nature and extent of the proposed work; (3) shall show in detail that the proposed work will conform to the provisions of the *Uniform Code*, the *Energy Code*, and other applicable codes, laws, ordinances, and regulations; (4) shall include all information required by any provision of this code (including, but not limited to, the information described in Sections 106.2.2 through 106.2.8) and all information required by any other applicable provision of the *Uniform Code* and all information required by any other applicable provision of the *Energy Code*; and (5) shall include any and all additional information and documentation that may be required by the stricter of the *Code Enforcement Program* of the *authority having jurisdiction* or a *Part 1203—Compliant Code Enforcement Program*.

[NY] 106.2.1.1 Manufacturer's installation instructions. Manufacturer's installation instructions, as required by any applicable provision of the *Uniform Code* or by any applicable provision of the *Energy Code*, shall be available on the job site at the time of inspection.

[NY] 106.2.2 Fire protection system shop drawings. Shop drawings for the fire protection system(s) shall be submitted to indicate compliance to Chapter 9, any other applicable provision of the *Uniform Code*, and the *construction documents.* Such shop drawings shall be *approved* prior to the start of system installation. Shop drawings shall contain all information as required by the installation standards referenced in Chapter 9 or in any other applicable provision of the *Uniform Code*.

[NY] 106.2.3 Means of egress. The *construction documents* shall show in sufficient detail the location, construction, size and character of all portions of the *means of egress,* including the path of the *exit discharge* to the *public way* in compliance with the provisions of the *Uniform Code*. In other than occupancies in Groups R-2, R-3, and I-1, the *construction documents* shall designate the number of occupants to be accommodated on every floor, and in all rooms and spaces.

[NY] 106.2.4 Exterior wall envelope. *Construction documents* for all buildings shall describe the *exterior wall envelope* in sufficient detail to determine compliance with the *Uniform Code* and the *Energy Code*. The *construction documents* shall provide details of the *exterior wall envelope* as required, including flashing, intersections with dissimilar materials, corners, end details, control joints, intersections at roof, eaves or parapets, means of drainage, water-resistive membrane and details around openings.

The *construction documents* shall include manufacturer's installation instructions that provide supporting documentation that the proposed penetration and opening details described in the *construction documents* maintain the weather resistance of the *exterior wall envelope*. The supporting documentation shall fully describe the *exterior wall* system that was tested, where applicable, as well as the test procedure used.

[NY] 106.2.5 Exterior balconies and elevated walking surfaces. Where balconies or other elevated walking surfaces are exposed to water from direct or blowing rain, snow, or irrigation, and the structural framing is protected by an impervious moisture barrier, the *construction documents* shall include details for all elements of the impervious moisture barrier system. The *construction documents* shall include manufacturer's installation instructions.

INTERNATIONAL CODE COUNCIL®
Copyright © 2019 ICC & NYSDOS. ALL RIGHTS RESERVED. Accessed by Lauren Gualdino (lgualdino@briarcliffmanor.org), (-) Order Number #100880972 on May 08, 2020 07:05 AM (PDT) pursuant to License Agreement with ICC & NYSDOS. No further reproduction, no

100880972

[NY] 106.2.6 Site plan. The *construction documents* submitted with the application for a *building permit* shall be accompanied by a site plan showing to scale the size and location of new construction and existing *structures* on the site, distances from *lot lines*, the established street grades and the proposed finished grades and, as applicable, *flood hazard areas*, *floodways*, and *design flood elevations*. The site plan shall be drawn in accordance with an accurate boundary line survey. In the case of demolition, the site plan shall show construction to be demolished and the location and size of existing structures and construction that are to remain on the site or plot. The *building official* is authorized to waive or modify the requirement for a site plan where the application for a *building permit* is for an *alteration* or *repair* or where otherwise warranted.

[NY] 106.2.6.1 Design flood elevations. Where *design flood elevations* are not specified, they shall be established in accordance with Section 1612.3.1 of the *Building Code of New York State.*

[NY] 106.2.6.2 Flood hazard documentation. If located in a *flood hazard area*, documentation of the elevation of the lowest floor as required in Section 1612.4 of the *Building Code of New York State* shall be submitted to the *building official* prior to the final inspection.

[NY] 106.2.7 Structural information. The construction documents shall provide the information specified in Section 1603 of the *Building Code of New York State*.

[NY] 106.2.8 Relocatable buildings. *Construction documents* for relocatable buildings shall comply with Section 3112 of the *Building Code of New York State*.

[NY] 106.2.9 Design professional. *Construction documents* shall be prepared by a registered *design professional* where required by Article 145 or Article 147 of the New York State Education Law, by the stricter of the *Code Enforcement Program* of the *authority having jurisdiction* or a *Part 1203—Compliant Code Enforcement Program*, or by any other applicable statute, regulation, or local law or ordinance.

[NY] SECTION 107
MAINTENANCE OF EQUIPMENT AND SYSTEMS

[NY] 107.1 Maintenance of required safeguards. Where any device, equipment, system, condition, arrangement, level of protection, or any other feature is required for compliance with the provisions of this code, or otherwise installed, such device, equipment, system, condition, arrangement, level of protection, or other feature shall thereafter be continuously maintained in accordance with this code, the *Property Maintenance Code of New York State* and applicable referenced standards.

[NY] 107.1.1 Existing nonrequired safeguards. Wherever any nonrequired device, equipment, system, condition, arrangement, level of protection, or any other feature is provided, such device, equipment, system, condition, arrangement, level of protection, or other feature shall, thereafter, be continuously maintained in accordance with this code and applicable referenced standards or shall be removed in its entirety.

Exceptions:

1. Nonrequired devices, equipment and systems are permitted to be removed in entirety;
2. Nonrequired devices, equipment and systems are permitted to be disabled, provided that all visible elements are removed;
3. Electrically charged devices, equipment and systems are permitted to be disabled, provided they are disconnected from power sources and all visible elements are labeled as not being energized; and
4. Nonrequired fire protection systems are permitted to be disabled, provided that sprinkler heads, exposed valves, fire department connections, initiating and notification devices and similar equipment are removed, and any remaining visible components are labeled as not being in service.

[NY] 107.2 Testing and operation. Equipment requiring periodic testing or operation to ensure maintenance shall be tested or operated as specified in this code.

[NY] 107.2.1 Test and inspection records. Required test and inspection records shall be available at all times.

[NY] 107.2.2 Reinspection and testing. Where any work or installation does not pass an initial test or inspection, the necessary corrections shall be made so as to achieve compliance with this code. The work or installation shall then be resubmitted to the *authority having jurisdiction* for inspection and testing.

[NY] 107.3 Rendering equipment inoperable. Portable or fixed fire-extinguishing systems or devices, and fire-warning systems, shall be provided with ready access and shall not be rendered inoperative, except as necessary during emergencies, maintenance, repairs, *alterations,* drills or prescribed testing.

[NY] SECTION 108
UNSAFE STRUCTURES AND EQUIPMENT

[NY] 108.1 General. If the *authority having jurisdiction* determines, during an inspection or otherwise that a premises, a *building or structure,* or any *building system* or *equipment*, in whole or in part, constitutes a clear and imminent threat to human life, safety or health, the *authority having jurisdiction* shall exercise its powers in due and proper manner so as to extend to the public protection from the hazards of threat to human life, safety or health.

[NY] 108.1.1 Unsafe structures. An unsafe structure is one that is found to be dangerous to the life, health, property or safety of the public or to the occupants of the structure by not providing minimum safeguards to protect or warn occupants in the event of fire; or because such structure contains unsafe equipment or is so damaged, decayed, dilapidated, or structurally unsafe; or is of such faulty construction or unstable foundation that partial or complete collapse is possible. A vacant structure that is not secured

INTERNATIONAL CODE COUNCIL®
Copyright © 2019 ICC & NYSDOS. ALL RIGHTS RESERVED. Accessed by Lauren Gualdino (lgualdino@briarcliffmanor.org), (-) Order Number #100880972 on May 08, 2020 07:05 AM (PDT) pursuant to License Agreement with ICC & NYSDOS. No further reproduction, no

100880972

against unauthorized entry as required by Section 311 of this code shall be deemed unsafe.

[NY] 108.1.2 Unsafe equipment. Unsafe equipment includes any boiler, heating equipment, elevator, moving stairway, electrical wiring or device, flammable liquid containers or any other equipment on the premises or within the structure that is in such disrepair or condition that the equipment is a hazard to life, health, property or safety of the public or occupants of the premises or structure.

[NY] 108.2 Structure unfit for human occupancy. A structure is unfit for human occupancy whenever the structure is unsafe, unlawful, or because of the degree to which the structure is in disrepair or lacks maintenance or the location of the structure constitutes a hazard to the occupants of the structure or to the public.

[NY] 108.3 Unlawful structure. An unlawful structure is one found in whole or in part to be occupied by more persons than are permitted under this code, or was erected, altered or occupied contrary to law.

[NY] 108.4 Closing of vacant structures. If the structure is vacant and unfit for human habitation and occupancy, and is not in danger of structural collapse, a placard of condemnation shall be posted on the premises, and the structure shall be closed up so as not to be an unattractive nuisance.

[NY] 108.4.1 Prohibited occupancy. No person shall occupy a placarded structure.

[NY] 108.4.2 Placard removal. The placard shall not be removed until the defect or defects on which the condemnation and placarding action were based have been eliminated.

[NY] 108.5 Notice. Whenever a structure or equipment has been condemned under the provisions of this section, a notice shall be posted in a conspicuous place in or about the structure affected by such notice. If the notice pertains to equipment, it shall also be placed on the condemned equipment.

[NY] SECTION 109
EMERGENCY MEASURES

[NY] 109.1 Imminent danger. The occupants shall vacate premises when any of the following exists:

1. Imminent danger of failure or collapse of a building or structure which endangers life;
2. A structure where the entire structure, or part of the structure, has fallen and life is endangered by the occupation of the structure;
3. Actual or potential danger to the building occupants or those in the proximity of any structure because of explosives, explosive fumes or vapors or the presence of toxic fumes, gases or materials; or
4. Operation of defective or dangerous equipment.

[NY] 109.1.1 Notice. There shall be posted at each entrance to such structure a notice reading as follows: "This Structure is Unsafe and its Occupancy Has Been Prohibited by the Fire Code Official." It shall be unlawful for any person to enter such structure except for the purpose of securing the structure, making the required repairs, removing the hazardous condition or demolishing the structure.

[NY] SECTION 110
SERVICE UTILITIES

[NY] 110.1 Connection of service utilities. Connections from a utility, source of energy, fuel or power to any *building* or system which is regulated by the *Uniform Code* shall be made in accordance with the requirements of the *Uniform Code;* the regulations of the public utility providing such utility, source of energy, fuel or power; and the regulations of any governmental unit or agency having jurisdiction over such utility, source of energy, fuel or power.

[NY] 110.1.1 Temporary connection. Where *approved* by the *building official,* temporary connections from a utility, source of energy, fuel or power to a *building* or system may be made. Temporary connections shall be made in accordance with Section 110.1.

[NY] 110.2 Notice of disconnection of service utilities. The *owner* or the *owner's* authorized agent shall notify the *building official* of the disconnection of any utility service to the *building*, *structure*, or system regulated by the *Uniform Code*.

[NY] SECTION 111
TEMPORARY STRUCTURES

[NY] 111.1 General. Temporary structures shall conform to Chapter 31 of this code and Chapter 31 of the *Building Code of New York State*.

SECTION 112
FIRE DEPARTMENT NOTIFICATION

[NY] 112.1 Fire department notification. The fire chief shall notify the *building official* of any fire or explosion involving any structural damage, fuel-burning appliance, chimney, flue or gas vent.

[NY] SECTION 113
INSPECTION OF SOLID FUEL-BURNING HEATING APPLIANCES, CHIMNEYS AND FLUES

[NY] 113.1 General. Section 113 is made part of the *Uniform Code* pursuant to Executive Law Section 378 (5-c).

[NY] 113.2 Permit. Prior to the installation of any *solid* fuel-burning heating appliance, *chimney* or flue in any *dwelling* used as a residence, the *owner* thereof, or his agent, shall first secure a *permit* from the *authority having jurisdiction*.

[NY] 113.3 Installation and inspection. An appropriate and qualified inspector, as determined by the *authority having jurisdiction*, shall cause an inspection to be made of the *solid* fuel burning heating appliance, *chimney* or flue at a time

INTERNATIONAL CODE COUNCIL®
Copyright © 2019 ICC & NYSDOS. ALL RIGHTS RESERVED. Accessed by Lauren Gualdino (lgualdino@briarcliffmanor.org), (-) Order Number #100880972 on May 08, 2020 07:05 AM (PDT) pursuant to License Agreement with ICC & NYSDOS. No further reproduction, no

100880972

when such inspection will best determine conformity of such installation with the *Uniform Code*.

Exception: The *authority having jurisdiction* may waive such inspection for good cause shown.

[NY] 113.4 Certificate of approval. Upon approval of such installation, the *building official* or other appropriate official of the *authority having jurisdiction* shall issue a certificate evidencing compliance with the appropriate provisions of the *Uniform Code* (such certificate being hereinafter referred to as a "certificate of approval"). No *owner* of any *dwelling* used as a residence shall operate, or cause to be operated, any *solid* fuel-burning heating appliance until such installation, including *chimney* and flue, has been approved and a certificate of approval has been obtained from the *authority having jurisdiction*.

[NY] 113.4.1 Accidental fire. In the event of an accidental fire in a *solid* fuel-burning heating appliance, chimney or flue requiring the services of a fire department, the chief of the responding fire department may issue a temporary thirty-day certificate indicating substantial conformity with the *Uniform Code*.

The *authority having jurisdiction* shall cause an inspection to be made by an official inspector, as determined by the *Code Enforcement Program* of the *authority having jurisdiction*, and a new certificate to be issued indicating conformity of such *solid* fuel-burning heating appliance, *chimney* or flue with the *Uniform Code*.

[NY] 113.4.2 Liability. Pursuant to Executive Law Section 378 (5-c)(f), the issuance of a certificate of approval shall not be deemed to give rise to any claim or cause of action for damages against the *authority having jurisdiction* or any official of the *authority having jurisdiction* for damages resulting from operation or use of such *solid* fuel-burning heating appliance, *chimney* or flue.

[NY] 113.5 Fee. The *authority having jurisdiction* may establish and collect a reasonable fee for such inspection from the *owner* of such property or such *owner's* agent.

[NY] 113.6 Violations. Pursuant to Executive Law Section 378(5-c)(h), any violation of Section 113 shall be deemed a violation and shall be punishable by a fine not to exceed two hundred fifty dollars.

[NY] 113.7 Emergency repair. Where equipment replacements and *repairs* must be performed in an emergency situation and where a delay occasioned by the requirement of securing a *permit* could reasonably be expected to cause irreparable damage to the property or serious personal injury to the occupants or other person, the *owner* or his agent may commence such installation without first obtaining such *permit* provided application therefore is filed within three business days after such work is commenced.

INTERNATIONAL CODE COUNCIL®
Copyright © 2019 ICC & NYSDOS. ALL RIGHTS RESERVED. Accessed by Lauren Gualdino (lgualdino@briarcliffmanor.org), (-) Order Number #100880972 on May 08, 2020 07:05 AM (PDT) pursuant to License Agreement with ICC & NYSDOS. No further reproduction, no

INTERNATIONAL CODE COUNCIL®
Copyright © 2019 ICC & NYSDOS. ALL RIGHTS RESERVED. Accessed by Lauren Gualdino (lgualdino@briarcliffmanor.org), (-) Order Number #100880972 on May 08, 2020 07:05 AM (PDT) pursuant to License Agreement with ICC & NYSDOS. No further reproduction, no

100880972

CHAPTER 2
DEFINITIONS

SECTION 201
GENERAL

201.1 Scope. Unless otherwise expressly stated, the following words and terms shall, for the purposes of this code, have the meanings shown in this chapter.

201.2 Interchangeability. Words used in the present tense include the future; words stated in the masculine gender include the feminine and neuter; the singular number includes the plural and the plural, the singular.

201.3 Terms defined in other codes. Where terms are not defined in this code and are defined in the *Building Code of New York State*, *Fuel Gas Code of New York State*, *Mechanical Code of New York State* or *Plumbing Code of New York State*, such terms shall have the meanings ascribed to them as in those codes.

201.4 Terms not defined. Where terms are not defined through the methods authorized by this section, such terms shall have ordinarily accepted meanings such as the context implies. *Merriam Webster's Collegiate Dictionary, 11th Edition*, shall be considered as providing ordinarily accepted meanings.

SECTION 202
GENERAL DEFINITIONS

[BG] 24-HOUR BASIS. The actual time that a person is an occupant within a facility for the purpose of receiving care. It shall not include a facility that is open for 24 hours and is capable of providing care to someone visiting the facility during any segment of the 24 hours.

[M]ACCESS (TO). That which enables a device, appliance or equipment to be reached by ready access or by a means that first requires the removal or movement of a panel, door or similar obstruction [see also "Ready access (to)"].

[BE] ACCESSIBLE MEANS OF EGRESS. A continuous and unobstructed way of egress travel from any *accessible* point in a building or facility to a *public way*.

[BE] ACCESSIBLE ROUTE. A continuous, unobstructed path that complies with Chapter 11 of the *Building Code of New York State*.

AEROSOL CONTAINER. A metal can or plastic container up to a maximum size of 33.8 fluid ounces (1000 ml) or a glass bottle up to a maximum size of 4 fluid ounces (118 ml) designed and intended to dispense an aerosol.

AEROSOL COOKING SPRAY PRODUCTS. Aerosol cooking spray products are those aerosol products designed to deliver a vegetable oil or a solid or nonflammable liquid to reduce sticking on cooking and baking surfaces, or to be applied to food, or both. These products have a chemical heat of combustion that is greater than 8600 Btu/lb. (20 kJ/g) and contain no more than 18 percent by weight of flammable propellant.

AEROSOL PRODUCT. A combination of a container, a propellant and a material that is dispensed. Aerosol products shall be classified by means of the calculation of their chemical heats of combustion and shall be designated Level 1, Level 2 or Level 3.

Level 1 aerosol products. Those with a total chemical heat of combustion that is less than or equal to 8,600 British thermal units per pound (Btu/lb) (20 kJ/g).

Level 2 aerosol products. Those with a total chemical heat of combustion that is greater than 8,600 Btu/lb (20 kJ/g), but less than or equal to 13,000 Btu/lb (30 kJ/g).

Level 3 aerosol products. Those with a total chemical heat of combustion that is greater than 13,000 Btu/lb (30 kJ/g).

AEROSOL PRODUCT WAREHOUSE. A building used for warehousing aerosol products.

AGENCY. Any emergency responder department within the jurisdiction that utilizes radio frequencies for communication. This could include, but not be limited to, various public safety agencies such as fire departments, emergency medical services and law enforcement.

AGENT. A person who shall have charge, care or control of any structure as *owner*, or agent of the *owner*, or as executor, executrix, administrator, administratrix, trustee or guardian of the estate of the *owner*. Any such person representing the actual *owner* shall be bound to comply with the provisions of this code to the same extent as if that person was the *owner*.

[NY] AGRICULTURAL BUILDING. A structure designed and constructed to house farm equipment, farm implements, poultry, livestock, hay, grain, or other horticultural products. This structure shall not be a place of human habitation or a place of employment where agricultural products are processed, treated or packaged, nor shall it be a place used by the public.

AGRO-INDUSTRIAL. A facility, or portion thereof, housing operations involving the transforming of raw agricultural products into intermediate or consumable products.

[BG] AIR-INFLATED STRUCTURE. A structure that uses air-pressurized membrane beams, arches or other elements to enclose space. Occupants of such a structure do not occupy the pressurized areas used to support the structure.

[BG] AIR-SUPPORTED STRUCTURE. A structure wherein the shape of the structure is attained by air pressure, and occupants of the structure are within the elevated pressure area. Air supported structures are of two basic types:

Double skin. Similar to a single skin, but with an attached liner that is separated from the outer skin and provides an airspace which serves for insulation, acoustic, aesthetic or similar purposes.

Single skin. Where there is only the single outer skin and the air pressure is directly against that skin.

AIRCRAFT MOTOR-VEHICLE FUEL-DISPENSING FACILITY. That portion of property where flammable or

INTERNATIONAL CODE COUNCIL®
Copyright © 2019 ICC & NYSDOS. ALL RIGHTS RESERVED. Accessed by Lauren Gualdino (lgualdino@briarcliffmanor.org), (-) Order Number #100880972 on May 08, 2020 07:05 AM (PDT) pursuant to License Agreement with ICC & NYSDOS. No further reproduction, no

100880972

combustible liquids or gases used as motor fuels are stored and dispensed from fixed automotive-type equipment into the fuel tanks of aircraft.

AIRCRAFT OPERATION AREA (AOA). Any area used or intended for use for the parking, taxiing, takeoff, landing or other ground-based aircraft activity.

AIRPORT. An area of land or structural surface that is used, or intended for use, for the landing and taking off of aircraft with an overall length greater than 39 feet (11 887 mm) and an overall exterior fuselage width greater than 6.6 feet (2012 mm), and any appurtenant areas that are used or intended for use for airport buildings and other airport facilities.

[BE] AISLE. An unenclosed *exit access* component that defines and provides a path of egress travel.

[BE] AISLE ACCESSWAY. That portion of an *exit access* that leads to an *aisle*.

ALARM, NUISANCE. See "Nuisance alarm."

ALARM DEVICE, MULTIPLE STATION. See "Multiple-station alarm device."

ALARM NOTIFICATION APPLIANCE. A fire alarm system component such as a bell, horn, speaker, light or text display that provides audible, tactile or visible outputs, or any combination thereof. See also "Audible alarm notification appliance" or "Visible alarm notification appliance."

ALARM SIGNAL. A signal indicating an emergency requiring immediate action, such as a signal indicative of fire.

ALARM VERIFICATION FEATURE. A feature of automatic fire detection and alarm systems to reduce unwanted alarms wherein smoke detectors report alarm conditions for a minimum period of time, or confirm alarm conditions within a given time period, after being automatically reset, in order to be accepted as a valid alarm-initiation signal.

ALCOHOL-BASED HAND RUB. An alcohol-containing preparation designed for application to the hands for reducing the number of viable microorganisms on the hands and containing ethanol or isopropanol in an amount not exceeding 95-percent by volume.

ALCOHOL-BLENDED FUELS. Flammable liquids consisting of greater than 10 percent, by volume, ethanol or other alcohols blended with gasoline.

[A] ALTERATION. Any construction or renovation to an existing structure other than a repair or addition.

[BE] ALTERNATING TREAD DEVICE. A device that has a series of steps between 50 and 70 degrees (0.87 and 1.22 rad) from horizontal, usually attached to a center support rail in an alternating manner so that the user does not have both feet on the same level at the same time.

[BG] AMBULATORY CARE FACILITY. Buildings or portions thereof used to provide medical, surgical, psychiatric, nursing or similar care on a less-than-24-hour basis to persons who are rendered *incapable of self-preservation* by the services provided or staff has accepted responsibility for care recipients already incapable.

AMMONIUM NITRATE. A chemical compound represented by the formula NH_4NO_3.

ANNUNCIATOR. A unit containing one or more indicator lamps, alphanumeric displays or other equivalent means in which each indication provides status information about a circuit, condition or location.

[A] APPROVED. Acceptable to the *fire code official*.

[BG] AREA, BUILDING. The area included within surrounding *exterior walls* (or *exterior walls* and *fire walls*) exclusive of vent shafts and *courts*. Areas of the building not provided with surrounding walls shall be included in the building area if such areas are included within the horizontal projection of the roof or floor above.

[BE] AREA OF REFUGE. An area where persons unable to use *stairways* can remain temporarily to await instructions or assistance during emergency evacuation.

ARRAY. The configuration of storage. Characteristics considered in defining an array include the type of packaging, flue spaces, height of storage and compactness of storage.

ARRAY, CLOSED. A storage configuration having a 6-inch (152 mm) or smaller width vertical flue space that restricts air movement through the stored commodity.

[BG] ATRIUM. An opening connecting two or more stories other than enclosed *stairways*, elevators, hoistways, escalators, plumbing, electrical, air-conditioning or other equipment, which is closed at the top and not defined as a mall. Stories, as used in this definition, do not include balconies within assembly groups or mezzanines that comply with Section 505 of the *Building Code of New York State*.

[BG] ATTIC. The space between the ceiling framing of the top *story* and the underside of the roof.

AUDIBLE ALARM NOTIFICATION APPLIANCE. A notification appliance that alerts by the sense of hearing.

[NY] AUTHORITY HAVING JURISDICTION. The governmental unit or agency responsible for administration and enforcement of this code.

AUTOMATED RACK STORAGE. Automated rack storage is a stocking method whereby the movement of pallets, products, apparatus or systems are automatically controlled by mechanical or electronic devices.

AUTOMATIC. As applied to fire protection devices, a device or system providing an emergency function without the necessity for human intervention and activated as a result of a predetermined temperature rise, rate of temperature rise or combustion products.

AUTOMATIC FIRE-EXTINGUISHING SYSTEM. An *approved* system of devices and equipment which automatically detects a fire and discharges an *approved* fire-extinguishing agent onto or in the area of a fire.

AUTOMATIC SMOKE DETECTION SYSTEM. A fire alarm system that has initiation devices that utilize smoke detectors for protection of an area such as a room or space with detectors to provide early warning of fire.

AUTOMATIC SPRINKLER SYSTEM. An *automatic sprinkler system*, for fire protection purposes, is an integrated system of underground and overhead piping designed in accordance with fire protection engineering standards. The system includes a suitable water supply. The portion of the system

INTERNATIONAL CODE COUNCIL®
Copyright © 2019 ICC & NYSDOS. ALL RIGHTS RESERVED. Accessed by Lauren Gualdino (lgualdino@briarcliffmanor.org), (-) Order Number #100880972 on May 08, 2020 07:05 AM (PDT) pursuant to License Agreement with ICC & NYSDOS. No further reproduction, no

100880972

above the ground is a network of specially sized or hydraulically designed piping installed in a structure or area, generally overhead, and to which automatic sprinklers are connected in a systematic pattern. The system is usually activated by heat from a fire and discharges water over the fire area.

AUTOMATIC WATER MIST SYSTEM. A system consisting of a water supply, a pressure source and a distribution piping system with attached nozzles which, at or above a minimum operating pressure, defined by its listing, discharges water in fine droplets meeting the requirements of NFPA 750 for the purpose of the control, suppression or extinguishment of a fire. Such systems include wet-pipe, dry-pipe and pre-action types. The systems are designed as engineered, preengineered, local-application or total flooding systems.

AUTOMOTIVE MOTOR FUEL-DISPENSING FACILITY. That portion of property where flammable or *combustible liquids* or gases used as motor fuels are stored and dispensed from fixed equipment into the fuel tanks of motor vehicles.

AVERAGE AMBIENT SOUND LEVEL. The root mean square, A-weighted sound pressure level measured over a 24-hour period, or the time any person is present, whichever time period is less.

[BG] AWNING. An architectural projection that provides weather protection, identity or decoration and is partially or wholly supported by the building to which it is attached. An awning is comprised of a lightweight frame structure over which a covering is attached.

[BE] BALANCED DOOR. A door equipped with double-pivoted hardware so designed as to cause a semicounter balanced swing action when opening.

BALED COTTON. See "Cotton."

BALED COTTON, DENSELY PACKED. See "Cotton."

BARRICADE. A structure that consists of a combination of walls, floor and roof, which is designed to withstand the rapid release of energy in an explosion and which is fully confined, partially vented or fully vented; or other effective method of shielding from *explosive materials* by a natural or artificial barrier.

Artificial barricade. An artificial mound or revetment with a minimum thickness of 3 feet (914 mm).

Natural barricade. Natural features of the ground, such as hills, or timber of sufficient density that the surrounding exposures that require protection cannot be seen from the magazine or building containing *explosives* when the trees are bare of leaves.

BARRICADED. The effective screening of a building containing *explosive materials* from the magazine or other building, railway or highway by a natural or an artificial barrier. A straight line from the top of any sidewall of the building containing *explosive materials* to the eave line of any magazine or other building or to a point 12 feet (3658 mm) above the center of a railway or highway shall pass through such barrier.

[BG] BASEMENT. A story that is not a story above grade plane.

BATTERY SYSTEM, STATIONARY STORAGE. A rechargeable energy storage system consisting of electrochemical storage batteries, battery chargers, controls and associated electrical equipment designed to provide electrical power to a building. The system is typically used to provide standby or emergency power, an uninterruptable power supply, load shedding, load sharing or similar capabilities.

BATTERY TYPES.

Flow battery. A type of storage battery that includes chemical components dissolved in two different liquids. Ion exchange, which provides the flow of electrical current, occurs through the membrane while both liquids circulate in their respective spaces.

Lead-acid battery. A storage battery that is comprised of lead electrodes immersed in sulphuric acid electrolyte.

Lithium-ion battery. A storage battery with lithium ions serving as the charge carriers of the battery. The electrolyte is a polymer mixture of carbonates with an inorganic salt and can be in a liquid or a gelled polymer form. Lithiated metal oxide is typically a cathode and forms of carbon or graphite typically form the anode.

Lithium metal polymer battery. A storage battery that is similar to the lithium ion battery except that it has a lithium metal anode in the place of the traditional carbon or graphite anode.

Nickel-cadmium (Ni-Cd) battery. An alkaline storage battery in which the positive active material is nickel oxide, the negative contains cadmium and the electrolyte is potassium hydroxide.

Pre-engineered stationary storage battery system. An energy storage system consisting of batteries, a battery management system, components and modules that are produced in a factory, designed to comprise the system when assembled on the job site.

Prepackaged stationary storage battery system. An energy storage system consisting of batteries, a battery management system, components and modules that is factory assembled and shipped as a complete unit for installation at the job site.

Sodium-beta storage battery. A storage battery, also referred to as a Na-beta battery or NBB, which uses a solid beta-alumina electrolyte membrane that selectively allows sodium ion transport between a positive electrode such as metal halide and a negative sodium electrode.

Stationary storage battery. A group of electrochemical cells interconnected to supply a nominal voltage of DC power to a suitably connected electrical load, designed for service in a permanent location.

BIN BOX. A five-sided container with the open side facing an aisle. Bin boxes are self-supporting or supported by a structure

INTERNATIONAL CODE COUNCIL®
Copyright © 2019 ICC & NYSDOS. ALL RIGHTS RESERVED. Accessed by Lauren Gualdino (lgualdino@briarcliffmanor.org), (-) Order Number #100880972 on May 08, 2020 07:05 AM (PDT) pursuant to License Agreement with ICC & NYSDOS. No further reproduction, no

100880972

designed so that little or no horizontal or vertical space exists around the boxes.

BIOMASS. Plant- or animal-based material of biological origin excluding material embedded in geologic formations or transformed into fossils.

BLAST AREA. The area including the blast site and the immediate adjacent area within the influence of flying rock, missiles and concussion.

BLAST SITE. The area in which *explosive materials* are being or have been loaded and which includes all holes loaded or to be loaded for the same blast and a distance of 50 feet (15 240 mm) in all directions.

BLASTER. A person qualified in accordance with Section 5601.4 to be in charge of and responsible for the loading and firing of a blast.

BLASTING AGENT. A material or mixture consisting of fuel and oxidizer, intended for blasting provided that the finished product, as mixed for use or shipment, cannot be detonated by means of a No. 8 test detonator when unconfined. Blasting agents are labeled and placarded as Class 1.5 material by US DOTn.

[BE] BLEACHERS. Tiered seating supported on a dedicated structural system and two or more rows high and is not a building element (see "*Grandstand*").

[BG] BOARDING HOUSE. A building arranged or used for lodging for compensation, with or without meals, and not occupied as a single-family unit.

BOILING POINT. The temperature at which the vapor pressure of a liquid equals the atmospheric pressure of 14.7 pounds per square inch absolute (psia) (101 kPa) or 760 mm of mercury. Where an accurate boiling point is unavailable for the material in question, or for mixtures which do not have a constant boiling point, for the purposes of this classification, the 20-percent evaporated point of a distillation performed in accordance with ASTM D86 shall be used as the boiling point of the liquid.

BONFIRE. An outdoor fire utilized for ceremonial purposes.

[BE] BREAKOUT. For revolving doors, a process whereby wings or door panels can be pushed open manually for *means of egress* travel.

BRITISH THERMAL UNIT (BTU). The heat necessary to raise the temperature of 1 pound (0.454 kg) of water by 1°F (0.5565°C).

[A] BUILDING. Any structure utilized or intended for supporting or sheltering any occupancy.

BUILDING AREA. See "Area, building."

[NY] BUILDING CODE OF NEW YORK STATE. The 2020 edition of the publication entitled "Building Code of New York State," published by the International Code Council, Inc. (publication date November 2019).

BUILDING HEIGHT. See "Height, building."

[A] BUILDING OFFICIAL. The officer or other designated authority charged with the administration and enforcement of the *Building Code of New York State*, or a duly authorized representative.

[NY] BUILDING PERMIT. A building permit, construction permit, demolition permit or permit that authorizes the performance of work.

BULK OXYGEN SYSTEM. An assembly of equipment, such as oxygen storage containers, pressure regulators, safety devices, vaporizers, manifolds and interconnecting piping, that has a storage capacity of more than 20,000 cubic feet (566 m^3) of oxygen at *normal temperature and pressure (NTP)* including unconnected reserves on hand at the site. The bulk oxygen system terminates at the point where oxygen at service pressure first enters the supply line. The oxygen containers can be stationary or movable, and the oxygen can be stored as a gas or liquid.

BULK PLANT OR TERMINAL. That portion of a property where flammable or *combustible liquids* are received by tank vessel, pipelines, tank car or tank vehicle and are stored or blended in bulk for the purpose of distributing such liquids by tank vessel, pipeline, tank car, tank vehicle, portable tank or container.

BULK TRANSFER. The loading or unloading of flammable or *combustible liquids* from or between tank vehicles, tank cars or storage tanks.

BULLET RESISTANT. Constructed so as to resist penetration of a bullet of 150-grain M2 ball ammunition having a nominal muzzle velocity of 2,700 feet per second (fps) (824 mps) when fired from a 30-caliber rifle at a distance of 100 feet (30 480 mm), measured perpendicular to the target.

CANOPY. A structure or architectural projection of rigid construction over which a covering is attached that provides weather protection, identity or decoration, and may be structurally independent or supported by attachment to a building on one end and by not less than one stanchion on the outer end.

[NY] CAPACITOR ENERGY STORAGE SYSTEM. A stationary, rechargeable energy storage system consisting of capacitors, chargers, controls and associated electrical equipment designed to provide electrical power to a building or facility. The system is typically used to provide standby or emergency power, an uninterruptable power supply, load shedding, load sharing or similar capabilities.

CARBON DIOXIDE ENRICHMENT SYSTEM. A system where carbon dioxide gas is intentionally introduced into an indoor environment, typically for the purpose of stimulating plant growth.

CARBON DIOXIDE EXTINGUISHING SYSTEM. A system supplying carbon dioxide (CO_2) from a pressurized vessel through fixed pipes and nozzles. The system includes a manual- or automatic-actuating mechanism.

CARBON MONOXIDE ALARM. A single- or multiple-station alarm intended to detect carbon monoxide gas and alert occupants by a distinct audible signal. It incorporates a sensor, control components and an alarm notification appliance in a single unit.

INTERNATIONAL CODE COUNCIL®
Copyright © 2019 ICC & NYSDOS. ALL RIGHTS RESERVED. Accessed by Lauren Gualdino (lgualdino@briarcliffmanor.org), (-) Order Number #100880972 on May 08, 2020 07:05 AM (PDT) pursuant to License Agreement with ICC & NYSDOS. No further reproduction, no

100880972

CARBON MONOXIDE DETECTOR. A device with an integral sensor to detect carbon monoxide gas and transmit an alarm signal to a connected alarm control unit.

[BG] CARE SUITE. In Group I-2 occupancies, a group of treatment rooms, care recipient sleeping rooms and the support rooms or spaces and circulation space within the suite where staff are in attendance for supervision of all care recipients within the suite, and the suite is in compliance with the requirements of Section 407.4.4 of the *Building Code of New York State*.

CARTON. A cardboard or fiberboard box enclosing a product.

CEILING LIMIT. The maximum concentration of an airborne contaminant to which one may be exposed. The ceiling limits utilized are those published in DOL 29 CFR Part 1910.1000. The ceiling Recommended Exposure Limit (REL-C) concentrations published by the U.S. National Institute for Occupational Safety and Health (NIOSH), Threshold Limit Value-Ceiling (TLV-C) concentrations published by the American Conference of Governmental Industrial Hygienists (ACGIH), Ceiling Workplace Environmental Exposure Level (WEEL-Ceiling) Guides published by the American Industrial Hygiene Association (AIHA), and other *approved*, consistent measures are allowed as surrogates for hazardous substances not listed in DOL 29 CFR Part 1910.1000.

[NY] CERTIFICATE OF OCCUPANCY. A document issued by the *authority having jurisdiction* certifying that the building complies with the *approved construction documents* that have been submitted to and approved by the *authority having jurisdiction*, indicating it to be in a condition suitable for occupancy.

[A] CHANGE OF OCCUPANCY. A change in the use of a building or a portion of a building that results in any of the following:

1. A change of occupancy classification.
2. A change from one group to another group within an occupancy classification.
3. Any change in use within a group for which there is a change in the application of the requirements of this code.

CHEMICAL. An element, chemical compound or mixture of elements or compounds or both.

CHEMICAL FUME HOOD. A ventilated enclosure designed to contain and exhaust fumes, gases, vapors, mists and particulate matter generated within the hood.

CHEMICAL NAME. The scientific designation of a chemical in accordance with the nomenclature system developed by the International Union of Pure and Applied Chemistry, the Chemical Abstracts Service rules of nomenclature, or a name which will clearly identify a chemical for the purpose of conducting an evaluation.

[M] CHIMNEY. A primarily vertical structure containing one or more flues for the purpose of carrying gaseous products of combustion and air from a fuel-burning appliance to the outdoor atmosphere.

Factory-built chimney. A listed and labeled chimney composed of factory-made components, assembled in the field in accordance with manufacturer's instructions and the conditions of the listing.

Masonry chimney. A field-constructed chimney composed of solid masonry units, bricks, stones, or concrete.

Metal chimney. A field-constructed chimney of metal.

CLEAN AGENT. Electrically nonconducting, volatile or gaseous fire extinguishant that does not leave a residue upon evaporation.

[BG] CLINIC, OUTPATIENT. Buildings or portions thereof used to provide medical care on a less-than-24-hour basis to persons who are not rendered incapable of self-preservation by the services provided.

CLOSED CONTAINER. A container sealed by means of a lid or other device such that liquid, vapor or dusts will not escape from it under ordinary conditions of use or handling.

CLOSED SYSTEM. The use of a solid or liquid hazardous material involving a closed vessel or system that remains closed during normal operations where vapors emitted by the product are not liberated outside of the vessel or system and the product is not exposed to the atmosphere during normal operations; and all uses of *compressed gases*. Examples of closed systems for solids and liquids include product conveyed through a piping system into a closed vessel, system or piece of equipment.

[NY] CODE ENFORCEMENT PROGRAM. The program under which an *authority having jurisdiction* administers and enforces this code, as such program is currently in effect and as such program may hereafter be amended from time to time.

COLD DECK. A pile of unfinished cut logs.

COMBUSTIBLE DUST. Finely divided solid material which is 420 microns or less in diameter and which, when dispersed in air in the proper proportions, could be ignited by a flame, spark or other source of ignition. Combustible dust will pass through a U.S. No. 40 standard sieve.

COMBUSTIBLE FIBERS. Readily ignitable and free-burning materials in a fibrous or shredded form, such as cocoa fiber, cloth, cotton, excelsior, hay, hemp, henequen, istle, jute, kapok, oakum, rags, sisal, Spanish moss, straw, tow, wastepaper, certain synthetic fibers or other like materials. This definition does not include densely packed baled cotton.

COMBUSTIBLE GAS DETECTOR. An instrument that samples the local atmosphere and indicates the presence of ignitable vapors or gases within the flammable or explosive range expressed as a volume percent in air.

INTERNATIONAL CODE COUNCIL®
Copyright © 2019 ICC & NYSDOS. ALL RIGHTS RESERVED. Accessed by Lauren Gualdino (lgualdino@briarcliffmanor.org), (-) Order Number #100880972 on May 08, 2020 07:05 AM (PDT) pursuant to License Agreement with ICC & NYSDOS. No further reproduction, no

100880972

COMBUSTIBLE LIQUID. A liquid having a closed cup flash point at or above 100°F (38°C). Combustible liquids shall be subdivided as follows:

Class II. Liquids having a closed cup flash point at or above 100°F (38°C) and below 140°F (60°C).

Class IIIA. Liquids having a closed cup flash point at or above 140°F (60°C) and below 200°F (93°C).

Class IIIB. Liquids having closed cup *flash points* at or above 200°F (93°C).

The category of combustible liquids does not include *compressed gases* or *cryogenic fluids*.

[M] COMMERCIAL COOKING APPLIANCES. Appliances used in a commercial food service establishment for heating or cooking food and which produce grease vapors, steam, fumes, smoke or odors that are required to be removed through a local exhaust ventilation system. Such appliances include deep fat fryers, upright broilers, griddles, broilers, steam-jacketed kettles, hot-top ranges, under-fired broilers (charbroilers), ovens, barbecues, rotisseries, and similar appliances. For the purpose of this definition, a food service establishment shall include any building or a portion thereof used for the preparation and serving of food.

COMMERCIAL MOTOR VEHICLE. A motor vehicle used to transport passengers or property where the motor vehicle:

1. Has a gross vehicle weight rating of 10,000 pounds (454 kg) or more; or
2. Is designed to transport 16 or more passengers, including the driver.

COMMODITY. A combination of products, packing materials and containers.

[BE] COMMON PATH OF EGRESS TRAVEL. That portion of *exit access* travel distance measured from the most remote point of each room, area or space to that point where the occupants have separate and distinct access to two *exits* or *exit access* doorways.

[BE] COMMON USE. Interior or exterior circulation paths, rooms, spaces or elements that are not for public use and are made available for the shared use of two or more people.

COMPRESSED GAS. A material, or mixture of materials that:

1. Is a gas at 68°F (20°C) or less at 14.7 psia (101 kPa) of pressure; and
2. Has a *boiling point* of 68°F (20°C) or less at 14.7 psia (101 kPa) which is either liquefied, nonliquefied or in solution, except those gases which have no other health- or physical-hazard properties are not considered to be compressed until the pressure in the packaging exceeds 41 psia (282 kPa) at 68°F (20°C).

The states of a compressed gas are categorized as follows:

1. Nonliquefied compressed gases are gases, other than those in solution, which are in a packaging under the charged pressure and are entirely gaseous at a temperature of 68°F (20°C).
2. Liquefied compressed gases are gases that, in a packaging under the charged pressure, are partially liquid at a temperature of 68°F (20°C).
3. Compressed gases in solution are nonliquefied gases that are dissolved in a solvent.
4. Compressed gas mixtures consist of a mixture of two or more compressed gases contained in a packaging, the hazard properties of which are represented by the properties of the mixture as a whole.

COMPRESSED GAS CONTAINER. A pressure vessel designed to hold *compressed gases* at pressures greater than one atmosphere at 68°F (20°C) and includes cylinders, containers and tanks.

COMPRESSED GAS SYSTEM. An assembly of equipment designed to contain, distribute or transport *compressed gases*. It can consist of a *compressed gas* container or containers, reactors and appurtenances, including pumps, compressors and connecting piping and tubing.

[BG] CONGREGATE LIVING FACILITIES. A building or part thereof that contains sleeping units where residents share bathroom and/or kitchen facilities.

CONSTANTLY ATTENDED LOCATION. A designated location at a facility staffed by trained personnel on a continuous basis where alarm or supervisory signals are monitored and facilities are provided for notification of the fire department or other emergency services.

[A] CONSTRUCTION DOCUMENTS. The written, graphic and pictorial documents prepared or assembled for describing the design, location and physical characteristics of the elements of the project necessary for obtaining a permit.

CONTAINER. A vessel of 60 gallons (227 L) or less in capacity used for transporting or storing hazardous materials. Pipes, piping systems, engines and engine fuel tanks are not considered to be containers.

CONTAINMENT SYSTEM. A gas-tight recovery system comprised of equipment or devices which can be placed over a leak in a *compressed gas* container, thereby stopping or controlling the escape of gas from the leaking container.

CONTAINMENT VESSEL. A gas-tight recovery vessel designed so that a leaking *compressed gas* container can be placed within its confines thereby encapsulating the leaking container.

CONTROL AREA. Spaces within a building where quantities of hazardous materials not exceeding the *maximum allowable quantities per control area* are stored, dispensed, used or handled. See also the definition of "Outdoor control area."

[BE] CORRIDOR. An enclosed *exit access* component that defines and provides a path of egress travel.

CORRIDOR, OPEN-ENDED. See "Open-ended corridor."

CORROSIVE. A chemical that causes visible destruction of, or irreversible alterations in, living tissue by chemical action at the point of contact. A chemical shall be considered corrosive if, when tested on the intact skin of albino rabbits by the method described in DOTn 49 CFR 173.137, such chemical destroys or changes irreversibly the structure of the tissue at

INTERNATIONAL CODE COUNCIL®
Copyright © 2019 ICC & NYSDOS. ALL RIGHTS RESERVED. Accessed by Lauren Gualdino (lgualdino@briarcliffmanor.org), (-) Order Number #100880972 on May 08, 2020 07:05 AM (PDT) pursuant to License Agreement with ICC & NYSDOS. No further reproduction, no

100880972

the point of contact following an exposure period of 4 hours. This term does not refer to action on inanimate surfaces.

COTTON.

Baled cotton. A natural seed fiber wrapped in and secured with industry-accepted materials, usually consisting of burlap, woven polypropylene, polyethylene or cotton or sheet polyethylene, and secured with steel, synthetic or wire bands, or wire; also includes linters (lint removed from the cottonseed) and motes (residual materials from the ginning process).

Baled cotton, densely packed. Cotton, made into banded bales, with a packing density of not less than 22 pounds per cubic foot (360 kg/m^3), and dimensions complying with the following: a length of 55 inches (1397 mm), a width of 21 inches (533.4 mm) and a height of 27.6 to 35.4 inches (701 to 899 mm).

Seed cotton. Perishable raw agricultural commodity consisting of cotton fiber (lint) attached to the seed of the cotton plant, which requires ginning to become a commercial product.

[BG] COURT. An open, uncovered space, unobstructed to the sky, bounded on three or more sides by exterior building walls or other enclosing devices.

[BG] COVERED MALL BUILDING. A single building enclosing a number of tenants and occupants such as retail stores, drinking and dining establishments, entertainment and amusement facilities, passenger transportation terminals, offices, and other similar uses wherein two or more tenants have a main entrance into one or more malls. Anchor buildings shall not be considered as a part of the covered mall building. The term "covered mall building" shall include open mall buildings as defined below.

Mall. A roofed or covered common pedestrian area within a covered mall building that serves as access for two or more tenants and not to exceed three levels that are open to each other. The term "mall" shall include open malls as defined below.

Open mall. An unroofed common pedestrian way serving a number of tenants not exceeding three levels. Circulation at levels above grade shall be permitted to include open exterior balconies leading to *exits* discharging at grade.

Open mall building. Several structures housing a number of tenants such as retail stores, drinking and dining establishments, entertainment and amusement facilities, offices, and other similar uses wherein two or more tenants have a main entrance into one or more open malls. Anchor buildings are not considered as a part of the open mall building.

CRITICAL CIRCUIT. A circuit that requires continuous operation to ensure safety of the structure and occupants.

CRYOGENIC CONTAINER. A cryogenic vessel of any size used for the transportation, handling or storage of *cryogenic fluids*.

CRYOGENIC FLUID. A fluid having a *boiling point* lower than -130°F (-89.9°C) at 14.7 pounds per square inch atmosphere (psia) (an absolute pressure of 101.3 kPa).

CRYOGENIC VESSEL. A pressure vessel, low-pressure tank or atmospheric tank designed to contain a *cryogenic fluid* on which venting, insulation, refrigeration or a combination of these is used in order to maintain the operating pressure within the design pressure and the contents in a liquid phase.

[BG] CUSTODIAL CARE. Assistance with day-to-day living tasks; such as assistance with cooking, taking medication, bathing, using toilet facilities and other tasks of daily living. Custodial care includes persons receiving care who have the ability to respond to emergency situations and evacuate at a slower rate and/or who have mental and psychiatric complications.

CYLINDER. A pressure vessel designed for pressures higher than 40 psia (275.6 kPa) and having a circular cross section. It does not include a portable tank, multiunit tank car tank, cargo tank or tank car.

DAMPER. See "Fire damper" and "Smoke damper."

DAY BOX. A portable magazine designed to hold *explosive* materials and constructed in accordance with the requirements for a Type 3 magazine as defined and classified in Chapter 56.

DECORATIVE MATERIALS. All materials applied over the building interior finish for decorative, acoustical or other effect including, but not limited to, curtains, draperies, fabrics, streamers and all other materials utilized for decorative effect including, but not limited to, bulletin boards, artwork, posters, photographs, paintings, batting, cloth, cotton, hay, stalks, straw, vines, leaves, trees, moss and similar items, foam plastics and materials containing foam plastics. Decorative materials do not include wall coverings, ceiling coverings, floor coverings, ordinary window shades, interior finish and materials 0.025 inch (0.64 mm) or less in thickness applied directly to and adhering tightly to a substrate.

DEFLAGRATION. An exothermic reaction, such as the extremely rapid oxidation of a flammable dust or vapor in air, in which the reaction progresses through the unburned material at a rate less than the velocity of sound. A deflagration can have an explosive effect.

DELUGE SYSTEM. A sprinkler system employing open sprinklers attached to a piping system connected to a water supply through a valve that is opened by the operation of a detection system installed in the same area as the sprinklers. When this valve opens, water flows into the piping system and discharges from all sprinklers attached thereto.

DESIGN PRESSURE. The maximum gauge pressure that a pressure vessel, device, component or system is designed to withstand safely under the temperature and conditions of use expected.

DESOLVENTIZING. The act of removing a solvent from a material.

DETACHED BUILDING. A separate single-story building, without a *basement* or crawl space, used for the storage or use of hazardous materials and located an *approved* distance from all structures.

DETEARING. A process for rapidly removing excess wet coating material from a dipped or coated object or material by passing it through an electrostatic field.

INTERNATIONAL CODE COUNCIL®
Copyright © 2019 ICC & NYSDOS. ALL RIGHTS RESERVED. Accessed by Lauren Gualdino (lgualdino@briarcliffmanor.org), (-) Order Number #100880972 on May 08, 2020 07:05 AM (PDT) pursuant to License Agreement with ICC & NYSDOS. No further reproduction, no

100880972

DETECTOR, HEAT. A fire detector that senses heat, either abnormally high temperature or rate of rise, or both.

DETONATING CORD. A flexible cord containing a center core of high *explosive* used to initiate other *explosives*.

DETONATION. An exothermic reaction characterized by the presence of a shock wave in the material which establishes and maintains the reaction. The reaction zone progresses through the material at a rate greater than the velocity of sound. The principal heating mechanism is one of shock compression. *Detonations* have an *explosive* effect.

DETONATOR. A device containing any initiating or primary *explosive* that is used for initiating *detonation*. A detonator shall not contain more than 154.32 grains (10 grams) of total *explosives* by weight, excluding ignition or delay charges. The term includes, but is not limited to, electric blasting caps of instantaneous and delay types, blasting caps for use with safety fuses, detonating cord delay connectors, and noninstantaneous and delay blasting caps which use detonating cord, shock tube or any other replacement for electric leg wires. All types of detonators in strengths through No. 8 cap should be rated at $1^1/_2$ pounds (0.68 kg) of explosives per 1,000 caps. For strengths higher than No. 8 cap, consult the manufacturer.

[BG] DETOXIFICATION FACILITIES. Facilities that provide treatment for substance abuse serving care recipients who are incapable of self-preservation or who are harmful to themselves or others.

DIP TANK. A tank, vat or container of flammable or combustible liquid in which articles or materials are immersed for the purpose of coating, finishing, treating and similar processes.

DISCHARGE SITE. The immediate area surrounding the fireworks mortars used for an outdoor fireworks display.

DISPENSING. The pouring or transferring of any material from a container, tank or similar vessel, whereby vapors, dusts, fumes, mists or gases are liberated to the atmosphere.

DISPENSING DEVICE, OVERHEAD TYPE. A dispensing device that consists of one or more individual units intended for installation in conjunction with each other, mounted above a dispensing area typically within the motor fuel-dispensing facility canopy structure, and characterized by the use of an overhead hose reel.

DISPLAY SITE. The immediate area where a fireworks display is conducted. The display area includes the discharge site, the fallout area and the required separation distance from the mortars to spectator viewing areas. The display area does not include spectator viewing areas or vehicle parking areas.

DOOR, BALANCED. See "Balanced door."

DOOR, DUTCH. See "Dutch door."

DOOR, LOW ENERGY POWER-OPERATED. See "Low energy power-operated door."

DOOR, POWER-ASSISTED. See "Power-assisted door."

DOOR, POWER-OPERATED. See "Power-operated door."

DOORWAY, EXIT ACCESS. See "Exit access doorway."

[BG] DORMITORY. A space in a building where group sleeping accommodations are provided in one room, or in a series of closely associated rooms, for persons not members of the same family group, under joint occupancy and single management, as in college dormitories or fraternity houses.

DRAFT CURTAIN. A structure arranged to limit the spread of smoke and heat along the underside of the ceiling or roof.

[BF] DRAFTSTOP. A material, device or construction installed to restrict the movement of air within open spaces of concealed areas of building components such as crawl spaces, floor/ceiling assemblies, roof/ceiling assemblies and attics.

DRY-CHEMICAL EXTINGUISHING AGENT. A powder composed of small particles, usually of sodium bicarbonate, potassium bicarbonate, urea-potassium-based bicarbon-ate, potassium chloride or monoammonium phosphate, with added particulate material supplemented by special treatment to provide resistance to packing, resistance to moisture absorption (caking) and the proper flow capabilities.

DRY CLEANING. The process of removing dirt, grease, paints and other stains from such items as wearing apparel, textiles, fabrics and rugs by use of nonaqueous liquids (solvents).

DRY CLEANING PLANT. A facility in which dry cleaning and associated operations are conducted, including the office, receiving area and storage rooms.

DRY CLEANING ROOM. An occupiable space within a building used for performing dry cleaning operations, the installation of solvent-handling equipment or the storage of dry cleaning solvents.

DRY CLEANING SYSTEM. Machinery or equipment in which textiles are immersed or agitated in solvent or in which dry cleaning solvent is extracted from textiles.

DUTCH DOOR. A door divided horizontally so that the top can be operated independently from the bottom.

[BG] DWELLING. A building that contains one or two *dwelling units* used, intended or designed to be used, rented, leased, let or hired out to be occupied for living purposes.

[BG] DWELLING UNIT. A single unit providing complete, independent living facilities for one or more persons, including permanent provisions for living, sleeping, eating, cooking and sanitation.

EARLY SUPPRESSION FAST-RESPONSE (ESFR) SPRINKLER. A sprinkler *listed* for early suppression fast-response performance.

[BE] EGRESS COURT. A court or *yard* which provides access to a *public way* for one or more *exits*.

ELECTROSTATIC FLUIDIZED BED. A container holding powder coating material that is aerated from below so as to form an air-supported expanded cloud of such material that is electrically charged with a charge opposite to that of the object to be coated. Such object is transported through the container immediately above the charged and aerated materials in order to be coated.

INTERNATIONAL CODE COUNCIL®
Copyright © 2019 ICC & NYSDOS. ALL RIGHTS RESERVED. Accessed by Lauren Gualdino (lgualdino@briarcliffmanor.org), (-) Order Number #100880972 on May 08, 2020 07:05 AM (PDT) pursuant to License Agreement with ICC & NYSDOS. No further reproduction, no

100880972

ELEVATOR GROUP. A grouping of elevators in a building located adjacent or directly across from one another that respond to a common hall call button(s).

EMERGENCY ALARM SYSTEM. A system to provide indication and warning of emergency situations involving hazardous materials.

EMERGENCY CONTROL STATION. An *approved* location on the premises where signals from emergency equipment are received and which is staffed by trained personnel.

[BE] EMERGENCY ESCAPE AND RESCUE OPENING. An operable window, door or other similar device that provides for a means of escape and access for rescue in the event of an emergency.

EMERGENCY EVACUATION DRILL. An exercise performed to train staff and occupants and to evaluate their efficiency and effectiveness in carrying out emergency evacuation procedures.

EMERGENCY POWER SYSTEM. A source of automatic electric power of a required capacity and duration to operate required life safety, fire alarm, detection and ventilation systems in the event of a failure of the primary power. Emergency power systems are required for electrical loads where interruption of the primary power could result in loss of human life or serious injuries.

EMERGENCY SHUTOFF VALVE. A valve designed to shut off the flow of gases or liquids.

EMERGENCY SHUTOFF VALVE, AUTOMATIC. A fail-safe automatic-closing valve designed to shut off the flow of gases or liquids initiated by a control system that is activated by automatic means.

EMERGENCY SHUTOFF VALVE, MANUAL. A manually operated valve designed to shut off the flow of gases or liquids.

EMERGENCY VOICE/ALARM COMMUNICATIONS. Dedicated manual or automatic facilities for originating and distributing voice instructions, as well as alert and evacuation signals pertaining to a fire emergency, to the occupants of a building.

[BE] EMPLOYEE WORK AREA. All or any portion of a space used only by employees and only for work. *Corridors*, toilet rooms, kitchenettes and break rooms are not employee work areas.

[NY] ENERGY CODE. The New York State Energy Conservation Construction Code, adopted pursuant to Article 11 of the New York State Energy Law.

[NY] ENERGY STORAGE MANAGEMENT SYSTEMS. An electronic system that protects *energy storage systems* from operating outside their safe operating parameters and disconnects electrical power to the *energy storage system* or places it in a safe condition if potentially hazardous temperatures or other conditions are detected.

[NY] ENERGY STORAGE SYSTEM. One or more devices, assembled together, capable of storing energy in order to supply electrical energy at a future time, not to include a stand-alone 12-volt car battery or an electric motor vehicle.

[NY] ENERGY STORAGE SYSTEM CABINET. A cabinet containing components of the *energy storage system* that is included in the UL 9540 *listing* for the system. Personnel are not able to enter the enclosure, other than reaching in to access components for maintenance purposes.

[NY] ENERGY STORAGE SYSTEM COMMISSIONING. A systematic process that provides documented confirmation that an *energy storage system* functions according to the intended design criteria and complies with applicable code requirements.

[NY] ENERGY STORAGE SYSTEM DECOMMISSIONING. A systematic process that provides documentation and procedures that allow an *energy storage system* to be safely de-energized, disassembled, readied for shipment or storage, and removed from the premise in accordance with applicable code requirements.

[NY] ENERGY STORAGE SYSTEM, ELECTROCHEMICAL. An *energy storage system* that stores energy and produces electricity using chemical reactions. It includes, among others, battery energy storage systems and *capacitor energy storage systems*.

[NY] ENERGY STORAGE SYSTEM, MOBILE. An *energy storage system* capable of being moved and utilized for temporary energy storage applications, and not installed as fixed or stationary electrical equipment. The system can include integral wheels for transportation or be loaded on a trailer and unloaded for charging, storage and deployment.

[NY] ENERGY STORAGE SYSTEM, STATIONARY. An *energy storage system* installed as fixed or stationary electrical equipment in a permanent location.

EQUIPMENT PLATFORM. An unoccupied, elevated platform used exclusively for mechanical systems or industrial process equipment, including the associated elevated walkways, *stairways*, *alternating tread devices* and ladders necessary to access the platform (see Section 505.3 of the *Building Code of New York State*).

EXCESS FLOW CONTROL. A fail-safe system or other *approved* means designed to shut off flow caused by a rupture in pressurized piping systems.

EXCESS FLOW VALVE. A valve inserted into a *compressed gas* cylinder, portable tank or stationary tank that is designed to positively shut off the flow of gas in the event that its predetermined flow is exceeded.

EXHAUSTED ENCLOSURE. An appliance or piece of equipment which consists of a top, a back and two sides providing a means of local exhaust for capturing gases, fumes, vapors and mists. Such enclosures include laboratory hoods, exhaust fume hoods and similar appliances and equipment used to retain and exhaust locally the gases, fumes, vapors and mists that could be released. Rooms or areas provided with general ventilation, in themselves, are not exhausted enclosures.

EXISTING. Buildings, facilities or conditions that are already in existence, constructed or officially authorized prior to the adoption of this code.

INTERNATIONAL CODE COUNCIL®
Copyright © 2019 ICC & NYSDOS. ALL RIGHTS RESERVED. Accessed by Lauren Gualdino (lgualdino@briarcliffmanor.org), (-) Order Number #100880972 on May 08, 2020 07:05 AM (PDT) pursuant to License Agreement with ICC & NYSDOS. No further reproduction, no

100880972

[NY] EXISTING BUILDING CODE OF NEW YORK STATE. The 2020 edition of the publication entitled "Existing Building Code of New York State," published by the International Code Council, Inc. (publication date November 2019).

[BE] EXIT. That portion of a *means of egress* system between the *exit access* and the *exit discharge* or *public way*. Exit components include exterior exit doors at the *level of exit discharge*, *interior exit stairways* and *ramps*, *exit passageways*, *exterior exit stairways* and *ramps* and *horizontal exits*.

[BE] EXIT ACCESS. That portion of a *means of egress* system that leads from any occupied portion of a building or structure to an *exit*.

[BE] EXIT ACCESS DOORWAY. A door or access point along the path of egress travel from an occupied room, area or space where the path of egress enters an intervening room, *corridor*, *exit access stairway* or *ramp*.

[BE] EXIT ACCESS RAMP. A *ramp* within the *exit access* portion of the *means of egress* system.

[BE] EXIT ACCESS STAIRWAY. A *stairway* within the *exit access* portion of the *means of egress* system.

[BE] EXIT DISCHARGE. That portion of a *means of egress* system between the termination of an *exit* and a *public way*.

[BE] EXIT DISCHARGE, LEVEL OF. The *story* at the point at which an *exit* terminates and an *exit discharge* begins.

[BE] EXIT PASSAGEWAY. An *exit* component that is separated from other interior spaces of a building or structure by fire-resistance-rated construction and opening protectives, and provides for a protected path of egress travel in a horizontal direction to the *exit discharge*.

EXPANDED PLASTIC. A foam or cellular plastic material having a reduced density based on the presence of numerous small cavities or cells dispersed throughout the material.

EXPLOSION. An effect produced by the sudden violent expansion of gases, which may be accompanied by a shock wave or disruption, or both, of enclosing materials or structures. An explosion could result from any of the following:

1. Chemical changes such as rapid oxidation, *deflagration* or *detonation*, decomposition of molecules and runaway polymerization (usually *detonation*s).
2. Physical changes such as pressure tank ruptures.
3. Atomic changes (nuclear fission or fusion).

EXPLOSIVE. A chemical compound, mixture or device, the primary or common purpose of which is to function by explosion. The term includes, but is not limited to, dynamite, black powder, pellet powder, initiating explosives, detonators, safety fuses, squibs, detonating cord, igniter cord and igniters.

The term "Explosive" includes any material determined to be within the scope of USC Title 18: Chapter 40 and also includes any material classified as an explosive by the *hazardous materials* regulations of DOTn 49 CFR Parts 100-185.

High explosive. *Explosive material*, such as dynamite, which can be caused to detonate by means of a No. 8 test blasting cap where unconfined.

Low explosive. *Explosive material* that will burn or deflagrate when ignited. It is characterized by a rate of reaction that is less than the speed of sound. Examples of low *explosives* include, but are not limited to, black powder, safety fuse, igniters, igniter cord, fuse lighters, fireworks and propellants, 1.3C.

Mass-detonating explosives. Division 1.1, 1.2 and 1.5 *explosives* alone or in combination, or loaded into various types of ammunition or containers, most of which can be expected to explode virtually instantaneously when a small portion is subjected to fire, severe concussion, impact, the impulse of an initiating agent or the effect of a considerable discharge of energy from without. Materials that react in this manner represent a mass explosion hazard. Such an *explosive* will normally cause severe structural damage to adjacent objects. Explosive propagation could occur immediately to other items of ammunition and *explosives* stored sufficiently close to and not adequately protected from the initially exploding pile with a time interval short enough so that two or more quantities must be considered as one for quantity-distance purposes.

UN/DOTn Class 1 explosives. The former classification system used by DOTn included the terms "high" and "low" *explosives* as defined herein. The following terms further define *explosives* under the current system applied by DOTn for all *explosive materials* defined as hazard Class 1 materials. Compatibility group letters are used in concert with the division to specify further limitations on each division noted (for example, the letter G identifies the material as a pyrotechnic substance or article containing a pyrotechnic substance and similar materials).

Division 1.1. *Explosives* that have a mass explosion hazard. A mass explosion is one which affects almost the entire load instantaneously.

Division 1.2. *Explosives* that have a projection hazard but not a mass explosion hazard.

Division 1.3. *Explosives* that have a fire hazard and either a minor blast hazard or a minor projection hazard or both, but not a mass explosion hazard.

Division 1.4. *Explosives* that pose a minor explosion hazard. The explosive effects are largely confined to the package and no projection of fragments of appreciable size or range is to be expected. An external fire must not cause virtually instantaneous explosion of almost the entire contents of the package.

Division 1.5. Very insensitive *explosives*. This division is comprised of substances that have a mass explosion hazard but which are so insensitive that there is very little probability of initiation or of transition from burning to *detonation* under normal conditions of transport.

Division 1.6. Extremely insensitive articles which do not have a mass explosion hazard. This division is comprised of articles that contain only extremely insensitive detonating substances and which demonstrate a negligible probability of accidental initiation or propagation.

EXPLOSIVE MATERIAL. The term "explosive" material means *explosives*, blasting agents and detonators.

INTERNATIONAL CODE COUNCIL®
Copyright © 2019 ICC & NYSDOS. ALL RIGHTS RESERVED. Accessed by Lauren Gualdino (lgualdino@briarcliffmanor.org), (-) Order Number #100880972 on May 08, 2020 07:05 AM (PDT) pursuant to License Agreement with ICC & NYSDOS. No further reproduction, no

100880972

[BE] EXTERIOR EXIT RAMP. An *exit* component that serves to meet one or more *means of egress* design requirements, such as required number of *exits* or *exit access* travel distance, and is open to yards, courts or *public ways*.

[BE] EXTERIOR EXIT STAIRWAY. An *exit* component that serves to meet one or more *means of egress* design requirements, such as required number of *exits* or *exit access* travel distance, and is open to yards, courts or *public ways*.

[BF] EXTERIOR WALL. A wall, bearing or nonbearing, that is used as an enclosing wall for a building, other than a *fire wall*, and that has a slope of 60 degrees (1.05 rad) or greater with the horizontal plane.

EXTRA-HIGH-RACK COMBUSTIBLE STORAGE. Storage on racks of Class I, II, III or IV commodities that exceed 40 feet (12 192 mm) in height and storage on racks of high-hazard commodities that exceed 30 feet (9144 mm) in height.

FABRICATION AREA. An area within a semiconductor fabrication facility and related research and development areas in which there are processes using hazardous production materials. Such areas are allowed to include ancillary rooms or areas such as dressing rooms and offices that are directly related to the fabrication area processes.

[A] FACILITY. A building or use in a fixed location including exterior storage areas for flammable and combustible substances and hazardous materials, piers, wharves, tank farms and similar uses. This term includes recreational vehicles, mobile home and manufactured housing parks, sales and storage lots.

FAIL-SAFE. A design condition incorporating a feature for automatically counteracting the effect of an anticipated possible source of failure; also, a design condition eliminating or mitigating a hazardous condition by compensating automatically for a failure or malfunction.

FALLOUT AREA. The area over which aerial shells are fired. The shells burst over the area, and unsafe debris and malfunctioning aerial shells fall into this area. The fallout area is the location where a typical aerial shell dud falls to the ground depending on the wind and the angle of mortar placement.

FALSE ALARM. The willful and knowing initiation or transmission of a signal, message or other notification of an event of fire when no such danger exists.

FINES. Small pieces or splinters of wood byproducts that will pass through a 0.25-inch (6.4 mm) screen.

FIRE ALARM. The giving, signaling or transmission to any public fire station, or company or to any officer or employee thereof, whether by telephone, spoken word or otherwise, of information to the effect that there is a fire at or near the place indicated by the person giving, signaling or transmitting such information.

FIRE ALARM BOX, MANUAL. See "Manual fire alarm box."

FIRE ALARM CONTROL UNIT. A system component that receives inputs from automatic and manual fire alarm devices and may be capable of supplying power to detection devices and transponder(s) or off-premises transmitter(s). The control unit may be capable of providing a transfer of power to the notification appliances and transfer of condition to relays or devices.

FIRE ALARM SIGNAL. A signal initiated by a fire alarm-initiating device such as a manual fire alarm box, automatic fire detector, waterflow switch or other device whose activation is indicative of the presence of a fire or fire signature.

FIRE ALARM SYSTEM. A system or portion of a combination system consisting of components and circuits arranged to monitor and annunciate the status of fire alarm or supervisory signal-initiating devices and to initiate the appropriate response to those signals.

FIRE APPARATUS ACCESS ROAD. A road that provides fire apparatus access from a fire station to a facility, building or portion thereof. This is a general term inclusive of all other terms such as *fire lane*, public street, private street, parking lot lane and access roadway.

[BF] FIRE AREA. The aggregate floor area enclosed and bounded by *fire walls*, *fire barriers*, *exterior walls* or *horizontal assemblies* of a building. Areas of the building not provided with surrounding walls shall be included in the fire area if such areas are included within the horizontal projection of the roof or floor next above.

[BF] FIRE BARRIER. A fire-resistance-rated wall assembly of materials designed to restrict the spread of fire in which continuity is maintained.

FIRE CHIEF. The chief officer of the fire department serving the jurisdiction, or a duly authorized representative.

[NY] FIRE CODE OFFICIAL. The officer or other designated authority charged with the administration and enforcement of the *Fire Code of New York State*, or a duly authorized representative.

FIRE COMMAND CENTER. The principal attended or unattended location where the status of detection, alarm communications and control systems is displayed, and from which the system(s) can be manually controlled.

[BF] FIRE DAMPER. A *listed* device installed in ducts and air transfer openings designed to close automatically upon detection of heat and resist the passage of flame. Fire dampers are classified for use in either static systems that will automatically shut down in the event of a fire, or in dynamic systems that continue to operate during a fire. A dynamic fire damper is tested and rated for closure under elevated temperature airflow.

FIRE DEPARTMENT MASTER KEY. A limited issue key of special or controlled design to be carried by fire department officials in command which will open key boxes on specified properties.

FIRE DETECTOR, AUTOMATIC. A device designed to detect the presence of a fire signature and to initiate action.

[BF] FIRE DOOR. The door component of a fire door assembly.

[BF] FIRE DOOR ASSEMBLY. Any combination of a fire door, frame, hardware and other accessories that together provide a specific degree of fire protection to the opening.

INTERNATIONAL CODE COUNCIL®
Copyright © 2019 ICC & NYSDOS. ALL RIGHTS RESERVED. Accessed by Lauren Gualdino (lgualdino@briarcliffmanor.org), (-) Order Number #100880972 on May 08, 2020 07:05 AM (PDT) pursuant to License Agreement with ICC & NYSDOS. No further reproduction, no

100880972

[BF] FIRE EXIT HARDWARE. Panic hardware that is *listed* for use on *fire door assemblies*.

FIRE LANE. A road or other passageway developed to allow the passage of fire apparatus. A fire lane is not necessarily intended for vehicular traffic other than fire apparatus.

[BF] FIRE PARTITION. A vertical assembly of materials designed to restrict the spread of fire in which openings are protected.

FIRE POINT. The lowest temperature at which a liquid will ignite and achieve sustained burning when exposed to a test flame in accordance with ASTM D92.

[BF] FIRE PROTECTION RATING. The period of time that an opening protective assembly will maintain the ability to confine a fire as determined by tests prescribed in Section 716 of the *Building Code of New York State*. Ratings are stated in hours or minutes.

FIRE PROTECTION SYSTEM. *Approved* devices, equipment and systems or combinations of systems used to detect a fire, activate an alarm, extinguish or control a fire, control or manage smoke and products of a fire or any combination thereof.

[BF] FIRE RESISTANCE. That property of materials or their assemblies that prevents or retards the passage of excessive heat, hot gases or flames under conditions of use.

FIRE SAFETY FUNCTIONS. Building and fire control functions that are intended to increase the level of life safety for occupants or to control the spread of the harmful effects of fire.

[BF] FIRE SEPARATION DISTANCE. The distance measured from the building face to one of the following:

1. The closest interior *lot line*.
2. To the centerline of a street, an alley or *public way*.
3. To an imaginary line between two buildings on the lot.

The distance shall be measured at right angles from the face of the wall.

[BF] FIRE WALL. A fire-resistance-rated wall having protected openings, which restricts the spread of fire and extends continuously from the foundation to or through the roof, with sufficient structural stability under fire conditions to allow collapse of construction on either side without collapse of the wall.

FIRE WATCH. A temporary measure intended to ensure continuous and systematic surveillance of a building or portion thereof by one or more qualified individuals for the purposes of identifying and controlling fire hazards, detecting early signs of unwanted fire, raising an alarm of fire and notifying the fire department.

[BF] FIREBLOCKING. Building materials, or materials *approved* for use as fireblocking, installed to resist the free passage of flame to other areas of the building through concealed spaces.

[BF] FIRE-RESISTANCE RATING. The period of time a building element, component or assembly maintains the ability to confine a fire, continues to perform a given structural function, or both, as determined by the tests, or the methods based on tests, prescribed in Section 703 of the *Building Code of New York State*.

[BF] FIRE-RESISTANT JOINT SYSTEM. An assemblage of specific materials or products that are designed, tested and fire-resistance rated in accordance with either ASTM E1966 or UL 2079 to resist for a prescribed period of time the passage of fire through joints made in or between fire-resistance-rated assemblies.

FIREWORKS. Any composition or device for the purpose of producing a visible or an audible effect for entertainment purposes by combustion, *deflagration* or *detonation* that meets the definition of 1.3G fireworks or 1.4G fireworks.

Fireworks, 1.3G. Large fireworks devices, which are *explosive materials*, intended for use in fireworks displays and designed to produce audible or visible effects by combustion, *deflagration* or *detonation*. Such 1.3G fireworks include, but are not limited to, firecrackers containing more than 130 milligrams (2 grains) of explosive composition, aerial shells containing more than 40 grams of pyrotechnic composition and other display pieces which exceed the limits for classification as 1.4G fireworks. Such 1.3G fireworks are also described as Fireworks, UN 0335 by the DOTn.

Fireworks, 1.4G. Small fireworks devices containing restricted amounts of pyrotechnic composition designed primarily to produce visible or audible effects by combustion or deflagration that complies with the construction, chemical composition and labeling regulations of the DOTn for Fireworks, UN 0336, and the U.S. Consumer Product Safety Commission as set forth in CPSC 16 CFR Parts 1500 and 1507.

FIREWORKS DISPLAY. A presentation of fireworks for a public or private gathering.

[BG] FIXED BASE OPERATOR (FBO). A commercial business granted the right by the airport sponsor to operate on an airport and provide aeronautical services such as fueling, hangaring, tie-down and parking, aircraft rental, aircraft maintenance and flight instruction.

[BE] FIXED SEATING. Furniture or fixtures designed and installed for the use of sitting and secured in place including bench-type seats and seats with or without back or arm rests.

[BF] FLAME SPREAD. The propagation of flame over a surface.

[BF] FLAME SPREAD INDEX. A comparative measure, expressed as a dimensionless number, derived from visual measurements of the spread of flame versus time for a material tested in accordance with ASTM E84 or UL 723.

FLAMMABLE CRYOGENIC FLUID. A *cryogenic fluid* that is flammable in its vapor state.

FLAMMABLE FINISHES. Coatings to articles or materials in which the material being applied is a flammable liquid, combustible liquid, combustible powder, fiberglass resin or flammable or combustible gel coating.

INTERNATIONAL CODE COUNCIL®
Copyright © 2019 ICC & NYSDOS. ALL RIGHTS RESERVED. Accessed by Lauren Gualdino (lgualdino@briarcliffmanor.org), (-) Order Number #100880972 on May 08, 2020 07:05 AM (PDT) pursuant to License Agreement with ICC & NYSDOS. No further reproduction, no

100880972

FLAMMABLE GAS. A material which is a gas at 68°F (20°C) or less at 14.7 pounds per square inch atmosphere (psia) (101 kPa) of pressure [a material that has a *boiling point* of 68°F (20°C) or less at 14.7 psia (101 kPa)] which:

1. Is ignitable at 14.7 psia (101 kPa) when in a mixture of 13 percent or less by volume with air; or
2. Has a flammable range at 14.7 psia (101 kPa) with air of not less than 12 percent, regardless of the lower limit.

The limits specified shall be determined at 14.7 psi (101 kPa) of pressure and a temperature of 68°F (20°C) in accordance with ASTM E681.

FLAMMABLE LIQUEFIED GAS. A liquefied *compressed gas* which, under a charged pressure, is partially liquid at a temperature of 68°F (20°C) and which is flammable.

FLAMMABLE LIQUID. A liquid having a closed cup flash point below 100°F (38°C). Flammable liquids are further categorized into a group known as Class I liquids. The Class I category is subdivided as follows:

Class IA. Liquids having a flash point below 73°F (23°C) and having a *boiling point* below 100°F (38°C).

Class IB. Liquids having a *flash point* below 73°F (23°C) and having a *boiling point* at or above 100°F (38°C).

Class IC. Liquids having a *flash point* at or above 73°F (23°C) and below 100°F (38°C).

The category of flammable liquids does not include *compressed gases* or *cryogenic fluids*.

FLAMMABLE MATERIAL. A material capable of being readily ignited from common sources of heat or at a temperature of 600°F (316°C) or less.

FLAMMABLE SOLID. A solid, other than a blasting agent or *explosive*, that is capable of causing fire through friction, absorption of moisture, spontaneous chemical change or retained heat from manufacturing or processing, or which has an ignition temperature below 212°F (100°C) or which burns so vigorously and persistently when ignited as to create a serious hazard. A chemical shall be considered a flammable solid as determined in accordance with the test method of CPSC 16 CFR Part 1500.44, if it ignites and burns with a self-sustained flame at a rate greater than 0.0866 inch (2.2 mm) per second along its major axis.

FLAMMABLE VAPOR AREA. An area in which the concentration of flammable constituents (vapor, gas, fume, mist or dust) in air exceeds 25 percent of their lower flammable limit (LFL) because of the flammable finish processes operation. It shall include:

1. The interior of spray booths.
2. The interior of ducts exhausting from spraying processes.
3. Any area in the direct path of spray or any area containing dangerous quantities of air-suspended powder, combustible residue, dust, deposits, vapor or mists as a result of spraying operations.
4. The area in the vicinity of dip tanks, drain boards or associated drying, conveying or other equipment during operation or shutdown periods.

The *fire code official* is authorized to determine the extent of the flammable vapor area, taking into consideration the material characteristics of the flammable materials, the degree of sustained ventilation and the nature of the operations.

FLAMMABLE VAPORS OR FUMES. The concentration of flammable constituents in air that exceeds 25 percent of their lower flammable limit (LFL).

FLASH POINT. The minimum temperature in degrees Fahrenheit at which a liquid will give off sufficient vapors to form an ignitable mixture with air near the surface or in the container, but will not sustain combustion. The flash point of a liquid shall be determined by appropriate test procedure and apparatus as specified in ASTM D56, ASTM D93 or ASTM D3278.

FLEET VEHICLE MOTOR FUEL-DISPENSING FACILITY. That portion of a commercial, industrial, governmental or manufacturing property where liquids used as fuels are stored and dispensed into the fuel tanks of motor vehicles that are used in connection with such businesses, by persons within the employ of such businesses.

[BE] FLIGHT. A continuous run of rectangular treads, *winders* or combination thereof from one landing to another.

FLOAT. A floating structure normally used as a point of transfer for passengers and goods, or both, for mooring purposes.

[BE] FLOOR AREA, GROSS. The floor area within the inside perimeter of the *exterior walls* of the building under consideration, exclusive of vent shafts and courts, without deduction for *corridors*, *stairways*, *ramps*, closets, the thickness of interior walls, columns or other features. The floor area of a building, or portion thereof, not provided with surrounding *exterior walls* shall be the usable area under the horizontal projection of the roof or floor above. The *gross floor area* shall not include shafts with no openings or interior courts.

[BE] FLOOR AREA, NET. The actual occupied area not including unoccupied accessory areas such as corridors, *stairways*, *ramps*, toilet rooms, mechanical rooms and closets.

FLUE SPACES.

Longitudinal flue space. The flue space between rows of storage perpendicular to the direction of loading.

Transverse flue space. The space between rows of storage parallel to the direction of loading.

FLUIDIZED BED. A container holding powder coating material that is aerated from below so as to form an air-supported expanded cloud of such material through which the preheated object to be coated is immersed and transported.

FOAM-EXTINGUISHING SYSTEM. A special system discharging a foam made from concentrates, either mechanically or chemically, over the area to be protected.

[BE] FOLDING AND TELESCOPIC SEATING. Tiered seating having an overall shape and size that is capable of being reduced for purposes of moving or storing and is not a building element.

INTERNATIONAL CODE COUNCIL®
Copyright © 2019 ICC & NYSDOS. ALL RIGHTS RESERVED. Accessed by Lauren Gualdino (lgualdino@briarcliffmanor.org), (-) Order Number #100880972 on May 08, 2020 07:05 AM (PDT) pursuant to License Agreement with ICC & NYSDOS. No further reproduction, no

100880972

[BG] FOSTER CARE FACILITIES. Facilities that provide care to more than five children, $2^1/_2$ years of age or less.

FUEL CELL POWER SYSTEM, STATIONARY. A stationary energy generation system that converts the chemical energy of a fuel and oxidant to electric energy (DC or AC electricity) by an electrochemical process.

Field-fabricated fuel cell power system. A *stationary fuel cell power system* that is assembled at the job site and is not a preengineered or prepackaged factory-assembled fuel cell power system.

Preengineered fuel cell power system. A *stationary fuel cell power system* consisting of components and modules that are produced in a factory, and shipped to the job site for assembly.

Prepackaged fuel cell power system. A *stationary fuel cell power system* that is factory assembled as a single, complete unit and shipped as a complete unit for installation at the job site.

[NY] FUEL GAS CODE OF NEW YORK STATE. The 2020 edition of the publication entitled "Fuel Gas Code of New York State," published by the International Code Council, Inc. (publication date November 2019).

FUEL LIMIT SWITCH. A mechanism, located on a tank vehicle, that limits the quantity of product dispensed at one time.

FUMIGANT. A substance which by itself or in combination with any other substance emits or liberates a gas, fume or vapor utilized for the destruction or control of insects, fungi, vermin, germs, rats or other pests, and shall be distinguished from insecticides and disinfectants which are essentially effective in the solid or liquid phases. Examples are methyl bromide, ethylene dibromide, hydrogen cyanide, carbon disulfide and sulfuryl fluoride.

FUMIGATION. The utilization within an enclosed space of a fumigant in concentrations that are hazardous or acutely toxic to humans.

FURNACE CLASS A. An oven or furnace that has heat utilization equipment operating at approximately atmospheric pressure wherein there is a potential explosion or fire hazard that could be occasioned by the presence of flammable volatiles or combustible materials processed or heated in the furnace.

Note: Such flammable volatiles or combustible materials can, for instance, originate from the following:

1. Paints, powders, inks, and adhesives from finishing processes, such as dipped, coated, sprayed and impregnated materials.
2. The substrate material.
3. Wood, paper and plastic pallets, spacers or packaging materials.
4. Polymerization or other molecular rearrangements.

Potentially flammable materials, such as quench oil, waterborne finishes, cooling oil or cooking oils, that present a hazard are ventilated according to Class A standards.

FURNACE CLASS B. An oven or furnace that has heat utilization equipment operating at approximately atmospheric pressure wherein there are no flammable volatiles or combustible materials being heated.

FURNACE CLASS C. An oven or furnace that has a potential hazard due to a flammable or other special atmosphere being used for treatment of material in process. This type of furnace can use any type of heating system and includes a special atmosphere supply system. Also included in the Class C classification are integral quench furnaces and molten salt bath furnaces.

FURNACE CLASS D. An oven or furnace that operates at temperatures from above ambient to over 5,000°F (2760°C) and at pressures normally below atmospheric using any type of heating system. These furnaces can include the use of special processing atmospheres.

GAS CABINET. A fully enclosed, ventilated, noncombustible enclosure used to provide an isolated environment for *compressed gas* cylinders in storage or use. Doors and access ports for exchanging cylinders and accessing pressure-regulating controls are allowed to be included.

GAS DETECTION SYSTEM. A system or portion of a combination system that utilizes one or more stationary sensors to detect the presence of a specified gas at a specified concentration and initiate one or more responses required by this code, such as notifying a responsible person, activating an alarm signal, or activating or deactivating equipment. A self-contained gas detection and alarm device is not classified as a gas detection system.

GAS ROOM. A separately ventilated, fully enclosed room in which only *compressed gases* and associated equipment and supplies are stored or used.

GAS ROOM, HYDROGEN FUEL. See "Hydrogen fuel gas room."

GASEOUS HYDROGEN SYSTEM. An assembly of piping, devices and apparatus designed to generate, store, contain, distribute or transport a nontoxic, gaseous hydrogen-containing mixture having not less than 95-percent hydrogen gas by volume and not more than 1-percent oxygen by volume. Gaseous hydrogen systems consist of items such as *compressed gas* containers, reactors and appurtenances, including pressure regulators, pressure relief devices, manifolds, pumps, compressors and interconnecting piping and tubing and controls.

GLOVE BOX. A sealed enclosure in which items inside the box are handled exclusively using long gloves sealed to ports in the enclosure.

[BG] GRADE FLOOR OPENING. A window or other opening located such that the sill height of the opening is not more than 44 inches (1118 mm) above or below the finished ground level adjacent to the opening.

[BG] GRADE PLANE. A reference plane representing the average of finished ground level adjoining the building at exterior walls. Where the finished ground level slopes away from the exterior walls, the reference plane shall be established by the lowest points within the area between the build-

INTERNATIONAL CODE COUNCIL®
Copyright © 2019 ICC & NYSDOS. ALL RIGHTS RESERVED. Accessed by Lauren Gualdino (lgualdino@briarcliffmanor.org), (-) Order Number #100880972 on May 08, 2020 07:05 AM (PDT) pursuant to License Agreement with ICC & NYSDOS. No further reproduction, no

100880972

ing and the *lot line* or, where the *lot line* is more than 6 feet (1829 mm) from the building, between the building and a point 6 feet (1829 mm) from the building.

[BE] GRANDSTAND. Tiered seating supported on a dedicated structural system and two or more rows high and is not a building element (see "*Bleachers*").

[BG] GROUP HOME. A facility for social rehabilitation, substance abuse or mental health problems that contains a group housing arrangement that provides custodial care but does not provide medical care.

[BE] GUARD. A building component or a system of building components located at or near the open sides of elevated walking surfaces that minimizes the possibility of a fall from the walking surface to a lower level.

[BG] GUESTROOM. A room used or intended to be used by one or more guests for living or sleeping purposes.

[BS] GYPSUM BOARD. Gypsum wallboard, gypsum sheathing, gypsum base for gypsum veneer plaster, exterior gypsum soffit board, predecorated gypsum board or water-resistant gypsum backing board complying with the standards listed in Tables 2506.2 and 2507.2 and Chapter 35 of the *Building Code of New York State*.

[BG] HABITABLE SPACE. A space in a building for living, sleeping, eating or cooking. Bathrooms, toilet rooms, closets, halls, storage or utility spaces and similar areas are not considered habitable spaces.

HALOGENATED EXTINGUISHING SYSTEM. A fire-extinguishing system using one or more atoms of an element from the halogen chemical series: fluorine, chlorine, bromine and iodine.

HANDLING. The deliberate transport by any means to a point of storage or use.

[BE] HANDRAIL. A horizontal or sloping rail intended for grasping by the hand for guidance or support.

HAZARDOUS MATERIALS. Those chemicals or substances which are *physical hazards* or *health hazards* as defined and classified in this chapter, whether the materials are in usable or waste condition.

HAZARDOUS PRODUCTION MATERIAL (HPM). A solid, liquid or gas associated with semiconductor manufacturing that has a degree-of-hazard rating in health, flammability or instability of Class 3 or 4 as ranked by NFPA 704 and which is used directly in research, laboratory or production processes which have, as their end product, materials that are not hazardous.

HEALTH HAZARD. A classification of a chemical for which there is statistically significant evidence that acute or chronic health effects are capable of occurring in exposed persons. The term "health hazard" includes chemicals that are toxic, highly toxic and *corrosive*.

HEAT DETECTOR. See "Detector, heat."

[BG] HEIGHT, BUILDING. The vertical distance from grade plane to the average height of the highest roof surface.

HELIPORT. An area of land or water or a structural surface that is used, or intended for use, for the landing and taking off of helicopters, and any appurtenant areas which are used, or intended for use, for heliport buildings and other heliport facilities.

HELISTOP. The same as "Heliport," except that fueling, defueling, maintenance, repairs or storage of helicopters is not permitted.

HI-BOY. A cart used to transport hot roofing materials on a roof.

HIGHER EDUCATION LABORATORY. Laboratories in Group B occupancies used for educational purposes above the 12th grade. Storage, use and handling of chemicals in such laboratories shall be limited to purposes related to testing, analysis, teaching, research or developmental activities on a nonproduction basis.

HIGHLY TOXIC. A material which produces a lethal dose or lethal concentration which falls within any of the following categories:

1. A chemical that has a median lethal dose (LD_{50}) of 50 milligrams or less per kilogram of body weight when administered orally to albino rats weighing between 200 and 300 grams each.
2. A chemical that has a median lethal dose (LD_{50}) of 200 milligrams or less per kilogram of body weight when administered by continuous contact for 24 hours (or less if death occurs within 24 hours) with the bare skin of albino rabbits weighing between 2 and 3 kilograms each.
3. A chemical that has a median lethal concentration (LC_{50}) in air of 200 parts per million by volume or less of gas or vapor, or 2 milligrams per liter or less of mist, fume or dust, when administered by continuous inhalation for one hour (or less if death occurs within 1 hour) to albino rats weighing between 200 and 300 grams each.

Mixtures of these materials with ordinary materials, such as water, might not warrant classification as highly toxic. While this system is basically simple in application, any hazard evaluation that is required for the precise categorization of this type of material shall be performed by experienced, technically competent persons.

HIGHLY VOLATILE LIQUID. A liquefied *compressed gas* with a *boiling point* of less than 68°F (20°C).

HIGH-PILED COMBUSTIBLE STORAGE. Storage of combustible materials in closely packed piles or combustible materials on pallets, in racks or on shelves where the top of storage is greater than 12 feet (3658 mm) in height. Where required by the *fire code official*, *high-piled combustible storage* also includes certain high-hazard commodities, such as rubber tires, Group A plastics, flammable liquids, idle pallets and similar commodities, where the top of storage is greater than 6 feet (1829 mm) in height.

HIGH-PILED STORAGE AREA. An area within a building which is designated, intended, proposed or actually used for *high-piled combustible storage,* including operating aisles.

INTERNATIONAL CODE COUNCIL®
Copyright © 2019 ICC & NYSDOS. ALL RIGHTS RESERVED. Accessed by Lauren Gualdino (lgualdino@briarcliffmanor.org), (-) Order Number #100880972 on May 08, 2020 07:05 AM (PDT) pursuant to License Agreement with ICC & NYSDOS. No further reproduction, no

100880972

[BG] HIGH-RISE BUILDING. A building with an occupied floor located more than 75 feet (22 860 mm) above the lowest level of fire department vehicle access.

HIGH-VOLTAGE TRANSMISSION LINE. An electrical power transmission line operating at or above 66 kilovolts.

HIGHWAY. A public street, public alley or public road.

[NY] HISTORIC BUILDINGS. Any building or structure that is one or more of the following:

1. Listed or certified as eligible for listing by the State Historic Preservation Officer or the Keeper of the National Register of Historic Places, in the National Register of Historic Places.
2. Designated as historic under an applicable state or local law.
3. Certified as a contributing resource within a National Register, state designated or locally designated historic district.

HOGGED MATERIALS. Wood waste materials produced from the lumber production process.

[M] HOOD. An air-intake device used to capture by entrapment, impingement, adhesion or similar means, grease and similar contaminants before they enter a duct system.

Type I. A kitchen hood for collecting and removing grease vapors and smoke.

Type II. A general kitchen hood for collecting and removing steam vapor, heat, odors and products of combustion.

[BF] HORIZONTAL ASSEMBLY. A fire-resistance-rated floor or roof assembly of materials designed to restrict the spread of fire in which continuity is maintained.

[BE] HORIZONTAL EXIT. An *exit* component consisting of fire-resistance-rated construction and opening protectives intended to compartmentalize portions of a building thereby creating refuge areas that afford safety from fire and smoke from the area of fire origin.

[BG] HOSPITALS AND PSYCHIATRIC HOSPITALS. Facilities that provide care or treatment for the medical, psychiatric, obstetrical, or surgical treatment of inpatient care recipients that are incapable of self-preservation.

HOT WORK. Operations including cutting, welding, Thermit welding, brazing, soldering, grinding, thermal spraying, thawing pipe, installation of torch-applied roof systems or any other similar activity.

HOT WORK AREA. The area exposed to sparks, hot slag, radiant heat, or convective heat as a result of the hot work.

HOT WORK EQUIPMENT. Electric or gas welding or cutting equipment used for hot work.

HOT WORK PERMITS. Permits issued by the responsible person at the facility under the hot work permit program permitting welding or other hot work to be done in locations referred to in Section 3503.3 and prepermitted by the *fire code official*.

HOT WORK PROGRAM. A permitted program, carried out by *approved* facilities-designated personnel, allowing them to oversee and issue permits for hot work conducted by their personnel or at their facility. The intent is to have trained, on-site, responsible personnel ensure that required hot work safety measures are taken to prevent fires and fire spread.

HPM. See "Hazardous Production Material."

HPM FACILITY. See "Semiconductor fabrication facility."

HPM ROOM. A room used in conjunction with or serving a Group H-5 occupancy, where HPM is stored or used and which is classified as a Group H-2, H-3 or H-4 occupancy.

HYDROGEN FUEL GAS ROOM. A room or space that is intended exclusively to house a *gaseous hydrogen system*.

IMMEDIATELY DANGEROUS TO LIFE AND HEALTH (IDLH). The concentration of airborne contaminants that poses a threat of death, immediate or delayed permanent adverse health effects, or effects that could prevent escape from such an environment. This contaminant concentration level is established by the National Institute of Occupational Safety and Health (NIOSH) based on both toxicity and flammability. It generally is expressed in parts per million by volume (ppm v/v) or milligrams per cubic meter (mg/m^3). Where adequate data do not exist for precise establishment of IDLH concentrations, an independent certified industrial hygienist, industrial toxicologist, appropriate regulatory agency or other source *approved* by the *fire code official* shall make such determination.

IMPAIRMENT COORDINATOR. The person responsible for the maintenance of a particular *fire protection system*.

[BG] INCAPABLE OF SELF-PRESERVATION. Persons who, because of age, physical limitations, mental limitations, chemical dependency or medical treatment, cannot respond as an individual to an emergency situation.

INCOMPATIBLE MATERIALS. Materials that, when mixed, have the potential to react in a manner which generates heat, fumes, gases or byproducts which are hazardous to life or property.

INERT GAS. A gas that is capable of reacting with other materials only under abnormal conditions such as high temperatures, pressures and similar extrinsic physical forces. Within the context of the code, inert gases do not exhibit either physical or *health hazard* properties as defined (other than acting as a simple asphyxiant) or hazard properties other than those of a *compressed gas*. Some of the more common inert gases include argon, helium, krypton, neon, nitrogen and xenon.

INHABITED BUILDING. A building regularly occupied in whole or in part as a habitation for people, or any place of religious worship, schoolhouse, railroad station, store or other structure where people are accustomed to assemble, except any building or structure occupied in connection with the manufacture, transportation, storage or use of *explosive materials*.

INITIATING DEVICE. A system component that originates transmission of a change-of-state condition, such as in a smoke detector, manual fire alarm box, or supervisory switch.

INSECTICIDAL FOGGING. The utilization of insecticidal liquids passed through fog-generating units where, by means of pressure and turbulence, with or without the application of heat, such liquids are transformed and discharged in the form of fog or mist blown into an area to be treated.

INTERNATIONAL CODE COUNCIL®
Copyright © 2019 ICC & NYSDOS. ALL RIGHTS RESERVED. Accessed by Lauren Gualdino (lgualdino@briarcliffmanor.org), (-) Order Number #100880972 on May 08, 2020 07:05 AM (PDT) pursuant to License Agreement with ICC & NYSDOS. No further reproduction, no

100880972

INTEGRATED TESTING (FIRE PROTECTION AND LIFE SAFETY SYSTEM). A testing procedure to establish the operational status, interaction and coordination of two or more fire protection and safety systems.

[BE] INTERIOR EXIT RAMP. An exit component that serves to meet one or more means of egress design requirements, such as required number of exits or exit access travel distance, and provides for a protected path of egress travel to the exit discharge or public way.

[BE] INTERIOR EXIT STAIRWAY. An exit component that serves to meet one or more means of egress design requirements, such as required number of exits or exit access travel distance, and provides for a protected path of egress travel to the exit discharge or public way.

[BG] INTERIOR FINISH. Interior finish includes interior wall and ceiling finish and interior floor finish.

[BG] INTERIOR FLOOR-WALL BASE. Interior floor finish trim used to provide a functional or decorative border at the intersection of walls and floors.

[BG] INTERIOR WALL AND CEILING FINISH. The exposed interior surfaces of buildings, including but not limited to: fixed or movable walls and partitions; toilet room privacy partitions; columns; ceilings; and interior wainscoting, paneling or other finish applied structurally or for decoration, acoustical correction, surface insulation, structural *fire resistance* or similar purposes, but not including trim.

IRRITANT. A chemical which is not *corrosive*, but which causes a reversible inflammatory effect on living tissue by chemical action at the site of contact. A chemical is a skin irritant if, when tested on the intact skin of albino rabbits by the methods of CPSC 16 CFR Part 1500.41 for an exposure of four or more hours or by other appropriate techniques, it results in an empirical score of 5 or more. A chemical is classified as an eye irritant if so determined under the procedure listed in CPSC 16 CFR Part 1500.42 or other *approved* techniques.

[A] JURISDICTION. The governmental unit that has adopted this code.

KEY BOX. A secure device with a lock operable only by a fire department master key, and containing building entry keys and other keys that may be required for access in an emergency.

[A] LABELED. Equipment, materials or products to which have been affixed a label, seal, symbol or other identifying mark of a nationally recognized testing laboratory, *approved* agency or other organization concerned with product evaluation that maintains periodic inspection of the production of such labeled items and whose labeling indicates either that the equipment, material or product meets identified standards or has been tested and found suitable for a specified purpose.

LABORATORY SUITE. A fire-rated enclosed laboratory area that will provide one or more laboratory spaces, within a Group B educational occupancy, that are permitted to include ancillary uses such as offices, bathrooms and corridors that are contiguous with the laboratory area, and are constructed in accordance with Chapter 38.

LEVEL OF EXIT DISCHARGE. See "Exit discharge, level of."

LIMITED SPRAYING SPACE. An area in which operations for touch-up or spot painting of a surface area of 9 square feet (0.84 m^2) or less are conducted.

LIQUEFIED NATURAL GAS (LNG). A fluid in the liquid state composed predominantly of methane and which may contain minor quantities of ethane, propane, nitrogen or other components normally found in natural gas.

LIQUEFIED PETROLEUM GAS (LP-gas). A material which is composed predominantly of the following hydrocarbons or mixtures of them: propane, propylene, butane (normal butane or isobutane) and butylenes.

LIQUID. A material having a melting point that is equal to or less than 68°F (20°C) and a *boiling point* which is greater than 68°F (20°C) at 14.7 pounds per square inch absolute (psia) (101 kPa). Where not otherwise identified, the term "liquid" includes both flammable and *combustible liquids*.

LIQUID OXYGEN AMBULATORY CONTAINER. A container used for liquid oxygen not exceeding 0.396 gallons (1.5 liters) specifically designed for use as a medical device as defined by 21 USC Chapter 9 that is intended for portable therapeutic use and to be filled from its companion base unit, a liquid oxygen home care container.

LIQUID OXYGEN HOME CARE CONTAINER. A container used for liquid oxygen not exceeding 15.8 gallons (60 liters) specifically designed for use as a medical device as defined by 21 USC Chapter 9 that is intended to deliver gaseous oxygen for therapeutic use in a home environment.

LIQUID STORAGE ROOM. A room classified as a Group H-3 occupancy used for the storage of flammable or *combustible liquids* in a closed condition.

LIQUID STORAGE WAREHOUSE. A building classified as a Group H-2 or H-3 occupancy used for the storage of flammable or *combustible liquids* in a closed condition.

[A] LISTED. Equipment, materials, products or services included in a list published by an organization acceptable to the *fire code official* and concerned with evaluation of products or services that maintains periodic inspection of production of listed equipment or materials or periodic evaluation of services and whose listing states either that the equipment, material, product or service meets identified standards or has been tested and found suitable for a specified purpose.

[NY] LIVE FIRE TRAINING FACILITIES. As defined by NFPA 1402, fire service training centers, fire training structures and props, gas-fueled and flammable liquid-fueled live fire training systems, mobile fire training props, and associated training props.

LOCKDOWN. An emergency situation, in other than a Group I-3 occupancy, requiring that the occupants be sheltered and secured in place within a building when normal evacuation would put occupants at risk.

[BG] LODGING HOUSE. A one-family dwelling where one or more occupants are primarily permanent in nature and rent is paid for guestrooms.

INTERNATIONAL CODE COUNCIL®
Copyright © 2019 ICC & NYSDOS. ALL RIGHTS RESERVED. Accessed by Lauren Gualdino (lgualdino@briarcliffmanor.org), (-) Order Number #100880972 on May 08, 2020 07:05 AM (PDT) pursuant to License Agreement with ICC & NYSDOS. No further reproduction, no

100880972

LONGITUDINAL FLUE SPACE. See "Flue space—longitudinal."

[A] LOT. A portion or parcel of land considered as a unit.

[A] LOT LINE. A line dividing one lot from another, or from a street or any public place.

[BE] LOW ENERGY POWER-OPERATED DOOR. Swinging, sliding or folding door which opens automatically upon an action by a pedestrian such as pressing a push plate or waving a hand in front of a sensor. The door closes automatically, and operates with decreased forces and decreased speeds. See also "Power-assisted door" and "Power-operated door."

LOWER EXPLOSIVE LIMIT (LEL). See "Lower flammable limit."

LOWER FLAMMABLE LIMIT (LFL). The minimum concentration of vapor in air at which propagation of flame will occur in the presence of an ignition source. The LFL is sometimes referred to as LEL or lower explosive limit.

LOW-PRESSURE TANK. A storage tank designed to withstand an internal pressure greater than 0.5 pound per square inch gauge (psig) (3.4 kPa) but not greater than 15 psig (103.4 kPa).

LP-GAS CONTAINER. Any vessel, including cylinders, tanks, portable tanks and cargo tanks, used for transporting or storing LP-gases.

MAGAZINE. A building, structure or container, other than an operating building, *approved* for storage of *explosive materials*.

Indoor. A portable structure, such as a box, bin or other container, constructed as required for Type 2, 4 or 5 magazines in accordance with NFPA 495, NFPA 1124 or DOTy 27 CFR Part 555 so as to be fire resistant and theft resistant.

Type 1. A permanent structure, such as a building or igloo, that is bullet resistant, fire resistant, theft resistant, weather resistant and ventilated in accordance with the requirements of NFPA 495, NFPA 1124 or DOTy 27 CFR Part 555.

Type 2. A portable or mobile structure, such as a box, skid-magazine, trailer or semitrailer, constructed in accordance with the requirements of NFPA 495, NFPA 1124 or DOTy 27 CFR Part 555 that is fire resistant, theft resistant, weather resistant and ventilated. If used outdoors, a Type 2 magazine is also bullet resistant.

Type 3. A fire resistant, theft resistant and weather resistant "day box" or portable structure constructed in accordance with NFPA 495, NFPA 1124 or DOTy 27 CFR Part 555 used for the temporary storage of *explosive materials*.

Type 4. A permanent, portable or mobile structure such as a building, igloo, box, semitrailer or other mobile container that is fire resistant, theft resistant and weather resistant and constructed in accordance with NFPA 495, NFPA 1124 or DOTy 27 CFR Part 555.

Type 5. A permanent, portable or mobile structure such as a building, igloo, box, bin, tank, semitrailer, bulk trailer, tank trailer, bulk truck, tank truck or other mobile container that is theft resistant, which is constructed in accordance with NFPA 495, NFPA 1124 or DOTy 27 CFR Part 555.

MAGNESIUM. The pure metal and alloys, of which the major part is magnesium.

MALL. See "Covered mall building."

MANUAL FIRE ALARM BOX. A manually operated device used to initiate an alarm signal.

MANUAL STOCKING METHODS. Stocking methods utilizing ladders or other nonmechanical equipment to move stock.

MARINA. Any portion of the ocean or inland water, either naturally or artificially protected, for the mooring, servicing or safety of vessels and shall include artificially protected works, the public or private lands ashore, and structures or facilities provided within the enclosed body of water and ashore for the mooring or servicing of vessels or the servicing of their crews or passengers.

MARINE MOTOR FUEL-DISPENSING FACILITY. That portion of property where flammable or *combustible liquids* or gases used as fuel for watercraft are stored and dispensed from fixed equipment on shore, piers, wharves, floats or barges into the fuel tanks of watercraft and shall include all other facilities used in connection therewith.

MAXIMUM ALLOWABLE QUANTITY PER CONTROL AREA. The maximum amount of a hazardous material allowed to be stored or used within a *control area* inside a building or an outdoor control area. The maximum allowable quantity per control area is based on the material state (solid, liquid or gas) and the material storage or use conditions.

[BE] MEANS OF EGRESS. A continuous and unobstructed path of vertical and horizontal egress travel from any occupied portion of a building or structure to a *public way*. A means of egress consists of three separate and distinct parts: the *exit access*, the *exit* and the *exit discharge*.

[NY] MECHANICAL CODE OF NEW YORK STATE. The 2020 edition of the publication entitled "Mechanical Code of New York State," published by the International Code Council, Inc. (publication date November 2019).

MECHANICAL STOCKING METHODS. Stocking methods utilizing motorized vehicles or hydraulic jacks to move stock.

[BG] MEDICAL CARE. Care involving medical or surgical procedures, nursing or for psychiatric purposes.

MEMBRANE STRUCTURE. An air-inflated, air-supported, cable or frame-covered structure as defined by the *Building Code of New York State* and not otherwise defined as a tent. See Chapter 31 of the *Building Code of New York State*.

[BF] MEMBRANE-PENETRATION FIRESTOP SYSTEM. An assemblage consisting of a fire-resistance-rated floor-ceiling, roof-ceiling or wall assembly, one or more penetrating items installed into or passing through the breach in one side of the assembly and the materials or devices, or both,

INTERNATIONAL CODE COUNCIL®
Copyright © 2019 ICC & NYSDOS. ALL RIGHTS RESERVED. Accessed by Lauren Gualdino (lgualdino@briarcliffmanor.org), (-) Order Number #100880972 on May 08, 2020 07:05 AM (PDT) pursuant to License Agreement with ICC & NYSDOS. No further reproduction, no

100880972

installed to resist the spread of fire into the assembly for a prescribed period of time.

[NY] MERCHANDISE PAD. A merchandise pad is an area for display of merchandise surrounded by *aisles*, permanent fixtures or walls. Merchandise pads contain elements such as nonfixed and moveable fixtures, cases, racks, counters and partitions from which customers browse or shop.

METAL HYDRIDE. A generic name for compounds composed of metallic element(s) and hydrogen.

METAL HYDRIDE STORAGE SYSTEM. A *closed system* consisting of a group of components assembled as a package to contain metal-hydrogen compounds for which there exists an equilibrium condition where the hydrogen-absorbing metal alloy(s), hydrogen gas and the metal-hydrogen compound(s) coexist and where only hydrogen gas is released from the system in normal use.

[BG] MEZZANINE. An intermediate level or levels between the floor and ceiling of any story and in accordance with Section 505 of the *Building Code of New York State.*

MISCELLA. A mixture, in any proportion, of the extracted oil or fat and the extracting solvent.

MOBILE FOOD PREPARATION VEHICLES. Vehicles that contain cooking equipment that produce smoke or grease-laden vapors for the purpose of preparing and serving food to the public. Vehicles intended for private recreation shall not be considered mobile food preparation vehicles.

MOBILE FUELING. The operation of dispensing liquid fuels from tank vehicles into the fuel tanks of motor vehicles. Mobile fueling may also be known by the terms "Mobile fleet fueling," "Wet fueling" and "Wet hosing."

MORTAR. A tube from which fireworks shells are fired into the air.

MULTIPLE-STATION ALARM DEVICE. Two or more single-station alarm devices that can be interconnected such that actuation of one causes all integral or separate audible alarms to operate. A multiple-station alarm device can consist of one single-station alarm device having connections to other detectors or to a manual fire alarm box.

MULTIPLE-STATION SMOKE ALARM. Two or more single-station alarm devices that are capable of interconnection such that actuation of one causes the appropriate alarm signal to operate in all interconnected alarms.

NESTING. A method of securing flat-bottomed *compressed gas* cylinders upright in a tight mass using a contiguous three-point contact system whereby all cylinders within a group have not less than three points of contact with other cylinders, walls or bracing.

NET EXPLOSIVE WEIGHT (net weight). The weight of *explosive material* expressed in pounds. The net explosive weight is the aggregate amount of *explosive material* contained within buildings, magazines, structures or portions thereof, used to establish quantity-distance relationships.

NORMAL TEMPERATURE AND PRESSURE (NTP). A temperature of 70°F (21°C) and a pressure of 1 atmosphere [14.7 psia (101 kPa)].

[BE] NOSING. The leading edge of treads of *stairs* and of landings at the top of *stairway flights*.

NOTIFICATION ZONE. See "Zone, notification."

NUISANCE ALARM. An alarm caused by mechanical failure, malfunction, improper installation or lack of proper maintenance, or an alarm activated by a cause that cannot be determined.

[BG] NURSING HOMES. Facilities that provide care, including both intermediate care facilities and skilled nursing facilities, where any of the persons are incapable of self-preservation.

OCCUPANCY CLASSIFICATION. For the purposes of this code, certain occupancies are defined as follows:

[BG] Assembly Group A. Assembly Group A occupancy includes, among others, the use of a building or structure, or a portion thereof, for the gathering of persons for purposes such as civic, social or religious functions; recreation, food or drink consumption; or awaiting transportation.

[BG] Small buildings and tenant spaces. A building or tenant space used for assembly purposes with an *occupant load* of less than 50 persons shall be classified as a Group B occupancy.

[BG] Small assembly spaces. The following rooms and spaces shall not be classified as assembly occupancies:

1. A room or space used for assembly purposes with an *occupant load* of less than 50 persons and accessory to another occupancy shall be classified as a Group B occupancy or as part of that occupancy.
2. A room or space used for assembly purposes that is less than 750 square feet (70 m^2) in area and accessory to another occupancy shall be classified as a Group B occupancy or as part of that occupancy.

[BG] Associated with Group E occupancies. A room or space used for assembly purposes that is associated with a Group E occupancy is not considered a separate occupancy.

[BG] Accessory with places of religious worship. Accessory religious educational rooms and religious auditoriums with *occupant loads* of less than 100 per room or space are not considered separate occupancies

[BG] Assembly Group A-1. Group A occupancy includes assembly uses, usually with fixed seating, intended for the production and viewing of performing arts or motion pictures including, but not limited to:

Motion picture theaters
Symphony and concert halls
Television and radio studios admitting an audience
Theaters

[BG] Assembly Group A-2. Group A-2 occupancy includes assembly uses intended for food and/or drink consumption including, but not limited to:

INTERNATIONAL CODE COUNCIL®
Copyright © 2019 ICC & NYSDOS. ALL RIGHTS RESERVED. Accessed by Lauren Gualdino (lgualdino@briarcliffmanor.org), (-) Order Number #100880972 on May 08, 2020 07:05 AM (PDT) pursuant to License Agreement with ICC & NYSDOS. No further reproduction, no

100880972

Banquet halls
Casinos (gaming areas)
Night clubs
Restaurants, cafeterias and similar dining facilities (including associated commercial kitchens)
Taverns and bars

[BG] Assembly Group A-3. Group A-3 occupancy includes assembly uses intended for worship, recreation or amusement and other assembly uses not classified elsewhere in Group A, including, but not limited to:

Amusement arcades
Art galleries
Bowling alleys
Community halls
Courtrooms
Dance halls (not including food or drink consumption)
Exhibition halls
Funeral parlors
Greenhouses with public access for the conservation and exhibition of plants
Gymnasiums (without spectator seating)
Indoor swimming pools (without spectator seating)
Indoor tennis courts (without spectator seating)
Lecture halls
Libraries
Museums
Places of religious worship
Pool and billiard parlors
Waiting areas in transportation terminals

[BG] Assembly Group A-4. Group A-4 occupancy includes assembly uses intended for viewing of indoor sporting events and activities with spectator seating including, but not limited to:

Arenas
Skating rinks
Swimming pools
Tennis courts

[BG] Assembly Group A-5. Group A-5 occupancy includes assembly uses intended for participation in or viewing outdoor activities including, but not limited to:

Amusement park structures
Bleachers
Grandstands
Stadiums

[BG] Business Group B. Business Group B occupancy includes, among others, the use of a building or structure, or a portion thereof, for office, professional or service-type transactions, including storage of records and accounts. Business occupancies shall include, but not be limited to, the following:

Airport traffic control towers
Ambulatory care facilities
Animal hospitals, kennels and pounds
Banks
Barber and beauty shops
Car wash
Civic administration
Clinic-outpatient
Dry cleaning and laundries: pick-up and delivery stations and self-service
Educational occupancies for students above the 12th grade
Electronic data processing
Food processing establishments and commercial kitchens not associated with restaurants, cafeterias and similar dining facilities not more than 2,500 square feet (232 m^2) in area.
Laboratories: testing and research
Motor vehicle showrooms
Post offices
Print shops
Professional services (architects, attorneys, dentists, physicians, engineers, etc.)
Radio and television stations
Telephone exchanges
Training and skill development not in a school or academic program (This shall include, but not be limited to, tutoring centers, martial arts studios, gymnastics and similar uses regardless of the ages served, and where not classified as a Group A occupancy).

[BG] Educational Group E. Educational Group E occupancy includes, among others, the use of a building or structure, or a portion thereof, by six or more persons at any one time for educational purposes through the 12th grade.

[BG] Accessory to places of religious worship. Religious educational rooms and religious auditoriums, which are accessory to places of religious worship in accordance with Section 303.1.4 of the *Building Code of New York State* and have *occupant loads* of less than 100 per room or space shall be classified as Group A-3 occupancies.

[BG] Group E, day care facilities. This group includes buildings and structures or portions thereof occupied by more than five children older than $2^1/_2$ years of age who receive educational, supervision or *personal care services* for less than 24 hours per day.

[BG] Within places of worship. Rooms and spaces within places of worship providing such care during religious functions shall be classified as part of the primary occupancy.

[BG] Five or fewer children. A facility having five or fewer children receiving such care shall be classified as part of the primary occupancy.

[BG] Five or fewer children in a dwelling unit. A facility such as the above within a dwelling unit and having five or fewer children receiving such care shall be classified as a Group R-3 occupancy or shall comply with the *Residential Code of New York State.*

[BG] Factory Industrial Group F. Factory Industrial Group F occupancy includes, among others, the use of a building or structure, or a portion thereof, for assembling, disassembling, fabricating, finishing, manufacturing, pack-

INTERNATIONAL CODE COUNCIL®
Copyright © 2019 ICC & NYSDOS. ALL RIGHTS RESERVED. Accessed by Lauren Gualdino (lgualdino@briarcliffmanor.org), (-) Order Number #100880972 on May 08, 2020 07:05 AM (PDT) pursuant to License Agreement with ICC & NYSDOS. No further reproduction, no

100880972

aging, repair or processing operations that are not classified as a Group H high-hazard or Group S storage occupancy.

[BG] Factory Industrial F-1 Moderate-hazard occupancy. Factory industrial uses that are not classified as Factory Industrial F-2 Low Hazard shall be classified as F-1 Moderate Hazard and shall include, but not be limited to, the following:

Aircraft (manufacturing, not to include repair)
Appliances
Athletic equipment
Automobiles and other motor vehicles
Bakeries
Beverages; over 16-percent alcohol content
Bicycles
Boats
Brooms or brushes
Business machines
Cameras and photo equipment
Canvas or similar fabric
Carpets and rugs (includes cleaning)
Clothing
Construction and agricultural machinery
Disinfectants
Dry cleaning and dyeing
Electric generation plants
Electronics
Engines (including rebuilding)
Food processing and commercial kitchens not associated with restaurants, cafeterias and similar dining facilities more than 2,500 square feet (232 m^2) in area.
Furniture
Hemp products
Jute products
Laundries
Leather products
Machinery
Metals
Millwork (sash and door)
Motion pictures and television filming (without spectators)
Musical instruments
Optical goods
Paper mills or products
Photographic film
Plastic products
Printing or publishing
Refuse incineration
Shoes
Soaps and detergents
Textiles
Tobacco
Trailers
Upholstering
Wood; distillation
Woodworking (cabinet)

[BG] Factory Industrial F-2 Low-hazard Occupancy. Factory industrial uses involving the fabrication or manufacturing of noncombustible materials that, during finishing, packaging or processing do not involve a significant fire hazard, shall be classified as Group F-2 occupancies and shall include, but not be limited to, the following:

Beverages; up to and including 16-percent alcohol content
Brick and masonry
Ceramic products
Foundries
Glass products
Gypsum
Ice
Metal products (fabrication and assembly)

High-hazard Group H. High-hazard Group H occupancy includes, among others, the use of a building or structure, or a portion thereof, that involves the manufacturing, processing, generation or storage of materials that constitute a physical or *health hazard* in quantities in excess of those allowed in *control areas* complying with Section 5003.8.3, based on the maximum allowable quantity limits for *control areas* set forth in Tables 5003.1.1(1) and 5003.1.1(2). Hazardous occupancies are classified in Groups H-1, H-2, H-3, H-4 and H-5 and shall be in accordance with this code and the requirements of Section 415 of the *Building Code of New York State*. Hazardous materials stored or used on top of roofs or canopies shall be classified as outdoor storage or use and shall comply with this code.

Uses other than Group H. The storage, use or handling of hazardous materials as described in one or more of the following items shall not cause the occupancy to be classified as Group H, but it shall be classified as the occupancy that it most nearly resembles:

1. Buildings and structures occupied for the application of flammable finishes, provided that such buildings or areas conform to the requirements of Chapter 24 of this code and Section 416 of the *Building Code of New York State*.
2. Wholesale and retail sales and storage of flammable and *combustible liquids* in mercantile occupancies conforming to Chapter 57.
3. Closed piping system containing flammable or *combustible liquids* or gases utilized for the operation of machinery or equipment.
4. Cleaning establishments that utilize *combustible liquid* solvents having a *flash point* of 140°F (60°C) or higher in *closed systems* employing equipment *listed* by an *approved* testing agency, provided that this occupancy is separated from all other areas of the building by 1-hour *fire barriers* in accordance with Section 707 of the *Building Code of New York State* or 1-hour *horizontal assemblies* in accordance with Section 711 of the *Building Code of New York State*, or both.
5. Cleaning establishments that utilize a liquid solvent having a *flash point* at or above 200°F (93°C).
6. Liquor stores and distributors without bulk storage.

INTERNATIONAL CODE COUNCIL®
Copyright © 2019 ICC & NYSDOS. ALL RIGHTS RESERVED. Accessed by Lauren Gualdino (lgualdino@briarcliffmanor.org), (-) Order Number #100880972 on May 08, 2020 07:05 AM (PDT) pursuant to License Agreement with ICC & NYSDOS. No further reproduction, no

100880972

7. Refrigeration systems.
8. The storage or utilization of materials for agricultural purposes on the premises.
9. Stationary storage battery systems installed in accordance with Section 1206.2.
10. *Corrosive* personal or household products in their original packaging used in retail display.
11. Commonly used *corrosive* building materials.
12. Buildings and structures occupied for aerosol product storage shall be classified as Group S-1, provided that such buildings conform to the requirements of Chapter 51.
13. Display and storage of nonflammable solid and nonflammable or noncombustible liquid hazardous materials in quantities not exceeding the *maximum allowable quantity per control area* in Group M or S occupancies complying with Section 5003.8.3.5.1.
14. The storage of black powder, smokeless propellant and small arms primers in Groups M and R-3 and special industrial explosive devices in Groups B, F, M and S, provided such storage conforms to the quantity limits and requirements of this code.
15. Stationary fuel cell power systems installed in accordance with this code.
16. *Capacitor energy storage systems* in accordance with this code.
17. Group B higher education laboratory occupancies complying with Section 428 of the *Building Code of New York State* and Chapter 38 of this code.

High-hazard Group H-1. Buildings and structures containing materials that pose a *detonation* hazard shall be classified as Group H-1. Such materials shall include, but not be limited to, the following:

Detonable pyrophoric materials

Explosives:

Division 1.1
Division 1.2
Division 1.3
Division 1.4
Division 1.5
Division 1.6

Organic peroxides, unclassified detonable
Oxidizers, Class 4
Unstable (reactive) materials, Class 3 detonable, and Class 4

Occupancies containing explosives not classified as H-1. The following occupancies containing explosive materials shall be classified as follows:

1. Division 1.3 explosive materials that are used and maintained in a form where either confinement or configuration will not elevate the hazard from a mass fire hazard to mass explosion hazard shall be allowed in Group H-2 occupancies.
2. Articles, including articles packaged for shipment, that are not regulated as a Division 1.4 explosive under Bureau of Alcohol, Tobacco, Firearms and Explosives regulations, or unpackaged articles used in process operations that do not propagate a *detonation* or deflagration between articles shall be allowed in H-3 occupancies.

High-hazard Group H-2. Buildings and structures containing materials that pose a *deflagration* hazard or a hazard from accelerated burning shall be classified as Group H-2. Such materials shall include, but not be limited to, the following:

Class I, II or IIIA flammable or *combustible liquids* that are used or stored in normally open containers or systems, or in closed containers or systems pressurized at more than 15 pounds per square inch gauge (103.4 kPa)
Combustible dusts where manufactured, generated or used in such a manner that the concentration and conditions create a fire or explosion hazard based on information prepared in accordance with Section 414.1.3 of the *Building Code of New York State*
Cryogenic fluids, flammable
Flammable gases
Organic peroxides, Class I
Oxidizers, Class 3, that are used or stored in normally open containers or systems, or in closed containers or systems pressurized at more than 15 pounds per square inch gauge (103.4 kPa)
Pyrophoric liquids, solids and gases, nondetonable
Unstable (reactive) materials, Class 3, nondetonable
Water-reactive materials, Class 3

High-hazard Group H-3. Buildings and structures containing materials that readily support combustion or that pose a *physical hazard* shall be classified as Group H-3. Such materials shall include, but not be limited to, the following:

Class I, II or IIIA flammable or *combustible liquids* that are used or stored in normally closed containers or systems pressurized at 15 pounds per square inch gauge (103.4 kPa) or less.
Combustible fibers, other than densely packed baled cotton, where manufactured, generated or used in such a manner that the concentration and conditions create a fire or explosion hazard based on information prepared in accordance with Section 414.1.3 of the *Building Code of New York State*
Consumer fireworks, 1.4G (Class C, Common)
Cryogenic fluids, oxidizing
Flammable solids
Organic peroxides, Class II and III
Oxidizers, Class 2
Oxidizers, Class 3, that are used or stored in normally closed containers or systems pressurized at 15 pounds per square inch gauge (103 kPa) or less

INTERNATIONAL CODE COUNCIL®
Copyright © 2019 ICC & NYSDOS. ALL RIGHTS RESERVED. Accessed by Lauren Gualdino (lgualdino@briarcliffmanor.org), (-) Order Number #100880972 on May 08, 2020 07:05 AM (PDT) pursuant to License Agreement with ICC & NYSDOS. No further reproduction, no

100880972

Oxidizing gases
Unstable (reactive) materials, Class 2
Water-reactive materials, Class 2

High-hazard Group H-4. Buildings and structures containing materials that are *health hazards* shall be classified as Group H-4. Such materials shall include, but not be limited to, the following:

Corrosives
Highly toxic materials
Toxic materials

High-hazard Group H-5. Semiconductor fabrication facilities and comparable research and development areas in which hazardous production materials (HPM) are used and the aggregate quantity of materials is in excess of those listed in Tables 5003.1.1(1) and 5003.1.1(2) shall be classified as Group H-5. Such facilities and areas shall be designed and constructed in accordance with Section 415.11 of the *Building Code of New York State*.

[BG] Institutional Group I. Institutional Group I occupancy includes, among others, the use of a building or structure, or a portion thereof, in which care or supervision is provided to persons who are or are not capable of self-preservation without physical assistance or in which persons are detained for penal or correctional purposes or in which the liberty of the occupants is restricted. Institutional occupancies shall be classified as Group I-1, I-2, I-3 or I-4.

[BG] Institutional Group I-1. Institutional Group I-1 occupancy shall include buildings, structures or portions thereof for more than 16 persons, excluding staff, who reside on a 24-hour basis in a supervised environment and receive custodial care. Buildings of Group I-1 shall be classified as one of the occupancy conditions indicated below. This group shall include, but not be limited to, the following:

Alcohol and drug centers
Assisted living facilities
Congregate care facilities
Group homes
Halfway houses
Residential board and care facilities
Residential board and custodial care facilities
Social rehabilitation facilities

[BG] Condition 1. This occupancy condition shall include buildings in which all persons receiving custodial care who, without any assistance, are capable of responding to an emergency situation to complete building evacuation.

[BG] Condition 2. This occupancy condition shall include buildings in which there are any persons receiving custodial care who require limited verbal or physical assistance while responding to an emergency situation to complete building evacuation.

[BG] Six to 16 persons receiving custodial care. A facility housing not fewer than six and not more than 16 persons receiving custodial care shall be classified as Group R-4.

[BG] Five or fewer persons receiving custodial care. A facility with five or fewer persons receiving custodial care shall be classified as Group R-3 or shall comply with the *Residential Code of New York State* provided an *automatic sprinkler system* is installed in accordance with Section 903.3.1.3 or with Section P2904 of the *Residential Code of New York State*.

[BG] Institutional Group I-2. Institutional Group I-2 occupancy shall include buildings and structures used for medical care on a 24-hour basis for more than five persons who are not capable of self-preservation. This group shall include, but not be limited to, the following:

Foster care facilities
Detoxification facilities
Hospitals
Nursing homes
Psychiatric hospitals

[BG] Occupancy Conditions. Buildings of Group I-2 shall be classified as one of the following occupancy conditions:

[BG] Condition 1. This occupancy condition shall include facilities that provide nursing and medical care but do not provide emergency care, surgery, obstetrics, or in-patient stabilization units for psychiatric or detoxification, including, but not limited to, nursing homes and foster care facilities.

[BG] Condition 2. This occupancy condition shall include facilities that provide nursing and medical care and could provide emergency care, surgery, obstetrics, or inpatient stabilization units for psychiatric or detoxification, including, but not limited to, hospitals.

[BG] Five or fewer persons receiving medical care. A facility with five or fewer persons receiving medical care shall be classified as Group R-3 or shall comply with the *Residential Code of New York State* provided an *automatic sprinkler system* is installed in accordance with Section 903.3.1.3 or with Section P2904 of the *Residential Code of New York State*.

[BG] Institutional Group I-3. Institutional Group I-3 occupancy shall include buildings and structures which are inhabited by more than five persons who are under restraint or security. A Group I-3 facility is occupied by persons who are generally incapable of self-preservation due to security measures not under the occupants' control. This group shall include, but not be limited to, the following:

Correctional centers
Detention centers
Jails
Prerelease centers
Prisons
Reformatories

Buildings of Group I-3 shall be classified as one of the following occupancy conditions:

[BG] Condition 1. This occupancy condition shall include buildings in which free movement is allowed from sleeping areas and other spaces where access or occupancy is permitted to the exterior via *means of*

INTERNATIONAL CODE COUNCIL®
Copyright © 2019 ICC & NYSDOS. ALL RIGHTS RESERVED. Accessed by Lauren Gualdino (lgualdino@briarcliffmanor.org), (-) Order Number #100880972 on May 08, 2020 07:05 AM (PDT) pursuant to License Agreement with ICC & NYSDOS. No further reproduction, no

100880972

egress without restraint. A Condition 1 facility is permitted to be constructed as Group R.

[BG] Condition 2. This occupancy condition shall include buildings in which free movement is allowed from sleeping areas and any other occupied smoke compartment to one or more other smoke compartments. Egress to the exterior is impeded by locked *exits*.

[BG] Condition 3. This occupancy condition shall include buildings in which free movement is allowed within individual smoke compartments, such as within a residential unit comprised of individual *sleeping units* and group activity spaces, where egress is impeded by remote-controlled release of *means of egress* from such smoke compartment to another smoke compartment.

[BG] Condition 4. This occupancy condition shall include buildings in which free movement is restricted from an occupied space. Remote-controlled release is provided to permit movement from *sleeping units*, activity spaces and other occupied areas within the smoke compartment to other smoke compartments.

[BG] Condition 5. This occupancy condition shall include buildings in which free movement is restricted from an occupied space. Staff-controlled manual release is provided to permit movement from *sleeping units*, activity spaces and other occupied areas within the smoke compartment to other smoke compartments.

[BG] Institutional Group I-4, day care facilities. Institutional Group I-4 shall include buildings and structures occupied by more than five persons of any age who receive custodial care for less than 24 hours by persons other than parents or guardians, relatives by blood, marriage, or adoption, and in a place other than the home of the person cared for. This group shall include, but not be limited to, the following:

Adult day care
Child day care

[BG] Classification as Group E. A child day care facility that provides care for more than five but not more than 100 children $2^1/_2$ years or less of age, where the rooms in which the children are cared for are located on a *level of exit discharge* serving such rooms and each of these child care rooms has an *exit* door directly to the exterior, shall be classified as Group E.

[BG] Within a place of religious worship. Rooms and spaces within places of religious worship providing such care during religious functions shall be classified as part of the primary occupancy.

[BG] Five or fewer occupants receiving care. A facility having five or fewer persons receiving custodial care shall be classified as part of the primary occupancy.

[BG] Five or fewer occupants receiving care in a dwelling unit. A facility such as the above within a *dwelling unit* and having five or fewer persons receiving custodial care shall be classified as a Group R-3 occupancy or shall comply with the *Residential Code of New York State.*

[BG] Mercantile Group M. Mercantile Group M occupancy includes, among others, the use of a building or structure or a portion thereof, for the display and sale of merchandise, and involves stocks of goods, wares or merchandise incidental to such purposes and accessible to the public. Mercantile occupancies shall include, but not be limited to, the following:

Department stores
Drug stores
Greenhouses with public access that maintain plants for display and sale
Markets
Motor fuel-dispensing facilities
Retail or wholesale stores
Sales rooms

[BG] Residential Group R. Residential Group R includes, among others, the use of a building or structure, or a portion thereof, for sleeping purposes when not classified as an Institutional Group I or when not regulated by the *Residential Code of New York State* in accordance with Section 101.2 of the *Building Code of New York State*.

[BG] Residential Group R-1. Residential Group R-1 occupancies containing *sleeping units* where the occupants are primarily transient in nature, including:

Boarding houses (transient) with more than 10 occupants
Congregate living facilities (transient) with more than 10 occupants
Hotels (transient)
Motels (transient)

[BG] Residential Group R-2. Residential Group R-2 occupancies containing *sleeping units* or more than two *dwelling units* where the occupants are primarily permanent in nature, including:

Apartment houses
Congregate living facilities (nontransient) with more than 16 occupants
Boarding houses (nontransient)
Convents
Dormitories
Fraternities and sororities
Monasteries
Hotels (nontransient)
Live/work units
Motels (nontransient)
Vacation timeshare properties

[BG] Residential Group R-3. Residential Group R-3 occupancies where the occupants are primarily permanent in nature and not classified as Group R-1, R-2, R-4 or I, including:

Buildings that do not contain more than two *dwelling units*
Care facilities that provide accommodations for five or fewer persons receiving care
Congregate living facilities (nontransient) with 16 or fewer occupants

INTERNATIONAL CODE COUNCIL®
Copyright © 2019 ICC & NYSDOS. ALL RIGHTS RESERVED. Accessed by Lauren Gualdino (lgualdino@briarcliffmanor.org), (-) Order Number #100880972 on May 08, 2020 07:05 AM (PDT) pursuant to License Agreement with ICC & NYSDOS. No further reproduction, no

100880972

Boarding houses (nontransient)
Convents
Dormitories
Fraternities and sororities
Monasteries

Congregate living facilities (*transient*) with 10 or fewer occupants
Boarding houses (*transient*)

Lodging houses (*transient*) with five or fewer *guestrooms* and 10 or fewer occupants

[BG] Care facilities within a dwelling. Care facilities for five or fewer persons receiving care that are within a single-family dwelling are permitted to comply with the *Residential Code of New York State* provided an *automatic sprinkler system* is installed in accordance with Section 903.3.1.3 or Section P2904 of the *Residential Code of New York State*.

[BG] Lodging houses. Owner-occupied *lodging houses* with five or fewer guestrooms and 10 or fewer total occupants shall be permitted to be constructed in accordance with the *Residential Code of New York State.*

[BG] Residential Group R-4. Residential Group R-4 shall include buildings, structures or portions thereof for more than five but not more than 16 persons, excluding staff, who reside on a 24-hour basis in a supervised residential environment and receive custodial care. Buildings of Group R-4 shall be classified as one of the occupancy conditions indicated below. This group shall include, but not be limited to, the following:

Alcohol and drug centers
Assisted living facilities
Congregate care facilities
Group homes
Halfway houses
Residential board and care facilities
Social rehabilitation facilities

Group R-4 occupancies shall meet the requirements for construction as defined for Group R-3, except as otherwise provided for in the *Building Code of New York State*.

[BG] Condition 1. This occupancy condition shall include buildings in which all persons receiving custodial care, without any assistance, are capable of responding to an emergency situation to complete building evacuation.

[BG] Condition 2. This occupancy condition shall include buildings in which there are any persons receiving custodial care who require limited verbal or physical assistance while responding to an emergency situation to complete building evacuation.

[BG] Storage Group S. Storage Group S occupancy includes, among others, the use of a building or structure, or a portion thereof, for storage that is not classified as a hazardous occupancy.

[BG] Accessory storage spaces. A room or space used for storage purposes that is accessory to another occupancy shall be classified as part of that occupancy.

[BG] Moderate-hazard storage, Group S-1. Storage Group S-1 occupancies are buildings occupied for storage uses that are not classified as Group S-2, including, but not limited to, storage of the following:

Aerosols, Levels 2 and 3
Aircraft hangar (storage and repair)
Bags: cloth, burlap and paper
Bamboos and rattan
Baskets
Belting: canvas and leather
Books and paper in rolls or packs
Boots and shoes
Buttons, including cloth covered, pearl or bone
Cardboard and cardboard boxes
Clothing, woolen wearing apparel
Cordage
Dry boat storage (indoor)
Furniture
Furs
Glues, mucilage, pastes and size
Grains
Horns and combs, other than celluloid
Leather
Linoleum
Lumber
Motor vehicle repair garages complying with the maximum allowable quantities of hazardous materials listed in Table 5003.1.1(1) (see Section 406.8 of the *Building Code of New York State*)
Photo engravings
Resilient flooring
Self-service storage facility (mini-storage)
Silks
Soaps
Sugar
Tires, bulk storage of
Tobacco, cigars, cigarettes and snuff
Upholstery and mattresses
Wax candles

[BG] Low-hazard storage, Group S-2. Storage Group S-2 occupancies include, among others, buildings used for the storage of noncombustible materials such as products on wood pallets or in paper cartons with or without single thickness divisions; or in paper wrappings. Such products are permitted to have a negligible amount of plastic trim, such as knobs, handles or film wrapping. Storage uses shall include, but not be limited to, storage of the following:

Asbestos
Beverages up to and including 16-percent alcohol in metal, glass or ceramic containers
Cement in bags
Chalk and crayons
Dairy products in nonwaxed coated paper containers
Dry cell batteries
Electrical coils
Electrical motors

INTERNATIONAL CODE COUNCIL®
Copyright © 2019 ICC & NYSDOS. ALL RIGHTS RESERVED. Accessed by Lauren Gualdino (lgualdino@briarcliffmanor.org), (-) Order Number #100880972 on May 08, 2020 07:05 AM (PDT) pursuant to License Agreement with ICC & NYSDOS. No further reproduction, no

100880972

Empty cans
Food products
Foods in noncombustible containers
Fresh fruits and vegetables in nonplastic trays or containers
Frozen foods
Glass
Glass bottles, empty or filled with noncombustible liquids
Gypsum board
Inert pigments
Ivory
Meats
Metal cabinets
Metal desks with plastic tops and trim
Metal parts
Metals
Mirrors
Oil-filled and other types of distribution transformers
Parking garages, open or enclosed
Porcelain and pottery
Stoves
Talc and soapstones
Washers and dryers

[BG] Miscellaneous Group U. Buildings and structures of an accessory character and miscellaneous structures not classified in any specific occupancy shall be constructed, equipped and maintained to conform to the requirements of this code commensurate with the fire and life hazard incidental to their occupancy. Group U shall include, but not be limited to, the following:

Agricultural buildings
Aircraft hangar, accessory to a one- or two-family residence (see Section 412.4 of the *Building Code of New York State*)
Barns
Carports
Communication equipment structures with a gross floor area of less than 1,500 square feet (139 m^3)
Fences more than 6 feet (1829 mm) high
Grain silos, accessory to a residential occupancy

[BG] Greenhouses. Greenhouses not classified as another occupancy shall be classified as Use Group U.

Livestock shelters
Private garages
Retaining walls
Sheds
Stables
Tanks
Towers

[BG] OCCUPANT LOAD. The number of persons for which the *means of egress* of a building or portion thereof is designed.

OPEN BURNING. The burning of materials wherein products of combustion are emitted directly into the ambient air without passing through a stack or chimney from an enclosed chamber. Open burning does not include road flares, smudge-pots and similar devices associated with safety or occupational uses typically considered open flames, *recreational fires* or use of portable outdoor fireplaces. For the purpose of this definition, a chamber shall be regarded as enclosed when, during the time combustion occurs, only apertures, ducts, stacks, flues or chimneys necessary to provide combustion air and permit the escape of exhaust gas are open.

OPEN MALL. See "Covered mall building."

OPEN MALL BUILDING. See "Covered mall building."

[BG] OPEN PARKING GARAGE. A structure or portion of a structure with the openings as described in Section 406.5.2 of the *Building Code of New York State* on two or more sides that is used for the parking or storage of private motor vehicles as described in Section 406.5 of the *Building Code of New York State*.

OPEN SYSTEM. The use of a solid or liquid hazardous material involving a vessel or system that is continuously open to the atmosphere during normal operations and where vapors are liberated, or the product is exposed to the atmosphere during normal operations. Examples of open systems for solids and liquids include dispensing from or into open beakers or containers, dip tank and plating tank operations.

OPEN-AIR ASSEMBLY SEATING. Seating served by *means of egress* that is not subject to smoke accumulation within or under a structure and is open to the atmosphere.

[BE] OPEN-ENDED CORRIDOR. An interior *corridor* that is open on each end and connects to an exterior *stairway* or *ramp* at each end with no intervening doors or separation from the *corridor*.

[BF] OPENING PROTECTIVE. A *fire door assembly*, fire shutter assembly, fire window assembly or glass-block assembly in a *fire-resistance-rated* wall or partition.

OPERATING BUILDING. A building occupied in conjunction with the manufacture, transportation or use of *explosive materials*. Operating buildings are separated from one another with the use of intraplant or intraline distances.

OPERATING LINE. A group of buildings, facilities or workstations so arranged as to permit performance of the steps in the manufacture of an *explosive* or in the loading, assembly, modification and maintenance of ammunition or devices containing *explosive materials*.

[NY] OPERATING PERMIT. A permit required under the stricter of the *authority having jurisdiction's Code Enforcement Program* or a *Part 1203—Compliant Code Enforcement Program* to conduct a specified activity or to use a specified category of building.

OPERATING PRESSURE. The pressure at which a system operates.

ORGANIC COATING. A liquid mixture of binders such as alkyd, nitrocellulose, acrylic or oil, and flammable and combustible solvents such as hydrocarbon, ester, ketone or alcohol, which, when spread in a thin film, convert to a durable protective and decorative finish.

ORGANIC PEROXIDE. An organic compound that contains the bivalent -O-O- structure and which may be considered to be a structural derivative of hydrogen peroxide where

INTERNATIONAL CODE COUNCIL®
Copyright © 2019 ICC & NYSDOS. ALL RIGHTS RESERVED. Accessed by Lauren Gualdino (lgualdino@briarcliffmanor.org), (-) Order Number #100880972 on May 08, 2020 07:05 AM (PDT) pursuant to License Agreement with ICC & NYSDOS. No further reproduction, no

100880972

one or both of the hydrogen atoms have been replaced by an organic radical. Organic peroxides can present an explosion hazard (*detonation* or *deflagration*) or they can be shock sensitive. They can also decompose into various unstable compounds over an extended period of time.

Class I. Describes those formulations that are capable of *deflagration* but not *detonation*.

Class II. Describes those formulations that burn very rapidly and that pose a moderate reactivity hazard.

Class III. Describes those formulations that burn rapidly and that pose a moderate reactivity hazard.

Class IV. Describes those formulations that burn in the same manner as ordinary combustibles and that pose a minimal reactivity hazard.

Class V. Describes those formulations that burn with less intensity than ordinary combustibles or do not sustain combustion and that pose no reactivity hazard.

Unclassified detonable. Organic peroxides that are capable of *detonation*. These peroxides pose an extremely high-explosion hazard through rapid explosive decomposition.

OUTDOOR ASSEMBLY EVENT. An outdoor gathering of persons for any purpose.

OUTDOOR CONTROL AREA. An outdoor area that contains hazardous materials in amounts not exceeding the maximum allowable quantities of Table 5003.1.1(3) or Table 5003.1.1(4).

OUTPATIENT CLINIC. See "Clinic, outpatient."

OVERCROWDING. A condition that exists when either there are more people in a building, structure or portion thereof than have been authorized or posted by the *fire code official*, or when the *fire code official* determines that a threat exists to the safety of the occupants due to persons sitting and/or standing in locations that may obstruct or impede the use of *aisles*, passages, *corridors*, *stairways*, *exits* or other components of the *means of egress*.

[A] OWNER. Any person, agent, operator, entity, firm or corporation having any legal or equitable interest in the property; or recorded in the official records of the state, county or municipality as holding an interest or title to the property; or otherwise having possession or control of the property, including the guardian of the estate of any such person, and the executor or administrator of the estate of such person if ordered to take possession of real property by a court.

OXIDIZER. A material that readily yields oxygen or other oxidizing gas, or that readily reacts to promote or initiate combustion of combustible materials and, if heated or contaminated, can result in vigorous self-sustained decomposition.

Class 4. An oxidizer that can undergo an explosive reaction due to contamination or exposure to thermal or physical shock and that causes a severe increase in the burning rate of combustible materials with which it comes into contact. Additionally, the oxidizer causes a severe increase in the burning rate and can cause spontaneous ignition of combustibles.

Class 3. An oxidizer that causes a severe increase in the burning rate of combustible materials with which it comes in contact.

Class 2. An oxidizer that will cause a moderate increase in the burning rate of combustible materials with which it comes in contact.

Class 1. An oxidizer that does not moderately increase the burning rate of combustible materials.

OXIDIZING CRYOGENIC FLUID. An oxidizing gas in the cryogenic state.

OXIDIZING GAS. A gas that can support and accelerate combustion of other materials more than air does.

OZONE-GAS GENERATOR. Equipment which causes the production of ozone.

[BE] PANIC HARDWARE. A door-latching assembly incorporating a device that releases the latch upon the application of a force in the direction of egress travel. See also "Fire exit hardware."

[NY] PART 1202. The regulations set forth in 19 NYCRR Part 1202 ("Uniform Code: Administration and Enforcement in Certain Local Governments"), as currently in effect and as hereafter amended from time to time.

[NY] PART 1203. The regulations set forth in 19 NYCRR Part 1203 ("Uniform Code: Minimum Standards for Administration and Enforcement"), as currently in effect and as hereafter amended from time to time.

[NY] PART 1203—COMPLIANT CODE ENFORCEMENT PROGRAM. A code enforcement program that includes the features required by Part 1203 and satisfies the requirements of Part 1203.

[NY] PART 1204. The regulations set forth in 19 NYCRR Part 1204 ("Uniform Code: Administration and Enforcement by State Agencies"), as currently in effect and as hereafter amended from time to time.

[NY] PART 1205. The regulations set forth in 19 NYCRR Part 1205 ("Uniform Code: Variance Procedures"), as currently in effect and as hereafter amended from time to time.

PASS-THROUGH. An enclosure installed in a wall with a door on each side that allows chemicals, HPM, equipment, and parts to be transferred from one side of the wall to the other.

[BG] PENTHOUSE. An enclosed, unoccupied rooftop structure used for sheltering mechanical and electrical equipment, tanks, elevators and related machinery, and vertical shaft openings.

PERMISSIBLE EXPOSURE LIMIT (PEL). The maximum permitted 8-hour time-weighted-average concentration of an airborne contaminant. The exposure limits to be utilized are those published in DOL 29 CFR Part 1910.1000. The Recommended Exposure Limit (REL) concentrations published by the U.S. National Institute for Occupational Safety and Health (NIOSH), Threshold Limit Value-Time Weighted Average (TLV-TWA) concentrations published by the American Conference of Governmental Industrial Hygienists (ACGIH), Workplace Environmental Exposure Level

INTERNATIONAL CODE COUNCIL®
Copyright © 2019 ICC & NYSDOS. ALL RIGHTS RESERVED. Accessed by Lauren Gualdino (lgualdino@briarcliffmanor.org), (-) Order Number #100880972 on May 08, 2020 07:05 AM (PDT) pursuant to License Agreement with ICC & NYSDOS. No further reproduction, no

100880972

(WEEL) Guides published by the American Industrial Hygiene Association (AIHA), and other *approved*, consistent measures are allowed as surrogates for hazardous substances not *listed* in DOL 29 CFR Part 1910.1000.

[NY] PERMIT. An official document or certificate issued by the *authority having jurisdiction* that authorizes performance of a specified activity.

[A] PERSON. An individual, heirs, executors, administrators or assigns, and also includes a firm, partnership or corporation, its or their successors or assigns, or the agent of any of the aforesaid.

[BG] PERSONAL CARE SERVICE. The care of persons who do not require medical care. Personal care involves responsibility for the safety of the persons while inside the building.

PESTICIDE. A substance or mixture of substances, including fungicides, intended for preventing, destroying, repelling or mitigating pests and substances or a mixture of substances intended for use as a plant regulator, defoliant or desiccant. Products defined as drugs in the Federal Food, Drug and Cosmetic Act are not pesticides.

[BE] PHOTOLUMINESCENT. Having the property of emitting light that continues for a length of time after excitation by visible or invisible light has been removed.

PHYSICAL HAZARD. A chemical for which there is evidence that it is a *combustible liquid*, *cryogenic fluid*, *explosive*, flammable (solid, liquid or gas), organic peroxide (solid or liquid), oxidizer (solid or liquid), oxidizing gas, pyrophoric (solid, liquid or gas), unstable (reactive) material (solid, liquid or gas) or water-reactive material (solid or liquid).

PHYSIOLOGICAL WARNING THRESHOLD. A concentration of airborne contaminants, normally expressed in parts per million (ppm) or milligrams per cubic meter (mg/m^3), that represents the concentration at which persons can sense the presence of the contaminant due to odor, irritation or other quick-acting physiological responses. When used in conjunction with the permissible exposure limit (PEL), the physiological warning threshold levels are those consistent with the classification system used to establish the PEL. See the definition of "Permissible exposure limit (PEL)."

PIER. A structure built over the water, supported by pillars or piles, and used as a landing place, pleasure pavilion or similar purpose.

PLACE OF RELIGIOUS WORSHIP. See "Religious worship, place of."

[M] PLENUM. An enclosed portion of the building structure, other than an occupiable space being conditioned, that is designed to allow air movement and thereby serve as part of an air distribution system.

PLOSOPHORIC MATERIAL. Two or more unmixed, commercially manufactured, prepackaged chemical substances including oxidizers, flammable liquids or solids, or similar substances that are not independently classified as *explosives* but which, when mixed or combined, form an *explosive* that is intended for blasting.

[NY] PLUMBING CODE OF NEW YORK STATE. The 2020 edition of the publication entitled "Plumbing Code of New York State," published by the International Code Council, Inc. (publication date November 2019).

PLYWOOD AND VENEER MILLS. Facilities where raw wood products are processed into finished wood products, including waferboard, oriented strandboard, fiberboard, composite wood panels and plywood.

PORTABLE OUTDOOR FIREPLACE. A portable, outdoor, solid-fuel-burning fireplace that may be constructed of steel, concrete, clay or other noncombustible material. A portable outdoor fireplace may be open in design, or may be equipped with a small hearth opening and a short chimney or chimney opening in the top.

[BE] POWER-ASSISTED DOOR. Swinging door that opens by reduced pushing or pulling force on the door-operating hardware. The door closes automatically after the pushing or pulling force is released, and functions with decreased forces. See also "Low energy power-operated door" and "Power-operated door."

POWERED INDUSTRIAL TRUCK. A forklift, tractor, platform lift truck or motorized hand truck powered by an electrical motor or internal combustion engine. Powered industrial trucks do not include farm vehicles or automotive vehicles for highway use.

[BE] POWER-OPERATED DOOR. Swinging, sliding, or folding door that opens automatically when approached by a pedestrian or opens automatically upon an action by a pedestrian. The door closes automatically and includes provisions such as presence sensors to prevent entrapment. See also "Low energy power-operated door" and "Power-assisted door."

PRESSURE VESSEL. A closed vessel designed to operate at pressures above 15 psig (103 kPa).

PRIMARY CONTAINMENT. The first level of containment, consisting of the inside portion of that container which comes into immediate contact on its inner surface with the material being contained.

[BG] PRIVATE GARAGE. A building or portion of a building in which motor vehicles used by the owner or tenants of the building or buildings on the premises are stored or kept, without provisions for repairing or servicing such vehicles for profit.

PROCESS TRANSFER. The transfer of flammable or *combustible liquids* between tank vehicles or tank cars and process operations. Process operations may include containers, tanks, piping and equipment.

PROPELLANT. The liquefied or *compressed gas* in an aerosol container that expels the contents from an aerosol container when the valve is actuated. A propellant is considered flammable if it forms a flammable mixture with air, or if a flame is self-propagating in a mixture with air.

[NY] PROPERTY MAINTENANCE CODE OF NEW YORK STATE. The 2020 edition of the publication entitled "Property Maintenance Code of New York State," published

INTERNATIONAL CODE COUNCIL®
Copyright © 2019 ICC & NYSDOS. ALL RIGHTS RESERVED. Accessed by Lauren Gualdino (lgualdino@briarcliffmanor.org), (-) Order Number #100880972 on May 08, 2020 07:05 AM (PDT) pursuant to License Agreement with ICC & NYSDOS. No further reproduction, no

100880972

by the International Code Council, Inc. (publication date November 2019).

PROXIMATE AUDIENCE. An audience closer to pyrotechnic devices than allowed by NFPA 1123.

[B] PSYCHIATRIC HOSPITALS. See "Hospitals."

PUBLIC TRAFFIC ROUTE (PTR). Any public street, road, highway, navigable stream or passenger railroad that is used for through traffic by the general public.

[A] PUBLIC WAY. A street, alley or other parcel of land open to the outside air leading to a street, that has been deeded, dedicated or otherwise permanently appropriated to the public for public use and which has a clear width and height of not less than 10 feet (3048 mm).

[BE] PUBLIC-USE AREAS. Interior or exterior rooms or spaces that are made available to the general public.

PYROPHORIC. A chemical with an autoignition temperature in air, at or below a temperature of 130°F (54°C).

PYROTECHNIC ARTICLE. A pyrotechnic device for use in the entertainment industry, which is not classified as fireworks.

PYROTECHNIC COMPOSITION. A chemical mixture that produces visible light displays or sounds through a self-propagating, heat-releasing chemical reaction which is initiated by ignition.

PYROTECHNIC SPECIAL EFFECT. A visible or audible effect for entertainment created through the use of pyrotechnic materials and devices.

PYROTECHNIC SPECIAL-EFFECT MATERIAL. A chemical mixture used in the entertainment industry to produce visible or audible effects by combustion, *deflagration* or *detonation*. Such a chemical mixture predominantly consists of solids capable of producing a controlled, self-sustaining and self-contained exothermic chemical reaction that results in heat, gas sound, light or a combination of these effects. The chemical reaction functions without external oxygen.

PYROTECHNICS. Controlled exothermic chemical reactions timed to create the effects of heat, hot gas, sound, dispersion of aerosols, emission of visible light or a combination of such effects to achieve the maximum effect from the least volume of pyrotechnic composition.

QUANTITY-DISTANCE (Q-D). The quantity of *explosive material* and separation distance relationships providing protection. These relationships are based on levels of risk considered acceptable for the stipulated exposures and are tabulated in the appropriate Q-D tables. The separation distances specified afford less than absolute safety:

Inhabited building distance (IBD). The minimum separation distance between an operating building or magazine containing *explosive materials* and an inhabited building or site boundary.

Intermagazine distance (IMD). The minimum separation distance between magazines.

Intraline distance (ILD) or Intraplant distance (IPD). The distance to be maintained between any two operating buildings on an *explosives* manufacturing site when at least one contains or is designed to contain *explosives*, or the distance between a magazine and an operating building.

RAILWAY. A steam, electric or other railroad or railway that carriers passengers for hire.

[BE] RAMP. A walking surface that has a running slope steeper than one unit vertical in 20 units horizontal (5-percent slope).

RAMP, EXIT ACCESS. See "Exit access ramp."

RAMP, EXTERIOR EXIT. See "Exterior exit ramp."

RAMP, INTERIOR EXIT. See "Interior exit ramp."

RAW PRODUCT. A mixture of natural materials such as tree, brush trimmings, or waste logs and stumps.

[M] READY ACCESS (TO). That which enables a device, appliance or equipment to be directly reached, without requiring the removal or movement of any panel, door or similar obstruction [see "Access (to)"].

READY BOX. A weather-resistant container with a self-closing or automatic-closing cover that protects fireworks shells from burning debris. Tarpaulins shall not be considered as ready boxes.

[A] RECORD DRAWINGS. Drawings ("as builts") that document the location of all devices, appliances, wiring, sequences, wiring methods and connections of the components of a fire alarm system as installed.

RECREATIONAL FIRE. An outdoor fire burning materials other than rubbish where the fuel being burned is not contained in an incinerator, outdoor fireplace, portable outdoor fireplace, barbeque grill or barbeque pit and has a total fuel area of 3 feet (914 mm) or less in diameter and 2 feet (610 mm) or less in height for pleasure, religious, ceremonial, cooking, warmth or similar purposes.

REDUCED FLOW VALVE. A valve equipped with a restricted flow orifice and inserted into a *compressed gas* cylinder, portable tank or stationary tank that is designed to reduce the maximum flow from the valve under full-flow conditions. The maximum flow rate from the valve is determined with the valve allowed to flow to atmosphere with no other piping or fittings attached.

REFINERY. A plant in which flammable or *combustible liquids* are produced on a commercial scale from crude petroleum, natural gasoline or other hydrocarbon sources.

REFRIGERANT. The fluid used for heat transfer in a refrigeration system; the refrigerant absorbs heat and transfers it at a higher temperature and a higher pressure, usually with a change of state.

[M] REFRIGERATING (REFRIGERATION) SYSTEM. A combination of interconnected refrigerant-containing parts constituting one closed refrigerant circuit in which a refrigerant is circulated for the purpose of extracting heat.

[NY] REGISTERED DESIGN PROFESSIONAL. An individual who is a licensed and registered architect (RA) in accordance with Article 147 of the New York State Education Law or a licensed and registered professional engineer (PE) in accordance with Article 145 of the New York State Education Law.

INTERNATIONAL CODE COUNCIL®
Copyright © 2019 ICC & NYSDOS. ALL RIGHTS RESERVED. Accessed by Lauren Gualdino (lgualdino@briarcliffmanor.org), (-) Order Number #100880972 on May 08, 2020 07:05 AM (PDT) pursuant to License Agreement with ICC & NYSDOS. No further reproduction, no

100880972

[BG] RELIGIOUS WORSHIP, PLACE OF. A building or portion thereof intended for the performance of religious services.

REMOTE EMERGENCY SHUTOFF DEVICE. The combination of an operator-carried signaling device and a mechanism on the tank vehicle. Activation of the remote emergency shutoff device sends a signal to the tanker-mounted mechanism and causes fuel flow to cease.

REMOTE SOLVENT RESERVOIR. A liquid solvent container enclosed against evaporative losses to the atmosphere during periods when the container is not being utilized, except for a solvent return opening not larger than 16 square inches (10 322 mm^2). Such return allows pump-cycled used solvent to drain back into the reservoir from a separate solvent sink or work area.

REMOTELY LOCATED, MANUALLY ACTIVATED SHUTDOWN CONTROL. A control system that is designed to initiate shutdown of the flow of gases or liquids that is manually activated from a point located some distance from the delivery system.

REPAIR GARAGE. A building, structure or portion thereof used for servicing or repairing motor vehicles.

[NY] RESIDENTIAL CODE OF NEW YORK STATE. The 2020 edition of the publication entitled "Residential Code of New York State," published by the International Code Council, Inc. (publication date November 2019).

RESIN APPLICATION AREA. An area where reinforced plastics are used to manufacture products by hand lay-up or spray-fabrication methods.

RESPONSIBLE PERSON. A person trained in the safety and fire safety considerations concerned with hot work. Responsible for reviewing the sites prior to issuing permits as part of the hot work permit program and following up as the job progresses.

RETAIL DISPLAY AREA. The area of a Group M occupancy open for the purpose of viewing or purchasing merchandise offered for sale. Individuals in such establishments are free to circulate among the items offered for sale which are typically displayed on shelves, racks or the floor.

ROLL COATING. The process of coating, spreading and impregnating fabrics, paper or other materials as they are passed directly through a tank or trough containing flammable or *combustible liquids*, or over the surface of a roller revolving partially submerged in a flammable or *combustible liquid*.

RUBBISH (TRASH). Combustible and noncombustible waste materials, including residue from the burning of coal, wood, coke or other combustible material, paper, rags, cartons, tin cans, metals, mineral matter, glass crockery, dust and discarded refrigerators, and heating, cooking or incinerator-type appliances.

SAFETY CAN. An *approved* container of not more than 5-gallon (19 L) capacity having a spring-closing lid and spout cover so designed that it will relieve internal pressure when subjected to fire exposure.

SAFETY DATA SHEET (SDS). Information concerning a hazardous material which is prepared in accordance with the provisions of DOL 29 CFR Part 1910.1200 or in accordance with the provisions of a federally approved state OSHA plan. A document titled as a Material Safety Data Sheet (MSDS) is equivalent to an SDS for the purposes of this code.

[BE] SCISSOR STAIRWAY. Two interlocking *stairways* providing two separate paths of egress located within one *exit* enclosure.

SECONDARY CONTAINMENT. That level of containment that is external to and separate from primary containment.

SEED COTTON. See "Cotton."

SEGREGATED. Storage in the same room or inside area, but physically separated by distance from *incompatible materials*.

[BF] SELF-CLOSING. As applied to a fire door or other opening, means equipped with an *approved* device that will ensure closing after having been opened.

[BE] SELF-LUMINOUS. Illuminated by a self-contained power source, other than batteries, and operated independently of external power sources.

SELF-PRESERVATION, INCAPABLE OF. See "Incapable of self-preservation."

SELF-SERVICE MOTOR FUEL-DISPENSING FACILITY. That portion of motor fuel-dispensing facility where liquid motor fuels are dispensed from fixed *approved* dispensing equipment into the fuel tanks of motor vehicles by persons other than a motor fuel-dispensing facility attendant.

SEMICONDUCTOR FABRICATION FACILITY. A building or a portion of a building in which electrical circuits or devices are created on solid crystalline substances having electrical conductivity greater than insulators but less than conductors. These circuits or devices are commonly known as semiconductors.

SERVICE CORRIDOR. A fully enclosed passage used for transporting HPM and purposes other than required *means of egress*.

SHELF STORAGE. Storage on shelves less than 30 inches (762 mm) deep with the distance between shelves not exceeding 3 feet (914 mm) vertically. For other shelving arrangements, see the requirements for rack storage.

SINGLE-STATION SMOKE ALARM. An assembly incorporating the detector, the control equipment and the alarm-sounding device in one unit, operated from a power supply either in the unit or obtained at the point of installation.

[BG] SITE. A parcel of land bounded by a *lot line* or a designated portion of a public right-of-way.

[BG] SITE-FABRICATED STRETCH SYSTEM. A system, fabricated on site and intended for acoustical, tackable or aesthetic purposes, that is composed of three elements:

1. A frame constructed of plastic, wood, metal or other material used to hold fabric in place.

INTERNATIONAL CODE COUNCIL®
Copyright © 2019 ICC & NYSDOS. ALL RIGHTS RESERVED. Accessed by Lauren Gualdino (lgualdino@briarcliffmanor.org), (-) Order Number #100880972 on May 08, 2020 07:05 AM (PDT) pursuant to License Agreement with ICC & NYSDOS. No further reproduction, no

100880972

2. A core material (infill, with the correct properties for the application).
3. An outside layer, comprised of a textile, fabric or vinyl, that is stretched taut and held in place by tension or mechanical fasteners via the frame.

SKY LANTERN. An unmanned device with a fuel source that incorporates an open flame in order to make the device airborne.

[BG] SLEEPING UNIT. A single unit providing rooms or spaces for one or more persons that includes permanent provisions for sleeping and can include provisions for living, eating and either sanitation or kitchen facilities but not both. Such rooms and spaces that are also part of a dwelling unit are not sleeping units.

SMALL ARMS AMMUNITION. A shotgun, rifle or pistol cartridge and any cartridge for propellant-actuated devices. This definition does not include military ammunition containing bursting charges or incendiary, trace, spotting or pyrotechnic projectiles.

SMALL ARMS PRIMERS. Small percussion-sensitive *explosive* charges, encased in a cap, used to ignite propellant powder.

SMOKE ALARM. A single- or multiple-station alarm responsive to smoke. See also "Single-station smoke alarm" and "Multiple-station smoke alarm."

[BF] SMOKE BARRIER. A continuous membrane, either vertical or horizontal, such as a wall, floor, or ceiling assembly, that is designed and constructed to restrict the movement of smoke.

[BG] SMOKE COMPARTMENT. A space within a building enclosed by *smoke barriers* on all sides, including the top and bottom.

[BF] SMOKE DAMPER. A *listed* device installed in ducts and air transfer openings designed to resist the passage of smoke. The device is installed to operate automatically, controlled by a smoke detection system, and where required, is capable of being positioned from a *fire command center*.

SMOKE DETECTOR. A *listed* device that senses visible or invisible particles of combustion.

SMOKE PARTITION. A wall assembly that extends from the top of the foundation or floor below to the underside of the floor or roof sheathing, deck or slab above or to the underside of the ceiling above where the ceiling membrane is constructed to limit the transfer of smoke.

[BG] SMOKE-DEVELOPED INDEX. A comparative measure, expressed as a dimensionless number, derived from measurements of smoke obscuration versus time for a material tested in accordance with ASTM E84.

SMOKELESS PROPELLANTS. Solid propellants, commonly referred to as smokeless powders, used in small arms ammunition, cannons, rockets, propellant-actuated devices and similar articles.

[BF] SMOKEPROOF ENCLOSURE. An *interior exit stairway* designed and constructed so that the movement of the products of combustion produced by a fire occurring in any part of the building into the enclosure is limited.

[BE] SMOKE-PROTECTED ASSEMBLY SEATING. Seating served by means of egress that is not subject to smoke accumulation within or under a structure for a specified design time by means of passive design or by mechanical ventilation.

SOLID. A material that has a melting point and decomposes or sublimes at a temperature greater than 68°F (20°C).

SOLID BIOFUEL. Densified biomass made in the form of cubiform, polyhedral, polyhydric or cylindrical units, produced by compressing milled biomass.

SOLID BIOMASS FEEDSTOCK. The basic materials of which solid biofuel is composed, manufactured or made.

SOLID SHELVING. Shelving that is solid, slatted or of other construction located in racks and which obstructs sprinkler discharge down into the racks.

SOLVENT DISTILLATION UNIT. An appliance that receives contaminated flammable or *combustible liquids* and which distills the contents to remove contaminants and recover the solvents.

SOLVENT OR LIQUID CLASSIFICATIONS. A method for classifying solvents or liquids according to the following classes:

Class I solvents. Liquids having a *flash point* below 100°F (38°C).

Class II solvents. Liquids having a *flash point* at or above 100°F (38°C) and below 140°F (60°C).

Class IIIA solvents. Liquids having a *flash point* at or above 140°F (60°C) and below 200°F (93°C).

Class IIIB solvents. Liquids having a *flash point* at or above 200°F (93°C).

Class IV solvents. Liquids classified as nonflammable.

SPECIAL AMUSEMENT BUILDING. A building that is temporary, permanent or mobile that contains a device or system that conveys passengers or provides a walkway along, around or over a course in any direction as a form of amusement arranged so that the egress path is not readily apparent due to visual or audio distractions or an intentionally confounded egress path, or is not readily available because of the mode of conveyance through the building or structure.

[A] SPECIAL EXPERT. An individual who has demonstrated qualifications in a specific area, outside the practice of architecture or engineering, through education, training and experience.

SPECIAL INDUSTRIAL EXPLOSIVE DEVICE. An explosive power pack containing an *explosive* charge in the form of a cartridge or construction device. The term includes but is not limited to explosive rivets, explosive bolts, *explosive* charges for driving pins or studs, cartridges for *explosive*-actuated power tools and charges of *explosives* used in automotive air bag inflators, jet tapping of open hearth furnaces and jet perforation of oil well casings.

INTERNATIONAL CODE COUNCIL®
Copyright © 2019 ICC & NYSDOS. ALL RIGHTS RESERVED. Accessed by Lauren Gualdino (lgualdino@briarcliffmanor.org), (-) Order Number #100880972 on May 08, 2020 07:05 AM (PDT) pursuant to License Agreement with ICC & NYSDOS. No further reproduction, no

100880972

SPRAY BOOTH. A mechanically ventilated appliance of varying dimensions and construction provided to enclose or accommodate a spraying operation and to confine and limit the escape of spray vapor and residue and to exhaust it safely.

SPRAY ROOM. A room designed to accommodate spraying operations, constructed in accordance with the *Building Code of New York State*.

SPRAYING SPACE. An area in which dangerous quantities of flammable vapors or combustible residues, dusts or deposits are present due to the operation of spraying processes. The *fire code official* is authorized to define the limits of the spraying space in any specific case.

[BE] STAIR. A change in elevation, consisting of one or more risers.

[BE] STAIRWAY. One or more *flights* of *stairs*, either exterior or interior, with the necessary landings and platforms connecting them, to form a continuous and uninterrupted passage from one level to another.

STAIRWAY, EXIT ACCESS. See "Exit access stairway."

STAIRWAY, EXTERIOR EXIT. See "Exterior exit stairway."

STAIRWAY, INTERIOR EXIT. See "Interior Exit Stairway."

STAIRWAY, SCISSOR. See "Scissor stairway."

[BE] STAIRWAY, SPIRAL. A *stairway* having a closed circular form in its plan view with uniform section-shaped treads attached to and radiating from a minimum-diameter supporting column.

STANDBY POWER SYSTEM. A source of automatic electric power of a required capacity and duration to operate required building, hazardous materials or ventilation systems in the event of a failure of the primary power. Standby power systems are required for electrical loads where interruption of the primary power could create hazards or hamper rescue or fire-fighting operations.

STANDPIPE, TYPES OF. Standpipe types are as follows:

Automatic dry. A dry standpipe system, normally filled with pressurized air, that is arranged through the use of a device, such as a dry pipe valve, to admit water into the system piping automatically upon the opening of a hose valve. The water supply for an automatic dry standpipe system shall be capable of supplying the system demand.

Automatic wet. A wet standpipe system that has a water supply that is capable of supplying the system demand automatically.

Manual dry. A dry standpipe system that does not have a permanent water supply attached to the system. Manual dry standpipe systems require water from a fire department pumper to be pumped into the system through the fire department connection in order to supply the system demand.

Manual wet. A wet standpipe system connected to a water supply for the purpose of maintaining water within the system but which does not have a water supply capable of delivering the system demand attached to the system. Manual wet standpipe systems require water from a fire department pumper (or the like) to be pumped into the system in order to supply the system demand.

Semiautomatic dry. A dry standpipe system that is arranged through the use of a device, such as a deluge valve, to admit water into the system piping upon activation of a remote control device located at a hose connection. A remote control activation device shall be provided at each hose connection. The water supply for a semiautomatic dry standpipe system shall be capable of supplying the system demand.

STANDPIPE SYSTEM, CLASSES OF. Standpipe system classes are as follows:

Class I system. A system providing $2^1/_2$-inch (64 mm) hose connections to supply water for use by fire departments and those trained in handling heavy fire streams.

Class II system. A system providing $1^1/_2$-inch (38 mm) hose stations to supply water for use primarily by the building occupants or by the fire department during initial response.

Class III system. A system providing $1^1/_2$-inch (38 mm) hose stations to supply water for use by building occupants and $2^1/_2$-inch (64 mm) hose connections to supply a larger volume of water for use by fire departments and those trained in handling heavy fire streams.

STATIC PILES. Piles in which processed wood product or solid biomass feedstock is mounded and is not being turned or moved.

STEEL. Hot- or cold-rolled as defined by the *Building Code of New York State*.

STORAGE, HAZARDOUS MATERIALS. The keeping, retention or leaving of hazardous materials in closed containers, tanks, cylinders, or similar vessels; or vessels supplying operations through closed connections to the vessel.

[BG] STORY. That portion of a building included between the upper surface of a floor and the upper surface of the floor or roof next above (see "Basement," "Building height," "Grade plane" and "Mezzanine"). A story is measured as the vertical distance from top to top of two successive tiers of beams or finished floor surfaces and, for the topmost story, from the top of the floor finish to the top of the ceiling joists or, where there is not a ceiling, to the top of the roof rafters.

[BG] STORY ABOVE GRADE PLANE. Any story having its finished floor surface entirely above grade plane, or in which the finished surface of the floor next above is:

1. More than 6 feet (1829 mm) above grade plane; or
2. More than 12 feet (3658 mm) above the finished ground level at any point.

SUBORDINATE (FIRE PROTECTION AND LIFE SAFETY SYSTEM). A system that is activated by another fire protection or life safety system. For example, where a fire alarm system activates a smoke removal or elevator recall system, the smoke removal or elevator recall system is considered to be "subordinate" to the fire alarm system.

INTERNATIONAL CODE COUNCIL®
Copyright © 2019 ICC & NYSDOS. ALL RIGHTS RESERVED. Accessed by Lauren Gualdino (lgualdino@briarcliffmanor.org), (-) Order Number #100880972 on May 08, 2020 07:05 AM (PDT) pursuant to License Agreement with ICC & NYSDOS. No further reproduction, no

100880972

SUPERVISING STATION. A facility that receives signals and at which personnel are in attendance at all times to respond to these signals.

SUPERVISORY SERVICE. The service required to monitor performance of guard tours and the operative condition of fixed suppression systems or other systems for the protection of life and property.

SUPERVISORY SIGNAL. A signal indicating the need of action in connection with the supervision of guard tours, the fire suppression systems or equipment, or the maintenance features of related systems.

SUPERVISORY SIGNAL-INITIATING DEVICE. An initiating device such as a valve supervisory switch, water level indicator, or low-air pressure switch on a dry-pipe sprinkler system whose change of state signals an off-normal condition and its restoration to normal of a fire protection or life safety system; or a need for action in connection with guard tours, fire suppression systems or equipment, or maintenance features of related systems.

SYSTEM. An assembly of equipment consisting of a tank, container or containers, appurtenances, pumps, compressors and connecting piping.

TANK. A vessel containing more than 60 gallons (227 L).

TANK, ATMOSPHERIC. A storage tank designed to operate at pressures from atmospheric through 1.0 pound per square inch gauge (760 mm Hg through 812 mm Hg) measured at the top of the tank.

TANK, PORTABLE. A packaging of more than 60-gallon (227 L) capacity and designed primarily to be loaded into or on or temporarily attached to a transport vehicle or ship and equipped with skids, mountings or accessories to facilitate handling of the tank by mechanical means. It does not include any cylinder having less than a 1,000-pound (454 kg) water capacity, cargo tank, tank car tank or trailers carrying cylinders of more than 1,000-pound (454 kg) water capacity.

TANK, PRIMARY. A *listed* atmospheric tank used to store liquid. See "Primary containment."

TANK, PROTECTED ABOVE GROUND. A tank *listed* in accordance with UL 2085 consisting of a primary tank provided with protection from physical damage and fire-resistive protection from a high-intensity liquid pool fire exposure. The tank may provide protection elements as a unit or may be an assembly of components, or a combination thereof.

TANK, STATIONARY. Packaging designed primarily for stationary installations not intended for loading, unloading or attachment to a transport vehicle as part of its normal operation in the process of use. It does not include cylinders having less than a 1,000-pound (454 kg) water capacity.

TANK VEHICLE. A vehicle other than a railroad tank car or boat, with a cargo tank mounted thereon or built as an integral part thereof, used for the transportation of flammable or *combustible liquids*, LP-gas or hazardous chemicals. Tank vehicles include self-propelled vehicles and full trailers and semitrailers, with or without motive power, and carrying part or all of the load.

TEMPORARY SPECIAL EVENT STRUCTURE. Any temporary ground-supported structure, platform, stage, stage scaffolding or rigging, canopy, tower supporting audio or visual effects equipment or similar structures not regulated within the scope of the *Building Code of New York State*.

TENT. A structure, enclosure, umbrella structure or shelter, with or without sidewalls or drops, constructed of fabric or pliable material supported in any manner except by air or the contents it protects (see "Umbrella structure").

THEFT RESISTANT. Construction designed to deter illegal entry into facilities for the storage of *explosive materials*.

[BF] THROUGH-PENETRATION FIRESTOP SYSTEM. An assemblage consisting of a *fire-resistance-rated* floor, floor-ceiling or wall assembly, one or more penetrating items passing through the breaches in both sides of the assembly and the materials or devices, or both, installed to resist the spread of fire through the assembly for a prescribed period of time.

TIMBER AND LUMBER PRODUCTION FACILITIES. Facilities where raw wood products are processed into finished wood products.

TIRES, BULK STORAGE OF. Storage of tires where the area available for storage exceeds 20,000 cubic feet (566 m^3).

TOOL. A device, storage container, workstation or process machine used in a fabrication area.

TORCH-APPLIED ROOF SYSTEM. Bituminous roofing systems using membranes that are adhered by heating with a torch and melting asphalt back coating instead of mopping hot asphalt for adhesion.

[NY] TOWNHOUSE. A single-family dwelling unit constructed in a group of three or more attached units in which each unit (1) extends from the foundation to roof, (2) has open space on at least two sides, and (3) has a separate *means of egress*.

TOXIC. A chemical falling within any of the following categories:

1. A chemical that has a median lethal dose (LD_{50}) of more than 50 milligrams per kilogram, but not more than 500 milligrams per kilogram of body weight when administered orally to albino rats weighing between 200 and 300 grams each.
2. A chemical that has a median lethal dose (LD_{50}) of more than 200 milligrams per kilogram but not more than 1,000 milligrams per kilogram of body weight when administered by continuous contact for 24 hours (or less if death occurs within 24 hours) with the bare skin of albino rabbits weighing between 2 and 3 kilograms each.
3. A chemical that has a median lethal concentration (LC_{50}) in air of more than 200 parts per million but not more than 2,000 parts per million by volume of gas or vapor, or more than 2 milligrams per liter but not more than 20 milligrams per liter of mist, fume or dust, when administered by continuous inhalation for 1 hour (or less if death occurs within 1 hour) to albino rats weighing between 200 and 300 grams each.

INTERNATIONAL CODE COUNCIL®
Copyright © 2019 ICC & NYSDOS. ALL RIGHTS RESERVED. Accessed by Lauren Gualdino (lgualdino@briarcliffmanor.org), (-) Order Number #100880972 on May 08, 2020 07:05 AM (PDT) pursuant to License Agreement with ICC & NYSDOS. No further reproduction, no

100880972

TRAFFIC CALMING DEVICES. Traffic calming devices are design elements of fire apparatus access roads such as street alignment, installation of barriers, and other physical measures intended to reduce traffic and cut-through volumes, and slow vehicle speeds.

[BG] TRANSIENT. Occupancy of a dwelling unit or sleeping unit for not more than 30 days.

[BG] TRANSIENT AIRCRAFT. Aircraft based at another location and that is at the transient location for not more than 90 days.

TRANSVERSE FLUE SPACE. See "Flue space—Transverse."

TRASH. See "Rubbish."

TROUBLE SIGNAL. A signal initiated by the fire alarm system or device indicative of a fault in a monitored circuit or component.

TUBE TRAILER. A semitrailer on which a number of tubular gas cylinders have been mounted. A manifold is typically provided that connects the cylinder valves enabling gas to be discharged from one or more tubes or cylinders through a piping and control system.

TWENTY-FOUR HOUR BASIS. See "24-hour basis" before the "A" entries.

UMBRELLA STRUCTURE. A structure, enclosure or shelter with or without sidewalls or drops, constructed of fabric or pliable material supported by a central pole or poles (see "Tent").

UNAUTHORIZED DISCHARGE. A release or emission of materials in a manner which does not conform to the provisions of this code or applicable public health and safety regulations.

[NY] UNIFORM CODE. The New York State Uniform Fire Prevention and Building Code, adopted pursuant to Article 18 of the New York State Executive Law, as currently in effect and as hereafter amended from time to time.

UNSTABLE (REACTIVE) MATERIAL. A material, other than an *explosive*, which in the pure state or as commercially produced, will vigorously polymerize, decompose, condense or become self-reactive and undergo other violent chemical changes, including explosion, when exposed to heat, friction or shock, or in the absence of an inhibitor, or in the presence of contaminants, or in contact with *incompatible materials*. Unstable (reactive) materials are subdivided as follows:

Class 4. Materials that in themselves are readily capable of *detonation* or explosive decomposition or explosive reaction at *normal temperatures and pressures*. This class includes materials that are sensitive to mechanical or localized thermal shock at *normal temperatures and pressures*.

Class 3. Materials that in themselves are capable of *detonation* or of explosive decomposition or explosive reaction but which require a strong initiating source or which must be heated under confinement before initiation. This class includes materials that are sensitive to thermal or mechanical shock at elevated temperatures and pressures.

Class 2. Materials that in themselves are normally unstable and readily undergo violent chemical change but do not detonate. This class includes materials that can undergo chemical change with rapid release of energy at *normal temperatures and pressures*, and that can undergo violent chemical change at elevated temperatures and pressures.

Class 1. Materials that in themselves are normally stable but which can become unstable at elevated temperatures and pressure.

UNWANTED FIRE. A fire not used for cooking, heating or recreational purposes or one not incidental to the normal operations of the property.

USE (MATERIAL). Placing a material into action, including solids, liquids and gases.

VAPOR PRESSURE. The pressure exerted by a volatile fluid as determined in accordance with ASTM D323.

[M] VENTILATION. The natural or mechanical process of supplying conditioned or unconditioned air to, or removing such air from, any space.

VESSEL. A motorized watercraft, other than a seaplane on the water, used or capable of being used as a means of transportation. Nontransportation vessels, such as houseboats and boathouses, are included in this definition.

VISIBLE ALARM NOTIFICATION APPLIANCE. A notification appliance that alerts by the sense of sight.

[NY] WALK-IN ENERGY STORAGE SYSTEM UNIT. A pre-fabricated building that contains *energy storage systems*. It includes doors that provide walk-in access for personnel to maintain, test and service the equipment, and is typically used in outdoor and *mobile energy storage system* applications.

WATER MIST SYSTEM, AUTOMATIC. See "Automatic water mist system."

WATER-REACTIVE MATERIAL. A material that explodes; violently reacts; produces flammable, toxic or other hazardous gases; or evolves enough heat to cause autoignition or ignition of combustibles upon exposure to water or moisture. Water-reactive materials are subdivided as follows:

Class 3. Materials that react explosively with water without requiring heat or confinement.

Class 2. Materials that react violently with water or have the ability to boil water. Materials that produce flammable, toxic or other hazardous gases, or evolve enough heat to cause autoignition or ignition of combustibles upon exposure to water or moisture.

Class 1. Materials that react with water with some release of energy, but not violently.

WET FUELING. See "Mobile fueling."

WET HOSING. See "Mobile fueling."

WET-CHEMICAL EXTINGUISHING AGENT. A solution of water and potassium-carbonate-based chemical, potassium-acetate-based chemical or a combination thereof, forming an extinguishing agent.

INTERNATIONAL CODE COUNCIL®
Copyright © 2019 ICC & NYSDOS. ALL RIGHTS RESERVED. Accessed by Lauren Gualdino (lgualdino@briarcliffmanor.org), (-) Order Number #100880972 on May 08, 2020 07:05 AM (PDT) pursuant to License Agreement with ICC & NYSDOS. No further reproduction, no

100880972

WHARF. A structure or bulkhead constructed of wood, stone, concrete or similar material built at the shore of a harbor, lake or river for vessels to lie alongside of, and to anchor piers or floats.

WILDFIRE RISK AREA. Land that is covered with grass, grain, brush or forest, whether privately or publicly owned, which is so situated or is of such inaccessible location that a fire originating upon it would present an abnormally difficult job of suppression or would result in great or unusual damage through fire or such areas designated by the *fire code official*.

[BE] WINDER. A tread with nonparallel edges.

WIRELESS PROTECTION SYSTEM. A system or a part of a system that can transmit and receive signals without the aid of wire.

[NY] WORKMANLIKE. Executed in a skilled manner; e.g., generally plumb, level, square, in line, undamaged and without marring adjacent work.

WORKSTATION. A defined space or an independent principal piece of equipment using HPM within a fabrication area where a specific function, laboratory procedure or research activity occurs. *Approved* or *listed* hazardous materials storage cabinets, flammable liquid storage cabinets or gas cabinets serving a workstation are included as part of the workstation. A workstation is allowed to contain ventilation equipment, fire protection devices, detection devices, electrical devices and other processing and scientific equipment.

[BG] YARD. An open space, other than a *court*, unobstructed from the ground to the sky, except where specifically provided by the *Building Code of New York State*, on the lot on which a building is situated.

ZONE. A defined area within the protected premises. A zone can define an area from which a signal can be received, an area to which a signal can be sent or an area in which a form of control can be executed.

ZONE, NOTIFICATION. An area within a building or facility covered by notification appliances which are activated simultaneously.

INTERNATIONAL CODE COUNCIL®
Copyright © 2019 ICC & NYSDOS. ALL RIGHTS RESERVED. Accessed by Lauren Gualdino (lgualdino@briarcliffmanor.org), (-) Order Number #100880972 on May 08, 2020 07:05 AM (PDT) pursuant to License Agreement with ICC & NYSDOS. No further reproduction, no

100880972

INTERNATIONAL CODE COUNCIL®
Copyright © 2019 ICC & NYSDOS. ALL RIGHTS RESERVED. Accessed by Lauren Gualdino (lgualdino@briarcliffmanor.org), (-) Order Number #100880972 on May 08, 2020 07:05 AM (PDT) pursuant to License Agreement with ICC & NYSDOS. No further reproduction, no

100880972

Part II—General Safety Provisions

CHAPTER 3
GENERAL REQUIREMENTS

SECTION 301
GENERAL

301.1 Scope. The provisions of this chapter shall govern the occupancy and maintenance of all structures and premises for precautions against fire and the spread of fire and general requirements of fire safety.

301.2 Permits. Permits shall be required as set forth in Section 105.6 for the activities or uses regulated by Sections 306, 307, 308 and 315.

SECTION 302
DEFINITIONS

302.1 Definitions. The following terms are defined in Chapter 2:

BONFIRE.

HI-BOY.

HIGH-VOLTAGE TRANSMISSION LINE.

OPEN BURNING.

PORTABLE OUTDOOR FIREPLACE.

POWERED INDUSTRIAL TRUCK.

RECREATIONAL FIRE.

SKY LANTERN.

SECTION 303
ASPHALT KETTLES

303.1 Transporting. Asphalt (tar) kettles shall not be transported over any highway, road or street when the heat source for the kettle is operating.

Exception: Asphalt (tar) kettles in the process of patching road surfaces.

303.2 Location. Asphalt (tar) kettles shall not be located within 20 feet (6096 mm) of any combustible material, combustible building surface or any building opening and within a controlled area identified by the use of traffic cones, barriers or other *approved* means. Asphalt (tar) kettles and pots shall not be utilized inside or on the roof of a building or structure. Roofing kettles and operating asphalt (tar) kettles shall not block *means of egress*, gates, roadways or entrances.

303.3 Location of fuel containers. Fuel containers shall be located not less than 10 feet (3048 mm) from the burner.

Exception: Containers properly insulated from heat or flame are allowed to be within 2 feet (610 mm) of the burner.

303.4 Attendant. An operating kettle shall be attended by not less than one employee knowledgeable of the operations and hazards. The employee shall be within 100 feet (30 480 mm) of the kettle and have the kettle within sight. Ladders or similar obstacles shall not form a part of the route between the attendant and the kettle.

303.5 Fire extinguishers. There shall be a portable fire extinguisher complying with Section 906 and with a minimum 40-B:C rating within 25 feet (7620 mm) of each asphalt (tar) kettle during the period such kettle is being utilized. Additionally, there shall be one portable fire extinguisher with a minimum 3-A:40-B:C rating on the roof being covered.

303.6 Lids. Asphalt (tar) kettles shall be equipped with tight-fitting lids.

303.7 Hi-boys. Hi-boys shall be constructed of noncombustible materials. Hi-boys shall be limited to a capacity of 55 gallons (208 L). Fuel sources or heating elements shall not be allowed as part of a hi-boy.

303.8 Roofing kettles. Roofing kettles shall be constructed of noncombustible materials.

303.9 Fuel containers under air pressure. Fuel containers that operate under air pressure shall not exceed 20 gallons (76 L) in capacity and shall be *approved*.

SECTION 304
COMBUSTIBLE WASTE MATERIAL

304.1 Waste accumulation prohibited. Combustible waste material creating a fire hazard shall not be allowed to accumulate in buildings or structures or upon premises.

304.1.1 Waste material. Accumulations of wastepaper, wood, hay, straw, weeds, litter or combustible or flammable waste or rubbish of any type shall not be permitted to remain on a roof or in any *court*, yard, vacant lot, alley, parking lot, open space, or beneath a grandstand, *bleacher*, pier, wharf, manufactured home, recreational vehicle or other similar structure.

[NY] 304.1.2 Vegetation. Weeds, grass, vines or other growth that is capable of being ignited and endangering property, shall be cut down and removed by the *owner* or occupant of the premises.

304.1.3 Space underneath seats. Spaces underneath grandstand and bleacher seats shall be kept free from combustible and flammable materials. Except where enclosed in not less than 1-hour fire-resistance-rated construction in accordance with the *Building Code of New York State*.

INTERNATIONAL CODE COUNCIL®
Copyright © 2019 ICC & NYSDOS. ALL RIGHTS RESERVED. Accessed by Lauren Gualdino (lgualdino@briarcliffmanor.org), (-) Order Number #100880972 on May 08, 2020 07:05 AM (PDT) pursuant to License Agreement with ICC & NYSDOS. No further reproduction, no

100880972

304.1.3.1 Spaces underneath grandstands and bleachers. Spaces underneath grandstands and bleachers shall not be occupied or utilized for purposes other than means of egress except where equipped with an automatic sprinkler system in accordance with Section 903.2.1.5.1, or separated with fire barriers and horizontal assemblies in accordance with Section 1029.1.1.1.

304.2 Storage. Storage of combustible rubbish shall not produce conditions that will create a nuisance or a hazard to the public health, safety or welfare.

304.3 Containers. Combustible rubbish, and waste material kept within or near a structure shall be stored in accordance with Sections 304.3.1 through 304.3.4.

304.3.1 Spontaneous ignition. Materials susceptible to spontaneous ignition, such as oily rags, shall be stored in a *listed* disposal container. Contents of such containers shall be removed and disposed of daily.

304.3.2 Capacity exceeding 5.33 cubic feet. Containers with a capacity exceeding 5.33 cubic feet (40 gallons) (0.15 m^3) shall be provided with lids. Containers and lids shall be constructed of noncombustible materials or of combustible materials with a peak rate of heat release not exceeding 300 kW/m^2 where tested in accordance with ASTM E1354 at an incident heat flux of 50 kW/m^2 in the horizontal orientation.

Exception: Wastebaskets complying with Section 808.

304.3.3 Capacity exceeding 1.5 cubic yards. Dumpsters and containers with an individual capacity of 1.5 cubic yards [40.5 cubic feet (1.15 m^3)] or more shall not be stored in buildings or placed within 5 feet (1524 mm) of combustible walls, openings or combustible roof eave lines.

Exceptions:

1. Dumpsters or containers that are placed inside buildings in areas protected by an *approved automatic sprinkler system* installed throughout in accordance with Section 903.3.1.1, 903.3.1.2 or 903.3.1.3.
2. Storage in a structure shall not be prohibited where the structure is of Type I or IIA construction, located not less than 10 feet (3048 mm) from other buildings and used exclusively for dumpster or container storage.
3. Dumpsters or containers that are located adjacent to buildings where the exterior area is protected by an approved automatic sprinkler system.

304.3.4 Capacity of 1 cubic yard or more. Dumpsters with an individual capacity of 1.0 cubic yard [200 gallons (0.76 m^3)] or more shall not be stored in buildings or placed within 5 feet (1524 mm) of combustible walls, openings or combustible roof eave lines unless the dumpsters are constructed of noncombustible materials or of combustible materials with a peak rate of heat release not exceeding 300 kW/m^2 where tested in accordance with ASTM E1354 at an incident heat flux of 50 kW/m^2 in the horizontal orientation.

Exceptions:

1. Dumpsters in areas protected by an *approved automatic sprinkler system* installed throughout in accordance with Section 903.3.1.1, 903.3.1.2 or 903.3.1.3.
2. Storage in a structure shall not be prohibited where the structure is of Type I or IIA construction, located not less than 10 feet (3048 mm) from other buildings and used exclusively for dumpster or container storage.

SECTION 305
IGNITION SOURCES

305.1 Clearance from ignition sources. Clearance between ignition sources, such as luminaires, heaters, flame-producing devices and combustible materials, shall be maintained in an *approved* manner.

305.2 Hot ashes and spontaneous ignition sources. Hot ashes, cinders, smoldering coals or greasy or oily materials subject to spontaneous ignition shall not be deposited in a combustible receptacle, within 10 feet (3048 mm) of other combustible material including combustible walls and partitions or within 2 feet (610 mm) of openings to buildings.

Exception: The minimum required separation distance to other combustible materials shall be 2 feet (610 mm) where the material is deposited in a covered, noncombustible receptacle placed on a noncombustible floor, ground surface or stand.

305.3 Open-flame warning devices. Open-flame warning devices shall not be used along an excavation, road, or any place where the dislodgment of such device might permit the device to roll, fall or slide on to any area or land containing combustible material.

305.4 Deliberate or negligent burning. It shall be unlawful to deliberately or through negligence set fire to or cause the burning of combustible material in such a manner as to endanger the safety of persons or property.

305.5 Unwanted fire ignitions. Acts or processes that have caused repeated ignition of unwanted fires shall be modified to prevent future ignition.

SECTION 306
MOTION PICTURE PROJECTION ROOMS AND FILM

306.1 Motion picture projection rooms. Electric arc, xenon or other light source projection equipment that develops hazardous gases, dust or radiation and the projection of ribbon-type cellulose nitrate film, regardless of the light source used

INTERNATIONAL CODE COUNCIL®
Copyright © 2019 ICC & NYSDOS. ALL RIGHTS RESERVED. Accessed by Lauren Gualdino (lgualdino@briarcliffmanor.org), (-) Order Number #100880972 on May 08, 2020 07:05 AM (PDT) pursuant to License Agreement with ICC & NYSDOS. No further reproduction, no

100880972

in projection, shall be operated within a motion picture projection room complying with Section 409 of the *Building Code of New York State*.

306.2 Cellulose nitrate film storage. Storage of cellulose nitrate film shall be in accordance with NFPA 40.

SECTION 307
OPEN BURNING, RECREATIONAL FIRES AND PORTABLE OUTDOOR FIREPLACES

307.1 General. A person shall not kindle or maintain or authorize to be kindled or maintained any *open burning* unless conducted and *approved* in accordance with Sections 307.1.1 through 307.5.

307.1.1 Prohibited open burning. Open burning shall be prohibited when atmospheric conditions or local circumstances make such fires hazardous.

Exception: Prescribed burning for the purpose of reducing the impact of wildland fire when authorized by the *fire code official*.

307.2 Permit required. A permit shall be obtained from the *fire code official* in accordance with Section 105.6 prior to kindling a fire for recognized silvicultural or range or wildlife management practices, prevention or control of disease or pests, or a bonfire. Application for such approval shall only be presented by and permits issued to the *owner* of the land on which the fire is to be kindled.

307.2.1 Authorization. Where required by state or local law or regulations, *open burning* shall only be permitted with prior approval from the state or local air and water quality management authority, provided that all conditions specified in the authorization are followed.

307.3 Extinguishment authority. Where open burning creates or adds to a hazardous situation, or a required permit for open burning has not been obtained, the *fire code official* is authorized to order the extinguishment of the open burning operation.

307.4 Location. The location for *open burning* shall be not less than 50 feet (15 240 mm) from any structure, and provisions shall be made to prevent the fire from spreading to within 50 feet (15 240 mm) of any structure.

Exceptions:

1. Fires in *approved* containers that are not less than 15 feet (4572 mm) from a structure.
2. The minimum required distance from a structure shall be 25 feet (7620 mm) where the pile size is 3 feet (914 mm) or less in diameter and 2 feet (610 mm) or less in height.

307.4.1 Bonfires. A bonfire shall not be conducted within 50 feet (15 240 mm) of a structure or combustible material unless the fire is contained in a barbecue pit. Conditions that could cause a fire to spread within 50 feet (15 240 mm) of a structure shall be eliminated prior to ignition.

307.4.2 Recreational fires. *Recreational fires* shall not be conducted within 25 feet (7620 mm) of a structure or combustible material. Conditions that could cause a fire to spread within 25 feet (7620 mm) of a structure shall be eliminated prior to ignition.

307.4.3 Portable outdoor fireplaces. Portable outdoor fireplaces shall be used in accordance with the manufacturer's instructions and shall not be operated within 15 feet (3048 mm) of a structure or combustible material.

Exception: Portable outdoor fireplaces used at one- and two-family *dwellings*.

307.5 Attendance. *Open burning*, bonfires, *recreational fires* and use of portable outdoor fireplaces shall be constantly attended until the fire is extinguished. Not fewer than one portable fire extinguisher complying with Section 906 with a minimum 4-A rating or other *approved* on-site fire-extinguishing equipment, such as dirt, sand, water barrel, garden hose or water truck, shall be available for immediate utilization.

SECTION 308
OPEN FLAMES

308.1 General. Open flame, fire and burning on all premises shall be in accordance with Sections 308.1.1 through 308.4.1 and with other applicable sections of this code.

308.1.1 Where prohibited. A person shall not take or utilize an open flame or light in a structure, vessel, boat or other place where highly flammable, combustible or explosive material is utilized or stored. Lighting appliances shall be well-secured in a glass globe and wire mesh cage or a similar *approved* device.

308.1.2 Throwing or placing sources of ignition. A person shall not throw or place, or cause to be thrown or placed, a lighted match, cigar, cigarette, matches, or other flaming or glowing substance or object on any surface or article where it can cause an unwanted fire.

308.1.3 Torches for removing paint. A person utilizing a torch or other flame-producing device for removing paint from a structure shall provide not less than one portable fire extinguisher complying with Section 906 and with a minimum 4-A rating, two portable fire extinguishers, each with a minimum 2-A rating, or a water hose connected to the water supply on the premises where such burning is done. The person doing the burning shall remain on the premises 1 hour after the torch or flame-producing device is utilized.

308.1.4 Open-flame cooking devices. Charcoal burners and other open-flame cooking devices shall not be operated on combustible balconies or within 10 feet (3048 mm) of combustible construction**.**

Exceptions:

1. One- and two-family *dwellings*.
2. Where buildings, balconies and decks are protected by an *automatic sprinkler system*.
3. LP-gas cooking devices having LP-gas container with a water capacity not greater than $2^{1}/_{2}$ pounds [nominal 1 pound (0.454 kg) LP-gas capacity].

308.1.5 Location near combustibles. Open flames such as from candles, lanterns, kerosene heaters and gas-fired

INTERNATIONAL CODE COUNCIL®
Copyright © 2019 ICC & NYSDOS. ALL RIGHTS RESERVED. Accessed by Lauren Gualdino (lgualdino@briarcliffmanor.org), (-) Order Number #100880972 on May 08, 2020 07:05 AM (PDT) pursuant to License Agreement with ICC & NYSDOS. No further reproduction, no

100880972

heaters shall not be located on or near decorative material or similar combustible materials.

308.1.6 Open-flame devices. Torches and other devices, machines or processes liable to start or cause fire shall not be operated or used in or on wildfire risk areas, except by a permit in accordance with Section 105.6 secured from the *fire code official*.

Exception: Use within inhabited premises or designated campsites that are not less than 30 feet (9144 mm) from grass-, grain-, brush- or forest-covered areas.

308.1.6.1 Signals and markers. Flame-employing devices, such as lanterns or kerosene road flares, shall not be operated or used as a signal or marker in or on wildfire risk areas.

Exception: The proper use of fusees at the scenes of emergencies or as required by standard railroad operating procedures.

308.1.6.2 Portable fueled open-flame devices. Portable open-flame devices fueled by flammable or combustible gases or liquids shall be enclosed or installed in such a manner as to prevent the flame from contacting combustible material.

Exceptions:

1. LP-gas-fueled devices used for sweating pipe joints or removing paint in accordance with Chapter 61.
2. Cutting and welding operations in accordance with Chapter 35.
3. Torches or flame-producing devices in accordance with Section 308.4.
4. Candles and open-flame decorative devices in accordance with Section 308.3.

308.1.6.3 Sky lanterns. A person shall not release or cause to be released an untethered sky lantern.

308.1.7 Religious ceremonies. Where, in the opinion of the *fire code official*, adequate safeguards have been taken, participants in religious ceremonies are allowed to carry hand-held candles. Hand-held candles shall not be passed from one person to another while lighted.

308.1.7.1 Aisles and exits. Candles shall be prohibited in areas where occupants stand, or are in an *aisle* or *exit*.

308.1.8 Flaming food and beverage preparation. The preparation of flaming foods or beverages in places of assembly and drinking or dining establishments shall be in accordance with Sections 308.1.8.1 through 308.1.8.5.

308.1.8.1 Dispensing. Flammable or *combustible liquids* used in the preparation of flaming foods or beverages shall be dispensed from one of the following:

1. A 1-ounce (29.6 ml) container.
2. A container not exceeding 1-quart (946.5 ml) capacity with a controlled pouring device that will limit the flow to a 1-ounce (29.6 ml) serving.

308.1.8.2 Containers not in use. Containers shall be secured to prevent spillage when not in use.

308.1.8.3 Serving of flaming food. The serving of flaming foods or beverages shall be done in a safe manner and shall not create high flames. The pouring, ladling or spooning of liquids is restricted to a maximum height of 8 inches (203 mm) above the receiving receptacle.

308.1.8.4 Location. Flaming foods or beverages shall be prepared only in the immediate vicinity of the table being serviced. They shall not be transported or carried while burning.

308.1.8.5 Fire protection. The person preparing the flaming foods or beverages shall have a wet cloth towel immediately available for use in smothering the flames in the event of an emergency.

308.2 Permits required. Permits shall be obtained from the *fire code official* in accordance with Section 105.6 prior to engaging in the following activities involving open flame, fire and burning:

1. Use of a torch or flame-producing device to remove paint from a structure.
2. Use of open flame, fire or burning in connection with Group A or E occupancies.
3. Use or operation of torches and other devices, machines or processes liable to start or cause fire in or on wildfire risk areas.

308.3 Group A occupancies. Open-flame devices shall not be used in a Group A occupancy.

Exceptions:

1. Open-flame devices are allowed to be used in the following situations, provided that *approved* precautions are taken to prevent ignition of a combustible material or injury to occupants:
   1.1. Where necessary for ceremonial or religious purposes in accordance with Section 308.1.7.
   1.2. On stages and platforms as a necessary part of a performance in accordance with Section 308.3.2.
   1.3. Where candles on tables are securely supported on substantial noncombustible bases and the candle flames are protected.
2. Heat-producing equipment complying with Chapter 6 and the *Mechanical Code of New York State*.
3. Gas lights are allowed to be used provided that adequate precautions satisfactory to the *fire code official* are taken to prevent ignition of combustible materials.

308.3.1 Open-flame decorative devices. Open-flame decorative devices shall comply with all of the following restrictions:

1. Class I and Class II liquids and LP-gas shall not be used.
2. Liquid- or solid-fueled lighting devices containing more than 8 ounces (237 ml) of fuel must self-extinguish and not leak fuel at a rate of more than

INTERNATIONAL CODE COUNCIL®
Copyright © 2019 ICC & NYSDOS. ALL RIGHTS RESERVED. Accessed by Lauren Gualdino (lgualdino@briarcliffmanor.org), (-) Order Number #100880972 on May 08, 2020 07:05 AM (PDT) pursuant to License Agreement with ICC & NYSDOS. No further reproduction, no

100880972

0.25 teaspoon per minute (1.26 ml per minute) if tipped over.

3. The device or holder shall be constructed to prevent the spillage of liquid fuel or wax at the rate of more than 0.25 teaspoon per minute (1.26 ml per minute) when the device or holder is not in an upright position.
4. The device or holder shall be designed so that it will return to the upright position after being tilted to an angle of 45 degrees (0.79 rad) from vertical.

   Exception: Devices that self-extinguish if tipped over and do not spill fuel or wax at the rate of more than 0.25 teaspoon per minute (1.26 ml per minute) if tipped over.
5. The flame shall be enclosed except where openings on the side are not more than 0.375-inch (9.5 mm) diameter or where openings are on the top and the distance to the top is such that a piece of tissue paper placed on the top will not ignite in 10 seconds.
6. Chimneys shall be made of noncombustible materials and securely attached to the open-flame device.

   Exception: A chimney is not required to be attached to any open-flame device that will self-extinguish if the device is tipped over.
7. Fuel canisters shall be safely sealed for storage.
8. Storage and handling of *combustible liquids* shall be in accordance with Chapter 57.
9. Shades, where used, shall be made of noncombustible materials and securely attached to the open-flame device holder or chimney.
10. Candelabras with flame-lighted candles shall be securely fastened in place to prevent overturning, and shall be located away from occupants using the area and away from possible contact with drapes, curtains or other combustibles.

308.3.2 Theatrical performances. Where *approved*, open-flame devices used in conjunction with theatrical performances are allowed to be used where adequate safety precautions have been taken in accordance with NFPA 160.

308.4 Group R occupancies. Open flame, fire and burning in Group R occupancies shall comply with the requirements of Sections 308.1 through 308.1.6.3 and Section 308.4.1.

308.4.1 Group R-2 dormitories. Candles, incense and similar open-flame-producing items shall not be allowed in sleeping units in Group R-2 dormitory occupancies.

SECTION 309
POWERED INDUSTRIAL TRUCKS AND EQUIPMENT

309.1 General. Powered industrial trucks and similar equipment including, but not limited to, floor scrubbers and floor buffers, shall be operated and maintained in accordance with Section 309.2 through 309.7.

309.2 Use in hazardous (classified) locations. Powered industrial trucks used in areas designated as hazardous (classified) locations in accordance with NFPA 70 shall be listed and labeled for use in the environment intended in accordance with NFPA 505.

309.3 Battery chargers. Battery chargers shall be of an *approved* type. Combustible storage shall be kept not less than 3 feet (915 mm) from battery chargers. Battery charging shall not be conducted in areas open to the public.

309.4 Ventilation. Ventilation shall be provided in an *approved* manner in battery-charging areas to prevent a dangerous accumulation of flammable gases.

309.5 Fire extinguishers. Battery-charging areas shall be provided with a fire extinguisher complying with Section 906 having a minimum 4-A:20-B:C rating within 20 feet (6096 mm) of the battery charger.

309.6 Refueling. Powered industrial trucks using liquid fuel, LP-gas or hydrogen shall be refueled outside of buildings or in areas specifically *approved* for that purpose. Fixed fuel-dispensing equipment and associated fueling operations shall be in accordance with Chapter 23. Other fuel-dispensing equipment and operations, including cylinder exchange for LP-gas-fueled vehicles, shall be in accordance with Chapter 57 for flammable and *combustible liquids* or Chapter 61 for LP-gas.

309.7 Repairs. Repairs to fuel systems, electrical systems and repairs utilizing open flame or welding shall be done in *approved* locations outside of buildings or in areas specifically *approved* for that purpose.

SECTION 310
SMOKING

310.1 General. The smoking or carrying of a lighted pipe, cigar, cigarette or any other type of smoking paraphernalia or material is prohibited in the areas indicated in Sections 310.2 through 310.8.

310.2 Prohibited areas. Smoking shall be prohibited where conditions are such as to make smoking a hazard, and in spaces where flammable or combustible materials are stored or handled.

310.3 "No Smoking" signs. The *fire code official* is authorized to order the posting of "No Smoking" signs in a conspicuous location in each structure or location in which smoking is prohibited. The content, lettering, size, color and location of required "No Smoking" signs shall be *approved*.

Exception: In Group I-2 occupancies where smoking is prohibited, "No Smoking" signs are not required in interior locations of the facility where signs are displayed at all major entrances into the facility.

310.4 Removal of signs prohibited. A posted "No Smoking" sign shall not be obscured, removed, defaced, mutilated or destroyed.

310.5 Compliance with "No Smoking" signs. Smoking shall not be permitted nor shall a person smoke, throw or deposit any lighted or smoldering substance in any place where "No Smoking" signs are posted.

INTERNATIONAL CODE COUNCIL®
Copyright © 2019 ICC & NYSDOS. ALL RIGHTS RESERVED. Accessed by Lauren Gualdino (lgualdino@briarcliffmanor.org), (-) Order Number #100880972 on May 08, 2020 07:05 AM (PDT) pursuant to License Agreement with ICC & NYSDOS. No further reproduction, no

100880972

310.6 Ash trays. Where smoking is permitted, suitable noncombustible ash trays or match receivers shall be provided on each table and at other appropriate locations.

310.7 Burning objects. Lighted matches, cigarettes, cigars or other burning object shall not be discarded in such a manner that could cause ignition of other combustible material.

310.8 Hazardous environmental conditions. Where the *fire code official* determines that hazardous environmental conditions necessitate controlled use of smoking materials, the ignition or use of such materials in mountainous, brush-covered or forest-covered areas or other designated areas is prohibited except in *approved* designated smoking areas.

SECTION 311
VACANT PREMISES

311.1 General. Temporarily unoccupied buildings, structures, premises or portions thereof, including tenant spaces, shall be safeguarded and maintained in accordance with Sections 311.1.1 through 311.6.

[NY] 311.1.1 Reserved.

311.1.2 Tenant spaces. Storage and lease plans required by this code shall be revised and updated to reflect temporary or partial vacancies.

311.2 Safeguarding vacant premises. Temporarily unoccupied buildings, structures, premises or portions thereof shall be secured and protected in accordance with Sections 311.2.1 through 311.2.3.

311.2.1 Security. Exterior and interior openings open to other tenants or unauthorized persons shall be boarded, locked, blocked or otherwise protected to prevent entry by unauthorized individuals. The *fire code official* is authorized to placard, post signs, erect barrier tape or take similar measures as necessary to secure public safety.

311.2.2 Fire protection. Fire alarm, sprinkler and standpipe systems shall be maintained in an operable condition at all times.

Exceptions:

1. Where the premises have been cleared of all combustible materials and debris and, in the opinion of the *fire code official*, the type of construction, *fire separation distance* and security of the premises do not create a fire hazard.
2. Where *approved* by the *fire code official*, buildings that will not be heated and where *fire protection systems* will be exposed to freezing temperatures, fire alarm and sprinkler systems are permitted to be placed out of service and standpipes are permitted to be maintained as dry systems (without an automatic water supply), provided that the building does not have contents or storage, and windows, doors and other openings are secured to prohibit entry by unauthorized persons.
3. Where *approved* by the *fire code official*, fire alarm and sprinkler systems are permitted to be placed out of service in seasonally occupied buildings: that will not be heated; where fire protection systems will be exposed to freezing temperatures; where *fire areas* do not exceed 12,000 square feet (1115 m^2); and that do not store motor vehicles or hazardous materials.

311.2.3 Fire separation. Fire-resistance-rated partitions, *fire barriers* and *fire walls* separating vacant tenant spaces from the remainder of the building shall be maintained. Openings, joints and penetrations in fire-resistance-rated assemblies shall be protected in accordance with Chapter 7.

311.3 Removal of combustibles. Persons owning, or in charge or control of, a vacant building or portion thereof, shall remove therefrom all accumulations of combustible materials, flammable or combustible waste or rubbish and shall securely lock or otherwise secure doors, windows and other openings to prevent entry by unauthorized persons. The premises shall be maintained clear of waste or hazardous materials.

Exceptions:

1. Buildings or portions of buildings undergoing additions, *alterations*, repairs or change of occupancy in accordance with the *Building Code of New York State*, where waste is controlled and removed as required by Section 304.
2. Seasonally occupied buildings.

311.4 Removal of hazardous materials. Persons owning or having charge or control of a vacant building containing hazardous materials regulated by Chapter 50 shall comply with the facility closure requirements of Section 5001.6.

311.5 Placards. Any vacant or abandoned buildings or structures determined to be unsafe pursuant to Section 108 of this code relating to structural or interior hazards shall be marked as required by Sections 311.5.1 through 311.5.5.

311.5.1 Placard location. Placards shall be applied on the front of the structure and be visible from the street. Additional placards shall be applied to the side of each entrance to the structure and on penthouses.

311.5.2 Placard size and color. Placards shall be 24 inches by 24 inches (610 mm by 610 mm) minimum in size with a red background, white reflective stripes and a white reflective border. The stripes and border shall have a 2-inch (51 mm) minimum stroke.

311.5.3 Placard date. Placards shall bear the date of their application to the building and the date of the most recent inspection.

311.5.4 Placard symbols. The design of the placards shall use the following symbols:

1. ☐ This symbol shall mean that the structure had normal structural conditions at the time of marking.
2. ⊠ This symbol shall mean that structural or interior hazards exist and interior fire-fighting or rescue operations should be conducted with extreme caution.

INTERNATIONAL CODE COUNCIL®
Copyright © 2019 ICC & NYSDOS. ALL RIGHTS RESERVED. Accessed by Lauren Gualdino (lgualdino@briarcliffmanor.org), (-) Order Number #100880972 on May 08, 2020 07:05 AM (PDT) pursuant to License Agreement with ICC & NYSDOS. No further reproduction, no

100880972

3. ☒ This symbol shall mean that structural or interior hazards exist to a degree that consideration should be given to limit fire fighting to exterior operations only, with entry only occurring for known life hazards.
4. Vacant marker hazard identification symbols: The following symbols shall be used to designate known hazards on the vacant building marker. They shall be placed directly above the symbol.
   4.1. R/O—Roof open.
   4.2. S/M—Stairs, steps and landing missing.
   4.3. F/E—Avoid fire escapes.
   4.4. H/F—Holes in floor.

311.5.5 Informational use. The use of these symbols shall be informational only and shall not in any way limit the discretion of the on-scene incident commander.

311.6 Unoccupied tenant spaces in mall buildings. Unoccupied tenant spaces in covered and open mall buildings shall be:

1. Kept free from the storage of any materials.
2. Separated from the remainder of the building by partitions of not less than 0.5-inch-thick (12.7 mm) gypsum board or an *approved* equivalent to the underside of the ceiling of the adjoining tenant spaces.
3. Without doors or other access openings other than one door that shall be kept key locked in the closed position except during that time when opened for inspection.
4. Kept free from combustible waste and be broomswept clean.

SECTION 312
VEHICLE IMPACT PROTECTION

312.1 General. Vehicle impact protection required by this code shall be provided by posts that comply with Section 312.2 or by other *approved* physical barriers that comply with Section 312.3.

312.2 Posts. Guard posts shall comply with all of the following requirements:

1. Constructed of steel not less than 4 inches (102 mm) in diameter and concrete filled.
2. Spaced not more than 4 feet (1219 mm) between posts on center.
3. Set not less than 3 feet (914 mm) deep in a concrete footing of not less than a 15-inch (381 mm) diameter.
4. Set with the top of the posts not less than 3 feet (914 mm) above ground.
5. Located not less than 3 feet (914 mm) from the protected object.

312.3 Other barriers. Barriers, other than posts specified in Section 312.2, that are designed to resist, deflect or visually deter vehicular impact commensurate with an anticipated impact scenario shall be permitted where *approved*.

SECTION 313
FUELED EQUIPMENT

313.1 General. Fueled equipment including, but not limited to, motorcycles, mopeds, lawn-care equipment, portable generators and portable cooking equipment, shall not be stored, operated or repaired within a building.

Exceptions:

1. Buildings or rooms constructed for such use in accordance with the *Building Code of New York State.*
2. Where allowed by Section 314.
3. Storage of equipment utilized for maintenance purposes is allowed in *approved* locations where the aggregate fuel capacity of the stored equipment does not exceed 10 gallons (38 L) and the building is equipped throughout with an *automatic sprinkler system* installed in accordance with Section 903.3.1.1.

313.1.1 Removal. The *fire code official* is authorized to require removal of fueled equipment from locations where the presence of such equipment is determined by the *fire code official* to be hazardous.

313.2 Group R occupancies. Vehicles powered by flammable liquids, Class II *combustible liquids* or compressed flammable gases shall not be stored within the living space of Group R buildings.

SECTION 314
INDOOR DISPLAYS

314.1 General. Indoor displays constructed within any occupancy shall comply with Sections 314.2 through 314.4.

314.2 Fixtures and displays. Fixtures and displays of goods for sale to the public shall be arranged so as to maintain free, immediate and unobstructed access to exits as required by Chapter 10.

314.3 Highly combustible goods. The display of highly combustible goods, including but not limited to fireworks, flammable or *combustible liquids*, liquefied flammable gases, oxidizing materials, pyroxylin plastics and agricultural goods, in main *exit access aisles*, *corridors*, covered and open malls, or within 5 feet (1524 mm) of entrances to *exits* and exterior exit doors is prohibited where a fire involving such goods would rapidly prevent or obstruct egress.

314.4 Vehicles. Liquid-fueled or gaseous-fueled vehicles, boats or other motorcraft shall not be located indoors except as follows:

1. Batteries are disconnected except where the *fire code official* requires that the batteries remain connected to maintain safety features.
2. Fuel in fuel tanks does not exceed one-quarter tank or 5 gallons (19 L) (whichever is least).
3. Fuel tanks and fill openings are closed and sealed to prevent tampering.

INTERNATIONAL CODE COUNCIL®
Copyright © 2019 ICC & NYSDOS. ALL RIGHTS RESERVED. Accessed by Lauren Gualdino (lgualdino@briarcliffmanor.org), (-) Order Number #100880972 on May 08, 2020 07:05 AM (PDT) pursuant to License Agreement with ICC & NYSDOS. No further reproduction, no

100880972

4. Vehicles, boats or other motorcraft equipment are not fueled or defueled within the building.

SECTION 315
GENERAL STORAGE

315.1 General. Storage shall be in accordance with Sections 315.2 through 315.6. Outdoor pallet storage shall be in accordance with Sections 315.2 and 315.7.

Exception: Wood and wood composite pallets stored outdoors at pallet manufacturing and recycling facilities and complying with Section 2810.

315.2 Permit required. A permit for miscellaneous combustible storage shall be required as set forth in Section 105.6.

315.3 Storage in buildings. Storage of materials in buildings shall be orderly and stacks shall be stable. Storage of combustible materials shall be separated from heaters or heating devices by distance or shielding so that ignition cannot occur.

315.3.1 Ceiling clearance. Storage shall be maintained 2 feet (610 mm) or more below the ceiling in nonsprinklered areas of buildings or not less than 18 inches (457 mm) below sprinkler head deflectors in sprinklered areas of buildings.

Exceptions:

1. The 2-foot (610 mm) ceiling clearance is not required for storage along walls in nonsprinklered areas of buildings.
2. The 18-inch (457 mm) ceiling clearance is not required for storage along walls in areas of buildings equipped with an *automatic sprinkler system* in accordance with Section 903.3.1.1, 903.3.1.2 or 903.3.1.3

315.3.2 Means of egress. Combustible materials shall not be stored in *exits* or enclosures for *stairways* and *ramps*. Combustible materials in the means of egress during construction, demolition, remodeling or alterations shall comply with Section 3311.3.

315.3.3 Equipment rooms. Combustible material shall not be stored in boiler rooms, mechanical rooms, electrical equipment rooms or in *fire command centers* as specified in Section 508.1.5.

315.3.4 Attic, under-floor and concealed spaces. Attic, under-floor and concealed spaces used for storage of combustible materials shall be protected on the storage side as required for 1-hour *fire-resistance-rated* construction. Openings shall be protected by assemblies that are self-closing and are of noncombustible construction or solid wood core not less than $1^3/_4$ inches (44.5 mm) in thickness. Storage shall not be placed on exposed joists.

Exceptions:

1. Areas protected by *approved automatic sprinkler systems*.
2. Group R-3 and Group U occupancies.

315.4 Outside storage. Outside storage of combustible materials shall not be located within 10 feet (3048 mm) of a *lot line*.

Exceptions:

1. The separation distance is allowed to be reduced to 3 feet (914 mm) for storage not exceeding 6 feet (1829 mm) in height.
2. The separation distance is allowed to be reduced where the *fire code official* determines that hazard to the adjoining property does not exist.

315.4.1 Storage beneath overhead projections from buildings. Where buildings are protected by an *automatic sprinkler system*, the outdoor storage, display and handling of combustible materials under eaves, canopies or other projections or overhangs are prohibited except where automatic sprinklers are installed under such eaves, canopies or other projections or overhangs.

315.4.2 Height. Storage in the open shall not exceed 20 feet (6096 mm) in height.

315.5 Storage underneath high-voltage transmission lines. Storage located underneath high-voltage transmission lines shall be in accordance with Section 316.6.2.

315.6 Storage in plenums. Storage is prohibited in plenums. Abandoned material in plenums shall be deemed to be storage and shall be removed. Where located in plenums, the portion of abandoned cables that are able to be accessed without causing damage, or requiring demolition to the building shall be identified for future use with a tag or shall be deemed storage and shall be removed.

315.7 Outdoor pallet storage. Pallets stored outdoors shall comply with Sections 315.7 through 315.7.7. Pallets stored within a building shall be protected in accordance with Chapter 32.

315.7.1 Storage beneath overhead projections from buildings. Where buildings are equipped throughout with an *automatic sprinkler system*, the outdoor storage of pallets under eaves, canopies or other projections or overhangs are prohibited except where automatic sprinklers are installed under such eaves, canopies or other projections or overhangs.

315.7.2 Distance to lot line. Pallet storage shall not be located within 10 feet (3048 mm) of a *lot line*.

315.7.3 Storage height. Pallet storage shall not exceed 20 feet (6096 mm) in height.

315.7.4 Pallet pile stability and size. Pallet stacks shall be arranged to form stable piles. Individual pallet piles shall cover an area not greater than 400 square feet (37 m^2).

315.7.5 Pallet types. Pallets shall be all wood, with slatted or solid top or bottom, with metal fasteners, or shall be plastic or composite pallets, listed and labeled in accordance with UL 2335 or FM 4996. Plastic pallets shall be both solid and gridded deck, independent of the pallet manufacturing process, type of resin used in fabrication or geometry of the pallet.

INTERNATIONAL CODE COUNCIL®
Copyright © 2019 ICC & NYSDOS. ALL RIGHTS RESERVED. Accessed by Lauren Gualdino (lgualdino@briarcliffmanor.org), (-) Order Number #100880972 on May 08, 2020 07:05 AM (PDT) pursuant to License Agreement with ICC & NYSDOS. No further reproduction, no

100880972

315.7.6 Pile separation distances. In addition to the other requirements of this section, pallet stacks and piles shall be separated in accordance with Sections 315.7.6.1 and 315.7.6.2.

315.7.6.1 Building separation. Pallet stacks and piles shall be separated from buildings in accordance with Table 315.7.6(1) for wood pallets and Table 315.7.6(2) for plastic pallets.

315.7.6.2 Separation from other pallets and on-site storage. Pallets shall be separated from other pallet piles and other storage in accordance with Table 315.7.6(3) for wood pallets and Table 315.7.6(4) for plastic pallets.

315.7.7 Prohibited locations. Pallets shall not be stored underneath high-voltage transmission lines, elevated roadways or elevated railways.

SECTION 316
HAZARDS TO FIRE FIGHTERS

316.1 Trapdoors to be closed. Trapdoors and scuttle covers, other than those that are within a *dwelling unit* or automatically operated, shall be kept closed at all times except when in use.

316.2 Shaftway markings. Vertical shafts shall be identified as required by this section.

316.2.1 Exterior access to shaftways. Outside openings that can be reached by the fire department and that open directly on a hoistway or shaftway communicating between two or more floors in a building shall be plainly marked with the word SHAFTWAY in red letters not less than 6 inches (152 mm) high on a white background. Such warning signs shall be placed so as to be readily discernible from the outside of the building.

316.2.2 Interior access to shaftways. Door or window openings to a hoistway or shaftway from the interior of the building shall be plainly marked with the word SHAFTWAY in red letters not less than 6 inches (152 mm) high on a white background. Such warning signs shall be placed so as to be readily discernible.

Exception: Marking shall not be required on shaftway openings that are readily discernible as openings onto a shaftway by the construction or arrangement.

316.3 Pitfalls. The intentional design or *alteration* of buildings to disable, injure, maim or kill intruders is prohibited. A person shall not install and use firearms, sharp or pointed objects, razor wire, *explosives*, flammable or *combustible liquid* containers, or dispensers containing highly toxic, toxic, irritant or other hazardous materials in a manner that could passively or actively disable, injure, maim or kill a fire fighter

TABLE 315.7.6(1)
SEPARATION DISTANCE BETWEEN WOOD PALLET STACKS AND BUILDINGS

WALL CONSTRUCTION	OPENING TYPE	WOOD PALLET SEPARATION DISTANCE (feet)		
		≤ 50 Pallets	51 to 200 Pallets	> 200 Pallets
Masonry	None	2	2	2
Masonry	Fire-rated glazing with open sprinklers	2	5	20
Masonry	Fire-rated glazing	10	5	20
Masonry	Plain glass with open sprinklers	10	5	20
Noncombustible	None	10	5	20
Wood with open sprinklers	—	10	5	20
Wood	None	15	30	90
Any	Plain glass	15	30	90

For SI: 1 foot = 304.8 mm.

TABLE 315.7.6(2)
SEPARATION DISTANCE BETWEEN PLASTIC PALLET STACKS AND BUILDINGS

WALL CONSTRUCTION	OPENING TYPE	PLASTIC PALLET SEPARATION DISTANCE (feet)		
		≤ 50 Pallets	51 to 200 Pallets	> 200 Pallets
Masonry	None	2	2	2
Masonry	Fire-rated glazing with open sprinklers	10	20	50
Masonry	Fire-rated glazing	15	40	100
Masonry	Plain glass with open sprinklers	15	40	100
Noncombustible	None	15	40	100
Wood with open sprinklers	—	15	40	100
Wood	None	30	80	150
Any	Plain glass	30	80	150

For SI: 1 foot = 304.8 mm.

INTERNATIONAL CODE COUNCIL®
Copyright © 2019 ICC & NYSDOS. ALL RIGHTS RESERVED. Accessed by Lauren Gualdino (lgualdino@briarcliffmanor.org), (-) Order Number #100880972 on May 08, 2020 07:05 AM (PDT) pursuant to License Agreement with ICC & NYSDOS. No further reproduction, no

100880972

TABLE 315.7.6(3)
SEPARATION FROM OTHER PALLET PILES AND ON-SITE STORAGE (WOOD PALLETS)

	WOOD PALLET SEPARATION DISTANCE (feet)		
	≤ 50 Pallets	51 to 200 Pallets	> 200 Pallets
Between pallet piles	7.5	15	45
Other on-site storage	7.5	15	45

For SI: 1 foot = 304.8 mm.

TABLE 315.7.6(4)
SEPARATION FROM OTHER PALLET PILES AND ON-SITE STORAGE (PLASTIC PALLETS)

	PLASTIC PALLET SEPARATION DISTANCE (feet)		
	≤ 50 Pallets	51 to 200 Pallets	> 200 Pallets
Between pallet piles	15	40	75
Other on-site storage	15	40	75

For SI: 1 foot = 304.8 mm.

who forcibly enters a building for the purpose of controlling or extinguishing a fire, rescuing trapped occupants or rendering other emergency assistance.

316.4 Obstructions on roofs. Wires, cables, ropes, antennas, or other suspended obstructions installed on the roof of a building having a roof slope of less than 30 degrees (0.52 rad) shall not create an obstruction that is less than 7 feet (2133 mm) high above the surface of the roof.

Exceptions:

1. Such obstruction shall be permitted where the wire, cable, rope, antenna or suspended obstruction is encased in a white, 2-inch (51 mm) minimum diameter plastic pipe or an approved equivalent.
2. Such obstruction shall be permitted where there is a solid obstruction below such that accidentally walking into the wire, cable, rope, antenna or suspended obstruction is not possible.

316.5 Security device. Any security device or system that emits any medium that could obscure a *means of egress* in any building, structure or premise shall be prohibited.

316.6 Structures and outdoor storage underneath high-voltage transmission lines. Structures and outdoor storage underneath high-voltage transmission lines shall comply with Sections 316.6.1 and 316.6.2, respectively.

316.6.1 Structures. Structures shall not be constructed within the utility easement beneath high-voltage transmission lines.

Exception: Restrooms and unoccupied telecommunication structures of noncombustible construction less than 15 feet (4572 mm) in height.

316.6.2 Outdoor storage. Outdoor storage within the utility easement underneath high-voltage transmission lines shall be limited to noncombustible material. Storage of hazardous materials including, but not limited to, flammable and *combustible liquids* is prohibited.

Exception: Combustible storage, including vehicles and fuel storage for backup power equipment serving public utility equipment, is allowed, provided that a plan indicating the storage configuration is submitted and *approved*.

SECTION 317
ROOFTOP GARDENS AND LANDSCAPED ROOFS

317.1 General. Rooftop gardens and landscaped roofs shall be installed and maintained in accordance with Sections 317.2 through 317.5 and Sections 1505 and 1507.16 of the *Building Code of New York State*.

317.2 Rooftop garden or landscaped roof size. Rooftop garden or landscaped roof areas shall not exceed 15,625 square feet (1450 m^2) in size for any single area with a maximum dimension of 125 feet (39 m) in length or width. A minimum 6-foot-wide (1.8 m) clearance consisting of a Class A-rated roof system complying with ASTM E108 or UL 790 shall be provided between adjacent rooftop gardens or landscaped roof areas.

317.3 Rooftop structure and equipment clearance. For all vegetated roofing systems abutting combustible vertical surfaces, a Class A-rated roof system complying with ASTM E108 or UL 790 shall be achieved for a minimum 6-foot-wide (1829 mm) continuous border placed around rooftop structures and all rooftop equipment including, but not limited to, mechanical and machine rooms, penthouses, skylights, roof vents, solar panels, antenna supports and building service equipment.

317.4 Vegetation. Vegetation shall be maintained in accordance with Sections 317.4.1 and 317.4.2.

317.4.1 Irrigation. Supplemental irrigation shall be provided to maintain levels of hydration necessary to keep green roof plants alive and to keep dry foliage to a minimum.

317.4.2 Dead foliage. Excess biomass, such as overgrown vegetation, leaves and other dead and decaying material, shall be removed at regular intervals not less than two times per year.

317.4.3 Maintenance plan. The *fire code official* is authorized to require a maintenance plan for vegetation placed on roofs due to the size of a roof garden, materials used or where a fire hazard exists to the building or exposures due to the lack of maintenance.

INTERNATIONAL CODE COUNCIL®
Copyright © 2019 ICC & NYSDOS. ALL RIGHTS RESERVED. Accessed by Lauren Gualdino (lgualdino@briarcliffmanor.org), (-) Order Number #100880972 on May 08, 2020 07:05 AM (PDT) pursuant to License Agreement with ICC & NYSDOS. No further reproduction, no

100880972

317.5 Maintenance equipment. Fueled equipment stored on roofs and used for the care and maintenance of vegetation on roofs shall be stored in accordance with Section 313.

SECTION 318
LAUNDRY CARTS

318.1 Laundry carts with a capacity of 1 cubic yard or more. Laundry carts with an individual capacity of 1 cubic yard [200 gallons (0.76 m^3)] or more, used in laundries within Group B, E, F-1, I, M and R-1 occupancies, shall be constructed of noncombustible materials or materials having a peak rate of heat release not exceeding 300 kW/m^2 at a flux of 50 kW/m^2 where tested in a horizontal orientation in accordance with ASTM E1354.

Exceptions:

1. Laundry carts in areas protected by an *approved automatic sprinkler system* installed throughout in accordance with Section 903.3.1.1.
2. Laundry carts in coin-operated laundries.

SECTION 319
MOBILE FOOD PREPARATION VEHICLES

319.1 General. Mobile food preparation vehicles that are equipped with appliances that produce smoke or grease-laden vapors shall comply with this section.

319.2 Permit required. Permits shall be required as set forth in Section 105.6.

319.3 Exhaust hood. Cooking equipment that produces grease-laden vapors shall be provided with a kitchen exhaust hood in accordance with Section 607.

319.4 Fire protection. Fire protection shall be provided in accordance with Sections 319.4.1 and 319.4.2.

319.4.1 Fire protection for cooking equipment. Cooking equipment shall be protected by automatic fire extinguishing systems in accordance with Section 904.12.

319.4.2 Fire extinguisher. Portable fire extinguishers shall be provided in accordance with Section 906.4.

319.5 Appliance connection to fuel supply piping. Gas cooking appliances shall be secured in place and connected to fuel-supply piping with an appliance connector complying with ANSI Z21.69/CSA 6.16. The connector installation shall be configured in accordance with the manufacturer's installation instructions. Movement of appliances shall be limited by restraining devices installed in accordance with the connector and appliance manufacturers' instructions.

319.6 Cooking oil storage containers. Cooking oil storage containers within mobile food preparation vehicles shall have a maximum aggregate volume not more than 120 gallons (454 L), and shall be stored in such a way as to not be toppled or damaged during transport.

319.7 Cooking oil storage tanks. Cooking oil storage tanks within mobile food preparation vehicles shall comply with Sections 319.7.1 through 319.7.5.2.

319.7.1 Metallic storage tanks. Metallic cooking oil storage tanks shall be *listed* in accordance with UL 80 or UL 142, and shall be installed in accordance with the tank manufacturer's instructions.

319.7.2 Nonmetallic storage tanks. Nonmetallic cooking oil storage tanks shall be installed in accordance with the tank manufacturer's instructions and shall comply with both of the following:

1. Tanks shall be *listed* for use with cooking oil, including maximum temperature to which the tank will be exposed during use.
2. Tank capacity shall not exceed 200 gallons (757 L) per tank.

319.7.3 Cooking oil storage system components. Metallic and nonmetallic cooking oil storage system components shall include, but are not limited to, piping, connections, fittings, valves, tubing, hose, pumps, vents and other related components used for the transfer of cooking oil.

319.7.4 Design criteria. The design, fabrication and assembly of system components shall be suitable for the working pressures, temperatures and structural stresses to be encountered by the components.

319.7.5 Tank venting. Normal and emergency venting shall be provided for cooking oil storage tanks.

319.7.5.1 Normal vents. Normal vents shall be located above the maximum normal liquid line, and shall have a minimum effective area not smaller than the largest filling or withdrawal connection. Normal vents are not required to vent to the exterior.

319.7.5.2 Emergency vents. Emergency relief vents shall be located above the maximum normal liquid line, and shall be in the form of a device or devices that will relieve excessive internal pressure caused by an exposure fire. For nonmetallic tanks, the emergency relief vent shall be allowed to be in the form of construction. Emergency vents are not required to discharge to the exterior.

319.8 LP-gas systems. Where LP-gas systems provide fuel for cooking appliances, such systems shall comply with Chapter 61 and Sections 319.8.1 through 319.8.5.

319.8.1 Maximum aggregate volume. The maximum aggregate capacity of LP-gas containers transported on the vehicle and used to fuel cooking appliances only shall not exceed 200 pounds (91 kg) propane capacity.

319.8.2 Protection of container. LP-gas containers installed on the vehicle shall be securely mounted and restrained to prevent movement.

319.8.3 LP-gas container construction. LP-gas containers shall be manufactured in compliance with the requirements of NFPA 58.

319.8.4 Protection of system piping. LP-gas system piping, including valves and fittings, shall be adequately protected to prevent tampering, impact damage, and damage from vibration.

INTERNATIONAL CODE COUNCIL®
Copyright © 2019 ICC & NYSDOS. ALL RIGHTS RESERVED. Accessed by Lauren Gualdino (lgualdino@briarcliffmanor.org), (-) Order Number #100880972 on May 08, 2020 07:05 AM (PDT) pursuant to License Agreement with ICC & NYSDOS. No further reproduction, no

100880972

319.8.5 LP-gas alarms. A *listed* LP-gas alarm shall be installed within the vehicle in the vicinity of LP-gas system components, in accordance with the manufacturer's instructions.

319.9 CNG systems. Where CNG systems provide fuel for cooking appliances, such systems shall comply with Sections 319.9.1 through 319.9.4.

319.9.1 CNG containers supplying only cooking fuel. CNG containers installed solely to provide fuel for cooking purposes shall be in accordance with Sections 319.9.1.1 through 319.9.1.3

319.9.1.1 Maximum aggregate volume. The maximum aggregate capacity of CNG containers transported on the vehicle shall not exceed 1,300 pounds (590 kg) water capacity.

319.9.1.2 Protection of container. CNG containers shall be securely mounted and restrained to prevent movement. Containers shall not be installed in locations subject to a direct vehicle impact.

319.9.1.3 CNG container construction. CNG containers shall be an NGV-2 cylinder.

319.9.2 CNG containers supplying transportation and cooking fuel. Where CNG containers and systems are used to supply fuel for cooking purposes in addition to being used for transportation fuel, the installation shall be in accordance with NFPA 52.

319.9.3 Protection of system piping. CNG system piping, including valves and fittings, shall be adequately protected to prevent tampering, impact damage and damage from vibration.

319.9.4 Methane alarms. A listed methane gas alarm shall be installed within the vehicle in accordance with manufacturer's instructions.

319.10 Maintenance. Maintenance of systems on mobile food preparation vehicles shall be in accordance with Sections 319.10.1 through 319.10.3.

319.10.1 Exhaust system. The exhaust system, including hood, grease-removal devices, fans, ducts and other appurtenances, shall be inspected and cleaned in accordance with Section 607.3.

319.10.2 Fire protection systems and devices. Fire protection systems and devices shall be maintained in accordance with Section 901.6.

319.10.3 Fuel gas systems. LP-gas containers installed on the vehicle and fuel-gas piping systems shall be inspected annually by an *approved* inspection agency or a company that is registered with the U.S. Department of Transportation to requalify LP-gas cylinders, to ensure that system components are free from damage, suitable for the intended service and not subject to leaking. CNG containers shall be inspected every 3 years in a qualified service facility. CNG containers shall not be used past their expiration date as listed on the manufacturer's container label. Upon satisfactory inspection, the *approved* inspection agency shall affix a tag on the fuel gas system or within the vehicle indicating the name of the inspection agency and the date of satisfactory inspection.

[NY] SECTION 320
LIVE FIRE TRAINING FACILITES

[NY] 320.1 Live fire training facilities. *Live fire training facilities* shall be designed, constructed, and maintained in accordance with NFPA 1402 and NFPA 1403.

INTERNATIONAL CODE COUNCIL®
Copyright © 2019 ICC & NYSDOS. ALL RIGHTS RESERVED. Accessed by Lauren Gualdino (lgualdino@briarcliffmanor.org), (-) Order Number #100880972 on May 08, 2020 07:05 AM (PDT) pursuant to License Agreement with ICC & NYSDOS. No further reproduction, no

100880972

CHAPTER 4
EMERGENCY PLANNING AND PREPAREDNESS

SECTION 401
GENERAL

401.1 Scope. Reporting of emergencies, coordination with emergency response forces, emergency plans and procedures for managing or responding to emergencies shall comply with the provisions of this section.

Exception: Firms that have approved on-premises fire-fighting organizations and that are in compliance with approved procedures for fire reporting.

401.2 Approval. Where required by this code, fire safety plans, emergency procedures and employee training programs shall be approved by the fire code official.

401.3 Emergency responder notification. Notification of emergency responders shall be in accordance with Sections 401.3.1 through 401.3.3.

401.3.1 Fire events. In the event an unwanted fire occurs on a property, the owner or occupant shall immediately report such condition to the fire department.

401.3.2 Alarm activations. Upon activation of a fire alarm signal, employees or staff shall immediately notify the fire department.

401.3.3 Delayed notification. A person shall not, by verbal or written directive, require any delay in the reporting of a fire to the fire department.

401.4 Required plan implementation. In the event an unwanted fire is detected in a building or a fire alarm activates, the emergency plan shall be implemented.

401.5 Making false report. A person shall not give, signal or transmit a false alarm.

401.6 Emergency evacuation drills. The sounding of a fire alarm signal and the carrying out of an emergency evacuation drill in accordance with the provisions of Section 405 shall be allowed.

401.7 Unplanned evacuation. Evacuations made necessary by the unplanned activation of a fire alarm system or by any other emergency shall not be substituted for a required evacuation drill.

401.8 Interference with fire department operations. It shall be unlawful to interfere with, attempt to interfere with, conspire to interfere with, obstruct or restrict the mobility of or block the path of travel of a fire department emergency vehicle in any way, or to interfere with, attempt to interfere with, conspire to interfere with, obstruct or hamper any fire department operation.

SECTION 402
DEFINITIONS

402.1 Definitions. The following terms are defined in Chapter 2:

EMERGENCY EVACUATION DRILL.

LOCKDOWN.

SECTION 403
EMERGENCY PREPAREDNESS REQUIREMENTS

403.1 General. In addition to the requirements of Section 401, occupancies, uses and outdoor locations shall comply with the emergency preparedness requirements set forth in Sections 403.2 through 403.12.3.3. Where a fire safety and evacuation plan is required by Sections 403.2 through 403.11.5, evacuation drills shall be in accordance with Section 405 and employee training shall be in accordance with Section 406.

[NY] 403.2 Group A occupancies. An *approved* fire safety and evacuation plan in accordance with Section 404 shall be prepared and maintained for Group A *occupancies*, other than those occupancies used exclusively for purposes of religious worship with an occupant load less than 2,000, and for buildings containing both a Group A occupancy and an atrium. Group A occupancies shall comply with Sections 403.2.1 through 403.2.5.

403.2.1 Seating plan. In addition to the requirements of Section 404.2, the fire safety and evacuation plans for assembly occupancies shall include a detailed seating plan, *occupant load* and *occupant load* limit. Deviations from the *approved* plans shall be allowed provided that the *occupant load* limit for the occupancy is not exceeded and the *aisles* and exit accessways remain unobstructed.

403.2.2 Announcements. In theaters, motion picture theaters, auditoriums and similar assembly occupancies in Group A used for noncontinuous programs, an audible announcement shall be made not more than 10 minutes prior to the start of each program to notify the occupants of the location of the exits to be used in the event of a fire or other emergency.

Exception: In motion picture theaters, the announcement is allowed to be projected on the screen in a manner approved by the fire code official.

403.2.3 Fire watch personnel. Fire watch personnel shall be provided where required by Section 403.12.1.

403.2.4 Crowd managers. Crowd managers shall be provided where required by Section 403.12.3.

INTERNATIONAL CODE COUNCIL®
Copyright © 2019 ICC & NYSDOS. ALL RIGHTS RESERVED. Accessed by Lauren Gualdino (lgualdino@briarcliffmanor.org), (-) Order Number #100880972 on May 08, 2020 07:05 AM (PDT) pursuant to License Agreement with ICC & NYSDOS. No further reproduction, no

100880972

[NY] 403.2.5 Education Law requirements for Group A, B and R-2 occupancies at colleges and universities. In addition to other requirements, the frequency and timing of drills shall be in accordance with the requirements of Section 807.3 of the Education Law, which requires not less than three drills annually, one of which shall take place between September 1 and December 1. At least one of the drills shall use fire escapes, where fire escapes are provided. Where summer sessions are provided, at least one of the required drills shall be held during the first week of summer session.

403.3 Ambulatory care facilities. Ambulatory care facilities shall comply with the requirements of Sections 401, 403.3.1 through 403.3.4 and 404 through 406.

403.3.1 Fire evacuation plan. The fire safety and evacuation plan required by Section 404 shall include a description of special staff actions. This shall include procedures for stabilizing patients in a defend-in-place response, staged evacuation, or full evacuation in conjunction with the entire building if part of a multitenant facility.

403.3.2 Fire safety plan. A copy of the plan shall be maintained at the facility at all times. The plan shall include all of the following in addition to the requirements of Section 404:

1. Locations of patients who are rendered incapable of self-preservation.
2. Maximum number of patients rendered incapable of self-preservation.
3. Area and extent of each ambulatory care facility.
4. Location of adjacent smoke compartments or refuge areas, where required.
5. Path of travel to adjacent smoke compartments.
6. Location of any special locking, delayed egress or access control arrangements.

403.3.3 Staff training. Employees shall be periodically instructed and kept informed of their duties and responsibilities under the plan. Records of instruction shall be maintained. Such instruction shall be reviewed by the staff not less than every two months. A copy of the plan shall be readily available at all times within the facility.

403.3.4 Emergency evacuation drills. Emergency evacuation drills shall comply with Section 405.

Exception: The movement of patients to safe areas or to the exterior of the building is not required.

403.4 Group B occupancies. An *approved* fire safety and evacuation plan in accordance with Section 404 shall be prepared and maintained for buildings containing a Group B occupancy where the Group B occupancy has an *occupant load* of 500 or more persons or more than 100 persons above or below the lowest *level of exit discharge* and for buildings having an ambulatory care facility.

[NY] 403.5 Group E occupancies. An *approved* fire safety and evacuation plan in accordance with Section 404 shall be prepared and maintained for Group E occupancies and for buildings containing both a Group E occupancy and an atrium. Group E occupancies shall comply with Sections 403.5.1 through 403.5.4.

403.5.1 First emergency evacuation drill. The first emergency evacuation drill of each school year shall be conducted within 10 days of the beginning of classes.

403.5.2 Time of day. Emergency evacuation drills shall be conducted at different hours of the day or evening, during the changing of classes, when the school is at assembly, during the recess or gymnastic periods, or during other times to avoid distinction between drills and actual fires.

403.5.3 Assembly points. Outdoor assembly areas shall be designated and shall be located a safe distance from the building being evacuated so as to avoid interference with fire department operations. The assembly areas shall be arranged to keep each class separate to provide accountability of all individuals.

[NY] 403.5.4 Education Law requirements for Group E occupancies. In addition to other requirements, the frequency and timing of drills shall be in accordance with the requirements of Section 807.1 of the Education Law, which requires not less than 12 drills in each school year, eight of which shall take place between September 1 and December 31. Eight of all such drills shall be evacuation drills, four of which shall be through use of fire escapes on buildings where fire escapes are provided or through the use of identified secondary means of egress. Four of all such required drills shall be lock-down drills.

Drills shall be conducted at different times of the school day. Pupils shall be instructed in the procedure to be followed in the event that a fire occurs during the lunch period or assembly, provided however, that such additional instruction may be waived where a drill is held during the regular school lunch period or assembly. At least four additional drills shall be held in each school year during the hours after sunset and before sunrise in school buildings in which students are provided with sleeping accommodations.

At least two additional drills shall be held during summer school, in buildings where summer school is conducted, and one of such drills shall be held during the first week of summer school.

403.6 Group F occupancies. An *approved* fire safety and evacuation plan in accordance with Section 404 shall be prepared and maintained for buildings containing a Group F occupancy where any of the following conditions apply:

1. The Group F occupancy has an *occupant load* of 500 or more persons.
2. The Group F occupancy has an *occupant load* of more than 100 persons above or below the lowest *level of exit discharge*.
3. Group F pallet manufacturing and recycling facilities as required by Section 2810.

403.7 Group H occupancies. An *approved* fire safety and evacuation plan in accordance with Section 404 shall be prepared and maintained for Group H occupancies.

INTERNATIONAL CODE COUNCIL®
Copyright © 2019 ICC & NYSDOS. ALL RIGHTS RESERVED. Accessed by Lauren Gualdino (lgualdino@briarcliffmanor.org), (-) Order Number #100880972 on May 08, 2020 07:05 AM (PDT) pursuant to License Agreement with ICC & NYSDOS. No further reproduction, no

100880972

403.7.1 Group H-5 occupancies. Group H-5 occupancies shall comply with Sections 403.7.1.1 through 403.7.1.4.

403.7.1.1 Plans and diagrams. In addition to the requirements of Section 404 and Section 407.6, plans and diagrams shall be maintained in approved locations indicating the approximate plan for each area, the amount and type of HPM stored, handled and used, locations of shutoff valves for HPM supply piping, emergency telephone locations and locations of exits.

403.7.1.2 Plan updating. The plans and diagrams required by Sections 404, 403.7.1.1 and 407.6 shall be maintained up to date and the *fire code official* and fire department shall be informed of major changes.

403.7.1.3 Emergency response team. Responsible persons shall be designated as an on-site emergency response team and trained to be liaison personnel for the fire department. These persons shall aid the fire department in preplanning emergency responses, identifying locations where HPM is stored, handled and used, and be familiar with the chemical nature of such material. An adequate number of personnel for each work shift shall be designated.

403.7.1.4 Emergency drills. Emergency drills of the on-site emergency response team shall be conducted on a regular basis but not less than once every three months. Records of drills conducted shall be maintained.

403.8 Group I occupancies. An *approved* fire safety and evacuation plan in accordance with Section 404 shall be prepared and maintained for Group I occupancies. Group I occupancies shall comply with Sections 403.8.1 through 403.8.3.4.

403.8.1 Group I-1 occupancies. Group I-1 occupancies shall comply with Sections 403.8.1.1 through 403.8.1.7.

403.8.1.1 Fire safety and evacuation plan. The fire safety and evacuation plan required by Section 404 shall include special employee actions, including fire protection procedures necessary for residents, and shall be amended or revised upon admission of any resident with unusual needs.

403.8.1.1.1 Fire evacuation plan. The fire evacuation plan required by Section 404 shall include a description of special staff actions. In addition to the requirements of Section 404, plans in Group I-1, Condition 2 occupancies shall include procedures for evacuation through a refuge area in an adjacent smoke compartment and then to an exterior assembly point.

403.8.1.1.2 Fire safety plans. A copy of the fire safety plan shall be maintained at the facility at all times. Plans shall include the following in addition to the requirements of Section 404:

1. Location and number of resident sleeping rooms.
2. Location of special locking or egress control arrangements.

403.8.1.2 Employee training. Employees shall be periodically instructed and kept informed of their duties and responsibilities under the plan. Such instruction shall be reviewed by employees at intervals not exceeding two months. A copy of the plan shall be readily available at all times within the facility.

403.8.1.3 Resident training. Residents capable of assisting in their own evacuation shall be trained in the proper actions to take in the event of a fire. In Group I-1, Condition 2 occupancies, training shall include evacuation through an adjacent smoke compartment and then to an exterior assembly point. The training shall include actions to take if the primary escape route is blocked. Where the resident is given rehabilitation or habilitation training, methods of fire prevention and actions to take in the event of a fire shall be a part of the rehabilitation training program. Residents shall be trained to assist each other in case of fire to the extent their physical and mental abilities permit them to do so without additional personal risk.

403.8.1.4 Drill frequency. In addition to the evacuation drills required in Section 405.2, employees shall participate in drills an additional two times a year on each shift. Twelve drills with all occupants shall be conducted in the first year of operation. Drills are not required to comply with the time requirements of Section 405.4.

403.8.1.5 Drill times. Drill times are not required to comply with Section 405.4.

403.8.1.6 Resident participation in drills. Emergency evacuation drills shall involve the actual evacuation of residents to a selected assembly point and shall provide residents with experience in exiting through all required exits. All required exits shall be used during emergency evacuation drills.

403.8.1.7 Emergency evacuation drill deferral. In severe climates, the *fire code official* shall have the authority to modify the emergency evacuation drill frequency specified in Section 405.2.

403.8.2 Group I-2 occupancies. Group I-2 occupancies shall comply with Sections 401, 403.8.2.1 through 403.8.2.3 and 404 through 406.

403.8.2.1 Fire evacuation plans. The fire safety and evacuation plans required by Section 404 shall include a description of special staff *actions*. Plans shall include all of the following in addition to the requirements of Section 404.

1. Procedures for evacuation for patients with needs for containment or restraint and post-evacuation containment, where present.
2. A written plan for maintenance of the means of egress.
3. Procedure for a defend-in-place strategy.
4. Procedures for a full-floor or building evacuation, where necessary.

INTERNATIONAL CODE COUNCIL®
Copyright © 2019 ICC & NYSDOS. ALL RIGHTS RESERVED. Accessed by Lauren Gualdino (lgualdino@briarcliffmanor.org), (-) Order Number #100880972 on May 08, 2020 07:05 AM (PDT) pursuant to License Agreement with ICC & NYSDOS. No further reproduction, no

100880972

403.8.2.2 Fire safety plans. A copy of the plan shall be maintained at the facility at all times. Plans shall include all of the following in addition to the requirements of Section 404:

1. Location and number of patient sleeping rooms and operating rooms.
2. Location of adjacent smoke compartments or refuge areas.
3. Path of travel to adjacent smoke compartments.
4. Location of special locking, delayed egress or access control arrangements.
5. Location of elevators utilized for patient movement in accordance with the fire safety plan, where provided.

403.8.2.3 Emergency evacuation drills. Emergency evacuation drills shall comply with Section 405.

Exceptions:

1. The movement of patients to safe areas or to the exterior of the building is not required.
2. Where emergency evacuation drills are conducted after visiting hours or where patients or residents are expected to be asleep, a coded announcement shall be an acceptable alternative to audible alarms.

403.8.3 Group I-3 occupancies. Group I-3 occupancies shall comply with Sections 403.8.3.1 through 403.8.3.4.

403.8.3.1 Employee training. Employees shall be instructed in the proper use of portable fire extinguishers and other manual fire suppression equipment. Training of new employees shall be provided promptly upon entrance to duty. Refresher training shall be provided not less than annually.

403.8.3.2 Employee staffing. Group I-3 occupancies shall be provided with 24-hour staffing. An employee shall be within three floors or 300 feet (91 440 mm) horizontal distance of the access door of each resident housing area. In Group I-3 Conditions 3, 4 and 5, as defined in Chapter 2, the arrangement shall be such that the employee involved can start release of locks necessary for emergency evacuation or rescue and initiate other necessary emergency actions within 2 minutes of an alarm.

Exception: An employee shall not be required to be within three floors or 300 feet (91 440 mm) horizontal distance of the access door of each resident housing area in areas in which all locks are unlocked remotely and automatically in accordance with Section 408.4 of the *Building Code of New York State*.

403.8.3.3 Notification. Provisions shall be made for residents in Group I-3 Conditions 3, 4 and 5, as defined in Chapter 2, to readily notify an employee of an emergency.

[NY] 403.8.3.4 Keys. Staff shall be trained on the identification and use of keys that are necessary for unlocking doors that are installed in the means of egress in Institutional Group I-3 occupancies. Keys that operate doors installed in the means of egress shall be identified in the fire safety and evacuation plan. Training shall be consistent with Section 406 of the *Fire Code of New York State*.

403.9 Group M occupancies. An *approved* fire safety and evacuation plan in accordance with Section 404 shall be prepared and maintained for buildings containing a Group M occupancy where the Group M occupancy has an *occupant load* of 500 or more persons or more than 100 persons above or below the lowest l*evel of exit discharge* and for buildings containing both a Group M occupancy and an atrium.

403.10 Group R occupancies. Group R occupancies shall comply with Sections 403.10.1 through 403.10.3.6.

403.10.1 Group R-1 occupancies. An approved fire safety and evacuation plan in accordance with Section 404 shall be prepared and maintained for Group R-1 occupancies. Group R-1 occupancies shall comply with Sections 403.10.1.1 through 403.10.1.3.

403.10.1.1 Evacuation diagrams. A diagram depicting two evacuation routes shall be posted on or immediately adjacent to every required egress door from each hotel or motel sleeping unit.

403.10.1.2 Emergency duties. Upon discovery of a fire or suspected fire, hotel and motel employees shall perform the following duties:

1. Activate the fire alarm system, where provided.
2. Notify the public fire department.
3. Take other action as previously instructed.

403.10.1.3 Fire safety and evacuation instructions. Information shall be provided in the fire safety and evacuation plan required by Section 404 to allow guests to decide whether to evacuate to the outside, evacuate to an *area of refuge,* remain in place, or any combination of the three.

[NY] 403.10.2 Group R-2 occupancies. Group R-2 occupancies shall comply with Sections 403.10.2.1 through 403.10.2.4.

403.10.2.1 College and university buildings. An *approved* fire safety and evacuation plan in accordance with Section 404 shall be prepared and maintained for Group R-2 college and university buildings. Group R-2 college and university buildings shall comply with Sections 403.10.2.1.1, 403.10.2.1.2, 403.10.2.3 and 403.10.2.4.

403.10.2.1.1 First emergency evacuation drill. The first emergency evacuation drill of each school year shall be conducted within 10 days of the beginning of classes.

403.10.2.1.2 Time of day. Emergency evacuation drills shall be conducted at different hours of the day or evening, during the changing of classes, when school is at assembly, during recess or gymnastic periods or during other times to avoid distinction between drills and actual fires. One required drill shall be held during hours after sunset or before sunrise.

INTERNATIONAL CODE COUNCIL®
Copyright © 2019 ICC & NYSDOS. ALL RIGHTS RESERVED. Accessed by Lauren Gualdino (lgualdino@briarcliffmanor.org), (-) Order Number #100880972 on May 08, 2020 07:05 AM (PDT) pursuant to License Agreement with ICC & NYSDOS. No further reproduction, no

100880972

403.10.2.2 Emergency guide. Fire emergency guides shall be provided for Group R-2 occupancies. Guide contents, maintenance and distribution shall comply with Sections 403.10.2.2.1 through 403.10.2.2.3.

403.10.2.2.1 Guide contents. A fire emergency guide shall describe the location, function and use of fire protection equipment and appliances available for use by residents, including fire alarm systems, smoke alarms and portable fire extinguishers. Guides shall include an emergency evacuation plan for each *dwelling unit*.

403.10.2.2.2 Emergency guide maintenance. Emergency guides shall be reviewed and approved by the *fire code official.*

403.10.2.2.3 Emergency guide distribution. A copy of the emergency guide shall be given to each tenant prior to initial occupancy.

403.10.2.3 Evacuation diagrams for dormitories. A diagram depicting two evacuation routes shall be posted on or immediately adjacent to every required egress door from each dormitory *sleeping unit*. Evacuation diagrams shall be reviewed and updated as needed to maintain accuracy.

[NY] 403.10.2.4 Education Law requirements for Group R-2 college and university buildings. In addition to other requirements, the frequency and timing of drills shall be in accordance with the requirements of Section 807.3 of the Education Law, which requires not less than three drills annually, one of which shall take place between September 1 and December 31. At least one of the drills shall use fire escapes, where fire escapes are provided. Where summer sessions are provided, at least one of the required drills shall be held during the first week of summer session. At least one additional drill shall be held in each year during the hours after sunset and before sunrise in college or university buildings in which students are provided with sleeping accommodations.

403.10.3 Group R-4 occupancies. An *approved* fire safety and evacuation plan in accordance with Section 404 shall be prepared and maintained for Group R-4 occupancies. Group R-4 occupancies shall comply with Sections 403.10.3.1 through 403.10.3.6.

403.10.3.1 Fire safety and evacuation plan. The fire safety and evacuation plan required by Section 404 shall include special employee actions, including fire protection procedures necessary for residents, and shall be amended or revised upon admission of a resident with unusual needs.

403.10.3.1.1 Fire safety plans. A copy of the plan shall be maintained at the facility at all times. Plans shall include the following in addition to the requirements of Section 404:

1. Location and number of resident sleeping rooms.
2. Location of special locking or egress control arrangements.

403.10.3.2 Employee training. Employees shall be periodically instructed and kept informed of their duties and responsibilities under the plan. Records of instruction shall be maintained. Such instruction shall be reviewed by employees at intervals not exceeding two months. A copy of the plan shall be readily available at all times within the facility.

403.10.3.3 Resident training. Residents capable of assisting in their own evacuation shall be trained in the proper actions to take in the event of a fire. The training shall include actions to take if the primary escape route is blocked. Where the resident is given rehabilitation or habilitation training, methods of fire prevention and actions to take in the event of a fire shall be a part of the rehabilitation training program. Residents shall be trained to assist each other in case of fire to the extent their physical and mental abilities permit them to do so without additional personal risk.

403.10.3.4 Drill frequency. In addition to the evacuation drills required in Section 405.2, employees shall participate in drills an additional two times a year on each shift. Twelve drills with all occupants shall be conducted in the first year of operation.

403.10.3.5 Drill times. Drill times are not required to comply with Section 405.4.

403.10.3.6 Resident participation in drills. Emergency evacuation drills shall involve the actual evacuation of residents to a selected assembly point and shall provide residents with experience in exiting through all required exits. All required exits shall be used during emergency evacuation drills.

Exception: Actual exiting from emergency escape and rescue windows shall not be required. Opening the emergency escape and rescue window and signaling for help shall be an acceptable alternative.

403.11 Special uses. Special uses shall be in accordance with Sections 403.11.1 through 403.11.5.

403.11.1 Covered and open mall buildings. Covered and open mall buildings shall comply with the requirements of Sections 403.11.1.1 through 403.11.1.6.

403.11.1.1 Malls and mall buildings exceeding 50,000 square feet. An *approved* fire safety and evacuation plan in accordance with Section 404 shall be prepared and maintained for covered malls exceeding 50,000 square feet (4645 m^2) in aggregate floor area and for open mall buildings exceeding 50,000 square feet (4645 m^2) in aggregate area within the perimeter line.

403.11.1.2 Lease plan. In addition to the requirements of Section 404.2.2, a lease plan that includes the following information shall be prepared for each covered and open mall building:

1. Each occupancy, including identification of tenant.

INTERNATIONAL CODE COUNCIL®
Copyright © 2019 ICC & NYSDOS. ALL RIGHTS RESERVED. Accessed by Lauren Gualdino (lgualdino@briarcliffmanor.org), (-) Order Number #100880972 on May 08, 2020 07:05 AM (PDT) pursuant to License Agreement with ICC & NYSDOS. No further reproduction, no

100880972

2. Exits from each tenant space.
3. Fire protection features, including the following:
    3.1. Fire department connections.
    3.2. Fire command center.
    3.3. Smoke management system controls.
    3.4. Elevators, elevator machine rooms and controls.
    3.5. Hose valve outlets.
    3.6. Sprinkler and standpipe control valves.
    3.7. Automatic fire-extinguishing system areas.
    3.8. Automatic fire detector zones.
    3.9. Fire barriers.

403.11.1.3 Lease plan approval. The lease plan shall be submitted to the fire code official for approval, and shall be maintained on site for immediate reference by responding fire service personnel.

403.11.1.4 Lease plan revisions. The lease plans shall be revised annually or as often as necessary to keep them current. Modifications or changes in tenants or occupancies shall not be made without prior approval of the fire code official and building official.

403.11.1.5 Tenant identification. Tenant identification shall be provided for secondary *exits* from occupied tenant spaces that lead to an *exit corridor* or directly to the exterior of the building. Tenant identification shall be posted on the exterior side of the *exit* or exit access door and shall identify the business name and address using plainly legible letters and numbers that contrast with their background.

Exception: Tenant identification is not required for anchor stores.

403.11.1.6 Unoccupied tenant spaces. The fire safety and evacuation plan shall provide for compliance with the requirements for unoccupied tenant spaces in Section 311.

403.11.2 High-rise buildings. An *approved* fire safety and evacuation plan in accordance with Section 404 shall be prepared and maintained for high-rise buildings.

403.11.3 Underground buildings. An *approved* fire safety and evacuation plan in accordance with Section 404 shall be prepared and maintained for underground buildings.

403.11.4 Buildings using occupant evacuation elevators. In buildings using occupant evacuation elevators in accordance with Section 3008 of the *Building Code of New York State*, the fire safety and evacuation plan and the training required by Sections 404 and 406, respectively, shall incorporate specific procedures for the occupants using such elevators.

403.11.5 Buildings with high-piled storage. An approved fire safety and evacuation plan in accordance with Section 404 shall be prepared for buildings with *high-piled combustible storage* in any of the following situations:

1. The *high-piled storage area* exceeds 500,000 square feet (46 450 m^2) for Class I-IV commodities.
2. The *high-piled storage area* exceeds 300,000 square feet (27 870 m^2) for high-hazard commodities.
3. The *high-piled storage* is located in a Group H occupancy.
4. The *high-piled storage* is located in a Group F occupancy with an *occupant load* of 500 or more persons or more than 100 persons above or below the lowest *level of exit discharge*.
5. The *high-piled storage* is located in a Group M occupancy with an *occupant load* of 500 or more persons or more than 100 persons above or below the lowest *level of exit discharge*.
6. Where required by the *fire code official* for other *high-piled storage areas*.

403.12 Special requirements for public safety. Special requirements for public safety shall be in accordance with Sections 403.12.1 through 403.12.3.3.

403.12.1 Fire watch personnel. Where, in the opinion of the *fire code official*, it is essential for public safety in a place of assembly or any other place where people congregate, because of the number of persons, or the nature of the performance, exhibition, display, contest or activity, the *owner*, agent or lessee shall provide one or more fire watch personnel, as required and *approved*. Fire watch personnel shall comply with Sections 403.12.1.1 and 403.12.1.2.

403.12.1.1 Duty times. Fire watch personnel shall remain on duty while places requiring a fire watch are open to the public, or when an activity requiring a fire watch is being conducted.

403.12.1.2 Duties. On-duty fire watch personnel shall have the following responsibilities:

1. Keep diligent watch for fires, obstructions to *means of egress* and other hazards.
2. Take prompt measures for remediation of hazards and extinguishment of fires that occur.
3. Take prompt measures to assist in the evacuation of the public from the structures.

[NY] 403.12.2 Public safety plan for gatherings. Where the *fire code official* determines that an indoor or outdoor gathering of persons has an adverse impact on public safety through diminished access to buildings, structures, fire hydrants and fire apparatus access roads or where such gatherings adversely affect public safety services of any kind, the *fire code official* shall have the authority to order the development of or prescribe a public safety plan that provides an *approved* level of public safety and addresses the following items:

1. Emergency vehicle ingress and egress.
2. Fire protection.

INTERNATIONAL CODE COUNCIL®
Copyright © 2019 ICC & NYSDOS. ALL RIGHTS RESERVED. Accessed by Lauren Gualdino (lgualdino@briarcliffmanor.org), (-) Order Number #100880972 on May 08, 2020 07:05 AM (PDT) pursuant to License Agreement with ICC & NYSDOS. No further reproduction, no

100880972

3. Emergency egress or escape routes.
4. Emergency medical services.
5. Public assembly areas.
6. The directing of both attendees and vehicles, including the parking of vehicles.
7. Vendor and food concession distribution.
8. The need for the presence of law enforcement.
9. The need for fire and emergency medical services personnel.
10. The need for a weather monitoring person.

See Part 18 of NYS Sanitary Code, Title 10 NYCRR, for public functions with attendance of over 5,000 people.

403.12.3 Crowd managers. Where facilities or events involve a gathering of more than 500 people, crowd managers shall be provided in accordance with Sections 403.12.3.1 through 403.12.3.3.

403.12.3.1 Number of crowd managers. Not fewer than two trained crowd managers, and not fewer than one trained crowd manager for each 250 persons or portion thereof, shall be provided for the gathering.

Exceptions:

1. Outdoor events with fewer than 1,000 persons in attendance shall not require crowd managers.
2. Assembly occupancies used exclusively for religious worship with an occupant load not exceeding 1,000 shall not require crowd managers.
3. The number of crowd managers shall be reduced where, in the opinion of the *fire code official*, the fire protection provided by the facility and the nature of the event warrant a reduction.

403.12.3.2 Training. Training for crowd managers shall be *approved*.

403.12.3.3 Duties. The duties of crowd managers shall include, but not be limited to:

1. Conduct an inspection of the area of responsibility and identify and address any egress barriers.
2. Conduct an inspection of the area of responsibility to identify and mitigate any fire hazards.
3. Verify compliance with all permit conditions, including those governing pyrotechnics and other special effects.
4. Direct and assist the event attendees in evacuation during an emergency.
5. Assist emergency response personnel where requested.
6. Other duties required by the *fire code official*.
7. Other duties as specified in the fire safety plan.

[NY] 403.13 Evacuation notices. In addition to but not in limitation of any other requirement of this Section, a fire-safety notice shall be affixed to the occupied side of the entrance door of each sleeping unit or dwelling unit in the following occupancies: Group R-1, Group R-2 senior citizen housing occupancy, and Group R-3 lodging house. Such notice shall indicate all of the following:

1. Location of nearest exits and fire alarms.
2. Procedures to be followed when a fire or smoke detector gives warning.
3. Procedures to be followed in the event of fire or smoke development.

SECTION 404
FIRE SAFETY, EVACUATION AND LOCKDOWN PLANS

404.1 General. Where required by Section 403, fire safety, evacuation and lockdown plans shall comply with Sections 404.2 through 404.4.1.

404.2 Contents. Fire safety, evacuation and lockdown plan contents shall be in accordance with Sections 404.2.1 through 404.2.3.2.

404.2.1 Fire evacuation plans. Fire evacuation plans shall include the following:

1. Emergency egress or escape routes and whether evacuation of the building is to be complete by selected floors or areas only or with a defend-in-place response.
2. Procedures for employees who must remain to operate critical equipment before evacuating.
3. Procedures for the use of elevators to evacuate the building where occupant evacuation elevators complying with Section 3008 of the *Building Code of New York State* are provided.
4. Procedures for assisted rescue for persons unable to use the general means of egress unassisted.
5. Procedures for accounting for employees and occupants after evacuation has been completed.
6. Identification and assignment of personnel responsible for rescue or emergency medical aid.
7. The preferred and any alternative means of notifying occupants of a fire or emergency.
8. The preferred and any alternative means of reporting fires and other emergencies to the fire department or designated emergency response organization.
9. Identification and assignment of personnel who can be contacted for further information or explanation of duties under the plan.
10. A description of the emergency voice/alarm communication system alert tone and preprogrammed voice messages, where provided.

404.2.2 Fire safety plans. Fire safety plans shall include the following:

1. The procedure for reporting a fire or other emergency.

INTERNATIONAL CODE COUNCIL®
Copyright © 2019 ICC & NYSDOS. ALL RIGHTS RESERVED. Accessed by Lauren Gualdino (lgualdino@briarcliffmanor.org), (-) Order Number #100880972 on May 08, 2020 07:05 AM (PDT) pursuant to License Agreement with ICC & NYSDOS. No further reproduction, no

100880972

2. The life safety strategy including the following:
    2.1. Procedures for notifying occupants, including areas with a private mode alarm system.
    2.2. Procedures for occupants under a defend-in-place response.
    2.3. Procedures for evacuating occupants, including those who need evacuation assistance.
3. Site plans indicating the following:
    3.1. The occupancy assembly point.
    3.2. The locations of fire hydrants.
    3.3. The normal routes of fire department vehicle access.
4. Floor plans identifying the locations of the following:
    4.1. Exits.
    4.2. Primary evacuation routes.
    4.3. Secondary evacuation routes.
    4.4. Accessible egress routes.
        4.4.1. Areas of refuge.
        4.4.2. Exterior areas for assisted rescue.
    4.5. Refuge areas associated with *smoke barriers* and *horizontal exits*.
    4.6. Manual fire alarm boxes.
    4.7. Portable fire extinguishers.
    4.8. Occupant-use hose stations.
    4.9. Fire alarm annunciators and controls.
5. A list of major fire hazards associated with the normal use and occupancy of the premises, including maintenance and housekeeping procedures.
6. Identification and assignment of personnel responsible for maintenance of systems and equipment installed to prevent or control fires.
7. Identification and assignment of personnel responsible for maintenance, housekeeping and controlling fuel hazard sources.

404.2.3 Lockdown plans. Lockdown plans shall only be permitted where such plans are approved by the *fire code official* and are in compliance with Sections 404.2.3.1 and 404.2.3.2.

404.2.3.1 Lockdown plan contents. Lockdown plans shall include the following:

1. Identification of individuals authorized to issue a lockdown order.
2. Security measures used during normal operations, when the building is occupied, that could adversely affect egress or fire department operations.
3. A description of identified emergency and security threats addressed by the plan, including specific lockdown procedures to be implemented for each threat condition.
4. Means and methods of initiating a lockdown plan for each threat, including:
    4.1. The means of notifying occupants of a lockdown event, which shall be distinct from the fire alarm signal.
    4.2. Identification of each door or other access point that will be secured.
    4.3. A description of the means or methods used to secure doors and other access points.
    4.4. A description of how locking means and methods are in compliance with the requirements of this code for egress and accessibility.
5. Procedures for reporting to the fire department any lockdown condition affecting egress or fire department operations.
6. Procedures for determining and reporting the presence or absence of occupants to emergency response agencies during a lockdown.
7. Means for providing two-way communication between a central location and each area subject to being secured during a lockdown.
8. Identification of the prearranged signal for terminating the lockdown.
9. Identification of individuals authorized to issue a lockdown termination order.
10. Procedures for unlocking doors and verifying that the means of egress has been returned to normal operations upon termination of the lockdown.
11. Training procedures and frequency of lockdown plan drills.

404.2.3.2 Drills. Lockdown plan drills shall be conducted in accordance with the approved plan. Such drills shall not be substituted for fire and evacuation drills required by Section 405.2.

404.3 Maintenance. Fire safety and evacuation plans shall be reviewed or updated annually or as necessitated by changes in staff assignments, occupancy or the physical arrangement of the building.

404.4 Availability. Fire safety and evacuation plans shall be available in the workplace for reference and review by employees, and copies shall be furnished to the fire code official for review on request.

404.4.1 Distribution. The fire safety and evacuation plans shall be distributed to the tenants and building service employees by the owner or owner's agent. Tenants shall distribute to their employees applicable parts of the fire safety plan affecting the employees' actions in the event of a fire or other emergency.

INTERNATIONAL CODE COUNCIL®
Copyright © 2019 ICC & NYSDOS. ALL RIGHTS RESERVED. Accessed by Lauren Gualdino (lgualdino@briarcliffmanor.org), (-) Order Number #100880972 on May 08, 2020 07:05 AM (PDT) pursuant to License Agreement with ICC & NYSDOS. No further reproduction, no

100880972

SECTION 405
EMERGENCY EVACUATION DRILLS

405.1 General. Emergency evacuation drills complying with Sections 405.2 through 405.9 shall be conducted not less than annually where fire safety and evacuation plans are required by Section 403 or where required by the *fire code official*. Drills shall be designed in cooperation with the local authorities.

405.2 Frequency. Required emergency evacuation drills shall be held at the intervals specified in Table 405.2 or more frequently where necessary to familiarize all occupants with the drill procedure.

[NY] TABLE 405.2
FIRE AND EVACUATION DRILL
FREQUENCY AND PARTICIPATION

GROUP OR OCCUPANCY	FREQUENCY	PARTICIPATION
Group A	Quarterly	Employees
Group A (College and University Buildings)	Three annually	All occupants
Group B[b]	Annually	All occupants
Group B (College and University Buildings)	Three annually	All occupants
Group B[c] (Ambulatory care facilities)	Quarterly on each shift[a]	Employees
Group B[b] (Clinic, outpatient)	Annually	Employees
Group E	Monthly[a]	All occupants
Group F	Annually	Employees
Group I-1	Semiannually on each shift[a]	All occupants
Group I-2	Quarterly on each shift[a]	Employees
Group I-3	Quarterly on each shift[a]	Employees
Group I-4	Monthly on each shift[a]	All occupants
Group R-1	Quarterly on each shift	Employees
Group R-2[d]	Four annually	All occupants
Group R-4	Semiannually on each shift[a]	All occupants

a. In severe climates, the fire code official shall have the authority to modify the emergency evacuation drill frequency.
b. Emergency evacuation drills are required in Group B buildings having an occupant load of 500 or more persons or more than 100 persons above or below the lowest level of exit discharge.
c. Emergency evacuation drills are required in ambulatory care facilities in accordance with Section 403.3.
d. Emergency evacuation drills in Group R-2 college and university buildings shall be in accordance with Section 403.10.2.1. Other Group R-2 occupancies shall be in accordance with Section 403.10.2.2.

405.3 Leadership. Responsibility for the planning and conduct of drills shall be assigned to competent persons designated to exercise leadership.

405.4 Time. Drills shall be held at unexpected times and under varying conditions to simulate the unusual conditions that occur in case of fire.

405.5 Record keeping. Records shall be maintained of required emergency evacuation drills and include the following information:

1. Identity of the person conducting the drill.
2. Date and time of the drill.
3. Notification method used.
4. Employees on duty and participating.
5. Number of occupants evacuated.
6. Special conditions simulated.
7. Problems encountered.
8. Weather conditions when occupants were evacuated.
9. Time required to accomplish complete evacuation.

405.6 Notification. Where required by the fire code official, prior notification of emergency evacuation drills shall be given to the fire code official.

405.7 Initiation. Where a fire alarm system is provided, emergency evacuation drills shall be initiated by activating the fire alarm system.

405.8 Accountability. As building occupants arrive at the assembly point, efforts shall be made to determine if all occupants have been successfully evacuated or have been accounted for.

405.9 Recall and reentry. An electrically or mechanically operated signal used to recall occupants after an evacuation shall be separate and distinct from the signal used to initiate the evacuation. The recall signal initiation means shall be manually operated and under the control of the person in charge of the premises or the official in charge of the incident. Persons shall not reenter the premises until authorized to do so by the official in charge.

SECTION 406
EMPLOYEE TRAINING AND RESPONSE PROCEDURES

406.1 General. Where fire safety and evacuation plans are required by Section 403, employees shall be trained in fire emergency procedures based on plans prepared in accordance with Section 404.

406.2 Frequency. Employees shall receive training in the contents of fire safety and evacuation plans and their duties as part of new employee orientation and not less than annually thereafter. Records of training shall be maintained.

[NY] 406.3 Employee training program. Employees shall be trained in fire prevention, evacuation and fire safety in accordance with Sections 406.3.1 through 406.3.5.

406.3.1 Fire prevention training. Employees shall be apprised of the fire hazards of the materials and processes to which they are exposed. Each employee shall be instructed in the proper procedures for preventing fires in the conduct of their assigned duties.

INTERNATIONAL CODE COUNCIL®
Copyright © 2019 ICC & NYSDOS. ALL RIGHTS RESERVED. Accessed by Lauren Gualdino (lgualdino@briarcliffmanor.org), (-) Order Number #100880972 on May 08, 2020 07:05 AM (PDT) pursuant to License Agreement with ICC & NYSDOS. No further reproduction, no

100880972

406.3.2 Evacuation training. Employees shall be familiarized with the fire alarm and evacuation signals, their assigned duties in the event of an alarm or emergency, evacuation routes, areas of refuge, exterior assembly areas and procedures for evacuation.

406.3.3 Fire safety training. Employees assigned fire-fighting duties shall be trained to know the locations and proper use of portable fire extinguishers or other manual fire-fighting equipment and the protective clothing or equipment required for its safe and proper use.

406.3.4 Emergency lockdown training. Where a facility has a lockdown plan, employees shall be trained on their assigned duties and procedures in the event of an emergency lockdown.

[NY] 406.3.5 Group I-3 key identification and use. Employees in Institutional Group I-3 occupancies shall be trained on the identification and use of keys that are necessary for unlocking doors that are installed in the means of egress. Employees shall be instructed on the proper key(s) that operate the appropriate door(s) during an emergency and evacuation situation.

SECTION 407
HAZARD COMMUNICATION

407.1 General. The provisions of Sections 407.2 through 407.7 shall be applicable where hazardous materials subject to permits under Section 5001.5 are located on the premises or where required by the fire code official.

407.2 Safety Data Sheets. Safety Data Sheets (SDS) for all hazardous materials shall be either readily available on the premises as a paper copy, or where approved, shall be permitted to be readily retrievable by electronic access.

407.3 Identification. Individual containers of hazardous materials, cartons or packages shall be marked or labeled in accordance with applicable federal regulations. Buildings, rooms and spaces containing hazardous materials shall be identified by hazard warning signs in accordance with Section 5003.5.

407.4 Training. Persons responsible for the operation of areas in which hazardous materials are stored, dispensed, handled or used shall be familiar with the chemical nature of the materials and the appropriate mitigating actions necessary in the event of a fire, leak or spill. Responsible persons shall be designated and trained to be liaison personnel for the fire department. These persons shall aid the fire department in preplanning emergency responses and identification of where hazardous materials are located, and shall have access to Safety Data Sheets and be knowledgeable in the site emergency response procedures.

407.5 Hazardous Materials Inventory Statement. Where required by the fire code official, each application for a permit shall include a Hazardous Materials Inventory Statement (HMIS) in accordance with Section 5001.5.2.

407.6 Hazardous Materials Management Plan. Where required by the fire code official, each application for a permit shall include a Hazardous Materials Management Plan (HMMP) in accordance with Section 5001.5.1. The fire code official is authorized to accept a similar plan required by other regulations.

407.7 Facility closure plans. The permit holder or applicant shall submit to the fire code official a facility closure plan in accordance with Section 5001.6.3 to terminate storage, dispensing, handling or use of hazardous materials.

INTERNATIONAL CODE COUNCIL®
Copyright © 2019 ICC & NYSDOS. ALL RIGHTS RESERVED. Accessed by Lauren Gualdino (lgualdino@briarcliffmanor.org), (-) Order Number #100880972 on May 08, 2020 07:05 AM (PDT) pursuant to License Agreement with ICC & NYSDOS. No further reproduction, no

100880972

Part III—Building and Equipment Design Features

CHAPTER 5
FIRE SERVICE FEATURES

SECTION 501
GENERAL

501.1 Scope. Fire service features for buildings, structures and premises shall comply with this chapter.

[NY] 501.2 Permits. A permit shall be required as set forth in Sections 105.2 and 105.6.

501.3 Construction documents. *Construction documents* for proposed fire apparatus access, location of *fire lanes*, security gates across fire apparatus access roads and *construction documents* and hydraulic calculations for fire hydrant systems shall be submitted to the fire department for review and approval prior to construction.

501.4 Timing of installation. Where fire apparatus access roads or a water supply for fire protection are required to be installed, such protection shall be installed and made serviceable prior to and during the time of construction except where *approved* alternative methods of protection are provided. Temporary street signs shall be installed at each street intersection where construction of new roadways allows passage by vehicles in accordance with Section 505.2.

SECTION 502
DEFINITIONS

502.1 Definitions. The following terms are defined in Chapter 2:

AGENCY.

FIRE APPARATUS ACCESS ROAD.

FIRE COMMAND CENTER.

FIRE DEPARTMENT MASTER KEY.

FIRE LANE.

KEY BOX.

TRAFFIC CALMING DEVICES.

SECTION 503
FIRE APPARATUS ACCESS ROADS

[NY] 503.1 Where required. Fire apparatus access roads shall be provided and maintained in accordance with Sections 503.1.1 through 503.1.3 and Appendix D.

[NY] 503.1.1 Buildings and facilities. *Approved* fire apparatus access roads shall be provided for every facility, building or portion of a building hereafter constructed or moved into or within the jurisdiction. The fire apparatus access road shall comply with the requirements of this section and shall extend to within 150 feet (45 720 mm) of all portions of the facility and all portions of the *exterior walls* of the first story of the building as measured by an *approved* route around the exterior of the building or facility.

Exceptions:

1. The *fire code official* is authorized to increase the dimension of 150 feet (45 720 mm) where any of the following conditions occur:
   - 1.1. The building is equipped throughout with an *approved automatic sprinkler system* installed in accordance with Section 903.3.1.1, 903.3.1.2 or 903.3.1.3.
   - 1.2. Fire apparatus access roads cannot be installed because of location on property, topography, waterways, nonnegotiable grades or other similar conditions, and an *approved* alternative means of fire protection is provided.
   - 1.3. Group U occupancies.
   - 1.4 One- or two-family detached dwellings or not more than two Group R-3 occupancies that meet the requirements of Section 511.
2. Where approved by the *fire code official*, fire apparatus access roads shall be permitted to be exempted or modified for solar photovoltaic power generation facilities.

503.1.2 Additional access. The *fire code official* is authorized to require more than one fire apparatus access road based on the potential for impairment of a single road by vehicle congestion, condition of terrain, climatic conditions or other factors that could limit access.

503.1.3 High-piled storage. Fire department vehicle access to buildings used for *high-piled combustible storage* shall comply with the applicable provisions of Chapter 32.

503.2 Specifications. Fire apparatus access roads shall be installed and arranged in accordance with Sections 503.2.1 through 503.2.8.

503.2.1 Dimensions. Fire apparatus access roads shall have an unobstructed width of not less than 20 feet (6096 mm), exclusive of shoulders, except for *approved* security gates in accordance with Section 503.6, and an unobstructed vertical clearance of not less than 13 feet 6 inches (4115 mm).

INTERNATIONAL CODE COUNCIL®
Copyright © 2019 ICC & NYSDOS. ALL RIGHTS RESERVED. Accessed by Lauren Gualdino (lgualdino@briarcliffmanor.org), (-) Order Number #100880972 on May 08, 2020 07:05 AM (PDT) pursuant to License Agreement with ICC & NYSDOS. No further reproduction, no

100880972

503.2.2 Authority. The *fire code official* shall have the authority to require or permit modifications to the required access widths where they are inadequate for fire or rescue operations or where necessary to meet the public safety objectives of the jurisdiction.

503.2.3 Surface. Fire apparatus access roads shall be designed and maintained to support the imposed loads of fire apparatus and shall be surfaced so as to provide all-weather driving capabilities.

503.2.4 Turning radius. The required turning radius of a fire apparatus access road shall be determined by the *fire code official*.

503.2.5 Dead ends. Dead-end fire apparatus access roads in excess of 150 feet (45 720 mm) in length shall be provided with an *approved* area for turning around fire apparatus.

503.2.6 Bridges and elevated surfaces. Where a bridge or an elevated surface is part of a fire apparatus access road, the bridge shall be constructed and maintained in accordance with AASHTO HB-17. Bridges and elevated surfaces shall be designed for a live load sufficient to carry the imposed loads of fire apparatus. Vehicle load limits shall be posted at both entrances to bridges where required by the *fire code official.* Where elevated surfaces designed for emergency vehicle use are adjacent to surfaces that are not designed for such use, *approved* barriers, *approved* signs or both shall be installed and maintained where required by the *fire code official.*

503.2.7 Grade. The grade of the fire apparatus access road shall be within the limits established by the *fire code official* based on the fire department's apparatus.

503.2.8 Angles of approach and departure. The angles of approach and departure for fire apparatus access roads shall be within the limits established by the *fire code official* based on the fire department's apparatus.

503.3 Marking. Where required by the *fire code official, approved* signs or other *approved* notices or markings that include the words NO PARKING—FIRE LANE shall be provided for fire apparatus access roads to identify such roads or prohibit the obstruction thereof. The means by which *fire lanes* are designated shall be maintained in a clean and legible condition at all times and be replaced or repaired when necessary to provide adequate visibility.

503.4 Obstruction of fire apparatus access roads. Fire apparatus access roads shall not be obstructed in any manner, including the parking of vehicles. The minimum widths and clearances established in Sections 503.2.1 and 503.2.2 shall be maintained at all times.

503.4.1 Traffic calming devices. Traffic calming devices shall be prohibited unless *approved* by the *fire code official.*

503.5 Required gates or barricades. The *fire code official* is authorized to require the installation and maintenance of gates or other *approved* barricades across fire apparatus access roads, trails or other accessways, not including public streets, alleys or highways. Electric gate operators, where provided, shall be *listed* in accordance with UL 325. Gates intended for automatic operation shall be designed, constructed and installed to comply with the requirements of ASTM F2200.

503.5.1 Secured gates and barricades. Where required, gates and barricades shall be secured in an *approved* manner. Roads, trails and other accessways that have been closed and obstructed in the manner prescribed by Section 503.5 shall not be trespassed on or used unless authorized by the *owner* and the *fire code official.*

Exception: The restriction on use shall not apply to public officers acting within the scope of duty.

503.6 Security gates. The installation of security gates across a fire apparatus access road shall be *approved* by the *fire code official*. Where security gates are installed, they shall have an *approved* means of emergency operation. The security gates and the emergency operation shall be maintained operational at all times. Electric gate operators, where provided, shall be *listed* in accordance with UL 325. Gates intended for automatic operation shall be designed, constructed and installed to comply with the requirements of ASTM F2200.

SECTION 504
ACCESS TO BUILDING OPENINGS AND ROOFS

504.1 Required access. Exterior doors and openings required by this code or the *Building Code of New York State* shall be maintained readily accessible for emergency access by the fire department. An *approved* access walkway leading from fire apparatus access roads to exterior openings shall be provided where required by the *fire code official.*

504.2 Maintenance of exterior doors and openings. Exterior doors and their function shall not be eliminated without prior approval. Exterior doors that have been rendered nonfunctional and that retain a functional door exterior appearance shall have a sign affixed to the exterior side of the door with the words THIS DOOR BLOCKED. The sign shall consist of letters having a principal stroke of not less than $^{3}/_{4}$ inch (19.1 mm) wide and not less than 6 inches (152 mm) high on a contrasting background. Required fire department access doors shall not be obstructed or eliminated. Exit and *exit access* doors shall comply with Chapter 10. Access doors for *high-piled combustible storage* shall comply with Section 3206.7.

504.3 Stairway access to roof. New buildings four or more stories above grade plane, except those with a roof slope greater than four units vertical in 12 units horizontal (33.3-percent slope), shall be provided with a *stairway* to the roof. *Stairway* access to the roof shall be in accordance with Section 1011.12. Such *stairway* shall be marked at street and floor levels with a sign indicating that the *stairway* continues to the roof. Where roofs are used for roof gardens or for other purposes, *stairways* shall be provided as required for such occupancy classification.

INTERNATIONAL CODE COUNCIL®
Copyright © 2019 ICC & NYSDOS. ALL RIGHTS RESERVED. Accessed by Lauren Gualdino (lgualdino@briarcliffmanor.org), (-) Order Number #100880972 on May 08, 2020 07:05 AM (PDT) pursuant to License Agreement with ICC & NYSDOS. No further reproduction, no

100880972

SECTION 505
PREMISES IDENTIFICATION

[NY] 505.1 Address identification. New and existing buildings shall be provided with *approved* address identification. The address identification shall be legible and placed in a position that is visible from the street or road fronting the property. Address identification characters shall contrast with their background. Address numbers shall be Arabic numbers or alphabetical letters. Numbers shall not be spelled out. Each character shall be not less than 4 inches (102 mm) high with a minimum stroke width of $^1/_2$ inch (12.7 mm). Where required by the *fire code official*, address identification shall be provided in additional *approved* locations to facilitate emergency response. Where access is by means of a private road and the building cannot be viewed from the *public way*, a monument, pole or other sign or means shall be used to identify the structure. Address identification shall be maintained.

Exception: Buildings identified under an addressing scheme as part of a countywide 911 numbering system.

505.2 Street or road signs. Streets and roads shall be identified with *approved* signs. Temporary signs shall be installed at each street intersection when construction of new roadways allows passage by vehicles. Signs shall be of an *approved* size, weather resistant and be maintained until replaced by permanent signs.

SECTION 506
KEY BOXES

506.1 Where required. Where access to or within a structure or an area is restricted because of secured openings or where immediate access is necessary for life-saving or fire-fighting purposes, the *fire code official* is authorized to require a key box to be installed in an *approved* location. The key box shall be of an *approved* type listed in accordance with UL 1037, and shall contain keys to gain necessary access as required by the *fire code official*.

506.1.1 Locks. An *approved* lock shall be installed on gates or similar barriers where required by the *fire code official*.

506.1.2 Key boxes for nonstandardized fire service elevator keys. Key boxes provided for nonstandardized fire service elevator keys shall comply with Section 506.1 and all of the following:

1. The key box shall be compatible with an existing rapid entry key box system in use in the jurisdiction and *approved* by the *fire code official*.
2. The front cover shall be permanently labeled with the words "Fire Department Use Only—Elevator Keys."
3. The key box shall be mounted at each elevator bank at the lobby nearest to the lowest level of fire department access.
4. The key box shall be mounted 5 feet 6 inches (1676 mm) above the finished floor to the right side of the elevator bank.
5. Contents of the key box are limited to fire service elevator keys. Additional elevator access tools, keys and information pertinent to emergency planning or elevator access shall be permitted where authorized by the *fire code official*.
6. In buildings with two or more elevator banks, a single key box shall be permitted to be used where such elevator banks are separated by not more than 30 feet (9144 mm). Additional key boxes shall be provided for each individual elevator or elevator bank separated by more than 30 feet (9144 mm).

Exception: A single key box shall be permitted to be located adjacent to a *fire command center* or the nonstandard fire service elevator key shall be permitted to be secured in a key box used for other purposes and located in accordance with Section 506.1.

506.2 Key box maintenance. The operator of the building shall immediately notify the *fire code official* and provide the new key where a lock is changed or rekeyed. The key to such lock shall be secured in the key box.

SECTION 507
FIRE PROTECTION WATER SUPPLIES

507.1 Required water supply. An *approved* water supply capable of supplying the required fire flow for fire protection shall be provided to premises on which facilities, buildings or portions of buildings are hereafter constructed or moved into or within the jurisdiction.

[NY] 507.2 Type of water supply. A water supply shall consist of reservoirs, pressure tanks, elevated tanks, water mains or other fixed systems capable of providing the required fire flow.

Exception: In rural and suburban areas in which adequate and reliable water supply systems do not exist, the fire code official is authorized to approve the use of NFPA 1142.

507.2.1 Private fire service mains. Private fire service mains and appurtenances shall be installed in accordance with NFPA 24.

507.2.2 Water tanks. Water tanks for private fire protection shall be installed in accordance with NFPA 22.

507.3 Fire flow. Fire-flow requirements for buildings or portions of buildings and facilities shall be determined by an *approved* method.

507.4 Water supply test. The *fire code official* shall be notified prior to the water supply test. Water supply tests shall be witnessed by the *fire code official* or *approved* documentation of the test shall be provided to the *fire code official* prior to final approval of the water supply system.

507.5 Fire hydrant systems. Fire hydrant systems shall comply with Sections 507.5.1 through 507.5.6.

507.5.1 Where required. Where a portion of the facility or building hereafter constructed or moved into or within the jurisdiction is more than 400 feet (122 m) from a hydrant on a fire apparatus access road, as measured by an

INTERNATIONAL CODE COUNCIL®
Copyright © 2019 ICC & NYSDOS. ALL RIGHTS RESERVED. Accessed by Lauren Gualdino (lgualdino@briarcliffmanor.org), (-) Order Number #100880972 on May 08, 2020 07:05 AM (PDT) pursuant to License Agreement with ICC & NYSDOS. No further reproduction, no

100880972

approved route around the exterior of the facility or building, on-site fire hydrants and mains shall be provided where required by the *fire code official*.

Exceptions:

1. For Group R-3 and Group U occupancies, the distance requirement shall be 600 feet (183 m).
2. For buildings equipped throughout with an *approved automatic sprinkler system* installed in accordance with Section 903.3.1.1 or 903.3.1.2, the distance requirement shall be 600 feet (183 m).

507.5.1.1 Hydrant for standpipe systems. Buildings equipped with a standpipe system installed in accordance with Section 905 shall have a fire hydrant within 100 feet (30 480 mm) of the fire department connections.

Exception: The distance shall be permitted to exceed 100 feet (30 480 mm) where *approved* by the *fire code official*.

507.5.2 Inspection, testing and maintenance. Fire hydrant systems shall be subject to periodic tests as required by the *fire code official*. Fire hydrant systems shall be maintained in an operative condition at all times and shall be repaired where defective. Additions, repairs, *alterations* and servicing shall comply with *approved* standards. Records of tests and required maintenance shall be maintained.

507.5.3 Private fire service mains and water tanks. Private fire service mains and water tanks shall be periodically inspected, tested and maintained in accordance with NFPA 25 at the following intervals:

1. Private fire hydrants of all types: Inspection annually and after each operation; flow test and maintenance annually.
2. Fire service main piping: Inspection of exposed, annually; flow test every 5 years.
3. Fire service main piping strainers: Inspection and maintenance after each use.

Records of inspections, testing and maintenance shall be maintained.

507.5.4 Obstruction. Unobstructed access to fire hydrants shall be maintained at all times. The fire department shall not be deterred or hindered from gaining immediate access to fire protection equipment or fire hydrants.

507.5.5 Clear space around hydrants. A 3-foot (914 mm) clear space shall be maintained around the circumference of fire hydrants, except as otherwise required or *approved*.

507.5.6 Physical protection. Where fire hydrants are subject to impact by a motor vehicle, guard posts or other *approved* means shall comply with Section 312.

SECTION 508
FIRE COMMAND CENTER

508.1 General. Where required by other sections of this code and in all buildings classified as high-rise buildings by the *Building Code of New York State*, a *fire command center* for fire department operations shall be provided and shall comply with Sections 508.1.1 through 508.1.6.

508.1.1 Location and access. The location and accessibility of the *fire command center* shall be *approved* by the *fire code official*.

508.1.2 Separation. The *fire command center* shall be separated from the remainder of the building by not less than a 1-hour *fire barrier* constructed in accordance with Section 707 of the *Building Code of New York State* or *horizontal assembly* constructed in accordance with Section 711 of the *Building Code of New York State*, or both.

508.1.3 Size. The *fire command center* shall be not less than 0.015 percent of the total building area of the facility served or 200 square feet (19 m^2) in area, whichever is greater, with a minimum dimension of 0.7 times the square root of the room area or 10 feet (3048 mm), whichever is greater.

508.1.4 Layout approval. A layout of the *fire command center* and all features required by this section to be contained therein shall be submitted for approval prior to installation.

508.1.5 Storage. Storage unrelated to operation of the *fire command center* shall be prohibited.

508.1.6 Required features. The *fire command center* shall comply with NFPA 72 and shall contain the following features:

1. The emergency voice/alarm communication system control unit.
2. The fire department communications system.
3. Fire detection and alarm system annunciator.
4. Annunciator unit visually indicating the location of the elevators and whether they are operational.
5. Status indicators and controls for air distribution systems.
6. The fire fighter's control panel required by Section 909.16 for smoke control systems installed in the building.
7. Controls for unlocking *interior exit stairway* doors simultaneously.
8. Sprinkler valve and water-flow detector display panels.
9. Emergency and standby power status indicators.
10. A telephone for fire department use with controlled access to the public telephone system.
11. Fire pump status indicators.

INTERNATIONAL CODE COUNCIL®
Copyright © 2019 ICC & NYSDOS. ALL RIGHTS RESERVED. Accessed by Lauren Gualdino (lgualdino@briarcliffmanor.org), (-) Order Number #100880972 on May 08, 2020 07:05 AM (PDT) pursuant to License Agreement with ICC & NYSDOS. No further reproduction, no

100880972

12. Schematic building plans indicating the typical floor plan and detailing the building core, *means of egress*, *fire protection systems*, fire-fighter air-replenishment systems, fire-fighting equipment and fire department access, and the location of *fire walls*, *fire barriers*, *fire partitions*, *smoke barriers* and smoke partitions.
13. An *approved* Building Information Card that includes, but is not limited to, all of the following information:
    - 13.1. General building information that includes: property name, address, the number of floors in the building above and below grade, use and occupancy classification (for mixed uses, identify the different types of occupancies on each floor) and the estimated building population during the day, night and weekend;
    - 13.2. Building emergency contact information that includes: a list of the building's emergency contacts including but not limited to building manager, building engineer and their respective work phone number, cell phone number and e-mail address;
    - 13.3. Building construction information that includes: the type of building construction including but not limited to floors, walls, columns and roof assembly;
    - 13.4. *Exit access stairway* and *exit stairway* information that includes: number of *exit access stairways* and *exit stairways* in building; each *exit access stairway* and *exit stairway* designation and floors served; location where each *exit access stairway* and *exit stairway* discharges, *interior exit stairways* that are pressurized; *exit stairways* provided with emergency lighting; each *exit stairway* that allows reentry; *exit stairways* providing roof access; elevator information that includes: number of elevator banks, elevator bank designation, elevator car numbers and respective floors that they serve; location of elevator machine rooms, control rooms and control spaces; location of sky lobby; and location of freight elevator banks;
    - 13.5. Building services and system information that includes: location of mechanical rooms, location of building management system, location and capacity of all fuel oil tanks, location of emergency generator and location of natural gas service;
    - 13.6. *Fire protection system* information that includes: location of standpipes, location of fire pump room, location of fire department connections, floors protected by automatic sprinklers and location of different types of *automatic sprinkler systems* installed including but not limited to dry, wet and pre-action;
    - 13.7. Hazardous material information that includes: location and quantity of hazardous material.
14. Work table.
15. Generator supervision devices, manual start and transfer features.
16. Public address system, where specifically required by other sections of this code.
17. Elevator fire recall switch in accordance with ASME A17.1/CSA B44.
18. Elevator emergency or standby power selector switch(es), where emergency or standby power is provided.

SECTION 509
FIRE PROTECTION AND UTILITY EQUIPMENT IDENTIFICATION AND ACCESS

509.1 Identification. Fire protection equipment shall be identified in an *approved* manner. Rooms containing controls for air-conditioning systems, sprinkler risers and valves, or other fire detection, suppression or control elements shall be identified for the use of the fire department. *Approved* signs required to identify fire protection equipment and equipment location shall be constructed of durable materials, permanently installed and readily visible.

509.1.1 Utility identification. Where required by the *fire code official*, gas shutoff valves, electric meters, service switches and other utility equipment shall be clearly and legibly marked to identify the unit or space that it serves. Identification shall be made in an *approved* manner, readily visible and shall be maintained.

509.2 Equipment access. *Approved* access shall be provided and maintained for all fire protection equipment to permit immediate safe operation and maintenance of such equipment. Storage, trash and other materials or objects shall not be placed or kept in such a manner that would prevent such equipment from being readily accessible.

SECTION 510
EMERGENCY RESPONDER RADIO COVERAGE

510.1 Emergency responder radio coverage in new buildings. New buildings shall have *approved* radio coverage for emergency responders within the building based on the existing coverage levels of the public safety communication systems utilized by the jurisdiction, measured at the exterior of the building. This section shall not require improvement of the existing public safety communication systems.

Exceptions:

1. Where *approved* by the building official and the *fire code official*, a wired communication system in accordance with Section 907.2.12.2 shall be permit-

INTERNATIONAL CODE COUNCIL®
Copyright © 2019 ICC & NYSDOS. ALL RIGHTS RESERVED. Accessed by Lauren Gualdino (lgualdino@briarcliffmanor.org), (-) Order Number #100880972 on May 08, 2020 07:05 AM (PDT) pursuant to License Agreement with ICC & NYSDOS. No further reproduction, no

100880972

ted to be installed or maintained instead of an *approved* radio coverage system.

2. Where it is determined by the *fire code official* that the radio coverage system is not needed.
3. In facilities where emergency responder radio coverage is required and such systems, components or equipment required could have a negative impact on the normal operations of that facility, the *fire code official* shall have the authority to accept an automatically activated emergency responder radio coverage system.

[NY] 510.2 Reserved.

[NY] 510.3 Permit required. A building permit for the installation of or modification to emergency responder radio coverage systems and related equipment is required as specified in Section 105.2. Maintenance performed in accordance with this code is not considered a modification and does not require a permit.

510.4 Technical requirements. Systems, components and equipment required to provide the emergency responder radio coverage system shall comply with Sections 510.4.1 through 510.4.2.8.

510.4.1 Emergency responder communication enhancement system signal strength. The building shall be considered to have acceptable emergency responder communications enhancement system coverage when signal strength measurements in 95 percent of all areas on each floor of the building meet the signal strength requirements in Sections 510.4.1.1 through 510.4.1.3.

510.4.1.1 Minimum signal strength into the building. The minimum inbound signal strength shall be sufficient to provide usable voice communications throughout the coverage area as specified by the *fire code official*. The inbound signal level shall be sufficient to provide not less than a Delivered Audio Quality (DAQ) of 3.0 or an equivalent Signal-to-Interference-Plus-Noise Ratio (SINR) applicable to the technology for either analog or digital signals.

510.4.1.2 Minimum signal strength out of the building. The minimum outbound signal strength shall be sufficient to provide usable voice communications throughout the coverage area as specified by the *fire code official*. The outbound signal level shall be sufficient to provide not less than a DAQ of 3.0 or an equivalent SINR applicable to the technology for either analog or digital signals.

510.4.1.3 System performance. Signal strength shall be sufficient to meet the requirements of the applications being utilized by public safety for emergency operations through the coverage area as specified by the *fire code official* in Section 510.4.2.2.

510.4.2 System design. The emergency responder radio coverage system shall be designed in accordance with Sections 510.4.2.1 through 510.4.2.8 and NFPA 1221.

510.4.2.1 Amplification systems and components. Buildings and structures that cannot support the required level of radio coverage shall be equipped with systems and components to enhance the public safety radio signals and achieve the required level of radio coverage specified in Sections 510.4.1 through 510.4.1.3. Public safety communications enhancement systems utilizing radio-frequency-emitting devices and cabling shall be approved by the *fire code official*. Prior to installation, all RF-emitting devices shall have the certification of the radio licensing authority and be suitable for public safety use.

510.4.2.2 Technical criteria. The *fire code official* shall maintain a document providing the specific technical information and requirements for the emergency responder communications coverage system. This document shall contain, but not be limited to, the various frequencies required, the location of radio sites, the effective radiated power of radio sites, the maximum propagation delay in microseconds, the applications being used and other supporting technical information necessary for system design.

510.4.2.3 Standby power. Emergency responder radio coverage systems shall be provided with dedicated standby batteries or provided with 2-hour standby batteries and connected to the facility generator power system in accordance with Section 1203. The standby power supply shall be capable of operating the emergency responder radio coverage system at 100-percent system capacity for a duration of not less than 12 hours.

510.4.2.4 Signal booster requirements. If used, signal boosters shall meet the following requirements:

1. All signal booster components shall be contained in a National Electrical Manufacturer's Association (NEMA) 4-type waterproof cabinet.
2. Battery systems used for the emergency power source shall be contained in a NEMA 3R or higher-rated cabinet.
3. Equipment shall have FCC or other radio licensing authority certification and be suitable for public safety use prior to installation.
4. Where a donor antenna exists, isolation shall be maintained between the donor antenna and all inside antennas to not less than 20dB greater than the system gain under all operating conditions.
5. Bi-Directional Amplifiers (BDAs) used in emergency responder radio coverage systems shall have oscillation prevention circuitry.
6. The installation of amplification systems or systems that operate on or provide the means to cause interference on any emergency responder radio coverage networks shall be coordinated and approved by the *fire code official*.

510.4.2.5 System monitoring. The emergency responder radio enhancement system shall be monitored by a listed *fire alarm control unit*, or where approved by the *fire code official*, shall sound an audible signal at a constantly attended on-site location.

INTERNATIONAL CODE COUNCIL®
Copyright © 2019 ICC & NYSDOS. ALL RIGHTS RESERVED. Accessed by Lauren Gualdino (lgualdino@briarcliffmanor.org), (-) Order Number #100880972 on May 08, 2020 07:05 AM (PDT) pursuant to License Agreement with ICC & NYSDOS. No further reproduction, no

100880972

Automatic supervisory signals shall include the following:

1. Loss of normal AC power supply.
2. System battery charger(s) failure.
3. Malfunction of the donor antenna(s).
4. Failure of active RF-emitting device(s).
5. Low-battery capacity at 70-percent reduction of operating capacity.
6. Failure of critical system components.
7. The communications link between the *fire alarm system* and the emergency responder radio enhancement system.

510.4.2.6 Additional frequencies and change of frequencies. The emergency responder radio coverage system shall be capable of modification or expansion in the event frequency changes are required by the FCC or other radio licensing authority, or additional frequencies are made available by the FCC or other radio licensing authority.

510.4.2.7 Design documents. The *fire code official* shall have the authority to require "as-built" design documents and specifications for emergency responder communications coverage systems. The documents shall be in a format acceptable to the *fire code official*.

510.4.2.8 Radio communication antenna density. Systems shall be engineered to minimize the near-far effect. Radio enhancement system designs shall include sufficient antenna density to address reduced gain conditions.

Exceptions:

1. Class A narrow band signal booster devices with independent AGC/ALC circuits per channel.
2. Systems where all portable devices within the same band use active power control features.

510.5 Installation requirements. The installation of the public safety radio coverage system shall be in accordance with NFPA 1221 and Sections 510.5.1 through 510.5.4.

510.5.1 Approval prior to installation. Amplification systems capable of operating on frequencies licensed to any public safety agency by the FCC or other radio licensing authority shall not be installed without prior coordination and approval of the *fire code official*.

510.5.2 Minimum qualifications of personnel. The minimum qualifications of the system designer and lead installation personnel shall include both of the following:

1. A valid FCC-issued general radio operator's license.
2. Certification of in-building system training issued by an approved organization or approved school, or a certificate issued by the manufacturer of the equipment being installed.

These qualifications shall not be required where demonstration of adequate skills and experience satisfactory to the *fire code official* is provided.

510.5.3 Acceptance test procedure. Where an emergency responder radio coverage system is required, and upon completion of installation, the building *owner* shall have the radio system tested to verify that two-way coverage on each floor of the building is not less than 95 percent. The test procedure shall be conducted as follows:

1. Each floor of the building shall be divided into a grid of 20 approximately equal test areas.
2. The test shall be conducted using a calibrated portable radio of the latest brand and model used by the agency talking through the agency's radio communications system or equipment approved by the fire code official.
3. Failure of more than one test area shall result in failure of the test.
4. In the event that two of the test areas fail the test, in order to be more statistically accurate, the floor shall be permitted to be divided into 40 equal test areas. Failure of not more than two nonadjacent test areas shall not result in failure of the test. If the system fails the 40-area test, the system shall be altered to meet the 95-percent coverage requirement.
5. A test location approximately in the center of each test area shall be selected for the test, with the radio enabled to verify two-way communications to and from the outside of the building through the public agency's radio communications system. Once the test location has been selected, that location shall represent the entire test area. Failure in the selected test location shall be considered to be a failure of that test area. Additional test locations shall not be permitted.
6. The gain values of all amplifiers shall be measured and the test measurement results shall be kept on file with the building *owner* so that the measurements can be verified during annual tests. In the event that the measurement results become lost, the building *owner* shall be required to rerun the acceptance test to reestablish the gain values.
7. As part of the installation, a spectrum analyzer or other suitable test equipment shall be utilized to ensure spurious oscillations are not being generated by the subject signal booster. This test shall be conducted at the time of installation and at subsequent annual inspections.
8. Systems incorporating Class B signal-booster devices or Class B broadband fiber remote devices shall be tested using two portable radios simultaneously conducting subjective voice quality checks. One portable radio shall be positioned not greater than 10 feet (3048 mm) from the indoor antenna. The second portable radio shall be positioned at a distance that represents the farthest distance from

INTERNATIONAL CODE COUNCIL®
Copyright © 2019 ICC & NYSDOS. ALL RIGHTS RESERVED. Accessed by Lauren Gualdino (lgualdino@briarcliffmanor.org), (-) Order Number #100880972 on May 08, 2020 07:05 AM (PDT) pursuant to License Agreement with ICC & NYSDOS. No further reproduction, no

100880972

any indoor antenna. With both portable radios simultaneously keyed up on different frequencies within the same band, subjective audio testing shall be conducted and comply with DAQ levels as specified in Sections 510.4.1.1 and 510.4.1.2.

510.5.4 FCC compliance. The emergency responder radio coverage system installation and components shall comply with all applicable federal regulations including, but not limited to, FCC 47 CFR Part 90.219.

510.6 Maintenance. The emergency responder radio coverage system shall be maintained operational at all times in accordance with Sections 510.6.1 through 510.6.4.

510.6.1 Testing and proof of compliance. The owner of the building or owner's authorized agent shall have the emergency responder radio coverage system shall be inspected and tested annually or where structural changes occur including additions or remodels that could materially change the original field performance tests. Testing shall consist of the following:

1. In-building coverage test as described in Section 510.5.3.
2. Signal boosters shall be tested to verify that the gain is the same as it was upon initial installation and acceptance or set to optimize the performance of the system.
3. Backup batteries and power supplies shall be tested under load of a period of 1 hour to verify that they will properly operate during an actual power outage. If within the 1-hour test period the battery exhibits symptoms of failure, the test shall be extended for additional 1-hour periods until the integrity of the battery can be determined.
4. Other active components shall be checked to verify operation within the manufacturer's specifications.
5. At the conclusion of the testing, a report, which shall verify compliance with Section 510.5.3, shall be submitted to the *fire code official*.

510.6.2 Additional frequencies. The building *owner* shall modify or expand the emergency responder radio coverage system at his or her expense in the event frequency changes are required by the FCC or other radio licensing authority, or additional frequencies are made available by the FCC or other radio licensing authority. Prior approval of a public safety radio coverage system on previous frequencies does not exempt this section.

510.6.3 Nonpublic safety system. Where other nonpublic safety amplification systems installed in buildings reduce the performance or cause interference with the emergency responder communications coverage system, the nonpublic safety amplification system shall be corrected or removed.

510.6.4 Field testing. Agency personnel shall have the right to enter onto the property at any reasonable time to conduct field testing to verify the required level of radio coverage.

[NY] SECTION 511
EMERGENCY VEHICLE ACCESS

[NY] 511.1 Emergency access driveways. Emergency vehicle access for one- or two-family Group R-3 buildings and detached one- and two-family dwellings constructed in accordance with the *Residential Code of New York State,* hereafter constructed or moved into the jurisdiction, shall be provided in accordance with this section.

Exceptions:

1. Construction of dwellings on premises which have had local site plan approval prior to January 1, 2011, with no modification to *approved* site plan.
2. Accessory storage buildings.
3. Dwellings without electrical service and permitted to not have electrical service by the *Residential Code of New York State*.

[NY] 511.2 Driveways. Driveways shall be provided when an egress door required by Section R311 of the *Residential Code of New York State* is located more than 300 feet (91 440 mm) from a fire apparatus access road or public street.

Exception: The measurement is permitted to be increased beyond 300 feet (91 440 mm) if driveways cannot be installed because of location on property, topography, waterways, nonnegotiable grades or other similar conditions and the building is protected by an automatic sprinkler system in accordance with Section 903.3.1.1, 903.3.1.2, 903.3.1.3, or Section P2904 of the *Residential Code of New York State*.

[NY] 511.2.1 Dimensions. Driveways shall provide a minimum unobstructed width of 12 feet (3658 mm) and a minimum unobstructed height of 13 feet, 6 inches (4115 mm).

[NY] 511.2.2 Turnaround. When driveways are in excess of 500 feet (152 400 mm) in length and do not exit to another fire apparatus access road or public street, a turnaround shall be provided suitable for use by fire apparatus.

[NY] 511.2.3 Turnouts. Driveways in excess of 500 feet (152 400 mm) in length and less than 20 feet (6096 mm) in width shall be provided with turnouts along the driveway that are a minimum 20 feet in width for a length of 50 feet (15 240 mm) in length. The turnouts shall be placed at intervals not to exceed 500 feet (152 400 mm) along the driveway.

[NY] 511.2.4 Stability. Driveways, including bridges and other supporting structures of driveways, shall be constructed to support fire apparatus in all weather conditions.

[NY] 511.2.5 Design. The design of driveways, including turning radius and grade, shall facilitate passage of fire apparatus and be approved.

[NY] 511.2.6 Driveways serving more than four buildings. Driveways, and portions thereof, that serve more than four buildings shall meet the design requirements for fire apparatus access roads as specified in Section 503.

INTERNATIONAL CODE COUNCIL®
Copyright © 2019 ICC & NYSDOS. ALL RIGHTS RESERVED. Accessed by Lauren Gualdino (lgualdino@briarcliffmanor.org), (-) Order Number #100880972 on May 08, 2020 07:05 AM (PDT) pursuant to License Agreement with ICC & NYSDOS. No further reproduction, no

CHAPTER 6
BUILDING SERVICES AND SYSTEMS

SECTION 601
GENERAL

601.1 Scope. The provisions of this chapter shall apply to the installation, operation and maintenance of fuel-fired appliances and heating systems, electrical systems and equipment, mechanical refrigeration systems, elevator recall and commercial kitchen equipment.

[NY] 601.2 Permits. Permits shall be obtained for refrigeration systems as set forth in Sections 105.2 and 105.6.

SECTION 602
DEFINITIONS

602.1 Definitions. The following terms are defined in Chapter 2:

➡ **COMMERCIAL COOKING APPLIANCES.**

CRITICAL CIRCUIT.

➡ **HOOD.**

Type I.

Type II.

REFRIGERANT.

REFRIGERATING (REFRIGERATION) SYSTEM.

➡

SECTION 603
FUEL-FIRED APPLIANCES

603.1 Installation. The installation of nonportable gas-fired appliances and systems shall comply with the *Fuel Gas Code of New York State*. The installation of nonportable liquid fuel-fired appliances and systems shall comply with this section and the *Mechanical Code of New York State*. The installation of all other fuel-fired appliances, other than portable internal combustion engines, oil lamps and other portable devices such as blow torches, melting pots and weed burners, shall comply with this section and the *Mechanical Code of New York State*.

603.1.1 Manufacturer's instructions. The installation shall be made in accordance with the manufacturer's instructions and applicable federal, state and local rules and regulations. Where it becomes necessary to change, modify or alter a manufacturer's instructions in any way, written approval shall first be obtained from the manufacturer.

603.1.2 Approval. The design, construction and installation of fuel-fired appliances shall be in accordance with the *Fuel Gas Code of New York State* and the *Mechanical Code of New York State*.

603.1.3 Electrical wiring and equipment. Electrical wiring and equipment used in connection with oil-burning equipment shall be installed and maintained in accordance with Section 604 and NFPA 70.

603.1.4 Fuel oil. The grade of fuel oil used in a burner shall be that for which the burner is *approved* and as stipulated by the burner manufacturer. Oil containing gasoline shall not be used. Waste crankcase oil shall be an acceptable fuel in Group F, M and S occupancies where utilized in equipment *listed* for use with waste oil and where such equipment is installed in accordance with the manufacturer's instructions and the terms of its listing.

603.1.5 Access. The installation shall be provided with access to equipment for cleaning hot surfaces; removing burners; replacing motors, controls, air filters, chimney connectors, draft regulators and other working parts; and for adjusting, cleaning and lubricating parts.

603.1.6 Testing, diagrams and instructions. After installation of the oil-burning equipment, operation and combustion performance tests shall be conducted to determine that the burner is in proper operating condition and that all accessory equipment, controls, and safety devices function properly.

603.1.6.1 Diagrams. Contractors installing industrial oil-burning systems shall furnish not less than two copies of diagrams showing the main oil lines and controlling valves, one copy of which shall be posted at the oil-burning equipment and another at an *approved* location that will be available in case of emergency.

603.1.6.2 Instructions. After completing the installation, the installer shall instruct the *owner* or operator in the proper operation of the equipment. The installer shall furnish the *owner* or operator with the name and telephone number of persons to contact for technical information or assistance and routine or emergency services.

603.1.7 Clearances. Working clearances between oil-fired appliances and electrical panelboards and equipment shall be in accordance with NFPA 70. Clearances between oil-fired equipment and oil supply tanks shall be in accordance with NFPA 31.

603.2 Chimneys. Masonry chimneys shall be constructed in accordance with the *Building Code of New York State*. Factory-built chimneys shall be installed in accordance with the *Mechanical Code of New York State*. Metal chimneys shall be constructed and installed in accordance with NFPA 211.

603.3 Fuel oil storage systems. Fuel oil storage systems shall be installed in accordance with this code. Fuel-oil piping systems shall be installed in accordance with the *Mechanical Code of New York State*.

603.3.1 Fuel oil storage in outside, above-ground tanks. Where connected to a fuel-oil piping system, the maximum amount of fuel oil storage allowed outside above

INTERNATIONAL CODE COUNCIL®
Copyright © 2019 ICC & NYSDOS. ALL RIGHTS RESERVED. Accessed by Lauren Gualdino (lgualdino@briarcliffmanor.org), (-) Order Number #100880972 on May 08, 2020 07:05 AM (PDT) pursuant to License Agreement with ICC & NYSDOS. No further reproduction, no

100880972

ground without additional protection shall be 660 gallons (2498 L). The storage of fuel oil above ground in quantities exceeding 660 gallons (2498 L) shall comply with NFPA 31.

603.3.2 Fuel oil storage inside buildings. Fuel oil storage inside buildings shall comply with Sections 603.3.2.1 through 603.3.2.7 or Chapter 57.

603.3.2.1 Quantity limits. One or more fuel oil storage tanks containing Class II or III *combustible liquid* shall be permitted in a building. The aggregate capacity of all tanks shall not exceed the following:

1. 660 gallons (2498 L) in unsprinklered buildings, where stored in a tank complying with UL 80, UL 142 or UL 2085.
2. 1,320 gallons (4996 L) in buildings equipped with an *automatic sprinkler* system in accordance with Section 903.3.1.1, where stored in a tank complying with UL 142.
3. 3,000 gallons (11 356 L) where stored in protected above-ground tanks complying with UL 2085 and Section 5704.2.9.7 and the room is protected by an *automatic sprinkler system* in accordance with Section 903.3.1.1.

603.3.2.2 Restricted use and connection. Tanks installed in accordance with Section 603.3.2 shall be used only to supply fuel oil to fuel-burning equipment, generators or fire pumps installed in accordance with Section 603.3.2.4. Connections between tanks and equipment supplied by such tanks shall be made using closed piping systems.

603.3.2.3 Applicability of maximum allowable quantity and control area requirements. The quantity of *combustible liquid* stored in tanks complying with Section 603.3.2 shall not be counted towards the maximum allowable quantity set forth in Table 5003.1.1(1), and such tanks shall not be required to be located in a *control area*.

603.3.2.4 Installation. Tanks and piping systems shall be installed in accordance with Section 915 and Chapter 13, both of the *Mechanical Code of New York State*, as applicable.

603.3.2.5 Separation. Rooms containing fuel oil tanks for internal combustion engines shall be separated from the remainder of the building by *fire barriers*, *horizontal assemblies*, or both, with a minimum 1-hour fire-resistance rating with 1-hour fire-protection-rated *opening protectives* constructed in accordance with the *Building Code of New York State.*

Exception: Rooms containing protected above-ground tanks complying with Section 5704.2.9.7 shall not be required to be separated from surrounding areas.

603.3.2.6 Spill containment. Tanks exceeding 55-gallon (208 L) capacity or an aggregate capacity of 1,000 gallons (3785 L) that are not provided with integral secondary containment shall be provided with spill containment sized to contain a release from the largest tank.

603.3.2.7 Tanks in basements. Tanks in *basements* shall be located not more than two stories below grade plane.

603.3.3 Underground storage of fuel oil. The storage of fuel oil in underground storage tanks shall comply with NFPA 31.

603.4 Portable unvented heaters. Portable unvented fuel-fired heating equipment shall be prohibited in occupancies in Groups A, E, I, R-1, R-2, R-3 and R-4 and ambulatory care facilities.

Exceptions:

1. In one- and two-family *dwellings* portable unvented fuel-fired heaters, where approved and *listed* in accordance with UL 647.
2. Portable outdoor gas-fired heating appliances in accordance with Section 603.4.2.

603.4.1 Prohibited locations. Unvented fuel-fired heating equipment shall not be located in, or obtain combustion air from, any of the following rooms or spaces: sleeping rooms, bathrooms, toilet rooms or storage closets.

603.4.2 Portable outdoor gas-fired heating appliances. Portable gas-fired heating appliances located outdoors shall be in accordance with Sections 603.4.2.1 through 603.4.2.3.4.

603.4.2.1 Location. Portable outdoor gas-fired heating appliances shall be located in accordance with Sections 603.4.2.1.1 through 603.4.2.1.4.

603.4.2.1.1 Prohibited locations. The storage or use of portable outdoor gas-fired heating appliances is prohibited in any of the following locations:

1. Inside of any occupancy where connected to the fuel gas container.
2. Inside of tents, canopies and membrane structures.
3. On exterior balconies.

Exception: As allowed in Section 6.22 of NFPA 58.

603.4.2.1.2 Clearance to buildings. Portable outdoor gas-fired heating appliances shall be located not less than 5 feet (1524 mm) from buildings.

603.4.2.1.3 Clearance to combustible materials. Portable outdoor gas-fired heating appliances shall not be located beneath, or closer than 5 feet (1524 mm) to combustible decorations and combustible overhangs, awnings, sunshades or similar combustible attachments to buildings.

603.4.2.1.4 Proximity to exits. Portable outdoor gas-fired heating appliances shall not be located within 5 feet (1524 mm) of *exits* or *exit discharges*.

603.4.2.2 Installation and operation. Portable outdoor gas-fired heating appliances shall be installed and oper-

INTERNATIONAL CODE COUNCIL®
Copyright © 2019 ICC & NYSDOS. ALL RIGHTS RESERVED. Accessed by Lauren Gualdino (lgualdino@briarcliffmanor.org), (-) Order Number #100880972 on May 08, 2020 07:05 AM (PDT) pursuant to License Agreement with ICC & NYSDOS. No further reproduction, no

100880972

ated in accordance with Sections 603.4.2.2.1 through 603.4.2.2.4.

603.4.2.2.1 Listing and approval. Only *listed* and *approved* portable outdoor gas-fired heating appliances utilizing a fuel gas container that is integral to the appliance shall be used.

603.4.2.2.2 Installation and maintenance. Portable outdoor gas-fired heating appliances shall be installed and maintained in accordance with the manufacturer's instructions.

603.4.2.2.3 Tip-over switch. Portable outdoor gas-fired heating appliances shall be equipped with a tilt or tip-over switch that automatically shuts off the flow of gas if the appliance is tilted more than 15 degrees (0.26 rad) from the vertical.

603.4.2.2.4 Guard against contact. The heating element or combustion chamber of portable outdoor gas-fired heating appliances shall be permanently guarded so as to prevent accidental contact by persons or material.

603.4.2.3 Gas containers. Fuel gas containers for portable outdoor gas-fired heating appliances shall comply with Sections 603.4.2.3.1 through 603.4.2.3.4.

603.4.2.3.1 Approved containers. Only *approved* DOTn or ASME gas containers shall be used.

603.4.2.3.2 Container replacement. Replacement of fuel gas containers in portable outdoor gas-fired heating appliances shall not be conducted while the public is present.

603.4.2.3.3 Container capacity. The maximum individual capacity of gas containers used in connection with portable outdoor gas-fired heating appliances shall not exceed 20 pounds (9 kg).

603.4.2.3.4 Indoor storage prohibited. Gas containers shall not be stored inside of buildings except in accordance with Section 6109.9.

603.5 Heating appliances. Heating appliances shall be *listed* and shall comply with Sections 603.5.1 and 603.5.2.

603.5.1 Guard against contact. The heating element or combustion chamber shall be permanently guarded so as to prevent accidental contact by persons or material.

603.5.2 Heating appliance installation and maintenance. Heating appliances shall be installed and maintained in accordance with the manufacturer's instructions, the *Building Code of New York State*, the *Mechanical Code of New York State*, the *Fuel Gas Code of New York State* and NFPA 70.

603.6 Chimneys and appliances. Chimneys, incinerators, smokestacks or similar devices for conveying smoke or hot gases to the outer air and the stoves, furnaces, fireboxes or boilers to which such devices are connected, shall be maintained so as not to create a fire hazard.

603.6.1 Masonry chimneys. Masonry chimneys that, upon inspection, are found to be without a flue liner and that have open mortar joints which will permit smoke or gases to be discharged into the building, or which are cracked as to be dangerous, shall be repaired or relined with a *listed* chimney liner system installed in accordance with the manufacturer's instructions or a flue lining system installed in accordance with the requirements of the *Building Code of New York State* and appropriate for the intended class of chimney service.

603.6.2 Metal chimneys. Metal chimneys that are corroded or improperly supported shall be repaired or replaced.

603.6.3 Decorative shrouds. Decorative shrouds installed at the termination of factory-built chimneys shall be removed except where such shrouds are *listed* and *labeled* for use with the specific factory-built chimney system and are installed in accordance with the chimney manufacturer's instructions.

603.6.4 Factory-built chimneys. Existing factory-built chimneys that are damaged, corroded or improperly supported shall be repaired or replaced.

603.6.5 Connectors. Existing chimney and vent connectors that are damaged, corroded or improperly supported shall be repaired or replaced.

603.7 Discontinuing operation of unsafe heating appliances. The *fire code official* is authorized to order that measures be taken to prevent the operation of any existing stove, oven, furnace, incinerator, boiler or any other heat-producing device or appliance found to be defective or in violation of code requirements for existing appliances after giving notice to this effect to any person, *owner*, firm or agent or operator in charge of the same. The *fire code official* is authorized to take measures to prevent the operation of any device or appliance without notice when inspection shows the existence of an immediate fire hazard or when imperiling human life. The defective device shall remain withdrawn from service until all necessary repairs or *alterations* have been made.

603.7.1 Unauthorized operation. It shall be a violation of this code for any person, user, firm or agent to continue the utilization of any device or appliance (the operation of which has been discontinued or ordered discontinued in accordance with Section 603.7) unless written authority to resume operation is given by the *fire code official*. Removing or breaking the means by which operation of the device is prevented shall be a violation of this code.

603.8 Incinerators. Commercial, industrial and residential-type incinerators and chimneys shall be constructed in accordance with the *Building Code of New York State,* the *Fuel Gas Code of New York State* and the *Mechanical Code of New York State*.

603.8.1 Residential incinerators. Residential incinerators shall be of an *approved* type.

603.8.2 Spark arrestor. Incinerators shall be equipped with an effective means for arresting sparks.

603.8.3 Restrictions. Where the *fire code official* determines that burning in incinerators located within 500 feet (152 m) of mountainous, brush or grass-covered areas will create an undue fire hazard because of atmospheric conditions, such burning shall be prohibited.

INTERNATIONAL CODE COUNCIL®
Copyright © 2019 ICC & NYSDOS. ALL RIGHTS RESERVED. Accessed by Lauren Gualdino (lgualdino@briarcliffmanor.org), (-) Order Number #100880972 on May 08, 2020 07:05 AM (PDT) pursuant to License Agreement with ICC & NYSDOS. No further reproduction, no

100880972

603.8.4 Time of burning. Burning shall take place only during *approved* hours.

603.8.5 Discontinuance. The *fire code official* is authorized to require incinerator use to be discontinued immediately if the *fire code official* determines that smoke emissions are offensive to occupants of surrounding property or if the use of incinerators is determined by the *fire code official* to constitute a hazardous condition.

603.8.6 Flue-fed incinerators in Group I-2. In Group I-2 occupancies, the continued use of existing flue-fed incinerators is prohibited.

603.8.7 Incinerator inspections in Group I-2. Incinerators in Group I-2 occupancies shall be inspected not less than annually in accordance with the manufacturer's instructions. Inspection records shall be maintained on the premises and made available to the *fire code official* upon request

603.9 Gas meters. Above-ground gas meters, regulators and piping subject to damage shall be protected by a barrier complying with Section 312 or otherwise protected in an *approved* manner.

* **[NY] 603.10 Solid fuel-burning heating appliances, chimneys and flues.** Building permits, inspection requirements, and compliance certificates for the installation, inspection, and subsequent use of solid fuel-burning heating appliances, chimneys and flues shall be in accordance with Section 113 of the *Fire Code of New York State*.

SECTION 604
ELECTRICAL EQUIPMENT, WIRING AND HAZARDS

604.1 Abatement of electrical hazards. Identified electrical hazards shall be abated. Identified hazardous electrical conditions in permanent wiring shall be brought to the attention of the responsible building official. Electrical wiring, devices, appliances and other equipment that is modified or damaged and constitutes an electrical shock or fire hazard shall not be used.

604.2 Illumination. Illumination shall be provided for service equipment areas, motor control centers and electrical panelboards.

604.3 Working space and clearance. A working space of not less than 30 inches (762 mm) in width, 36 inches (914 mm) in depth and 78 inches (1981 mm) in height shall be provided in front of electrical service equipment. Where the electrical service equipment is wider than 30 inches (762 mm), the working space shall be not less than the width of the equipment. Storage of materials shall not be located within the designated working space.

Exceptions:

1. Where other dimensions are required or allowed by NFPA 70.
2. Access openings into attics or under-floor areas that provide a minimum clear opening of 22 inches (559 mm) by 30 inches (762 mm).

604.3.1 Labeling. Doors into electrical control panel rooms shall be marked with a plainly visible and legible sign stating ELECTRICAL ROOM or similar approved wording. The disconnecting means for each service, feeder or branch circuit originating on a switchboard or panelboard shall be legibly and durably marked to indicate its purpose unless such purpose is clearly evident. Where buildings or structures are supplied by more than one power source, markings shall be provided at each service equipment location and at all interconnected electric power production sources identifying all electric power sources at the premises in accordance with NFPA 70.

604.4 Multiplug adapters. Multiplug adapters, such as cube adapters, unfused plug strips or any other device not complying with NFPA 70 shall be prohibited.

604.4.1 Power tap design. Relocatable power taps shall be of the polarized or grounded type, equipped with overcurrent protection, and shall be *listed* in accordance with UL 1363.

604.4.2 Power supply. Relocatable power taps shall be directly connected to a permanently installed receptacle.

604.4.3 Installation. Relocatable power tap cords shall not extend through walls, ceilings, floors, under doors or floor coverings, or be subject to environmental or physical damage.

604.5 Extension cords. Extension cords and flexible cords shall not be a substitute for permanent wiring and shall be listed and labeled in accordance with UL 817. Extension cords and flexible cords shall not be affixed to structures, extended through walls, ceilings or floors, or under doors or floor coverings, nor shall such cords be subject to environmental damage or physical impact. Extension cords shall be used only with portable appliances. Extension cords marked for indoor use shall not be used outdoors.

604.5.1 Power supply. Extension cords shall be plugged directly into an *approved* receptacle, power tap or multiplug adapter and, except for *approved* multiplug extension cords, shall serve only one portable appliance.

604.5.2 Ampacity. The ampacity of the extension cords shall be not less than the rated capacity of the portable appliance supplied by the cord.

604.5.3 Maintenance. Extension cords shall be maintained in good condition without splices, deterioration or damage.

604.5.4 Grounding. Extension cords shall be grounded where serving grounded portable appliances.

604.6 Unapproved conditions. Open junction boxes and open-wiring splices shall be prohibited. *Approved* covers shall be provided for all switch and electrical outlet boxes.

604.7 Equipment and fixtures. Electrical equipment and fixtures shall be tested and *listed* by an *approved* agency and installed and maintained in accordance with all instructions included as part of such listing.

604.8 Electrical motors. Electrical motors shall be maintained free from excessive accumulations of oil, dirt, waste and debris.

INTERNATIONAL CODE COUNCIL®
Copyright © 2019 ICC & NYSDOS. ALL RIGHTS RESERVED. Accessed by Lauren Gualdino (lgualdino@briarcliffmanor.org), (-) Order Number #100880972 on May 08, 2020 07:05 AM (PDT) pursuant to License Agreement with ICC & NYSDOS. No further reproduction, no

100880972

604.9 Temporary wiring. Temporary wiring for electrical power and lighting installations is allowed for a period not to exceed 90 days. Temporary wiring methods shall meet the applicable provisions of NFPA 70.

Exception: Temporary wiring for electrical power and lighting installations is allowed during periods of construction, remodeling, repair or demolition of buildings, structures, equipment or similar activities.

604.9.1 Attachment to structures. Temporary wiring attached to a structure shall be attached in an *approved* manner.

604.10 Portable, electric space heaters. Where not prohibited by other sections of this code, portable, electric space heaters shall be permitted to be used in all occupancies in accordance with Sections 604.10.1 through 604.10.5.

604.10.1 Listed and labeled. Only *listed* and *labeled* portable, electric space heaters shall be used.

604.10.2 Power supply. Portable, electric space heaters shall be plugged directly into an *approved* receptacle.

604.10.3 Extension cords. Portable, electric space heaters shall not be plugged into extension cords.

604.10.4 Prohibited areas. Portable, electric space heaters shall not be operated within 3 feet (914 mm) of any combustible materials. Portable, electric space heaters shall be operated only in locations for which they are *listed*.

604.10.5 Group I-2 occupancies and ambulatory care facilities. Where used in Group I-2 and ambulatory care facilities, portable, electric space heaters shall be limited to those having a heating element that cannot exceed a temperature of 212°F (100°C), and such heaters shall only be used in nonsleeping staff and employee areas.

*

604.11 Abandoned wiring in plenums. Abandoned cables in plenums that are able to be accessed without causing damage, or requiring demolition to the building, shall be tagged for future use or shall be removed.

SECTION 605
MECHANICAL REFRIGERATION

[M] 605.1 Scope. Refrigeration systems shall be installed in accordance with the *Mechanical Code of New York State*.

**

605.1.1 Refrigerants other than ammonia. Where a refrigerant other than ammonia is used, refrigeration systems and the buildings in which such systems are installed shall be in accordance with ASHRAE 15.

605.1.2 Ammonia refrigeration. Refrigeration systems using ammonia refrigerant and the buildings in which such systems are installed shall comply with ANSI/IIAR-2 for system design and installation and ANSI/IIAR-7 for operating procedures. Decommissioning of ammonia refrigeration systems shall comply with ANSI/IIAR-8.

[M] 605.2 Refrigerants. The use and purity of new, recovered and reclaimed refrigerants shall be in accordance with the *Mechanical Code of New York State*.

[M] 605.3 Refrigerant classification. Refrigerants shall be classified in accordance with the *Mechanical Code of New York State.*

[M] 605.4 Change in refrigerant type. A change in the type of refrigerant in a refrigeration system shall be in accordance with the *Mechanical Code of New York State*.

605.5 Access. Access to refrigeration systems having a refrigerant circuit containing more than 220 pounds (100 kg) of Group A1 or 30 pounds (14 kg) of any other group refrigerant shall be provided for the fire department at all times as required by the *fire code official*.

605.6 Testing of equipment. Refrigeration equipment and systems having a refrigerant circuit containing more than 220 pounds (100 kg) of Group A1 or 30 pounds (14 kg) of any other group refrigerant shall be subject to periodic testing in accordance with Section 605.6.1. Records of tests shall be maintained. Tests of emergency devices or systems required by this chapter shall be conducted by persons trained and qualified in refrigeration systems.

605.6.1 Periodic testing. The following emergency devices or systems shall be periodically tested in accordance with the manufacturer's instructions and as required by the *fire code official*.

1. Treatment and flaring systems.
2. Valves and appurtenances necessary to the operation of emergency refrigeration control boxes.
3. Fans and associated equipment intended to operate emergency ventilation systems.
4. Detection and alarm systems.

605.7 Emergency signs. Refrigeration units or systems having a refrigerant circuit containing more than 220 pounds (100 kg) of Group A1 or 30 pounds (14 kg) of any other group refrigerant shall be provided with *approved* emergency signs, charts and labels in accordance with NFPA 704. Hazard signs shall be in accordance with the *Mechanical Code of New York State* for the classification of refrigerants listed therein.

605.8 Refrigerant detection. Machinery rooms shall be provided with a refrigerant detector with an audible and visible alarm. Where ammonia is used as the refrigerant, detection shall comply with ANSI/IIAR 2. For refrigerants other than ammonia, refrigerant detection shall comply with Section 605.8.1.

605.8.1 Refrigerants other than ammonia. A detector, or a sampling tube that draws air to a detector, shall be provided at an approved location where refrigerant from a leak is expected to accumulate. The system shall be designed to initiate audible and visible alarms inside of and outside each entrance to the refrigerating machinery room and transmit a signal to an approved location where

INTERNATIONAL CODE COUNCIL®
Copyright © 2019 ICC & NYSDOS. ALL RIGHTS RESERVED. Accessed by Lauren Gualdino (lgualdino@briarcliffmanor.org), (-) Order Number #100880972 on May 08, 2020 07:05 AM (PDT) pursuant to License Agreement with ICC & NYSDOS. No further reproduction, no

100880972

the concentration of refrigerant detected exceeds the lesser of the following:

1. The corresponding TLV-TWA values shown in the *Mechanical Code of New York State* for the refrigerant classification.
2. Twenty-five percent of the lower flammable limit (LFL).

Detection of a refrigerant concentration exceeding the upper detection limit or 25 percent of the lower flammable limit (LFL), whichever is lower, shall stop refrigerant equipment in the machinery room in accordance with Section 605.9.1.

605.9 Remote controls. Where flammable refrigerants are used and compliance with Section 1106 of the *Mechanical Code of New York State* is required, remote control of the mechanical equipment and appliances located in the machinery room as required by Sections 605.9.1 and 605.9.2 shall be provided at an approved location immediately outside the machinery room and adjacent to its principal entrance.

605.9.1 Refrigeration system emergency shutoff. A clearly identified switch of the break-glass type or with an *approved* tamper-resistant cover shall provide off-only control of refrigerant compressors, refrigerant pumps and normally closed automatic refrigerant valves located in the machinery room. Additionally, this equipment shall be automatically shut off when the refrigerant vapor concentration in the machinery room exceeds the vapor detector's upper detection limit or 25 percent of the LEL, whichever is lower.

605.9.2 Ventilation system. A clearly identified switch of the break-glass type or with an approved tamper-resistant cover shall provide on-only control of the machinery room ventilation fans.

605.10 Emergency pressure control system. Permanently installed refrigeration systems containing more than 6.6 pounds (3 kg) of flammable, toxic or highly toxic refrigerant or ammonia shall be provided with an emergency pressure control system in accordance with Sections 605.10.1 and 605.10.2.

605.10.1 Automatic crossover valves. Each high- and intermediate-pressure zone in a refrigeration system shall be provided with a single automatic valve providing a crossover connection to a lower pressure zone. Automatic crossover valves shall comply with Sections 605.10.1.1 through 605.10.1.3.

605.10.1.1 Overpressure limit set point. Automatic crossover valves shall be arranged to automatically relieve excess system pressure to a lower pressure zone if the pressure in a high- or intermediate-pressure zone rises to within 90 percent of the set point for emergency pressure relief devices.

605.10.1.2 Manual operation. Where required by the *fire code official*, automatic crossover valves shall be capable of manual operation.

605.10.1.3 System design pressure. Refrigeration system zones that are connected to a higher pressure zone by an automatic crossover valve shall be designed to safely contain the maximum pressure that can be achieved by interconnection of the two zones.

605.10.2 Automatic emergency stop. An automatic emergency stop feature shall be provided in accordance with Sections 605.10.2.1 and 605.10.2.2.

605.10.2.1 Operation of an automatic crossover valve. Operation of an automatic crossover valve shall cause all compressors on the affected system to immediately stop. Dedicated pressure-sensing devices located immediately adjacent to crossover valves shall be permitted as a means for determining operation of a valve. To ensure that the automatic crossover valve system provides a redundant means of stopping compressors in an overpressure condition, high-pressure cutout sensors associated with compressors shall not be used as a basis for determining operation of a crossover valve.

605.10.2.2 Overpressure in low-pressure zone. The lowest pressure zone in a refrigeration system shall be provided with a dedicated means of determining a rise in system pressure to within 90 percent of the set point for emergency pressure relief devices. Activation of the overpressure sensing device shall cause all compressors on the affected system to immediately stop.

605.11 Storage, use and handling. Flammable and combustible materials shall not be stored in machinery rooms for refrigeration systems having a refrigerant circuit containing more than 220 pounds (100 kg) of Group A1 or 30 pounds (14 kg) of any other group refrigerant. Storage, use or handling of extra refrigerant or refrigerant oils shall be as required by Chapters 50, 53, 55 and 57.

Exception: This provision shall not apply to spare parts, tools and incidental materials necessary for the safe and proper operation and maintenance of the system.

605.12 Discharge and termination of pressure relief and purge systems. Pressure relief devices, fusible plugs and purge systems discharging to the atmosphere from refrigeration systems containing flammable, toxic or highly toxic refrigerants or ammonia shall comply with Sections 605.12.2 through 605.12.4. *

605.12.1 Fusible plugs and rupture members. Discharge piping and devices connected to the discharge side of a fusible plug or rupture member shall have provisions to prevent plugging the pipe in the event the fusible plug or rupture member functions.

605.12.2 Flammable refrigerants. Systems containing more than 6.6 pounds (3 kg) of flammable refrigerants

INTERNATIONAL CODE COUNCIL®
Copyright © 2019 ICC & NYSDOS. ALL RIGHTS RESERVED. Accessed by Lauren Gualdino (lgualdino@briarcliffmanor.org), (-) Order Number #100880972 on May 08, 2020 07:05 AM (PDT) pursuant to License Agreement with ICC & NYSDOS. No further reproduction, no

100880972

having a density equal to or greater than the density of air shall discharge vapor to the atmosphere only through an *approved* treatment system in accordance with Section 605.12.5 or a flaring system in accordance with Section 605.12.6. Systems containing more than 6.6 pounds (3 kg) of flammable refrigerants having a density less than the density of air shall be permitted to discharge vapor to the atmosphere provided that the point of discharge is located outside of the structure at not less than 15 feet (4572 mm) above the adjoining grade level and not less than 20 feet (6096 mm) from any window, ventilation opening or *exit*.

605.12.3 Toxic and highly toxic refrigerants. Systems containing more than 6.6 pounds (3 kg) of toxic or highly toxic refrigerants shall discharge vapor to the atmosphere only through an *approved* treatment system in accordance with Section 605.12.5 or a flaring system in accordance with Section 605.12.6.

605.12.4 Ammonia refrigerant. Systems containing more than 6.6 pounds (3 kg) of ammonia refrigerant shall discharge vapor to the atmosphere in accordance with one of the following methods:

1. Directly to atmosphere where the *fire code official* determines, on review of an engineering analysis prepared in accordance with Section 104.7.2, that a fire, health or environmental hazard would not result from atmospheric discharge of ammonia.
2. Through an *approved* treatment system in accordance with Section 605.12.5.
3. Through a flaring system in accordance with Section 605.12.6.
4. Through an *approved* ammonia diffusion system in accordance with Section 605.12.7.
5. By other *approved* means.

Exception: Ammonia/water absorption systems containing less than 22 pounds (10 kg) of ammonia and for which the ammonia circuit is located entirely outdoors.

605.12.5 Treatment systems. Treatment systems shall be designed to reduce the allowable discharge concentration of the refrigerant gas to not more than 50 percent of the IDLH at the point of exhaust. Treatment systems shall be in accordance with Chapter 60.

605.12.6 Flaring systems. Flaring systems for incineration of flammable refrigerants shall be designed to incinerate the entire discharge. The products of refrigerant incineration shall not pose health or environmental hazards. Incineration shall be automatic upon initiation of discharge, shall be designed to prevent blowback and shall not expose structures or materials to threat of fire. Standby fuel, such as LP-gas, and standby power shall have the capacity to operate for one and one-half the required time for complete incineration of refrigerant in the system. Standby electrical power, where required to complete the incineration process, shall be in accordance with Section 1203.

605.12.7 Ammonia diffusion systems. Ammonia diffusion systems shall include a tank containing 1 gallon of water for each pound of ammonia (8.3 L of water for each 1 kg of ammonia) that will be released in 1 hour from the largest relief device connected to the discharge pipe. The water shall be prevented from freezing. The discharge pipe from the pressure relief device shall distribute ammonia in the bottom of the tank, but not lower than 33 feet (10 058 mm) below the maximum liquid level. The tank shall contain the volume of water and ammonia without overflowing.

605.13 Mechanical ventilation exhaust. Exhaust from mechanical ventilation systems serving refrigeration machinery rooms containing flammable, toxic or highly toxic refrigerants, other than ammonia, capable of exceeding 25 percent of the LFL or 50 percent of the IDLH shall be equipped with *approved* treatment systems to reduce the discharge concentrations to those values or lower.

Exception: Refrigeration systems containing Group A2L complying with Section 605.17.

605.14 Notification of refrigerant discharges. The *fire code official* shall be notified immediately when a discharge becomes reportable under state, federal or local regulations in accordance with Section 5003.3.1.

605.15 Records. A record of refrigerant quantities brought into and removed from the premises shall be maintained.

[M] 605.16 Electrical equipment. Where *refrigerant* of Groups A2, A3, B2 and B3, as defined in the *Mechanical Code of New York State*, are used, refrigeration machinery rooms shall conform to the Class I, Division 2 hazardous location classification requirements of NFPA 70.

Exceptions:

1. Ammonia machinery rooms that are provided with ventilation in accordance with Section 1106.3 of the *Mechanical Code of New York State*.
2. Machinery rooms for systems containing Group A2L *refrigerants* that are provided with ventilation in accordance with Section 605.17.

[M] 605.17 Special requirements for Group A2L refrigerant machinery rooms. Machinery rooms with systems containing Group A2L refrigerants shall comply with Sections 605.17.1 through 605.17.3.

Exception: Machinery rooms conforming to the Class 1, Division 2 hazardous location classification requirements of NFPA 70.

605.17.1 Refrigerant detection system. The machinery room shall be provided with a refrigerant detection system. The refrigerant detection system shall be in accordance with Section 605.8 and all of the following:

1. The detectors shall activate at or below a refrigerant concentration of 25 percent of the LFL.
2. Upon activation, the detection system shall activate the emergency ventilation system in Section 605.17.3.
3. The detection, signaling and control circuits shall be supervised.

[M] 605.17.2 Emergency ventilation system. An emergency ventilation system shall be provided at the mini-

INTERNATIONAL CODE COUNCIL®
Copyright © 2019 ICC & NYSDOS. ALL RIGHTS RESERVED. Accessed by Lauren Gualdino (lgualdino@briarcliffmanor.org), (-) Order Number #100880972 on May 08, 2020 07:05 AM (PDT) pursuant to License Agreement with ICC & NYSDOS. No further reproduction, no

100880972

mum exhaust rate specified in ASHRAE 15 or Table 605.17.2. Shut down of the emergency ventilation system shall be by manual means.

TABLE [M] 605.17.2
MINIMUM EXHAUST RATE

REFRIGERANT	Q (m^3/sec)	Q (cfm)
R32	15.4	32,600
R143a	13.6	28,700
R444A	6.46	13,700
R444B	10.6	22,400
R445A	7.83	16,600
R446A	23.9	50,700
R447A	23.8	50,400
R451A	7.04	15,000
R451B	7.05	15,000
R1234yf	7.80	16,600
R1234ze(E)	5.92	12,600

[M] 605.17.3 Emergency ventilation system discharge. The point of discharge to the atmosphere shall be located outside of the structure at not less than 15 feet (4572 mm) above the adjoining grade level and not less than 20 feet (6096 mm) from any window, ventilation opening or exit.

SECTION 606
ELEVATOR OPERATION, MAINTENANCE AND FIRE SERVICE KEYS

606.1 Emergency operation. Existing elevators with a travel distance of 25 feet (7620 mm) or more shall comply with the requirements in Chapter 11. New elevators shall be provided with Phase I emergency recall operation and Phase II emergency in-car operation in accordance with ASME A17.1/CSA B44.

606.2 Standby power. In buildings and structures where standby power is required or furnished to operate an elevator, standby power shall be provided in accordance with Section 1203. Operation of the system shall be in accordance with Sections 606.2.1 through 606.2.4.

606.2.1 Manual transfer. Standby power shall be manually transferable to all elevators in each bank.

606.2.2 One elevator. Where only one elevator is installed, the elevator shall automatically transfer to standby power within 60 seconds after failure of normal power.

606.2.3 Two or more elevators. Where two or more elevators are controlled by a common operating system, all elevators shall automatically transfer to standby power within 60 seconds after failure of normal power where the standby power source is of sufficient capacity to operate all elevators at the same time. Where the standby power source is not of sufficient capacity to operate all elevators at the same time, all elevators shall transfer to standby power in sequence, return to the designated landing and disconnect from the standby power source. After all elevators have been returned to the designated level, not less than one elevator shall remain operable from the standby power source.

606.2.4 Machine room ventilation. Where standby power is connected to elevators, the machine room ventilation or air conditioning shall be connected to the standby power source.

[BE] 606.3 Emergency signs. An *approved* pictorial sign of a standardized design shall be posted adjacent to each elevator call station on all floors instructing occupants to use the exit stairways and not to use the elevators in case of fire. The sign shall read: IN FIRE EMERGENCY, DO NOT USE ELEVATOR. USE EXIT STAIRS.

Exceptions:

1. The emergency sign shall not be required for elevators that are part of an accessible *means of egress* complying with Section 1009.4.
2. The emergency sign shall not be required for elevators that are used for occupant self-evacuation in accordance with Section 3008 of the *Building Code of New York State*.

606.4 Fire service access elevator lobbies. Where fire service access elevators are required by Section 3007 of the *Building Code of New York State*, fire service access elevator lobbies shall be maintained free of storage and furniture.

606.5 Occupant evacuation elevator lobbies. Where occupant evacuation elevators are provided in accordance with Section 3008 of the *Building Code of New York State*, occupant evacuation elevator lobbies shall be maintained free of storage and furniture.

606.6 Water protection of hoistway enclosures. Methods to prevent water from infiltrating into a hoistway enclosure required by Section 3007.3 and Section 3008.3 of the *Building Code of New York State* shall be maintained.

606.7 Elevator key location. Keys for the elevator car doors and fire-fighter service keys shall be kept in an *approved* location for immediate use by the fire department.

606.8 Standardized fire service elevator keys. Buildings with elevators equipped with Phase I emergency recall, Phase II emergency in-car operation, or a fire service access elevator shall be equipped to operate with a standardized fire service elevator key approved by the *fire code official*.

Exception: The owner shall be permitted to place the building's nonstandardized fire service elevator keys in a key box installed in accordance with Section 506.1.2.

606.8.1 Requirements for standardized fire service elevator keys. Standardized fire service elevator keys shall comply with all of the following:

1. All fire service elevator keys within the jurisdiction shall be uniform and specific for the jurisdiction. Keys shall be cut to a uniform key code.
2. Fire service elevator keys shall be of a patent-protected design to prevent unauthorized duplication.
3. Fire service elevator keys shall be factory restricted by the manufacturer to prevent the unauthorized dis-

INTERNATIONAL CODE COUNCIL®
Copyright © 2019 ICC & NYSDOS. ALL RIGHTS RESERVED. Accessed by Lauren Gualdino (lgualdino@briarcliffmanor.org), (-) Order Number #100880972 on May 08, 2020 07:05 AM (PDT) pursuant to License Agreement with ICC & NYSDOS. No further reproduction, no

100880972

tribution of key blanks. Uncut key blanks shall not be permitted to leave the factory.

4. Fire service elevator keys subject to these rules shall be engraved with the words "DO NOT DUPLICATE."

606.8.2 Access to standardized fire service keys. Access to standardized fire service elevator keys shall be restricted to the following:

1. Elevator owners or their authorized agents.
2. Elevator contractors.
3. Elevator inspectors of the jurisdiction.
4. *Fire code officials* of the jurisdiction.
5. The fire department and other emergency response agencies designated by the *fire code official*.

606.8.3 Duplication or distribution of keys. A person shall not duplicate a standardized fire service elevator key or issue, give, or sell a duplicated key unless in accordance with this code.

606.8.4 Responsibility to provide keys. The building owner shall provide up to three standardized fire service elevator keys where required by the *fire code official*, upon installation of a standardized fire service key switch or switches in the building.

*

SECTION 607
COMMERCIAL KITCHEN HOODS

[M] 607.1 General. Commercial kitchen exhaust hoods shall comply with the requirements of the *Mechanical Code of New York State.*

[M] 607.2 Where required. A Type I hood shall be installed at or above all commercial cooking appliances and domestic cooking appliances used for commercial purposes that produce grease vapors.

Exceptions:

1. Factory-built commercial exhaust hoods that are listed and labeled in accordance with UL 710, and installed in accordance with Section 304.1 of the *Mechanical Code of New York State*, shall not be required to comply with Sections 507.1.5, 507.2.3, 507.2.5, 507.2.8, 507.3.1, 507.3.3, 507.4 and 507.5 of the *Mechanical Code of New York State*.
2. Factory-built commercial cooking recirculating systems that are listed and labeled in accordance with UL 710B, and installed in accordance with Section 304.1 of the *Mechanical Code of New York State*, shall not be required to comply with Sections 507.1.5, 507.2.3, 507.2.5, 507.2.8, 507.3.1, 507.3.3, 507.4 and 507.5 of the *Mechanical Code of New York State*. Spaces in which such systems are located shall be considered to be kitchens and shall be ventilated in accordance with Table 403.3.1.1 of the *Mechanical Code of New York State* For the purpose of determining the floor area required to be ventilated, each individual appliance shall be considered as occupying not less than 100 square feet (9.3 m^2).
3. Where cooking appliances are equipped with integral down-draft exhaust systems and such appliances and exhaust systems are listed and labeled for the application in accordance with NFPA 96, a hood shall not be required at or above them.
4. A Type I hood shall not be required for an electric cooking appliance where an approved testing agency provides documentation that the appliance effluent contains 5 mg/m^3 or less of grease when tested at an exhaust flow rate of 500 cfm (0.236 m^3/s) in accordance with UL 710B.

607.3 Operations and maintenance. Commercial cooking systems shall be operated and maintained in accordance with Sections 607.3.1 through 607.3.4.

607.3.1 Ventilation system. The ventilation system in connection with hoods shall be operated at the required rate of air movement, and grease filters listed and labeled in accordance with UL 1046 shall be in place where equipment under a kitchen grease hood is used.

607.3.2 Grease extractors. Where grease extractors are installed, they shall be operated when the commercial-type cooking equipment is used.

607.3.3 Cleaning. Hoods, grease-removal devices, fans, ducts and other appurtenances shall be cleaned at intervals as required by Sections 607.3.3.1 through 607.3.3.3.

607.3.3.1 Inspection. Hoods, grease-removal devices, fans, ducts and other appurtenances shall be inspected at intervals specified in Table 607.3.3.1 or as *approved* by the *fire code official.* Inspections shall be completed by qualified individuals.

TABLE 607.3.3.1
COMMERCIAL COOKING SYSTEM INSPECTION FREQUENCY

TYPE OF COOKING OPERATIONS	FREQUENCY OF INSPECTION
High-volume cooking operations such as 24-hour cooking, charbroiling or wok cooking	3 months
Low-volume cooking operations such as places of religious worship, seasonal businesses and senior centers	12 months
Cooking operations utilizing solid fuel-burning cooking appliances	1 month
All other cooking operations	6 months

607.3.3.2 Grease accumulation. If during the inspection it is found that hoods, grease-removal devices, fans, ducts or other appurtenances have an accumulation of grease, such components shall be cleaned in accordance with ANSI/IKECA C10.

607.3.3.3 Records. Records for inspections shall state the individual and company performing the inspection, a description of the inspection and when the inspection took place. Records for cleanings shall state the individual and company performing the cleaning and when

INTERNATIONAL CODE COUNCIL®
Copyright © 2019 ICC & NYSDOS. ALL RIGHTS RESERVED. Accessed by Lauren Gualdino (lgualdino@briarcliffmanor.org), (-) Order Number #100880972 on May 08, 2020 07:05 AM (PDT) pursuant to License Agreement with ICC & NYSDOS. No further reproduction, no

100880972

the cleaning took place. Such records shall be completed after each inspection or cleaning and maintained.

607.3.3.3.1 Tags. When a commercial kitchen hood or duct system is inspected, a tag containing the service provider name, address, telephone number and date of service shall be provided in a conspicuous location. Prior tags shall be covered or removed.

607.3.4 Extinguishing system service. Automatic fire-extinguishing systems protecting commercial cooking systems shall be serviced as required in Section 904.12.5.

607.4 Appliance connection to building piping. Gas-fired commercial cooking appliances installed on casters and appliances that are moved for cleaning and sanitation purposes shall be connected to the piping system with an appliance connector listed as complying with ANSI Z21.69. The commercial cooking appliance connector installation shall be configured in accordance with the manufacturer's installation instructions. Movement of appliances with casters shall be limited by a restraining device installed in accordance with the connector and appliance manufacturer's instructions.

SECTION 608
COMMERCIAL KITCHEN COOKING OIL STORAGE

608.1 General. Storage of cooking oil (grease) in commercial cooking operations utilizing above-ground tanks with a capacity greater than 60 gal (227 L) installed within a building shall comply with Sections 608.2 through 608.7 and NFPA 30. For purposes of this section, cooking oil shall be classified as a Class IIIB liquid unless otherwise determined by testing.

608.2 Metallic storage tanks. Metallic cooking oil storage tanks shall be listed in accordance with UL 142 or UL 80, and shall be installed in accordance with the tank manufacturer's instructions.

608.3 Nonmetallic storage tanks. Nonmetallic cooking oil storage tanks shall be listed in accordance with UL 2152 and shall be installed in accordance with the tank manufacturer's instructions. Tank capacity shall not exceed 200 gallons (757 L) per tank.

608.4 Cooking oil storage system components. Cooking oil storage system components shall include but are not limited to piping, connections, fittings, valves, tubing, hose, pumps, vents and other related components used for the transfer of cooking oil, and are permitted to be of either metallic or nonmetallic construction.

608.4.1 Design standards. The design, fabrication and assembly of system components shall be suitable for the working pressures, temperatures and structural stresses to be encountered by the components.

608.4.2 Components in contact with heated oil. System components that come in contact with heated cooking oil shall be rated for the maximum operating temperatures expected in the system.

608.5 Tank venting. Normal and emergency venting shall be provided for cooking oil storage tanks.

608.5.1 Normal vents. Normal vents shall be located above the maximum normal liquid line, and shall have a minimum effective area not smaller than the largest filling or withdrawal connection. Normal vents shall be permitted to vent inside the building.

608.5.2 Emergency vents. Emergency relief vents shall be located above the maximum normal liquid line, and shall be in the form of a device or devices that will relieve excessive internal pressure caused by an exposure fire. For nonmetallic tanks, the emergency relief vent shall be allowed to be in the form of construction. Emergency vents shall be permitted to vent inside the building.

608.6 Heating of cooking oil. Electrical equipment used for heating cooking oil in cooking oil storage systems shall be listed to UL 499 and shall comply with NFPA 70. Use of electrical immersion heaters shall be prohibited in nonmetallic tanks.

608.7 Electrical equipment. Electrical equipment used for the operation of cooking oil storage systems shall comply with NFPA 70.

SECTION 609
HYPERBARIC FACILITIES

609.1 General. Hyperbaric facilities shall be inspected, tested and maintained in accordance with NFPA 99.

609.2 Records. Records shall be maintained of all testing and repair conducted on the hyperbaric chamber and associated devices and equipment. Records shall be available to the *fire code official*.

INTERNATIONAL CODE COUNCIL®
Copyright © 2019 ICC & NYSDOS. ALL RIGHTS RESERVED. Accessed by Lauren Gualdino (lgualdino@briarcliffmanor.org), (-) Order Number #100880972 on May 08, 2020 07:05 AM (PDT) pursuant to License Agreement with ICC & NYSDOS. No further reproduction, no

100880972

CHAPTER 7
FIRE AND SMOKE PROTECTION FEATURES

SECTION 701
GENERAL

701.1 Scope. The provisions of this chapter shall govern the inspection and maintenance of the materials, systems and assemblies used for structural *fire resistance*, *fire-resistance-rated* construction separation of adjacent spaces and construction installed to resist the passage of smoke to safeguard against the spread of fire and smoke within a building and the spread of fire to or from buildings. New buildings shall comply with the *Building Code of New York State*.

701.2 Fire-resistance-rated construction. The *fire-resistance rating* of the following *fire-resistance-rated* construction shall be maintained:

1. Structural members.
2. *Exterior walls*.
3. *Fire walls, fire barriers, fire partitions*.
4. *Horizontal assemblies.*
5. Shaft enclosures.

701.2.1 Hanging displays. The hanging and displaying of salable goods and other decorative materials from acoustical ceiling systems that are part of a fire-resistance-rated horizontal assembly shall be prohibited.

701.3 Smoke barriers. The *fire-resistance rating* and smoke-resistant characteristics of *smoke barriers* shall be maintained.

701.4 Smoke partitions. The smoke-resistant characteristics of smoke partitions shall be maintained.

701.5 Maintaining protection. Materials, systems and devices used to repair or protect breaches and openings in fire-resistance-rated construction and construction installed to resist the passage of smoke shall be maintained in accordance with Sections 703 through 707.

701.6 Owner's responsibility. The owner shall maintain an inventory of all required *fire-resistance-rated* construction, construction installed to resist the passage of smoke and the construction included in Sections 703 through 707. Such construction shall be visually inspected by the *owner* annually and properly repaired, restored or replaced where damaged, altered, breached or penetrated. Records of inspections and repairs shall be maintained. Where concealed, such elements shall not be required to be visually inspected by the *owner* unless the concealed space is accessible by the removal or movement of a panel, access door, ceiling tile or similar movable entry to the space.

701.7 Unsafe conditions. Where any components in this chapter are not maintained and do not function as intended or do not have the *fire resistance* or the resistance to the passage of smoke required by the code under which the building was constructed, remodeled or altered, such component(s) or portion thereof shall be deemed an unsafe condition, in accordance with Section 108. Components or portions thereof determined to be unsafe shall be repaired or replaced to conform to that code under which the building was constructed, remodeled, altered or this chapter, as deemed appropriate by the *fire code official*.

Where the condition of components is such that any building, structure or portion thereof presents an imminent danger to the occupants of the building, structure or portion thereof, the *fire code official* shall act in accordance with Section 109.

SECTION 702
DEFINITIONS

702.1 Definitions. The following terms are defined in Chapter 2:

DRAFTSTOP.

FIREBLOCKING.

FIRE-RESISTANT JOINT SYSTEM.

MEMBRANE-PENETRATION FIRESTOP SYSTEM.

OPENING PROTECTIVE.

SMOKE BARRIER.

SMOKE PARTITION.

THROUGH-PENETRATION FIRESTOP SYSTEM.

SECTION 703
PENETRATIONS

703.1 Maintaining protection. Materials and firestop systems used to protect membrane and through penetrations in *fire-resistance-rated* construction and construction installed to resist the passage of smoke shall be maintained. The materials and firestop systems shall be securely attached to or bonded to the construction being penetrated with no openings visible through or into the cavity of the construction. Where the system design number is known, the system shall be inspected to the listing criteria and manufacturer's installation instructions.

SECTION 704
JOINTS AND VOIDS

704.1 Maintaining protection. Where required when the building was originally constructed, materials and systems used to protect joints and voids in the following locations shall be maintained. The materials and systems shall be securely attached to or bonded to the adjacent construction, without openings visible through the construction.

1. Joints in or between *fire-resistance-rated* walls, floors or floor/ceiling assemblies and roof or roof/ceiling assemblies.

INTERNATIONAL CODE COUNCIL®
Copyright © 2019 ICC & NYSDOS. ALL RIGHTS RESERVED. Accessed by Lauren Gualdino (lgualdino@briarcliffmanor.org), (-) Order Number #100880972 on May 08, 2020 07:05 AM (PDT) pursuant to License Agreement with ICC & NYSDOS. No further reproduction, no

100880972

2. Joints in *smoke barriers*.
3. Voids at the intersection of a horizontal floor assembly and an exterior curtain wall.
4. Voids at the intersection of a horizontal smoke barrier and an exterior curtain wall.
5. Voids at the intersection of a nonfire-resistance-rated floor assembly and an exterior curtain wall.
6. Voids at the intersection of a vertical *fire barrier* and an exterior curtain wall.
7. Voids at the intersection of a vertical *fire barrier* and a nonfire-resistance-rated roof assembly.

Unprotected joints and voids do not need to be protected where such joints and voids were not required to be protected when the building was originally constructed.

704.2 Opening protectives. Where openings are required to be protected, opening protectives shall be maintained self-closing or automatic-closing by smoke detection. Existing fusible-link-type automatic door-closing devices are permitted if the fusible link rating does not exceed 135°F (57°C).

SECTION 705
DOOR AND WINDOW OPENINGS

705.1 General. Where required when the building was originally constructed, opening protectives installed in *fire-resistance-rated* assemblies, *smoke barriers* and *smoke partitions* shall be inspected and maintained in accordance with this section.

705.2 Inspection and maintenance. Opening protectives in *fire-resistance-rated* assemblies shall be inspected and maintained in accordance with NFPA 80. *Opening protectives* in *smoke barriers* shall be inspected and maintained in accordance with NFPA 80 and NFPA 105. Openings in smoke partitions shall be inspected and maintained in accordance with NFPA 105. Fire doors and smoke and draft control doors shall not be blocked, obstructed, or otherwise made inoperable. Fusible links shall be replaced promptly whenever fused or damaged. *Opening protectives* and smoke and draft control doors shall not be modified.

705.2.1 Labeling requirements. Where approved by the *fire code official*, the application of field-applied labels associated with the maintenance of *opening protectives* shall follow the requirements of the *approved* third-party certification organization accredited for *listing* the opening protective.

705.2.2 Signs. Where required by the *fire code official*, a sign shall be permanently displayed on or near each *fire door* in letters not less than 1 inch (25 mm) high to read as follows:

1. For doors designed to be kept normally open: FIRE DOOR—DO NOT BLOCK.
2. For doors designed to be kept normally closed: FIRE DOOR—KEEP CLOSED.

705.2.3 Hold-open devices and closers. Hold-open devices and automatic door closers, where provided, shall be maintained. During the period that such device is out of service for repairs, the door it operates shall remain in the closed position.

705.2.4 Door operation. Swinging *fire doors* shall close from the full-open position and latch automatically.

705.2.5 Smoke- and heat-activated doors. Smoke-activated doors shall be maintained to self-close or automatically close upon detection of smoke. Existing fusible-link-type automatic door-closing devices are permitted if the fusible link rating does not exceed 135°F (57°C).

705.2.6 Testing. Horizontal and vertical sliding and rolling *fire doors* shall be inspected and tested annually to confirm proper operation and full closure. Records of inspections and testing shall be maintained.

SECTION 706
DUCT AND AIR TRANSFER OPENINGS

706.1 Maintaining protection. Dampers protecting ducts and air transfer openings shall be inspected and maintained in accordance with NFPA 80 and NFPA 105. Other products or materials used to protect the openings for ducts and air transfer openings shall be securely attached to or bonded to the construction containing the duct or air transfer opening, without visible openings through or into the cavity of the construction. Any damaged products or materials protecting duct and air transfer openings shall be repaired, restored or replaced.

706.2 Unprotected openings. Unprotected duct and air transfer openings in *fire-resistance-rated* construction and construction installed to resist the passage of smoke shall be protected so as to comply with requirements that were in effect when the building was constructed.

SECTION 707
CONCEALED SPACES

707.1 Fireblocking and draftstopping. Required *fireblocking* and draftstopping in combustible concealed spaces shall be maintained to provide continuity and integrity of the construction.

INTERNATIONAL CODE COUNCIL®
Copyright © 2019 ICC & NYSDOS. ALL RIGHTS RESERVED. Accessed by Lauren Gualdino (lgualdino@briarcliffmanor.org), (-) Order Number #100880972 on May 08, 2020 07:05 AM (PDT) pursuant to License Agreement with ICC & NYSDOS. No further reproduction, no

100880972

CHAPTER 8
INTERIOR FINISH, DECORATIVE MATERIALS AND FURNISHINGS

SECTION 801
GENERAL

801.1 Scope. The provisions of this chapter shall govern interior finish, interior trim, furniture, furnishings, decorative materials and decorative vegetation in buildings. Existing buildings shall comply with Sections 803 through 808. New buildings shall comply with Sections 804 through 808, and Section 803 of the *Building Code of New York State*.

SECTION 802
DEFINITIONS

802.1 Definitions. The following terms are defined in Chapter 2:

FLAME SPREAD.

FLAME SPREAD INDEX.

INTERIOR FLOOR-WALL BASE.

SITE-FABRICATED STRETCH SYSTEM.

SMOKE-DEVELOPED INDEX.

SECTION 803
INTERIOR WALL AND CEILING FINISH IN EXISTING BUILDINGS

803.1 General. The provisions of this section shall limit the allowable fire performance and smoke development of interior wall and ceiling finishes in existing buildings based on location and occupancy classification. Interior wall and ceiling finishes shall be classified in accordance with Section 803 of the *Building Code of New York State*. Such materials shall be classified in accordance with NFPA 286, as indicated in Section 803.1.1, or in accordance with ASTM E84 or UL 723, as indicated in Section 803.1.2.

Materials tested in accordance with Section 803.1.1 shall not be required to be tested in accordance with Section 803.1.2.

803.1.1 Interior wall and ceiling finish materials tested in accordance with NFPA 286. Interior wall and ceiling finish materials shall be classified in accordance with NFPA 286 and tested in accordance with Section 803.1.1.1. Materials complying with Section 803.1.1.1 shall be considered to comply with the requirements of Class A specified in Section 803.1.2.

803.1.1.1 Acceptance criteria for NFPA 286. The interior finish shall comply with the following:

1. During the 40 kW exposure, flames shall not spread to the ceiling.
2. The flame shall not spread to the outer extremity of the sample on any wall or ceiling.
3. Flashover, as defined in NFPA 286, shall not occur.
4. The peak heat release rate throughout the test shall not exceed 800 kW.
5. The total smoke released throughout the test shall not exceed 1,000 m^2.

803.1.2 Interior wall and ceiling finish materials tested in accordance with ASTM E84 or UL 723. Interior wall and ceiling finishes shall be classified in accordance with ASTM E84 or UL 723. Such interior finish materials shall be grouped in the following classes in accordance with their flame spread and smoke-developed indices.

Class A: Flame spread index 0–25; smoke-developed index 0–450.

Class B: Flame spread index 26–75; smoke-developed index 0–450.

Class C: Flame spread index 76–200; smoke-developed index 0–450.

Exception: Materials tested in accordance with Section 803.1.1 and as indicated in Sections 803.1.3 through 803.15.

803.1.3 Interior wall and ceiling finish materials with specific requirements. The materials indicated in Sections 803.4 through 803.15 shall be tested as indicated in the corresponding sections.

803.2 Stability. Interior finish materials regulated by this chapter shall be applied or otherwise fastened in such a manner that such materials will not readily become detached where subjected to room temperatures of 200°F (93°C) for not less than 30 minutes.

803.3 Interior finish requirements based on occupancy. Interior wall and ceiling finish shall have a flame spread index not greater than that specified in Table 803.3 for the group and location designated. Interior wall and ceiling finish materials tested in accordance with NFPA 286, and meeting the acceptance criteria of Section 803.1.1.1, shall be used where a Class A classification in accordance with ASTM E84 or UL 723 is required.

803.4 Fire-retardant coatings. The required flame spread or smoke-developed index of surfaces in existing buildings shall be allowed to be achieved by application of *approved* fire-retardant coatings, paints or solutions to surfaces having a flame spread index exceeding that allowed. Such applications shall comply with NFPA 703 and the required fire-retardant properties shall be maintained or renewed in accordance with the manufacturer's instructions. The fire-retardant paint, coating or solution shall have been assessed by testing over the same substrate to be used in the application.

803.5 Textile wall coverings. Where used as interior wall finish materials, textile wall coverings, including materials having a woven, nonwoven, napped, tufted, looped or similar surface, shall be tested in the manner intended for use, using the product mounting system, including adhesive, and shall comply with the requirements of Section 803.1.1, 803.5.1 or 803.5.2.

INTERNATIONAL CODE COUNCIL®
Copyright © 2019 ICC & NYSDOS. ALL RIGHTS RESERVED. Accessed by Lauren Gualdino (lgualdino@briarcliffmanor.org), (-) Order Number #100880972 on May 08, 2020 07:05 AM (PDT) pursuant to License Agreement with ICC & NYSDOS. No further reproduction, no

100880972

803.5.1 Room corner test for textile wall coverings and expanded vinyl wall coverings. Textile wall coverings and expanded vinyl wall coverings shall meet the criteria of Section 803.5.1.1 when tested in the manner intended for use in accordance with the Method B protocol of NFPA 265 using the product mounting system, including adhesive. Test specimen preparation and mounting shall be in accordance with ASTM E2404.

803.5.1.1 Acceptance criteria for NFPA 265 Method B test protocol. Where testing to NFPA 265, the interior finish shall comply with the following:

1. During the 40-kW exposure, flames shall not spread to the ceiling.
2. The flame shall not spread to the outer extremities of the samples on the 8-foot by 12-foot (203 by 305 mm) walls.
3. Flashover, as defined in NFPA 265, shall not occur.
4. For newly introduced wall coverings, the total smoke released throughout the test shall not exceed 1,000 m^2.

803.5.2 Acceptance criteria for wall and ceiling coverings. Textile wall and ceiling coverings shall have a Class A flame spread index in accordance with ASTM E84 or UL 723, and be protected by an automatic sprinkler system installed in accordance with Section 903.3.1.1 or 903.3.1.2. Test specimen preparation and mounting shall be in accordance with ASTM E2404.

803.6 Textile ceiling coverings. Where used as interior ceiling finish materials, textile ceiling coverings, including materials having a woven, nonwoven, napped, tufted, looped or similar surface and carpet or similar textile materials, shall be tested in the manner intended for use, using the product mounting system, including adhesive, and shall comply with the requirements of Section 803.1.1 or 803.5.2.

803.7 Expanded vinyl wall coverings. Where used as interior wall finish materials, expanded vinyl wall coverings shall

TABLE 803.3
INTERIOR WALL AND CEILING FINISH REQUIREMENTS BY OCCUPANCY[k]

GROUP	SPRINKLERED[l]			NONSPRINKLERED		
	Interior exit stairways and ramps and exit passageways[a, b]	Corridors and enclosure for exit access stairways and ramps	Rooms and enclosed spaces[c]	Interior exit stairways and ramps and exit passageways[a, b]	Corridors and enclosure for exit access stairways and ramps	Rooms and enclosed spaces[c]
A-1 and A-2	B	B	C	A	A[d]	B[e]
A-3[f], A-4, A-5	B	B	C	A	A[d]	C
B, E, M, R-1, R-4	B	C[m]	C	A	B[m]	C
F	C	C	C	B	C	C
H	B	B	C[g]	A	A	B
I-1	B	C	C	A	B	B
I-2	B	B	B[h, i]	A	A	B
I-3	A	A[j]	C	A	A	B
I-4	B	B	B[h, i]	A	A	B
R-2	C	C	C	B	B	C
R-3	C	C	C	C	C	C
S	C	C	C	B	B	C
U	No Restrictions			No Restrictions		

For SI: 1 inch = 25.4 mm, 1 square foot = 0.0929 m^2.

a. Class C interior finish materials shall be allowed for wainscoting or paneling of not more than 1,000 square feet of applied surface area in the grade lobby where applied directly to a noncombustible base or over furring strips applied to a noncombustible base and fireblocked as required by Section 803.11 of the *Building Code of New York State*.

b. In exit enclosures of buildings less than three stories in height of other than Group I-3, Class B interior finish for nonsprinklered buildings and Class C for sprinklered buildings shall be permitted.

c. Requirements for rooms and enclosed spaces shall be based on spaces enclosed by partitions. Where a fire-resistance rating is required for structural elements, the enclosing partitions shall extend from the floor to the ceiling. Partitions that do not comply with this shall be considered as enclosing spaces and the rooms or spaces on both sides shall be considered as one. In determining the applicable requirements for rooms and enclosed spaces, the specific occupancy thereof shall be the governing factor regardless of the group classification of the building or structure.

d. Lobby areas in Group A-1, A-2 and A-3 occupancies shall be not less than Class B materials.

e. Class C interior finish materials shall be allowed in Group A occupancies with an occupant load of 300 persons or less.

f. In places of religious worship, wood used for ornamental purposes, trusses, paneling or chancel furnishing shall be allowed.

g. Class B material is required where the building exceeds two stories.

h. Class C interior finish materials shall be allowed in administrative spaces.

i. Class C interior finish materials shall be allowed in rooms with a capacity of four persons or less.

j. Class B materials shall be allowed as wainscoting extending not more than 48 inches above the finished floor in corridors.

k. Finish materials as provided for in other sections of this code.

l. Applies where the vertical exits, exit passageways, corridors or rooms and spaces are protected by an approved automatic sprinkler system installed in accordance with Section 903.3.1.1 or 903.3.1.2.

m. Corridors in ambulatory care facilities shall have a Class B or better interior finish material.

INTERNATIONAL CODE COUNCIL®
Copyright © 2019 ICC & NYSDOS. ALL RIGHTS RESERVED. Accessed by Lauren Gualdino (lgualdino@briarcliffmanor.org), (-) Order Number #100880972 on May 08, 2020 07:05 AM (PDT) pursuant to License Agreement with ICC & NYSDOS. No further reproduction, no

100880972

be tested in the manner intended for use, using the product mounting system, including adhesive, and shall comply with the requirements of Section 803.1.1, 803.5.1 or 803.5.2.

803.8 Expanded vinyl ceiling coverings. Where used as interior ceiling finish materials, expanded vinyl ceiling coverings shall be tested in the manner intended for use, using the product mounting system, including adhesive, and shall comply with the requirements of Section 803.1.1 or 803.5.2.

[BF] 803.9 High-density polyethylene (HDPE) and polypropylene (PP). Where high-density polyethylene or polypropylene is used as an interior finish, it shall comply with Section 803.1.1.

[BF] 803.10 Site-fabricated stretch systems. Where used as newly installed interior wall or interior ceiling finish materials, site-fabricated stretch systems containing all three components described in the definition in Chapter 2 shall be tested in the manner intended for use, and shall comply with the requirements of Section 803.1.1 or 803.1.2. If the materials are tested in accordance with ASTM E84 or UL 723, specimen preparation and mounting shall be in accordance with ASTM E2573.

803.11 Foam plastic materials. Foam plastic materials shall not be used as interior wall and ceiling finish unless specifically allowed by Section 803.11.1 or 803.11.2. Foam plastic materials shall not be used as interior trim unless specifically allowed by Section 804.2.

803.11.1 Foam plastic combustibility characteristics. Foam plastic materials shall be allowed on the basis of fire tests that substantiate their combustibility characteristics for the use intended under actual fire conditions, as indicated in Section 2603.9 of the *Building Code of New York State*. This section shall apply both to exposed foam plastics and to foam plastics used in conjunction with a textile or vinyl facing or cover.

803.11.2 Thermal barrier for foam plastics. Foam plastic material shall be allowed if it is separated from the interior of the building by a thermal barrier in accordance with Section 2603.4 of the *Building Code of New York State*.

803.12 Facings or wood veneers intended to be applied on site over a wood substrate. Facings or veneers intended to be applied on site over a wood substrate shall comply with one of the following:

1. The facing or veneer shall meet the criteria of Section 803.1.1 when tested in accordance with NFPA 286 using the product mounting system, including adhesive, described in Section 5.8.9 of NFPA 286.
2. The facing or veneer shall have a Class A, B or C flame spread index and smoke-developed index based on the requirements of Table 803.3, in accordance with ASTM E84 or UL 723. Test specimen preparation and mounting shall be in accordance with ASTM E2404.

803.13 Laminated products factory produced with an attached wood substrate. Laminated products factory produced with an attached wood substrate shall comply with one of the following:

1. The laminated product shall meet the criteria of Section 803.1.1 when tested in accordance with NFPA 286 using the product mounting system, including adhesive, of actual use.
2. The laminated product shall have a Class A, B or C flame spread index and smoke-developed index based on the requirements of Table 803.3, in accordance with ASTM E84 or UL 723. Test specimen preparation and mounting shall be in accordance with ASTM E2579.

803.14 Thickness exemption. Materials having a thickness less than 0.036 inch (0.9 mm) applied directly to the surface of walls or ceilings shall not be required to be tested.

803.15 Heavy timber exemption. Exposed portions of building elements complying with the requirements of Type IV construction in accordance with the *Building Code of New York State* shall not be subject to interior finish requirements.

SECTION 804
INTERIOR WALL AND CEILING TRIM AND INTERIOR FLOOR FINISH IN NEW AND EXISTING BUILDINGS

804.1 Interior trim. Combustible trim in new and existing buildings, excluding handrails and guards, shall not exceed 10 percent of the specific wall or ceiling areas to which it is attached. Other than foam plastic, material used as interior trim shall comply with Section 804.1.1 or 804.1.2. Foam plastic used as interior trim shall comply with Section 804.2.

804.1.1 Testing in accordance with NFPA 286. Interior trim material shall be tested in accordance with NFPA 286 and comply with the acceptance criteria in Section 803.1.1.1. Where the interior trim material has been tested as an interior finish in accordance with NFPA 286 and complies with the acceptance criteria in Section 803.1.1.1, it shall not be required to be tested for flame spread index and smoke-developed index in accordance with ASTM E84 or UL 723.

804.1.2 Testing in accordance with ASTM E84 or UL 723. Material, other than foam plastic, used as interior trim shall have minimum Class C flame spread and smoke-developed indices, when tested in accordance with ASTM E84 or UL 723, as described in Section 803.1.2.

804.2 Foam plastic interior trim. Foam plastic used as interior trim shall comply with Sections 804.2.1 through 804.2.4.

804.2.1 Density. The minimum density of the interior trim shall be 20 pounds per cubic foot (320 kg/m^3).

804.2.2 Thickness. The maximum thickness of the interior trim shall be $^1/_2$ inch (12.7 mm) and the maximum width shall be 8 inches (203 mm).

804.2.3 Area limitation. The interior trim shall not constitute more than 10 percent of the specific wall or ceiling area to which it is attached.

804.2.4 Flame spread. The flame spread index shall not exceed 75 where tested in accordance with ASTM E84 or UL 723. The smoke-developed index shall not be limited.

Exception: Where the interior trim material has been tested as an interior finish in accordance with NFPA 286 and complies with the acceptance criteria in Section 803.1.1.1, it is not required to be tested for flame

INTERNATIONAL CODE COUNCIL®
Copyright © 2019 ICC & NYSDOS. ALL RIGHTS RESERVED. Accessed by Lauren Gualdino (lgualdino@briarcliffmanor.org), (-) Order Number #100880972 on May 08, 2020 07:05 AM (PDT) pursuant to License Agreement with ICC & NYSDOS. No further reproduction, no

100880972

spread index in accordance with ASTM E84 or UL 723.

804.3 New interior floor finish. New interior floor finish and floor covering materials in new and existing buildings shall comply with Sections 804.3.1 through 804.3.3.2.

Exception: Floor finishes and coverings of a traditional type, such as wood, vinyl, linoleum or terrazzo, and resilient floor covering materials that are not composed of fibers.

804.3.1 Classification. Interior floor finish and floor covering materials required by Section 804.3.3.2 to be of Class I or II materials shall be classified in accordance with ASTM E648 or NFPA 253. The classification referred to herein corresponds to the classifications determined by ASTM E648 or NFPA 253 as follows: Class I, 0.45 watts/cm^2 or greater; Class II, 0.22 watts/cm^2 or greater.

804.3.2 Testing and identification. Interior floor finish and floor covering materials shall be tested by an *approved* agency in accordance with ASTM E648 or NFPA 253 and identified by a hang tag or other suitable method so as to identify the manufacturer or supplier and style, and shall indicate the interior floor finish or floor covering classification in accordance with Section 804.3.1. Carpet-type floor coverings shall be tested as proposed for use, including underlayment. Test reports confirming the information provided in the manufacturer's product identification shall be furnished to the *fire code official* upon request.

804.3.3 Interior floor finish requirements. New interior floor coverings materials shall comply with Sections 804.3.3.1 and 804.3.3.2, and interior floor finish materials shall comply with Section 804.3.1.

804.3.3.1 Pill test. In all occupancies, new floor covering materials shall comply with the requirements of the DOC FF-1 "pill test" (CPSC 16 CFR Part 1630) or of ASTM D2859.

804.3.3.2 Minimum critical radiant flux. In all occupancies, new interior floor finish and floor covering materials in enclosures for *stairways* and *ramps*, *exit passageways*, *corridors* and rooms or spaces not separated from *corridors* by full-height partitions extending from the floor to the underside of the ceiling shall withstand a minimum critical radiant flux. The minimum critical radiant flux shall be not less than Class I in Groups I-1, I-2 and I-3 and not less than Class II in Groups A, B, E, H, I-4, M, R-1, R-2 and S.

Exception: Where a building is equipped throughout with an *automatic sprinkler system* in accordance with Section 903.3.1.1 or 903.3.1.2, Class II materials shall be permitted in any area where Class I materials are required and materials complying with DOC FF-1 "pill test" (CPSC 16 CFR Part 1630) or with ASTM D2859 shall be permitted in any area where Class II materials are required.

804.4 Interior floor-wall base. Interior floor-wall base that is 6 inches (152 mm) or less in height shall be tested in accordance with ASTM E648 or NFPA 253 and shall be not less than Class II. Where a Class I floor finish is required, the floor-wall base shall be Class I. The classification referred to herein corresponds to the classifications determined by ASTM E648 or NFPA 253 as follows: Class I, 0.45 watt/cm^2 or greater; Class II, 0.22 watts/cm^2 or greater.

Exception: Interior trim materials that comply with Section 804.1.

SECTION 805
UPHOLSTERED FURNITURE AND MATTRESSES IN NEW AND EXISTING BUILDINGS

805.1 Group I-1, Condition 2. The requirements in Sections 805.1.1 through 805.1.2 shall apply to facilities in Group I-1, Condition 2.

805.1.1 Upholstered furniture. Newly introduced upholstered furniture shall meet the requirements of Sections 805.1.1.1 through 805.1.1.3.

805.1.1.1 Ignition by cigarettes. Newly introduced upholstered furniture shall be shown to resist ignition by cigarettes as determined by tests conducted in accordance with one of the following:

1. Mocked-up composites of the upholstered furniture shall have a char length not exceeding 1.5 inches (38 mm) when tested in accordance with NFPA 261.
2. The components of the upholstered furniture shall meet the requirements for Class I when tested in accordance with NFPA 260.

805.1.1.2 Heat release rate. Newly introduced upholstered furniture shall have limited rates of heat release when tested in accordance with ASTM E1537 or California Technical Bulletin 133, as follows:

1. The peak rate of heat release for the single upholstered furniture item shall not exceed 80 kW.

   Exception: Upholstered furniture in rooms or spaces protected by an *approved automatic sprinkler system* installed in accordance with Section 903.3.1.1.

2. The total heat released by the single upholstered furniture item during the first 10 minutes of the test shall not exceed 25 megajoules (MJ).

   Exception: Upholstered furniture in rooms or spaces protected by an *approved automatic sprinkler system* installed in accordance with Section 903.3.1.1.

805.1.1.3 Identification. Upholstered furniture shall bear the label of an *approved* agency, confirming compliance with the requirements of Sections 805.1.1.1 and 805.1.1.2.

805.1.2 Mattresses. Newly introduced mattresses shall meet the requirements of Sections 805.1.2.1 through 805.1.2.3.

805.1.2.1 Ignition by cigarettes. Newly introduced mattresses shall be shown to resist ignition by ciga-

INTERNATIONAL CODE COUNCIL®
Copyright © 2019 ICC & NYSDOS. ALL RIGHTS RESERVED. Accessed by Lauren Gualdino (lgualdino@briarcliffmanor.org), (-) Order Number #100880972 on May 08, 2020 07:05 AM (PDT) pursuant to License Agreement with ICC & NYSDOS. No further reproduction, no

100880972

rettes as determined by tests conducted in accordance with DOC 16 CFR Part 1632 and shall have a char length not exceeding 2 inches (51 mm).

805.1.2.2 Heat release rate. Newly introduced mattresses shall have limited rates of heat release when tested in accordance with ASTM E1590 or California Technical Bulletin 129, as follows:

1. The peak rate of heat release for the single mattress shall not exceed 100 kW.

   Exception: Mattresses in rooms or spaces protected by an *approved automatic sprinkler system* installed in accordance with Section 903.3.1.1.

2. The total heat released by the single mattress during the first 10 minutes of the test shall not exceed 25 MJ.

   Exception: Mattresses in rooms or spaces protected by an *approved automatic sprinkler system* installed in accordance with Section 903.3.1.1.

805.1.2.3 Identification. Mattresses shall bear the label of an *approved* agency, confirming compliance with the requirements of Sections 805.2.2.1 and 805.2.2.2.

805.2 Group I-2 and Group B ambulatory care facilities. The requirements in Sections 805.2.1 through 805.2.2 shall apply to Group I-2 occupancies and Group B ambulatory care facilities.

805.2.1 Upholstered furniture. Newly introduced upholstered furniture shall meet the requirements of Sections 805.2.1.1 through 805.2.1.3.

805.2.1.1 Ignition by cigarettes. Newly introduced upholstered furniture shall be shown to resist ignition by cigarettes as determined by tests conducted in accordance with one of the following: (a) mocked-up composites of the upholstered furniture shall have a char length not exceeding 1.5 inches (38 mm) when tested in accordance with NFPA 261 or (b) the components of the upholstered furniture shall meet the requirements for Class I when tested in accordance with NFPA 260.

Exception: Upholstered furniture belonging to the patients in sleeping rooms of Group I-2, Condition 1 occupancies provided that a smoke detector is installed in such rooms. Battery-powered, single-station smoke alarms shall be allowed.

805.2.1.2 Heat release rate. Newly introduced upholstered furniture shall have limited rates of heat release when tested in accordance with ASTM E1537 or California Technical Bulletin 133, as follows:

1. The peak rate of heat release for the single upholstered furniture item shall not exceed 80 kW.

   Exception: Upholstered furniture in rooms or spaces protected by an *approved automatic sprinkler system* installed in accordance with Section 903.3.1.1.

2. The total heat released by the single upholstered furniture item during the first 10 minutes of the test shall not exceed 25 MJ.

   Exception: Upholstered furniture in rooms or spaces protected by an *approved automatic sprinkler system* installed in accordance with Section 903.3.1.1.

805.2.1.3 Identification. Upholstered furniture shall bear the label of an *approved* agency, confirming compliance with the requirements of Sections 805.2.1.1 and 805.2.1.2.

805.2.2 Mattresses. Newly introduced mattresses shall meet the requirements of Sections 805.2.2.1 through 805.2.2.3.

805.2.2.1 Ignition by cigarettes. Newly introduced mattresses shall be shown to resist ignition by cigarettes as determined by tests conducted in accordance with DOC 16 CFR Part 1632 and shall have a char length not exceeding 2 inches (51 mm).

805.2.2.2 Heat release rate. Newly introduced mattresses shall have limited rates of heat release when tested in accordance with ASTM E1590 or California Technical Bulletin 129, as follows:

1. The peak rate of heat release for the single mattress shall not exceed 100 kW.

   Exception: Mattresses in rooms or spaces protected by an *approved automatic sprinkler system* installed in accordance with Section 903.3.1.1.

2. The total heat released by the single mattress during the first 10 minutes of the test shall not exceed 25 MJ.

   Exception: Mattresses in rooms or spaces protected by an *approved automatic sprinkler system* installed in accordance with Section 903.3.1.1.

805.2.2.3 Identification. Mattresses shall bear the label of an *approved* agency, confirming compliance with the requirements of Sections 805.2.2.1 and 805.2.2.2.

805.3 Group I-3, detention and correction facilities. The requirements in Sections 805.3.1 through 805.3.2 shall apply to detention and correction facilities classified in Group I-3.

805.3.1 Upholstered furniture. Newly introduced upholstered furniture shall meet the requirements of Sections 805.3.1.1 through 805.3.1.3.

805.3.1.1 Ignition by cigarettes. Newly introduced upholstered furniture shall be shown to resist ignition by cigarettes as determined by tests conducted in accordance with one of the following:

1. Mocked-up composites of the upholstered furniture shall have a char length not exceeding 1.5 inches (38 mm) when tested in accordance with NFPA 261.
2. The components of the upholstered furniture shall meet the requirements for Class I when tested in accordance with NFPA 260.

INTERNATIONAL CODE COUNCIL®
Copyright © 2019 ICC & NYSDOS. ALL RIGHTS RESERVED. Accessed by Lauren Gualdino (lgualdino@briarcliffmanor.org), (-) Order Number #100880972 on May 08, 2020 07:05 AM (PDT) pursuant to License Agreement with ICC & NYSDOS. No further reproduction, no

100880972

805.3.1.2 Heat release rate. Newly introduced upholstered furniture shall have limited rates of heat release when tested in accordance with ASTM E1537, as follows:

1. The peak rate of heat release for the single upholstered furniture item shall not exceed 80 kW.
2. The total heat released by the single upholstered furniture item during the first 10 minutes of the test shall not exceed 25 MJ.

805.3.1.3 Identification. Upholstered furniture shall bear the label of an *approved* agency, confirming compliance with the requirements of Sections 805.3.1.1 and 805.3.1.2.

805.3.2 Mattresses. Newly introduced mattresses shall meet the requirements of Sections 805.3.2.1 through 805.3.2.3.

805.3.2.1 Ignition by cigarettes. Newly introduced mattresses shall be shown to resist ignition by cigarettes as determined by tests conducted in accordance with DOC 16 CFR Part 1632 and shall have a char length not exceeding 2 inches (51 mm).

805.3.2.2 Fire performance tests. Newly introduced mattresses shall be tested in accordance with Section 805.3.2.2.1 or 805.3.2.2.2.

805.3.2.2.1 Heat release rate. Newly introduced mattresses shall have limited rates of heat release when tested in accordance with ASTM E1590 or California Technical Bulletin 129, as follows:

1. The peak rate of heat release for the single mattress shall not exceed 100 kW.
2. The total heat released by the single mattress during the first 10 minutes of the test shall not exceed 25 MJ.

805.3.2.2.2 Mass loss test. Newly introduced mattresses shall have a mass loss not exceeding 15 percent of the initial mass of the mattress where tested in accordance with the test in Annex A3 of ASTM F1085.

805.3.2.3 Identification. Mattresses shall bear the label of an *approved* agency, confirming compliance with the requirements of Sections 805.3.2.1 and 805.3.2.2.

805.4 Group R-2 college and university dormitories. The requirements of Sections 805.4.1 through 805.4.2.3 shall apply to college and university dormitories classified in Group R-2, including decks, porches and balconies.

805.4.1 Upholstered furniture. Newly introduced upholstered furniture shall meet the requirements of Sections 805.4.1.1 through 805.4.1.3

805.4.1.1 Ignition by cigarettes. Newly introduced upholstered furniture shall be shown to resist ignition by cigarettes as determined by tests conducted in accordance with one of the following:

1. Mocked-up composites of the upholstered furniture shall have a char length not exceeding $1^1/_2$ inches (38 mm) when tested in accordance with NFPA 261.
2. The components of the upholstered furniture shall meet the requirements for Class I when tested in accordance with NFPA 260.

805.4.1.2 Heat release rate. Newly introduced upholstered furniture shall have limited rates of heat release when tested in accordance with ASTM E1537 or California Technical Bulletin 133, as follows:

1. The peak rate of heat release for the single upholstered furniture item shall not exceed 80 kW.

   Exception: Upholstered furniture in rooms or spaces protected by an *approved automatic sprinkler system* installed in accordance with Section 903.3.1.1.

2. The total heat released by the single upholstered furniture item during the first 10 minutes of the test shall not exceed 25 MJ.

   Exception: Upholstered furniture in rooms or spaces protected by an *approved automatic sprinkler system* installed in accordance with Section 903.3.1.1.

805.4.1.3 Identification. Upholstered furniture shall bear the label of an *approved* agency, confirming compliance with the requirements of Sections 805.4.1.1 and 805.4.1.2.

805.4.2 Mattresses. Newly introduced mattresses shall meet the requirements of Sections 805.4.2.1 through 805.4.2.3.

805.4.2.1 Ignition by cigarettes. Newly introduced mattresses shall be shown to resist ignition by cigarettes as determined by tests conducted in accordance with DOC 16 CFR Part 1632 and shall have a char length not exceeding 2 inches (51 mm).

805.4.2.2 Heat release rate. Newly introduced mattresses shall have limited rates of heat release when tested in accordance with ASTM E1590 or California Technical Bulletin 129, as follows:

1. The peak rate of heat release for the single mattress shall not exceed 100 kW.

   Exception: Mattresses in rooms or spaces protected by an *approved automatic sprinkler system* installed in accordance with Section 903.3.1.1.

2. The total heat released by the single mattress during the first 10 minutes of the test shall not exceed 25 MJ.

   Exception: Mattresses in rooms or spaces protected by an *approved automatic sprinkler system* installed in accordance with Section 903.3.1.1.

805.4.2.3 Identification. Mattresses shall bear the label of an *approved* agency, confirming compliance with the requirements of Sections 805.4.2.1 and 805.4.2.2.

INTERNATIONAL CODE COUNCIL®
Copyright © 2019 ICC & NYSDOS. ALL RIGHTS RESERVED. Accessed by Lauren Gualdino (lgualdino@briarcliffmanor.org), (-) Order Number #100880972 on May 08, 2020 07:05 AM (PDT) pursuant to License Agreement with ICC & NYSDOS. No further reproduction, no

100880972

SECTION 806
NATURAL DECORATIVE VEGETATION IN NEW AND EXISTING BUILDINGS

806.1 Natural cut trees. Natural cut trees, where allowed by this section, shall have the trunk bottoms cut off not less than 0.5 inch (12.7 mm) above the original cut and shall be placed in a support device complying with Section 806.1.2.

[NY] 806.1.1 Restricted occupancies. Natural cut trees shall be prohibited within ambulatory care facilities and Group A, E, I-1, I-2, I-3, I-4, M, R-1, R-2 and R-4 occupancies.

Exceptions:

1. Trees located in areas protected by an approved automatic sprinkler system installed in accordance with Section 903.3.1.1 or 903.3.1.2 shall not be prohibited in Groups A, E, M, R-1 and R-2.
2. Trees shall be allowed within dwelling units in Group R-2 occupancies.
3. Where approved by the fire code official, natural cut trees shall be permitted in places of religious worship and assembly spaces with an occupant load of 50 or fewer, without the installation of an approved automatic sprinkler system, provided that an approved fire extinguisher that (1) conforms with NFPA 10 and (2) shall be kept in plain sight within 15 feet of such tree.

806.1.2 Support devices. The support device that holds the tree in an upright position shall be of a type that is stable and that meets all of the following criteria:

1. The device shall hold the tree securely and be of adequate size to avoid tipping over of the tree.
2. The device shall be capable of containing a minimum two-day supply of water.
3. The water level, when full, shall cover the tree stem not less than 2 inches (51 mm). The water level shall be maintained above the fresh cut and checked not less than once daily.

806.1.3 Dryness. The tree shall be removed from the building whenever the needles or leaves fall off readily when a tree branch is shaken or if the needles are brittle and break when bent between the thumb and index finger. The tree shall be checked daily for dryness.

*

806.2 Obstruction of means of egress. The required width of any portion of a *means of egress* shall not be obstructed by decorative vegetation. Natural cut trees shall not be located within an exit, corridor, or a lobby or vestibule.

806.3 Open flame. Candles and open flames shall not be used on or near decorative vegetation. Natural cut trees shall be kept a distance from heat vents and any open flame or heat-producing devices not less than the height of the tree.

806.4 Electrical fixtures and wiring. The use of unlisted electrical wiring and lighting on natural vegetation, including natural cut trees, shall be prohibited.

SECTION 807
DECORATIVE MATERIALS AND ARTIFICIAL DECORATIVE VEGETATION IN NEW AND EXISTING BUILDINGS

807.1 General. The following requirements shall apply to all occupancies:

1. Furnishings or decorative materials of an explosive or highly flammable character shall not be used.
2. Fire-retardant coatings in existing buildings shall be maintained so as to retain the effectiveness of the treatment under service conditions encountered in actual use.
3. Furnishings or other objects shall not be placed to obstruct exits, access thereto, egress therefrom or visibility thereof.
4. The permissible amount of noncombustible decorative materials shall not be limited.

807.2 Combustible decorative materials. In Groups A, B, E, I, M and R-1 and in dormitories in Group R-2, curtains, draperies, fabric hangings and other similar combustible decorative materials suspended from walls or ceilings shall comply with Section 807.3 and shall not exceed 10 percent of the specific wall or ceiling area to which such materials are attached.

Fixed or movable walls and partitions, paneling, wall pads and crash pads applied structurally or for decoration, acoustical correction, surface insulation or other purposes shall be considered to be *interior finish*, shall comply with Section 803 and shall not be considered *decorative materials* or furnishings.

Exceptions:

1. In auditoriums in Group A, the permissible amount of curtains, draperies, fabric hangings and similar combustible decorative material suspended from walls or ceilings shall not exceed 75 percent of the aggregate wall area where the building is equipped throughout with an *approved automatic sprinkler system* in accordance with Section 903.3.1.1, and where the material is installed in accordance with Section 803.15 of the *Building Code of New York State*.
2. In Group R-2 dormitories, within sleeping units and dwelling units, the permissible amount of curtains, draperies, fabric hangings and similar decorative materials suspended from walls or ceilings shall not exceed 50 percent of the aggregate wall areas where the building is equipped throughout with an *approved automatic sprinkler system* installed in accordance with Section 903.3.1.
3. In Group B and M occupancies, the amount of combustible fabric partitions suspended from the ceiling and not supported by the floor shall comply with Section 807.3 and shall not be limited.
4. The 10-percent limit shall not apply to curtains, draperies, fabric hangings and similar combustible decorative materials used as window coverings.

807.3 Acceptance criteria and reports. Where required to exhibit improved fire performance, curtains, draperies, fabric

INTERNATIONAL CODE COUNCIL®
Copyright © 2019 ICC & NYSDOS. ALL RIGHTS RESERVED. Accessed by Lauren Gualdino (lgualdino@briarcliffmanor.org), (-) Order Number #100880972 on May 08, 2020 07:05 AM (PDT) pursuant to License Agreement with ICC & NYSDOS. No further reproduction, no

100880972

hangings and other similar combustible decorative materials suspended from walls or ceilings shall be tested by an *approved* agency and meet the flame propagation performance criteria of Test Method 1 or Test Method 2, as appropriate, of NFPA 701 or exhibit a maximum rate of heat release of 100 kW when tested in accordance with NFPA 289, using the 20 kW ignition source. Reports of test results shall be prepared in accordance with the test method used and furnished to the *fire code official* upon request.

807.4 Artificial decorative vegetation. Artificial decorative vegetation shall comply with this section and the requirements of Sections 806.2 and 806.3. Natural decorative vegetation shall comply with Section 806.

Exception: Testing of artificial vegetation is not required in Group I-1; Group I-2, Condition 1; Group R-2; Group R-3; or Group R-4 occupancies equipped throughout with an *approved automatic sprinkler system* installed in accordance with Section 903.3.1, where such artificial vegetation complies with the following:

1. Wreaths and other decorative items on doors shall not obstruct the door operation and shall not exceed 50 percent of the surface area of the door.
2. Decorative artificial vegetation shall be limited to not more than 30 percent of the wall area to which it is attached.
3. Decorative artificial vegetation not on doors or walls shall not exceed 3 feet (914 mm) in any dimension.

** **807.4.1 Flammability.** Artificial decorative vegetation shall meet the flame propagation performance criteria of Test Method 1 or Test Method 2, as appropriate, of NFPA 701. Meeting such criteria shall be documented and certified by the manufacturer in an *approved* manner. Alternatively, the artificial decorative vegetation shall be tested in accordance with NFPA 289, using the 20 kW ignition source, and shall have a maximum heat release rate of 100 kW.

807.4.2 Electrical fixtures and wiring on artificial vegetation. The use of unlisted electrical wiring and lighting on artificial decorative vegetation shall be prohibited. The use of electrical wiring and lighting on artificial trees constructed entirely of metal shall be prohibited.

807.5 Occupancy-based requirements. Occupancies shall comply with Sections 807.5.1 through 807.5.6.

807.5.1 Group A. In Group A occupancies, the requirements in Sections 807.5.1.1 through 807.5.1.4 shall apply.

807.5.1.1 Foam plastics. Exposed foam plastic materials and unprotected materials containing foam plastic used for decorative purposes or stage scenery or exhibit booths shall have a maximum heat release rate of 100 kW when tested in accordance with UL 1975, or when tested in accordance with NFPA 289 using the 20 kW ignition source.

Exceptions:

1. Individual foam plastic items or items containing foam plastic where the foam plastic does not exceed 1 pound (0.45 kg) in weight.
2. Cellular or foam plastic shall be allowed for trim in accordance with Section 804.2.

807.5.1.2 Motion picture screens. The screens on which motion pictures are projected in new and existing buildings of Group A shall either meet the flame propagation performance criteria of Test Method 1 or Test Method 2, as appropriate, of NFPA 701 or shall comply with the requirements for a Class B interior finish in accordance with Section 803 of the *Building Code of New York State*.

807.5.1.3 Wood use in places of religious worship. In places of religious worship, wood used for ornamental purposes, trusses, paneling or chancel furnishing shall not be limited.

807.5.1.4 Pyroxylin plastic. Imitation leather or other material consisting of or coated with a pyroxylin or similarly hazardous base shall not be used.

807.5.2 Group E. Group E occupancies shall comply with Sections 807.5.2.1 through 807.5.2.3.

807.5.2.1 Storage in corridors and lobbies. Clothing and personal effects shall not be stored in *corridors* and lobbies.

Exceptions:

1. *Corridors* protected by an *approved automatic sprinkler system* installed in accordance with Section 903.3.1.1.
2. *Corridors* protected by an *approved* fire alarm system installed in accordance with Section 907.
3. Storage in metal lockers, provided the minimum required egress width is maintained.

807.5.2.2 Artwork in corridors. Artwork and teaching materials shall be limited on the walls of *corridors* to not more than 20 percent of the wall area.

807.5.2.3 Artwork in classrooms. Artwork and teaching materials shall be limited on walls of classrooms to not more than 50 percent of the specific wall area to which they are attached.

807.5.3 Groups I-1 and I-2. In Group I-1 and I-2 occupancies, combustible *decorative materials* shall comply with Sections 807.5.3.1 through 807.5.3.4.

807.5.3.1 Group I-1 and I-2 Condition 1 within units. In Group I-1 and Group I-2 Condition 1 occupancies, equipped throughout with an *approved automatic sprinkler system* installed in accordance with Section 903.3.1.1, within sleeping units and dwelling units, combustible decorative materials placed on walls shall be limited to not more than 50 percent of the wall area to which they are attached.

807.5.3.2 In Group I-1 and I-2, Condition 1 for areas other than within units. In Group I-1 and Group I-2, Condition 1 occupancies, equipped throughout with an *approved automatic sprinkler system* installed in accordance with Section 903.3.1.1, combustible decorative materials placed on walls in areas other than within dwelling and sleeping units shall be limited to not more than 30 percent of the wall area to which they are attached.

INTERNATIONAL CODE COUNCIL®
Copyright © 2019 ICC & NYSDOS. ALL RIGHTS RESERVED. Accessed by Lauren Gualdino (lgualdino@briarcliffmanor.org), (-) Order Number #100880972 on May 08, 2020 07:05 AM (PDT) pursuant to License Agreement with ICC & NYSDOS. No further reproduction, no

100880972

807.5.3.3 In Group I-2, Condition 2. In Group I-2, Condition 2 occupancies, equipped throughout with an *approved automatic sprinkler system* installed in accordance with Section 903.3.1.1, combustible decorative materials placed on walls shall be limited to not more than 30 percent of the wall area to which they are attached.

807.5.3.4 Other areas in Groups I-1 and I-2. In Group I-1 and I-2 occupancies, in areas not equipped throughout with an *approved automatic sprinkler system*, combustible decorative materials shall be of such limited quantities that a hazard of fire development or spread is not present.

807.5.4 Group I-3. In Group I-3, combustible *decorative materials* are prohibited.

807.5.5 Group I-4. Group I-4 occupancies shall comply with the requirements in Sections 807.5.5.1 through 807.5.5.3.

807.5.5.1 Storage in corridors and lobbies. Clothing and personal effects shall not be stored in *corridors* and lobbies.

Exceptions:

1. *Corridors* protected by an *approved automatic sprinkler system* installed in accordance with Section 903.3.1.1.
2. *Corridors* protected by an a*pproved fire alarm system* installed in accordance with Section 907.
3. Storage in metal lockers, provided the minimum required egress width is maintained.

807.5.5.2 Artwork in corridors. Artwork and teaching materials shall be limited on walls of corridors to not more than 20 percent of the wall area.

807.5.5.3 Artwork in classrooms. Artwork and teaching materials shall be limited on walls of classrooms to not more than 50 percent of the specific wall area to which they are attached.

807.5.6 Dormitories in Group R-2. In Group R-2 dormitories, within sleeping units and dwelling units, the combustible decorative materials shall be of limited quantities such that a hazard of fire development or spread is not present.

SECTION 808
FURNISHINGS OTHER THAN UPHOLSTERED FURNITURE AND MATTRESSES OR DECORATIVE MATERIALS IN NEW AND EXISTING BUILDINGS

808.1 Wastebaskets and linen containers in Group I-1, I-2 and I-3 occupancies and Group B ambulatory care facilities. Wastebaskets, linen containers and other waste containers, including their lids, located in Group I-1, I-2 and I-3 occupancies and Group B ambulatory care facilities shall be constructed of noncombustible materials or of materials that meet a peak rate of heat release not exceeding 300 kW/m^2 when tested in accordance with ASTM E1354 at an incident heat flux of 50 kW/m^2 in the horizontal orientation. Metal wastebaskets and other metal waste containers with a capacity of 20 gallons (75.7 L) or more shall be *listed* in accordance with UL 1315 and shall be provided with a noncombustible lid. Portable containers exceeding 32 gallons (121 L) shall be stored in an area classified as a waste and linen collection room and constructed in accordance with Table 509 of the *Building Code of New York State*.

Exception: Recycling containers complying with Section 808.1.2 are not required to be stored in waste and linen collection rooms.

808.1.1 Capacity density. The average capacity density of containers located in an individual room or space, other than waste and linen collection rooms, shall not be greater than 0.5 gal/ft^2 (20.4 L/m^2).

808.1.2 Recycling clean waste containers. Recycling clean waste containers, including their lids, shall not exceed an individual capacity of 96 gallons (363 L).

808.2 Waste containers with a capacity of 20 gallons or more in Group R-2 college and university dormitories. Waste containers, including their lids, located in Group R-2 college and university dormitories, and with a capacity of 20 gallons (75.7 L) or more, shall be constructed of noncombustible materials or of materials that meet a peak rate of heat release not exceeding 300 kW/m^2 when tested in accordance with ASTM E1354 at an incident heat flux of 50 kW/m^2 in the horizontal orientation. Metal wastebaskets and other metal waste containers with a capacity of 20 gallons (75.7 L) or more shall be *listed* in accordance with UL 1315 and shall be provided with a noncombustible lid. Portable containers exceeding 32 gallons (121 L) shall be stored in an area classified as a waste and linen collection room constructed in accordance with Table 509 of the *Building Code of New York State*.

808.3 Signs. Foam plastic signs that are not affixed to interior building surfaces shall have a maximum heat release rate of 150 kW when tested in accordance with UL 1975, or when tested in accordance with NFPA 289 using the 20-kW ignition source.

Exception: Where the aggregate area of foam plastic signs is less than 10 percent of the floor area or wall area of the room or space in which the signs are located, whichever is less, subject to the approval of the *fire code official*.

808.4 Combustible lockers. Where lockers constructed of combustible materials are used, the lockers shall be considered to be interior finish and shall comply with Section 803.

Exception: Lockers constructed entirely of wood and noncombustible materials shall be permitted to be used wherever interior finish materials are required to meet a Class C classification in accordance with Section 803.1.2.

INTERNATIONAL CODE COUNCIL®
Copyright © 2019 ICC & NYSDOS. ALL RIGHTS RESERVED. Accessed by Lauren Gualdino (lgualdino@briarcliffmanor.org), (-) Order Number #100880972 on May 08, 2020 07:05 AM (PDT) pursuant to License Agreement with ICC & NYSDOS. No further reproduction, no

100880972

INTERNATIONAL CODE COUNCIL®
Copyright © 2019 ICC & NYSDOS. ALL RIGHTS RESERVED. Accessed by Lauren Gualdino (lgualdino@briarcliffmanor.org), (-) Order Number #100880972 on May 08, 2020 07:05 AM (PDT) pursuant to License Agreement with ICC & NYSDOS. No further reproduction, no

100880972

CHAPTER 9

FIRE PROTECTION AND LIFE SAFETY SYSTEMS

SECTION 901 GENERAL

901.1 Scope. The provisions of this chapter shall specify where fire protection and life safety systems are required and shall apply to the design, installation, inspection, operation, testing and maintenance of all *fire protection systems*.

901.2 Construction documents. The *fire code official* shall have the authority to require *construction documents* and calculations for all *fire protection systems* and to require permits be issued for the installation, rehabilitation or modification of any *fire protection system*. *Construction documents* for *fire protection systems* shall be submitted for review and approval prior to system installation.

901.2.1 Statement of compliance. Before requesting final approval of the installation, where required by the *fire code official*, the installing contractor shall furnish a written statement to the *fire code official* that the subject *fire protection system* has been installed in accordance with *approved* plans and has been tested in accordance with the manufacturer's specifications and the appropriate installation standard. Any deviations from the design standards shall be noted and copies of the approvals for such deviations shall be attached to the written statement.

[NY] 901.3 Permits. Permits shall be required as set forth in Sections 105.2 and 105.6.

901.4 Installation. *Fire protection systems* shall be maintained in accordance with the original installation standards for that system. Required systems shall be extended, altered or augmented as necessary to maintain and continue protection where the building is altered, remodeled or added to. *Alterations* to *fire protection systems* shall be done in accordance with applicable standards.

901.4.1 Required fire protection systems. *Fire protection systems* required by this code or the *Building Code of New York State* shall be installed, repaired, operated, tested and maintained in accordance with this code. A *fire protection system* for which a design option, exception or reduction to the provisions of this code or the *Building Code of New York State* has been granted shall be considered to be a required system.

901.4.2 Nonrequired fire protection systems. A *fire protection system* or portion thereof not required by this code or the *Building Code of New York State* shall be allowed to be furnished for partial or complete protection provided that such installed system meets the applicable requirements of this code and the *Building Code of New York State*.

901.4.3 Fire areas. Where buildings, or portions thereof, are divided into *fire areas* so as not to exceed the limits established for requiring a *fire protection system* in accordance with this chapter, such *fire areas* shall be separated by *fire barriers* constructed in accordance with Section 707 of the *Building Code of New York State* or *horizontal assemblies* constructed in accordance with Section 711 of the *Building Code of New York State*, or both, having a fire-resistance rating of not less than that determined in accordance with Section 707.3.10 of the *Building Code of New York State*.

901.4.4 Additional fire protection systems. In occupancies of a hazardous nature, where special hazards exist in addition to the normal hazards of the occupancy, or where the *fire code official* determines that access for fire apparatus is unduly difficult, the *fire code official* shall have the authority to require additional safeguards. Such safeguards include, but shall not be limited to, the following: automatic fire detection systems, fire alarm systems, automatic fire-extinguishing systems, standpipe systems, or portable or fixed extinguishers. Fire protection equipment required under this section shall be installed in accordance with this code and the applicable referenced standards.

901.4.5 Appearance of equipment. Any device that has the physical appearance of life safety or fire protection equipment but that does not perform that life safety or fire protection function shall be prohibited.

901.4.6 Pump and riser room size. Where provided, fire pump rooms and *automatic sprinkler system* riser rooms shall be designed with adequate space for all equipment necessary for the installation, as defined by the manufacturer, with sufficient working space around the stationary equipment. Clearances around equipment to elements of permanent construction, including other installed equipment and appliances, shall be sufficient to allow inspection, service, repair or replacement without removing such elements of permanent construction or disabling the function of a required fire-resistance-rated assembly. Fire pump and *automatic sprinkler system* riser rooms shall be provided with doors and unobstructed passageways large enough to allow removal of the largest piece of equipment.

901.4.6.1 Access. Automatic sprinkler system risers, fire pumps and controllers shall be provided with ready access. Where located in a fire pump room or automatic sprinkler system riser room, the door shall be permitted to be locked provided that the key is available at all times.

901.4.6.2 Marking on access doors. Access doors for automatic sprinkler system riser rooms and fire pump rooms shall be labeled with an approved sign. The lettering shall be in contrasting color to the background. Letters shall have a minimum height of 2 inches (51 mm) with a minimum stroke of $^3/_8$ inch (10 mm).

901.4.6.3 Environment. Automatic sprinkler system riser rooms and fire pump rooms shall be maintained at a temperature of not less than 40ºF (4ºC). Heating units shall be permanently installed.

901.4.6.4 Lighting. Permanently installed artificial illumination shall be provided in the automatic sprinkler system riser rooms and fire pump rooms.

901.5 Installation acceptance testing. Fire detection and alarm systems, emergency alarm systems, gas detection systems, fire-extinguishing systems, fire hydrant systems, fire

INTERNATIONAL CODE COUNCIL®
Copyright © 2019 ICC & NYSDOS. ALL RIGHTS RESERVED. Accessed by Lauren Gualdino (lgualdino@briarcliffmanor.org), (-) Order Number #100880972 on May 08, 2020 07:05 AM (PDT) pursuant to License Agreement with ICC & NYSDOS. No further reproduction, no

100880972

standpipe systems, fire pump systems, private fire service mains and all other *fire protection systems* and appurtenances thereto shall be subject to acceptance tests as contained in the installation standards and as *approved* by the *fire code official*. The *fire code official* shall be notified before any required acceptance testing.

901.5.1 Occupancy. It shall be unlawful to occupy any portion of a building or structure until the required fire detection, alarm and suppression systems have been tested and *approved*.

901.6 Inspection, testing and maintenance. Fire detection and alarm systems, emergency alarm systems, gas detection systems, fire-extinguishing systems, mechanical smoke exhaust systems and smoke and heat vents shall be maintained in an operative condition at all times, and shall be replaced or repaired where defective. Nonrequired *fire protection systems* and equipment shall be inspected, tested and maintained or removed.

901.6.1 Standards. *Fire protection systems* shall be inspected, tested and maintained in accordance with the referenced standards *listed* in Table 901.6.1.

TABLE 901.6.1
FIRE PROTECTION SYSTEM MAINTENANCE STANDARDS

SYSTEM	STANDARD
Portable fire extinguishers	NFPA 10
Carbon dioxide fire-extinguishing system	NFPA 12
Halon 1301 fire-extinguishing systems	NFPA 12A
Dry-chemical extinguishing systems	NFPA 17
Wet-chemical extinguishing systems	NFPA 17A
Water-based fire protection systems	NFPA 25
Fire alarm systems	NFPA 72
Smoke and heat vents	NFPA 204
Water-mist systems	NFPA 750
Clean-agent extinguishing systems	NFPA 2001
Aerosol fire-extinguishing systems	NFPA 2010

901.6.2 Integrated testing. Where two or more fire protection or life safety systems are interconnected, the intended response of subordinate fire protection and life safety systems shall be verified when required testing of the initiating system is conducted. In addition, integrated testing shall be performed in accordance with Sections 901.6.2.1 and 901.6.2.2.

901.6.2.1 High-rise buildings. For high-rise buildings, integrated testing shall comply with NFPA 4, with an integrated test performed prior to issuance of the certificate of occupancy and at intervals not exceeding 10 years, unless otherwise specified by an integrated system test plan prepared in accordance with NFPA 4. If an equipment failure is detected during integrated testing, a repeat of the integrated test shall not be required, except as necessary to verify operation of fire protection or life safety functions that are initiated by equipment that was repaired or replaced.

901.6.2.2 Smoke control systems. Where a fire alarm system is integrated with a smoke control system as outlined in Section 909, integrated testing shall comply with NFPA 4, with an integrated test performed prior to issuance of the certificate of occupancy and at intervals not exceeding 10 years, unless otherwise specified by an integrated system test plan prepared in accordance with NFPA 4. If an equipment failure is detected during integrated testing, a repeat of the integrated test shall not be required, except as necessary to verify operation of fire protection or life safety functions that are initiated by equipment that was repaired or replaced.

901.6.3 Records. Records of all system inspections, tests and maintenance required by the referenced standards shall be maintained.

901.6.3.1 Records information. Initial records shall include the name of the installation contractor, type of components installed, manufacturer of the components, location and number of components installed per floor. Records shall include the manufacturers' operation and maintenance instruction manuals. Such records shall be maintained for the life of the installation.

901.7 Systems out of service. Where a required *fire protection system* is out of service, the fire department and the *fire code official* shall be notified immediately and, where required by the *fire code official*, the building shall be either evacuated or an *approved* fire watch shall be provided for all occupants left unprotected by the shutdown until the *fire protection system* has been returned to service.

Where utilized, fire watches shall be provided with not less than one *approved* means for notification of the fire department and their only duty shall be to perform constant patrols of the protected premises and keep watch for fires.

901.7.1 Impairment coordinator. The building *owner* shall assign an impairment coordinator to comply with the requirements of this section. In the absence of a specific designee, the *owner* shall be considered to be the impairment coordinator.

901.7.2 Tag required. A tag shall be used to indicate that a system, or portion thereof, has been removed from service.

901.7.3 Placement of tag. The tag shall be posted at each fire department connection, system control valve, fire alarm control unit, fire alarm annunciator and *fire command center*, indicating which system, or part thereof, has been removed from service. The *fire code official* shall specify where the tag is to be placed.

901.7.4 Preplanned impairment programs. Preplanned impairments shall be authorized by the impairment coordinator. Before authorization is given, a designated individual shall be responsible for verifying that all of the following procedures have been implemented:

1. The extent and expected duration of the impairment have been determined.
2. The areas or buildings involved have been inspected and the increased risks determined.
3. Recommendations have been submitted to management or the building *owner*/manager.
4. The fire department has been notified.
5. The insurance carrier, the alarm company, the building *owner*/manager and other authorities having jurisdiction have been notified.

INTERNATIONAL CODE COUNCIL®
Copyright © 2019 ICC & NYSDOS. ALL RIGHTS RESERVED. Accessed by Lauren Gualdino (lgualdino@briarcliffmanor.org), (-) Order Number #100880972 on May 08, 2020 07:05 AM (PDT) pursuant to License Agreement with ICC & NYSDOS. No further reproduction, no

100880972

6. The supervisors in the areas to be affected have been notified.
7. A tag impairment system has been implemented.
8. Necessary tools and materials have been assembled on the impairment site.

901.7.5 Emergency impairments. Where unplanned impairments occur, appropriate emergency action shall be taken to minimize potential injury and damage. The impairment coordinator shall implement the steps outlined in Section 901.7.4.

901.7.6 Restoring systems to service. Where impaired equipment is restored to normal working order, the impairment coordinator shall verify that all of the following procedures have been implemented:

1. Necessary inspections and tests have been conducted to verify that affected systems are operational.
2. Supervisors have been advised that protection is restored.
3. The fire department has been advised that protection is restored.
4. The building *owner*/manager, insurance carrier, alarm company and other involved parties have been advised that protection is restored.
5. The impairment tag has been removed.

901.8 Removal of or tampering with equipment. It shall be unlawful for any person to remove, tamper with or otherwise disturb any fire hydrant, fire detection and alarm system, fire suppression system or other fire appliance required by this code except for the purposes of extinguishing fire, training, recharging or making necessary repairs or where *approved* by the *fire code official*.

901.8.1 Removal of or tampering with appurtenances. Locks, gates, doors, barricades, chains, enclosures, signs, tags or seals that have been installed by or at the direction of the *fire code official* shall not be removed, unlocked, destroyed, tampered with or otherwise vandalized in any manner.

901.8.2 Removal of existing occupant-use hose lines. The *fire code official* is authorized to permit the removal of existing occupant-use hose lines where both of the following conditions exist:

1. The hose line would not be utilized by trained personnel or the fire department.
2. The remaining outlets are compatible with local fire department fittings.

901.9 Termination of monitoring service. For fire alarm systems required to be monitored by this code, notice shall be made to the *fire code official* whenever alarm monitoring services are terminated. Notice shall be made in writing by the provider of the monitoring service being terminated.

901.10 Recall of fire protection components. Any *fire protection system* component regulated by this code that is the subject of a voluntary or mandatory recall under federal law shall be replaced with *approved*, *listed* components in compliance with the referenced standards of this code. The *fire code official* shall be notified in writing by the building *owner* when the recalled component parts have been replaced.

SECTION 902
DEFINITIONS

902.1 Definitions. The following terms are defined in Chapter 2:

ALARM NOTIFICATION APPLIANCE.
ALARM SIGNAL.
ALARM VERIFICATION FEATURE.
ANNUNCIATOR.
AUDIBLE ALARM NOTIFICATION APPLIANCE.
AUTOMATIC.
AUTOMATIC FIRE-EXTINGUISHING SYSTEM.
AUTOMATIC SMOKE DETECTION SYSTEM.
AUTOMATIC SPRINKLER SYSTEM.
AUTOMATIC WATER MIST SYSTEM.
AVERAGE AMBIENT SOUND LEVEL.
CARBON DIOXIDE EXTINGUISHING SYSTEM.
CLEAN AGENT.
COMMERCIAL MOTOR VEHICLE.
CONSTANTLY ATTENDED LOCATION.
DELUGE SYSTEM.
DETECTOR, HEAT.
DRY-CHEMICAL EXTINGUISHING AGENT.
ELEVATOR GROUP.
EMERGENCY ALARM SYSTEM.
EMERGENCY VOICE/ALARM COMMUNICATIONS.
FIRE ALARM BOX, MANUAL.
FIRE ALARM CONTROL UNIT.
FIRE ALARM SIGNAL.
FIRE ALARM SYSTEM.
FIRE AREA.
FIRE DETECTOR, AUTOMATIC.
FIRE PROTECTION SYSTEM.
FIRE SAFETY FUNCTIONS.
FIXED BASE OPERATOR (FBO).
FOAM-EXTINGUISHING SYSTEM.
GAS DETECTION SYSTEM.
HALOGENATED EXTINGUISHING SYSTEM.
IMPAIRMENT COORDINATOR.
INITIATING DEVICE.
MANUAL FIRE ALARM BOX.
MULTIPLE-STATION ALARM DEVICE.
MULTIPLE-STATION SMOKE ALARM.
NOTIFICATION ZONE.
NUISANCE ALARM.
PRIVATE GARAGE.
RECORD DRAWINGS.
SINGLE-STATION SMOKE ALARM.

INTERNATIONAL CODE COUNCIL®
Copyright © 2019 ICC & NYSDOS. ALL RIGHTS RESERVED. Accessed by Lauren Gualdino (lgualdino@briarcliffmanor.org), (-) Order Number #100880972 on May 08, 2020 07:05 AM (PDT) pursuant to License Agreement with ICC & NYSDOS. No further reproduction, no

100880972

SLEEPING UNIT.
SMOKE ALARM.
SMOKE DETECTOR.
STANDPIPE, TYPES OF.
Automatic dry.
Automatic wet.
Manual dry.
Manual wet.
Semiautomatic dry.
STANDPIPE SYSTEM, CLASSES OF.
Class I system.
Class II system.
Class III system.
SUPERVISING STATION.
SUPERVISORY SERVICE.
SUPERVISORY SIGNAL.
SUPERVISORY SIGNAL-INITIATING DEVICE.
TIRES, BULK STORAGE OF.
TRANSIENT AIRCRAFT.
TROUBLE SIGNAL.
VISIBLE ALARM NOTIFICATION APPLIANCE.
WET-CHEMICAL EXTINGUISHING AGENT.
WIRELESS PROTECTION SYSTEM.
ZONE.
ZONE, NOTIFICATION.

SECTION 903
AUTOMATIC SPRINKLER SYSTEMS

903.1 General. *Automatic sprinkler systems* shall comply with this section.

903.1.1 Alternative protection. Alternative automatic fire-extinguishing systems complying with Section 904 shall be permitted instead of automatic sprinkler protection where recognized by the applicable standard and *approved* by the *fire code official.*

903.2 Where required. *Approved automatic sprinkler systems* in new buildings and structures shall be provided in the locations described in Sections 903.2.1 through 903.2.12.

Exception: Spaces or areas in telecommunications buildings used exclusively for telecommunications equipment, associated electrical power distribution equipment, batteries and standby engines, provided that those spaces or areas are equipped throughout with an automatic smoke detection system in accordance with Section 907.2 and are separated from the remainder of the building by not less than 1-hour *fire barriers* constructed in accordance with Section 707 of the *Building Code of New York State* or not less than 2-hour *horizontal assemblies* constructed in accordance with Section 711 of the *Building Code of New York State ,* or both.

903.2.1 Group A. An *automatic sprinkler system* shall be provided throughout buildings and portions thereof used as Group A occupancies as provided in this section.

903.2.1.1 Group A-1. An *automatic sprinkler system* shall be provided throughout stories containing Group A-1 occupancies and throughout all stories from the Group A-1 occupancy to and including the levels of exit discharge serving that occupancy where one of the following conditions exists:

1. The *fire area* exceeds 12,000 square feet (1115 m^2).
2. The *fire area* has an *occupant load* of 300 or more.
3. The *fire area* is located on a floor other than a *level of exit discharge* serving such occupancies.
4. The *fire area* contains a multiple-theater complex.

903.2.1.2 Group A-2. An *automatic sprinkler system* shall be provided throughout stories containing Group A-2 occupancies and throughout all stories from the Group A-2 occupancy to and including the levels of exit discharge serving that occupancy where one of the following conditions exists:

1. The *fire area* exceeds 5,000 square feet (464 m^2).
2. The *fire area* has an *occupant load* of 100 or more.
3. The *fire area* is located on a floor other than a *level of exit discharge* serving such occupancies.

903.2.1.3 Group A-3. An *automatic sprinkler system* shall be provided throughout stories containing Group A-3 occupancies and throughout all stories from the Group A-3 occupancy to and including the levels of exit discharge serving that occupancy where one of the following conditions exists:

1. The *fire area* exceeds 12,000 square feet (1115 m^2).
2. The *fire area* has an *occupant load* of 300 or more.
3. The *fire area* is located on a floor other than a *level of exit discharge* serving such occupancies.

903.2.1.4 Group A-4. An *automatic sprinkler system* shall be provided throughout stories containing Group A-4 occupancies and throughout all stories from the Group A-4 occupancy to and including the levels of exit discharge serving that occupancy where one of the following conditions exists:

1. The *fire area* exceeds 12,000 square feet (1115 m^2).
2. The *fire area* has an *occupant load* of 300 or more.
3. The *fire area* is located on a floor other than a *level of exit discharge* serving such occupancies.

903.2.1.5 Group A-5. An *automatic sprinkler system* shall be provided for all enclosed Group A-5 accessory use areas in excess of 1,000 square feet (93 m^2).

INTERNATIONAL CODE COUNCIL®
Copyright © 2019 ICC & NYSDOS. ALL RIGHTS RESERVED. Accessed by Lauren Gualdino (lgualdino@briarcliffmanor.org), (-) Order Number #100880972 on May 08, 2020 07:05 AM (PDT) pursuant to License Agreement with ICC & NYSDOS. No further reproduction, no

100880972

903.2.1.5.1 Spaces under grandstands or bleachers. Enclosed spaces under *grandstands* or *bleachers* shall be equipped with an *automatic sprinkler system* in accordance with Section 903.3.1.1 where either of the following exist:

1. The enclosed area is 1,000 square feet (93 m^2) or less and is not constructed in accordance with Section 1029.1.1.1.
2. The enclosed area exceeds 1,000 square feet (93 m^2).

903.2.1.6 Assembly occupancies on roofs. Where an occupied roof has an assembly occupancy with an *occupant load* exceeding 100 for Group A-2 and 300 for other Group A occupancies, all floors between the occupied roof and the *level of exit discharge* shall be equipped with an *automatic sprinkler system* in accordance with Section 903.3.1.1 or 903.3.1.2.

Exception: Open parking garages of Type I or Type II construction.

903.2.1.7 Multiple fire areas. An *automatic sprinkler system* shall be provided where multiple fire areas of Group A-1, A-2, A-3 or A-4 occupancies share exit or *exit access* components and the combined *occupant load* of these fire areas is 300 or more.

903.2.2 Ambulatory care facilities. An *automatic sprinkler system* shall be installed throughout the entire floor containing an ambulatory care facility where either of the following conditions exist at any time:

1. Four or more care recipients are incapable of self-preservation.
2. One or more care recipients that are incapable of self-preservation are located at other than the level of exit discharge serving such a facility.

In buildings where ambulatory care is provided on levels other than the *level of exit discharge*, an *automatic sprinkler system* shall be installed throughout the entire floor as well as all floors below where such care is provided, and all floors between the level of ambulatory care and the nearest *level of exit discharge*, the *level of exit* discharge, and all floors below the *level of exit discharge*.

Exception: Floors classified as an open parking garage are not required to be sprinklered.

903.2.3 Group E. An *automatic sprinkler system* shall be provided for Group E occupancies as follows:

1. Throughout all Group E *fire areas* greater than 12,000 square feet (1115 m^2) in area.
2. The Group E fire area is located on a floor other than a level of exit discharge serving such occupancies.

   Exception: In buildings where every classroom has not fewer than one exterior exit door at ground level, an automatic sprinkler system is not required in any area below the lowest level of exit discharge serving that area.
3. The Group E fire area has an occupant load of 300 or more.

903.2.4 Group F-1. An *automatic sprinkler system* shall be provided throughout all buildings containing a Group F-1 occupancy where one of the following conditions exists:

1. A Group F-1 *fire area* exceeds 12,000 square feet (1115 m^2).
2. A Group F-1 *fire area* is located more than three stories above grade plane.
3. The combined area of all Group F-1 *fire areas* on all floors, including any mezzanines, exceeds 24,000 square feet (2230 m^2).
4. A Group F-1 occupancy used for the manufacture of upholstered furniture or mattresses exceeds 2,500 square feet (232 m^2).

903.2.4.1 Woodworking operations. An *automatic sprinkler system* shall be provided throughout all Group F-1 occupancy *fire areas* that contain woodworking operations in excess of 2,500 square feet (232 m^2) in area that generate finely divided combustible waste or use finely divided combustible materials.

903.2.5 Group H. *Automatic sprinkler systems* shall be provided in high-hazard occupancies as required in Sections 903.2.5.1 through 903.2.5.3.

903.2.5.1 General. An *automatic sprinkler system* shall be installed in Group H occupancies.

903.2.5.2 Group H-5 occupancies. An *automatic sprinkler system* shall be installed throughout buildings containing Group H-5 occupancies. The design of the sprinkler system shall be not less than that required under the *Building Code of New York State* for the occupancy hazard classifications in accordance with Table 903.2.5.2.

Where the design area of the sprinkler system consists of a *corridor* protected by one row of sprinklers, the maximum number of sprinklers required to be calculated is 13.

TABLE 903.2.5.2
GROUP H-5 SPRINKLER DESIGN CRITERIA

LOCATION	OCCUPANCY HAZARD CLASSIFICATION
Fabrication areas	Ordinary Hazard Group 2
Service corridors	Ordinary Hazard Group 2
Storage rooms without dispensing	Ordinary Hazard Group 2
Storage rooms with dispensing	Extra Hazard Group 2
Corridors	Ordinary Hazard Group 2

903.2.5.3 Pyroxylin plastics. An *automatic sprinkler system* shall be provided in buildings, or portions thereof, where cellulose nitrate film or pyroxylin plastics are manufactured, stored or handled in quantities exceeding 100 pounds (45 kg).

INTERNATIONAL CODE COUNCIL®
Copyright © 2019 ICC & NYSDOS. ALL RIGHTS RESERVED. Accessed by Lauren Gualdino (lgualdino@briarcliffmanor.org), (-) Order Number #100880972 on May 08, 2020 07:05 AM (PDT) pursuant to License Agreement with ICC & NYSDOS. No further reproduction, no

100880972

903.2.6 Group I. An *automatic sprinkler system* shall be provided throughout buildings with a Group I *fire area*.

Exceptions:

1. An *automatic sprinkler system* installed in accordance with Section 903.3.1.2 shall be permitted in Group I-1, Condition 1 facilities.
2. An *automatic sprinkler system* is not required where Group I-4 day care facilities are at the *level of exit discharge* and where every room where care is provided has not fewer than one exterior *exit* door.
3. In buildings where Group I-4 day care is provided on levels other than the *level of exit discharge*, an *automatic sprinkler system* in accordance with Section 903.3.1.1 shall be installed on the entire floor where care is provided, all floors between the level of care and the *level of exit discharge* and all floors below the *level of exit discharge* other than areas classified as an open parking garage.

903.2.7 Group M. An *automatic sprinkler system* shall be provided throughout buildings containing a Group M occupancy where one of the following conditions exists:

1. A Group M *fire area* exceeds 12,000 square feet (1115 m^2).
2. A Group M *fire area* is located more than three stories above grade plane.
3. The combined area of all Group M *fire areas* on all floors, including any mezzanines, exceeds 24,000 square feet (2230 m^2).
4. A Group M occupancy used for the display and sale of upholstered furniture or mattresses exceeds 5,000 square feet (464 m^2).

903.2.7.1 High-piled storage. An *automatic sprinkler system* shall be provided as required in Chapter 32 in all buildings of Group M where storage of merchandise is in high-piled or rack storage arrays.

903.2.8 Group R. An *automatic sprinkler system* installed in accordance with Section 903.3 shall be provided throughout all buildings with a Group R *fire area*.

903.2.8.1 Group R-3. An *automatic sprinkler system* installed in accordance with Section 903.3.1.3 shall be permitted in Group R-3 occupancies.

903.2.8.2 Group R-4, Condition 1. An *automatic sprinkler system* installed in accordance with Section 903.3.1.3 shall be permitted in Group R-4, Condition 1 occupancies.

903.2.8.3 Group R-4, Condition 2. An *automatic sprinkler system* installed in accordance with Section 903.3.1.2 shall be permitted in Group R-4, Condition 2 occupancies.

➡

903.2.8.4 Care facilities. An *automatic sprinkler system* installed in accordance with Section 903.3.1.3 shall be permitted in care facilities with five or fewer individuals in a single-family dwelling.

903.2.9 Group S-1. An *automatic sprinkler system* shall be provided throughout all buildings containing a Group S-1 occupancy where one of the following conditions exists:

1. A Group S-1 *fire area* exceeds 12,000 square feet (1115 m^2).
2. A Group S-1 *fire area* is located more than three stories above grade plane.
3. The combined area of all Group S-1 *fire areas* on all floors, including any mezzanines, exceeds 24,000 square feet (2230 m^2).
4. A Group S-1 *fire area* used for the storage of commercial motor vehicles where the *fire area* exceeds 5,000 square feet (464 m^2).
5. A Group S-1 occupancy used for the storage of upholstered furniture or mattresses exceeds 2,500 square feet (232 m^2).

903.2.9.1 Repair garages. An *automatic sprinkler system* shall be provided throughout all buildings used as repair garages in accordance with Section 406.8 of the *Building Code of New York State*, as shown:

1. Buildings having two or more stories above grade plane, including *basements*, with a *fire area* containing a repair garage exceeding 10,000 square feet (929 m^2).
2. Buildings not more than one story above grade plane, with a *fire area* containing a repair garage exceeding 12,000 square feet (1115 m^2).
3. Buildings with repair garages servicing vehicles parked in *basements*.
4. A Group S-1 *fire area* used for the repair of commercial motor vehicles where the *fire area* exceeds 5,000 square feet (464 m^2).

903.2.9.2 Bulk storage of tires. Buildings and structures where the area for the storage of tires exceeds 20,000 cubic feet (566 m^3) shall be equipped throughout with an *automatic sprinkler system* in accordance with Section 903.3.1.1.

903.2.10 Group S-2 enclosed parking garages. An *automatic sprinkler system* shall be provided throughout buildings classified as enclosed parking garages in accordance with Section 406.6 of the *Building Code of New York State* where either of the following conditions exists:

1. Where the *fire area* of the enclosed parking garage exceeds 12,000 square feet (1115 m^2).
2. Where the enclosed parking garage is located beneath other groups.

   Exception: Enclosed parking garages located beneath Group R-3 occupancies.

903.2.10.1 Commercial parking garages. An *automatic sprinkler system* shall be provided throughout buildings used for storage of commercial motor vehicles where the *fire area* exceeds 5,000 square feet (464 m^2).

903.2.11 Specific buildings areas and hazards. In all occupancies other than Group U, an *automatic sprinkler*

INTERNATIONAL CODE COUNCIL®
Copyright © 2019 ICC & NYSDOS. ALL RIGHTS RESERVED. Accessed by Lauren Gualdino (lgualdino@briarcliffmanor.org), (-) Order Number #100880972 on May 08, 2020 07:05 AM (PDT) pursuant to License Agreement with ICC & NYSDOS. No further reproduction, no

100880972

system shall be installed for building design or hazards in the locations set forth in Sections 903.2.11.1 through 903.2.11.6.

903.2.11.1 Stories without openings. An *automatic sprinkler system* shall be installed throughout all *stories*, including *basements*, of all buildings where the floor area exceeds 1,500 square feet (139 m^2) and where the story does not comply with the following criteria for exterior wall openings:

1. Openings below grade that lead directly to ground level by an exterior *stairway* complying with Section 1011 or an outside ramp complying with Section 1012. Openings shall be located in each 50 linear feet (15 240 mm), or fraction thereof, of *exterior wall* in the story on not fewer than one side. The required openings shall be distributed such that the lineal distance between adjacent openings does not exceed 50 feet (15 240 mm).
2. Openings entirely above the adjoining ground level totaling not less than 20 square feet (1.86 m^2) in each 50 linear feet (15 240 mm), or fraction thereof, of *exterior wall* in the story on not fewer than one side. The required openings shall be distributed such that the lineal distance between adjacent openings does not exceed 50 feet (15 240 mm). The height of the bottom of the clear opening shall not exceed 44 inches (1118 mm) measured from the floor.

903.2.11.1.1 Opening dimensions and access. Openings shall have a minimum dimension of not less than 30 inches (762 mm). *Access* to such openings shall be provided for the fire department from the exterior and shall not be obstructed in a manner such that fire fighting or rescue cannot be accomplished from the exterior.

903.2.11.1.2 Openings on one side only. Where openings in a story are provided on only one side and the opposite wall of such story is more than 75 feet (22 860 mm) from such openings, the story shall be equipped throughout with an *approved automatic sprinkler system,* or openings shall be provided on not fewer than two sides of the story.

903.2.11.1.3 Basements. Where any portion of a *basement* is located more than 75 feet (22 860 mm) from openings required by Section 903.2.11.1, or where walls, partitions or other obstructions are installed that restrict the application of water from hose streams, the *basement* shall be equipped throughout with an *approved automatic sprinkler system*.

903.2.11.2 Rubbish and linen chutes. An *automatic sprinkler system* shall be installed at the top of rubbish and linen chutes and in their terminal rooms. Chutes shall have additional sprinkler heads installed at alternate floors and at the lowest intake. Where a rubbish chute extends through a building more than one floor below the lowest intake, the extension shall have sprinklers installed that are recessed from the drop area of the chute and protected from freezing in accordance with Section 903.3.1.1. Such sprinklers shall be installed at alternate floors, beginning with the second level below the last intake and ending with the floor above the discharge. *Access* to sprinklers in chutes shall be provided for servicing.

903.2.11.3 Buildings 55 feet or more in height. An *automatic sprinkler system* shall be installed throughout buildings that have one or more stories with an *occupant load* of 30 or more located 55 feet (16 764 mm) or more above the lowest level of fire department vehicle access, measured to the finished floor.

Exceptions:

1. Open parking structures.
2. Occupancies in Group F-2.

903.2.11.4 Ducts conveying hazardous exhausts. Where required by the *Mechanical Code of New York State*, automatic sprinklers shall be provided in ducts conveying hazardous exhaust or flammable or combustible materials.

Exception: Ducts where the largest cross-sectional diameter of the duct is less than 10 inches (254 mm).

903.2.11.5 Commercial cooking operations. An *automatic sprinkler system* shall be installed in commercial kitchen exhaust hood and duct systems where an *automatic sprinkler system* is used to comply with Section 904.

903.2.11.6 Other required suppression systems. In addition to the requirements of Section 903.2, the provisions indicated in Table 903.2.11.6 require the installation of a fire suppression system for certain buildings and areas.

903.2.12 During construction. *Automatic sprinkler systems* required during construction, *alteration* and demolition operations shall be provided in accordance with Section 3314.

903.3 Installation requirements. *Automatic sprinkler systems* shall be designed and installed in accordance with Sections 903.3.1 through 903.3.8.

903.3.1 Standards. Sprinkler systems shall be designed and installed in accordance with Section 903.3.1.1, unless otherwise permitted by Sections 903.3.1.2 and 903.3.1.3 and other chapters of this code, as applicable.

903.3.1.1 NFPA 13 sprinkler systems. Where the provisions of this code require that a building or portion thereof be equipped throughout with an *automatic sprinkler system* in accordance with this section, sprinklers shall be installed throughout in accordance with NFPA 13 except as provided in Sections 903.3.1.1.1 and 903.3.1.1.2.

INTERNATIONAL CODE COUNCIL®
Copyright © 2019 ICC & NYSDOS. ALL RIGHTS RESERVED. Accessed by Lauren Gualdino (lgualdino@briarcliffmanor.org), (-) Order Number #100880972 on May 08, 2020 07:05 AM (PDT) pursuant to License Agreement with ICC & NYSDOS. No further reproduction, no

100880972

TABLE 903.2.11.6
ADDITIONAL REQUIRED FIRE SUPPRESSION SYSTEMS

SECTION	SUBJECT
914.2.1	Covered and open mall buildings
914.3.1	High-rise buildings
914.4.1	Atriums
914.5.1	Underground structures
914.6.1	Stages
914.7.1	Special amusement buildings
914.8.2	Airport traffic control towers
914.8.3, 914.8.6	Aircraft hangars
914.9	Flammable finishes
914.10	Drying rooms
914.11.1	Ambulatory care facilities
1029.6.2.3	Smoke-protected assembly seating
1103.5.1	Existing Group A occupancies
1103.5.2	Pyroxylin plastic storage in existing buildings
1103.5.3	Existing Group I-2 occupancies
1103.5.4	Existing Group I-2, Condition 2 occupancies
1103.5.4	Pyroxylin plastics
2108.2	Dry cleaning plants
2108.3	Dry cleaning machines
2309.3.1.5.2	Hydrogen motor fuel-dispensing area canopies
2404.2	Spray finishing in Group A, E, I or R
2404.4	Spray booths and spray rooms
2405.2	Dip-tank rooms in Group A, I or R
2405.4.1	Dip tanks
2405.9.4	Hardening and tempering tanks
2703.10	HPM facilities
2703.10.1.1	HPM work station exhaust
2703.10.2	HPM gas cabinets and exhausted enclosures
2703.10.3	HPM exit access corridor
2703.10.4	HPM exhaust ducts
2703.10.4.1	HPM noncombustible ducts
2703.10.4.2	HPM combustible ducts
2807.3	Lumber production conveyor enclosures
2808.7	Recycling facility conveyor enclosures
3006.1	Class A and B ovens
3006.2	Class C and D ovens
Table 3206.2	Storage fire protection
3206.4	Storage
3704.5	Storage of more than 1,000 cubic feet of loose combustible fibers
5003.8.4.1	Gas rooms
5003.8.5.3	Exhausted enclosures
5004.5	Indoor storage of hazardous materials
5005.1.8	Indoor dispensing of hazardous materials
5104.4.1	Aerosol product warehouses
5106.3.2	Aerosol display and merchandising areas
5306.2.1	Exterior medical gas storage room
5306.2.2	Interior medical gas storage room
5306.2.3	Medical gas storage cabinet
5606.5.2.1	Storage of smokeless propellant
5606.5.2.3	Storage of small arms primers
5704.3.7.5.1	Flammable and combustible liquid storage rooms
5704.3.8.4	Flammable and combustible liquid storage warehouses
5705.3.7.3	Flammable and combustible liquid Group H-2 or H-3 areas
6004.1.2	Gas cabinets for highly toxic and toxic gas
6004.1.3	Exhausted enclosures for highly toxic and toxic gas
6004.2.2.6	Gas rooms for highly toxic and toxic gas
6004.3.3	Outdoor storage for highly toxic and toxic gas
6504.1.1	Pyroxylin plastic storage cabinets
6504.1.3	Pyroxylin plastic storage vaults
6504.2	Pyroxylin plastic storage and manufacturing

For SI: 1 cubic foot = 0.023 m^3.

903.3.1.1.1 Exempt locations. Automatic sprinklers shall not be required in the following rooms or areas where such rooms or areas are protected with an *approved* automatic fire detection system in accordance with Section 907.2 that will respond to visible or invisible particles of combustion. Sprinklers shall not be omitted from a room merely because it is damp, of fire-resistance-rated construction or contains electrical equipment.

1. A room where the application of water, or flame and water, constitutes a serious life or fire hazard.
2. A room or space where sprinklers are considered undesirable because of the nature of the contents, where *approved* by the *fire code official*.
3. Generator and transformer rooms separated from the remainder of the building by walls and floor/ceiling or roof/ceiling assemblies having a *fire-resistance rating* of not less than 2 hours.
4. Rooms or areas that are of noncombustible construction with wholly noncombustible contents.
5. Fire service access elevator machine rooms and machinery spaces.
6. Machine rooms, machinery spaces, control rooms and control spaces associated with occupant evacuation elevators designed in accordance with Section 3008 of the *Building Code of New York State*.

(continued)

INTERNATIONAL CODE COUNCIL®
Copyright © 2019 ICC & NYSDOS. ALL RIGHTS RESERVED. Accessed by Lauren Gualdino (lgualdino@briarcliffmanor.org), (-) Order Number #100880972 on May 08, 2020 07:05 AM (PDT) pursuant to License Agreement with ICC & NYSDOS. No further reproduction, no

100880972

903.3.1.1.2 Bathrooms. In Group R occupancies, sprinklers shall not be required in bathrooms that do not exceed 55 square feet (5 m^2) in area and are located within individual *dwelling units* or *sleeping units*, provided that walls and ceilings, including the walls and ceilings behind a shower enclosure or tub, are of noncombustible or limited-combustible materials with a 15-minute thermal barrier rating.

903.3.1.2 NFPA 13R sprinkler systems. *Automatic sprinkler systems* in Group R occupancies up to and including four stories in height in buildings not exceeding 60 feet (18 288 mm) in height above grade plane shall be permitted to be installed throughout in accordance with NFPA 13R.

The number of stories of Group R occupancies constructed in accordance with Sections 510.2 and 510.4 of the *Building Code of New York State* shall be measured from the horizontal assembly creating separate buildings.

903.3.1.2.1 Balconies and decks. Sprinkler protection shall be provided for exterior balconies, decks and ground floor patios of *dwelling units* and *sleeping units* where either of the following conditions exists:

1. The building is of Type V construction, provided that there is a roof or deck above.
2. Exterior balconies, decks and ground floor patios of dwelling units and sleeping units are constructed in accordance with Section 705.2.3.1, Exception 3 of the *Building Code of New York State*.

Sidewall sprinklers that are used to protect such areas shall be permitted to be located such that their deflectors are within 1 inch (25 mm) to 6 inches (152 mm) below the structural members and a maximum distance of 14 inches (356 mm) below the deck of the exterior balconies and decks that are constructed of open wood joist construction.

903.3.1.2.2 Open-ended corridors. Sprinkler protection shall be provided in *open-ended corridors* and associated *exterior stairways* and *ramps* as specified in Section 1027.6, Exception 3.

903.3.1.2.3 Attics. Attic protection shall be provided as follows:

1. Attics that are used or intended for living purposes or storage shall be protected by an *automatic sprinkler system*.
2. Where fuel-fired equipment is installed in an unsprinklered attic, not fewer than one quick-response intermediate temperature sprinkler shall be installed above the equipment.
3. Where located in a building of Type III, Type IV or Type V construction designed in accordance with Section 510.2 or 510.4 of the *Building Code of New York State*, attics not required by Item 1 to have sprinklers shall comply with one of the following if the roof assembly is located more than 55 feet (16 764 mm) above the lowest level of required fire department vehicle access:
   - 3.1. Provide *automatic sprinkler system* protection.
   - 3.2. Construct the attic using noncombustible materials.
   - 3.3. Construct the attic using fire-retardant-treated wood complying with Section 2303.2 of the *Building Code of New York State*.
   - 3.4. Fill the attic with noncombustible insulation.

   The height of the roof assembly shall be determined by measuring the distance from the lowest required fire vehicle access road surface adjacent to the building to the eave of the highest pitched roof, the intersection of the highest roof to the exterior wall, or the top of the highest parapet, whichever yields the greatest distance. For the purpose of this measurement, required fire vehicle access roads shall include only those roads that are necessary for compliance with Section 503.
4. Group R-4, Condition 2 occupancy attics not required by Item 1 to have sprinklers shall comply with one of the following:
   - 4.1. Provide *automatic sprinkler system* protection.
   - 4.2. Provide a heat detection system throughout the attic that is arranged to activate the building fire alarm system.
   - 4.3. Construct the attic using noncombustible materials.
   - 4.4. Construct the attic using fire-retardant-treated wood complying with Section 2303.2 of the *Building Code of New York State*.
   - 4.5. Fill the attic with noncombustible insulation.

903.3.1.3 NFPA 13D sprinkler systems. *Automatic sprinkler systems* installed in one- and two-family *dwellings*; Group R-3; Group R-4, Condition 1; and *townhouses* shall be permitted to be installed throughout in accordance with NFPA 13D.

903.3.2 Quick-response and residential sprinklers. Where *automatic sprinkler systems* are required by this code, quick-response or residential automatic sprinklers shall be installed in all of the following areas in accordance with Section 903.3.1 and their listings:

1. Throughout all spaces within a smoke compartment containing care recipient *sleeping units* in Group I-2 in accordance with the *Building Code of New York State*.

INTERNATIONAL CODE COUNCIL®
Copyright © 2019 ICC & NYSDOS. ALL RIGHTS RESERVED. Accessed by Lauren Gualdino (lgualdino@briarcliffmanor.org), (-) Order Number #100880972 on May 08, 2020 07:05 AM (PDT) pursuant to License Agreement with ICC & NYSDOS. No further reproduction, no

100880972

2. Throughout all spaces within a smoke compartment containing treatment rooms in ambulatory care facilities.
3. *Dwelling units* and *sleeping units* in Group I-1 and R occupancies.
4. Light-hazard occupancies as defined in NFPA 13.

903.3.3 Obstructed locations. Automatic sprinklers shall be installed with regard to obstructions that will delay activation or obstruct the water distribution pattern and shall be in accordance with the applicable *automatic sprinkler system* standard that is being used. Automatic sprinklers shall be installed in or under covered kiosks, displays, booths, concession stands or equipment that exceeds 4 feet (1219 mm) in width. Not less than a 3-foot (914 mm) clearance shall be maintained between automatic sprinklers and the top of piles of *combustible fibers*.

Exception: Kitchen equipment under exhaust hoods protected with a fire-extinguishing system in accordance with Section 904.

903.3.4 Actuation. *Automatic sprinkler systems* shall be automatically actuated unless specifically provided for in this code.

903.3.5 Water supplies. Water supplies for *automatic sprinkler systems* shall comply with this section and the standards referenced in Section 903.3.1. The potable water supply shall be protected against backflow in accordance with the requirements of this section and the *Plumbing Code of New York State*. For connections to public waterworks systems, the water supply test used for design of fire protection systems shall be adjusted to account for seasonal and daily pressure fluctuations based on information from the water supply authority and as approved by the *fire code official*.

903.3.5.1 Domestic services. Where the domestic service provides the water supply for the *automatic sprinkler system*, the supply shall be in accordance with this section.

903.3.5.2 Residential combination services. A single combination water supply shall be allowed provided that the domestic demand is added to the sprinkler demand as required by NFPA 13R.

903.3.6 Hose threads. Fire hose threads and fittings used in connection with *automatic sprinkler systems* shall be as prescribed by the *fire code official.*

903.3.7 Fire department connections. Fire department connections for *automatic sprinkler systems* shall be installed in accordance with Section 912.

903.3.8 Limited area sprinkler systems. Limited area sprinkler systems shall be in accordance with the standards listed in Section 903.3.1 except as provided in Sections 903.3.8.1 through 903.3.8.5.

903.3.8.1 Number of sprinklers. Limited area sprinkler systems shall not exceed six sprinklers in any single fire area.

903.3.8.2 Occupancy hazard classification. Only areas classified by NFPA 13 as Light Hazard or Ordinary Hazard Group 1 shall be permitted to be protected by limited area sprinkler systems.

903.3.8.3 Piping arrangement. Where a limited area sprinkler system is installed in a building with an automatic wet standpipe system, sprinklers shall be supplied by the standpipe system. Where a limited area sprinkler system is installed in a building without an automatic wet standpipe system, water shall be permitted to be supplied by the plumbing system provided that the plumbing system is capable of simultaneously supplying domestic and sprinkler demands.

903.3.8.4 Supervision. Control valves shall not be installed between the water supply and sprinklers unless the valves are of an *approved* indicating type that are supervised or secured in the open position.

903.3.8.5 Calculations. Hydraulic calculations in accordance with NFPA 13 shall be provided to demonstrate that the available water flow and pressure are adequate to supply all sprinklers installed in any single *fire area* with discharge densities corresponding to the hazard classification.

903.4 Sprinkler system supervision and alarms. Valves controlling the water supply for *automatic sprinkler systems*, pumps, tanks, water levels and temperatures, critical air pressures and waterflow switches on all sprinkler systems shall be electrically supervised by a *listed* fire alarm control unit.

Exceptions:

1. *Automatic sprinkler systems* protecting one- and two-family *dwellings*.
2. Limited area sprinkler systems in accordance with Section 903.3.8.
3. *Automatic sprinkler systems* installed in accordance with NFPA 13R where a common supply main is used to supply both domestic water and the *automatic sprinkler system*, and a separate shutoff valve for the *automatic sprinkler system* is not provided.
4. Jockey pump control valves that are sealed or locked in the open position.
5. Control valves to commercial kitchen hoods, paint spray booths or dip tanks that are sealed or locked in the open position.
6. Valves controlling the fuel supply to fire pump engines that are sealed or locked in the open position.
7. Trim valves to pressure switches in dry, preaction and deluge sprinkler systems that are sealed or locked in the open position.

903.4.1 Monitoring. Alarm, supervisory and trouble signals shall be distinctly different and shall be automatically transmitted to an *approved* supervising station or, where *approved* by the *fire code official*, shall sound an audible signal at a constantly attended location.

Exceptions:

1. Underground key or hub valves in roadway boxes provided by the municipality or public utility are not required to be monitored.

INTERNATIONAL CODE COUNCIL®
Copyright © 2019 ICC & NYSDOS. ALL RIGHTS RESERVED. Accessed by Lauren Gualdino (lgualdino@briarcliffmanor.org), (-) Order Number #100880972 on May 08, 2020 07:05 AM (PDT) pursuant to License Agreement with ICC & NYSDOS. No further reproduction, no

100880972

2. Backflow prevention device test valves located in limited area sprinkler system supply piping shall be locked in the open position. In occupancies required to be equipped with a fire alarm system, the backflow preventer valves shall be electrically supervised by a tamper switch installed in accordance with NFPA 72 and separately annunciated.

903.4.2 Alarms. An approved audible device, located on the exterior of the building in an *approved* location, shall be connected to each *automatic sprinkler system*. Such sprinkler waterflow alarm devices shall be activated by water flow equivalent to the flow of a single sprinkler of the smallest orifice size installed in the system. Where a fire alarm system is installed, actuation of the *automatic sprinkler system* shall actuate the building fire alarm system.

903.4.3 Floor control valves. *Approved* supervised indicating control valves shall be provided at the point of connection to the riser on each floor in high-rise buildings.

903.5 Testing and maintenance. Sprinkler systems shall be tested and maintained in accordance with Section 901.

903.6 Where required in existing buildings and structures. An *automatic sprinkler system* shall be provided in existing buildings and structures where required in Chapter 11.

SECTION 904
ALTERNATIVE AUTOMATIC FIRE-EXTINGUISHING SYSTEMS

904.1 General. Automatic fire-extinguishing systems, other than *automatic sprinkler systems*, shall be designed, installed, inspected, tested and maintained in accordance with the provisions of this section and the applicable referenced standards.

904.1.1 Certification of service personnel for fire-extinguishing equipment. Service personnel providing or conducting maintenance on automatic fire-extinguishing systems, other than *automatic sprinkler systems*, shall possess a valid certificate issued by an *approved* governmental agency, or other *approved* organization for the type of system and work performed.

904.2 Where permitted. Automatic fire-extinguishing systems installed as an alternative to the required *automatic sprinkler systems* of Section 903 shall be *approved* by the *fire code official.*

904.2.1 Restriction on using automatic sprinkler system exceptions or reductions. Automatic fire-extinguishing systems shall not be considered alternatives for the purposes of exceptions or reductions allowed for *automatic sprinkler systems* or by other requirements of this code.

904.2.2 Commercial hood and duct systems. Each required commercial kitchen exhaust hood and duct system required by Section 607 to have a Type I hood shall be protected with an *approved* automatic fire-extinguishing system installed in accordance with this code.

904.3 Installation. Automatic fire-extinguishing systems shall be installed in accordance with this section.

904.3.1 Electrical wiring. Electrical wiring shall be in accordance with NFPA 70.

904.3.2 Actuation. Automatic fire-extinguishing systems shall be automatically actuated and provided with a manual means of actuation in accordance with Section 904.12.1. Where more than one hazard could be simultaneously involved in fire due to their proximity, all hazards shall be protected by a single system designed to protect all hazards that could become involved.

Exception: Multiple systems shall be permitted to be installed if they are designed to operate simultaneously.

904.3.3 System interlocking. Automatic equipment interlocks with fuel shutoffs, ventilation controls, door closers, window shutters, conveyor openings, smoke and heat vents and other features necessary for proper operation of the fire-extinguishing system shall be provided as required by the design and installation standard utilized for the hazard.

904.3.4 Alarms and warning signs. Where alarms are required to indicate the operation of automatic fire-extinguishing systems, distinctive audible, visible alarms and warning signs shall be provided to warn of pending agent discharge. Where exposure to automatic-extinguishing agents poses a hazard to persons and a delay is required to ensure the evacuation of occupants before agent discharge, a separate warning signal shall be provided to alert occupants once agent discharge has begun. Audible signals shall be in accordance with Section 907.5.2.

904.3.5 Monitoring. Where a building fire alarm system is installed, automatic fire-extinguishing systems shall be monitored by the building fire alarm system in accordance with NFPA 72.

904.4 Inspection and testing. Automatic fire-extinguishing systems shall be inspected and tested in accordance with the provisions of this section prior to acceptance.

904.4.1 Inspection. Prior to conducting final acceptance tests, all of the following items shall be inspected:

1. Hazard specification for consistency with design hazard.
2. Type, location and spacing of automatic- and manual-initiating devices.
3. Size, placement and position of nozzles or discharge orifices.
4. Location and identification of audible and visible alarm devices.
5. Identification of devices with proper designations.
6. Operating instructions.

904.4.2 Alarm testing. Notification appliances, connections to fire alarm systems and connections to *approved* supervising stations shall be tested in accordance with this section and Section 907 to verify proper operation.

904.4.2.1 Audible and visible signals. The audibility and visibility of notification appliances signaling agent

INTERNATIONAL CODE COUNCIL®
Copyright © 2019 ICC & NYSDOS. ALL RIGHTS RESERVED. Accessed by Lauren Gualdino (lgualdino@briarcliffmanor.org), (-) Order Number #100880972 on May 08, 2020 07:05 AM (PDT) pursuant to License Agreement with ICC & NYSDOS. No further reproduction, no

100880972

discharge or system operation, where required, shall be verified.

904.4.3 Monitor testing. Connections to protected premises and supervising station fire alarm systems shall be tested to verify proper identification and retransmission of alarms from automatic fire-extinguishing systems.

904.5 Wet-chemical systems. Wet-chemical extinguishing systems shall be installed, maintained, periodically inspected and tested in accordance with NFPA 17A and their listing. Records of inspections and testing shall be maintained.

904.5.1 System test. Systems shall be inspected and tested for proper operation at six-month intervals. Tests shall include a check of the detection system, alarms and releasing devices, including manual stations and other associated equipment. Extinguishing system units shall be weighed and the required amount of agent verified. Stored pressure-type units shall be checked for the required pressure. The cartridge of cartridge-operated units shall be weighed and replaced at intervals indicated by the manufacturer.

904.5.2 Fusible link maintenance. Fixed temperature-sensing elements shall be maintained to ensure proper operation of the system.

904.6 Dry-chemical systems. Dry-chemical extinguishing systems shall be installed, maintained, periodically inspected and tested in accordance with NFPA 17 and their listing. Records of inspections and testing shall be maintained.

904.6.1 System test. Systems shall be inspected and tested for proper operation at six-month intervals. Tests shall include a check of the detection system, alarms and releasing devices, including manual stations and other associated equipment. Extinguishing system units shall be weighed, and the required amount of agent verified. Stored pressure-type units shall be checked for the required pressure. The cartridge of cartridge-operated units shall be weighed and replaced at intervals indicated by the manufacturer.

904.6.2 Fusible link maintenance. Fixed temperature-sensing elements shall be maintained to ensure proper operation of the system.

904.7 Foam systems. Foam-extinguishing systems shall be installed, maintained, periodically inspected and tested in accordance with NFPA 11 and NFPA 16 and their listing. Records of inspections and testing shall be maintained.

904.7.1 System test. Foam-extinguishing systems shall be inspected and tested at intervals in accordance with NFPA 25.

904.8 Carbon dioxide systems. Carbon dioxide extinguishing systems shall be installed, maintained, periodically inspected and tested in accordance with NFPA 12 and their listing. Records of inspections and testing shall be maintained.

904.8.1 System test. Systems shall be inspected and tested for proper operation at 12-month intervals.

904.8.2 High-pressure cylinders. High-pressure cylinders shall be weighed and the date of the last hydrostatic test shall be verified at six-month intervals. Where a container shows a loss in original content of more than 10 percent, the cylinder shall be refilled or replaced.

904.8.3 Low-pressure containers. The liquid-level gauges of low-pressure containers shall be observed at one-week intervals. Where a container shows a content loss of more than 10 percent, the container shall be refilled to maintain the minimum gas requirements.

904.8.4 System hoses. System hoses shall be examined at 12-month intervals for damage. Damaged hoses shall be replaced or tested. At five-year intervals, all hoses shall be tested.

904.8.4.1 Test procedure. Hoses shall be tested at not less than 2,500 pounds per square inch (psi) (17 238 kPa) for high-pressure systems and at not less than 900 psi (6206 kPa) for low-pressure systems.

904.8.5 Auxiliary equipment. Auxiliary and supplementary components, such as switches, door and window releases, interconnected valves, damper releases and supplementary alarms, shall be manually operated at 12-month intervals to ensure that such components are in proper operating condition.

904.9 Halon systems. Halogenated extinguishing systems shall be installed, maintained, periodically inspected and tested in accordance with NFPA 12A and their listing. Records of inspections and testing shall be maintained.

904.9.1 System test. Systems shall be inspected and tested for proper operation at 12-month intervals.

904.9.2 Containers. The extinguishing agent quantity and pressure of containers shall be checked at six-month intervals. Where a container shows a loss in original weight of more than 5 percent or a loss in original pressure (adjusted for temperature) of more than 10 percent, the container shall be refilled or replaced. The weight and pressure of the container shall be recorded on a tag attached to the container.

904.9.3 System hoses. System hoses shall be examined at 12-month intervals for damage. Damaged hoses shall be replaced or tested. At five-year intervals, all hoses shall be tested.

904.9.3.1 Test procedure. For Halon 1301 systems, hoses shall be tested at not less than 1,500 psi (10 343 kPa) for 600 psi (4137 kPa) charging pressure systems and not less than 900 psi (6206 kPa) for 360 psi (2482 kPa) charging pressure systems. For Halon 1211 handhose line systems, hoses shall be tested at 2,500 psi (17 238 kPa) for high-pressure systems and 900 psi (6206 kPa) for low-pressure systems.

904.9.4 Auxiliary equipment. Auxiliary and supplementary components, such as switches, door and window releases, interconnected valves, damper releases and supplementary alarms, shall be manually operated at 12-month intervals to ensure such components are in proper operating condition.

INTERNATIONAL CODE COUNCIL®
Copyright © 2019 ICC & NYSDOS. ALL RIGHTS RESERVED. Accessed by Lauren Gualdino (lgualdino@briarcliffmanor.org), (-) Order Number #100880972 on May 08, 2020 07:05 AM (PDT) pursuant to License Agreement with ICC & NYSDOS. No further reproduction, no

100880972

904.10 Clean-agent systems. Clean-agent fire-extinguishing systems shall be installed, maintained, periodically inspected and tested in accordance with NFPA 2001 and their listing. Records of inspections and testing shall be maintained.

904.10.1 System test. Systems shall be inspected and tested for proper operation at 12-month intervals.

904.10.2 Containers. The extinguishing agent quantity and pressure of the containers shall be checked at six-month intervals. Where a container shows a loss in original weight of more than 5 percent or a loss in original pressure, adjusted for temperature, of more than 10 percent, the container shall be refilled or replaced. The weight and pressure of the container shall be recorded on a tag attached to the container.

904.10.3 System hoses. System hoses shall be examined at 12-month intervals for damage. Damaged hoses shall be replaced or tested. All hoses shall be tested at five-year intervals.

904.11 Automatic water mist systems. *Automatic water mist systems* shall be permitted in applications that are consistent with the applicable listing or approvals and shall comply with Sections 904.11.1 through 904.11.3.

904.11.1 Design and installation requirements. *Automatic water mist systems* shall be designed and installed in accordance with Sections 904.11.1.1 through 904.11.1.4.

904.11.1.1 General. *Automatic water mist systems* shall be designed and installed in accordance with NFPA 750 and the manufacturer's instructions.

904.11.1.2 Actuation. *Automatic water mist systems* shall be automatically actuated.

904.11.1.3 Water supply protection. Connections to a potable water supply shall be protected against backflow in accordance with the *Plumbing Code of New York State*.

904.11.1.4 Secondary water supply. Where a secondary water supply is required for an *automatic sprinkler system*, an *automatic water mist system* shall be provided with an *approved* secondary water supply.

904.11.2 Water mist system supervision and alarms. Supervision and alarms shall be provided as required for *automatic sprinkler systems* in accordance with Section 903.4.

904.11.2.1 Monitoring. Monitoring shall be provided as required for *automatic sprinkler systems* in accordance with Section 903.4.1.

904.11.2.2 Alarms. Alarms shall be provided as required for *automatic sprinkler systems* in accordance with Section 903.4.2.

904.11.2.3 Floor control valves. Floor control valves shall be provided as required for *automatic sprinkler systems* in accordance with Section 903.4.3.

904.11.3 Testing and maintenance. *Automatic water mist systems* shall be tested and maintained in accordance with Section 901.6.

904.12 Commercial cooking systems. The automatic fire-extinguishing system for commercial cooking systems shall be of a type recognized for protection of commercial cooking equipment and exhaust systems of the type and arrangement protected. Preengineered automatic dry- and wet-chemical extinguishing systems shall be tested in accordance with UL 300 and *listed* and *labeled* for the intended application. Other types of automatic fire-extinguishing systems shall be *listed* and *labeled* for specific use as protection for commercial cooking operations. The system shall be installed in accordance with this code, NFPA 96, its listing and the manufacturer's installation instructions. Automatic fire-extinguishing systems of the following types shall be installed in accordance with the referenced standard indicated, as follows:

1. Carbon dioxide extinguishing systems, NFPA 12.
2. *Automatic sprinkler systems*, NFPA 13.
3. Automatic water mist systems, NFPA 750.
4. Foam-water sprinkler system or foam-water spray systems, NFPA 16.
5. Dry-chemical extinguishing systems, NFPA 17.
6. Wet-chemical extinguishing systems, NFPA 17A.

Exception: Factory-built commercial cooking recirculating systems that are tested in accordance with UL 710B and *listed*, *labeled* and installed in accordance with Section 304.1 of the *Mechanical Code of New York State*.

904.12.1 Manual system operation. A manual actuation device shall be located at or near a *means of egress* from the cooking area not less than 10 feet (3048 mm) and not more than 20 feet (6096 mm) from the kitchen exhaust system. The manual actuation device shall be installed not more than 48 inches (1200 mm) nor less than 42 inches (1067 mm) above the floor and shall clearly identify the hazard protected. The manual actuation shall require a maximum force of 40 pounds (178 N) and a maximum movement of 14 inches (356 mm) to actuate the fire suppression system.

Exception: *Automatic sprinkler systems* shall not be required to be equipped with manual actuation means.

904.12.2 System interconnection. The actuation of the fire extinguishing system shall automatically shut down the fuel or electrical power supply to the cooking equipment. The fuel and electrical supply reset shall be manual.

904.12.3 Carbon dioxide systems. Where carbon dioxide systems are used, there shall be a nozzle at the top of the ventilating duct. Additional nozzles that are symmetrically arranged to give uniform distribution shall be installed within vertical ducts exceeding 20 feet (6096 mm) and horizontal ducts exceeding 50 feet (15 240 mm). Dampers shall be installed at either the top or the bottom of the duct and shall be arranged to operate automatically upon activation of the fire-extinguishing system. Where the damper is installed at the top of the duct, the top nozzle shall be immediately below the damper. Automatic carbon dioxide fire-extinguishing systems shall be sufficiently sized to protect all hazards venting through a common duct simultaneously.

904.12.3.1 Ventilation system. Commercial-type cooking equipment protected by an automatic carbon

INTERNATIONAL CODE COUNCIL®
Copyright © 2019 ICC & NYSDOS. ALL RIGHTS RESERVED. Accessed by Lauren Gualdino (lgualdino@briarcliffmanor.org), (-) Order Number #100880972 on May 08, 2020 07:05 AM (PDT) pursuant to License Agreement with ICC & NYSDOS. No further reproduction, no

100880972

dioxide extinguishing system shall be arranged to shut off the ventilation system upon activation.

904.12.4 Special provisions for automatic sprinkler systems. *Automatic sprinkler systems* protecting commercial-type cooking equipment shall be supplied from a separate, indicating-type control valve that is identified. *Access* to the control valve shall be provided.

904.12.4.1 Listed sprinklers. Sprinklers used for the protection of fryers shall be tested in accordance with UL 199E, *listed* for that application and installed in accordance with their listing.

*

904.12.5 Operations and maintenance. Automatic fire-extinguishing systems protecting commercial cooking systems shall be maintained in accordance with Sections 904.12.5.1 through 904.12.5.3.

904.12.5.1 Existing automatic fire-extinguishing systems. Where changes in the cooking media, positioning of cooking equipment or replacement of cooking equipment occur in existing commercial cooking systems, the automatic fire-extinguishing system shall be required to comply with the applicable provisions of Sections 904.12 through 904.12.4.

904.12.5.2 Extinguishing system service. Automatic fire-extinguishing systems shall be serviced not less frequently than every six months and after activation of the system. Inspection shall be by qualified individuals, and a certificate of inspection shall be forwarded to the *fire code official* upon completion.

904.12.5.3 Fusible link and sprinkler head replacement. Fusible links and automatic sprinkler heads shall be replaced annually, and other protection devices shall be serviced or replaced in accordance with the manufacturer's instructions.

Exception: Frangible bulbs are not required to be replaced annually.

904.13 Domestic cooking systems. Cooktops and ranges installed in the following occupancies shall be protected in accordance with Section 904.13.1:

1. In Group I-1 occupancies where domestic cooking facilities are installed in accordance with Section 420.8 of the *Building Code of New York State.*
2. In Group I-2, Condition 1 occupancies where domestic cooking facilities are installed in accordance with Section 407.2.6 of the *Building Code of New York State*.
3. In Group R-2 college dormitories where domestic cooking facilities are installed in accordance with Section 420.10 of the *Building Code of New York State*.

904.13.1 Protection from fire. Cooktops and ranges shall be protected in accordance with Section 904.13.1.1 or 904.13.1.2.

904.13.1.1 Automatic fire-extinguishing system. The domestic recirculating or exterior vented cooking hood provided over the cooktop or range shall be equipped with an approved automatic fire-extinguishing system complying with the following:

1. The automatic fire-extinguishing system shall be of a type recognized for protection of domestic cooking equipment. Preengineered automatic fire-extinguishing systems shall be listed and labeled in accordance with UL 300A and installed in accordance with the manufacturer's instructions.
2. Manual actuation of the fire-extinguishing system shall be provided in accordance with Section 904.12.1.
3. Interconnection of the fuel and electric power supply shall be in accordance with Section 904.12.2.

904.13.1.2 Ignition prevention. Cooktops and ranges shall include burners that have been tested and listed to prevent ignition of cooking oil with burners turned on to their maximum heat settings and allowed to operate for 30 minutes.

904.14 Aerosol fire-extinguishing systems. Aerosol fire-extinguishing systems shall be installed, periodically inspected, tested and maintained in accordance with Sections 901 and 904.4, NFPA 2010, and in accordance with their listing.

Such devices and appurtenances shall be listed and installed in compliance with manufacturer's instructions.

904.14.1 Maintenance. Not less than semiannually, an inspection shall be conducted by a trained person to assess whether the system is in working order. Not less than annually, a certified fire suppression contractor having knowledge of and training in the installation, operation and maintenance of the specific fire-extinguishing system shall inspect, test, service and maintain such system in accordance with this section and the manufacturer's specifications and servicing manuals.

SECTION 905
STANDPIPE SYSTEMS

905.1 General. Standpipe systems shall be provided in new buildings and structures in accordance with Sections 905.2 through 905.11. In buildings used for *high-piled combustible storage*, fire protection shall be in accordance with Chapter 32.

[NY] 905.2 Installation and initial testing standard. Standpipe system installation and initial testing shall be performed in accordance with this section and NFPA 14. Flow testing of standpipes shall not be waived. Fire department connections for standpipe systems shall be in accordance with Section 912.

905.3 Required installations. Standpipe systems shall be installed where required by Sections 905.3.1 through 905.3.8. Standpipe systems are allowed to be combined with *automatic sprinkler systems*.

INTERNATIONAL CODE COUNCIL®
Copyright © 2019 ICC & NYSDOS. ALL RIGHTS RESERVED. Accessed by Lauren Gualdino (lgualdino@briarcliffmanor.org), (-) Order Number #100880972 on May 08, 2020 07:05 AM (PDT) pursuant to License Agreement with ICC & NYSDOS. No further reproduction, no

100880972

Exception: Standpipe systems are not required in Group R-3 occupancies.

905.3.1 Height. Class III standpipe systems shall be installed throughout buildings where any of the following conditions exist:

1. Four or more stories are above or below grade plane.
2. The floor level of the highest story is located more than 30 feet (9144 mm) above the lowest level of the fire department vehicle access.
3. The floor level of the lowest story is located more than 30 feet (9144 mm) below the highest level of fire department vehicle access.

Exceptions:

1. Class I standpipes are allowed in buildings equipped throughout with an *automatic sprinkler system* in accordance with Section 903.3.1.1 or 903.3.1.2.
2. Class I standpipes are allowed in Group B and E occupancies.
3. Class I manual standpipes are allowed in open parking garages where the highest floor is located not more than 150 feet (45 720 mm) above the lowest level of fire department vehicle access.
4. Class I manual dry standpipes are allowed in open parking garages that are subject to freezing temperatures, provided that the hose connections are located as required for Class II standpipes in accordance with Section 905.5.
5. Class I standpipes are allowed in *basements* equipped throughout with an *automatic sprinkler system*.
6. Class I standpipes are allowed in buildings where occupant-use hose lines will not be utilized by trained personnel or the fire department.
7. In determining the lowest level of fire department vehicle access, it shall not be required to consider either of the following:
   7.1. Recessed loading docks for four vehicles or less.
   7.2. Conditions where topography makes access from the fire department vehicle to the building impractical or impossible.

905.3.2 Group A. Class I automatic wet standpipes shall be provided in nonsprinklered Group A buildings having an *occupant load* exceeding 1,000 persons.

Exceptions:

1. Open-air-seating spaces without enclosed spaces.
2. Class I automatic dry and semiautomatic dry standpipes or manual wet standpipes are allowed in buildings that are not high-rise buildings.

905.3.3 Covered and open mall buildings. Covered mall and open mall buildings shall be equipped throughout with a standpipe system where required by Section 905.3.1. Mall buildings not required to be equipped with a standpipe system by Section 905.3.1 shall be equipped with Class I hose connections connected to the *automatic sprinkler system* sized to deliver water at 250 gallons per minute (946.4 L/min) at the hydraulically most remote hose connection while concurrently supplying the automatic sprinkler system demand. The standpipe system shall be designed not to exceed a 50 pounds per square inch (psi) (345 kPa) residual pressure loss with a flow of 250 gallons per minute (946.4 L/min) from the fire department connection to the hydraulically most remote hose connection. Hose connections shall be provided at each of the following locations:

1. Within the mall at the entrance to each exit passageway or corridor.
2. At each floor-level landing within *interior exit stairways* opening directly on the mall.
3. At exterior public entrances to the mall of a covered mall building.
4. At public entrances at the perimeter line of an open mall building.
5. At other locations as necessary so that the distance to reach all portions of a tenant space does not exceed 200 feet (60 960 mm) from a hose connection.

905.3.4 Stages. Stages greater than 1,000 square feet (93 m^2) in area shall be equipped with a Class III wet standpipe system with $1^1/_2$-inch and $2^1/_2$-inch (38 mm and 64 mm) hose connections on each side of the stage.

Exception: Where the building or area is equipped throughout with an *automatic sprinkler system*, a $1^1/_2$-inch (38 mm) hose connection shall be installed in accordance with NFPA 13 or in accordance with NFPA 14 for Class II or III standpipes.

905.3.4.1 Hose and cabinet. The $1^1/_2$-inch (38 mm) hose connections shall be equipped with sufficient lengths of $1^1/_2$-inch (38 mm) hose to provide fire protection for the stage area. Hose connections shall be equipped with an *approved* adjustable fog nozzle and be mounted in a cabinet or on a rack.

905.3.5 Underground buildings. Underground buildings shall be equipped throughout with a Class I automatic wet or manual wet standpipe system.

905.3.6 Helistops and heliports. Buildings with a rooftop *helistop* or *heliport* shall be equipped with a Class I or III standpipe system extended to the roof level on which the *helistop* or *heliport* is located in accordance with Section 2007.5.

905.3.7 Marinas and boatyards. Standpipes in marinas and boatyards shall comply with Chapter 36.

905.3.8 Rooftop gardens and landscaped roofs. Buildings or structures that have rooftop gardens or landscaped roofs and that are equipped with a standpipe system shall have the standpipe system extended to the roof level on which the rooftop garden or landscaped roof is located.

905.4 Location of Class I standpipe hose connections. Class I standpipe hose connections shall be provided in all of the following locations:

1. In every required *interior exit stairway*, a hose connection shall be provided for each story above and below grade plane. Hose connections shall be located at the

INTERNATIONAL CODE COUNCIL®
Copyright © 2019 ICC & NYSDOS. ALL RIGHTS RESERVED. Accessed by Lauren Gualdino (lgualdino@briarcliffmanor.org), (-) Order Number #100880972 on May 08, 2020 07:05 AM (PDT) pursuant to License Agreement with ICC & NYSDOS. No further reproduction, no

100880972

main floor landing unless otherwise *approved* by the *fire code official*.

Exception: A single hose connection shall be permitted to be installed in the open corridor or open breezeway between open stairs that are not greater than 75 feet (22 860 mm) apart.

2. On each side of the wall adjacent to the *exit* opening of a horizontal *exit*.

   Exception: Where floor areas adjacent to a horizontal *exit* are reachable from an *interior exit stairway* hose connection by a 30-foot (9144 mm) hose stream from a nozzle attached to 100 feet (30 480 mm) of hose, a hose connection shall not be required at the horizontal *exit*.

3. In every *exit* passageway, at the entrance from the exit passageway to other areas of a building.

   Exception: Where floor areas adjacent to an exit passageway are reachable from an *interior exit stairway* hose connection by a 30-foot (9144 mm) hose stream from a nozzle attached to 100 feet (30 480 mm) of hose, a hose connection shall not be required at the entrance from the exit passageway to other areas of the building.

4. In covered mall buildings, adjacent to each exterior public entrance to the mall and adjacent to each entrance from an *exit* passageway or *exit corridor* to the mall. In open mall buildings, adjacent to each public entrance to the mall at the perimeter line and adjacent to each entrance from an exit passageway or exit corridor to the mall.

5. Where the roof has a slope less than four units vertical in 12 units horizontal (33.3-percent slope), a hose connection shall be located to serve the roof or at the highest landing of an *interior exit stairway* with access to the roof provided in accordance with Section 1011.12.

6. Where the most remote portion of a nonsprinklered floor or story is more than 150 feet (45 720 mm) from a hose connection or the most remote portion of a sprinklered floor or story is more than 200 feet (60 960 mm) from a hose connection, the *fire code official* is authorized to require that additional hose connections be provided in *approved* locations.

905.4.1 Protection. Risers and laterals of Class I standpipe systems not located within an *interior exit stairway* shall be protected by a degree of *fire resistance* equal to that required for vertical enclosures in the building in which they are located.

Exception: In buildings equipped throughout with an *approved automatic sprinkler system*, laterals that are not located within an *interior exit stairway* are not required to be enclosed within fire-resistance-rated construction.

905.4.2 Interconnection. In buildings where more than one standpipe is provided, the standpipes shall be interconnected in accordance with NFPA 14.

905.5 Location of Class II standpipe hose connections. Class II standpipe hose connections shall be located so that all portions of the building are within 30 feet (9144 mm) of a nozzle attached to 100 feet (30 480 mm) of hose. Class II standpipe hose connections shall be located where they will have *ready access*.

905.5.1 Groups A-1 and A-2. In Group A-1 and A-2 occupancies with *occupant loads* of more than 1,000, hose connections shall be located on each side of any stage, on each side of the rear of the auditorium, on each side of the balcony and on each tier of dressing rooms.

905.5.2 Protection. Fire-resistance-rated protection of risers and laterals of Class II standpipe systems is not required.

905.5.3 Class II system 1-inch hose. A minimum 1-inch (25 mm) hose shall be allowed to be used for hose stations in light-hazard occupancies where investigated and *listed* for this service and where *approved* by the *fire code official*.

905.6 Location of Class III standpipe hose connections. Class III standpipe systems shall have hose connections located as required for Class I standpipes in Section 905.4 and shall have Class II hose connections as required in Section 905.5.

905.6.1 Protection. Risers and laterals of Class III standpipe systems shall be protected as required for Class I systems in accordance with Section 905.4.1.

905.6.2 Interconnection. In buildings where more than one Class III standpipe is provided, the standpipes shall be interconnected in accordance with NFPA 14.

905.7 Cabinets. Cabinets containing fire-fighting equipment, such as standpipes, fire hose, fire extinguishers or fire department valves, shall not be blocked from use or obscured from view.

905.7.1 Cabinet equipment identification. Cabinets shall be identified in an *approved* manner by a permanently attached sign with letters not less than 2 inches (51 mm) high in a color that contrasts with the background color, indicating the equipment contained therein.

Exceptions:

1. Doors not large enough to accommodate a written sign shall be marked with a permanently attached pictogram of the equipment contained therein.
2. Doors that have either an *approved* visual identification clear glass panel or a complete glass door panel are not required to be marked.

905.7.2 Locking cabinet doors. Cabinets shall be unlocked.

Exceptions:

1. Visual identification panels of glass or other *approved* transparent frangible material that is easily broken and allows access.
2. *Approved* locking arrangements.
3. Group I-3 occupancies.

905.8 Dry standpipes. Dry standpipes shall not be installed.

INTERNATIONAL CODE COUNCIL®
Copyright © 2019 ICC & NYSDOS. ALL RIGHTS RESERVED. Accessed by Lauren Gualdino (lgualdino@briarcliffmanor.org), (-) Order Number #100880972 on May 08, 2020 07:05 AM (PDT) pursuant to License Agreement with ICC & NYSDOS. No further reproduction, no

100880972

Exception: Where subject to freezing and in accordance with NFPA 14.

905.9 Valve supervision. Valves controlling water supplies shall be supervised in the open position so that a change in the normal position of the valve will generate a supervisory signal at the supervising station required by Section 903.4. Where a fire alarm system is provided, a signal shall be transmitted to the control unit.

Exceptions:

1. Valves to underground key or hub valves in roadway boxes provided by the municipality or public utility do not require supervision.
2. Valves locked in the normal position and inspected as provided in this code in buildings not equipped with a fire alarm system.

905.10 During construction. Standpipe systems required during construction and demolition operations shall be provided in accordance with Section 3313.

905.11 Locking standpipe outlet caps. The *fire code official* is authorized to require locking caps on the outlets on dry standpipes where the responding fire department carries key wrenches for the removal that are compatible with locking FDC connection caps.

905.12 Existing buildings. Where required in Chapter 11, existing structures shall be equipped with standpipes installed in accordance with Section 905.

SECTION 906
PORTABLE FIRE EXTINGUISHERS

906.1 Where required. Portable fire extinguishers shall be installed in all of the following locations:

1. In new and existing Group A, B, E, F, H, I, M, R-1, R-2, R-4 and S occupancies.

   Exceptions:

   1. In Group R-2 occupancies, portable fire extinguishers shall be required only in locations specified in Items 2 through 6 where each dwelling unit is provided with a portable fire extinguisher having a minimum rating of 1-A:10-B:C.
   2. In Group E occupancies, portable fire extinguishers shall be required only in locations specified in Items 2 through 6 where each classroom is provided with a portable fire extinguisher having a minimum rating of 2-A:20-B:C.
2. Within 30 feet (9144 mm) distance of travel from commercial cooking equipment and from domestic cooking equipment in Group I-1; I-2, Condition 1; and R-2 college dormitory occupancies.
3. In areas where flammable or combustible liquids are stored, used or dispensed.
4. On each floor of structures under construction, except Group R-3 occupancies, in accordance with Section 3315.1.

TABLE 906.1
ADDITIONAL REQUIRED PORTABLE FIRE EXTINGUISHERS

SECTION	SUBJECT
303.5	Asphalt kettles
307.5	Open burning
308.1.3	Open flames—torches
309.4	Powered industrial trucks
2005.2	Aircraft towing vehicles
2005.3	Aircraft welding apparatus
2005.4	Aircraft fuel-servicing tank vehicles
2005.5	Aircraft hydrant fuel-servicing vehicles
2005.6	Aircraft fuel-dispensing stations
2007.7	Heliports and helistops
2108.4	Dry cleaning plants
2305.5	Motor fuel-dispensing facilities
2310.6.4	Marine motor fuel-dispensing facilities
2311.6	Repair garages
2404.4.1	Spray-finishing operations
2405.4.2	Dip-tank operations
2406.4.2	Powder-coating areas
2804.3	Lumberyards/woodworking facilities
2808.8	Recycling facilities
2809.5	Exterior lumber storage
2903.5	Organic-coating areas
3006.3	Industrial ovens
3107.9	Tents and membrane structures
3206.11	High-piled storage
3315.1	Buildings under construction or demolition
3317.3	Roofing operations
3408.2	Tire rebuilding/storage
3504.2.6	Welding and other hot work
3604.4	Marinas
3703.6	Combustible fibers
5703.2.1	Flammable and combustible liquids, general
5704.3.3.1	Indoor storage of flammable and combustible liquids
5704.3.7.5.2	Liquid storage rooms for flammable and combustible liquids
5705.4.9	Solvent distillation units
5706.2.7	Farms and construction sites—flammable and combustible liquids storage
5706.4.10.1	Bulk plants and terminals for flammable and combustible liquids
5706.5.4.5	Commercial, industrial, governmental or manufacturing establishments—fuel dispensing
5706.6.4	Tank vehicles for flammable and combustible liquids
5906.5.7	Flammable solids
6108.2	LP-gas

INTERNATIONAL CODE COUNCIL®
Copyright © 2019 ICC & NYSDOS. ALL RIGHTS RESERVED. Accessed by Lauren Gualdino (lgualdino@briarcliffmanor.org), (-) Order Number #100880972 on May 08, 2020 07:05 AM (PDT) pursuant to License Agreement with ICC & NYSDOS. No further reproduction, no

100880972

5. Where required by the sections indicated in Table 906.1.
6. Special-hazard areas, including but not limited to laboratories, computer rooms and generator rooms, where required by the *fire code official*.

906.2 General requirements. Portable fire extinguishers shall be selected, installed and maintained in accordance with this section and NFPA 10.

Exceptions:

1. The distance of travel to reach an extinguisher shall not apply to the spectator seating portions of Group A-5 occupancies.
2. Thirty-day inspections shall not be required and maintenance shall be allowed to be once every 3 years for dry-chemical or halogenated agent portable fire extinguishers that are supervised by a *listed* and *approved* electronic monitoring device, provided that all of the following conditions are met:
   2.1. Electronic monitoring shall confirm that extinguishers are properly positioned, properly charged and unobstructed.
   2.2. Loss of power or circuit continuity to the electronic monitoring device shall initiate a trouble signal.
   2.3. The extinguishers shall be installed inside of a building or cabinet in a noncorrosive environment.
   2.4. Electronic monitoring devices and supervisory circuits shall be tested every 3 years when extinguisher maintenance is performed.
   2.5. A written log of required hydrostatic test dates for extinguishers shall be maintained by the *owner* to verify that hydrostatic tests are conducted at the frequency required by NFPA 10.
3. In Group I-3, portable fire extinguishers shall be permitted to be located at staff locations.

906.2.1 Certification of service personnel for portable fire extinguishers. Service personnel providing or conducting maintenance on portable fire extinguishers shall possess a valid certificate issued by an *approved* governmental agency, or other *approved* organization for the type of work performed.

906.3 Size and distribution. The size and distribution of portable fire extinguishers shall be in accordance with Sections 906.3.1 through 906.3.4.

906.3.1 Class A fire hazards. The minimum sizes and distribution of portable fire extinguishers for occupancies that involve primarily Class A fire hazards shall comply with Table 906.3(1).

TABLE 906.3(1)
FIRE EXTINGUISHERS FOR CLASS A FIRE HAZARDS

	LIGHT (Low) HAZARD OCCUPANCY	ORDINARY (Moderate) HAZARD OCCUPANCY	EXTRA (High) HAZARD OCCUPANCY
Minimum-rated single extinguisher	2-A[c]	2-A	4-A[a]
Maximum floor area per unit of A	3,000 square feet	1,500 square feet	1,000 square feet
Maximum floor area for extinguisher[b]	11,250 square feet	11,250 square feet	11,250 square feet
Maximum distance of travel to extinguisher	75 feet	75 feet	75 feet

For SI: 1 foot = 304.8 mm, 1 square foot = 0.0929 m^2, 1 gallon = 3.785 L.

a. Two $2^1/_2$-gallon water-type extinguishers shall be deemed the equivalent of one 4-A rated extinguisher.

b. Annex E.3.3 of NFPA 10 provides more details concerning application of the maximum floor area criteria.

c. Two water-type extinguishers each with a 1-A rating shall be deemed the equivalent of one 2-A rated extinguisher for Light (Low) Hazard Occupancies.

906.3.2 Class B fire hazards. Portable fire extinguishers for occupancies involving flammable or *combustible liquids* with depths less than or equal to 0.25 inch (6.4 mm) shall be selected and placed in accordance with Table 906.3(2).

Portable fire extinguishers for occupancies involving flammable or *combustible liquids* with a depth of greater than 0.25-inch (6.4 mm) shall be selected and placed in accordance with NFPA 10.

TABLE 906.3(2)
FIRE EXTINGUISHERS FOR FLAMMABLE OR COMBUSTIBLE LIQUIDS WITH DEPTHS OF LESS THAN OR EQUAL TO 0.25 INCH[a]

TYPE OF HAZARD	BASIC MINIMUM EXTINGUISHER RATING	MAXIMUM DISTANCE OF TRAVEL TO EXTINGUISHERS (feet)
Light (Low)	5-B 10-B	30 50
Ordinary (Moderate)	10-B 20-B	30 50
Extra (High)	40-B 80-B	30 50

For SI: 1 inch = 25.4 mm, 1 foot = 304.8 mm.

a. For requirements on water-soluble flammable liquids and alternative sizing criteria, see Section 5.5 of NFPA 10.

906.3.3 Class C fire hazards. Portable fire extinguishers for Class C fire hazards shall be selected and placed on the basis of the anticipated Class A or B hazard.

906.3.4 Class D fire hazards. Portable fire extinguishers for occupancies involving combustible metals shall be selected and placed in accordance with NFPA 10. **

906.4 Cooking equipment fires. Fire extinguishers provided for the protection of cooking equipment shall be of an *approved* type compatible with the automatic fire-extinguish-

INTERNATIONAL CODE COUNCIL®
Copyright © 2019 ICC & NYSDOS. ALL RIGHTS RESERVED. Accessed by Lauren Gualdino (lgualdino@briarcliffmanor.org), (-) Order Number #100880972 on May 08, 2020 07:05 AM (PDT) pursuant to License Agreement with ICC & NYSDOS. No further reproduction, no

100880972

ing system agent. Cooking equipment involving solid fuels or vegetable or animal oils and fats shall be protected by a Class K-rated portable extinguisher in accordance with Sections 906.1, Item 2, 906.4.1 and 906.4.2 as applicable.

906.4.1 Portable fire extinguishers for solid fuel cooking appliances. Solid fuel cooking appliances, whether or not under a hood, with fireboxes 5 cubic feet (0.14 m^3) or less in volume shall have a minimum 2.5-gallon (9 L) or two 1.5-gallon (6 L) Class K wet-chemical portable fire extinguishers located in accordance with Section 906.1.

906.4.2 Class K portable fire extinguishers for deep fat fryers. Where hazard areas include deep fat fryers, listed Class K portable fire extinguishers shall be provided as follows:

1. For up to four fryers having a maximum cooking medium capacity of 80 pounds (36.3 kg) each: one Class K portable fire extinguisher of a minimum 1.5-gallon (6 L) capacity.
2. For every additional group of four fryers having a maximum cooking medium capacity of 80 pounds (36.3 kg) each: one additional Class K portable fire extinguisher of a minimum 1.5-gallon (6 L) capacity shall be provided.
3. For individual fryers exceeding 6 square feet (0.55 m^2) in surface area: Class K portable fire extinguishers shall be installed in accordance with the extinguisher manufacturer's recommendations.

906.5 Conspicuous location. Portable fire extinguishers shall be located in conspicuous locations where they will have *ready access* and be immediately available for use. These locations shall be along normal paths of travel, unless the *fire code official* determines that the hazard posed indicates the need for placement away from normal paths of travel.

906.6 Unobstructed and unobscured. Portable fire extinguishers shall not be obstructed or obscured from view. In rooms or areas in which visual obstruction cannot be completely avoided, means shall be provided to indicate the locations of extinguishers.

906.7 Hangers and brackets. Hand-held portable fire extinguishers, not housed in cabinets, shall be installed on the hangers or brackets supplied. Hangers or brackets shall be securely anchored to the mounting surface in accordance with the manufacturer's installation instructions.

906.8 Cabinets. Cabinets used to house portable fire extinguishers shall not be locked.

Exceptions:

1. Where portable fire extinguishers subject to malicious use or damage are provided with a means of ready access.
2. In Group I-3 occupancies and in mental health areas in Group I-2 occupancies, access to portable fire extinguishers shall be permitted to be locked or to be located in staff locations provided that the staff has keys.

906.9 Extinguisher installation. The installation of portable fire extinguishers shall be in accordance with Sections 906.9.1 through 906.9.3.

906.9.1 Extinguishers weighing 40 pounds or less. Portable fire extinguishers having a gross weight not exceeding 40 pounds (18 kg) shall be installed so that their tops are not more than 5 feet (1524 mm) above the floor.

906.9.2 Extinguishers weighing more than 40 pounds. Hand-held portable fire extinguishers having a gross weight exceeding 40 pounds (18 kg) shall be installed so that their tops are not more than 3.5 feet (1067 mm) above the floor.

906.9.3 Floor clearance. The clearance between the floor and the bottom of installed hand-held portable fire extinguishers shall be not less than 4 inches (102 mm).

906.10 Wheeled units. Wheeled fire extinguishers shall be conspicuously located in a designated location.

SECTION 907
FIRE ALARM AND DETECTION SYSTEMS

907.1 General. This section covers the application, installation, performance and maintenance of fire alarm systems and their components in new and existing buildings and structures. The requirements of Section 907.2 are applicable to new buildings and structures. The requirements of Section 907.9 are applicable to existing buildings and structures.

907.1.1 Construction documents. *Construction documents* for fire alarm systems shall be of sufficient clarity to indicate the location, nature and extent of the work proposed and show in detail that it will conform to the provisions of this code, the *Building Code of New York State* and relevant laws, ordinances, rules and regulations, as determined by the *fire code official*.

907.1.2 Fire alarm shop drawings. Shop drawings for fire alarm systems shall be prepared in accordance with NFPA 72 and submitted for review and approval prior to system installation.

907.1.3 Equipment. Systems and components shall be *listed* and *approved* for the purpose for which they are installed.

907.2 Where required—new buildings and structures. An *approved* fire alarm system installed in accordance with the provisions of this code and NFPA 72 shall be provided in new buildings and structures in accordance with Sections 907.2.1 through 907.2.23 and provide occupant notification in accordance with Section 907.5, unless other requirements are provided by another section of this code.

Not fewer than one manual fire alarm box shall be provided in an *approved* location to initiate a fire alarm signal for fire alarm systems employing automatic fire detectors or waterflow detection devices. Where other sections of this

INTERNATIONAL CODE COUNCIL®
Copyright © 2019 ICC & NYSDOS. ALL RIGHTS RESERVED. Accessed by Lauren Gualdino (lgualdino@briarcliffmanor.org), (-) Order Number #100880972 on May 08, 2020 07:05 AM (PDT) pursuant to License Agreement with ICC & NYSDOS. No further reproduction, no

100880972

code allow elimination of fire alarm boxes due to sprinklers, a single fire alarm box shall be installed.

Exceptions:

1. The manual fire alarm box is not required for fire alarm systems dedicated to elevator recall control and supervisory service.
2. The manual fire alarm box is not required for Group R-2 occupancies unless required by the *fire code official* to provide a means for fire watch personnel to initiate an alarm during a sprinkler system impairment event. Where provided, the manual fire alarm box shall not be located in an area that is open to the public.

907.2.1 Group A. A manual fire alarm system that activates the occupant notification system in accordance with Section 907.5 shall be installed in Group A occupancies where the occupant load due to the assembly occupancy is 300 or more, or where the Group A occupant load is more than 100 persons above or below the *lowest level of exit discharge*. Group A occupancies not separated from one another in accordance with Section 707.3.10 of the *Building Code of New York State* shall be considered as a single occupancy for the purposes of applying this section. Portions of Group E occupancies occupied for assembly purposes shall be provided with a fire alarm system as required for the Group E occupancy.

Exception: Manual fire alarm boxes are not required where the building is equipped throughout with an automatic sprinkler system installed in accordance with Section 903.3.1.1 and the occupant notification appliances will activate throughout the notification zones upon sprinkler water flow.

907.2.1.1 System initiation in Group A occupancies with an occupant load of 1,000 or more. Activation of the fire alarm in Group A occupancies with an *occupant load* of 1,000 or more shall initiate a signal using an emergency voice/alarm communications system in accordance with Section 907.5.2.2.

Exception: Where *approved*, the prerecorded announcement is allowed to be manually deactivated for a period of time, not to exceed 3 minutes, for the sole purpose of allowing a live voice announcement from an *approved*, constantly attended location.

907.2.1.2 Emergency voice/alarm communication system captions. Stadiums, arenas and grandstands required to caption audible public announcements shall be in accordance with Section 907.5.2.2.4.

[NY] 907.2.1.3 Automatic smoke detection system. A smoke detection system that activates the occupant notification system in accordance with Section 907.5 shall be installed in Group A occupancies unless the fire area is protected with an automatic fire sprinkler system, that activates the occupant notification system, installed in accordance with Section 903.3.1.1.

907.2.2 Group B. A manual fire alarm system shall be installed in Group B occupancies where one of the following conditions exists:

1. The combined Group B *occupant load* of all floors is 500 or more.
2. The Group B *occupant load* is more than 100 persons above or below the lowest *level of exit discharge*.
3. The *fire area* contains an ambulatory care facility.

Exception: Manual fire alarm boxes are not required where the building is equipped throughout with an *automatic sprinkler system* installed in accordance with Section 903.3.1.1 and the occupant notification appliances will activate throughout the notification zones upon sprinkler water flow.

907.2.2.1 Ambulatory care facilities. *Fire areas* containing ambulatory care facilities shall be provided with an electronically supervised automatic smoke detection system installed within the *ambulatory care facility* and in public use areas outside of tenant spaces, including public *corridors* and elevator lobbies.

Exception: Buildings equipped throughout with an *automatic sprinkler system* in accordance with Section 903.3.1.1 provided that the occupant notification appliances will activate throughout the notification zones upon sprinkler water flow.

907.2.3 Group E. A manual fire alarm system that initiates the occupant notification signal utilizing an emergency voice/alarm communication system meeting the requirements of Section 907.5.2.2 and installed in accordance with Section 907.6 shall be installed in Group E occupancies. Where *automatic sprinkler systems* or smoke detectors are installed, such systems or detectors shall be connected to the building fire alarm system.

Exceptions:

1. A manual fire alarm system is not required in Group E occupancies with an *occupant load* of 50 or less.
2. Emergency voice/alarm communication systems meeting the requirements of Section 907.5.2.2 and installed in accordance with Section 907.6 shall not be required in Group E occupancies with occupant loads of 100 or less, provided that activation of the manual fire alarm system initiates an *approved* occupant notification signal in accordance with Section 907.5.
3. Manual fire alarm boxes are not required in Group E occupancies where all of the following apply:
   - 3.1. Interior *corridors* are protected by smoke detectors.
   - 3.2. Auditoriums, cafeterias, gymnasiums and similar areas are protected by *heat detectors* or other *approved* detection devices.
   - 3.3. Shops and laboratories involving dusts or vapors are protected by *heat detectors* or other *approved* detection devices.

INTERNATIONAL CODE COUNCIL®
Copyright © 2019 ICC & NYSDOS. ALL RIGHTS RESERVED. Accessed by Lauren Gualdino (lgualdino@briarcliffmanor.org), (-) Order Number #100880972 on May 08, 2020 07:05 AM (PDT) pursuant to License Agreement with ICC & NYSDOS. No further reproduction, no

100880972

4. Manual fire alarm boxes shall not be required in Group E occupancies where all of the following apply:
    4.1. The building is equipped throughout with an *approved automatic sprinkler system* installed in accordance with Section 903.3.1.1.
    4.2. The emergency voice/alarm communication system will activate on sprinkler water flow.
    4.3. Manual activation is provided from a normally occupied location.

907.2.4 Group F. A manual fire alarm system that activates the occupant notification system in accordance with Section 907.5 shall be installed in Group F occupancies where both of the following conditions exist:

1. The Group F occupancy is two or more stories in height.
2. The Group F occupancy has a combined *occupant load* of 500 or more above or below the lowest *level of exit discharge*.

Exception: Manual fire alarm boxes are not required where the building is equipped throughout with an *automatic sprinkler system* installed in accordance with Section 903.3.1.1 and the occupant notification appliances will activate throughout the notification zones upon sprinkler water flow.

907.2.5 Group H. A manual fire alarm system that activates the occupant notification system in accordance with Section 907.5 shall be installed in Group H-5 occupancies and in occupancies used for the manufacture of organic coatings. An automatic smoke detection system shall be installed for highly toxic gases, organic peroxides and oxidizers in accordance with Chapters 60, 62 and 63, respectively.

907.2.6 Group I. A manual fire alarm system that activates the occupant notification system in accordance with Section 907.5 shall be installed in Group I occupancies. An automatic smoke detection system that activates the occupant notification system in accordance with Section 907.5 shall be provided in accordance with Sections 907.2.6.1, 907.2.6.2 and 907.2.6.3.3.

Exceptions:

1. Manual fire alarm boxes in *sleeping units* of Group I-1 and I-2 occupancies shall not be required at *exits* if located at all care providers' control stations or other constantly attended staff locations, provided that such manual fire alarm boxes are visible and provided with *ready access*, and the distances of travel required in Section 907.4.2.1 are not exceeded.
2. Occupant notification systems are not required to be activated where private mode signaling installed in accordance with NFPA 72 is *approved* by the *fire code official* and staff evacuation responsibilities are included in the fire safety and evacuation plan required by Section 404.

907.2.6.1 Group I-1. An automatic smoke detection system shall be installed in *corridors*, waiting areas open to *corridors* and *habitable spaces* other than *sleeping units* and kitchens. The system shall be activated in accordance with Section 907.5.

Exceptions:

1. For Group I-1, Condition 1 occupancies, smoke detection in *habitable spaces* is not required where the facility is equipped throughout with an *automatic sprinkler system* installed in accordance with Section 903.3.1.1.
2. Smoke detection is not required for exterior balconies.

907.2.6.1.1 Smoke alarms. Single- and multiple-station smoke alarms shall be installed in accordance with Section 907.2.10.

907.2.6.2 Group I-2. An automatic smoke detection system shall be installed in *corridors* in Group I-2, Condition 1 facilities and spaces permitted to be open to the *corridors* by Section 407.2 of the *Building Code of New York State*. The system shall be activated in accordance with Section 907.4. Group I-2, Condition 2 occupancies shall be equipped with an automatic smoke detection system as required in Section 407 of the *Building Code of New York State*.

Exceptions:

1. *Corridor* smoke detection is not required in smoke compartments that contain *sleeping units* where such units are provided with smoke detectors that comply with UL 268. Such detectors shall provide a visual display on the *corridor* side of each *sleeping unit* and shall provide an audible and visual alarm at the care providers' station attending each unit.
2. *Corridor* smoke detection is not required in smoke compartments that contain *sleeping units* where *sleeping unit* doors are equipped with automatic door-closing devices with integral smoke detectors on the unit sides installed in accordance with their listing, provided that the integral detectors perform the required alerting function.

907.2.6.3 Group I-3 occupancies. Group I-3 occupancies shall be equipped with a manual fire alarm system and automatic smoke detection system installed for alerting staff.

907.2.6.3.1 System initiation. Actuation of an automatic fire-extinguishing system, *automatic sprinkler system*, a manual fire alarm box or a fire detector shall initiate an approved fire alarm signal that automatically notifies staff.

907.2.6.3.2 Manual fire alarm boxes. Manual fire alarm boxes are not required to be located in accor-

INTERNATIONAL CODE COUNCIL®
Copyright © 2019 ICC & NYSDOS. ALL RIGHTS RESERVED. Accessed by Lauren Gualdino (lgualdino@briarcliffmanor.org), (-) Order Number #100880972 on May 08, 2020 07:05 AM (PDT) pursuant to License Agreement with ICC & NYSDOS. No further reproduction, no

100880972

dance with Section 907.4.2 where the fire alarm boxes are provided at staff-attended locations having direct supervision over areas where manual fire alarm boxes have been omitted.

907.2.6.3.2.1 Manual fire alarms boxes in detainee areas. Manual fire alarm boxes are allowed to be locked in areas occupied by detainees, provided that staff members are present within the subject area and have keys readily available to operate the manual fire alarm boxes.

907.2.6.3.3 Automatic smoke detection system. An automatic smoke detection system shall be installed throughout resident housing areas, including *sleeping units* and contiguous day rooms, group activity spaces and other common spaces normally open to residents.

Exceptions:

1. Other *approved* smoke detection arrangements providing equivalent protection, including, but not limited to, placing detectors in exhaust ducts from cells or behind protective guards *listed* for the purpose, are allowed where necessary to prevent damage or tampering.
2. *Sleeping units* in Use Conditions 2 and 3 as described in Section 308 of the *Building Code of New York State*.
3. Smoke detectors are not required in *sleeping units* with four or fewer occupants in smoke compartments that are equipped throughout with an *automatic sprinkler system* installed in accordance with Section 903.3.1.1.

907.2.7 Group M. A manual fire alarm system that activates the occupant notification system in accordance with Section 907.5 shall be installed in Group M occupancies where one of the following conditions exists:

1. The combined Group M *occupant load* of all floors is 500 or more persons.
2. The Group M *occupant load* is more than 100 persons above or below the lowest *level of exit discharge*.

Exceptions:

1. A manual fire alarm system is not required in covered or open mall buildings complying with Section 402 of the *Building Code of New York State*.
2. Manual fire alarm boxes are not required where the building is equipped throughout with an *automatic sprinkler system* installed in accordance with Section 903.3.1.1 and the occupant notification appliances will automatically activate throughout the notification zones upon sprinkler water flow.

907.2.7.1 Occupant notification. During times that the building is occupied, the initiation of a signal from a manual fire alarm box or from a waterflow switch shall not be required to activate the alarm notification appliances when an alarm signal is activated at a constantly attended location from which evacuation instructions shall be initiated over an emergency voice/alarm communication system installed in accordance with Section 907.5.2.2.

907.2.8 Group R-1. Fire alarm systems and smoke alarms shall be installed in Group R-1 occupancies as required in Sections 907.2.8.1 through 907.2.8.3.

907.2.8.1 Manual fire alarm system. A manual fire alarm system that activates the occupant notification system in accordance with Section 907.5 shall be installed in Group R-1 occupancies.

Exceptions:

1. A manual fire alarm system is not required in buildings not more than two stories in height where all individual *sleeping units* and contiguous attic and crawl spaces to those units are separated from each other and public or common areas by not less than 1-hour *fire partitions* and each individual *sleeping unit* has an *exit* directly to a *public way*, *egress court* or yard.
2. Manual fire alarm boxes are not required throughout the building where all of the following conditions are met:
   2.1. The building is equipped throughout with an *automatic sprinkler system* installed in accordance with Section 903.3.1.1 or 903.3.1.2.
   2.2. The notification appliances will activate upon sprinkler water flow.
   2.3. Not fewer than one manual fire alarm box is installed at an *approved* location.

907.2.8.2 Automatic smoke detection system. An automatic smoke detection system that activates the occupant notification system in accordance with Section 907.5 shall be installed throughout all interior *corridors* serving *sleeping units*.

Exception: An automatic smoke detection system is not required in buildings that do not have interior *corridors* serving *sleeping units* and where each *sleeping unit* has a *means of egress* door opening directly to an *exit* or to an exterior *exit access* that leads directly to an *exit*.

907.2.8.3 Smoke alarms. Single- and multiple-station smoke alarms shall be installed in accordance with Section 907.2.10.

907.2.9 Group R-2. Fire alarm systems and smoke alarms shall be installed in Group R-2 occupancies as required in Sections 907.2.9.1 and 907.2.9.3.

907.2.9.1 Manual fire alarm system. A manual fire alarm system that activates the occupant notification system in accordance with Section 907.5 shall be

INTERNATIONAL CODE COUNCIL®
Copyright © 2019 ICC & NYSDOS. ALL RIGHTS RESERVED. Accessed by Lauren Gualdino (lgualdino@briarcliffmanor.org), (-) Order Number #100880972 on May 08, 2020 07:05 AM (PDT) pursuant to License Agreement with ICC & NYSDOS. No further reproduction, no

100880972

installed in Group R-2 occupancies where any of the following conditions apply:

1. Any *dwelling unit* or *sleeping unit* is located three or more stories above the lowest *level of exit discharge*.
2. Any *dwelling unit* or *sleeping unit* is located more than one story below the highest *level of exit discharge* of *exit*s serving the *dwelling unit* or *sleeping unit*.
3. The building contains more than 16 *dwelling unit*s or *sleeping unit*s.

Exceptions:

1. A fire alarm system is not required in buildings not more than two stories in height where all *dwelling unit*s or *sleeping unit*s and contiguous attic and crawl spaces are separated from each other and public or common areas by not less than 1-hour *fire partitions* and each *dwelling unit* or *sleeping unit* has an *exit* directly to a *public way*, *egress court* or yard.
2. Manual fire alarm boxes are not required where the building is equipped throughout with an *automatic sprinkler system* installed in accordance with Section 903.3.1.1 or 903.3.1.2 and the occupant notification appliances will automatically activate throughout the notification zones upon a sprinkler water flow.
3. A fire alarm system is not required in buildings that do not have interior *corridor*s serving *dwelling unit*s and are protected by an *approved automatic sprinkler system* installed in accordance with Section 903.3.1.1 or 903.3.1.2, provided that *dwelling unit*s either have a *means of egress* door opening directly to an exterior *exit access* that leads directly to the *exit*s or are served by open-ended *corridor*s designed in accordance with Section 1027.6, Exception 3.

907.2.9.2 Smoke alarms. Single- and multiple-station smoke alarms shall be installed in accordance with Section 907.2.10.

907.2.9.3 Group R-2 college and university buildings. An automatic smoke detection system that activates the occupant notification system in accordance with Section 907.5 shall be installed in Group R-2 occupancies operated by a college or university for student or staff housing in all of the following locations:

1. Common spaces outside of *dwelling unit*s and *sleeping unit*s.
2. Laundry rooms, mechanical equipment rooms and storage rooms.
3. All interior corridors serving *sleeping unit*s or *dwelling unit*s.

   Exception: An automatic smoke detection system is not required in buildings that do not have interior *corridor*s serving *sleeping unit*s or *dwelling unit*s and where each s*leeping unit* or *dwelling unit* either has a *means of egress* door opening directly to an exterior *exit access* that leads directly to an *exit* or a *means of egress* door opening directly to an *exit*.

Required smoke alarms in *dwelling unit*s and *sleeping unit*s in Group R-2 occupancies operated by a college or university for student or staff housing shall be interconnected with the fire alarm system in accordance with NFPA 72.

907.2.10 Single- and multiple-station smoke alarms. *Listed* single- and multiple-station smoke alarms complying with UL 217 shall be installed in accordance with Sections 907.2.10.1 through 907.2.10.7 and NFPA 72.

907.2.10.1 Group R-1. Single- or multiple-station smoke alarms shall be installed in all of the following locations in Group R-1:

1. In sleeping areas.
2. In every room in the path of the *means of egress* from the sleeping area to the door leading from the *sleeping unit*.
3. In each story within the *sleeping unit*, including *basements*. For *sleeping units* with split levels and without an intervening door between the adjacent levels, a smoke alarm installed on the upper level shall suffice for the adjacent lower level provided that the lower level is less than one full story below the upper level.

907.2.10.2 Groups R-2, R-3, R-4 and I-1. Single or multiple-station smoke alarms shall be installed and maintained in Groups R-2, R-3, R-4 and I-1 regardless of *occupant load* at all of the following locations:

1. On the ceiling or wall outside of each separate sleeping area in the immediate vicinity of bedrooms.
2. In each room used for sleeping purposes.
3. In each story within a *dwelling unit*, including *basements* but not including crawl spaces and uninhabitable attics. In *dwellings* or *dwelling units* with split levels and without an intervening door between the adjacent levels, a smoke alarm installed on the upper level shall suffice for the adjacent lower level provided that the lower level is less than one full story below the upper level.

907.2.10.3 Installation near cooking appliances. Smoke alarms shall not be installed in the following locations unless this would prevent placement of a smoke alarm in a location required by Section 907.2.10.1 or 907.2.10.2:

1. Ionization smoke alarms shall not be installed less than 20 feet (6096 mm) horizontally from a permanently installed cooking appliance.
2. Ionization smoke alarms with an alarm-silencing switch shall not be installed less than 10 feet (3048 mm) horizontally from a permanently installed cooking appliance.

INTERNATIONAL CODE COUNCIL®
Copyright © 2019 ICC & NYSDOS. ALL RIGHTS RESERVED. Accessed by Lauren Gualdino (lgualdino@briarcliffmanor.org), (-) Order Number #100880972 on May 08, 2020 07:05 AM (PDT) pursuant to License Agreement with ICC & NYSDOS. No further reproduction, no

100880972

3. Photoelectric smoke alarms shall not be installed less than 6 feet (1829 mm) horizontally from a permanently installed cooking appliance.

907.2.10.4 Installation near bathrooms. Smoke alarms shall be installed not less than 3 feet (914 mm) horizontally from the door or opening of a bathroom that contains a bathtub or shower unless this would prevent placement of a smoke alarm required by Section 907.2.10.1 or 907.2.10.2.

907.2.10.5 Interconnection. Where more than one smoke alarm is required to be installed within an individual *dwelling unit* or *sleeping unit* in Group R or I-1 occupancies, the smoke alarms shall be interconnected in such a manner that the activation of one alarm will activate all of the alarms in the individual unit. Physical interconnection of smoke alarms shall not be required where listed wireless alarms are installed and all alarms sound upon activation of one alarm. The alarm shall be clearly audible in all bedrooms over background noise levels with all intervening doors closed**.**

907.2.10.6 Power source. In new construction, required smoke alarms shall receive their primary power from the building wiring where such wiring is served from a commercial source and shall be equipped with a battery backup. Smoke alarms with integral strobes that are not equipped with battery back-up shall be connected to an emergency electrical system in accordance with Section 1203. Smoke alarms shall emit a signal when the batteries are low. Wiring shall be permanent and without a disconnecting switch other than as required for overcurrent protection.

Exception: Smoke alarms are not required to be equipped with battery backup where they are connected to an emergency electrical system that complies with Section 1203.

907.2.10.7 Smoke detection system. Smoke detectors listed in accordance with UL 268 and provided as part of the building fire alarm system shall be an acceptable alternative to single- and multiple-station *smoke alarms* and shall comply with the following:

1. The fire alarm system shall comply with all applicable requirements in Section 907.
2. Activation of a smoke detector in a *dwelling unit* or *sleeping unit* shall initiate alarm notification in the *dwelling unit* or *sleeping unit* in accordance with Section 907.5.2.
3. Activation of a smoke detector in a *dwelling unit* or *sleeping unit* shall not activate alarm notification appliances outside of the *dwelling unit* or *sleeping unit*, provided that a supervisory signal is generated and monitored in accordance with Section 907.6.6.

[NY] 907.2.10.8 Portable smoke alarms in Group R-1 occupancies and Group R-3 lodging houses. In addition to, but not in limitation of, any other requirement of this code, portable smoke alarms of both audible and visual design shall be provided in all buildings of Group R-1 occupancies and Group R-3 lodging houses. The number of smoke alarms available shall be 3 percent of the number of sleeping units with a minimum of one operational smoke alarm per building. Proprietors shall conspicuously post a sign, with letters at least 3 inches (76 mm) in height, at the main desk or other similar station advising of the availability of such smoke alarms. Such smoke alarms shall be in conformity with NFPA 72.

Exception: Portable smoke alarms shall not be required where any of the following applies:

1. Where audible/visual smoke alarms are hard wired.
2. Where audible/visual smoke alarms are incorporated into a fire alarm system such that visual notification is activated by the system.

907.2.11 Special amusement buildings. An automatic smoke detection system shall be provided in special amusement buildings in accordance with Sections 907.2.11.1 through 907.2.11.3.

907.2.11.1 Alarm. Activation of any single smoke detector, the *automatic sprinkler system* or any other automatic fire detection device shall immediately activate an audible and visible alarm at the building at a constantly attended location from which emergency action can be initiated, including the capability of manual initiation of requirements in Section 907.2.11.2.

907.2.11.2 System response. The activation of two or more smoke detectors, a single smoke detector equipped with an alarm verification feature, the *automatic sprinkler system* or other *approved* fire detection device shall automatically do all of the following:

1. Cause illumination of the *means of egress* with light of not less than 1 footcandle (11 lux) at the walking surface level.
2. Stop any conflicting or confusing sounds and visual distractions.
3. Activate an *approved* directional *exit* marking that will become apparent in an emergency.
4. Activate a prerecorded message, audible throughout the special amusement building, instructing patrons to proceed to the nearest exit. Alarm signals used in conjunction with the prerecorded message shall produce a sound that is distinctive from other sounds used during normal operation.

907.2.11.3 Emergency voice/alarm communication system. An emergency voice/alarm communication system, which is allowed to serve as a public address system, shall be installed in accordance with Section 907.5.2.2 and be audible throughout the entire special amusement building.

INTERNATIONAL CODE COUNCIL®
Copyright © 2019 ICC & NYSDOS. ALL RIGHTS RESERVED. Accessed by Lauren Gualdino (lgualdino@briarcliffmanor.org), (-) Order Number #100880972 on May 08, 2020 07:05 AM (PDT) pursuant to License Agreement with ICC & NYSDOS. No further reproduction, no

100880972

907.2.12 High-rise buildings. High-rise buildings shall be provided with an automatic smoke detection system in accordance with Section 907.2.12.1, a fire department communication system in accordance with Section 907.2.12.2 and an emergency voice/alarm communication system in accordance with Section 907.5.2.2.

Exceptions:

1. Airport traffic control towers in accordance with Section 907.2.21 of this code and Section 412 of the *Building Code of New York State*.
2. Open parking garages in accordance with Section 406.5 of the *Building Code of New York State*.
3. Buildings with an occupancy in Group A-5 in accordance with Section 303.1 of the *Building Code of New York State*.
4. Low-hazard special occupancies in accordance with Section 503.1.1 of the *Building Code of New York State*.
5. Buildings with an occupancy in Group H-1, H-2 or H-3 in accordance with Section 415 of the *Building Code of New York State*.
6. In Group I-1 and I-2 occupancies, the alarm shall sound at a constantly attended location and occupant notification shall be broadcast by the emergency voice/alarm communication system.

907.2.12.1 Automatic smoke detection. Automatic smoke detection in high-rise buildings shall be in accordance with Sections 907.2.12.1.1 and 907.2.12.1.2.

907.2.12.1.1 Area smoke detection. Area smoke detectors shall be provided in accordance with this section. Smoke detectors shall be connected to an automatic fire alarm system. The activation of any detector required by this section shall activate the emergency voice/alarm communication system in accordance with Section 907.5.2.2. In addition to smoke detectors required by Sections 907.2.1 through 907.2.9, smoke detectors shall be located as follows:

1. In each mechanical equipment, electrical, transformer, telephone equipment or similar room that is not provided with sprinkler protection.
2. In each elevator machine room, machinery space, control room and control space and in elevator lobbies.

907.2.12.1.2 Duct smoke detection. Duct smoke detectors complying with Section 907.3.1 shall be located as follows:

1. In the main return air and exhaust air plenum of each air-conditioning system having a capacity greater than 2,000 cubic feet per minute (cfm) (0.94 m^3/s). Such detectors shall be located in a serviceable area downstream of the last duct inlet.
2. At each connection to a vertical duct or riser serving two or more stories from a return air duct or plenum of an air-conditioning system. In Group R-1 and R-2 occupancies, a smoke detector is allowed to be used in each return air riser carrying not more than 5,000 cfm (2.4 m^3/s) and serving not more than 10 air-inlet openings.

907.2.12.2 Fire department communication system. Where a wired communication system is *approved* in lieu of an emergency responder radio coverage system in accordance with Section 510, the wired fire department communication system shall be designed and installed in accordance with NFPA 72 and shall operate between a *fire command center* complying with Section 508, elevators, elevator lobbies, emergency and standby power rooms, fire pump rooms, areas of refuge and inside *interior exit stairways*. The fire department communication device shall be provided at each floor level within the *interior exit stairway*.

907.2.12.3 Multiple-channel voice evacuation. In buildings with an occupied floor more than 120 feet (36 576 mm) above the lowest level of fire department vehicle access, voice evacuation systems for high-rise buildings shall be multiple-channel systems.

907.2.13 Atriums connecting more than two stories. A fire alarm system shall be installed in occupancies with an atrium that connects more than two stories, with smoke detection in locations required by a rational analysis in Section 909.4 and in accordance with the system operation requirements in Section 909.17. The system shall be activated in accordance with Section 907.5. Such occupancies in Group A, E or M shall be provided with an emergency voice/alarm communication system complying with the requirements of Section 907.5.2.2.

907.2.14 High-piled combustible storage areas. An automatic smoke detection system shall be installed throughout *high-piled combustible storage* areas where required by Section 3206.5.

907.2.15 Aerosol storage uses. Aerosol product rooms and general-purpose warehouses containing aerosol products shall be provided with an *approved* manual fire alarm system where required by this code.

907.2.16 Lumber, wood structural panel and veneer mills. Lumber, wood structural panel and veneer mills shall be provided with a manual fire alarm system.

907.2.17 Underground buildings with smoke control systems. Where a smoke control system is installed in an underground building in accordance with the *Building Code of New York State*, automatic smoke detectors shall be provided in accordance with Section 907.2.17.1.

907.2.17.1 Smoke detectors. Not fewer than one smoke detector *listed* for the intended purpose shall be installed in all of the following areas:

1. Mechanical equipment, electrical, transformer, telephone equipment, elevator machine or similar rooms.

INTERNATIONAL CODE COUNCIL®
Copyright © 2019 ICC & NYSDOS. ALL RIGHTS RESERVED. Accessed by Lauren Gualdino (lgualdino@briarcliffmanor.org), (-) Order Number #100880972 on May 08, 2020 07:05 AM (PDT) pursuant to License Agreement with ICC & NYSDOS. No further reproduction, no

100880972

2. Elevator lobbies.
3. The main return and exhaust air plenum of each air-conditioning system serving more than one story and located in a serviceable area downstream of the last duct inlet.
4. Each connection to a vertical duct or riser serving two or more floors from return air ducts or plenums of heating, ventilating and air-conditioning systems, except that in Group R occupancies, a *listed* smoke detector is allowed to be used in each return air riser carrying not more than 5,000 cfm (2.4 m^3/s) and serving not more than 10 air inlet openings.

907.2.17.2 Alarm required. Activation of the smoke control system shall activate an audible alarm at a constantly attended location.

907.2.18 Deep underground buildings. Where the lowest level of a structure is more than 60 feet (18 288 mm) below the finished floor of the lowest *level of exit discharge*, the structure shall be equipped throughout with a manual *fire alarm system*, including an emergency voice/alarm communication system installed in accordance with Section 907.5.2.2.

907.2.19 Covered and open mall buildings. Where the total floor area exceeds 50,000 square feet (4645 m^2) within either a covered mall building or within the perimeter line of an open mall building, an emergency voice/alarm communication system shall be provided. *Access* to emergency voice/alarm communication systems serving a mall, required or otherwise, shall be provided for the fire department. The system shall be provided in accordance with Section 907.5.2.2.

907.2.20 Residential aircraft hangars. Not fewer than one single-station smoke alarm shall be installed within a residential aircraft hangar as defined in Chapter 2 of the *Building Code of New York State* and shall be interconnected into the residential smoke alarm or other sounding device to provide an alarm that will be audible in all sleeping areas of the *dwelling*.

907.2.21 Airport traffic control towers. An automatic smoke detection system that activates the occupant notification system in accordance with Section 907.5 shall be provided in airport control towers in accordance with Sections 907.2.21.1 and 907.2.21.2.

Exception: Audible appliances shall not be installed within the control tower cab.

907.2.21.1 Airport traffic control towers with multiple exits and automatic sprinklers. Airport traffic control towers with multiple *exits* and equipped throughout with an *automatic sprinkler system* in accordance with Section 903.3.1.1 shall be provided with smoke detectors in all of the following locations:

1. Airport traffic control cab.
2. Electrical and mechanical equipment rooms.
3. Airport terminal radar and electronics rooms.
4. Outside each opening into *interior exit stairways*.
5. Along the single *means of egress* permitted from observation levels.
6. Outside each opening into the single *means of egress* permitted from observation levels.

907.2.21.2 Other airport traffic control towers. Airport traffic control towers with a single *exit* or where sprinklers are not installed throughout shall be provided with smoke detectors in all of the following locations:

1. Airport traffic control cab.
2. Electrical and mechanical equipment rooms.
3. Airport terminal radar and electronics rooms.
4. Office spaces incidental to the tower operation.
5. Lounges for employees, including sanitary facilities.
6. *Means of egress*.
7. Utility shafts where *access* to smoke detectors can be provided.

[NY] 907.2.22 Battery rooms. An automatic smoke detection system shall be installed in areas containing *energy storage systems* as required in Section 1206.

[NY] 907.2.23 Capacitor energy storage systems. An *automatic smoke detection system* shall be installed in areas containing *capacitor energy storage systems* as required by Section 1206.

907.3 Fire safety functions. Automatic fire detectors utilized for the purpose of performing fire safety functions shall be connected to the building's fire alarm control unit where a fire alarm system is required by Section 907.2. Detectors shall, upon actuation, perform the intended function and activate the alarm notification appliances or activate a visible and audible supervisory signal at a constantly attended location. In buildings not equipped with a fire alarm system, the automatic fire detector shall be powered by normal electrical service and, upon actuation, perform the intended function. The detectors shall be located in accordance with NFPA 72.

907.3.1 Duct smoke detectors. Smoke detectors installed in ducts shall be *listed* for the air velocity, temperature and humidity present in the duct. Duct smoke detectors shall be connected to the building's fire alarm control unit where a fire alarm system is required by Section 907.2. Activation of a duct smoke detector shall initiate a visible and audible supervisory signal at a *constantly attended location* and shall perform the intended fire safety function in accordance with this code and the *Mechanical Code of New York State*. In facilities that are required to be monitored by a supervising station, duct smoke detectors shall report only as a supervisory signal and not as a fire alarm. They shall not be used as a substitute for required open area detection.

Exceptions:

1. The supervisory signal at a constantly attended location is not required where duct smoke detectors activate the building's alarm notification appliances.
2. In occupancies not required to be equipped with a fire alarm system, actuation of a smoke detector

INTERNATIONAL CODE COUNCIL®
Copyright © 2019 ICC & NYSDOS. ALL RIGHTS RESERVED. Accessed by Lauren Gualdino (lgualdino@briarcliffmanor.org), (-) Order Number #100880972 on May 08, 2020 07:05 AM (PDT) pursuant to License Agreement with ICC & NYSDOS. No further reproduction, no

100880972

shall activate a visible and an audible signal in an *approved* location. Smoke detector trouble conditions shall activate a visible or audible signal in an *approved* location and shall be identified as air duct detector trouble.

907.3.2 Special locking systems. Where special locking systems are installed on means of egress doors in accordance with Section 1010.1.9.7 or 1010.1.9.8, an automatic detection system shall be installed as required by that section.

907.3.3 Elevator emergency operation. Automatic fire detectors installed for elevator emergency operation shall be installed in accordance with the provisions of ASME A17.1/CSA B44 and NFPA 72.

907.3.4 Wiring. The wiring to the auxiliary devices and equipment used to accomplish the fire safety functions shall be monitored for integrity in accordance with NFPA 72.

907.4 Initiating devices. Where manual or automatic alarm initiation is required as part of a fire alarm system, the initiating devices shall be installed in accordance with Sections 907.4.1 through 907.4.3.1.

907.4.1 Protection of fire alarm control unit. In areas that are not continuously occupied, a single smoke detector shall be provided at the location of each fire alarm control unit, notification appliance circuit power extenders and supervising station transmitting equipment.

Exception: Where ambient conditions prohibit installation of smoke detector, a *heat detector* shall be permitted.

907.4.2 Manual fire alarm boxes. Where a manual fire alarm system is required by another section of this code, it shall be activated by fire alarm boxes installed in accordance with Sections 907.4.2.1 through 907.4.2.6.

907.4.2.1 Location. Manual fire alarm boxes shall be located not more than 5 feet (1524 mm) from the entrance to each *exit*. In buildings not protected by an *automatic sprinkler system* in accordance with Section 903.3.1.1 or 903.3.1.2, additional manual fire alarm boxes shall be located so that the distance of travel to the nearest box does not exceed 200 feet (60 960 mm).

907.4.2.2 Height. The height of the manual fire alarm boxes shall be not less than 42 inches (1067 mm) and not more than 48 inches (1372 mm) measured vertically, from the floor level to the activating handle or lever of the box.

907.4.2.3 Color. Manual fire alarm boxes shall be red in color.

[NY] 907.4.2.4 Signs. Where fire alarm systems are not monitored by an approved supervising station in accordance with Section 907.6.6, an *approved* permanent sign shall be installed adjacent to each manual fire alarm box that reads: WHEN ALARM SOUNDS—CALL FIRE DEPARTMENT.

Exception: Where the manufacturer has permanently provided this information on the manual fire alarm box.

907.4.2.5 Protective covers. The *fire code official* is authorized to require the installation of *listed* manual fire alarm box protective covers to prevent malicious false alarms or to provide the manual fire alarm box with protection from physical damage. The protective cover shall be transparent or red in color with a transparent face to permit visibility of the manual fire alarm box. Each cover shall include proper operating instructions. A protective cover that emits a local alarm signal shall not be installed unless *approved*. Protective covers shall not project more than that permitted by Section 1003.3.3.

907.4.2.6 Unobstructed and unobscured. Manual fire alarm boxes shall be provided with *ready access*, unobstructed, unobscured and visible at all times.

907.4.3 Automatic smoke detection. Where an automatic smoke detection system is required it shall utilize smoke detectors unless ambient conditions prohibit such an installation. In spaces where smoke detectors cannot be utilized due to ambient conditions, *approved* automatic *heat detectors* shall be permitted.

907.4.3.1 Automatic sprinkler system. For conditions other than specific fire safety functions noted in Section 907.3, in areas where ambient conditions prohibit the installation of smoke detectors, an *automatic sprinkler system* installed in such areas in accordance with Section 903.3.1.1 or 903.3.1.2 and that is connected to the fire alarm system shall be *approved* as automatic heat detection.

907.5 Occupant notification systems. A fire alarm system shall annunciate at the fire alarm control unit and shall initiate occupant notification upon activation, in accordance with Sections 907.5.1 through 907.5.2.3.3. Where a fire alarm system is required by another section of this code, it shall be activated by:

1. Automatic fire detectors.
2. Automatic sprinkler system waterflow devices.
3. Manual fire alarm boxes.
4. Automatic fire-extinguishing systems.

Exception: Where notification systems are allowed elsewhere in Section 907 to annunciate at a constantly attended location.

907.5.1 Presignal feature. A presignal feature shall not be installed unless *approved* by the *fire code official*. Where a presignal feature is provided, a signal shall be annunciated at a constantly attended location *approved* by the *fire code official*, so that occupant notification can be activated in the event of fire or other emergency.

907.5.2 Alarm notification appliances. Alarm notification appliances shall be provided and shall be *listed* for their purpose.

INTERNATIONAL CODE COUNCIL®
Copyright © 2019 ICC & NYSDOS. ALL RIGHTS RESERVED. Accessed by Lauren Gualdino (lgualdino@briarcliffmanor.org), (-) Order Number #100880972 on May 08, 2020 07:05 AM (PDT) pursuant to License Agreement with ICC & NYSDOS. No further reproduction, no

100880972

907.5.2.1 Audible alarms. Audible alarm notification appliances shall be provided and emit a distinctive sound that is not to be used for any purpose other than that of a fire alarm.

Exceptions:

1. Audible alarm notification appliances are not required in critical care areas of Group I-2, Condition 2 occupancies that are in compliance with Section 907.2.6, Exception 2.
2. A visible alarm notification appliance installed in a nurses' control station or other continuously attended staff location in a Group I-2, Condition 2 suite shall be an acceptable alternative to the installation of audible alarm notification appliances throughout the suite in Group I-2, Condition 2 occupancies that are in compliance with Section 907.2.6, Exception 2.
3. Where provided, audible notification appliances located in each enclosed occupant evacuation elevator lobby in accordance with Section 3008.9.1 of the *Building Code of New York State* shall be connected to a separate notification zone for manual paging only.

907.5.2.1.1 Average sound pressure. The audible alarm notification appliances shall provide a sound pressure level of 15 decibels (dBA) above the average ambient sound level or 5 dBA above the maximum sound level having a duration of not less than 60 seconds, whichever is greater, in every occupiable space within the building.

907.5.2.1.2 Maximum sound pressure. The maximum sound pressure level for audible alarm notification appliances shall be 110 dBA at the minimum hearing distance from the audible appliance. Where the average ambient noise is greater than 95 dBA, visible alarm notification appliances shall be provided in accordance with NFPA 72 and audible alarm notification appliances shall not be required.

907.5.2.2 Emergency voice/alarm communication systems. Emergency voice/alarm communication systems required by this code shall be designed and installed in accordance with NFPA 72. The operation of any automatic fire detector, sprinkler waterflow device or manual fire alarm box shall automatically sound an alert tone followed by voice instructions giving *approved* information and directions for a general or staged evacuation in accordance with the building's fire safety and evacuation plans required by Section 404. In high-rise buildings, the system shall operate on at least the alarming floor, the floor above and the floor below. Speakers shall be provided throughout the building by paging zones. At a minimum, paging zones shall be provided as follows:

1. Elevator groups.
2. *Interior exit stairways*.
3. Each floor.
4. *Areas of refuge* as defined in Chapter 2.

Exception: In Group I-1 and I-2 occupancies, the alarm shall sound in a constantly attended area and a general occupant notification shall be broadcast over the overhead page.

907.5.2.2.1 Manual override. A manual override for emergency voice communication shall be provided on a selective and all-call basis for all paging zones.

907.5.2.2.2 Live voice messages. The emergency voice/alarm communication system shall have the capability to broadcast live voice messages by paging zones on a selective and all-call basis.

907.5.2.2.3 Alternative uses. The emergency voice/alarm communication system shall be allowed to be used for other announcements, provided that the manual fire alarm use takes precedence over any other use.

907.5.2.2.4 Emergency voice/alarm communication captions. Where stadiums, arenas and grandstands have 15,000 fixed seats or more and provide audible public announcements, the emergency voice/alarm communication system shall provide prerecorded or real-time captions. Prerecorded or live emergency captions shall be from an *approved* location constantly attended by personnel trained to respond to an emergency.

907.5.2.2.5 Emergency power. Emergency voice/alarm communications systems shall be provided with emergency power in accordance with Section 1203. The system shall be capable of powering the required load for a duration of not less than 24 hours, as required in NFPA 72.

907.5.2.3 Visible alarms. Visible alarm notification appliances shall be provided in accordance with Sections 907.5.2.3.1 through 907.5.2.3.3.

Exceptions:

1. Visible alarm notification appliances are not required in *alterations*, except where an existing fire alarm system is upgraded or replaced, or a new fire alarm system is installed.
2. Visible alarm notification appliances shall not be required in *exits* as defined in Chapter 2.
3. Visible alarm notification appliances shall not be required in elevator cars.
4. Visual alarm notification appliances are not required in critical care areas of Group I-2, Condition 2 occupancies that are in compliance with Section 907.2.6, Exception 2.

907.5.2.3.1 Public use areas and common use areas. Visible alarm notification appliances shall be provided in *public use areas* and *common use areas*.

Exception: Where employee work areas have audible alarm coverage, the notification appliance circuits serving the employee work areas shall be initially designed with not less than 20-

INTERNATIONAL CODE COUNCIL®
Copyright © 2019 ICC & NYSDOS. ALL RIGHTS RESERVED. Accessed by Lauren Gualdino (lgualdino@briarcliffmanor.org), (-) Order Number #100880972 on May 08, 2020 07:05 AM (PDT) pursuant to License Agreement with ICC & NYSDOS. No further reproduction, no

100880972

percent spare capacity to account for the potential of adding visible notification appliances in the future to accommodate hearing-impaired employee(s).

907.5.2.3.2 Groups I-1 and R-1. Habitable spaces in dwelling units and sleeping units in Group I-1 and R-1 occupancies in accordance with Table 907.5.2.3.2 shall be provided with visible alarm notification. Visible alarms shall be activated by the in-room smoke alarm and the building fire alarm system.

TABLE 907.5.2.3.2
VISIBLE ALARMS

NUMBER OF SLEEPING UNITS	SLEEPING ACCOMMODATIONS WITH VISIBLE ALARMS
6 to 25	2
26 to 50	4
51 to 75	7
76 to 100	9
101 to 150	12
151 to 200	14
201 to 300	17
301 to 400	20
401 to 500	22
501 to 1,000	5% of total
1,001 and over	50 plus 3 for each 100 over 1,000

907.5.2.3.3 Group R-2. In Group R-2 occupancies required by Section 907 to have a fire alarm system, each *story* that contains *dwelling units* and *sleeping units* shall be provided with the future capability to support visible alarm notification appliances in accordance with Chapter 10 of ICC A117.1. Such capability shall accommodate wired or wireless equipment. The future capability shall include one of the following:

1. The interconnection of the building fire alarm system with the unit smoke alarms.
2. The replacement of audible appliances with combination audible/visible appliances.
3. The future extension of the existing wiring from the unit smoke alarm locations to required locations for visible appliances.

907.6 Installation and monitoring. A fire alarm system shall be installed and monitored in accordance with Sections 907.6.1 through 907.6.6.2 and NFPA 72.

907.6.1 Wiring. Wiring shall comply with the requirements of NFPA 70 and NFPA 72. Wireless protection systems utilizing radio-frequency transmitting devices shall comply with the special requirements for supervision of low-power wireless systems in NFPA 72.

907.6.2 Power supply. The primary and secondary power supply for the fire alarm system shall be provided in accordance with NFPA 72.

Exception: Backup power for single-station and multiple-station smoke alarms as required in Section 907.2.10.6.

907.6.3 Initiating device identification. The fire alarm system shall identify the specific initiating device address, location, device type, floor level where applicable and status including indication of normal, alarm, trouble and supervisory status, as appropriate.

Exceptions:

1. Fire alarm systems in single-story buildings less than 22,500 square feet (2090 m^2) in area.
2. Fire alarm systems that only include manual fire alarm boxes, waterflow initiating devices and not more than 10 additional alarm-initiating devices.
3. Special initiating devices that do not support individual device identification.
4. Fire alarm systems or devices that are replacing existing equipment.

907.6.3.1 Annunciation. The initiating device status shall be annunciated at an *approved* on-site location.

907.6.4 Zones. Each floor shall be zoned separately and a zone shall not exceed 22,500 square feet (2090 m^2). The length of any zone shall not exceed 300 feet (91 440 mm) in any direction.

Exception: *Automatic sprinkler system* zones shall not exceed the area permitted by NFPA 13.

907.6.4.1 Zoning indicator panel. A zoning indicator panel and the associated controls shall be provided in an *approved* location. The visual zone indication shall lock in until the system is reset and shall not be canceled by the operation of an audible alarm-silencing switch.

907.6.4.2 High-rise buildings. In high-rise buildings, a separate zone by floor shall be provided for each of the following types of alarm-initiating devices where provided:

1. Smoke detectors.
2. Sprinkler waterflow devices.
3. Manual fire alarm boxes.
4. Other *approved* types of automatic fire detection devices or suppression systems.

907.6.5 Access. Access shall be provided to each fire alarm device and notification appliance for periodic inspection, maintenance and testing.

907.6.6 Monitoring. Fire alarm systems required by this chapter or by the *Building Code of New York State* shall be monitored by an *approved* supervising station in accordance with NFPA 72.

INTERNATIONAL CODE COUNCIL®
Copyright © 2019 ICC & NYSDOS. ALL RIGHTS RESERVED. Accessed by Lauren Gualdino (lgualdino@briarcliffmanor.org), (-) Order Number #100880972 on May 08, 2020 07:05 AM (PDT) pursuant to License Agreement with ICC & NYSDOS. No further reproduction, no

100880972

Exception: Monitoring by a supervising station is not required for:

1. Single- and multiple-station smoke alarms required by Section 907.2.10.
2. Smoke detectors in Group I-3 occupancies.
3. *Automatic sprinkler systems* in one- and two-family dwellings.

907.6.6.1 Automatic telephone-dialing devices. Automatic telephone-dialing devices used to transmit an emergency alarm shall not be connected to any fire department telephone number unless *approved* by the fire chief.

907.6.6.2 Termination of monitoring service. Termination of fire alarm monitoring services shall be in accordance with Section 901.9.

907.7 Acceptance tests and completion. Upon completion of the installation, the fire alarm system and all fire alarm components shall be tested in accordance with NFPA 72.

907.7.1 Single- and multiple-station alarm devices. When the installation of the alarm devices is complete, each device and interconnecting wiring for multiple-station alarm devices shall be tested in accordance with the smoke alarm provisions of NFPA 72.

907.7.2 Record of completion. A record of completion in accordance with NFPA 72 verifying that the system has been installed and tested in accordance with the *approved* plans and specifications shall be provided.

907.7.3 Instructions. Operating, testing and maintenance instructions and record drawings ("as builts") and equipment specifications shall be provided at an *approved* location.

907.8 Inspection, testing and maintenance. The maintenance and testing schedules and procedures for fire alarm and fire detection systems shall be in accordance with Sections 907.8.1 through 907.8.5 and NFPA 72. Records of inspection, testing and maintenance shall be maintained.

907.8.1 Maintenance required. Where required for compliance with the provisions of this code, devices, equipment, systems, conditions, arrangements, levels of protection or other features shall thereafter be continuously maintained in accordance with applicable NFPA requirements or as directed by the *fire code official*.

907.8.2 Testing. Testing shall be performed in accordance with the schedules in NFPA 72 or more frequently where required by the *fire code official*. Records of testing shall be maintained.

Exception: Devices or equipment that are inaccessible because of safety considerations shall be tested during scheduled shutdowns where *approved* by the *fire code official*, but not less than every 18 months.

907.8.3 Smoke detector sensitivity. Smoke detector sensitivity shall be checked within one year after installation and every alternate year thereafter. After the second calibration test, where sensitivity tests indicate that the detector has remained within its *listed* and marked sensitivity range (or 4-percent obscuration light gray smoke, if not marked), the length of time between calibration tests shall be permitted to be extended to not more than 5 years. Where the frequency is extended, records of detector-caused nuisance alarms and subsequent trends of these alarms shall be maintained. In zones or areas where nuisance alarms show any increase over the previous year, calibration tests shall be performed.

907.8.4 Sensitivity test method. To verify that each smoke detector is within its *listed* and marked sensitivity range, it shall be tested using one of the following methods:

1. A calibrated test method.
2. The manufacturer's calibrated sensitivity test instrument.
3. *Listed* control equipment arranged for the purpose.
4. A smoke detector/control unit arrangement whereby the detector causes a signal at the control unit where the detector's sensitivity is outside its acceptable sensitivity range.
5. Another calibrated sensitivity test method acceptable to the *fire code official*.

Detectors found to have a sensitivity outside the *listed* and marked sensitivity range shall be cleaned and recalibrated or replaced.

Exceptions:

1. Detectors *listed* as field adjustable shall be permitted to be either adjusted within the *listed* and marked sensitivity range and cleaned and recalibrated or they shall be replaced.
2. This requirement shall not apply to single-station smoke alarms.

907.8.4.1 Sensitivity testing device. Smoke detector sensitivity shall not be tested or measured using a device that administers an unmeasured concentration of smoke or other aerosol into the detector.

907.8.5 Inspection, testing and maintenance. The building *owner* shall be responsible to maintain the fire and life safety systems in an operable condition at all times. Service personnel shall meet the qualification requirements of NFPA 72 for inspection, testing and maintenance of such systems. Records of inspection, testing and maintenance shall be maintained.

907.9 Where required in existing buildings and structures. An *approved* fire alarm system shall be provided in existing buildings and structures where required in Chapter 11.

[NY] 907.9.1 Portable smoke alarms in Group R-1 occupancies and Group R-3 lodging houses. In addition to, but not in limitation of, any other requirement of this code, portable smoke alarms of both audible and visual design shall be provided in all buildings of Group R-1 occupancies and Group R-3 lodging houses. The number of smoke alarms available shall be 3 percent of the number of sleeping units with a minimum of one operational smoke alarm per building. Proprietors shall post conspicuously a sign, with letters at least 3 inches (76 mm) in

INTERNATIONAL CODE COUNCIL®
Copyright © 2019 ICC & NYSDOS. ALL RIGHTS RESERVED. Accessed by Lauren Gualdino (lgualdino@briarcliffmanor.org), (-) Order Number #100880972 on May 08, 2020 07:05 AM (PDT) pursuant to License Agreement with ICC & NYSDOS. No further reproduction, no

100880972

height, at the main desk or other similar station advising of the availability of such smoke alarms. Such smoke alarms shall be in conformity with NFPA 72.

Exception: Portable smoke alarms shall not be required where any of the following applies:

1. Where audible/visual smoke alarms are hard wired.
2. Where audible/visual smoke alarms are incorporated into a fire alarm system such that visual notification is activated by the system.

907.10 Smoke alarm maintenance. Smoke alarms shall be tested and maintained in accordance with the manufacturer's instructions. Smoke alarms shall be replaced when they fail to respond to operability tests, or when they exceed 10 years from the date of manufacture, unless an earlier replacement is specified in the manufacturer's published instructions.

SECTION 908
EMERGENCY ALARM SYSTEMS

908.1 Group H occupancies. Emergency alarms for the detection and notification of an emergency condition in Group H occupancies shall be provided as required in Chapter 50.

908.2 Group H-5 occupancy. Emergency alarms for notification of an emergency condition in an HPM facility shall be provided as required in Section 2703.12.

*

SECTION 909
SMOKE CONTROL SYSTEMS

909.1 Scope and purpose. This section applies to mechanical or passive smoke control systems where they are required for new buildings or portions thereof by provisions of the *Building Code of New York State* or this code. The purpose of this section is to establish minimum requirements for the design, installation and acceptance testing of smoke control systems that are intended to provide a tenable environment for the evacuation or relocation of occupants. These provisions are not intended for the preservation of contents, the timely restoration of operations or for assistance in fire suppression or overhaul activities. Smoke control systems regulated by this section serve a different purpose than the smoke- and heat-removal provisions found in Section 910. Mechanical smoke control systems shall not be considered exhaust systems under Chapter 5 of the *Mechanical Code of New York State*.

909.2 General design requirements. Buildings, structures, or parts thereof required by the *Building Code of New York State* or this code to have a smoke control system or systems shall have such systems designed in accordance with the applicable requirements of Section 909 and the generally accepted and well-established principles of engineering relevant to the design. The *construction documents* shall include sufficient information and detail to describe adequately the elements of the design necessary for the proper implementation of the smoke control systems. These documents shall be accompanied with sufficient information and analysis to demonstrate compliance with these provisions.

909.3 Special inspection and test requirements. In addition to the ordinary inspection and test requirements that buildings, structures and parts thereof are required to undergo, smoke control systems subject to the provisions of Section 909 shall undergo special inspections and tests sufficient to verify the proper commissioning of the smoke control design in its final installed condition. The design submission accompanying the *construction documents* shall clearly detail procedures and methods to be used and the items subject to such inspections and tests. Such commissioning shall be in accordance with generally accepted engineering practice and, where possible, based on published standards for the particular testing involved. The special inspections and tests required by this section shall be conducted under the same terms as in Section 1704 of the *Building Code of New York State.*

909.4 Analysis. A rational analysis supporting the types of smoke control systems to be employed, the methods of their operations, the systems supporting them and the methods of construction to be utilized shall accompany the *construction documents* submission and include, but not be limited to, the items indicated in Sections 909.4.1 through 909.4.7.

909.4.1 Stack effect. The system shall be designed such that the maximum probable normal or reverse stack effect will not adversely interfere with the system's capabilities. In determining the maximum probable stack effect, altitude, elevation, weather history and interior temperatures shall be used.

909.4.2 Temperature effect of fire. Buoyancy and expansion caused by the design fire in accordance with Section 909.9 shall be analyzed. The system shall be designed such that these effects do not adversely interfere with the system's capabilities.

909.4.3 Wind effect. The design shall consider the adverse effects of wind. Such consideration shall be consistent with the wind-loading provisions of the *Building Code of New York State.*

[NY] 909.4.4 HVAC Systems. The design shall consider the effects of the heating, ventilating and air-conditioning (HVAC) systems on both smoke and fire transport. The analysis shall include all permutations of systems status. The design shall consider the effects of the fire on the heating, ventilating and air-conditioning systems.

909.4.5 Climate. The design shall consider the effects of low temperatures on systems, property and occupants. Air inlets and exhausts shall be located so as to prevent snow or ice blockage.

909.4.6 Duration of operation. All portions of active or engineered smoke control systems shall be capable of continued operation after detection of the fire event for a period of not less than either 20 minutes or 1.5 times the calculated egress time, whichever is greater.

909.4.7 Smoke control system interaction. The design shall consider the interaction effects of the operation of multiple smoke control systems for all design scenarios.

INTERNATIONAL CODE COUNCIL®
Copyright © 2019 ICC & NYSDOS. ALL RIGHTS RESERVED. Accessed by Lauren Gualdino (lgualdino@briarcliffmanor.org), (-) Order Number #100880972 on May 08, 2020 07:05 AM (PDT) pursuant to License Agreement with ICC & NYSDOS. No further reproduction, no

100880972

909.5 Smoke barrier construction. *Smoke barriers* required for passive smoke control and a smoke control system using the pressurization method shall comply with Section 709 of the *Building Code of New York State*. The maximum allowable leakage area shall be the aggregate area calculated using the following leakage area ratios:

1. Walls: $A/A_w = 0.00100$
2. Interior *exit stairways* and *ramps* and *exit passageways*: $A/A_w = 0.00035$
3. Enclosed *exit access stairways* and *ramps* and all other shafts: $A/A_w = 0.00150$
4. Floors and roofs: $A/A_F = 0.00050$

where:

A = Total leakage area, square feet (m^2).

A_F = Unit floor or roof area of barrier, square feet (m^2).

A_w = Unit wall area of barrier, square feet (m^2).

The leakage area ratios shown do not include openings due to gaps around doors and operable windows. The total leakage area of the *smoke barrier* shall be determined in accordance with Section 909.5.1 and tested in accordance with Section 909.5.2.

909.5.1 Total leakage area. Total leakage area of the barrier is the product of the *smoke barrier* gross area multiplied by the allowable leakage area ratio, plus the area of other openings such as gaps around doors and operable windows.

909.5.2 Testing of leakage area. Compliance with the maximum total leakage area shall be determined by achieving the minimum air pressure difference across the barrier with the system in the smoke control mode for mechanical smoke control systems utilizing the pressurization method. Compliance with the maximum total leakage area of passive smoke control systems shall be verified through methods such as door fan testing or other methods, as *approved* by the *fire code official*.

909.5.3 Opening protection. Openings in *smoke barriers* shall be protected by automatic-closing devices actuated by the required controls for the mechanical smoke control system. Door openings shall be protected by fire door assemblies complying with Section 716 of the *Building Code of New York State*.

Exceptions:

1. Passive smoke control systems with automatic-closing devices actuated by spot-type smoke detectors *listed* for releasing service installed in accordance with Section 907.3.
2. Fixed openings between smoke zones that are protected utilizing the airflow method.
3. In Group I-1, Condition 2; Group I-2; and ambulatory care facilities, where a pair of opposite-swinging doors are installed across a corridor in accordance with Section 909.5.3.1, the doors shall not be required to be protected in accordance with Section 716 of the *Building Code of New York State*. The doors shall be close-fitting within operational tolerances and shall not have a center mullion or undercuts in excess of $^3/_4$-inch (19.1 mm) louvers or grilles. The doors shall have head and jamb stops and astragals or rabbets at meeting edges and, where permitted by the door manufacturer's listing, positive-latching devices are not required.
4. In Group I-2 and ambulatory care facilities, where such doors are special-purpose horizontal sliding, accordion or folding door assemblies installed in accordance with Section 1010.1.4.3 and are automatic closing by smoke detection in accordance with Section 716.2.6.6 of the *Building Code of New York State*.
5. Group I-3.
6. Openings between smoke zones with clear ceiling heights of 14 feet (4267 mm) or greater and bank-down capacity of greater than 20 minutes as determined by the design fire size.

909.5.3.1 Group I-1, Condition 2; Group I-2; and ambulatory care facilities. In Group I-1, Condition 2; Group I-2; and *ambulatory care facilities*, where doors are installed across a *corridor*, the doors shall be automatic closing by smoke detection in accordance with Section 716.2.6.6 of the *Building Code of New York State* and shall have a vision panel with fire-protection-rated glazing materials in fire-protection-rated frames, the area of which shall not exceed that tested.

909.5.3.2 Ducts and air transfer openings. Ducts and air transfer openings are required to be protected with a minimum Class II, 250°F (121°C) smoke damper complying with Section 717 of the *Building Code of New York State*.

909.6 Pressurization method. The primary mechanical means of controlling smoke shall be by pressure differences across *smoke barriers*. Maintenance of a tenable environment is not required in the smoke-control zone of fire origin.

909.6.1 Minimum pressure difference. The pressure difference across a *smoke barrier* used to separate smoke zones shall be not less than 0.05-inch water gage (0.0124 kPa) in fully sprinklered buildings.

In buildings permitted to be other than fully sprinklered, the smoke control system shall be designed to achieve pressure differences not less than two times the maximum calculated pressure difference produced by the design fire.

909.6.2 Maximum pressure difference. The maximum air pressure difference across a *smoke barrier* shall be determined by required door-opening or closing forces. The actual force required to open *exit* doors when the system is in the smoke control mode shall be in accordance with Section 1010.1.3. Opening and closing forces for other doors shall be determined by standard engineering methods for the resolution of forces and reactions. The

INTERNATIONAL CODE COUNCIL®
Copyright © 2019 ICC & NYSDOS. ALL RIGHTS RESERVED. Accessed by Lauren Gualdino (lgualdino@briarcliffmanor.org), (-) Order Number #100880972 on May 08, 2020 07:05 AM (PDT) pursuant to License Agreement with ICC & NYSDOS. No further reproduction, no

100880972

calculated force to set a side-hinged, swinging door in motion shall be determined by:

$F = F_{dc} + K(WA\Delta P)/2(W - d)$ **(Equation 9-1)**

where:

A = Door area, square feet (m^2).

d = Distance from door handle to latch edge of door, feet (m).

F = Total door opening force, pounds (N).

F_{dc} = Force required to overcome closing device, pounds (N).

K = Coefficient 5.2 (1.0).

W = Door width, feet (m).

ΔP = Design pressure difference, inches of water (Pa).

909.6.3 Pressurized stairways and elevator hoistways. Where stairways or elevator hoistways are pressurized, such pressurization systems shall comply with Section 909 as smoke control systems, in addition to the requirements of Section 909.21 of this code and Section 909.20 of the *Building Code of New York State*.

909.7 Airflow design method. Where *approved* by the *fire code official*, smoke migration through openings fixed in a permanently open position, which are located between smoke control zones by the use of the airflow method, shall be permitted. The design airflow shall be in accordance with this section. Airflow shall be directed to limit smoke migration from the fire zone. The geometry of openings shall be considered to prevent flow reversal from turbulent effects. Smoke control systems using the airflow method shall be designed in accordance with NFPA 92.

909.7.1 Prohibited conditions. This method shall not be employed where either the quantity of air or the velocity of the airflow will adversely affect other portions of the smoke control system, unduly intensify the fire, disrupt plume dynamics or interfere with exiting. Airflow toward the fire shall not exceed 200 feet per minute (1.02 m/s). Where the calculated airflow exceeds this limit, the airflow method shall not be used.

909.8 Exhaust method. Where *approved* by the *fire code official*, mechanical smoke control for large enclosed volumes, such as in atriums or malls, shall be permitted to utilize the exhaust method. Smoke control systems using the exhaust method shall be designed in accordance with NFPA 92.

909.8.1 Smoke layer. The height of the lowest horizontal surface of the smoke layer interface shall be maintained not less than 6 feet (1829 mm) above a walking surface that forms a portion of a required egress system within the smoke zone.

909.9 Design fire. The design fire shall be based on a rational analysis performed by the registered design professional and *approved* by the *fire code official*. The design fire shall be based on the analysis in accordance with Section 909.4 and this section.

909.9.1 Factors considered. The engineering analysis shall include the characteristics of the fuel, fuel load, effects included by the fire and whether the fire is likely to be steady or unsteady.

909.9.2 Design fire fuel. Determination of the design fire shall include consideration of the type of fuel, fuel spacing and configuration.

909.9.3 Heat-release assumptions. The analysis shall make use of best available data from *approved* sources and shall not be based on excessively stringent limitations of combustible material.

909.9.4 Sprinkler effectiveness assumptions. A documented engineering analysis shall be provided for conditions that assume fire growth is halted at the time of sprinkler activation.

909.10 Equipment. Equipment including, but not limited to, fans, ducts, automatic dampers and balance dampers shall be suitable for their intended use, suitable for the probable exposure temperatures that the rational analysis indicates, and as *approved* by the *fire code official.*

909.10.1 Exhaust fans. Components of exhaust fans shall be rated and certified by the manufacturer for the probable temperature rise to which the components will be exposed. This temperature rise shall be computed by:

$T_s = (Q_c/mc) + (T_a)$ **(Equation 9-2)**

where:

c = Specific heat of smoke at smoke layer temperature, Btu/lb°F · (kJ/kg • K).

m = Exhaust rate, pounds per second (kg/s).

Q_c = Convective heat output of fire, Btu/s (kW).

T_a = Ambient temperature, °F (K).

T_s = Smoke temperature, °F (K).

Exception: Reduced T_s as calculated based on the assurance of adequate dilution air.

909.10.2 Ducts. Duct materials and joints shall be capable of withstanding the probable temperatures and pressures to which they are exposed as determined in accordance with Section 909.10.1. Ducts shall be constructed and supported in accordance with the *Mechanical Code of New York State.* Ducts shall be leak tested to 1.5 times the maximum design pressure in accordance with nationally accepted practices. Measured leakage shall not exceed 5 percent of design flow. Results of such testing shall be a part of the documentation procedure. Ducts shall be supported directly from fire-resistance-rated structural elements of the building by substantial, noncombustible supports.

Exception: Flexible connections, for the purpose of vibration isolation, complying with the *Mechanical Code of New York State* and that are constructed of *approved* fire-resistance-rated materials.

909.10.3 Equipment, inlets and outlets. Equipment shall be located so as to not expose uninvolved portions of the building to an additional fire hazard. Outside air inlets shall be located so as to minimize the potential for introducing smoke or flame into the building. Exhaust outlets shall be so located as to minimize reintroduction of smoke into the building and to limit exposure of the building or adjacent buildings to an additional fire hazard.

909.10.4 Automatic dampers. Automatic dampers, regardless of the purpose for which they are installed within the smoke control system, shall be *listed* and con-

INTERNATIONAL CODE COUNCIL®
Copyright © 2019 ICC & NYSDOS. ALL RIGHTS RESERVED. Accessed by Lauren Gualdino (lgualdino@briarcliffmanor.org), (-) Order Number #100880972 on May 08, 2020 07:05 AM (PDT) pursuant to License Agreement with ICC & NYSDOS. No further reproduction, no

100880972

form to the requirements of *approved* recognized standards.

909.10.5 Fans. In addition to other requirements, belt-driven fans shall have 1.5 times the number of belts required for the design duty with the minimum number of belts being two. Fans shall be selected for stable performance based on normal temperature and, where applicable, elevated temperature. Calculations and manufacturer's fan curves shall be part of the documentation procedures. Fans shall be supported and restrained by noncombustible devices in accordance with the structural design requirements of Chapter 16 of the *Building Code of New York State.*

Motors driving fans shall not be operated beyond their nameplate horsepower (kilowatts) as determined from measurement of actual current draw and shall have a minimum service factor of 1.15.

909.11 Standby power. Smoke control systems shall be provided with standby power in accordance with Section 1203.

909.11.1 Equipment room. The standby power source and its transfer switches shall be in a room separate from the normal power transformers and switch gears and ventilated directly to and from the exterior. The room shall be enclosed with not less than 1-hour fire barriers constructed in accordance with Section 707 of the *Building Code of New York State* or horizontal assemblies constructed in accordance with Section 711 of the *Building Code of New York State*, or both.

909.11.2 Power sources and power surges. Elements of the smoke control system relying on volatile memories or the like shall be supplied with uninterruptable power sources of sufficient duration to span 15-minute primary power interruption. Elements of the smoke control system susceptible to power surges shall be suitably protected by conditioners, suppressors or other *approved* means.

909.12 Detection and control systems. Fire detection systems providing control input or output signals to mechanical smoke control systems or elements thereof shall comply with the requirements of Section 907. Such systems shall be equipped with a control unit complying with UL 864 and *listed* as smoke control equipment.

909.12.1 Verification. Control systems for mechanical smoke control systems shall include provisions for verification. Verification shall include positive confirmation of actuation, testing, manual override and the presence of power downstream of all disconnects. A preprogrammed weekly test sequence shall report abnormal conditions audibly, visually and by printed report. The preprogrammed weekly test shall operate all devices, equipment, and components used for smoke control.

Exception: Where verification of individual components tested through the preprogrammed weekly testing sequence will interfere with, and produce unwanted effects to, normal building operation, such individual components are permitted to be bypassed from the preprogrammed weekly testing, where *approved* by the *fire code official* and in accordance with both of the following:

1. Where the operation of components is bypassed from the preprogrammed weekly test, presence of power downstream of all disconnects shall be verified weekly by a listed control unit.
2. Testing of all components bypassed from the preprogrammed weekly test shall be in accordance with Section 909.20.6.

909.12.2 Wiring. In addition to meeting requirements of NFPA 70, all wiring, regardless of voltage, shall be fully enclosed within continuous raceways.

909.12.3 Activation. Smoke control systems shall be activated in accordance with this section.

909.12.3.1 Pressurization, airflow or exhaust method. Mechanical smoke control systems using the pressurization, airflow or exhaust method shall have completely automatic control.

909.12.3.2 Passive method. Passive smoke control systems actuated by *approved* spot-type detectors *listed* for releasing service shall be permitted.

909.12.4 Automatic control. Where completely automatic control is required or used, the automatic-control sequences shall be initiated from an appropriately zoned *automatic sprinkler system* complying with Section 903.3.1.1, manual controls provided with *ready access* for the fire department and any smoke detectors required by the engineering analysis.

909.13 Control air tubing. Control air tubing shall be of sufficient size to meet the required response times. Tubing shall be flushed clean and dry prior to final connections and shall be adequately supported and protected from damage. Tubing passing through concrete or masonry shall be sleeved and protected from abrasion and electrolytic action.

909.13.1 Materials. Control air tubing shall be hard drawn copper, Type L, ACR in accordance with ASTM B42, ASTM B43, ASTM B68, ASTM B88, ASTM B251 and ASTM B280. Fittings shall be wrought copper or brass, solder type, in accordance with ASME B16.18 or ASME B16.22. Changes in direction shall be made with appropriate tool bends. Brass compression-type fittings shall be used at final connection to devices; other joints shall be brazed using a BCuP5 brazing alloy with solidus above 1,100°F (593°C) and liquidus below 1,500°F (816°C). Brazing flux shall be used on copper-to-brass joints only.

Exception: Nonmetallic tubing used within control panels and at the final connection to devices, provided that all of the following conditions are met:

1. Tubing shall comply with the requirements of Section 602.2.1.3 of the *Mechanical Code of New York State*.
2. Tubing and the connected device shall be completely enclosed within a galvanized or paint-grade steel enclosure having a minimum thickness of 0.0296 inch (0.7534 mm) (No. 22 gage). Entry to the enclosure shall be by copper tubing with a protective grommet of neoprene or Teflon or by suitable brass compression to male-barbed adapter.

INTERNATIONAL CODE COUNCIL®
Copyright © 2019 ICC & NYSDOS. ALL RIGHTS RESERVED. Accessed by Lauren Gualdino (lgualdino@briarcliffmanor.org), (-) Order Number #100880972 on May 08, 2020 07:05 AM (PDT) pursuant to License Agreement with ICC & NYSDOS. No further reproduction, no

100880972

3. Tubing shall be identified by appropriately documented coding.
4. Tubing shall be neatly tied and supported within the enclosure. Tubing bridging cabinets and doors or moveable devices shall be of sufficient length to avoid tension and excessive stress. Tubing shall be protected against abrasion. Tubing connected to devices on doors shall be fastened along hinges.

909.13.2 Isolation from other functions. Control tubing serving other than smoke control functions shall be isolated by automatic isolation valves or shall be an independent system.

909.13.3 Testing. Control air tubing shall be tested at three times the operating pressure for not less than 30 minutes without any noticeable loss in gauge pressure prior to final connection to devices.

909.14 Marking and identification. The detection and control systems shall be clearly marked at all junctions, accesses and terminations.

909.15 Control diagrams. Identical control diagrams showing all devices in the system and identifying their location and function shall be maintained current and kept on file with the *fire code official*, the fire department and in the *fire command center* in a format and manner *approved* by the *fire code official*.

909.16 Fire fighter's smoke control panel. A fire fighter's smoke control panel for fire department emergency response purposes only shall be provided and shall include manual control or override of automatic control for mechanical smoke control systems. The panel shall be located in a *fire command center* complying with Section 508 in high-rise buildings or buildings with smoke-protected assembly seating. In all other buildings, the fire fighter's smoke control panel shall be installed in an *approved* location adjacent to the fire alarm control panel. The fire fighter's smoke control panel shall comply with Sections 909.16.1 through 909.16.3.

909.16.1 Smoke control systems. Fans within the building shall be shown on the fire fighter's control panel. A clear indication of the direction of airflow and the relationship of components shall be displayed. Status indicators shall be provided for all smoke control equipment, annunciated by fan and zone and by pilot-lamp-type indicators as follows:

1. Fans, dampers and other operating equipment in their normal status—WHITE.
2. Fans, dampers and other operating equipment in their off or closed status—RED.
3. Fans, dampers and other operating equipment in their on or open status—GREEN.
4. Fans, dampers and other operating equipment in a fault status—YELLOW/AMBER.

909.16.2 Smoke control panel. The fire fighter's control panel shall provide control capability over the complete smoke control system equipment within the building as follows:

1. ON-AUTO-OFF control over each individual piece of operating smoke control equipment that can be controlled from other sources within the building. This includes *stairway* pressurization fans; smoke exhaust fans; supply, return and exhaust fans; elevator shaft fans; and other operating equipment used or intended for smoke control purposes.
2. OPEN-AUTO-CLOSE control over individual dampers relating to smoke control and that are controlled from other sources within the building.
3. ON-OFF or OPEN-CLOSE control over smoke control and other critical equipment associated with a fire or smoke emergency and that can only be controlled from the fire fighter's control panel.

Exceptions:

1. Complex systems, where *approved*, where the controls and indicators are combined to control and indicate all elements of a single smoke zone as a unit.
2. Complex systems, where *approved*, where the control is accomplished by computer interface using *approved*, plain English commands.

909.16.3 Control action and priorities. The fire fighter's control panel actions shall be as follows:

1. ON-OFF and OPEN-CLOSE control actions shall have the highest priority of any control point within the building. Once issued from the fire fighter's control panel, automatic or manual control from any other control point within the building shall not contradict the control action. Where automatic means are provided to interrupt normal, nonemergency equipment operation or produce a specific result to safeguard the building or equipment including, but not limited to, duct freezestats, duct smoke detectors, high-temperature cutouts, temperature-actuated linkage and similar devices, such means shall be capable of being overridden by the fire fighter's control panel. The last control action as indicated by each fire fighter's control panel switch position shall prevail. Control actions shall not require the smoke control system to assume more than one configuration at any one time.

   Exception: Power disconnects required by NFPA 70.
2. Only the AUTO position of each three-position fire-fighter's control panel switch shall allow automatic or manual control action from other control points within the building. The AUTO position shall be the NORMAL, nonemergency, building control position. Where a fire fighter's control panel is in the AUTO position, the actual status of the device (on, off, open, closed) shall continue to be indicated by the status indicator described in Section 909.16.1. Where directed by an automatic signal to assume an emergency condition, the NORMAL position shall become the emergency condition for that device or group of devices within the zone. Control actions

INTERNATIONAL CODE COUNCIL®
Copyright © 2019 ICC & NYSDOS. ALL RIGHTS RESERVED. Accessed by Lauren Gualdino (lgualdino@briarcliffmanor.org), (-) Order Number #100880972 on May 08, 2020 07:05 AM (PDT) pursuant to License Agreement with ICC & NYSDOS. No further reproduction, no

100880972

shall not require the smoke control system to assume more than one configuration at any one time.

909.17 System response time. Smoke-control system activation shall be initiated immediately after receipt of an appropriate automatic or manual activation command. Smoke control systems shall activate individual components (such as dampers and fans) in the sequence necessary to prevent physical damage to the fans, dampers, ducts and other equipment. For purposes of smoke control, the fire fighter's control panel response time shall be the same for automatic or manual smoke control action initiated from any other building control point. The total response time, including that necessary for detection, shutdown of operating equipment and smoke control system startup, shall allow for full operational mode to be achieved before the conditions in the space exceed the design smoke condition. The system response time for each component and their sequential relationships shall be detailed in the required rational analysis and verification of their installed condition reported in the required final report.

909.18 Acceptance testing. Devices, equipment, components and sequences shall be individually tested. These tests, in addition to those required by other provisions of this code, shall consist of determination of function, sequence and, where applicable, capacity of their installed condition.

909.18.1 Detection devices. Smoke or fire detectors that are a part of a smoke control system shall be tested in accordance with Chapter 9 in their installed condition. Where applicable, this testing shall include verification of airflow in both minimum and maximum conditions.

909.18.2 Ducts. Ducts that are part of a smoke control system shall be traversed using generally accepted practices to determine actual air quantities.

909.18.3 Dampers. Dampers shall be tested for function in their installed condition.

909.18.4 Inlets and outlets. Inlets and outlets shall be read using generally accepted practices to determine air quantities.

909.18.5 Fans. Fans shall be examined for correct rotation. Measurements of voltage, amperage, revolutions per minute and belt tension shall be made.

909.18.6 Smoke barriers. Measurements using inclined manometers or other *approved* calibrated measuring devices shall be made of the pressure differences across *smoke barriers*. Such measurements shall be conducted for each possible smoke control condition.

909.18.7 Controls. Each smoke zone equipped with an automatic-initiation device shall be put into operation by the actuation of one such device. Each additional device within the zone shall be verified to cause the same sequence without requiring the operation of fan motors in order to prevent damage. Control sequences shall be verified throughout the system, including verification of override from the fire fighter's control panel and simulation of standby power conditions.

909.18.8 Testing for smoke control. Smoke control systems shall be tested by a special inspector in accordance with Section 1705.18 of the *Building Code of New York State*.

909.18.8.1 Scope of testing. Testing shall be conducted in accordance with the following:

1. During erection of ductwork and prior to concealment for the purposes of leakage testing and recording of device location.
2. Prior to occupancy and after sufficient completion for the purposes of pressure-difference testing, flow measurements, and detection and control verification.

909.18.8.2 Qualifications. *Approved* agencies for smoke control testing shall have expertise in fire protection engineering, mechanical engineering and certification as air balancers.

909.18.8.3 Reports. A complete report of testing shall be prepared by the *approved* agency. The report shall include identification of all devices by manufacturer, nameplate data, design values, measured values and identification tag or mark. The report shall be reviewed by the responsible registered design professional and, when satisfied that the design intent has been achieved, the responsible registered design professional shall sign, seal and date the report.

909.18.8.3.1 Report filing. A copy of the final report shall be filed with the *fire code official* and an identical copy shall be maintained in an *approved* location at the building.

909.18.9 Identification and documentation. Charts, drawings and other documents identifying and locating each component of the smoke control system, and describing their proper function and maintenance requirements, shall be maintained on file at the building as an attachment to the report required by Section 909.18.8.3. Devices shall have an *approved* identifying tag or mark on them consistent with the other required documentation and shall be dated indicating the last time they were successfully tested and by whom.

909.19 System acceptance. Buildings, or portions thereof, required by this code to comply with this section shall not be issued a certificate of occupancy until such time that the *fire code official* determines that the provisions of this section have been fully complied with and that the fire department has received satisfactory instruction on the operation, both automatic and manual, of the system and a written maintenance program complying with the requirements of Section 909.20.1 has been submitted and *approved* by the *fire code official*.

Exception: In buildings of phased construction, a temporary certificate of occupancy, as *approved* by the *fire code official*, shall be allowed, provided that those portions of the building to be occupied meet the requirements of this section and that the remainder does not pose a significant hazard to the safety of the proposed occupants or adjacent buildings.

909.20 Maintenance. Smoke control systems shall be maintained to ensure to a reasonable degree that the system is capable of controlling smoke for the duration required. The system shall be maintained in accordance with the manufacturer's instructions and Sections 909.20.1 through 909.20.6.

INTERNATIONAL CODE COUNCIL®
Copyright © 2019 ICC & NYSDOS. ALL RIGHTS RESERVED. Accessed by Lauren Gualdino (lgualdino@briarcliffmanor.org), (-) Order Number #100880972 on May 08, 2020 07:05 AM (PDT) pursuant to License Agreement with ICC & NYSDOS. No further reproduction, no

100880972

909.20.1 Schedule. A routine maintenance and operational testing program shall be initiated immediately after the smoke control system has passed the acceptance tests. A written schedule for routine maintenance and operational testing shall be established.

909.20.2 Records. Records of smoke control system testing and maintenance shall be maintained. The record shall include the date of the maintenance, identification of the servicing personnel and notification of any unsatisfactory condition and the corrective action taken, including parts replaced.

909.20.3 Testing. Operational testing of the smoke control system shall include all equipment such as initiating devices, fans, dampers, controls, doors and windows.

909.20.4 Dedicated smoke control systems. Dedicated smoke control systems shall be operated for each control sequence semiannually. The system shall be tested under standby power conditions.

909.20.5 Nondedicated smoke control systems. Nondedicated smoke control systems shall be operated for each control sequence annually. The system shall be tested under standby power conditions.

909.20.6 Components bypassing weekly test. Where components of the smoke control system are bypassed by the preprogrammed weekly test required by Section 909.12.1, such components shall be tested semiannually. The system shall be tested under standby power conditions.

[BF] 909.21 Elevator hoistway pressurization alternative. Where elevator hoistway pressurization is provided in lieu of required enclosed elevator lobbies, the pressurization system shall comply with Sections 909.21.1 through 909.21.11.

[BF] 909.21.1 Pressurization requirements. Elevator hoistways shall be pressurized to maintain a minimum positive pressure of 0.10 inch of water (25 Pa) and a maximum positive pressure of 0.25 inch of water (67 Pa) with respect to adjacent occupied space on all floors. This pressure shall be measured at the midpoint of each hoistway door, with all elevator cars at the floor of recall and all hoistway doors on the floor of recall open and all other hoistway doors closed. The pressure differentials shall be measured between the hoistway and the adjacent elevator landing. The opening and closing of hoistway doors at each level must be demonstrated during this test. The supply air intake shall be from an outside, uncontaminated source located a minimum distance of 20 feet (6096 mm) from any air exhaust system or outlet.

Exceptions:

1. On floors containing only Group R occupancies, the pressure differential is permitted to be measured between the hoistway and a *dwelling unit* or *sleeping unit*.
2. Where an elevator opens into a lobby enclosed in accordance with Section 3007.6 or 3008.6 of the *Building Code of New York State*, the pressure differential is permitted to be measured between the hoistway and the space immediately outside the door(s) from the floor to the enclosed lobby.
3. The pressure differential is permitted to be measured relative to the outdoor atmosphere on floors other than the following:
   3.1. The fire floor.
   3.2. The two floors immediately below the fire floor.
   3.3. The floor immediately above the fire floor.
4. The minimum positive pressure of 0.10 inch of water (25 Pa) and a maximum positive pressure of 0.25 inch of water (67 Pa) with respect to occupied floors is not required at the floor of recall with the doors open.

[BF] 909.21.1.1 Use of ventilation systems. Ventilation systems, other than hoistway supply air systems, are permitted to be used to exhaust air from adjacent spaces on the fire floor, two floors immediately below and one floor immediately above the fire floor to the building's exterior where necessary to maintain positive pressure relationships as required in Section 909.21.1 during operation of the elevator shaft pressurization system.

[BF] 909.21.2 Rational analysis. A rational analysis complying with Section 909.4 shall be submitted with the *construction documents*.

[BF] 909.21.3 Ducts for system. Any duct system that is part of the pressurization system shall be protected with the same *fire-resistance rating* as required for the elevator shaft enclosure.

[BF] 909.21.4 Fan system. The fan system provided for the pressurization system shall be as required by Sections 909.21.4.1 through 909.21.4.4.

[BF] 909.21.4.1 Fire resistance. Where located within the building, the fan system that provides the pressurization shall be protected with the same *fire-resistance rating* required for the elevator shaft enclosure.

[BF] 909.21.4.2 Smoke detection. The fan system shall be equipped with a smoke detector that will automatically shut down the fan system when smoke is detected within the system.

[BF] 909.21.4.3 Separate systems. A separate fan system shall be used for each elevator hoistway.

[BF] 909.21.4.4 Fan capacity. The supply fan shall be either adjustable with a capacity of not less than 1,000 cfm (0.4719 m^3/s) per door, or that specified by a *registered design professional* to meet the requirements of a designed pressurization system.

[BF] 909.21.5 Standby power. The pressurization system shall be provided with standby power in accordance with Section 1203.

[BF] 909.21.6 Activation of pressurization system. The elevator pressurization system shall be activated upon activation of either the building fire alarm system or the elevator lobby smoke detectors. Where both a building fire alarm system and elevator lobby smoke detectors are pres-

INTERNATIONAL CODE COUNCIL®
Copyright © 2019 ICC & NYSDOS. ALL RIGHTS RESERVED. Accessed by Lauren Gualdino (lgualdino@briarcliffmanor.org), (-) Order Number #100880972 on May 08, 2020 07:05 AM (PDT) pursuant to License Agreement with ICC & NYSDOS. No further reproduction, no

100880972

ent, each shall be independently capable of activating the pressurization system.

[BF] 909.21.7 Testing. Testing for performance shall be required in accordance with Section 909.18.8. System acceptance shall be in accordance with Section 909.19.

[BF] 909.21.8 Marking and identification. Detection and control systems shall be marked in accordance with Section 909.14.

[BF] 909.21.9 Control diagrams. Control diagrams shall be provided in accordance with Section 909.15.

[BF] 909.21.10 Control panel. A control panel complying with Section 909.16 shall be provided.

[BF] 909.21.11 System response time. Hoistway pressurization systems shall comply with the requirements for smoke control system response time in Section 909.17.

SECTION 910
SMOKE AND HEAT REMOVAL

910.1 General. Where required by this code, smoke and heat vents or mechanical smoke removal systems shall conform to the requirements of this section.

910.2 Where required. Smoke and heat vents or a mechanical smoke removal system shall be installed as required by Sections 910.2.1 and 910.2.2.

Exceptions:

1. Frozen food warehouses used solely for storage of Class I and II commodities where protected by an *approved automatic sprinkler system*.
2. Smoke and heat removal shall not be required in areas of buildings equipped with early suppression fast-response (ESFR) sprinklers.
3. Smoke and heat removal shall not be required in areas of buildings equipped with control mode special application sprinklers with a response time index of 50 $(m \cdot s)^{1/2}$ or less that are listed to control a fire in stored commodities with 12 or fewer sprinklers.

910.2.1 Group F-1 or S-1. Smoke and heat vents installed in accordance with Section 910.3 or a mechanical smoke removal system installed in accordance with Section 910.4 shall be installed in buildings and portions thereof used as a Group F-1 or S-1 occupancy having more than 50,000 square feet (4645 m^2) of undivided area. In occupied portions of a building equipped throughout with an *automatic sprinkler system* in accordance with Section 903.3.1.1, where the upper surface of the story is not a roof assembly, a mechanical smoke removal system in accordance with Section 910.4 shall be installed.

Exception: Group S-1 aircraft repair hangars.

910.2.2 High-piled combustible storage. Smoke and heat removal required by Table 3206.2 for buildings and portions thereof containing high-piled combustible storage shall be installed in accordance with Section 910.3 in unsprinklered buildings. In buildings and portions thereof containing high-piled combustible storage equipped throughout with an *automatic sprinkler system* in accordance with Section 903.3.1.1, a smoke and heat removal system shall be installed in accordance with Section 910.3 or 910.4. In occupied portions of a building equipped throughout with an *automatic sprinkler system* in accordance with Section 903.3.1.1 where the upper surface of the story is not a roof assembly, a mechanical smoke removal system in accordance with Section 910.4 shall be installed.

910.3 Smoke and heat vents. The design and installation of smoke and heat vents shall be in accordance with Sections 910.3.1 through 910.3.3.

910.3.1 Listing and labeling. Smoke and heat vents shall be *listed* and labeled to indicate compliance with UL 793 or FM 4430.

910.3.2 Smoke and heat vent locations. Smoke and heat vents shall be located 20 feet (6096 mm) or more from adjacent *lot lines* and *fire walls* and 10 feet (3048 mm) or more from *fire barriers.* Vents shall be uniformly located within the roof in the areas of the building where the vents are required to be installed by Section 910.2, with consideration given to roof pitch, sprinkler location and structural members.

910.3.3 Smoke and heat vents area. The required aggregate area of smoke and heat vents shall be calculated as follows:

For buildings equipped throughout with an *automatic sprinkler system* in accordance with Section 903.3.1.1:

$$A_{VR} = V/9000 \qquad \textbf{(Equation 9-3)}$$

where:

A_{VR} = The required aggregate vent area (ft^2).

V = Volume (ft^3) of the area that requires smoke removal.

For unsprinklered buildings:

$$A_{VR} = A_{FA}/50 \qquad \textbf{(Equation 9-4)}$$

where:

A_{VR} = The required aggregate vent area (ft^2).

A_{FA} = The area of the floor in the area that requires smoke removal.

910.4 Mechanical smoke removal systems. Mechanical smoke removal systems shall be designed and installed in accordance with Sections 910.4.1 through 910.4.7.

910.4.1 Automatic sprinklers required. The building shall be equipped throughout with an approved *automatic sprinkler system* in accordance with Section 903.3.1.1.

910.4.2 Exhaust fan construction. Exhaust fans that are part of a mechanical smoke removal system shall be rated for operation at 221°F (105°C). Exhaust fan motors shall be located outside of the exhaust fan air stream.

910.4.3 System design criteria. The mechanical smoke removal system shall be sized to exhaust the building at a minimum rate of two air changes per hour based on the volume of the building or portion thereof without contents. The capacity of each exhaust fan shall not exceed 30,000 cubic feet per minute (14.2 m^3/s).

INTERNATIONAL CODE COUNCIL®
Copyright © 2019 ICC & NYSDOS. ALL RIGHTS RESERVED. Accessed by Lauren Gualdino (lgualdino@briarcliffmanor.org), (-) Order Number #100880972 on May 08, 2020 07:05 AM (PDT) pursuant to License Agreement with ICC & NYSDOS. No further reproduction, no

100880972

910.4.3.1 Makeup air. Makeup air openings shall be provided within 6 feet (1829 mm) of the floor level. Operation of makeup air openings shall be manual or automatic. The minimum gross area of makeup air inlets shall be 8 square feet per 1,000 cubic feet per minute (0.74 m^2 per 0.4719 m^3/s) of smoke exhaust.

910.4.4 Activation. The mechanical smoke removal system shall be activated by manual controls only.

910.4.5 Manual control location. Manual controls shall be located where they are able to be accessed by the fire service from an exterior door of the building and separated from the remainder of the building by not less than 1-hour *fire barriers* constructed in accordance with Section 707 of the *Building Code of New York State* or *horizontal assemblies* constructed in accordance with Section 711 of the *Building Code of New York State*, or both.

910.4.6 Control wiring. Wiring for operation and control of mechanical smoke removal systems shall be connected ahead of the main disconnect in accordance with Section 701.12E of NFPA 70 and be protected against interior fire exposure to temperatures in excess of 1,000°F (538°C) for a period of not less than 15 minutes.

910.4.7 Controls. Where building air-handling and mechanical smoke removal systems are combined or where independent building air-handling systems are provided, fans shall automatically shut down in accordance with the *Mechanical Code of New York State*. The manual controls provided for the smoke removal system shall have the capability to override the automatic shutdown of fans that are part of the smoke removal system.

910.5 Maintenance and testing. Maintenance and testing of smoke and heat vents and mechanical smoke removal systems shall be in accordance with Sections 910.5.1 and 910.5.2. A written record of inspection, testing and maintenance that includes the date, identification of personnel involved, any unsatisfactory result, corrective action taken and replaced parts shall be maintained on the premises.

910.5.1 Smoke and heat vents. Smoke and heat vents shall be maintained in an operative condition. Inspection, testing and maintenance shall be in accordance with NFPA 204 except as follows:

1. Mechanically operated smoke and heat vents shall be inspected annually and operationally tested not less than every 5 years.
2. Gravity dropout smoke and heat vents shall be inspected annually.
3. Fused, damaged or painted fusible links shall be replaced.

910.5.2 Mechanical smoke removal systems. Mechanical smoke removal systems shall be maintained in accordance with NFPA 204 and the equipment manufacturer's instructions except as follows:

1. Systems shall be inspected and operationally tested annually.
2. Testing shall include the operation of all system components, controls and ancillary equipment, such as makeup air openings.
3. A written schedule for routine maintenance and operational testing shall be established and testing shall be conducted in accordance with the schedule.

SECTION 911
EXPLOSION CONTROL

911.1 General. Explosion control shall be provided in the following locations:

1. Where a structure, room or space is occupied for purposes involving explosion hazards as identified in Table 911.1.
2. Where quantities of hazardous materials specified in Table 911.1 exceed the maximum allowable quantities in Table 5003.1.1(1).

Such areas shall be provided with explosion (*deflagration*) venting, explosion (*deflagration*) prevention systems or *barricades* in accordance with this section and NFPA 69, or NFPA 495 as applicable. *Deflagration* venting shall not be utilized as a means to protect buildings from *detonation* hazards.

911.2 Required deflagration venting. Areas that are required to be provided with *deflagration* venting shall comply with the following:

1. Walls, ceilings and roofs exposing surrounding areas shall be designed to resist a minimum internal pressure of 100 pounds per square foot (psf) (4788 Pa). The minimum internal design pressure shall be not less than five times the maximum internal relief pressure specified in Item 5 of this section.
2. *Deflagration* venting shall be provided only in exterior walls and roofs.

   Exception: Where sufficient *exterior wall* and roof venting cannot be provided because of inadequate exterior wall or roof area, *deflagration* venting shall be allowed by specially designed shafts vented to the exterior of the building.
3. *Deflagration* venting shall be designed to prevent unacceptable structural damage. Where relieving a *deflagration*, vent closures shall not produce projectiles of sufficient velocity and mass to cause life threatening injuries to the occupants or other persons on the property or adjacent *public ways*.
4. The aggregate clear area of vents and venting devices shall be governed by the pressure resistance of the construction assemblies specified in Item 1 of this section and the maximum internal pressure allowed by Item 5 of this section.
5. Vents shall be designed to withstand loads in accordance with the *Building Code of New York State*. Vents shall consist of any one or any combination of the following to relieve at a maximum internal pressure of 20 pounds per square foot (958 Pa), but not less than the loads required by the *Building Code of New York State*:

INTERNATIONAL CODE COUNCIL®
Copyright © 2019 ICC & NYSDOS. ALL RIGHTS RESERVED. Accessed by Lauren Gualdino (lgualdino@briarcliffmanor.org), (-) Order Number #100880972 on May 08, 2020 07:05 AM (PDT) pursuant to License Agreement with ICC & NYSDOS. No further reproduction, no

100880972

5.1. *Exterior walls* designed to release outward.

5.2. Hatch covers.

5.3. Outward swinging doors.

5.4. Roofs designed to uplift.

5.5. Venting devices *listed* for the purpose.

6. Vents designed to release from the *exterior walls* or roofs of the building when venting a *deflagration* shall discharge directly to the exterior of the building where an unoccupied space not less than 50 feet (15 240 mm) in width is provided between the exterior walls of the building and the lot line.

   Exception: Vents complying with Item 7 of this section.

7. Vents designed to remain attached to the building when venting a *deflagration* shall be so located that the discharge opening shall be not less than 10 feet (3048 mm) vertically from window openings and *exits* in the building and 20 feet (6096 mm) horizontally from *exits* in the building, from window openings and *exits* in adjacent buildings on the same lot and from the lot line.

8. Discharge from vents shall not be into the interior of the building.

911.3 Explosion prevention systems. Explosion prevention systems shall be of an *approved* type and installed in accordance with the provisions of this code and NFPA 69.

911.4 Barricades. *Barricades* shall be designed and installed in accordance with NFPA 495.

SECTION 912
FIRE DEPARTMENT CONNECTIONS

912.1 Installation. Fire department connections shall be installed in accordance with the NFPA standard applicable to the system design and shall comply with Sections 912.2 through 912.7.

912.2 Location. With respect to hydrants, driveways, buildings and landscaping, fire department connections shall be so

TABLE 911.1
EXPLOSION CONTROL REQUIREMENTS[f]

MATERIAL	CLASS	EXPLOSION CONTROL METHODS	
		Barricade construction	Explosion (deflagration) venting or explosion (deflagration) prevention systems
Hazard Category			
Combustible dusts[a]	—	Not required	Required
Cryogenic fluids	Flammable	Not required	Required
Explosives	Division 1.1 Division 1.2 Division 1.3 Division 1.4 Division 1.5 Division 1.6	Required Required Not required Not required Required Required	Not required Not required Required Required Not required Not required
Flammable gas	Gaseous Liquefied	Not required Not required	Required Required
Flammable liquids	IA[b] IB[c]	Not required Not required	Required Required
Organic peroxides	Unclassified detonable I	Required Required	Not permitted Not permitted
Oxidizer liquids and solids	4	Required	Not permitted
Pyrophoric	Gases	Not required	Required
Unstable (reactive)	4 3 detonable 3 nondetonable	Required Required Not required	Not permitted Not permitted Required
Water-reactive liquids and solids	3 2[e]	Not required Not required	Required Required
Special Uses			
Acetylene generator rooms	—	Not required	Required
Grain processing	—	Not required	Required
Liquefied petroleum gas distribution facilities	—	Not required	Required
Where explosion hazards exist[d]	Detonation Deflagration	Required Not required	Not permitted Required

a. Combustible dusts that are generated during manufacturing or processing. See definition of "Combustible dust" in Chapter 2.
b. Storage or use.
c. In open use or dispensing.
d. Rooms containing dispensing and use of hazardous materials where an explosive environment can occur because of the characteristics or nature of the hazardous materials or as a result of the dispensing or use process.
e. A method of explosion control shall be provided where Class 2 water-reactive materials can form potentially explosive mixtures.
f. Explosion venting is not required for Group H-5 Fabrication Areas complying with Chapter 27 and the *Building Code of New York State*.

INTERNATIONAL CODE COUNCIL®
Copyright © 2019 ICC & NYSDOS. ALL RIGHTS RESERVED. Accessed by Lauren Gualdino (lgualdino@briarcliffmanor.org), (-) Order Number #100880972 on May 08, 2020 07:05 AM (PDT) pursuant to License Agreement with ICC & NYSDOS. No further reproduction, no

100880972

located that fire apparatus and hose connected to supply the system will not obstruct access to the buildings for other fire apparatus. The location of fire department connections shall be *approved* by the *fire code official*.

912.2.1 Visible location. Fire department connections shall be located on the street side of buildings or facing *approved* fire apparatus access roads, fully visible and recognizable from the street, fire apparatus access road or nearest point of fire department vehicle access or as otherwise *approved* by the *fire code official*.

912.2.2 Existing buildings. On existing buildings, wherever the fire department connection is not visible to approaching fire apparatus, the fire department connection shall be indicated by an *approved* sign mounted on the street front or on the side of the building. Such sign shall have the letters "FDC" not less than 6 inches (152 mm) high and words in letters not less than 2 inches (51 mm) high or an arrow to indicate the location. Such signs shall be subject to the approval of the *fire code official*.

912.3 Fire hose threads. Fire hose threads used in connection with standpipe systems shall be *approved* and shall be compatible with fire department hose threads.

912.4 Access. Immediate access to fire department connections shall be maintained at all times and without obstruction by fences, bushes, trees, walls or any other fixed or moveable object. Access to fire department connections shall be *approved* by the *fire code official*.

Exception: Fences, where provided with an access gate equipped with a sign complying with the legend requirements of Section 912.5 and a means of emergency operation. The gate and the means of emergency operation shall be *approved* by the *fire code official* and maintained operational at all times.

912.4.1 Locking fire department connection caps. The *fire code official* is authorized to require locking caps on fire department connections for water-based *fire protection systems* where the responding fire department carries appropriate key wrenches for removal.

912.4.2 Clear space around connections. A working space of not less than 36 inches (914 mm) in width, 36 inches (914 mm) in depth and 78 inches (1981 mm) in height shall be provided and maintained in front of and to the sides of wall-mounted fire department connections and around the circumference of free-standing fire department connections, except as otherwise required or *approved* by the *fire code official*.

912.4.3 Physical protection. Where fire department connections are subject to impact by a motor vehicle, vehicle impact protection shall be provided in accordance with Section 312.

912.5 Signs. A metal sign with raised letters not less than 1 inch (25 mm) in size shall be mounted on all fire department connections serving automatic sprinklers, standpipes or fire pump connections. Such signs shall read: AUTOMATIC SPRINKLERS or STANDPIPES or TEST CONNECTION or a combination thereof as applicable. Where the fire department connection does not serve the entire building, a sign shall be provided indicating the portions of the building served.

912.6 Backflow protection. The potable water supply to automatic sprinkler and standpipe systems shall be protected against backflow as required by the *Plumbing Code of New York State*.

912.7 Inspection, testing and maintenance. Fire department connections shall be periodically inspected, tested and maintained in accordance with NFPA 25. Records of inspection, testing and maintenance shall be maintained.

SECTION 913
FIRE PUMPS

913.1 General. Where provided, fire pumps shall be installed in accordance with this section and NFPA 20.

913.2 Protection against interruption of service. The fire pump, driver and controller shall be protected in accordance with NFPA 20 against possible interruption of service through damage caused by explosion, fire, flood, earthquake, rodents, insects, windstorm, freezing, vandalism and other adverse conditions.

913.2.1 Protection of fire pump rooms. Rooms where fire pumps are located shall be separated from all other areas of the building in accordance with Section 913.2.1 of the *Building Code of New York State*.

913.2.2 Circuits supplying fire pumps. Cables used for survivability of circuits supplying fire pumps shall be protected using one of the following methods:

1. Cables used for survivability of required critical circuits shall be *listed* in accordance with UL 2196 and shall have a *fire-resistance rating* of not less than 1 hour.
2. Electrical circuit protective systems shall have a *fire-resistance rating* of not less than 1 hour. Electrical circuit protective systems shall be installed in accordance with their listing requirements.
3. Construction having a *fire-resistance rating* of not less than 1 hour.

913.3 Temperature of pump room. Suitable means shall be provided for maintaining the temperature of a pump room or pump house, where required, above 40°F (5°C).

913.3.1 Engine manufacturer's recommendation. Temperature of the pump room, pump house or area where engines are installed shall never be less than the minimum recommended by the engine manufacturer. The engine manufacturer's recommendations for oil heaters shall be followed.

913.4 Valve supervision. Where provided, the fire pump suction, discharge and bypass valves, and isolation valves on the backflow prevention device or assembly shall be supervised open by one of the following methods:

1. Central-station, proprietary or remote-station signaling service.
2. Local signaling service that will cause the sounding of an audible signal at a constantly attended location.
3. Locking valves open.
4. Sealing of valves and *approved* weekly recorded inspection where valves are located within fenced enclosures under the control of the *owner*.

INTERNATIONAL CODE COUNCIL®
Copyright © 2019 ICC & NYSDOS. ALL RIGHTS RESERVED. Accessed by Lauren Gualdino (lgualdino@briarcliffmanor.org), (-) Order Number #100880972 on May 08, 2020 07:05 AM (PDT) pursuant to License Agreement with ICC & NYSDOS. No further reproduction, no

100880972

913.4.1 Test outlet valve supervision. Fire pump test outlet valves shall be supervised in the closed position.

913.5 Testing and maintenance. Fire pumps shall be inspected, tested and maintained in accordance with the requirements of this section and NFPA 25. Records of inspection, testing and maintenance shall be maintained.

913.5.1 Acceptance test. Acceptance testing shall be done in accordance with the requirements of NFPA 20.

913.5.2 Generator sets. Engine generator sets supplying emergency or standby power to fire pump assemblies shall be periodically tested in accordance with NFPA 110. Records of testing shall be maintained.

913.5.3 Transfer switches. Automatic transfer switches shall be periodically tested in accordance with NFPA 110. Records of testing shall be maintained.

913.5.4 Pump room environmental conditions. Tests of pump room environmental conditions, including heating, ventilation and illumination, shall be made to ensure proper manual or automatic operation of the associated equipment.

SECTION 914
FIRE PROTECTION BASED ON SPECIAL DETAILED REQUIREMENTS OF USE AND OCCUPANCY

914.1 General. This section shall specify where *fire protection systems* are required based on the detailed requirements of use and occupancy of the *Building Code of New York State*.

914.2 Covered and open mall buildings. Covered and open mall buildings shall comply with Sections 914.2.1 through 914.2.4.

914.2.1 Automatic sprinkler system. Covered and open mall buildings and buildings connected shall be equipped throughout with an automatic sprinkler system in accordance with Section 903.3.1.1, which shall comply with the all of the following:

1. The automatic sprinkler system shall be complete and operative throughout occupied space in the mall building prior to occupancy of any of the tenant spaces. Unoccupied tenant spaces shall be similarly protected unless provided with approved alternative protection.
2. Sprinkler protection for the mall of a covered mall building shall be independent from that provided for tenant spaces or anchor buildings.
3. Sprinkler protection for the tenant spaces of an open mall building shall be independent from that provided for anchor buildings.
4. Sprinkler protection shall be provided beneath exterior circulation balconies located adjacent to an open mall.
5. Where tenant spaces are supplied by the same system, they shall be independently controlled.

Exception: An *automatic sprinkler system* shall not be required in spaces or areas of open parking garages separated from the covered or open mall in accordance with Section 402.4.2.3 of the *Building Code of New York State* and constructed in accordance with Section 406.5 of the *Building Code of New York State*.

914.2.2 Standpipe system. The covered and open mall building shall be equipped throughout with a standpipe system as required by Section 905.3.3.

914.2.3 Emergency voice/alarm communication system. Where the total floor area exceeds 50,000 square feet (4645 m^2) within either a covered mall building or within the perimeter line of an open mall building, an emergency voice/alarm communication system shall be provided. *Access* to emergency voice/alarm communication systems serving a mall, required or otherwise, shall be provided for the fire department. The system shall be provided in accordance with Section 907.5.2.2.

914.2.4 Fire department access to equipment. Rooms or areas containing controls for air-conditioning systems, automatic fire-extinguishing systems, *automatic sprinkler systems* or other detection, suppression or control elements shall be identified for use by the fire department.

914.3 High-rise buildings. High-rise buildings shall comply with Sections 914.3.1 through 914.3.7.

914.3.1 Automatic sprinkler system. Buildings and structures shall be equipped throughout with an *automatic sprinkler system* in accordance with Section 903.3.1.1 and a secondary water supply where required by Section 914.3.2.

Exception: An *automatic sprinkler system* shall not be required in spaces or areas of:

1. Open parking garages in accordance with Section 406.5 of the *Building Code of New York State.*
2. Telecommunications equipment buildings used exclusively for telecommunications equipment, associated electrical power distribution equipment, batteries and standby engines, provided that those spaces or areas are equipped throughout with an automatic fire detection system in accordance with Section 907.2 and are separated from the remainder of the building by not less than 1-hour *fire barriers* constructed in accordance with Section 707 of the *Building Code of New York State* or not less than 2-hour *horizontal assemblies* constructed in accordance with Section 711 of the *Building Code of New York State*, or both.

914.3.1.1 Number of sprinkler risers and system design. Each sprinkler system zone in buildings that are more than 420 feet (128 m) in height shall be supplied by not fewer than two risers. Each riser shall supply sprinklers on alternate floors. If more than two risers are provided for a zone, sprinklers on adjacent floors shall not be supplied from the same riser.

914.3.1.1.1 Riser location. Sprinkler risers shall be placed in interior exit stairways and ramps that are remotely located in accordance with Section 1007.

914.3.1.2 Water supply to required fire pumps. In buildings that are more than 420 feet (128 m) in *building height*, required fire pumps shall be supplied by

INTERNATIONAL CODE COUNCIL®
Copyright © 2019 ICC & NYSDOS. ALL RIGHTS RESERVED. Accessed by Lauren Gualdino (lgualdino@briarcliffmanor.org), (-) Order Number #100880972 on May 08, 2020 07:05 AM (PDT) pursuant to License Agreement with ICC & NYSDOS. No further reproduction, no

100880972

connections to not fewer than two water mains located in different streets. Separate supply piping shall be provided between each connection to the water main and the pumps. Each connection and the supply piping between the connection and the pumps shall be sized to supply the flow and pressure required for the pumps to operate.

Exception: Two connections to the same main shall be permitted provided that the main is valved such that an interruption can be isolated so that the water supply will continue without interruption through not fewer than one of the connections.

914.3.2 Secondary water supply. An automatic secondary on-site water supply having a capacity not less than the hydraulically calculated sprinkler demand, including the hose stream requirement, shall be provided for high-rise buildings assigned to Seismic Design Category C, D, E or F as determined by the *Building Code of New York State*. An additional fire pump shall not be required for the secondary water supply unless needed to provide the minimum design intake pressure at the suction side of the fire pump supplying the *automatic sprinkler system*. The secondary water supply shall have a duration of not less than 30 minutes as determined by the occupancy hazard classification in accordance with NFPA 13.

Exception: Existing buildings.

914.3.3 Fire alarm system. A fire alarm system shall be provided in accordance with Section 907.2.12.

914.3.4 Automatic smoke detection. Smoke detection shall be provided in accordance with Section 907.2.12.1.

914.3.5 Emergency voice/alarm communication system. An emergency voice/alarm communication system shall be provided in accordance with Section 907.5.2.2.

914.3.6 Emergency responder radio coverage. Emergency responder radio coverage shall be provided in accordance with Section 510.

914.3.7 Fire command. A *fire command center* complying with Section 508 shall be provided in a location *approved* by the fire department.

914.4 Atriums. Atriums shall comply with Sections 914.4.1 and 914.4.2.

914.4.1 Automatic sprinkler system. An *approved automatic sprinkler system* shall be installed throughout the entire building.

Exceptions:

1. That area of a building adjacent to or above the atrium need not be sprinklered, provided that portion of the building is separated from the atrium portion by not less than a 2-hour *fire barrier* constructed in accordance with Section 707 of the *Building Code of New York State* or *horizontal assemblies* constructed in accordance with Section 711 of the *Building Code of New York State*, or both.
2. Where the ceiling of the atrium is more than 55 feet (16 764 mm) above the floor, sprinkler protection at the ceiling of the atrium is not required.

914.4.2 Fire alarm system. A fire alarm system shall be provided where required by Section 907.2.13.

914.5 Underground buildings. Underground buildings shall comply with Sections 914.5.1 through 914.5.5.

914.5.1 Automatic sprinkler system. The highest *level of exit discharge* serving the underground portions of the building and all levels below shall be equipped with an *automatic sprinkler system* installed in accordance with Section 903.3.1.1. Water-flow switches and control valves shall be supervised in accordance with Section 903.4.

914.5.2 Smoke control system. A smoke control system is required to control the migration of products of combustion in accordance with Section 909 and provisions of this section. Smoke control shall restrict movement of smoke to the general area of fire origin and maintain *means of egress* in a usable condition.

914.5.3 Compartment smoke control system. Where compartmentation is required by Section 405.4 of the *Building Code of New York State*, each compartment shall have an independent smoke control system. The system shall be automatically activated and capable of manual operation in accordance with Section 907.2.17.

914.5.4 Fire alarm system. A fire alarm system shall be provided where required by Sections 907.2.17 and 907.2.18.

914.5.5 Standpipe system. The underground building shall be provided throughout with a standpipe system in accordance with Section 905.

914.6 Stages. Stages shall comply with Sections 914.6.1 and 914.6.2.

914.6.1 Automatic sprinkler system. Stages shall be equipped with an *automatic sprinkler system* in accordance with Section 903.3.1.1. Sprinklers shall be installed under the roof and gridiron and under all catwalks and galleries over the stage. Sprinklers shall be installed in dressing rooms, performer lounges, shops and storerooms accessory to such stages.

Exceptions:

1. Sprinklers are not required under stage areas less than 4 feet (1219 mm) in clear height utilized exclusively for storage of tables and chairs, provided that the concealed space is separated from the adjacent spaces by Type X gypsum board not less than $^5/_8$ inch (15.9 mm) in thickness.
2. Sprinklers are not required for stages 1,000 square feet (93 m^2) or less in area and 50 feet (15 240 mm) or less in height where curtains, scenery or other combustible hangings are not retractable vertically. Combustible hangings shall be limited to a single main curtain, borders, legs and a single backdrop.
3. Sprinklers are not required within portable orchestra enclosures on stages.

914.6.2 Standpipe system. Standpipe systems shall be provided in accordance with Section 905.

INTERNATIONAL CODE COUNCIL®
Copyright © 2019 ICC & NYSDOS. ALL RIGHTS RESERVED. Accessed by Lauren Gualdino (lgualdino@briarcliffmanor.org), (-) Order Number #100880972 on May 08, 2020 07:05 AM (PDT) pursuant to License Agreement with ICC & NYSDOS. No further reproduction, no

100880972

914.7 Special amusement buildings. Special amusement buildings shall comply with Sections 914.7.1 and 914.7.2.

914.7.1 Automatic sprinkler system. Special amusement buildings shall be equipped throughout with an *automatic sprinkler system* in accordance with Section 903.3.1.1. Where the special amusement building is temporary, the sprinkler water supply shall be of an *approved* temporary means.

Exception: Automatic sprinklers are not required where the total floor area of a temporary special amusement building is less than 1,000 square feet (93 m^2) and the *exit access* travel distance from any point to an *exit* is less than 50 feet (15 240 mm).

914.7.2 Automatic smoke detection. Special amusement buildings shall be equipped with an automatic smoke detection system in accordance with Section 907.2.11.

914.8 Aircraft-related occupancies. Aircraft-related occupancies shall comply with Sections 914.8.1 through 914.8.6.

914.8.1 Automatic smoke detection systems. Airport traffic control towers shall be provided with an automatic smoke detection system installed in accordance with Section 907.2.21.

914.8.2 Automatic sprinkler system for new airport traffic control towers. Where an occupied floor is located more than 35 feet (10 668 mm) above the lowest level of fire department vehicle access, new airport traffic control towers shall be equipped with an *automatic sprinkler system* in accordance with Section 903.3.1.1.

914.8.3 Fire suppression for aircraft hangars. Aircraft hangars shall be provided with a fire suppression system designed in accordance with NFPA 409, based on the classification for the hangar given in Table 914.8.3.

Exception: Where a fixed base operator has separate repair facilities on site, Group II hangars operated by a fixed base operator used for storage of transient aircraft only shall have a fire suppression system, but the system shall be exempt from foam requirements.

914.8.3.1 Hazardous operations. Any Group III aircraft hangar in accordance with Table 914.8.3 that contains hazardous operations including, but not limited to, the following shall be provided with a Group I or II fire suppression system in accordance with NFPA 409 as applicable:

1. Doping.
2. Hot work including, but not limited to, welding, torch cutting and torch soldering.
3. Fuel transfer.
4. Fuel tank repair or maintenance not including defueled tanks in accordance with NFPA 409, inerted tanks or tanks that have never been fueled.
5. Spray finishing operations.
6. Total fuel capacity of all aircraft within the unsprinklered single *fire area* in excess of 1,600 gallons (6057 L).
7. Total fuel capacity of all aircraft within the maximum single *fire area* in excess of 7,500 gallons (28 390 L) for a hangar equipped throughout with an *automatic sprinkler system* installed in accordance with Section 903.3.1.1.

914.8.3.2 Separation of maximum single fire areas. Maximum single *fire areas* established in accordance with hangar classification and construction type in Table 914.8.3 shall be separated by 2-hour *fire walls* constructed in accordance with Section 706 of the *Building Code of New York State*. In determining the maximum single fire area as set forth in Table 914.8.3, ancillary uses that are separated from aircraft servicing areas by not less than a 1-hour *fire barrier* constructed in accordance with Section 707 of the *Building Code of New York State* shall not be included in the area.

914.8.4 Finishing. The process of "doping," involving the use of a volatile flammable solvent, or of painting shall be carried on in a separate detached building equipped with

TABLE 914.8.3
HANGAR FIRE SUPPRESSION REQUIREMENTS[a, b, c]

MAXIMUM SINGLE FIRE AREA (square feet)	BUILDING CODE OF NEW YORK STATE TYPE OF CONSTRUCTION								
	IA	IB	IIA	IIB	IIIA	IIIB	IV	VA	VB
> 40,001	Group I	Group I	Group I	Group I	Group I	Group I	Group I	Group I	Group I
40,000	Group II	Group II	Group II	Group II	Group II	Group II	Group II	Group II	Group II
30,000	Group III	Group II	Group II	Group II	Group II	Group II	Group II	Group II	Group II
20,000	Group III	Group III	Group II	Group II	Group II	Group II	Group II	Group II	Group II
15,000	Group III	Group III	Group III	Group II	Group III	Group II	Group III	Group II	Group II
12,000	Group III	Group III	Group III	Group III	Group III	Group III	Group III	Group II	Group II
8,000	Group III	Group III	Group III	Group III	Group III	Group III	Group III	Group III	Group II
5,000	Group III	Group III	Group III	Group III	Group III	Group III	Group III	Group III	Group III

For SI: 1 square foot = 0.0929 m^2, 1 foot = 304.8 mm.

a. Aircraft hangars with a door height greater than 28 feet shall be provided with fire suppression for a Group I hangar regardless of maximum fire area.

b. Groups shall be as classified in accordance with NFPA 409.

c. Membrane structures complying with Section 3102 of the *Building Code of New York State* shall be classified as a Group IV hangar.

INTERNATIONAL CODE COUNCIL®
Copyright © 2019 ICC & NYSDOS. ALL RIGHTS RESERVED. Accessed by Lauren Gualdino (lgualdino@briarcliffmanor.org), (-) Order Number #100880972 on May 08, 2020 07:05 AM (PDT) pursuant to License Agreement with ICC & NYSDOS. No further reproduction, no

100880972

automatic fire-extinguishing equipment in accordance with Section 903.

914.8.5 Residential aircraft hangar smoke alarms. Smoke alarms shall be provided within residential aircraft hangars in accordance with Section 907.2.20.

914.8.6 Aircraft paint hangar fire suppression. Aircraft paint hangars shall be provided with fire suppression as required by NFPA 409.

914.9 Application of flammable finishes. An *automatic sprinkler system* or fire-extinguishing system shall be provided in all spray rooms and spray booths, and shall be installed in accordance with Chapter 9.

914.10 Drying rooms. Drying rooms designed for high-hazard materials and processes, including special occupancies as provided for in Chapter 4 of the *Building Code of New York State*, shall be protected by an *approved* automatic fire-extinguishing system complying with the provisions of Chapter 9.

914.11 Ambulatory care facilities. Occupancies classified as ambulatory care facilities shall comply with Sections 914.11.1 through 914.11.3.

914.11.1 Automatic sprinkler systems. An *automatic sprinkler system* shall be provided for ambulatory care facilities in accordance with Section 903.2.2.

914.11.2 Manual fire alarm systems. A manual fire alarm system shall be provided for ambulatory care facilities in accordance with Section 907.2.2.

914.11.3 Fire alarm systems. An automatic smoke detection system shall be provided for ambulatory care facilities in accordance with Section 907.2.2.1.

[NY] SECTION 915
CARBON MONOXIDE DETECTION

[NY] 915.1 General. New and existing residential buildings and commercial buildings shall be provided with carbon monoxide detection and notification in accordance with this Section 915.

Exceptions:

1. Carbon monoxide detection and notification shall not be required for any of the following:
   1.1. Buildings that are classified in their entirety as a Storage Group S occupancy or a Utility and Miscellaneous Group U occupancy and that are occupied only occasionally for retrieval of stored material, equipment, or products, or for building or equipment maintenance,
   1.2. Occupiable space when such space is regularly vented to the exterior through the normal operation of the space (such as automotive repair garages, warehouses with loading dock doors that are regularly open, etc.), and when approved by the *fire code official*, or
   1.3. Buildings that satisfy all of the following conditions:
      a. The building is unoccupied;
      b. Exterior openings are boarded, locked, blocked, or otherwise protected to prevent entry by unauthorized individuals;
      c. All fuel-burning appliances are disabled in a manner that makes them incapable of producing carbon monoxide; and
      d. All attached motor vehicle related occupancies are boarded, locked, blocked, or otherwise protected to prevent entry by motor vehicles and equipment.
2. Existing buildings that are in full compliance with the carbon monoxide detection and notification requirements of the 2017 Uniform Code Supplement or an earlier version of the *Uniform Code* shall be deemed to be in full compliance with Sections 915.3 through 915.5.4 unless otherwise required by the *Residential Code of New York State, Building Code of New York State, Fire Code of New York State,* or *Existing Building Code of New York State*. Existing buildings that are not in full compliance with the carbon monoxide detection requirements of the 2017 Uniform Code Supplement or an earlier version of the *Uniform Code* shall comply with the requirements of this section.

[NY] 915.2 Definitions. For the purposes of applying Section 915, the following terms shall have the following meanings:

CARPORT. A structure that is used for parking, storage, or repair of equipment and/or vehicles, and consists of a roof and at least one side that is open to the atmosphere.

COMMERCIAL BUILDING. A building that is not a residential building.

COMMUNICATING OPENING. A pathway by which air can freely flow from a room to another room. Communicating openings shall include, but shall not be limited to, elevator shafts, open stairways, archways, transfer ducts and grilles, concealed spaces, interior hallways, and pass-through windows.

DWELLING UNIT. A single unit providing complete, independent living facilities for one or more persons, including permanent provisions for living, sleeping, eating, cooking, and sanitation. Dwelling units include, but are not limited to, a one-family dwelling, each unit in a two-family dwelling, each unit in a multiple single-family dwelling (townhouse), lodging houses, bed and breakfast dwellings, apartments, condominiums, and dormitory suites having living areas, bedrooms, bathrooms, and kitchens. This term shall apply regardless of whether the unit is a permanent residence or a rental unit.

FUEL-BURNING APPLIANCE. Any appliance, equipment, device, machine, or system that may emit carbon monoxide. Examples of fuel-burning appliances include, but are not limited to, fireplaces, wood stoves, fuel-fired furnaces, fuel-fired boilers, space heaters with pilot lights or open flames, kerosene heaters, stoves, ovens, ranges, gas-powered clothes dryers, refrigerators that use gas or liquid fuel, generators, engines, torches, forklifts, compressors, pumps, welding equipment, pressure washers, and fuel-powered tools.

INTERNATIONAL CODE COUNCIL®
Copyright © 2019 ICC & NYSDOS. ALL RIGHTS RESERVED. Accessed by Lauren Gualdino (lgualdino@briarcliffmanor.org), (-) Order Number #100880972 on May 08, 2020 07:05 AM (PDT) pursuant to License Agreement with ICC & NYSDOS. No further reproduction, no

100880972

MOTOR VEHICLE RELATED OCCUPANCY. A building or portion thereof that is used for parking, storage, or repair of equipment and/or vehicles. The term motor vehicle related occupancy shall exclude structures that meet the definition of a carport or an open parking garage.

OCCUPIABLE SPACE. A room or enclosed space designed for human occupancy in which individuals congregate for amusement, educational, or similar purposes, or in which occupants are engaged at labor, and which is equipped with means of egress and light and ventilation facilities meeting the requirements of this code.

RESIDENTIAL BUILDING. A building that is a one-family dwelling, a two-family dwelling, or a building containing only townhouses.

SLEEPING AREA. A room or space that can be used, either on an occasional or permanent basis, for sleeping. Sleeping areas include, but are not limited to, bedrooms, finished rooms in basements, family rooms, recreation rooms or other similar areas in residential buildings, and places where children sleep in a day care facility.

SLEEPING UNIT. A room or space in which people sleep, which can also include permanent provisions for living, eating, and either sanitation or kitchen facilities, but not both. Such rooms and spaces that are also part of a dwelling unit are not sleeping units. Sleeping units include, but are not limited to, dormitory suites with living areas, bedrooms, and bathrooms; hotel guest rooms; bedrooms in boarding houses; patient sleeping rooms in hospitals, nursing homes or assisted living facilities; housing cells in a jail; or studio apartments with a kitchenette (i.e., countertop microwave, sink, refrigerator, and without a cooktop, range, or oven).

[NY] 915.3 Detection locations. Carbon monoxide detection shall be installed in the locations specified in Sections 915.3 through 915.3.3 plus any additional locations as required by the manufacturer of the carbon monoxide detection device. All carbon monoxide detectors shall be installed in locations that avoid dead air spaces, turbulent air spaces, fresh air returns, open windows, HVAC ducts, closed doors, and other such obstructions that could prevent carbon monoxide from reaching the detector. Where there is a conflict between the location requirements specified by this code and the location requirements specified by the manufacturer of the carbon monoxide detection device, the more restrictive shall govern.

Exception: Where Sections 915.3 through 915.3.3 require a room or area to be protected by multiple carbon monoxide detectors, one carbon monoxide detector may be provided in an approved location that satisfies all applicable requirements of Sections 915.3.1 through 915.3.3 or otherwise provides the room or area with adequate protection. The level of protection in adjacent rooms shall not be reduced by the elimination of an otherwise required detector.

[NY] 915.3.1 Residential buildings and commercial buildings that contain a fuel-burning appliance. Carbon monoxide detection shall be installed in residential buildings and commercial buildings in all rooms, occupiable space, dwelling units, sleeping areas, and sleeping units that contain a fuel-burning appliance.

Exceptions:

1. In sleeping areas and sleeping units where a fuel-burning appliance is located in an attached bathroom, utility room, closet, or space, a carbon monoxide detector shall be installed in a central or otherwise approved location in the sleeping area or sleeping unit.
2. In dwelling units and sleeping units where a fuel-burning appliance is located in a kitchen or kitchenette, a carbon monoxide detector shall be installed outside of the sleeping areas and within 10 feet (3048 mm) of the entrance to the sleeping areas.

[NY] 915.3.1.1 Rooms with an elevator shaft. When a room containing a fuel-burning appliance also contains an elevator that provides access to an upper level of a building, the carbon monoxide detector shall be installed between the fuel-burning appliance and the elevator.

[NY] 915.3.1.2 Rooms with communicating openings. Carbon monoxide detection shall be installed in a central or otherwise approved location in occupiable space, sleeping areas, and sleeping units that have a direct communicating opening to a room that contains a fuel-burning appliance.

[NY] 915.3.1.3 Dwelling units and sleeping units that contain a fuel-burning appliance. Carbon monoxide detection shall be installed outside of sleeping areas and within 10 feet (3048 mm) of the entrance to the sleeping areas in dwelling units and sleeping units that contain a fuel-burning appliance.

Exception: Carbon monoxide detection shall be installed in sleeping areas when required by Sections 915.3.1 through 915.3.1.2, Section 915.3.2, or Section 915.3.3, as applicable.

[NY] 915.3.2 Commercial buildings served by a fuel-burning forced-air furnace. Carbon monoxide detection shall be installed in a central or otherwise approved location in commercial buildings in the following locations when such location is served by a fuel-burning forced-air furnace:

1. In each HVAC zone on every floor level that is served by a fuel-burning forced air furnace.
2. In sleeping units, sleeping areas in day care facilities, and in every classroom in a Group E occupancy that is served by a fuel-burning forced-air furnace.
3. Outside of sleeping areas and within 10 feet (3048 mm) of the entrance to the sleeping areas in dwelling units.

Exceptions:

1. Carbon monoxide detection shall not be required to be installed in accordance with Section 915.3.2, Items 1 or 2, where carbon monoxide

INTERNATIONAL CODE COUNCIL®
Copyright © 2019 ICC & NYSDOS. ALL RIGHTS RESERVED. Accessed by Lauren Gualdino (lgualdino@briarcliffmanor.org), (-) Order Number #100880972 on May 08, 2020 07:05 AM (PDT) pursuant to License Agreement with ICC & NYSDOS. No further reproduction, no

100880972

detection is provided in each main duct leaving the furnace and the carbon monoxide alarm signals are automatically transmitted to an approved location that provides occupant notification.

2. Carbon monoxide detection shall not be required in sleeping areas, sleeping units, sleeping areas in day care facilities, and in every classroom in a Group E occupancy if a carbon monoxide detector is provided in the first room or area served by each main duct leaving the furnace and the carbon monoxide alarm signals are automatically transmitted to an approved location that provided occupant notification.

[NY] 915.3.3 Residential buildings and commercial buildings with an attached motor vehicle related occupancy. Carbon monoxide detection shall be installed in a central or otherwise approved location in each occupiable space in a commercial building and within 10 feet (3048 mm) of the entrance to sleeping areas and sleeping units in residential buildings and commercial buildings that:

1. Have a communicating opening with an attached motor vehicle related occupancy,
2. Share one or more common walls with an attached motor vehicle related occupancy, or
3. Are located one story above or below a motor vehicle related occupancy.

Exceptions: Carbon monoxide detection shall not be required:

1. Where a motor vehicle related occupancy connects to a building through an open-ended corridor, or
2. Where a carbon monoxide detector is provided in an approved location between a room and the motor vehicle related occupancy and the carbon monoxide alarm signals are automatically transmitted to an approved location that provides occupant notification.

[NY] 915.4 Carbon monoxide alarms and detection systems. Carbon monoxide detection shall be provided by either carbon monoxide alarms complying with Section 915.4.1 or carbon monoxide detection systems complying with Section 915.4.2.

[NY] 915.4.1 Carbon monoxide alarms. Carbon monoxide alarms shall only be installed in dwelling units, sleeping areas, and sleeping units and shall not be installed in locations where the code requires carbon monoxide detectors to be used. Carbon monoxide alarms shall comply with Sections 915.4.1 through 915.5.4.

Exception: Carbon monoxide alarms shall be allowed in buildings and spaces other than dwelling units, sleeping areas, and sleeping units in accordance with the exception to Section 915.4.1.1.

[NY] 915.4.1.1 Power source. Carbon monoxide alarms shall receive their primary power from the building wiring where such wiring is served from a commercial source, and when primary power is interrupted, shall receive power from a battery. Wiring shall be permanent and without a disconnecting switch other than that required for overcurrent protection.

Exceptions:

1. Carbon monoxide alarms powered by a 10-year battery shall be an acceptable alternative in residential buildings and commercial buildings without commercial power, and
   1.1. Existing residential buildings and commercial buildings unless otherwise required by the *Uniform Code*.
2. Carbon monoxide alarms installed in accordance with an earlier version of the *Uniform Code* may be cord-type or direct plug when permitted by such code.

[NY] 915.4.1.2 Carbon monoxide alarm listing. Carbon monoxide alarms shall be listed and labeled as complying with UL 2034 or CAN/CSA 6.19.

Exception: For uses and occupancies regulated by the Occupational Safety and Health Administration (OSHA), carbon monoxide alarms and carbon monoxide detectors that activate at levels in accordance with 49 CFR 1917.24(a), shall not be required to be listed in accordance with UL 2034 or CAN/CSA 6.19. Such carbon monoxide alarms and carbon monoxide detectors that are connected to fire alarm control panels shall be connected utilizing connections listed for fire alarm service.

[NY] 915.4.1.3 Combination alarms. A combination carbon monoxide/smoke alarm shall be an acceptable alternative to a carbon monoxide alarm, provided that:

1. The combination alarm is installed in a location and in a manner that satisfies the *Uniform Code* requirements for both carbon monoxide alarms and smoke alarms, or
2. The room(s), area(s), or space(s) that the combination alarm serves are also served by a code compliant smoke alarm or fire alarm system in the instances that a smoke alarm or fire alarm system is required by the *Uniform Code*.

[NY] 915.4.1.3.1 Combination alarm listing. Combination alarms shall be listed and labeled as complying with UL 2034 and UL 217.

Exception: For uses and occupancies regulated by the Occupational Safety and Health Administration (OSHA), carbon monoxide alarms and carbon monoxide detectors that activate at levels in accordance with 49 CFR 1917.24(a), shall not be required to be listed in accordance with UL 2034. Such carbon monoxide alarms and carbon monoxide detectors that are connected to fire alarm control panels shall be connected utilizing connections listed for fire alarm service.

[NY] 915.4.1.4 Installation requirements. Where required by Sections 915.1 through 915.5.2, carbon monoxide alarms shall be installed in accordance with Section 915, NFPA 720, and the manufacturer's installation instructions. Where there is a conflict between

INTERNATIONAL CODE COUNCIL®
Copyright © 2019 ICC & NYSDOS. ALL RIGHTS RESERVED. Accessed by Lauren Gualdino (lgualdino@briarcliffmanor.org), (-) Order Number #100880972 on May 08, 2020 07:05 AM (PDT) pursuant to License Agreement with ICC & NYSDOS. No further reproduction, no

100880972

the requirements of this code, NFPA 720, and the manufacturer's installation instructions, the manufacturer's installation instructions shall govern.

[NY] 915.4.2 Carbon monoxide detection systems. Carbon monoxide detection systems shall be an acceptable alternative to carbon monoxide alarms. Carbon monoxide detection systems shall comply with Sections 915.5.1 through 915.5.3.

[NY] 915.4.2.1 Carbon monoxide detector listing. Carbon monoxide detectors shall be listed and labeled as complying with UL 2075.

Exception: For uses and occupancies regulated by the Occupational Safety and Health Administration (OSHA), carbon monoxide alarms and carbon monoxide detectors that activate at levels in accordance with 49 CFR 1917.24(a), shall not be required to be listed in accordance with UL 2075. Such carbon monoxide alarms and carbon monoxide detectors that are connected to fire alarm control panels shall be connected utilizing connections listed for fire alarm service.

[NY] 915.4.2.2 Combination detector listing. Combination carbon monoxide/smoke detectors that are listed and labeled as complying with UL 2075 and UL 268 shall be an acceptable alternative to carbon monoxide detectors in carbon monoxide detection systems.

Exception: For uses and occupancies regulated by the Occupational Safety and Health Administration (OSHA), carbon monoxide alarms and carbon monoxide detectors that activate at levels in accordance with 49 CFR 1917.24(a), shall not be required to be listed in accordance with UL 2075. Such carbon monoxide alarms and carbon monoxide detectors that are connected to fire alarm control panels shall be connected utilizing connections listed for fire alarm service.

[NY] 915.4.2.3 Power source. The power source for carbon monoxide detection systems shall comply with NFPA 720.

[NY] 915.4.3 Alternative listing. Products that are listed for fire service and that meet the requirements of NFPA 720 Section 4.3.4 shall be deemed to meet the listing requirements of Section 915.

[NY] 915.5 Occupant notification. Building occupants shall be notified of the presence of carbon monoxide through the use of audible notification, visible notification, or both. The selection, design, and location of notification appliances shall be in accordance with this Section 915 and NFPA 720.

[NY] 915.5.1 Audible notification. The selection, design, and location of audible notification appliances shall be based on the sound pressure level produced by the appliance, the average ambient sound level in the room being protected, and the maximum sound level in the room being protected. The anticipated average ambient sound level and maximum sound level shall be consistent with the proposed use. The average ambient sound level shall be determined in accordance with any of the following:

1. NFPA 720, Table A.6.4.2 (Average Ambient Sound Level According to Location),
2. The actual sound levels in the room being protected as determined and documented by the system designer, or
3. Approved published literature.

[NY] 915.5.1.1 Maximum distance between audible notification appliances. The maximum distance between audible notification appliances shall not exceed 55 feet (16 764 mm) for any occupancy when NFPA 720 Table A.6.4.2 is applied.

[NY] 915.5.1.2 Additional audible alarms. Additional audible alarms shall be:

1. Installed in sufficient locations to ensure compliance with Sections 915.5 through 915.5.1.1,
2. Provided to ensure that not more than one door or wall is located between an audible alarm and an occupiable space, sleeping area, or sleeping unit, and
3. Located in areas that comply with the requirements of Section 915 and the manufacturer's installation instructions.

[NY] 915.5.2 Visible alarm notification. Visible carbon monoxide alarm notification appliances shall be installed in new commercial buildings in the instances that the code requires visible smoke alarms. Visible alarms shall be activated by the in-room carbon monoxide alarm or detector.

[NY] 915.5.3 Interconnection of multiple carbon monoxide notification appliances. When more than one carbon monoxide alarm is installed in a dwelling unit, sleeping unit, sleeping area, occupiable space, or HVAC zone, all such alarms shall be interconnected in such a manner that the activation of one alarm or detector shall activate all carbon monoxide notification appliances throughout the individual dwelling unit, sleeping unit, sleeping area, occupiable space, or HVAC zone. Interconnection of alarms shall comply with NFPA 720 Sections 9.6.4.1 through 9.6.4.5 and 9.6.7.

Exception: Interconnection is not required where battery operated, cord-type or direct plug carbon monoxide alarms or detectors are permitted.

[NY] 915.5.4 Group E occupancies and I-2 hospitals. Carbon monoxide alarm signals shall be automatically transmitted to an on-site staffed location in Group E occupancies and I-2 hospitals.

Exceptions:

1. Group E occupancies with an occupant load of 30 or less.
2. Existing buildings with carbon monoxide alarms powered by a 10-year battery, plug-in, or chord-type appliance.
3. Existing Group I-2 hospitals.

INTERNATIONAL CODE COUNCIL®
Copyright © 2019 ICC & NYSDOS. ALL RIGHTS RESERVED. Accessed by Lauren Gualdino (lgualdino@briarcliffmanor.org), (-) Order Number #100880972 on May 08, 2020 07:05 AM (PDT) pursuant to License Agreement with ICC & NYSDOS. No further reproduction, no

100880972

[NY] 915.6 Maintenance and replacement. Carbon monoxide alarms, carbon monoxide detectors, carbon monoxide detection systems, and alarm control units shall be maintained in good working order in accordance with Section 915, NFPA 720, and the manufacturer's instructions/recommendations. Carbon monoxide alarms and carbon monoxide detectors shall be replaced when they become inoperable, cease to operate as intended, begin producing end-of-life signals, or when otherwise required by the manufacturer's instructions or manufacturer's recommendations.

[NY] 915.6.1 Existing buildings with hardwired alarms. Carbon monoxide detection and notification devices that receive primary power from the building wiring and that are installed pursuant to an earlier version of the *Uniform Code* and in full compliance with such earlier code shall be maintained in accordance with the requirements of such code.

[NY] 915.6.2 Existing buildings with a battery, plug, or cord-powered carbon monoxide alarm. Carbon monoxide alarms that are powered solely by a battery, plug, or cord shall be maintained in an operating condition. At such time that the battery, plug, or cord-powered carbon monoxide alarm fails to operate or otherwise requires replacement, a new carbon monoxide alarm that is powered by either a 10-year battery or the building's wiring shall be installed in the location and in the manner required by Section 915, plus any additional carbon monoxide alarms as necessary to satisfy the location and notification requirements of Section 915.

[NY] 915.6.2.1 Replaced alarms. When an existing battery, plug, or cord-powered alarm is replaced pursuant to Section 915.6.2, the installation of one or more new alarms to satisfy the requirements of Section 915 shall include the installation of additional smoke alarms, carbon monoxide alarms, combination alarms, or any combination thereof as necessary to ensure that the level of protection that had been afforded by a carbon monoxide alarm or combination alarm is not reduced by the installation of a new alarm in a new location for the purpose of satisfying the requirements of this section.

[NY] 915.6.3 Enclosed parking garages. Carbon monoxide and nitrogen dioxide detectors installed in enclosed parking garages in accordance with Section 404.1 of the *Mechanical Code of New York State* shall be maintained in accordance with the manufacturer's instructions and their listing. Detectors that become inoperable or begin producing end-of-life signals shall be replaced.

[NY] 915.6.4 Testing. Carbon monoxide alarms, carbon monoxide detectors, carbon monoxide detection systems, and alarm control units shall be periodically tested in accordance with NFPA 720 and the manufacturer's instructions.

SECTION 916
GAS DETECTION SYSTEMS

916.1 Gas detection systems. Gas detection systems required by this code shall comply with Sections 916.2 through 916.11.

[NY] 916.2 Permits. Permits shall be required as set forth in Section 105.2.

916.2.1 Construction documents. Documentation of the gas detection system design and equipment to be used that demonstrates compliance with the requirements of this code shall be provided with the application for permit.

916.3 Equipment. Gas detection system equipment shall be designed for use with the gases being detected and shall be installed in accordance with manufacturer's instructions.

916.4 Power connections. Gas detection systems shall be permanently connected to the building electrical power supply or shall be permitted to be cord connected to an unswitched receptacle using an *approved* restraining means that secures the plug to the receptacle.

916.5 Emergency and standby power. Standby or emergency power shall be provided or the gas detection system shall initiate a trouble signal at an *approved* location if the power supply is interrupted.

916.6 Sensor locations. Sensors shall be installed in approved locations where leaking gases are expected to accumulate.

916.7 Gas sampling. Gas sampling shall be performed continuously. Sample analysis shall be processed immediately after sampling, except as follows:

1. For HPM gases, sample analysis shall be performed at intervals not exceeding 30 minutes.
2. For toxic gases that are not HPM, sample analysis shall be performed at intervals not exceeding 5 minutes, in accordance with Section 6004.2.2.7.
3. Where a less frequent or delayed sampling interval is *approved*.

916.8 System activation. A gas detection alarm shall be initiated where any sensor detects a concentration of gas exceeding the following thresholds:

1. For flammable gases, a gas concentration exceeding 25 percent of the lower flammability limit (LFL).
2. For nonflammable gases, a gas concentration exceeding one-half of the IDLH, unless a different threshold is specified by the section of this code requiring a gas detection system.

Upon activation of a gas detection alarm, alarm signals or other required responses shall be as specified by the section of this code requiring a gas detection system. Audible and visible alarm signals associated with a gas detection alarm shall be distinct from fire alarm and carbon monoxide alarm signals.

INTERNATIONAL CODE COUNCIL®
Copyright © 2019 ICC & NYSDOS. ALL RIGHTS RESERVED. Accessed by Lauren Gualdino (lgualdino@briarcliffmanor.org), (-) Order Number #100880972 on May 08, 2020 07:05 AM (PDT) pursuant to License Agreement with ICC & NYSDOS. No further reproduction, no

100880972

916.9 Signage. Signs shall be provided adjacent to gas detection system alarm signaling devices that advise occupants of the nature of the signals and actions to take in response to the signal.

916.10 Fire alarm system connections. Gas sensors and gas detection systems shall not be connected to fire alarm systems unless *approved* and connected in accordance with the fire alarm equipment manufacturer's instructions.

916.11 Inspection, testing and sensor calibration. Inspection and testing of gas detection systems shall be conducted not less than annually. Sensor calibration shall be confirmed at the time of sensor installation and calibration shall be performed at the frequency specified by the sensor manufacturer.

SECTION 917
MASS NOTIFICATION SYSTEMS

917.1 College and university campuses. Prior to construction of a new building requiring a fire alarm system on a multiple-building college or university campus having a cumulative building occupant load of 1,000 or more, a mass notification risk analysis shall be conducted in accordance with NFPA 72. Where the risk analysis determines a need for mass notification, an *approved* mass notification system shall be provided in accordance with the findings of the risk analysis.

INTERNATIONAL CODE COUNCIL®
Copyright © 2019 ICC & NYSDOS. ALL RIGHTS RESERVED. Accessed by Lauren Gualdino (lgualdino@briarcliffmanor.org), (-) Order Number #100880972 on May 08, 2020 07:05 AM (PDT) pursuant to License Agreement with ICC & NYSDOS. No further reproduction, no

100880972

CHAPTER 10

MEANS OF EGRESS

SECTION 1001 ADMINISTRATION

1001.1 General. Buildings or portions thereof shall be provided with a *means of egress* system as required by this chapter. The provisions of this chapter shall control the design, construction and arrangement of *means of egress* components required to provide an *approved means of egress* from structures and portions thereof. Sections 1003 through 1030 shall apply to new construction. Section 1031 shall apply to existing buildings.

Exception: Detached one- and two-family dwellings and multiple single-family dwellings (townhouses) not more than three stories above grade plane in height with a separate means of egress and their accessory structures shall comply with the *Residential Code of New York State*.

[NY] 1001.2 Minimum requirements. It shall be unlawful to alter a building or structure in a manner that will reduce the number of *exits* or the minimum width or required capacity of the *means of egress* to less than required by this code.

SECTION 1002 DEFINITIONS

[BE] 1002.1 Definitions. The following terms are defined in Chapter 2:

ACCESSIBLE MEANS OF EGRESS.
AISLE.
AISLE ACCESSWAY.
ALTERNATING TREAD DEVICE.
AREA OF REFUGE.
BLEACHERS.
BREAKOUT.
COMMON PATH OF EGRESS TRAVEL.
CORRIDOR.
DOOR, BALANCED.
EGRESS COURT.
EMERGENCY ESCAPE AND RESCUE OPENING.
EXIT.
EXIT ACCESS.
EXIT ACCESS DOORWAY.
EXIT ACCESS RAMP.
EXIT ACCESS STAIRWAY.
EXIT DISCHARGE.
EXIT DISCHARGE, LEVEL OF.
EXIT PASSAGEWAY.
EXTERIOR EXIT RAMP.
EXTERIOR EXIT STAIRWAY.
FIRE EXIT HARDWARE.
FIXED SEATING.
FLIGHT.
FLOOR AREA, GROSS.
FLOOR AREA, NET.
FOLDING AND TELESCOPIC SEATING.
GRANDSTAND.
GUARD.
HANDRAIL.
HORIZONTAL EXIT.
INTERIOR EXIT RAMP.
INTERIOR EXIT STAIRWAY.
LOW ENERGY POWER-OPERATED DOOR.
MEANS OF EGRESS.
MERCHANDISE PAD.
NOSING.
OCCUPANT LOAD.
OPEN-AIR ASSEMBLY SEATING.
OPEN-ENDED CORRIDOR.
PANIC HARDWARE.
PHOTOLUMINESCENT.
POWER-ASSISTED DOOR.
POWER-OPERATED DOOR.
PUBLIC WAY.
RAMP.
SCISSOR STAIRWAY.
SELF-LUMINOUS.
SMOKE-PROTECTED ASSEMBLY SEATING.
STAIR.
STAIRWAY.
STAIRWAY, INTERIOR EXIT.
STAIRWAY, SPIRAL.
WINDER.

SECTION 1003 GENERAL MEANS OF EGRESS

[BE] 1003.1 Applicability. The general requirements specified in Sections 1003 through 1015 shall apply to all three elements of the *means of egress* system, in addition to those specific requirements for the *exit access*, the *exit* and the *exit discharge* detailed elsewhere in this chapter.

[BE] 1003.2 Ceiling height. The *means of egress* shall have a ceiling height of not less than 7 feet 6 inches (2286 mm) above the finished floor.

Exceptions:

1. Sloped ceilings in accordance with Section 1207.2 of the *Building Code of New York State*.
2. Ceilings of *dwelling units* and *sleeping units* within residential occupancies in accordance with Section 1207.2 of the *Building Code of New York State*.
3. Allowable projections in accordance with Section 1003.3.

INTERNATIONAL CODE COUNCIL®
Copyright © 2019 ICC & NYSDOS. ALL RIGHTS RESERVED. Accessed by Lauren Gualdino (lgualdino@briarcliffmanor.org), (-) Order Number #100880972 on May 08, 2020 07:05 AM (PDT) pursuant to License Agreement with ICC & NYSDOS. No further reproduction, no

100880972

4. *Stair* headroom in accordance with Section 1011.3.
5. Door height in accordance with Section 1010.1.1.
6. *Ramp* headroom in accordance with Section 1012.5.2.
7. The clear height of floor levels in vehicular and pedestrian traffic areas of public and private parking garages in accordance with Section 406.2.2 of the *Building Code of New York State*.
8. Areas above and below *mezzanine* floors in accordance with Section 505.2 of the *Building Code of New York State*.

[BE] 1003.3 Protruding objects. Protruding objects on circulation paths shall comply with the requirements of Sections 1003.3.1 through 1003.3.4.

[BE] 1003.3.1 Headroom. Protruding objects are permitted to extend below the minimum ceiling height required by Section 1003.2 where a minimum headroom of 80 inches (2032 mm) is provided over any circulation paths, including walks, *corridors*, *aisles* and passageways. Not more than 50 percent of the ceiling area of a *means of egress* shall be reduced in height by protruding objects.

Exception: Door closers and stops shall not reduce headroom to less than 78 inches (1981 mm).

A barrier shall be provided where the vertical clearance above a circulation path is less than 80 inches (2032 mm) high above the finished floor. The leading edge of such a barrier shall be located 27 inches (686 mm) maximum above the finished floor.

[BE] 1003.3.2 Post-mounted objects. A free-standing object mounted on a post or pylon shall not overhang that post or pylon more than 4 inches (102 mm) where the lowest point of the leading edge is more than 27 inches (686 mm) and less than 80 inches (2032 mm) above the finished floor. Where a sign or other obstruction is mounted between posts or pylons and the clear distance between the posts or pylons is greater than 12 inches (305 mm), the lowest edge of such sign or obstruction shall be 27 inches (686 mm) maximum or 80 inches (2032 mm) minimum above the finished floor or ground.

Exception: These requirements shall not apply to sloping portions of *handrails* between the top and bottom riser of *stairs* and above the *ramp* run.

[BE] 1003.3.3 Horizontal projections. Objects with leading edges more than 27 inches (685 mm) and not more than 80 inches (2030 mm) above the finished floor shall not project horizontally more than 4 inches (102 mm) into the circulation path.

Exception: *Handrails* are permitted to protrude $4^1/_2$ inches (114 mm) from the wall or guard.

[BE] 1003.3.4 Clear width. Protruding objects shall not reduce the minimum clear width of *accessible routes*.

[BE] 1003.4 Slip-resistant surface. Circulation paths of the *means of egress* shall have a slip-resistant surface and be securely attached.

[BE] 1003.5 Elevation change. Where changes in elevation of less than 12 inches (305 mm) exist in the *means of egress*, sloped surfaces shall be used. Where the slope is greater than one unit vertical in 20 units horizontal (5-percent slope), *ramps* complying with Section 1012 shall be used. Where the difference in elevation is 6 inches (152 mm) or less, the *ramp* shall be equipped with either *handrails* or floor finish materials that contrast with adjacent floor finish materials.

Exceptions:

1. A single step with a maximum riser height of 7 inches (178 mm) is permitted for buildings with occupancies in Groups F, H, R-2, R-3, S and U at exterior doors not required to be accessible by Chapter 11 of the *Building Code of New York State*.
2. A *stair* with a single riser or with two risers and a tread is permitted at locations not required to be *accessible* by Chapter 11 of the *Building Code of New York State*, where the risers and treads comply with Section 1011.5, the minimum depth of the tread is 13 inches (330 mm) and not less than one *handrail* complying with Section 1014 is provided within 30 inches (762 mm) of the centerline of the normal path of egress travel on the *stair*.
3. A step is permitted in *aisles* serving seating that has a difference in elevation less than 12 inches (305 mm) at locations not required to be *accessible* by Chapter 11 of the *Building Code of New York State*, provided that the risers and treads comply with Section 1029.14 and the *aisle* is provided with a *handrail* complying with Section 1029.16.

Throughout a story in a Group I-2 occupancy, any change in elevation in portions of the *means of egress* that serve nonambulatory persons shall be by means of a *ramp* or sloped walkway.

[BE] 1003.6 Means of egress continuity. The path of egress travel along a *means of egress* shall not be interrupted by a building element other than a *means of egress* component as specified in this chapter. Obstructions shall not be placed in the minimum width or required capacity of a *means of egress* component except projections permitted by this chapter. The minimum width or required capacity of a *means of egress* system shall not be diminished along the path of egress travel.

[BE] 1003.7 Elevators, escalators and moving walks. Elevators, escalators and moving walks shall not be used as a component of a required *means of egress* from any other part of the building.

Exception: Elevators used as an *accessible means of egress* in accordance with Section 1009.4.

SECTION 1004
OCCUPANT LOAD

[BE] 1004.1 Design occupant load. In determining *means of egress* requirements, the number of occupants for whom *means of egress* facilities are provided shall be determined in accordance with this section.

[BE] 1004.2 Cumulative occupant loads. Where the path of egress travel includes intervening rooms, areas or spaces, cumulative *occupant loads* shall be determined in accordance with this section.

[BE] 1004.2.1 Intervening spaces or accessory areas. Where occupants egress from one or more rooms, areas or spaces through others, the design *occupant load* shall be the combined *occupant load* of interconnected accessory or intervening spaces. Design of egress path capacity shall

INTERNATIONAL CODE COUNCIL®
Copyright © 2019 ICC & NYSDOS. ALL RIGHTS RESERVED. Accessed by Lauren Gualdino (lgualdino@briarcliffmanor.org), (-) Order Number #100880972 on May 08, 2020 07:05 AM (PDT) pursuant to License Agreement with ICC & NYSDOS. No further reproduction, no

100880972

be based on the cumulative portion of *occupant loads* of all rooms, areas or spaces to that point along the path of egress travel.

[BE] 1004.2.2 Adjacent levels for mezzanines. That portion of the *occupant load* of a *mezzanine* with required egress through a room, area or space on an adjacent level shall be added to the *occupant load* of that room, area or space.

[BE] 1004.2.3 Adjacent stories. Other than for the egress components designed for convergence in accordance with Section 1005.6, the *occupant load* from separate stories shall not be added.

[BE] 1004.3 Multiple-function occupant load. Where an area under consideration contains multiple functions having different occupant load factors, the design occupant load for such area shall be based on the floor area of each function calculated independently.

[BE] 1004.4 Multiple occupancies. Where a building contains two or more occupancies, the *means of egress* requirements shall apply to each portion of the building based on the occupancy of that space. Where two or more occupancies utilize portions of the same *means of egress* system, those egress components shall meet the more stringent requirements of all occupancies that are served.

1004.5 Areas without fixed seating. The number of occupants shall be computed at the rate of one occupant per unit of area as prescribed in Table 1004.5. For areas without *fixed seating*, the occupant load shall be not less than that number determined by dividing the floor area under consideration by the *occupant load* factor assigned to the function of the space as set forth in Table 1004.5. Where an intended function is not listed in Table 1004.5, the *fire code official* shall establish a function based on a listed function that most nearly resembles the intended function.

Exception: Where *approved* by the *fire code official*, the actual number of occupants for whom each occupied space, floor or building is designed, although less than those determined by calculation, shall be permitted to be used in the determination of the design *occupant load*.

[BE] 1004.5.1 Increased occupant load. The *occupant load* permitted in any building, or portion thereof, is permitted to be increased from that number established for the occupancies in Table 1004.5, provided that all other requirements of the code are met based on such modified number and the *occupant load* does not exceed one occupant per 7 square feet (0.65 m^2) of occupiable floor space. Where required by the *fire code official*, an *approved aisle*, seating or fixed equipment diagram substantiating any increase in *occupant load* shall be submitted. Where required by the *fire code official*, such diagram shall be posted.

[BE] 1004.6 Fixed seating. For areas having fixed seats and *aisles*, the *occupant load* shall be determined by the number of fixed seats installed therein. The *occupant load* for areas in which *fixed seating* is not installed, such as waiting spaces, shall be determined in accordance with Section 1004.5 and added to the number of fixed seats.

The *occupant load* of wheelchair spaces and the associated companion seat shall be based on one occupant for each wheelchair space and one occupant for the associated com-

[BE] TABLE 1004.5
MAXIMUM FLOOR AREA ALLOWANCES PER OCCUPANT

FUNCTION OF SPACE	OCCUPANT LOAD FACTOR[a]
Accessory storage areas, mechanical equipment room	300 gross
Agricultural building	300 gross
Aircraft hangars	500 gross
Airport terminal	
Baggage claim	20 gross
Baggage handling	300 gross
Concourse	100 gross
Waiting areas	15 gross
Assembly	
Gaming floors (keno, slots, etc.)	11 gross
Exhibit gallery and museum	30 net
Assembly with fixed seats	See Section 1004.4
Assembly without fixed seats	
Concentrated (chairs only – not fixed)	7 net
Standing space	5 net
Unconcentrated (tables and chairs)	15 net
Bowling centers, allow 5 persons for each lane including 15 feet of runway, and for additional areas	7 net
Business areas	150 gross
Concentrated business use areas	See Section 1004.8
Courtrooms – other than fixed seating areas	40 net
Day care	35 net
Dormitories	50 gross
Educational	
Classroom area	20 net
Shops and other vocational room areas	50 net
Exercise rooms	50 gross
Group H-5 fabrication and manufacturing areas	200 gross
Industrial areas	100 gross
Institutional areas	
Inpatient treatment areas	240 gross
Outpatient areas	100 gross
Sleeping areas	120 gross
Kitchens, commercial	200 gross
Library	
Reading rooms	50 net
Stack area	100 gross
Locker rooms	50 gross
Mall buildings – covered and open	See Section 402.8.2 of the *Building Code of New York State*
Mercantile	60 gross
Storage, stock, shipping areas	300 gross
Parking garages	200 gross
Residential	200 gross
Skating rinks, swimming pools	
Rink and pool	50 gross
Decks	15 gross
Stages and platforms	15 net
Warehouses	500 gross

For SI: 1 square foot = 0.0929 m^2, 1 foot = 304.8 mm.

a. Floor area in square feet per occupant.

INTERNATIONAL CODE COUNCIL®
Copyright © 2019 ICC & NYSDOS. ALL RIGHTS RESERVED. Accessed by Lauren Gualdino (lgualdino@briarcliffmanor.org), (-) Order Number #100880972 on May 08, 2020 07:05 AM (PDT) pursuant to License Agreement with ICC & NYSDOS. No further reproduction, no

100880972

panion seat provided in accordance with Section 1108.2.3 of the *Building Code of New York State*.

For areas having *fixed seating* without dividing arms, the *occupant load* shall be not less than the number of seats based on one person for each 18 inches (457 mm) of seating length.

The *occupant load* of seating booths shall be based on one person for each 24 inches (610 mm) of booth seat length measured at the backrest of the seating booth.

[BE] 1004.7 Outdoor areas. *Yards*, patios, occupied roofs *courts* and similar outdoor areas accessible to and usable by the building occupants shall be provided with *means of egress* as required by this chapter. The *occupant load* of such outdoor areas shall be assigned by the *fire code official* in accordance with the anticipated use. Where outdoor areas are to be used by persons in addition to the occupants of the building, and the path of egress travel from the outdoor areas passes through the building, *means of egress* requirements for the building shall be based on the sum of the *occupant loads* of the building plus the outdoor areas.

Exceptions:

1. Outdoor areas used exclusively for service of the building need only have one *means of egress*.
2. Both outdoor areas associated with Group R-3 and individual dwelling units of Group R-2.

[BE] 1004.8 Concentrated business use areas. The occupant load factor for concentrated business use shall be applied to telephone call centers, trading floors, electronic data processing centers and similar business use areas with a higher density of occupants than would normally be expected in a typical business occupancy environment. Where approved by the building official, the occupant load for concentrated business use areas shall be the actual occupant load, but not less than one occupant per 50 square feet (4.65 m^2) of gross occupiable floor space.

[BE] 1004.9 Posting of occupant load. Every room or space that is an assembly occupancy shall have the *occupant load* of the room or space posted in a conspicuous place, near the main *exit* or *exit access* doorway from the room or space, for the intended configurations. Posted signs shall be of an *approved* legible permanent design and shall be maintained by the owner or the owner's authorized agent.

SECTION 1005
MEANS OF EGRESS SIZING

[BE] 1005.1 General. All portions of the *means of egress* system shall be sized in accordance with this section.

Exception: *Aisles* and *aisle accessways* in rooms or spaces used for assembly purposes complying with Section 1029.

[BE] 1005.2 Minimum width based on component. The minimum width, in inches (mm), of any *means of egress* components shall be not less than that specified for such component, elsewhere in this code.

[BE] 1005.3 Required capacity based on occupant load. The required capacity, in inches (mm), of the *means of egress* for any room, area, space or story shall be not less than that determined in accordance with Sections 1005.3.1 and 1005.3.2:

[BE] 1005.3.1 Stairways. The capacity, in inches, of *means of egress stairways* shall be calculated by multiplying the *occupant load* served by such *stairways* by a means of *egress* capacity factor of 0.3 inch (7.6 mm) per occupant. Where *stairways* serve more than one story, only the *occupant load* of each story considered individually shall be used in calculating the required capacity of the *stairways* serving that story.

Exceptions:

1. For other than Group H and I-2 occupancies, the capacity, in inches, of *means of egress stairways* shall be calculated by multiplying the *occupant load* served by such *stairways* by a *means of egress* capacity factor of 0.2 inches (5.1 mm) per occupant in buildings equipped throughout with an *automatic sprinkler system* installed in accordance with Section 903.3.1.1 or 903.3.1.2 and an emergency voice/alarm communication system in accordance with Section 907.5.2.2.
2. Facilities with *smoke-protected assembly seating* shall be permitted to use the capacity factors in Table 1029.6.2 indicated for stepped *aisles* for *exit access* or *exit stairways* where the entire path for *means of egress* from the seating to the *exit discharge* is provided with a smoke control system complying with Section 909.
3. Facilities with *open-air assembly seating* shall be permitted to the capacity factors in Section 1029.6.3 indicated for stepped *aisles* for *exit access* or *exit stairways* where the entire path for *means of egress* from the seating to the *exit discharge* is open to the outdoors.

[BE] 1005.3.2 Other egress components. The capacity, in inches, of *means of egress* components other than *stairways* shall be calculated by multiplying the *occupant load* served by such component by a *means of egress* capacity factor of 0.2 inches (5.1 mm) per occupant.

Exceptions:

1. For other than Group H and I-2 occupancies, the capacity, in inches, of *means of egress* components other than *stairways* shall be calculated by multiplying the *occupant load* served by such component by a *means of egress* capacity factor of 0.15 inches (3.8 mm) per occupant in buildings equipped throughout with an *automatic sprinkler system* installed in accordance with Section 903.3.1.1 or 903.3.1.2 and an emergency voice/alarm communication system in accordance with Section 907.5.2.2.
2. Facilities with *smoke-protected assembly seating* shall be permitted to use the capacity factors in Table 1029.6.2 indicated for level or ramped aisles for *means of egress* components other than *stairways* where the entire path for *means of egress* from the seating to the *exit discharge* is provided with a smoke control system complying with Section 909.
3. Facilities with *open-air assembly seating* shall be permitted to the capacity factors in Section 1029.6.3 indicated for level or ramped aisles for

INTERNATIONAL CODE COUNCIL®
Copyright © 2019 ICC & NYSDOS. ALL RIGHTS RESERVED. Accessed by Lauren Gualdino (lgualdino@briarcliffmanor.org), (-) Order Number #100880972 on May 08, 2020 07:05 AM (PDT) pursuant to License Agreement with ICC & NYSDOS. No further reproduction, no

100880972

means of egress components other than *stairways* where the entire path for *means of egress* from the seating to the *exit discharge* is open to the outdoors.

[BE] 1005.4 Continuity. The minimum width or required capacity of the *means of egress* required from any story of a building shall not be reduced along the path of egress travel until arrival at the *public way*.

[BE] 1005.5 Distribution of minimum width and required capacity. Where more than one *exit*, or access to more than one *exit*, is required, the *means of egress* shall be configured such that the loss of any one *exit*, or access to one *exit*, shall not reduce the available capacity or width to less than 50 percent of the required capacity or width.

[BE] 1005.6 Egress convergence. Where the *means of egress* from stories above and below converge at an intermediate level, the capacity of the *means of egress* from the point of convergence shall be not less than the largest minimum width or the sum of the required capacities for the *stairways* or *ramps* serving the two adjacent stories, whichever is larger.

[BE] 1005.7 Encroachment. Encroachments into the required *means of egress* width shall be in accordance with the provisions of this section.

[BE] 1005.7.1 Doors. Doors, when fully opened, shall not reduce the required width by more than 7 inches (178 mm). Doors in any position shall not reduce the required width by more than one-half.

Exceptions:

1. Surface-mounted latch release hardware shall be exempt from inclusion in the 7-inch maximum (178 mm) encroachment where both of the following conditions exists:
   1.1. The hardware is mounted to the side of the door facing away from the adjacent wall where the door is in the open position.
   1.2. The hardware is mounted not less than 34 inches (865 mm) nor more than 48 inches (1219 mm) above the finished floor.
2. The restrictions on door swing shall not apply to doors within individual *dwelling units* and *sleeping units* of Group R-2 occupancies and *dwelling units* of Group R-3 occupancies.

[BE] 1005.7.2 Other projections. *Handrail* projections shall be in accordance with the provisions of Section 1014.8. Other nonstructural projections such as trim and similar decorative features shall be permitted to project into the required width not more than $1^1/_2$ inches (38 mm) on each side.

Exception: Projections are permitted in corridors within Group I-2, Condition 1 in accordance with Section 407.4.3 of the *Building Code of New York State*.

[BE] 1005.7.3 Protruding objects. Protruding objects shall comply with the applicable requirements of Section 1003.3.

SECTION 1006
NUMBERS OF EXITS AND EXIT ACCESS DOORWAYS

[BE] 1006.1 General. The number of *exits* or *exit access doorways* required within the *means of egress* system shall comply with the provisions of Section 1006.2 for spaces, including *mezzanines*, and Section 1006.3 for *stories* or occupied roofs.

[BE] 1006.2 Egress from spaces. Rooms, areas or spaces, including *mezzanines*, within a story or *basement* shall be provided with the number of *exits* or access to *exits* in accordance with this section.

[BE] 1006.2.1 Egress based on occupant load and common path of egress travel distance. Two *exits* or *exit access doorways* from any space shall be provided where the design *occupant load* or the *common path of egress travel* distance exceeds the values listed in Table 1006.2.1. The cumulative occupant load from adjacent rooms, areas or spaces shall be determined in accordance with Section 1004.2.

Exceptions:

1. The number of exits from foyers, lobbies, vestibules or similar spaces need not be based on cumulative occupant loads for areas discharging through such spaces, but the capacity of the exits from such spaces shall be based on applicable cumulative occupant loads.
2. Care suites in Group I-2 occupancies complying with Section 407.4 of the *Building Code of New York State*.

[BE] 1006.2.1.1 Three or more exits or exit access doorways. Three *exits* or *exit access doorways* shall be provided from any space with an *occupant load* of 501 to 1,000. Four *exits* or *exit access doorways* shall be provided from any space with an *occupant load* greater than 1,000.

[BE] 1006.2.2 Egress based on use. The numbers of *exits* or access to *exits* shall be provided in the uses described in Sections 1006.2.2.1 through 1006.2.2.6.

[BE] 1006.2.2.1 Boiler, incinerator and furnace rooms. Two *exit access doorways* are required in boiler, incinerator and furnace rooms where the area is over 500 square feet (46 m^2) and any fuel-fired equipment exceeds 400,000 British thermal units (Btu) (422 000 KJ) input capacity. Where two *exit access doorways* are required, one is permitted to be a fixed ladder or an *alternating tread device*. *Exit access doorways* shall be separated by a horizontal distance equal to one-half the length of the maximum overall diagonal dimension of the room.

[BE] 1006.2.2.2 Refrigeration machinery rooms. Machinery rooms larger than 1,000 square feet (93 m^2) shall have not less than two *exits* or *exit access doorways*. Where two *exit access doorways* are required, one such doorway is permitted to be served by a fixed ladder or an *alternating tread device*. *Exit access* doorways shall be separated by a horizontal distance equal to one-half the maximum horizontal dimension of the room.

INTERNATIONAL CODE COUNCIL®
Copyright © 2019 ICC & NYSDOS. ALL RIGHTS RESERVED. Accessed by Lauren Gualdino (lgualdino@briarcliffmanor.org), (-) Order Number #100880972 on May 08, 2020 07:05 AM (PDT) pursuant to License Agreement with ICC & NYSDOS. No further reproduction, no

100880972

All portions of machinery rooms shall be within 150 feet (45 720 mm) of an *exit* or *exit access doorway*. An increase in *exit access* travel distance is permitted in accordance with Section 1017.1.

Exit and *exit access doorways* shall swing in the direction of egress travel, regardless of the *occupant load* served. *Exit* and *exit access doorways* shall be tight fitting and self-closing.

[BE] 1006.2.2.3 Refrigerated rooms or spaces. Rooms or spaces having a floor area larger than 1,000 square feet (93 m^2), containing a refrigerant evaporator and maintained at a temperature below 68°F (20°C), shall have access to not less than two *exits* or *exit access doorways*.

Exit access travel distance shall be determined as specified in Section 1017.1, but all portions of a refrigerated room or space shall be within 150 feet (45 720 mm) of an *exit* or *exit* access *doorway* where such rooms are not protected by an *approved automatic sprinkler system*. Egress is allowed through adjoining refrigerated rooms or spaces.

Exception: Where using refrigerants in quantities limited to the amounts based on the volume set forth in the *Mechanical Code of New York State*.

[BE] 1006.2.2.4 Group I-4 means of egress. Group I-4 facilities, rooms or spaces where care is provided for more than 10 children that are $2^1/_2$ years of age or less, shall have access to not less than two *exits* or *exit access doorways*.

[BE] 1006.2.2.5 Vehicular ramps. Vehicular ramps shall not be considered as an *exit access ramp* unless pedestrian facilities are provided.

[BE] 1006.2.2.6 Groups R-3 and R-4. Where Group R-3 occupancies are permitted by Section 903.2.8 to be protected by an automatic sprinkler system installed in accordance with Section 903.3.1.3, the exit access travel distance for Group R-3 shall be not more than 125 feet (38 100 mm). Where Group R-4 occupancies are permitted by Section 903.2.8 to be protected by an automatic sprinkler system installed in accordance with Section 903.3.1.3, the exit access travel distance for Group R-4 shall be not more than 75 feet (22 860 mm).

[BE] 1006.3 Egress from stories or occupied roofs. The *means of egress* system serving any *story* or occupied roof shall be provided with the number of separate and distinct *exits* or access to *exits* based on the aggregate *occupant load* served in accordance with this section. Where stairways serve more than one story, only the occupant load of each story

[BE] TABLE 1006.2.1
SPACES WITH ONE EXIT OR EXIT ACCESS DOORWAY

OCCUPANCY	MAXIMUM OCCUPANT LOAD OF SPACE	MAXIMUM COMMON PATH OF EGRESS TRAVEL DISTANCE (feet)		
		Without Sprinkler System (feet)		With Sprinkler System (feet)
		Occupant Load		
		OL ≤ 30	OL > 30	
A[c], E, M	49	75	75	75[a]
B	49	100	75	100[a]
F	49	75	75	100[a]
H-1, H-2, H-3	3	NP	NP	25[b]
H-4, H-5	10	NP	NP	75[b]
I-1, I-2[d], I-4	10	NP	NP	75[a]
I-3	10	NP	NP	100[a]
R-1	10	NP	NP	75[a]
R-2	20	NP	NP	125[a]
R-3[e]	20	NP	NP	125[a, g]
R-4[e]	20	NP	NP	125[a, g]
S[f]	29	100	75	100[a]
U	49	100	75	75[a]

For SI: 1 foot = 304.8 mm.

NP = Not Permitted.

a. Buildings equipped throughout with an automatic sprinkler system in accordance with Section 903.3.1.1 or 903.3.1.2. See Section 903 for occupancies where automatic sprinkler systems are permitted in accordance with Section 903.3.1.2

b. Group H occupancies equipped throughout with an automatic sprinkler system in accordance with Section 903.2.5.

c. For a room or space used for assembly purposes having fixed seating, see Section 1029.8.

d. For the travel distance limitations in Group I-2, see Section 407.4 of the *Building Code of New York State*.

e. The common path of egress travel distance shall apply only in a Group R-3 occupancy located in a mixed occupancy building or within a Group R-3 or R-4 congregate living facility.

f. The length of common path of egress travel distance in a Group S-2 open parking garage shall be not more than 100 feet.

g. For the travel distance limitations in Group R-3 and R-4 equipped throughout with an automatic sprinkler system in accordance with Section 903.3.1.3, see Section 1006.2.2.6.

INTERNATIONAL CODE COUNCIL®
Copyright © 2019 ICC & NYSDOS. ALL RIGHTS RESERVED. Accessed by Lauren Gualdino (lgualdino@briarcliffmanor.org), (-) Order Number #100880972 on May 08, 2020 07:05 AM (PDT) pursuant to License Agreement with ICC & NYSDOS. No further reproduction, no

100880972

considered individually shall be used in calculating the required number of exits or access to exits serving that story.

[BE] 1006.3.1 Adjacent story. The path of egress travel to an exit shall not pass through more than one adjacent story.

Exception: The path of egress travel to an *exit* shall be permitted to pass through more than one adjacent *story* in any of the following:

1. In Group R-1, R-2 or R-3 occupancies, exit access stairways and ramps connecting four stories or fewer serving and contained within an individual dwelling unit or sleeping unit or live/work unit.
2. Exit access stairways serving and contained within a Group R-3 congregate residence or a Group R-4 facility.
3. Exit access stairways and ramps in open parking garages that serve only the parking garage.
4. Exit access stairways and ramps serving open-air assembly seating complying with the exit access travel distance requirements of Section 1029.7.
5. Exit access stairways and ramps between the balcony, gallery or press box and the main assembly floor in occupancies such as theaters, places of religious worship, auditoriums and sports facilities.

[BE] 1006.3.2 Egress based on occupant load. Each *story* and occupied roof shall have the minimum number of separate and distinct *exits*, or access to *exits*, as specified in Table 1006.3.2. A single *exit* or access to a single *exit* shall be permitted in accordance with Section 1006.3.3. The required number of *exits*, or *exit access stairways* or *ramps* providing access to *exits*, from any story or occupied roof shall be maintained until arrival at the *exit discharge* or *public way*.

[BE] TABLE 1006.3.2
MINIMUM NUMBER OF EXITS OR ACCESS TO EXITS PER STORY

OCCUPANT LOAD PER STORY	MINIMUM NUMBER OF EXITS OR ACCESS TO EXITS FROM STORY
1-500	2
501-1,000	3
More than 1,000	4

[BE] 1006.3.3 Single exits. A single *exit* or access to a single *exit* shall be permitted from any story or occupied roof, where one of the following conditions exists:

1. The *occupant load*, number of *dwelling units* and *common path of egress* travel distance do not exceed the values in Table 1006.3.3(1) or 1006.3.3(2).
2. Rooms, areas and spaces complying with Section 1006.2.1 with *exits* that discharge directly to the exterior at the *level of exit discharge*, are permitted to have one *exit* or access to a single *exit*.
3. Parking garages where vehicles are mechanically parked shall be permitted to have one *exit* or access to a single *exit*.
4. Group R-3 and R-4 occupancies shall be permitted to have one *exit* or access to a single *exit*.
5. Individual single-story or multistory *dwelling units* shall be permitted to have a single *exit* or access to a single *exit* from the *dwelling unit* provided that both of the following criteria are met:
   5.1. The *dwelling unit* complies with Section 1006.2.1 as a space with one means of egress.
   5.2. Either the *exit* from the *dwelling unit* discharges directly to the exterior at the *level of exit discharge*, or the *exit* access outside the *dwelling unit*'s entrance door provides access to not less than two approved independent *exits*.

[BE] 1006.3.3.1 Mixed occupancies. Where one *exit*, or *exit access stairway* or *ramp* providing access to exits at other stories, is permitted to serve individual stories, mixed occupancies shall be permitted to be served by single *exits* provided that each individual occupancy complies with the applicable requirements of Table 1006.3.3(1) or 1006.3.3(2) for that occupancy. Where applicable, cumulative *occupant loads* from adjacent occupancies shall be considered to be in accordance with the provisions of Section 1004.1. In each story of a mixed occupancy building, the maximum number of occupants served by a single *exit* shall be such that the sum of the ratios of the calculated number of occupants of the space divided by the allowable number of occupants indicated in Table 1006.3.3(2) for each occupancy does not exceed one. Where *dwelling units* are located on a story with other occupancies, the actual number of *dwelling units* divided by four plus the ratio from the other occupancy does not exceed one.

[BE] TABLE 1006.3.3(1)
STORIES WITH ONE EXIT OR ACCESS TO ONE EXIT FOR R-2 OCCUPANCIES

STORY	OCCUPANCY	MAXIMUM NUMBER OF DWELLING UNITS	MAXIMUM COMMON PATH OF EGRESS TRAVEL DISTANCE
Basement, first, second or third story above grade plane	R-2[a, b]	4 dwelling units	125 feet
Fourth story above grade plane and higher	NP	NA	NA

For SI: 1 foot = 3048 mm.
NP = Not Permitted.
NA = Not Applicable.
a. Buildings classified as Group R-2 equipped throughout with an automatic sprinkler system in accordance with Section 903.3.1.1 or 903.3.1.2 and provided with emergency escape and rescue openings in accordance with Section 1030.
b. This table is used for R-2 occupancies consisting of dwelling units. For R-2 occupancies consisting of sleeping units, use Table 1006.3.3(2).

INTERNATIONAL CODE COUNCIL®
Copyright © 2019 ICC & NYSDOS. ALL RIGHTS RESERVED. Accessed by Lauren Gualdino (lgualdino@briarcliffmanor.org), (-) Order Number #100880972 on May 08, 2020 07:05 AM (PDT) pursuant to License Agreement with ICC & NYSDOS. No further reproduction, no

100880972

SECTION 1007
EXIT AND EXIT ACCESS DOORWAY CONFIGURATION

[BE] 1007.1 General. *Exits*, *exit access doorways*, and *exit access stairways* and *ramps* serving spaces, including individual building stories, shall be separated in accordance with the provisions of this section.

[BE] 1007.1.1 Two exits or exit access doorways. Where two *exits*, *exit access doorways*, *exit access stairways* or *ramps*, or any combination thereof, are required from any portion of the *exit access*, they shall be placed a distance apart equal to not less than one-half of the length of the maximum overall diagonal dimension of the building or area to be served measured in a straight line between them. Interlocking or *scissor stairways* shall be counted as one exit *stairway*.

Exceptions:

1. Where *interior exit stairways* or *ramps* are interconnected by a 1-hour fire-resistance-rated corridor conforming to the requirements of Section 1020, the required *exit* separation shall be measured along the shortest direct line of travel within the *corridor*.
2. Where a building is equipped throughout with an *automatic sprinkler system* in accordance with Section 903.3.1.1 or 903.3.1.2, the separation distance shall be not less than one-third of the length of the maximum overall diagonal dimension of the area served.

[BE] 1007.1.1.1 Measurement point. The separation distance required in Section 1007.1.1 shall be measured in accordance with the following:

1. The separation distance to *exit* or *exit access doorways* shall be measured to any point along the width of the doorway.
2. The separation distance to *exit access stairways* shall be measured to the closest riser.
3. The separation distance to *exit access ramps* shall be measured to the start of the ramp run.

[BE] 1007.1.2 Three or more exits or exit access doorways. Where access to three or more exits is required, not less than two exit or *exit access doorways* shall be arranged in accordance with the provisions of Section 1007.1.1. Additional required exit or *exit access doorways* shall be arranged a reasonable distance apart so that if one becomes blocked, the others will be available.

[BE] 1007.1.3 Remoteness of exit access stairways or ramps. Where two *exit* access *stairways* or *ramps* provide the required *means of egress* to *exits* at another story, the required separation distance shall be maintained for all portions of such *exit access stairways* or *ramps*.

[BE] 1007.1.3.1 Three or more exit access stairways or ramps. Where more than two *exit access stairways* or *ramps* provide the required *means of egress*, not less than two shall be arranged in accordance with Section 1007.1.3.

SECTION 1008
MEANS OF EGRESS ILLUMINATION

[BE] 1008.1 Means of egress illumination. Illumination shall be provided in the *means of egress* in accordance with Section 1008.2. Under emergency power, *means of egress* illumination shall comply with Section 1008.3.

[BE] 1008.2 Illumination required. The *means of egress* serving a room or space shall be illuminated at all times that the room or space is occupied.

Exceptions:

1. Occupancies in Group U.
2. *Aisle accessways* in Group A.
3. *Dwelling units* and *sleeping units* in Groups R-1, R-2 and R-3.
4. *Sleeping units* of Group I occupancies.

[BE] TABLE 1006.3.3(2)
STORIES WITH ONE EXIT OR ACCESS TO ONE EXIT FOR OTHER OCCUPANCIES

STORY	OCCUPANCY	MAXIMUM OCCUPANT LOAD PER STORY	MAXIMUM COMMON PATH OF EGRESS TRAVEL DISTANCE (feet)
First story above or below grade plane	A, B[b], E F[b], M, U	49	75
	H-2, H-3	3	25
	H-4, H-5, I, R-1, R-2[a, c]	10	75
	S[b, d]	29	75
Second story above grade plane	B, F, M, S[d]	29	75
Third story above grade plane and higher	NP	NA	NA

For SI: 1 foot = 304.8 mm.
NP = Not Permitted.
NA = Not Applicable.
a. Buildings classified as Group R-2 equipped throughout with an automatic sprinkler system in accordance with Section 903.3.1.1 or 903.3.1.2 and provided with emergency escape and rescue openings in accordance with Section 1030.
b. Group B, F and S occupancies in buildings equipped throughout with an automatic sprinkler system in accordance with Section 903.3.1.1 shall have a maximum exit access travel distance of 100 feet.
c. This table is used for R-2 occupancies consisting of sleeping units. For R-2 occupancies consisting of dwelling units, use Table 1006.3.3(1).
d. The length of exit access travel distance in a Group S-2 open parking garage shall be not more than 100 feet.

INTERNATIONAL CODE COUNCIL®
Copyright © 2019 ICC & NYSDOS. ALL RIGHTS RESERVED. Accessed by Lauren Gualdino (lgualdino@briarcliffmanor.org), (-) Order Number #100880972 on May 08, 2020 07:05 AM (PDT) pursuant to License Agreement with ICC & NYSDOS. No further reproduction, no

100880972

[BE] 1008.2.1 Illumination level under normal power. The *means of egress* illumination level shall be not less than 1 footcandle (11 lux) at the walking surface.

Exception: For auditoriums, theaters, concert or opera halls and similar assembly occupancies, the illumination at the walking surface is permitted to be reduced during performances by one of the following methods provided that the required illumination is automatically restored upon activation of a premises' fire alarm system:

1. Externally illuminated walking surfaces shall be permitted to be illuminated to not less than 0.2 footcandle (2.15 lux).
2. Steps, landings and the sides of *ramps* shall be permitted to be marked with self-luminous materials in accordance with Sections 1025.2.1, 1025.2.2 and 1025.2.4 by systems *listed* in accordance with UL 1994.

[BE] 1008.2.2 Group I-2. In Group I-2 occupancies where two or more *exits* are required, on the exterior landings required by Section 1010.6.1, means of egress illumination levels for the *exit discharge* shall be provided such that failure of a single lamp in a luminaire shall not reduce the illumination level on that landing to less than 1 footcandle (11 lux).

[BE] 1008.2.3 Exit discharge. Illumination shall be provided along the path of travel for the exit discharge from each exit to the public way.

Exception: Illumination shall not be required where the path of the exit discharge meets both of the following requirements:

1. The path of exit discharge is illuminated from the exit to a safe dispersal area complying with Section 1028.5.
2. A dispersal area shall be illuminated to a level not less than 1 footcandle (11 lux) at the walking surface.

[BE] 1008.3 Emergency power for illumination. The power supply for *means of egress* illumination shall normally be provided by the premises' electrical supply.

[BE] 1008.3.1 General. In the event of power supply failure in rooms and spaces that require two or more *means of egress* an emergency electrical system shall automatically illuminate all of the following areas:

1. *Aisles*.
2. *Corridors*.
3. *Exit access stairways* and *ramps*.

[BE] 1008.3.2 Buildings. In the event of power supply failure, in buildings that require two or more *means of egress*, an emergency electrical system shall automatically illuminate all of the following areas:

1. Interior *exit access stairways* and *ramps*.
2. *Interior* and *exterior exit stairways* and *ramps*.
3. *Exit passageways*.
4. Vestibules and areas on the *level of discharge* used for *exit discharge* in accordance with Section 1028.1.
5. Exterior landings as required by Section 1010.1.6 for exit doorways that lead directly to the *exit discharge*.

[BE] 1008.3.3 Rooms and spaces. In the event of power supply failure, an emergency electrical system shall automatically illuminate all of the following areas:

1. Electrical equipment rooms.
2. Fire command centers.
3. Fire pump rooms.
4. Generator rooms.
5. Public restrooms with an area greater than 300 square feet (27.87 m^2).

[BE] 1008.3.4 Duration. The emergency power system shall provide power for a duration of not less than 90 minutes and shall consist of storage batteries, unit equipment or an on-site generator. The installation of the emergency power system shall be in accordance with Section 2702 of the *Building Code of New York State*.

[BE] 1008.3.5 Illumination level under emergency power. Emergency lighting facilities shall be arranged to provide initial illumination that is not less than an average of 1 footcandle (11 lux) and a minimum at any point of 0.1 footcandle(1 lux) measured along the path of egress at floor level. Illumination levels shall be permitted to decline to 0.6 footcandle (6 lux) average and a minimum at any point of 0.06 footcandle (0.6 lux) at the end of the emergency lighting time duration. A maximum-to-minimum illumination uniformity ratio of 40 to 1 shall not be exceeded. In Group I-2 occupancies, failure of a single lamp in a luminaire shall not reduce the illumination level to less than 0.2 foot-candle (2.2 lux).

SECTION 1009
ACCESSIBLE MEANS OF EGRESS

[BE] 1009.1 Accessible means of egress required. *Accessible means of egress* shall comply with this section. Accessible spaces shall be provided with not less than one *accessible means of egress*. Where more than one *means of egress* is required by Section 1006.2 or 1006.3 from any accessible space, each accessible portion of the space shall be served by not less than two *accessible means of egress*.

Exceptions:

1. One *accessible means of egress* is required from an accessible *mezzanine* level in accordance with Section 1009.3, 1009.4 or 1009.5.
2. In assembly areas with ramped *aisles* or stepped *aisles*, one *accessible means of egress* is permitted where the common path of travel is accessible and meets the requirements in Section 1029.8.

[BE] 1009.2 Continuity and components. Each required *accessible means of egress* shall be continuous to a public way and shall consist of one or more of the following components:

INTERNATIONAL CODE COUNCIL®
Copyright © 2019 ICC & NYSDOS. ALL RIGHTS RESERVED. Accessed by Lauren Gualdino (lgualdino@briarcliffmanor.org), (-) Order Number #100880972 on May 08, 2020 07:05 AM (PDT) pursuant to License Agreement with ICC & NYSDOS. No further reproduction, no

100880972

1. *Accessible routes* complying with Section 1104 of the *Building Code of New York State*.
2. *Interior exit stairways* complying with Sections 1009.3 and 1023.
3. *Exit access stairways* complying with Sections 1009.3 and 1019.3 or 1019.4.
4. *Exterior exit stairways* complying with Sections 1009.3 and 1027 and serving levels other than the *level of exit discharge*.
5. Elevators complying with Section 1009.4.
6. Platform lifts complying with Section 1009.5.
7. *Horizontal exits* complying with Section 1026.
8. *Ramps* complying with Section 1012.
9. *Areas of refuge* complying with Section 1009.6.
10. Exterior areas for assisted rescue complying with Section 1009.7 serving *exits* at the *level of exit discharge*.

[BE] 1009.2.1 Elevators required. In buildings where a required accessible floor is four or more stories above or below a *level of exit discharge*, not less than one required *accessible means of egress* shall be an elevator complying with Section 1009.4.

Exceptions:

1. In buildings equipped throughout with an *automatic sprinkler system* installed in accordance with Section 903.3.1.1 or 903.3.1.2, the elevator shall not be required on floors provided with a *horizontal exit* and located at or above the *levels of exit discharge.*
2. In buildings equipped throughout with an *automatic sprinkler system* installed in accordance with Section 903.3.1.1 or 903.3.1.2, the elevator shall not be required on floors provided with a *ramp* conforming to the provisions of Section 1012.

[BE] 1009.3 Stairways. In order to be considered part of an *accessible means of egress*, a *stairway* between stories shall comply with Sections 1009.3.1 through 1009.3.3.

[BE] 1009.3.1 Exit acess stairways. *Exit access stairways* that connect levels in the same *story* are not permitted as part of an accessible means of egress.

Exception: *Exit access stairways* providing *means of egress* from mezzanines are permitted as part of an *accessible means of egress*.

[BE] 1009.3.2 Stairway width. *Stairways* shall have a clear width of 48 inches (1219 mm) minimum between *handrails.*

Exceptions:

1. The clear width of 48 inches (1219 mm) between handrails is not required in buildings equipped throughout with an *automatic sprinkler* system installed in accordance with Section 903.3.1.1 or 903.3.1.2.
2. The clear width of 48 inches (1219 mm) between *handrails* is not required for *stairways* accessed from a refuge area in conjunction with a *horizontal exit*.

[BE] 1009.3.3 Area of refuge. Stairways shall either incorporate an area of refuge within an enlarged floor-level landing or shall be accessed from an area of refuge complying with Section 1009.6.

Exceptions:

1. *Areas of refuge* are not required at *exit access stairways* where two-way communication is provided at the elevator landing in accordance with Section 1009.8.
2. *Areas of refuge* are not required at *stairways* in buildings equipped throughout with an *automatic sprinkler system* installed in accordance with Section 903.3.1.1 or 903.3.1.2.
3. *Areas of refuge* are not required at *stairways* serving *open parking garages*.
4. *Areas of refuge* are not required for *smoke-protected* or *open-air assembly seating* areas complying with Sections 1029.6.2 and 1029.6.3.
5. *Areas of refuge* are not required at *stairways* in Group R-2 occupancies.
6. *Areas of refuge* are not required for *stairways* accessed from a refuge area in conjunction with a *horizontal exit*.

[BE] 1009.4 Elevators. In order to be considered part of an accessible *means of egress*, an elevator shall comply with Sections 1009.4.1 and 1009.4.2.

[BE] 1009.4.1 Standby power. The elevator shall meet the emergency operation and signaling device requirements of Section 2.27 of ASME A17.1/CSA B44. Standby power shall be provided in accordance with Chapter 27 and Section 3003 of the *Building Code of New York State*.

[BE] 1009.4.2 Area of refuge. The elevator shall be accessed from an *area of refuge* complying with Section 1009.6.

Exceptions:

1. *Areas of refuge* are not required at the elevator in open parking garages.
2. *Areas of refuge* are not required in buildings and facilities equipped throughout with an *automatic sprinkler system* installed in accordance with Section 903.3.1.1 or 903.3.1.2.
3. *Areas of refuge* are not required at elevators not required to be located in a shaft in accordance with Section 712 of the *Building Code of New York State*.
4. *Areas of refuge* are not required at elevators serving *smoke protected or open-air assembly seating* areas complying with Sections 1029.6.2 and 1029.6.3.
5. *Areas of refuge* are not required for elevators accessed from a refuge area in conjunction with a *horizontal exit*.

[BE] 1009.5 Platform lifts. Platform lifts shall be permitted to serve as part of an *accessible means of egress* where allowed as part of a required *accessible route* in Section 1109.8 of the *Building Code of New York State* except for

INTERNATIONAL CODE COUNCIL®
Copyright © 2019 ICC & NYSDOS. ALL RIGHTS RESERVED. Accessed by Lauren Gualdino (lgualdino@briarcliffmanor.org), (-) Order Number #100880972 on May 08, 2020 07:05 AM (PDT) pursuant to License Agreement with ICC & NYSDOS. No further reproduction, no

100880972

Item 10. Standby power for the platform lift shall be provided in accordance with Chapter 27 of the *Building Code of New York State*.

[BE] 1009.6 Areas of refuge. Every required *area of refuge* shall be accessible from the space it serves by an *accessible means of egress*.

[BE] 1009.6.1 Travel distance. The maximum travel distance from any accessible space to an *area of refuge* shall not exceed the *exit access* travel distance permitted for the occupancy in accordance with Section 1017.1.

[BE] 1009.6.2 Stairway or elevator access. Every required *area of refuge* shall have direct access to a *stairway* complying with Sections 1009.3 and 1023 or an elevator complying with Section 1009.4.

[BE] 1009.6.3 Size. Each *area of refuge* shall be sized to accommodate one *w*heelchair space of 30 inches by 48 inches (762 mm by 1219 mm) for each 200 occupants or portion thereof, based on the *occupant load* of the *area of refuge* and areas served by the *area of refuge*. Such wheelchair spaces shall not reduce the *means of egress* minimum width or required capacity. Access to any of the required wheelchair spaces in an *area of refuge* shall not be obstructed by more than one adjoining wheelchair space.

[BE] 1009.6.4 Separation. Each *area of refuge* shall be separated from the remainder of the story by a *smoke barrier* complying with Section 709 of the *Building Code of New York State* or a *horizontal* exit complying with Section 1026. Each *area of refuge* shall be designed to minimize the intrusion of smoke.

Exceptions:

1. *Areas of refuge* located within an enclosure for *interior exit stairways* complying with Section 1023.
2. *Areas of refuge* in outdoor facilities where *exit access* is essentially open to the outside.

[BE] 1009.6.5 Two-way communication. *Areas of refuge* shall be provided with a two-way communication system complying with Sections 1009.8.1 and 1009.8.2.

[BE] 1009.7 Exterior areas for assisted rescue. Exterior areas for assisted rescue shall be accessed by an *accessible route* from the area served.

Where the *exit discharge* does not include an *accessible route* from an *exit* located on the *level of exit discharge* to a *public way*, an exterior area of assisted rescue shall be provided on the exterior landing in accordance with Sections 1009.7.1 through 1009.7.4.

[BE] 1009.7.1 Size. Each exterior area for assisted rescue shall be sized to accommodate wheelchair spaces in accordance with Section 1009.6.3.

[BE] 1009.7.2 Separation. *Exterior walls* separating the exterior area of assisted rescue from the interior of the building shall have a minimum fire-resistance rating of 1 hour, rated for exposure to fire from the inside. The fire-resistance-rated *exterior wall* construction shall extend horizontally not less than 10 feet (3048 mm) beyond the landing on either side of the landing or equivalent fire-resistance-rated construction is permitted to extend out perpendicular to the *exterior wall* not less than 4 feet (1220 mm) on the side of the landing. The fire-resistance-rated construction shall extend vertically from the ground to a point not less than 10 feet (3048 mm) above the floor level of the area for assisted rescue or to the roof line, whichever is lower. Openings within such fire-resistance-rated *exterior walls* shall be protected in accordance with Section 716 of the *Building Code of New York State*.

Exception: The fire-resistance rating and opening protectives are not required in the exterior wall where the building is equipped throughout with an automatic sprinkler system installed in accordance with Section 903.3.1.1 or 903.3.1.2.

[BE] 1009.7.3 Openness. The exterior area for assisted rescue shall be open to the outside air. The sides other than the separation walls shall be not less than 50 percent open, and the open area shall be distributed so as to minimize the accumulation of smoke or toxic gases.

[BE] 1009.7.4 Stairways. *Stairways* that are part of the *means of egress* for the exterior area for assisted rescue shall provide a minimum clear width of 48 inches (1220 mm) between *handrails*.

Exception: The minimum clear width of 48 inches (1220 mm) between *handrails* is not required at *stairways* serving buildings equipped throughout with an *automatic sprinkler system* installed in accordance with Section 903.3.1.1 or 903.3.1.2.

[BE] 1009.8 Two-way communication. A two-way communication system complying with Sections 1009.8.1 and 1009.8.2 shall be provided at the landing serving each elevator or bank of elevators on each accessible floor that is one or more stories above or below the *level of exit discharge*.

Exceptions:

1. Two-way communication systems are not required at the landing serving each elevator or bank of elevators where the two-way communication system is provided within *areas of refuge* in accordance with Section 1009.6.5.
2. Two-way communication systems are not required on floors provided with *ramps* conforming to the provisions of Section 1012.
3. Two-way communication systems are not required at the landings serving only service elevators that are not designated as part of the *accessible means of egress* or serve as part of the required *accessible route* into a facility.
4. Two-way communication systems are not required at the landings serving only freight elevators.
5. Two-way communication systems are not required at the landing serving a private residence elevator.
6. Two-way communication systems are not required in Group I-2 or I-3 facilities.

[BE] 1009.8.1 System requirements. Two-way communication systems shall provide communication between

INTERNATIONAL CODE COUNCIL®
Copyright © 2019 ICC & NYSDOS. ALL RIGHTS RESERVED. Accessed by Lauren Gualdino (lgualdino@briarcliffmanor.org), (-) Order Number #100880972 on May 08, 2020 07:05 AM (PDT) pursuant to License Agreement with ICC & NYSDOS. No further reproduction, no

100880972

each required location and the fire command center or a central control point location *approved* by the fire department. Where the central control point is not a constantly attended location, a two-way communication system shall have a timed automatic telephone dial-out capability to a monitoring location or 9-1-1. The two-way communication system shall include both audible and visible signals.

[BE] 1009.8.2 Directions. Directions for the use of the two-way communication system, instructions for summoning assistance via the two-way communication system and written identification of the location shall be posted adjacent to the two-way communication system. Signage shall comply with the ICC A117.1 requirements for visual characters.

[BE] 1009.9 Signage. Signage indicating special accessibility provisions shall be provided as shown:

1. Each door providing access to an *area of refuge* from an adjacent floor area shall be identified by a sign stating: AREA OF REFUGE.
2. Each door providing access to an exterior area for assisted rescue shall be identified by a sign stating: EXTERIOR AREA FOR ASSISTED RESCUE.

Signage shall comply with the ICC A117.1 requirements for visual characters and include the International Symbol of Accessibility. Where exit sign illumination is required by Section 1013.3, the signs shall be illuminated. Additionally, visual characters, raised character and braille signage complying with ICC A117.1 shall be located at each door to an *area of refuge* and exterior area for assisted rescue in accordance with Section 1013.4.

[BE] 1009.10 Directional signage. Directional signage indicating the location of all other means of egress and which of those are *accessible means of egress* shall be provided at the following:

1. At *exits* serving a required accessible space but not providing an *approved accessible means of egress*.
2. At elevator landings.
3. Within *areas of refuge*.

[BE] 1009.11 Instructions. In *areas of refuge* and exterior areas for assisted rescue, instructions on the use of the area under emergency conditions shall be posted. Signage shall comply with the ICC A117.1 requirements for visual characters. The instructions shall include all of the following:

1. Persons able to use the *exit stairway* do so as soon as possible, unless they are assisting others.
2. Information on planned availability of assistance in the use of *stairs* or supervised operation of elevators and how to summon such assistance.
3. Directions for use of the two-way communication system where provided.

SECTION 1010
DOORS, GATES AND TURNSTILES

[BE] 1010.1 Doors. *Means of egress* doors shall meet the requirements of this section. Doors serving a *means of egress* system shall meet the requirements of this section and Section 1022.2. Doors provided for egress purposes in numbers greater than required by this code shall meet the requirements of this section.

Means of egress doors shall be readily distinguishable from the adjacent construction and finishes such that the doors are easily recognizable as doors. Mirrors or similar reflecting materials shall not be used on *means of egress* doors. *Means of egress* doors shall not be concealed by curtains, drapes, decorations or similar materials.

[BE] 1010.1.1 Size of doors. The required capacity of each door opening shall be sufficient for the *occupant load* thereof and shall provide a minimum clear opening width of 32 inches (813 mm). The clear opening width of doorways with swinging doors shall be measured between the face of the door and the stop, with the door open 90 degrees (1.57 rad). Where this section requires a minimum clear opening width of 32 inches (813 mm) and a door opening includes two door leaves without a mullion, one leaf shall provide a minimum clear opening width of 32 inches (813 mm). In Group I-2, doors serving as means of egress doors where used for the movement of beds shall provide a minimum clear opening width of $41^1/_2$ inches (1054 mm). The maximum width of a swinging door leaf shall be 48 inches (1219 mm) nominal. The minimum clear opening height of doors shall be not less than 80 inches (2032 mm).

Exceptions:

1. In Group R-2 and R-3 dwelling and sleeping units that are not required to be an Accessible unit, Type A unit or Type B unit, the minimum and maximum width shall not apply to door openings that are not part of the required *means of egress*.
2. Group I-3 door openings to resident *sleeping units* that are not required to be an Accessible unit shall have a minimum clear opening width of 28 inches (711 mm).
3. Door openings to storage closets less than 10 square feet (0.93 m^2) in area shall not be limited by the minimum clear opening width.
4. The width of door leaves in revolving doors that comply with Section 1010.1.4.1 shall not be limited.
5. The maximum width of door leaves in power-operated doors that comply with Section 1010.1.4.2 shall not be limited.
6. Door openings within a *dwelling unit* or *sleeping unit* shall have a minimum clear opening height of 78 inches (1981 mm).
7. In dwelling and sleeping units that are not required to be Accessible, Type A or Type B units, exterior door openings, other than the required *exit* door, shall have a minimum clear opening height of 76 inches (1930 mm).
8. In Groups I-1, R-2, R-3 and R-4, in dwelling and sleeping units that are not required to be

INTERNATIONAL CODE COUNCIL®
Copyright © 2019 ICC & NYSDOS. ALL RIGHTS RESERVED. Accessed by Lauren Gualdino (lgualdino@briarcliffmanor.org), (-) Order Number #100880972 on May 08, 2020 07:05 AM (PDT) pursuant to License Agreement with ICC & NYSDOS. No further reproduction, no

100880972

Accessible, Type A or Type B units, the minimum clear opening widths shall not apply to interior egress doors.

9. Door openings required to be *accessible* within Type B units intended for user passage shall have a minimum clear opening width of 31.75 inches (806 mm).
10. Doors to walk-in freezers and coolers less than 1,000 square feet (93 m^2) in area shall have a maximum width of 60 inches (1524 mm) nominal.
11. The minimum clear opening width shall not apply to doors for nonaccessible shower or sauna compartments.
12. The minimum clear opening width shall not apply to the doors for nonaccessible toilet stalls.

[BE] 1010.1.1.1 Projections into clear width. There shall not be projections into the required clear opening width lower than 34 inches (864 mm) above the floor or ground. Projections into the clear opening width between 34 inches (864 mm) and 80 inches (2032 mm) above the floor or ground shall not exceed 4 inches (102 mm).

Exception: Door closers and door stops shall be permitted to be 78 inches (1980 mm) minimum above the floor.

[BE] 1010.1.2 Door swing. Egress doors shall be of the pivoted or side-hinged swinging type.

Exceptions:

1. Private garages, office areas, factory and storage areas with an *occupant load* of 10 or less.
2. Group I-3 occupancies used as a place of detention.
3. Critical or intensive care patient rooms within suites of health care facilities.
4. Doors within or serving a single *dwelling unit* in Groups R-2 and R-3.
5. In other than Group H occupancies, revolving doors complying with Section 1010.1.4.1.
6. In other than Group H occupancies, special purpose horizontal sliding, accordion or folding door assemblies complying with Section 1010.1.4.3.
7. Power-operated doors in accordance with Section 1010.1.4.2.
8. Doors serving a bathroom within an individual *sleeping unit* in Group R-1.
9. In other than Group H occupancies, manually operated horizontal sliding doors are permitted in a *means of egress* from spaces with an *occupant load* of 10 or less.

[BE] 1010.1.2.1 Direction of swing. Pivot or side-hinged swinging doors shall swing in the direction of egress travel where serving a room or area containing an occupant load of 50 or more persons or a Group H occupancy.

[BE] 1010.1.3 Door opening force. The force for pushing or pulling open interior swinging egress doors, other than fire doors, shall not exceed 5 pounds (22 N). These forces do not apply to the force required to retract latch bolts or disengage other devices that hold the door in a closed position. For other swinging doors, as well as sliding and folding doors, the door latch shall release when subjected to a 15-pound (67 N) force. The door shall be set in motion when subjected to a 30-pound (133 N) force. The door shall swing to a full-open position when subjected to a 15-pound (67 N) force.

[BE] 1010.1.3.1 Location of applied forces. Forces shall be applied to the latch side of the door.

[BE] 1010.1.4 Special doors. Special doors and security grilles shall comply with the requirements of Sections 1010.1.4.1 through 1010.1.4.5.

[BE] 1010.1.4.1 Revolving doors. Revolving doors shall comply with the following:

1. Revolving doors shall comply with BHMA A156.27 and shall be installed in accordance with the manufacturer's instructions.
2. Each revolving door shall be capable of *breakout* in accordance with BHMA A156.27 and shall provide an aggregate width of not less than 36 inches (914 mm).
3. A revolving door shall not be located within 10 feet (3048 mm) of the foot or top of stairways or escalators. A dispersal area shall be provided between the stairways or escalators and the revolving doors.
4. The revolutions per minute (rpm) for a revolving door shall not exceed the maximum rpm as specified in BHMA A156.27. Manual revolving doors shall comply with Table 1010.1.4.1(1). Automatic or power-operated revolving doors shall comply with Table 1010.1.4.1(2).
5. An emergency stop switch shall be provided near each entry point of power or automatic operated revolving doors within 48 inches (1220 mm) of the door and between 24 inches (610 mm) and 48 inches (1220 mm) above the floor. The activation area of the emergency stop switch button shall be not less than 1 inch (25 mm) in diameter and shall be red.
6. Each revolving door shall have a side-hinged swinging door that complies with Section 1010.1 in the same wall and within 10 feet (3048 mm) of the revolving door.
7. Revolving doors shall not be part of an *accessible route* required by Section 1009 of this code and Chapter 11 of the *Building Code of New York State*.

INTERNATIONAL CODE COUNCIL®
Copyright © 2019 ICC & NYSDOS. ALL RIGHTS RESERVED. Accessed by Lauren Gualdino (lgualdino@briarcliffmanor.org), (-) Order Number #100880972 on May 08, 2020 07:05 AM (PDT) pursuant to License Agreement with ICC & NYSDOS. No further reproduction, no

100880972

[BE] TABLE 1010.1.4.1(1)
MAXIMUM DOOR SPEED MANUAL REVOLVING DOORS

REVOLVING DOOR MAXIMUM NOMINAL DIAMETER (FT-IN)	MAXIMUM ALLOWABLE REVOLVING DOOR SPEED (RPM)
6-0	12
7-0	11
8-0	10
9-0	9
10-0	8

For SI: 1 inch = 25.4 mm, 1 foot = 304.8 mm.

[BE] TABLE 1010.1.4.1(2)
MAXIMUM DOOR SPEED AUTOMATIC OR POWER-OPERATED REVOLVING DOORS

REVOLVING DOOR MAXIMUM NOMINAL DIAMETER (FT-IN)	MAXIMUM ALLOWABLE REVOLVING DOOR SPEED (RPM)
8-0	7.2
9-0	6.4
10-0	5.7
11-0	5.2
12-0	4.8
12-6	4.6
14-0	4.1
16-0	3.6
17-0	3.4
18-0	3.2
20-0	2.9
24-0	2.4

For SI: 1 inch = 25.4 mm, 1 foot = 304.8 mm.

[BE] 1010.1.4.1.1 Egress component. A revolving door used as a component of a *means of egress* shall comply with Section 1010.1.4.1 and the following three conditions:

1. Revolving doors shall not be given credit for more than 50 percent of the minimum width or required capacity.
2. Each revolving door shall be credited with a capacity based on not more than a 50-person occupant load.
3. Each revolving door shall provide for egress in accordance with BHMA A156.27 with a *breakout* force of not more than 130 pounds (578 N).

[BE] 1010.1.4.1.2 Other than egress component. A revolving door used as other than a component of a *means of egress* shall comply with Section 1010.1.4.1. The *breakout* force of a revolving door not used as a component of a *means of egress* shall not be more than 180 pounds (801 N).

Exception: A *breakout* force in excess of 180 pounds (801 N) is permitted if the breakout force is reduced to not more than 130 pounds (578 N) when not less than one of the following conditions is satisfied:

1. There is a power failure or power is removed to the device holding the door wings in position.
2. There is an actuation of the *automatic sprinkler system* where such system is provided.
3. There is an actuation of a smoke detection system that is installed in accordance with Section 907 to provide coverage in areas within the building that are within 75 feet (22 860 mm) of the revolving doors.
4. There is an actuation of a manual control switch, in an *approved* location and clearly identified, that reduces the *breakout* force to not more than 130 pounds (578 N).

[BE] 1010.1.4.2 Power-operated doors. Where *means of egress* doors are operated or assisted by power, the design shall be such that in the event of power failure, the door is capable of being opened manually to permit *means of egress* travel or closed where necessary to safeguard *means of egress*. The forces required to open these doors manually shall not exceed those specified in Section 1010.1.3, except that the force to set the door in motion shall not exceed 50 pounds (220 N). The door shall be capable of opening from any position to the full width of the opening in which such door is installed when a force is applied to the door on the side from which egress is made. Power-operated swinging doors, power-operated sliding doors and power-operated folding doors shall comply with BHMA A156.10. Power-assisted swinging doors and low energy power-operated swinging doors shall comply with BHMA A156.19. Low-energy power-operated sliding doors and low-energy power-operated folding doors shall comply with BHMA A156.38.

Exceptions:

1. Occupancies in Group I-3.
2. Special-purpose horizontal sliding, accordion or folding doors complying with Section 1010.1.4.3.
3. For a biparting door in the emergency *breakout* mode, a door leaf located within a multiple-leaf opening shall be exempt from the minimum 32-inch (813 mm) single-leaf requirement of Section 1010.1.1, provided that a minimum 32-inch (813 mm) clear opening is provided when the two biparting leaves meeting in the center are broken out.

[BE] 1010.1.4.3 Special-purpose horizontal sliding, accordion or folding doors. In other than Group H occupancies, special-purpose horizontal sliding, accordion, or folding door assemblies permitted to be a component of a *means of egress* in accordance with

INTERNATIONAL CODE COUNCIL®
Copyright © 2019 ICC & NYSDOS. ALL RIGHTS RESERVED. Accessed by Lauren Gualdino (lgualdino@briarcliffmanor.org), (-) Order Number #100880972 on May 08, 2020 07:05 AM (PDT) pursuant to License Agreement with ICC & NYSDOS. No further reproduction, no

100880972

Exception 6 to Section 1010.1.2 shall comply with all of the following criteria:

1. The doors shall be power operated and shall be capable of being operated manually in the event of power failure.
2. The doors shall be openable by a simple method from both sides without special knowledge or effort.
3. The force required to operate the door shall not exceed 30 pounds (133 N) to set the door in motion and 15 pounds (67 N) to close the door or open it to the minimum required width.
4. The door shall be openable with a force not to exceed 15 pounds (67 N) when a force of 250 pounds (1100 N) is applied perpendicular to the door adjacent to the operating device.
5. The door assembly shall comply with the applicable *fire protection rating* and, where rated, shall be self-closing or automatic closing by smoke detection in accordance with Section 716.2.6.6 of the *Building Code of New York State*, shall be installed in accordance with NFPA 80 and shall comply with Section 716 of the *Building Code of New York State*.
6. The door assembly shall have an integrated standby power supply.
7. The door assembly power supply shall be electrically supervised.
8. The door shall open to the minimum required width within 10 seconds after activation of the operating device.

[BE] 1010.1.4.4 Locking arrangements in educational occupancies. In Group E and Group B educational occupancies, egress doors from classrooms, offices and other occupied rooms shall be permitted to be provided with locking arrangements designed to keep intruders from entering the room, where all of the following conditions are met:

1. The door shall be capable of being unlocked from outside the room with a key or other approved means.
2. The door shall be openable from within the room in accordance with Section 1010.1.9.
3. Modifications shall not be made to listed panic hardware, fire door hardware or door closers.

[BE] 1010.1.4.4.1 Remote operation of locks. Remote operation of locks complying with Section 1010.1.4.4 shall be permitted.

[BE] 1010.1.4.5 Security grilles. In Groups B, F, M and S, horizontal sliding or vertical security grilles are permitted at the main *exit* and shall be openable from the inside without the use of a key or special knowledge or effort during periods that the space is occupied. The grilles shall remain secured in the full-open position during the period of occupancy by the general public. Where two or more *means of egress* are required, not more than one-half of the *exits* or *exit access doorways* shall be equipped with horizontal sliding or vertical security grilles.

[BE] 1010.1.5 Floor elevation. There shall be a floor or landing on each side of a door. Such floor or landing shall be at the same elevation on each side of the door. Landings shall be level except for exterior landings, which are permitted to have a slope not to exceed 0.25 unit vertical in 12 units horizontal (2-percent slope).

Exceptions:

1. Doors serving individual *dwelling units* in Groups R-2 and R-3 where the following apply:
   1.1. A door is permitted to open at the top step of an interior *flight* of *stairs*, provided that the door does not swing over the top step.
   1.2. Screen doors and storm doors are permitted to swing over *stairs* or landings.
2. Exterior doors as provided for in Section 1003.5, Exception 1, and Section 1022.2, which are not on an *accessible route*.
3. In Group R-3 occupancies not required to be Accessible units, Type A units or Type B units, the landing at an exterior doorway shall be not more than $7^3/_4$ inches (197 mm) below the top of the threshold, provided that the door, other than an exterior storm or screen door, does not swing over the landing.
4. Variations in elevation due to differences in finish materials, but not more than $^1/_2$ inch (12.7 mm).
5. Exterior decks, patios or balconies that are part of Type B *dwelling units*, have impervious surfaces and that are not more than 4 inches (102 mm) below the finished floor level of the adjacent interior space of the dwelling unit.
6. Doors serving equipment spaces not required to be accessible in accordance with Section 1103.2.9 of the *Building Code of New York State* and serving an *occupant load* of five or less shall be permitted to have a landing on one side to be not more than 7 inches (178 mm) above or below the landing on the egress side of the door.

[BE] 1010.1.6 Landings at doors. Landings shall have a width not less than the width of the *stairway* or the door, whichever is greater. Doors in the fully open position shall not reduce a required dimension by more than 7 inches (178 mm). Where a landing serves an *occupant load* of 50 or more, doors in any position shall not reduce the landing to less than one-half its required width. Landings shall have a length measured in the direction of travel of not less than 44 inches (1118 mm).

Exception: Landing length in the direction of travel in Groups R-3 and U and within individual units of Group R-2 need not exceed 36 inches (914 mm).

[BE] 1010.1.7 Thresholds. Thresholds at doorways shall not exceed $^3/_4$ inch (19.1 mm) in height above the finished

INTERNATIONAL CODE COUNCIL®
Copyright © 2019 ICC & NYSDOS. ALL RIGHTS RESERVED. Accessed by Lauren Gualdino (lgualdino@briarcliffmanor.org), (-) Order Number #100880972 on May 08, 2020 07:05 AM (PDT) pursuant to License Agreement with ICC & NYSDOS. No further reproduction, no

100880972

floor or landing for sliding doors serving *dwelling units* or $^1/_2$ inch (12.7 mm) above the finished floor or landing for other doors. Raised thresholds and floor level changes greater than $^1/_4$ inch (6.4 mm) at doorways shall be beveled with a slope not greater than one unit vertical in two units horizontal (50-percent slope).

Exceptions:

1. In occupancy Group R-2 or R-3, threshold heights for sliding and side-hinged exterior doors shall be permitted to be up to $7^3/_4$ inches (197 mm) in height if all of the following apply:
   1.1. The door is not part of the required *means of egress*.
   1.2. The door is not part of an *accessible route* as required by Chapter 11 of the *Building Code of New York State*.
   1.3. The door is not part of an accessible unit, Type A unit or Type B unit.
2. In Type B units, where Exception 5 to Section 1010.1.5 permits a 4-inch (102 mm) elevation change at the door, the threshold height on the exterior side of the door shall not exceed $4^3/_4$ inches (120 mm) in height above the exterior deck, patio or balcony for sliding doors or $4^1/_2$ inches (114 mm) above the exterior deck, patio or balcony for other doors.

[BE] 1010.1.8 Door arrangement. Space between two doors in a series shall be 48 inches (1219 mm) minimum plus the width of a door swinging into the space. Doors in a series shall swing either in the same direction or away from the space between the doors.

Exceptions:

1. The minimum distance between horizontal sliding power-operated doors in a series shall be 48 inches (1219 mm).
2. Storm and screen doors serving individual *dwelling units* in Groups R-2 and R-3 need not be spaced 48 inches (1219 mm) from the other door.
3. Doors within individual *dwelling units* in Groups R-2 and R-3 other than within Type A dwelling units.

[BE] 1010.1.9 Door operations. Except as specifically permitted by this section, egress doors shall be readily openable from the egress side without the use of a key or special knowledge or effort.

[BE] 1010.1.9.1 Hardware. Door handles, pulls, latches, locks and other operating devices on doors required to be accessible by Chapter 11 of the *Building Code of New York State* shall not require tight grasping, tight pinching or twisting of the wrist to operate.

[BE] 1010.1.9.2 Hardware height. Door handles, pulls, latches, locks and other operating devices shall be installed 34 inches (864 mm) minimum and 48 inches (1219 mm) maximum above the finished floor. Locks used only for security purposes and not used for normal operation are permitted at any height.

Exception: Access doors or gates in barrier walls and fences protecting pools, spas and hot tubs shall be permitted to have operable parts of the latch release on self-latching devices at 54 inches (1370 mm) maximum above the finished floor or ground, provided that the self-latching devices are not also self-locking devices operated by means of a key, electronic opener or integral combination lock.

[BE] 1010.1.9.3 Monitored or recorded egress. Where electrical systems that monitor or record egress activity are incorporated, the locking system shall comply with Section 1010.1.9.7, 1010.1.9.8, 1010.1.9.9, 1010.1.9.10 or 1010.1.9.11, or shall be readily openable from the egress side without the use of a key or special knowledge or effort.

[BE] 1010.1.9.4 Locks and latches. Locks and latches shall be permitted to prevent operation of doors where any of the following exist:

1. Places of detention or restraint.
2. In buildings in occupancy Group A having an *occupant load* of 300 or less, Groups B, F, M and S, and in places of religious worship, the main door or doors are permitted to be equipped with key-operated locking devices from the egress side provided:
   2.1. The locking device is readily distinguishable as locked.
   2.2. A readily visible durable sign is posted on the egress side on or adjacent to the door stating: THIS DOOR TO REMAIN UNLOCKED WHEN THIS SPACE IS OCCUPIED. The sign shall be in letters 1 inch (25 mm) high on a contrasting background.
   2.3. The use of the key-operated locking device is revokable by the *fire code official* for due cause.
3. Where egress doors are used in pairs, *approved* automatic flush bolts shall be permitted to be used, provided that the door leaf having the automatic flush bolts does not have a doorknob or surface-mounted hardware.
4. Doors from individual *dwelling* or *sleeping units* of Group R occupancies having an *occupant load* of 10 or less are permitted to be equipped with a night latch, dead bolt or security chain, provided such devices are openable from the inside without the use of a key or tool.
5. Fire doors after the minimum elevated temperature has disabled the unlatching mechanism in accordance with *listed* fire door test procedures.

INTERNATIONAL CODE COUNCIL®
Copyright © 2019 ICC & NYSDOS. ALL RIGHTS RESERVED. Accessed by Lauren Gualdino (lgualdino@briarcliffmanor.org), (-) Order Number #100880972 on May 08, 2020 07:05 AM (PDT) pursuant to License Agreement with ICC & NYSDOS. No further reproduction, no

100880972

6. Doors serving roofs not intended to be occupied shall be permitted to be locked, preventing entry to the building from the roof.

[BE] 1010.1.9.5 Bolt locks. Manually operated flush bolts or surface bolts are not permitted.

Exceptions:

1. On doors not required for egress in individual *dwelling units* or *sleeping units*.
2. Where a pair of doors serves a storage or equipment room, manually operated edge- or surface-mounted bolts are permitted on the inactive leaf.
3. Where a pair of doors serves an *occupant load* of less than 50 persons in a Group B, F or S occupancy, manually operated edge- or surface-mounted bolts are permitted on the inactive leaf. The inactive leaf shall not contain doorknobs, panic bars or similar operating hardware.
4. Where a pair of doors serves a Group B, F or S occupancy, manually operated edge- or surface-mounted bolts are permitted on the inactive leaf provided that such inactive leaf is not needed to meet egress capacity requirements and the building is equipped throughout with an *automatic sprinkler system* in accordance with Section 903.3.1.1. The inactive leaf shall not contain doorknobs, panic bars or similar operating hardware.
5. Where a pair of doors serves patient care rooms in Group I-2 occupancies, self-latching edge- or surface-mounted bolts are permitted on the inactive leaf provided that the inactive leaf is not needed to meet egress capacity requirements and the inactive leaf shall not contain doorknobs, panic bars or similar operating hardware.

[BE] 1010.1.9.6 Unlatching. The unlatching of any door or leaf shall not require more than one operation.

Exceptions:

1. Places of detention or restraint.
2. Where manually operated bolt locks are permitted by Section 1010.1.9.5.
3. Doors with automatic flush bolts as permitted by Section 1010.1.9.4, Item 3.
4. Doors from individual *dwelling units* and *sleeping units* of Group R occupancies as permitted by Section 1010.1.9.4, Item 4.

[BE] 1010.1.9.6.1 Closet doors. Closet doors that latch in the closed position shall be openable from inside the closet.

[BE] 1010.1.9.7 Controlled egress doors in Groups I-1 and I-2. Electric locking systems, including electro-mechanical locking systems and electromagnetic locking systems, shall be permitted to be locked in the means of egress in Group I-1 or I-2 occupancies where the clinical needs of persons receiving care require their containment. Controlled egress doors shall be permitted in such occupancies where the building is equipped throughout with an *automatic sprinkler system* in accordance with Section 903.3.1.1 or an approved automatic smoke or heat detection system installed in accordance with Section 907, provided that the doors are installed and operate in accordance with all of the following:

1. The door locks shall unlock on actuation of the *automatic sprinkler system* or automatic fire detection system.
2. The door locks shall unlock on loss of power controlling the lock or lock mechanism.
3. The door locking system shall be installed to have the capability of being unlocked by a switch located at the fire command center, a nursing station or other approved location. The switch shall directly break power to the lock.
4. A building occupant shall not be required to pass through more than one door equipped with a controlled egress locking system before entering an exit.
5. The procedures for unlocking the doors shall be described and approved as part of the emergency planning and preparedness required by Chapter 4.
6. All clinical staff shall have the keys, codes or other means necessary to operate the locking systems.
7. Emergency lighting shall be provided at the door.
8. The door locking system units shall be *listed* in accordance with UL 294.

Exceptions:

1. Items 1 through 4 shall not apply to doors to areas occupied by persons who, because of clinical needs, require restraint or containment as part of the function of a psychiatric treatment area.
2. Items 1 through 4 shall not apply to doors to areas where a *listed* egress control system is utilized to reduce the risk of child abduction from nursery and obstetric areas of a Group I-2 hospital.

[BE] 1010.1.9.8 Delayed egress. Delayed egress locking systems, shall be permitted to be installed on doors serving the following occupancies in buildings that are equipped throughout with an *automatic sprinkler system* in accordance with Section 903.3.1.1 or an *approved* automatic smoke or heat detection system installed in accordance with Section 907:

1. Group B, F, I, M, R, S and U occupancies.
2. Group E classrooms with an occupant load of less than 50.

Exception: Delayed egress locking systems shall be permitted to be installed on exit or exit access doors, other than the main exit or exit access door, serving

INTERNATIONAL CODE COUNCIL®
Copyright © 2019 ICC & NYSDOS. ALL RIGHTS RESERVED. Accessed by Lauren Gualdino (lgualdino@briarcliffmanor.org), (-) Order Number #100880972 on May 08, 2020 07:05 AM (PDT) pursuant to License Agreement with ICC & NYSDOS. No further reproduction, no

100880972

a courtroom in buildings equipped throughout with an *automatic sprinkler system* in accordance with Section 903.3.1.1.

[BE] 1010.1.9.8.1 Delayed egress locking system. The delayed egress locking system shall be installed and operated in accordance with all of the following:

1. The delay electronics of the delayed egress locking system shall deactivate upon actuation of the *automatic sprinkler system* or automatic fire detection system, allowing immediate, free egress.
2. The delay electronics of the delayed egress locking system shall deactivate upon loss of power controlling the lock or lock mechanism, allowing immediate free egress.
3. The delayed egress locking system shall have the capability of being deactivated at the fire command center and other approved locations.
4. An attempt to egress shall initiate an irreversible process that shall allow such egress in not more than 15 seconds when a physical effort to exit is applied to the egress side door hardware for not more than 3 seconds. Initiation of the irreversible process shall activate an audible signal in the vicinity of the door. Once the delay electronics have been deactivated, rearming the delay electronics shall be by manual means only.

   Exception: Where *approved*, a delay of not more than 30 seconds is permitted on a delayed egress door.
5. The egress path from any point shall not pass through more than one delayed egress locking system.

   Exceptions:

   1. In Group I-2 or I-3 occupancies, the egress path from any point in the building shall pass through not more than two delayed egress locking systems provided that the combined delay does not exceed 30 seconds.
   2. In Group I-1 or I-4 occupancies, the egress path from any point in the building shall pass through not more than two delayed egress locking systems provided that the combined delay does not exceed 30 seconds and the building is equipped throughout with an automatic sprinkler system in accordance with Section 903.3.1.1.
6. A sign shall be provided on the door and shall be located above and within 12 inches (305 mm) of the door exit hardware:

   6.1. For doors that swing in the direction of egress, the sign shall read: PUSH UNTIL ALARM SOUNDS. DOOR CAN BE OPENED IN 15 [30] SECONDS.

   6.2. For doors that swing in the opposite direction of egress, the sign shall read: PULL UNTIL ALARM SOUNDS. DOOR CAN BE OPENED IN 15 [30] SECONDS.

   6.3 The sign shall comply with the visual character requirements in ICC A117.1.

   Exception: Where *approved*, in Group I occupancies, the installation of a sign is not required where care recipients who, because of clinical needs, require restraint or containment as part of the function of the treatment area.
7. Emergency lighting shall be provided on the egress side of the door.
8. The delayed egress locking system units shall be *listed* in accordance with UL 294.

[BE] 1010.1.9.9 Sensor release of electrically locked egress doors. Sensor release of electric locking systems shall be permitted on doors located in a the *means of egress* in any occupancy except Group H where installed and operated in accordance with all of the following criteria:

1. The sensor shall be installed on the egress side, arranged to detect an occupant approaching the doors and shall cause the electric locking system to unlock.
2. The electric locks shall be arranged to unlock by a signal from or loss of power to the sensor.
3. Loss of power to the lock or locking system shall automatically unlock the electric locks.
4. The doors shall be arranged to unlock from a manual unlocking device located 40 inches to 48 inches (1016 mm to 1219 mm) vertically above the floor and within 5 feet (1524 mm) of the secured doors. Ready access shall be provided to the manual unlocking device and the device shall be clearly identified by a sign that reads "PUSH TO EXIT." When operated, the manual unlocking device shall result in direct interruption of power to the electric lock—independent of other electronics—and the electric lock shall remain unlocked for not less than 30 seconds.
5. Activation of the building fire alarm system, where provided, shall automatically unlock the electric lock, and the electric lock shall remain unlocked until the fire alarm system has been reset.
6. Activation of the building *automatic sprinkler system* or fire detection system, where provided, shall automatically unlock the electric lock. The electric lock shall remain unlocked until the fire alarm system has been reset.
7. The door locking system units shall be listed in accordance with UL 294.

INTERNATIONAL CODE COUNCIL®
Copyright © 2019 ICC & NYSDOS. ALL RIGHTS RESERVED. Accessed by Lauren Gualdino (lgualdino@briarcliffmanor.org), (-) Order Number #100880972 on May 08, 2020 07:05 AM (PDT) pursuant to License Agreement with ICC & NYSDOS. No further reproduction, no

100880972

[BE] 1010.1.9.10 Door hardware release of electrically locked egress doors. Door hardware release of electric locking systems shall be permitted on doors in the *means of egress* in any occupancy except Group H where installed and operated in accordance with all of the following:

1. The door hardware that is affixed to the door leaf has an obvious method of operation that is readily operated under all lighting conditions.
2. The door hardware is capable of being operated with one hand and shall comply with Section 1010.1.9.6.
3. Operation of the door hardware directly interrupts the power to the electric lock and unlocks the door immediately.
4. Loss of power to the electric locking system automatically unlocks the door.
5. Where *panic* or *fire exit hardware* is required by Section 1010.1.10, operation of the *panic* or *fire exit hardware* also releases the electric lock.
6. The locking system units shall be *listed* in accordance with UL 294.

[BE] 1010.1.9.11 Locking arrangements in buildings within correctional facilities. In buildings within correctional and detention facilities, doors in *means of egress* serving rooms or spaces occupied by persons whose movements are controlled for security reasons shall be permitted to be locked where equipped with egress control devices that shall unlock manually and by not less than one of the following means:

1. Activation of an *automatic sprinkler system* installed in accordance with Section 903.3.1.1.
2. Activation of an *approved* manual fire alarm box.
3. A signal from a constantly attended location.

[BE] 1010.1.9.12 Stairway doors. Interior *stairway means of egress* doors shall be openable from both sides without the use of a key or special knowledge or effort.

Exceptions:

1. *Stairway* discharge doors shall be openable from the egress side and shall only be locked from the opposite side.
2. This section shall not apply to doors arranged in accordance with Section 403.5.3 of the *Building Code of New York State*.
3. *Stairway* exit doors are permitted to be locked from the side opposite the egress side, provided that they are openable from the egress side and capable of being unlocked simultaneously without unlatching upon a signal from the *fire command center*, if present, or a signal by emergency personnel from a single location inside the main entrance to the building.
4. *Stairway* exit doors shall be openable from the egress side and shall only be locked from the opposite side in Group B, F, M and S occupancies where the only interior access to the tenant space is from a single *exit stairway* where permitted in Section 1006.3.3.
5. *Stairway* exit doors shall be openable from the egress side and shall only be locked from the opposite side in Group R-2 occupancies where the only interior access to the *dwelling unit* is from a single exit stairway where permitted in Section 1006.3.3.

[BE] 1010.1.10 Panic and fire exit hardware. Swinging doors serving a Group H occupancy and swinging doors serving rooms or spaces with an *occupant load* of 50 or more in a Group A or E occupancy shall not be provided with a latch or lock other than *panic hardware* or *fire exit hardware*.

Exceptions:

1. A main *exit* of a Group A occupancy shall be permitted to have locking devices in accordance with Section 1010.1.9.4, Item 2.
2. Doors provided with *panic hardware* or *fire exit hardware* and serving a Group A or E occupancy shall be permitted to be electrically locked in accordance with Section 1010.1.9.9 or 1010.1.9.10.

Electrical rooms with equipment rated 1,200 amperes or more and over 6 feet (1829 mm) wide, and that contain overcurrent devices, switching devices or control devices with exit or exit access doors, shall be equipped with *panic hardware* or *fire exit hardware*. The doors shall swing in the direction of egress travel.

[BE] 1010.1.10.1 Installation. Where *panic* or *fire exit hardware* is installed, it shall comply with the following:

1. *Panic hardware* shall be *listed* in accordance with UL 305.
2. *Fire exit hardware* shall be *listed* in accordance with UL 10C and UL 305.
3. The actuating portion of the releasing device shall extend not less than one-half of the door leaf width.
4. The maximum unlatching force shall not exceed 15 pounds (67 N).

[BE] 1010.1.10.2 Balanced doors. If *balanced doors* are used and *panic hardware* is required, the *panic hardware* shall be the push-pad type and the pad shall not extend more than one-half the width of the door measured from the latch side.

[BE] 1010.2 Gates. Gates serving the *means of egress* system shall comply with the requirements of this section. Gates used as a component in a *means of egress* shall conform to the applicable requirements for doors.

Exception: Horizontal sliding or swinging gates exceeding the 4-foot (1219 mm) maximum leaf width limitation are permitted in fences and walls surrounding a stadium.

[BE] 1010.2.1 Stadiums. *Panic hardware* is not required on gates surrounding stadiums where such gates are under

INTERNATIONAL CODE COUNCIL®
Copyright © 2019 ICC & NYSDOS. ALL RIGHTS RESERVED. Accessed by Lauren Gualdino (lgualdino@briarcliffmanor.org), (-) Order Number #100880972 on May 08, 2020 07:05 AM (PDT) pursuant to License Agreement with ICC & NYSDOS. No further reproduction, no

100880972

constant immediate supervision while the public is present, and where safe dispersal areas based on 3 square feet (0.28 m^2) per occupant are located between the fence and enclosed space. Such required safe dispersal areas shall not be located less than 50 feet (15 240 mm) from the enclosed space. See Section 1028.5 for *means of egress* from safe dispersal areas.

[BE] 1010.3 Turnstiles and similar devices. Turnstiles or similar devices that restrict travel to one direction shall not be placed so as to obstruct any required *means of egress*, except where permitted in accordance with Sections 1010.3.1, 1010.3.2 and 1010.3.3.

[BE] 1010.3.1 Capacity. Each turnstile or similar device shall be credited with a capacity based on not more than a 50-person *occupant* load where all of the following provisions are met:

1. Each device shall turn free in the direction of egress travel when primary power is lost and on the manual release by an employee in the area.
2. Such devices are not given credit for more than 50 percent of the required egress capacity or width.
3. Each device is not more than 39 inches (991 mm) high.
4. Each device has not less than $16^1/_2$ inches (419 mm) clear width at and below a height of 39 inches (991 mm) and not less than 22 inches (559 mm) clear width at heights above 39 inches (991 mm).

[BE] 1010.3.1.1 Clear width. Where located as part of an *accessible route*, turnstiles shall have not less than 36 inches (914 mm) clear at and below a height of 34 inches (864 mm), not less than 32 inches (813 mm) clear width between 34 inches (864 mm) and 80 inches (2032 mm) and shall consist of a mechanism other than a revolving device.

[BE] 1010.3.2 Security access turnstiles. Security access turnstiles that inhibit travel in the direction of egress utilizing a physical barrier shall be permitted to be considered as a component of the means of egress, provided that all of the following criteria are met:

1. The building is protected throughout by an approved, supervised automatic sprinkler system in accordance with Section 903.3.1.1.
2. Each security access turnstile lane configuration has a minimum clear passage width of 22 inches (559 mm).
3. Any security access turnstile lane configuration providing a clear passage width of less than 32 inches (810 mm) shall be credited with a maximum egress capacity of 50 persons.
4. Any security access turnstile lane configuration providing a clear passage width of 32 inches (810 mm) or more shall be credited with a maximum egress capacity as calculated in accordance with Section 1005.
5. Each secured physical barrier shall automatically retract or swing to an unobstructed open position in the direction of egress, under each of the following conditions:
   - 5.1. Upon loss of power to the turnstile or any part of the access control system that secures the physical barrier.
   - 5.2. Upon actuation of a clearly identified manual release device with ready access that results in direct interruption of power to each secured physical barrier, after which such barriers remain in the open position for not less than 30 seconds. The manual release device shall be positioned at one of the following locations:
     - 5.2.1. On the egress side of each security access turnstile lane.
     - 5.2.2. At an approved location where it can be actuated by an employee assigned to the area at all times that the building is occupied.
   - 5.3. Upon actuation of the building fire alarm system, if provided, after which the physical barrier remains in the open position until the fire alarm system is manually reset.

     Exception: Actuation of a manual fire alarm box.
   - 5.4. Upon actuation of the building automatic sprinkler or fire detection system, after which the physical barrier remains in the open position until the fire alarm system is manually reset.

[BE] 1010.3.3 High turnstile. Turnstiles more than 39 inches (991 mm) high shall meet the requirements for revolving doors or the requirements of Section 1010.3.2 for security access turnstiles.

[BE] 1010.3.4 Additional door. Where serving an *occupant load* greater than 300, each turnstile that is not portable shall have a side-hinged swinging door that conforms to Section 1010.1 within 50 feet (15 240 mm).

Exception: A side-hinged swinging door is not required at security access turnstiles that comply with Section 1010.3.2.

SECTION 1011
STAIRWAYS

[BE] 1011.1 General. *Stairways* serving occupied portions of a building shall comply with the requirements of Sections 1011.2 through 1011.13. Alternating tread devices shall comply with Section 1011.14. Ship's ladders shall comply with Section 1011.15. Ladders shall comply with Section 1011.16.

Exception: Within rooms or spaces used for assembly purposes, stepped *aisles* shall comply with Section 1029.

INTERNATIONAL CODE COUNCIL®
Copyright © 2019 ICC & NYSDOS. ALL RIGHTS RESERVED. Accessed by Lauren Gualdino (lgualdino@briarcliffmanor.org), (-) Order Number #100880972 on May 08, 2020 07:05 AM (PDT) pursuant to License Agreement with ICC & NYSDOS. No further reproduction, no

100880972

[BE] 1011.2 Width and capacity. The required capacity of *stairways* shall be determined as specified in Section 1005.1, but the minimum width shall be not less than 44 inches (1118 mm). See Section 1009.3 for *accessible means of egress stairways*.

Exceptions:

1. *Stairways* serving an *occupant load* of less than 50 shall have a width of not less than 36 inches (914 mm).
2. *Spiral stairways* as provided for in Section 1011.10.
3. Where an incline platform lift or *stairway* chairlift is installed on *stairways* serving occupancies in Group R-3, or within *dwelling units* in occupancies in Group R-2, a clear passage width not less than 20 inches (508 mm) shall be provided. Where the seat and platform can be folded when not in use, the distance shall be measured from the folded position.

[BE] 1011.3 Headroom. *Stairways* shall have a headroom clearance of not less than 80 inches (2032 mm) measured vertically from a line connecting the edge of the *nosings*. Such headroom shall be continuous above the *stairway* to the point where the line intersects the landing below, one tread depth beyond the bottom riser. The minimum clearance shall be maintained the full width of the *stairway* and landing.

Exceptions:

1. *Spiral stairways* complying with Section 1011.10 are permitted a 78-inch (1981 mm) headroom clearance.
2. In Group R-3 occupancies; within *dwelling units* in Group R-2 occupancies; and in Group U occupancies that are accessory to a Group R-3 occupancy or accessory to individual *dwelling units* in Group R-2 occupancies; where the *nosings* of treads at the side of a *flight* extend under the edge of a floor opening through which the *stair* passes, the floor opening shall be allowed to project horizontally into the required headroom not more than $4^3/_4$ inches (121 mm).

[BE] 1011.4 Walkline. The walkline across *winder* treads shall be concentric to the direction of travel through the turn and located 12 inches (305 mm) from the side where the *winders* are narrower. The 12-inch (305 mm) dimension shall be measured from the widest point of the clear *stair* width at the walking surface of the *winder*. Where *winders* are adjacent within the *flight*, the point of the widest clear *stair* width of the adjacent *winders* shall be used.

[BE] 1011.5 Stair treads and risers. *Stair* treads and risers shall comply with Sections 1011.5.1 through 1011.5.5.3.

[BE] 1011.5.1 Dimension reference surfaces. For the purpose of this section, all dimensions are exclusive of carpets, rugs or runners.

[BE] 1011.5.2 Riser height and tread depth. *Stair* riser heights shall be 7 inches (178 mm) maximum and 4 inches (102 mm) minimum. The riser height shall be measured vertically between the *nosings* of adjacent treads. Rectangular tread depths shall be 11 inches (279 mm) minimum measured horizontally between the vertical planes of the foremost projection of adjacent treads and at a right angle to the tread's *nosing*. *Winder* treads shall have a minimum tread depth of 11 inches (279 mm) between the vertical planes of the foremost projection of adjacent treads at the intersections with the walkline and a minimum tread depth of 10 inches (254 mm) within the clear width of the *stair*.

Exceptions:

1. *Spiral stairways* in accordance with Section 1011.10.
2. *Stairways* connecting stepped *aisles* to cross aisles or concourses shall be permitted to use the riser/tread dimension in Section 1029.14.2.
3. In Group R-3 occupancies; within *dwelling units* in Group R-2 occupancies; and in Group U occupancies that are accessory to a Group R-3 occupancy or accessory to individual *dwelling units* in Group R-2 occupancies; the maximum riser height shall be $7^3/_4$ inches (197 mm); the minimum tread depth shall be 10 inches (254 mm); the minimum *winder* tread depth at the walkline shall be 10 inches (254 mm); and the minimum *winder* tread depth shall be 6 inches (152 mm). A *nosing* projection not less than $^3/_4$ inch (19.1 mm) but not more than $1^1/_4$ inches (32 mm) shall be provided on *stairways* with solid risers where the tread depth is less than 11 inches (279 mm).
4. See Section 503.1 of the *Existing Building Code of New York State* for the replacement of existing *stairways*.
5. In Group I-3 facilities, *stairways* providing access to guard towers, observation stations and control rooms, not more than 250 square feet (23 m^2) in area, shall be permitted to have a maximum riser height of 8 inches (203 mm) and a minimum tread depth of 9 inches (229 mm).

[BE] 1011.5.3 Winder treads. *Winder* treads are not permitted in *means of egress stairways* except within a *dwelling unit.*

Exceptions:

1. Curved *stairways* in accordance with Section 1011.9.
2. *Spiral stairways* in accordance with Section 1011.10.

[BE] 1011.5.4 Dimensional uniformity. *Stair* treads and risers shall be of uniform size and shape. The tolerance between the largest and smallest riser height or between the largest and smallest tread depth shall not exceed $^3/_8$ inch (9.5 mm) in any *flight* of *stairs*. The greatest *winder* tread depth at the walkline within any *flight* of *stairs* shall not exceed the smallest by more than $^3/_8$ inch (9.5 mm).

Exceptions:

1. *Stairways* connecting stepped *aisles* to cross *aisles* or concourses shall be permitted to comply with the dimensional nonuniformity in Section 1029.14.2.

INTERNATIONAL CODE COUNCIL®
Copyright © 2019 ICC & NYSDOS. ALL RIGHTS RESERVED. Accessed by Lauren Gualdino (lgualdino@briarcliffmanor.org), (-) Order Number #100880972 on May 08, 2020 07:05 AM (PDT) pursuant to License Agreement with ICC & NYSDOS. No further reproduction, no

100880972

2. Consistently shaped *winders*, complying with Section 1011.5, differing from rectangular treads in the same *flight* of *stairs*.
3. Nonuniform riser dimension complying with Section 1011.5.4.1.

[BE] 1011.5.4.1 Nonuniform height risers. Where the bottom or top riser adjoins a sloping *public way*, walkway or driveway having an established grade and serving as a landing, the bottom or top riser is permitted to be reduced along the slope to less than 4 inches (102 mm) in height, with the variation in height of the bottom or top riser not to exceed one unit vertical in 12 units horizontal (8-percent slope) of stair width. The nosings or leading edges of treads at such nonuniform height risers shall have a distinctive marking stripe, different from any other *nosing* marking provided on the *stair flight*. The distinctive marking stripe shall be visible in descent of the *stair* and shall have a slip-resistant surface. Marking stripes shall have a width of not less than 1 inch (25 mm) but not more than 2 inches (51 mm).

[BE] 1011.5.5 Nosing and riser profile. *Nosings* shall have a curvature or bevel of not less than $^{1}/_{16}$ inch (1.6 mm) but not more than $^{9}/_{16}$ inch (14.3 mm) from the foremost projection of the tread. Risers shall be solid and vertical or sloped under the tread above from the underside of the *nosing* above at an angle not more than 30 degrees (0.52 rad) from the vertical.

[BE] 1011.5.5.1 Nosing projection size. The leading edge (*nosings*) of treads shall project not more than $1^{1}/_{4}$ inches (32 mm) beyond the tread below.

[BE] 1011.5.5.2 Nosing projection uniformity. *Nosing* projections of the leading edges shall be of uniform size, including the projections of the *nosing's* leading edge of the floor at the top of a *flight*.

[BE] 1011.5.5.3 Solid risers. Risers shall be solid.

Exceptions:

1. Solid risers are not required for *stairways* that are not required to comply with Section 1009.3, provided that the opening between treads does not permit the passage of a sphere with a diameter of 4 inches (102 mm).
2. Solid risers are not required for occupancies in Group I-3 or in Group F, H and S occupancies other than areas accessible to the public. The size of the opening in the riser is not restricted.
3. Solid risers are not required for *spiral stairways* constructed in accordance with Section 1011.10.

[BE] 1011.6 Stairway landings. There shall be a floor or landing at the top and bottom of each *stairway*. The width of landings, measured perpendicularly to the direction of travel, shall be not less than the width of *stairways* served. Every landing shall have a minimum depth, measured parallel to the direction of travel, equal to the width of the *stairway* or 48 inches (1219 mm), whichever is less Doors opening onto a landing shall not reduce the landing to less than one-half the required width. When fully open, the door shall not project more than 7 inches (178 mm) into a landing. Where *wheelchair* spaces are required on the *stairway* landing in accordance with Section 1009.6.3, the *wheelchair* space shall not be located in the required width of the landing and doors shall not swing over the *wheelchair* spaces.

Exception: Where *stairways* connect stepped *aisles* to cross *aisles* or concourses, *stairway* landings are not required at the transition between *stairways* and stepped *aisles* constructed in accordance with Section 1029.

[BE] 1011.7 Stairway construction. *Stairways* shall be built of materials consistent with the types permitted for the type of construction of the building, except that wood *handrails* shall be permitted for all types of construction.

[BE] 1011.7.1 Stairway walking surface. The walking surface of treads and landings of a *stairway* shall not be sloped steeper than one unit vertical in 48 units horizontal (2-percent slope) in any direction. *Stairway* treads and landings shall have a solid surface. Finish floor surfaces shall be securely attached.

Exceptions:

1. Openings in stair walking surfaces shall be a size that does not permit the passage of $^{1}/_{2}$-inch-diameter (12.7 mm) sphere. Elongated openings shall be placed so that the long dimension is perpendicular to the direction of travel.
2. In Group F, H and S occupancies, other than areas of parking structures accessible to the public, openings in treads and landings shall not be prohibited provided that a sphere with a diameter of $1^{1}/_{8}$ inches (29 mm) cannot pass through the opening.

[BE] 1011.7.2 Outdoor conditions. Outdoor *stairways* and outdoor approaches to *stairways* shall be designed so that water will not accumulate on walking surfaces.

[BE] 1011.7.3 Enclosures under interior stairways. The walls and soffits within enclosed usable spaces under enclosed and unenclosed *stairways* shall be protected by 1-hour fire-resistance- rated construction or the *fire-resistance rating* of the *stairway* enclosure, whichever is greater. Access to the enclosed space shall not be directly from within the *stairway* enclosure.

Exception: Spaces under *stairways* serving and contained within a single residential *dwelling unit* in Group R-2 or R-3 shall be permitted to be protected on the enclosed side with $^{1}/_{2}$-inch (12.7 mm) gypsum board.

[BE] 1011.7.4 Enclosures under exterior stairways. There shall not be enclosed usable space under *exterior exit stairways* unless the space is completely enclosed in 1-hour fire-resistance-rated construction. The open space under *exterior stairways* shall not be used for any purpose.

INTERNATIONAL CODE COUNCIL®
Copyright © 2019 ICC & NYSDOS. ALL RIGHTS RESERVED. Accessed by Lauren Gualdino (lgualdino@briarcliffmanor.org), (-) Order Number #100880972 on May 08, 2020 07:05 AM (PDT) pursuant to License Agreement with ICC & NYSDOS. No further reproduction, no

100880972

[BE] 1011.8 Vertical rise. A *flight* of *stairs* shall not have a vertical rise greater than 12 feet (3658 mm) between floor levels or landings.

Exception: *Spiral stairways* used as a *means of egress* from technical production areas.

[BE] 1011.9 Curved stairways. Curved *stairways* with *winder* treads shall have treads and risers in accordance with Section 1011.5 and the smallest radius shall be not less than twice the minimum width or required capacity of the *stairway*.

Exception: The radius restriction shall not apply to curved *stairways* in Group R-3 and within individual *dwelling units* in Group R-2.

[BE] 1011.10 Spiral stairways. *Spiral stairways* are permitted to be used as a component in the *means of egress* only within *dwelling units* or from a space not more than 250 square feet (23 m^2) in area and serving not more than five occupants, or from technical production areas in accordance with Section 410.5 of the *Building Code of New York State*.

A *spiral stairway* shall have a $6^3/_4$-inch (171 mm) minimum clear tread depth at a point 12 inches (305 mm) from the narrow edge. The risers shall be sufficient to provide a headroom of 78 inches (1981 mm) minimum, but riser height shall not be more than $9^1/_2$ inches (241 mm). The minimum *stairway* clear width at and below the *handrail* shall be 26 inches (660 mm).

[BE] 1011.11 Handrails. *Flights of stairways* shall have *handrails* on each side and shall comply with Section 1014. Where glass is used to provide the *handrail*, the *handrail* shall comply with Section 2407 of the *Building Code of New York State*.

Exceptions:

1. *Flights of stairways* within *dwelling units*, and flights of *spiral stairways* are permitted to have a *handrail* on one side only.
2. Decks, patios and walkways that have a single change in elevation where the landing depth on each side of the change of elevation is greater than what is required for a landing do not require *handrails*.
3. In Group R-3 occupancies, a change in elevation consisting of a single riser at an entrance or egress door does not require *handrails*.
4. Changes in room elevations of three or fewer risers within *dwelling units* and *sleeping units* in Group R-2 and R-3 do not require *handrails*.

[BE] 1011.12 Stairway to roof. In buildings four or more stories above grade plane, one *stairway* shall extend to the roof surface, unless the roof has a slope steeper than four units vertical in 12 units horizontal (33-percent slope).

Exception: Other than where required by Section 1011.12.1, in buildings without an occupied roof, access to the roof from the top story shall be permitted to be by an *alternating tread device*, a ship's ladder or a permanent ladder.

[BE] 1011.12.1 Stairway to elevator equipment. Roofs and penthouses containing elevator equipment that must be accessed for maintenance are required to be accessed by a *stairway*.

[BE] 1011.12.2 Roof access. Where a *stairway* is provided to a roof, access to the roof shall be provided through a penthouse complying with Section 1510.2 of the *Building Code of New York State*.

Exception: In buildings without an occupied roof, access to the roof shall be permitted to be a roof hatch or trap door not less than 16 square feet (1.5 m^2) in area and having a minimum dimension of 2 feet (610 mm).

[BE] 1011.13 Guards. *Guards* shall be provided along *stairways* and landings where required by Section 1015 and shall be constructed in accordance with Section 1015. Where the roof hatch opening providing the required access is located within 10 feet (3049 mm) of the roof edge, such roof access or roof edge shall be protected by *guards* installed in accordance with Section 1015.

[BE] 1011.14 Alternating tread devices. *Alternating tread devices* are limited to an element of a *means of egress* in buildings of Groups F, H and S from a *mezzanine* not more than 250 square feet (23 m^2) in area and that serves not more than five occupants; in buildings of Group I-3 from a guard tower, observation station or control room not more than 250 square feet (23 m^2) in area and for access to unoccupied roofs. *Alternating tread devices* used as a *means of egress* shall not have a rise greater than 20 feet (6096 mm) between floor levels or landings.

[BE] 1011.14.1 Handrails of alternating tread devices. *Handrails* shall be provided on both sides of *alternating tread devices* and shall comply with Section 1014.

[BE] 1011.14.2 Treads of alternating tread devices. *Alternating tread devices* shall have a minimum tread depth of 5 inches (127 mm), a minimum projected tread depth of $8^1/_2$ inches (216 mm), a minimum tread width of 7 inches (178 mm) and a maximum riser height of $9^1/_2$ inches (241 mm). The tread depth shall be measured horizontally between the vertical planes of the foremost projections of adjacent treads. The riser height shall be measured vertically between the leading edges of adjacent treads. The riser height and tread depth provided shall result in an angle of ascent from the horizontal of between 50 and 70 degrees (0.87 and 1.22 rad). The initial tread of the device shall begin at the same elevation as the platform, landing or floor surface.

Exception: *Alternating tread devices* used as an element of a *means of egress* in buildings from a *mezzanine* area not more than 250 square feet (23 m^2) in area that serves not more than five occupants shall have a minimum tread depth of 3 inches (76 mm) with a minimum projected tread depth of $10^1/_2$ inches (267 mm). The rise to the next alternating tread surface shall not exceed 8 inches (203 mm).

[BE] 1011.15 Ship's ladders. Ship's ladders are permitted to be used in Group I-3 as a component of a *means of egress* to and from control rooms or elevated facility observation stations not more than 250 square feet (23 m^2) with not more than three occupants and for access to unoccupied roofs. The

INTERNATIONAL CODE COUNCIL®
Copyright © 2019 ICC & NYSDOS. ALL RIGHTS RESERVED. Accessed by Lauren Gualdino (lgualdino@briarcliffmanor.org), (-) Order Number #100880972 on May 08, 2020 07:05 AM (PDT) pursuant to License Agreement with ICC & NYSDOS. No further reproduction, no

100880972

minimum clear width at and below the *handrails* shall be 20 inches (508 mm).

[BE] 1011.15.1 Handrails of ship's ladders. *Handrails* shall be provided on both sides of ship's ladders.

[BE] 1011.15.2 Treads of ship's ladders. Ship's ladders shall have a minimum tread depth of 5 inches (127 mm). The tread shall be projected such that the total of the tread depth plus the *nosing* projection is not less than $8^1/_2$ inches (216 mm). The maximum riser height shall be $9^1/_2$ inches (241 mm).

[BE] 1011.16 Ladders. Permanent ladders shall not serve as a part of the *means of egress* from occupied spaces within a building. Permanent ladders shall be constructed in accordance with Section 306.5 of the *Mechanical Code of New York State*. Permanent ladders shall be permitted to provide access to the following areas:

1. Spaces frequented only by personnel for maintenance, repair or monitoring of equipment.
2. Nonoccupiable spaces accessed only by catwalks, crawl spaces, freight elevators or very narrow passageways.
3. Raised areas used primarily for purposes of security, life safety or fire safety including, but not limited to, observation galleries, prison guard towers, fire towers or lifeguard stands.
4. Elevated levels in Group U not open to the general public.
5. Nonoccupied roofs that are not required to have *stairway* access in accordance with Section 1011.12.1.
6. Where permitted to access equipment and appliances in accordance with Section 306.5 of the *Mechanical Code of New York State*.

SECTION 1012
RAMPS

[BE] 1012.1 Scope. The provisions of this section shall apply to ramps used as a component of a *means of egress*.

Exceptions:

1. Ramped *aisles* within assembly rooms or spaces shall comply with the provisions in Section 1029.
2. Curb *ramps* shall comply with ICC A117.1.
3. Vehicle *ramps* in parking garages for pedestrian *exit access* shall not be required to comply with Sections 1012.3 through 1012.10 where they are not an *accessible route* serving accessible parking spaces, other required accessible elements or part of an *accessible means of egress*.

[BE] 1012.2 Slope. *Ramps* used as part of a *means of egress* shall have a running slope not steeper than one unit vertical in 12 units horizontal (8-percent slope). The slope of other pedestrian *ramps* shall not be steeper than one unit vertical in eight units horizontal (12.5-percent slope).

[BE] 1012.3 Cross slope. The slope measured perpendicular to the direction of travel of a *ramp* shall not be steeper than one unit vertical in 48 units horizontal (2-percent slope).

[BE] 1012.4 Vertical rise. The rise for any *ramp* run shall be 30 inches (762 mm) maximum.

[BE] 1012.5 Minimum dimensions. The minimum dimensions of *means of egress ramps* shall comply with Sections 1012.5.1 through 1012.5.3.

[BE] 1012.5.1 Width and capacity. The minimum width and required capacity of a *means of egress ramp* shall be not less than that required for *corridors* by Section 1020.2. The clear width of a *ramp* between *handrails*, if provided, or other permissible projections shall be 36 inches (914 mm) minimum.

[BE] 1012.5.2 Headroom. The minimum headroom in all parts of the *means of egress ramp* shall be not less than 80 inches (2032 mm) above the finished floor of the ramp run and any intermediate landings. The minimum clearance shall be maintained for the full width of the ramp and landing.

[BE] 1012.5.3 Restrictions. *Means of egress ramps* shall not reduce in width in the direction of egress travel. Projections into the required *ramp* and landing width are prohibited. Doors opening onto a landing shall not reduce the clear width to less than 42 inches (1067 mm).

[BE] 1012.6 Landings. *Ramps* shall have landings at the bottom and top of each *ramp*, points of turning, entrance, *exits* and at doors. Landings shall comply with Sections 1012.6.1 through 1012.6.5.

[BE] 1012.6.1 Slope. Landings shall have a slope not steeper than one unit vertical in 48 units horizontal (2-percent slope) in any direction. Changes in level are not permitted.

[BE] 1012.6.2 Width. The landing width shall be not less than the width of the widest *ramp* run adjoining the landing.

[BE] 1012.6.3 Length. The landing length shall be 60 inches (1525 mm) minimum.

Exceptions:

1. In Group R-2 and R-3 individual *dwelling* and *sleeping units* that are not required to be Accessible units, Type A units or Type B units in accordance with Section 1107 of the *Building Code of New York State*, landings are permitted to be 36 inches (914 mm) minimum.
2. Where the *ramp* is not a part of an *accessible route*, the length of the landing shall not be required to be more than 48 inches (1220 mm) in the direction of travel.

[BE] 1012.6.4 Change in direction. Where changes in direction of travel occur at landings provided between *ramp* runs, the landing shall be 60 inches by 60 inches (1524 mm by 1524 mm) minimum.

Exception: In Group R-2 and R-3 individual *dwelling* or *sleeping units* that are not required to be Accessible units, Type A units or Type B units in accordance with Section 1107 of the *Building Code of New York State*, landings are permitted to be 36 inches by 36 inches (914 mm by 914 mm) minimum.

INTERNATIONAL CODE COUNCIL®
Copyright © 2019 ICC & NYSDOS. ALL RIGHTS RESERVED. Accessed by Lauren Gualdino (lgualdino@briarcliffmanor.org), (-) Order Number #100880972 on May 08, 2020 07:05 AM (PDT) pursuant to License Agreement with ICC & NYSDOS. No further reproduction, no

100880972

[BE] 1012.6.5 Doorways. Where doorways are located adjacent to a *ramp* landing, maneuvering clearances required by ICC A117.1 are permitted to overlap the required landing area.

[BE] 1012.7 Ramp construction. *Ramps* shall be built of materials consistent with the types permitted for the type of construction of the building, except that wood *handrails* shall be permitted for all types of construction.

[BE] 1012.7.1 Ramp surface. The surface of *ramps* shall be of slip-resistant materials that are securely attached.

[BE] 1012.7.2 Outdoor conditions. Outdoor *ramps* and outdoor approaches to *ramps* shall be designed so that water will not accumulate on walking surfaces.

[BE] 1012.8 Handrails. *Ramps* with a rise greater than 6 inches (152 mm) shall have *handrails* on both sides. *Handrails* shall comply with Section 1014.

[BE] 1012.9 Guards. *Guards* shall be provided where required by Section 1015 and shall be constructed in accordance with Section 1015.

[BE] 1012.10 Edge protection. Edge protection complying with Section 1012.10.1 or 1012.10.2 shall be provided on each side of *ramp* runs and at each side of *ramp* landings.

Exceptions:

1. Edge protection is not required on *ramps* that are not required to have *handrails*, provided that they have flared sides that comply with the ICC A117.1 curb *ramp* provisions.
2. Edge protection is not required on the sides of *ramp* landings serving an adjoining *ramp* run or *stairway*.
3. Edge protection is not required on the sides of *ramp* landings having a vertical dropoff of not more than $^1/_2$ inch (12.7 mm) within 10 inches (254 mm) horizontally of the required landing area.

[BE] 1012.10.1 Curb, rail, wall or barrier. A curb, rail, wall or barrier shall be provided to serve as edge protection. A curb shall be not less than 4 inches (102 mm) in height. Barriers shall be constructed so that the barrier prevents the passage of a 4-inch-diameter (102 mm) sphere, where any portion of the sphere is within 4 inches (102 mm) of the floor or ground surface.

[BE] 1012.10.2 Extended floor or ground surface. The floor or ground surface of the *ramp* run or landing shall extend 12 inches (305 mm) minimum beyond the inside face of a *handrail* complying with Section 1014.

SECTION 1013
EXIT SIGNS

[BE] 1013.1 Where required. *Exits* and *exit access* doors shall be marked by an *approved* exit sign readily visible from any direction of egress travel. The path of egress travel to *exits* and within *exits* shall be marked by readily visible exit signs to clearly indicate the direction of egress travel in cases where the *exit* or the path of egress travel is not immediately visible to the occupants. Intervening *means of egress* doors within *exits* shall be marked by exit signs. Exit sign placement shall be such that any point in an *exit access corridor* or *exit passageway* is within 100 feet (30 480 mm) or the *listed* viewing distance of the sign, whichever is less, from the nearest visible exit sign.

Exceptions:

1. Exit signs are not required in rooms or areas that require only one *exit* or *exit access*.
2. Main exterior *exit* doors or gates that are obviously and clearly identifiable as *exits* need not have *exit* signs where *approved* by the *fire code official*.
3. Exit signs are not required in occupancies in Group U and individual *sleeping units* or *dwelling units* in Group R-1, R-2 or R-3.
4. Exit signs are not required in dayrooms, sleeping rooms or dormitories in occupancies in Group I-3.
5. In occupancies in Groups A-4 and A-5, exit signs are not required on the seating side of vomitories or openings into seating areas where exit signs are provided in the concourse that are readily apparent from the vomitories. Egress lighting is provided to identify each vomitory or opening within the seating area in an emergency.

[BE] 1013.2 Low-level exit signs in Group R-1. Where exit signs are required in Group R-1 occupancies by Section 1013.1, additional low-level exit signs shall be provided in all areas serving guestrooms in Group R-1 occupancies and shall comply with Section 1013.5.

The bottom of the sign shall be not less than 10 inches (254 mm) nor more than 18 inches (455 mm) above the floor level. The sign shall be flush mounted to the door or wall. Where mounted on the wall, the edge of the sign shall be within 4 inches (102 mm) of the door frame on the latch side.

[BE] 1013.3 Illumination. Exit signs shall be internally or externally illuminated.

Exception: Tactile signs required by Section 1013.4 need not be provided with illumination.

[BE] 1013.4 Raised character and braille exit signs. A sign stating EXIT in visual characters, raised characters and braille and complying with ICC A117.1 shall be provided adjacent to each door to an *area of refuge* providing direct access to a stairway, an exterior area for assisted rescue, an *exit stairway* or *ramp*, an *exit passageway* and the *exit discharge*.

[BE] 1013.5 Internally illuminated exit signs. Electrically powered, *self-luminous* and *photoluminescent exit* signs shall be *listed* and labeled in accordance with UL 924 and shall be installed in accordance with the manufacturer's instructions and Section 1203. Exit signs shall be illuminated at all times.

[BE] 1013.6 Externally illuminated exit signs. Externally illuminated exit signs shall comply with Sections 1013.6.1 through 1013.6.3.

[BE] 1013.6.1 Graphics. Every exit sign and directional exit sign shall have plainly legible letters not less than 6 inches (152 mm) high with the principal strokes of the letters not less than $^3/_4$ inch (19.1 mm) wide. The word "EXIT" shall have letters having a width not less than 2 inches (51 mm) wide, except the letter "I," and the mini-

INTERNATIONAL CODE COUNCIL®
Copyright © 2019 ICC & NYSDOS. ALL RIGHTS RESERVED. Accessed by Lauren Gualdino (lgualdino@briarcliffmanor.org), (-) Order Number #100880972 on May 08, 2020 07:05 AM (PDT) pursuant to License Agreement with ICC & NYSDOS. No further reproduction, no

100880972

mum spacing between letters shall be not less than $^3/_8$ inch (9.5 mm). Signs larger than the minimum established in this section shall have letter widths, strokes and spacing in proportion to their height.

The word "EXIT" shall be in high contrast with the background and shall be clearly discernible when the means of exit sign illumination is or is not energized. If a chevron directional indicator is provided as part of the exit sign, the construction shall be such that the direction of the chevron directional indicator cannot be readily changed.

[BE] 1013.6.2 Exit sign illumination. The face of an exit sign illuminated from an external source shall have an intensity of not less than 5 foot-candles (54 lux).

[BE] 1013.6.3 Power source. Exit signs shall be illuminated at all times. To ensure continued illumination for a duration of not less than 90 minutes in case of primary power loss, the sign illumination means shall be connected to an emergency power system provided from storage batteries, unit equipment or an on-site generator. The installation of the emergency power system shall be in accordance with Section 1203. Group I-2, Condition 2 exit sign illumination shall not be provided by unit equipment batteries only.

Exception: *Approved* exit sign illumination types that provide continuous illumination independent of external power sources for a duration of not less than 90 minutes, in case of primary power loss, are not required to be connected to an emergency electrical system.

SECTION 1014
HANDRAILS

[BE] 1014.1 Where required. *Handrails* serving *flights of stairways*, *ramps*, stepped *aisles* and ramped *aisles* shall be adequate in strength and attachment in accordance with Section 1607.8 of the *Building Code of New York State*. *Handrails* required for *flights of stairways* by Section 1011.11 shall comply with Sections 1014.2 through 1014.9. *Handrails* required for *ramps* by Section 1012.8 shall comply with Sections 1014.2 through 1014.8. *Handrails* for stepped *aisles* and ramped *aisles* required by Section 1029.16 shall comply with Sections 1014.2 through 1014.8.

[BE] 1014.2 Height. *Handrail* height, measured above *stair* tread *nosings*, or finish surface of *ramp* slope, shall be uniform, not less than 34 inches (864 mm) and not more than 38 inches (965 mm). *Handrail* height of *alternating tread devices* and ship's ladders, measured above tread *nosings*, shall be uniform, not less than 30 inches (762 mm) and not more than 34 inches (864 mm).

Exceptions:

1. Where handrail fittings or bendings are used to provide continuous transition between *flights*, the fittings or bendings shall be permitted to exceed the maximum height.
2. In Group R-3 occupancies; within *dwelling units* in Group R-2 occupancies; and in Group U occupancies that are associated with a Group R-3 occupancy or associated with individual *dwelling units* in Group R-2 occupancies; where handrail fittings or bendings are used to provide continuous transition between *flights*, transition at *winder* treads, transition from *handrail* to *guard*, or where used at the start of a *flight*, the *handrail* height at the fittings or bendings shall be permitted to exceed the maximum height.
3. *Handrails* on top of a *guard* where permitted along stepped *aisles* and ramped *aisles* in accordance with Section 1029.16.

[BE] 1014.3 Handrail graspability. Required *handrails* shall comply with Section 1014.3.1 or shall provide equivalent graspability.

Exception: In Group R-3 occupancies; within *dwelling units* in Group R-2 occupancies; and in Group U occupancies that are accessory to a Group R-3 occupancy or accessory to individual *dwelling units* in Group R-2 occupancies; *handrails* shall be Type I in accordance with Section 1014.3.1, Type II in accordance with Section 1014.3.2 or shall provide equivalent graspability.

[BE] 1014.3.1 Type I. *Handrails* with a circular cross section shall have an outside diameter of not less than $1^1/_4$ inches (32 mm) and not greater than 2 inches (51 mm). Where the *handrail* is not circular, it shall have a perimeter dimension of not less than 4 inches (102 mm) and not greater than $6^1/_4$ inches (160 mm) with a maximum cross-sectional dimension of $2^1/_4$ inches (57 mm) and minimum cross-sectional dimension of 1 inch (25 mm). Edges shall have a minimum radius of 0.01 inch (0.25 mm).

[BE] 1014.3.2 Type II. *Handrails* with a perimeter greater than $6^1/_4$ inches (160 mm) shall provide a graspable finger recess area on both sides of the profile. The finger recess shall begin within a distance of $^3/_4$ inch (19 mm) measured vertically from the tallest portion of the profile and achieve a depth of not less than $^5/_{16}$ inch (8 mm) within $^7/_8$ inch (22 mm) below the widest portion of the profile. This required depth shall continue for not less than $^3/_8$ inch (10 mm) to a level that is not less than $1^3/_4$ inches (45 mm) below the tallest portion of the profile. The width of the *handrail* above the recess shall be not less than $1^1/_4$ inches (32 mm) to not greater than $2^3/_4$ inches (70 mm). Edges shall have a minimum radius of 0.01 inch (0.25 mm).

[BE] 1014.4 Continuity. *Handrail* gripping surfaces shall be continuous, without interruption by newel posts or other obstructions.

Exceptions:

1. *Handrails* within *dwelling units* are permitted to be interrupted by a newel post at a turn or landing.
2. Within a *dwelling unit*, the use of a volute, turnout, starting easing or starting newel is allowed over the lowest tread.
3. Handrail brackets or balusters attached to the bottom surface of the *handrail* that do not project horizontally beyond the sides of the *handrail* within $1^1/_2$ inches (38 mm) of the bottom of the *handrail* shall not be considered obstructions. For each $^1/_2$ inch (12.7 mm) of additional *handrail* perimeter dimen-

INTERNATIONAL CODE COUNCIL®
Copyright © 2019 ICC & NYSDOS. ALL RIGHTS RESERVED. Accessed by Lauren Gualdino (lgualdino@briarcliffmanor.org), (-) Order Number #100880972 on May 08, 2020 07:05 AM (PDT) pursuant to License Agreement with ICC & NYSDOS. No further reproduction, no

100880972

sion above 4 inches (102 mm), the vertical clearance dimension of $1^1/_2$ inches (38 mm) shall be permitted to be reduced by $^1/_8$ inch (3.2 mm).

4. Where *handrails* are provided along walking surfaces with slopes not steeper than 1:20, the bottoms of the handrail gripping surfaces shall be permitted to be obstructed along their entire length where they are integral to crash rails or bumper guards.
5. *Handrails* serving stepped *aisles* or ramped *aisles* are permitted to be discontinuous in accordance with Section 1029.16.1.

[BE] 1014.5 Fittings. *Handrails* shall not rotate within their fittings.

[BE] 1014.6 Handrail extensions. *Handrails* shall return to a wall, *guard* or the walking surface or shall be continuous to the *handrail* of an adjacent *flight* of *stairs* or ramp run. Where *handrails* are not continuous between *flights* the *handrails* shall extend horizontally not less than 12 inches (305 mm) beyond the top riser and continue to slope for the depth of one tread beyond the bottom riser. At *ramps* where *handrails* are not continuous between runs, the *handrails* shall extend horizontally above the landing 12 inches (305 mm) minimum beyond the top and bottom of *ramp* runs. The extensions of *handrails* shall be in the same direction of the *flights* of *stairs* at *stairways* and the *ramp* runs at *ramps*.

Exceptions:

1. *Handrails* within a *dwelling unit* that is not required to be accessible need extend only from the top riser to the bottom riser.
2. *Handrails* serving *aisles* in rooms or spaces used for assembly purposes are permitted to comply with the *handrail* extensions in accordance with Section 1029.16.
3. *Handrails* for *alternating tread devices* and ship's ladders are permitted to terminate at a location vertically above the top and bottom risers. *Handrails* for *alternating tread devices* are not required to be continuous between *flights* or to extend beyond the top or bottom risers.

[BE] 1014.7 Clearance. Clear space between a *handrail* and a wall or other surface shall be not less than $1^1/_2$ inches (38 mm). A *handrail* and a wall or other surface adjacent to the *handrail* shall be free of any sharp or abrasive elements.

[BE] 1014.8 Projections. On *ramps* and on ramped *aisles* that are part of an *accessible route*, the clear width between *handrails* shall be 36 inches (914 mm) minimum. Projections into the required width of *aisles*, *stairways* and *ramps* at each side shall not exceed $4^1/_2$ inches (114 mm) at or below the *handrail* height. Projections into the required width shall not be limited above the minimum headroom height required in Section 1011.3. Projections due to intermediate *handrails* shall not constitute a reduction in the egress width. Where a pair of intermediate *handrails* are provided within the *stairway* width without a walking surface between the pair of intermediate *handrails* and the distance between the pair of intermediate *handrails* is greater than 6 inches (152 mm), the available egress width shall be reduced by the distance between the closest edges of each such intermediate pair of *handrails* that is greater than 6 inches (152 mm).

[BE] 1014.9 Intermediate handrails. *Stairways* shall have intermediate *handrails* located in such a manner that all portions of the *stairway* minimum width or required capacity are within 30 inches (762 mm) of a *handrail*. On monumental *stairs*, *handrails* shall be located along the most direct path of egress travel.

SECTION 1015
GUARDS

[BE] 1015.1 General. *Guards* shall comply with the provisions of Section 1015.2 through 1015.7. Operable windows with sills located more than 72 inches (1829 mm) above finished grade or other surface below shall comply with Section 1015.8.

[BE] 1015.2 Where required. *Guards* shall be located along open-sided walking surfaces, including *mezzanines*, equipment platforms, *aisles*, *stairs*, *ramps* and landings that are located more than 30 inches (762 mm) measured vertically to the floor or grade below at any point within 36 inches (914 mm) horizontally to the edge of the open side. *Guards* shall be adequate in strength and attachment in accordance with Section 1607.8 of the *Building Code of New York State*.

Exception: *Guards* are not required for the following locations:

1. On the loading side of loading docks or piers.
2. On the audience side of stages and raised platforms, including *stairs* leading up to the stage and raised platforms.
3. On raised stage and platform floor areas, such as runways, *ramps* and side stages used for entertainment or presentations.
4. At vertical openings in the performance area of stages and platforms.
5. At elevated walking surfaces appurtenant to stages and platforms for access to and utilization of special lighting or equipment.
6. Along vehicle service pits not accessible to the public.
7. In assembly seating areas at cross aisles in accordance with Section 1029.17.2.

[BE] 1015.2.1 Glazing. Where glass is used to provide a *guard* or as a portion of the *guard* system, the *guard* shall comply with Section 2407 of the *Building Code of New York State*. Where the glazing provided does not meet the strength and attachment requirements of Section 1607.8 of the *Building Code of New York State*, complying *guards* shall be located along glazed sides of open-sided walking surfaces.

[BE] 1015.3 Height. Required *guards* shall be not less than 42 inches (1067 mm) high, measured vertically as follows:

1. From the adjacent walking surfaces.
2. On *stairways* and stepped *aisles*, from the line connecting the leading edges of the tread *nosings*.

INTERNATIONAL CODE COUNCIL®
Copyright © 2019 ICC & NYSDOS. ALL RIGHTS RESERVED. Accessed by Lauren Gualdino (lgualdino@briarcliffmanor.org), (-) Order Number #100880972 on May 08, 2020 07:05 AM (PDT) pursuant to License Agreement with ICC & NYSDOS. No further reproduction, no

100880972

3. On *ramps* and ramped *aisles*, from the *ramp* surface at the *guard*.

Exceptions:

1. For occupancies in Group R-3 not more than three stories above grade in height and within individual *dwelling units* in occupancies in Group R-2 not more than three stories above grade in height with separate *means of egress*, required *guards* shall be not less than 36 inches (914 mm) in height measured vertically above the adjacent walking surfaces.
2. For occupancies in Group R-3, and within individual *dwelling units* in occupancies in Group R-2, *guards* on the open sides of *stairs* shall have a height not less than 34 inches (864 mm) measured vertically from a line connecting the leading edges of the treads.
3. For occupancies in Group R-3, and within individual *dwelling units* in occupancies in Group R-2, where the top of the *guard* serves as a *handrail* on the open sides of *stairs*, the top of the *guard* shall be not less than 34 inches (864 mm) and not more than 38 inches (965 mm) measured vertically from a line connecting the leading edges of the treads.
4. The *guard* height in assembly seating areas shall comply with Section 1029.17 as applicable.
5. Along *alternating tread devices* and ship's ladders, *guards* where the top rail serves as a *handrail* shall have height not less than 30 inches (762 mm) and not more than 34 inches (864 mm), measured vertically from the leading edge of the device tread *nosing*.
6. In Group F occupancies where *exit access stairways* serve fewer than three stories and such *stairways* are not open to the public, and where the top of the *guard* also serves as a *handrail*, the top of the *guard* shall be not less than 34 inches (864 mm) and not more than 38 inches (965 mm) measured vertically from a line connecting the leading edges of the treads.

[BE] 1015.4 Opening limitations. Required *guards* shall not have openings that allow passage of a sphere 4 inches (102 mm) in diameter from the walking surface to the required *guard* height.

Exceptions:

1. From a height of 36 inches (914 mm) to 42 inches (1067 mm), *guards* shall not have openings that allow passage of a sphere $4^3/_8$ inches (111 mm) in diameter.
2. The triangular openings at the open sides of a *stair*, formed by the riser, tread and bottom rail shall not allow passage of a sphere 6 inches (152 mm) in diameter.
3. At elevated walking surfaces for access to and use of electrical, mechanical or plumbing systems or equipment, *guards* shall not have openings that allow passage of a sphere 21 inches (533 mm) in diameter.
4. In areas that are not open to the public within occupancies in Group I-3, F, H or S, and for *alternating tread devices* and ship's ladders, *guards* shall not have openings that allow passage of a sphere 21 inches (533 mm) in diameter.
5. In assembly seating areas, *guards* required at the end of *aisles* in accordance with Section 1029.17.4 shall not have openings that allow passage of a sphere 4 inches (102 mm) in diameter up to a height of 26 inches (660 mm). From a height of 26 inches (660 mm) to 42 inches (1067 mm) above the adjacent walking surfaces, *guards* shall not have openings that allow passage of a sphere 8 inches (203 mm) in diameter.
6. Within individual *dwelling units* and *sleeping units* in Group R-2 and R-3 occupancies, *guards* on the open sides of *stairs* shall not have openings that allow passage of a sphere $4^3/_8$ (111 mm) inches in diameter.

[BE] 1015.5 Screen porches. Porches and decks that are enclosed with insect screening shall be provided with *guards* where the walking surface is located more than 30 inches (762 mm) above the floor or grade below.

[BE] 1015.6 Mechanical equipment, systems and devices. *Guards* shall be provided where various components that require service are located within 10 feet (3048 mm) of a roof edge or open side of a walking surface and such edge or open side is located more than 30 inches (762 mm) above the floor, roof or grade below. The *guard* shall extend not less than 30 inches (762 mm) beyond each end of such components. The *guard* shall be constructed so as to prevent the passage of a sphere 21 inches (533 mm) in diameter.

Exception: *Guards* are not required where personal fall arrest anchorage connector devices that comply with ANSI/ASSE Z 359.1 are installed.

[BE] 1015.7 Roof access. *Guards* shall be provided where the roof hatch opening is located within 10 feet (3048 mm) of a roof edge or open side of a walking surface and such edge or open side is located more than 30 inches (762 mm) above the floor, roof or grade below. The *guard* shall be constructed so as to prevent the passage of a sphere 21 inches (533 mm) in diameter.

Exception: *Guards* are not required where personal fall arrest anchorage connector devices that comply with ANSI/ASSE Z 359.1 are installed.

[BE] 1015.8 Window openings. Windows in Group R-2 and R-3 buildings including *dwelling units*, where the top of the sill of an operable window opening is located less than 36 inches above the finished floor and more than 72 inches (1829 mm) above the finished grade or other surface below on the exterior of the building, shall comply with one of the following:

1. Operable windows where the top of the sill of the opening is located more than 75 feet (22 860 mm) above the finished grade or other surface below and that are provided with window fall prevention devices that comply with ASTM F2006.

INTERNATIONAL CODE COUNCIL®
Copyright © 2019 ICC & NYSDOS. ALL RIGHTS RESERVED. Accessed by Lauren Gualdino (lgualdino@briarcliffmanor.org), (-) Order Number #100880972 on May 08, 2020 07:05 AM (PDT) pursuant to License Agreement with ICC & NYSDOS. No further reproduction, no

100880972

2. Operable windows where the openings will not allow a 4-inch-diameter (102 mm) sphere to pass through the opening when the window is in its largest opened position.
3. Operable windows where the openings are provided with window fall prevention devices that comply with ASTM F2090.
4. Operable windows that are provided with window opening control devices that comply with Section 1015.8.1.

[BE] 1015.8.1 Window opening control devices. Window opening control devices shall comply with ASTM F2090. The window opening control device, after operation to release the control device allowing the window to fully open, shall not reduce the minimum net clear opening area of the window unit to less than the area required by Section 1030.2.

SECTION 1016
EXIT ACCESS

[BE] 1016.1 General. The *exit access* shall comply with the applicable provisions of Sections 1003 through 1015. *Exit access* arrangement shall comply with Sections 1016 through 1021.

[BE] 1016.2 Egress through intervening spaces. Egress through intervening spaces shall comply with this section.

1. Exit access through an enclosed elevator lobby is permitted. Access to not less than one of the required *exits* shall be provided without travel through the enclosed elevator lobbies required by Section 3006 of the *Building Code of New York State*. Where the path of *exit access* travel passes through an enclosed elevator lobby the level of protection required for the enclosed elevator lobby is not required to be extended to the *exit* unless direct access to an *exit* is required by other sections of this code.
2. Egress from a room or space shall not pass through adjoining or intervening rooms or areas, except where such adjoining rooms or areas and the area served are accessory to one or the other, are not a Group H occupancy and provide a discernible path of egress travel to an *exit*.

   Exception: *Means of egress* are not prohibited through adjoining or intervening rooms or spaces in a Group H, S or F occupancy where the adjoining or intervening rooms or spaces are the same or a lesser hazard occupancy group.
3. An *exit access* shall not pass through a room that can be locked to prevent egress.
4. *Means of egress* from *dwelling units* or sleeping areas shall not lead through other sleeping areas, toilet rooms or bathrooms.
5. Egress shall not pass through kitchens, storage rooms, closets or spaces used for similar purposes.

   Exceptions:

   1. *Means of egress* are not prohibited through a kitchen area serving adjoining rooms constituting part of the same *dwelling unit* or *sleeping unit.*
   2. *Means of egress* are not prohibited through stockrooms in Group M occupancies where all of the following are met:

      2.1. The stock is of the same hazard classification as that found in the main retail area.

      2.2. Not more than 50 percent of the *exit access* is through the stockroom.

      2.3. The stockroom is not subject to locking from the egress side.

      2.4. There is a demarcated, minimum 44-inch-wide (1118 mm) *aisle* defined by full- or partial-height fixed walls or similar construction that will maintain the required width and lead directly from the retail area to the *exit* without obstructions.

[BE] 1016.2.1 Multiple tenants. Where more than one tenant occupies any one floor of a building or structure, each tenant space, *dwelling unit* and *sleeping unit* shall be provided with access to the required *exits* without passing through adjacent tenant spaces, *dwelling units* and *sleeping units*.

Exception: The *means of egress* from a smaller tenant space shall not be prohibited from passing through a larger adjoining tenant space where such rooms or spaces of the smaller tenant occupy less than 10 percent of the area of the larger tenant space through which they pass; are the same or similar occupancy group; a discernable path of egress travel to an *exit* is provided; and the *means of egress* into the adjoining space is not subject to locking from the egress side. A required *means of egress* serving the larger tenant space shall not pass through the smaller tenant space or spaces.

SECTION 1017
EXIT ACCESS TRAVEL DISTANCE

[BE] 1017.1 General. Travel distance within the *exit access* portion of the *means of egress* system shall be in accordance with this section.

[BE] 1017.2 Limitations. *Exit access* travel distance shall not exceed the values given in Table 1017.2.

[BE] 1017.2.1 Exterior egress balcony increase. *Exit access* travel distances specified in Table 1017.2 shall be

INTERNATIONAL CODE COUNCIL®
Copyright © 2019 ICC & NYSDOS. ALL RIGHTS RESERVED. Accessed by Lauren Gualdino (lgualdino@briarcliffmanor.org), (-) Order Number #100880972 on May 08, 2020 07:05 AM (PDT) pursuant to License Agreement with ICC & NYSDOS. No further reproduction, no

100880972

increased up to an additional 100 feet (30 480 mm) provided that the last portion of the *exit access* leading to the *exit* occurs on an exterior egress balcony constructed in accordance with Section 1021. The length of such balcony shall be not less than the amount of the increase taken.

[BE] TABLE 1017.2
EXIT ACCESS TRAVEL DISTANCE[a]

OCCUPANCY	WITHOUT SPRINKLER SYSTEM (feet)	WITH SPRINKLER SYSTEM (feet)
A, E, F-1, M, R, S-1	200	250[b, e]
I-1	Not Permitted	250[b]
B	200	300[c]
F-2, S-2, U	300	400[c]
H-1	Not Permitted	75[d]
H-2	Not Permitted	100[d]
H-3	Not Permitted	150[d]
H-4	Not Permitted	175[d]
H-5	Not Permitted	200[c]
I-2, I-3	Not Permitted	200[c]
I-4	150	200[c]

For SI: 1 foot = 304.8 mm.

a. See the following sections for modifications to exit access travel distance requirements:
   Section 402.8 of the *Building Code of New York State:* For the distance limitation in malls.
   Section 404.9 of the *Building Code of New York State:* For the distance limitation through an atrium space.
   Section 407.4 of the *Building Code of New York State:* For the distance limitation in Group I-2.
   Sections 408.6.1 and 408.8.1 of the *Building Code of New York State:* For the distance limitations in Group I-3.
   Section 411.3 of the *Building Code of New York State:* For the distance limitation in special amusement buildings.
   Section 412.6 of the *Building Code of New York State:* For the distance limitations in aircraft manufacturing facilities.
   Section 1006.2.2.2: For the distance limitation in refrigeration machinery rooms.
   Section 1006.2.2.3: For the distance limitation in refrigerated rooms and spaces.
   Section 1006.3.3: For buildings with one exit.
   Section 1017.2.2: For increased distance limitation in Groups F-1 and S-1.
   Section 1029.7: For increased limitation in assembly seating.
   Section 3103.4 of the *Building Code of New York State:* For temporary structures.
   Section 3104.9 of the *Building Code of New York State:* For pedestrian walkways.

b. Buildings equipped throughout with an automatic sprinkler system in accordance with Section 903.3.1.1 or 903.3.1.2. See Section 903 for occupancies where automatic sprinkler systems are permitted in accordance with Section 903.3.1.2.

c. Buildings equipped throughout with an automatic sprinkler system in accordance with Section 903.3.1.1.

d. Group H occupancies equipped throughout with an automatic sprinkler system in accordance with Section 903.2.5.1.

e. Group R-3 and R-4 buildings equipped throughout with an automatic sprinkler system in accordance with Section 903.3.1.3. See Section 903.2.8 for occupancies where automatic sprinkler systems are permitted in accordance with Section 903.3.1.3.

[BE] 1017.2.2 Groups F-1 and S-1 increase. The maximum *exit access* travel distance shall be 400 feet (122 m) in Group F-1 or S-1 occupancies where all of the following conditions are met:

1. The portion of the building classified as Group F-1 or S-1 is limited to one story in height.
2. The minimum height from the finished floor to the bottom of the ceiling or roof slab or deck is 24 feet (7315 mm).
3. The building is equipped throughout with an *automatic sprinkler system* in accordance with Section 903.3.1.1.

[BE] 1017.3 Measurement. *Exit access* travel distance shall be measured from the most remote point of each room, area or space along the natural and unobstructed path of horizontal and vertical egress travel to the entrance to an *exit*.

Exception: In open parking garages, *exit access* travel distance is permitted to be measured to the closest riser of an *exit access stairway* or the closest slope of an *exit access ramp*.

[BE] 1017.3.1 Exit access stairways and ramps. Travel distance on *exit access stairways* or *ramps* shall be included in the *exit access* travel distance measurement. The measurement along *stairways* shall be made on a plane parallel and tangent to the *stair* tread *nosings* in the center of the *stair* and landings. The measurement along *ramps* shall be made on the walking surface in the center of the *ramp* and landings.

SECTION 1018
AISLES

[BE] 1018.1 General. *Aisles* and *aisle accessways* serving as a portion of the *exit access* in the *means of egress* system shall comply with the requirements of this section. *Aisles* or *aisle accessways* shall be provided from all occupied portions of the *exit access* that contain seats, tables, furnishings, displays and similar fixtures or equipment. The minimum width or required capacity of *aisles* shall be unobstructed.

Exception: Encroachments complying with Section 1005.7.

[BE] 1018.2 Aisles in assembly spaces. *Aisles and aisle accessways* serving a room or space used for assembly purposes shall comply with Section 1029.

[BE] 1018.3 Aisles in Groups B and M. In Group B and M occupancies, the minimum clear *aisle* width shall be determined by Section 1005.1 for the *occupant load* served, but shall be not less than that required for *corridors* by Section 1020.2.

Exception: Nonpublic *aisles* serving less than 50 people and not required to be accessible by Chapter 11 of the *Building Code of New York State* need not exceed 28 inches (711 mm) in width.

[BE] 1018.4 Aisle accessways in Group M. An *aisle accessway* shall be provided on not less than one side of each element within the *merchandise pad*. The minimum clear width for an *aisle accessway* not required to be accessible shall be 30 inches (762 mm). The required clear width of the *aisle accessway* shall be measured perpendicular to the elements

INTERNATIONAL CODE COUNCIL®
Copyright © 2019 ICC & NYSDOS. ALL RIGHTS RESERVED. Accessed by Lauren Gualdino (lgualdino@briarcliffmanor.org), (-) Order Number #100880972 on May 08, 2020 07:05 AM (PDT) pursuant to License Agreement with ICC & NYSDOS. No further reproduction, no

100880972

and merchandise within the *merchandise pad*. The 30-inch (762 mm) minimum clear width shall be maintained to provide a path to an adjacent *aisle* or *aisle accessway*. The *common path of egress travel* shall not exceed 30 feet (9144 mm) from any point in the *merchandise pad*.

Exception: For areas serving not more than 50 occupants, the *common path of egress travel* shall not exceed 75 feet (22 860 mm).

[BE] 1018.5 Aisles in other than assembly spaces and Groups B and M. In other than rooms or spaces used for assembly purposes and Group B and M occupancies, the minimum clear *aisle* capacity shall be determined by Section 1005.1 for the *occupant load* served, but the width shall be not less than that required for *corridors* by Section 1020.2.

Exception: Nonpublic *aisles* serving less than 50 people and not required to be accessible by Chapter 11 of the *Building Code of New York State* need not exceed 28 inches (711 mm) in width.

SECTION 1019
EXIT ACCESS STAIRWAYS AND RAMPS

[BE] 1019.1 General. *Exit access stairways* and *ramps* serving as an *exit access* component in a *means of egress* system shall comply with the requirements of this section. The number of stories connected by *exit access stairways* and *ramps* shall include *basements*, but not *mezzanines*.

[BE] 1019.2 All occupancies. *Exit access stairways* and *ramps* that serve floor levels within a single story are not required to be enclosed.

[BE] 1019.3 Occupancies other than Groups I-2 and I-3. In other than Group I-2 and I-3 occupancies, floor openings containing *exit access stairways* or *ramps* that do not comply with one of the conditions listed in this section shall be enclosed with a shaft enclosure constructed in accordance with Section 713 of the *Building Code of New York State*.

1. *Exit access stairways* and *ramps* that serve, or atmospherically communicate between, only two stories. Such interconnected stories shall not be open to other stories.
2. In Group R-1, R-2 or R-3 occupancies, *exit access stairways* and *ramps* connecting four stories or less serving and contained within an individual *dwelling unit* or *sleeping unit* or live/work unit.
3. *Exit access stairways* serving and contained within a Group R-3 congregate residence or a Group R-4 facility are not required to be enclosed.
4. *Exit access stairways* and *ramps* in buildings equipped throughout with an *automatic sprinkler system* in accordance with Section 903.3.1.1, where the area of the vertical opening between stories does not exceed twice the horizontal projected area of the *stairway* or *ramp*, and the opening is protected by a draft curtain and closely spaced sprinklers in accordance with NFPA 13. In other than Group B and M occupancies, this provision is limited to openings that do not connect more than four stories.
5. *Exit access stairways* and *ramps* within an atrium complying with the provisions of Section 404 of the *Building Code of New York State.*
6. *Exit access stairways* and *ramps* in open parking garages that serve only the parking garage.
7. *Exit access stairways* and *ramps* serving smoke-protected or open-air assembly seating complying with the *exit access* travel distance requirements of Section 1029.7.
8. *Exit access stairways* and *ramps* between the balcony, gallery or press box and the main assembly floor in occupancies such as theaters, *places of religious worship*, auditoriums and sports facilities.

[BE] 1019.4 Group I-2 and I-3 occupancies. In Group I-2 and I-3 occupancies, floor openings between stories containing *exit access stairways* or *ramps* are required to be enclosed with a shaft enclosure constructed in accordance with Section 713 of the *Building Code of New York State*.

Exception: In Group I-3 occupancies, *exit access stairways* or *ramps* constructed in accordance with Section 408 of the *Building Code of New York State* are not required to be enclosed.

SECTION 1020
CORRIDORS

[BE] 1020.1 Construction. *Corridors* shall be fire-resistance rated in accordance with Table 1020.1. The *corridor* walls required to be fire-resistance rated shall comply with Section 708 of the *Building Code of New York State* for fire partitions.

Exceptions:

1. A fire-resistance rating is not required for *corridors* in an occupancy in Group E where each room that is used for instruction has not less than one door opening directly to the exterior and rooms for assembly purposes have not less than one-half of the required means of egress doors opening directly to the exterior. Exterior doors specified in this exception are required to be at ground level.
2. A fire-resistance rating is not required for corridors contained within a *dwelling unit* or *sleeping unit* in an occupancy in Groups I-1 and R.
3. A fire-resistance rating is not required for *corridors* in open parking garages.
4. A fire-resistance rating is not required for *corridors* in an occupancy in Group B that is a space requiring only a single *means of egress* complying with Section 1006.2.
5. *Corridors* adjacent to the *exterior walls* of buildings shall be permitted to have unprotected openings on unrated *exterior walls* where unrated walls are permitted by Table 602 of the *Building Code of New York State* and unprotected openings are permitted by Table 705.8 of the *Building Code of New York State*.

INTERNATIONAL CODE COUNCIL®
Copyright © 2019 ICC & NYSDOS. ALL RIGHTS RESERVED. Accessed by Lauren Gualdino (lgualdino@briarcliffmanor.org), (-) Order Number #100880972 on May 08, 2020 07:05 AM (PDT) pursuant to License Agreement with ICC & NYSDOS. No further reproduction, no

100880972

[BE] 1020.1.1 Hoistway opening protection. Elevator hoistway openings shall be protected in accordance with Section 3006.2.1 of the *Building Code of New York State*.

[BE] TABLE 1020.1
CORRIDOR FIRE-RESISTANCE RATING

OCCUPANCY	OCCUPANT LOAD SERVED BY CORRIDOR	REQUIRED FIRE-RESISTANCE RATING (hours)	
		Without sprinkler system	With sprinkler system[c]
H-1, H-2, H-3	All	Not Permitted	1
H-4, H-5	Greater than 30	Not Permitted	1
A, B, E, F, M, S, U	Greater than 30	1	0
R	Greater than 10	Not Permitted	0.5[c]/1[d]
I-2[a]	All	Not Permitted	0
I-1, I-3	All	Not Permitted	1[b]
I-4	All	1	0

a. For requirements for occupancies in Group I-2, see Sections 407.2 and 407.3 of the *Building Code of New York State*.
b. For a reduction in the fire-resistance rating for occupancies in Group I-3, see Section 408.8 of the *Building Code of New York State*
c. Buildings equipped throughout with an automatic sprinkler system in accordance with Section 903.3.1.1 or 903.3.1.2 where allowed.
d. Group R-3 and R-4 buildings equipped throughout with an automatic sprinkler system in accordance with Section 903.3.1.3. See Section 903.2.8 for occupancies where automatic sprinkler systems are permitted in accordance with Section 903.3.1.3.

[BE] 1020.2 Width and capacity. The required capacity of *corridors* shall be determined as specified in Section 1005.1, but the minimum width shall be not less than that specified in Table 1020.2.

Exception: In Group I-2 occupancies, *corridors* are not required to have a clear width of 96 inches (2438 mm) in areas where there will not be stretcher or bed movement for access to care or as part of the defend-in-place strategy.

[BE] TABLE 1020.2
MINIMUM CORRIDOR WIDTH

OCCUPANCY	MINIMUM WIDTH (inches)
Any facility not listed below	44
Access to and utilization of mechanical, plumbing or electrical systems or equipment	24
With an occupant load of less than 50	36
Within a dwelling unit	36
In Group E with a corridor having a occupant load of 100 or more	72
In corridors and areas serving stretcher traffic in ambulatory care facilities	72
Group I-2 in areas where required for bed movement	96

For SI: 1 inch = 25.4 mm.

[BE] 1020.3 Obstruction. The minimum width or required capacity of *corridors* shall be unobstructed.

Exception: Encroachments complying with Section 1005.7.

[BE] 1020.4 Dead ends. Where more than one *exit* or exit access doorway is required, the *exit access* shall be arranged such that dead-end *corridors* do not exceed 20 feet (6096 mm) in length.

Exceptions:

1. In Group I-3, Condition 2, 3 or 4 occupancies, the dead end in a corridor shall not exceed 50 feet (15 240 mm).
2. In occupancies in Groups B, E, F, I-1, M, R-1, R-2, S and U, where the building is equipped throughout with an *automatic sprinkler system* in accordance with Section 903.3.1.1, the length of the dead-end *corridors* shall not exceed 50 feet (15 240 mm).
3. A dead-end *corridor* shall not be limited in length where the length of the dead-end *corridor* is less than 2.5 times the least width of the dead-end *corridor*.

[BE] 1020.5 Air movement in corridors. *Corridors* shall not serve as supply, return, exhaust, relief or ventilation air ducts.

Exceptions:

1. Use of a *corridor* as a source of makeup air for exhaust systems in rooms that open directly onto such *corridors*, including toilet rooms, bathrooms, dressing rooms, smoking lounges and janitor closets, shall be permitted, provided that each such *corridor* is directly supplied with outdoor air at a rate greater than the rate of makeup air taken from the *corridor*.
2. Where located within a *dwelling unit*, the use of *corridors* for conveying return air shall not be prohibited.
3. Where located within tenant spaces of 1,000 square feet (93 m^2) or less in area, utilization of *corridors* for conveying return air is permitted.
4. Incidental air movement from pressurized rooms within health care facilities, provided that the *corridor* is not the primary source of supply or return to the room.

[BE] 1020.5.1 Corridor ceiling. Use of the space between the *corridor* ceiling and the floor or roof structure above as a return air plenum is permitted for one or more of the following conditions:

1. The *corridor* is not required to be of fire-resistance-rated construction.
2. The *corridor* is separated from the plenum by fire-resistance-rated construction.
3. The air-handling system serving the *corridor* is shut down upon activation of the air-handling unit smoke

INTERNATIONAL CODE COUNCIL®
Copyright © 2019 ICC & NYSDOS. ALL RIGHTS RESERVED. Accessed by Lauren Gualdino (lgualdino@briarcliffmanor.org), (-) Order Number #100880972 on May 08, 2020 07:05 AM (PDT) pursuant to License Agreement with ICC & NYSDOS. No further reproduction, no

100880972

detectors required by the *Mechanical Code of New York State*.

4. The air-handling system serving the *corridor* is shut down upon detection of sprinkler water flow where the building is equipped throughout with an *automatic sprinkler system*.
5. The space between the *corridor* ceiling and the floor or roof structure above the *corridor* is used as a component of an *approved* engineered smoke control system.

[BE] 1020.6 Corridor continuity. Fire-resistance-rated *corridors* shall be continuous from the point of entry to an *exit*, and shall not be interrupted by intervening rooms. Where the path of egress travel within a fire-resistance-rated *corridor* to the *exit* includes travel along unenclosed *exit access stairways* or *ramps*, the fire-resistance-rating shall be continuous for the length of the *stairway* or *ramp* and for the length of the connecting *corridor* on the adjacent floor leading to the *exit*.

Exceptions:

1. Foyers, lobbies or reception rooms constructed as required for *corridors* shall not be construed as intervening rooms.
2. Enclosed elevator lobbies as permitted by Item 1 of Section 1016.2 shall not be construed as intervening rooms.

SECTION 1021
EGRESS BALCONIES

[BE] 1021.1 General. Balconies used for egress purposes shall conform to the same requirements as *corridors* for minimum width, required capacity, headroom, dead ends and projections.

[BE] 1021.2 Wall separation. Exterior egress balconies shall be separated from the interior of the building by walls and opening protectives as required for *corridors*.

Exception: Separation is not required where the exterior egress balcony is served by not less than two *stairways* and a dead-end travel condition does not require travel past an unprotected opening to reach a *stairway*.

[BE] 1021.3 Openness. The long side of an egress balcony shall be not less than 50 percent open, and the open area above the guards shall be so distributed as to minimize the accumulation of smoke or toxic gases.

[BE] 1021.4 Location. Exterior egress balconies shall have a minimum fire separation distance of 10 feet (3048 mm) measured at right angles from the exterior edge of the egress balcony to the following:

1. Adjacent lot lines.
2. Other portions of the building.
3. Other buildings on the same lot unless the adjacent building *exterior walls* and openings are protected in accordance with Section 705 of the *Building Code of New York State* based on fire separation distance.

For the purposes of this section, other portions of the building shall be treated as separate buildings.

SECTION 1022
EXITS

[BE] 1022.1 General. *Exits* shall comply with Sections 1022 through 1027 and the applicable requirements of Sections 1003 through 1015. An *exit* shall not be used for any purpose that interferes with its function as a *means of egress*. Once a given level of *exit* protection is achieved, such level of protection shall not be reduced until arrival at the *exit discharge*. *Exits* shall be continuous from the point of entry into the *exit* to the *exit discharge*.

[BE] 1022.2 Exterior exit doors. Buildings or structures used for human occupancy shall have not less than one exterior door that meets the requirements of Section 1010.1.1.

[BE] 1022.2.1 Detailed requirements. Exterior exit doors shall comply with the applicable requirements of Section 1010.1.

[BE] 1022.2.2 Arrangement. Exterior exit doors shall lead directly to the *exit discharge* or the *public way*.

SECTION 1023
INTERIOR EXIT STAIRWAYS AND RAMPS

[BE] 1023.1 General. *Interior exit stairways* and *ramps* serving as an *exit* component in a *means of egress* system shall comply with the requirements of this section. *Interior exit stairways* and *ramps* shall be enclosed and lead directly to the exterior of the building or shall be extended to the exterior of the building with an *exit passageway* conforming to the requirements of Section 1024, except as permitted in Section 1028.1. An *interior exit* stairway or *ramp* shall not be used for any purpose other than as a *means of egress* and a circulation path.

[BE] 1023.2 Construction. Enclosures for *interior exit stairways* and *ramps* shall be constructed as *fire barriers* in accordance with Section 707 of the *Building Code of New York State* or *horizontal assemblies* constructed in accordance with Section 711 of the *Building Code of New York State*, or both. *Interior exit stairway* and *ramp* enclosures shall have a *fire-resistance rating* of not less than 2 hours where connecting four stories or more and not less than 1 hour where connecting less than four stories. The number of stories connected by the *interior exit stairways* or *ramps* shall include any *basements*, but not any *mezzanines*. *Interior exit stairways* and *ramps* shall have a fire-resistance rating not less than the floor assembly penetrated, but need not exceed 2 hours.

Exceptions:

1. *Interior exit stairways* and *ramps* in Group I-3 occupancies in accordance with the provisions of Section 408.3.8 of the *Building Code of New York State*.
2. *Interior exit stairways* within an atrium enclosed in accordance with Section 404.6 of the *Building Code of New York State*.

INTERNATIONAL CODE COUNCIL®
Copyright © 2019 ICC & NYSDOS. ALL RIGHTS RESERVED. Accessed by Lauren Gualdino (lgualdino@briarcliffmanor.org), (-) Order Number #100880972 on May 08, 2020 07:05 AM (PDT) pursuant to License Agreement with ICC & NYSDOS. No further reproduction, no

100880972

[BE] 1023.3 Termination. *Interior exit stairways* and *ramps* shall terminate at an *exit discharge* or a *public way*.

Exception: A combination of *interior exit stairways*, *interior exit ramps* and *exit* passageways, constructed in accordance with Sections 1023.2, 1023.3.1 and 1024, respectively, and forming a continuous protected enclosure, shall be permitted to extend an *interior exit stairway* or *ramp* to the *exit discharge* or a *public way*.

[BE] 1023.3.1 Extension. Where *interior exit stairways* and *ramps* are extended to an *exit discharge* or a *public way* by an *exit passageway*, the *interior exit stairway* and *ramp* shall be separated from the *exit passageway* by a *fire barrier* constructed in accordance with Section 707 of the *Building Code of New York State* or a *horizontal assembly* constructed in accordance with Section 711 of the *Building Code of New York State*, or both. The *fire-resistance rating* shall be not less than that required for the *interior exit stairway* and *ramp*. A *fire door* assembly complying with Section 716 of the *Building Code of New York State* shall be installed in the *fire barrier* to provide a *means of egress* from the *interior exit stairway* and *ramp* to the *exit passageway*. Openings in the *fire barrier* other than the *fire door* assembly are prohibited. Penetrations of the *fire barrier* are prohibited.

Exceptions:

1. Penetrations of the *fire barrier* in accordance with Section 1023.5 shall be permitted.
2. Separation between an *interior exit stairway* or *ramp* and the *exit passageway* extension shall not be required where there are no openings into the *exit passageway* extension.
3. Separation between an *interior exit stairway* or *ramp* and the *exit passageway* extension shall not be required where the *interior exit stairway* and the *exit passageway* extension are pressurized in accordance with Section 909.20.5 of the *Building Code of New York State*.

[BE] 1023.4 Openings. *Interior exit stairway* and *ramp* opening protectives shall be in accordance with the requirements of Section 716 of the *Building Code of New York State*.

Openings in *interior exit stairways* and *ramps* other than unprotected exterior openings shall be limited to those required for *exit access* to the enclosure from normally occupied spaces and for egress from the enclosure.

Elevators shall not open into *interior exit stairways* and *ramps*.

[BE] 1023.5 Penetrations. Penetrations into or through *interior exit stairways* and *ramps* are prohibited except for the following:

1. Equipment and ductwork necessary for independent ventilation or pressurization.
2. *Fire protection systems*.
3. Security systems.
4. Two-way communication systems.
5. Electrical raceway for fire department communication systems.
6. Electrical raceway serving the interior *exit stairway* and *ramp* and terminating at a steel box not exceeding 16 square inches (0.010 m^2).

Such penetrations shall be protected in accordance with Section 714 of the *Building Code of New York State*. There shall not be penetrations or communication openings, whether protected or not, between adjacent *interior exit stairways* and *ramps*.

Exception: Membrane penetrations shall be permitted on the outside of the *interior exit stairway* and *ramp*. Such penetrations shall be protected in accordance with Section 714.4.2 of the *Building Code of New York State*.

[BE] 1023.6 Ventilation. Equipment and ductwork for *interior exit stairway* and *ramp* ventilation as permitted by Section 1023.5 shall comply with one of the following items:

1. Such equipment and ductwork shall be located exterior to the building and shall be directly connected to the *interior exit stairway* and *ramp* by ductwork enclosed in construction as required for shafts.
2. Where such equipment and ductwork is located within the *interior exit stairway* and *ramp*, the intake air shall be taken directly from the outdoors and the exhaust air shall be discharged directly to the outdoors, or such air shall be conveyed through ducts enclosed in construction as required for shafts.
3. Where located within the building, such equipment and ductwork shall be separated from the remainder of the building, including other mechanical equipment, with construction as required for shafts.

In each case, openings into the fire-resistance-rated construction shall be limited to those needed for maintenance and operation and shall be protected by opening protectives in accordance with Section 716 of the *Building Code of New York State* for shaft enclosures.

The *interior exit stairway* and *ramp* ventilation systems shall be independent of other building ventilation systems.

[BE] 1023.7 Interior exit stairway and ramp exterior walls. Exterior walls of the *interior exit stairway* or *ramp* shall comply with the requirements of Section 705 of the *Building Code of New York State* for *exterior walls*. Where nonrated walls or unprotected openings enclose the exterior of the *stairway* or *ramps* and the walls or openings are exposed by other parts of the building at an angle of less than 180 degrees (3.14 rad), the building *exterior walls* within 10 feet (3048 mm) horizontally of a nonrated wall or unprotected opening shall have a *fire-resistance rating* of not less than 1 hour. Openings within such *exterior walls* shall be protected by opening protectives having a *fire protection rating* of not less than $^3/_4$ hour. This construction shall extend vertically from the ground to a point 10 feet (3048 mm) above the topmost landing of the *stairway* or *ramp*, or to the roof line, whichever is lower.

[BE] 1023.8 Discharge identification. An *interior exit stairway* and *ramp* shall not continue below its *level of exit discharge* unless an *approved* barrier is provided at the *level of exit discharge* to prevent persons from unintentionally continuing into levels below. Directional exit signs shall be provided as specified in Section 1013.

[BE] 1023.9 Stairway identification signs. A sign shall be provided at each floor landing in an *interior exit stairway* and *ramp* connecting more than three stories designating the floor level, the terminus of the top and bottom of the *interior exit stairway* and *ramp* and the identification of the *stairway* or

INTERNATIONAL CODE COUNCIL®
Copyright © 2019 ICC & NYSDOS. ALL RIGHTS RESERVED. Accessed by Lauren Gualdino (lgualdino@briarcliffmanor.org), (-) Order Number #100880972 on May 08, 2020 07:05 AM (PDT) pursuant to License Agreement with ICC & NYSDOS. No further reproduction, no

100880972

ramp. The signage shall state the story of, and the direction to, the *exit discharge* and the availability of roof access from the *interior exit stairway* and *ramp* for the fire department. The sign shall be located 5 feet (1524 mm) above the floor landing in a position that is readily visible when the doors are in the open and closed positions. In addition to the *stairway* identification sign, a floor-level sign in visual characters, raised characters and braille complying with ICC A117.1 shall be located at each floor-level landing adjacent to the door leading from the *interior exit stairway* and *ramp* into the *corridor* to identify the floor level.

[BE] 1023.9.1 Signage requirements. *Stairway* identification signs shall comply with all of the following requirements:

1. The signs shall be a minimum size of 18 inches (457 mm) by 12 inches (305 mm).
2. The letters designating the identification of the *interior exit stairway* and *ramp* shall be not less than $1^1/_2$ inches (38 mm) in height.
3. The number designating the floor level shall be not less than 5 inches (127 mm) in height and located in the center of the sign.
4. Other lettering and numbers shall be not less than 1 inch (25 mm) in height.
5. Characters and their background shall have a nonglare finish. Characters shall contrast with their background, with either light characters on a dark background or dark characters on a light background.
6. Where signs required by Section 1023.9 are installed in the *interior exit stairways* and *ramps* of buildings subject to Section 1025, the signs shall be made of the same materials as required by Section 1025.4.

[BE] 1023.10 Elevator lobby identification signs. At landings in *interior exit stairways* where two or more doors lead to the floor level, any door with direct access to an enclosed elevator lobby shall be identified by signage located on the door or directly adjacent to the door stating "Elevator Lobby." Signage shall be in accordance with Section 1023.9.1, Items 4, 5 and 6.

[BE] 1023.11 Smokeproof enclosures. Where required by Section 403.5.4, 405.7.2 or 412.2.2.1 of the *Building Code of New York State*, *interior exit stairways* and *ramps* shall be *smokeproof enclosures* in accordance with Section 909.20 of the *Building Code of New York State*.

[BE] 1023.11.1 Termination and extension. A *smokeproof enclosure* shall terminate at an *exit discharge* or a *public way*. The *smokeproof enclosure* shall be permitted to be extended by an *exit passageway* in accordance with Section 1023.3. The *exit passageway* shall be without openings other than the *fire door assembly* required by Section 1023.3.1 and those necessary for egress from the *exit passageway*. The *exit passageway* shall be separated from the remainder of the building by 2-hour *fire barriers* constructed in accordance with Section 707 of the *Building Code of New York State* or *horizontal assemblies* constructed in accordance with Section 711 of the *Building Code of New York State*, or both.

Exceptions:

1. Openings in the *exit passageway* serving a *smokeproof enclosure* are permitted where the *exit passageway* is protected and pressurized in the same manner as the *smokeproof enclosure*, and openings are protected as required for access from other floors.
2. The *fire barrier* separating the *smokeproof enclosure* from the *exit passageway* is not required, provided that the *exit passageway* is protected and pressurized in the same manner as the *smokeproof enclosure*.
3. A *smokeproof enclosure* shall be permitted to egress through areas on the *level of exit discharge* or vestibules as permitted by Section 1028.

[BE] 1023.11.2 Enclosure access. Access to the *stairway* or *ramp* within a *smokeproof enclosure* shall be by way of a vestibule or an open exterior balcony.

Exception: Access is not required by way of a vestibule or exterior balcony for *stairways* and *ramps* using the pressurization alternative complying with Section 909.20.5 of the *Building Code of New York State*.

[BE] 1023.12 Standpipes. Standpipes and standpipe hose connections shall be provided where required by Sections 905.3 and 905.4.

SECTION 1024
EXIT PASSAGEWAYS

[BE] 1024.1 Exit passageways. *Exit passageways* serving as an exit component in a *means of egress* system shall comply with the requirements of this section. An *exit passageway* shall not be used for any purpose other than as a *means of egress* and a circulation path.

[BE] 1024.2 Width and capacity. The required capacity of *exit passageways* shall be determined as specified in Section 1005.1 but the minimum width shall be not less than 44 inches (1118 mm), except that *exit passageways* serving an *occupant load* of less than 50 shall be not less than 36 inches (914 mm) in width. The minimum width or required capacity of *exit passageways* shall be unobstructed.

Exception: Encroachments complying with Section 1005.7.

[BE] 1024.3 Construction. *Exit passageway* enclosures shall have walls, floors and ceilings of not less than a 1-hour *fire-resistance rating*, and not less than that required for any connecting *interior exit stairway* or *ramp*. *Exit passageways* shall be constructed as *fire barriers* in accordance with Section 707 of the *Building Code of New York State* or *horizontal assemblies* constructed in accordance with Section 711 of the *Building Code of New York State*, or both.

[BE] 1024.4 Termination. *Exit passageways* on the *level of exit discharge* shall terminate at an *exit discharge*. *Exit passageways* on other levels shall terminate at an *exit*.

INTERNATIONAL CODE COUNCIL®
Copyright © 2019 ICC & NYSDOS. ALL RIGHTS RESERVED. Accessed by Lauren Gualdino (lgualdino@briarcliffmanor.org), (-) Order Number #100880972 on May 08, 2020 07:05 AM (PDT) pursuant to License Agreement with ICC & NYSDOS. No further reproduction, no

100880972

[BE] 1024.5 Openings. *Exit passageway* opening protectives shall be in accordance with the requirements of Section 716 of the *Building Code of New York State*.

Except as permitted in Section 402.8.7 of the *Building Code of New York State*, openings in *exit passageways* other than unprotected exterior openings shall be limited to those necessary for *exit access* to the *exit passageway* from normally occupied spaces and for egress from the *exit passageway*.

Where an *interior exit stairway* or *ramp* is extended to an *exit discharge* or a *public way* by an *exit passageway*, the *exit passageway* shall comply with Section 1023.3.1.

Elevators shall not open into an *exit passageway*.

[BE] 1024.6 Penetrations. Penetrations into or through an *exit passageway* are prohibited except for the following:

1. Equipment and ductwork necessary for independent pressurization.
2. Fire protection systems.
3. Security systems.
4. Two-way communication systems.
5. Electrical raceway for fire department communication.
6. Electrical raceway serving the *exit passageway* and terminating at a steel box not exceeding 16 square inches (0.010 m^2).

Such penetrations shall be protected in accordance with Section 714 of the *Building Code of New York State*. There shall not be penetrations or communicating openings, whether protected or not, between adjacent *exit passageways*.

Exception: Membrane penetrations shall be permitted on the outside of the *exit passageway*. Such penetrations shall be protected in accordance with Section 714.4.2 of the *Building Code of New York State*.

[BE] 1024.7 Ventilation. Equipment and ductwork for *exit passageway* ventilation as permitted by Section 1024.6 shall comply with one of the following:

1. The equipment and ductwork shall be located exterior to the building and shall be directly connected to the *exit passageway* by ductwork enclosed in construction as required for shafts.
2. Where the equipment and ductwork is located within the *exit passageway*, the intake air shall be taken directly from the outdoors and the exhaust air shall be discharged directly to the outdoors, or the air shall be conveyed through ducts enclosed in construction as required for shafts.
3. Where located within the building, the equipment and ductwork shall be separated from the remainder of the building, including other mechanical equipment, with construction as required for shafts.

In each case, openings into the fire-resistance-rated construction shall be limited to those needed for maintenance and operation and shall be protected by opening protectives in accordance with Section 716 of the *Building Code of New York State* for shaft enclosures.

Exit passageway ventilation systems shall be independent of other building ventilation systems.

[BE] 1024.8 Standpipes. Standpipes and standpipe hose connections shall be provided where required by Sections 905.3 and 905.4.

SECTION 1025
LUMINOUS EGRESS PATH MARKINGS

[BE] 1025.1 General. *Approved* luminous egress path markings delineating the exit path shall be provided in high-rise buildings of Group A, B, E, I-1, M or R-1 occupancies in accordance with this section.

Exception: Luminous egress path markings shall not be required on the *level of exit discharge* in lobbies that serve as part of the exit path in accordance with Section 1028.1, Exception 1.

[BE] 1025.2 Markings within exit components. Egress path markings shall be provided in *interior exit stairways*, *interior exit ramps* and *exit passageways*, in accordance with Sections 1025.2.1 through 1025.2.6.

[BE] 1025.2.1 Steps. A solid and continuous stripe shall be applied to the horizontal leading edge of each step and shall extend for the full length of the step. Outlining stripes shall have a minimum horizontal width of 1 inch (25 mm) and a maximum width of 2 inches (51 mm). The leading edge of the stripe shall be placed not more than $^1/_2$ inch (12.7 mm) from the leading edge of the step and the stripe shall not overlap the leading edge of the step by not more than $^1/_2$ inch (12.7 mm) down the vertical face of the step.

Exception: The minimum width of 1 inch (25 mm) shall not apply to outlining stripes listed in accordance with UL 1994.

[BE] 1025.2.2 Landings. The leading edge of landings shall be marked with a stripe consistent with the dimensional requirements for steps.

[BE] 1025.2.3 Handrails. *Handrails* and handrail extensions shall be marked with a solid and continuous stripe having a minimum width of 1 inch (25 mm). The stripe shall be placed on the top surface of the *handrail* for the entire length of the *handrail*, including extensions and newel post caps. Where *handrails* or handrail extensions bend or turn corners, the stripe shall not have a gap of more than 4 inches (102 mm).

Exception: The minimum width of 1 inch (25 mm) shall not apply to outlining stripes listed in accordance with UL 1994.

[BE] 1025.2.4 Perimeter demarcation lines. Stair landings and other floor areas within *interior exit stairways*, *interior exit ramps* and *exit passageways*, with the exception of the sides of steps, shall be provided with solid and continuous demarcation lines on the floor or on the walls or a combination of both. The stripes shall be 1 to 2 inches (25 mm to 51 mm) wide with interruptions not exceeding 4 inches (102 mm).

Exception: The minimum width of 1 inch (25 mm) shall not apply to outlining stripes *listed* in accordance with UL 1994.

INTERNATIONAL CODE COUNCIL®
Copyright © 2019 ICC & NYSDOS. ALL RIGHTS RESERVED. Accessed by Lauren Gualdino (lgualdino@briarcliffmanor.org), (-) Order Number #100880972 on May 08, 2020 07:05 AM (PDT) pursuant to License Agreement with ICC & NYSDOS. No further reproduction, no

100880972

[BE] 1025.2.4.1 Floor-mounted demarcation lines. Perimeter demarcation lines shall be placed within 4 inches (102 mm) of the wall and shall extend to within 2 inches (51 mm) of the markings on the leading edge of landings. The demarcation lines shall continue across the floor in front of all doors.

Exception: Demarcation lines shall not extend in front of *exit discharge* doors that lead out of an *exit* and through which occupants must travel to complete the exit path.

[BE] 1025.2.4.2 Wall-mounted demarcation lines. Perimeter demarcation lines shall be placed on the wall with the bottom edge of the stripe not more than 4 inches (102 mm) above the finished floor. At the top or bottom of the *stairs*, demarcation lines shall drop vertically to the floor within 2 inches (51 mm) of the step or landing edge. Demarcation lines on walls shall transition vertically to the floor and then extend across the floor where a line on the floor is the only practical method of outlining the path. Where the wall line is broken by a door, demarcation lines on walls shall continue across the face of the door or transition to the floor and extend across the floor in front of such door.

Exception: Demarcation lines shall not extend in front of *exit discharge* doors that lead out of an *exit* and through which occupants must travel to complete the exit path.

[BE] 1025.2.4.3 Transition. Where a wall-mounted demarcation line transitions to a floor-mounted demarcation line, or vice-versa, the wall-mounted demarcation line shall drop vertically to the floor to meet a complimentary extension of the floor-mounted demarcation line, thus forming a continuous marking.

[BE] 1025.2.5 Obstacles. Obstacles at or below 6 feet 6 inches (1981 mm) in height and projecting more than 4 inches (102 mm) into the egress path shall be outlined with markings not less than 1 inch (25 mm) in width comprised of a pattern of alternating equal bands, of luminous material and black, with the alternating bands not more than 2 inches (51 mm) thick and angled at 45 degrees (0.79 rad). Obstacles shall include, but are not limited to, standpipes, hose cabinets, wall projections, and restricted height areas. However, such markings shall not conceal any required information or indicators including but not limited to instructions to occupants for the use of standpipes.

Exception: The minimum width of 1 inch (25 mm) shall not apply to markings listed in accordance with UL 1994.

[BE] 1025.2.6 Doors within the exit path. Doors through which occupants must pass in order to complete the exit path shall be provided with markings complying with Sections 1025.2.6.1 through 1025.2.6.3.

[BE] 1025.2.6.1 Emergency exit symbol. The doors shall be identified by a low-location luminous emergency exit symbol complying with NFPA 170. The exit symbol shall be not less than 4 inches (102 mm) in height and shall be mounted on the door, centered horizontally, with the top of the symbol not higher than 18 inches (457 mm) above the finished floor.

[BE] 1025.2.6.2 Door hardware markings. Door hardware shall be marked with not less than 16 square inches (406 mm^2) of luminous material. This marking shall be located behind, immediately adjacent to, or on the door handle or escutcheon. Where a panic bar is installed, such material shall be not less than 1 inch (25 mm) wide for the entire length of the actuating bar or touchpad.

[BE] 1025.2.6.3 Door frame markings. The top and sides of the door frame shall be marked with a solid and continuous 1-inch- to 2-inch-wide (25 mm to 51 mm) stripe. Where the door molding does not provide sufficient flat surface on which to locate the stripe, the stripe shall be permitted to be located on the wall surrounding the frame.

[BE] 1025.3 Uniformity. Placement and dimensions of markings shall be consistent and uniform throughout the same enclosure.

[BE] 1025.4 Self-luminous and photoluminescent. Luminous egress path markings shall be permitted to be made of any material, including paint, provided that an electrical charge is not required to maintain the required luminance. Such materials shall include, but not be limited to, *self-luminous* materials and *photoluminescent* materials. Materials shall comply with either of the following standards:

1. UL 1994.
2. ASTM E2072, except that the charging source shall be 1 footcandle (11 lux) of fluorescent illumination for 60 minutes, and the minimum luminance shall be 30 millicandelas per square meter at 10 minutes and 5 millicandelas per square meter after 90 minutes.

[BE] 1025.5 Illumination. Where *photoluminescent* exit path markings are installed, they shall be provided with not less than 1 footcandle (11 lux) of illumination for not less than 60 minutes prior to periods when the building is occupied and continuously during the building occupancy.

SECTION 1026
HORIZONTAL EXITS

[BE] 1026.1 Horizontal exits. *Horizontal exits* serving as an *exit* in a *means of egress* system shall comply with the requirements of this section. A *horizontal exit* shall not serve as the only *exit* from a portion of a building, and where two or more *exits* are required, not more than one-half of the total number of *exits* or total *exit* minimum width or required capacity shall be *horizontal exits*.

Exceptions:

1. *Horizontal exits* are permitted to comprise two-thirds of the required *exits* from any building or floor area for occupancies in Group I-2.
2. *Horizontal exits* are permitted to comprise 100 percent of the *exits* required for occupancies in Group I-3. Not less than 6 square feet (0.6 m^2) of accessible space per occupant shall be provided on each side of

INTERNATIONAL CODE COUNCIL®
Copyright © 2019 ICC & NYSDOS. ALL RIGHTS RESERVED. Accessed by Lauren Gualdino (lgualdino@briarcliffmanor.org), (-) Order Number #100880972 on May 08, 2020 07:05 AM (PDT) pursuant to License Agreement with ICC & NYSDOS. No further reproduction, no

100880972

the *horizontal exit* for the total number of people in adjoining compartments.

[BE] 1026.2 Separation. The separation between buildings or refuge areas connected by a *horizontal exit* shall be provided by a *fire wall* complying with Section 706 of the *Building Code of New York State*; or by a *fire barrier* complying with Section 707 of the *Building Code of New York State* or a *horizontal assembly* complying with Section 711 of the *Building Code of New York State,* or both. The minimum *fire-resistance rating* of the separation shall be 2 hours. Opening protectives in *horizontal exits* shall also comply with Section 716 of the *Building Code of New York State*. Duct and air transfer openings in a *fire wall* or *fire barrier* that serves as a *horizontal exit* shall also comply with Section 717 of the *Building Code of New York State*. The *horizontal exit* separation shall extend vertically through all levels of the building unless floor assemblies have a *fire-resistance rating* of not less than 2 hours and do not have unprotected openings.

Exception: A *fire-resistance rating* is not required at *horizontal exits* between a building area and an above-grade pedestrian walkway constructed in accordance with Section 3104 of the *Building Code of New York State*, provided that the distance between connected buildings is more than 20 feet (6096 mm).

Horizontal exits constructed as *fire barriers* shall be continuous from *exterior wall* to *exterior wall* so as to divide completely the floor served by the *horizontal exit*.

[BE] 1026.3 Opening protectives. *Fire doors* in *horizontal exits* shall be self-closing or automatic-closing when activated by a *smoke detector* in accordance with Section 716.2.6.6 of the *Building Code of New York State*. Doors, where located in a cross-corridor condition, shall be automatic-closing by activation of a *smoke detector* installed in accordance with Section 716.2.6.6 of the *Building Code of New York State*.

[BE] 1026.4 Refuge area. The refuge area of a *horizontal exit* shall be a space occupied by the same tenant or a public area and each such refuge area shall be adequate to accommodate the original *occupant load* of the refuge area plus the *occupant load* anticipated from the adjoining compartment. The anticipated *occupant load* from the adjoining compartment shall be based on the capacity of the *horizontal exit* doors entering the refuge area, or the total occupant load of the adjoining compartment, whichever is less.

[BE] 1026.4.1 Capacity. The capacity of the refuge area shall be computed based on a net floor area allowance of 3 square feet (0.2787 m^2) for each occupant to be accommodated therein. Where the horizontal exit also forms a smoke compartment, the capacity of the refuge area for Group I-1, I-2 and I-3 occupancies and Group B ambulatory care facilities shall comply with Sections 407.5.3, 408.6.2, 420.6.1 and 422.3.2 of the *Building Code of New York State* as applicable.

[BE] 1026.4.2 Number of exits. The refuge area into which a *horizontal exit* leads shall be provided with *exits* adequate to meet the occupant requirements of this chapter, but not including the added *occupant load* imposed by persons entering the refuge area through *horizontal exits* from other areas. Not less than one refuge area *exit* shall lead directly to the exterior or to an *interior exit stairway* or *ramp*.

Exception: The adjoining compartment shall not be required to have a *stairway* or door leading directly outside, provided that the refuge area into which a *horizontal exit* leads has *stairways* or doors leading directly outside and are so arranged that egress shall not require the occupants to return through the compartment from which egress originates.

[BE] 1026.5 Standpipes. Standpipes and standpipe hose connections shall be provided where required by Sections 905.3 and 905.4.

SECTION 1027
EXTERIOR EXIT STAIRWAYS AND RAMPS

[BE] 1027.1 Exterior exit stairways and ramps. *Exterior exit stairways* and *ramps* serving as an element of a required *means of egress* shall comply with this section.

[BE] 1027.2 Use in a means of egress. *Exterior exit stairways* shall not be used as an element of a required *means of egress* for Group I-2 occupancies. For occupancies in other than Group I-2, *exterior exit stairways* and *ramps* shall be permitted as an element of a required *means of egress* for buildings not exceeding six stories above *grade plane* or that are not high-rise buildings.

[BE] 1027.3 Open side. *Exterior exit stairways* and *ramps* serving as an element of a required *means of egress* shall be open on not less than one side, except for required structural columns, beams, handrails and guards. An open side shall have not less than 35 square feet (3.3 m^2) of aggregate open area adjacent to each floor level and the level of each intermediate landing. The required open area shall be located not less than 42 inches (1067 mm) above the adjacent floor or landing level.

[BE] 1027.4 Side yards. The open areas adjoining *exterior exit stairways* or *ramps* shall be either *yards*, *courts* or *public ways*; the remaining sides are permitted to be enclosed by the *exterior walls* of the building.

[BE] 1027.5 Location. *Exterior exit stairways* and *ramps* shall have a minimum fire separation distance of 10 feet (3048 mm) measured at right angles from the exterior edge of the stairway or ramps, including landings, to:

1. Adjacent lot lines.
2. Other portions of the building.
3. Other buildings on the same lot unless the adjacent building *exterior walls* and openings are protected in accordance with Section 705 of the *Building Code of New York State* based on fire separation distance.

For the purposes of this section, other portions of the building shall be treated as separate buildings.

Exception: Exterior exit stairways and ramps serving individual dwelling units of Group R-3 shall have a fire separation distance of not less than 5 feet (1524 mm).

[BE] 1027.6 Exterior exit stairway and ramp protection. *Exterior exit stairways* and *ramps* shall be separated from the

INTERNATIONAL CODE COUNCIL®
Copyright © 2019 ICC & NYSDOS. ALL RIGHTS RESERVED. Accessed by Lauren Gualdino (lgualdino@briarcliffmanor.org), (-) Order Number #100880972 on May 08, 2020 07:05 AM (PDT) pursuant to License Agreement with ICC & NYSDOS. No further reproduction, no

100880972

interior of the building as required in Section 1023.2. Openings shall be limited to those necessary for egress from normally occupied spaces. Where a vertical plane projecting from the edge of an *exterior exit stairway* or *ramp* and landings is exposed by other parts of the building at an angle of less than 180 degrees (3.14 rad), the *exterior wall* shall be rated in accordance with Section 1023.7.

Exceptions:

1. Separation from the interior of the building is not required for occupancies, other than those in Group R-1 or R-2, in buildings that are not more than two stories above grade plane where a *level of exit discharge* serving such occupancies is the first story above grade plane.
2. Separation from the interior of the building is not required where the *exterior exit stairway* or *ramp* is served by an *exterior exit ramp* or balcony that connects two remote *exterior exit stairways* or other approved *exits*, with a perimeter that is not less than 50 percent open. To be considered open, the opening shall be not less than 50 percent of the height of the enclosing wall, with the top of the openings not less than 7 feet (2134 mm) above the top of the balcony.
3. Separation from the *open-ended corridor* of the building is not required for *exterior exit stairways* or *ramps*, provided that Items 3.1 through 3.5 are met:
    3.1. The building, including *open-ended corridors*, and *stairways* and *ramps*, shall be equipped throughout with an *automatic sprinkler system* in accordance with Section 903.3.1.1 or 903.3.1.2.
    3.2. The *open-ended corridors* comply with Section 1020.
    3.3. The *open-ended corridors* are connected on each end to an *exterior exit stairway* or *ramp* complying with Section 1027.
    3.4. The *exterior walls* and openings adjacent to the *exterior exit stairway* or *ramp* comply with Section 1023.7.
    3.5. At any location in an *open-ended corridor* where a change of direction exceeding 45 degrees (0.79 rad) occurs, a clear opening of not less than 35 square feet (3.3 m^2) or an exterior *stairway* or *ramp* shall be provided. Where clear openings are provided, they shall be located so as to minimize the accumulation of smoke or toxic gases.
4. In Group R-3 occupancies not more than four stories in height, exterior exit stairways and ramps serving individual dwelling units are not required to be separated from the interior of the building where the exterior exit stairway or ramp discharges directly to grade.

SECTION 1028
EXIT DISCHARGE

[BE] 1028.1 General. *Exits* shall discharge directly to the exterior of the building. The *exit discharge* shall be at grade or shall provide a direct path of egress travel to grade. The *exit discharge* shall not reenter a building. The combined use of Exceptions 1 and 2 shall not exceed 50 percent of the number and minimum width or required capacity of the required *exits*.

Exceptions:

1. Not more than 50 percent of the number and minimum width or required capacity of *interior exit stairways* and *ramps* is permitted to egress through areas on the *level of discharge* provided that all of the following conditions are met:
    1.1. Discharge of *interior exit stairways* and *ramps* shall be provided with a free and unobstructed path of travel to an exterior exit door and such *exit* is readily visible and identifiable from the point of termination of the enclosure.
    1.2. The entire area of the *level of exit discharge* is separated from areas below by construction conforming to the *fire-resistance rating* for the enclosure.
    1.3. The egress path from the *interior exit stairway* and *ramp* on the *level of exit discharge* is protected throughout by an *approved automatic sprinkler system*. Portions of the *level of exit discharge* with access to the egress path shall either be equipped throughout with an *automatic sprinkler system* installed in accordance with Section 903.3.1.1 or 903.3.1.2, or separated from the egress path in accordance with the requirements for the enclosure of *interior exit stairways* or *ramps*.
    1.4. Where a required *interior exit stairway* or *ramp* and an *exit access stairway* or *ramp* serve the same floor level and terminate at the same *level of exit discharge*, the termination of the *exit access stairway* or *ramp* and the exit discharge door of the *interior exit stairway* or *ramp* shall be separated by a distance of not less than 30 feet (9144 mm) or not less than one-fourth the length of the maximum overall diagonal dimension of the building, whichever is less. The distance shall be measured in a straight line between the exit discharge door from the *interior exit stairway* or ramp and the last tread of the *exit access stairway* or termination of slope of the *exit access ramp*.
2. Not more than 50 percent of the number and minimum width or required capacity of the interior *exit stairways* and *ramps* is permitted to egress through a

INTERNATIONAL CODE COUNCIL®
Copyright © 2019 ICC & NYSDOS. ALL RIGHTS RESERVED. Accessed by Lauren Gualdino (lgualdino@briarcliffmanor.org), (-) Order Number #100880972 on May 08, 2020 07:05 AM (PDT) pursuant to License Agreement with ICC & NYSDOS. No further reproduction, no

100880972

vestibule provided that all of the following conditions are met:

2.1. The entire area of the vestibule is separated from areas below by construction conforming to the *fire-resistance rating* of the *interior exit stairway* or *ramp* enclosure.

2.2. The depth from the exterior of the building is not greater than 10 feet (3048 mm) and the length is not greater than 30 feet (9144 mm).

2.3. The area is separated from the remainder of the *level of exit discharge* by a *fire partition* constructed in accordance with Section 708 of the *Building Code of New York State*.

Exception: The maximum transmitted temperature rise is not required.

2.4. The area is used only for *means of egress* and *exits* directly to the outside.

3. *Horizontal exits* complying with Section 1026 shall not be required to discharge directly to the exterior of the building.

[BE] 1028.2 Exit discharge width or capacity. The minimum width or required capacity of the *exit discharge* shall be not less than the minimum width or required capacity of the *exits* being served.

[BE] 1028.3 Exit discharge components. *Exit discharge* components shall be sufficiently open to the exterior so as to minimize the accumulation of smoke and toxic gases.

[BE] 1028.4 Egress courts. *Egress courts* serving as a portion of the *exit discharge* in the *means of egress* system shall comply with the requirements of Sections 1028.4.1 and 1028.4.2.

[BE] 1028.4.1 Width or capacity. The required capacity of *egress courts* shall be determined as specified in Section 1005.1, but the minimum width shall be not less than 44 inches (1118 mm), except as specified herein. *Egress courts* serving Group R-3 and U occupancies shall be not less than 36 inches (914 mm) in width. The required capacity and width of *egress courts* shall be unobstructed to a height of 7 feet (2134 mm).

The width of the *egress court* shall be not less than the required capacity.

Exception: Encroachments complying with Section 1005.7.

[BE] 1028.4.2 Construction and openings. Where an *egress court* serving a building or portion thereof is less than 10 feet (3048 mm) in width, the *egress court* walls shall have not less than 1-hour fire-resistance-rated construction for a distance of 10 feet (3048 mm) above the floor of the *egress court*. Openings within such walls shall be protected by opening protectives having a fire protection rating of not less than $^3/_4$ hour.

Exceptions:

1. *Egress courts* serving an *occupant load* of less than 10.
2. *Egress courts* serving Group R-3.

[BE] 1028.5 Access to a public way. The *exit discharge* shall provide a direct and unobstructed access to a *public way*.

Exception: Where access to a *public way* cannot be provided, a safe dispersal area shall be provided where all of the following are met:

1. The area shall be of a size to accommodate *not less than* 5 square feet (0.46 m^2) for each person.
2. The area shall be located on the same lot not less than 50 feet (15 240 mm) away from the building requiring egress.
3. The area shall be permanently maintained and identified as a safe dispersal area.
4. The area shall be provided with a safe and unobstructed path of travel from the building.

SECTION 1029
ASSEMBLY

[BE] 1029.1 General. A room or space used for assembly purposes that contains seats, tables, displays, equipment or other material shall comply with this section.

[BE] 1029.1.1 Bleachers. *Bleachers*, *grandstands* and *folding and telescopic seating*, that are not building elements, shall comply with ICC 300.

[BE] 1029.1.1.1 Spaces under grandstands and bleachers. Spaces under *grandstands* or *bleachers* shall be separated by *fire barriers* complying with Section 707 of the *Building Code of New York State* and *horizontal assemblies* complying with Section 711 of the *Building Code of New York State* with not less than 1-hour fire-resistance-rated construction.

Exceptions:

1. Ticket booths less than 100 square feet (9 m^2) in area.
2. Toilet rooms.
3. Other accessory use areas 1,000 square feet (93 m^2) or less in area and equipped with an automatic sprinkler system in accordance with Section 903.3.1.1.

[BE] 1029.2 Assembly main exit. A building, room or space used for assembly purposes that has an *occupant load* of greater than 300 and is provided with a main *exit*, that main *exit* shall be of sufficient capacity to accommodate not less than one-half of the *occupant load*, but such capacity shall be not less than the total required capacity of all *means of egress* leading to the *exit*. Where the building is classified as a Group A occupancy, the main *exit* shall front on not less than one street or an unoccupied space of not less than 10 feet (3048 mm) in width that adjoins a street or *public way*. In a building, room or space used for assembly purposes where there is not a well-defined main *exit* or where multiple main *exits* are provided, *exits* shall be permitted to be distributed around the perimeter of the building provided that the total capacity of egress is not less than 100 percent of the required capacity.

INTERNATIONAL CODE COUNCIL®
Copyright © 2019 ICC & NYSDOS. ALL RIGHTS RESERVED. Accessed by Lauren Gualdino (lgualdino@briarcliffmanor.org), (-) Order Number #100880972 on May 08, 2020 07:05 AM (PDT) pursuant to License Agreement with ICC & NYSDOS. No further reproduction, no

100880972

[BE] 1029.3 Assembly other exits. In addition to having access to a main *exit*, each level in a building used for assembly purposes having an *occupant load* greater than 300 and provided with a main *exit*, shall be provided with additional *means of egress* that shall provide an egress capacity for not less than one-half of the total *occupant load* served by that level and shall comply with Section 1007.1. In a building used for assembly purposes where there is not a well-defined main *exit* or where multiple main *exits* are provided, *exits* for each level shall be permitted to be distributed around the perimeter of the building, provided that the total width of egress is not less than 100 percent of the required width.

[BE] 1029.4 Foyers and lobbies. In Group A-1 occupancies, where persons are admitted to the building at times when seats are not available, such persons shall be allowed to wait in a lobby or similar space, provided that such lobby or similar space shall not encroach on the minimum width or required capacity of the *means of egress*. Such foyer, if not directly connected to a public street by all the main entrances or *exits*, shall have a straight and unobstructed *corridor* or path of travel to every such main entrance or *exit*.

[BE] 1029.5 Interior balcony and gallery means of egress. For balconies, galleries or press boxes having a seating capacity of 50 or more located in a building, room or space used for assembly purposes, not less than two *means of egress* shall be provided, with one from each side of every balcony, gallery or press box.

[BE] 1029.6 Capacity of aisle for assembly. The required capacity of *aisles* shall be not less than that determined in accordance with Section 1029.6.1 where s*moke-protected assembly seating* is not provided, with Section 1029.6.2 where *smoke-protected assembly seating* is provided, and with Section 1029.6.3 where open-air assembly seating is provided.

[BE] 1029.6.1 Without smoke protection. The required capacity in inches (mm) of the *aisles* for assembly seating without smoke protection shall be not less than the *occupant load* served by the egress element in accordance with all of the following, as applicable:

1. Not less than 0.3 inch (7.6 mm) of *aisle* capacity for each occupant served shall be provided on stepped *aisles* having riser heights 7 inches (178 mm) or less and tread depths 11 inches (279 mm) or greater, measured horizontally between tread *nosings*.
2. Not less than 0.005 inch (0.127 mm) of additional *aisle* capacity for each occupant shall be provided for each 0.10 inch (2.5mm) of riser height above 7 inches (178 mm).
3. Where egress requires stepped *aisle* descent, not less than 0.075 inch (1.9 mm) of additional *aisle* capacity for each occupant shall be provided on those portions of *aisle* capacity that do not have a *handrail* within a horizontal distance of 30 inches (762 mm).
4. Ramped *aisles*, where slopes are steeper than one unit vertical in 12 units horizontal (8-percent slope), shall have not less than 0.22 inch (5.6 mm) of clear *aisle* capacity for each occupant served. Level or ramped aisles, where slopes are not steeper than one unit vertical in 12 units horizontal (8-percent slope), shall have not less than 0.20 inch (5.1 mm) of clear *aisle* capacity for each occupant served.

[BE] 1029.6.2 Smoke-protected assembly seating. The required capacity in inches (mm) of the *aisle* for *smoke-protected assembly seating* shall be not less than the *occupant load* served by the egress element multiplied by the appropriate factor in Table 1029.6.2. The total number of seats specified shall be those within the space exposed to the same smoke-protected environment. Interpolation is permitted between the specific values shown. A life safety evaluation, complying with NFPA 101, shall be done for a facility utilizing the reduced width requirements of Table 1029.6.2 for *smoke-protected assembly seating*.

Exception: For *open-air assembly seating* with an *occupant load* not greater than 18,000, the required capacity in inches (mm) shall be determined using the factors in Section 1029.6.3.

[BE] 1029.6.2.1 Smoke control. *Aisles* and *aisle accessways* serving a *smoke-protected assembly seating* area shall be provided with a smoke control system complying with Section 909 or natural ventilation designed to maintain the smoke level not less than 6 feet (1829 mm) above the floor of the *means of egress*.

[BE] 1029.6.2.2 Roof height. A *smoke-protected assembly seating area* with a roof shall have the lowest portion of the roof deck not less than 15 feet (4572 mm) above the highest *aisle* or *aisle accessway*.

Exception: A roof canopy in an outdoor stadium shall be permitted to be less than 15 feet (4572 mm) above the highest *aisle* or *aisle accessway* provided that there are no objects less than 80 inches (2032 mm) above the highest *aisle* or *aisle accessway*.

[BE] 1029.6.2.3 Automatic sprinklers. Enclosed areas with walls and ceilings in buildings or structures containing *smoke-protected assembly seating* shall be protected with an *approved automatic sprinkler system* in accordance with Section 903.3.1.1.

Exceptions:

1. The floor area used for contests, performances or entertainment provided that the roof construction is more than 50 feet (15 240 mm) above the floor level and the use is restricted to low fire hazard uses.
2. Press boxes and storage facilities less than 1,000 square feet (93 m^2) in area.
3. Outdoor seating facilities where seating and the *means of egress* in the seating area are essentially open to the outside.

[BE] 1029.6.3 Open-air assembly seating. In *open-air assembly seating,* the required capacity in inches (mm) of *aisles* shall be not less than the total *occupant load* served by the egress element multiplied by 0.08 (2.0 mm) where egress is by stepped *aisle* and multiplied by 0.06 (1.52 mm) where egress is by level *aisles* and ramped *aisles*.

Exception: The required capacity in inches (mm) of *aisles* shall be permitted to comply with Section 1029.6.2 for the number of seats in the *open-air assem-*

INTERNATIONAL CODE COUNCIL®
Copyright © 2019 ICC & NYSDOS. ALL RIGHTS RESERVED. Accessed by Lauren Gualdino (lgualdino@briarcliffmanor.org), (-) Order Number #100880972 on May 08, 2020 07:05 AM (PDT) pursuant to License Agreement with ICC & NYSDOS. No further reproduction, no

100880972

bly seating where Section 1029.6.2 permits less capacity.

[BE] 1029.7 Travel distance. The *exit access* travel distance shall comply with Section 1017. Where *aisles* are provided for seating, the distance shall be measured along the *aisles* and *aisle accessways* without travel over or on the seats.

Exceptions:

1. In facilities with *smoke-protected assembly* seating the total *exit access* travel distance shall be not greater than 400 feet (122 m). That portion of the total permitted *exit access* travel distance from each seat to the nearest entrance to a vomitory or concourse shall not exceed 200 feet (60 960 mm). The portion of the total permitted *exit access* travel distance from the entrance to the vomitory or concourse to one of the following shall not exceed 200 feet (60 960 mm).
    1.1. The closest riser of an *exit access stairway*.
    1.2. The closest slope of an *exit access ramp*.
    1.3. An exit.
2. In facilities with *open-air assembly seating* of Type III, IV or V construction, the total exit access travel distance to one of the following shall not exceed 400 feet (122 m).
    2.1. The closest riser of an *exit access stairway*.
    2.2. The closest slope of an *exit access ramp*.
    2.3. An exit.
3. In facilities with *open-air assembly seating* of Type I or II construction, the *exit access* travel distance shall not be limited.

[BE] 1029.8 Common path of egress travel. The *common path of egress travel* shall not exceed 30 feet (9144 mm) from any seat to a point where an occupant has a choice of two paths of egress travel to two *exits*.

Exceptions:

1. For areas serving less than 50 occupants, the *common path of egress travel* shall not exceed 75 feet (22 860 mm).
2. For *smoke-protected* or *open-air assembly seating*, the *common path of egress travel* shall not exceed 50 feet (15 240 mm).

[BE] 1029.8.1 Path through adjacent row. Where one of the two paths of travel is across the *aisle* through a row of seats to another *aisle*, there shall be not more than 24 seats between the two *aisles*, and the minimum clear width between rows for the row between the two *aisles* shall be 12 inches (305 mm) plus 0.6 inch (15.2 mm) for each additional seat above seven in the row between *aisles*.

Exception: For *smoke-protected* or *open-air assembly seating* there shall be not more than 40 seats between the two *aisles* and the minimum clear width shall be 12 inches (305 mm) plus 0.3 inch (7.6 mm) for each additional seat.

[BE] 1029.9 Assembly aisles are required. Every occupied portion of any building, room or space used for assembly purposes that contains seats, tables, displays, similar fixtures or equipment shall be provided with *aisles* leading to *exits* or *exit access doorways* in accordance with this section.

[BE] 1029.9.1 Minimum aisle width. The minimum clear width for *aisles* shall comply with one of the following:

1. Forty-eight inches (1219 mm) for stepped *aisles* having seating on both sides.

    Exception: Thirty-six inches (914 mm) where the stepped *aisles* serve less than 50 seats.
2. Thirty-six inches (914 mm) for stepped *aisles* having seating on only one side.

    Exception: Twenty-three inches (584 mm) between a stepped aisle *handrail* and seating where a stepped *aisle* does not serve more than five rows on one side.
3. Twenty-three inches (584 mm) between a stepped aisle *handrail* or *guard* and seating where the stepped aisle is subdivided by a mid-aisle *handrail*.
4. Forty-two inches (1067 mm) for level or ramped *aisles* having seating on both sides.

    Exceptions:

    1. Thirty-six inches (914 mm) where the *aisle* serves less than 50 seats.

[BE] TABLE 1029.6.2
CAPACITY FOR AISLES FOR SMOKE-PROTECTED ASSEMBLY

TOTAL NUMBER OF SEATS IN THE SMOKE-PROTECTED ASSEMBLY SEATING	INCHES OF CAPACITY PER SEAT SERVED			
	Stepped aisles with handrails within 30 inches	Stepped aisles without handrails within 30 inches	Level aisles or ramped aisles not steeper than 1 in 10 in slope	Ramped aisles steeper than 1 in 10 in slope
Equal to or less than 5,000	0.200	0.250	0.150	0.165
10,000	0.130	0.163	0.100	0.110
15,000	0.096	0.120	0.070	0.077
20,000	0.076	0.095	0.056	0.062
Equal to or greater than 25,000	0.060	0.075	0.044	0.048

For SI: 1 inch = 25.4 mm.

INTERNATIONAL CODE COUNCIL®
Copyright © 2019 ICC & NYSDOS. ALL RIGHTS RESERVED. Accessed by Lauren Gualdino (lgualdino@briarcliffmanor.org), (-) Order Number #100880972 on May 08, 2020 07:05 AM (PDT) pursuant to License Agreement with ICC & NYSDOS. No further reproduction, no

100880972

2. Thirty inches (762 mm) where the *aisle* serves fewer than 15 seats and does not serve as part of an accessible route.

5. Thirty-six inches (914 mm) for level or ramped *aisles* having seating on only one side.

Exception: Thirty inches (762 mm) where the *aisle* serves fewer than 15 seats and does not serve as part of an *accessible route*.

[BE] 1029.9.2 Aisle catchment area. The *aisle* shall provide sufficient capacity for the number of persons accommodated by the catchment area served by the *aisle*. The catchment area served by an *aisle* is that portion of the total space served by that section of the *aisle*. In establishing catchment areas, the assumption shall be made that there is a balanced use of all *means of egress*, with the number of persons in proportion to egress capacity.

[BE] 1029.9.3 Converging aisles. Where *aisles* converge to form a single path of egress travel, the required capacity of that path shall be not less than the combined required capacity of the converging *aisles*.

[BE] 1029.9.4 Uniform width and capacity. Those portions of *aisles*, where egress is possible in either of two directions, shall be uniform in minimum width or required capacity.

[BE] 1029.9.5 Dead-end aisles. Each end of an *aisle* shall be continuous to a cross *aisle*, foyer, doorway, vomitory, concourse or *stairway* in accordance with Section 1029.9.7 having access to an *exit*.

Exceptions:

1. Dead-end *aisles* shall be not greater than 20 feet (6096 mm) in length.
2. Dead-end *aisles* longer than 16 rows are permitted where seats beyond the 16th row dead-end *aisle* are not more than 24 seats from another *aisle*, measured along a row of seats having a minimum clear width of 12 inches (305 mm) plus 0.6 inch (15.2 mm) for each additional seat above seven in the row where seats have backrests or beyond 10 where seats are without backrests in the row.
3. For *smoke-protected* or *open-air assembly seating*, the dead-end *aisle* length of vertical *aisles* shall not exceed a distance of 21 rows.
4. For *smoke-protected* or *open-air assembly seating*, a longer dead-end *aisle* is permitted where seats beyond the 21-row dead-end *aisle* are not more than 40 seats from another *aisle*, measured along a row of seats having an *aisle accessway* with a minimum clear width of 12 inches (305 mm) plus 0.3 inch (7.6 mm) for each additional seat above seven in the row where seats have backrests or beyond 10 where seats are without backrests in the row.

[BE] 1029.9.6 Aisle measurement. The clear width for *aisles* shall be measured to walls, edges of seating and tread edges except for permitted projections.

Exception: The clear width of *aisles* adjacent to seating at tables shall be permitted to be measured in accordance with Section 1029.13.1.

[BE] 1029.9.6.1 Assembly aisle obstructions. There shall not be obstructions in the minimum width or required capacity of *aisles*.

Exception: *Handrails* are permitted to project into the required width of stepped *aisles* and ramped aisles in accordance with Section 1014.8.

[BE] 1029.9.7 Stairways connecting to stepped aisles. A *stairway* that connects a stepped *aisle* to a cross *aisle* or concourse shall be permitted to comply with the assembly *aisle* walking surface requirements of Section 1029.14. Transitions between *stairways* and stepped *aisles* shall comply with Section 1029.10.

[BE] 1029.9.8 Stairways connecting to vomitories. A stairway that connects a vomitory to a cross aisle or concourse shall be permitted to comply with the assembly *aisle* walking surface requirements of Section 1029.14. Transitions between *stairways* and stepped *aisles* shall comply with Section 1029.10.

[BE] 1029.10 Transitions. Transitions between *stairways* and stepped *aisles* shall comply with either Section 1029.10.1 or 1029.10.2.

[BE] 1029.10.1 Transitions to stairways that maintain stepped aisle riser and tread dimensions. Stepped *aisles*, transitions and *stairways* that maintain the stepped aisle riser and tread dimensions shall comply with Section 1029.14 as one *exit access* component.

[BE] 1029.10.2 Transitions to stairways that do not maintain stepped aisle riser and tread dimensions. Transitions between *stairways* and stepped *aisles* having different riser and tread dimensions shall comply with Sections 1029.10.2.1 through 1029.10.3.

[BE] 1029.10.2.1 Stairways and stepped aisles in a straight run. Where *stairways* and stepped *aisles* are in a straight run, transitions shall have one of the following:

1. A depth of not less than 22 inches (559 mm) where the treads on the descending side of the transition have greater depth.
2. A depth of not less than 30 inches (762 mm) where the treads on the descending side of the transition have lesser depth.

[BE] 1029.10.2.2 Stairways that change direction from stepped aisles. Transitions where the *stairway* changes direction from the stepped *aisle* shall have a minimum depth of 11 inches (280 mm) or the stepped *aisle* tread depth, whichever is greater, between the stepped *aisle* and *stairway*.

INTERNATIONAL CODE COUNCIL®
Copyright © 2019 ICC & NYSDOS. ALL RIGHTS RESERVED. Accessed by Lauren Gualdino (lgualdino@briarcliffmanor.org), (-) Order Number #100880972 on May 08, 2020 07:05 AM (PDT) pursuant to License Agreement with ICC & NYSDOS. No further reproduction, no

100880972

[BE] 1029.10.3 Transition marking. A distinctive marking stripe shall be provided at each *nosing* or leading edge adjacent to the transition. Such stripe shall be not less than 1 inch (25 mm), and not more than 2 inches (51 mm), wide. The edge marking stripe shall be distinctively different from the stepped *aisle* contrasting marking stripe.

[BE] 1029.11 Stepped aisles at vomitories. Stepped aisles that change direction at vomitories shall comply with Section 1029.11.1. Transitions between a stepped aisle above a vomitory and a stepped aisle to the side of a vomitory shall comply with Section 1029.11.2.

[BE] 1029.11.1 Stepped aisles that change direction at vomitories. Stepped *aisle* treads where the stepped aisle changes direction at a vomitory shall have a depth of not less than 11 inches (280 mm) or the stepped aisle tread depth, whichever is greater. The height of a stepped aisle tread above a transition at a vomitory shall comply with Section 1029.14.2.2.

[BE] 1029.11.2 Stepped aisle transitions at the top of vomitories. Transitions between the stepped *aisle* above a vomitory and stepped aisles to the side of a vomitory shall have a depth of not less than 11 inches (280 mm) or the stepped aisle tread depth, whichever is greater.

[BE] 1029.12 Construction. *Aisles*, stepped *aisles* and ramped *aisles* shall be built of materials consistent with the types permitted for the type of construction of the building.

Exception: Wood *handrails* shall be permitted for all types of construction.

[BE] 1029.12.1 Walking surface. The surface of *aisles*, stepped *aisles* and ramped *aisles* shall be of slip-resistant materials that are securely attached. The surface for stepped *aisles* shall comply with Section 1011.7.1.

[BE] 1029.12.2 Outdoor conditions. Outdoor *aisles*, stepped *aisles* and ramped *aisles* and outdoor approaches to *aisles*, stepped *aisles* and ramped *aisles* shall be designed so that water will not accumulate on the walking surface.

[BE] 1029.13 Aisle accessways. *Aisle accessways* for seating at tables shall comply with Section 1029.13.1. *Aisle accessways* for seating in rows shall comply with Section 1029.13.2.

[BE] 1029.13.1 Seating at tables. Where seating is located at a table or counter and is adjacent to an *aisle* or *aisle accessway*, the measurement of required clear width of the *aisle* or *aisle accessway* shall be made to a line 19 inches (483 mm) away from and parallel to the edge of the table or counter. The 19-inch (483 mm) distance shall be measured perpendicular to the side of the table or counter. In the case of other side boundaries for *aisles* or *aisle accessways*, the clear width shall be measured to walls, edges of seating and tread edges.

Exception: Where tables or counters are served by fixed seats, the width of the *aisle* or *aisle accessway* shall be measured from the back of the seat.

[BE] 1029.13.1.1 Aisle accessway capacity and width for seating at tables. *Aisle accessways* serving arrangements of seating at tables or counters shall comply with the capacity requirements of Section 1005.1 but shall not have less than 12 inches (305 mm) of width plus $^1/_2$ inch (12.7 mm) of width for each additional 1 foot (305 mm), or fraction thereof, beyond 12 feet (3658 mm) of *aisle accessway* length measured from the center of the seat farthest from an *aisle*.

Exception: Portions of an *aisle accessway* having a length not exceeding 6 feet (1829 mm) and used by a total of not more than four persons.

[BE] 1029.13.1.2 Seating at table aisle accessway length. The length of travel along the *aisle accessway* shall not exceed 30 feet (9144 mm) from any seat to the point where a person has a choice of two or more paths of egress travel to separate *exits*.

[BE] 1029.13.2 Clear width of aisle accessways serving seating in rows. Where seating rows have 14 or fewer seats, the minimum clear *aisle accessway* width shall be not less than 12 inches (305 mm) measured as the clear horizontal distance from the back of the row ahead and the nearest projection of the row behind. Where chairs have automatic or self-rising seats, the measurement shall be made with seats in the raised position. Where any chair in the row does not have an automatic or self-rising seat, the measurements shall be made with the seat in the down position. For seats with folding tablet arms, row spacing shall be determined with the tablet arm in the used position.

Exception: For seats with folding tablet arms, row spacing is permitted to be determined with the tablet arm in the stored position where the tablet arm when raised manually to vertical position in one motion automatically returns to the stored position by force of gravity.

[BE] 1029.13.2.1 Dual access. For rows of seating served by *aisles* or doorways at both ends, there shall be not more than 100 seats per row. The minimum clear width of 12 inches (305 mm) between rows shall be increased by 0.3 inch (7.6 mm) for every additional seat beyond 14 seats where seats have backrests or beyond 21 where seats are without backrests. The minimum clear width is not required to exceed 22 inches (559 mm).

Exception: For s*moke-protected* or *open-air assembly seating*, the row length limits for a 12-inch-wide (305 mm) *aisle accessway*, beyond which the *aisle accessway* minimum clear width shall be increased, are in Table 1029.13.2.1.

[BE] 1029.13.2.2 Single access. For rows of seating served by an *aisle* or doorway at only one end of the row, the minimum clear width of 12 inches (305 mm) between rows shall be increased by 0.6 inch (15.2 mm) for every additional seat beyond seven seats where seats have backrests or beyond 10 where seats are without backrests. The minimum clear width is not required to exceed 22 inches (559 mm).

Exception: For *smoke-protected* or *open-air assembly seating*, the row length limits for a 12-inch-wide (305 mm) *aisle accessway*, beyond which the *aisle*

INTERNATIONAL CODE COUNCIL®
Copyright © 2019 ICC & NYSDOS. ALL RIGHTS RESERVED. Accessed by Lauren Gualdino (lgualdino@briarcliffmanor.org), (-) Order Number #100880972 on May 08, 2020 07:05 AM (PDT) pursuant to License Agreement with ICC & NYSDOS. No further reproduction, no

100880972

accessway minimum clear width shall be increased, are in Table 1029.13.2.1.

[BE] 1029.14 Assembly aisle walking surfaces. Ramped aisles shall comply with Sections 1029.14.1 through 1029.14.1.3. Stepped *aisles* shall comply with Sections 1029.14.2 through 1029.14.2.4.

[BE] 1029.14.1 Ramped aisles. *Aisles* that are sloped more than one unit vertical in 20 units horizontal (5-percent slope) shall be considered to be a ramped *aisle*. Ramped *aisles* that serve as part of an accessible route in accordance with Sections 1009 of this code and Section 1108.2 of the *Building Code of New York State* shall have a maximum slope of one unit vertical in 12 units horizontal (8-percent slope). The slope of other ramped *aisles* shall not exceed one unit vertical in 8 units horizontal (12.5-percent slope).

[BE] 1029.14.1.1 Cross slope. The slope measured perpendicular to the direction of travel of a ramped *aisle* shall not be steeper than one unit vertical in 48 units horizontal (2-percent slope).

[BE] 1029.14.1.2 Landings. Ramped *aisles* shall have landings in accordance with Sections 1012.6 through 1012.6.5. Landings for ramped *aisles* shall be permitted to overlap required *aisles* or cross *aisles*.

[BE] 1029.14.1.3 Edge protection. Ramped *aisles* shall have edge protection in accordance with Sections 1012.10 and 1012.10.1.

Exception: In assembly spaces with *fixed seating*, edge protection is not required on the sides of ramped *aisles* where the ramped *aisles* provide access to the adjacent seating and *aisle accessways*.

[BE] 1029.14.2 Stepped aisles. *Aisles* with a slope exceeding one unit vertical in eight units horizontal (12.5-percent slope) shall consist of a series of risers and treads that extends across the full width of *aisles* and complies with Sections 1029.14.2.1 through 1029.14.2.4.

[BE] 1029.14.2.1 Treads. Tread depths shall be not less than 11 inches (279 mm) and shall have dimensional uniformity.

Exception: The tolerance between adjacent treads shall not exceed $^{3}/_{16}$ inch (4.8 mm).

[BE] 1029.14.2.2 Risers. Where the gradient of stepped *aisles* is to be the same as the gradient of adjoining seating areas, the riser height shall be not less than 4 inches (102 mm) nor more than 8 inches (203 mm) and shall be uniform within each *flight*.

Exceptions:

1. Riser height nonuniformity shall be limited to the extent necessitated by changes in the gradient of the adjoining seating area to maintain adequate sightlines. Where nonuniformities exceed $^{3}/_{16}$ inch (4.8 mm) between adjacent risers, the exact location of such nonuniformities shall be indicated with a distinctive marking stripe on each tread at the *nosing* or leading edge adjacent to the nonuniform risers. Such stripe shall be not less than 1 inch (25 mm), and not more than 2 inches (51 mm), wide. The edge marking stripe shall be distinctively different from the contrasting marking stripe.
2. Riser heights not exceeding 9 inches (229 mm) shall be permitted where they are necessitated by the slope of the adjacent seating areas to maintain sightlines.

[BE] 1029.14.2.2.1 Construction tolerances. The tolerance between adjacent risers on a stepped *aisle* that were designed to be equal height shall not exceed $^{3}/_{16}$ inch (4.8 mm). Where the stepped *aisle* is designed in accordance with Exception 1 of Section 1029.14.2.2, the stepped *aisle* shall be constructed so that each riser of unequal height, determined in the direction of descent, is not more than $^{3}/_{8}$ inch (9.5 mm) in height different from adjacent risers where stepped *aisle* treads are less than 22 inches

[BE] TABLE 1029.13.2.1
SMOKE-PROTECTED OR OPEN-AIR ASSEMBLY AISLE ACCESSWAYS

TOTAL NUMBER OF SEATS IN THE SMOKE-PROTECTED OR OPEN-AIR ASSEMBLY SEATING	MAXIMUM NUMBER OF SEATS PER ROW PERMITTED TO HAVE A MINIMUM 12-INCH CLEAR WIDTH AISLE ACCESSWAY			
	Aisle or doorway at both ends of row		Aisle or doorway at one end of row only	
	Seats with backrests	Seats without backrests	Seats with backrests	Seats without backrests
Less than 4,000	14	21	7	10
4,000	15	22	7	10
7,000	16	23	8	11
10,000	17	24	8	11
13,000	18	25	9	12
16,000	19	26	9	12
19,000	20	27	10	13
22,000 and greater	21	28	11	14

For SI: 1 inch = 25.4 mm.

INTERNATIONAL CODE COUNCIL®
Copyright © 2019 ICC & NYSDOS. ALL RIGHTS RESERVED. Accessed by Lauren Gualdino (lgualdino@briarcliffmanor.org), (-) Order Number #100880972 on May 08, 2020 07:05 AM (PDT) pursuant to License Agreement with ICC & NYSDOS. No further reproduction, no

100880972

(560 mm) in depth and $^{3}/_{4}$ inch (19.1 mm) in height different from adjacent risers where stepped *aisle* treads are 22 inches (560 mm) or greater in depth.

[BE] 1029.14.2.3 Tread contrasting marking stripe. A contrasting marking stripe shall be provided on each tread at the *nosing* or leading edge such that the location of each tread is readily apparent when viewed in descent. Such stripe shall be not less than 1 inch (25 mm), and not more than 2 inches (51 mm), wide.

Exception: The contrasting marking stripe is permitted to be omitted where tread surfaces are such that the location of each tread is readily apparent when viewed in descent.

[BE] 1029.14.2.4 Nosing and profile. *Nosing* and riser profile shall comply with Sections 1011.5.5 through 1011.5.5.3.

[BE] 1029.15 Seat stability. In a building, room or space used for assembly purposes, the seats shall be securely fastened to the floor.

Exceptions:

1. In a building, room or space used for assembly purposes or portions thereof without ramped or tiered floors for seating and with 200 or fewer seats, the seats shall not be required to be fastened to the floor.
2. In a building, room or space used for assembly purposes or portions thereof with seating at tables and without ramped or tiered floors for seating, the seats shall not be required to be fastened to the floor.
3. In a building, room or space used for assembly purposes or portions thereof without ramped or tiered floors for seating and with greater than 200 seats, the seats shall be fastened together in groups of not less than three or the seats shall be securely fastened to the floor.
4. In a building, room or space used for assembly purposes where flexibility of the seating arrangement is an integral part of the design and function of the space and seating is on tiered levels, not more than 200 seats shall not be required to be fastened to the floor. Plans showing seating, tiers and *aisles* shall be submitted for approval.
5. Groups of seats within a building, room or space used for assembly purposes separated from other seating by railings, *guards*, partial height walls or similar barriers with level floors and having not more than 14 seats per group shall not be required to be fastened to the floor.
6. Seats intended for musicians or other performers and separated by railings, *guards*, partial height walls or similar barriers shall not be required to be fastened to the floor.

[BE] 1029.16 Handrails. Ramped *aisles* having a slope exceeding one unit vertical in 15 units horizontal (6.7-percent slope) and stepped *aisles* shall be provided with *handrails* in compliance with Section 1014 located either at one or both sides of the *aisle* or within the *aisle* width.

Exceptions:

1. *Handrails* are not required for ramped *aisles* with seating on both sides.
2. *Handrails* are not required where, at the side of the *aisle*, there is a *guard* with a top surface that complies with the graspability requirements of *handrails* in accordance with Section 1014.3.
3. *Handrail* extensions are not required at the top and bottom of stepped *aisles* and ramped *aisles* to permit crossovers within the *aisles*.

[BE] 1029.16.1 Discontinuous handrails. Where there is seating on both sides of the *aisle*, the mid-aisle *handrails* shall be discontinuous with gaps or breaks at intervals not exceeding five rows to facilitate access to seating and to permit crossing from one side of the *aisle* to the other. These gaps or breaks shall have a clear width of not less than 22 inches (559 mm) and not greater than 36 inches (914 mm), measured horizontally, and the mid-aisle *handrail* shall have rounded terminations or bends.

[BE] 1029.16.2 Handrail termination. *Handrails* located on the side of stepped *aisles* shall return to a wall, *guard* or the walking surfaces or shall be continuous to the *handrail* of an adjacent stepped *aisle flight*.

[BE] 1029.16.3 Mid-aisle termination. Mid-aisle *handrails* shall not extend beyond the lowest riser and shall terminate within 18 inches (381 mm), measured horizontally, from the lowest riser. *Handrail* extensions are not required.

Exception: Mid-aisle *handrails* shall be permitted to extend beyond the lowest riser where the *handrail* extensions do not obstruct the width of the cross *aisle*.

[BE] 1029.16.4 Rails. Where mid-aisle *handrails* are provided in stepped *aisles*, there shall be an additional rail located approximately 12 inches (305 mm) below the *handrail*. The rail shall be adequate in strength and attachment in accordance with Section 1607.8.1.2 of the *Building Code of New York State*.

[BE] 1029.17 Assembly guards. *Guards* adjacent to seating in a building, room or space used for assembly purposes shall be provided where required by Section 1015 and shall be constructed in accordance with Section 1015 except where provided in accordance with Sections 1029.17.1 through 1029.17.4. At *bleachers, grandstands and folding and telescopic seating*, *guards* must be provided where required by ICC 300 and Section 1029.17.1.

[BE] 1029.17.1 Perimeter guards. Perimeter *guards* shall be provided where the footboards or walking surface of seating facilities are more than 30 inches (762 mm) above the floor or grade below. Where the seatboards are adjacent to the perimeter, *guard* height shall be 42 inches (1067 mm) high minimum, measured from the seatboard. Where the seats are self-rising, *guard* height shall be 42 inches (1067 mm) high minimum, measured from the

INTERNATIONAL CODE COUNCIL®
Copyright © 2019 ICC & NYSDOS. ALL RIGHTS RESERVED. Accessed by Lauren Gualdino (lgualdino@briarcliffmanor.org), (-) Order Number #100880972 on May 08, 2020 07:05 AM (PDT) pursuant to License Agreement with ICC & NYSDOS. No further reproduction, no

100880972

floor surface. Where there is an *aisle* between the seating and the perimeter, the *guard* height shall be measured in accordance with Section 1015.3.

Exceptions:

1. *Guards* that impact sightlines shall be permitted to comply with Section 1029.17.3.
2. *Bleachers, grandstands and folding and telescopic seating* shall not be required to have perimeter *guards* where the seating is located adjacent to a wall and the space between the wall and the seating is less than 4 inches (102 mm).

[BE] 1029.17.2 Cross aisles. Cross *aisles* located more than 30 inches (762 mm) above the floor or grade below shall have *guards* in accordance with Section 1015.

Where an elevation change of 30 inches (762 mm) or less occurs between a cross *aisle* and the adjacent floor or grade below, *guards* not less than 26 inches (660 mm) above the *aisle* floor shall be provided.

Exception: Where the backs of seats on the front of the cross *aisle* project 24 inches (610 mm) or more above the adjacent floor of the *aisle*, a *guard* need not be provided.

[BE] 1029.17.3 Sightline-constrained guard heights. Unless subject to the requirements of Section 1029.17.4, a fascia or railing system in accordance with the *guard* requirements of Section 1015 and having a minimum height of 26 inches (660 mm) shall be provided where the floor or footboard elevation is more than 30 inches (762 mm) above the floor or grade below and the fascia or railing would otherwise interfere with the sightlines of immediately adjacent seating.

[BE] 1029.17.4 Guards at the end of aisles. A fascia or railing system complying with the *guard* requirements of Section 1015 shall be provided for the full width of the *aisle* where the foot of the *aisle* is more than 30 inches (762 mm) above the floor or grade below. The fascia or railing shall be not less than 36 inches (914 mm) high and shall provide not less than 42 inches (1067 mm) measured diagonally between the top of the rail and the *nosing* of the nearest tread.

SECTION 1030
EMERGENCY ESCAPE AND RESCUE

[BE] 1030.1 General. In addition to the *means of egress* required by this chapter, *emergency escape and rescue openings* shall be provided in the following occupancies:

1. Group R-2 occupancies located in stories with only one exit or access to only one exit as permitted by Tables 1006.3.3(1) and 1006.3.3(2).
2. Group R-3 and R-4 occupancies.

Basements and sleeping rooms below the fourth story above *grade plane* shall have not fewer than one exterior *emergency escape and rescue opening* in accordance with this section. Where *basements* contain one or more sleeping rooms, *emergency escape and rescue openings* shall be required in each sleeping room, but shall not be required in adjoining areas of the *basement*. Such openings shall open directly into a *public way* or to a *yard* or *court* that opens to a *public way*.

Exceptions:

1. *Basements* with a ceiling height of less than 80 inches (2032 mm) shall not be required to have *emergency escape and rescue openings*.
2. *Emergency escape and rescue openings* are not required from *basements* or sleeping rooms that have an *exit* door or *exit access* door that opens directly into a *public way* or to a *yard*, *court* or exterior exit balcony that opens to a *public way*.
3. *Basements* without *habitable spaces* and having not more than 200 square feet (18.6 m^2) in floor area shall not be required to have *emergency escape and rescue openings.*
4. Within individual dwelling and sleeping units in Groups R-2 and R-3, where the building is equipped throughout with an automatic sprinkler system installed in accordance with Section 903.3.1.1, 903.3.1.2 or 903.3.1.3, sleeping rooms in *basements* shall not be required to have emergency escape and rescue openings provided that the *basement* has one of the following:
   4.1. One means of egress and one emergency escape and rescue opening.
   4.2. Two means of egress.

[BE] 1030.1.1 Operational constraints and opening control devices. Emergency escape and rescue openings shall be operational from inside the room without the use of keys or tools. Window-opening control devices complying with ASTM F2090 shall be permitted for use on windows serving as a required emergency escape and rescue opening.

[BE] 1030.2 Minimum size. *Emergency escape and rescue openings* shall have a minimum net clear opening of 5.7 square feet (0.53 m^2).

Exception: The minimum net clear opening for grade-floor *emergency escape and rescue openings* shall be 5 square feet (0.46 m^2).

[BE] 1030.2.1 Minimum dimensions. The minimum net clear opening height dimension shall be 24 inches (610 mm). The minimum net clear opening width dimension shall be 20 inches (508 mm). The net clear opening dimensions shall be the result of normal operation of the opening.

[BE] 1030.3 Maximum height from floor. *Emergency escape and rescue openings* shall have the bottom of the clear opening not greater than 44 inches (1118 mm) measured from the floor.

[BE] 1030.4 Window wells. An *emergency escape and rescue opening* with a finished sill height below the adjacent ground level shall be provided with a window well in accordance with Sections 1030.4.1 and 1030.4.2.

[BE] 1030.4.1 Minimum size. The minimum horizontal area of the window well shall be 9 square feet (0.84 m^2),

INTERNATIONAL CODE COUNCIL®
Copyright © 2019 ICC & NYSDOS. ALL RIGHTS RESERVED. Accessed by Lauren Gualdino (lgualdino@briarcliffmanor.org), (-) Order Number #100880972 on May 08, 2020 07:05 AM (PDT) pursuant to License Agreement with ICC & NYSDOS. No further reproduction, no

100880972

with a minimum dimension of 36 inches (914 mm). The area of the window well shall allow the *emergency escape and rescue opening* to be fully opened.

[BE] 1030.4.2 Ladders or steps. Window wells with a vertical depth of more than 44 inches (1118 mm) shall be equipped with an *approved* permanently affixed ladder or steps. Ladders or rungs shall have an inside width of not less than 12 inches (305 mm), shall project not less than 3 inches (76 mm) from the wall and shall be spaced not more than 18 inches (457 mm) on center (o.c.) vertically for the full height of the window well. The ladder or steps shall not encroach into the required dimensions of the window well by more than 6 inches (152 mm). The ladder or steps shall not be obstructed by the *emergency escape and rescue opening*. Ladders or steps required by this section are exempt from the *stairway* requirements of Section 1011.

[BE] 1030.5 Bars, grilles, covers and screens. Bars, grilles, covers, screens or similar devices are permitted to be placed over *emergency escape and rescue openings,* bulkhead enclosures, or window wells that serve such openings, provided that the minimum net clear opening size complies with Sections 1030.1.1 through 1030.4.2 and such devices shall be releasable or removable from the inside without the use of a key, tool or force greater than that which is required for normal operation of the escape and rescue opening. Where such bars, grilles, covers, screens or similar devices are installed in existing buildings, they shall not reduce the net clear opening of the *emergency escape and rescue opening* and *smoke alarms* shall be installed in accordance with Section 907.2.10 regardless of the valuation of the *alteration*.

SECTION 1031
MAINTENANCE OF THE MEANS OF EGRESS

1031.1 General. The *means of egress* for buildings or portions thereof shall be maintained in accordance with this section.

1031.2 Reliability. Required *exit accesses*, *exits* and *exit discharges* shall be continuously maintained free from obstructions or impediments to full instant use in the case of fire or other emergency where the building area served by the *means of egress* is occupied. An *exit* or *exit passageway* shall not be used for any purpose that interferes with a *means of egress*.

1031.2.1 Security devices and egress locks. Security devices affecting *means of egress* shall be subject to approval of the *fire code official*. Security devices and locking arrangements in the *means of egress* that restrict, control, or delay egress shall be installed and maintained as required by this chapter.

[BE] 1031.2.2 Locking arrangements in educational occupancies. In Group E occupancies, Group B educational occupancies and Group I-4 occupancies, egress doors from classrooms, offices and other occupied rooms shall be permitted to be provided with locking arrangements designed to keep intruders from entering the room where all of the following conditions are met:

1. The door shall be capable of being unlocked from outside the room with a key or other approved means.
2. The door shall be openable from within the room in accordance with Section 1010.1.9.
3. Modifications shall not be made to existing listed panic hardware, fire door hardware or door closers.
4. Modifications to fire door assemblies shall be in accordance with NFPA 80.

1031.3 Obstructions. A *means of egress* shall be free from obstructions that would prevent its use, including the accumulation of snow and ice.

1031.3.1 Group I-2. In Group I-2, the required clear width for *aisles*, *corridors* and *ramps* that are part of the required *means of egress* shall comply with Section 1020.2. The facility shall have a plan to maintain the required clear width during emergency situations.

Exception: In areas required for bed movement, equipment shall be permitted in the required width where all of the following provisions are met:

1. The equipment is low hazard and wheeled.
2. The equipment does not reduce the effective clear width for the *means of egress* to less than 5 feet (1525 mm).
3. The equipment is limited to:
   - 3.1. Equipment and carts in use.
   - 3.2. Medical emergency equipment.
   - 3.3. Infection control carts.
   - 3.4. Patient lift and transportation equipment.
4. Medical emergency equipment and patient lift and transportation equipment, when not in use, are required to be located on one side of the corridor.
5. The equipment is limited in number to not more than one per patient sleeping room or patient care room within each smoke compartment.

[BE] 1031.4 Exit signs. Exit signs shall be installed and maintained in accordance with the building code that was in effect at the time of construction and the applicable provisions in Section 1104. Decorations, furnishings, equipment or adjacent signage that impairs the visibility of exit signs, creates confusion or prevents identification of the *exit* shall not be allowed.

1031.5 Nonexit identification. Where a door is adjacent to, constructed similar to and can be confused with a *means of egress* door, that door shall be identified with an *approved* sign that identifies the room name or use of the room.

1031.6 Finishes, furnishings and decorations. Means of egress doors shall be maintained in such a manner as to be distinguishable from the adjacent construction and finishes such that the doors are easily recognizable as doors. Furnishings, decorations or other objects shall not be placed so as to obstruct *exits*, access thereto, egress therefrom, or visibility thereof. Hangings and draperies shall not be placed over exit doors or otherwise be located to conceal or obstruct an *exit*.

INTERNATIONAL CODE COUNCIL®
Copyright © 2019 ICC & NYSDOS. ALL RIGHTS RESERVED. Accessed by Lauren Gualdino (lgualdino@briarcliffmanor.org), (-) Order Number #100880972 on May 08, 2020 07:05 AM (PDT) pursuant to License Agreement with ICC & NYSDOS. No further reproduction, no

100880972

Mirrors shall not be placed on *exit* doors. Mirrors shall not be placed in or adjacent to any *exit* in such a manner as to confuse the direction of exit.

1031.7 Emergency escape and rescue openings. Required *emergency escape and rescue openings* shall be maintained in accordance with the that was code in effect at the time of construction, and both of the following:

1. Required *emergency escape and rescue openings* shall be operational from the inside of the room without the use of keys or tools.
2. Bars, grilles, grates or similar devices are allowed to be placed over *emergency escape and rescue openings* provided that the minimum net clear opening size complies with the code that was in effect at the time of construction and such devices shall be releasable or removable from the inside without the use of a key, tool or force greater than that which is required for normal operation of the *emergency escape and rescue opening*.

1031.8 Inspection, testing and maintenance. Two-way communication systems for *areas of refuge* shall be inspected and tested on a yearly basis to verify that all components are operational. Where required, the tests shall be conducted in the presence of the *fire code official*. Records of inspection, testing and maintenance shall be maintained.

1031.9 Floor identification signs. The floor identification signs required by Sections 1023.9 and 1104.24 shall be maintained in an *approved* manner.

1031.10 Emergency lighting equipment inspection and testing. Emergency lighting shall be maintained in accordance with Section 1008 and shall be inspected and tested in accordance with Sections 1031.10.1 and 1031.10.2.

1031.10.1 Activation test. Emergency lighting equipment shall be tested monthly for a duration of not less than 30 seconds. The test shall be performed manually or by an automated self-testing and self-diagnostic routine. Where testing is performed by self-testing and self-diagnostics, a visual inspection of the emergency lighting equipment shall be conducted monthly to identify any equipment displaying a trouble indicator or that has become damaged or otherwise impaired.

1031.10.2 Power test. Battery-powered emergency lighting equipment shall be tested annually by operating the equipment on battery power for not less than 90 minutes.

[NY] 1031.11 Capacity of means of egress. The occupant load of buildings or portions of buildings shall not exceed the capacity of the means of egress from the buildings or portions thereof. Occupant load shall be calculated as provided in Section 1004.1. Capacity of the means of egress shall be calculated as provided in Sections 1005 and 1006.

[NY] 1031.12 Posting of occupant load. Every room or space that is an assembly occupancy shall have the occupant load of the room or space posted in a conspicuous place, near the main exit or exit access doorway from the room or space. Posted signs shall be of an approved, legible, permanent design and shall be maintained by the owner or authorized agent.

[NY] 1031.13 Overcrowding. It shall be prohibited for buildings, or portions thereof, to be overcrowded. The building owner or authorized agent shall be responsible to ensure buildings, or portions thereof, are not overcrowded.

INTERNATIONAL CODE COUNCIL®
Copyright © 2019 ICC & NYSDOS. ALL RIGHTS RESERVED. Accessed by Lauren Gualdino (lgualdino@briarcliffmanor.org), (-) Order Number #100880972 on May 08, 2020 07:05 AM (PDT) pursuant to License Agreement with ICC & NYSDOS. No further reproduction, no

100880972

INTERNATIONAL CODE COUNCIL®
Copyright © 2019 ICC & NYSDOS. ALL RIGHTS RESERVED. Accessed by Lauren Gualdino (lgualdino@briarcliffmanor.org), (-) Order Number #100880972 on May 08, 2020 07:05 AM (PDT) pursuant to License Agreement with ICC & NYSDOS. No further reproduction, no

100880972

CHAPTER 11
CONSTRUCTION REQUIREMENTS FOR EXISTING BUILDINGS

SECTION 1101
GENERAL

[NY] 1101.1 Scope. The provisions of this chapter shall apply to existing buildings and structures constructed prior to the adoption of this code. Sections 1103, 1105, and 1106 shall apply to existing buildings and structures undergoing construction and only to the extent as required by other sections of this code, the *Existing Building Code of New York State*, or the *Building Code of New York State*. Means of egress in existing buildings and structures shall comply with the minimum egress requirements of Section 1104.

SECTION 1102
DEFINITIONS

1102.1 Definitions. The following terms are defined in Chapter 2:

DUTCH DOOR.

EXISTING.

SECTION 1103
FIRE SAFETY REQUIREMENTS FOR EXISTING BUILDINGS

1103.1 Required construction. Existing buildings shall comply with not less than the minimum provisions specified in Table 1103.1 and as further enumerated in Sections 1103.2 through 1103.10.

The provisions of this chapter shall not be construed to allow the elimination of *fire protection systems* or a reduction in the level of fire safety provided in buildings constructed in accordance with previously adopted codes.

Exceptions:

1. Where a change in fire-resistance rating has been approved in accordance with Section 501.2 or 802.6 of the *Existing Building Code of New York State.*
2. Group U occupancies.

[NY] 1103.2 Reserved.

1103.3 Existing elevators. In other than Group R-3, existing elevators, escalators and moving walks shall comply with the requirements of Sections 1103.3.1 and 1103.3.2.

1103.3.1 Elevators, escalators and moving walks. Existing elevators, escalators and moving walks in Group I-2, Condition 2 occupancies and serving ambulatory care facilities shall comply with ASME A17.3.

1103.3.2 Elevator emergency operation. Existing elevators with a travel distance of 25 feet (7620 mm) or more above or below the main floor or other level of a building and intended to serve the needs of emergency personnel for fire-fighting or rescue purposes shall be provided with emergency operation in accordance with ASME A17.3.

Exceptions:

1. Buildings without occupied floors located more than 55 feet (16 764 mm) above or 25 feet (7620 mm) below the lowest level of fire department vehicle access where protected at the elevator shaft openings with additional fire doors in accordance with Section 716 of the *Building Code of New York State* and where all of the following conditions are met:
   1.1. The doors shall be provided with vision panels of approved fire protection rated glazing so located as to furnish clear vision of the approach to the elevator. Such glazing shall not exceed 100 square inches (0.065 m^2) in area.
   1.2. The doors shall be held open but be automatic-closing by activation of a fire alarm initiating device installed in accordance with the requirements of NFPA 72 as for Phase I Emergency Recall Operation, and shall be located at each floor served by the elevator; in the associated elevator machine room, control space, or control room; and in the elevator hoistway, where sprinklers are located in those hoistways.
   1.3. The doors, when closed, shall have signs visible from the approach area stating: WHEN THESE DOORS ARE CLOSED OR IN FIRE EMERGENCY, DO NOT USE ELEVATOR. USE EXIT STAIRWAYS.
2. Buildings without occupied floors located more than 55 feet (16 764 mm) above or 25 feet (7620 mm) below the lowest level of fire department vehicle access where provided with *automatic sprinkler systems* installed in accordance with Section 903.3.1.1 or 903.3.1.2.
3. Freight elevators in buildings provided with both *automatic sprinkler systems* installed in accordance with Section 903.3.1.1 or 903.3.1.2 and not less than one ASME 17.3-compliant elevator serving the same floors.

Elimination of previously installed Phase I emergency recall or Phase II emergency in-car systems shall not be permitted.

1103.4 Vertical openings. Interior vertical openings, including but not limited to *stairways*, elevator hoistways, service and utility shafts, that connect two or more stories of a building, shall be enclosed or protected as specified in Sections 1103.4.1 through 1103.4.10.

INTERNATIONAL CODE COUNCIL®
Copyright © 2019 ICC & NYSDOS. ALL RIGHTS RESERVED. Accessed by Lauren Gualdino (lgualdino@briarcliffmanor.org), (-) Order Number #100880972 on May 08, 2020 07:05 AM (PDT) pursuant to License Agreement with ICC & NYSDOS. No further reproduction, no

100880972

1103.4.1 Group I-2 and I-3 occupancies. In Group I-2 and I-3 occupancies, interior vertical openings connecting two or more stories shall be protected with 1-hour fire-resistance-rated construction.

Exceptions:

1. In Group I-2, unenclosed vertical openings not exceeding two connected stories and not concealed within the building construction shall be permitted as follows:
   - 1.1. The unenclosed vertical openings shall be separated from other unenclosed vertical openings serving other floors by a smoke barrier.
   - 1.2. The unenclosed vertical openings shall be separated from corridors by smoke partitions.
   - 1.3. The unenclosed vertical openings shall be separated from other fire or smoke compartments on the same floors by a smoke barrier.
   - 1.4. On other than the lowest level, the unenclosed vertical openings shall not serve as a required means of egress.
2. In Group I-2, atriums connecting three or more stories shall not require 1-hour fire-resistance-rated construction where the building is equipped throughout with an *automatic sprinkler system* installed in accordance with Section 903.3, and all of the following conditions are met:
   - 2.1. For other than existing approved atriums with a smoke control system, where the atrium was constructed and is maintained in accordance with the code in effect at the time the atrium was created, the atrium shall have a smoke control system that is in compliance with Section 909.
   - 2.2. Glass walls forming a smoke partition or a glass-block wall assembly shall be permitted where in compliance with Condition 2.2.1 or 2.2.2.
     - 2.2.1. Glass walls forming a smoke partition shall be permitted where all of the following conditions are met:
       - 2.2.1.1. Automatic sprinklers are provided along both sides of the separation wall and doors, or on the room side only if there is not a walkway or occupied space on the atrium side.
       - 2.2.1.2. The sprinklers shall be not more than 12

TABLE 1103.1
OCCUPANCY AND USE REQUIREMENTS[a]

SECTION	USE				OCCUPANCY CLASSIFICATION																	
	High-rise	Atrium or covered mall	Under-ground building	Tire storage	A	B	E	F	H-1	H-2	H-3	H-4	H-5	I-1	I-2	I-3	I-4	M	R-1	R-2	R-3	R-4	S
1103.2	R	R	R	—	R	R	R	R	R	R	R	R	R	R	R	R	R	R	R	R	—	—	R
1103.3	R	—	R	—	R	R	R	R	R	R	R	R	R	R	R	R	R	R	R	R	—	—	R
1103.4.1	R	—	R	—	—	—	—	—	—	—	—	—	—	—	R	R	—	—	—	—	—	—	—
1103.4.2	R	—	R	—	R	R	R	R	R	R	R	R	R	R	—	—	R	R	R	R	—	—	R
1103.4.3	R	—	R	—	R	R	R	R	R	R	R	R	R	R	—	—	R	R	R	R	—	—	R
1103.4.4	—	R	—	—	—	—	—	—	—	—	—	—	—	—	—	—	—	—	—	—	—	—	—
1103.4.5	—	—	—	—	—	R	—	—	—	—	—	—	—	—	—	—	—	R	—	—	—	—	—
1103.4.6	—	—	—	—	R	—	R	R	R	R	R	R	R	R	R	R	R	—	R	R	R	R	R
1103.4.7	—	—	—	—	R	—	R	R	R	R	R	R	R	R	R	R	R	—	R	R	R	R	R
1103.4.8	R	—	R	—	R	R	R	R	R	R	R	R	R	R	—	—	R	R	R	R	R	R	R
1103.4.9	R	—	—	—	—	—	—	—	—	—	—	—	—	—	R	—	—	—	—	—	—	—	—
1103.4.10	—	—	—	—	R	R	R	R	R	R	R	R	R	R	R	R	R	R	R	R	R	R	R

(continued)

INTERNATIONAL CODE COUNCIL®
Copyright © 2019 ICC & NYSDOS. ALL RIGHTS RESERVED. Accessed by Lauren Gualdino (lgualdino@briarcliffmanor.org), (-) Order Number #100880972 on May 08, 2020 07:05 AM (PDT) pursuant to License Agreement with ICC & NYSDOS. No further reproduction, no

100880972

TABLE 1103.1
OCCUPANCY AND USE REQUIREMENTS[a]—continued

SECTION	USE				OCCUPANCY CLASSIFICATION																	
	High-rise	Atrium or covered mall	Under-ground building	Tire storage	A	B	E	F	H-1	H-2	H-3	H-4	H-5	I-1	I-2	I-3	I-4	M	R-1	R-2	R-3	R-4	S
1103.5.1	—	—	—	—	R[c]	—	—	—	—	—	—	—	—	—	—	—	—	—	—	—	—	—	—
1103.5.2	—	—	—	—	—	—	—	—	—	—	—	—	—	—	R	—	—	—	—	—	—	—	—
1103.5.3	—	—	—	—	—	—	—	—	—	—	—	—	—	—	R[b]	—	—	—	—	—	—	—	—
1103.5.4	—	—	—	—	R	R	R	R	R	R	R	R	R	R	R	R	R	R	R	R	R	R	R
1103.6.1	R	—	R	—	R	R	R	R	R	R	R	R	R	R	R	R	R	R	R	R	—	—	R
1103.6.2	R	—	R	—	R	R	R	R	R	R	R	R	R	R	R	R	R	R	R	R	—	—	R
1103.7.1	—	—	—	—	—	—	R	—	—	—	—	—	—	—	—	—	—	—	—	—	—	—	—
1103.7.2	—	—	—	—	—	—	—	—	—	—	—	—	—	R	—	—	—	—	—	—	—	—	—
1103.7.3	—	—	—	—	—	—	—	—	—	—	—	—	—	—	R	—	—	—	—	—	—	—	—
1103.7.4	—	—	—	—	—	—	—	—	—	—	—	—	—	—	—	R	—	—	—	—	—	—	—
1103.7.5	—	—	—	—	—	—	—	—	—	—	—	—	—	—	—	—	—	—	R	—	—	—	—
1103.7.6	—	—	—	—	—	—	—	—	—	—	—	—	—	—	—	—	—	—	—	R	—	—	—
1103.7.7	—	—	—	—	—	—	—	—	—	—	—	—	—	—	—	—	—	—	—	—	—	R	—
1103.8	—	—	—	—	—	—	—	—	—	—	—	—	—	R	—	—	—	—	R	R	R	R	—
1103.9	R	—	—	—	—	—	—	—	—	—	—	—	—	R	R	—	R	—	R	R	R	R	—
1103.10	—	—	—	—	—	—	—	—	—	—	—	—	—	R	R	—	—	—	—	—	—	—	—
1104	R	R	R	—	R	R	R	R	R	R	R	R	R	R	R	R	R	R	R	R	R	R	R
1105	—	—	—	—	—	—	—	—	—	—	—	—	—	—	R	—	—	—	—	—	—	—	—
1106	—	—	—	R	—	—	—	—	—	—	—	—	—	—	—	—	—	—	—	—	—	—	—

R = The building is required to comply.

a. Existing buildings shall comply with the sections identified as "Required" (R) based on occupancy classification or use, or both, whichever is applicable.

b. Only applies to Group I-2, Condition 2 occupancies as established by the adopting ordinance or legislation of the jurisdiction.

c. Only applies to Group A-2 occupancies where alcoholic beverages are consumed.

inches (305 mm) away from the face of the glass and at intervals along the glass of not greater than 72 inches (1829 mm).

2.2.1.3. Windows in the glass wall shall be non-operating type.

2.2.1.4. The glass wall and windows shall be installed in a gasketed frame in a manner that the framing system deflects without breaking (loading) the glass before the sprinkler system operates.

2.2.1.5. The sprinkler system shall be designed so that the entire surface of the glass is wet upon activation of the sprinkler system without obstruction.

2.2.2. A fire barrier is not required where a glass-block wall assembly complying with Section 2110 of the *Building Code of New York State* and having a $^{3}/_{4}$-hour fire protection rating is provided.

INTERNATIONAL CODE COUNCIL®
Copyright © 2019 ICC & NYSDOS. ALL RIGHTS RESERVED. Accessed by Lauren Gualdino (lgualdino@briarcliffmanor.org), (-) Order Number #100880972 on May 08, 2020 07:05 AM (PDT) pursuant to License Agreement with ICC & NYSDOS. No further reproduction, no

100880972

2.3. Where doors are provided in the glass wall, they shall be either self-closing or automatic-closing and shall be constructed to resist the passage of smoke.

3. In Group I-3 occupancies, exit *stairways* or ramps and *exit access stairways* or *ramps* constructed in accordance with Section 408 in the *Building Code of New York State*.

1103.4.2 Three to five stories. In other than Group I-2 and I-3 occupancies, interior vertical openings connecting three to five stories shall be protected by either 1-hour fire-resistance-rated construction or an *automatic sprinkler system* shall be installed throughout the building in accordance with Section 903.3.1.1 or 903.3.1.2.

Exceptions:

1. Vertical opening protection is not required for Group R-3 occupancies.
2. Vertical opening protection is not required for open parking garages.
3. Vertical opening protection for escalators shall be in accordance with Section 1103.4.5, 1103.4.6 or 1103.4.7.
4. *Exit access stairways* and *ramps* shall be in accordance with Section 1103.4.8.

1103.4.3 More than five stories. In other than Group I-2 and I-3 occupancies, interior vertical openings connecting more than five stories shall be protected by 1-hour fire-resistance-rated construction.

Exceptions:

1. Vertical opening protection is not required for Group R-3 occupancies.
2. Vertical opening protection is not required for open parking garages.
3. Vertical opening protection for escalators shall be in accordance with Section 1103.4.5, 1103.4.6 or 1103.4.7.
4. *Exit access stairways* and *ramps* shall be in accordance with Section 1103.4.8.

1103.4.4 Atriums and covered malls. In other than Group I-2 and I-3 occupancies, interior vertical openings in a covered mall building or a building with an atrium shall be protected by either 1-hour fire-resistance-rated construction or an *automatic sprinkler system* shall be installed throughout the building in accordance with Section 903.3.1.1 or 903.3.1.2.

Exceptions:

1. Vertical opening protection is not required for Group R-3 occupancies.
2. Vertical opening protection is not required for open parking garages.
3. *Exit access stairways* and *ramps* shall be in accordance with Section 1103.4.8.

1103.4.5 Escalators in Group B and M occupancies. In Group B and M occupancies, escalators creating vertical openings connecting any number of stories shall be protected by either 1-hour fire-resistance-rated construction or an *automatic sprinkler system* in accordance with Section 903.3.1.1 installed throughout the building, with a draft curtain and closely spaced sprinklers around the escalator opening.

1103.4.6 Escalators connecting four or fewer stories. In other than Group B and M occupancies, escalators creating vertical openings connecting four or fewer stories shall be protected by either 1-hour fire-resistance-rated construction or an *automatic sprinkler system* in accordance with Section 903.3.1.1 or 903.3.1.2 shall be installed throughout the building, and a draft curtain with closely spaced sprinklers shall be installed around the escalator opening.

1103.4.7 Escalators connecting more than four stories. In other than Group B and M occupancies, escalators creating vertical openings connecting five or more stories shall be protected by 1-hour fire-resistance-rated construction.

1103.4.8 Occupancies other than Groups I-2 and I-3. In other than Group I-2 and I-3 occupancies, floor openings containing *exit access stairways* or *ramps* that do not comply with one of the conditions listed in this section shall be protected by 1-hour fire-resistance-rated construction.

1. *Exit access stairways* and *ramps* that serve, or atmospherically communicate between, only two stories. Such interconnected stories shall not be open to other stories.
2. In Group R-1, R-2 or R-3 occupancies, *exit access stairways* and *ramps* connecting four stories or less serving and contained within an individual *dwelling unit* or *sleeping unit* or live/work unit.
3. *Exit access stairways* and *ramps* in buildings equipped throughout with an *automatic sprinkler system* in accordance with Section 903.3.1.1, where the area of the vertical opening between stories does not exceed twice the horizontal projected area of the *stairway* or *ramp*, and the opening is protected by a draft curtain and closely spaced sprinklers in accordance with NFPA 13. In other than Group B and M occupancies, this provision is limited to openings that do not connect more than four stories.
4. *Exit access stairways* and *ramps* within an atrium complying with the provisions of Section 404 of the *Building Code of New York State*.
5. *Exit access stairways* and *ramps* in open parking garages that serve only the parking garage.
6. *Exit access stairways* and *ramps* serving open-air seating complying with the exit access travel distance requirements of Section 1029.7 of the *Building Code of New York State*.
7. *Exit access stairways* and *ramps* serving the balcony, gallery or press box and the main assembly floor in occupancies such as theaters, places of religious worship, auditoriums and sports facilities.

INTERNATIONAL CODE COUNCIL®
Copyright © 2019 ICC & NYSDOS. ALL RIGHTS RESERVED. Accessed by Lauren Gualdino (lgualdino@briarcliffmanor.org), (-) Order Number #100880972 on May 08, 2020 07:05 AM (PDT) pursuant to License Agreement with ICC & NYSDOS. No further reproduction, no

100880972

1103.4.9 Waste and linen chutes. In Group I-2 occupancies, existing waste and linen chutes shall comply with Sections 1103.4.9.1 through 1103.4.9.5.

1103.4.9.1 Enclosure. Chutes shall be enclosed with 1-hour fire-resistance-rated construction. Opening protectives shall be in accordance with Section 716 of the *Building Code of New York State* and have a fire protection rating of not less than1 hour.

1103.4.9.2 Chute intakes. Chute intakes shall comply with Section 1103.4.9.2.1 or 1103.4.9.2.2.

1103.4.9.2.1 Chute intake direct from corridor. Where intake to chutes is direct from a *corridor*, the intake opening shall be equipped with a chute-intake door in accordance with Section 716 of the *Building Code of New York State* and having a fire protection rating of not less than 1 hour.

1103.4.9.2.2 Chute intake via a chute-intake room. Where the intake to chutes is accessed through a chute-intake room, the room shall be enclosed with 1-hour fire-resistance-rated construction. Opening protectives for the intake room shall be in accordance with Section 716 of the *Building Code of New York State* and have a fire protection rating of not less than $^{3}/_{4}$ hour. Opening protectives for the chute enclosure shall be in accordance with Section 1103.4.9.1.

1103.4.9.3 Automatic sprinkler system. Chutes shall be equipped with an *approved automatic sprinkler system* in accordance with Section 903.2.11.2.

1103.4.9.4 Chute discharge rooms. Chutes shall terminate in a dedicated chute discharge room. Such rooms shall be separated from the remainder of the building by not less than 1-hour fire-resistance-rated construction. Opening protectives shall be in accordance with Section 716 of the *Building Code of New York State* and have a fire protection rating of not less than 1 hour.

1103.4.9.5 Chute discharge protection. Chute discharges shall be equipped with a self-closing or automatic-closing opening protective in accordance with Section 716 of the *Building Code of New York State* and having a fire protection rating of not less than 1 hour.

1103.4.10 Flue-fed incinerators. Existing flue-fed incinerator rooms and associated flue shafts shall be protected with 1-hour fire-resistance-rated construction and shall not have other vertical openings connected with the space other than the associated flue. Opening protectives shall be in accordance with Section 716 of the *Building Code of New York State* and have a fire protection rating of not less than 1 hour.

1103.5 Sprinkler systems. An *automatic sprinkler system* shall be provided in existing buildings in accordance with Sections 1103.5.1 through 1103.5.4.

1103.5.1 Group A-2. Where alcoholic beverages are consumed in a Group A-2 occupancy having an occupant load of 300 or more, the fire area containing the Group A-2 occupancy shall be equipped with an *automatic sprinkler system* in accordance with Section 903.3.1.1.

1103.5.2 Group I-2. In Group I-2, an *automatic sprinkler system* shall be provided in accordance with Section 1105.9.

1103.5.3 Group I-2, Condition 2. In addition to the requirements of Section 1103.5.2, existing buildings of Group I-2, Condition 2 occupancy shall be equipped throughout with an *approved automatic sprinkler system* in accordance with Section 903.3.1.1. The *automatic sprinkler system* shall be installed as established by the adopting ordinance. **[DATE BY WHICH SPRINKLER SYSTEM MUST BE INSTALLED].**

1103.5.4 Pyroxylin plastics. An *automatic sprinkler system* shall be provided throughout existing buildings where cellulose nitrate film or pyroxylin plastics are manufactured, stored or handled in quantities exceeding 100 pounds (45 kg). Vaults located within buildings for the storage of raw pyroxylin shall be protected with an *approved automatic sprinkler system* capable of discharging 1.66 gallons per minute per square foot (68 L/min/m^2) over the area of the vault.

1103.6 Standpipes. Existing structures shall be equipped with standpipes installed in accordance with Section 905 where required in Sections 1103.6.1 and 1103.6.2. The *fire code official* is authorized to approve the installation of manual standpipe systems to achieve compliance with this section where the responding fire department is capable of providing the required hose flow at the highest standpipe outlet.

1103.6.1 Existing multiple-story buildings. Existing buildings with occupied floors located more than 50 feet (15 240 mm) above the lowest level of fire department access or more than 50 feet (15 240 mm) below the highest level of fire department access shall be equipped with standpipes.

1103.6.2 Existing helistops and heliports. Existing buildings with a rooftop helistop or heliport located more than 30 feet (9144 mm) above the lowest level of fire department access to the roof level on which the helistop or heliport is located shall be equipped with standpipes in accordance with Section 2007.5.

1103.7 Fire alarm systems. An *approved* fire alarm system shall be installed in existing buildings and structures in accordance with Sections 1103.7.1 through 1103.7.6 and provide occupant notification in accordance with Section 907.5 unless other requirements are provided by other sections of this code.

Exception: Occupancies with an existing, previously *approved* fire alarm system.

1103.7.1 Group E. A fire alarm system shall be installed in existing Group E occupancies in accordance with Section 907.2.3.

Exceptions:

1. A manual fire alarm system is not required in a building with a maximum area of 1,000 square feet (93 m^2) that contains a single classroom and is located not closer than 50 feet (15 240 mm) from another building.

INTERNATIONAL CODE COUNCIL®
Copyright © 2019 ICC & NYSDOS. ALL RIGHTS RESERVED. Accessed by Lauren Gualdino (lgualdino@briarcliffmanor.org), (-) Order Number #100880972 on May 08, 2020 07:05 AM (PDT) pursuant to License Agreement with ICC & NYSDOS. No further reproduction, no

100880972

2. A manual fire alarm system is not required in Group E occupancies with an *occupant load* less than 50.

1103.7.2 Group I-1. An automatic fire alarm system shall be installed in existing Group I-1 facilities in accordance with Section 907.2.6.1.

Exception: Where each sleeping room has a *means of egress* door opening directly to an exterior egress balcony that leads directly to the *exits* in accordance with Section 1021, and the building is not more than three stories in height.

1103.7.3 Group I-2. In Group I-2, an automatic fire alarm system shall be installed in accordance with Section 1105.10.

1103.7.4 Group I-3. An automatic and manual fire alarm system shall be installed in existing Group I-3 occupancies in accordance with Section 907.2.6.3.

1103.7.5 Group R-1. A fire alarm system and smoke alarms shall be installed in existing Group R-1 occupancies in accordance with Sections 1103.7.5.1 through 1103.7.5.2.1.

1103.7.5.1 Group R-1 hotel and motel manual fire alarm system. A manual fire alarm system that activates the occupant notification system in accordance with Section 907.5 shall be installed in existing Group R-1 hotels and motels more than three stories or with more than 20 *sleeping units.*

Exceptions:

1. Buildings less than two stories in height where all *sleeping units,* attics and crawl spaces are separated by 1-hour fire-resistance-rated construction and each *sleeping unit* has direct access to a *public way, egress court* or yard.
2. Manual fire alarm boxes are not required throughout the building where the following conditions are met:
   2.1. The building is equipped throughout with an *automatic sprinkler system* installed in accordance with Section 903.3.1.1 or 903.3.1.2.
   2.2. The notification appliances will activate upon sprinkler water flow.
   2.3. Not less than one manual fire alarm box is installed at an *approved* location.

1103.7.5.1.1 Group R-1 hotel and motel automatic smoke detection system. An automatic smoke detection system that activates the occupant notification system in accordance with Section 907.5 shall be installed in existing Group R-1 hotels and motels throughout all interior *corridors* serving sleeping rooms not equipped with an *approved,* supervised *automatic sprinkler system* installed in accordance with Section 903.

Exception: An automatic smoke detection system is not required in buildings that do not have interior *corridors* serving *sleeping units* and where each sleeping unit has a *means of egress* door opening directly to an *exit* or to an exterior *exit access* that leads directly to an *exit.*

1103.7.5.2 Group R-1 boarding and rooming houses manual fire alarm system. A manual fire alarm system that activates the occupant notification system in accordance with Section 907.5 shall be installed in existing Group R-1 boarding and rooming houses.

Exception: Buildings less than two stories in height where all *sleeping units,* attics and crawl spaces are separated by 1-hour fire-resistance-rated construction and each *sleeping unit* has direct access to a *public way, egress court* or yard.

1103.7.5.2.1 Group R-1 boarding and rooming houses automatic smoke detection system. An automatic smoke detection system that activates the occupant notification system in accordance with Section 907.5 shall be installed in existing Group R-1 boarding and rooming houses throughout all interior *corridors* serving *sleeping units* not equipped with an *approved,* supervised sprinkler system installed in accordance with Section 903.

Exception: Buildings equipped with single-station smoke alarms meeting or exceeding the requirements of Section 907.2.10.1 and where the fire alarm system includes not less than one manual fire alarm box per floor arranged to initiate the alarm.

1103.7.6 Group R-2. A manual fire alarm system that activates the occupant notification system in accordance with Section 907.5 shall be installed in existing Group R-2 occupancies more than three stories in height or with more than 16 *dwelling* or *sleeping units.*

Exceptions:

1. Where each living unit is separated from other contiguous living units by *fire barriers* having a *fire-resistance rating* of not less than $^{3}/_{4}$ hour, and where each living unit has either its own independent *exit* or its own independent stairway or ramp discharging at grade.
2. A separate fire alarm system is not required in buildings that are equipped throughout with an *approved* supervised *automatic sprinkler system* installed in accordance with Section 903.3.1.1 or 903.3.1.2 and having a local alarm to notify all occupants.
3. A fire alarm system is not required in buildings that do not have interior *corridors* serving *dwelling units* and are protected by an *approved automatic sprinkler system* installed in accordance with Section 903.3.1.1 or 903.3.1.2, provided that *dwelling units* either have a *means of egress* door opening directly to an exterior *exit access* that leads directly to the *exits* or are served by open-ended *corridors* designed in accordance with Section 1027.6, Exception 3.

INTERNATIONAL CODE COUNCIL®
Copyright © 2019 ICC & NYSDOS. ALL RIGHTS RESERVED. Accessed by Lauren Gualdino (lgualdino@briarcliffmanor.org), (-) Order Number #100880972 on May 08, 2020 07:05 AM (PDT) pursuant to License Agreement with ICC & NYSDOS. No further reproduction, no

100880972

4. A fire alarm system is not required in buildings that do not have interior *corridors* serving *dwelling units*, do not exceed three stories in height and comply with both of the following:
    4.1. Each *dwelling unit* is separated from other contiguous *dwelling units* by *fire barriers* having a *fire-resistance rating* of not less than $^3/_4$ hour.
    4.2. Each *dwelling unit* is provided with smoke alarms complying with the requirements of Section 907.2.10.

1103.8 Single- and multiple-station smoke alarms. Single- and multiple-station smoke alarms shall be installed in existing Group I-1 and R occupancies in accordance with Sections 1103.8.1 through 1103.8.3.

1103.8.1 Where required. Existing Group I-1 and R occupancies shall be provided with single-station smoke alarms in accordance with Section 907.2.10. Interconnection and power sources shall be in accordance with Sections 1103.8.2 and 1103.8.3, respectively.

Exceptions:

1. Where the code that was in effect at the time of construction required smoke alarms and smoke alarms complying with those requirements are already provided.
2. Where smoke alarms have been installed in occupancies and dwellings that were not required to have them at the time of construction, additional smoke alarms shall not be required provided that the existing smoke alarms comply with requirements that were in effect at the time of installation.
3. Where smoke detectors connected to a fire alarm system have been installed as a substitute for smoke alarms.

1103.8.2 Interconnection. Where more than one smoke alarm is required to be installed within an individual *dwelling* or *sleeping unit*, the smoke alarms shall be interconnected in such a manner that the activation of one alarm will activate all of the alarms in the individual unit. Physical interconnection of smoke alarms shall not be required where listed wireless alarms are installed and all alarms sound upon activation of one alarm. The alarm shall be clearly audible in all bedrooms over background noise levels with all intervening doors closed.

Exceptions:

1. Interconnection is not required in buildings that are not undergoing *alterations*, repairs or construction of any kind.
2. Smoke alarms in existing areas are not required to be interconnected where *alterations* or repairs do not result in the removal of interior wall or ceiling finishes exposing the structure, unless there is an attic, crawl space or *basement* available that could provide access for interconnection without the removal of interior finishes.

1103.8.3 Power source. Single-station smoke alarms shall receive their primary power from the building wiring provided that such wiring is served from a commercial source and shall be equipped with a battery backup. Smoke alarms with integral strobes that are not equipped with battery backup shall be connected to an emergency electrical system. Smoke alarms shall emit a signal when the batteries are low. Wiring shall be permanent and without a disconnecting switch other than as required for overcurrent protection.

Exceptions:

1. Smoke alarms are permitted to be solely battery operated in existing buildings where construction is not taking place.
2. Smoke alarms are permitted to be solely battery operated in buildings that are not served from a commercial power source.
3. Smoke alarms are permitted to be solely battery operated in existing areas of buildings undergoing *alterations* or repairs that do not result in the removal of interior walls or ceiling finishes exposing the structure, unless there is an attic, crawl space or *basement* available that could provide access for building wiring without the removal of interior finishes.

[NY] 1103.9 Carbon monoxide alarms. *Carbon monoxide alarms* shall be provided as required by the *Existing Building Code of New York State*.

Exceptions:

1. *Carbon monoxide alarms* are permitted to be solely battery operated where the code that was in effect at the time of construction did not require carbon monoxide detectors to be provided.
2. *Carbon monoxide alarms* are permitted to be solely battery operated in dwelling units that are not served from a commercial power source.
3. A carbon monoxide detection system in accordance with Section 915.5 shall be an acceptable alternative to *carbon monoxide alarms*.

1103.10 Medical gases. Medical gases stored and transferred in health-care-related facilities shall be in accordance with Chapter 53.

SECTION 1104
MEANS OF EGRESS FOR EXISTING BUILDINGS

[NY] 1104.1 General. Means of egress in existing buildings shall comply with Sections 1104.2 through 1104.25.

Exceptions:

1. Detached one- and two-family dwellings and multiple single-family dwellings (townhouses) not more than three stories above grade plane in height with a separate means of egress and their accessory structures shall comply with the *Residential Code of New York State*.

INTERNATIONAL CODE COUNCIL®
Copyright © 2019 ICC & NYSDOS. ALL RIGHTS RESERVED. Accessed by Lauren Gualdino (lgualdino@briarcliffmanor.org), (-) Order Number #100880972 on May 08, 2020 07:05 AM (PDT) pursuant to License Agreement with ICC & NYSDOS. No further reproduction, no

100880972

2. Buildings constructed in accordance with the Uniform Fire Prevention and Building Code, the State Building Construction Code or other building code in force before the effective date of this code shall be maintained in accordance with such code.
3. Buildings rehabilitated in conformance with the *Existing Building Code of New York State* shall have the means of egress maintained in compliance with such code.

1104.2 Elevators, escalators and moving walks. Elevators, escalators and moving walks shall not be used as a component of a required *means of egress.*

Exceptions:

1. Elevators used as an *accessible means of egress* where allowed by Section 1009.4.
2. Previously *approved* elevators, escalators and moving walks in existing buildings.

1104.3 Exit sign illumination. Exit signs shall be internally or externally illuminated. The face of an exit sign illuminated from an external source shall have an intensity of not less than 5 foot-candles (54 lux). Internally illuminated signs shall provide equivalent luminance and be *listed* for the purpose.

Exception: *Approved* self-luminous signs that provide evenly illuminated letters shall have a minimum luminance of 0.06 foot-lamberts (0.21 cd/m^2).

1104.4 Power source. Where emergency illumination is required in Section 1104.5, exit signs shall be visible under emergency illumination conditions.

Exception: *Approved* signs that provide continuous illumination independent of external power sources are not required to be connected to an emergency electrical system.

1104.5 Illumination emergency power. Where *means of egress* illumination is provided, the power supply for *means of egress* illumination shall normally be provided by the premises' electrical supply. In the event of power supply failure, illumination shall be automatically provided from an emergency system for the following occupancies where such occupancies require two or more *means of egress*:

1. Group A having 50 or more occupants.

   Exception: Assembly occupancies used exclusively as a place of worship and having an *occupant load* of less than 300.

2. Group B buildings three or more stories in height, buildings with 100 or more occupants above or below a *level of exit discharge* serving the occupants or buildings with 1,000 or more total occupants.
3. Group E in interior *exit access* and *exit stairways* and *ramps*, *corridors*, windowless areas with student occupancy, shops and laboratories.
4. Group F having more than 100 occupants.

   Exception: Buildings used only during daylight hours and that are provided with windows for natural light in accordance with the *Building Code of New York State.*

5. Group I.
6. Group M.

   Exception: Buildings less than 3,000 square feet (279 m^2) in gross sales area on one story only, excluding mezzanines.

7. Group R-1.

   Exception: Where each *sleeping unit* has direct access to the outside of the building at grade.

8. Group R-2.

   Exception: Where each *dwelling unit* or *sleeping unit* has direct access to the outside of the building at grade.

1104.5.1 Emergency power duration and installation. Emergency power for *means of egress* illumination shall be provided in accordance with Section 1203. In other than Group I-2, emergency power shall be provided for not less than 60 minutes for systems requiring emergency power.

1104.6 Guards. Guards complying with this section shall be provided at the open sides of *means of egress* that are more than 30 inches (762 mm) above the floor or grade below.

1104.6.1 Height of guards. Guards shall form a protective barrier not less than 42 inches (1067 mm) high.

Exceptions:

1. Existing guards on the open side of exit access and exit *stairways* and *ramps* shall be not less than 30 inches (760 mm) high.
2. Existing *guards* within *dwelling units* shall be not less than 36 inches (910 mm) high.
3. Existing *guards* in assembly seating areas.

1104.6.2 Opening limitations. Open *guards* shall have balusters or ornamental patterns such that a 6-inch-diameter (152 mm) sphere cannot pass through any opening up to a height of 34 inches (864 mm).

Exceptions:

1. At elevated walking surfaces for access to, and use of, electrical, mechanical or plumbing systems or equipment, guards shall have balusters or be of solid materials such that a sphere with a diameter of 21 inches (533 mm) cannot pass through any opening.
2. In occupancies in Group I-3, F, H or S, the clear distance between intermediate rails measured at right angles to the rails shall not exceed 21 inches (533 mm).
3. *Approved* existing open guards.

1104.7 Size of doors. The required capacity of each door opening shall be sufficient for the *occupant load* thereof and shall provide a minimum clear opening width of 28 inches (711 mm). Where this section requires a minimum clear opening width of 28 inches (711 mm) and a door opening includes two door leaves without a mullion, one leaf shall provide a clear opening width of 28 inches (711 mm). The

INTERNATIONAL CODE COUNCIL®
Copyright © 2019 ICC & NYSDOS. ALL RIGHTS RESERVED. Accessed by Lauren Gualdino (lgualdino@briarcliffmanor.org), (-) Order Number #100880972 on May 08, 2020 07:05 AM (PDT) pursuant to License Agreement with ICC & NYSDOS. No further reproduction, no

100880972

minimum clear opening height of doorways shall be 80 inches (2032 mm).

Exceptions:

1. The minimum and maximum width shall not apply to door openings that are not part of the required *means of egress* in occupancies in Group R-2 and R-3 units that are not required to be an Accessible Type A unit or Type B unit.
2. Door openings to storage closets less than 10 square feet (0.93 m^2) in area shall not be limited by the minimum clear opening width.
3. The width of door leaves in revolving doors that comply with Section 1010.1.4.1 shall not be limited.
4. The maximum width of door leaves in power-operated doors that comply with Section 1010.1.4.2 shall not be limited.
5. Door openings within a *dwelling unit* shall have a minimum clear opening height of 78 inches (1981 mm).
6. In dwelling and sleeping units that are not required to be Accessible units, Type A units or Type B units, exterior door openings, other than the required *exit* door, shall have a minimum clear opening height of 76 inches (1930 mm).
7. *Exit access* doors serving a room not larger than 70 square feet (6.5 m^2) shall have a minimum door leaf width of 24 inches (610 mm).
8. The minimum clear opening width shall not apply to doors for nonaccessible showers or sauna compartments.
9. The minimum clear opening width shall not apply to the doors for nonaccessible toilet stalls.
10. Door closers and door stops shall be permitted to be 78 inches (1980 mm) minimum above the floor.

1104.7.1 Group I-2. In Group I-2 occupancies, means of egress doors where used for the movement of beds shall provide a minimum clear opening width of $41^1/_2$ inches (1054 mm).

Doors serving as means of egress doors and not used for movement of beds shall provide a minimum clear opening width of 32 inches (813 mm).

1104.7.2 Ambulatory care. In ambulatory care facilities, doors serving as means of egress from patient treatment rooms shall provide a minimum clear opening width of 32 inches (813 mm).

1104.8 Opening force for doors. The opening force for interior side-swinging doors without closers shall not exceed a 5-pound (22 N) force. The opening forces do not apply to the force required to retract latch bolts or disengage other devices that hold the door in a closed position. For other side-swinging, sliding and folding doors, the door latch shall release when subjected to a force of not more than 15 pounds (66 N). The door shall be set in motion when subjected to a force not exceeding 30 pounds (133 N). The door shall swing to a full-open position when subjected to a force of not more than 50 pounds (222 N). Forces shall be applied to the latch side.

1104.9 Revolving doors. Revolving doors shall comply with the following:

1. A revolving door shall not be located within 10 feet (3048 mm) of the foot or top of *stairways* or escalators. A dispersal area shall be provided between the *stairways* or escalators and the revolving doors.
2. The revolutions per minute for a revolving door shall not exceed those shown in Table 1104.9.
3. Each revolving door shall have a conforming side-hinged swinging door in the same wall as the revolving door and within 10 feet (3048 mm).

Exceptions:

1. A revolving door is permitted to be used without an adjacent swinging door for street-floor elevator lobbies provided that a stairway, escalator or door from other parts of the building does not discharge through the lobby and the lobby does not have any occupancy or use other than as a means of travel between elevators and a street.
2. Existing revolving doors where the number of revolving doors does not exceed the number of swinging doors within 20 feet (6096 mm).

TABLE 1104.9
REVOLVING DOOR SPEEDS

INSIDE DIAMETER (feet-inches)	POWER-DRIVEN-TYPE SPEED CONTROL (rpm)	MANUAL-TYPE SPEED CONTROL (rpm)
6-6	11	12
7-0	10	11
7-6	9	11
8-0	9	10
8-6	8	9
9-0	8	9
9-6	7	8
10-0	7	8

For SI: 1 inch = 25.4 mm, 1 foot = 304.8 mm.

1104.9.1 Egress component. A revolving door used as a component of a *means of egress* shall comply with Section 1104.9 and all of the following conditions:

1. Revolving doors shall not be given credit for more than 50 percent of the required egress capacity.
2. Each revolving door shall be credited with not more than a 50-person capacity.
3. Revolving doors shall be capable of being collapsed when a force of not more than 130 pounds (578 N) is applied within 3 inches (76 mm) of the outer edge of a wing.

1104.10 Stair dimensions for existing stairways. Existing *stairways* in buildings shall be permitted to remain if the rise does not exceed $8^1/_4$ inches (210 mm) and the run is not less than 9 inches (229 mm). Existing *stairways* can be rebuilt.

Exception: Other *stairways approved* by the *fire code official*.

1104.10.1 Dimensions for replacement stairways. The replacement of an existing *stairway* in a structure shall not

INTERNATIONAL CODE COUNCIL®
Copyright © 2019 ICC & NYSDOS. ALL RIGHTS RESERVED. Accessed by Lauren Gualdino (lgualdino@briarcliffmanor.org), (-) Order Number #100880972 on May 08, 2020 07:05 AM (PDT) pursuant to License Agreement with ICC & NYSDOS. No further reproduction, no

100880972

be required to comply with the new *stairway* requirements of Section 1011 where the existing space and construction will not allow a reduction in pitch or slope.

1104.11 Winders. Existing winders shall be allowed to remain in use if they have a minimum tread depth of 6 inches (152 mm) and a minimum tread depth of 9 inches (229 mm) at a point 12 inches (305 mm) from the narrowest edge.

1104.12 Curved stairways. Existing curved *stairways* shall be allowed to continue in use, provided that the minimum depth of tread is 10 inches (254 mm) and the smallest radius shall be not less than twice the width of the *stairway*.

1104.13 Stairway handrails. *Stairways* shall have *handrails* on at least one side. *Handrails* shall be located so that all portions of the *stairway* width required for egress capacity are within 44 inches (1118 mm) of a *handrail*.

Exception: *Aisle stairs* provided with a center *handrail* are not required to have additional *handrails*.

1104.13.1 Height. *Handrail* height, measured above *stair* tread nosings, shall be uniform, not less than 30 inches (762 mm) and not more than 42 inches (1067 mm).

1104.14 Slope of ramps. *Ramp* runs utilized as part of a *means of egress* shall have a running slope not steeper than one unit vertical in 10 units horizontal (10-percent slope). The slope of other *ramps* shall not be steeper than one unit vertical in eight units horizontal (12.5-percent slope).

1104.15 Width of ramps. Existing *ramps* are permitted to have a minimum width of 30 inches (762 mm) but not less than the width required for the number of occupants served as determined by Section 1005.1. In Group I-2, *ramps* serving as a *means of egress* and used for the movement of patients in beds shall comply with Section 1105.6.3.

[BE] 1104.16 Fire escape stairways. Fire escape *stairways* shall comply with Sections 1104.16.1 through 1104.16.7.

[BE] 1104.16.1 Existing means of egress. Fire escape *stairways* shall be permitted in existing buildings but shall not constitute more than 50 percent of the required *exit* capacity.

[BE] 1104.16.2 Opening protectives. Doors and windows within 10 feet (3048 mm) of fire escape *stairways* shall be protected with $^3/_4$-hour opening protectives.

Exception: Opening protectives shall not be required in buildings equipped throughout with an approved *automatic sprinkler system*.

[BE] 1104.16.3 Dimensions. Fire escape *stairways* shall meet the minimum width, capacity, riser height and tread depth as specified in Section 1104.10.

[BE] 1104.16.4 Access. Access to a fire escape *stairway* from a *corridor* shall not be through an intervening room. Access to a fire escape *stairway* shall be from a door or window meeting the criteria of Section 1005.1. Access to a fire escape *stairway* shall be directly to a balcony, landing or platform. These shall not be higher than the floor or window sill level and not lower than 8 inches (203 mm) below the floor level or 18 inches (457 mm) below the window sill.

[BE] 1104.16.5 Materials and strength. Components of fire escape *stairways* shall be constructed of noncombustible materials. Fire escape *stairways* and balconies shall support the dead load plus a live load of not less than 100 pounds per square foot (4.78 kN/m^2). Fire escape *stairways* and balconies shall be provided with a top and intermediate *handrail* on each side.

[BE] 1104.16.5.1 Examination. Fire escape *stairways* and balconies shall be examined for structural adequacy and safety in accordance with Section 1104.16.5 by a registered design professional or others acceptable to the *fire code official* every 5 years, or as required by the *fire code official*. An inspection report shall be submitted to the *fire code official* after such examination.

[BE] 1104.16.6 Termination. The lowest balcony shall not be more than 18 feet (5486 mm) from the ground. Fire escape *stairways* shall extend to the ground or be provided with counterbalanced *stairs* reaching the ground.

Exception: For fire escape *stairways* serving 10 or fewer occupants, an *approved* fire escape ladder is allowed to serve as the termination.

[BE] 1104.16.7 Maintenance. Fire escape *stairways* shall be kept clear and unobstructed at all times and shall be maintained in good working order.

1104.17 Corridor construction. Corridors serving an occupant load greater than 30 and the openings therein shall provide an effective barrier to resist the movement of smoke. Transoms, louvers, doors and other openings shall be kept closed or be self-closing. In Group I-2, corridors in areas housing patient sleeping or care rooms shall comply with Section 1105.5.

Exceptions:

1. *Corridors* in occupancies other than in Group H, that are equipped throughout with an *approved automatic sprinkler system*.
2. *Corridors* in occupancies in Group E where each room utilized for instruction or assembly has not less than one-half of the required *means of egress* doors opening directly to the exterior of the building at ground level.
3. *Corridors* that are in accordance with the *Building Code of New York State*.

1104.17.1 Corridor openings. Openings in *corridor* walls shall comply with the requirements of the *Building Code of New York State*.

Exceptions:

1. Where 20-minute fire door assemblies are required, solid wood doors not less than 1.75 inches (44 mm) thick or insulated steel doors are allowed.
2. Openings protected with fixed wire glass set in steel frames.
3. Openings covered with 0.5-inch (12.7 mm) gypsum wallboard or 0.75-inch (19.1 mm) plywood on the room side.

INTERNATIONAL CODE COUNCIL®
Copyright © 2019 ICC & NYSDOS. ALL RIGHTS RESERVED. Accessed by Lauren Gualdino (lgualdino@briarcliffmanor.org), (-) Order Number #100880972 on May 08, 2020 07:05 AM (PDT) pursuant to License Agreement with ICC & NYSDOS. No further reproduction, no

100880972

4. Opening protection is not required where the building is equipped throughout with an *approved automatic sprinkler system*.

1104.18 Dead ends. Where more than one exit or exit access doorway is required, the *exit access* shall be arranged such that dead ends do not exceed the limits specified in Table 1104.18.

Exceptions:

1. A dead-end *corridor* shall not be limited in length where the length of the dead-end *corridor* is less than 2.5 times the least width of the dead-end *corridor*.
2. In existing buildings, existing dead-end corridors shall be permitted to comply with lengths established in Section 805.6 of the *Existing Building Code of New York State*. Any newly constructed dead-end corridors within an existing building shall be limited to the lengths allowed by the *Building Code of New York State*.

1104.19 Exit access travel distance. *Exits* shall be located so that the maximum length of exit access travel, measured from the most remote point to an *approved exit* along the natural and unobstructed path of egress travel, does not exceed the distances given in Table 1104.18.

1104.20 Common path of egress travel. The *common path of egress travel* shall not exceed the distances given in Table 1104.18.

1104.21 Stairway discharge identification. An interior *exit stairway* or *ramp* that continues below its *level of exit discharge* shall be arranged and marked to make the direction of egress to a *public way* readily identifiable.

Exception: *Stairways* that continue one-half story beyond their *levels of exit discharge* need not be provided with barriers where the *exit discharge* is obvious.

1104.22 Exterior stairway protection. *Exterior exit stairways* shall be separated from the interior of the building as required in Section 1027.6. Openings shall be limited to those necessary for egress from normally occupied spaces.

Exceptions:

1. Separation from the interior of the building is not required for buildings that are two stories or less above grade where the *level of exit discharge* serving such occupancies is the first story above grade.
2. Separation from the interior of the building is not required where the exterior *stairway* is served by an exterior balcony that connects two remote exterior *stairways* or other *approved exits*, with a perimeter that is not less than 50 percent open. To be considered open, the opening shall be not less than 50 percent of the height of the enclosing wall, with the top of the opening not less than 7 feet (2134 mm) above the top of the balcony.
3. Separation from the interior of the building is not required for an exterior *stairway* located in a building or structure that is permitted to have unenclosed interior *stairways* in accordance with Section 1023.
4. Separation from the open-ended corridors of the building is not required for exterior *stairways* provided that:
   4.1. The open-ended *corridors* comply with Section 1020.
   4.2. The open-ended *corridors* are connected on each end to an *exterior exit stairway* complying with Section 1027.
   4.3. At any location in an open-ended *corridor* where a change of direction exceeding 45 degrees (0.79 rad) occurs, a clear opening of not less than 35 square feet (3 m^2) or an exterior *stairway* shall be provided. Where clear openings are provided, they shall be located so as to minimize the accumulation of smoke or toxic gases.

1104.23 Minimum aisle width. The minimum clear width of *aisles* shall comply with the following:

1. Forty-two inches (1067 mm) for stepped aisles having seating on each side.

   Exception: Thirty-six inches (914 mm) where the stepped *aisle* serves fewer than 50 seats.
2. Thirty-six inches (914 mm) for stepped *aisles* having seating on only one side.

   Exceptions:

   1. Thirty inches (760 mm) for catchment areas serving not more than 60 seats.
   2. Twenty-three inches (584 mm) between a stepped aisle *handrail* and seating where a stepped *aisle* does not serve more than five rows on one side.
3. Twenty inches (508 mm) between a stepped *aisle handrail* or *guard* and seating where the *aisle* is subdivided by a mid-aisle *handrail*.
4. Forty-two inches (1067 mm) for level or ramped *aisles* having seating on both sides.

   Exceptions:

   1. Thirty-six inches (914 mm) where the *aisle* serves fewer than 50 seats.
   2. Thirty inches (760 mm) where the aisle serves fewer than 15 seats and does not serve as part of an accessible route.
5. Thirty-six inches (914 mm) for level or ramped *aisles* having seating on only one side.

   Exception: Thirty inches (760 mm) for catchment areas serving not more than 60 seats and not serving as part of an accessible route.
6. In Group I-2, where *aisles* are used for movement of patients in beds, *aisles* shall comply with Section 1105.6.7.

1104.24 Stairway floor number signs. Existing *stairways* shall be marked in accordance with Section 1023.9.

1104.25 Egress path markings. Existing high-rise buildings of Group A, B, E, I, M and R-1 occupancies shall be provided

INTERNATIONAL CODE COUNCIL®
Copyright © 2019 ICC & NYSDOS. ALL RIGHTS RESERVED. Accessed by Lauren Gualdino (lgualdino@briarcliffmanor.org), (-) Order Number #100880972 on May 08, 2020 07:05 AM (PDT) pursuant to License Agreement with ICC & NYSDOS. No further reproduction, no

100880972

TABLE 1104.18
COMMON PATH, DEAD-END AND TRAVEL DISTANCE LIMITS (by occupancy)

OCCUPANCY	COMMON PATH OF EGRESS TRAVEL LIMIT		DEAD-END LIMIT		EGRESS ACCESS TRAVEL DISTANCE LIMIT	
	Unsprinklered (feet)	Sprinklered (feet)	Unsprinklered (feet)	Sprinklered (feet)	Unsprinklered (feet)	Sprinklered (feet)
Group A	75	20/75	20[a]	20[a]	200	250
Group B[h]	75[g]	100	50	50	200	300
Group E	75	75	20	50	200	250
Group F-1, S-1	75[g]	100	50	50	200[c]	250[c, h]
Group F-2, S-2	75[g]	100	50	50	300	400
Group H-1	25	25	0	0	75	75
Group H-2	50	100	0	0	75	100
Group H-3	50	100	20	20	100	150
Group H-4	75	75	20	20	150	175
Group H-5	75	75	20	50	150	200
Group I-1	75	75	20	50	200	250
Group I-2	Notes d, e, f	Notes d, e, f	Note e	Note e	150	200[b]
Group I-3	100	100	NR	NR	150[b]	200[b]
Group I-4	NR	NR	20	20	200	250
Group M	75	100	50	50	200	250[i]
Group R-1	75	75	50	50	200	250
Group R-2	75	125	50	50	200	250
Group R-3	NR	NR	NR	NR	NR	NR
Group R-4	NR	NR	NR	NR	NR	NR
Group U	75	100	20	50	300	400

NR = No Requirements.

For SI: 1 foot = 304.8 mm, 1 square foot = 0.0929 m^2.

a. See Section 1029.9.5 for dead-end aisles in Group A occupancies.

b. This dimension is for the total travel distance, assuming incremental portions have fully utilized their allowable maximums. For travel distance within the room, and from the room exit access door to the exit, see the appropriate occupancy chapter.

c. See Section 412.7 of the *Building Code of New York State* for special requirements on spacing of doors in aircraft hangars.

d. Separation of exit access doors within a care recipient sleeping room, or any suite that includes care recipient sleeping rooms, shall comply with Section 1105.5.6.

e. In smoke compartments containing care recipient sleeping rooms and treatment rooms, dead-end corridors shall comply with Section 1105.6.5.

f. In Group I-2, Condition 2, care recipient sleeping rooms or any suite that includes care recipient sleeping rooms shall comply with Section 1105.7.

g. Where a tenant space in Group B, S and U occupancies has an occupant load of not more than 30, the length of a common path of egress travel shall not be more than 100 feet.

h. Where the building, or portion of the building, is limited to one story and the height from the finished floor to the bottom of the ceiling or roof slab or deck is 24 feet or more, the exit access travel distance is increased to 400 feet.

i. For covered and open malls, the exit access travel distance is increased to 400 feet.

with luminous *egress* path markings in accordance with Section 1025.

Exception: Open, unenclosed stairwells in historic buildings designated as historic under a state or local historic preservation program.

SECTION 1105
CONSTRUCTION REQUIREMENTS FOR EXISTING GROUP I-2

1105.1 General. Existing Group I-2 shall meet all of the following requirements:

1. The minimum fire safety requirements in Section 1103.
2. The minimum mean of egress requirements in Section 1104.
3. The additional egress and construction requirements in Section 1105.

Where the provisions of this chapter conflict with the construction requirements that applied at the time of construction, the most restrictive provision shall apply.

1105.2 Applicability. The provisions of Sections 1105.3 through 1105.8, 1105.10 and 1105.11 shall apply to the existing Group I-2 fire area.

1105.3 Construction. Group I-2, Condition 2 shall not be located on a floor level higher than the floor level limitation in Table 1105.3 based on the type of construction.

1105.4 Incidental uses in existing Group I-2. Incidental uses associated with and located within existing single-occupancy or mixed-occupancy Group I-2 buildings and that generally pose a greater level of risk to such occupancies shall

INTERNATIONAL CODE COUNCIL®
Copyright © 2019 ICC & NYSDOS. ALL RIGHTS RESERVED. Accessed by Lauren Gualdino (lgualdino@briarcliffmanor.org), (-) Order Number #100880972 on May 08, 2020 07:05 AM (PDT) pursuant to License Agreement with ICC & NYSDOS. No further reproduction, no

100880972

comply with the provisions of Sections 1105.4.1 through 1105.4.3.2.1. Incidental uses in Group I-2 occupancies are limited to those listed in Table 1105.4.

1105.4.1 Occupancy classification. Incidental uses shall not be individually classified in accordance with Section 302.1 of the *Building Code of New York State*. Incidental uses shall be included in the building occupancies within which they are located.

1105.4.2 Area limitations. Incidental uses shall not occupy more than 10 percent of the building area of the story in which they are located.

1105.4.3 Separation and protection. The incidental uses listed in Table 1105.4 shall be separated from the remainder of the building or equipped with an *automatic sprinkler system*, or both, in accordance with the provisions of that table.

1105.4.3.1 Separation. Where Table 1105.4 specifies a fire-resistance-rated separation, the incidental uses shall be separated from the remainder of the building in accordance with Section 509.4.1 of the *Building Code of New York State*.

1105.4.3.2 Protection. Where Table 1105.4 permits an *automatic sprinkler system* without a fire-resistance-rated separation, the incidental uses shall be separated from the remainder of the building by construction capable of resisting the passage of smoke in accordance with Section 509.4.2 of the *Building Code of New York State*.

1105.4.3.2.1 Protection limitation. Except as otherwise specified in Table 1105.4 for certain incidental uses, where an *automatic sprinkler system* is provided in accordance with Table 1105.4, only the space occupied by the incidental use need be equipped with such a system.

1105.5 Corridor construction. In Group I-2, in areas housing patient sleeping or care rooms, *corridor* walls and the opening protectives therein shall provide a barrier designed to resist the passage of smoke in accordance with Sections 1105.5.1 through 1105.5.7.

1105.5.1 Materials. The walls shall be of materials permitted by the building type of construction.

1105.5.2 Fire-resistance rating. Unless required elsewhere in this code, corridor walls are not required to have a fire-resistance rating. Corridor walls that were installed as fire-resistance-rated assemblies in accordance with the applicable codes under which the building was constructed, remodeled or altered shall be maintained unless modified in accordance with the *Existing Building Code of New York State*.

1105.5.3 Corridor wall continuity. *Corridor* walls shall extend from the top of the foundation or floor below to one of the following:

1. The underside of the floor or roof sheathing, deck or slab above.
2. The underside of a ceiling above where the ceiling membrane is constructed to limit the passage of smoke.
3. The underside of a lay-in ceiling system where the ceiling system is constructed to limit the passage of smoke and where the ceiling tiles weigh not less than 1 pound per square foot (4.88 kg/m^2) of tile.

1105.5.4 Openings in corridor walls. Openings in *corridor* walls shall provide protection in accordance with Sections 1105.5.4.1 through 1105.5.4.3.

1105.5.4.1 Windows. Windows in *corridor* walls shall be sealed to limit the passage of smoke, or the window shall be automatic-closing upon detection of smoke, or the window opening shall be protected by an automatic closing device that closes upon detection of smoke.

Exception: In smoke compartments not containing patient sleeping rooms, pass-through windows or similar openings shall be permitted in accordance with Section 1105.5.4.3.

1105.5.4.2 Doors. Doors in *corridor* walls shall comply with Sections 1105.5.4.2.1 through 1105.5.4.2.3.

1105.5.4.2.1 Louvers. Doors in *corridor* walls shall not include louvers, transfer grills or similar openings.

Exception: Doors shall be permitted to have louvers, transfer grills or similar openings at toilet rooms or bathrooms; storage rooms that do not contain storage of flammable or combustible material; and storage rooms that are not required to be separated as incidental uses.

1105.5.4.2.2 Corridor doors. Doors in *corridor* walls shall limit the transfer of smoke by complying with the following:

1. Doors shall be constructed of not less than $1^3/_4$ inch-thick (44 mm) solid bonded-core wood or capable of resisting fire not less than $^1/_3$ hour.

   Exception: Corridor doors in buildings equipped throughout with an automatic sprinkler system.
2. Frames for side-hinged swinging doors shall have stops on the sides and top to limit transfer of smoke.
3. Where provided, vision panels in doors shall be a fixed glass window assembly installed to limit the passage of smoke. Existing wired glass panels with steel frames shall be permitted to remain in place.
4. Door undercuts shall not exceed 1 inch (25 mm).
5. Doors shall be positive latching with devices that resist not less than 5 pounds (22.2 N). Roller latches are prohibited.
6. Mail slots or similar openings shall be permitted in accordance with Section 1105.5.4.3.

1105.5.4.2.3 Dutch doors. Where provided, dutch doors shall comply with Section 1105.5.4.2.2. In addition, dutch doors shall be equipped with latching devices on either the top or bottom leaf to allow leaves to latch together. The space between the

INTERNATIONAL CODE COUNCIL®
Copyright © 2019 ICC & NYSDOS. ALL RIGHTS RESERVED. Accessed by Lauren Gualdino (lgualdino@briarcliffmanor.org), (-) Order Number #100880972 on May 08, 2020 07:05 AM (PDT) pursuant to License Agreement with ICC & NYSDOS. No further reproduction, no

100880972

TABLE 1105.3
FLOOR LEVEL LIMITATIONS FOR GROUP I-2, CONDITION 2

CONSTRUCTION TYPE	AUTOMATIC SPRINKLER SYSTEM	ALLOWABLE FLOOR LEVEL[a]			
		1	2	3	4 or more
IA	Note b	P	P	P	P
	Note c	P	P	P	P
IB	Note b	P	P	P	P
	Note c	P	P	P	P
IIA	Note b	P	P	P	NP
	Note c	P	NP	NP	NP
IIB	Note b	P	P	NP	NP
	Note c	NP	NP	NP	NP
IIIA	Note b	P	P	NP	NP
	Note c	P	NP	NP	NP
IIIB	Note b	P	NP	NP	NP
	Note c	NP	NP	NP	NP
IV	Note b	P	P	NP	NP
	Note c	NP	NP	NP	NP
VA	Note b	P	P	NP	NP
	Note c	NP	NP	NP	NP
VB	Note b	P	NP	NP	NP
	Note c	NP	NP	NP	NP

P = Permitted; NP = Not Permitted.

a. Floor level shall be counted based on the number of stories above grade.

b. The building is equipped throughout with an automatic sprinkler system in accordance with Section 903.3.1.1.

c. The building is equipped with an automatic sprinkler system in accordance with Section 1105.8.

leaves shall be protected with devices such as astragals to limit the passage of smoke.

1105.5.4.2.4 Self- or automatic-closing doors. Where self- or automatic-closing doors are required, closers shall be maintained in operational condition.

1105.5.4.3 Openings in corridor walls and doors. In other than smoke compartments containing patient sleeping rooms, mail slots, pass-through windows or similar openings shall not be required to be protected where the aggregate area of the openings between the *corridor* and a room are not greater than 80 square inches (51 613 mm^2) and are located with the top edge of any opening not higher than 48 inches above the floor.

1105.5.5 Penetrations. The space around penetrating items shall be filled with an *approved* material to limit the passage of smoke.

1105.5.6 Joints. Joints shall be filled with an *approved* material to limit the passage of smoke.

1105.5.7 Ducts and air transfer openings. The space around a duct penetrating a smoke partition shall be filled with an *approved* material to limit the passage of smoke. Air transfer openings in smoke partitions shall be provided with a smoke damper complying with Section 717.3.2.2 of the *Building Code of New York State*.

Exception: Where the installation of a smoke damper will interfere with the operation of a required smoke control system in accordance with Section 909, approved alternative protection shall be utilized.

1105.6 Means of egress. In addition to the *means of egress* requirements in Section 1104, Group I-2 facilities shall meet the *means of egress* requirements in Sections 1105.6.1 through 1105.6.7.

1105.6.1 Size of door. Means of egress doors used for the movement of patients in beds shall provide a minimum clear width of $41^1/_2$ inches (1054 mm). The height of the door opening shall be not less than 80 inches (2032 mm).

Exceptions:

1. Door closers and door stops shall be permitted to be 78 inches (1981 mm) minimum above the floor.
2. In Group I-2, Condition 1, existing means of egress doors used for the movement of patients in beds that provide a minimum clear width of 32 inches (813 mm) shall be permitted to remain.

1105.6.2 Group I-2 occupancies. In Group I-2, where a door serves as an opening protective in a fire barrier,

INTERNATIONAL CODE COUNCIL®
Copyright © 2019 ICC & NYSDOS. ALL RIGHTS RESERVED. Accessed by Lauren Gualdino (lgualdino@briarcliffmanor.org), (-) Order Number #100880972 on May 08, 2020 07:05 AM (PDT) pursuant to License Agreement with ICC & NYSDOS. No further reproduction, no

100880972

[NY] TABLE 1105.4
INCIDENTAL USES IN EXISTING GROUP I-2 OCCUPANCIES

ROOM OR AREA	SEPARATION AND/OR PROTECTION
Furnace room where any piece of equipment is over 400,000 Btu per hour input	1 hour or provide automatic sprinkler system
Rooms with boilers where the largest piece of equipment is over 15 psi and 10 horsepower	1 hour or provide automatic sprinkler system
Refrigerant machinery room	1 hour or provide automatic sprinkler system
Hydrogen fuel gas rooms, not classified as Group H	2 hours
Incinerator rooms	2 hours and provide automatic sprinkler system
Paint shops not classified as Group H	2 hours; or 1 hour and provide automatic sprinkler system
Laboratories and vocational shops, not classified as Group H	1 hour or provide automatic sprinkler system
Laundry rooms over 100 square feet	1 hour or provide automatic sprinkler system
Patient rooms equipped with padded surfaces	1 hour or provide automatic sprinkler system
Physical plant maintenance shops	1 hour or provide automatic sprinkler system
Waste and linen collection rooms with containers with total volume of 10 cubic feet or greater	1 hour or provide automatic sprinkler system
Storage rooms greater than 100 square feet	1 hour or provide automatic sprinkler system
Energy storage systems having an energy capacity greater than the threshold quantity in Table 1206.1 of this code.	2 hours

For SI: 1 square foot = 0.0929 m^2, 1 pound per square inch (psi) = 6.9 kPa, 1 British thermal unit (Btu) per hour = 0.293 watts, 1 horsepower = 746 watts, 1 gallon = 3.785 L.

smoke barrier or fire wall and where the door is equipped with a hold-open device, such door shall automatically close upon any of the following conditions:

1. Actuation of smoke detectors initiating the hold-open device.
2. Activation of the fire alarm system within the zone.
3. Activation of an automatic sprinkler system within the zone.

1105.6.3 Ramps. In areas where *ramps* are used for movement of patients in beds, the clear width of the *ramp* shall be not less than 48 inches (1219 mm).

1105.6.4 Corridor width. In areas where *corridors* are used for movement of patients in beds, the clear width of the *corridor* shall be not less than 48 inches (1219 mm).

1105.6.5 Dead-end corridors. In smoke compartments containing patient sleeping rooms and treatment rooms, dead-end *corridors* shall not exceed 30 feet (9144 mm) unless approved by the *fire code official*.

1105.6.6 Separation of exit access doors. Patient sleeping rooms, or any suite that includes patient sleeping rooms, of more than 1,000 square feet (92.9 m^2) shall have not less than two exit access doors placed a distance apart equal to not less than one-third of the length of the maximum overall diagonal dimension of the patient sleeping room or suite to be served, measured in a straight line between exit access doors.

1105.6.7 Aisles. In areas where *aisles* are used for movement of patients in beds, the clear width of the *aisle* shall be not less than 48 inches (1219 mm).

1105.7 Smoke compartments. Smoke compartments shall be provided in existing Group I-2, Condition 2, in accordance with Sections 1105.7.1 through 1105.7.6.

1105.7.1 Design. Smoke barriers shall be provided to subdivide each story used for patients sleeping with an occupant load of more than 30 patients into not fewer than two smoke compartments.

1105.7.1.1 Refuge areas. Refuge areas shall be provided within each smoke compartment. The size of the refuge area shall accommodate the occupants and care recipients from the adjoining smoke compartment. Where a smoke compartment is adjoined by two or more smoke compartments, the minimum area of the refuge area shall accommodate the largest occupant load of the adjoining compartments.

The size of the refuge area shall provide the following:

1. Not less than 30 net square feet (2.8 m^2) for each care recipient confined to a bed or stretcher.
2. Not less than 15 square feet (1.4 m^2) for each resident in a Group I-2 using mobility assistance devices.
3. Not less than 6 square feet (0.56 m^2) for each occupant not addressed in Items 1 and 2.

Areas of spaces permitted to be included in the calculation of the refuge area are *corridors*, sleeping areas, treatment rooms, lounge or dining areas and other low-hazard areas.

INTERNATIONAL CODE COUNCIL®
Copyright © 2019 ICC & NYSDOS. ALL RIGHTS RESERVED. Accessed by Lauren Gualdino (lgualdino@briarcliffmanor.org), (-) Order Number #100880972 on May 08, 2020 07:05 AM (PDT) pursuant to License Agreement with ICC & NYSDOS. No further reproduction, no

100880972

1105.7.2 Smoke barriers. Smoke barriers shall be constructed in accordance with Section 709 of the *Building Code of New York State*.

Exceptions:

1. Existing smoke barriers are permitted to remain where the existing smoke barrier has a minimum fire-resistance rating of $^1/_2$ hour.
2. Smoke barriers shall be permitted to terminate at an atrium enclosure in accordance with Section 404.6 of the *Building Code of New York State*.

1105.7.3 Opening protectives. Openings in smoke barriers shall be protected in accordance with Section 716 of the *Building Code of New York State*. Opening protectives shall have a minimum fire protection rating of $^1/_3$ hour.

Exceptions:

1. Existing wired glass vision panels in doors shall be permitted to remain.
2. Existing nonlabeled protection plates shall be permitted to remain.

1105.7.4 Penetrations. Penetrations of smoke barriers shall comply with the *Building Code of New York State*.

Exception: Approved existing materials and methods of construction.

1105.7.5 Joints. Joints made in or between smoke barriers shall comply with the *Building Code of New York State*.

Exception: Approved existing materials and methods of construction.

1105.7.6 Duct and air transfer openings. Penetrations in a smoke barrier by duct and air transfer openings shall comply with Section 717 of the *Building Code of New York State*.

Exception: Where existing duct and air transfer openings in smoke barriers exist without smoke dampers, they shall be permitted to remain. Any changes to existing smoke dampers shall be submitted for review and approved in accordance with Section 717 of the *Building Code of New York State*.

1105.8 Group I-2 care suites. Care suites in existing Group I-2, Condition 2 occupancies shall comply with Sections 407.4.4 through 407.4.4.6.2 of the *Building Code of New York State*.

1105.9 Group I-2 automatic sprinkler system. An *automatic sprinkler system* installed in accordance with Section 903.3.1.1 shall be provided throughout the floor containing the Group I-2 fire area. The sprinkler system shall be provided throughout the floor where the Group I-2 occupancy is located, on all floors between the Group I-2 occupancy fire area and the *level of exit discharge,* the *level of exit discharge,* and all floors below the *level of exit discharge*.

Exception: Floors classified as an open parking garage are not required to be sprinklered.

1105.10 Group I-2 automatic fire alarm system. An automatic fire alarm system shall be installed in existing Group I-2 occupancies in accordance with Section 907.2.6.2.

Exception: Manual fire alarm boxes in patient sleeping areas shall not be required at *exits* if located at all nurses' control stations or other constantly attended staff locations, provided such that manual fire alarm boxes are visible, are provided with *ready access,* and travel distances required in Section 907.4.2.1 are not exceeded.

1105.11 Essential electrical systems. Essential electrical systems in Group I-2, Condition 2 occupancies shall be in accordance with Sections 1105.11.1 and 1105.11.2.

1105.11.1 Where required. Where required by NFPA 99, Group I-2, Condition 2 occupancies shall be provided with an essential electrical system in accordance with NFPA 99.

1105.11.2 Installation and duration. In Group I-2, Condition 2 occupancies, the installation and duration of operation of existing essential electrical systems shall be based on a hazard vulnerability analysis conducted in accordance with NFPA 99.

SECTION 1106
REQUIREMENTS FOR OUTDOOR OPERATIONS

1106.1 Tire storage yards. Existing tire storage yards shall be provided with fire apparatus access roads in accordance with Sections 1106.1.1 and 1106.1.2.

1106.1.1 Access to piles. Access roadways shall be within 150 feet (45 720 mm) of any point in the storage yard where storage piles are located not less than 20 feet (6096 mm) from any storage pile.

1106.1.2 Location within piles. Fire apparatus access roads shall be located within all pile clearances identified in Section 3405.4 and within all fire breaks required in Section 3405.5.

INTERNATIONAL CODE COUNCIL®
Copyright © 2019 ICC & NYSDOS. ALL RIGHTS RESERVED. Accessed by Lauren Gualdino (lgualdino@briarcliffmanor.org), (-) Order Number #100880972 on May 08, 2020 07:05 AM (PDT) pursuant to License Agreement with ICC & NYSDOS. No further reproduction, no

100880972

CHAPTER 12
ENERGY SYSTEMS

SECTION 1201
GENERAL

[NY] 1201.1 Scope. The provisions of this chapter shall apply to the installation, operation, maintenance, repair, retrofitting, testing, commissioning and decommissioning of energy systems used for generating or storing energy. It shall not apply to equipment associated with the generation, control, transformation, transmission, or distribution of energy installations that is under the exclusive control of an electric utility or lawfully designated agency.

1201.2 Electrical wiring and equipment. Electrical wiring and equipment used in connection with energy systems shall be installed and maintained in accordance with Chapter 12 and NFPA 70.

[NY] 1201.3 Mixed system installation. Where approved by the *fire code official*, the aggregate nameplate kWh energy capacity of all *energy storage systems* in a fire area shall not exceed the maximum quantity specified for any of the energy systems in this chapter. Where required by the *authority having jurisdiction*, a hazard mitigation analysis shall be provided and *approved* to evaluate any potential adverse interaction between the various *energy storage systems* and technologies.

SECTION 1202
DEFINITIONS

[NY] 1202.1 Definitions. The following terms are defined in Chapter 2:

BATTERY SYSTEM, STATIONARY STORAGE.

BATTERY TYPES.

CAPACITOR ENERGY STORAGE SYSTEM.

CRITICAL CIRCUIT.

EMERGENCY POWER SYSTEM.

ENERGY STORAGE MANAGEMENT SYSTEMS.

ENERGY STORAGE SYSTEM.

ENERGY STORAGE SYSTEM CABINET.

ENERGY STORAGE SYSTEM COMMISSIONING.

ENERGY STORAGE SYSTEM DECOMMISSIONING.

ENERGY STORAGE SYSTEM, ELECTROCHEMICAL.

ENERGY STORAGE SYSTEM, MOBILE.

FUEL CELL POWER SYSTEM, STATIONARY.

STANDBY POWER SYSTEM.

WALK-IN ENERGY STORAGE SYSTEM UNIT.

**

SECTION 1203
EMERGENCY AND STANDBY POWER SYSTEMS

1203.1 General. Emergency power systems and standby power systems required by this code or the *Building Code of New York State* shall comply with Sections 1203.1.1 through 1203.1.9.

1203.1.1 Stationary generators. Stationary emergency and standby power generators required by this code shall be listed in accordance with UL 2200.

1203.1.2 Fuel line piping protection. Fuel lines supplying a generator set inside a high-rise building shall be separated from areas of the building other than the room the generator is located in by an approved method, or an assembly that has a fire-resistance rating of not less than 2 hours. Where the building is protected throughout with an automatic sprinkler system installed in accordance with Section 903.3.1.1, the required fire-resistance rating shall be reduced to 1 hour.

1203.1.3 Installation. Emergency power systems and standby power systems shall be installed in accordance with the *Building Code of New York State*, NFPA 70, NFPA 110 and NFPA 111.

1203.1.4 Load transfer. Emergency power systems shall automatically provide secondary power within 10 seconds after primary power is lost, unless specified otherwise in this code. Standby power systems shall automatically provide secondary power within 60 seconds after primary power is lost, unless specified otherwise in this code.

1203.1.5 Load duration. Emergency power systems and standby power systems shall be designed to provide the required power for a minimum duration of 2 hours without being refueled or recharged, unless specified otherwise in this code.

1203.1.6 Uninterruptable power source. An uninterrupted source of power shall be provided for equipment where required by the manufacturer's instructions, the listing, this code or applicable referenced standards.

1203.1.7 Interchangeability. Emergency power systems shall be an acceptable alternative for installations that require standby power systems.

[NY] 1203.1.8 Group I-2 occupancies. In Group I-2 occupancies located in flood hazard areas established in Section 1612.3 of the *Building Code of New York State*, where new essential electrical systems are installed, and where new essential electrical system generators are installed, the systems and generators shall be located and installed in accordance with ASCE 24. Where connections for hook up of temporary generators are provided, the connections shall be located at or above the elevation required in ASCE 24.

1203.1.9 Maintenance. Existing installations shall be maintained in accordance with the original approval and Section 1203.4.

1203.2 Where required. Emergency and standby power systems shall be provided where required by Sections 1203.2.1 through 1203.2.18.

INTERNATIONAL CODE COUNCIL®
Copyright © 2019 ICC & NYSDOS. ALL RIGHTS RESERVED. Accessed by Lauren Gualdino (lgualdino@briarcliffmanor.org), (-) Order Number #100880972 on May 08, 2020 07:05 AM (PDT) pursuant to License Agreement with ICC & NYSDOS. No further reproduction, no

100880972

1203.2.1 Ambulatory care facilities. Essential electrical systems for ambulatory care facilities shall be in accordance with Section 422.6 of the *Building Code of New York State*.

1203.2.2 Elevators and platform lifts. Standby power shall be provided for elevators and platform lifts as required in Sections 606.2, 1009.4.1, and 1009.5.

1203.2.3 Emergency responder radio coverage systems. Standby power shall be provided for emergency responder radio coverage systems as required in Section 510.4.2.3. The standby power supply shall be capable of operating the emergency responder radio coverage system at 100 percent system operation capacity for a duration of not less than 12 hours.

1203.2.4 Emergency voice/alarm communication systems. Emergency power shall be provided for emergency voice/alarm communication systems as required in Section 907.5.2.2.5. The system shall be capable of powering the required load for a duration of not less than 24 hours, as required in NFPA 72.

[NY] 1203.2.5 Exhaust ventilation. Standy power shall be provided for mechanical exhaust ventilation systems as required in Section 1206.6.1.2.1. The system shall be capable of powering the required load for a duration of not less than 2 hours.

[NY] 1203.2.6 Exit signs. Emergency power shall be provided for exit signs as required in Section 1013.6.3. The system shall be capable of powering the required load for a duration of not less than 90 minutes.

[NY] 1203.2.7 Gas detection systems. Emergency power shall be provided for gas detection systems where required by Sections 1203.2.9 and 1203.2.16. Standby power shall be provided for gas detection systems where required by Section 916.5.

[NY] 1203.2.8 Group I-2 occupancies. Essential electrical systems for Group I-2 occupancies shall be in accordance with Section 407.11 of the *Building Code of New York State*.

[NY] 1203.2.9 Group I-3 occupancies. Power-operated sliding doors or power-operated locks for swinging doors in Group I-3 occupancies shall be operable by a manual release mechanism at the door. Emergency power shall be provided for the doors and locks.

Exceptions:

1. Emergency power is not required in facilities where provisions for remote locking and unlocking of occupied rooms in Occupancy Condition 4 are not required as set forth in the *Building Code of New York State*.
2. Emergency power is not required where remote mechanical operating releases are provided.

[NY] 1203.2.10 Hazardous materials. Emergency and standby power shall be provided in occupancies with hazardous materials as required in the following sections:

1. Sections 5004.7 and 5005.1.5 for hazardous materials.
2. Sections 6004.2.2.8 and 6004.3.4.2 for highly toxic and toxic gases.
3. Section 6204.1.11 for organic peroxides.

[NY] 1203.2.11 High-rise buildings. Standby power and emergency power shall be provided for high-rise buildings as required in Section 403 of the *Building Code of New York State*, and shall be in accordance with Section 1203.

[NY] 1203.2.12 Special purpose horizontal sliding doors. Standby power shall be provided for horizontal sliding doors as required in Section 1010.1.4.3. The standby power supply shall have a capacity to operate not fewer than 50 closing cycles of the door.

[NY] 1203.2.13 Hydrogen fuel gas rooms. Standby power shall be provided for hydrogen fuel gas rooms as required by Section 5808.7.

[NY] 1203.2.14 Laboratory suites. Standby or emergency power shall be provided in accordance with Section 5004.7 where *laboratory suites* are located above the sixth story above grade plane or located in a story below grade plane.

[NY] 1203.2.15 Means of egress illumination. Emergency power shall be provided for *means of egress* illumination in accordance with Sections 1008.3 and 1104.5.1.

[NY] 1203.2.16 Membrane structures. Standby power shall be provided for auxiliary inflation systems in permanent membrane structures in accordance with Section 2702 of the *Building Code of New York State*. Auxiliary inflation systems shall be provided in temporary air-supported and air-inflated membrane structures in accordance with Section 3103.10.4.

[NY] 1203.2.17 Semiconductor fabrication facilities. Emergency power shall be provided for semiconductor fabrication facilities as required in Section 2703.15.

[NY] 1203.2.18 Smoke control systems. Standby power shall be provided for smoke control systems as required in Section 909.11.

[NY] 1203.2.19 Underground buildings. Emergency and standby power shall be provided in underground buildings as required in Section 405 of the *Building Code of New York State* and shall be in accordance with Section 1203.

1203.3 Critical circuits. Required critical circuits shall be protected using one of the following methods:

1. Cables used for survivability of required critical circuits shall be listed in accordance with UL 2196 and shall have a *fire-resistance rating* of not less than 1 hour.
2. Electrical circuit protective systems shall have a *fire-resistance rating* of not less than 1 hour. Electrical circuit protective systems shall be installed in accordance with their listing requirements.
3. Construction having a *fire-resistance rating* of not less than 1 hour.

1203.4 Maintenance. Emergency and standby power systems shall be maintained in accordance with NFPA 110 and NFPA 111 such that the system is capable of supplying service within the time specified for the type and duration required.

1203.4.1 Group I-2. In Group I-2 occupancies, emergency and standby power systems shall be maintained in accordance with NFPA 99.

1203.4.2 Schedule. Inspection, testing and maintenance of emergency and standby power systems shall be in accordance with an approved schedule established upon completion and approval of the system installation.

INTERNATIONAL CODE COUNCIL®
Copyright © 2019 ICC & NYSDOS. ALL RIGHTS RESERVED. Accessed by Lauren Gualdino (lgualdino@briarcliffmanor.org), (-) Order Number #100880972 on May 08, 2020 07:05 AM (PDT) pursuant to License Agreement with ICC & NYSDOS. No further reproduction, no

100880972

1203.4.3 Records. Records of the inspection, testing and maintenance of emergency and standby power systems shall include the date of service, name of the servicing technician, a summary of conditions noted and a detailed description of any conditions requiring correction and what corrective action was taken. Such records shall be maintained.

1203.4.4 Switch maintenance. Emergency and standby power system transfer switches shall be included in the inspection, testing and maintenance schedule required by Section 1203.4.2. Transfer switches shall be maintained free from accumulated dust and dirt. Inspection shall include examination of the transfer switch contacts for evidence of deterioration. When evidence of contact deterioration is detected, the contacts shall be replaced in accordance with the transfer switch manufacturer's instructions.

1203.5 Operational inspection and testing. Emergency power systems, including all appurtenant components, shall be inspected and tested under load in accordance with NFPA 110 and NFPA 111.

Exception: Where the emergency power system is used for standby power or peak load shaving, such use shall be recorded and shall be allowed to be substituted for scheduled testing of the generator set, provided that appropriate records are maintained.

1203.5.1 Group I-2. In Group I-2 occupancies, emergency and standby power systems shall be inspected and tested under load in accordance with NFPA 99.

1203.5.2 Transfer switch test. The test of the transfer switch shall consist of electrically operating the transfer switch from the normal position to the alternate position and then return to the normal position.

1203.6 Supervision of maintenance and testing. Routine maintenance, inspection and operational testing shall be overseen by a properly instructed individual.

**

SECTION 1204
SOLAR PHOTOVOLTAIC POWER SYSTEMS

1204.1 General. Solar photovoltaic systems shall be installed in accordance with Sections 1204.2 through 1204.5, and the *Building Code of New York State* or *Residential Code of New York State*. The electrical portion of solar PV systems shall be installed in accordance with NFPA 70.

1204.2 Access and pathways. Roof access, pathways, and spacing requirements shall be provided in accordance with Sections 1204.2.1 through 1204.3.3. Pathways shall be over areas capable of supporting fire fighters accessing the roof. Pathways shall be located in areas with minimal obstructions, such as vent pipes, conduit or mechanical equipment.

Exceptions:

1. Detached, nonhabitable Group U structures including, but not limited to, detached garages serving Group R-3 buildings, parking shade structures, carports, solar trellises and similar structures.
2. Roof access, pathways and spacing requirements need not be provided where the *fire code official* has determined that rooftop operations will not be employed.

1204.2.1 Solar photovoltaic systems for Group R-3 buildings. Solar photovoltaic systems for Group R-3 buildings shall comply with Sections 1204.2.1.1 through 1204.2.1.3.

Exceptions:

1. These requirements shall not apply to structures designed and constructed in accordance with the *Residential Code of New York State*.
2. These requirements shall not apply to roofs with slopes of 2 units vertical in 12 units horizontal or less.

1204.2.1.1 Pathways to ridge. Not fewer than two 36-inch-wide (914 mm) pathways on separate roof planes, from lowest roof edge to ridge, shall be provided on all buildings. Not fewer than one pathway shall be provided on the street or driveway side of the roof. For each roof plane with a photovoltaic array, not fewer than one 36-inch-wide (914 mm) pathway from lowest roof edge to ridge shall be provided on the same roof plane as the photovoltaic array, on an adjacent roof plane or straddling the same and adjacent roof planes.

1204.2.1.2 Setbacks at ridge. For photovoltaic arrays occupying 33 percent or less of the plan view total roof area, a setback of not less than 18 inches (457 mm) wide is required on both sides of a horizontal ridge. For photovoltaic arrays occupying more than 33 percent of the plan view total roof area, a setback of not less than 36 inches (457 mm) wide is required on both sides of a horizontal ridge.

1204.2.1.3 Alternative setbacks at ridge. Where an automatic sprinkler system is installed within the dwelling in accordance with Section 903.3.1.3, setbacks at the ridge shall conform to one of the following:

1. For photovoltaic arrays occupying 66 percent or less of the plan view total roof area, a setback of not less than 18 inches (457 mm) wide is required on both sides of a horizontal ridge.
2. For photovoltaic arrays occupying more than 66 percent of the plan view total roof area, a setback of not less than 36 inches (914 mm) wide is required on both sides of a horizontal ridge.

1204.2.2 Emergency escape and rescue openings. Panels and modules installed on Group R-3 buildings shall not be placed on the portion of a roof that is below an emergency escape and rescue opening. A pathway of not less than 36 inches (914 mm) wide shall be provided to the emergency escape and rescue opening.

1204.3 Other than Group R-3 buildings. Access to systems for buildings, other than those containing Group R-3 occupancies, shall be provided in accordance with Sections 1204.3.1 through 1204.3.3.

Exception: Where it is determined by the *fire code official* that the roof configuration is similar to that of a Group R-3 occupancy, the residential access and ventilation require-

INTERNATIONAL CODE COUNCIL®
Copyright © 2019 ICC & NYSDOS. ALL RIGHTS RESERVED. Accessed by Lauren Gualdino (lgualdino@briarcliffmanor.org), (-) Order Number #100880972 on May 08, 2020 07:05 AM (PDT) pursuant to License Agreement with ICC & NYSDOS. No further reproduction, no

100880972

ments in Sections 1204.2.1.1 through 1204.2.1.3 are a suitable alternative.

1204.3.1 Perimeter pathways. There shall be a minimum 6-foot-wide (1829 mm) clear perimeter around the edges of the roof.

Exception: Where either axis of the building is 250 feet (76 200 mm) or less, the clear perimeter around the edges of the roof shall be permitted to be reduced to a minimum width of 4 feet (1219 mm).

1204.3.2 Interior pathways. Interior pathways shall be provided between array sections to meet the following requirements:

1. Pathways shall be provided at intervals not greater than 150 feet (45 720 mm) throughout the length and width of the roof.
2. A pathway not less than 4 feet (1219 mm) wide in a straight line to roof standpipes or ventilation hatches.
3. A pathway not less than 4 feet (1219 mm) wide around roof access hatches, with not fewer than one such pathway to a parapet or roof edge.

1204.3.3 Smoke ventilation. The solar installation shall be designed to meet the following requirements:

1. Where nongravity-operated smoke and heat vents occur, a pathway not less than 4 feet (1219 mm) wide shall be provided bordering all sides.
2. Smoke ventilation options between array sections shall be one of the following:
   - 2.1. A pathway not less than 8 feet (2438 mm) wide.
   - 2.2. Where gravity-operated dropout smoke and heat vents occur, a pathway not less than 4 feet (1219 mm) wide on not fewer than one side.
   - 2.3. A pathway not less than 4 feet (1219 mm) wide bordering 4-foot by 8-foot (1219 mm by 2438 mm) venting cutouts every 20 feet (6096 mm) on alternating sides of the pathway.

1204.4 Ground-mounted photovoltaic panel systems. Ground-mounted photovoltaic panel systems shall comply with Section 1204.1 and this section. Setback requirements shall not apply to ground-mounted, free-standing photovoltaic arrays. A clear, brush-free area of 10 feet (3048 mm) shall be required for ground-mounted photovoltaic arrays.

1204.5 Buildings with rapid shutdown. Buildings with rapid shutdown solar photovoltaic systems shall have permanent labels in accordance with Sections 1204.5.1 through 1204.5.3.

1204.5.1 Rapid shutdown type. The type of solar photovoltaic system rapid shutdown shall be labeled with one of the following:

1. For solar photovoltaic systems that shut down the array and the conductors leaving the array, a label shall be provided. The first two lines of the label shall be uppercase characters with a minimum height of $^{3}/_{8}$ inch (10 mm) in black on a yellow background. The remaining characters shall be uppercase with a minimum height of $^{3}/_{16}$ inch (5 mm) in black on a white background. The label shall be in accordance with Figure 1204.5.1(1) and state the following:

   SOLAR PV SYSTEM EQUIPPED WITH RAPID SHUTDOWN. TURN RAPID SHUTDOWN SWITCH TO THE "OFF" POSITION TO SHUT DOWN PV SYSTEM AND REDUCE SHOCK HAZARD IN ARRAY.

2. For photovoltaic systems that only shut down conductors leaving the array, a label shall be provided. The first two lines of the label shall be uppercase characters with a minimum height of $^{3}/_{8}$ inch (10 mm) in white on a red background and the remaining characters shall be capitalized with a minimum height of $^{3}/_{16}$ inch (5 mm) in black on a white background. The label shall be in accordance with Figure 1204.5.1(2) and state the following:

   THIS SOLAR PV SYSTEM EQUIPPED WITH RAPID SHUTDOWN. TURN RAPID SHUTDOWN SWITCH TO THE "OFF"

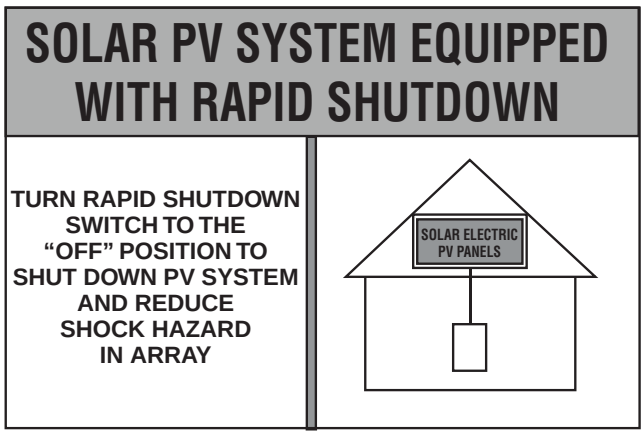

FIGURE 1204.5.1(1)
LABEL FOR SOLAR PV SYSTEMS THAT REDUCE SHOCK HAZARD WITHIN ARRAY AND SHUT DOWN CONDUCTORS LEAVING ARRAY

INTERNATIONAL CODE COUNCIL®
Copyright © 2019 ICC & NYSDOS. ALL RIGHTS RESERVED. Accessed by Lauren Gualdino (lgualdino@briarcliffmanor.org), (-) Order Number #100880972 on May 08, 2020 07:05 AM (PDT) pursuant to License Agreement with ICC & NYSDOS. No further reproduction, no

100880972

POSITION TO SHUT DOWN CONDUCTORS OUTSIDE THE ARRAY. CONDUCTORS WITHIN ARRAY REMAIN ENERGIZED IN SUNLIGHT.

1204.5.1.1 Diagram. The labels in Section 1204.5.1 shall include a simple diagram of a building with a roof. Diagram sections in red signify sections of the solar photovoltaic system that are not shut down when the rapid shutdown switch is turned off.

1204.5.1.2 Location. The rapid shutdown label in Section 1204.5.1 shall be located not greater than 3 feet (914 mm) from the service disconnecting means to which the photovoltaic systems are connected, and shall indicate the location of all identified rapid shutdown switches if not at the same location.

1204.5.2 Buildings with more than one rapid shutdown type. Solar photovoltaic systems that contain rapid shutdown in accordance with both Items 1 and 2 of Section 1204.5.1 or solar photovoltaic systems where only portions of the systems on the building contain rapid shutdown, shall provide a detailed plan view diagram of the roof showing each different photovoltaic system and a dotted line around areas that remain energized after the rapid shutdown switch is operated.

1204.5.3 Rapid shutdown switch. A rapid shutdown switch shall have a label located not greater than 3 feet (914 mm) from the switch that states the following:

RAPID SHUTDOWN SWITCH
FOR SOLAR PV SYSTEM

SECTION 1205
STATIONARY FUEL CELL POWER SYSTEMS

1205.1 General. *Stationary fuel cell power systems* in new and existing occupancies shall comply with this section.

[NY] 1205.2 Permits. Permits shall be obtained for *stationary fuel cell power systems* as set forth in Section 105.2.

[NY] 1205.3 Equipment. *Stationary fuel cell power systems* shall comply with the following:

1. *Prepackaged fuel cell power systems* shall be listed and labeled in accordance with CSA FC 1.
2. The modules and components in a *preengineered fuel cell power system* shall be listed and labeled in accordance with CSA FC 1 and interconnected to complete the assembly of the system at the job site in accordance with the manufacturer's instructions and the module and component listings.
3. *Field-fabricated fuel cell power systems* shall be approved based on a review of the technical report provided. The report shall be prepared by and bear the stamp of a registered design professional and shall include:
   - 3.1. A fire risk evaluation.
   - 3.2. An evaluation demonstrating that modules and components in the fuel cell power system comply with applicable requirements in CSA FC 1.
   - 3.3. Documentation of the fuel cell power system's compliance with applicable NFPA 2 and NFPA 853 construction requirements.

1205.4 Installation. *Stationary fuel cell power systems* shall be installed and maintained in accordance with NFPA 70 and NFPA 853, the manufacturer's installation instructions, and the listing. *Stationary fuel cell power systems* fueled by hydrogen shall be installed and maintained in accordance with NFPA 2 and NFPA 70, the manufacturer's installation instructions and the listing.

1205.5 Residential use. *Stationary fuel cell power systems* shall not be installed in Group R-3 and R-4 buildings, or

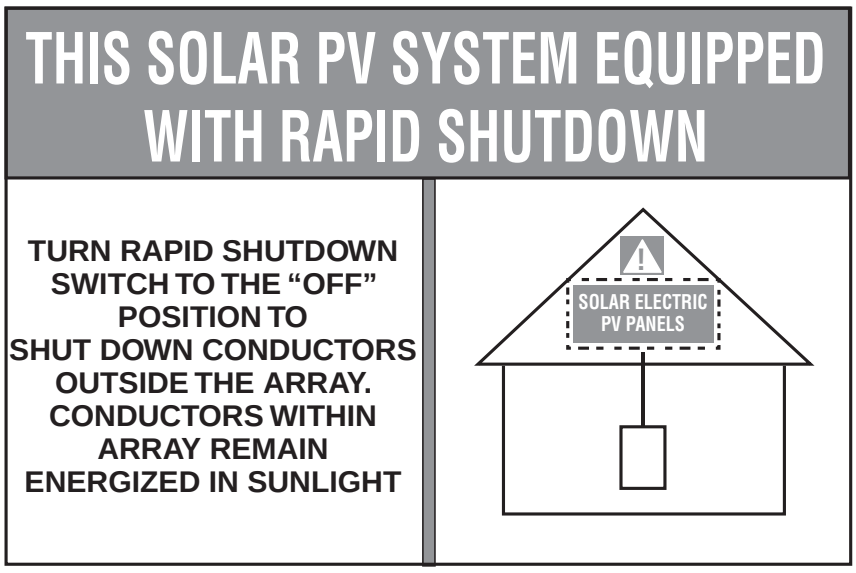

FIGURE 1204.5.1(2)
LABEL FOR SOLAR PV SYSTEMS THAT ONLY SHUT DOWN CONDUCTORS LEAVING THE ARRAY

INTERNATIONAL CODE COUNCIL®
Copyright © 2019 ICC & NYSDOS. ALL RIGHTS RESERVED. Accessed by Lauren Gualdino (lgualdino@briarcliffmanor.org), (-) Order Number #100880972 on May 08, 2020 07:05 AM (PDT) pursuant to License Agreement with ICC & NYSDOS. No further reproduction, no

100880972

dwelling units associated with Group R-2 buildings unless they are specifically listed for residential use.

1205.6 Indoor installations. *Stationary fuel cell power systems* installed in indoor locations shall comply with Sections 1205.6 through 1205.6.2. For purposes of this section, an indoor location includes a roof and 50 percent or greater enclosing walls.

1205.6.1 Listed. *Stationary fuel cell power systems* installed indoors shall be specifically listed and labeled for indoor use.

1205.6.2 Separation. Rooms containing *stationary fuel cell power systems* shall be separated from the following occupancies by fire barriers or horizontal assemblies, or both, constructed in accordance with the *Building Code of New York State*.

1. Group B, F, M, S and U occupancies by 1-hour fire-resistance-rated construction.
2. Group A, E, I and R occupancies by 2-hour fire-resistance-rated construction.

Exception: *Stationary fuel cell power systems* with an aggregate rating less than 50 kW shall not be required to be separated from other occupancies provided that the systems comply with Section 9.3 of NFPA 853.

1205.7 Vehicle impact protection. Where *stationary fuel cell power systems* are subject to impact by a motor vehicle, vehicle impact protection shall be provided in accordance with Section 312.

1205.8 Outdoor installation. *Stationary fuel cell power systems* located outdoors shall be separated by not less than 5 feet (1524 mm) from the following:

1. Lot lines.
2. Public ways.
3. Buildings.
4. Stored combustible materials.
5. Hazardous materials.
6. High-piled stock.
7. Any portion of a designated means of egress system.
8. Other exposure hazards.

1205.9 Fuel supply. The design, location and installation of the fuel supply for *stationary fuel cell power systems* shall comply with Chapter 53, Chapter 58 and the *Fuel Gas Code of New York State,* based on the particular fuel being supplied to the system.

1205.10 Manual shutoff. Access to a manual shutoff valve shall be provided for the fuel piping within 6 feet (1829 mm) of any fuel storage tank serving the fuel cell and within 6 feet (1829 mm) of the power system. If the fuel tank and the *stationary fuel cell power system* are less than 12 feet (3658 mm) apart, a single shutoff valve shall be permitted. If the *stationary fuel cell power system* is located indoors, the shut-off valve shall be located outside of the room in which the system is installed, unless otherwise approved by the *fire code official*.

1205.11 Ventilation and exhaust. Ventilation and exhaust for stationary fuel cell power systems shall be provided in accordance with NFPA 853.

1205.12 Fire suppression. Fire suppression for stationary fuel cell power system installations shall be provided in accordance with NFPA 853.

1205.13 Gas detection systems. Stationary fuel cell power systems shall be provided with a gas detection system. Detection shall be provided in approved locations in the fuel cell power system enclosure, the exhaust system or the room that encloses the fuel cell power system. The system shall be designed to activate at a flammable gas concentration of not more than 25 percent of the lower flammable limit (LFL).

1205.13.1 System activation. The activation of the gas detection system shall automatically:

1. Close valves between the gas supply and the fuel cell power system.
2. Shut down the fuel cell power system.
3. Initiate local audible and visible alarms in approved locations.

SECTION 1206
ELECTRICAL ENERGY STORAGE SYSTEMS

[NY] 1206.1 Scope. Energy storage systems having capacities exceeding the values shown in Table 1206.1 shall comply with Section 1206.2 through 1206.17.7.7. Energy storage systems in Group R-3 and R-4 occupancies shall comply with Section 1206.18.

[NY] TABLE 1206.1
ENERGY STORAGE SYSTEM THRESHOLD QUANTITIES

TECHNOLOGY	ENERGY CAPACITY [a]
Lead-acid batteries, all types	70 kWh (252 Megajoules) [c]
Nickel-cadmium batteries (Ni-Cd)	70 kWh (252 Megajoules)
Nickel metal hydride (Ni-MH)	70 kWh (252 Megajoules)
Lithium-ion batteries	20 kWh (72 Megajoules)
Flow batteries [b]	20 kWh (72 Megajoules)
Other battery technologies	10 kWh (36 Megajoules)
Capacitor energy storage systems	3 kWh (10.8 Mega joules)
Other *electrochemical energy storage systems* technologies	3 kWh (10.8 Mega joules)

a. Energy capacity is the total energy capable of being stored (nameplate rating), not the usable energy rating. For units rated in Amp-Hours, kWh shall equal rated voltage times amp-hour rating divided by 1000.

b. Shall include vanadium, zinc-bromine, polysulfide-bromide, and other flowing electrolyte type technologies.

c. An installation that exceeds 50 gallons of lead-acid battery electrolyte shall be considered to have exceeded the threshold quantities of this Table.

INTERNATIONAL CODE COUNCIL®
Copyright © 2019 ICC & NYSDOS. ALL RIGHTS RESERVED. Accessed by Lauren Gualdino (lgualdino@briarcliffmanor.org), (-) Order Number #100880972 on May 08, 2020 07:05 AM (PDT) pursuant to License Agreement with ICC & NYSDOS. No further reproduction, no

100880972

[NY] 1206.2 Applicability. The provisions of Section 1206 shall apply to the installation, operation, maintenance, repair, retrofitting, testing, commissioning and decommissioning of both stationary energy storage systems and mobile energy storage systems.

Exceptions:

1. Equipment associated with the generation, control, transformation, transmission, or distribution of energy installations that is under the exclusive control of an electric utility.
2. Outdoor stationary vehicle charging stations with a capacity of 250 kWh or less. Electrical connections between the charging station and buildings shall meet the requirements of NFPA 70.

[NY] 1206.2.1 Electrical wiring and equipment. Electrical wiring and equipment used in connection with *energy storage systems* shall be installed and maintained in accordance with this chapter and NFPA 70.

[NY] 1206.2.2 Mixed system installation. Where *approved* by the *fire code official*, the aggregate nameplate kWh energy capacity of all *energy storage systems* in a fire area shall not exceed the maximum quantity specified for any of the *energy storage systems* in this chapter. Where required by the *authority having jurisdiction*, a hazard mitigation analysis shall be provided and *approved* to evaluate any potential adverse interaction between the various *energy storage systems* and technologies.

[NY] 1206.3 Permits. *Building permits* and *operating permits* shall be provided in accordance with Section 105.

[NY] 1206.4 Construction documents. The following information shall be provided with the *permit* application:

1. Location and layout diagram of the room or area in which the *energy storage system* is to be installed.
2. Details on the *fire-resistance rating* of assemblies enclosing the *energy storage system*.
3. The quantities and types of *energy storage system* to be installed.
4. Manufacturer's specifications, ratings and *listings* of each *energy storage system*.
5. Description of *energy storage management systems* and their operation.
6. Location and content of required signage.
7. Details on fire suppression, smoke or fire detection, thermal management, ventilation, exhaust and deflagration venting systems, if provided.
8. Support arrangement associated with the installation, including any required seismic restraint.
9. A commissioning plan complying with 1206.9.1.
10. A decommissioning plan complying with 1206.9.3.
11. Peer reviewer identification and qualifications, where required by the *authority having jurisdiction*.

[NY] 1206.5 Hazard mitigation analysis. A failure modes and effects analysis (FMEA) or other *approved* hazard mitigation analysis shall be provided under any of the following conditions:

1. Where *energy storage system* technologies not specifically identified in Table 1206.1 are provided.
2. More than one *energy storage system* technology is provided in a room or enclosed area.
3. Where allowed as a basis for increasing maximum allowable quantities. See Section 1206.12.2.

[NY] 1206.5.1 Fault condition. The hazard mitigation analysis shall evaluate the consequences of the following failure modes. Only single failure modes shall be considered.

1. A thermal runaway condition in a single *energy storage system* rack, module or unit.
2. Failure of any *energy storage management system*.
3. Failure of any required ventilation or exhaust system.
4. Voltage surges on the primary electric supply.
5. Short circuits on the load side of the *energy storage system*.
6. Failure of the smoke detection, fire detection, fire suppression, or gas detection system.
7. Required spill neutralization not being provided or failure of a required secondary containment system.

[NY] 1206.5.2 Analysis approval. The *fire code official* may *approve* the hazardous mitigation analysis provided the consequences of the hazard mitigation analysis demonstrate:

1. Fires will be contained within unoccupied *energy storage system* rooms or areas for the minimum duration of the *fire-resistance rated* assemblies identified in Section 1206.14.4.
2. Fires in occupied work centers will be detected in time to allow occupants within the room or area to safely evacuate.
3. Toxic and highly toxic gases released during fires will not reach concentrations in excess of OSHA-regulated IDLH levels in the building or in adjacent means of egress routes during the time deemed necessary to evacuate occupants from any affected area.
4. Flammable gases released from *energy storage systems* during charging, discharging and normal operation will not exceed 25 percent of their lower flammability limit (LFL).
5. Flammable gases released from *energy storage systems* during fire, overcharging and other abnormal conditions will be controlled through the use of ventilation of the gases preventing accumulation or by deflagration venting.

[NY] 1206.5.3 Additional protection measures. Construction, equipment and systems that are required for the *energy storage system* to comply with the hazardous mitigation analysis, including, but not limited to, those specifi-

INTERNATIONAL CODE COUNCIL®
Copyright © 2019 ICC & NYSDOS. ALL RIGHTS RESERVED. Accessed by Lauren Gualdino (lgualdino@briarcliffmanor.org), (-) Order Number #100880972 on May 08, 2020 07:05 AM (PDT) pursuant to License Agreement with ICC & NYSDOS. No further reproduction, no

100880972

cally described in Section 1206 shall be installed, maintained and tested in accordance with nationally recognized standards and specified design parameters.

[NY] 1206.6 Large-scale fire test. Where required elsewhere in Section 1206, large-scale fire testing shall be conducted on a representative *energy storage system* in accordance with UL 9540A or approved equivalent. The testing shall be conducted or witnessed and reported by an *approved* testing laboratory and show that a fire involving one *energy storage system* will not propagate to an adjacent *energy storage system.* In addition, the testing shall demonstrate that, where the *energy storage system* is installed within a room, enclosed area or *walk-in energy storage system unit*, a fire will be contained within the room, enclosed area or *walk-in energy storage system unit* for a duration equal to the *fire-resistance rating* of the room assemblies as specified in Section 1206.14.4. The test report shall be provided to the *fire code official* for review and *approval*.

[NY] 1206.7 Fire remediation. Where a fire or other event has damaged the *energy storage system*, the system owner, agent, or lessee shall, at their expense, comply with Sections 1206.7.1 and 1206.7.2, or remove damaged equipment from the premises to a safe location.

[NY] 1206.7.1 Fire mitigation personnel. Where, required by the fire code official, the system owner, agent or lessee shall, at their expense, immediately dispatch one or more fire mitigation personnel to the premises. The personnel shall remain on duty continuously after the fire department leaves the premises and until the damaged energy storage system equipment is removed from the premises, or earlier if the fire code official indicates the public safety hazard has been abated.

[NY] 1206.7.2 Duties. On-duty fire mitigation personnel shall have the following responsibilities:

1. Keep diligent watch for fires, obstructions to means of egress, and other hazards.
2. Immediately contact the fire department if their assistance is needed to mitigate any hazards or extinguish fires.
3. Take prompt measures for remediation of hazards in accordance with the decommissioning plan in Section 1206.9.3.
4. Take prompt measures to assist in evacuation from the structures.

[NY] 1206.8 Peer review. Where required by the *authority having jurisdiction,* the owner or the owner's authorized agent shall be responsible for retaining and furnishing the services of a *registered design professional* or special expert, who will perform as a peer reviewer, subject to the *approval* of the *fire code official*.

[NY] 1206.8.1 Costs. The costs of special services, where required by the *authority having jurisdiction*, shall be borne by the owner or the owner's authorized agent.

[NY] 1206.8.2 Special expert. Where the scope of work is limited or focused in an area that does not require the services of a *registered design professional* or the special knowledge and skills associated with the practice of architecture or engineering, an *approved* special expert may be employed by the owner or the owner's authorized agent as the person in responsible charge of the limited or focused activity.

[NY] 1206.8.2.1 Scope of work. The scope of work of a special expert shall be limited to the area of expertise as demonstrated in the documentation submitted to the *fire code official* for review and *approval*.

[NY] 1206.8.2.2 Special expert qualifications. Special experts are those individuals who possess the following qualifications:

1. Has credentials of education and experience in an area of practice that is needed to evaluate risks and safe operations associated with the design, operation and special hazards of *energy storage systems*.
2. Licensing or registration, when required by any other applicable statute, regulation, or local law or ordinance.

[NY] 1206.9 Commissioning, decommissioning, operation and maintenance. *Energy storage system commissioning*, *energy storage system decommissioning*, operation, and maintenance shall be conducted in accordance with this section.

[NY] 1206.9.1 Commissioning. *Energy storage system commissioning* of newly installed *energy storage systems*, and existing *energy storage systems* that have been retrofitted, replaced or previously decommissioned and are returning to service, shall be conducted prior to the *energy storage system* being placed in service, in accordance with a commissioning plan that has been *approved* prior to initiating commissioning. The commissioning plan shall include the following:

1. A narrative description of the activities that will be accomplished during each phase of commissioning including the personnel intended to accomplish each of the activities.
2. A listing of the specific *energy storage system* and associated components, controls and safety related devices to be tested, a description of the tests to be performed and the functions to be tested.
3. Conditions under which all testing will be performed, which are representative of the conditions during normal operation of the system.
4. Documentation of the owner's project requirements and the basis of design necessary to understand the installation and operation of the *energy storage system*.
5. Verification that required equipment and systems are installed in accordance with the *approved* plans and specifications.
6. Integrated testing for all fire and safety systems.
7. Testing for any required thermal management, ventilation or exhaust systems associated with the *energy storage system* installation.

INTERNATIONAL CODE COUNCIL®
Copyright © 2019 ICC & NYSDOS. ALL RIGHTS RESERVED. Accessed by Lauren Gualdino (lgualdino@briarcliffmanor.org), (-) Order Number #100880972 on May 08, 2020 07:05 AM (PDT) pursuant to License Agreement with ICC & NYSDOS. No further reproduction, no

100880972

8. Preparation and delivery of operation and maintenance documentation.
9. Training of facility operating and maintenance staff.
10. Identification and documentation of the requirements for maintaining system performance to meet the original design intent during the operation phase.
11. Identification and documentation of personnel who are qualified to service, maintain and decommission the *energy storage system*, and respond to incidents involving the *energy storage system*, including documentation that such service has been contracted for.
12. A decommissioning plan in accordance with Section 1206.9.3.

Exception: *Energy storage system commissioning* shall not be required for lead-acid and nickel-cadmium battery systems at facilities under the exclusive control of communications utilities that comply with NFPA 76 and operate at less than 50 VAC and 60 VDC. However, a decommissioning plan shall be provided and maintained where required by the *authority having jurisdiction*.

[NY] 1206.9.1.1 Initial acceptance testing. During the commissioning process an *energy storage system* shall be evaluated for proper operation in accordance with the manufacturer's instructions and the commissioning plan prior to final *approval*.

[NY] 1206.9.1.2 Commissioning report. A report describing the results of the *energy storage system commissioning* and including the results of the initial acceptance testing required in Section 1206.9.1.1 shall be provided to the *fire code official* prior to final inspection and *approval* and maintained at an *approved* on-site location.

[NY] 1206.9.2 Operation and Maintenance Manual. An Operation and Maintenance Manual (O&M) shall be provided to both the energy storage system owner or their authorized agent and to the energy storage system operator before the energy storage system is put into operation. The energy storage system shall be operated and maintained in accordance with the manual. A copy of the manual shall be retained at an approved onsite location and be available to the fire code official. The O&M shall include the following:

1. Manufacturer’s O&M for the entire *energy storage system* or for each component of the system requiring maintenance, that clearly identifies the required routine maintenance actions.
2. Name, address and phone number of a service agency that has been contracted to service the *energy storage system* and its associated safety systems.
3. Maintenance and calibration information, including wiring diagrams, control drawings, schematics, system programming instructions and control sequence descriptions, for all energy storage systems controls.
4. Desired or field-determined control set points that are permanently recorded on control drawings at control devices or, for digital control systems, in system programming instructions.
5. A schedule for inspecting and recalibrating all *energy storage system* controls.
6. A service record log form that lists the schedule for all required servicing and maintenance actions and space for logging such actions that are completed over time and retained on site.
7. Inspection and testing records shall be maintained in the O&M.

[NY] 1206.9.2.1 Systems monitoring. Systems that monitor and protect the *energy storage system* installation shall also be inspected and tested in accordance with the manufacturer's instructions and Section 1206.9.2.

[NY] 1206.9.3 Decommissioning. The *authority having jurisdiction* shall be notified prior to *energy storage system decommissioning.* Decommissioning or removal of the *energy storage system* from service, and from the facility in which it is located, shall be performed in accordance with the decommissioning plan. The plan shall include details on providing a safe and orderly shutdown of the *energy storage system* that includes the following:

1. A narrative description of the activities to be accomplished for removing the *energy storage system* from service, and from the facility in which it is located.
2. A listing of any contingencies for removing an intact operational *energy storage system* from service, and for removing an *energy storage system* from service that has been damaged by a fire or other event.

[NY] 1206.10 Equipment. *Energy storage systems* and equipment shall comply with Sections 1206.10.1 through 1206.10.9

[NY] 1206.10.1 Energy storage system listings. Energy storage systems shall be listed in accordance with UL 9540 or approved equivalent.

Exception: Lead-acid and nickel-cadmium battery systems installed in facilities under the exclusive control of communications utilities and operating at less than 50 VAC and 60 VDC in accordance with NFPA 76 are not required to be *listed*.

[NY] 1206.10.2 Equipment listing. Chargers, inverters, *energy storage management systems* shall be covered as part of the UL 9540 *listing* or shall be *listed* separately.

[NY] 1206.10.3 Utility interactive systems. Only inverters *listed* and labeled for utility interactive system use and identified as interactive shall be allowed to operate in parallel with the electric utility power system to supply power to common loads. Inverters shall be listed and labeled in accordance with UL 1741.

INTERNATIONAL CODE COUNCIL®
Copyright © 2019 ICC & NYSDOS. ALL RIGHTS RESERVED. Accessed by Lauren Gualdino (lgualdino@briarcliffmanor.org), (-) Order Number #100880972 on May 08, 2020 07:05 AM (PDT) pursuant to License Agreement with ICC & NYSDOS. No further reproduction, no

100880972

[NY] 1206.10.4 Energy storage management system. Where required by the *energy storage system listing* an *approved energy storage management system* shall be provided that monitors and balances cell voltages, currents and temperatures within the manufacturer's specifications. The system shall disconnect electrical connections to the *energy storage system* or otherwise place it in a safe condition if potentially hazardous temperatures or other conditions such as short circuits, over voltage or under voltage are detected.

[NY] 1206.10.5 Enclosures. Enclosures of *energy storage systems* shall be of noncombustible construction.

[NY] 1206.10.6 Repairs. Repairs of *energy storage systems* shall only be done by qualified personnel. Repairs with other than identical parts shall be considered a retrofit and comply with Section 1206.10.7. Repairs shall be documented in the service records log.

[NY] 1206.10.7 Retrofits. Retrofitting of an existing *energy storage system* shall comply with the following:

1. A *building permit* shall be obtained in accordance with Section 105.
2. New batteries, battery modules, capacitors and similar *energy storage system* components shall be *listed*.
3. *Energy storage management systems* and other monitoring systems shall be connected and installed in accordance with the manufacturer's instructions.
4. The overall installation shall continue to comply with UL 9540 *listing* requirements, where applicable.
5. Systems that have been retrofitted shall be commissioned in accordance with Section 1206.9.1.
6. Retrofits shall be documented in the service records log.

Exception: Retrofitting of lead-acid and nickel-cadmium batteries with other lead-acid and nickel-cadmium batteries at facilities under the exclusive control of communications utilities that comply with NFPA 76 and operate at less than 50 VAC and 60 VDC.

[NY] 1206.10.8 Replacements. Replacements of *energy storage systems* shall be considered new *energy storage system* installations and shall comply with the provisions of Section 1206 as applicable to new *energy storage systems*. The *energy storage system* being replaced shall be decommissioned in accordance with Section 1206.9.3.

[NY] 1206.10.9 Reused and repurposed equipment. Equipment and materials shall only be reused or reinstalled as *approved* by the *fire code official*. Storage batteries previously used in other applications, such as electric vehicle propulsion, shall not be reused in applications regulated by this Chapter, unless (1) *approved* by the *fire code official* and (2) the equipment is refurbished by a battery refurbishing company *approved* in accordance with UL 1974.

[NY] 1206.11 General installations requirements. *Energy storage systems* shall comply with the requirements of Sections 1206.11.1 through 1206.11.12.

[NY] 1206.11.1 Electrical disconnects. Where the *energy storage system* disconnecting means is not within sight of the main electrical service disconnecting means, placards or directories shall be installed at the location of the main electrical service disconnecting means indicating the location of stationary storage battery system disconnecting means, in accordance with NFPA 70.

Exception: Electrical disconnects for lead-acid and nickel-cadmium battery systems at facilities under the exclusive control of communications utilities and operating at less than 50 VAC and 60 VDC shall be permitted to have electrical disconnects signage in accordance with NFPA 76.

[NY] 1206.11.2 Working clearances. Access and working space shall be provided and maintained about all electrical equipment to permit ready and safe operation and maintenance of such equipment, in accordance with NFPA 70 and the manufacturer's instructions.

[NY] 1206.11.3 Fire-resistance-rated construction. Rooms and other indoor areas containing *energy storage systems* shall be separated from other areas of the building in accordance with Section 1206.14.4 and Chapter 7 of this code. *Energy storage systems* shall be permitted to be in the same room as the equipment they support.

[NY] 1206.11.4 Seismic and structural design. Stationary *energy storage systems* shall comply with the seismic design requirements in Chapter 16 of the *Building Code New York State* and shall not exceed the floor loading limitation of the building.

[NY] 1206.11.5 Vehicle impact protection. Where *energy storage systems* are subject to impact by a motor vehicle, including fork lifts, vehicle impact protection shall be provided in accordance with Section 312 of this code.

[NY] 1206.11.6 Combustible storage. Combustible materials shall not be stored in *energy storage system* rooms, areas, or *walk-in energy storage system units*. Combustible materials in occupied work centers covered by Section 1206.11.10 shall be stored at least 3 feet (914 mm) from *energy storage system cabinets*.

[NY] 1206.11.7 Toxic and highly toxic gases. Energy storage systems installed indoors and that have the potential to release toxic and highly toxic gas during charging, discharging and normal use conditions shall be provided with a hazardous exhaust system in accordance with Section 502.8 of the *Mechanical Code of New York State*.

[NY] 1206.11.8 Signage. Approved signs shall be provided on or adjacent to all entry doors to energy storage system rooms or areas, to walk-in energy storage system units located outdoors, on rooftops, or in open parking garages, and on enclosures of energy storage system cabinets. Signs shall be designed to meet both the require-

INTERNATIONAL CODE COUNCIL®
Copyright © 2019 ICC & NYSDOS. ALL RIGHTS RESERVED. Accessed by Lauren Gualdino (lgualdino@briarcliffmanor.org), (-) Order Number #100880972 on May 08, 2020 07:05 AM (PDT) pursuant to License Agreement with ICC & NYSDOS. No further reproduction, no

100880972

ments of this section and of NFPA 70. The signage shall include the following or equivalent.

1. "Energy Storage System," "Battery Storage System," "Capacitor Energy Storage System," or the equivalent.
2. The identification of the electrochemical energy storage system technology present and its rated capacity.
3. "Energized electrical circuits."
4. If water reactive electrochemical energy storage systems are present the signage shall include "APPLY NO WATER."
5. Current contact information, including phone number, for personnel with technical knowledge of the system who is authorized to service the equipment and for fire mitigation personnel required by Section 1206.7.1.

[NY] 1206.11.9 Security of installations. Rooms, areas and *walk-in energy storage system units* in which *electrochemical energy storage systems* are located shall be secured against unauthorized entry and safeguarded in an *approved* manner. Security barriers, fences, landscaping, and other enclosures shall not inhibit the required air flow to or exhaust from the *electrochemical energy storage system* and its components.

[NY] 1206.11.10 Occupied work centers. *Electrochemical energy storage systems* located in rooms or areas occupied by personnel not directly involved with maintenance, service and testing of the systems shall comply with the following:

1. *Electrochemical energy storage systems* located in occupied work centers shall be housed in locked noncombustible cabinets or other enclosures to prevent access by unauthorized personnel.
2. Where *electrochemical energy storage systems* are contained in cabinets in occupied work centers, the cabinets shall be located within 10 feet (3048 mm) of the equipment that they support.
3. Cabinets shall include signage complying with Section 1206.11.8.

[NY] 1206.11.11 Open rack installations. Where *electrochemical energy storage systems* are installed in a separate equipment room and only authorized personnel have access to the room, they shall be permitted to be installed on an open rack.

[NY] 1206.11.12 Walk-in units. *Walk-in energy storage system units* shall only be entered for inspection, maintenance and repair of *energy storage system* units and ancillary equipment and shall not be occupied for other purposes.

[NY] 1206.12 Electrochemical energy storage system protection. Where required by Section 1206.14 through 1206.17, the protection of *electrochemical energy storage systems* shall be in accordance with Sections 1206.12.1 through 1206.12.8.

1206.12.1 Size and separation. *Electrochemical energy storage systems* shall be segregated into groups not exceeding 50 kWh (180 Mega joules). Each group shall be separated a minimum 3 feet (914 mm) from other groups and from walls in the storage room or area. The storage arrangements shall comply with Chapter 10 of this code.

Exceptions:

1. Lead-acid and nickel-cadmium battery systems in facilities under the exclusive control of communications utilities and operating at less than 50 VAC and 60 VDC in accordance with NFPA 76.
2. Larger capacities or smaller separation distances shall be permitted based on large scale fire testing complying with Section 1206.6.

[NY] 1206.12.2 Maximum allowable quantities. Fire areas within rooms, areas and *walk-in energy storage system units* containing *electrochemical energy storage systems* shall not exceed the maximum allowable quantities in Table 1206.12.

Exceptions:

1. Where *approved* by the *fire code official*, rooms, areas and *walk-in energy storage system units* containing *electrochemical energy storage systems* that exceed the amounts in Table 1206.12 shall be permitted based on a hazard mitigation analysis in accordance with Section 1206.5 and large-scale fire testing complying with Section 1206.6.
2. Lead-acid and nickel-cadmium battery systems installed in facilities under the exclusive control of communications utilities and operating at less than 50 VAC and 60 VDC in accordance with NFPA 76.
3. Dedicated use buildings in compliance with Section 1206.14.1.

[NY] 1206.12.2.1 Mixed electrochemical energy systems. Where rooms, areas and *walk-in energy storage system units* contain different types of electrochemical energy technologies, the total aggregate quantities of the systems shall be determined based on the sum of percentages of each technology type quantity divided by the maximum allowable quantity of each technology type. The sum of the percentages shall not exceed 100 percent of the maximum allowable quantity.

[NY] 1206.12.3 Elevation. *Electrochemical energy storage systems* shall not be located in the following areas:

1. Where the floor is located more than 75 feet (22 860 mm) above the lowest level of fire department vehicle access, or
2. Where the floor is located below the lowest level of *exit discharge*.

Exceptions:

1. Lead-acid and nickel-cadmium battery systems less than 50 VAC and 60 VDC installed in facilities under the exclusive control of communications utilities in accordance with NFPA 76.

INTERNATIONAL CODE COUNCIL®
Copyright © 2019 ICC & NYSDOS. ALL RIGHTS RESERVED. Accessed by Lauren Gualdino (lgualdino@briarcliffmanor.org), (-) Order Number #100880972 on May 08, 2020 07:05 AM (PDT) pursuant to License Agreement with ICC & NYSDOS. No further reproduction, no

100880972

2. Where *approved* by the *fire code official*, installations shall be permitted in underground vaults complying with NFPA 70, Article 450, Part III.
3. Where approved by the fire code official, installations shall be permitted on higher and lower floors, based on large scale fire testing complying with Section 1206.6 or on hazard mitigation analysis complying with Section 1206.5.

[NY] TABLE 1206.12
MAXIMUM ALLOWABLE QUANTITIES OF ELECTROCHEMICAL ENERGY STORAGE SYSTEMS

TECHNOLOGY	MAXIMUM ALLOWABLE QUANTITIES [a]
STORAGE BATTERIES	
Lead-acid, all types	Unlimited
Nickel-cadmium (Ni-Cd)	Unlimited
Nickel metal hydride (Ni-MH)	Unlimited
Lithium-ion	600 kWh
Flow batteries [b]	600 kWh
Other battery technologies	200 kWh
CAPACITORS	
All types	20 kWh
OTHER ELECTROCHEMICAL ENERGY STORAGE SYSTEM	
All types	20 kWh

a. For *electrochemical energy storage system* units rated in Amp-Hours, kWh shall equal rated voltage times the Amp-hour rating divided by 1,000.

b. Shall include vanadium, zinc-bromine, polysulfide-bromide, and other flowing electrolyte type technologies.

[NY] 1206.12.4 Fire detection. An *approved* automatic smoke detection system or radiant energy–sensing fire detection system complying with Section 907 shall be installed in rooms, indoor areas, and *walk-in energy storage system units* containing *electrochemical energy storage systems*. An *approved* radiant energy–sensing fire detection system shall be installed to protect open parking garage and rooftop installations. Alarm signals from detection systems shall be monitored by an *approved* supervising station in accordance with NFPA 72.

[NY] 1206.12.4.1 System status. Where required by the *authority having jurisdiction*, visible annunciation shall be provided on cabinet exteriors or in other *approved* locations to indicate that potentially hazardous conditions associated with the *energy storage system* exist.

[NY] 1206.12.5 Fire suppression systems. Rooms and areas within buildings and *walk-in energy storage system units* containing *electrochemical energy storage systems* shall be protected by an automatic fire suppression system designed and installed in accordance with one of the following:

1. An *automatic sprinkler system* designed and installed in accordance with Section 903.3.1.1 with a minimum density of 0.3 gpm/ft^2 based on the fire area or on a 2,500 square feet (232 m^3) design area, whichever is smaller.
2. Where *approved*, based on large scale fire testing complying with Section 1206.6, an *automatic sprinkler system* designed and installed in accordance with Section 903.3.1.1 with a sprinkler hazard classification.
3. Where *approved*, based on large scale fire testing complying with Section 1206.6, the following alternate *automatic fire extinguishing systems* designed and installed in accordance with Section 904:
   - 3.1. NFPA 12, Standard on Carbon Dioxide Extinguishing Systems
   - 3.2. NFPA 15, Standard for Water Spray Fixed Systems for Fire Protection
   - 3.3. NFPA 750, Standard on Water Mist Fire Protection Systems
   - 3.4. NFPA 2001, Standard on Clean Agent Fire Extinguishing Systems
   - 3.5. NFPA 2010, Standard for Fixed Aerosol Fire Extinguishing Systems

Exception: Fire suppression systems for lead-acid and nickel-cadmium battery systems at facilities under the exclusive control of communications utilities that operate at less than 50 VAC and 60 VDC shall be provided where required by NFPA 76.

[NY] 1206.12.5.1 Water reactive systems. Where an *electrochemical energy storage system* that utilizes water reactive materials is *approved* based on large-scale fire testing complying with Section 1206.6, it shall be protected by an *approved* alternative *automatic fire extinguishing system* in accordance with Section 904.

[NY] 1206.12.6 Maximum enclosure size. Outdoor walk-in energy storage system units housing energy storage systems shall not exceed 4,028 cubic feet (114 m^3), not including bolt-on HVAC and related equipment, as approved. Outdoor walk-in energy storage system units exceeding these limitations shall be considered indoor installations and comply with the requirements in Section 1206.14.

[NY] 1206.12.7 Vegetation control. Areas within 10 feet (3 m) on each side of an outdoor energy storage system shall be cleared of combustible vegetation and other combustible growth. Single specimens of trees, shrubbery, or cultivated ground cover such as green grass, ivy, succulents, or similar plants used as ground covers shall be permitted, provided that they do not form a means of readily transmitting fire.

Exception: A reduced clearance to combustible vegetation shall be permitted based on large scale fire testing complying with Section 1206.6.

[NY] 1206.12.8 Means of egress separation. *Energy storage systems* located outdoors and in open parking garages shall be separated from any *means of egress* to ensure safe egress under fire conditions by no less than 10 feet (3048 mm).

Exception: The *fire code official* may approve a reduced separation distance if large scale fire testing complying with Section 1206.6 is provided that shows

INTERNATIONAL CODE COUNCIL®
Copyright © 2019 ICC & NYSDOS. ALL RIGHTS RESERVED. Accessed by Lauren Gualdino (lgualdino@briarcliffmanor.org), (-) Order Number #100880972 on May 08, 2020 07:05 AM (PDT) pursuant to License Agreement with ICC & NYSDOS. No further reproduction, no

100880972

that a fire involving the *energy storage system* will not adversely impact occupant egress.

[NY] 1206.13 Electrochemical energy storage system technology specific protection. *Electrochemical energy storage system* installations shall comply with the requirements of this section in accordance with the applicable requirements of Table 1206.13.

[NY] 1206.13.1 Exhaust ventilation. Where required by Table 1206.13 or elsewhere in this code, exhaust ventilation shall be provided for rooms, areas, and *walk-in energy storage system units* containing *electrochemical energy storage systems* in accordance with the International Mechanical Code and Section 1206.13.1.1 or 1206.13.1.2

[NY] 1206.13.1.1 Ventilation based upon LFL. The exhaust ventilation system shall be designed to limit the maximum concentration of flammable gas to 25 percent of the lower flammable limit (LFL) of the total volume of the room, area, or *walk-in energy storage system unit* during the worst-case event of simultaneous charging of batteries at the maximum charge rate, in accordance with nationally recognized standards.

[NY] 1206.13.1.2 Ventilation based upon exhaust rate. Mechanical exhaust ventilation shall be provided at a rate of not less than 1 $ft^3/min/ft^2$ (5.1 $L/sec/m^2$) of floor area of the room, area, or *walk-in energy storage system unit*. The ventilation shall be either continuous or shall be activated by a gas detection system in accordance with Section 1206.13.1.2.4.

[NY] 1206.13.1.2.1 Standby power. Mechanical exhaust ventilation shall be provided with a minimum of two hours of standby power in accordance with Section 604.2.17.

[NY] 1206.13.1.2.2 Installation instructions. Required mechanical exhaust ventilation systems shall be installed in accordance with the manufacturer's installation instructions and the *Mechanical Code of New York State*.

[NY] 1206.13.1.2.3 Supervision. Required mechanical exhaust ventilation systems shall be supervised by an *approved* supervising station in accordance with NFPA 72.

[NY] 1206.13.1.2.4 Gas detection system. Where required by Section 1206.13.1.2, rooms, areas, and *walk-in energy storage system units* containing *energy storage systems* shall be protected by an *approved* continuous gas detection system that complies with Section 916 of this code and with the following:

1. The gas detection system shall be designed to activate the mechanical ventilation system when the level of flammable gas in the room, area, or *walk-in energy storage system unit* exceeds 25 percent of the LFL.
2. The mechanical ventilation system shall remain on until the flammable gas detected is less than 25 percent of the LFL.
3. The gas detection system shall be provided with a minimum of 2 hours of standby power in accordance with requirements for emergency and *standby power systems* for gas detection systems in Section 916 of this code.
4. Failure of the gas detection system shall annunciate a trouble signal at an *approved* supervising station in accordance with NFPA 72.

[NY] 1206.13.2 Spill control and neutralization. Where required by Table 1206.13 or elsewhere in this code, areas containing free-flowing liquid electrolyte or hazardous materials shall be provided with spill control and neutralization in accordance with this section.

[NY] 1206.13.2.1 Spill control. Spill control shall be provided to prevent the flow of liquid electrolyte or hazardous materials to adjoining rooms or areas. The method shall be capable of containing a spill from the single largest battery or vessel.

[NY] 1206.13.2.2 Neutralization. An *approved* method to neutralize spilled liquid electrolyte shall be

[NY] TABLE 1206.13
ELECTROCHEMICAL ENERGY STORAGE SYSTEM TECHNOLOGY SPECIFIC REQUIREMENTS

COMPLIANCE REQUIRED [b]	BATTERY TECHNOLOGY				OTHER ENERGY STORAGE SYSTEM AND BATTERY TECHNOLOGIES [b]	CAPACITOR ENERGY STORAGE SYSTEM [b]
	Lead-acid	Ni-Cad and Ni-MH	Lithium-ion	Flow		
1206.13.1 Exhaust ventilation	Yes	Yes	No	Yes	Yes	Yes
1206.13.2 Spill control and neutralization	Yes [c]	Yes [c]	No	Yes	Yes	Yes
1206.13.3 Explosion control	Yes [a]	Yes [a]	Yes	No	Yes	Yes
1206.13.4 Safety caps	Yes	Yes	No	No	Yes	Yes
1206.13.5 Thermal runaway	Yes [d]	Yes	Yes [e]	No	Yes [e]	Yes

a. Not required for lead-acid and nickel cadmium batteries at facilities under the exclusive control of communications utilities that comply with NFPA 76 and operate at less than 50 VAC and 60 VDC.

b. Protection shall be provided unless documentation acceptable to the *fire code official* is provided that provides justification why the protection is not necessary based on the technology used.

c. Applicable to vented (i.e. flooded) type nickel-cadmium and lead-acid batteries.

d. Not required for vented (i.e. flooded) type lead-acid batteries.

e. The thermal runaway protection is permitted to be part of an *energy storage management system* that has been evaluated with the battery as part of the evaluation to UL 1973.

INTERNATIONAL CODE COUNCIL®
Copyright © 2019 ICC & NYSDOS. ALL RIGHTS RESERVED. Accessed by Lauren Gualdino (lgualdino@briarcliffmanor.org), (-) Order Number #100880972 on May 08, 2020 07:05 AM (PDT) pursuant to License Agreement with ICC & NYSDOS. No further reproduction, no

100880972

provided that is capable of neutralizing a spill from the largest battery or vessel to a pH between 5.0 and 9.0.

[NY] 1206.13.2.3 Communication utilities. The requirements of Section 1206.13.2 only apply where the aggregate capacity of multiple vessels exceeds 1,000 gallons (3785 L) for lead-acid and nickel-cadmium battery systems operating at less than 50 VAC and 60 VDC that are located at facilities under the exclusive control of communications utilities and those facilities comply with NFPA 76 in addition to applicable requirements of this code.

[NY] 1206.13.3 Explosion control. Where required by Table 1206.13 or elsewhere in this code, explosion control complying with Section 911 shall be provided for rooms, areas or *walk-in energy storage system units* containing *electrochemical energy storage system* technologies.

Exceptions:

1. Where *approved* by the *fire code official*, explosion control may be waived based on large scale fire testing complying with Section 1206.6 which demonstrates that flammable gases are not liberated from *electrochemical energy storage system* cells or modules.
2. Where *approved* by the *fire code official*, explosion control may be waived based on documentation provided that demonstrates that the *electrochemical energy storage system* technology to be used does not have the potential to release flammable gas concentrations in excess of 25 percent of the LFL anywhere in the room, area, *walk-in energy storage system unit* or structure under thermal runaway or other fault conditions.

[NY] 1206.13.4 Safety caps. Where required by Table 1206.13 or elsewhere in this code, vented batteries and other *energy storage systems* shall be provided with flame arresting safety caps.

[NY] 1206.13.5 Thermal runaway. Where required by Table 1206.13 or elsewhere in this code, batteries and other *energy storage systems* shall be provided with a *listed* device or other *approved* method to prevent, detect and minimize the impact of thermal runaway.

[NY] 1206.14 Indoor installations. Indoor *energy storage system* installations shall be in accordance with Sections 1206.14.1 through 1206.14.4.

[NY] 1206.14.1 Dedicated use buildings. Dedicated use buildings in compliance with this section shall be classified as Group F-1 occupancies. For the purpose of Table 1206.14, dedicated use *energy storage system* buildings shall comply with all the following:

1. The building shall only be used for *energy storage systems*, electrical energy generation, and other electrical grid related operations.
2. Other occupancy types shall not be permitted in the building.
3. Occupants in the rooms and areas containing *energy storage systems* are limited to personnel that operate, maintain, service, test and repair the *energy storage system* and other energy systems.
4. Administrative and support personnel shall be permitted in areas within the buildings that do not contain *energy storage systems* provided:
   4.1. The areas do not occupy more than 10 percent of the building area of the story in which they are located.
   4.2. A *means of egress* is provided from the administrative and support use areas to the public way that does not require occupants to traverse

[NY] TABLE 1206.14
INDOOR ENERGY STORAGE SYSTEM INSTALLATIONS

COMPLIANCE REQUIRED	DEDICATED USE BUILDINGS [a]	NON-DEDICATED USE BUILDINGS [b]
1206.11 General installation requirements	Yes	Yes
1206.12.1 Size and separation	Yes	Yes
1206.12.2 Maximum allowable quantities	No	Yes
1206.12.3 Elevation	Yes	Yes
1206.12.4 Smoke and automatic fire detection [e]	Yes [c]	Yes
1206.12.5 Fire suppression systems	Yes [d]	Yes
1206.14.3 Dwelling units and sleeping units	NA	Yes
1206.14.4 Fire-resistance rating	Yes	Yes
1206.13 Technology specific protection	Yes	Yes

NA = Not allowed.

a. See Section 1206.14.1.

b. See Section 1206.14.2.

c. Where *approved* by the *fire code official*, alarm signals are not required to be monitored by an *approved* supervising station in accordance with NFPA 72.

d. Where *approved* by the *fire code official*, fire suppression systems are permitted to be omitted in dedicated use buildings located more than 100 feet (30.5 M) from buildings, lot lines, public ways, stored combustible materials, hazardous materials, high piled stock and other exposure hazards.

e. Lead-acid and nickel-cadmium battery systems installed in Group U buildings and structures less than 1500 ft^2 (140 m^2) under the exclusive control of communications utilities and operating at less than 50 VAC and 60 VDC in accordance with NFPA 76 are not required to have an *approved* automatic smoke or fire detection system.

INTERNATIONAL CODE COUNCIL®
Copyright © 2019 ICC & NYSDOS. ALL RIGHTS RESERVED. Accessed by Lauren Gualdino (lgualdino@briarcliffmanor.org), (-) Order Number #100880972 on May 08, 2020 07:05 AM (PDT) pursuant to License Agreement with ICC & NYSDOS. No further reproduction, no

100880972

through areas containing *energy storage systems* or other energy system equipment.

[NY] 1206.14.2 Non-dedicated use buildings. For the purpose of Table 1206.14, non-dedicated use buildings include all buildings that contain *energy storage systems* and do not comply with the Section 1206.14.1 dedicated use building requirements.

[NY] 1206.14.3 Dwelling units and sleeping units. *Energy storage systems* shall not be installed in *sleeping units* or in *habitable spaces* of *dwelling units*.

[NY] 1206.14.4 Fire-resistance rating. Separation shall be provided by 2 hour rated *fire barriers* constructed in accordance with Section 707 of the *Building Code of New York State* and 2 hour rated *horizontal assemblies* constructed in accordance with Section 711 of the *Building Code of New York State*, as appropriate. Rooms and areas containing *energy storage systems* shall be protected on the system side as follows:

1. In dedicated use buildings, *fire-resistance rated* assemblies shall be provided between rooms and areas containing *energy storage systems* and areas in which administrative and support personnel are located.
2. In non-dedicated use buildings, *fire-resistance rated* assemblies shall be provided between rooms and areas containing *energy storage systems* and other areas in the *building*.

[NY] 1206.15 Outdoor installations. Outdoor installations shall be in accordance with Sections 1206.15.1 through 1206.15.3. Exterior wall installations for individual *energy storage system* units not exceeding 20 kWh shall be in accordance with Sections 1206.15.3 and 1206.15.4.

[NY] 1206.15.1 Remote outdoor installations. For the purpose of Table 1206.15, remote outdoor installations include *energy storage systems* located more than 100 feet (30.5 m) from buildings, lot lines, public ways, stored combustible materials, hazardous materials, high piled stock and other exposure hazards.

[NY] 1206.15.2 Installations near exposures. For the purpose of Table 1206.15, installations near exposures include all outdoor *energy storage system* installations that do not comply with Section 1206.15.1 remote outdoor location requirements.

[NY] 1206.15.3 Clearance to exposures. *Energy storage systems* located outdoors shall be separated by a minimum 10 feet (3048 mm) from the following exposures:

1. *Lot lines*
2. *Public ways*
3. *Buildings*
4. Stored combustible materials
5. *Hazardous materials*
6. High-piled storage
7. Other exposure hazards

Exceptions:

1. Clearances from exposures are permitted to be reduced to 3 feet (914 mm) where a 1-hour free standing fire barrier, suitable for exterior use, and extending 5 feet (1.5 m) above and 5 feet (1.5 m) horizontally beyond the physical boundary of the *energy storage system* installation is provided to protect the exposure.
2. Clearances to buildings are permitted to be reduced to 3 feet (914 mm) where noncombustible exterior walls without openings or combustible overhangs are provided on the wall adjacent to the *energy storage system* and the *fire-resistance rating* of the exterior wall is no less than 2 hours.
3. Clearances to buildings are permitted to be reduced to 3 feet (914.4 mm) where a weatherproof enclosure constructed of noncombustible materials is provided over the *energy storage system*, and it has been demonstrated that a fire within the enclosure will not ignite combustible materials outside the enclosure based on large scale fire testing complying with Section 1206.6.

[NY] TABLE 1206.15
OUTDOOR ENERGY STORAGE SYSTEM INSTALLATIONS[a]

COMPLIANCE REQUIRED	REMOTE INSTALLATIONS [a]	INSTALLATIONS NEAR EXPOSURES [b]
1206.11 General installation requirements	Yes	Yes
1206.12.1 Size and separation	No	Yes [c]
1206.12.2 Maximum allowable quantities	No	Yes
1206.12.4 Smoke and automatic fire detection	Yes	Yes
1206.12.5 Fire suppression systems	Yes [d]	Yes
1206.12.6 Maximum enclosure size	Yes	Yes
1206.12.7 Vegetation control	Yes	Yes
1206.12.8 Means of egress separation	Yes	Yes
1206.15.3 Clearance to exposures	Yes	Yes
1206.13 Technology specific protection	Yes	Yes

a. See Section 1206.15.1.
b. See Section 1206.15.2.
c. In outdoor *walk-in energy storage system units*, spacing is not required between *energy storage system* units and the walls of the enclosure.
d. Where *approved* by the *fire code official*, fire suppression systems are permitted to be omitted.

INTERNATIONAL CODE COUNCIL®
Copyright © 2019 ICC & NYSDOS. ALL RIGHTS RESERVED. Accessed by Lauren Gualdino (lgualdino@briarcliffmanor.org), (-) Order Number #100880972 on May 08, 2020 07:05 AM (PDT) pursuant to License Agreement with ICC & NYSDOS. No further reproduction, no

100880972

4. Where exterior wall installations in accordance with Section 1206.15.4 are provided, the clearance between the energy storage system and the wall in which it is mounted, is permitted to be reduced to zero.

[NY] 1206.15.4 Exterior wall installations. Energy storage systems shall be permitted to be installed outdoors on exterior walls of buildings when all of the following conditions are met:

1. The maximum energy capacity of individual energy storage system units shall not exceed 20 kWh.
2. The energy storage system shall comply with applicable requirements in Section 1206.15.
3. The energy storage system shall be installed in accordance with the manufacturer's instructions and their listing.
4. Individual energy storage system units shall be separated from each other by at least 3 feet (914 mm).
5. The energy storage system shall be separated from doors, windows, operable openings into buildings, or HVAC inlets by at least 5 feet (1524 mm).

Exception: Smaller separation distances in Items 4 and 5 shall be permitted based on large scale fire testing complying with Section 1206.6.

[NY] 1206.16 Special installations. Rooftop and open parking garage *energy storage system* installations shall comply with Sections 1206.16.1 through 1206.16.6.

[NY] 1206.16.1 Rooftop installations. For the purpose of Table 1206.16, rooftop *energy storage system* installations are those located on the roofs of buildings.

[NY] 1206.16.2 Open parking garage installations. For the purpose of Table 1206.16, open parking garage *energy storage system* installations are those located in a structure or portion of a structure that complies with Section 406.5 of the *Building Code of New York State*.

[NY] 1206.16.3 Clearance to exposures. *Energy storage systems* located on rooftops and in open parking garages shall be separated by a minimum 10 feet (3048 mm) from the following exposures:

1. *Buildings*, except the *building* on which a rooftop *energy storage system* is mounted
2. Any portion of the building on which a rooftop system is mounted that is elevated above the rooftop on which the system is installed
3. *Lot lines*
4. *Public ways*
5. Stored combustible materials
6. Locations where motor vehicles can be parked
7. *Hazardous materials*
8. Other exposure hazards

Exceptions:

1. Clearances from exposures are permitted to be reduced to 3 feet (914 mm) where a 1-hour free standing fire barrier, suitable for exterior use, and extending 5 feet (1.5 m) above and extending 5 feet (1.5 m) beyond the physical boundary of the *energy storage system* installation is provided to protect the exposure.
2. Clearances are permitted to be reduced to 3 feet (914.4 mm) where a weatherproof enclosure constructed of noncombustible materials is provided over the *energy storage system* and it has been demonstrated that a fire within the enclosure will not ignite combustible materials outside the enclosure based on large scale fire testing complying with Section 1206.6.

[NY] 1206.16.4 Fire suppression systems. *Energy storage systems* located in *walk-in energy storage system units* on rooftops or in *walk-in energy storage system units* in open parking garages shall be provided with *automatic fire suppression systems* within the *energy storage system*

[NY] TABLE 1206.16
SPECIAL ENERGY STORAGE SYSTEM INSTALLATIONS

COMPLIANCE REQUIRED	ROOFTOPS [a]	OPEN PARKING GARAGES [b]
1206.11 General installation requirements	Yes	Yes
1206.12.1 Size and separation	Yes	Yes
1206.12.2 Maximum allowable quantities	Yes	Yes
1206.12.4 Smoke and automatic fire detection	Yes	Yes
1206.12.6 Maximum enclosure size	Yes	Yes
1206.12.8 Means of egress separation	Yes	Yes
1206.16.3 Clearance to exposures	Yes	Yes
1206.16.4 Fire suppression systems	Yes	Yes
1206.16.5 Rooftop installations	Yes	No
1206.16.6 Open parking garage installations	No	Yes
1206.13 Technology specific protection	Yes	Yes

a. See Section 1206.16.1.

a. See Section 1206.16.2.

INTERNATIONAL CODE COUNCIL®
Copyright © 2019 ICC & NYSDOS. ALL RIGHTS RESERVED. Accessed by Lauren Gualdino (lgualdino@briarcliffmanor.org), (-) Order Number #100880972 on May 08, 2020 07:05 AM (PDT) pursuant to License Agreement with ICC & NYSDOS. No further reproduction, no

100880972

enclosure in accordance with Section 1206.12.5. Areas containing *energy storage systems* other than *walk-in energy storage system units* in open parking structures on levels not open above to the sky shall be provided with an *automatic fire suppression system* complying with Section 1206.12.5.

Exception: A fire suppression system is not required in open parking garages if large scale fire testing complying with Section 1206.6 is provided that shows that a fire will not impact the exposures in Section 1206.16.3.

[NY] 1206.16.5 Rooftop. *Energy storage systems* and associated equipment that are located on rooftops and not enclosed by *building* construction shall comply with the following:

1. Stairway access to the roof for emergency response and fire department personnel shall be provided either through a bulkhead from the interior of the building or a stairway on the exterior of the building.
2. Service walkways at least 5 feet (1524 mm) in width shall be provided for service and emergency personnel from the point of access to the roof to the system.
3. *Energy storage systems* and associated equipment shall be located from the edge of the roof a distance equal to at least the height of the system, equipment, or component but not less than 5 feet (1.5 m).
4. The roofing materials under and within 5 feet (1524 mm) horizontally from an *energy storage system* or associated equipment shall be noncombustible or shall have a Class A rating when tested in accordance with ASTM E108 or UL 790.
5. A Class I standpipe outlet shall be installed at an *approved* location on the roof level of the *building* or in the stairway bulkhead at the top level.
6. The *energy storage system* shall be the minimum of 10 feet from the fire service access point on the roof top.
7. *Energy storage systems* shall not be located within 50 feet (15,240 mm) of air inlets for building HVAC systems.

Exception: This distance shall be permitted to be reduced to 25 feet (7620 mm) if the *automatic fire alarm system* monitoring the radiant-energy sensing detectors deenergizes the ventilation system connected to the air intakes upon detection of fire.

[NY] 1206.16.6 Open parking garages. *Energy storage systems* and associated equipment that are located in open parking garages shall comply with all of the following:

1. *Energy storage systems* shall not be located within 50 feet (15 240 mm) of air inlets for building HVAC systems.

   Exception: This distance shall be permitted to be reduced to 25 feet (7620 mm) if the *automatic fire alarm system* monitoring the radiant-energy sensing detectors deenergizes the ventilation system connected to the air intakes upon detection of fire.

2. *Energy storage systems* shall not be located within 25 feet (7620 mm) of exits where located on a covered level of the parking structure not directly open to the sky above.
3. An *approved* fence with a locked gate or other *approved* barrier shall be provided to keep the general public at least 5 feet (1024 mm) from the outer enclosure of the *energy storage system*.

[NY] 1206.17 Mobile energy storage system equipment and operations. *Mobile energy storage system* equipment and operations shall comply with Sections 1206.17.1 through 1206.17.7.7.

[NY] 1206.17.1 Charging and storage. For the purpose of Section 1206.17, charging and storage covers the operation where *mobile energy storage systems* are charged and stored so they are ready for deployment to another site, and where they are charged and stored after a deployment.

[NY] 1206.17.2 Deployment. For the purpose of Section 1206.17, deployment covers operations where *mobile energy storage systems* are located at a site other than the charging and storage site and are being used to provide power.

[NY] 1206.17.3 Permits. *Building permits* and *operating permits* shall be provided as required by Section 105.

[NY] 1206.17.4 Construction documents. Construction documents complying with Section 1206.4 shall be provided with the *building permit* application for *mobile energy storage system* charging and storage locations.

[NY] 1206.17.4.1 Deployment documents. The following information shall be provided with the *operating permit* applications for *mobile energy storage system* deployments:

1. Relevant information for the *mobile energy storage system* equipment and protection measures in the construction documents required by Section 1206.4.
2. Location(s) and layout diagram(s) of the area(s) in which the *mobile energy storage system* is to be deployed, including a scale diagram of all nearby exposures.
3. Location and content of signage, including no smoking signs and signage complying with Section 1206.11.8.
4. Description of fencing to be provided around the *energy storage system*, including locking methods.
5. Details on fire suppression, smoke and automatic fire detection, system monitoring, thermal management, exhaust ventilation, and explosion control, if provided.
6. The intended duration of the deployment operation, including anticipated connection and disconnection times and dates.
7. Location and description of local staging stops during transit to the deployment site. See Section 1206.17.7.5.

INTERNATIONAL CODE COUNCIL®
Copyright © 2019 ICC & NYSDOS. ALL RIGHTS RESERVED. Accessed by Lauren Gualdino (lgualdino@briarcliffmanor.org), (-) Order Number #100880972 on May 08, 2020 07:05 AM (PDT) pursuant to License Agreement with ICC & NYSDOS. No further reproduction, no

100880972

8. Description of the temporary wiring, including connection methods, conductor type and size, and circuit overcurrent protection to be provided.
9. Description of how fire suppression system connections to water supplies or extinguishing agents are to be provided.
10. Contact information for personnel who are responsible for maintaining and servicing the equipment and responding to emergencies as required by Section 1206.7.1.

[NY] 1206.17.5 Approved locations. Locations where *mobile energy storage systems* are charged, stored and deployed shall be restricted to the locations established on the *building permits* and *operating permits*.

[NY] 1206.17.5.1 Local staging. *Mobile energy storage systems* in transit from the charging and storage location to the deployment location and back shall not be parked within 100 feet (30 480 mm) of an occupied building for more than one hour during transit, unless specifically permitted by Section 1206.17.3.

[NY] 1206.17.6 Charging and storage. Installations where *mobile energy storage systems* are charged and stored shall be treated as permanent indoor or outdoor *energy storage system* installations, and shall comply with the following sections, as applicable:

1. Indoor charging and storage shall comply with Section 1206.14.
2. Outdoor charging and storage shall comply with Section 1206.15.
3. Charging and storage on rooftops and in open parking garages shall comply with Section 1206.16.

Exceptions:

1. Electrical connections shall be permitted to be made using temporary wiring complying with the manufacturer's instructions, the UL 9540 *listing*, and NFPA 70.
2. Fire suppression system connections to the water supply shall be permitted to use *approved* temporary connections.

[NY] 1206.17.7 Deployed mobile energy storage system requirements. Deployed *mobile energy storage system* equipment and operations shall comply with this section and Table 1206.17.

1206.17.7.1 Duration. The duration of a *mobile energy storage system* deployment shall not exceed 30 days.

Exceptions:

1. *Mobile energy storage system* deployments that provide power for durations longer than 30 days shall comply with Section 1206.17.6.
2. *Mobile energy storage system* deployments shall not exceed 180 days unless additional *operating permits* are obtained.

[NY] 1206.17.7.2 Restricted locations. Deployed *mobile energy storage system* operations shall not be located indoors, in covered parking garages, on rooftops, below grade, or under building overhangs.

[NY] 1206.17.7.3 Clearance to exposures. Deployed *mobile energy storage systems* shall be separated by a minimum 50 feet (15.3 m) from public seating areas and from tents, canopies and membrane structures with an occupant load of 30 or more. Deployed *mobile energy storage systems* shall be separated by a minimum 10 feet (3048 mm) from the following exposures:

1. Public ways
2. Buildings
3. Stored combustible materials
4. Hazardous materials
5. High-piled stock
6. Other exposure hazards

[NY] 1206.17.7.4 Electrical connections. Electrical connections shall be made in accordance with the manufacturer's instructions and the UL 9540 *listing*. Temporary wiring for electrical power connections shall comply with NFPA 70. Fixed electrical wiring shall not be provided.

[NY] 1206.17.7.5 Fencing. An *approved* fence with a locked gate or other *approved* barrier shall be provided to keep the general public at least 5 feet (1024 mm) from the outer enclosure of a deployed *mobile energy storage system*.

[NY] 1206.17.7.6 Smoking. Smoking shall be prohibited within 10 feet (3048 mm) of *mobile energy storage systems*. Signs shall be posted in accordance with Section 310.

[NY] TABLE 1206.17
MOBILE ENERGY STORAGE SYSTEMS

COMPLIANCE REQUIRED	DEPLOYMENT [a]
1206.11 General installation requirements	Yes [b]
1206.12.1 Size and separation	Yes [c]
1206.12.2 Maximum allowable quantities	Yes
1206.12.4 Smoke and automatic fire detection	Yes [e]
1206.12.5 Fire suppression systems	Yes [d]
1206.12.6 Maximum enclosure size	Yes
1206.12.7 Vegetation control	Yes
1206.12.8 Means of egress separation	Yes
1206.13 Technology specific protection	Yes

a. See Section 1206.17.2.
b. Mobile operations on wheeled vehicle or trailers shall not be required to comply with the seismic and structural load requirements of Section 1206.11.4.
c. In *walk-in energy storage system units*, spacing is not required between *energy storage system* units and the walls of the enclosure.
d. Fire suppression system connections to the water supply shall be permitted to use *approved* temporary connections.
e. Alarm signals are not required to be transmitted to an *approved* location for *mobile energy storage systems* deployed 30 days or less.

[NY] 1206.18 Energy storage systems in Group R-3, and R-4 occupancies. *Energy storage systems* in Group R-3 and R-4 occupancies shall be installed and maintained in accordance with Sections 1206.18.1 through 1206.18.9. The tem-

INTERNATIONAL CODE COUNCIL®
Copyright © 2019 ICC & NYSDOS. ALL RIGHTS RESERVED. Accessed by Lauren Gualdino (lgualdino@briarcliffmanor.org), (-) Order Number #100880972 on May 08, 2020 07:05 AM (PDT) pursuant to License Agreement with ICC & NYSDOS. No further reproduction, no

100880972

porary use of an owner or occupant's electric powered vehicle as an *energy storage system* shall be in accordance with Section 1206.18.11.

Energy storage system installations exceeding the permitted aggregate ratings in Section 1206.18.4 shall be installed in accordance with Section 1206.2 through 1206.17.7.7.

[NY] 1206.18.1 Equipment listings. *Energy storage systems* shall be *listed* and *labeled* for residential use in accordance with UL 9540. *Energy storage systems listed* and *labeled* solely for utility or commercial use shall not be used for residential applications.

Exceptions:

1. Where *approved* by the *fire code official*, repurposed unlisted battery systems from electric vehicles are allowed to be installed outdoors or in detached dedicated cabinets located not less than 5 feet (1524 mm) from exterior walls, property lines and public ways.
2. *Energy storage systems* less than 1 kWh (3.6 megajoules).

[NY] 1206.18.2 Installation. *Energy storage systems* shall be installed in accordance with the manufacturer's instructions and their *listing.*

[NY] 1206.18.2.1 Spacing. Individual units shall be separated from each other by at least 3 feet (910 mm) of spacing unless smaller separation distances are documented to be adequate based on large scale fire testing complying with Section 1206.6.

[NY] 1206.18.3 Location. *Energy storage systems* shall only be installed in the following locations:

1. Detached garages and detached accessory structures.
2. Attached garages separated from the *dwelling unit* living space and *sleeping units* in accordance with Section 406.3.4 of the *Building Code of New York State.*
3. Outdoors on exterior walls located a minimum 3 feet (910 mm) from doors and windows.
4. Utility closets and storage or utility spaces within *dwelling units* and *sleeping units.*

[NY] 1206.18.4 Energy ratings. Individual *energy storage system* units shall have a maximum rating of 20 kWh. The aggregate rating shall not exceed:

1. 40 kWh within utility closets and storage or utility spaces
2. 80 kWh in attached or detached garages and detached accessory structures
3. 80 kWh on exterior walls
4. 80 kWh outdoors on the ground

[NY] 1206.18.5 Electrical installation. *Energy storage systems* shall be installed in accordance with NFPA 70. Inverters shall be *listed* and *labeled* in accordance with UL 1741 or provided as part of the UL 9540 *listing*. Systems connected to the utility grid shall use inverters *listed* for utility interaction.

[NY] 1206.18.6 Fire detection. Rooms and areas within *dwellings units*, *sleeping units* and attached garages in which *energy storage systems* are installed shall be protected by smoke alarms in accordance with Section 907. A heat detector or heat alarm *listed* and interconnected to the smoke alarms shall be installed in locations within *dwelling units*, *sleeping units* and attached garages where smoke alarms cannot be installed based on their *listing*.

[NY] 1206.18.7 Fire-resistance rating. Rooms and areas containing *energy storage systems* shall be protected on the system side by 2-hour rated *fire barriers* constructed in accordance with Section 707 of the *Building Code of New York State* and 2-hour rated *horizontal assemblies* constructed in accordance with Section 711 of the *Building Code of New York Stat*e, as applicable.

[NY] 1206.18.8 Protection from impact. *Energy storage systems* installed in a location subject to vehicle damage shall be protected by *approved* barriers.

[NY] 1206.18.9 Ventilation. Indoor installations of *energy storage systems* that include batteries that produce hydrogen or other flammable gases during charging shall be provided with exhaust ventilation in accordance with Section 1206.13.1.

[NY] 1206.18.10 Toxic and highly toxic gas. *Energy storage systems* that have the potential to release toxic or highly toxic gas during charging, discharging and normal use conditions shall not be installed within Group R-3 and R-4 occupancies.

[NY] 1206.18.11 Electric vehicle use. The temporary use of an owner or occupant's electric powered vehicle to power a *dwelling unit* or *sleeping unit* while parked in an attached or detached garage or outside, shall comply with the vehicle manufacturer's instructions and NFPA 70. The batteries on electric vehicles shall not contribute to the aggregate energy limitations in Section 1206.18.4.

INTERNATIONAL CODE COUNCIL®
Copyright © 2019 ICC & NYSDOS. ALL RIGHTS RESERVED. Accessed by Lauren Gualdino (lgualdino@briarcliffmanor.org), (-) Order Number #100880972 on May 08, 2020 07:05 AM (PDT) pursuant to License Agreement with ICC & NYSDOS. No further reproduction, no

INTERNATIONAL CODE COUNCIL®
Copyright © 2019 ICC & NYSDOS. ALL RIGHTS RESERVED. Accessed by Lauren Gualdino (lgualdino@briarcliffmanor.org), (-) Order Number #100880972 on May 08, 2020 07:05 AM (PDT) pursuant to License Agreement with ICC & NYSDOS. No further reproduction, no

100880972

CHAPTERS 13 through 19

RESERVED

INTERNATIONAL CODE COUNCIL®
Copyright © 2019 ICC & NYSDOS. ALL RIGHTS RESERVED. Accessed by Lauren Gualdino (lgualdino@briarcliffmanor.org), (-) Order Number #100880972 on May 08, 2020 07:05 AM (PDT) pursuant to License Agreement with ICC & NYSDOS. No further reproduction, no

100880972

INTERNATIONAL CODE COUNCIL®
Copyright © 2019 ICC & NYSDOS. ALL RIGHTS RESERVED. Accessed by Lauren Gualdino (lgualdino@briarcliffmanor.org), (-) Order Number #100880972 on May 08, 2020 07:05 AM (PDT) pursuant to License Agreement with ICC & NYSDOS. No further reproduction, no

100880972

Part IV—Special Occupancies and Operations

CHAPTER 20
AVIATION FACILITIES

SECTION 2001
GENERAL

2001.1 Scope. Airports, heliports, helistops and aircraft hangars shall be in accordance with this chapter.

2001.2 Regulations not covered. Regulations not specifically contained herein pertaining to airports, aircraft maintenance, aircraft hangars and appurtenant operations shall be in accordance with nationally recognized standards.

2001.3 Permits. For permits to operate aircraft-refueling vehicles, application of flammable or combustible finishes and hot work, see Section 105.6.

SECTION 2002
DEFINITIONS

2002.1 Definitions. The following terms are defined in Chapter 2:

AIRCRAFT OPERATION AREA (AOA).

AIRPORT.

HELIPORT.

HELISTOP.

SECTION 2003
GENERAL PRECAUTIONS

2003.1 Sources of ignition. Open flames, flame-producing devices and other sources of ignition shall not be permitted in a hangar, except in *approved* locations or in any location within 50 feet (15 240 mm) of an aircraft-fueling operation.

2003.2 Smoking. Smoking shall be prohibited in aircraft-refueling vehicles, aircraft hangars and aircraft operation areas used for cleaning, paint removal, painting operations or fueling. "No Smoking" signs shall be provided in accordance with Section 310.

Exception: Designated and *approved* smoking areas.

2003.3 Housekeeping. The aircraft operation area (AOA) and related areas shall be kept free from combustible debris at all times.

2003.4 Fire department access. Fire apparatus access roads shall be provided and maintained in accordance with Chapter 5. Fire apparatus access roads and aircraft parking positions shall be designed in a manner so as to preclude the possibility of fire vehicles traveling under any portion of a parked aircraft.

2003.5 Dispensing of flammable and combustible liquids. The dispensing, transferring and storage of flammable and *combustible liquids* shall be in accordance with this chapter and Chapter 57. Aircraft motor vehicle fuel-dispensing facilities shall be in accordance with Chapter 23.

2003.6 Combustible storage. Combustible materials stored in aircraft hangars shall be stored in *approved* locations and containers.

2003.7 Hazardous material storage. Hazardous materials shall be stored in accordance with Chapter 50.

SECTION 2004
AIRCRAFT MAINTENANCE

2004.1 Transferring flammable and combustible liquids. Flammable and *combustible liquids* shall not be dispensed into or removed from a container, tank, vehicle or aircraft except in *approved* locations.

2004.2 Application of flammable and combustible liquid finishes. The application of flammable or Class II *combustible liquid* finishes is prohibited unless both of the following conditions are met:

1. The application of the liquid finish is accomplished in an *approved* location.
2. The application methods and procedures are in accordance with Chapter 24.

2004.3 Cleaning parts. Class IA flammable liquids shall not be used to clean aircraft, aircraft parts or aircraft engines. Cleaning with other flammable and *combustible liquids* shall be in accordance with Section 5705.3.6.

2004.4 Spills. Sections 2004.4.1 through 2004.4.3 shall apply to spills of flammable and *combustible liquids* and other hazardous materials. Fuel spill control shall also comply with Section 2006.11.

2004.4.1 Cessation of work. Activities in the affected area not related to the mitigation of the spill shall cease until the spilled material has been removed or the hazard has been mitigated.

2004.4.2 Vehicle movement. Aircraft or other vehicles shall not be moved through the spill area until the spilled material has been removed or the hazard has been mitigated.

2004.4.3 Mitigation. Spills shall be reported, documented and mitigated in accordance with the provisions of this chapter and Section 5003.3.

2004.5 Running engines. Aircraft engines shall not be run in aircraft hangars except in *approved* engine test areas.

INTERNATIONAL CODE COUNCIL®
Copyright © 2019 ICC & NYSDOS. ALL RIGHTS RESERVED. Accessed by Lauren Gualdino (lgualdino@briarcliffmanor.org), (-) Order Number #100880972 on May 08, 2020 07:05 AM (PDT) pursuant to License Agreement with ICC & NYSDOS. No further reproduction, no

100880972

2004.6 Open flame. Repairing of aircraft requiring the use of open flames, spark-producing devices or the heating of parts above 500°F (260°C) shall only be done outdoors or in an area complying with the provisions of the *Building Code of New York State* for a Group F-1 occupancy.

2004.7 Other aircraft maintenance. Maintenance, repairs, modifications, or construction performed on aircraft not addressed elsewhere in this code shall be conducted in accordance with NFPA 410.

SECTION 2005
PORTABLE FIRE EXTINGUISHERS

2005.1 General. Portable fire extinguishers suitable for flammable or *combustible liquid* and electrical-type fires shall be provided as specified in Sections 2005.2 through 2005.6 and Section 906. Extinguishers required by this section shall be inspected and maintained in accordance with Section 906.

2005.2 On towing vehicles. Vehicles used for towing aircraft shall be equipped with not less than one *listed* portable fire extinguisher complying with Section 906 and having a minimum rating of 20-B:C.

2005.3 On welding apparatus. Welding apparatus shall be equipped with not less than one *listed* portable fire extinguisher complying with Section 906 and having a minimum rating of 2-A:20-B:C.

2005.4 On aircraft fuel-servicing tank vehicles. Aircraft fuel-servicing tank vehicles shall be equipped with not less than two *listed* portable fire extinguishers complying with Section 906, each having a minimum rating of 20-B:C. A portable fire extinguisher shall be provided with *ready access* from either side of the vehicle.

2005.5 On hydrant fuel-servicing vehicles. Hydrant fuel-servicing vehicles shall be equipped with not less than one *listed* portable fire extinguisher complying with Section 906, and having a minimum rating of 20-B:C.

2005.6 At fuel-dispensing stations. Portable fire extinguishers at fuel-dispensing stations shall be located such that pumps or dispensers are not more than 75 feet (22 860 mm) from one such extinguisher. Fire extinguishers shall be provided as follows:

1. Where the open-hose discharge capacity of the fueling system is not more than 200 gallons per minute (13 L/s), not less than two *listed* portable fire extinguishers complying with Section 906 and having a minimum rating of 20-B:C shall be provided.
2. Where the open-hose discharge capacity of the fueling system is more than 200 gallons per minute (13 L/s) but not more than 350 gallons per minute (22 L/s), not less than one *listed* wheeled extinguisher complying with Section 906 and having a minimum extinguishing rating of 80-B:C, and a minimum agent capacity of 125 pounds (57 kg), shall be provided.
3. Where the open-hose discharge capacity of the fueling system is more than 350 gallons per minute (22 L/s), not less than two *listed* wheeled extinguishers complying with Section 906 and having a minimum rating of 80-B:C each, and a minimum capacity agent of 125 pounds (57 kg) of each, shall be provided.

2005.7 Fire extinguisher access. Access to portable fire extinguishers required by this chapter shall be maintained at all times. Where necessary, provisions shall be made to clear accumulations of snow, ice and other forms of weather-induced obstructions.

2005.7.1 Cabinets. Cabinets and enclosed compartments used to house portable fire extinguishers shall be clearly marked with the words FIRE EXTINGUISHER in letters not less than 2 inches (51 mm) high. Cabinets and compartments shall be provided with *ready access* at all times.

2005.8 Reporting use. Use of a fire extinguisher under any circumstances shall be immediately reported to the manager of the airport and the *fire code official*.

SECTION 2006
AIRCRAFT FUELING

2006.1 Aircraft motor vehicle fuel-dispensing facilities. Aircraft motor vehicle fuel-dispensing facilities shall be in accordance with Chapter 23.

2006.2 Airport fuel systems. Airport fuel systems shall be designed and constructed in accordance with NFPA 407.

2006.3 Construction of aircraft-fueling vehicles and accessories. Aircraft-fueling vehicles shall comply with this section and shall be designed and constructed in accordance with NFPA 407.

2006.3.1 Transfer apparatus. Aircraft-fueling vehicles shall be equipped and maintained with an *approved* transfer apparatus.

2006.3.1.1 Internal combustion type. Where such transfer apparatus is operated by an individual unit of the internal-combustion-motor type, such power unit shall be located as remotely as practicable from pumps, piping, meters, air eliminators, water separators, hose reels and similar equipment, and shall be housed in a separate compartment from any of the aforementioned items. The fuel tank in connection therewith shall be suitably designed and installed, and the maximum fuel capacity shall not exceed 5 gallons (19 L) where the tank is installed on the engine. The exhaust pipe, muffler and tail pipe shall be shielded.

2006.3.1.2 Gear operated. Where operated by gears or chains, the gears, chains, shafts, bearings, housing and all parts thereof shall be of an *approved* design and shall be installed and maintained in an *approved* manner.

2006.3.1.3 Vibration isolation. Flexible connections for the purpose of eliminating vibration are allowed if the material used therein is designed, installed and maintained in an *approved* manner, provided that such connections do not exceed 24 inches (610 mm) in length.

2006.3.2 Pumps. Pumps of a positive-displacement type shall be provided with a bypass relief valve set at a pressure of not more than 35 percent in excess of the normal working pressure of such unit. Such units shall be

INTERNATIONAL CODE COUNCIL®
Copyright © 2019 ICC & NYSDOS. ALL RIGHTS RESERVED. Accessed by Lauren Gualdino (lgualdino@briarcliffmanor.org), (-) Order Number #100880972 on May 08, 2020 07:05 AM (PDT) pursuant to License Agreement with ICC & NYSDOS. No further reproduction, no

100880972

equipped and maintained with a pressure gauge on the discharge side of the pump.

2006.3.3 Dispensing hoses and nozzles. Hoses shall be designed for the transferring of hydrocarbon liquids and shall not be any longer than necessary to provide efficient fuel transfer operations. Hoses shall be equipped with an *approved* shutoff nozzle. Fuel-transfer nozzles shall be self-closing and designed to be actuated by hand pressure only. Notches and other devices shall not be used for holding a nozzle valve handle in the open position. Nozzles shall be equipped with a bonding cable complete with proper attachment for aircraft to be serviced.

2006.3.4 Protection of electrical equipment. Electric wiring, switches, lights and other sources of ignition, where located in a compartment housing piping, pumps, air eliminators, water separators, hose reels or similar equipment, shall be enclosed in a vapor-tight housing. Electrical motors located in such a compartment shall be of a type *approved* for use as specified in NFPA 70.

2006.3.5 Venting of equipment compartments. Compartments housing piping, pumps, air eliminators, water separators, hose reels and similar equipment shall be adequately ventilated at floor level or within the floor itself.

2006.3.6 Accessory equipment. Ladders, hose reels and similar accessory equipment shall be of an *approved* type and constructed substantially as follows:

1. Ladders constructed of noncombustible material are allowed to be used with or attached to aircraft-fueling vehicles, provided that the manner of attachment or use of such ladders is *approved* and does not constitute an additional fire or accident hazard in the operation of such fueling vehicles.
2. Hose reels used in connection with fueling vehicles shall be constructed of noncombustible materials and shall be provided with a packing gland or other device that will preclude fuel leakage between reels and fuel manifolds.

2006.3.7 Electrical bonding provisions. Transfer apparatus shall be metallically interconnected with tanks, chassis, axles and springs of aircraft-fueling vehicles.

2006.3.7.1 Bonding cables. Aircraft-fueling vehicles shall be provided and maintained with a substantial heavy-duty electrical cable of sufficient length to be bonded to the aircraft to be serviced. Such cable shall be metallically connected to the transfer apparatus or chassis of the aircraft-fueling vehicle on one end and shall be provided with a suitable metal clamp on the other end, to be fixed to the aircraft.

2006.3.7.2 Bonding cable protection. The bonding cable shall be bare or have a transparent protective sleeve and be stored on a reel or in a compartment provided for no other purpose. It shall be carried in such a manner that it will not be subjected to sharp kinks or accidental breakage under conditions of general use.

2006.3.8 Smoking. Smoking in aircraft-fueling vehicles is prohibited. Signs to this effect shall be conspicuously posted in the driver's compartment of all fueling vehicles.

2006.3.9 Smoking equipment. Smoking equipment such as cigarette lighters and ash trays shall not be provided in aircraft-fueling vehicles.

2006.4 Operation, maintenance and use of aircraft-fueling vehicles. The operation, maintenance and use of aircraft-fueling vehicles shall be in accordance with Sections 2006.4.1 through 2006.4.4 and other applicable provisions of this chapter.

2006.4.1 Proper maintenance. Aircraft-fueling vehicles and all related equipment shall be properly maintained and kept in good repair. Accumulations of oil, grease, fuel and other flammable or combustible materials is prohibited. Maintenance and servicing of such equipment shall be accomplished in *approved* areas.

2006.4.2 Vehicle integrity. Tanks, pipes, hoses, valves and other fuel delivery equipment shall be maintained leak free at all times.

2006.4.3 Removal from service. Aircraft-fueling vehicles and related equipment that are in violation of Section 2006.4.1 or 2006.4.2 shall be immediately defueled and removed from service and shall not be returned to service until proper repairs have been made.

2006.4.4 Operators. Aircraft-fueling vehicles that are operated by a person, firm or corporation other than the permittee or the permittee's authorized employee shall be provided with a legible sign visible from outside the vehicle showing the name of the person, firm or corporation operating such unit.

2006.5 Fueling and defueling. Aircraft-fueling and defueling operations shall be in accordance with Sections 2006.5.1 through 2006.5.5.

2006.5.1 Positioning of aircraft-fueling vehicles. Aircraft-fueling vehicles shall not be located, parked or permitted to stand in a position where such unit would obstruct egress from an aircraft should a fire occur during fuel-transfer operations. Aircraft-fueling vehicles shall not be located, parked or permitted to stand under any portion of an aircraft.

Exception: Aircraft-fueling vehicles shall be allowed to be located under aircraft wings during underwing fueling of turbine-engine powered aircraft.

2006.5.1.1 Fueling vehicle egress. A clear path shall be maintained for aircraft-fueling vehicles to provide for prompt and timely egress from the fueling area.

2006.5.1.2 Aircraft vent openings. A clear space of not less than 10 feet (3048 mm) shall be maintained between aircraft fuel-system vent openings and any part or portion of an aircraft-fueling vehicle.

2006.5.1.3 Parking. Prior to leaving the cab, the aircraft-fueling vehicle operator shall ensure that the parking brake has been set. Not less than two chock blocks not less than 5 inches by 5 inches by 12 inches (127 mm by 127 mm by 305 mm) in size and dished to fit the contour of the tires shall be utilized and positioned in such a manner as to preclude movement of the vehicle in any direction.

INTERNATIONAL CODE COUNCIL®
Copyright © 2019 ICC & NYSDOS. ALL RIGHTS RESERVED. Accessed by Lauren Gualdino (lgualdino@briarcliffmanor.org), (-) Order Number #100880972 on May 08, 2020 07:05 AM (PDT) pursuant to License Agreement with ICC & NYSDOS. No further reproduction, no

100880972

2006.5.2 Electrical bonding. Aircraft-fueling vehicles shall be electrically bonded to the aircraft being fueled or defueled. Bonding connections shall be made prior to making fueling connections and shall not be disconnected until the fuel-transfer operations are completed and the fueling connections have been removed.

Where a hydrant service vehicle or cart is used for fueling, the hydrant coupler shall be connected to the hydrant system prior to bonding the fueling equipment to the aircraft.

2006.5.2.1 Conductive hose. In addition to the bonding cable required by Section 2006.5.2, conductive hose shall be used for all fueling operations.

2006.5.2.2 Bonding conductors on transfer nozzles. Transfer nozzles shall be equipped with *approved* bonding conductors that shall be clipped or otherwise positively engaged with the bonding attachment provided on the aircraft adjacent to the fuel tank cap prior to removal of the cap.

Exception: In the case of overwing fueling where an appropriate bonding attachment adjacent to the fuel fill port has not been provided on the aircraft, the fueling operator shall touch the fuel tank cap with the nozzle spout prior to removal of the cap. The nozzle shall be kept in contact with the fill port until fueling is completed.

2006.5.2.3 Funnels. Where required, metal funnels are allowed to be used during fueling operations. Direct contact between the fueling receptacle, the funnel and the fueling nozzle shall be maintained during the fueling operation.

2006.5.3 Training. Aircraft-fueling vehicles shall be attended and operated only by persons instructed in methods of proper use and operation and who are qualified to use such fueling vehicles in accordance with minimum safety requirements.

2006.5.3.1 Fueling hazards. Fuel-servicing personnel shall know and understand the hazards associated with each type of fuel dispensed by the airport fueling-system operator.

2006.5.3.2 Fire safety training. Employees of fuel agents who fuel aircraft, accept fuel shipments or otherwise handle fuel shall receive *approved* fire safety training.

2006.5.3.2.1 Fire extinguisher training. Fuel-servicing personnel shall receive *approved* training in the operation of fire-extinguishing equipment.

2006.5.3.2.2 Records. The airport fueling-system operator shall maintain records of all training administered to its employees.

2006.5.4 Transfer personnel. During fuel-transfer operations, a qualified person shall be in control of each transfer nozzle and another qualified person shall be in immediate control of the fuel-pumping equipment to shut off or otherwise control the flow of fuel from the time fueling operations are begun until they are completed.

Exceptions:

1. For underwing refueling, the person stationed at the point of fuel intake is not required.
2. For overwing refueling, the person stationed at the fuel pumping equipment shall not be required where the person at the fuel dispensing device is within 75 feet (22 800 mm) of the emergency shutoff device; is not on the wing of the aircraft and has a clear and unencumbered path to the fuel pumping equipment; and the fuel dispensing line does not exceed 50 feet (15 240 mm) in length.

The fueling operator shall monitor the panel of the fueling equipment and the aircraft control panel during pressure fueling or shall monitor the fill port during overwing fueling.

2006.5.5 Fuel flow control. Fuel flow-control valves shall be operable only by the direct hand pressure of the operator. Removal of the operator's hand pressure shall cause an immediate cessation of the flow of fuel.

2006.6 Emergency fuel shutoff. Emergency fuel shutoff controls and procedures shall comply with Sections 2006.6.1 through 2006.6.4.

2006.6.1 Controls. Emergency fuel shutoff controls shall be provided with *ready access* at all times when the fueling system is being operated.

2006.6.2 Notification of the fire department. The fueling-system operator shall establish a procedure by which the fire department will be notified in the event of an activation of an emergency fuel shutoff control.

2006.6.3 Determining cause. Prior to reestablishment of normal fuel flow, the cause of fuel shutoff conditions shall be determined and corrected.

2006.6.4 Testing. Emergency fuel shutoff devices shall be operationally tested at intervals not exceeding three months. The fueling-system operator shall maintain testing records.

2006.7 Protection of hoses. Before an aircraft-fueling vehicle is moved, fuel transfer hoses shall be properly placed on the *approved* reel or in the compartment provided, or stored on the top decking of the fueling vehicle if proper height rail is provided for security and protection of such equipment. Fuel-transfer hose shall not be looped or draped over any part of the fueling vehicle, except as herein provided. Fuel-transfer hose shall not be dragged when such fueling vehicle is moved from one fueling position to another.

2006.8 Loading and unloading. Aircraft-fueling vehicles shall be loaded only at an *approved* loading rack. Such loading racks shall be in accordance with Section 5706.5.1.12.

Exceptions:

1. Aircraft-refueling units are allowed to be loaded from the fuel tanks of an aircraft during defueling operations.

INTERNATIONAL CODE COUNCIL®
Copyright © 2019 ICC & NYSDOS. ALL RIGHTS RESERVED. Accessed by Lauren Gualdino (lgualdino@briarcliffmanor.org), (-) Order Number #100880972 on May 08, 2020 07:05 AM (PDT) pursuant to License Agreement with ICC & NYSDOS. No further reproduction, no

100880972

2. Fuel transfer between tank vehicles is allowed to be performed in accordance with Section 5706.6 where the operation is not less than 200 feet (60 960 mm) from an aircraft.

The fuel cargo of such units shall be unloaded only by *approved* transfer apparatus into the fuel tanks of aircraft, underground storage tanks or *approved* gravity storage tanks.

2006.9 Passengers. Passenger traffic is allowed during the time fuel transfer operations are in progress, provided that the following provisions are strictly enforced by the *owner* of the aircraft or the *owner*'s authorized employee:

1. Smoking and producing an open flame in the cabin of the aircraft or the outside thereof within 50 feet (15 240 mm) of such aircraft shall be prohibited.

   A qualified employee of the aircraft *owner* shall be responsible for seeing that the passengers are not allowed to smoke when remaining aboard the aircraft or while going across the ramp from the gate to such aircraft, or vice versa.

2. Passengers shall not be permitted to linger about the plane, but shall proceed directly between the loading gate and the aircraft.

3. Passenger loading stands or walkways shall be left in loading position until all fuel transfer operations are completed.

4. Fuel transfer operations shall not be performed on the main *exit* side of any aircraft containing passengers except when the *owner* of such aircraft or a capable and qualified employee of such *owner* remains inside the aircraft to direct and assist the escape of such passengers through regular and emergency *exits* in the event fire should occur during fuel transfer operations.

2006.10 Sources of ignition. Smoking and producing open flames within 50 feet (15 240 mm) of a point where fuel is being transferred shall be prohibited. Electrical and motor-driven devices shall not be connected to or disconnected from an aircraft at any time fueling operations are in progress on such aircraft.

2006.11 Fuel spill prevention and procedures. Fuel spill prevention and the procedures for handling spills shall comply with Sections 2006.11.1 through 2006.11.7.

2006.11.1 Fuel-service equipment maintenance. Aircraft fuel-servicing equipment shall be maintained and kept free from leaks. Fuel-servicing equipment that malfunctions or leaks shall not be continued in service.

2006.11.2 Transporting fuel nozzles. Fuel nozzles shall be carried utilizing appropriate handles. Dragging fuel nozzles along the ground shall be prohibited.

2006.11.3 Drum fueling. Fueling from drums or other containers having a capacity greater than 5 gallons (19 L) shall be accomplished with the use of an *approved* pump.

2006.11.4 Fuel spill procedures. The fueling-system operator shall establish procedures to follow in the event of a fuel spill. These procedures shall be comprehensive and shall provide for all of the following:

1. Upon observation of a fuel spill, the aircraft-fueling operator shall immediately stop the delivery of fuel by releasing hand pressure from the fuel flow-control valve.

2. Failure of the fuel control valve to stop the continued spillage of fuel shall be cause for the activation of the appropriate emergency fuel shutoff device.

3. A supervisor for the fueling-system operator shall respond to the fuel spill area immediately.

2006.11.5 Notification of the fire department. The fire department shall be notified of any fuel spill that is considered a hazard to people or property or which meets one or more of the following criteria:

1. Any dimension of the spill is greater than 10 feet (3048 mm).

2. The spill area is greater than 50 square feet (4.65 m^2).

3. The fuel flow is continuous in nature.

2006.11.6 Investigation required. An investigation shall be conducted by the fueling-system operator of all spills requiring notification of the fire department. The investigation shall provide conclusive proof of the cause and verification of the appropriate use of emergency procedures. Where it is determined that corrective measures are necessary to prevent future incidents of the same nature, they shall be implemented immediately.

2006.11.7 Multiple fuel delivery vehicles. Simultaneous delivery of fuel from more than one aircraft-fueling vehicle to a single aircraft-fueling manifold is prohibited unless proper backflow prevention devices are installed to prevent fuel flow into the tank vehicles.

2006.12 Aircraft engines and heaters. Operation of aircraft onboard engines and combustion heaters shall be terminated prior to commencing fuel service operations and shall remain off until the fuel-servicing operation is completed.

Exception: In an emergency, a single jet engine is allowed to be operated during fuel servicing where all of the following conditions are met:

1. The emergency shall have resulted from an onboard failure of the aircraft's auxiliary power unit.

2. Restoration of auxiliary power to the aircraft by ground support services is not available.

3. The engine to be operated is either at the rear of the aircraft or on the opposite side of the aircraft from the fuel service operation.

4. The emergency operation is in accordance with a written procedure *approved* by the *fire code official*.

2006.13 Vehicle and equipment restrictions. During aircraft-fueling operations, only the equipment actively involved in the fueling operation is allowed within 50 feet (15 240 mm) of the aircraft being fueled. Other equipment shall be prohibited in this area until the fueling operation is complete.

A clear space of not less than 10 feet (3048 mm) shall be maintained between aircraft fuel-system vent openings and

INTERNATIONAL CODE COUNCIL®
Copyright © 2019 ICC & NYSDOS. ALL RIGHTS RESERVED. Accessed by Lauren Gualdino (lgualdino@briarcliffmanor.org), (-) Order Number #100880972 on May 08, 2020 07:05 AM (PDT) pursuant to License Agreement with ICC & NYSDOS. No further reproduction, no

100880972

any part or portion of aircraft-servicing vehicles or equipment.

Exception: Aircraft-fueling operations utilizing single-point refueling with a sealed, mechanically locked fuel line connection and the fuel is not a Class I flammable liquid.

2006.13.1 Overwing fueling. Vehicles or equipment shall not be allowed beneath the trailing edge of the wing when aircraft fueling takes place over the wing and the aircraft fuel-system vents are located on the upper surface of the wing.

2006.14 Electrical equipment. Electrical equipment, including but not limited to, battery chargers, ground or auxiliary power units, fans, compressors or tools, shall not be operated, nor shall they be connected or disconnected from their power source, during fuel service operations.

2006.14.1 Other equipment. Electrical or other spark-producing equipment shall not be used within 10 feet (3048 mm) of fueling equipment, aircraft fill or vent points, or spill areas unless that equipment is intrinsically safe and *approved* for use in an explosive atmosphere.

2006.15 Open flames. Open flames and open-flame devices are prohibited within 50 feet (15 240 mm) of any aircraft fuel-servicing operation or fueling equipment.

2006.15.1 Other areas. The *fire code official* is authorized to establish other locations where open flames and open-flame devices are prohibited.

2006.15.2 Matches and lighters. Personnel assigned to and engaged in fuel-servicing operations shall not carry matches or lighters on or about their person. Matches or lighters shall be prohibited in, on or about aircraft-fueling equipment.

2006.16 Lightning procedures. The *fire code official* is authorized to require the airport authority and the fueling-system operator to establish written procedures to follow when lightning flashes are detected on or near the airport. These procedures shall establish criteria for the suspension and resumption of aircraft-fueling operations.

2006.17 Fuel-transfer locations. Aircraft fuel-transfer operations shall be prohibited indoors.

Exception: In aircraft hangars built in accordance with the provisions of the *Building Code of New York State* for Group F-1 occupancies, aircraft fuel-transfer operations are allowed where either of the following conditions exist:

1. Necessary to accomplish aircraft fuel-system maintenance operations. Such operations shall be performed in accordance with nationally recognized standards.
2. The fuel being used has a *flash point* greater than 100°F (37.8°C).

2006.17.1 Position of aircraft. Aircraft being fueled shall be positioned such that any fuel system vents and other fuel tank openings are not less than:

1. Twenty-five feet (7620 mm) from buildings or structures other than jet bridges.
2. Fifty feet (15 240 mm) from air intake vents for boiler, heater or incinerator rooms.

2006.17.2 Fire equipment access. Access for fire service equipment to aircraft shall be maintained during fuel-servicing operations.

2006.18 Defueling operations. The requirements for fueling operations contained in this section shall also apply to aircraft defueling operations. Additional procedures shall be established by the fueling-system operator to prevent overfilling of the tank vehicle used in the defueling operation.

2006.19 Maintenance of aircraft-fueling hose. Aircraft-fueling hoses shall be maintained in accordance with Sections 2006.19.1 through 2006.19.4.

2006.19.1 Inspections. Hoses used to fuel or defuel aircraft shall be inspected periodically to ensure their serviceability and suitability for continued service. The fuel-service operator shall maintain records of all tests and inspections performed on fueling hoses. Hoses found to be defective or otherwise damaged shall be immediately removed from service.

2006.19.1.1 Daily inspection. Each hose shall be inspected daily. This inspection shall include a complete visual scan of the exterior for evidence of damage, blistering or leakage. Each coupling shall be inspected for evidence of leaks, slippage or misalignment.

2006.19.1.2 Monthly inspection. A more thorough inspection, including pressure testing, shall be accomplished for each hose on a monthly basis. This inspection shall include examination of the fuel delivery inlet screen for rubber particles, which indicates problems with the hose lining.

2006.19.2 Damaged hose. Hose that has been subjected to severe abuse shall be immediately removed from service. Such hoses shall be hydrostatically tested prior to being returned to service.

2006.19.3 Repairing hose. Hoses are allowed to be repaired by removing the damaged portion and recoupling the undamaged end. When recoupling hoses, only couplings designed and *approved* for the size and type of hose in question shall be used. Hoses repaired in this manner shall be visually inspected and hydrostatically tested prior to being placed back in service.

2006.19.4 New hose. New hose shall be visually inspected prior to being placed into service.

2006.20 Aircraft fuel-servicing vehicles parking. Unattended aircraft fuel-servicing vehicles shall be parked in areas that provide for both the unencumbered dispersal of vehicles in the event of an emergency and the control of leakage such that adjacent buildings and storm drains are not contaminated by leaking fuel.

2006.20.1 Parking area design. Parking areas for tank vehicles shall be designed and utilized such that a clearance of 10 feet (3048 mm) is maintained between each parked vehicle for fire department access. In addition, a minimum clearance of 50 feet (15 240 mm) shall be main-

INTERNATIONAL CODE COUNCIL®
Copyright © 2019 ICC & NYSDOS. ALL RIGHTS RESERVED. Accessed by Lauren Gualdino (lgualdino@briarcliffmanor.org), (-) Order Number #100880972 on May 08, 2020 07:05 AM (PDT) pursuant to License Agreement with ICC & NYSDOS. No further reproduction, no

100880972

tained between tank vehicles and parked aircraft and structures other than those used for the maintenance or garaging of aircraft fuel-servicing vehicles.

2006.21 Radar equipment. Aircraft fuel-servicing operations shall be prohibited while the weather-mapping radar of that aircraft is operating.

Aircraft fuel-servicing or other operations in which flammable liquids, vapors or mists could be present shall not be conducted within 300 feet (91 440 mm) of an operating aircraft surveillance radar.

Aircraft fuel-servicing operations shall not be conducted within 300 feet (91 440 mm) of airport flight traffic surveillance radar equipment.

Aircraft fuel-servicing or other operations in which flammable liquids, vapors or mists could be present shall not be conducted within 100 feet (30 480 mm) of airport ground traffic surveillance radar equipment.

2006.21.1 Direction of radar beams. The beam from ground radar equipment shall not be directed toward fuel storage or loading racks.

Exceptions:

1. Fuel storage and loading racks in excess of 300 feet (91 440 mm) from airport flight traffic surveillance equipment.
2. Fuel storage and loading racks in excess of 100 feet (30 480 mm) from airport ground traffic surveillance equipment.

SECTION 2007
HELISTOPS AND HELIPORTS

2007.1 General. Helistops and heliports shall be maintained in accordance with Sections 2007.2 through 2007.8. Helistops and heliports on buildings shall be constructed in accordance with the *Building Code of New York State.*

2007.2 Clearances. The touchdown area shall be surrounded on all sides by a clear area having minimum average width at roof level of 15 feet (4572 mm) and not less than 5 feet (1524 mm) at any point. The clear area shall be maintained.

2007.3 Flammable and Class II combustible liquid spillage. Landing areas on structures shall be maintained so as to confine flammable or Class II *combustible liquid* spillage to the landing area itself, and provisions shall be made to drain such spillage away from *exits* or *stairways* serving the helicopter landing area or from a structure housing such *exit* or *stairway.*

2007.4 Exits. *Exits* and *stairways* shall be maintained in accordance with Section 412.7 of the *Building Code of New York State.*

2007.5 Standpipe systems. A building with a rooftop helistop or heliport shall be provided with a Class I or III standpipe system extended to the roof level on which the helistop or heliport is located. All portions of the helistop and heliport area shall be within 150 feet (45 720 mm) of a $2^{1}/_{2}$-inch (63.5 mm) outlet on the standpipe system.

2007.6 Foam protection. Foam fire-protection capabilities shall be provided for rooftop heliports. Such systems shall be designed, installed and maintained in accordance with the applicable provisions of Sections 903, 904 and 905.

2007.7 Fire extinguishers. Not less than one portable fire extinguisher having a minimum 80-B:C rating shall be provided for each permanent takeoff and landing area and for the aircraft parking areas. Installation, inspection and maintenance of these extinguishers shall be in accordance with Section 906.

2007.8 Federal approval. Before operating helicopters from helistops and heliports, approval shall be obtained from the Federal Aviation Administration.

INTERNATIONAL CODE COUNCIL®
Copyright © 2019 ICC & NYSDOS. ALL RIGHTS RESERVED. Accessed by Lauren Gualdino (lgualdino@briarcliffmanor.org), (-) Order Number #100880972 on May 08, 2020 07:05 AM (PDT) pursuant to License Agreement with ICC & NYSDOS. No further reproduction, no

100880972

INTERNATIONAL CODE COUNCIL®
Copyright © 2019 ICC & NYSDOS. ALL RIGHTS RESERVED. Accessed by Lauren Gualdino (lgualdino@briarcliffmanor.org), (-) Order Number #100880972 on May 08, 2020 07:05 AM (PDT) pursuant to License Agreement with ICC & NYSDOS. No further reproduction, no

100880972

CHAPTER 21

DRY CLEANING

SECTION 2101 GENERAL

2101.1 Scope. Dry cleaning plants and their operations shall comply with the requirements of this chapter.

2101.2 Permit required. Permits shall be required as set forth in Section 105.6.

SECTION 2102 DEFINITIONS

2102.1 Definitions. The following terms are defined in Chapter 2:

DRY CLEANING.

DRY CLEANING PLANT.

DRY CLEANING ROOM.

DRY CLEANING SYSTEM.

SOLVENT OR LIQUID CLASSIFICATIONS.

Class I solvents.

Class II solvents.

Class IIIA solvents.

Class IIIB solvents.

Class IV solvents.

SECTION 2103 CLASSIFICATIONS

2103.1 Solvent classification. Dry cleaning solvents shall be classified according to their *flash point*s as follows:

1. Class I solvents are liquids having a *flash point* below 100°F (38°C).
2. Class II solvents are liquids having a *flash point* at or above 100°F (38°C) and below 140°F (60°C).
3. Class IIIA solvents are liquids having a *flash point* at or above 140°F (60°C) and below 200°F (93°C).
4. Class IIIB solvents are liquids having a *flash point* at or above 200°F (93°C).
5. Class IV solvents are liquids classified as nonflammable.

2103.2 Classification of dry cleaning plants and systems. Dry cleaning plants and systems shall be classified based on the solvents used as follows:

1. Type I—systems using Class I solvents.
2. Type II—systems using Class II solvents.
3. Type III-A—systems using Class IIIA solvents.
4. Type III-B—systems using Class IIIB solvents.
5. Type IV—systems using Class IV solvents in which dry cleaning is not conducted by the public.
6. Type V—systems using Class IV solvents in which dry cleaning is conducted by the public.

Spotting and pretreating operations conducted in accordance with Section 2106 shall not change the type of the dry cleaning plant.

2103.2.1 Multiple solvents. Dry cleaning plants using more than one class of solvent for dry cleaning shall be classified based on the numerically lowest solvent class.

2103.3 Design. The occupancy classification, design and construction of dry cleaning plants shall comply with the applicable requirements of the *Building Code of New York State*.

SECTION 2104 GENERAL REQUIREMENTS

2104.1 Prohibited use. Type I dry cleaning plants shall be prohibited. Limited quantities of Class I solvents stored and used in accordance with this section shall not be prohibited in dry cleaning plants.

2104.2 Building services. Building services and systems shall be designed, installed and maintained in accordance with this section and Chapter 6.

2104.2.1 Ventilation. Ventilation shall be provided in accordance with Section 502 of the *Mechanical Code of New York State* and DOL 29 CFR Part 1910.1000, where applicable.

2104.2.2 Heating. In Type II dry cleaning plants, heating shall be by indirect means using steam, hot water or hot oil only.

2104.2.3 Electrical wiring and equipment. Electrical wiring and equipment in dry cleaning rooms or other locations subject to flammable vapors shall be installed in accordance with NFPA 70.

2104.2.4 Bonding and grounding. Storage tanks, treatment tanks, filters, pumps, piping, ducts, dry cleaning units, stills, tumblers, drying cabinets and other such equipment, where not inherently electrically conductive, shall be bonded together and grounded. Isolated equipment shall be grounded.

SECTION 2105 OPERATING REQUIREMENTS

2105.1 General. The operation of dry cleaning systems shall comply with the requirements of Sections 2105.1.1 through 2105.3.

INTERNATIONAL CODE COUNCIL®
Copyright © 2019 ICC & NYSDOS. ALL RIGHTS RESERVED. Accessed by Lauren Gualdino (lgualdino@briarcliffmanor.org), (-) Order Number #100880972 on May 08, 2020 07:05 AM (PDT) pursuant to License Agreement with ICC & NYSDOS. No further reproduction, no

100880972

2105.1.1 Written instructions. Written instructions covering the proper installation and safe operation and use of equipment and solvent shall be given to the buyer.

2105.1.1.1 Type II, III-A, III-B and IV systems. In Type II, III-A, III-B and IV dry cleaning systems, machines shall be operated in accordance with the operating instructions furnished by the machinery manufacturer. Employees shall be instructed as to the hazards involved in their departments and in the work they perform.

2105.1.1.2 Type V systems. Operating instructions for customer use of Type V dry cleaning systems shall be conspicuously posted in a location near the dry cleaning unit. A telephone number shall be provided for emergency assistance.

2105.1.2 Equipment identification. The manufacturer shall provide nameplates on dry cleaning machines indicating the class of solvent for which each machine is designed.

2105.1.3 Open systems prohibited. Dry cleaning by immersion and agitation in open vessels shall be prohibited.

2105.1.4 Prohibited use of solvent. The use of solvents with a *flash point* below that for which a machine is designed or *listed* shall be prohibited.

2105.1.5 Equipment maintenance and housekeeping. Proper maintenance and operating practices shall be observed in order to prevent the leakage of solvent or the accumulation of lint. The handling of waste material generated by dry cleaning operations and the maintenance of facilities shall comply with the provisions of this section.

2105.1.5.1 Floors. Class I and II liquids shall not be used for cleaning floors.

2105.1.5.2 Filters. Filter residue and other residues containing solvent shall be handled and disposed of in covered metal containers.

2105.1.5.3 Lint. Lint and refuse shall be removed from traps daily, deposited in *approved* waste cans, removed from the premises, and disposed of safely. At all other times, traps shall be held securely in place.

2105.1.5.4 Customer areas. In Type V dry cleaning systems, customer areas shall be kept clean.

2105.2 Type II systems. Special operating requirements for Type II dry cleaning systems shall comply with the provisions of Sections 2105.2.1 through 2105.2.3.

2105.2.1 Inspection of materials. Materials to be dry cleaned shall be searched thoroughly and foreign materials, including matches and metallic substances, shall be removed.

2105.2.2 Material transfer. In removing materials from the washer, provisions shall be made for minimizing the dripping of solvent on the floor. Where materials are transferred from a washer to a drain tub, a nonferrous metal drip apron shall be placed so that the apron rests on the drain tub and the cylinder of the washer.

2105.2.3 Ventilation. A mechanical ventilation system that is designed to exhaust 1 cubic foot of air per minute for each square foot of floor area [0.0058 $m^3/(s \cdot m^2)$] shall be installed in dry cleaning rooms and in drying rooms. The ventilation system shall operate automatically when the dry cleaning equipment is in operation and shall have manual controls at an *approved* location.

2105.3 Type IV and V systems. Type IV and V dry cleaning systems shall be provided with an automatically activated exhaust ventilation system to maintain an air velocity of not less than 100 feet per minute (0.51 m/s) through the loading door when the door is opened. Such systems for dry cleaning equipment shall comply with the *Mechanical Code of New York State*.

Exception: Dry cleaning units are not required to be provided with exhaust ventilation where an exhaust hood is installed immediately outside of and above the loading door and operates at an airflow rate as follows:

$$Q = 100 \times A_{LD} \qquad \textbf{(Equation 21-1)}$$

where:

Q = flow rate exhausted through the hood, cubic feet per minute (m^3/s).

A_{LD}= area of the loading door, square feet (m^2).

SECTION 2106
SPOTTING AND PRETREATING

2106.1 General. Spotting and pretreating operations and equipment shall comply with the provisions of Sections 2106.2 through 2106.5.

2106.2 Class I solvents. The maximum quantity of Class I solvents permitted at any work station shall be 1 gallon (4 L). Spotting or prespotting shall be permitted to be conducted with Class I solvents where they are stored in and dispensed from *approved* safety cans or in sealed DOT-approved metal shipping containers of not more than 1-gallon (4 L) capacity.

2106.2.1 Spotting and prespotting. Spotting and prespotting shall be permitted to be conducted with Class I solvents where dispensed from plastic containers of not more than 1 pint (0.5 L) capacity.

2106.3 Class II and III solvents. Scouring, brushing, and spotting and pretreating shall be permitted to be conducted with Class II or III solvents. The maximum quantity of Class II or III solvents permitted at any work station shall be 1 gallon (4 L). In other than Group H-2 occupancy, the aggregate quantities of solvents shall not exceed the *maximum allowable quantity per control area* for use-open system.

2106.3.1 Spotting tables. Scouring, brushing or spotting tables on which articles are soaked in solvent shall have a liquid-tight top with a curb on all sides not less than 1 inch (25 mm) high. The top of the table shall be pitched to ensure thorough draining to a $1^1/_2$-inch (38 mm) drain connected to an *approved* container.

2106.3.2 Special handling. Where *approved*, articles that cannot be washed in the usual washing machines are

INTERNATIONAL CODE COUNCIL®
Copyright © 2019 ICC & NYSDOS. ALL RIGHTS RESERVED. Accessed by Lauren Gualdino (lgualdino@briarcliffmanor.org), (-) Order Number #100880972 on May 08, 2020 07:05 AM (PDT) pursuant to License Agreement with ICC & NYSDOS. No further reproduction, no

100880972

allowed to be cleaned in scrubbing tubs. Scrubbing tubs shall comply with the following:

1. Only Class II or III liquids shall be used.
2. The total amount of solvent used in such open containers shall not exceed 3 gallons (11 L).
3. Scrubbing tubs shall be secured to the floor.
4. Scrubbing tubs shall be provided with permanent $1^1/_2$-inch (38 mm) drains. Such drain shall be provided with a trap and shall be connected to an *approved* container.

2106.3.3 Ventilation. Scrubbing tubs, scouring, brushing or spotting operations shall be located such that solvent vapors are captured and exhausted by the ventilating system.

2106.3.4 Bonding and grounding. Metal scouring, brushing and spotting tables and scrubbing tubs shall be permanently and effectively bonded and grounded.

2106.4 Type IV systems. Flammable and combustible liquids used for spotting operations shall be stored in *approved* safety cans or in sealed DOTn-approved shipping containers of not more than 1 gallon (4 L) in capacity. Aggregate amounts shall not exceed 10 gallons (38 L).

2106.5 Type V systems. Spotting operations using flammable or *combustible liquids* are prohibited in Type V dry cleaning systems.

SECTION 2107
DRY CLEANING SYSTEMS

2107.1 General equipment requirements. Dry cleaning systems, including dry cleaning units, washing machines, stills, drying cabinets, tumblers and their appurtenances, including pumps, piping, valves, filters and solvent coolers, shall be installed and maintained in accordance with NFPA 32. The construction of buildings in which such systems are located shall comply with the requirements of this section and the *Building Code of New York State*.

2107.2 Type II systems. Type II dry cleaning and solvent tank storage rooms shall not be located below grade or above the lowest floor level of the building and shall comply with Sections 2107.2.1 through 2107.2.3.

Exception: Solvent storage tanks installed underground, in vaults or in special enclosures in accordance with Chapter 57.

2107.2.1 Fire-fighting access. Type II dry cleaning plants shall be located so that access is provided and maintained from one side for fire-fighting and fire control purposes in accordance with Section 503.

2107.2.2 Number of means of egress. Type II dry cleaning rooms shall have not less than two *means of egress* doors located at opposite ends of the room, not less than one of which shall lead directly to the outside.

2107.2.3 Spill control and secondary containment. Curbs, drains or other provisions for spill control and secondary containment shall be provided in accordance with Section 5004.2 to collect solvent leakage and fire protection water and direct it to a safe location.

2107.3 Solvent storage tanks. Solvent storage tanks for Class II, IIIA and IIIB liquids shall conform to the requirements of Chapter 57 and be located underground or outside, above ground.

Exception: As provided in NFPA 32 for inside storage or treatment tanks.

SECTION 2108
FIRE PROTECTION

2108.1 General. Where required by this section, *fire protection systems*, devices and equipment shall be installed, inspected, tested and maintained in accordance with Chapter 9.

2108.2 Automatic sprinkler system. An *automatic sprinkler system* shall be installed in accordance with Section 903.3.1.1 throughout dry cleaning plants containing Type II, Type III-A or Type III-B dry cleaning systems.

Exceptions:

1. An *automatic sprinkler system* shall not be required in Type III-A dry cleaning plants where the aggregate quantity of Class III-A solvent in dry cleaning machines and storage does not exceed 330 gallons (1250 L) and dry cleaning machines are equipped with a feature that will accomplish any one of the following:
   1.1. Prevent oxygen concentrations from reaching 8 percent or more by volume.
   1.2. Keep the temperature of the solvent not less than 30°F (16.7°C) below the flash point.
   1.3. Maintain the solvent vapor concentration at a level lower than 25 percent of the lower explosive limit (LEL).
   1.4. Utilize equipment *approved* for use in Class I, Division 2 hazardous locations in accordance with NFPA 70.
   1.5. Utilize an integrated dry-chemical, clean agent or water-mist automatic fire-extinguishing system designed in accordance with Chapter 9.
2. An *automatic sprinkler system* shall not be required in Type III-B dry cleaning plants where the aggregate quantity of Class III-B solvent in dry cleaning machines and storage does not exceed 3,300 gallons (12 490 L).

2108.3 Automatic fire-extinguishing systems. Type II dry cleaning units, washer-extractors, and drying tumblers in Type II dry cleaning plants shall be provided with an *approved* automatic fire-extinguishing system installed and maintained in accordance with Chapter 9.

Exception: Where *approved*, a manual steam jet not less than $^3/_4$ inch (19 mm) with a continuously available steam supply at a pressure not less than 15 pounds per square inch gauge (psig) (103 kPa) is allowed to be substituted for the automatic fire-extinguishing system.

INTERNATIONAL CODE COUNCIL®
Copyright © 2019 ICC & NYSDOS. ALL RIGHTS RESERVED. Accessed by Lauren Gualdino (lgualdino@briarcliffmanor.org), (-) Order Number #100880972 on May 08, 2020 07:05 AM (PDT) pursuant to License Agreement with ICC & NYSDOS. No further reproduction, no

100880972

2108.4 Portable fire extinguishers. Portable fire extinguishers shall be selected, installed and maintained in accordance with this section and Section 906. Not fewer than two 2-A:10-B:C portable fire extinguishers shall be provided near the doors inside dry cleaning rooms containing Type II, Type III-A and Type III-B dry cleaning systems.

INTERNATIONAL CODE COUNCIL®
Copyright © 2019 ICC & NYSDOS. ALL RIGHTS RESERVED. Accessed by Lauren Gualdino (lgualdino@briarcliffmanor.org), (-) Order Number #100880972 on May 08, 2020 07:05 AM (PDT) pursuant to License Agreement with ICC & NYSDOS. No further reproduction, no

100880972

CHAPTER 22
COMBUSTIBLE DUST-PRODUCING OPERATIONS

SECTION 2201
GENERAL

2201.1 Scope. The equipment, processes and operations involving dust explosion hazards shall comply with the provisions of this code and NFPA 652.

2201.2 Permits. Permits shall be required for *combustible dust*-producing operations as set forth in Section 105.6.

SECTION 2202
DEFINITION

2202.1 Definition. The following term is defined in Chapter 2:

COMBUSTIBLE DUST.

SECTION 2203
PRECAUTIONS

2203.1 Owner responsibility. The owner or operator of a facility with operations that manufacture, process, blend, convey, repackage, generate or handle potentially combustible dust or combustible particulate solids shall be responsible for compliance with the provisions of this code and NFPA 652.

2203.2 Dust hazard analysis (DHA). The requirements of NFPA 652 apply to all new and existing facilities and operations with combustible dust hazard. Existing facilities shall have a dust hazard analysis (DHA) completed in accordance with Section 7.1.2 of NFPA 652.

The fire code official shall be authorized to order a dust hazard analysis to occur sooner if a combustible dust hazard has been identified in a facility that has not previously performed an analysis.

2203.3 Sources of ignition. Smoking, the use of heating or other devices employing an open flame, or the use of spark-producing equipment is prohibited in areas where *combustible dust* is generated, stored, manufactured, processed or handled.

2203.4 Housekeeping. Accumulation of *combustible dust* shall be kept to a minimum in the interior of buildings. Accumulated *combustible dust* shall be collected by vacuum cleaning or other means that will not place *combustible dust* into suspension in air. Forced air or similar methods shall not be used to remove dust from surfaces.

SECTION 2204
ADDITIONAL REQUIREMENTS

2204.1 Specific hazards standards. The industry- or commodity-specific codes and standards listed in Table 2204.1 shall be complied with based on the identification and evaluation of the specific fire and deflagration hazards that exist at a facility.

TABLE 2204.1
SPECIFIC HAZARDS STANDARDS

STANDARD	SUBJECT
NFPA 61	Standard for the Prevention of Fires and Dust Explosions in Agricultural and Food Processing Facilities
NFPA 69	Standard on Explosion Prevention Systems
NFPA 70	National Electrical Code
NFPA 85	Boiler and Combustion System Hazards Code
NFPA 120	Standard for Fire Prevention and Control in Coal Mines
NFPA 484	Standard for Combustible Metals
NFPA 654	Standard for Prevention of Fire and Dust Explosions from the Manufacturing, Processing and Handling of Combustible Particulate Solids
NFPA 655	Standard for the Prevention of Sulfur Fires and Explosions
NFPA 664	Standard for the Prevention of Fires and Explosions in Wood Processing and Woodworking Facilities

INTERNATIONAL CODE COUNCIL®
Copyright © 2019 ICC & NYSDOS. ALL RIGHTS RESERVED. Accessed by Lauren Gualdino (lgualdino@briarcliffmanor.org), (-) Order Number #100880972 on May 08, 2020 07:05 AM (PDT) pursuant to License Agreement with ICC & NYSDOS. No further reproduction, no

100880972

INTERNATIONAL CODE COUNCIL®
Copyright © 2019 ICC & NYSDOS. ALL RIGHTS RESERVED. Accessed by Lauren Gualdino (lgualdino@briarcliffmanor.org), (-) Order Number #100880972 on May 08, 2020 07:05 AM (PDT) pursuant to License Agreement with ICC & NYSDOS. No further reproduction, no

100880972

CHAPTER 23

MOTOR FUEL-DISPENSING FACILITIES AND REPAIR GARAGES

SECTION 2301 GENERAL

2301.1 Scope. Automotive motor fuel-dispensing facilities, marine motor fuel-dispensing facilities, fleet vehicle motor fuel-dispensing facilities, aircraft motor-vehicle fuel-dispensing facilities and repair garages shall be in accordance with this chapter and the *Building Code of New York State, Fuel Gas Code of New York State* and *Mechanical Code of New York State*. Such operations shall include both those that are open to the public and private operations.

2301.2 Permits. Permits shall be required as set forth in Section 105.6.

[NY] 2301.3 Construction documents. *Construction documents* shall be submitted for review and approval prior to the installation or construction of automotive, marine or fleet vehicle motor fuel-dispensing facilities and repair garages in accordance with Section 106.2.

2301.4 Indoor motor fuel-dispensing facilities. Motor fuel-dispensing facilities located inside buildings shall comply with the *Building Code of New York State* and NFPA 30A.

2301.4.1 Protection of floor openings in indoor motor fuel-dispensing facilities. Where motor fuel-dispensing facilities are located inside buildings and the dispensers are located above spaces within the building, openings beneath dispensers shall be sealed to prevent the flow of leaked fuel to lower building spaces.

2301.5 Electrical. Electrical wiring and equipment shall be suitable for the locations in which they are installed and shall comply with Section 604, NFPA 30A and NFPA 70.

2301.6 Heat-producing appliances. Heat-producing appliances shall be suitable for the locations in which they are installed and shall comply with NFPA 30A and the *Fuel Gas Code of New York State* or the *Mechanical Code of New York State*.

SECTION 2302 DEFINITIONS

2302.1 Definitions. The following terms are defined in Chapter 2:

AIRCRAFT MOTOR-VEHICLE FUEL-DISPENSING FACILITY.

ALCOHOL-BLENDED FUELS.

AUTOMOTIVE MOTOR FUEL-DISPENSING FACILITY.

DISPENSING DEVICE, OVERHEAD TYPE.

FLEET VEHICLE MOTOR FUEL-DISPENSING FACILITY.

LIQUEFIED NATURAL GAS (LNG).

MARINE MOTOR FUEL-DISPENSING FACILITY.

REPAIR GARAGE.

SELF-SERVICE MOTOR FUEL-DISPENSING FACILITY.

SECTION 2303 LOCATION OF DISPENSING DEVICES

2303.1 Location of dispensing devices. Dispensing devices shall be located as follows:

1. Ten feet (3048 mm) or more from *lot lines*.
2. Ten feet (3048 mm) or more from buildings having combustible exterior wall surfaces or buildings having noncombustible exterior wall surfaces that are not part of a 1-hour fire-resistance-rated assembly or buildings having combustible overhangs.

   Exception: Canopies constructed in accordance with the *Building Code of New York State* providing weather protection for the fuel islands.
3. Such that all portions of the vehicle being fueled will be on the premises of the motor fuel-dispensing facility.
4. Such that the nozzle, where the hose is fully extended, will not reach within 5 feet (1524 mm) of building openings.
5. Twenty feet (6096 mm) or more from fixed sources of ignition.

2303.2 Emergency disconnect switches. An *approved* emergency disconnect switch shall be provided at an *approved* location to stop the transfer of fuel to the fuel dispensers in the event of a fuel spill or other emergency. The emergency disconnect switch for exterior fuel dispensers shall be provided with *ready access* and shall be located within 100 feet (30 480 mm) of, but not less than 20 feet (6096 mm) from, the fuel dispensers. For interior fuel-dispensing operations, the emergency disconnect switch shall be provided with *ready access* and be installed at an *approved* location. Such devices shall be distinctly *labeled* as: EMERGENCY FUEL SHUTOFF. Signs shall be provided in *approved* locations.

2303.2.1 Height. The height of the emergency disconnect switch shall be not less than 42 inches (1067 mm) and not more than 48 inches (1372 mm) measured vertically, from the floor level to the activating button.

SECTION 2304 DISPENSING OPERATIONS

2304.1 Supervision of dispensing. The dispensing of fuel at motor fuel-dispensing facilities shall be conducted by a qualified attendant or shall be under the supervision of a qualified attendant at all times or shall be in accordance with Section 2304.3.

INTERNATIONAL CODE COUNCIL®
Copyright © 2019 ICC & NYSDOS. ALL RIGHTS RESERVED. Accessed by Lauren Gualdino (lgualdino@briarcliffmanor.org), (-) Order Number #100880972 on May 08, 2020 07:05 AM (PDT) pursuant to License Agreement with ICC & NYSDOS. No further reproduction, no

100880972

2304.2 Attended self-service motor fuel-dispensing facilities. Attended self-service motor fuel-dispensing facilities shall comply with Sections 2304.2.1 through 2304.2.5. Attended self-service motor fuel-dispensing facilities shall have not less than one qualified attendant on duty while the facility is open for business. The attendant's primary function shall be to supervise, observe and control the dispensing of fuel. The attendant shall prevent the dispensing of fuel into containers that do not comply with Section 2304.4.1, control sources of ignition, give immediate attention to accidental spills or releases, and be prepared to use fire extinguishers.

2304.2.1 Special-type dispensers. *Approved* special-dispensing devices and systems such as, but not limited to, card- or coin-operated and remote-preset types, are allowed at motor fuel-dispensing facilities provided that there is not less than one qualified attendant on duty while the facility is open to the public. Remote preset-type devices shall be set in the "off" position while not in use so that the dispenser cannot be activated without the knowledge of the attendant.

2304.2.2 Emergency controls. *Approved* emergency controls shall be provided in accordance with Section 2303.2.

2304.2.3 Operating instructions. Dispenser operating instructions shall be conspicuously posted in *approved* locations on every dispenser.

2304.2.4 Obstructions to view. Dispensing devices shall be in clear view of the attendant at all times. Obstructions shall not be placed between the dispensing area and the attendant.

2304.2.5 Communications. The attendant shall be able to communicate with persons in the dispensing area at all times. An *approved* method of communicating with the fire department shall be provided for the attendant.

2304.3 Unattended self-service motor fuel-dispensing facilities. Unattended self-service motor fuel-dispensing facilities shall comply with Sections 2304.3.1 through 2304.3.7.

2304.3.1 General. Where *approved,* unattended self-service motor fuel-dispensing facilities are allowed. As a condition of approval, the *owner* or operator shall provide, and be accountable for, daily site visits, regular equipment inspection and maintenance.

2304.3.2 Dispensers. Dispensing devices shall comply with Section 2306.7. Dispensing devices operated by the insertion of coins or currency shall not be used unless *approved.*

2304.3.3 Emergency controls. *Approved* emergency controls shall be provided in accordance with Section 2303.2. Emergency controls shall be of a type that is only manually resettable.

2304.3.4 Operating instructions. Dispenser operating instructions shall be conspicuously posted in *approved* locations on every dispenser and shall indicate the location of the emergency controls required by Section 2304.3.3.

2304.3.5 Emergency procedures. An *approved* emergency procedures sign, in addition to the signs required by Section 2305.6, shall be posted in a conspicuous location and shall read:

IN CASE OF FIRE, SPILL OR RELEASE

1. USE EMERGENCY PUMP SHUTOFF

2. REPORT THE ACCIDENT!

FIRE DEPARTMENT TELEPHONE NO._____

FACILITY ADDRESS _____

2304.3.6 Communications. A telephone not requiring a coin to operate or other *approved,* clearly identified means to notify the fire department shall be provided on the site in a location *approved* by the *fire code official.*

2304.3.7 Quantity limits. Dispensing equipment used at unsupervised locations shall comply with one of the following:

1. Dispensing devices shall be programmed or set to limit uninterrupted fuel delivery to 25 gallons (95 L) and require a manual action to resume delivery.
2. The amount of fuel being dispensed shall be limited in quantity by a preprogrammed card as *approved.*

2304.4 Dispensing into portable containers. The dispensing of flammable or *combustible liquids* into portable *approved* containers shall comply with Sections 2304.4.1 through 2304.4.3.

2304.4.1 Approved containers required. Class I, II and IIIA liquids shall not be dispensed into a portable container unless such container does not exceed a 6-gallon (22.7 L) capacity, is *listed* or of *approved* material and construction, and has a tight closure with a screwed or spring-loaded cover so designed that the contents can be dispensed without spilling. Liquids shall not be dispensed into portable or cargo tanks.

2304.4.2 Nozzle operation. A hose nozzle valve used for dispensing Class I liquids into a portable container shall be in compliance with Section 2306.7.6 and be manually held open during the dispensing operation.

2304.4.3 Location of containers being filled. Portable containers shall not be filled while located inside the trunk, passenger compartment or truck bed of a vehicle.

SECTION 2305
OPERATIONAL REQUIREMENTS

2305.1 Tank filling operations for Class I, II or III liquids. Delivery operations to tanks for Class I, II or III liquids shall comply with Sections 2305.1.1 through 2305.1.3 and the applicable requirements of Chapter 57.

2305.1.1 Delivery vehicle location. Where liquid delivery to above-ground storage tanks is accomplished by positive-pressure operation, tank vehicles shall be positioned not less than 25 feet (7620 mm) from tanks receiving Class I liquids and 15 feet (4572 mm) from tanks receiving Class II and IIIA liquids, measured from the tank to the nearest unloading valve on the tank vehicle.

2305.1.2 Tank capacity calculation. The driver, operator or attendant of a tank vehicle shall, before making delivery

INTERNATIONAL CODE COUNCIL®
Copyright © 2019 ICC & NYSDOS. ALL RIGHTS RESERVED. Accessed by Lauren Gualdino (lgualdino@briarcliffmanor.org), (-) Order Number #100880972 on May 08, 2020 07:05 AM (PDT) pursuant to License Agreement with ICC & NYSDOS. No further reproduction, no

100880972

to a tank, determine the unfilled, available capacity of such tank by an *approved* gauging device.

2305.1.3 Tank fill connections. Delivery of flammable liquids to tanks more than 1,000 gallons (3785 L) in capacity shall be made by means of *approved* liquid- and vapor-tight connections between the delivery hose and tank fill pipe. Where tanks are equipped with any type of vapor recovery system, all connections required to be made for the safe and proper functioning of the particular vapor recovery process shall be made. Such connections shall be made liquid and vapor tight and remain connected throughout the unloading process. Vapors shall not be discharged at grade level during delivery.

2305.2 Equipment maintenance and inspection. Motor fuel-dispensing facility equipment shall be maintained in proper working order at all times in accordance with Sections 2305.2.1 through 2305.2.5.

2305.2.1 Inspections. Flammable and *combustible liquid* fuel-dispensing and containment equipment shall be periodically inspected where required by the *fire code official* to verify that the equipment is in proper working order and not subject to leakage. Records of inspections shall be maintained.

2305.2.2 Repairs and service. The *fire code official* is authorized to require damaged or unsafe containment and dispensing equipment to be repaired or serviced in an *approved* manner.

2305.2.3 Dispensing devices. Where maintenance to Class I liquid dispensing devices becomes necessary and such maintenance could allow the accidental release or ignition of liquid, the following precautions shall be taken before such maintenance is begun:

1. Only persons knowledgeable in performing the required maintenance shall perform the work.
2. Electrical power to the dispensing device and pump serving the dispenser shall be shut off at the main electrical disconnect panel.
3. The emergency shutoff valve at the dispenser, where installed, shall be closed.
4. Vehicle traffic and unauthorized persons shall be prevented from coming within 12 feet (3658 mm) of the dispensing device.

2305.2.4 Emergency shutoff valves. Automatic emergency shutoff valves required by Section 2306.7.4 shall be checked not less than once per year by manually tripping the hold-open linkage.

2305.2.5 Leak detectors. Leak detection devices required by Section 2306.7.7.1 shall be checked and tested not less than annually in accordance with the manufacturer's specifications to ensure proper installation and operation.

2305.3 Spill control. Provisions shall be made to prevent liquids spilled during dispensing operations from flowing into buildings. Acceptable methods include, but shall not be limited to, grading driveways, raising doorsills or other *approved* means.

2305.4 Sources of ignition. Smoking and open flames shall be prohibited in areas where fuel is dispensed. The engines of vehicles being fueled shall be shut off during fueling. Electrical equipment shall be in accordance with NFPA 70.

2305.5 Fire extinguishers. *Approved* portable fire extinguishers complying with Section 906 with a minimum rating of 2-A:20-B:C shall be provided and located such that an extinguisher is not more than 75 feet (22 860 mm) from pumps, dispensers or storage tank fill-pipe openings.

2305.6 Warning signs. Warning signs shall be conspicuously posted within sight of each dispenser in the fuel-dispensing area and shall state the following:

1. No smoking.
2. Shut off motor.
3. Discharge your static electricity before fueling by touching a metal surface away from the nozzle.
4. To prevent static charge, do not reenter your vehicle while gasoline is pumping.
5. If a fire starts, do not remove nozzle—back away immediately.
6. It is unlawful and dangerous to dispense gasoline into unapproved containers.
7. No filling of portable containers in or on a motor vehicle. Place container on ground before filling.

2305.7 Control of brush and debris. Fenced and diked areas surrounding above-ground tanks shall be kept free from vegetation, debris and other material that is not necessary to the proper operation of the tank and piping system.

Weeds, grass, brush, trash and other combustible materials shall be kept not less than 10 feet (3048 mm) from fuel-handling equipment.

SECTION 2306
FLAMMABLE AND COMBUSTIBLE LIQUID MOTOR FUEL-DISPENSING FACILITIES

2306.1 General. Storage of flammable and *combustible liquids* shall be in accordance with Chapter 57 and Sections 2306.2 through 2306.6.3.

2306.2 Method of storage. *Approved* methods of storage for Class I, II and III liquid fuels at motor fuel-dispensing facilities shall be in accordance with Sections 2306.2.1 through 2306.2.6.

2306.2.1 Underground tanks. Underground tanks for the storage of Class I, II and IIIA liquid fuels shall comply with Chapter 57.

2306.2.1.1 Inventory control for underground tanks. Accurate daily inventory records shall be maintained and reconciled on underground fuel storage tanks for indication of possible leakage from tanks and piping. The records shall include records for each product showing daily reconciliation between sales, use, receipts and inventory on hand. Where there is more than one system consisting of tanks serving separate pumps or dispensers for a product, the reconciliation shall be ascertained separately for each tank system. A consistent or accidental loss of product shall be immediately reported to the *fire code official*.

INTERNATIONAL CODE COUNCIL®
Copyright © 2019 ICC & NYSDOS. ALL RIGHTS RESERVED. Accessed by Lauren Gualdino (lgualdino@briarcliffmanor.org), (-) Order Number #100880972 on May 08, 2020 07:05 AM (PDT) pursuant to License Agreement with ICC & NYSDOS. No further reproduction, no

100880972

2306.2.2 Above-ground tanks located inside buildings. Above-ground tanks for the storage of Class I, II and IIIA liquid fuels are allowed to be located in buildings. Such tanks shall be located in special enclosures complying with Section 2306.2.6, in a liquid storage room or a liquid storage warehouse complying with Chapter 57, or shall be *listed* and *labeled* as protected above-ground tanks in accordance with UL 2085.

2306.2.3 Above-ground tanks located outdoors, above grade. Above-ground tanks shall not be used for the storage of Class I, II or III liquid motor fuels, except as provided by this section.

1. Above-ground tanks used for outdoor, above-grade storage of Class I liquids shall be *listed* and *labeled* as protected above-ground tanks in accordance with UL 2085 and shall be in accordance with Chapter 57. Such tanks shall be located in accordance with Table 2306.2.3.
2. Above-ground tanks used for outdoor, above-grade storage of Class II or IIIA liquids shall be *listed* and *labeled* as protected above-ground tanks in accordance with UL 2085 and shall be installed in accordance with Chapter 57. Tank locations shall be in accordance with Table 2306.2.3.

   Exception: Other above-ground tanks that comply with Chapter 57 where *approved* by the *fire code official*.
3. Tanks containing fuels shall not exceed 12,000 gallons (45 420 L) in individual capacity or 48,000 gallons (181 680 L) in aggregate capacity. Installations with the maximum allowable aggregate capacity shall be separated from other such installations by not less than 100 feet (30 480 mm).
4. Tanks located at farms, construction projects, or rural areas shall comply with Section 5706.2.
5. Above-ground tanks used for outdoor, above-grade storage of Class IIIB liquid motor fuel shall be *listed* and *labeled* in accordance with UL 142 or *listed* and *labeled* as protected above-ground tanks in accordance with UL 2085 and shall be installed in accordance with Chapter 57. Tank locations shall be in accordance with Table 2306.2.3.

2306.2.4 Above-ground tanks located in above-grade vaults or below-grade vaults. Above-ground tanks used for storage of Class I, II or IIIA liquid motor fuels are allowed to be installed in vaults located above grade or below grade in accordance with Section 5704.2.8 and shall comply with Sections 2306.2.4.1 and 2306.2.4.2. Tanks in above-grade vaults shall also comply with Table 2306.2.3.

2306.2.4.1 Tank capacity limits. Tanks storing Class I and Class II liquids at an individual site shall be limited to a maximum individual capacity of 15,000 gallons (56 775 L) and an aggregate capacity of 48,000 gallons (181 680 L).

2306.2.4.2 Fleet vehicle motor fuel-dispensing facilities. Tanks storing Class II and Class IIIA liquids at a fleet vehicle motor fuel-dispensing facility shall be limited to a maximum individual capacity of 20,000 gallons (75 700 L) and an aggregate capacity of 80,000 gallons (302 800 L).

2306.2.5 Portable tanks. Where *approved* by the *fire code official*, portable tanks are allowed to be temporarily used in conjunction with the dispensing of Class I, II or III liquids into the fuel tanks of motor vehicles or motorized equipment on premises not normally open to the public. The approval shall include a definite time limit.

2306.2.6 Special enclosures. Where installation of tanks in accordance with Section 5704.2.11 is impractical, or because of property or building limitations, tanks for liquid motor fuels are allowed to be installed in buildings in special enclosures in accordance with all of the following:

TABLE 2306.2.3
MINIMUM SEPARATION REQUIREMENTS FOR ABOVE-GROUND TANKS

TANK TYPE	INDIVIDUAL TANK CAPACITY (gallons)	MINIMUM DISTANCE FROM NEAREST IMPORTANT BUILDING ON SAME PROPERTY (feet)	MINIMUM DISTANCE FROM NEAREST FUEL DISPENSER (feet)	MINIMUM DISTANCE FROM LOT LINE THAT IS OR CAN BE BUILT ON, INCLUDING THE OPPOSITE SIDE OF A PUBLIC WAY (feet)	MINIMUM DISTANCE FROM NEAREST SIDE OF ANY PUBLIC WAY (feet)	MINIMUM DISTANCE BETWEEN TANKS (feet)
Protected above-ground tanks	Less than or equal to 6,000	5	25[a, c]	15	5	3
	Greater than 6,000	15	25[a, c]	25	15	3
Tanks in vaults	0–20,000	0[b]	0	0[b]	0	Separate compartment required for each tank
Other tanks	All	50	50	100	50	3

For SI: 1 foot = 304.8 mm, 1 gallon = 3.785 L.

a. At fleet vehicle motor fuel-dispensing facilities, a minimum separation distance is not required.

b. Underground vaults shall be located such that they will not be subject to loading from nearby structures, or they shall be designed to accommodate applied loads from existing or future structures that can be built nearby.

c. For Class IIIB liquids in protected above-ground tanks, a minimum separation distance is not required.

INTERNATIONAL CODE COUNCIL®
Copyright © 2019 ICC & NYSDOS. ALL RIGHTS RESERVED. Accessed by Lauren Gualdino (lgualdino@briarcliffmanor.org), (-) Order Number #100880972 on May 08, 2020 07:05 AM (PDT) pursuant to License Agreement with ICC & NYSDOS. No further reproduction, no

100880972

1. The special enclosure shall be liquid tight and vapor tight.
2. The special enclosure shall not contain backfill.
3. Sides, top and bottom of the special enclosure shall be of reinforced concrete not less than 6 inches (152 mm) thick, with openings for inspection through the top only.
4. Tank connections shall be piped or closed such that neither vapors nor liquid can escape into the enclosed space between the special enclosure and any tanks inside the special enclosure.
5. Means shall be provided whereby portable equipment can be employed to discharge to the outside any vapors that might accumulate inside the special enclosure should leakage occur.
6. Tanks containing Class I, II or IIIA liquids inside a special enclosure shall not exceed 6,000 gallons (22 710 L) in individual capacity or 18,000 gallons (68 130 L) in aggregate capacity.
7. Each tank within special enclosures shall be surrounded by a clear space of not less than 3 feet (910 mm) to allow for maintenance and inspection.

2306.3 Security. Above-ground tanks for the storage of liquid motor fuels shall be safeguarded from public access or unauthorized entry in an *approved* manner.

2306.4 Physical protection. Guard posts complying with Section 312 or other *approved* means shall be provided to protect above-ground tanks against impact by a motor vehicle unless the tank is *listed* as a protected above-ground tank with vehicle impact protection.

2306.5 Secondary containment. Above-ground tanks shall be provided with drainage control or diking in accordance with Chapter 57. Drainage control and diking is not required for *listed* secondary containment tanks. Secondary containment systems shall be monitored either visually or automatically. Enclosed secondary containment systems shall be provided with emergency venting in accordance with Section 2306.6.2.5.

2306.6 Piping, valves, fittings and ancillary equipment for use with flammable or combustible liquids. The design, fabrication, assembly, testing and inspection of piping, valves, fittings and ancillary equipment for use with flammable or *combustible liquids* shall be in accordance with Chapter 57 and Sections 2306.6.1 through 2306.6.3.

2306.6.1 Protection from damage. Piping shall be located such that it is protected from physical damage.

2306.6.2 Piping, valves, fittings and ancillary equipment for above-ground tanks for Class I, II and III liquids. Piping, valves, fittings and ancillary equipment for above-ground tanks storing Class I, II and III liquids shall comply with Sections 2306.6.2.1 through 2306.6.2.6.

2306.6.2.1 Tank openings. Tank openings for above-ground tanks shall be through the top only.

2306.6.2.2 Fill-pipe connections. The fill pipe for above-ground tanks shall be provided with a means for making a direct connection to the tank vehicle's fuel-delivery hose so that the delivery of fuel is not exposed to the open air during the filling operation. Where any portion of the fill pipe exterior to the tank extends below the level of the top of the tank, a check valve shall be installed in the fill pipe not more than 12 inches (305 mm) from the fill-hose connection.

2306.6.2.3 Overfill protection. Overfill protection shall be provided for above-ground flammable and *combustible liquid* storage tanks in accordance with Sections 5704.2.7.5.8 and 5704.2.9.7.5.

2306.6.2.4 Siphon prevention. An *approved* antisiphon method shall be provided in the piping system to prevent flow of liquid by siphon action.

2306.6.2.5 Emergency relief venting. Above-ground storage tanks, tank compartments and enclosed secondary containment spaces shall be provided with emergency relief venting in accordance with Chapter 57.

2306.6.2.6 Spill containers. A spill container having a capacity of not less than 5 gallons (19 L) shall be provided for each fill connection. For tanks with a top fill connection, spill containers shall be noncombustible and shall be fixed to the tank and equipped with a manual drain valve that drains into the primary tank. For tanks with a remote fill connection, a portable spill container is allowed.

2306.6.3 Piping, valves, fittings and ancillary equipment for underground tanks. Piping, valves, fittings and ancillary equipment for underground tanks shall comply with Chapter 57 and NFPA 30A.

2306.7 Fuel-dispensing systems for flammable or combustible liquids. The design, fabrication and installation of fuel-dispensing systems for flammable or *combustible liquid* fuels shall be in accordance with Sections 2306.7.1 through 2306.7.9.2.4. Alcohol-blended fuel-dispensing systems shall also comply with Section 2306.8.

2306.7.1 Listed equipment. Electrical equipment, dispensers, hose, nozzles and submersible or subsurface pumps used in fuel-dispensing systems shall be *listed*.

2306.7.2 Fixed pumps required. Class I and II liquids shall be transferred from tanks by means of fixed pumps designed and equipped to allow control of the flow and prevent leakage or accidental discharge.

2306.7.3 Mounting of dispensers. Dispensing devices, except those installed on top of a protected above-ground tank that qualifies as vehicle-impact resistant, shall be protected against physical damage by mounting on a concrete island 6 inches (152 mm) or more in height, or shall be protected in accordance with Section 312. Dispensing devices shall be installed and securely fastened to their mounting surface in accordance with the dispenser manufacturer's instructions. Dispensing devices installed indoors shall be located in an *approved* position where they cannot be struck by an out-of-control vehicle descending a ramp or other slope.

2306.7.3.1 Additional impact protection. The *fire code official* is authorized to require additional impact protection in accordance with Section 312 where dis-

INTERNATIONAL CODE COUNCIL®
Copyright © 2019 ICC & NYSDOS. ALL RIGHTS RESERVED. Accessed by Lauren Gualdino (lgualdino@briarcliffmanor.org), (-) Order Number #100880972 on May 08, 2020 07:05 AM (PDT) pursuant to License Agreement with ICC & NYSDOS. No further reproduction, no

100880972

pensing devices are located in areas near parking areas, multiple dispensing devices, highway on- and off-ramps, and other areas where there is a higher potential for vehicle impacts.

2306.7.4 Dispenser emergency shutoff valve. An *approved* automatic emergency shutoff valve designed to close in the event of a fire or impact shall be properly installed in the liquid supply line at the base of each dispenser supplied by a remote pump. The valve shall be installed so that the shear groove is flush with or within $^1/_2$ inch (12.7 mm) of the top of the concrete dispenser island and there is clearance provided for maintenance purposes around the valve body and operating parts. The valve shall be installed at the liquid supply line inlet of each overhead-type dispenser. Where installed, a vapor return line located inside the dispenser housing shall have a shear section or *approved* flexible connector for the liquid supply line emergency shutoff valve to function. Emergency shutoff valves shall be installed and maintained in accordance with the manufacturer's instructions, tested at the time of initial installation and not less than yearly thereafter in accordance with Section 2305.2.4.

2306.7.5 Dispenser hose. Dispenser hoses shall be not more than 18 feet (5486 mm) in length unless otherwise *approved*. Dispenser hoses shall be *listed* and *approved*. When not in use, hoses shall be reeled, racked or otherwise protected from damage.

2306.7.5.1 Emergency breakaway devices. Dispenser hoses for Class I and II liquids shall be equipped with a *listed* emergency breakaway device designed to retain liquid on both sides of a breakaway point. Such devices shall be installed and maintained in accordance with the manufacturer's instructions. Where hoses are attached to hose-retrieving mechanisms, the emergency breakaway device shall be located between the hose nozzle and the point of attachment of the hose-retrieval mechanism to the hose.

2306.7.6 Fuel delivery nozzles. A listed automatic-closing-type hose nozzle valve with or without a latch-open device shall be provided on island-type dispensers used for dispensing Class I, II or III liquids.

Overhead-type dispensing units shall be provided with a *listed* automatic-closing-type hose nozzle valve without a latch-open device.

Exception: A *listed* automatic-closing-type hose nozzle valve with latch-open device is allowed to be used on overhead-type dispensing units where the design of the system is such that the hose nozzle valve will close automatically in the event the valve is released from a fill opening or upon impact with a driveway.

2306.7.6.1 Special requirements for nozzles. Where dispensing of Class I, II or III liquids is performed, a listed automatic-closing-type hose nozzle valve shall be used incorporating all of the following features:

1. The hose nozzle valve shall be equipped with an integral latch-open device.
2. Where the flow of product is normally controlled by devices or equipment other than the hose nozzle valve, the hose nozzle valve shall not be capable of being opened unless the delivery hose is pressurized. If pressure to the hose is lost, the nozzle shall close automatically.

   Exception: Vapor recovery nozzles incorporating insertion interlock devices designed to achieve shutoff on disconnect from the vehicle fill pipe.
3. The hose nozzle shall be designed such that the nozzle is retained in the fill pipe during the filling operation.
4. The system shall include *listed* equipment with a feature that causes or requires the closing of the hose nozzle valve before the product flow can be resumed or before the hose nozzle valve can be replaced in its normal position in the dispenser.

2306.7.7 Remote pumping systems. Remote pumping systems for liquid fuels shall comply with Sections 2306.7.7.1 and 2306.7.7.2.

2306.7.7.1 Leak detection. Where remote pumps are used to supply fuel dispensers, each pump shall have installed on the discharge side a *listed* leak detection device that will detect a leak in the piping and dispensers and provide an indication. A leak detection device is not required if the piping from the pump discharge to under the dispenser is above ground and visible.

2306.7.7.2 Location. Remote pumps installed above grade, outside of buildings, shall be located not less than 10 feet (3048 mm) from lines of adjoining property that can be built on and not less than 5 feet (1524 mm) from any building opening. Where an outside pump location is impractical, pumps are permitted to be installed inside buildings as provided for dispensers in Section 2301.4 and Chapter 57. Pumps shall be substantially anchored and protected against physical damage.

2306.7.8 Gravity and pressure dispensing. Flammable liquids shall not be dispensed by gravity from tanks, drums, barrels or similar containers. Flammable or *combustible liquids* shall not be dispensed by a device operating through pressure within a storage tank, drum or container.

2306.7.9 Vapor-recovery and vapor-processing systems. Vapor-recovery and vapor-processing systems shall be in accordance with Sections 2306.7.9.1 through 2306.7.9.2.4.

2306.7.9.1 Vapor-balance systems. Vapor-balance systems shall comply with Sections 2306.7.9.1.1 through 2306.7.9.1.5.

2306.7.9.1.1 Dispensing devices. Dispensing devices incorporating provisions for vapor recovery shall be *listed* and *labeled*. Where existing *listed* or *labeled* dispensing devices are modified for vapor recovery, such modifications shall be *listed* by report by a nationally recognized testing laboratory. The listing by report shall contain a description of

INTERNATIONAL CODE COUNCIL®
Copyright © 2019 ICC & NYSDOS. ALL RIGHTS RESERVED. Accessed by Lauren Gualdino (lgualdino@briarcliffmanor.org), (-) Order Number #100880972 on May 08, 2020 07:05 AM (PDT) pursuant to License Agreement with ICC & NYSDOS. No further reproduction, no

100880972

the component parts used in the modification and recommended method of installation on specific dispensers. Such report shall be made available on request of the *fire code official*.

Means shall be provided to shut down fuel dispensing in the event the vapor return line becomes blocked.

2306.7.9.1.2 Vapor-return line closeoff. An acceptable method shall be provided to close off the vapor return line from dispensers when the product is not being dispensed.

2306.7.9.1.3 Piping. Piping in vapor-balance systems shall be in accordance with Sections 5703.6, 5704.2.9 and 5704.2.11. Nonmetallic piping shall be installed in accordance with the manufacturer's instructions.

Existing and new vent piping shall be in accordance with Sections 5703.6 and 5704.2. Vapor return piping shall be installed in a manner that drains back to the tank, without sags or traps in which liquid can become trapped. If necessary, because of grade, condensate tanks are allowed in vapor return piping. Condensate tanks shall be designed and installed so that they can be drained without opening.

2306.7.9.1.4 Flexible joints and shear joints. Flexible joints shall be installed in accordance with Section 5703.6.9.

An *approved* shear joint shall be rigidly mounted and connected by a union in the vapor return piping at the base of each dispensing device. The shear joint shall be mounted flush with the top of the surface on which the dispenser is mounted.

2306.7.9.1.5 Testing. Vapor return lines and vent piping shall be tested in accordance with Section 5703.6.3.

2306.7.9.2 Vapor-processing systems. Vapor-processing systems shall comply with Sections 2306.7.9.2.1 through 2306.7.9.2.4.

2306.7.9.2.1 Equipment. Equipment in vapor-processing systems, including hose nozzle valves, vapor pumps, flame arresters, fire checks or systems for prevention of flame propagation, controls and vapor-processing equipment, shall be individually *listed* for the intended use in a specified manner.

Vapor-processing systems that introduce air into the underground piping or storage tanks shall be provided with equipment for prevention of flame propagation that has been tested and *listed* as suitable for the intended use.

2306.7.9.2.2 Location. Vapor-processing equipment shall be located at or above grade. Sources of ignition shall be located not less than 50 feet (15 240 mm) from fuel-transfer areas and not less than 18 inches (457 mm) above tank fill openings and tops of dispenser islands. Vapor-processing units shall be located not less than 10 feet (3048 mm) from the nearest building or *lot line* of a property that can be built on.

Exception: Where the required distances to buildings, *lot lines* or fuel-transfer areas cannot be obtained, means shall be provided to protect equipment against fire exposure. Acceptable means shall include but not be limited to either of the following:

1. *Approved* protective enclosures, which extend not less than 18 inches (457 mm) above the equipment, constructed of fire-resistant or noncombustible materials.
2. Fire protection using an *approved* water-spray system.

2306.7.9.2.2.1 Distance from dispensing devices. Vapor-processing equipment shall be located not less than 20 feet (6096 mm) from dispensing devices.

2306.7.9.2.2.2 Physical protection. Vapor-processing equipment shall be protected against physical damage by guardrails, curbs, protective enclosures or fencing. Where *approved* protective enclosures are used, *approved* means shall be provided to ventilate the volume within the enclosure to prevent pocketing of flammable vapors.

2306.7.9.2.2.3 Downslopes. Where a downslope exists toward the location of the vapor-processing unit from a fuel-transfer area, the *fire code official* is authorized to require additional separation by distance and height.

2306.7.9.2.3 Installation. Vapor-processing units shall be securely mounted on concrete, masonry or structural steel supports on concrete or other noncombustible foundations. Vapor-recovery and vapor-processing equipment is allowed to be installed on roofs where *approved*.

2306.7.9.2.4 Piping. Piping in a mechanical-assist system shall be in accordance with Section 5703.6.

2306.8 Alcohol-blended fuel-dispensing operations. The design, fabrication and installation of *alcohol-blended fuel*-dispensing systems shall be in accordance with Section 2306.7 and Sections 2306.8.1 through 2306.8.6.

2306.8.1 Listed equipment. Dispensers shall be *listed* in accordance with UL 87A. Hoses, nozzles, breakaway fittings, swivels, flexible connectors or dispenser emergency shutoff valves, vapor recovery systems, leak detection devices and pumps used in alcohol-blended fuel-dispensing systems shall be *listed* for the specific purpose.

2306.8.2 Compatibility. Dispensers shall be used only with the fuels for which they have been *listed* and that are marked on the product. Field-installed components including hose assemblies, breakaway fittings, swivel connectors and hose nozzle valves shall be provided in accordance with the listing and the marking on the unit.

2306.8.3 Change of system contents. Fuel-dispensing systems subject to change in contents from gasoline to alcohol-blended fuels shall be subject to *fire code official*

INTERNATIONAL CODE COUNCIL®
Copyright © 2019 ICC & NYSDOS. ALL RIGHTS RESERVED. Accessed by Lauren Gualdino (lgualdino@briarcliffmanor.org), (-) Order Number #100880972 on May 08, 2020 07:05 AM (PDT) pursuant to License Agreement with ICC & NYSDOS. No further reproduction, no

100880972

review and approval prior to commencing dispensing operations.

2306.8.4 Facility identification. Facilities dispensing alcohol-blended fuels shall be identified by an *approved* means.

2306.8.5 Marking. Dispensers shall be marked in an *approved* manner to identify the types of *alcohol-blended fuels* to be dispensed.

2306.8.6 Maintenance and inspection. Equipment shall be maintained and inspected in accordance with Section 2305.2.

SECTION 2307
LIQUEFIED PETROLEUM GAS MOTOR FUEL-DISPENSING FACILITIES

2307.1 General. Motor fuel-dispensing facilities for liquefied petroleum gas (LP-gas) fuel shall be in accordance with this section and Chapter 61.

2307.2 Approvals. Storage vessels and equipment used for the storage or dispensing of LP-gas shall be *approved* or *listed* in accordance with Sections 2307.2.1 and 2307.2.2.

2307.2.1 Approved equipment. Containers, pressure relief devices (including pressure relief valves), pressure regulators and piping for LP-gas shall be *approved*.

2307.2.2 Listed equipment. Hoses, hose connections, vehicle fuel connections, dispensers, LP-gas pumps and electrical equipment used for LP-gas shall be *listed*.

2307.3 Attendants. Motor fuel-dispensing operations for LP-gas shall be conducted by qualified attendants or in accordance with Section 2307.7 by persons trained in the proper handling of LP-gas.

2307.4 Location of dispensing operations and equipment. The point of transfer for LP-gas dispensing operations shall be separated from buildings and other exposures in accordance with the following:

1. Not less than 25 feet (7620 mm) from buildings where the *exterior wall* is not part of a fire-resistance-rated assembly having a rating of 1 hour or greater.
2. Not less than 25 feet (7620 mm) from combustible overhangs on buildings, measured from a vertical line dropped from the face of the overhang at a point nearest the point of transfer.
3. Not less than 25 feet (7620 mm) from the lot line of property that can be built on.
4. Not less than 25 feet (7620 mm) from the centerline of the nearest mainline railroad track.
5. Not less than 10 feet (3048 mm) from public streets, highways, thoroughfares, sidewalks and driveways.
6. Not less than 10 feet (3048 mm) from buildings where the *exterior wall* is part of a fire-resistance-rated assembly having a rating of 1 hour or greater.

Exception: The point of transfer for LP-gas dispensing operations need not be separated from canopies that are constructed in accordance with the *Building Code of New York State* and that provide weather protection for the dispensing equipment.

LP-gas containers shall be located in accordance with Chapter 61. LP-gas storage and dispensing equipment shall be located outdoors.

2307.5 Additional requirements for LP-gas dispensers and equipment. LP-gas dispensers and related equipment shall comply with the following provisions.

1. Pumps shall be fixed in place and shall be designed to allow control of the flow and to prevent leakage and accidental discharge.
2. Dispensing devices installed within 10 feet (3048 mm) of where vehicle traffic occurs shall be protected against physical damage by mounting on a concrete island 6 inches (152 mm) or more in height, or shall be protected in accordance with Section 312.
3. Dispensing devices shall be securely fastened to their mounting surface in accordance with the dispenser manufacturer's instructions.

2307.6 Installation of LP-gas dispensing devices and equipment. The installation and operation of LP-gas dispensing systems shall be in accordance with Sections 2307.6.1 through 2307.6.4 and Chapter 61. LP-gas dispensers and dispensing stations shall be installed in accordance with the manufacturer's specifications and their listing.

2307.6.1 Product control valves. The dispenser system piping shall be protected from uncontrolled discharge in accordance with the following:

1. Where mounted on a concrete base, a means shall be provided and installed within $^1/_2$ inch (12.7 mm) of the top of the concrete base that will prevent flow from the supply piping in the event that the dispenser is displaced from its mounting.
2. A manual shutoff valve and an excess flow-control check valve shall be located in the liquid line between the pump and the dispenser inlet where the dispensing device is installed at a remote location and is not part of a complete storage and dispensing unit mounted on a common base.
3. An excess flow-control check valve or an emergency shutoff valve shall be installed in or on the dispenser at the point at which the dispenser hose is connected to the liquid piping.
4. A *listed* automatic-closing type hose nozzle valve with or without a latch-open device shall be provided on island-type dispensers.

2307.6.2 Hoses. Hoses and piping for the dispensing of LP-gas shall be provided with hydrostatic relief valves. The hose length shall not exceed 18 feet (5486 mm). An *approved* method shall be provided to protect the hose against mechanical damage.

2307.6.3 Emergency breakaway devices. Dispenser hoses shall be equipped with a *listed* emergency breakaway device designed to retain liquid on both sides of the breakaway point. Where hoses are attached to hose-retrieving mechanisms, the emergency breakaway device

INTERNATIONAL CODE COUNCIL®
Copyright © 2019 ICC & NYSDOS. ALL RIGHTS RESERVED. Accessed by Lauren Gualdino (lgualdino@briarcliffmanor.org), (-) Order Number #100880972 on May 08, 2020 07:05 AM (PDT) pursuant to License Agreement with ICC & NYSDOS. No further reproduction, no

100880972

shall be located such that the breakaway device activates to protect the dispenser from being displaced.

2307.6.4 Vehicle impact protection. Where installed within 10 feet of vehicle traffic, LP-gas storage containers, pumps and dispensers shall be protected in accordance with Section 2307.5, Item 2.

2307.7 Public fueling of motor vehicles. Self-service LP-gas dispensing systems, including key, code and card lock dispensing systems, shall be limited to the filling of permanently mounted containers providing fuel to the LP-gas powered vehicle.

The requirements for self-service LP-gas dispensing systems shall be in accordance with the following:

1. The arrangement and operation of the transfer of product into a vehicle shall be in accordance with this section and Chapter 61.
2. The system shall be provided with an emergency shutoff switch located within 100 feet (30 480 mm) of, but not less than 20 feet (6096 mm) from, dispensers.
3. The *owner* of the LP-gas motor fuel-dispensing facility or the owner's designee shall provide for the safe operation of the system and the training of users.
4. The dispenser and hose-end valve shall release not more than $^1/_8$ fluid ounce (4 cc) of liquid to the atmosphere upon breaking the connection with the fill valve on the vehicle.
5. Portable fire extinguishers shall be provided in accordance with Section 2305.5.
6. Warning signs shall be provided in accordance with Section 2305.6.
7. The area around the dispenser shall be maintained in accordance with Section 2305.7.

2307.8 Overfilling. LP-gas containers shall not be filled with LP-gas in excess of the volume determined using the fixed maximum liquid level gauge installed on the container, the volume determined by the overfilling prevention device installed on the container or the weight determined by the required percentage of the water capacity marked on the container.

SECTION 2308
COMPRESSED NATURAL GAS MOTOR FUEL-DISPENSING FACILITIES

2308.1 General. Motor fuel-dispensing facilities for compressed natural gas (CNG) fuel shall be in accordance with this section and Chapter 53.

2308.2 Approvals. Storage vessels and equipment used for the storage, compression or dispensing of CNG shall be *approved* or *listed* in accordance with Sections 2308.2.1 and 2308.2.2.

2308.2.1 Approved equipment. Containers, compressors, pressure relief devices (including pressure relief valves), and pressure regulators and piping used for CNG shall be *approved*.

2308.2.2 Listed equipment. Hoses, hose connections, dispensers and electrical equipment used for CNG shall be *listed*. Vehicle-fueling connections shall be *listed* and *labeled*.

2308.3 Location of dispensing operations and equipment. Compression, storage and dispensing equipment shall be located above ground, outdoors.

Exceptions:

1. Compression, storage or dispensing equipment shall be allowed in buildings of noncombustible construction, as set forth in the *Building Code of New York State*, that are unenclosed for three-quarters or more of the perimeter.
2. Compression, storage and dispensing equipment shall be allowed indoors or in vaults in accordance with Chapter 53.

2308.3.1 Location on property. In addition to the requirements of Section 2303.1, compression, storage and dispensing equipment not located in vaults complying with Chapter 53 shall be installed as follows:

1. Not beneath power lines.
2. Ten feet (3048 mm) or more from the nearest building or *lot line* that could be built on, public street, sidewalk or source of ignition.

   Exception: Dispensing equipment need not be separated from canopies that are constructed in accordance with the *Building Code of New York State* and that provide weather protection for the dispensing equipment.
3. Twenty-five feet (7620 mm) or more from the nearest rail of any railroad track and 50 feet (15 240 mm) or more from the nearest rail of any railroad main track or any railroad or transit line where power for train propulsion is provided by an outside electrical source, such as third rail or overhead catenary.
4. Fifty feet (15 240 mm) or more from the vertical plane below the nearest overhead wire of a trolley bus line.

2308.4 Private fueling of motor vehicles. Self-service CNG-dispensing systems, including key, code and card lock dispensing systems, shall be limited to the filling of permanently mounted fuel containers on CNG-powered vehicles.

In addition to the requirements in Section 2305, the *owner* of a self-service CNG motor fuel-dispensing facility shall ensure the safe operation of the system and the training of users.

2308.5 Pressure regulators. Pressure regulators shall be designed and installed or protected so that their operation will not be affected by the elements (freezing rain, sleet, snow or ice), mud or debris. The protection is allowed to be an integral part of the regulator.

2308.6 Valves. Gas piping to equipment shall be provided with a remote, manual shutoff valve that is provided with *ready access*.

2308.7 Emergency shutdown control. An emergency shutdown control shall be located within 75 feet (22 860 mm) of,

INTERNATIONAL CODE COUNCIL®
Copyright © 2019 ICC & NYSDOS. ALL RIGHTS RESERVED. Accessed by Lauren Gualdino (lgualdino@briarcliffmanor.org), (-) Order Number #100880972 on May 08, 2020 07:05 AM (PDT) pursuant to License Agreement with ICC & NYSDOS. No further reproduction, no

100880972

but not less than 25 feet (7620 mm) from, dispensers and shall be provided in the compressor area. Upon activation, the emergency shutdown system shall automatically shut off the power supply to the compressor and close valves between the main gas supply and the compressor and between the storage containers and dispensers.

2308.8 Discharge of CNG from motor vehicle fuel storage containers. The discharge of CNG from motor vehicle fuel cylinders for the purposes of maintenance, cylinder certification, calibration of dispensers or other activities shall be in accordance with Sections 2308.8.1 through 2308.8.1.2.6.

2308.8.1 Methods of discharge. The discharge of CNG from motor vehicle fuel cylinders shall be accomplished through a closed transfer system in accordance with Section 2308.8.1.1 or an *approved* method of atmospheric venting in accordance with Section 2308.8.1.2.

2308.8.1.1 Closed transfer system. A documented procedure that explains the logical sequence for discharging the cylinder shall be provided to the *fire code official* for review and approval. The procedure shall include what actions the operator will take in the event of a low-pressure or high-pressure natural gas release during the discharging activity. A drawing illustrating the arrangement of piping, regulators and equipment settings shall be provided to the *fire code official* for review and approval. The drawing shall illustrate the piping and regulator arrangement and shall be shown in spatial relation to the location of the compressor, storage vessels and emergency shutdown devices.

2308.8.1.2 Atmospheric venting. Atmospheric venting of CNG shall comply with Sections 2308.8.1.2.1 through 2308.8.1.2.6.

2308.8.1.2.1 Plans and specifications. A drawing illustrating the location of the vessel support, piping, the method of grounding and bonding, and other requirements specified herein shall be provided to the *fire code official* for review and approval.

2308.8.1.2.2 Cylinder stability. A method of rigidly supporting the vessel during the venting of CNG shall be provided. The selected method shall provide not less than two points of support and shall prevent the horizontal and lateral movement of the vessel. The system shall be designed to prevent the movement of the vessel based on the highest gas-release velocity through valve orifices at the vessel's rated pressure and volume. The structure or appurtenance shall be constructed of noncombustible materials.

2308.8.1.2.3 Separation. The structure or appurtenance used for stabilizing the cylinder shall be separated from the site equipment, features and exposures and shall be located in accordance with Table 2308.8.1.2.3.

2308.8.1.2.4 Grounding and bonding. The structure or appurtenance used for supporting the cylinder shall be grounded in accordance with NFPA 70. The cylinder valve shall be bonded prior to the commencement of venting operations.

TABLE 2308.8.1.2.3
SEPARATION DISTANCE FOR ATMOSPHERIC VENTING OF CNG

EQUIPMENT OR FEATURE	MINIMUM SEPARATION (feet)
Buildings	25
Building openings	25
CNG compressor and storage vessels	25
CNG dispensers	25
Lot lines	15
Public ways	15
Vehicles	25

For SI: 1 foot = 304.8 mm.

2308.8.1.2.5 Vent tube. A vent tube that will divert the gas flow to atmosphere shall be installed on the cylinder prior to commencement of the venting and purging operation. The vent tube shall be constructed of pipe or tubing materials *approved* for use with CNG in accordance with Chapter 53.

The vent tube shall be capable of dispersing the gas not less than 10 feet (3048 mm) above grade level. The vent tube shall not be provided with a rain cap or other feature that would limit or obstruct the gas flow.

At the connection fitting of the vent tube and the CNG cylinder, a *listed* bidirectional *detonation* flame arrester shall be provided.

2308.8.1.2.6 Signage. *Approved* "No Smoking" signs complying with Section 310 shall be posted within 10 feet (3048 mm) of the cylinder support structure or appurtenance. *Approved* CYLINDER SHALL BE BONDED signs shall be posted on the cylinder support structure or appurtenance.

SECTION 2309
HYDROGEN MOTOR FUEL-DISPENSING AND GENERATION FACILITIES

2309.1 General. Hydrogen motor fuel-dispensing and generation facilities shall be in accordance with this section and Chapter 58. Where a fuel-dispensing facility includes a repair garage, the repair operation shall comply with Section 2311.

2309.2 Equipment. Equipment used for the generation, compression, storage or dispensing of hydrogen shall be designed for the specific application in accordance with Sections 2309.2.1 through 2309.2.3.

2309.2.1 Approved equipment. Cylinders, containers and tanks; pressure relief devices, including pressure valves; hydrogen vaporizers; pressure regulators; and piping used for gaseous hydrogen systems shall be designed and constructed in accordance with Chapters 53, 55 and 58.

2309.2.2 Listed or approved equipment. Hoses, hose connections, compressors, hydrogen generators, dispensers and electrical equipment used for hydrogen shall be *listed* or *approved* for use with hydrogen. Hydrogen

INTERNATIONAL CODE COUNCIL®
Copyright © 2019 ICC & NYSDOS. ALL RIGHTS RESERVED. Accessed by Lauren Gualdino (lgualdino@briarcliffmanor.org), (-) Order Number #100880972 on May 08, 2020 07:05 AM (PDT) pursuant to License Agreement with ICC & NYSDOS. No further reproduction, no

100880972

motor-fueling connections shall be *listed* and *labeled* or *approved* for use with hydrogen.

2309.2.3 Electrical equipment. Electrical installations shall be in accordance with NFPA 70.

2309.3 Location on property. In addition to the requirements of Section 2303.1, dispensing equipment shall be located in accordance with Sections 2309.3.1 through Section 2309.3.2.

2309.3.1 Location of operations and equipment. Generation, compression, storage and dispensing equipment shall be located in accordance with Sections 2309.3.1.1 through 2309.3.1.5.5.

2309.3.1.1 Outdoors. Generation, compression, or storage equipment shall be allowed outdoors in accordance with Chapter 58 and NFPA 2.

2309.3.1.2 Indoors. Generation, compression, storage and dispensing equipment shall be located in indoor rooms or areas constructed in accordance with the requirements of the *Building Code of New York State*, the *Fuel Gas Code of New York State*, the *Mechanical Code of New York State* and NFPA 2.

2309.3.1.2.1 Maintenance. Gaseous hydrogen systems and detection devices shall be maintained in accordance with the manufacturer's instructions.

2309.3.1.2.2 Smoking. Smoking shall be prohibited in hydrogen cutoff rooms. "No Smoking" signs shall be provided at all entrances to hydrogen fuel gas rooms.

2309.3.1.2.3 Ignition source control. Open flames, flame-producing devices and other sources of ignition shall be controlled in accordance with Chapter 58.

2309.3.1.2.4 Housekeeping. Hydrogen fuel gas rooms shall be kept free from combustible debris and storage.

2309.3.1.3 Gaseous hydrogen storage. Storage of gaseous hydrogen shall be in accordance with Chapters 53 and 58.

2309.3.1.4 Liquefied hydrogen storage. Storage of liquefied hydrogen shall be in accordance with Chapters 55 and 58.

2309.3.1.5 Canopy tops. Gaseous hydrogen compression and storage equipment located on top of motor fuel-dispensing facility canopies shall be in accordance with Sections 2309.3.1.5.1 through 2309.3.1.5.5, Chapters 53 and 58 and the *Fuel Gas Code of New York State*.

2309.3.1.5.1 Construction. Canopies shall be constructed in accordance with the motor fuel-dispensing facility canopy requirements of Section 406.7 of the *Building Code of New York State*.

2309.3.1.5.2 Fire-extinguishing systems. Fuel-dispensing areas under canopies shall be equipped throughout with an *approved automatic sprinkler system* in accordance with Section 903.3.1.1. The design of the sprinkler system shall be not less than that required for Extra Hazard Group 2 occupancies. Operation of the sprinkler system shall activate the emergency functions of Sections 2309.3.1.5.3 and 2309.3.1.5.4.

2309.3.1.5.3 Emergency discharge. Operation of the *automatic sprinkler system* shall activate an automatic emergency discharge system, which will discharge the hydrogen gas from the equipment on the canopy top through the vent pipe system.

2309.3.1.5.4 Emergency shutdown control. Operation of the *automatic sprinkler system* shall activate the emergency shutdown control required by Section 2309.5.3.

2309.3.1.5.5 Signage. *Approved* signage having 2-inch (51 mm) block letters shall be affixed at *approved* locations on the exterior of the canopy structure stating: CANOPY TOP HYDROGEN STORAGE.

2309.3.2 Canopies. Dispensing equipment need not be separated from canopies of Type I or II construction that are constructed in a manner that prevents the accumulation of hydrogen gas and in accordance with Section 406.7 of the *Building Code of New York State.*

2309.4 Dispensing into motor vehicles at self-service hydrogen motor fuel-dispensing facilities. Self-service hydrogen motor fuel-dispensing systems, including key, code and card lock dispensing systems, shall be limited to the filling of permanently mounted fuel containers on hydrogen-powered vehicles.

In addition to the requirements in Section 2311, the *owner* of a self-service hydrogen motor fuel-dispensing facility shall provide for the safe operation of the system through the institution of a fire safety plan submitted in accordance with Section 404, the training of employees and operators who use and maintain the system in accordance with Section 406, and provisions for hazard communication in accordance with Section 407.

2309.4.1 Dispensing systems. Dispensing systems shall be equipped with an overpressure protection device set at not greater than 140 percent of the service pressure of the fueling nozzle it supplies.

2309.5 Safety precautions. Safety precautions at hydrogen motor fuel-dispensing and generation facilities shall be in accordance with Sections 2309.5.1 through 2309.5.3.1.

2309.5.1 Protection from vehicles. Guard posts or other *approved* means shall be provided to protect hydrogen storage systems and use areas subject to vehicular damage in accordance with Section 312.

2309.5.1.1 Vehicle fueling pad. The vehicle shall be fueled on noncoated concrete or other *approved* paving material having a resistance not exceeding 1 megohm as determined by the methodology specified in EN 1081.

2309.5.2 Emergency shutoff valves. A manual emergency shutoff valve shall be provided to shut down the flow of gas from the hydrogen supply to the piping system.

INTERNATIONAL CODE COUNCIL®
Copyright © 2019 ICC & NYSDOS. ALL RIGHTS RESERVED. Accessed by Lauren Gualdino (lgualdino@briarcliffmanor.org), (-) Order Number #100880972 on May 08, 2020 07:05 AM (PDT) pursuant to License Agreement with ICC & NYSDOS. No further reproduction, no

100880972

2309.5.2.1 Identification. Manual emergency shutoff valves shall be identified and the location shall be clearly visible, accessible and indicated by means of a sign.

2309.5.3 Emergency shutdown controls. In addition to the manual emergency shutoff valve required by Section 2309.5.2, a remotely located, manually activated emergency shutdown control shall be provided. An emergency shutdown control shall be located within 75 feet (22 860 mm) of, but not less than 25 feet (7620 mm) from, dispensers and hydrogen generators.

2309.5.3.1 System requirements. Activation of the emergency shutdown control shall automatically shut off the power supply to all hydrogen storage, compression and dispensing equipment; shut off natural gas or other fuel supply to the hydrogen generator; and close valves between the main supply and the compressor and between the storage containers and dispensing equipment.

2309.6 Repairs, purging, defueling and discharge. The repair, purging, defueling or discharge activities associated with hydrogen motor fuel supply systems and tanks and the installation of the systems shall be in accordance with Chapters 53 and 58 and NFPA 2.

Exception: The fuel supply piping from the fuel storage tank to the engine compartment on a motor vehicle or forklift.

2309.6.1 Documented procedure. A documented procedure that explains the logic sequence for defueling or discharging operations shall be maintained on site and shall be provided to the *fire code official* upon request. The procedure shall include what actions the operator is required to take in the event of a low-pressure or high-pressure hydrogen release during discharging activity. Schematic design documents shall be maintained on site, illustrating the arrangement of piping, regulators and equipment settings. The schematic shall illustrate the piping and regulator arrangement and shall be shown in spatial relation to the location of the vehicle being defueled and, if applicable, to the compressor, storage vessels and emergency shutdown devices.

SECTION 2310
MARINE MOTOR FUEL-DISPENSING FACILITIES

2310.1 General. The construction of marine motor fuel-dispensing facilities shall be in accordance with the *Building Code of New York State* and NFPA 30A. The storage of Class I, II or IIIA liquids at marine motor fuel-dispensing facilities shall be in accordance with this chapter and Chapter 57.

2310.2 Storage and handling. The storage and handling of Class I, II or IIIA liquids at marine motor fuel-dispensing facilities shall be in accordance with Sections 2310.2.1 through 2310.2.3.

2310.2.1 Class I, II or IIIA liquid storage. Class I, II or IIIA liquids stored inside of buildings used for marine motor fuel-dispensing facilities shall be stored in *approved* containers or portable tanks. Storage of Class I liquids shall not exceed 10 gallons (38 L).

Exception: Storage in liquid storage rooms in accordance with Section 5704.3.7.

2310.2.2 Class II or IIIA liquid storage and dispensing. Class II or IIIA liquids stored or dispensed inside of buildings used for marine motor fuel-dispensing facilities shall be stored in and dispensed from *approved* containers or portable tanks. Storage of Class II and IIIA liquids shall not exceed 120 gallons (454 L).

2310.2.3 Heating equipment. Heating equipment installed in Class I, II or IIIA liquid storage or dispensing areas shall comply with Section 2301.6.

2310.3 Dispensing. The dispensing of liquid fuels at marine motor fuel-dispensing facilities shall comply with Sections 2310.3.1 through 2310.3.5.

2310.3.1 General. Wharves, piers or floats at marine motor fuel-dispensing facilities shall be used exclusively for the dispensing or transfer of petroleum products to or from marine craft, except that transfer of essential ship stores is allowed.

2310.3.2 Supervision. Marine motor fuel-dispensing facilities shall have an attendant or supervisor who is fully aware of the operation, mechanics and hazards inherent to fueling of boats on duty whenever the facility is open for business. The attendant's primary function shall be to supervise, observe and control the dispensing of Class I, II or IIIA liquids or flammable gases.

2310.3.3 Hoses and nozzles. Dispensing of Class I, II or IIIA liquids into the fuel tanks of marine craft shall be by means of an *approved*-type hose equipped with a *listed* automatic-closing nozzle without a latch-open device.

Hoses used for dispensing or transferring Class I, II or IIIA liquids, when not in use, shall be reeled, racked or otherwise protected from mechanical damage.

2310.3.4 Portable containers. Dispensing of Class I, II or IIIA liquids into containers, other than fuel tanks, shall be in accordance with Section 2304.4.1.

2310.3.5 Liquefied petroleum gas. Liquefied petroleum gas cylinders shall not be filled at *marine motor fuel-dispensing facilities* unless *approved*. *Approved* storage facilities for LP-gas cylinders shall be provided. See also Section 2307.

2310.4 Fueling of marine vehicles at other than approved marine motor fuel-dispensing facilities. Fueling of floating marine craft at other than a marine motor fuel-dispensing facility shall comply with Sections 2310.4.1 and 2310.4.2.

2310.4.1 Class I liquid fuels. Fueling of floating marine craft with Class I fuels at other than a marine motor fuel-dispensing facility is prohibited.

2310.4.2 Class II or III liquid fuels. Fueling of floating marine craft with Class II or III fuels at other than a marine motor fuel-dispensing facility shall be in accordance with all of the following:

1. The premises and operations shall be *approved* by the *fire code official*.

INTERNATIONAL CODE COUNCIL®
Copyright © 2019 ICC & NYSDOS. ALL RIGHTS RESERVED. Accessed by Lauren Gualdino (lgualdino@briarcliffmanor.org), (-) Order Number #100880972 on May 08, 2020 07:05 AM (PDT) pursuant to License Agreement with ICC & NYSDOS. No further reproduction, no

100880972

2. Tank vehicles and fueling operations shall comply with Section 5706.6.
3. The dispensing nozzle shall be of the *listed* automatic-closing type without a latch-open device.
4. Nighttime deliveries shall only be made in lighted areas.
5. The tank vehicle flasher lights shall be in operation while dispensing.
6. Fuel expansion space shall be left in each fuel tank to prevent overflow in the event of temperature increase.

2310.5 Fire prevention regulations. General fire safety regulations for marine motor fuel-dispensing facilities shall comply with Sections 2310.5.1 through 2310.5.7.

2310.5.1 Housekeeping. Marine motor fuel-dispensing facilities shall be maintained in a neat and orderly manner. Accumulations of rubbish or waste oils in excessive amounts shall be prohibited.

2310.5.2 Spills. Spills of Class I, II or IIIA liquids at or on the water shall be reported immediately to the fire department and jurisdictional authorities.

2310.5.3 Rubbish containers. Containers with tight-fitting or self-closing lids shall be provided for temporary storage of combustible debris, rubbish and waste material. The rubbish containers shall be constructed entirely of materials that comply with any one of the following:

1. Noncombustible materials.
2. Materials that meet a peak rate of heat release not exceeding 300 kW/m^2 when tested in accordance with ASTM E1354 at an incident heat flux of 50 kW/m^2 in the horizontal orientation.

2310.5.4 Marine vessels and craft. Vessels or craft shall not be made fast to fuel docks serving other vessels or craft occupying a berth at a marine motor fuel-dispensing facility.

2310.5.5 Sources of ignition. Construction, maintenance, repair and reconditioning work involving the use of open flames, arcs or spark-producing devices shall not be performed at marine motor fuel-dispensing facilities or within 50 feet (15 240 mm) of the dispensing facilities, including piers, wharves or floats, except for emergency repair work *approved* in writing by the *fire code official*. Fueling shall not be conducted at the pier, wharf or float during the course of such emergency repairs.

2310.5.5.1 Smoking. Smoking or open flames shall be prohibited within 50 feet (15 240 mm) of fueling operations. "No Smoking" signs complying with Section 310 shall be posted conspicuously about the premises. Such signs shall have letters not less than 4 inches (102 mm) in height on a background of contrasting color.

2310.5.6 Preparation of tanks for fueling. Boat *owners* and operators shall not offer their craft for fueling unless the tanks being filled are properly vented to dissipate fumes to the outside atmosphere.

2310.5.7 Warning signs. Warning signs shall be prominently displayed at the face of each wharf, pier or float at such elevation as to be clearly visible from the decks of marine craft being fueled. Such signs shall have letters not less than 3 inches (76 mm) in height on a background of contrasting color bearing the following or *approved* equivalent wording:

WARNING

NO SMOKING—STOP ENGINE WHILE FUELING, SHUT OFF ELECTRICITY

DO NOT START ENGINE UNTIL AFTER BELOW DECK SPACES ARE VENTILATED.

2310.6 Fire protection. Fire protection features for marine motor fuel-dispensing facilities shall comply with Sections 2310.6.1 through 2310.6.4.

2310.6.1 Standpipe hose stations. Fire hose, where provided, shall be enclosed within a cabinet, and hose stations shall be labeled: FIRE HOSE—EMERGENCY USE ONLY.

2310.6.2 Obstruction of fire protection equipment. Materials shall not be placed on a pier in such a manner as to obstruct access to fire-fighting equipment or piping system control valves.

2310.6.3 Access. Where the pier is designed for vehicular traffic, an unobstructed roadway to the shore end of the wharf shall be maintained for access by fire apparatus.

2310.6.4 Portable fire extinguishers. Portable fire extinguishers in accordance with Section 906, each having a minimum rating of 20-B:C, shall be provided as follows:

1. One on each float.
2. One on the pier or wharf within 25 feet (7620 mm) of the head of the gangway to the float, unless the office is within 25 feet (7620 mm) of the gangway or is on the float and an extinguisher is provided thereon.

SECTION 2311
REPAIR GARAGES

2311.1 General. Repair garages shall comply with this section and the *Building Code of New York State*. Repair garages for vehicles that use more than one type of fuel shall comply with the applicable provisions of this section for each type of fuel used.

Where a repair garage includes a motor fuel-dispensing facility, the fuel-dispensing operation shall comply with the requirements of this chapter for motor fuel-dispensing facilities.

2311.2 Storage and use of flammable and combustible liquids. The storage and use of flammable and *combustible liquids* in repair garages shall comply with Chapter 57 and Sections 2311.2.1 through 2311.2.4.

2311.2.1 Cleaning of parts. Cleaning of parts shall be conducted in *listed* and *approved* parts-cleaning machines in accordance with Chapter 57.

2311.2.2 Waste oil, motor oil and other Class IIIB liquids. Waste oil, motor oil and other Class IIIB liquids shall be stored in *approved* tanks or containers, which are

INTERNATIONAL CODE COUNCIL®
Copyright © 2019 ICC & NYSDOS. ALL RIGHTS RESERVED. Accessed by Lauren Gualdino (lgualdino@briarcliffmanor.org), (-) Order Number #100880972 on May 08, 2020 07:05 AM (PDT) pursuant to License Agreement with ICC & NYSDOS. No further reproduction, no

100880972

allowed to be stored and dispensed from inside repair garages.

2311.2.2.1 Tank location. Tanks storing Class IIIB liquids in *repair garages* are allowed to be located at, below or above grade, provided that adequate drainage or containment is provided.

2311.2.2.2 Liquid classification. Crankcase drainings shall be classified as Class IIIB liquids unless otherwise determined by testing.

2311.2.3 Drainage and disposal of liquids and oil-soaked waste. Garage floor drains, where provided, shall drain to *approved* oil separators or traps discharging to a sewer in accordance with the *Plumbing Code of New York State*. Contents of oil separators, traps and floor drainage systems shall be collected at sufficiently frequent intervals and removed from the premises to prevent oil from being carried into the sewers.

2311.2.3.1 Disposal of liquids. Crankcase drainings and liquids shall not be dumped into sewers, streams or on the ground, but shall be stored in *approved* tanks or containers in accordance with Chapter 57 until removed from the premises.

2311.2.3.2 Disposal of oily waste. Self-closing metal cans shall be used for oily waste.

2311.2.4 Spray finishing. Spray finishing with flammable or *combustible liquids* shall comply with Chapter 24.

2311.3 Sources of ignition. Sources of ignition shall not be located within 18 inches (457 mm) of the floor and shall comply with Chapters 3 and 35.

2311.3.1 Equipment. Appliances and equipment installed in a repair garage shall comply with the provisions of the *Building Code of New York State,* the *Mechanical Code of New York State* and NFPA 70.

2311.3.2 Smoking. Smoking shall not be allowed in repair garages except in *approved* locations.

2311.4 Below-grade areas. Pits and below-grade work areas in repair garages shall comply with Sections 2311.4.1 through 2311.4.3.

2311.4.1 Construction. Pits and below-grade work areas shall be constructed in accordance with the *Building Code of New York State*.

2311.4.2 Means of egress. Pits and below-grade work areas shall be provided with *means of egress* in accordance with Chapter 10.

2311.4.3 Ventilation. Where Class I liquids or LP-gas are stored or used within a building having a *basement* or pit wherein flammable vapors could accumulate, the *basement* or pit shall be provided with mechanical ventilation in accordance with the *Mechanical Code of New York State,* at a minimum rate of $1^1/_2$ cubic feet per minute per square foot (cfm/ft^2) [0.008 m^3/(s • m^2)] to prevent the accumulation of flammable vapors.

2311.5 Vehicles powered by liquefied petroleum gas (LP-gas). Vehicles powered by LP-gas and the servicing of vehicles powered by LP-gas shall be in compliance with this chapter, Chapter 61 of this code and NFPA 58.

2311.6 Vehicles powered by liquefied natural gas (LNG) and compressed natural gas (CNG). LNG vehicles and CNG vehicles shall comply with Sections 2311.6.1 and 2311.6.2, as applicable.

2311.6.1 Liquefied natural gas (LNG). LNG vehicle fuel system pressure shall be measured and recorded prior to entering the repair facility. The maximum allowable system pressure shall be not more than 170 psig (1172 kPa). Pressure greater than 170 psig (1172 kPa) shall be reduced by operating the vehicle or limited venting outdoors, as required.

2311.6.2 Compressed natural gas (CNG). CNG vehicle fuel system pressure and the ambient temperature shall be measured and recorded prior to entering the repair facility. Pressure greater than the indicated maximum pressure in accordance with Table 2311.6.2 shall be reduced by defueling the vehicle.

TABLE 2311.6.2
TEMPERATURE COMPENSATED CYLINDER PRESSURE TABLE[a]

GAS TEMPERATURE °F	PRESSURE IN FULL 3,600 PSI CNG CONTAINER, psig
123.6	4,500
120	4,455
110	4,272
100	4,105
90	3,936
80	3,768
70	3,600
60	3,432
50	3,263
40	3,094
30	2,926
20	2,757
10	2,589
0	2,421
-10	2,253
-20	2,086
-30	1,919
-40	1,753

For SI: °C = [(°F) - 32]/1.8, 1 psig = 6.895 kPa.

a. 3,600 psi service pressure calculated from the standard gas composition used to create the gasoline gallon equivalent (GGE).

2311.7 Fire extinguishers. Fire extinguishers shall be provided in accordance with Section 906.

2311.8 Repair garages for vehicles fueled by lighter-than-air fuels. The room, motor vehicle repair booth or motor vehicle repair space containing repair garage activities for the conversion or repair of vehicles that use CNG, LNG, hydrogen or other lighter-than-air motor fuels shall be in accordance with Sections 2311.8 through 2311.8.11 in addition to the other requirements of Section 2311. Repair garages for the repair of vehicles that use hydrogen fuel shall be in accordance with this code and NFPA 2.

Exceptions:

1. Repair garages where work is conducted only on vehicles that have been defueled and their systems purged with nitrogen gas, and where standard oper-

INTERNATIONAL CODE COUNCIL®
Copyright © 2019 ICC & NYSDOS. ALL RIGHTS RESERVED. Accessed by Lauren Gualdino (lgualdino@briarcliffmanor.org), (-) Order Number #100880972 on May 08, 2020 07:05 AM (PDT) pursuant to License Agreement with ICC & NYSDOS. No further reproduction, no

100880972

ating procedures to document and maintain the fueling status throughout repair operations are approved.

2. Repair garages where work is not performed on the fuel system and is limited to exchange of parts and maintenance not requiring open flame or welding on the CNG-, LNG-, hydrogen- or other lighter-than-air-fueled motor vehicle.

3. Repair garages for hydrogen-fueled vehicles where work is not performed on the hydrogen storage tank and is limited to the exchange of parts and maintenance not requiring open flame or welding on the hydrogen-fueled vehicle. During the work, the entire hydrogen fuel system shall contain less than 200 cubic feet (5.6 m^3) of hydrogen.

4. Repair garages for natural-gas-fueled vehicles where work is not being performed on the fuel storage tank, and is limited to the exchange of parts and maintenance not requiring open flame or welding on the natural-gas-fueled vehicle. During the work, the natural gas, in the vehicle fuel tank shall contain a pressure of not more than 250 psi at 70ºF (1724 kPa at 21ºC).

2311.8.1 Preparation of vehicles for repair. For vehicles powered by gaseous fuels, the fuel shutoff valves shall be closed prior to repairing any portion of the vehicle fuel system.

Vehicles powered by gaseous fuels in which the fuel system has been damaged shall be inspected and evaluated for fuel system integrity prior to being brought into the repair garage. The inspection shall include testing of the entire fuel delivery system for leakage.

2311.8.2 Repair garages used for the repair of hydrogen-fueled vehicles. Repair garages used for the repair of hydrogen-fueled vehicles shall be provided with an *approved* exhaust ventilation system in accordance with the *Mechanical Code of New York State* and Chapter 6 of NFPA 2.

2311.8.3 Motor vehicle repair rooms. Motor vehicle repair rooms shall be enclosed with not less than 1-hour fire barriers constructed in accordance with Section 707 of the *Building Code of New York State*, or horizontal assemblies constructed in accordance with Section 711 of the *Building Code of New York State*, or both, with 1-hour rated opening protectives.

2311.8.4 Motor vehicle repair booths. The design and construction of motor vehicle repair booths shall be in accordance with Sections 2311.8.4.1 through 2311.8.4.4.

2311.8.4.1 Construction. Motor vehicle repair booths shall be constructed of approved noncombustible materials. Where walls or ceiling assemblies are constructed of sheet metal, single-skin assemblies shall be not thinner than 0.0478 inch (18 gage) (1.2 mm) and each sheet of double-skin assemblies shall be not thinner than 0.0359 inch (20 gage) (0.9 mm). Structural sections of motor vehicle repair booths shall be sealed in an *approved* manner.

2311.8.4.2 Surfaces. The interior surfaces of motor vehicle repair booths shall be constructed to permit the free passage of exhaust air from all parts of the interior.

2311.8.4.3 Means of egress. *Means of egress* shall be provided in accordance with Chapter 10.

Exception: *Means of egress* doors from premanufactured motor vehicle repair booths shall be not less than 30 inches (762 mm) in width by 80 inches (2032 mm) in height.

2311.8.4.4 Clear space. Motor vehicle repair booths shall be installed so that all parts of the booth provide *ready access* for cleaning. A clear area of not less than 3 feet (914 mm) wide shall be maintained on all sides of the motor vehicle repair booth. This clear area shall be kept free of any storage or combustible construction.

Exceptions:

1. This requirement shall not prohibit locating a motor vehicle repair booth closer than 3 feet (914 mm) to or directly against an interior partition, wall or floor/ceiling assembly that has a fire-resistance rating of not less than 1 hour, provided that the motor vehicle repair booth can be adequately maintained and cleaned.
2. This requirement shall not prohibit locating a motor vehicle repair booth closer than 3 feet (914 mm) to an exterior wall or a roof assembly, provided that the wall or roof is constructed of noncombustible material and the motor vehicle repair booth can be adequately maintained and cleaned.

2311.8.5 Motor vehicle repair spaces. Where such spaces are not separately enclosed, noncombustible spray curtains shall be provided to restrict the spread of flammable gases.

2311.8.6 Fire protection. Motor vehicle repair booths or spaces installed in a room or area protected by an *automatic sprinkler system* shall have the protection extended to include the inside of the motor vehicle repair booth or space.

2311.8.7 Fire extinguishers. Portable fire extinguishers complying with Section 906 shall be provided for motor vehicle repair rooms, motor vehicle repair booths or motor vehicle repair spaces.

2311.8.8 Exhaust ventilation system. Repair garages used for the repair of CNG, LNG, or other lighter-than-air motor fuels other than hydrogen shall be provided with an *approved* mechanical ventilation system. The mechanical exhaust ventilation system shall be in accordance with the *Mechanical Code of New York State* and Sections 2311.8.8.1 and 2311.8.8.2.

Exception: Where *approved* by the *fire code official*, natural ventilation shall be permitted in lieu of mechanical exhaust ventilation.

2311.8.8.1 Design. For indoor locations, air supply inlets and exhaust outlets for mechanical ventilation shall be arranged to provide uniformly distributed air movement with inlets uniformly arranged on walls near

INTERNATIONAL CODE COUNCIL®
Copyright © 2019 ICC & NYSDOS. ALL RIGHTS RESERVED. Accessed by Lauren Gualdino (lgualdino@briarcliffmanor.org), (-) Order Number #100880972 on May 08, 2020 07:05 AM (PDT) pursuant to License Agreement with ICC & NYSDOS. No further reproduction, no

100880972

floor level and outlets at the high point of the room in walls or the roof.

Failure of the ventilation system shall cause the fueling system to shut down.

The exhaust ventilation rate shall be not less than 1 cubic foot per minute (0.03 m^3/minute) per 12 cubic feet (34 m^3) of room volume.

2311.8.8.2 Operation. The mechanical exhaust ventilation system shall operate continuously.

Exceptions:

1. Mechanical exhaust ventilation systems that are interlocked with a gas detection system designed in accordance with Sections 2311.8.9 through 2311.8.9.2.
2. Mechanical exhaust ventilation systems in repair garages that are used only for repair of vehicles fueled by liquid fuels or odorized gases, such as CNG, where the ventilation system is electrically interlocked with the lighting circuit.

2311.8.9 Gas detection system. Repair garages used for repair of vehicles fueled by nonodorized gases including, but not limited to, hydrogen and nonodorized LNG, shall be provided with a gas detection system that complies with Section 916. The gas detection system shall be designed to detect leakage of nonodorized gaseous fuel. Where lubrication or chassis service pits are provided in garages used for repairing nonodorized LNG-fueled vehicles, gas sensors shall be provided in such pits.

2311.8.9.1 System activation. Activation of the gas detection alarm shall result in all of the following:

1. Initiation of local audible and visual alarms in approved locations.
2. Deactivation of heating systems located in the repair garage.
3. Activation of the mechanical exhaust ventilation system, where the ventilation system is interlocked with gas detection.

2311.8.9.2 Failure of the gas detection system. Failure of the gas detection system shall automatically deactivate the heating system, activate the mechanical exhaust ventilation system where the system is interlocked with the gas detection system and cause a trouble signal to sound in an *approved* location.

2311.8.10 Classified electrical area. Areas within 18 inches (450 mm) of a ceiling within a motor vehicle repair room or motor vehicle repair booth shall be designed and installed in accordance with the requirements for Class I, Division 2 classified locations, as set forth in NFPA 70.

Exceptions:

1. Rooms with exhaust ventilation of not less than 1 cubic foot per minute per square foot (0.3 m^3/min/m^2) of floor area, with suction taken from a point within 18 inches (450 mm) of the highest point in the ceiling in repair garages for vehicles that use CNG, liquefied natural gas (LNG) or other lighter-than-air motor fuels.
2. Rooms used for the repair of hydrogen-fueled vehicles that have an approved exhaust ventilation system in accordance with the *Mechanical Code of New York State* and NFPA 2.

2311.8.11 Defueling equipment required at vehicle maintenance and repair facilities. Facilities for repairing or replacing hydrogen fuel tanks on hydrogen-fueled vehicles shall have equipment to defuel vehicle storage tanks. Where work must be performed on a vehicle's fuel storage tank for the purpose of maintenance, repair or cylinder certification, defueling and purging shall be conducted in accordance with Section 2309.6 and NFPA 2.

INTERNATIONAL CODE COUNCIL®
Copyright © 2019 ICC & NYSDOS. ALL RIGHTS RESERVED. Accessed by Lauren Gualdino (lgualdino@briarcliffmanor.org), (-) Order Number #100880972 on May 08, 2020 07:05 AM (PDT) pursuant to License Agreement with ICC & NYSDOS. No further reproduction, no

100880972

CHAPTER 24

FLAMMABLE FINISHES

SECTION 2401
GENERAL

2401.1 Scope. This chapter shall apply to locations or areas where any of the following activities are conducted:

1. The application of flammable finishes to articles or materials by means of spray apparatus.
2. The application of flammable finishes by dipping or immersing articles or materials into the contents of tanks, vats or containers of flammable or *combustible liquids* for coating, finishing, treatment or similar processes.
3. The application of flammable finishes by applying combustible powders to articles or materials utilizing powder spray guns, electrostatic powder spray guns, fluidized beds or electrostatic fluidized beds.
4. Floor surfacing or finishing operations using Class I or II liquids in areas exceeding 350 square feet (32.5 m^2).
5. The application of flammable finishes consisting of dual-component coatings or Class I or II liquids where applied by brush or roller in quantities exceeding 1 gallon (4 L).

2401.2 Nonapplicability. This chapter shall not apply to spray finishing utilizing flammable or *combustible liquids* that do not sustain combustion, including:

1. Liquids that do not have a fire point when tested in accordance with ASTM D92.
2. Liquids with a flashpoint greater than 95°F (35°C) in a water-miscible solution or dispersion with a water and inert (noncombustible) solids content of more than 80 percent by weight.

[NY] 2401.3 Permits. Permits shall be required as set forth in Sections 105.2 and 105.6.

SECTION 2402
DEFINITIONS

2402.1 Definitions. The following terms are defined in Chapter 2:

DETEARING.

DIP TANK.

ELECTROSTATIC FLUIDIZED BED.

FLAMMABLE FINISHES.

FLAMMABLE VAPOR AREA.

FLUIDIZED BED.

LIMITED SPRAYING SPACE.

RESIN APPLICATION AREA.

ROLL COATING.

SPRAY BOOTH.

SPRAY ROOM.

SPRAYING SPACE.

SECTION 2403
PROTECTION OF OPERATIONS

2403.1 General. Operations covered by this chapter shall be protected as required by Sections 2403.2 through 2403.4.4.

2403.2 Sources of ignition. Protection against sources of ignition shall be provided in accordance with Sections 2403.2.1 through 2403.2.8.

2403.2.1 Electrical wiring and equipment. Electrical wiring and equipment shall comply with this chapter and NFPA 70.

2403.2.1.1 Flammable vapor areas. Electrical wiring and equipment in flammable vapor areas shall be of an explosionproof type *approved* for use in such hazardous locations. Such areas shall be considered to be Class I, Division 1 or Class II, Division 1 hazardous locations in accordance with NFPA 70.

2403.2.1.2 Areas subject to deposits of residues. Electrical equipment, flammable vapor areas or drying operations that are subject to splashing or dripping of liquids shall be specifically *approved* for locations containing deposits of readily ignitable residue and explosive vapors.

Exceptions:

1. This provision shall not apply to wiring in rigid conduit, threaded boxes or fittings not containing taps, splices or terminal connections.
2. This provision shall not apply to electrostatic equipment allowed by Section 2407.

In resin application areas, electrical wiring and equipment that is subject to deposits of combustible residues shall be *listed* for such exposure and shall be installed as required for hazardous (classified) locations. Electrical wiring and equipment not subject to deposits of combustible residues shall be installed as required for ordinary hazard locations.

2403.2.1.3 Areas adjacent to spray booths. Electrical wiring and equipment located outside of, but within 3 feet (914 mm) of openings in a spray booth or a spray room, shall be *approved* for Class I, Division 2 or Class II, Division 2 hazardous locations, whichever is applicable.

2403.2.1.4 Areas subject to overspray deposits. Electrical equipment in flammable vapor areas located such that deposits of combustible residues could readily

INTERNATIONAL CODE COUNCIL®
Copyright © 2019 ICC & NYSDOS. ALL RIGHTS RESERVED. Accessed by Lauren Gualdino (lgualdino@briarcliffmanor.org), (-) Order Number #100880972 on May 08, 2020 07:05 AM (PDT) pursuant to License Agreement with ICC & NYSDOS. No further reproduction, no

100880972

accumulate thereon shall be specifically *approved* for locations containing deposits of readily ignitable residue and *explosive* vapors in accordance with NFPA 70.

Exceptions:

1. Wiring in rigid conduit.
2. Boxes or fittings not containing taps, splices or terminal connections.
3. Equipment allowed by Sections 2404 and 2407 and Chapter 30.

2403.2.2 Open flames and sparks. Open flames and spark-producing devices shall not be located in flammable vapor areas and shall not be located within 20 feet (6096 mm) of such areas unless separated by a permanent partition.

Exception: Drying and baking apparatus complying with Section 2404.6.1.2.

2403.2.3 Hot surfaces. Heated surfaces having a temperature sufficient to ignite vapors shall not be located in flammable vapor areas. Space-heating appliances, steam pipes or hot surfaces in a flammable vapor area shall be located such that they are not subject to accumulation of deposits of combustible residues.

Exception: Drying apparatus complying with Section 2404.6.1.2.

2403.2.4 Equipment enclosures. Equipment or apparatus that is capable of producing sparks or particles of hot metal that would fall into a flammable vapor area shall be totally enclosed.

2403.2.5 Grounding. Metal parts of spray booths, exhaust ducts and piping systems conveying Class I or II liquids shall be electrically grounded in accordance with NFPA 70. Metallic parts located in resin application areas, including but not limited to exhaust ducts, ventilation fans, spray application equipment, workpieces and piping, shall be electrically grounded.

2403.2.6 Smoking prohibited. Smoking shall be prohibited in flammable vapor areas and hazardous materials storage rooms associated with flammable finish processes. "No Smoking" signs complying with Section 310 shall be conspicuously posted in such areas.

2403.2.7 Welding warning signs. Welding, cutting and similar spark-producing operations shall not be conducted in or adjacent to flammable vapor areas or dipping or coating operations unless precautions have been taken to provide safety. Conspicuous signs with the following warning shall be posted in the vicinity of *flammable vapor areas*, dipping operations and paint storage rooms:

NO WELDING
THE USE OF WELDING OR CUTTING
EQUIPMENT IN OR NEAR THIS AREA
IS DANGEROUS BECAUSE OF FIRE
AND EXPLOSION HAZARDS. WELDING
AND CUTTING SHALL BE DONE ONLY
UNDER THE SUPERVISION OF THE
PERSON IN CHARGE.

2403.2.8 Powered industrial trucks. Powered industrial trucks used in electrically classified areas shall be *listed* for such use.

2403.3 Storage, use and handling of flammable and combustible liquids. The storage, use and handling of flammable and *combustible liquids* shall be in accordance with this section and Chapter 57.

2403.3.1 Use. Containers supplying spray nozzles shall be of a closed type or provided with metal covers that are kept closed. Containers not resting on floors shall be on noncombustible supports or suspended by wire cables. Containers supplying spray nozzles by gravity flow shall not exceed 10 gallons (37.9 L) in capacity.

2403.3.2 Valves. Containers and piping to which a hose or flexible connection is attached shall be provided with a shutoff valve at the connection. Such valves shall be kept shut when hoses are not in use.

2403.3.3 Pumped liquid supplies. Where flammable or *combustible liquids* are supplied to spray nozzles by positive displacement pumps, pump discharge lines shall be provided with an *approved* relief valve discharging to pump suction or a safe detached location.

2403.3.4 Liquid transfer. Where a flammable mixture is transferred from one portable container to another, a bond shall be provided between the two containers. Not less than one container shall be grounded. Piping systems for Class I and II liquids shall be permanently grounded.

2403.3.5 Class I liquids as solvents. Class I liquids used as solvents shall be used in spray gun and equipment cleaning machines that have been *listed* and *approved* for such purpose or shall be used in spray booths or spray rooms in accordance with Sections 2403.3.5.1 and 2403.3.5.2.

2403.3.5.1 Listed devices. Cleaning machines for spray guns and equipment shall not be located in areas open to the public and shall be separated from ignition sources in accordance with their listings or by a distance of 3 feet (914 mm), whichever is greater. The quantity of solvent used in a machine shall not exceed the design capacity of the machine.

2403.3.5.2 Within spray booths and spray rooms. Where solvents are used for cleaning spray nozzles and auxiliary equipment within spray booths and spray rooms, the ventilating equipment shall be operated during cleaning.

2403.3.6 Class II and III liquids. Solvents used outside of spray booths, spray rooms or *listed* and *approved* spray gun and equipment cleaning machines shall be restricted to Class II and III liquids.

2403.4 Operations and maintenance. *Flammable vapor areas*, exhaust fan blades and exhaust ducts shall be kept free from the accumulation of deposits of combustible residues. Where excessive residue accumulates in such areas, spraying operations shall be discontinued until conditions are corrected.

INTERNATIONAL CODE COUNCIL®
Copyright © 2019 ICC & NYSDOS. ALL RIGHTS RESERVED. Accessed by Lauren Gualdino (lgualdino@briarcliffmanor.org), (-) Order Number #100880972 on May 08, 2020 07:05 AM (PDT) pursuant to License Agreement with ICC & NYSDOS. No further reproduction, no

100880972

2403.4.1 Tools. Scrapers, spuds and other tools used for cleaning purposes shall be constructed of nonsparking materials.

2403.4.2 Residue. Residues removed during cleaning and debris contaminated with residue shall be immediately removed from the premises and properly disposed.

2403.4.3 Waste cans. *Approved* metal waste cans equipped with self-closing lids shall be provided wherever rags or waste are impregnated with finishing material. Such rags and waste shall be deposited therein immediately after being utilized. The contents of waste cans shall be properly disposed of not less than once daily and at the end of each shift.

2403.4.4 Solvent recycling. Solvent distillation equipment used to recycle and clean dirty solvents shall comply with Section 5705.4.

SECTION 2404
SPRAY FINISHING

2404.1 General. The application of flammable or *combustible liquids* by means of spray apparatus in continuous or intermittent processes shall be in accordance with the requirements of Sections 2403 and 2404.2 through 2404.9.4.

2404.2 Location of spray-finishing operations. Spray-finishing operations conducted in buildings used for Group A, E, I or R occupancies shall be located in a spray room protected with an *approved automatic sprinkler system* installed in accordance with Section 903.3.1.1 and separated vertically and horizontally from the remainder of the building by *fire barrier* walls and horizontal assemblies with not less than a 1-hour *fire-resistance rating* in accordance with the *Building Code of New York State*. In other occupancies, spray-finishing operations shall be conducted in a spray room, spray booth or limited spraying space *approved* for such use.

Exceptions:

1. Automobile undercoating spray operations and spray-on automotive lining operations conducted in areas with *approved* natural or mechanical ventilation shall be exempt from the provisions of Section 2404 when *approved* and where utilizing Class IIIA or IIIB *combustible liquids.*
2. In buildings other than Group A, E, I or R occupancies, *approved* limited spraying space in accordance with Section 2404.9.
3. Resin application areas used for manufacturing of reinforced plastics complying with Section 2409 shall not be required to be located in a spray room, spray booth or spraying space.

2404.3 Design and construction. Design and construction of spray rooms, spray booths and spray spaces shall be in accordance with Sections 2404.3.1 through 2404.3.3.1.

2404.3.1 Spray rooms. Spray rooms shall be constructed and designed in accordance with Section 416 of the *Building Code of New York State* and Section 2404.3.2 of this code, and shall comply with Sections 2404.4 through 2404.8 of this code.

2404.3.2 Floor. Combustible floor construction in spray rooms shall be covered by *approved*, noncombustible, nonsparking material, except where combustible coverings, including but not limited to thin paper or plastic and strippable coatings, are utilized over noncombustible materials to facilitate cleaning operations in spray rooms.

2404.3.3 Spray booths. The design and construction of spray booths shall be in accordance with Sections 2404.3.3.1 through 2404.3.3.6, Sections 2404.4 through 2404.8 and NFPA 33.

2404.3.3.1 Construction. Spray booths shall be constructed of *approved* noncombustible materials. Aluminum shall not be used. Where walls or ceiling assemblies are constructed of sheet metal, single-skin assemblies shall be not thinner than 0.0478 inch (18 gage) (1.2 mm) and each sheet of double-skin assemblies shall be not thinner than 0.0359 inch (20 gage) (0.9 mm). Structural sections of spray booths are allowed to be sealed with latex-based or similar caulks and sealants.

2404.3.3.2 Surfaces. The interior surfaces of spray booths shall be smooth; shall be constructed so as to permit the free passage of exhaust air from all parts of the interior, and to facilitate washing and cleaning; and shall be designed to confine residues within the booth. Aluminum shall not be used.

2404.3.3.3 Floor. Combustible floor construction in spray booths shall be covered by *approved*, noncombustible, nonsparking material, except where combustible coverings, including but not limited to thin paper or plastic and strippable coatings, are utilized over noncombustible materials to facilitate cleaning operations in spray booths.

2404.3.3.4 Means of egress. *Means of egress* shall be provided in accordance with Chapter 10.

Exception: *Means of egress* doors from premanufactured spray booths shall be not less than 30 inches (762 mm) in width by 80 inches (2032 mm) in height.

2404.3.3.5 Clear space. Spray booths shall be installed so that all parts of the booth are able to be accessed for cleaning. A clear space of not less than 3 feet (914 mm) shall be maintained on all sides of the spray booth. This clear space shall be kept free of any storage or combustible construction.

Exceptions:

1. This requirement shall not prohibit locating a spray booth closer than 3 feet (914 mm) to or directly against an interior partition, wall or floor/ceiling assembly that has a *fire-resistance rating* of not less than 1 hour, provided that the spray booth can be adequately maintained and cleaned.

INTERNATIONAL CODE COUNCIL®
Copyright © 2019 ICC & NYSDOS. ALL RIGHTS RESERVED. Accessed by Lauren Gualdino (lgualdino@briarcliffmanor.org), (-) Order Number #100880972 on May 08, 2020 07:05 AM (PDT) pursuant to License Agreement with ICC & NYSDOS. No further reproduction, no

100880972

2. This requirement shall not prohibit locating a spray booth closer than 3 feet (914 mm) to an exterior wall or a roof assembly, provided that the wall or roof is constructed of noncombustible material and the spray booth can be adequately maintained and cleaned.

2404.3.3.6 Size. The aggregate area of spray booths in a building shall not exceed the lesser of 10 percent of the area of any floor of a building or the basic area allowed for a Group H-2 occupancy without area increases, as set forth in the *Building Code of New York State*. The area of an individual spray booth in a building shall not exceed the lesser of the aggregate size limit or 1,500 square feet (139 m^2).

Exception: One individual booth not exceeding 500 square feet (46 m^2).

2404.3.4 Spraying spaces. Spraying spaces shall be designed and constructed in accordance with the *Building Code of New York State*, and Section 2404.3.4.1 and Sections 2404.4 through 2404.8 of this code.

2404.3.4.1 Floor. Combustible floor construction in spraying spaces shall be covered by *approved*, noncombustible, nonsparking material, except where combustible coverings, such as thin paper or plastic and strippable coatings, are utilized over noncombustible materials to facilitate cleaning operations in spraying spaces.

2404.4 Fire protection. Spray booths and spray rooms shall be protected by an *approved* automatic fire-extinguishing system complying with Chapter 9. Protection shall extend to exhaust plenums, exhaust ducts and both sides of dry filters where such filters are used.

2404.4.1 Fire extinguishers. Portable fire extinguishers complying with Section 906 shall be provided for spraying areas in accordance with the requirements for an extra (high) hazard occupancy.

2404.5 Housekeeping, maintenance and storage of hazardous materials. Housekeeping, maintenance, storage and use of hazardous materials shall be in accordance with Sections 2403.3, 2403.4, 2404.5.1 and 2404.5.2.

2404.5.1 Different coatings. Spray booths, spray rooms and spraying spaces shall not be alternately utilized for different types of coating materials where the combination of materials is conducive to spontaneous ignition, unless all deposits of one material are removed from the booth, room or space and exhaust ducts prior to spraying with a different material.

2404.5.2 Protection of sprinklers. Automatic sprinklers installed in *flammable vapor areas* shall be protected from the accumulation of residue from spraying operations in an *approved* manner. Bags used as a protective covering shall be 0.003-inch-thick (0.076 mm) polyethylene or cellophane or shall be thin paper. Automatic sprinklers contaminated by overspray particles shall be replaced with new automatic sprinklers.

2404.6 Sources of ignition. Control of sources of ignition shall be in accordance with Section 2403.2 and Sections 2404.6.1 through 2404.6.2.4.

2404.6.1 Drying operations. Spray booths and spray rooms shall not be alternately used for the purpose of drying by arrangements or methods that could cause an increase in the surface temperature of the spray booth or spray room except in accordance with Sections 2404.6.1.1 and 2404.6.1.2. Except as specifically provided in this section, drying or baking units utilizing a heating system having open flames or that are capable of producing sparks shall not be installed in a *flammable vapor areas*.

2404.6.1.1 Spraying procedure. The spraying procedure shall use low-volume spray application.

2404.6.1.2 Drying apparatus. Fixed drying apparatus shall comply with this chapter and the applicable provisions of Chapter 30. Where recirculation ventilation is provided in accordance with Section 2404.7.2, the heating system shall not be within the recirculation air path.

2404.6.1.2.1 Interlocks. The spraying apparatus, drying apparatus and ventilating system for the spray booth or spray room shall be equipped with interlocks arranged to accomplish all of the following:

1. Prevent operation of the spraying apparatus while drying operations are in progress.
2. Where the drying apparatus is located in the spray booth or spray room, prevent operation of the drying apparatus until a timed purge of spray vapors from the spray booth or spray room is complete. This purge time shall be based on completing not fewer than four air changes of spray booth or spray room volume or for a period of not less than 3 minutes, whichever is greater.
3. Have the ventilating system maintain a safe atmosphere within the spray booth or spray room during the drying process and automatically shut off drying apparatus in the event of a failure of the ventilating system.
4. Shut off the drying apparatus automatically if the air temperature within the booth exceeds 200°F (93°C).

2404.6.1.2.2 Portable infrared apparatus. Where a portable infrared drying apparatus is used, electrical wiring and portable infrared drying equipment shall comply with NFPA 70. Electrical equipment located within 18 inches (457 mm) of floor level shall be *approved* for Class I, Division 2 hazardous locations. Metallic parts of drying apparatus shall be electrically bonded and grounded. During spraying operations, portable drying apparatus and electrical connections and wiring thereto shall not be located within spray booths, spray rooms or other areas where spray residue would be deposited thereon.

INTERNATIONAL CODE COUNCIL®
Copyright © 2019 ICC & NYSDOS. ALL RIGHTS RESERVED. Accessed by Lauren Gualdino (lgualdino@briarcliffmanor.org), (-) Order Number #100880972 on May 08, 2020 07:05 AM (PDT) pursuant to License Agreement with ICC & NYSDOS. No further reproduction, no

100880972

2404.6.2 Illumination. Where spraying spaces, spray rooms or spray booths are illuminated through glass panels or other transparent materials, only fixed luminaires shall be utilized as a source of illumination.

2404.6.2.1 Glass panels. Panels for luminaires or for observation shall be of heat-treated glass, wired glass or hammered wire glass and shall be sealed to confine vapors, mists, residues, dusts and deposits to the flammable vapor area. Panels for luminaires shall be separated from the luminaire to prevent the surface temperature of the panel from exceeding 200°F (93°C).

2404.6.2.2 Exterior luminaires. Luminaires attached to the walls or ceilings of a flammable vapor area, but outside of any classified area and separated from the flammable vapor areas by vapor-tight glass panels, shall be suitable for use in ordinary hazard locations. Such luminaires shall be serviced from outside the flammable vapor areas.

2404.6.2.3 Integral luminaires. Luminaires that are an integral part of the walls or ceiling of a flammable vapor area are allowed to be separated from the flammable vapor area by glass panels that are an integral part of the luminaire. Such luminaires shall be *listed* for use in Class I, Division 2 or Class II, Division 2 locations, whichever is applicable, and shall be suitable for accumulations of deposits of combustible residues. Such luminaires are allowed to be serviced from inside the flammable vapor area.

2404.6.2.4 Portable electric lamps. Portable electric lamps shall not be used in *flammable vapor areas* during spraying operations. Portable electric lamps used during cleaning or repairing operations shall be of a type *approved* for hazardous locations.

2404.7 Ventilation. Mechanical ventilation of *flammable vapor areas* shall be provided in accordance with Section 502.7 of the *Mechanical Code of New York State*.

2404.7.1 Operation. Mechanical ventilation shall be kept in operation at all times while spraying operations are being conducted and for a sufficient time thereafter to allow vapors from drying coated articles and finishing material residue to be exhausted. Spraying equipment shall be interlocked with the ventilation of the *flammable vapor areas* such that spraying operations cannot be conducted unless the ventilation system is in operation.

2404.7.2 Recirculation. Air exhausted from spraying operations shall not be recirculated.

Exceptions:

1. Air exhausted from spraying operations is allowed to be recirculated as makeup air for unmanned spray operations, provided that all of the following conditions exist:
   1.1. The solid particulate has been removed.
   1.2. The vapor concentration is less than 25 percent of the LFL.
   1.3. *Approved* equipment is used to monitor the vapor concentration.
   1.4. When the vapor concentration exceeds 25 percent of the LFL, both of the following shall occur:
      1.4.1. An alarm shall sound.
      1.4.2. Spray operations shall automatically shut down.
   1.5. In the event of shutdown of the vapor concentration monitor, 100 percent of the air volume specified in Section 510 of the *Mechanical Code of New York State* is automatically exhausted.
2. Air exhausted from spraying operations is allowed to be recirculated as makeup air to manned spraying operations where all of the conditions provided in Exception 1 are included in the installation and documents have been prepared to show that the installation does not pose a life safety hazard to personnel inside the spray booth, spraying space or spray room.

2404.7.3 Air velocity. The ventilation system shall be designed, installed and maintained so that the flammable contaminants are diluted in noncontaminated air to maintain concentrations in the exhaust airflow below 25 percent of the contaminant's lower flammable limit (LFL). In addition, the spray booth shall be provided with mechanical ventilation so that the average air velocity through openings is in accordance with Sections 2404.7.3.1 and 2404.7.3.2.

2404.7.3.1 Open-face or open-front spray booth. For spray application operations conducted in an open-face or open-front spray booth, the ventilation system shall be designed, installed and maintained so that the average air velocity into the spray booth through all openings is not less than 100 feet per minute (0.51 m/s).

Exception: For fixed or automated electrostatic spray application equipment, the average air velocity into the spray booth through all openings shall be not less than 50 feet per minute (0.25 m/s).

2404.7.3.2 Enclosed spray booth or spray room with openings for product conveyance. For spray application operations conducted in an enclosed spray booth or spray room with openings for product conveyance, the ventilation system shall be designed, installed and maintained so that the average air velocity into the spray booth through openings is not less than 100 feet per minute (0.51 m/s).

Exceptions:

1. For fixed or automated electrostatic spray application equipment, the average air velocity into the spray booth through all openings shall be not less than 50 feet per minute (0.25 m/s).
2. Where methods are used to reduce cross drafts that can draw vapors and overspray through openings from the spray booth or spray room, the average air velocity into the spray booth or spray room shall be that necessary to capture

INTERNATIONAL CODE COUNCIL®
Copyright © 2019 ICC & NYSDOS. ALL RIGHTS RESERVED. Accessed by Lauren Gualdino (lgualdino@briarcliffmanor.org), (-) Order Number #100880972 on May 08, 2020 07:05 AM (PDT) pursuant to License Agreement with ICC & NYSDOS. No further reproduction, no

100880972

and confine vapors and overspray to the spray booth or spray room.

2404.7.4 Ventilation obstruction. Articles being sprayed shall be positioned in a manner that does not obstruct collection of overspray.

2404.7.5 Independent ducts. Each spray booth and spray room shall have an independent exhaust duct system discharging to the outside.

Exceptions:

1. Multiple spray booths having a combined frontal area of 18 square feet (1.67 m^2) or less are allowed to have a common exhaust where identical spray finishing material is used in each booth. If more than one fan serves one booth, fans shall be interconnected such that all fans will operate simultaneously.
2. Where treatment of exhaust is necessary for air pollution control or for energy conservation, ducts shall be allowed to be manifolded if all of the following conditions are met:
   2.1. The sprayed materials used are compatible and will not react or cause ignition of the residue in the ducts.
   2.2. Nitrocellulose-based finishing material shall not be used.
   2.3. A filtering system shall be provided to reduce the amount of overspray carried into the duct manifold.
   2.4. Automatic sprinkler protection shall be provided at the junction of each booth exhaust with the manifold, in addition to the protection required by this chapter.

2404.7.6 Termination point. The termination point for exhaust ducts discharging to the atmosphere shall be not less than the following distances:

1. Ducts conveying explosive or flammable vapors, fumes or dusts: 30 feet (9144 mm) from the *lot line*; 10 feet (3048 mm) from openings into the building; 6 feet (1829 mm) from exterior walls and roofs; 30 feet (9144 mm) from combustible walls or openings into the building that are in the direction of the exhaust discharge; 10 feet (3048 mm) above adjoining grade.
2. Other product-conveying outlets: 10 feet (3048 mm) from the *lot line*; 3 feet (914 mm) from exterior walls and roofs; 10 feet (3048 mm) from openings into the building; 10 feet (3048 mm) above adjoining grade.

2404.7.7 Fan motors and belts. Electric motors driving exhaust fans shall not be placed inside booths or ducts. Fan rotating elements shall be nonferrous or nonsparking or the casing shall consist of, or be lined with, such material. Belts shall not enter the duct or booth unless the belt and pulley within the duct are tightly enclosed.

2404.7.8 Filters. Air intake filters that are part of a wall or ceiling assembly shall be *listed* as Class I or II in accordance with UL 900. Exhaust filters shall be required.

2404.7.8.1 Supports. Supports and holders for filters shall be constructed of noncombustible materials.

2404.7.8.2 Attachment. Overspray collection filters shall be readily removable and able to be accessed for cleaning or replacement.

2404.7.8.3 Maintaining air velocity. Visible gauges, audible alarms or pressure-activated devices shall be installed to indicate or ensure that the required air velocity is maintained.

2404.7.8.4 Filter rolls. Spray booths equipped with a filter roll that is automatically advanced when the air velocity is reduced to less than 100 feet per minute (0.51 m/s) shall be arranged to shut down the spraying operation if the filter roll fails to advance automatically.

2404.7.8.5 Filter disposal. Discarded filter pads shall be immediately removed to a safe, detached location or placed in a noncombustible container with a tight-fitting lid and disposed of properly.

2404.7.8.6 Spontaneous ignition. Spray booths using dry filters shall not be used for spraying materials that are highly susceptible to spontaneous heating and ignition. Filters shall be changed prior to spraying materials that could react with other materials previously collected. An example of a potentially reactive combination includes lacquer when combined with varnishes, stains or primers.

2404.7.8.7 Waterwash spray booths. Waterwash spray booths shall be of an *approved* design so as to prevent excessive accumulation of deposits in ducts and residue at duct outlets. Such booths shall be arranged so that air and overspray are drawn through a continuously flowing water curtain before entering an exhaust duct to the building exterior.

2404.8 Interlocks. Interlocks for spray application finishes shall be in accordance with Sections 2404.8.1 through 2404.8.2.

2404.8.1 Automated spray application operations. Where protecting automated spray application operations, automatic fire-extinguishing systems shall be equipped with an *approved* interlock feature that will, upon discharge of the system, automatically stop the spraying operations and workpiece conveyors into and out of the flammable vapor areas. Where the building is equipped with a fire alarm system, discharge of the automatic fire-extinguishing system shall also activate the building alarm notification appliances.

2404.8.1.1 Alarm station. A manual fire alarm and emergency system shutdown station shall be installed to serve each flammable vapor area. When activated, the station shall accomplish the functions indicated in Section 2404.8.1.

INTERNATIONAL CODE COUNCIL®
Copyright © 2019 ICC & NYSDOS. ALL RIGHTS RESERVED. Accessed by Lauren Gualdino (lgualdino@briarcliffmanor.org), (-) Order Number #100880972 on May 08, 2020 07:05 AM (PDT) pursuant to License Agreement with ICC & NYSDOS. No further reproduction, no

100880972

2404.8.1.2 Alarm station location. Not less than one manual fire alarm and emergency system shutdown station shall be provided with *ready access* for operating personnel. Where access to this station is likely to involve exposure to danger, an additional station shall be located adjacent to an *exit* from the area.

2404.8.2 Ventilation interlock prohibited. Air makeup and flammable vapor area exhaust systems shall not be interlocked with the fire alarm system and shall remain in operation during a fire alarm condition.

Exception: Where the type of fire-extinguishing system used requires such ventilation to be discontinued, air makeup and exhaust systems shall shut down and dampers shall close.

2404.9 Limited spraying spaces. Limited spraying spaces shall comply with Sections 2404.9.1 through 2404.9.4.

2404.9.1 Job size. The aggregate surface area to be sprayed shall not exceed 9 square feet (0.84 m^2).

2404.9.2 Frequency. Spraying operations shall not be of a continuous nature.

2404.9.3 Ventilation. Positive mechanical ventilation providing not fewer than six complete air changes per hour shall be installed. Such system shall meet the requirements of this code for handling flammable vapor areas. Explosion venting is not required.

2404.9.4 Electrical wiring. Electrical wiring within 10 feet (3048 mm) of the floor and 20 feet (6096 mm) horizontally of the limited spraying space shall be designed for Class I, Division 2 locations in accordance with NFPA 70.

SECTION 2405
DIPPING OPERATIONS

2405.1 General. *Dip-tank* operations shall comply with the requirements of Section 2403 and Sections 2405.2 through 2405.11.

2405.2 Location of dip-tank operations. Dip-tank operations conducted in buildings used for Group A, I or R occupancies shall be located in a room designed for that purpose, equipped with an *approved automatic sprinkler system* and separated vertically and horizontally from other areas in accordance with the *Building Code of New York State*.

2405.3 Construction of dip tanks. Dip tanks shall be constructed in accordance with Sections 2405.3.1 through 2405.3.4.3 and NFPA 34. Dip tanks, including drain boards, shall be constructed of noncombustible material and their supports shall be of heavy metal, reinforced concrete or masonry.

2405.3.1 Overflow. Dip tanks greater than 150 gallons (568 L) in capacity or 10 square feet (0.93 m^2) in liquid surface area shall be equipped with a trapped overflow pipe leading to an *approved* location outside the building. The bottom of the overflow connection shall be not less than 6 inches (152 mm) below the top of the tank.

2405.3.2 Bottom drains. Dip tanks greater than 500 gallons (1893 L) in liquid capacity shall be equipped with bottom drains that are arranged to automatically and manually drain the tank quickly in the event of a fire unless the viscosity of the liquid at normal atmospheric temperature makes this impractical. Access to the manual operation shall be from a safe location. Where gravity flow is not practicable, automatic pumps shall be provided. Such drains shall be trapped and discharged to a closed, vented salvage tank or to an *approved* outside location.

Exception: Dip tanks containing Class IIIB *combustible liquids* where the liquids are not heated above room temperature and the process area is protected by automatic sprinklers.

2405.3.3 Dipping liquid temperature control. Protection against the accumulation of vapors, self-ignition and excessively high temperatures shall be provided for dipping liquids that are heated directly or heated by the surfaces of the object being dipped.

2405.3.4 Dip-tank covers. Dip-tank covers allowed by Section 2405.4.1 shall be capable of manual operation and shall be automatic closing by *approved* automatic-closing devices designed to operate in the event of a fire.

2405.3.4.1 Construction. Covers shall be constructed of noncombustible material or be of a tin-clad type with enclosing metal applied with locked joints.

2405.3.4.2 Supports. Chain or wire rope shall be utilized for cover supports or operating mechanisms.

2405.3.4.3 Closed covers. Covers shall be kept closed when tanks are not in use.

2405.4 Fire protection. Dip-tank operations shall be protected in accordance with Sections 2405.4.1 through 2405.4.2.

2405.4.1 Fixed fire-extinguishing equipment. An *approved* automatic fire-extinguishing system or dip-tank cover in accordance with Section 2405.3.4 shall be provided for the following dip tanks:

1. Dip tanks less than 150 gallons (568 L) in capacity or 10 square feet (0.93 m^2) in liquid surface area.
2. Dip tanks containing a liquid with a *flash point* below 110°F (43°C) used in such manner that the liquid temperature could equal or be greater than its *flash point* from artificial or natural causes, and having both a capacity of more than 10 gallons (37.9 L) and a liquid surface area of more than 4 square feet (0.37 m^2).

2405.4.1.1 Fire-extinguishing system. An *approved automatic fire-extinguishing system* shall be provided for *dip tanks* with a 150-gallon (568 L) or more capacity or 10 square feet (0.93 m^2) or larger in a liquid surface area. Fire-extinguishing system design shall be in accordance with NFPA 34.

2405.4.2 Portable fire extinguishers. Areas in the vicinity of dip tanks shall be provided with portable fire extinguishers complying with Section 906 and suitable for flammable and combustible liquid fires as specified for extra (high) hazard occupancies.

INTERNATIONAL CODE COUNCIL®
Copyright © 2019 ICC & NYSDOS. ALL RIGHTS RESERVED. Accessed by Lauren Gualdino (lgualdino@briarcliffmanor.org), (-) Order Number #100880972 on May 08, 2020 07:05 AM (PDT) pursuant to License Agreement with ICC & NYSDOS. No further reproduction, no

100880972

2405.5 Housekeeping, maintenance and storage of hazardous materials. Housekeeping, maintenance, storage and use of hazardous materials shall be in accordance with Sections 2403.3 and 2403.4.

2405.6 Sources of ignition. Control of sources of ignition shall be in accordance with Section 2403.2.

2405.7 Ventilation of flammable vapor areas. Flammable vapor areas shall be provided with mechanical ventilation adequate to prevent the dangerous accumulation of vapors. Required ventilation systems shall be arranged such that the failure of any ventilating fan shall automatically stop the dipping conveyor system.

2405.8 Conveyor interlock. Dip tanks utilizing a conveyor system shall be arranged such that in the event of a fire, the conveyor system shall automatically cease motion and the required tank bottom drains shall open.

2405.9 Hardening and tempering tanks. Hardening and tempering tanks shall comply with Sections 2405.3 through 2405.3.3, 2405.4.2 and 2405.8, but shall be exempt from other provisions of Section 2405.

2405.9.1 Location. Tanks shall be located as far as practical from furnaces and shall not be located on or near combustible floors.

2405.9.2 Hoods. Tanks shall be provided with a noncombustible hood and vent or other *approved* venting means, terminating outside of the structure to serve as a vent in case of a fire. Such vent ducts shall be treated as flues and proper clearances shall be maintained from combustible materials.

2405.9.3 Alarms. Tanks shall be equipped with a high-temperature limit switch arranged to sound an alarm when the temperature of the quenching medium reaches 50°F (10°C) below the *flash point*.

2405.9.4 Fire protection. Hardening and tempering tanks greater than 500 gallons (1893 L) in capacity or 25 square feet (2.3 m^2) in liquid surface area shall be protected by an *approved automatic fire-extinguishing system* complying with Chapter 9.

2405.9.5 Use of air pressure. Air under pressure shall not be used to fill or agitate oil in tanks.

2405.10 Flow-coating operations. Flow-coating operations shall comply with the requirements for dip tanks. The area of the sump and any areas on which paint flows shall be considered to be the area of a dip tank.

2405.10.1 Paint supply. Paint shall be supplied by a gravity tank not exceeding 10 gallons (38 L) in capacity or by direct low-pressure pumps arranged to shut down automatically in case of a fire by means of *approved* heat-actuated devices.

2405.11 Roll-coating operations. Roll-coating operations shall comply with Section 2405.10. In roll-coating operations utilizing flammable or *combustible liquids*, sparks from static electricity shall be prevented by electrically bonding and grounding all metallic rotating and other parts of machinery and equipment and by the installation of static collectors, or by maintaining a conductive atmosphere such as a high relative humidity.

SECTION 2406
POWDER COATING

2406.1 General. Operations using finely ground particles of protective finishing material applied in dry powder form by a fluidized bed, an electrostatic fluidized bed, powder spray guns or electrostatic powder spray guns shall comply with Sections 2406.2 through 2406.7. In addition, Section 2407 shall apply to fixed electrostatic equipment used in powder coating operations.

2406.2 Location. Powder coating operations shall be conducted in enclosed powder coating rooms, enclosed powder coating facilities that are ventilated or ventilated spray booths.

2406.3 Construction of powder coating rooms and booths. Powder coating rooms shall be constructed of noncombustible materials. Spray booths shall be constructed in accordance with Section 2404.3.3.

Exception: *Listed* spray-booth assemblies that are constructed of other materials shall be allowed.

2406.4 Fire protection. Areas used for powder coating shall be protected by an *approved* automatic fire-extinguishing system complying with Chapter 9.

2406.4.1 Additional protection for fixed systems. Automated powder application equipment shall be protected by the installation of an *approved*, supervised flame detection apparatus that shall react to the presence of flame within 0.5 second and shall accomplish all of the following:

1. Shutting down of energy supplies (electrical and compressed air) to conveyor, ventilation, application, transfer and powder collection equipment.
2. Closing of segregation dampers in associated ductwork to interrupt airflow from application equipment to powder collectors.
3. Activation of an alarm that is audible throughout the powder coating room or booth.

2406.4.2 Fire extinguishers. Portable fire extinguishers complying with Section 906 shall be provided for areas used for powder coating in accordance with the requirements for an extra-hazard occupancy.

2406.5 Operation and maintenance. Powder coating areas shall be kept free from the accumulation of powder coating dusts, including horizontal surfaces such as ledges, beams, pipes, hoods, booths and floors.

2406.5.1 Cleaning. Surfaces shall be cleaned in such a manner so as to avoid scattering dusts to other places or creating dust clouds. Vacuum sweeping equipment shall be of a type *approved* for use in hazardous locations.

2406.6 Sources of ignition. Control of sources of ignition shall be in accordance with Section 2403.2 and Sections 2406.6.1 through 2406.6.4.

INTERNATIONAL CODE COUNCIL®
Copyright © 2019 ICC & NYSDOS. ALL RIGHTS RESERVED. Accessed by Lauren Gualdino (lgualdino@briarcliffmanor.org), (-) Order Number #100880972 on May 08, 2020 07:05 AM (PDT) pursuant to License Agreement with ICC & NYSDOS. No further reproduction, no

100880972

2406.6.1 Drying, curing and fusion equipment. Drying, curing and fusion equipment shall comply with Chapter 30.

2406.6.2 Spark-producing metals. Iron or spark-producing metals shall be prevented from being introduced into the powders being applied by magnetic separators, filter-type separators or by other *approved* means.

2406.6.3 Preheated parts. When parts are heated prior to coating, the temperature of the parts shall not exceed the ignition temperature of the powder to be used.

2406.6.4 Grounding and bonding. Precautions shall be taken to minimize the possibility of ignition by static electrical sparks through static bonding and grounding, where possible, of powder transport, application and recovery equipment.

2406.7 Ventilation. Exhaust ventilation shall be sufficient to maintain the atmosphere below one-half the minimum *explosive* concentration for the material being applied. Nondeposited, air-suspended powders shall be removed through exhaust ducts to the powder recovery system.

SECTION 2407
ELECTROSTATIC APPARATUS

2407.1 General. Electrostatic apparatus and devices used in connection with paint-spraying and paint-*detearing* operations shall be of an *approved* type.

2407.2 Location and clear space. A space of not less than twice the sparking distance shall be maintained between goods being painted or *deteared* and electrodes, electrostatic atomizing heads or conductors. A sign stating the sparking distance shall be conspicuously posted near the assembly.

Exception: Portable electrostatic paint-spraying apparatus *listed* for use in Class I, Division 1, locations.

2407.3 Construction of equipment. Electrodes and electrostatic atomizing heads shall be of *approved* construction, rigidly supported in permanent locations and effectively insulated from ground. Insulators shall be nonporous and noncombustible.

Exception: Portable electrostatic paint-spraying apparatus *listed* for use in Class I, Division 1, locations.

2407.3.1 Barriers. Booths, fencing, railings or guards shall be placed about the equipment such that either by their location or character, or both, isolation of the process is maintained from plant storage and personnel. Railings, fencing and guards shall be of conductive material, adequately grounded, and not less than 5 feet (1524 mm) from processing equipment.

Exception: Portable electrostatic paint-spraying apparatus *listed* for use in Class I, Division 1, locations.

2407.4 Fire protection. Areas used for electrostatic spray finishing with fixed equipment shall be protected with an *approved automatic fire-extinguishing system* complying with Chapter 9 and Section 2407.4.1.

2407.4.1 Protection for automated liquid electrostatic spray application equipment. Automated liquid electrostatic spray application equipment shall be protected by the installation of an *approved*, supervised flame detection apparatus that shall, in the event of ignition, react to the presence of flame within 0.5 second and shall accomplish all of the following:

1. Activation of a local alarm in the vicinity of the spraying operation and activation of the building alarm system, if such a system is provided.
2. Shutting down of the coating material delivery system.
3. Termination of all spray application operations.
4. Stopping of conveyors into and out of the flammable vapor areas.
5. Disconnection of power to the high-voltage elements in the flammable vapor areas and disconnection of power to the system.

2407.5 Housekeeping, maintenance and storage of hazardous materials. Housekeeping, maintenance, storage and use of hazardous materials shall be in accordance with Sections 2403.3, 2403.4 and Sections 2407.5.1 and 2407.5.2.

2407.5.1 Maintenance. Insulators shall be kept clean and dry. Drip plates and screens subject to paint deposits shall be removable and taken to a safe place for cleaning. Grounds and bonding means for the paint-spraying apparatus and all associated equipment shall be periodically cleaned and maintained free of overspray.

2407.5.2 Signs. Signs shall be posted to provide the following information:

1. Designate the process zone as dangerous with respect to fire and accident.
2. Identify the grounding requirements for all electrically conductive objects in the flammable vapor area, including persons.
3. Restrict access to qualified personnel only.

2407.6 Sources of ignition. Transformers, power packs, control apparatus and all other electrical portions of the equipment, except high-voltage grids and electrostatic atomizing heads and connections, shall be located outside of the *flammable vapor areas* or shall comply with Section 2403.2.

2407.7 Ventilation. The flammable vapor area shall be ventilated in accordance with Section 2404.7.

2407.8 Emergency shutdown. Electrostatic apparatus shall be equipped with automatic controls operating without time delay to disconnect the power supply to the high-voltage transformer and signal the operator under any of the following conditions:

1. Stoppage of ventilating fans or failure of ventilating equipment from any cause.
2. Stoppage of the conveyor carrying articles past the high-voltage grid.
3. Occurrence of a ground or an imminent ground at any point of the high-voltage system.
4. Reduction of clearance below that required in Section 2407.2.

INTERNATIONAL CODE COUNCIL®
Copyright © 2019 ICC & NYSDOS. ALL RIGHTS RESERVED. Accessed by Lauren Gualdino (lgualdino@briarcliffmanor.org), (-) Order Number #100880972 on May 08, 2020 07:05 AM (PDT) pursuant to License Agreement with ICC & NYSDOS. No further reproduction, no

100880972

2407.9 Ventilation interlock. Hand electrostatic equipment shall be interlocked with the ventilation system for the spraying area so that the equipment cannot be operated unless the ventilating system is in operation.

SECTION 2408
ORGANIC PEROXIDES AND DUAL-COMPONENT COATINGS

2408.1 General. Spraying operations involving the use of organic peroxides and other dual-component coatings shall be in accordance with the requirements of Section 2403 and Sections 2408.2 through 2408.5.

2408.2 Use of organic peroxide coatings. Spraying operations involving the use of organic peroxides and other dual-component coatings shall be conducted in *approved* sprinklered spray booths complying with Section 2404.3.3.

2408.3 Equipment. Spray guns and related handling equipment used with organic peroxides shall be of a type manufactured for such use.

2408.3.1 Pressure tanks. Separate pressure vessels and inserts specifically for the application shall be used for the resin and for the organic peroxide, and shall not be interchanged. Organic peroxide pressure tank inserts shall be constructed of stainless steel or polyethylene.

2408.4 Housekeeping, maintenance, storage and use of hazardous materials. Housekeeping, maintenance, storage and use of hazardous materials shall be in accordance with Sections 2403.3 and 2403.4 and Sections 2408.4.1 through 2408.4.7.

2408.4.1 Contamination prevention. Organic peroxide initiators shall not be contaminated with foreign substances.

2408.4.2 Spilled material. Spilled organic peroxides shall be promptly removed and any residue thereof promptly eliminated. Spilled material absorbed by using a noncombustible absorbent shall be promptly disposed of in accordance with the manufacturer's recommendation.

2408.4.3 Residue control. Materials shall not be contaminated by dusts and overspray residues resulting from the sanding or spraying of finishing materials containing organic peroxides.

2408.4.4 Handling. Handling of organic peroxides shall be conducted in a manner that avoids shock and friction that produces decomposition and violent reaction hazards.

2408.4.5 Mixing. Organic peroxides shall not be mixed directly with accelerators or promoters.

2408.4.6 Personnel qualifications. Personnel working with organic peroxides and dual-component coatings shall be specifically trained to work with these materials.

2408.4.7 Storage. The storage of organic peroxides shall comply with Chapter 62.

2408.5 Sources of ignition. Only nonsparking tools shall be used in areas where organic peroxides are stored, mixed or applied.

SECTION 2409
INDOOR MANUFACTURING OF REINFORCED PLASTICS

2409.1 General. Indoor manufacturing processes involving spray or hand application of reinforced plastics and using more than 5 gallons (19 L) of resin in a 24-hour period shall be in accordance with Sections 2409.2 through 2409.6.1.

2409.2 Resin application equipment. Equipment used for spray application of resin shall be installed and used in accordance with Section 2408 and Sections 2409.3 through 2409.6.1.

2409.3 Fire protection. Resin application areas shall be protected by an *automatic sprinkler system*. The sprinkler system design shall be not less than that required for Ordinary Hazard, Group 2, with a minimum design area of 3,000 square feet (279 m^2). Where the materials or storage arrangements are required by other regulations to be provided with a higher level of sprinkler system protection, the higher level of sprinkler system protection shall be provided.

2409.4 Housekeeping, maintenance, storage and use of hazardous materials. Housekeeping, maintenance, storage and use of hazardous materials shall be in accordance with Sections 2403.3 and 2403.4 and Sections 2409.4.1 through 2409.4.3.

2409.4.1 Handling of excess catalyzed resin. A noncombustible, open-top container shall be provided for disposal of excess catalyzed resin. Excess catalyzed resin shall be drained into the container while still in the liquid state. Enough water shall be provided in the container to maintain a minimum 2-inch (51 mm) water layer over the contained resin.

2409.4.2 Control of overchop. In areas where chopper guns are used, exposed wall and floor surfaces shall be covered with paper, polyethylene film or other *approved* material to allow for removal of overchop. Overchop shall be allowed to cure for not less than 4 hours prior to removal.

2409.4.2.1 Disposal. Following removal, used wall and floor covering materials required by Section 2409.4.2 shall be placed in a noncombustible container and removed from the facility.

2409.4.3 Storage and use of hazardous materials. Storage and use of organic peroxides shall be in accordance with Section 2408 and Chapter 62. Storage and use of flammable and *combustible liquids* shall be in accordance with Chapter 57. Storage and use of unstable (reactive) materials shall be in accordance with Chapter 66.

2409.5 Sources of ignition in resin application areas. Sources of ignition in resin application areas shall comply with Section 2403.2.

INTERNATIONAL CODE COUNCIL®
Copyright © 2019 ICC & NYSDOS. ALL RIGHTS RESERVED. Accessed by Lauren Gualdino (lgualdino@briarcliffmanor.org), (-) Order Number #100880972 on May 08, 2020 07:05 AM (PDT) pursuant to License Agreement with ICC & NYSDOS. No further reproduction, no

100880972

2409.6 Ventilation. Mechanical ventilation shall be provided throughout resin application areas in accordance with Section 2404.7. The ventilation rate shall be adequate to maintain the concentration of flammable vapors in the resin application area at or below 25 percent of the LFL.

Exception: Mechanical ventilation is not required for buildings that have 75 percent of the perimeter unenclosed.

2409.6.1 Local ventilation. Local ventilation shall be provided inside of workpieces where personnel will be under or inside of the workpiece.

SECTION 2410
FLOOR SURFACING AND FINISHING OPERATIONS

2410.1 Scope. Floor surfacing and finishing operations exceeding 350 square feet (33 m^2) and using Class I or II liquids shall comply with Sections 2410.2 through 2410.5.

2410.2 Mechanical system operation. Heating, ventilation and air-conditioning systems shall not be operated during resurfacing or refinishing operations or within 4 hours of the application of flammable or *combustible liquids*.

2410.3 Business operation. Floor surfacing and finishing operations shall not be conducted while an establishment is open to the public.

2410.4 Ignition sources. The power shall be shut down to all electrical sources of ignition within the flammable vapor area, unless those devices are classified for use in Class I, Division 1 hazardous locations.

2410.5 Ventilation. To prevent the accumulation of flammable vapors, mechanical ventilation at a minimum rate of 1 cubic foot per minute per square foot [0.00508 $m^3/(s \cdot m^2)$] of area being finished shall be provided. Such exhaust shall be by *approved* temporary or portable means. Vapors shall be exhausted to the exterior of the building.

INTERNATIONAL CODE COUNCIL®
Copyright © 2019 ICC & NYSDOS. ALL RIGHTS RESERVED. Accessed by Lauren Gualdino (lgualdino@briarcliffmanor.org), (-) Order Number #100880972 on May 08, 2020 07:05 AM (PDT) pursuant to License Agreement with ICC & NYSDOS. No further reproduction, no

100880972

INTERNATIONAL CODE COUNCIL®
Copyright © 2019 ICC & NYSDOS. ALL RIGHTS RESERVED. Accessed by Lauren Gualdino (lgualdino@briarcliffmanor.org), (-) Order Number #100880972 on May 08, 2020 07:05 AM (PDT) pursuant to License Agreement with ICC & NYSDOS. No further reproduction, no

100880972

CHAPTER 25
FRUIT AND CROP RIPENING

SECTION 2501
GENERAL

2501.1 Scope. Ripening processes where ethylene gas is introduced into a room to promote the ripening of fruits, vegetables and other crops shall comply with this chapter.

Exception: Mixtures of ethylene and one or more inert gases in concentrations that prevent the gas from reaching greater than 25 percent of the lower explosive limit (LEL) when released to the atmosphere.

2501.2 Permits. Permits shall be required as set forth in Section 105.6.

2501.3 Ethylene generators. *Approved* ethylene generators shall be operated and maintained in accordance with Section 2506.

SECTION 2502
DEFINITIONS

2502.1 Terms defined in Chapter 2. Words and terms used in this chapter and defined in Chapter 2 shall have the meanings ascribed to them as defined therein.

SECTION 2503
ETHYLENE GAS

2503.1 Location. Ethylene gas shall be discharged only into *approved* rooms or enclosures designed and constructed for this purpose.

2503.2 Dispensing. Valves controlling discharge of ethylene shall provide positive and fail-closed control of flow and shall be set to limit the concentration of gas in air below 1,000 parts per million (ppm).

SECTION 2504
SOURCES OF IGNITION

2504.1 Ignition prevention. Sources of ignition shall be controlled or protected in accordance with this section and Chapter 3.

2504.2 Electrical wiring and equipment. Electrical wiring and equipment, including luminaires, shall be *approved* for use in Class I, Division 2, Group C hazardous (classified) locations.

2504.3 Static electricity. Containers, piping and equipment used to dispense ethylene shall be bonded and grounded to prevent the discharge of static sparks or arcs.

2504.4 Lighting. Lighting shall be by *approved* electric lamps or luminaires only.

2504.5 Heating. Heating shall be by indirect means utilizing low-pressure steam, hot water or warm air.

Exception: Electric or fuel-fired heaters *approved* for use in hazardous (classified) locations and that are installed and operated in accordance with the applicable provisions of NFPA 70, the *Mechanical Code of New York State* or the *Fuel Gas Code of New York State*.

SECTION 2505
COMBUSTIBLE WASTE

2505.1 Housekeeping. Empty boxes, cartons, pallets and other combustible waste shall be removed from ripening rooms or enclosures and disposed of at regular intervals in accordance with Chapter 3.

SECTION 2506
ETHYLENE GENERATORS

2506.1 Ethylene generators. Ethylene generators shall be *listed* and *labeled* by an *approved* testing laboratory, *approved* by the *fire code official* and used only in *approved* rooms in accordance with the ethylene generator manufacturer's instructions. The listing evaluation shall include documentation that the concentration of ethylene gas does not exceed 25 percent of the lower explosive limit (LEL).

2506.2 Ethylene generator rooms. Ethylene generators shall be used in rooms having a volume of not less than 1,000 cubic feet (28 m^3). Rooms shall have air circulation to ensure even distribution of ethylene gas and shall be free from sparks, open flames or other ignition sources.

SECTION 2507
WARNING SIGNS

2507.1 Where required. *Approved* warning signs indicating the danger involved and necessary precautions shall be posted on all doors and entrances to the premises.

INTERNATIONAL CODE COUNCIL®
Copyright © 2019 ICC & NYSDOS. ALL RIGHTS RESERVED. Accessed by Lauren Gualdino (lgualdino@briarcliffmanor.org), (-) Order Number #100880972 on May 08, 2020 07:05 AM (PDT) pursuant to License Agreement with ICC & NYSDOS. No further reproduction, no

INTERNATIONAL CODE COUNCIL®
Copyright © 2019 ICC & NYSDOS. ALL RIGHTS RESERVED. Accessed by Lauren Gualdino (lgualdino@briarcliffmanor.org), (-) Order Number #100880972 on May 08, 2020 07:05 AM (PDT) pursuant to License Agreement with ICC & NYSDOS. No further reproduction, no

100880972

CHAPTER 26
FUMIGATION AND INSECTICIDAL FOGGING

SECTION 2601
GENERAL

2601.1 Scope. *Fumigation* and *insecticidal fogging* operations within buildings, structures and spaces shall comply with this chapter.

2601.2 Permits. Permits shall be required as set forth in Section 105.6.

SECTION 2602
DEFINITIONS

2602.1 Definitions. The following terms are defined in Chapter 2:

FUMIGANT.

FUMIGATION.

INSECTICIDAL FOGGING.

SECTION 2603
FIRE SAFETY REQUIREMENTS

2603.1 General. Buildings, structures and spaces in which fumigation and insecticidal fogging operations are conducted shall comply with the fire protection and safety requirements of Sections 2603.2 through 2603.7.

2603.2 Sources of ignition. Fires, open flames and similar sources of ignition shall be eliminated from the space under fumigation or insecticidal fogging. Heating, where needed, shall be of an *approved* type.

2603.2.1 Electricity. Electricity in any part of the building, structure or space where operation of switches or electrical devices, equipment or systems could serve as a source of ignition shall be shut off.

Exception: Circulating fans that have been specifically designed for utilization in hazardous atmospheres and installed in accordance with NFPA 70.

2603.2.2 Electronic devices. Electronic devices, including portable equipment and cellular phones, shall be shut off. Telephone lines shall be disconnected from telephones.

2603.2.3 Duration. Sources of ignition shall be shut off during the fumigation activity and remain shut off until the ventilation required in Section 2603.6 is completed.

2603.3 Notification. The *fire code official* and fire chief shall be notified in writing not less than 48 hours before the building, structure or space is to be closed in connection with the utilization of any toxic or flammable *fumigant*. Notification shall give the location of the enclosed space to be fumigated or fogged, the occupancy, the *fumigants* or insecticides to be utilized, the person or persons responsible for the operation, and the date and time at which the operation will begin. Written notice of any *fumigation* or *insecticidal fogging* operation shall be given to all affected occupants of the building, structure or space in which such operations are to be conducted with sufficient advance notice to allow the occupants to evacuate the building, structure or space. Such notice shall inform the occupants as to the purposes, anticipated duration and hazards associated with the fumigation or insecticidal fogging operation.

2603.3.1 Warning signs. *Approved* warning signs indicating the danger, type of chemical involved and necessary precautions shall be posted on all doors and entrances to the affected building, structure or space and on all gangplanks and ladders from the deck, pier or land to a ship. Such notices shall be printed in red ink on a white background. Letters in the headlines shall be not less than 2 inches (51 mm) in height and shall state the date and time of the operation, the name and address of the person, the name of the operator in charge, and a warning stating that the affected building, structure or space shall be vacated not less than 1 hour before the operation begins and shall not be reentered until the danger signs have been removed by the proper authorities.

2603.3.2 Breathing apparatus. Persons engaged in the business of fumigation or insecticidal fogging shall maintain and have available *approved* protective breathing apparatus.

2603.3.3 Watch personnel. During the period fumigation is in progress, except where fumigation is conducted in a gas-tight vault or tank, a responsible watchperson shall remain on duty at the entrance or entrances to the enclosed fumigated space until after the fumigation is completed and the building, structure or space is properly ventilated and safe for occupancy. Sufficient watchers shall be provided to prevent persons from entering the enclosed space under *fumigation* without being observed.

2603.3.4 Evacuation during fumigation. Occupants of the building, structure or space to be fumigated, except the personnel conducting the fumigation, shall be evacuated from such building, structure or space prior to commencing fumigation operations.

2603.3.5 Evacuation during insecticidal fogging operations. Occupants in the building, structure or space to be fogged, except the personnel conducting the insecticidal fogging operations, shall be evacuated from such building, structure or space prior to commencing fogging operations.

2603.4 Insecticidal fogging liquids. Insecticidal fogging liquids with a *flash point* below 100°F (38°C) shall not be utilized.

2603.5 Sealing of buildings, structures and spaces. Paper and other similar materials that do not meet the flame propagation performance criteria of Test Method 1 or Test Method

INTERNATIONAL CODE COUNCIL®
Copyright © 2019 ICC & NYSDOS. ALL RIGHTS RESERVED. Accessed by Lauren Gualdino (lgualdino@briarcliffmanor.org), (-) Order Number #100880972 on May 08, 2020 07:05 AM (PDT) pursuant to License Agreement with ICC & NYSDOS. No further reproduction, no

100880972

2, as appropriate, of NFPA 701 shall not be used to wrap or cover a building, structure or space in excess of that required for the sealing of cracks, casements and similar openings.

2603.5.1 Maintenance of openings. All openings to the building, structure or space to be fumigated or fogged shall be kept securely closed during such operation.

2603.6 Venting and cleanup. At the end of the exposure period, fumigators shall safely and properly ventilate the premises and contents; properly dispose of fumigant containers, residues, debris and other materials used for such fumigation; and clear obstructions from gas-fired appliance vents.

2603.7 Flammable fumigants restricted. The use of carbon disulfide and hydrogen cyanide shall be restricted to agricultural fumigation.

INTERNATIONAL CODE COUNCIL®
Copyright © 2019 ICC & NYSDOS. ALL RIGHTS RESERVED. Accessed by Lauren Gualdino (lgualdino@briarcliffmanor.org), (-) Order Number #100880972 on May 08, 2020 07:05 AM (PDT) pursuant to License Agreement with ICC & NYSDOS. No further reproduction, no

100880972

CHAPTER 27

SEMICONDUCTOR FABRICATION FACILITIES

SECTION 2701 GENERAL

2701.1 Scope. Semiconductor fabrication facilities and comparable research and development areas classified as Group H-5 shall comply with this chapter and the *Building Code of New York State*. The use, storage and handling of hazardous materials in Group H-5 shall comply with this chapter, other applicable provisions of this code and the *Building Code of New York State*.

2701.2 Application. The requirements set forth in this chapter are requirements specific only to Group H-5 and shall be applied as exceptions or additions to applicable requirements set forth elsewhere in this code.

2701.3 Multiple hazards. Where a material poses multiple hazards, all hazards shall be addressed in accordance with Section 5001.1.

2701.4 Existing buildings and existing fabrication areas. Existing buildings and existing *fabrication areas* shall comply with this chapter, except that transportation and handling of HPM in *corridors* and enclosures for *stairways* and *ramps* shall be allowed where in compliance with Section 2705.3.2 and the *Building Code of New York State*.

2701.5 Permits. Permits shall be required as set forth in Section 105.6.

SECTION 2702 DEFINITIONS

2702.1 Definitions. The following terms are defined in Chapter 2:

EMERGENCY CONTROL STATION.

FABRICATION AREA.

GAS DETECTION SYSTEM.

HAZARDOUS PRODUCTION MATERIAL (HPM).

HPM.

HPM ROOM.

PASS-THROUGH.

SEMICONDUCTOR FABRICATION FACILITY.

SERVICE CORRIDOR.

TOOL.

WORKSTATION.

SECTION 2703 GENERAL SAFETY PROVISIONS

2703.1 Emergency control station. An *emergency control station* shall be provided in accordance with Sections 2703.1.1 through 2703.1.3.

2703.1.1 Location. The *emergency control station* shall be located on the premises at an *approved* location outside the fabrication area.

2703.1.2 Staffing. Trained personnel shall continuously staff the *emergency control station*.

2703.1.3 Signals. The *emergency control station* shall receive signals from emergency equipment and alarm and detection systems. Such emergency equipment and alarm and detection systems shall include, but not be limited to, the following where such equipment or systems are required to be provided either in this chapter or elsewhere in this code:

1. *Automatic sprinkler system* alarm and monitoring systems.
2. Manual fire alarm systems.
3. Emergency alarm systems.
4. Gas detection systems.
5. Smoke detection systems.
6. Emergency power systems.
7. Automatic detection and alarm systems for pyrophoric liquids and Class 3 water-reactive liquids required by Section 2705.2.3.4.
8. Exhaust ventilation flow alarm devices for pyrophoric liquids and Class 3 water-reactive liquids and cabinet exhaust ventilation systems required by Section 2705.2.3.4.

2703.2 Systems, equipment and processes. Systems, equipment and processes shall be in accordance with Sections 2703.2.1 through 2703.2.3.2.

2703.2.1 Application. Systems, equipment and processes shall include, but not be limited to, containers, cylinders, tanks, piping, tubing, valves and fittings.

2703.2.2 General requirements. In addition to the requirements in Section 2703.2, systems, equipment and processes shall comply with Section 5003.2, other applicable provisions of this code, the *Building Code of New York State* and the *Mechanical Code of New York State*.

2703.2.3 Additional requirements for HPM supply piping. In addition to the requirements in Section 2703.2, HPM supply piping and tubing for HPM gases and liquids shall comply with this section.

2703.2.3.1 General requirements. The requirements set forth in Section 5003.2.2.2 shall apply to supply piping and tubing for HPM gases and liquids.

2703.2.3.2 Health-hazard ranking 3 or 4 HPM. Supply piping and tubing for HPM gases and liquids having a health-hazard ranking of 3 or 4 shall be welded throughout, except for connections located within a ventilation enclosure if the material is a gas, or an

INTERNATIONAL CODE COUNCIL®
Copyright © 2019 ICC & NYSDOS. ALL RIGHTS RESERVED. Accessed by Lauren Gualdino (lgualdino@briarcliffmanor.org), (-) Order Number #100880972 on May 08, 2020 07:05 AM (PDT) pursuant to License Agreement with ICC & NYSDOS. No further reproduction, no

100880972

approved method of drainage or containment provided for connections if the material is a liquid.

2703.3 Construction requirements. Construction of semiconductor fabrication facilities shall be in accordance with Sections 2703.3.1 through 2703.3.9.

2703.3.1 Fabrication areas. Construction and location of *fabrication areas* shall comply with the *Building Code of New York State*.

2703.3.2 Pass-throughs in exit access corridors. Pass-throughs in *exit access corridors* shall be constructed in accordance with the *Building Code of New York State*.

2703.3.3 Liquid storage rooms. Liquid storage rooms shall comply with Chapter 57 and the *Building Code of New York State*.

2703.3.4 HPM rooms. HPM rooms shall comply with the *Building Code of New York State*.

2703.3.5 Gas cabinets. Gas cabinets shall comply with Section 5003.8.6.

2703.3.6 Exhausted enclosures. Exhausted enclosures shall comply with Section 5003.8.5.

2703.3.7 Gas rooms. Gas rooms shall comply with Section 5003.8.4.

2703.3.8 Service corridors. Service corridors shall comply with Section 2705.3 and the *Building Code of New York State*.

2703.3.9 Cabinets containing pyrophoric liquids or water-reactive Class 3 liquids. Cabinets in *fabrication areas* containing pyrophoric liquids or Class 3 water-reactive liquids in containers or in amounts greater than $^1/_2$ gallon (2 L) shall comply with Section 2705.2.3.4.

2703.4 Emergency plan. An emergency plan shall be established as set forth in Section 403.7.1.

2703.5 Maintenance of equipment, machinery and processes. Maintenance of equipment, machinery and processes shall comply with Section 5003.2.6.

2703.6 Security of areas. Areas shall be secured in accordance with Section 5003.9.2.

2703.7 Electrical wiring and equipment. Electrical wiring and equipment in HPM facilities shall comply with Sections 2703.7.1 through 2703.7.3.

2703.7.1 Fabrication areas. Electrical wiring and equipment in *fabrication areas* shall comply with NFPA 70.

2703.7.2 Workstations. Electrical equipment and devices within 5 feet (1524 mm) of workstations in which flammable or pyrophoric gases or flammable liquids are used shall comply with NFPA 70 for Class I, Division 2 hazardous locations. Workstations shall not be energized without adequate exhaust ventilation in accordance with Section 2703.14.

Exception: Class I, Division 2 hazardous electrical equipment is not required where the air removal from the workstation or dilution will prevent the accumulation of flammable vapors and fumes on a continuous basis.

2703.7.3 Hazardous production material (HPM) rooms, gas rooms and liquid storage rooms. Electrical wiring and equipment in HPM rooms, gas rooms and liquid storage rooms shall comply with NFPA 70.

2703.8 Corridors and enclosures for stairways and ramps. Hazardous materials shall not be used or stored in *corridors* or enclosures for *stairways* and *ramps.*

2703.9 Service corridors. Hazardous materials shall not be used in an open-system use condition in service corridors.

2703.10 Automatic sprinkler system. An *approved automatic sprinkler system* shall be provided in accordance with Sections 2703.10.1 through 2703.10.5 and Chapter 9.

2703.10.1 Workstations and tools. The design of the sprinkler system in the area shall take into consideration the spray pattern and the effect on the equipment.

2703.10.1.1 Combustible workstations. A sprinkler head shall be installed within each branch exhaust connection or individual plenums of workstations of combustible construction. The sprinkler head in the exhaust connection or plenum shall be located not more than 2 feet (610 mm) from the point of the duct connection or the connection to the plenum. Where necessary to prevent corrosion, the sprinkler head and connecting piping in the duct shall be coated with *approved* or *listed* corrosion-resistant materials. Access to the sprinkler head shall be provided for periodic inspection.

Exceptions:

1. *Approved* alternative automatic fire-extinguishing systems are allowed. Activation of such systems shall deactivate the related processing equipment.
2. Process equipment that operates at temperatures exceeding 932°F (500°C) and is provided with automatic shutdown capabilities for hazardous materials.
3. Exhaust ducts 10 inches (254 mm) or less in diameter from flammable gas storage cabinets that are part of a workstation.
4. Ducts *listed* or *approved* for use without internal automatic sprinkler protection.

2703.10.1.2 Combustible tools. Where the horizontal surface of a combustible tool is obstructed from ceiling sprinkler discharge, automatic sprinkler protection that covers the horizontal surface of the tool shall be provided.

Exceptions:

1. An automatic gaseous fire-extinguishing local surface application system shall be allowed as an alternative to sprinklers. Gaseous-extinguishing systems shall be actuated by infrared (IR) or ultraviolet/infrared (UV/IR) optical detectors.
2. Tools constructed of materials that are *listed* as Class 1 or Class 2 in accordance with UL

INTERNATIONAL CODE COUNCIL®
Copyright © 2019 ICC & NYSDOS. ALL RIGHTS RESERVED. Accessed by Lauren Gualdino (lgualdino@briarcliffmanor.org), (-) Order Number #100880972 on May 08, 2020 07:05 AM (PDT) pursuant to License Agreement with ICC & NYSDOS. No further reproduction, no

100880972

2360 or *approved* for use without internal fire-extinguishing system protection.

2703.10.2 Gas cabinets and exhausted enclosures. An *approved automatic sprinkler system* shall be provided in gas cabinets and exhausted enclosures containing HPM *compressed gases*.

Exception: Gas cabinets located in an HPM room other than those cabinets containing pyrophoric gases.

2703.10.3 Pass-throughs in existing exit access corridors. Pass-throughs in existing *exit access corridors* shall be protected by an *approved automatic sprinkler system*.

2703.10.4 Exhaust ducts for HPM. An *approved automatic sprinkler system* shall be provided in exhaust ducts conveying gases, vapors, fumes, mists or dusts generated from HPM in accordance with this section and the *Mechanical Code of New York State*.

2703.10.4.1 Metallic and noncombustible nonmetallic exhaust ducts. An *approved automatic sprinkler system* shall be provided in metallic and noncombustible nonmetallic exhaust ducts where all of the following conditions apply:

1. Where the largest cross-sectional diameter is equal to or greater than 10 inches (254 mm).
2. The ducts are within the building.
3. The ducts are conveying flammable gases, vapors or fumes.

2703.10.4.2 Combustible nonmetallic exhaust ducts. An *approved automatic sprinkler system* shall be provided in combustible nonmetallic exhaust ducts where the largest cross-sectional diameter of the duct is equal to or greater than 10 inches (254 mm).

Exceptions:

1. Ducts *listed* or *approved* for applications without *automatic sprinkler system* protection.
2. Ducts not more than 12 feet (3658 mm) in length installed below ceiling level.

2703.10.4.3 Exhaust connections and plenums of combustible workstations. Automatic fire-extinguishing system protection for exhaust connections and plenums of combustible workstations shall comply with Section 2703.10.1.1.

2703.10.4.4 Exhaust duct sprinkler system requirements. Automatic sprinklers installed in exhaust duct systems shall be hydraulically designed to provide 0.5 gallons per minute (gpm) (1.9 L/min) over an area derived by multiplying the distance between the sprinklers in a horizontal duct by the width of the duct. Minimum discharge shall be 20 gpm (76 L/min) per sprinkler from the five hydraulically most remote sprinklers.

2703.10.4.4.1 Sprinkler head locations. Automatic sprinklers shall be installed at 12-foot (3658 mm) intervals in horizontal ducts and at changes in direction. In vertical runs, automatic sprinklers shall be installed at the top and at alternate floor levels.

2703.10.4.4.2 Control valve. A separate indicating control valve shall be provided for sprinklers installed in exhaust ducts.

2703.10.4.4.3 Drainage. Drainage shall be provided to remove sprinkler water discharged in exhaust ducts.

2703.10.4.4.4 Corrosive atmospheres. Where corrosive atmospheres exist, exhaust duct sprinklers and pipe fittings shall be manufactured of corrosion-resistant materials or coated with *approved* materials.

2703.10.4.4.5 Maintenance and inspection. Access to sprinklers in exhaust ducts shall be provided for periodic inspection and maintenance.

2703.10.5 Sprinkler alarms and supervision. *Automatic sprinkler systems* shall be electrically supervised and provided with alarms in accordance with Chapter 9. *Automatic sprinkler system* alarm and supervisory signals shall be transmitted to the *emergency control station*.

2703.11 Manual fire alarm system. A manual fire alarm system shall be installed throughout buildings containing a Group H-5 occupancy. Activation of the alarm system shall initiate a local alarm and transmit a signal to the *emergency control station*. Manual fire alarm systems shall be designed and installed in accordance with Section 907.

2703.12 Emergency alarm system. Emergency alarm systems shall be provided in accordance with Sections 2703.12.1 through 2703.12.3, Section 5004.9 and Section 5005.4.4. The *maximum allowable quantity per control area* provisions of Section 5004.1 shall not apply to emergency alarm systems required for HPM.

2703.12.1 Where required. Emergency alarm systems shall be provided in the areas indicated in Sections 2703.12.1.1 through 2703.12.1.3.

2703.12.1.1 Service corridors. An *approved* emergency alarm system shall be provided in service corridors, with not less than one alarm device in the service corridor.

2703.12.1.2 Corridors and interior exit stairways and ramps. Emergency alarms for *corridors*, interior *exit stairways* and *ramps* and exit passageways shall comply with Section 5005.4.4.

2703.12.1.3 Liquid storage rooms, HPM rooms and gas rooms. Emergency alarms for liquid storage rooms, HPM rooms and gas rooms shall comply with Section 5004.9.

2703.12.2 Alarm-initiating devices. An *approved* emergency telephone system, local alarm manual pull stations, or other *approved* alarm-initiating devices are allowed to be used as emergency alarm-initiating devices.

2703.12.3 Alarm signals. Activation of the emergency alarm system shall sound a local alarm and transmit a signal to the *emergency control station*.

2703.13 Gas detection systems. A gas detection system complying with Section 916 shall be provided for HPM gases where the physiological warning threshold level of the gas is

INTERNATIONAL CODE COUNCIL®
Copyright © 2019 ICC & NYSDOS. ALL RIGHTS RESERVED. Accessed by Lauren Gualdino (lgualdino@briarcliffmanor.org), (-) Order Number #100880972 on May 08, 2020 07:05 AM (PDT) pursuant to License Agreement with ICC & NYSDOS. No further reproduction, no

100880972

at a higher level than the accepted permissible exposure limit (PEL) for the gas and for flammable gases in accordance with Sections 2703.13.1 through 2703.13.2.2.

2703.13.1 Where required. A gas detection system shall be provided in the areas identified in Sections 2703.13.1.1 through 2703.13.1.4.

2703.13.1.1 Fabrication areas. A gas detection system shall be provided in *fabrication areas* where HPM gas is used in the *fabrication area*.

2703.13.1.2 HPM rooms. A gas detection system shall be provided in HPM rooms where HPM gas is used in the room.

2703.13.1.3 Gas cabinets, exhausted enclosures and gas rooms. A gas detection system shall be provided in gas cabinets and exhausted enclosures for HPM gas. A gas detection system shall be provided in gas rooms where HPM gases are not located in gas cabinets or exhausted enclosures.

2703.13.1.4 Corridors. Where HPM gases are transported in piping placed within the space defined by the walls of a *corridor* and the floor or roof above the *corridor*, a gas detection system shall be provided where piping is located and in the *corridor*.

Exception: A gas detection system is not required for occasional transverse crossings of the *corridors* by supply piping that is enclosed in a ferrous pipe or tube for the width of the *corridor*.

2703.13.2 Gas detection system operation. The gas detection system shall be capable of monitoring the room, area or equipment in which the HPM gas is located at or below all the following gas concentrations:

1. Immediately dangerous to life and health (IDLH) values where the monitoring point is within an exhausted enclosure, ventilated enclosure or gas cabinet.
2. Permissible exposure limit (PEL) levels where the monitoring point is in an area outside an exhausted enclosure, ventilated enclosure or gas cabinet.
3. For flammable gases, the monitoring detection threshold level shall be vapor concentrations in excess of 25 percent of the lower flammable limit (LFL) where the monitoring is within or outside an exhausted enclosure, ventilated enclosure or gas cabinet.
4. Except as noted in this section, monitoring for highly toxic and toxic gases shall also comply with Chapter 60.

2703.13.2.1 Alarms. The gas detection system shall initiate a local alarm and transmit a signal to the *emergency control station* when a short-term hazard condition is detected. The alarm shall be both visible and audible and shall provide warning both inside and outside the area where the gas is detected. The audible alarm shall be distinct from all other alarms.

2703.13.2.2 Shut off of gas supply. The gas detection system shall automatically close the shutoff valve at the source on gas supply piping and tubing related to the system being monitored for which gas is detected when a short-term hazard condition is detected. Automatic closure of shutoff valves shall comply with the following:

1. Where the gas-detection sampling point initiating the gas detection system alarm is within a gas cabinet or exhausted enclosure, the shutoff valve in the gas cabinet or exhausted enclosure for the specific gas detected shall automatically close.
2. Where the gas-detection sampling point initiating the gas detection system alarm is within a room and *compressed gas* containers are not in gas cabinets or exhausted enclosure, the shutoff valves on all gas lines for the specific gas detected shall automatically close.
3. Where the gas-detection sampling point initiating the gas detection system alarm is within a piping distribution manifold enclosure, the shutoff valve supplying the manifold for the *compressed gas* container of the specific gas detected shall automatically close.

Exception: Where the gas-detection sampling point initiating the gas detection system alarm is at the use location or within a gas valve enclosure of a branch line downstream of a piping distribution manifold, the shutoff valve for the branch line located in the piping distribution manifold enclosure shall automatically close.

2703.14 Exhaust ventilation systems for HPM. Exhaust ventilation systems and materials for exhaust ducts utilized for the exhaust of HPM shall comply with Sections 2703.14.1 through 2703.14.3, other applicable provisions of this code, the *Building Code of New York State* and the *Mechanical Code of New York State*.

2703.14.1 Where required. Exhaust ventilation systems shall be provided in the following locations in accordance with the requirements of this section and the *Building Code of New York State*:

1. *Fabrication areas*: Exhaust ventilation for *fabrication areas* shall comply with the *Building Code of New York State*. The *fire code official* is authorized to require additional manual control switches.
2. Workstations: A ventilation system shall be provided to capture and exhaust gases, fumes and vapors at workstations.
3. Liquid storage rooms: Exhaust ventilation for liquid storage rooms shall comply with Section 5004.3.1 and the *Building Code of New York State*.
4. HPM rooms: Exhaust ventilation for HPM rooms shall comply with Section 5004.3.1 and the *Building Code of New York State*.
5. Gas cabinets: Exhaust ventilation for gas cabinets shall comply with Section 5003.8.6.2. The gas cabinet ventilation system is allowed to connect to a workstation ventilation system. Exhaust ventilation

INTERNATIONAL CODE COUNCIL®
Copyright © 2019 ICC & NYSDOS. ALL RIGHTS RESERVED. Accessed by Lauren Gualdino (lgualdino@briarcliffmanor.org), (-) Order Number #100880972 on May 08, 2020 07:05 AM (PDT) pursuant to License Agreement with ICC & NYSDOS. No further reproduction, no

100880972

for gas cabinets containing highly toxic or toxic gases shall also comply with Chapter 60.

6. Exhausted enclosures: Exhaust ventilation for exhausted enclosures shall comply with Section 5003.8.5.2. Exhaust ventilation for exhausted enclosures containing highly toxic or toxic gases shall also comply with Chapter 60.
7. Gas rooms: Exhaust ventilation for gas rooms shall comply with Section 5003.8.4.2. Exhaust ventilation for gas rooms containing highly toxic or toxic gases shall also comply with Chapter 60.
8. Cabinets containing pyrophoric liquids or Class 3 water-reactive liquids: Exhaust ventilation for cabinets in *fabrication areas* containing pyrophoric liquids or Class 3 water-reactive liquids shall be as required in Section 2705.2.3.4.

2703.14.2 Penetrations. Exhaust ducts penetrating *fire barriers* constructed in accordance with Section 707 of the *Building Code of New York State* or *horizontal assemblies* constructed in accordance with Section 711 of the *Building Code of New York State* shall be contained in a shaft of equivalent fire-resistance-rated construction. Exhaust ducts shall not penetrate *fire walls*. Fire dampers shall not be installed in exhaust ducts.

2703.14.3 Treatment systems. Treatment systems for highly toxic and toxic gases shall comply with Chapter 60.

2703.15 Emergency power system. An emergency power system shall be provided in Group H-5 occupancies in accordance with Section 1203. The emergency power system shall supply power automatically to the electrical systems specified in Section 2703.15.1 when the normal supply system is interrupted.

2703.15.1 Required electrical systems. Emergency power shall be provided for electrically operated equipment and connected control circuits for the following systems:

1. HPM exhaust ventilation systems.
2. HPM gas cabinet ventilation systems.
3. HPM exhausted enclosure ventilation systems.
4. HPM gas room ventilation systems.
5. HPM gas detection systems.
6. Emergency alarm systems.
7. Manual fire alarm systems.
8. *Automatic sprinkler system* monitoring and alarm systems.
9. Automatic alarm and detection systems for pyrophoric liquids and Class 3 water-reactive liquids required in Section 2705.2.3.4.
10. Flow alarm switches for pyrophoric liquids and Class 3 water-reactive liquids cabinet exhaust ventilation systems required in Section 2705.2.3.4.
11. Electrically operated systems required elsewhere in this code or in the *Building Code of New York State* applicable to the use, storage or handling of HPM.

2703.15.2 Exhaust ventilation systems. Exhaust ventilation systems are allowed to be designed to operate at not less than one-half the normal fan speed on the emergency power system where it is demonstrated that the level of exhaust will maintain a safe atmosphere.

2703.16 Sub-atmospheric pressure gas systems. Sub-atmospheric pressure gas systems (SAGS) shall be in accordance with NFPA 318.

SECTION 2704
STORAGE

2704.1 General. Storage of hazardous materials shall comply with Section 2703 and this section and other applicable provisions of this code.

2704.2 Fabrication areas. Hazardous materials storage and the maximum quantities of hazardous materials in use and storage allowed in *fabrication areas* shall be in accordance with Sections 2704.2.1 through 2704.2.2.1.

2704.2.1 Location of HPM storage in fabrication areas. Storage of HPM in *fabrication areas* shall be within *approved* or *listed* storage cabinets, gas cabinets, exhausted enclosures or within a workstation as follows:

1. Flammable and *combustible liquid* storage cabinets shall comply with Section 5704.3.2.
2. Hazardous materials storage cabinets shall comply with Section 5003.8.7.
3. Gas cabinets shall comply with Section 5003.8.6. Gas cabinets for highly toxic or toxic gases shall also comply with Section 6004.1.2.
4. Exhausted enclosures shall comply with Section 5003.8.5. Exhausted enclosures for highly toxic or toxic gases shall also comply with Section 6004.1.3.
5. Workstations shall comply with Section 2705.2.3.

2704.2.2 Maximum aggregate quantities in fabrication areas. The aggregate quantities of hazardous materials stored or used in a single *fabrication area* shall be limited as specified in this section.

Exception: *Fabrication areas* containing quantities of hazardous materials not exceeding the maximum allowable quantities per *control area* established by Sections 5003.1.1, 5704.3.4 and 5704.3.5.

2704.2.2.1 Storage and use in fabrication areas. The maximum quantities of hazardous materials stored or used in a single *fabrication area* shall not exceed the quantities set forth in Table 2704.2.2.1.

2704.3 Indoor storage outside of fabrication areas. The indoor storage of hazardous materials outside of *fabrication areas* shall be in accordance with Sections 2704.3.1 through 2704.3.3.

2704.3.1 HPM storage. The indoor storage of HPM in quantities greater than those *listed* in Sections 5003.1.1 and 5704.3.4 shall be in a room complying with the

INTERNATIONAL CODE COUNCIL®
Copyright © 2019 ICC & NYSDOS. ALL RIGHTS RESERVED. Accessed by Lauren Gualdino (lgualdino@briarcliffmanor.org), (-) Order Number #100880972 on May 08, 2020 07:05 AM (PDT) pursuant to License Agreement with ICC & NYSDOS. No further reproduction, no

100880972

requirements of the *Building Code of New York State* and this code for a liquid storage room, HPM room or gas room as appropriate for the materials stored.

2704.3.2 Other hazardous materials storage. The indoor storage of other hazardous materials shall comply with Sections 5001, 5003 and 5004 and other applicable provisions of this code.

2704.3.3 Separation of incompatible hazardous materials. Incompatible hazardous materials in storage shall be separated from each other in accordance with Section 5003.9.8.

SECTION 2705
USE AND HANDLING

2705.1 General. The use and handling of hazardous materials shall comply with this section, Section 2703 and other applicable provisions of this code.

2705.2 Fabrication areas. The use of hazardous materials in *fabrication areas* shall be in accordance with Sections 2705.2.1 through 2705.2.3.4.

2705.2.1 Location of HPM in use in fabrication areas. Hazardous production materials in use in *fabrication areas* shall be within *approved* or *listed* gas cabinets, exhausted enclosures or a workstation.

2705.2.2 Maximum aggregate quantities in fabrication areas. The aggregate quantities of hazardous materials in a single *fabrication area* shall comply with Section 2704.2.2, and Table 2704.2.2.1. The quantity of HPM in use at a workstation shall not exceed the quantities *listed* in Table 2705.2.2.

2705.2.3 Workstations. Workstations in *fabrication areas* shall be in accordance with Sections 2705.2.3.1 through 2705.2.3.4.

2705.2.3.1 Construction. Workstations in *fabrication areas* shall be constructed of materials compatible with the materials used and stored at the workstation. The portion of the workstation that serves as a cabinet for HPM gases, Class I flammable liquids or Class II or Class IIIA *combustible liquids* shall be noncombustible and, if of metal, shall be not less than 0.0478-inch (18 gage) (1.2 mm) steel.

2705.2.3.2 Protection of vessels. Vessels containing hazardous materials located in or connected to a workstation shall be protected as follows:

1. HPM: Vessels containing HPM shall be protected from physical damage and shall not project from the workstation.
2. Hazardous *cryogenic fluids*, gases and liquids: Hazardous *cryogenic fluid*, gas and liquid vessels located within a workstation shall be protected from seismic forces in an *approved* manner in accordance with the *Building Code of New York State*.
3. *Compressed gases*: Protection for *compressed gas* vessels shall also comply with Section 5303.5.
4. *Cryogenic fluids*: Protection for *cryogenic fluid* vessels shall also comply with Section 5503.5.

2705.2.3.3 Drainage and containment for HPM liquids. Each workstation utilizing HPM liquids shall have all of the following:

1. Drainage piping systems connected to a compatible system for disposition of such liquids.
2. The work surface provided with a slope or other means for directing spilled materials to the containment or drainage system.
3. An *approved* means of containing or directing spilled or leaked liquids to the drainage system.

2705.2.3.4 Pyrophoric solids, liquids and Class 3 water-reactive liquids. Pyrophoric liquids and Class 3 water-reactive liquids in containers greater than 0.5-gallon (2 L) but not exceeding 5.3-gallon (20 L) capacity and pyrophoric solids in containers greater than 4.4 pounds (2 kg) but not exceeding 44 pounds (20 kg) shall be allowed at workstations where located inside cabinets and the following conditions are met:

1. Maximum amount per cabinet: The maximum amount per cabinet shall be limited to 5.3 gallons (20 L) of liquids and 44 pounds (20 kg) of total liquids and solids.
2. Cabinet construction: Cabinets shall be constructed in accordance with the following:
   2.1. Cabinets shall be constructed of not less than 0.097-inch (2.5 mm) (12 gage) steel.
   2.2. Cabinets shall be permitted to have self-closing limited access ports or noncombustible windows that provide access to equipment controls.
   2.3. Cabinets shall be provided with self- or manual-closing doors. Manual-closing doors shall be equipped with a door switch that will initiate local audible and visual alarms when the door is in the open position.
3. Cabinet exhaust ventilation system: An exhaust ventilation system shall be provided for cabinets and shall comply with the following:
   3.1. The system shall be designed to operate at a negative pressure in relation to the surrounding area.
   3.2. The system shall be equipped with monitoring equipment to ensure that required exhaust flow or static pressure is provided.
   3.3. Low-flow or static pressure conditions shall send an alarm to the on-site emergency control station. The alarm shall be both visual and audible.

INTERNATIONAL CODE COUNCIL®
Copyright © 2019 ICC & NYSDOS. ALL RIGHTS RESERVED. Accessed by Lauren Gualdino (lgualdino@briarcliffmanor.org), (-) Order Number #100880972 on May 08, 2020 07:05 AM (PDT) pursuant to License Agreement with ICC & NYSDOS. No further reproduction, no

100880972

TABLE 2704.2.2.1
QUANTITY LIMITS FOR HAZARDOUS MATERIALS IN A SINGLE FABRICATION AREA IN GROUP H-5[a]

HAZARD CATEGORY	SOLIDS (pounds/square foot)	LIQUIDS (gallons/square foot)	GAS (cubic feet @ NTP/square foot)
Physical-hazard materials			
Combustible dust	Note b	Not Applicable	Not Applicable
Combustible fiber Loose Baled	Note b Notes b and c	Not Applicable	Not Applicable
Combustible liquid Class II Class IIIA Class IIIB Combination Class I, II and IIIA	Not Applicable	0.01 0.02 Not Limited 0.04	Not Applicable
Cryogenic gas Flammable Oxidizing	Not Applicable	Not Applicable	Note d 1.25
Explosives	Note b	Note b	Note b
Flammable gas Gaseous Liquefied	Not Applicable	Not Applicable	Note d Note d
Flammable liquid Class IA Class IB Class IC Combination Class IA, IB and IC Combination Class I, II and IIIA	Not Applicable	0.0025 0.025 0.025 0.025 0.04	Not Applicable
Flammable solid	0.001	Not Applicable	Not Applicable
Organic peroxide Unclassified detonable Class I Class II Class III Class IV Class V	Note b Note b 0.025 0.1 Not Limited Not Limited	Not Applicable	Not Applicable
Oxidizing gas Gaseous Liquefied Combination of Gaseous and Liquefied	Not Applicable	Not Applicable	1.25 1.25 1.25
Oxidizer Class 4 Class 3 Class 2 Class 1 Combination oxidizer Class 1, 2, 3	Note b 0.003 0.003 0.003 0.003	Note b 0.03 0.03 0.03 0.03	Not Applicable
Pyrophoric	0.01	0.00125	Notes d and e
Unstable reactive Class 4 Class 3 Class 2 Class 1	Note b 0.025 0.1 Not Limited	Note b 0.0025 0.01 Not Limited	Note b Note b Note b Not Limited

(continued)

INTERNATIONAL CODE COUNCIL®
Copyright © 2019 ICC & NYSDOS. ALL RIGHTS RESERVED. Accessed by Lauren Gualdino (lgualdino@briarcliffmanor.org), (-) Order Number #100880972 on May 08, 2020 07:05 AM (PDT) pursuant to License Agreement with ICC & NYSDOS. No further reproduction, no

100880972

TABLE 2704.2.2.1—continued
QUANTITY LIMITS FOR HAZARDOUS MATERIALS IN A SINGLE FABRICATION AREA IN GROUP H-5[a]

HAZARD CATEGORY	SOLIDS (pounds/square foot)	LIQUIDS (gallons/square foot)	GAS (cubic feet @ NTP/square foot)
Physical-hazard materials			
Water reactive Class 3 Class 2 Class 1	 Note b 0.25 Not Limited	 0.00125 0.025 Not Limited	Not Applicable
Health-hazard materials			
Corrosives	Not Limited	Not Limited	Not Limited
Highly toxics	Not Limited	Not Limited	Note d
Toxics	Not Limited	Not Limited	Note d

For SI: 1 pound per square foot = 4.882 kg/m^2, 1 gallon per square foot = 40.7 L/m^2, 1 cubic foot @ NTP/square foot = 0.305 m^3 @ NTP/m^2, 1 cubic foot = 0.02832 m^3.

a. Hazardous materials within piping shall not be included in the calculated quantities.

b. Quantity of hazardous materials in a single fabrication area shall not exceed the maximum allowable quantities per control area in Tables 5003.1.1(1) and 5003.1.1(2).

c. Densely packed baled cotton that complies with the packing requirements of ISO 8115 shall not be included in this material class.

d. The aggregate quantity of flammable, pyrophoric, toxic and highly toxic gases shall not exceed the greater of 0.2 cubic feet at NTP/square foot or 9,000 cubic feet at NTP.

e. The aggregate quantity of pyrophoric gases in the building shall not exceed the amounts set forth in Table 5003.8.2.

4. Cabinet spill containment: Spill containment shall be provided in each cabinet, with the spill containment capable of holding the contents of the aggregate amount of liquids in containers in each cabinet.
5. Valves: Valves in supply piping between the product containers in the cabinet and the workstation served by the containers shall fail in the closed position upon power failure, loss of exhaust ventilation and upon actuation of the fire control system.
6. Fire detection system: Each cabinet shall be equipped with an automatic fire detection system complying with the following conditions:
    6.1. Automatic detection system: UV/IR, high-sensitivity smoke detection (HSSD) or other *approved* detection systems shall be provided inside each cabinet.
    6.2. Automatic shutoff: Activation of the detection system shall automatically close the shutoff valves at the source on the liquid supply.
    6.3. Alarms and signals: Activation of the detection system shall initiate a local alarm within the *fabrication area* and transmit a signal to the *emergency control station.* The alarms and signals shall be both visual and audible.

2705.3 Transportation and handling. The transportation and handling of hazardous materials shall comply with Sections 2705.3.1 through 2705.3.4.1 and other applicable provisions of this code.

2705.3.1 Corridors and enclosures for stairways and ramps. *Corridors* and enclosures for *exit stairways* and *ramps* in new buildings or serving new *fabrication areas* shall not contain HPM, except as permitted in *corridors* by Section 415.11.6.4 of the *Building Code of New York State* and Section 2705.3.2 of this code.

2705.3.2 Transport in corridors and enclosures for stairways and ramps. Transport in *corridors* and enclosures for *stairways* and *ramps* shall be in accordance with Sections 2705.3.2.1 through 2705.3.3.

2705.3.2.1 Fabrication area alterations. Where existing *fabrication areas* are altered or modified in existing buildings, HPM is allowed to be transported in existing *corridors* where such *corridors* comply with Section 5003.10 of this code and Section 415.11.2 of the *Building Code of New York State*.

2705.3.2.2 HPM transport in corridors and enclosures for stairways and ramps. Nonproduction HPM is allowed to be transported in *corridors* and enclosures for *stairways* and *ramps* where utilized for maintenance, lab work and testing when the transportation is in accordance with Section 5003.10.

2705.3.3 Service corridors. Where a new *fabrication area* is constructed, a service corridor shall be provided where it is necessary to transport HPM from a liquid storage room, HPM room, gas room or from the outside of a building to the perimeter wall of a *fabrication area.* Service corridors shall be designed and constructed in accordance with the *Building Code of New York State.*

2705.3.4 Carts and trucks. Carts and trucks used to transport HPM in *corridors* and enclosures for *stairways* and *ramps* shall comply with Section 5003.10.3.

2705.3.4.1 Identification. Carts and trucks shall be marked to indicate the contents.

INTERNATIONAL CODE COUNCIL®
Copyright © 2019 ICC & NYSDOS. ALL RIGHTS RESERVED. Accessed by Lauren Gualdino (lgualdino@briarcliffmanor.org), (-) Order Number #100880972 on May 08, 2020 07:05 AM (PDT) pursuant to License Agreement with ICC & NYSDOS. No further reproduction, no

100880972

TABLE 2705.2.2
MAXIMUM QUANTITIES OF HPM AT A WORKSTATION[d]

HPM CLASSIFICATION	STATE	MAXIMUM QUANTITY
Flammable, highly toxic, pyrophoric and toxic combined	Gas	Combined aggregate volume of all cylinders at a workstation shall not exceed an internal cylinder volume of 39.6 gallons or 5.29 cubic feet
Flammable	Liquid Solid	15 gallons[a, b] 5 pounds[a, b]
Corrosive	Gas Liquid Solid	Combined aggregate volume of all cylinders at a workstation shall not exceed an internal cylinder volume of 39.6 gallons or 5.29 cubic feet Use-open system: 25 gallons[b] Use-closed system: 150 gallons[b, e] 20 pounds[a, b]
Highly toxic	Liquid Solid	15 gallons[a] 5 pounds[a]
Oxidizer	Gas Liquid Solid	Combined aggregate volume of all cylinders at a workstation shall not exceed an internal cylinder volume of 39.6 gallons or 5.29 cubic feet Use-open system: 12 gallons[b] Use-closed system: 60 gallons[b] 20 pounds[a, b]
Pyrophoric	Liquid Solid	0.5 gallon[c, f] 4.4 pounds[c, f]
Toxic	Liquid Solid	Use-open system: 15 gallons[b] Use-closed system: 60 gallons[b] 5 pounds[a, b]
Unstable reactive Class 3	Liquid Solid	0.5 gallon[a, b] 5 pounds[a, b]
Water-reactive Class 3	Liquid Solid	0.5 gallon[c, f] See Table 2704.2.2.1

For SI: 1 pound = 0.454 kg, 1 gallon = 3.785 L.

a. Maximum allowable quantities shall be increased 100 percent for closed system operations. Where Note b applies, the increase for both notes shall be allowed.

b. Quantities shall be allowed to be increased 100 percent where workstations are internally protected with an approved automatic fire-extinguishing or suppression system complying with Chapter 9. Where Note a applies, the increase for both notes shall be allowed. Where Note e applies, the maximum increase allowed for both Notes b and e shall not exceed 100 percent.

c. Allowed only in workstations that are internally protected with an approved automatic fire-extinguishing or fire protection system complying with Chapter 9 and compatible with the reactivity of materials in use at the workstation.

d. The quantity limits apply only to materials classified as HPM.

e. Quantities shall be allowed to be increased 100 percent for nonflammable, noncombustible corrosive liquids where the materials of construction for workstations are listed or approved for use without internal fire-extinguishing or suppression system protection. Where Note b applies, the maximum increase allowed for both Notes b and e shall not exceed 100 percent.

f. A maximum quantity of 5.3 gallons of liquids and 44 pounds of total liquids and solids shall be allowed at a workstation where conditions are in accordance with Section 2705.2.3.4.

INTERNATIONAL CODE COUNCIL®
Copyright © 2019 ICC & NYSDOS. ALL RIGHTS RESERVED. Accessed by Lauren Gualdino (lgualdino@briarcliffmanor.org), (-) Order Number #100880972 on May 08, 2020 07:05 AM (PDT) pursuant to License Agreement with ICC & NYSDOS. No further reproduction, no

100880972

INTERNATIONAL CODE COUNCIL®
Copyright © 2019 ICC & NYSDOS. ALL RIGHTS RESERVED. Accessed by Lauren Gualdino (lgualdino@briarcliffmanor.org), (-) Order Number #100880972 on May 08, 2020 07:05 AM (PDT) pursuant to License Agreement with ICC & NYSDOS. No further reproduction, no

100880972

CHAPTER 28

LUMBER YARDS AND AGRO-INDUSTRIAL, SOLID BIOMASS AND WOODWORKING FACILITIES

SECTION 2801 GENERAL

2801.1 Scope. The storage, manufacturing and processing of solid biomass feedstock, timber, lumber, plywood, veneers and agro-industrial byproducts shall be in accordance with this chapter.

2801.2 Permit. Permits shall be required as set forth in Section 105.6.

SECTION 2802 DEFINITIONS

2802.1 Definitions. The following terms are defined in Chapter 2:

AGRO-INDUSTRIAL.

BIOMASS.

COLD DECK.

FINES.

HOGGED MATERIALS.

PLYWOOD AND VENEER MILLS.

RAW PRODUCT.

SOLID BIOFUEL.

SOLID BIOMASS FEEDSTOCK.

STATIC PILES.

TIMBER AND LUMBER PRODUCTION FACILITIES.

SECTION 2803 GENERAL REQUIREMENTS

2803.1 Open yards. Open yards required by the *Building Code of New York State* shall be maintained around structures.

2803.2 Dust control. Equipment or machinery located inside buildings that generates or emits *combustible dust* shall be provided with an *approved* dust collection and exhaust system installed in accordance with Chapter 22 and the *Mechanical Code of New York State*. Equipment or systems that are used to collect, process or convey *combustible dusts* shall be provided with an *approved* explosion control system.

2803.2.1 Explosion venting. Where a dust explosion hazard exists in equipment rooms, buildings or other enclosures, such areas shall be provided with explosion (*deflagration*) venting or an *approved* explosion suppression system complying with Section 911.

2803.3 Waste removal. Sawmills, planning mills and other woodworking plants shall be equipped with a waste removal system that will collect and remove sawdust and shavings. Such systems shall be installed in accordance with Chapter 22 and the *Mechanical Code of New York State*.

Exception: Manual waste removal where *approved*.

2803.3.1 Housekeeping. Provisions shall be made for a systematic and thorough cleaning of the entire plant at sufficient intervals to prevent the accumulations of *combustible dust* and spilled combustible or flammable liquids.

2803.3.2 Metal scrap. Provision shall be made for separately collecting and disposing of any metal scrap so that such scrap will not enter the wood handling or processing equipment.

2803.4 Electrical equipment. Electrical wiring and equipment shall comply with NFPA 70.

2803.5 Control of ignition sources. Protection from ignition sources shall be provided in accordance with Sections 2803.5.1 through 2803.5.3.

2803.5.1 Cutting and welding. Cutting and welding shall comply with Chapter 35.

2803.5.2 Static electricity. Static electricity shall be prevented from accumulating on machines and equipment subject to static electricity buildup by permanent grounding and bonding wires or other *approved* means.

2803.5.3 Smoking. Where smoking constitutes a fire hazard, the *fire code official* is authorized to order the *owner* or occupant to post *approved* "No Smoking" signs complying with Section 310. The *fire code official* is authorized to designate specific locations where smoking is allowed.

2803.6 Fire apparatus access roads. Fire apparatus access roads shall be provided for buildings and facilities in accordance with Section 503.

2803.7 Access plan. Where storage pile configurations could change because of changes in product operations and processing, the access plan shall be submitted for approval where required by the *fire code official*.

SECTION 2804 FIRE PROTECTION

2804.1 General. Fire protection in timber and lumber production mills, plywood and veneer mills and agro-industrial facilities shall comply with Sections 2804.2 through 2804.4.

2804.2 Fire alarms. An *approved* means for transmitting alarms to the fire department shall be provided in timber and lumber production mills and plywood and veneer mills.

2804.2.1 Manual fire alarms. A manual fire alarm system complying with Section 907.2 shall be installed in

INTERNATIONAL CODE COUNCIL®
Copyright © 2019 ICC & NYSDOS. ALL RIGHTS RESERVED. Accessed by Lauren Gualdino (lgualdino@briarcliffmanor.org), (-) Order Number #100880972 on May 08, 2020 07:05 AM (PDT) pursuant to License Agreement with ICC & NYSDOS. No further reproduction, no

100880972

areas of timber and lumber production mills and for plywood and veneer mills that contain product dryers.

Exception: Where dryers or other sources of ignition are protected by a supervised *automatic sprinkler system* complying with Section 903.

2804.3 Portable fire extinguishers or standpipes and hose. Portable fire extinguishers or standpipes and hose supplied from an *approved* water system shall be provided within a 50-foot (15 240 mm) distance of travel from any machine producing shavings or sawdust. Portable fire extinguishers shall be provided in accordance with Section 906 for extra-high hazards.

2804.4 Automatic sprinkler systems. *Automatic sprinkler systems* shall be installed in accordance with Section 903.3.1.1.

SECTION 2805
PLYWOOD, VENEER AND COMPOSITE BOARD MILLS

2805.1 General. Plant operations of plywood, veneer and composite board mills shall comply with Sections 2805.2 and 2805.3.

2805.2 Dryer protection. Dryers shall be protected throughout by an *approved*, automatic deluge water-spray suppression system complying with Chapter 9. Deluge heads shall be inspected quarterly for pitch buildup. Deluge heads shall be flushed during regular maintenance for functional operation. Manual activation valves shall be located within 75 feet (22 860 mm) of the drying equipment.

2805.3 Thermal oil-heating systems. Facilities that use heat transfer fluids to provide process equipment heat through piped, indirect heating systems shall comply with this code and NFPA 664.

SECTION 2806
LOG STORAGE AREAS

2806.1 General. Log storage areas shall comply with Sections 2806.2 and 2806.3.

2806.2 Cold decks. Cold decks shall not exceed 500 feet (152.4 m) in length, 300 feet (91 440 mm) in width and 20 feet (6096 mm) in height. Cold decks shall be separated from adjacent cold decks or other exposures by not less than 100 feet (30 480 mm).

Exception: The size of cold decks shall be determined by the *fire code official* where the decks are protected by special fire protection including, but not limited to, additional fire flow, portable turrets and deluge sets, and hydrant hose houses equipped with *approved* fire-fighting equipment capable of reaching the entire storage area in accordance with Chapter 9.

2806.3 Pile stability. Log and pole piles shall be stabilized by *approved* means.

SECTION 2807
STORAGE OF WOOD CHIPS AND HOGGED MATERIAL ASSOCIATED WITH TIMBER AND LUMBER PRODUCTION FACILITIES

2807.1 General. The storage of wood chips and hogged materials associated with timber and lumber production facilities shall comply with Sections 2807.2 through 2807.5.

2807.2 Size of piles. Piles shall not exceed 60 feet (18 288 mm) in height, 300 feet (91 440 mm) in width and 500 feet (152 m) in length. Piles shall be separated from adjacent piles or other exposures by *approved* fire apparatus access roads.

Exception: The *fire code official* is authorized to allow the pile size to be increased where additional fire protection is provided in accordance with Chapter 9. The increase shall be based on the capabilities of the system installed.

2807.3 Pile fire protection. Automatic sprinkler protection shall be provided in conveyor tunnels and combustible enclosures that pass under a pile. Combustible or enclosed conveyor systems shall be equipped with an *approved automatic sprinkler system*.

2807.4 Material-handling equipment. *Approved* material-handling equipment shall be readily available for moving wood chips and hogged material.

2807.5 Emergency plan. The *owner* or operator shall develop a plan for monitoring, controlling and extinguishing spot fires. The plan shall be submitted to the *fire code official* for review and approval.

SECTION 2808
STORAGE AND PROCESSING OF WOOD CHIPS, HOGGED MATERIAL, FINES, COMPOST, SOLID BIOMASS FEEDSTOCK AND RAW PRODUCT ASSOCIATED WITH YARD WASTE, AGRO-INDUSTRIAL AND RECYCLING FACILITIES

2808.1 General. The storage and processing of wood chips, hogged materials, fines, compost, solid biomass feedstock and raw product produced from yard waste, debris and agro-industrial and recycling facilities shall comply with Sections 2808.2 through 2808.10.

2808.2 Storage site. Storage sites shall be level and on solid ground, elevated soil lifts or other all-weather surface. Sites shall be thoroughly cleaned before transferring wood products to the site.

2808.3 Size of piles. Piles shall not exceed 25 feet (7620 mm) in height, 150 feet (45 720 mm) in width and 250 feet (76 200 mm) in length.

INTERNATIONAL CODE COUNCIL®
Copyright © 2019 ICC & NYSDOS. ALL RIGHTS RESERVED. Accessed by Lauren Gualdino (lgualdino@briarcliffmanor.org), (-) Order Number #100880972 on May 08, 2020 07:05 AM (PDT) pursuant to License Agreement with ICC & NYSDOS. No further reproduction, no

100880972

Exception: The *fire code official* is authorized to allow the pile size to be increased where a fire protection plan is provided for approval that includes, but is not limited to, the following:

1. Storage yard areas and materials-handling equipment selection, design and arrangement shall be based on sound fire prevention and protection principles.
2. Factors that lead to spontaneous heating shall be identified in the plan, and control of the various factors shall be identified and implemented, including provisions for monitoring the internal condition of the pile.
3. The plan shall include means for early fire detection and reporting to the public fire department; and facilities needed by the fire department for fire extinguishment including a water supply and fire hydrants.
4. Fire apparatus access roads around the piles and access roads to the top of the piles shall be established, identified and maintained.
5. Regular yard inspections by trained personnel shall be included as part of an effective fire prevention maintenance program.

Additional fire protection called for in the plan shall be provided and shall be installed in accordance with this code. The increase of the pile size shall be based on the capabilities of the installed *fire protection systems* and features.

2808.4 Pile separation. Piles shall be separated from adjacent piles by *approved* fire apparatus access roads.

2808.5 Combustible waste. The storage, accumulation and handling of combustible materials and control of vegetation shall comply with Chapter 3.

2808.6 Static pile protection. Static piles shall be monitored by an *approved* means to measure temperatures within the static piles. Internal pile temperatures shall be monitored and recorded weekly. Such records shall be maintained. An operational plan indicating procedures and schedules for the inspection, monitoring and restricting of excessive internal temperatures in static piles shall be submitted to the *fire code official* for review and approval.

2808.7 Pile fire protection. Automatic sprinkler protection shall be provided in conveyor tunnels and combustible enclosures that pass under a pile. Combustible conveyor systems and enclosed conveyor systems shall be equipped with an *approved automatic sprinkler system*.

2808.8 Fire extinguishers. Portable fire extinguishers complying with Section 906 and with a minimum rating of 4-A:60-B:C shall be provided on all vehicles and equipment operating on piles and at all processing equipment.

2808.9 Material-handling equipment. *Approved* material-handling equipment shall be available for moving wood chips, hogged material, wood fines and raw product during fire-fighting operations.

2808.10 Emergency plan. The *owner* or operator shall develop a plan for monitoring, controlling and extinguishing spot fires and submit the plan to the *fire code official* for review and approval.

SECTION 2809
EXTERIOR STORAGE OF FINISHED LUMBER AND SOLID BIOFUEL PRODUCTS

2809.1 General. Exterior storage of finished lumber and solid biofuel products shall comply with Sections 2809.2 through 2809.5.

2809.2 Size of piles. Exterior storage shall be arranged to form stable piles with a maximum height of 20 feet (6096 mm). Piles shall not exceed 150,000 cubic feet (4248 m^3) in volume.

2809.3 Fire apparatus access roads. Fire apparatus access roads in accordance with Section 503 shall be located so that a maximum grid system unit of 50 feet by 150 feet (15 240 mm by 45 720 mm) is established.

2809.4 Security. Permanent storage areas shall be surrounded with an *approved* fence. Fences shall be not less than 6 feet (1829 mm) in height.

Exceptions:

1. Lumber piles inside of buildings and production mills for lumber, plywood and veneer.
2. Solid biofuel piles inside of buildings and agro-industrial processing facilities for solid biomass feedstock.

2809.5 Fire protection. An *approved* hydrant and hose system or portable fire-extinguishing equipment suitable for the fire hazard involved shall be provided for open storage yards. Hydrant and hose systems shall be installed in accordance with NFPA 24. Portable fire extinguishers complying with Section 906 shall be located so that the distance of travel from the nearest unit does not exceed 75 feet (22 860 mm).

SECTION 2810
OUTDOOR STORAGE OF PALLETS AT PALLET MANUFACTURING AND RECYCLING FACILITIES

2810.1 General. The outside storage of wood pallets and wood composite pallets on the same site as a pallet manufacturing or recycling facility shall comply with Sections 2810.2 through 2810.11.

2810.2 Site plan. Each site shall maintain a current site plan that includes a general description of the property, the boundaries of the lot, the size and location of buildings, and all of the following:

1. Utilities.
2. Type of construction and presence of sprinkler protection for other buildings on the site.
3. Water supply sources for fire-fighting purposes.
4. Location of hazardous material storage areas.

INTERNATIONAL CODE COUNCIL®
Copyright © 2019 ICC & NYSDOS. ALL RIGHTS RESERVED. Accessed by Lauren Gualdino (lgualdino@briarcliffmanor.org), (-) Order Number #100880972 on May 08, 2020 07:05 AM (PDT) pursuant to License Agreement with ICC & NYSDOS. No further reproduction, no

100880972

5. Location of pallet storage.
6. Equipment protected with a dust collection system.
7. *Fire apparatus access roads.*
8. Designated smoking areas.
9. Location of fire alarm control panels.

2810.3 Fire prevention plan. The *owner* or *owner's* authorized representative shall prepare an *approved* fire prevention plan that includes all of the following:

1. Frequency of walk-through inspections to verify compliance with the plan.
2. Hot work permit program in accordance with Chapter 35.
3. Preventive maintenance program for equipment associated with pallet activities.
4. Inspection, testing and maintenance of *fire protection systems* in accordance with Chapter 9.

2810.4 Fire safety and emergency evacuation plan. The *owner* or *owner's* authorized representative shall prepare and train employees in an *approved* fire safety and emergency evacuation plan in accordance with Chapter 4.

2810.5 Security management plan. The *owner* or *owner's* authorized representative shall prepare a security management plan based on a security risk assessment and shall make the plan and assessment available to the *fire code official* upon request.

2810.6 Clearance to property line. Stacks of pallets shall not be stored within 0.75 times the stack height or 8 feet (2438 mm) of the property line, whichever is greater, or shall comply with Section 2810.11.

2810.7 Clearance to important buildings. Stacks of pallets shall not be stored within 0.75 times the stack height of any important building on site, or shall comply with Section 2810.11.

2810.8 Height. Pallet stacks shall not exceed 20 feet (6096 mm) in height.

2810.9 Fire flow. Fire-flow requirements for the site shall be determined by the *fire code official*.

2810.10 Portable fire extinguishers. Portable fire extinguishers shall be provided within 75 feet (22 860 mm) of any pallet stack.

2810.11 Alternative approach. Where *approved* by the *fire code official*, pallet stacks located closer to a property line or structure than as required by Sections 2810.6 and 2810.7 shall be provided with additional fire protection including, but not limited to, the following:

1. The storage yard areas and materials-handling equipment selection, design, and arrangement are based on an *approved* risk assessment.
2. Automatic fire detection that transmits an alarm to a supervising station in accordance with NFPA 72.
3. *Fire apparatus access roads* around all storage areas.

INTERNATIONAL CODE COUNCIL®
Copyright © 2019 ICC & NYSDOS. ALL RIGHTS RESERVED. Accessed by Lauren Gualdino (lgualdino@briarcliffmanor.org), (-) Order Number #100880972 on May 08, 2020 07:05 AM (PDT) pursuant to License Agreement with ICC & NYSDOS. No further reproduction, no

100880972

CHAPTER 29
MANUFACTURE OF ORGANIC COATINGS

SECTION 2901
GENERAL

2901.1 Scope. Organic coating manufacturing processes shall comply with this chapter, except that this chapter shall not apply to processes manufacturing nonflammable or water-thinned coatings or to operations applying coating materials.

2901.2 Permits. Permits shall be required as set forth in Section 105.6.

2901.3 Maintenance. Structures and their service equipment shall be maintained in accordance with this code and NFPA 35.

SECTION 2902
DEFINITION

2902.1 Definition. The following term is defined in Chapter 2:

ORGANIC COATING.

SECTION 2903
GENERAL PRECAUTIONS

2903.1 Building features. Manufacturing of organic coatings shall be done only in buildings that do not have pits or *basements*.

2903.2 Location. *Organic coating* manufacturing operations and operations incidental to or connected with organic coating manufacturing shall not be located in buildings having other occupancies.

2903.3 Fire-fighting access. The fire department shall be able to access the *organic coating* manufacturing operations from not less than one side for the purpose of fire control. *Approved aisles* shall be maintained for the unobstructed movement of personnel and fire suppression equipment.

2903.4 Fire protection systems. *Fire protection systems* shall be installed, maintained, periodically inspected and tested in accordance with Chapter 9.

2903.5 Portable fire extinguishers. Not less than one portable fire extinguisher complying with Section 906 for extra hazard shall be provided in *organic coating* areas.

2903.6 Open flames. Open flames and direct-fired heating devices shall be prohibited in areas where flammable vapor-air mixtures exist.

2903.7 Smoking. Smoking shall be prohibited in accordance with Section 310.

2903.8 Power equipment. Power-operated equipment and industrial trucks shall be of a type *approved* for the location.

2903.9 Tank maintenance. The cleaning of tanks and vessels that have contained flammable or *combustible liquids* shall be performed under the supervision of persons knowledgeable of the fire and explosion potential.

2903.9.1 Repairs. Where necessary to make repairs involving "*hot work*," the work shall be authorized by the responsible individual before the work begins.

2903.9.2 Empty containers. Empty flammable or *combustible liquid* containers shall be removed to a detached, outside location and, if not cleaned on the premises, the empty containers shall be removed from the plant as soon as practical.

2903.10 Drainage. Drainage facilities shall be provided to direct flammable and *combustible liquid* leakage and fire protection water to an *approved* location away from the building, any other structure, storage area or adjoining premises.

2903.11 Alarm system. An *approved* fire alarm system shall be provided in accordance with Section 907.

SECTION 2904
ELECTRICAL EQUIPMENT AND PROTECTION

2904.1 Wiring and equipment. Electrical wiring and equipment shall comply with this chapter and shall be installed in accordance with NFPA 70.

2904.2 Hazardous locations. Where Class I liquids are exposed to the air, the design of equipment and ventilation of structures shall be such as to limit the Class I, Division 1, locations to the following:

1. Piping trenches.
2. The interior of equipment.
3. The immediate vicinity of pumps or equipment locations, such as dispensing stations, open centrifuges, plate and frame filters, opened vacuum filters, change cans and the surfaces of open equipment. The immediate vicinity shall include a zone extending from the vapor liberation point 5 feet (1524 mm) horizontally in all directions and vertically from the floor to a level 3 feet (914 mm) above the highest point of vapor liberation.

2904.2.1 Other locations. Locations within the confines of the manufacturing room where Class I liquids are handled shall be Class I, Division 2, except locations indicated in Section 2904.2.

2904.2.2 Ordinary equipment. Ordinary electrical equipment, including switchgear, shall be prohibited, except where installed in a room maintained under positive pressure with respect to the hazardous area. The air or other media utilized for pressurization shall be obtained from a source that will not cause any amount or type of flammable vapor to be introduced into the room.

INTERNATIONAL CODE COUNCIL®
Copyright © 2019 ICC & NYSDOS. ALL RIGHTS RESERVED. Accessed by Lauren Gualdino (lgualdino@briarcliffmanor.org), (-) Order Number #100880972 on May 08, 2020 07:05 AM (PDT) pursuant to License Agreement with ICC & NYSDOS. No further reproduction, no

100880972

2904.3 Bonding. Equipment including, but not limited to, tanks, machinery and piping shall be bonded and connected to a ground where an ignitable mixture is capable of being present.

2904.3.1 Piping. Electrically isolated sections of metallic piping or equipment shall be grounded or bonded to the other grounded portions of the system.

2904.3.2 Vehicles. Tank vehicles loaded or unloaded through open connections shall be grounded and bonded to the receiving system.

2904.3.3 Containers. Where a flammable mixture is transferred from one portable container to another, a bond shall be provided between the two containers, and one shall be grounded.

2904.4 Ground. Metal framing of buildings shall be grounded with resistance of not more than 5 ohms.

SECTION 2905
PROCESS STRUCTURES

2905.1 Design. Process structures shall be designed and constructed in accordance with the *Building Code of New York State*.

2905.2 Fire apparatus access. Fire apparatus access complying with Section 503 shall be provided for the purpose of fire control to not less than one side of organic coating manufacturing operations.

2905.3 Drainage. Drainage facilities shall be provided in accordance with Section 2903.10 where topographical conditions are such that flammable and *combustible liquids* are capable of flowing from the organic coating manufacturing operation so as to constitute a fire hazard to other premises.

2905.4 Explosion control. Explosion control shall be provided in areas subject to potential *deflagration* hazards as indicated in NFPA 35. Explosion control shall be provided in accordance with Section 911.

2905.5 Ventilation. Enclosed structures in which Class I liquids are processed or handled shall be ventilated at a rate of not less than 1 cubic foot per minute per square foot [0.00508 $m^3/(s \cdot m^2)$] of solid floor area. Ventilation shall be accomplished by exhaust fans that take suction at floor levels and discharge to a safe location outside the structure. Noncontaminated intake air shall be introduced in such a manner that all portions of solid floor areas are provided with continuous uniformly distributed air movement.

2905.6 Heating. Heating provided in hazardous areas shall be by indirect means. Ignition sources such as open flames or electrical heating elements, except as provided for in Section 2904, shall not be permitted within the structure.

SECTION 2906
PROCESS MILLS AND KETTLES

2906.1 Mills. Mills, operating with close clearances, which process flammable and heat-sensitive materials, such as nitrocellulose, shall be located in a detached building or in a noncombustible structure without other occupancies. The amount of nitrocellulose or other flammable material brought into the area shall not be more than the amount required for a batch.

2906.2 Mixers. Mixers shall be of the enclosed type or, where of the open type, shall be provided with properly fitted covers. Where flow is by gravity, a shutoff valve shall be installed as close as practical to the mixer, and a control valve shall be provided near the end of the fill pipe.

2906.3 Open kettles. Open kettles shall be located in an outside area provided with a protective roof; in a separate structure of noncombustible construction; or separated from other areas by a noncombustible wall having a *fire-resistance rating* of not less than 2 hours.

2906.4 Closed kettles. Contact-heated kettles containing solvents shall be equipped with safety devices that, in case of a fire, will turn off the process heat, turn on the cooling medium and inject inert gas into the kettle.

2906.4.1 Vaporizer location. The vaporizer section of heat-transfer systems that heat closed kettles containing solvents shall be remotely located.

2906.5 Kettle controls. The kettle and thin-down tank shall be instrumented, controlled and interlocked so that any failure of the controls will result in a safe condition. The kettle shall be provided with a pressure-rupture disc in addition to the primary vent. The vent piping from the rupture disc shall be of minimum length and shall discharge to an *approved* location. The thin-down tank shall be adequately vented. Thinning operations shall be provided with an adequate vapor removal system.

SECTION 2907
PROCESS PIPING

2907.1 Design. Piping, valves and fittings shall be designed for the working pressures and structural stresses to which the piping, valves and fittings will be subjected, and shall be of steel or other material *approved* for the service intended.

2907.2 Valves. Valves shall be of an indicating type. Terminal valves on remote pumping systems shall be of the deadman type, shutting off both the pump and the flow of solvent.

2907.3 Support. Piping systems shall be supported adequately and protected against physical damage. Piping shall be pitched to avoid unintentional trapping of liquids, or *approved* drains shall be provided.

2907.4 Connectors. *Approved* flexible connectors shall be installed where vibration exists or frequent movement is necessary. Hose at dispensing stations shall be of an *approved* type.

2907.5 Tests. Before being placed in service, all piping shall be free of leaks when tested for not less than 30 minutes at not less than 1.5 times the working pressure or not less than 5 pounds per square inch gauge (psig) (35 kPa) at the highest point in the system.

INTERNATIONAL CODE COUNCIL®
Copyright © 2019 ICC & NYSDOS. ALL RIGHTS RESERVED. Accessed by Lauren Gualdino (lgualdino@briarcliffmanor.org), (-) Order Number #100880972 on May 08, 2020 07:05 AM (PDT) pursuant to License Agreement with ICC & NYSDOS. No further reproduction, no

100880972

SECTION 2908
RAW MATERIALS IN PROCESS AREAS

2908.1 Nitrocellulose quantity. The amount of nitrocellulose brought into the operating area shall not exceed the amount required for a work shift. Nitrocellulose spillage shall be promptly swept up and disposed of properly.

2908.2 Organic peroxides quantity. Organic peroxides brought into the operating area shall be in the original shipping container. When in the operating area, the organic peroxide shall not be placed in locations exposed to ignition sources, heat or mechanical shocks.

SECTION 2909
RAW MATERIALS AND FINISHED PRODUCTS

2909.1 General. The storage, handling and use of flammable and *combustible liquids* in process areas shall be in accordance with Chapter 57.

2909.2 Tank storage. Tank storage for flammable and *combustible liquids* located inside of structures shall be limited to storage areas at or above grade that are separated from the processing area in accordance with the *Building Code of New York State*. Processing equipment containing flammable and *combustible liquids* and storage in quantities essential to the continuity of the operations shall not be prohibited in the processing area.

2909.3 Tank vehicle. Tank car and tank vehicle loading and unloading stations for Class I liquids shall be separated from the processing area, other plant structures, nearest *lot line* of property that can be built upon or public thoroughfare by a minimum clear distance of 25 feet (7620 mm).

2909.3.1 Loading. Loading and unloading structures and platforms for flammable and *combustible liquids* shall be designed and installed in accordance with Chapter 57.

2909.3.2 Safety. Tank cars for flammable liquids shall be unloaded such that the safety to persons and property is ensured. Tank vehicles for flammable and *combustible liquids* shall be loaded and unloaded in accordance with Chapter 57.

2909.4 Nitrocellulose storage. Nitrocellulose storage shall be located on a detached pad or in a separate structure or a room enclosed in accordance with the *Building Code of New York State*. The nitrocellulose storage area shall not be utilized for any other purpose. Electrical wiring and equipment installed in storage areas adjacent to process areas shall comply with Section 2904.2.

2909.4.1 Containers. Nitrocellulose shall be stored in closed containers. Barrels shall be stored on end and not more than two tiers high. Barrels or other containers of nitrocellulose shall not be opened in the main storage structure but at the point of use or other location intended for that purpose.

2909.4.2 Spills. Spilled nitrocellulose shall be promptly wetted with water and disposed of by use or burning in the open at an *approved* detached location.

2909.5 Organic peroxide storage. The storage of organic peroxides shall be in accordance with Chapter 62.

2909.5.1 Size. The size of the package containing organic peroxide shall be selected so that, as nearly as practical, full packages are utilized at one time. Spilled peroxide shall be promptly cleaned up and disposed of as specified by the supplier.

2909.6 Finished products. Finished products that are flammable or *combustible liquids* shall be stored outside of structures, in a separate structure, or in a room separated from the processing area in accordance with the *Building Code of New York State*. The storage of finished products shall be in tanks or closed containers in accordance with Chapter 57.

INTERNATIONAL CODE COUNCIL®
Copyright © 2019 ICC & NYSDOS. ALL RIGHTS RESERVED. Accessed by Lauren Gualdino (lgualdino@briarcliffmanor.org), (-) Order Number #100880972 on May 08, 2020 07:05 AM (PDT) pursuant to License Agreement with ICC & NYSDOS. No further reproduction, no

100880972

INTERNATIONAL CODE COUNCIL®
Copyright © 2019 ICC & NYSDOS. ALL RIGHTS RESERVED. Accessed by Lauren Gualdino (lgualdino@briarcliffmanor.org), (-) Order Number #100880972 on May 08, 2020 07:05 AM (PDT) pursuant to License Agreement with ICC & NYSDOS. No further reproduction, no

100880972

CHAPTER 30

INDUSTRIAL OVENS

SECTION 3001 GENERAL

3001.1 Scope. This chapter shall apply to the installation and operation of industrial ovens and furnaces. Industrial ovens and furnaces shall comply with the applicable provisions of NFPA 86, the *Fuel Gas Code of New York State*, *Mechanical Code of New York State* and this chapter. The terms "ovens" and "furnaces" are used interchangeably in this chapter.

[NY] 3001.2 Permits. Permits shall be required as set forth in Sections 105.2 and 105.6.

SECTION 3002 DEFINITIONS

3002.1 Definitions. The following terms are defined in Chapter 2:

FURNACE CLASS A.

FURNACE CLASS B.

FURNACE CLASS C.

FURNACE CLASS D.

SECTION 3003 LOCATION

3003.1 Ventilation. Enclosed rooms or *basements* containing industrial ovens or furnaces shall be provided with combustion air in accordance with the *Mechanical Code of New York State* and the *Fuel Gas Code of New York State*, and with ventilation air in accordance with the *Mechanical Code of New York State.*

3003.2 Exposure. When locating ovens, oven heaters and related equipment, the possibility of fire resulting from overheating or from the escape of fuel gas or fuel oil and the possibility of damage to the building and injury to persons resulting from explosion shall be considered.

3003.3 Ignition source. Industrial ovens and furnaces shall be located so as not to pose an ignition hazard to flammable vapors or mists or *combustible dusts*.

3003.4 Temperatures. Roofs and floors of ovens shall be insulated and ventilated to prevent temperatures at combustible ceilings and floors from exceeding 160°F (71°C).

SECTION 3004 FUEL PIPING

3004.1 Fuel-gas piping. Fuel-gas piping serving industrial ovens shall comply with the *Fuel Gas Code of New York State*. Piping for other fuel sources shall comply with this section.

3004.2 Shutoff valves. Each industrial oven or furnace shall be provided with an *approved* manual fuel shutoff valve in accordance with the *Mechanical Code of New York State* or the *Fuel Gas Code of New York State*.

3004.2.1 Fuel supply lines. Valves for fuel supply lines shall be located within 6 feet (1829 mm) of the appliance served.

Exception: Where *approved* and the valve is located in the same general area as the appliance served.

3004.3 Valve position. The design of manual fuel shutoff valves shall incorporate a permanent feature that visually indicates the open or closed position of the valve. Manual fuel shutoff valves shall not be equipped with removable handles or wrenches unless the handle or wrench can only be installed parallel with the fuel line when the valve is in the open position.

SECTION 3005 INTERLOCKS

3005.1 Shut down. Interlocks shall be provided for Class A ovens so that conveyors or sources of flammable or combustible materials shall shut down if either the exhaust or recirculation air supply fails.

SECTION 3006 FIRE PROTECTION

3006.1 Required protection. Class A and B ovens that contain, or are utilized for the processing of, combustible materials shall be protected by an *approved automatic fire-extinguishing system* complying with Chapter 9.

3006.2 Fixed fire-extinguishing systems. Fixed fire-extinguishing systems shall be provided for Class C or D ovens to protect against such hazards as overheating, spillage of molten salts or metals, quench tanks, ignition of hydraulic oil and escape of fuel. It shall be the user's responsibility to consult with the *fire code official* concerning the necessary requirements for such protection.

3006.3 Fire extinguishers. Portable fire extinguishers complying with Section 906 shall be provided not closer than 15 feet (4572 mm) or not more than 50 feet (15 240 mm) or in accordance with NFPA 10. This shall apply to the oven and related equipment.

SECTION 3007 OPERATION AND MAINTENANCE

3007.1 Furnace system information. An *approved*, clearly worded, and prominently displayed safety design data form or manufacturer's nameplate shall be provided stating the

INTERNATIONAL CODE COUNCIL®
Copyright © 2019 ICC & NYSDOS. ALL RIGHTS RESERVED. Accessed by Lauren Gualdino (lgualdino@briarcliffmanor.org), (-) Order Number #100880972 on May 08, 2020 07:05 AM (PDT) pursuant to License Agreement with ICC & NYSDOS. No further reproduction, no

100880972

safe operating condition for which the furnace system was designed, built, altered or extended.

3007.2 Oven nameplate. Safety data for Class A solvent atmosphere ovens shall be furnished on the manufacturer's nameplate. The nameplate shall provide the following design data:

1. The solvent used.
2. The number of gallons (L) used per batch or per hour of solvent entering the oven.
3. The required purge time.
4. The oven operating temperature.
5. The exhaust blower rating for the number of gallons (L) of solvent per hour or batch at the maximum operating temperature.

Exception: For low-oxygen ovens, the maximum allowable oxygen concentration shall be included in place of the exhaust blower ratings.

3007.3 Training. Operating, maintenance and supervisory personnel shall be thoroughly instructed and trained in the operation of ovens or furnaces.

3007.4 Equipment maintenance. Equipment shall be maintained in accordance with the manufacturer's instructions.

INTERNATIONAL CODE COUNCIL®
Copyright © 2019 ICC & NYSDOS. ALL RIGHTS RESERVED. Accessed by Lauren Gualdino (lgualdino@briarcliffmanor.org), (-) Order Number #100880972 on May 08, 2020 07:05 AM (PDT) pursuant to License Agreement with ICC & NYSDOS. No further reproduction, no

100880972

CHAPTER 31

TENTS, TEMPORARY SPECIAL EVENT STRUCTURES AND OTHER MEMBRANE STRUCTURES

SECTION 3101 GENERAL

3101.1 Scope. Tents, temporary special event structures and *membrane structures* shall comply with this chapter. The provisions of Section 3103 are applicable only to temporary tents and membrane structures. The provisions of Sections 3104 and 3106 are applicable to temporary and permanent tents and membrane structures. The provisions of Section 3105 are applicable to temporary special event structures. The provisions of Section 3106 are applicable to outdoor assembly events. Other temporary structures shall comply with the *Building Code of New York State*.

SECTION 3102 DEFINITIONS

3102.1 Definitions. The following terms are defined in Chapter 2:

AIR-INFLATED STRUCTURE.

AIR-SUPPORTED STRUCTURE.

MEMBRANE STRUCTURE.

TEMPORARY SPECIAL EVENT STRUCTURE.

TENT.

SECTION 3103 TEMPORARY TENTS AND MEMBRANE STRUCTURES

3103.1 General. Tents and membrane structures used for temporary periods shall comply with this section and Section 3106. Other temporary structures erected for a period of 180 days or less shall comply with the *Building Code of New York State*.

[NY] 3103.2 Approval required. Tents and membrane structures having an area in excess of 400 square feet (37 m^2) shall not be erected, operated or maintained for any purpose without first obtaining approval from the *fire code official*.

Exceptions:

1. Tents used exclusively for recreational camping purposes.
2. Tents open on all sides that comply with all of the following:
   - 2.1. Individual tents having a maximum size of 700 square feet (65 m^2).
   - 2.2. The aggregate area of multiple tents placed side by side without a fire break clearance of 12 feet (3658 mm), not exceeding 700 square feet (65 m^2) total.
   - 2.3. A minimum clearance of 12 feet (3658 mm) to all structures and other tents.

3103.3 Outdoor assembly event. For the purposes of this chapter, an outdoor assembly event shall include a circus, carnival, tent show, theater, skating rink, dance hall or other place of assembly in or under which persons gather for any purpose.

3103.3.1 Special amusement building. Tents and other membrane structures erected as a special amusement building shall be equipped with an *automatic sprinkler system* in accordance with Section 411.3 of the *Building Code of New York State*.

[NY] 3103.4 Permits. Permits shall be required as set forth in Sections 105.2 and 105.6.

3103.5 Use period. Temporary tents, air-supported, air-inflated or tensioned membrane structures shall not be erected for a period of more than 180 days within a 12-month period on a single premises.

3103.6 Construction documents. A detailed site and floor plan for tents or membrane structures with an *occupant load* of 50 or more shall be provided with each application for approval. The tent or membrane structure floor plan shall indicate details of the *means of egress* facilities, seating capacity, arrangement of the seating and location and type of heating and electrical equipment. The *construction documents* shall include an analysis of structural stability.

3103.7 Inspections. The entire tent, air-supported, air-inflated or tensioned membrane structure system shall be inspected at regular intervals, but not less than two times per permit use period, by the permittee, *owner* or agent to determine that the installation is maintained in accordance with this chapter.

Exception: Permit use periods of less than 30 days.

3103.7.1 Inspection report. Where required by the *fire code official*, an inspection report shall be provided and shall consist of maintenance, anchors and fabric inspections.

3103.8 Access, location and parking. Access, location and parking for temporary tents and membrane structures shall be in accordance with this section.

3103.8.1 Access. Fire apparatus access roads shall be provided in accordance with Section 503.

3103.8.2 Location. Tents or membrane structures shall not be located within 20 feet (6096 mm) of *lot lines*, buildings, other tents or membrane structures, parked vehicles or internal combustion engines. For the purpose of deter-

INTERNATIONAL CODE COUNCIL®
Copyright © 2019 ICC & NYSDOS. ALL RIGHTS RESERVED. Accessed by Lauren Gualdino (lgualdino@briarcliffmanor.org), (-) Order Number #100880972 on May 08, 2020 07:05 AM (PDT) pursuant to License Agreement with ICC & NYSDOS. No further reproduction, no

100880972

mining required distances, support ropes and guy wires shall be considered as part of the temporary membrane structure or tent.

Exceptions:

1. Separation distance between membrane structures and tents not used for cooking is not required where the aggregate floor area does not exceed 15,000 square feet (1394 m^2).
2. Membrane structures or tents need not be separated from buildings where all of the following conditions are met:
   2.1. The aggregate floor area of the membrane structure or tent shall not exceed 10,000 square feet (929 m^2).
   2.2. The aggregate floor area of the building and membrane structure or tent shall not exceed the allowable floor area including increases as indicated in the *Building Code of New York State*.
   2.3. Required *means of egress* are provided for both the building and the membrane structure or tent including travel distances.
   2.4. Fire apparatus access roads are provided in accordance with Section 503.

3103.8.3 Location of structures in excess of 15,000 square feet in area. Membrane structures having an area of 15,000 square feet (1394 m^2) or more shall be located not less than 50 feet (15 240 mm) from any other tent or structure as measured from the sidewall of the tent or membrane structure unless joined together by a corridor.

3103.8.4 Membrane structures on buildings. Membrane structures that are erected on buildings, balconies, decks or other structures shall be regulated as permanent membrane structures in accordance with Section 3102 of the *Building Code of New York State*.

3103.8.5 Connecting corridors. Tents or membrane structures are allowed to be joined together by means of corridors. *Exit* doors shall be provided at each end of such corridor. On each side of such corridor and approximately opposite each other, there shall be provided openings not less than 12 feet (3658 mm) wide.

3103.8.6 Fire break. An unobstructed fire break passageway or fire road not less than 12 feet (3658 mm) wide and free from guy ropes or other obstructions shall be maintained on all sides of all tents and membrane structures unless otherwise *approved* by the *fire code official*.

3103.9 Structural stability and anchorage required. Tents or membrane structures and their appurtenances shall be designed and installed to withstand the elements of weather and prevent collapsing. Documentation of structural stability shall be furnished to the *fire code official*.

3103.9.1 Tents and membrane structures greater than one story. Tents and membrane structures exceeding one story shall be designed and constructed to comply with Sections 1606 through 1609 of the *Building Code of New York State*.

3103.9.2 Tents and membrane structures greater than 7,500 square feet. *Tents* and *membrane structures* greater than 7,500 square feet (697 m^2) shall be designed and constructed to comply with Sections 1606 through 1609 of the *Building Code of New York State*.

3103.9.3 Tents and membrane structures with an occupant load greater than 1,000. *Tents* and *membrane structures* with an occupant capacity greater than 1,000 persons shall be designed and constructed to comply with Sections 1606 through 1609 of the *Building Code of New York State*.

3103.10 Temporary air-supported and air-inflated membrane structures. Temporary air-supported and air-inflated membrane structures shall be in accordance with Sections 3103.10.1 through 3103.10.4.

3103.10.1 Door operation. During high winds exceeding 50 miles per hour (22 m/s) or in snow conditions, the use of doors in air-supported structures shall be controlled to avoid excessive air loss. Doors shall not be left open.

3103.10.2 Fabric envelope design and construction. Air-supported and air-inflated structures shall have the design and construction of the fabric envelope and the method of anchoring in accordance with Architectural Fabric Structures Institute FSAAS.

3103.10.3 Blowers. An air-supported structure used as a place of assembly shall be furnished with not less than two blowers, each of which has adequate capacity to maintain full inflation pressure with normal leakage. The design of the blower shall be so as to provide integral limiting pressure at the design pressure specified by the manufacturer.

3103.10.4 Auxiliary inflation systems. Places of public assembly for more than 200 persons shall be furnished with an auxiliary inflation system capable of powering a blower with the capacity to maintain full inflation pressure with normal leakage in accordance with Section 3103.10.3 for a minimum duration of 4 hours. The auxiliary inflation system shall be either a fully automatic auxiliary engine-generator set or a supplementary blower powered by an internal combustion engine that shall be automatic in operation. The system shall be capable of automatically operating the required blowers at full power within 60 seconds of a commercial power failure.

3103.11 Seating arrangements. Seating in tents or membrane structures shall be in accordance with Chapter 10.

3103.12 Means of egress. *Means of egress* for temporary tents and membrane structures shall be in accordance with Sections 3103.12.1 through 3103.12.8.

3103.12.1 Distribution. *Exits* shall be spaced at approximately equal intervals around the perimeter of the tent or membrane structure, and shall be located such that all points are 100 feet (30 480 mm) or less from an *exit*.

3103.12.2 Number. Tents, or membrane structures or a usable portion thereof shall have not less than one *exit* and not less than the number of *exits* required by Table 3103.12.2. The total width of *means of egress* in inches

INTERNATIONAL CODE COUNCIL®
Copyright © 2019 ICC & NYSDOS. ALL RIGHTS RESERVED. Accessed by Lauren Gualdino (lgualdino@briarcliffmanor.org), (-) Order Number #100880972 on May 08, 2020 07:05 AM (PDT) pursuant to License Agreement with ICC & NYSDOS. No further reproduction, no

100880972

(mm) shall be not less than the total *occupant load* served by a *means of egress* multiplied by 0.2 inches (5 mm) per person.

3103.12.3 Exit openings from tents. *Exit* openings from tents shall remain open unless covered by a flame-resistant curtain. The curtain shall comply with the following requirements:

1. Curtains shall be free sliding on a metal support. The support shall be not less than 80 inches (2032 mm) above the floor level at the *exit*. The curtains shall be so arranged that, when open, no part of the curtains obstructs the *exit*.
2. Curtains shall be of a color, or colors, that contrasts with the color of the tent.

3103.12.4 Doors. *Exit* doors shall swing in the direction of *exit* travel. To avoid hazardous air and pressure loss in air-supported membrane structures, such doors shall be automatic closing against operating pressures. Opening force at the door edge shall not exceed 15 pounds (66 N).

3103.12.5 Aisle. The width of *aisles* without fixed seating shall be in accordance with the following:

1. In areas serving employees only, the minimum *aisle* width shall be 24 inches (610 mm) but not less than the width required by the number of employees served.
2. In public areas, smooth-surfaced, unobstructed *aisles* having a minimum width of not less than 44 inches (1118 mm) shall be provided from seating areas, and *aisles* shall be progressively increased in width to provide, at all points, not less than 1 foot (305 mm) of *aisle* width for each 50 persons served by such *aisle* at that point.

3103.12.5.1 Arrangement and maintenance. The arrangement of *aisles* shall be subject to approval by the *fire code official* and shall be maintained clear at all times during occupancy.

3103.12.6 Exit signs. *Exits* shall be clearly marked. *Exit* signs shall be installed at required *exit* doorways and where otherwise necessary to indicate clearly the direction of egress where the *exit* serves an *occupant load* of 50 or more.

3103.12.6.1 Exit sign illumination. *Exit* signs shall be either *listed* and *labeled* in accordance with UL 924 as the internally illuminated type and used in accordance with the listing or shall be externally illuminated by luminaires supplied in either of the following manners:

1. Two separate circuits, one of which shall be separate from all other circuits, for *occupant loads* of 300 or less.
2. Two separate sources of power, one of which shall be an *approved* emergency system, shall be provided where the *occupant load* exceeds 300. Emergency systems shall be supplied from storage batteries or from the on-site generator set, and the system shall be installed in accordance with NFPA 70. The emergency system provided shall have a minimum duration of 90 minutes when operated at full design demand.

3103.12.7 Means of egress illumination. *Means of egress* shall be illuminated with light having an intensity of not less than 1 foot-candle (11 lux) at floor level while the structure is occupied. Fixtures required for *means of egress* illumination shall be supplied from a separate circuit or source of power.

3103.12.8 Maintenance of means of egress. The required width of *exits*, *aisles* and passageways shall be maintained at all times to a *public way*. Guy wires, guy ropes and other support members shall not cross a *means of egress* at a height of less than 8 feet (2438 mm). The surface of *means of egress* shall be maintained in an *approved* manner.

SECTION 3104
TEMPORARY AND PERMANENT TENTS AND MEMBRANE STRUCTURES

3104.1 General. Tents and membrane structures, both temporary and permanent, shall be in accordance with this section and Sections 3106 and 3107. Permanent tents and

TABLE 3103.12.2
MINIMUM NUMBER OF MEANS OF EGRESS AND MEANS OF EGRESS WIDTHS FROM TEMPORARY MEMBRANE STRUCTURES AND TENTS

OCCUPANT LOAD	MINIMUM NUMBER OF MEANS OF EGRESS	MINIMUM WIDTH OF EACH MEANS OF EGRESS (inches)	MINIMUM WIDTH OF EACH MEANS OF EGRESS (inches)
		Tent	Membrane Structure
10 to 199	2	72	36
200 to 499	3	72	72
500 to 999	4	96	72
1,000 to 1,999	5	120	96
2,000 to 2,999	6	120	96
Over 3,000[a]	7	120	96

For SI: 1 inch = 25.4 mm.

a. When the occupant load exceeds 3,000, the total width of means of egress (in inches) shall be not less than the total occupant load multiplied by 0.2 inches per person.

INTERNATIONAL CODE COUNCIL®
Copyright © 2019 ICC & NYSDOS. ALL RIGHTS RESERVED. Accessed by Lauren Gualdino (lgualdino@briarcliffmanor.org), (-) Order Number #100880972 on May 08, 2020 07:05 AM (PDT) pursuant to License Agreement with ICC & NYSDOS. No further reproduction, no

100880972

membrane structures shall also comply with the *Building Code of New York State*.

3104.2 Flame propagation performance treatment. Before a permit is granted, the *owner* or agent shall file with the *fire code official* a certificate executed by an *approved* testing laboratory. The certificate shall indicate that the floor coverings, tents, membrane structures and their appurtenances, which include sidewalls, drops and tarpaulins, are composed of materials meeting the flame propagation performance of Test Method 2 of NFPA 701. Additionally, it shall indicate that the bunting and combustible decorative materials and effects are composed of material meeting the flame propagation performance criteria of Test Method 1 or Test Method 2 of NFPA 701, as applicable. Alternatively, the materials shall be treated with a flame retardant in an *approved* manner and meet the flame propagation performance criteria of the applicable test method of NFPA 701. The flame propagation performance criteria shall be effective for the period specified by the permit.

3104.3 Label. Membrane structures or tents shall have a permanently affixed label bearing the identification of size and fabric or material type.

3104.4 Certification. An affidavit or affirmation shall be submitted to the *fire code official* and a copy retained on the premises on which the tent or air-supported structure is located. The affidavit shall attest to all of the following information relative to the flame propagation performance criteria of the fabric:

1. Names and address of the *owners* of the tent or air-supported structure.
2. Date the fabric was last treated with flame-retardant solution.
3. Trade name or kind of chemical used in treatment.
4. Name of person or firm treating the material.
5. Name of testing agency and test standard by which the fabric was tested.

*

SECTION 3105
TEMPORARY SPECIAL EVENT STRUCTURES

3105.1 General. Temporary special event structures shall comply with Section 3104, Sections 3105.2 through 3105.9 and ANSI E1.21.

3105.2 Approval. Temporary special event structures in excess of 400 square feet (37 m^2) shall not be erected, operated or maintained for any purpose without first obtaining approval and a permit from the *fire code official* and the building official.

[NY] 3105.3 Permits. Permits shall be required as set forth in Sections 105.2 and 105.6.

3105.4 Use period. Temporary special event structures erected in accordance with ANSI E1.21 shall not be erected for a period of more than six consecutive weeks.

3105.5 Required documents. The following documents shall be submitted to the *fire code official* and the building official for review before a permit is *approved*:

1. Construction documents: *Construction documents* shall be prepared by a *registered design professional* in accordance with the *Building Code of New York State* and ANSI E1.21 where applicable. *Construction documents* shall include:
   - 1.1. A summary sheet showing the building code used, design criteria, loads and support reactions.
   - 1.2. Detailed construction and installation drawings.
   - 1.3. Design calculations.
   - 1.4. Operating limits of the structure explicitly outlined by the *registered design professional* including environmental conditions and physical forces.
   - 1.5. Effects of additive elements such as video walls, supported scenery, audio equipment, vertical and horizontal coverings.
   - 1.6. Means for adequate stability including specific requirements for guying and cross-bracing, ground anchors or ballast for different ground conditions.
2. Designation of responsible party: The *owner* of the temporary special event structure shall designate in writing a person to have responsibility for the temporary special event structure on the site. The designated person shall have sufficient knowledge of the construction documents, manufacturer's recommendations and operations plan to make judgments regarding the structure's safety and to coordinate with the *fire code official.*
3. Operations plan: The operations plan shall reflect manufacturer's operational guidelines, procedures for environmental monitoring and actions to be taken under specified conditions consistent with the *construction documents.*

[NY] 3105.6 Inspections. Inspections shall comply with Section 105 and Sections 3105.6.1 and 3105.6.2.

3105.6.1 Independent inspector. The *owner* of a temporary special event structure shall employ a qualified, independent *approved* agency or individual to inspect the installation of a temporary special event structure.

3105.6.2 Inspection report. The inspecting agency or individual shall furnish an inspection report to the *fire code official*. The inspection report shall indicate that the temporary special event structure was inspected and was or was not installed in accordance with the approved *construction documents*. Discrepancies shall be brought to the immediate attention of the installer for correction. Where any discrepancy is not corrected, it shall be brought to the attention of the *fire code official* and the designated responsible party.

3105.7 Means of egress. The *means of egress* for temporary special event structures shall comply with Chapter 10.

3105.8 Location. Temporary special event structure shall be located a distance from property lines and buildings to accommodate distances indicated in the construction draw-

INTERNATIONAL CODE COUNCIL®
Copyright © 2019 ICC & NYSDOS. ALL RIGHTS RESERVED. Accessed by Lauren Gualdino (lgualdino@briarcliffmanor.org), (-) Order Number #100880972 on May 08, 2020 07:05 AM (PDT) pursuant to License Agreement with ICC & NYSDOS. No further reproduction, no

100880972

ings for guy wires, cross-bracing, ground anchors or ballast. Location shall not interfere with egress from a building or encroach on fire apparatus access roads.

3105.9 Portable fire extinguishers. Portable fire extinguishers shall be provided as required by Section 906.

SECTION 3106
OUTDOOR ASSEMBLY EVENTS

3106.1 Scope. Outdoor assembly events shall comply with this section.

3106.2 General. Outdoor assembly events shall be in accordance with this section and Section 403.12. Temporary structures erected for outdoor assembly events shall comply with this chapter.

3106.2.1 Approval required. Outdoor assembly events shall be *approved* by the *fire code official*.

[NY] 3106.2.2 Permits. An *operating permit* shall be required as set forth in Section 105.6.

3106.2.3 Access. An *approved* means of fire apparatus access shall be provided.

3106.2.3.1 Fire service features. Unobstructed access to fire hydrants, drafting sources and other fire protection features shall be maintained at all times.

3106.3 Occupancy and means of egress. The number and location of emergency egress and escape routes shall be *approved* by the *fire code official*.

3106.3.1 Occupant load. The *fire code official* shall establish an *occupant load* for the event site.

3106.3.2 Maintenance of emergency egress and escape routes. Emergency egress and escape routes shall be maintained at all times.

3106.4 Public safety for events. Outdoor assembly events shall comply with Sections 3106.4.1 through 3106.4.7.

[NY] 3106.4.1 Public safety plan for gatherings. A public safety plan shall be prepared where required by Section 403.12.2. The public safety plan shall be submitted to the *fire code official* with the application for an *operating permit* as required by Section 3106.2.2.

3106.4.2 Weather monitoring person. Where required by the *fire code official*, the event operator or agent shall designate one qualified individual to continuously monitor local weather reports, forecasts and conditions. Said person shall be responsible for initiating weather-related event mitigation activities, ordering the suspension or cancellation of the outdoor assembly event and issuing the evacuation signal in accordance with the *approved* public safety plan.

3106.4.3 Crowd managers. Where events involve a gathering of more than 1,000 people, trained crowd managers shall be provided in accordance with Section 403.12.3.

3106.4.4 Portable fire extinguishers. *Approved* portable fire extinguishers complying with Section 906 shall be provided and placed in locations *approved* by the *fire code official*.

3106.4.5 Smoking. Smoking shall be permitted only in designated areas. Other areas shall have *approved* "No Smoking" signs conspicuously posted and maintained in accordance with Section 310.

3106.4.6 Combustible vegetation. Combustible vegetation that could create a fire hazard shall be removed from the outdoor assembly event area.

3106.4.7 Combustible refuse. Combustible refuse shall be kept in noncombustible containers with tight-fitting or self-closing lids. Combustible refuse shall be removed from the event site at regular intervals to prevent an unsafe accumulation within the event site.

3106.5 Cooking appliances or devices. Outdoor assembly events with concession stands or booths using cooking appliances or devices shall comply with Sections 3106.5.1 through 3106.5.3.

3106.5.1 Separation from tents or structures. Cooking appliances or devices that produce sparks or grease-laden vapors or flying embers (firebrands) shall not be used within 20 feet (6096 mm) of a tent or temporary structure.

Exceptions:

1. Designated cooking tents not occupied by the public when *approved* by the *fire code official*.
2. *Tents* or structures where cooking appliances are protected with an automatic fire-extinguishing system in accordance with Section 904.12.

3106.5.2 Protection. Cooking equipment using combustible oils or solids shall meet the following:

1. A noncombustible lid shall be immediately available. The lid shall be of sufficient size to cover the cooking well completely.
2. The equipment shall be placed on a noncombustible surface.
3. An *approved* portable fire extinguisher for protection from cooking grease fires shall be provided at a location *approved* by the *fire code official*.

3106.5.3 Liquefied petroleum gas (LP-gas). The use of liquefied petroleum gas (LP-gas) shall be in accordance with Chapter 61.

3106.6 Electrical equipment and wiring. Outdoor assembly events with concession stands or booths using electrical equipment and temporary wiring for electrical power or lighting shall comply with the applicable provisions of NFPA 70 and Sections 3106.6.1 through 3106.6.3.

3106.6.1 Outdoor use. Electrical equipment and wiring shall be *listed* and *labeled* for outdoor use.

3106.6.2 Generators. Generators shall be installed not less than 10 feet (3048 mm) from combustible materials, and shall be isolated from the public by physical guard, fence or enclosure installed not less than 3 feet (914 mm) away from the internal combustion power source.

3106.6.3 Portable fire extinguishers. Each generator shall be provided with an *approved* portable fire extinguisher complying with Section 906.

INTERNATIONAL CODE COUNCIL®
Copyright © 2019 ICC & NYSDOS. ALL RIGHTS RESERVED. Accessed by Lauren Gualdino (lgualdino@briarcliffmanor.org), (-) Order Number #100880972 on May 08, 2020 07:05 AM (PDT) pursuant to License Agreement with ICC & NYSDOS. No further reproduction, no

100880972

SECTION 3107
OPERATIONAL REQUIREMENTS

3107.1 General. Temporary and permanent *tents* and *membrane structures* shall comply with this section.

**

3107.2 Combustible materials. Hay, straw, shavings or similar combustible materials shall not be located within any tent or membrane structure containing an assembly occupancy, except the materials necessary for the daily feeding and care of animals. Sawdust and shavings utilized for a public performance or exhibit shall not be prohibited provided that the sawdust and shavings are kept damp. Combustible materials shall not be permitted under stands or seats at any time.

3107.3 Smoking. Smoking shall not be permitted in *tents* or *membrane structures*. *Approved* "No Smoking" signs shall be conspicuously posted in accordance with Section 310.

3107.4 Open or exposed flame. Open flame or other devices emitting flame, fire or heat or any flammable or *combustible liquids*, gas, charcoal or other cooking device or any other unapproved devices shall not be permitted inside or located within 20 feet (6096 mm) of the *tent* or *membrane structures* while open to the public unless *approved* by the *fire code official*.

3107.5 Fireworks. Fireworks shall not be used within 100 feet (30 480 mm) of *tents* or *membrane structures.*

3107.6 Spot lighting. Spot or effect lighting shall only be by electricity, and all combustible construction located within 6 feet (1829 mm) of such equipment shall be protected with *approved* noncombustible insulation not less than $9^1/_4$ inches (235 mm) thick.

3107.7 Safety film. Motion pictures shall not be displayed in *tents* or *membrane structures* unless the motion picture film is safety film.

3107.8 Clearance. There shall be a clearance of not less than 3 feet (914 mm) between the fabric envelope and all contents located inside *membrane structures*.

3107.9 Portable fire extinguishers. *Approved* portable fire extinguishers complying with Section 906 shall be provided and placed in locations as required by *the fire code official*.

3107.10 Fire protection equipment. Fire hose lines, water supplies and other auxiliary fire equipment shall be maintained at the site in such numbers and sizes as required by the *fire code official.*

3107.11 Occupant load factors. The *occupant load* allowed in an assembly structure, or portion thereof, shall be determined in accordance with Chapter 10.

3107.12 Heating and cooking equipment. Heating and cooking equipment shall be in accordance with Sections 3107.12.1 through 3107.12.7.

3107.12.1 Installation. Heating or cooking equipment, tanks, piping, hoses, fittings, valves, tubing and other related components shall be installed as specified in the *Mechanical Code of New York State* and the *Fuel Gas Code of New York State*, and shall be *approved* by the *fire code official*.

3107.12.2 Venting. Gas, liquid and solid fuel-burning equipment designed to be vented shall be vented to the outside air as specified in the *Fuel Gas Code of New York State* and the *Mechanical Code of New York State*. Such vents shall be equipped with *approved* spark arresters where required. Where vents or flues are used, all portions of the tent or membrane structure shall be not less than 12 inches (305 mm) from the flue or vent.

3107.12.3 Location. Cooking and heating equipment shall not be located within 10 feet (3048 mm) of *exits* or combustible materials.

3107.12.4 Operations. Operations such as warming of foods, cooking demonstrations and similar operations that use solid flammables, butane or other similar devices that do not pose an ignition hazard, shall be *approved*.

3107.12.5 Cooking tents. Tents with sidewalls or drops where cooking is performed shall be separated from other tents or membrane structures by not less than 20 feet (6096 mm).

3107.12.6 Outdoor cooking. Outdoor cooking that produces sparks or grease-laden vapors shall not be performed within 20 feet (6096 mm) of a tent or membrane structure.

3107.12.7 Electrical heating and cooking equipment. Electrical cooking and heating equipment shall comply with NFPA 70.

3107.13 LP-gas. The storage, handling and use of LP-gas and LP-gas equipment shall be in accordance with Sections 3107.13.1 through 3107.13.3.

3107.13.1 General. LP-gas equipment such as containers, tanks, piping, hoses, fittings, valves, tubing and other related components shall be *approved* and in accordance with Chapter 61 and with the *Fuel Gas Code of New York State*.

3107.13.2 Location of containers. LP-gas containers and tanks shall be located outside in accordance with Table 6104.3. Pressure relief devices shall be pointed away from the *tent* or *membrane structure*.

3107.13.3 Protection and security. Portable LP-gas containers, tanks, piping, valves and fittings that are located outside and are being used to fuel equipment inside a tent or membrane structure shall be adequately protected to prevent tampering, damage by vehicles or other hazards and shall be located in an *approved* location. Portable LP-gas containers shall be secured to prevent unauthorized movement.

3107.14 Flammable and combustible liquids. The storage of flammable and *combustible liquids* and the use of flammable-liquid-fueled equipment shall be in accordance with Sections 3107.14.1 through 3107.14.3.

3107.14.1 Use. Flammable-liquid-fueled equipment shall not be used in *tents* or *membrane structures*.

3107.14.2 Flammable and combustible liquid storage. Flammable and *combustible liquids* shall be stored outside in an *approved* manner not less than 50 feet (15 240 mm)

INTERNATIONAL CODE COUNCIL®
Copyright © 2019 ICC & NYSDOS. ALL RIGHTS RESERVED. Accessed by Lauren Gualdino (lgualdino@briarcliffmanor.org), (-) Order Number #100880972 on May 08, 2020 07:05 AM (PDT) pursuant to License Agreement with ICC & NYSDOS. No further reproduction, no

100880972

from *tents* or *membrane structures*. Storage shall be in accordance with Chapter 57.

3107.14.3 Refueling. Refueling shall be performed in an *approved* location not less than 20 feet (6096 mm) from *tents* or *membrane structures*.

3107.15 Display of motor vehicles. Liquid- and gas-fueled vehicles and equipment used for display within *tents* or *membrane structures* shall be in accordance with Sections 3107.15.1 through 3107.15.5.3.

3107.15.1 Batteries. Batteries shall be disconnected in an appropriate manner.

3107.15.2 Fuel. Vehicles or equipment shall not be fueled or defueled within the tent or membrane structure.

3107.15.2.1 Quantity limit. Fuel in the fuel tank shall not exceed one-quarter of the tank capacity or 5 gallons (19 L), whichever is less.

3107.15.2.2 Inspection. Fuel systems shall be inspected for leaks.

3107.15.2.3 Closure. Fuel tank openings shall be locked and sealed to prevent the escape of vapors.

3107.15.3 Location. The location of vehicles or equipment shall not obstruct *means of egress*.

3107.15.4 Places of assembly. When a compressed natural gas (CNG) or liquefied petroleum gas (LP-gas) powered vehicle is parked inside a place of assembly, all the following conditions shall be met:

1. The quarter-turn shutoff valve or other shutoff valve on the outlet of the CNG or LP-gas container shall be closed and the engine shall be operated until it stops. Valves shall remain closed while the vehicle is indoors.
2. The hot lead of the battery shall be disconnected.
3. Dual-fuel vehicles equipped to operate on gasoline and CNG or LP-gas shall comply with this section and Sections 3107.15.1 through 3107.15.3 for gasoline-powered vehicles.

3107.15.5 Competitions and demonstrations. Liquid and gas-fueled vehicles and equipment used for competition or demonstration within a tent or membrane structure shall comply with Sections 3107.15.5.1 through 3107.15.5.3.

3107.15.5.1 Fuel storage. Fuel for vehicles or equipment shall be stored in *approved* containers in an *approved* location outside of the structure in accordance with Section 3107.14.2.

3107.15.5.2 Fueling. Refueling shall be performed outside of the structure in accordance with Section 3107.14.3.

3107.15.5.3 Spills. Fuel spills shall be cleaned up immediately.

3107.16 Separation of generators. Generators and other internal combustion power sources shall be separated from tents or membrane structures by not less than 20 feet (6096 mm) and shall be isolated from contact with the public by fencing, enclosure or other *approved* means.

3107.17 Standby personnel. Where, in the opinion of the *fire code official*, it is essential for public safety in a tent or membrane structure used as a place of assembly or any other use where people congregate, because of the number of persons, or the nature of the performance, exhibition, display, contest or activity, the *owner*, agent or lessee shall employ one or more qualified persons, as required and *approved*, to remain on duty during the times such places are open to the public, or when such activity is being conducted.

3107.17.1 Duties. Before each performance or the start of such activity, standby personnel shall keep diligent watch for fires during the time such place is open to the public or such activity is being conducted and take prompt measures for extinguishment of fires that occur and assist in the evacuation of the public from the structure.

3107.17.2 Crowd managers. There shall be trained crowd managers or trained crowd supervisors at a ratio of one crowd manager or supervisor for every 250 occupants, as *approved*.

3107.18 Combustible vegetation. Combustible vegetation that could create a fire hazard shall be removed from the area occupied by a *tent* or *membrane structure*, and from areas within 30 feet (9144 mm) of such structures.

3107.19 Combustible waste material. The floor surface inside *tents* or *membrane structures* and the grounds outside and within a 30-foot (9144 mm) perimeter shall be kept free of combustible waste and other combustible materials that could create a fire hazard. Such waste shall be stored in *approved* containers and removed from the premises not less than once a day during the period the structure is occupied by the public.

INTERNATIONAL CODE COUNCIL®
Copyright © 2019 ICC & NYSDOS. ALL RIGHTS RESERVED. Accessed by Lauren Gualdino (lgualdino@briarcliffmanor.org), (-) Order Number #100880972 on May 08, 2020 07:05 AM (PDT) pursuant to License Agreement with ICC & NYSDOS. No further reproduction, no

100880972

INTERNATIONAL CODE COUNCIL®
Copyright © 2019 ICC & NYSDOS. ALL RIGHTS RESERVED. Accessed by Lauren Gualdino (lgualdino@briarcliffmanor.org), (-) Order Number #100880972 on May 08, 2020 07:05 AM (PDT) pursuant to License Agreement with ICC & NYSDOS. No further reproduction, no

100880972

CHAPTER 32

HIGH-PILED COMBUSTIBLE STORAGE

SECTION 3201 GENERAL

3201.1 Scope. *High-piled combustible storage* shall be in accordance with this chapter. In addition to the requirements of this chapter, the following material-specific requirements shall apply:

1. Aerosols shall be in accordance with Chapter 51.
2. *Flammable* and *combustible liquids* shall be in accordance with Chapter 57.
3. Hazardous materials shall be in accordance with Chapter 50.
4. Storage of combustible paper records shall be in accordance with NFPA 13.
5. Storage of *combustible fibers* shall be in accordance with Chapter 37.
6. General storage of combustible material shall be in accordance with Chapter 3.

[NY] 3201.2 Permits. A permit shall be required as set forth in Sections 105.2 and 105.6.

3201.3 Construction documents. At the time of building permit application for new structures designed to accommodate high-piled storage or for requesting a change of occupancy/use, and at the time of application for a storage permit, plans and specifications shall be submitted for review and approval. In addition to the information required by the *Building Code of New York State*, the storage permit submittal shall include the information specified in this section. The construction documents shall include all of the following:

1. Floor plan of the building showing locations and dimensions of *high-piled storage areas*.
2. Usable storage height for each storage area.
3. Number of tiers within each rack, if applicable.
4. Commodity clearance between top of storage and the sprinkler deflector for each storage arrangement.
5. Aisle dimensions between each storage array.
6. Maximum pile volume for each storage array.
7. Location and classification of commodities in accordance with Section 3203.
8. Location of commodities that are banded or encapsulated.
9. Location of required fire department access doors.
10. Type of fire suppression and fire detection systems.
11. Location of valves controlling the water supply of ceiling and in-rack sprinklers.
12. Type, location and specifications of smoke removal and curtain board systems.
13. Dimension and location of transverse and longitudinal flue spaces.
14. Additional information regarding required design features, commodities, storage arrangement and fire protection features within the *high-piled storage area* shall be provided at the time of permit, where required by the *fire code official*.

3201.3.1 Approved construction documents. Following approval of the *construction documents,* a copy of the *approved* plans shall be maintained on the premises in an *approved* location.

3201.3.2 Approved storage layout. A floor plan, of legible size, shall be provided, mounted on a wall and protected from damage. The floor plan shall be mounted in an *approved* location and show the following:

1. Locations, dimensions and rack layout of *high-piled storage areas.*
2. Design storage height for each storage area.
3. Types of commodities.
4. Commodity clearance between top of storage and the sprinkler deflector for each storage arrangement.
5. Aisle dimensions between each storage array.
6. For palletized and solid-piled storage, the maximum pile volume for each storage array.
7. Location and classification of commodities in accordance with Section 3203.
8. Location of required fire department access doors.
9. Location of valves controlling the water supply of ceiling and in-rack sprinklers.

3201.4 Fire safety and evacuation plan. Where required by the Section 403, a fire safety and evacuation plan shall be submitted at the time of permit application for review and approval. A copy of the *approved* fire safety and evacuation plan shall be maintained on the premises in an *approved* location.

SECTION 3202 DEFINITIONS

3202.1 Definitions. The following terms are defined in Chapter 2:

ARRAY.

ARRAY, CLOSED.

AUTOMATED RACK STORAGE.

BIN BOX.

COMMODITY.

EARLY SUPPRESSION FAST-RESPONSE (ESFR) SPRINKLER.

EXPANDED PLASTIC.

EXTRA-HIGH-RACK COMBUSTIBLE STORAGE.

HIGH-PILED COMBUSTIBLE STORAGE.

INTERNATIONAL CODE COUNCIL®
Copyright © 2019 ICC & NYSDOS. ALL RIGHTS RESERVED. Accessed by Lauren Gualdino (lgualdino@briarcliffmanor.org), (-) Order Number #100880972 on May 08, 2020 07:05 AM (PDT) pursuant to License Agreement with ICC & NYSDOS. No further reproduction, no

100880972

HIGH-PILED STORAGE AREA.
LONGITUDINAL FLUE SPACE.
MANUAL STOCKING METHODS.
MECHANICAL STOCKING METHODS.
SHELF STORAGE.
SOLID SHELVING.
TRANSVERSE FLUE SPACE.

SECTION 3203
COMMODITY CLASSIFICATION

3203.1 Classification of commodities. Commodities shall be classified as Class I, II, III, IV or high hazard in accordance with Sections 3203.2 through 3203.10.3. Materials listed within each commodity classification are assumed to be unmodified for improved combustibility characteristics. Use of flame-retarding modifiers or the physical form of the material could change the classification.

3203.2 Class I commodities. Class I commodities are noncombustible products in ordinary corrugated cartons with or without single-thickness dividers, or in ordinary paper wrappings with or without wood pallets. The amount of Group A plastics shall be limited in accordance with Section 3203.9.

3203.3 Class II commodities. Class II commodities are Class I products in slatted wooden crates, solid wooden boxes, multiple-thickness paperboard cartons or equivalent combustible packaging material with or without wood pallets. The amount of Group A plastics shall be limited in accordance with Section 3203.9.

3203.4 Class III commodities. Class III commodities are products of wood, paper, natural fiber cloth, or Group C plastics or products thereof, with or without wood pallets. The amount of Group A plastics shall be limited in accordance with Section 3203.9.

3203.5 Class IV commodities. Class IV commodities are Class I, II or III products containing Group A plastics in ordinary corrugated cartons; Class I, II and III products with Group A plastic packaging; Group B plastics; and free-flowing Group A plastics with or without wood pallets. The total amount of nonfree-flowing Group A plastics shall be limited in accordance with Section 3203.9.

3203.6 High-hazard commodities. High-hazard commodities are products presenting special fire hazards beyond those of Class I, II, III or IV. Group A plastics not otherwise classified are included in this class.

3203.7 Classification of plastics. Plastics shall be designated as Group A, B or C in accordance with Sections 3203.7.1 through 3203.7.3.

3203.7.1 Group A plastics. Group A plastics are plastic materials having a heat of combustion that is much higher than that of ordinary combustibles, and a burning rate higher than that of Group B plastics.

3203.7.2 Group B plastics. Group B plastics are plastic materials having a heat of combustion and a burning rate higher than that of ordinary combustibles, but not as high as those of Group A plastics.

3203.7.3 Group C plastics. Group C plastics are plastic materials having a heat of combustion and a burning rate similar to those of ordinary combustibles.

3203.8 Examples of commodity classification. Table 3203.8 shall be used to determine the commodity classification for various products and materials. Products not found in the list shall be classified based on the classification descriptions in Sections 3203.2 through 3203.6 and the products they most nearly represent in Table 3203.8. Table 3203.8 considers the product and the packaging if listed with the item. Products with additional packaging consisting of Group A plastics shall be classified in accordance with Section 3203.9.

The commodity classifications are based on products with, or without, wood pallets. Where plastic pallets are used, the commodity classification shall be modified in accordance with Section 3203.10.

3203.9 Limited quantities of Group A plastics in mixed commodities. Figures 3203.9(1) and 3203.9(2) shall be used to determine the commodity classification based on the quantity of Group A plastics in the following situations:

1. The product is not listed in Table 3203.8 and contains Group A plastics.
2. The commodity contains Group A plastics and is not classified as high-hazard in Table 3203.8.
3. The product listing in Table 3203.8 does not specifically include packaging, and the packaging material includes Group A plastics.

3203.9.1 Classifying mixed commodities with limited Group A plastics. The percentage of Group A plastics determined in accordance with Section 3203.9.2 shall be used in Figures 3203.9(1) and 3203.9(2). Results from Figure 3203.9(1) must be compared to results from Figure 3203.9(2) and the commodity will be classified with the highest commodity classification.

Figures 3203.9(1) and 3203.9(2) shall not be used to reduce the commodity classification shown in Table 3203.8.

3203.9.2 Percentage of Group A plastics. The pallet, if any, shall not be included when measuring the weight of the commodity (W_{PU} or W_{PE}) or the volume of the commodity (V_{PE}). The pallet, if any, shall be included when measuring the weight of the entire load (W_L) or the volume of the entire load (V_L).

Exception: Where noncombustible pallets are used, the pallets shall not be included in the volume and weight calculations.

The percentage by weight of Group A unexpanded plastics in the load shall be calculated in accordance with Equation 32-1.

The percentage by volume of Group A expanded plastics in the load shall be calculated in accordance with Equation 32-2.

The percentage by weight of Group A expanded plastics in the load shall be calculated in accordance with Equation 32-3.

$$P_{WU} = W_{PU}/W_L \qquad \textbf{(Equation 32-1)}$$

INTERNATIONAL CODE COUNCIL®
Copyright © 2019 ICC & NYSDOS. ALL RIGHTS RESERVED. Accessed by Lauren Gualdino (lgualdino@briarcliffmanor.org), (-) Order Number #100880972 on May 08, 2020 07:05 AM (PDT) pursuant to License Agreement with ICC & NYSDOS. No further reproduction, no

100880972

TABLE 3203.8
EXAMPLES OF COMMODITY CLASSIFICATION

PRODUCT CATEGORY	PRODUCT	CLASSIFICATION
Aerosols	Level 1	Class III (See Chapter 51)
	Level 2	Class IV (See Chapter 51)
	Level 3	High-hazard (See Chapter 51)
Batteries	Dry cells (excludes lithium, lithium-ion and other similar exotic metals or combustible electrolyte); without blister packing (if blister packed, refer to the commodity classification definitions)	Class I
	Dry cells (nonlithium or similar exotic metals); in blister packing; cartoned	Class II
	Vehicle; any size (for example, automobile or truck); empty plastic casing	High-hazard (Group A unexpanded)
	Vehicle; large (in other words, truck or larger); dry or wet cells (excludes lithium-ion and other cells containing combustible electrolytes)	High-hazard (Group A unexpanded)
	Vehicle; small (for example, automobile); wet cells (excludes lithium-ion and other cells containing combustible electrolytes)	Class I
Biomass	Circular baled corn stover	Class IV
	Rectangular baled corn stover	Class III
	Rectangular baled switchgrass	High-hazard
Empty containers	Noncombustible	Class I
	PET	Class IV
	Rigid plastic (not including PET)	High-hazard (Group A unexpanded)
	Wood; solid sided (such as crates, boxes)	Class II
Film rolls, including photographic	Polypropylene, polyester, polyethylene; rolled on any reel type	High-hazard (Group A unexpanded)
	35 mm metal film cartridges in polyethylene cans; cartoned	Class III
	Motion picture or bulk rolls in polycarbonate, polyethylene or in metal cans; polyethylene bagged; cartoned	Class II
	Rolls in polycarbonate plastic cassettes; cartoned	Class IV
	Photographic paper; sheets; bagged in polyethylene; cartoned	Class III
Flammable and combustible liquids	Glycol in combustible containers (50 percent or greater)	High-hazard
	Lacquers, which dry by solvent evaporation, in metal cans or cartons	High-hazard
	Lighters; butane; blister-packed; cartoned	High-hazard (Group A unexpanded)
	Over 20- and up to 50-percent alcohol (such as alcoholic beverages, hair spray); up to 1-gallon glass bottles or jars; in racks; cartoned	Class III
	Over 20- and up to 50-percent alcohol (such as alcoholic beverages, hair spray); up to 1-gallon glass bottles or jars; palletized; cartoned	Class IV
	Over 20- and up to 50-percent alcohol (such as alcoholic beverages, hair spray); up to 1-gallon plastic bottles or jars; cartoned	Class IV
	Up to 20-percent alcohol (such as alcoholic beverages, flavoring extracts); greater than 5-gallon plastic containers with wall thickness greater than 0.25 inch	High-hazard (Group A unexpanded)
	Up to 20-percent alcohol (such as alcoholic beverages, flavoring extracts); metal, glass or ceramic containers	Class I

(continued)

INTERNATIONAL CODE COUNCIL®
Copyright © 2019 ICC & NYSDOS. ALL RIGHTS RESERVED. Accessed by Lauren Gualdino (lgualdino@briarcliffmanor.org), (-) Order Number #100880972 on May 08, 2020 07:05 AM (PDT) pursuant to License Agreement with ICC & NYSDOS. No further reproduction, no

100880972

TABLE 3203.8—continued
EXAMPLES OF COMMODITY CLASSIFICATION

PRODUCT CATEGORY	PRODUCT	CLASSIFICATION
Flammable and combustible liquids	Up to 20-percent alcohol (such as alcoholic beverages, flavoring extracts); plastic containers greater than 5 gallons and wall thickness up to $^{1}/_{4}$ inch	Class II
	Up to 20-percent alcohol (such as alcoholic beverages, flavoring extracts); up to 5-gallon plastic bottles or jars	Class I
	Up to 20-percent alcohol (such as alcoholic beverages, flavoring extracts); wood containers	Class II
	Lubricating or hydraulic fluid in plastic containers	High-hazard
	Nail polish; up to 2-ounce glass bottles or jars; cartoned	Class IV
	Nail polish; up to 2-ounce plastic bottles or jars; cartoned	High-hazard (Group A unexpanded)
Flammable solids	Except solid combustible metals	High-hazard
Food products, frozen	In nonwaxed or nonplastic packaging	Class I
	In plastic trays	Class III
	In waxed or plastic-coated paper packaging	Class II
Food products, nonfrozen	Butter (stick or whipped spread) or margarine (up to 50-percent oil)	Class III
	Butter; whipped spread	Class III
	Dry foods (such as baked goods, candy, cereals, cheese, chocolate, cocoa, coffee, grains, granular sugar, nuts); bagged or cartoned	Class III
	Foods (such as coffee, fish products, fruit, meat products, nuts, poultry); metal cans	Class I
	Fruits and vegetables (noncombustible semiliquid); crushed; plastic containers up to 5 gallons	Class I
	Fruits and vegetables; fresh; wood spacers, nonplastic trays or containers	Class I
	Margarine; over 50- and up to 80-percent oil	High-hazard (Group A unexpanded)
	Meat; fresh; no plastic packaging; uncartoned	Class I
	Meat; fresh; no plastic packaging; cartoned	Class II
	Meat; fresh; plastic tray	Class III
	Milk; any container; stored in solid plastic crates	High-hazard (Group A unexpanded)
	Milk; paper containers, or plastic bottles or jars up to 5 gallons	Class I
	Salt; bagged	Class I
	Salt; cartoned	Class II
	Snack foods (such as potato chips); plasticized aluminum bags; cartoned	High-hazard (Group A unexpanded)
	Syrup; wooden container	Class II
Furniture and bedding	Box spring; standard (minimal plastic materials)	Class III
	Box spring; wrapped in plastic cover	Class IV
	Furniture and bedding; with foam cushioning	High-hazard (Group A expanded)
	Furniture; metal (such as file cabinets or desks with minimal plastic trim); cartoned	Class I
	Furniture; wood (such as doors, windows, cabinets); no plastic coverings or foam cushioning	Class III
	Furniture; wood; plastic coverings; nonexpanded plastic trim	Class IV

(continued)

INTERNATIONAL CODE COUNCIL®
Copyright © 2019 ICC & NYSDOS. ALL RIGHTS RESERVED. Accessed by Lauren Gualdino (lgualdino@briarcliffmanor.org), (-) Order Number #100880972 on May 08, 2020 07:05 AM (PDT) pursuant to License Agreement with ICC & NYSDOS. No further reproduction, no

100880972

TABLE 3203.8—continued
EXAMPLES OF COMMODITY CLASSIFICATION

PRODUCT CATEGORY	PRODUCT	CLASSIFICATION
Furniture and bedding	Mattress; foam (in finished form)	High-hazard (Group A expanded)
	Pillows, foam rubber and foam plastics	High-hazard (Group A expanded)
Housing materials and appliances	Appliances; major (for example, stoves, refrigerators); no appreciable plastic interior or exterior trim; cartoned	Class II
	Appliances; major (for example, stoves, refrigerators); no appreciable plastic interior or exterior trim; uncartoned	Class I
	Appliances; no appreciable plastic exterior trim (interior of unit can have appreciable plastic)	Class III
	Carpet tiles; cartoned	High-hazard (Group A unexpanded)
	Fiberglass insulation; paper-backed rolls; bagged or unbagged	Class IV
	Floor coverings; vinyl, stacked tiles	Class IV
	Floor coverings; vinyl; rolled	High-hazard (Group A unexpanded)
	Gypsum board	Class I
	Housing materials (such as sinks, countertops); noncombustible, cartoned or crated	Class II
	Light fixtures; nonplastic; cartoned	Class II
	Paint; oil-based; friction-top metal containers; cartoned	Class IV
	Paint; water-based (latex); friction-top metal containers; cartoned	Class I
	Paper; asphalt; rolled, horizontal or vertical storage	High-hazard
	Roofing shingles; asphalt-coated fiberglass	Class III
	Roofing shingles; asphalt-impregnated felt	Class IV
Miscellaneous	Ammunition; small arms and shotgun; cartoned	Class IV
	Charcoal; mineral-spirit impregnated; bagged	High-hazard (Group A expanded)
	Charcoal; standard (nonmineral-spirit impregnated); bagged	Class III
	Fertilizers; nitrates; bagged	Class II
	Fertilizers; phosphates; bagged	Class I
	Leather hides; baled	Class II
	Leather; finished products (such as shoes, jackets, gloves, bags, luggage, belts)	Class III
	Motors; electric	Class I
	Pallets and flats that are idle; combustible	High-hazard
	Shock absorbers; metal dust cover	Class II
	Shock absorbers; plastic dust cover	Class III
	Skis; wood	Class III
	Skis; composite materials (such as plastic, fiberglass, foam)	Class IV
	Tobacco products; cartoned	Class III
	Toys; stuffed; foam or synthetic	High-hazard (Group A expanded)
	Transformer; dry or empty (in other words, void of oil)	Class I

(continued)

INTERNATIONAL CODE COUNCIL®
Copyright © 2019 ICC & NYSDOS. ALL RIGHTS RESERVED. Accessed by Lauren Gualdino (lgualdino@briarcliffmanor.org), (-) Order Number #100880972 on May 08, 2020 07:05 AM (PDT) pursuant to License Agreement with ICC & NYSDOS. No further reproduction, no

100880972

TABLE 3203.8—continued
EXAMPLES OF COMMODITY CLASSIFICATION

PRODUCT CATEGORY	PRODUCT	CLASSIFICATION
Noncombustible liquids	Liquids or semiliquids; PET containers greater than 5 gallons having a nominal wall thickness greater than $^1/_4$ inch	Class IV
	Liquids or semiliquids; PET containers up to 5 gallons having a nominal wall thickness less than $^1/_4$ inch	Class I
	Liquids or semiliquids (such as crushed fruits and vegetables); plastic containers up to 5-gallon capacity	Class I
	Liquids or semiliquids; plastic (except PET) containers greater than 5-gallon capacity having a nominal wall thickness greater than $^1/_4$ inch	High-hazard (Group A unexpanded)
	Liquids or semiliquids; plastic (except PET) containers greater than 5-gallon capacity having a nominal wall thickness up to $^1/_4$ inch	Class II
	Liquids; cardboard drink boxes, plastic coated, wax coated, and/or aluminum lined; uncartoned or on corrugated carton trays with plastic sheeting	Class I
	Liquids; cardboard drink boxes, plastic coated, wax coated, and/or aluminum lined; stored in plastic containers	High-hazard (Group A unexpanded)
	Liquids; glass bottles or jars; cartoned	Class I
	Liquids; less than 5-gallon plastic containers	Class I
	Liquids; pharmaceuticals (nonflammable); glass bottles or jars; cartoned	Class II
	Liquids; plastic bottles or jars; stored in open or solid plastic crates	High-hazard (Group A unexpanded)
Paper products	Book signatures (paper part of book without hard cover)	Class II
	Cartons (such as cardboard flats); corrugated; partially assembled	Class IV
	Cartons (such as cardboard flats); corrugated; unassembled in neat piles	Class III
	Cartons; wax coated, single-walled corrugated	High-hazard (Group A unexpanded)
	Cellulosic paper products; nonwax coated (such as books, cardboard games, cartoned tissue products, magazines, newspapers, paper cups, paper plates, paper towels, plastic-coated paper food containers, stationary)	Class III
	Cellulosic paper products; wax coated (such as paper plates, cups); loosely packed; cartoned	High-hazard (Group A unexpanded)
	Cellulosic paper products; wax coated (such as paper plates, cups); nested; cartoned	Class IV
	Matches; paper-type; cartoned	Class IV
	Matches; wooden; cartoned	High-hazard (Group A unexpanded)
	Rolled; lightweight; in storage racks	Class IV
	Rolled; medium or heavyweight; in storage racks or onside	Class III
	Rolled; in horizontal storage or vertical storage that is banded or protected with an approved wrap	Class III
	Rolled; in vertical storage that is unbanded or not protected with an approved wrap	High-hazard
	Tissue products; plastic wrapped; cartoned	Class III
	Tissue products; plastic wrapped; uncartoned	High-hazard (Group A unexpanded)

(continued)

INTERNATIONAL CODE COUNCIL®
Copyright © 2019 ICC & NYSDOS. ALL RIGHTS RESERVED. Accessed by Lauren Gualdino (lgualdino@briarcliffmanor.org), (-) Order Number #100880972 on May 08, 2020 07:05 AM (PDT) pursuant to License Agreement with ICC & NYSDOS. No further reproduction, no

100880972

TABLE 3203.8—continued
EXAMPLES OF COMMODITY CLASSIFICATION

PRODUCT CATEGORY	PRODUCT	CLASSIFICATION
Plastic, rubber	ABS (Acrylonitrile-butadiene-styrene copolymer)	High-hazard (Group A unexpanded)
	Acetal (polyformaldehyde)	High-hazard (Group A unexpanded)
	Acrylic (polymethyl methacrylate)	High-hazard (Group A unexpanded)
	Automobile bumpers and dashboards	High-hazard (Group A expanded)
	Butyl rubber	High-hazard (Group A unexpanded)
	Cellulose acetate	Class IV (Group B plastic)
	Cellulose acetate butyrate	High-hazard (Group A unexpanded)
	Chloroprene rubber	Class IV (Group B plastic)
	Containers; Nonexpanded plastic gridded or solid; collapsed or nested with no air spaces	High-hazard (Group A unexpanded)
	ECTFE (ethylene-chlorotrifluoro-ethylene copolymer)	Class IV (Group B plastic)
	EPDM (ethylene-propylene rubber)	High-hazard (Group A unexpanded)
	ETFE (ethylene-tetrafluoroethylene copolymer)	Class IV (Group B plastic)
	Ethyl cellulose	High-hazard (Group A unexpanded)
	FEP (fluorinated ethylene-propylene copolymer)	Class IV (Group B plastic)
	FRP (fiberglass-reinforced polyester)	High-hazard (Group A unexpanded)
	Melamine (melamine formaldehyde)	Class III (Group C plastic)
	Nitrile rubber (acrylonitrile-butadiene rubber)	High-hazard (Group A unexpanded)
	Nylon (nylon 6, nylon 6/6)	High-hazard (Group A unexpanded)
	PCTFE (polychlorotrifluoroethylene)	Class III (Group C plastic)
	PET (Polyethylene terephthalate-thermoplastic polyester)	High-hazard (Group A unexpanded)
	Phenolic	Class III (Group C plastic)
	Plastics; stored in fully closed and solid (no openings) metal containers	Class I
	Polybutadiene	High-hazard (Group A unexpanded)
	Polycarbonate	High-hazard (Group A unexpanded)
	Polyester elastomer	High-hazard (Group A unexpanded)

(continued)

INTERNATIONAL CODE COUNCIL®
Copyright © 2019 ICC & NYSDOS. ALL RIGHTS RESERVED. Accessed by Lauren Gualdino (lgualdino@briarcliffmanor.org), (-) Order Number #100880972 on May 08, 2020 07:05 AM (PDT) pursuant to License Agreement with ICC & NYSDOS. No further reproduction, no

100880972

TABLE 3203.8—continued
EXAMPLES OF COMMODITY CLASSIFICATION

PRODUCT CATEGORY	PRODUCT	CLASSIFICATION
Plastic, rubber	Polyethylene	High-hazard (Group A unexpanded)
	Polypropylene	High-hazard (Group A unexpanded)
	Polystyrene; foam products (such as plates, cups)	High-hazard (Group A expanded)
	Polystyrene; rigid products	High-hazard (Group A unexpanded)
	Polyurethane	High-hazard (Group A expanded)
	PTFE (polytetrafluoroethylene)	Class III (Group C plastic)
	PVC (polyvinyl chloride) products; plasticizer content 20 percent or less	Class III (Group C plastic)
	PVC (polyvinyl chloride) products; plasticizer content greater than 20 percent	High-hazard (Group A unexpanded)
	PVC resins; bagged	Class III (Group C plastic)
	PVDC (polyvinylidene chloride)	Class III (Group C plastic)
	PVDF (polyvinylidene fluoride)	Class III (Group C plastic)
	PVF (polyvinyl fluoride)	High-hazard (Group A unexpanded)
	Pyroxylin	High-hazard
	Rubber; natural in blocks; cartoned	High-hazard (Group A unexpanded)
	Rubber; natural; expanded	High-hazard (Group A expanded)
	Rubber; natural; Nonexpanded	High-hazard (Group A unexpanded)
	Rubber; synthetic (santoprene)	High-hazard (Group A unexpanded)
	Rubber tires	High-hazard
	SAN (styrene acrylonitrile)	High-hazard (Group A unexpanded)
	SBR (styrene-butadiene rubber)	High-hazard (Group A unexpanded)
	Silicone rubber	Class IV (Group B plastic)
	Urea (urea formaldehyde)	Class III (Group C plastic)
Plastic containers	Bottles or jars greater than 1 gallon containing noncombustible solids	High-hazard (Group A unexpanded)
	Bottles or jars up to 1 gallon containing noncombustible solids	High-hazard (Group A unexpanded)

(continued)

INTERNATIONAL CODE COUNCIL®
Copyright © 2019 ICC & NYSDOS. ALL RIGHTS RESERVED. Accessed by Lauren Gualdino (lgualdino@briarcliffmanor.org), (-) Order Number #100880972 on May 08, 2020 07:05 AM (PDT) pursuant to License Agreement with ICC & NYSDOS. No further reproduction, no

100880972

TABLE 3203.8—continued
EXAMPLES OF COMMODITY CLASSIFICATION

PRODUCT CATEGORY	PRODUCT	CLASSIFICATION
Powders, pills	Pharmaceutical pills; glass bottles or jars; cartoned	Class II
	Pharmaceuticals pills; plastic bottles or jars; cartoned	Class IV
	Polyvinyl alcohol (PVA) resins; bagged	Class IV
	Powders; combustible (ordinary—such as sugar or flour); free-flowing; bagged	Class II
	Powders; noncombustible free-flowing powdered or granular materials (such as cement, calcium chloride, clay, iron oxide, sodium chloride, sodium silicate); bagged	Class I
	Powders; noncombustible; glass bottles or jars; cartoned	Class I
	Powders; noncombustible; PET bottles or jars	Class II
	Powders; noncombustible; plastic (other than PET) bottles or jars; uncartoned	High-hazard (Group A unexpanded)
	Powders; noncombustible; plastic bottles or jars greater than 1-gallon capacity	High-hazard (Group A unexpanded)
	Powders; noncombustible; plastic bottles or jars up to 1-gallon capacity; cartoned	Class IV
Textile materials and products	Cloth; natural fibers; baled	Class III
	Cloth; synthetic cloth	Class IV
	Clothing; natural fibers (such as wool, cotton) and viscose	Class III
	Cotton; cartoned	Class III
	Diapers; cotton or linen	Class III
	Diapers; plastic or nonwoven fabric; cartoned	Class IV
	Diapers; plastic or nonwoven fabric; plastic-wrapped; uncartoned	High-hazard (Group A unexpanded)
	Fabric; rayon and nylon	Class IV
	Fabric; synthetic (except rayon and nylon); greater than 50/50 blend	High-hazard (Group A unexpanded)
	Fabric; synthetic (except rayon and nylon); up to 50/50 blend	Class III
	Fabric; vinyl-coated (such as tablecloth); cartoned	High-hazard (Group A unexpanded)
	Fibers; rayon and nylon; baled	Class IV
	Fibers; synthetic (except rayon and nylon); baled	High-hazard (Group A unexpanded)
	Thread or yarn; rayon and nylon; wood or paper spools	Class IV
	Thread or yarn; rayon or nylon; plastic spools	High-hazard (Group A unexpanded)
	Thread or yarn; synthetic (except rayon and nylon); greater than 50/50 blend; paper or wood spools	Class IV
	Thread or yarn; synthetic (except rayon and nylon); greater than 50/50 blend; plastic spools	High-hazard (Group A unexpanded)
	Thread or yarn; synthetic (except rayon and nylon); up to 50/50 blend; plastic spools	High-hazard (Group A unexpanded)
	Thread or yarn; synthetic (except rayon and nylon); up to 50/50 blend; wood or paper spools	Class III
Wax products	Candles	High-hazard (Group A expanded)
	Paraffin or petroleum wax; blocks	High-hazard (Group A expanded)

(continued)

INTERNATIONAL CODE COUNCIL®
Copyright © 2019 ICC & NYSDOS. ALL RIGHTS RESERVED. Accessed by Lauren Gualdino (lgualdino@briarcliffmanor.org), (-) Order Number #100880972 on May 08, 2020 07:05 AM (PDT) pursuant to License Agreement with ICC & NYSDOS. No further reproduction, no

100880972

TABLE 3203.8—continued
EXAMPLES OF COMMODITY CLASSIFICATION

PRODUCT CATEGORY	PRODUCT	CLASSIFICATION
Wire, cable, spools	Spools; plastic; empty	High-hazard (Group A unexpanded)
	Spools; wood; empty	Class III
	Wire or cable; PVC insulated; metal or wood spools	Class II
	Wire or cable; PVC insulated; plastic spools	Class IV
	Wire; bare; metal spools; uncartoned	Class I
	Wire; bare; metal spools; cartoned	Class II
	Wire; bare; plastic spools; cartoned	Class IV
	Wire; bare; plastic spools; uncartoned	High-hazard (Group A unexpanded)
	Wire; bare; wood or cardboard spools	Class II
Wood products	Wood patterns	Class IV
	Wood products (such as fiberboard, lumber, particle board, plywood, pressboard with smooth ends and edges); bundled solid blocks	Class II
	Wood products (such as fiberboard, lumber, particle board, plywood, pressboard with smooth ends and edges); unbundled or nonsolid blocks	Class III
	Wood products (such as toothpicks, clothespins and hangers)	Class III

For SI: 1 inch = 25.4 mm, 1 gallon = 3.8 L, 1 ounce = 29.57 ml.

where:

P_{WU} = Percentage by weight of Group A unexpanded plastic.

W_{PU} = Weight of Group A unexpanded plastic in the commodity, not including the weight of the pallet, if any.

W_L = Weight of the entire load, including the weight of the pallet, if any.

$$P_{VE} = V_{PE}/V_L \qquad \textbf{(Equation 32-2)}$$

where:

P_{VE} = Percentage by volume of Group A expanded plastic.

V_{PE} = Volume of Group A expanded plastic in the commodity, not including the volume of the pallet, if any.

V_L = Volume of the entire load, including the volume of the pallet, if any.

$$P_{WE} = W_{PE}/W_L \qquad \textbf{(Equation 32-3)}$$

where:

P_{WE} = Percentage by weight of Group A expanded plastic.

W_{PE} = Weight of Group A expanded plastic in the commodity, not including the weight of the pallet, if any.

W_L = Weight of the entire load, including the weight of the pallet, if any.

3203.10 Plastic pallets. The commodity classification determined in Section 3203.8 or 3203.9 shall be modified in accordance with Sections 3203.10.1 through 3203.10.3 where plastic pallets are used.

Exception: The commodity classification is not modified where any of the following conditions occur:

1. Group A plastic commodities are stored on plastic pallets.
2. Sprinkler protection consists of sprinklers at the ceiling only, using sprinklers with a minimum K-factor of K-16.8 (240).
3. The plastic pallets are *listed* and *labeled* in accordance with Section 3206.4.1.1.

3203.10.1 Unreinforced plastic pallets. For Class I through IV commodities, where unreinforced polypropylene or unreinforced high-density polyethylene plastic pallets are used, the commodity classification shall be increased one class. To be considered unreinforced plastic pallets, the pallets shall be marked with a permanent symbol indicating the pallet is unreinforced.

3203.10.2 Reinforced plastic pallets. For Class I through IV commodities, where reinforced polypropylene or reinforced high-density polyethylene plastic pallets are used, the commodity classification shall be increased two classes except for Class IV commodities, which shall be increased to a high-hazard (Group A plastic, cartoned, unexpanded) commodity.

3203.10.3 Other pallets. For Class I through IV commodities stored on plastic pallets other than polypropylene or high-density polyethylene plastic pallets, the commodity classification shall be increased two classes unless specific testing is conducted by a testing laboratory.

INTERNATIONAL CODE COUNCIL®
Copyright © 2019 ICC & NYSDOS. ALL RIGHTS RESERVED. Accessed by Lauren Gualdino (lgualdino@briarcliffmanor.org), (-) Order Number #100880972 on May 08, 2020 07:05 AM (PDT) pursuant to License Agreement with ICC & NYSDOS. No further reproduction, no

100880972

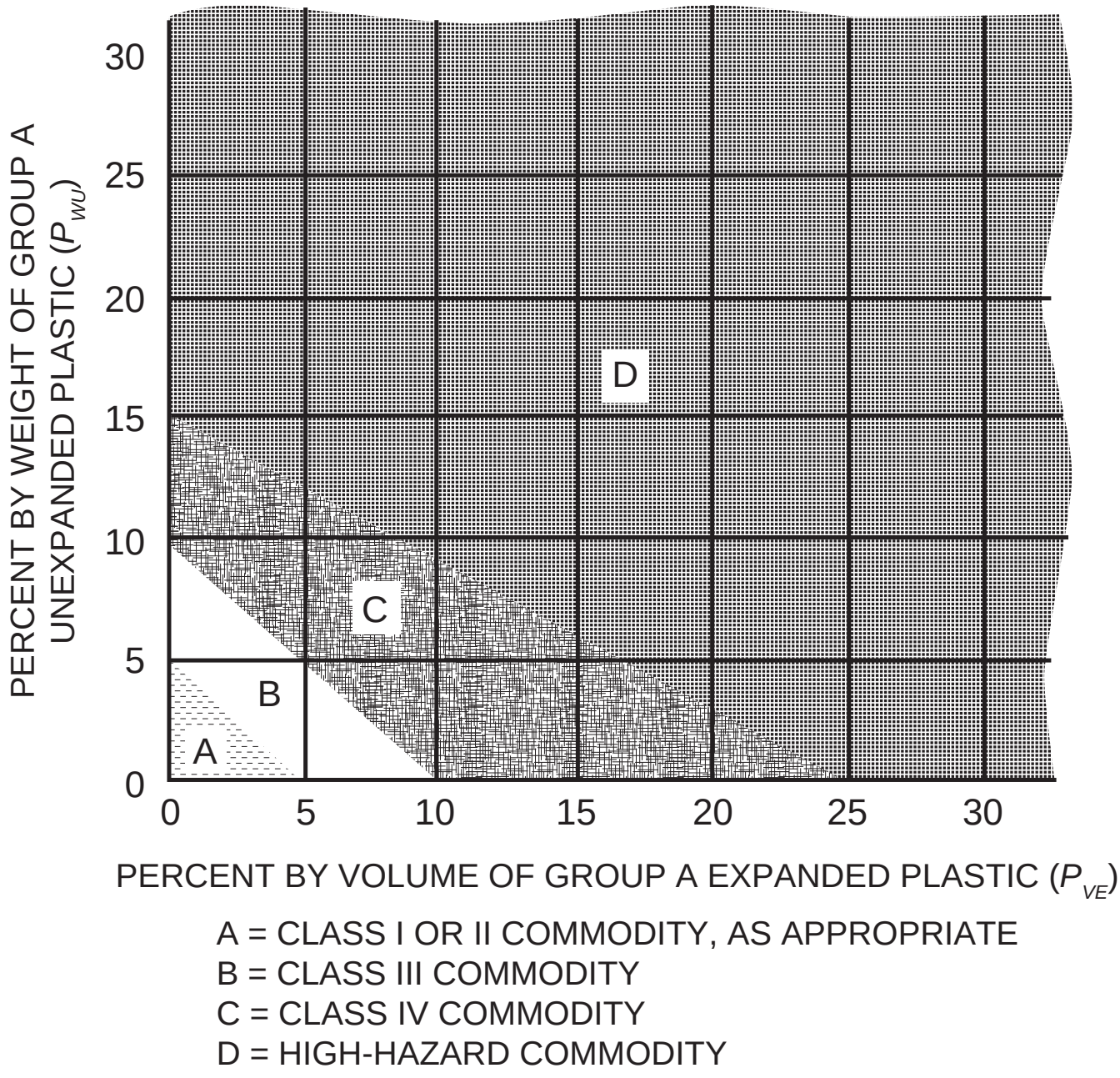

FIGURE 3203.9(1)
EVALUATION BY VOLUME OF GROUP A EXPANDED PLASTICS IN MIXED COMMODITIES[a, b]

a. This figure is used to determine the commodity classification of a mixed commodity with Group A plastics in a package or carton, or on a pallet.

b. The following is an example of how to apply Figure 3203.9(1): A pallet load consists of a Class III commodity with components of unexpanded Group A plastic and packing material of expanded Group A plastic. Using Equation 32-1, the weight of unexpanded Group A plastic is 5 percent. Using Equation 32-2, the volume of expanded Group A plastic is 15 percent. This commodity is classified as a Class IV commodity. If the volume of the expanded Group A plastic is increased to 20 percent, the classification changes to a high-hazard commodity. Compare this result with the result from Figure 3203.9(2), and the highest classification will apply. Where the load is stored on a plastic pallet, the requirements in Section 3203.10 apply.

INTERNATIONAL CODE COUNCIL®
Copyright © 2019 ICC & NYSDOS. ALL RIGHTS RESERVED. Accessed by Lauren Gualdino (lgualdino@briarcliffmanor.org), (-) Order Number #100880972 on May 08, 2020 07:05 AM (PDT) pursuant to License Agreement with ICC & NYSDOS. No further reproduction, no

100880972

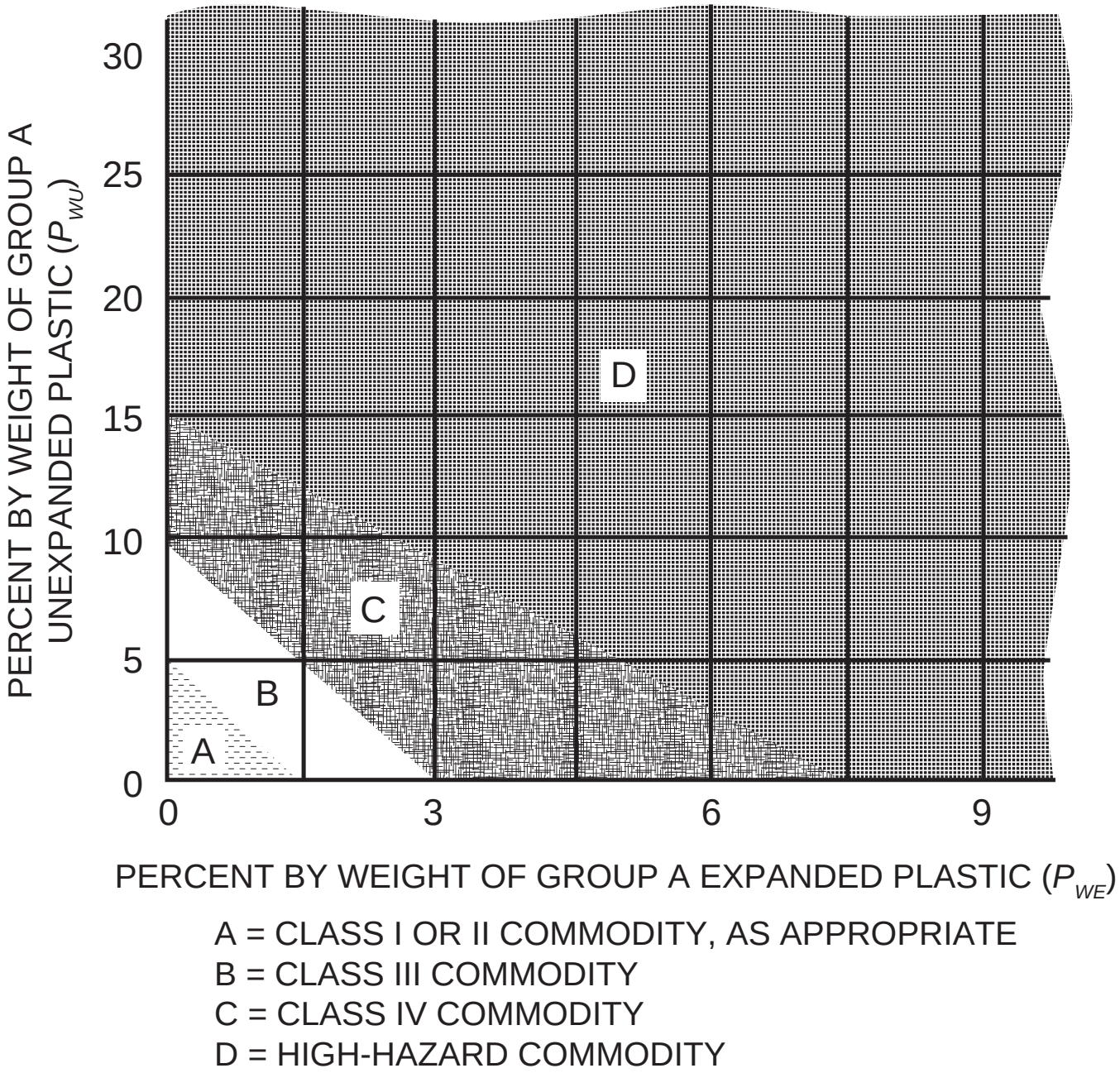

FIGURE 3203.9(2)
EVALUATION BY WEIGHT OF GROUP A EXPANDED PLASTICS IN MIXED COMMODITIES[a, b, c]

a. This figure is used to determine the commodity classification of a mixed commodity with Group A plastics in a package or carton, or on a pallet.
b. The results from this figure must be compared to the results from Figure 3203.9(1). The highest classification will apply.
c. The following is an example of how to apply Figure 3203.9(2): A pallet load consists of a Class III commodity with components of unexpanded Group A plastic and packing material of expanded Group A plastic. Using Equation 32-1, the weight of unexpanded Group A plastic is 5 percent. Using Equation 32-3, the weight of expanded Group A plastic is 6 percent. This commodity is classified as a high-hazard commodity. Where the load is stored on a plastic pallet, the requirements in Section 3203.10 apply.

INTERNATIONAL CODE COUNCIL®
Copyright © 2019 ICC & NYSDOS. ALL RIGHTS RESERVED. Accessed by Lauren Gualdino (lgualdino@briarcliffmanor.org), (-) Order Number #100880972 on May 08, 2020 07:05 AM (PDT) pursuant to License Agreement with ICC & NYSDOS. No further reproduction, no

100880972

SECTION 3204
DESIGNATION OF HIGH-PILED STORAGE AREAS

3204.1 General. *High-piled storage areas*, and portions of *high-piled storage areas* intended for storage of a different commodity class than adjacent areas, shall be designed and specifically designated to contain Class I, Class II, Class III, Class IV or high-hazard commodities. The designation of a *high-piled storage* area, or portion thereof intended for storage of a different commodity class, shall be based on the highest hazard commodity class stored except as provided in Section 3204.2.

3204.2 Designation based on engineering analysis. The designation of a *high-piled combustible storage* area, or portion thereof, is allowed to be based on a lower hazard class than that of the highest class of commodity stored where a limited quantity of the higher hazard commodity has been demonstrated by engineering analysis to be adequately protected by the *automatic sprinkler system* provided. The engineering analysis shall consider the ability of the sprinkler system to deliver the higher density required by the higher hazard commodity. The higher density shall be based on the actual storage height of the pile or rack and the minimum allowable design area for sprinkler operation as set forth in the density/area figures provided in NFPA 13. The contiguous area occupied by the higher hazard commodity shall not exceed 120 square feet (11 m^2) and additional areas of higher hazard commodity shall be separated from other such areas by 25 feet (7620 mm) or more. The sprinkler system shall be capable of delivering the higher density over a minimum area of 900 square feet (84 m^2) for wet pipe systems and 1,200 square feet (111 m^2) for dry pipe systems. The shape of the design area shall be in accordance with Section 903.

SECTION 3205
HOUSEKEEPING AND MAINTENANCE

3205.1 Rack structures. The structural integrity of racks shall be maintained.

3205.2 Ignition sources. Clearance from ignition sources shall be provided in accordance with Section 305.

3205.3 Smoking. Smoking shall be prohibited. *Approved* "No Smoking" signs shall be conspicuously posted in accordance with Section 310.

3205.4 Aisle maintenance. When restocking is not being conducted, aisles shall be kept clear of storage, waste material and debris. Fire department access doors, aisles and *exit* doors shall not be obstructed. During restocking operations using manual stocking methods, a minimum unobstructed aisle width of 24 inches (610 mm) shall be maintained in 48-inch (1219 mm) or smaller aisles, and a minimum unobstructed aisle width of one-half of the required aisle width shall be maintained in aisles greater than 48 inches (1219 mm). During mechanical stocking operations, a minimum unobstructed aisle width of 44 inches (1118 mm) shall be maintained in accordance with Section 3206.10.

3205.5 Pile dimension and height limitations. Pile dimensions and height limitations shall comply with Section 3207.3.

3205.6 Designation of storage heights. Where required by the *fire code official*, a visual method of indicating the maximum allowable storage height shall be provided.

3205.7 Arrays. Arrays shall comply with Section 3207.4.

3205.8 Flue spaces. Flue spaces shall comply with Section 3208.3.

SECTION 3206
GENERAL FIRE PROTECTION AND LIFE SAFETY FEATURES

3206.1 General. Fire protection and life safety features for *high-piled storage areas* shall be in accordance with Sections 3206.2 through 3206.11.

3206.2 Type of protection. Where required by Table 3206.2, fire detection systems, smoke and heat removal and automatic sprinkler design densities shall be provided to protect the *high-piled storage area*.

3206.2.1 Extent of protection. The fire safety features required in Table 3206.2 shall extend to the lesser of 15 feet (4572 mm) beyond the *high-piled storage area* or a full height wall. Where portions of *high-piled storage areas* have different fire protection requirements because of commodity, method of storage or storage height, the fire protection features required by Table 3206.2 within this area shall be based on the most restrictive design requirements.

3206.3 High-piled storage areas. For the application of Table 3206.2, the size of the *high-piled storage areas* shall be determined in accordance with Sections 3206.3.1 through 3206.3.2.1.

3206.3.1 Size of high-piled storage area. The size of each *high-piled storage area* shall include the footprint of the actual high-piled storage racks, shelves or piles and the following aisles:

1. Interior aisles within the footprint of the storage area.
2. An aisle around the perimeter of the footprint with a minimum width as required in Section 3206.10.1 or the dimension to a wall or full height wall, whichever is less.

3206.3.2 Multiple high-piled storage areas. Where a building contains multiple *high-piled storage areas*, the aggregate of all *high-piled storage areas* shall be used for the application of Table 3206.2 unless the *high-piled storage areas* are separated in accordance with one of the following:

INTERNATIONAL CODE COUNCIL®
Copyright © 2019 ICC & NYSDOS. ALL RIGHTS RESERVED. Accessed by Lauren Gualdino (lgualdino@briarcliffmanor.org), (-) Order Number #100880972 on May 08, 2020 07:05 AM (PDT) pursuant to License Agreement with ICC & NYSDOS. No further reproduction, no

TABLE 3206.2
GENERAL FIRE PROTECTION AND LIFE SAFETY REQUIREMENTS

COMMODITY CLASS	SIZE OF HIGH-PILED STORAGE AREA[a] (square feet) (see Sections 3206.2 and 3206.3)	ALL STORAGE AREAS (See Sections 3206, 3207 and 3208)[b]				SOLID-PILED STORAGE, SHELF STORAGE AND PALLETIZED STORAGE (see Section 3207.3)		
		Automatic fire-extinguishing system (see Section 3206.4)	Fire detection system (see Section 3206.5)	Fire department access doors (see Section 3206.7)	Smoke and heat removal (see Section 3206.8)	Maximum pile dimension[c] (feet)	Maximum permissible storage height[d] (feet)	Maximum pile volume (cubic feet)
I-IV	0–500	Not Required[a]	Not Required	Not Required	Not Required	Not Required	Not Required	Not Required
	501–2,500	Not Required[a]	Yes[g]	Not Required	Not Required	120	40	100,000
	2,501–12,000 Open to the public	Yes	Not Required	Not Required	Not Required	120	40	400,000
	2,501–12,000 Not open to the public (Option 1)	Yes	Not Required	Not Required	Not Required	120	40	400,000
	2,501–12,000 Not open to the public (Option 2)	Not Required[a]	Yes	Yes	Yes[h, i]	120	30[e]	200,000
	12,001–500,000	Yes	Not Required	Yes	Yes[h, i]	120	40	400,000
	Greater than 500,000[f]	Yes	Not Required	Yes	Yes[h, i]	120	40	400,000
High hazard	0–500	Not Required[a]	Not Required	Not Required	Not Required	60	Not Required	Not Required
	501–2,500 Open to the public	Yes	Not Required	Not Required	Not Required	60	30	75,000
	501–2,500 Not open to the public (Option 1)	Yes	Not Required	Not Required	Not Required	60	30	75,000
	501–2,500 Not open to the public (Option 2)	Not Required[a]	Yes[g]	Yes	Yes[h, i]	60	20	50,000
	2,501–300,000	Yes	Not Required	Yes	Yes[h, i]	60	30	75,000
	Greater than 300,000[f]	Yes	Not Required	Yes	Yes[h, i]	60	30	75,000

For SI: 1 foot = 304.8 mm, 1 cubic foot = 0.02832 m^3, 1 square foot = 0.0929 m^2.

a. Where automatic sprinklers are required for reasons other than those in Chapter 32, the portion of the sprinkler system protecting the high-piled storage area shall be designed and installed in accordance with Sections 3207 and 3208.

b. For aisles, see Section 3206.10.

c. Piles shall be separated by aisles complying with Section 3206.10.

d. For storage in excess of the height indicated, special fire protection shall be provided in accordance with Note f where required by the fire code official. See Chapters 51 and 57 for special limitations for aerosols and flammable and combustible liquids, respectively.

e. For storage exceeding 30 feet in height, Option 1 shall be used.

f. Special fire protection provisions including, but not limited to, fire protection of exposed steel columns; increased sprinkler density; additional in-rack sprinklers, without associated reductions in ceiling sprinkler density; or additional fire department hose connections shall be provided where required by the fire code official.

g. Not required where an automatic fire-extinguishing system is designed and installed to protect the high-piled storage area in accordance with Sections 3207 and 3208.

h. Not required where storage areas are protected by either early suppression fast response (ESFR) sprinkler systems or control mode special application sprinklers with a response time index of 50 $(m \cdot s)^{1/2}$ or less that are listed to control a fire in the stored commodities with 12 or fewer sprinklers, installed in accordance with NFPA 13.

i. Not required in frozen food warehouses used solely for storage of Class I and II commodities where protected by an approved automatic sprinkler system.

INTERNATIONAL CODE COUNCIL®
Copyright © 2019 ICC & NYSDOS. ALL RIGHTS RESERVED. Accessed by Lauren Gualdino (lgualdino@briarcliffmanor.org), (-) Order Number #100880972 on May 08, 2020 07:05 AM (PDT) pursuant to License Agreement with ICC & NYSDOS. No further reproduction, no

100880972

1. *High-piled storage areas* separated by fire barriers with a minimum *fire-resistance-rating* of 1 hour constructed in accordance with Section 707 of the *Building Code of New York State*.
2. In buildings equipped throughout with an *automatic sprinkler system* in accordance with Section 903.3.1.1, *high-piled storage areas* separated by 100 feet (30 480 mm) or more. The area providing the separation shall not contain *high-piled combustible storage*.

3206.3.2.1 Multiple class high-piled storage areas. *High-piled storage areas* classified as Class I through IV not separated from *high-piled storage areas* classified as high hazard shall utilize the aggregate of all *high-piled storage areas* as high hazard for the purposes of the application of Table 3206.2. Multiple class *high-piled storage areas* meeting the separation requirements in Section 3206.3.2 shall be considered as separated. The fire safety features in Table 3206.2 shall be extended beyond the higher-hazard storage area in accordance with Section 3206.2.1.

Exception: Multiple class *high-piled storage areas* do not need to be separated where in accordance with Section 3204.2.

3206.4 Automatic sprinklers. *Automatic sprinkler systems* shall be provided in accordance with Sections 3207, 3208 and 3209.

3206.4.1 Pallets. *Automatic sprinkler system* requirements based on the presence of pallets shall be in accordance with NFPA 13.

3206.4.1.1 Plastic pallets. Plastic pallets *listed* and *labeled* in accordance with FM 4996 or UL 2335 shall be treated as wood pallets for determining required sprinkler protection.

3206.5 Fire detection. Where fire detection is required by Table 3206.2, an *approved* automatic fire detection system shall be installed throughout the *high-piled storage area*. The system shall be monitored and be in accordance with Section 907.

3206.6 Building access. Fire apparatus access roads in accordance with Section 503 shall be provided within 150 feet (45 720 mm) of all portions of the *exterior walls* of buildings used for high-piled storage.

Exception: Where fire apparatus access roads cannot be installed because of topography, railways, waterways, nonnegotiable grades or other similar conditions, the *fire code official* is authorized to require additional fire protection.

3206.7 Fire department access doors. Where fire department access doors are required by Table 3206.2, fire department access doors shall be provided in accordance Sections 3206.7.1 through 3206.7.8.

3206.7.1 Exterior walls without fire department access doors. Fire department access doors are not required in an exterior wall that does not face a fire apparatus access road provided that all of the following conditions occur:

1. The opposite exterior wall faces a fire apparatus access road.
2. The opposite exterior wall is provided with fire department access doors.
3. The entire interior surface of the exterior wall is less than 150 feet (45 720 mm) away from a fire department access door.
4. The building is equipped throughout with an automatic sprinkler system in accordance with Section 903.3.1.1.

3206.7.2 Where located. Where exterior walls surrounding *high-piled storage areas* face fire apparatus access roads, such walls shall be provided with fire department access doors.

3206.7.3 Access to doors. Fire department access doors shall be able to be accessed without the use of a ladder.

3206.7.4 Marking on fire department access doors. Fire department access doors shall be labeled on the exterior side with the following sign or other *approved* sign:

FIRE DEPARTMENT ACCESS DOOR
DO NOT BLOCK

The lettering shall be in a contrasting color to the background. Letters shall have a minimum height of 2 inches (51 mm) with a minimum stroke of $^3/_8$ inch (10 mm).

3206.7.5 Number of doors required. The required fire department access doors shall be distributed such that the lineal distance between adjacent fire department access doors does not exceed 125 feet (38 100 mm) measured center to center.

Exception: The linear distance between adjacent access doors shall not exceed 200 feet (60 960 mm) in existing buildings where change in occupancy is not proposed.

3206.7.6 Door size and type. Fire department access doors shall be not less than 3 feet (914 mm) in width and 6 feet 8 inches (2032 mm) in height. Roll-up doors shall not be considered fire department access doors unless *approved*.

3206.7.7 Locking devices. Locking devices on fire department access doors shall be *approved*.

3206.7.8 Key box. Where fire department access doors are required, a key box shall be installed in accordance with Section 506.1. The key box shall contain keys or devices to allow for entry through the fire department access doors.

3206.8 Smoke and heat removal. Where smoke and heat removal is required by Table 3206.2 it shall be provided in accordance with Section 910.

3206.9 Fire department hose connections. Where *exit* passageways are required by the *Building Code of New York State* for egress, a Class I standpipe system shall be provided in accordance with Section 905.

3206.10 Aisles. Aisles providing access to *exits* and fire department access doors shall be provided in *high-piled storage areas* exceeding 500 square feet (46 m^2), in accordance with Sections 3206.10.1 through 3206.10.3. Aisles separating

INTERNATIONAL CODE COUNCIL®
Copyright © 2019 ICC & NYSDOS. ALL RIGHTS RESERVED. Accessed by Lauren Gualdino (lgualdino@briarcliffmanor.org), (-) Order Number #100880972 on May 08, 2020 07:05 AM (PDT) pursuant to License Agreement with ICC & NYSDOS. No further reproduction, no

100880972

storage piles or racks shall comply with NFPA 13. Aisles shall comply with Chapter 10.

Exception: Where aisles are precluded by rack storage systems, alternate methods of access and protection are allowed where *approved*.

3206.10.1 Width. Aisle width shall be in accordance with Sections 3206.10.1.1 and 3206.10.1.2.

Exceptions:

1. Aisles crossing rack structures or storage piles, that are used only for employee access, shall be not less than 24 inches (610 mm) wide.
2. Aisles separating shelves classified as shelf storage shall be not less than 30 inches (762 mm) wide.

3206.10.1.1 Sprinklered buildings. Aisles in sprinklered buildings shall be not less than 44 inches (1118 mm) wide. Aisles shall be not less than 96 inches (2438 mm) wide in *high-piled storage areas* exceeding 2,500 square feet (232 m^2) in area, that are accessible to the public and designated to contain high-hazard commodities.

Aisles shall be not less than 96 inches (2438 mm) wide in areas open to the public where mechanical stocking methods are used.

Exceptions:

1. Aisles in *high-piled storage areas* exceeding 2,500 square feet (232 m^2) in area, that are open to the public and designated to contain high-hazard commodities, and that are protected by a sprinkler system designed for multiple-row racks of high-hazard commodities, shall be not less than 44 inches (1118 mm) wide.
2. Aisles that are in *high-piled storage areas* exceeding 2,500 square feet (232 m^2) in area, not open to the public and protected by a sprinkler system designed for multiple-row racks, shall be not less than 24 inches (610 mm) wide.

3206.10.1.2 Nonsprinklered buildings. Aisles in nonsprinklered buildings shall be not less than 96 inches (2438 mm) wide.

3206.10.2 Clear height. The required aisle width shall extend from floor to ceiling. Rack structural supports and catwalks are allowed to cross aisles at a minimum height of 6 feet 8 inches (2032 mm) above the finished floor level, provided that such supports do not interfere with fire department hose stream trajectory.

3206.10.3 Dead-end aisles. Dead-end aisles shall not exceed 20 feet (6096 mm) in length in Group M occupancies. Dead-end aisles shall not exceed 50 feet (15 240 mm) in length in all other occupancies.

Exception: Dead-end aisles are not limited where the length of the dead-end aisle is less than 2.5 times the least width of the dead-end aisle.

3206.11 Portable fire extinguishers. Portable fire extinguishers shall be provided in accordance with Section 906.

SECTION 3207
SOLID-PILED AND SHELF STORAGE

3207.1 General. Shelf storage and storage in solid piles, solid piles on pallets and bin box storage in bin boxes not exceeding 5 feet (1524 mm) in any dimension, shall be in accordance with Section 3206 and this section.

3207.2 Fire protection. Where automatic sprinklers are required by Table 3206.2, an *approved automatic sprinkler system* shall be installed throughout the building or to 1-hour *fire barriers* constructed in accordance with Section 707 of the *Building Code of New York State*. Openings in such *fire barriers* shall be protected by opening protectives having a 1-hour *fire protection rating*. The design and installation of the *automatic sprinkler system* and other applicable fire protection shall be in accordance with the *Building Code of New York State* and NFPA 13.

3207.2.1 Shelf storage. Shelf storage greater than 12 feet (3658 mm) but less than 15 feet (4572 mm) in height shall be in accordance with the fire protection requirements set forth in NFPA 13. Shelf storage 15 feet (4572 mm) or more in height shall be protected in an *approved* manner with special fire protection, such as in-rack sprinklers.

3207.3 Pile dimension and height limitations. Pile dimensions, the maximum permissible storage height and pile volume shall be in accordance with Table 3206.2.

3207.4 Arrays. Where an *automatic sprinkler system* design utilizes protection based on a closed array, array clearances shall be provided and maintained as specified by the standard used.

SECTION 3208
RACK STORAGE

3208.1 General. Rack storage shall be in accordance with Section 3206 and this section. Bin boxes exceeding 5 feet (1524 mm) in any dimension shall be regulated as rack storage.

3208.2 Fire protection. Where automatic sprinklers are required by Table 3206.2, an *approved automatic sprinkler system* shall be installed throughout the building or to 1-hour *fire barriers* constructed in accordance with Section 707 of the *Building Code of New York State*. Openings in such *fire barriers* shall be protected by opening protectives having a 1-hour *fire protection rating*. The design and installation of the *automatic sprinkler system* and other applicable fire protection shall be in accordance with Section 903.3.1.1 and the *Building Code of New York State*.

INTERNATIONAL CODE COUNCIL®
Copyright © 2019 ICC & NYSDOS. ALL RIGHTS RESERVED. Accessed by Lauren Gualdino (lgualdino@briarcliffmanor.org), (-) Order Number #100880972 on May 08, 2020 07:05 AM (PDT) pursuant to License Agreement with ICC & NYSDOS. No further reproduction, no

100880972

3208.2.1 Plastic shelves. Storage on plastic shelves shall be protected by *approved* specially engineered *fire protection systems*.

3208.2.2 Racks with solid shelving. Racks with solid shelving having an area greater than 20 square feet (1.9 m^2), measured between *approved* flue spaces at all four edges of the shelf, shall be in accordance with this section.

Exceptions:

1. Racks with mesh, grated, slatted or similar shelves having uniform openings not more than 6 inches (152 mm) apart, comprising not less than 50 percent of the overall shelf area, and with *approved* flue spaces are allowed to be treated as racks without solid shelves.
2. Racks used for the storage of combustible paper records, with solid shelving, shall be in accordance with NFPA 13.

3208.2.2.1 Fire protection. Fire protection for racks with solid shelving shall be in accordance with NFPA 13.

3208.3 Flue spaces. Rack storage areas protected with an *automatic sprinkler system* shall be provided with flue spaces in accordance with Table 3208.3. Required flue spaces shall be maintained.

3208.3.1 Flue space protection. Flue spaces required by Table 3208.3 above the first tier of storage in single-, double- or multiple-row rack storage installations shall, where required by the *fire code official*, be equipped with *approved* protection devices. Such devices shall not be removed or modified.

3208.4 Column protection. Steel building columns shall be protected in accordance with NFPA 13.

3208.5 Extra-high-rack storage systems. Approval of the *fire code official* shall be obtained prior to installing extra-high-rack combustible storage.

3208.5.1 Fire protection. Buildings with extra-high-rack combustible storage shall be protected with a specially engineered *automatic sprinkler system*. Extra-high-rack combustible storage shall be provided with additional special fire protection, such as separation from other buildings and additional built-in fire protection features and fire department access, where required by the *fire code official*.

SECTION 3209
AUTOMATED STORAGE

3209.1 General. Automated storage shall be in accordance with this section.

3209.2 Automatic sprinklers. Where automatic sprinklers are required by Table 3206.2, the building shall be equipped throughout with an *approved automatic sprinkler system* in accordance with Section 903.3.1.1.

3209.3 Carousel storage. *High-piled storage areas* having greater than 500 square feet (46 m^2) of carousel storage shall be provided with automatic shutdown in accordance with one of the following:

1. An automatic smoke detection system installed in accordance with Section 907, with coverage extending 15 feet (4575 mm) in all directions beyond unenclosed carousel storage systems and that sounds a local alarm at the operator's station and stops the carousel storage system upon the activation of a single detector.
2. An automatic smoke detection system installed in accordance with Section 907 and within enclosed carousel storage systems, that sounds a local alarm at the

TABLE 3208.3
REQUIRED FLUE SPACES FOR RACK STORAGE

RACK CONFIGURATION	FLUE DESIGN		AUTOMATIC SPRINKLER PROTECTION		
			Sprinklers at the ceiling with or without minimum in-rack sprinklers		In-rack sprinklers at every tier
			Storage height ≤ 25 feet	Storage height > 25 feet	Any height
Single-row rack	Transverse flue space	Size[b]	3 inches	3 inches	Not required
		Vertically aligned	Not required	Yes	Not required
	Longitudinal flue space		Not required	Not required	Not required
Double-row rack (Option 1)	Transverse flue space	Size[b]	6 inches[a]	3 inches	Not required
		Vertically aligned	Not required	Yes	Not required
	Longitudinal flue space		Not required	6 inches	Not required
Double-row rack (Option 2)	Transverse flue space	Size[b]	3 inches	6 inches	Not required
		Vertically aligned	Not required	Yes	Not required
	Longitudinal flue space		6 inches	Not required	Not required
Multiple-row rack	Transverse flue space	Size[b]	6 inches	6 inches	Not required
		Vertically aligned	Not required	Yes	Not required
	Longitudinal flue space		Not required	Not required	Not required

For SI: 1 inch = 25.4 mm, 1 foot = 304.8 mm.

a. Three-inch transverse flue spaces shall be provided not less than every 10 feet where ESFR sprinkler protection is provided.

b. Random variations are allowed, provided that the configuration does not obstruct water penetration.

INTERNATIONAL CODE COUNCIL®
Copyright © 2019 ICC & NYSDOS. ALL RIGHTS RESERVED. Accessed by Lauren Gualdino (lgualdino@briarcliffmanor.org), (-) Order Number #100880972 on May 08, 2020 07:05 AM (PDT) pursuant to License Agreement with ICC & NYSDOS. No further reproduction, no

100880972

operator's station and stops the carousel storage system upon the activation of a single detector.

3. A single dead-man-type control switch that allows the operation of the carousel storage system only when the operator is present. The switch shall be in the same room as the carousel storage system and located to provide for observation of the carousel system.

3209.4 Automated rack storage. *High-piled storage areas* with automated rack storage shall be provided with a manually activated emergency shutdown switch for use by emergency personnel. The switch shall be clearly identified and shall be in a location *approved* by the *fire code official.*

SECTION 3210
SPECIALTY STORAGE

3210.1 General. Records storage facilities used for the rack or shelf storage of combustible paper records greater than 12 feet (3658 mm) in height shall be in accordance with Sections 3206 and 3208 and NFPA 13. Palletized storage of records shall be in accordance with Section 3207.

INTERNATIONAL CODE COUNCIL®
Copyright © 2019 ICC & NYSDOS. ALL RIGHTS RESERVED. Accessed by Lauren Gualdino (lgualdino@briarcliffmanor.org), (-) Order Number #100880972 on May 08, 2020 07:05 AM (PDT) pursuant to License Agreement with ICC & NYSDOS. No further reproduction, no

100880972

CHAPTER 33
FIRE SAFETY DURING CONSTRUCTION AND DEMOLITION

SECTION 3301
GENERAL

3301.1 Scope. This chapter shall apply to structures in the course of construction, *alteration* or demolition, including those in underground locations. Compliance with NFPA 241 is required for items not specifically addressed herein.

3301.2 Purpose. This chapter prescribes minimum safeguards for construction, *alteration* and demolition operations to provide reasonable safety to life and property from fire during such operations.

SECTION 3302
DEFINITIONS

3302.1 Terms defined in Chapter 2. Words and terms used in this chapter and defined in Chapter 2 shall have the meanings ascribed to them as defined therein.

SECTION 3303
TEMPORARY HEATING EQUIPMENT

3303.1 Listed. Temporary heating devices shall be *listed* and *labeled*. The installation, maintenance and use of temporary heating devices shall be in accordance with the listing and the manufacturer's instructions.

3303.2 Oil-fired heaters. Oil-fired heaters shall comply with Section 603.

3303.3 LP-gas heaters. Fuel supplies for liquefied-petroleum gas-fired heaters shall comply with Chapter 61 and the *Fuel Gas Code of New York State*.

3303.4 Refueling. Refueling operations for liquid-fueled equipment or appliances shall be conducted in accordance with Section 5705. The equipment or appliance shall be allowed to cool prior to refueling.

3303.5 Installation. Clearance to combustibles from temporary heating devices shall be maintained in accordance with the *labeled* equipment. When in operation, temporary heating devices shall be fixed in place and protected from damage, dislodgement or overturning in accordance with the manufacturer's instructions.

3303.6 Supervision. The use of temporary heating devices shall be supervised and maintained only by competent personnel.

SECTION 3304
PRECAUTIONS AGAINST FIRE

3304.1 Smoking. Smoking shall be prohibited except in *approved* areas. Signs shall be posted in accordance with Section 310. In *approved* areas where smoking is permitted, *approved* ashtrays shall be provided in accordance with Section 310.

3304.2 Combustible debris, rubbish and waste. Combustible debris, rubbish and waste material shall comply with the requirements of Sections 3304.2.1 through 3304.2.4.

3304.2.1 Combustible waste material accumulation. Combustible debris, rubbish and waste material shall not be accumulated within buildings.

3304.2.2 Combustible waste material removal. Combustible debris, rubbish and waste material shall be removed from buildings at the end of each shift of work.

3304.2.3 Rubbish containers. Where rubbish containers with a capacity exceeding 5.33 cubic feet (40 gallons) (0.15 m^3) are used for temporary storage of combustible debris, rubbish and waste material, they shall have tight-fitting or self-closing lids. Such rubbish containers shall be constructed entirely of materials that comply with either of the following:

1. Noncombustible materials.
2. Materials that meet a peak rate of heat release not exceeding 300 kW/m^2 when tested in accordance with ASTM E1354 at an incident heat flux of 50 kW/m^2 in the horizontal orientation.

3304.2.4 Spontaneous ignition. Materials susceptible to spontaneous ignition, such as oily rags, shall be stored in a *listed* disposal container.

3304.3 Burning of combustible debris, rubbish and waste. Combustible debris, rubbish and waste material shall not be disposed of by burning on the site unless *approved*.

3304.4 Open burning. *Open burning* shall comply with Section 307.

3304.5 Fire watch. Where required by the *fire code official* or the prefire plan established in accordance with Section 3308.3, a fire watch shall be provided for building demolition and for building construction that is hazardous in nature, such as temporary heating or hot work.

3304.5.1 Fire watch during construction. Where required by the *fire code official*, a fire watch shall be provided during nonworking hours for new construction that exceeds 40 feet (12 192 mm) in height above the lowest adjacent grade.

3304.5.2 Fire watch personnel. Trained personnel shall be provided to serve as an on-site fire watch. Fire watch personnel shall be provided with not fewer than one *approved* means for notification of the fire department, and the sole duty of such personnel shall be to perform constant patrols and watch for the occurrence of fire. The combination of fire watch duties and site security duties is

INTERNATIONAL CODE COUNCIL®
Copyright © 2019 ICC & NYSDOS. ALL RIGHTS RESERVED. Accessed by Lauren Gualdino (lgualdino@briarcliffmanor.org), (-) Order Number #100880972 on May 08, 2020 07:05 AM (PDT) pursuant to License Agreement with ICC & NYSDOS. No further reproduction, no

100880972

acceptable. Fire watch personnel shall be trained in the use of portable fire extinguishers.

3304.5.3 Fire watch location and records. The fire watch shall include areas specified by the prefire plan established in accordance with Section 3308.3. The fire watch personnel shall keep a record of all time periods of duty, including a log entry each time the site was patrolled and each time a structure under construction was entered and inspected. The records and log entries shall be made available for review by the *fire code official* upon request.

3304.6 Cutting and welding. Welding, cutting, open torches and other hot work operations and equipment shall comply with Chapter 35.

3304.7 Electrical. Temporary wiring for electrical power and lighting installations used in connection with the construction, *alteration* or demolition of buildings, structures, equipment or similar activities shall comply with NFPA 70.

3304.8 Cooking. Cooking shall be prohibited except in *approved* designated cooking areas. Signs with a minimum letter height of 3 inches (76 mm) and a minimum brush stroke of $^1/_2$ inch (13 mm) shall be posted in conspicuous locations in designated cooking areas and state:

DESIGNATED COOKING AREA
COOKING OUTSIDE OF A DESIGNATED COOKING AREA IS PROHIBITED

SECTION 3305
FLAMMABLE AND COMBUSTIBLE LIQUIDS

3305.1 Storage of flammable and combustible liquids. Storage of flammable and *combustible liquids* shall be in accordance with Section 5704.

3305.2 Class I and Class II liquids. The storage, use and handling of flammable and *combustible liquids* at construction sites shall be in accordance with Section 5706.2. Ventilation shall be provided for operations involving the application of materials containing flammable solvents.

3305.3 Housekeeping. Flammable and combustible liquid storage areas shall be maintained clear of combustible vegetation and waste materials. Such storage areas shall not be used for the storage of combustible materials.

3305.4 Precautions against fire. Sources of ignition and smoking shall be prohibited in flammable and *combustible liquid* storage areas. Signs shall be posted in accordance with Section 310.

3305.5 Handling at point of final use. Class I and II liquids shall be kept in *approved* safety containers.

3305.6 Leakage and spills. Leaking vessels shall be immediately repaired or taken out of service and spills shall be cleaned up and disposed of properly.

SECTION 3306
FLAMMABLE GASES

3306.1 Storage and handling. The storage, use and handling of flammable gases shall comply with Chapter 58.

3306.2 Cleaning with flammable gas. Flammable gases shall not be used to clean or remove debris from piping open to the atmosphere.

3306.2.1 Pipe cleaning and purging. The cleaning and purging of flammable gas piping systems, including cleaning new or existing piping systems, purging piping systems into service and purging piping systems out of service, shall comply with NFPA 56.

Exceptions:

1. Compressed gas piping systems other than fuel gas piping systems where in accordance with Chapter 53.
2. Piping systems regulated by the *Fuel Gas Code of New York State.*
3. Liquefied petroleum gas systems in accordance with Chapter 61.

SECTION 3307
EXPLOSIVE MATERIALS

3307.1 Storage and handling. *Explosive* materials shall be stored, used and handled in accordance with Chapter 56.

3307.2 Supervision. Blasting operations shall be conducted in accordance with Chapter 56.

3307.3 Demolition using explosives. *Approved* fire hoses for use by demolition personnel shall be maintained at the demolition site wherever *explosives* are used for demolition. Such fire hoses shall be connected to an *approved* water supply and shall be capable of being brought to bear on post-*detonation* fires anywhere on the site of the demolition operation.

SECTION 3308
OWNER'S RESPONSIBILITY FOR FIRE PROTECTION

3308.1 Program development and maintenance. The *owner* or *owner's* authorized agent shall be responsible for the development, implementation and maintenance of a written plan establishing a fire prevention program at the project site applicable throughout all phases of the construction, repair, *alteration* or demolition work. The plan shall address the requirements of this chapter and other applicable portions of this code, the duties of staff, and staff training requirements. The plan shall be made available for review by the *fire code official* upon request.

3308.2 Program superintendent. The *owner* shall designate a person to be the fire prevention program superintendent who shall be responsible for the fire prevention program and ensure that it is carried out through completion of the project. The fire prevention program superintendent shall have the authority to enforce the provisions of this chapter and other provisions as necessary to secure the intent of this chapter. Where guard service is provided in accordance with NFPA 241, the superintendent shall be responsible for the guard service.

3308.3 Prefire plans. The fire prevention program superintendent shall develop and maintain an *approved* prefire plan

INTERNATIONAL CODE COUNCIL®
Copyright © 2019 ICC & NYSDOS. ALL RIGHTS RESERVED. Accessed by Lauren Gualdino (lgualdino@briarcliffmanor.org), (-) Order Number #100880972 on May 08, 2020 07:05 AM (PDT) pursuant to License Agreement with ICC & NYSDOS. No further reproduction, no

100880972

in cooperation with the fire chief. The fire chief and the *fire code official* shall be notified of changes affecting the utilization of information contained in such prefire plans.

3308.4 Training. Training of responsible personnel in the use of fire protection equipment shall be the responsibility of the fire prevention program superintendent. Records of training shall be kept and made a part of the written plan for the fire prevention program.

3308.5 Fire protection devices. The fire prevention program superintendent shall determine that all fire protection equipment is maintained and serviced in accordance with this code. The quantity and type of fire protection equipment shall be *approved*. Fire protection equipment shall be inspected in accordance with the fire protection program.

3308.6 Hot work operations. The fire prevention program superintendent shall be responsible for supervising the permit system for hot work operations in accordance with Chapter 35.

3308.7 Impairment of fire protection systems. Impairments to any *fire protection system* shall be in accordance with Section 901.

3308.7.1 Smoke detectors and smoke alarms. Smoke detectors and smoke alarms located in an area where airborne construction dust is expected shall be covered to prevent exposure to dust or shall be temporarily removed. Smoke detectors and alarms that were removed shall be replaced upon conclusion of dust-producing work. Smoke detectors and smoke alarms that were covered shall be inspected and cleaned, as necessary, upon conclusion of dust-producing work.

3308.8 Temporary covering of fire protection devices. Coverings placed on or over fire protection devices to protect them from damage during construction processes shall be immediately removed upon the completion of the construction processes in the room or area in which the devices are installed.

SECTION 3309
FIRE REPORTING

3309.1 Emergency telephone. Emergency telephone facilities with *ready access* shall be provided in an *approved* location at the construction site, or an *approved* equivalent means of communication shall be provided. The street address of the construction site and the emergency telephone number of the fire department shall be posted adjacent to the telephone. Alternatively, where an equivalent means of communication has been *approved*, the site address and fire department emergency telephone number shall be posted at the main entrance to the site, in guard shacks and in the construction site office.

SECTION 3310
ACCESS FOR FIRE FIGHTING

3310.1 Required access. *Approved* vehicle access for fire fighting shall be provided to all construction or demolition sites. Vehicle access shall be provided to within 100 feet (30 480 mm) of temporary or permanent fire department connections. Vehicle access shall be provided by either temporary or permanent roads, capable of supporting vehicle loading under all weather conditions. Vehicle access shall be maintained until permanent fire apparatus access roads are available.

3310.2 Key boxes. Key boxes shall be provided as required by Chapter 5.

SECTION 3311
MEANS OF EGRESS

[BE] 3311.1 Stairways required. Where building construction exceeds 40 feet (12 192 mm) in height above the lowest level of fire department vehicle access, a temporary or permanent *stairway* shall be provided. As construction progresses, such stairway shall be extended to within one floor of the highest point of construction having secured decking or flooring.

3311.2 Maintenance. Required *means of egress* and required *accessible means of egress* shall be maintained during construction and demolition, remodeling or *alterations* and additions to any building.

Exception: *Approved* temporary *means of egress* and *accessible means of egress* systems and facilities.

3311.3 Storage. Combustible materials associated with construction, demolition, remodeling or alterations to an occupied structure shall not be stored in exits, enclosures for stairways and ramps, or exit access corridors serving an occupant load of 30 or more.

Exceptions:

1. Where the only occupants are construction workers.
2. Combustible materials that are temporarily accumulated to support work being performed when workers are present.

SECTION 3312
WATER SUPPLY FOR FIRE PROTECTION

3312.1 When required. An *approved* water supply for fire protection, either temporary or permanent, shall be made available as soon as combustible material arrives on the site.

SECTION 3313
STANDPIPES

3313.1 Where required. In buildings required to have standpipes by Section 905.3.1, not less than one standpipe shall be provided for use during construction. Such standpipes shall be installed prior to construction exceeding 40 feet (12 192 mm) in height above the lowest level of fire department vehicle access. Such standpipes shall be provided with fire department hose connections at locations adjacent to *stairways* complying with Section 3311.1. As construction progresses, such standpipes shall be extended to within one floor of the highest point of construction having secured decking or flooring.

3313.2 Buildings being demolished. Where a building is being demolished and a standpipe is existing within such a building, such standpipe shall be maintained in an operable

INTERNATIONAL CODE COUNCIL®
Copyright © 2019 ICC & NYSDOS. ALL RIGHTS RESERVED. Accessed by Lauren Gualdino (lgualdino@briarcliffmanor.org), (-) Order Number #100880972 on May 08, 2020 07:05 AM (PDT) pursuant to License Agreement with ICC & NYSDOS. No further reproduction, no

100880972

condition so as to be available for use by the fire department. Such standpipe shall be demolished with the building but shall not be demolished more than one floor below the floor being demolished.

3313.3 Detailed requirements. Standpipes shall be installed in accordance with the provisions of Section 905.

Exception: Standpipes shall be either temporary or permanent in nature, and with or without a water supply, provided that such standpipes comply with the requirements of Section 905 as to capacity, outlets and materials.

SECTION 3314
AUTOMATIC SPRINKLER SYSTEM

[NY] 3314.1 Completion before occupancy. In buildings where an *automatic sprinkler system* is required by this code or the *Building Code of New York State*, it shall be unlawful to occupy any portion of a building or structure until the *automatic sprinkler system* installation has been tested and *approved*.

3314.2 Operation of valves. Operation of sprinkler control valves shall be allowed only by properly authorized personnel and shall be accompanied by notification of duly designated parties. Where the sprinkler protection is being regularly turned off and on to facilitate connection of newly completed segments, the sprinkler control valves shall be checked at the end of each work period to ascertain that protection is in service.

SECTION 3315
PORTABLE FIRE EXTINGUISHERS

3315.1 Where required. Structures under construction, *alteration* or demolition shall be provided with not less than one *approved* portable fire extinguisher in accordance with Section 906 and sized for not less than ordinary hazard as follows:

1. At each *stairway* on all floor levels where combustible materials have accumulated.
2. In every storage and construction shed.
3. Additional portable fire extinguishers shall be provided where special hazards exist including, but not limited to, the storage and use of flammable and *combustible liquids*.

SECTION 3316
MOTORIZED CONSTRUCTION EQUIPMENT

3316.1 Conditions of use. Internal-combustion-powered construction equipment shall be used in accordance with all of the following conditions:

1. Equipment shall be located so that exhausts do not discharge against combustible material.
2. Exhausts shall be piped to the outside of the building.
3. Equipment shall not be refueled while in operation.
4. Fuel for equipment shall be stored in an *approved* area outside of the building.

SECTION 3317
SAFEGUARDING ROOFING OPERATIONS

3317.1 General. Roofing operations utilizing heat-producing systems or other ignition sources shall be conducted in accordance with Sections 3317.2 and 3317.3 and Chapter 35.

3317.2 Asphalt and tar kettles. Asphalt and tar kettles shall be operated in accordance with Section 303.

3317.3 Fire extinguishers for roofing operations. Fire extinguishers shall comply with Section 906. There shall be not less than one multiple-purpose portable fire extinguisher with a minimum 3-A 40-B:C rating on the roof being covered or repaired.

INTERNATIONAL CODE COUNCIL®
Copyright © 2019 ICC & NYSDOS. ALL RIGHTS RESERVED. Accessed by Lauren Gualdino (lgualdino@briarcliffmanor.org), (-) Order Number #100880972 on May 08, 2020 07:05 AM (PDT) pursuant to License Agreement with ICC & NYSDOS. No further reproduction, no

100880972

CHAPTER 34
TIRE REBUILDING AND TIRE STORAGE

SECTION 3401
GENERAL

3401.1 Scope. Tire rebuilding plants, tire storage and tire byproduct facilities shall comply with this chapter, other applicable requirements of this code and NFPA 13. Tire storage in buildings shall also comply with Chapter 32.

3401.2 Permit required. Permits shall be required as set forth in Section 105.6.

SECTION 3402
DEFINITIONS

3402.1 Terms defined in Chapter 2. Words and terms used in this chapter and defined in Chapter 2 shall have the meanings ascribed to them as defined therein.

SECTION 3403
TIRE REBUILDING

3403.1 Construction. Tire rebuilding plants shall comply with the requirements of the *Building Code of New York State*, as to construction, separation from other buildings or other portions of the same building, and protection.

3403.2 Location. Buffing operations shall be located in a room separated from the remainder of the building housing the tire rebuilding or tire recapping operations by a 1-hour *fire barrier*.

Exception: Buffing operations are not required to be separated where all of the following conditions are met:

1. Buffing operations are equipped with an *approved* continuous automatic water-spray system directed at the point of cutting action.
2. Buffing machines are connected to particle-collecting systems providing a minimum air movement of 1,500 cubic feet per minute (cfm) (0.71 m^3/s) in volume and 4,500 feet per minute (fpm) (23 m/s) in-line velocity.
3. The collecting system shall discharge the rubber particles to an *approved* outdoor noncombustible or fire-resistant container that is emptied at frequent intervals to prevent overflow.

3403.3 Cleaning. The buffing area shall be cleaned at frequent intervals to prevent the accumulation of rubber particles.

3403.4 Spray rooms and booths. Each *spray room* or *spray booth* where flammable or combustible solvents are applied, shall comply with Chapter 24.

SECTION 3404
PRECAUTIONS AGAINST FIRE

3404.1 Open burning. *Open burning* is prohibited in tire storage yards.

3404.2 Sources of heat. Cutting, welding or heating devices shall not be operated in tire storage yards.

3404.3 Smoking prohibited. Smoking is prohibited in tire storage yards, except in designated areas.

3404.4 Power lines. Tire storage piles shall not be located beneath electrical power lines having a voltage in excess of 750 volts or that supply power to fire emergency systems.

3404.5 Fire safety plan. The *owner* or individual in charge of the tire storage yard shall be required to prepare and submit to the *fire code official* a fire safety plan for review and approval. The fire safety plan shall include provisions for fire department vehicle access. Not less than one copy of the fire safety plan shall be prominently posted and maintained at the storage yard.

3404.6 Telephone number. The telephone number of the fire department and location of the nearest telephone shall be posted conspicuously in attended locations.

SECTION 3405
OUTDOOR STORAGE

3405.1 Individual piles. Tire storage shall be restricted to individual piles not exceeding 5,000 square feet (464.5 m^2) of continuous area. Piles shall not exceed 50,000 cubic feet (1416 m^3) in volume or 10 feet (3048 mm) in height.

3405.2 Separation of piles. Individual tire storage piles shall be separated from other piles by a clear space of not less than 40 feet (12 192 mm).

3405.3 Distance between piles of other stored products. Tire storage piles shall be separated by a clear space of not less than 40 feet (12 192 mm) from piles of other stored product.

3405.4 Distance from lot lines and buildings. Tire storage piles shall be located not less than 50 feet (15 240 mm) from *lot lines* and buildings.

3405.5 Fire breaks. Storage yards shall be maintained free from combustible ground vegetation for a distance of 40 feet (12 192 mm) from the stored material to grass and weeds; and for a distance of 100 feet (30 480 mm) from the stored product to brush and forested areas.

3405.6 Volume more than 150,000 cubic feet. Where the bulk volume of stored product is more than 150,000 cubic feet (4248 m^3), storage arrangement shall be in accordance with the following:

INTERNATIONAL CODE COUNCIL®
Copyright © 2019 ICC & NYSDOS. ALL RIGHTS RESERVED. Accessed by Lauren Gualdino (lgualdino@briarcliffmanor.org), (-) Order Number #100880972 on May 08, 2020 07:05 AM (PDT) pursuant to License Agreement with ICC & NYSDOS. No further reproduction, no

100880972

1. Individual storage piles shall comply with size and separation requirements in Sections 3405.1 through 3405.5.
2. Adjacent storage piles shall be considered to be a group, and the aggregate volume of storage piles in a group shall not exceed 150,000 cubic feet (4248 m^3).

Separation between groups shall be not less than 75 feet (22 860 mm) wide.

3405.7 Location of storage. Outdoor waste tire storage shall not be located under bridges, elevated trestles, elevated roadways or elevated railroads.

SECTION 3406
FIRE DEPARTMENT ACCESS

3406.1 Required access. New tire storage yards shall be provided with fire apparatus access roads in accordance with Section 503 and Section 3406.2. Existing tire storage yards shall be provided with fire apparatus access roads where required in Chapter 11.

3406.2 Location. Fire apparatus access roads shall be located within all pile clearances identified in Section 3405.4 and within all fire breaks required in Section 3405.5. Access roadways shall be within 150 feet (45 720 mm) of any point in the storage yard where storage piles are located, not less than 20 feet (6096 mm) from any storage pile.

SECTION 3407
FENCING

3407.1 Where required. Where the bulk volume of stored material is more than 20,000 cubic feet (566 m^3), a firmly anchored fence or other *approved* method of security that controls unauthorized access to the storage yard shall surround the storage yard.

3407.2 Construction. The fence shall be constructed of *approved* materials and shall be not less than 6 feet (1829 mm) high and provided with gates not less than 20 feet (6096 mm) wide.

3407.3 Locking. Gates to the storage yard shall be locked when the storage yard is not staffed.

3407.4 Unobstructed. Gateways shall be kept clear of obstructions and be fully openable at all times.

SECTION 3408
FIRE PROTECTION

3408.1 Water supply. A public or private fire protection water supply shall be provided in accordance with Section 508. The water supply shall be arranged such that any part of the storage yard can be reached by using not more than 500 feet (152 m) of hose.

3408.2 Fire extinguishers. Buildings or structures shall be provided with portable fire extinguishers in accordance with Section 906. Fuel-fired vehicles operating in the storage yard shall be equipped with a minimum 2-A:20-B:C-rated portable fire extinguisher.

SECTION 3409
INDOOR STORAGE ARRANGEMENT

3409.1 Pile dimensions. Where tires are stored on-tread, the dimension of the pile in the direction of the wheel hole shall be not more than 50 feet (15 240 mm). Tires stored adjacent to or along one wall shall not extend more than 25 feet (7620 mm) from that wall. Other piles shall be not more than 50 feet (15 240 mm) in width.

INTERNATIONAL CODE COUNCIL®
Copyright © 2019 ICC & NYSDOS. ALL RIGHTS RESERVED. Accessed by Lauren Gualdino (lgualdino@briarcliffmanor.org), (-) Order Number #100880972 on May 08, 2020 07:05 AM (PDT) pursuant to License Agreement with ICC & NYSDOS. No further reproduction, no

100880972

CHAPTER 35
WELDING AND OTHER HOT WORK

SECTION 3501
GENERAL

3501.1 Scope. Welding, cutting, open torches and other *hot work* operations and equipment shall comply with this chapter.

3501.2 Permits. Permits shall be required as set forth in Section 105.6.

3501.3 Restricted areas. *Hot work* shall only be conducted in areas designed or authorized for that purpose by the personnel responsible for a *hot work program*. *Hot work* shall not be conducted in the following areas unless approval has been obtained from the *fire code official*:

1. Areas where the sprinkler system is impaired.
2. Areas where there exists the potential of an explosive atmosphere, such as locations where flammable gases, liquids or vapors are present.
3. Areas with readily ignitable materials, such as storage of large quantities of bulk sulfur, baled paper, cotton, lint, dust or loose combustible materials.
4. On board ships at dock or ships under construction or repair.
5. At other locations as specified by the *fire code official*.

3501.4 Cylinders and containers. *Compressed gas* cylinders and fuel containers shall comply with this chapter and Chapter 53.

3501.5 Design and installation of oxygen-fuel gas systems. An oxygen-fuel gas system with two or more manifolded cylinders of oxygen shall be in accordance with NFPA 51.

SECTION 3502
DEFINITIONS

3502.1 Definitions. The following terms are defined in Chapter 2:

HOT WORK.

HOT WORK AREA.

HOT WORK EQUIPMENT.

HOT WORK PERMITS.

HOT WORK PROGRAM.

RESPONSIBLE PERSON.

SECTION 3503
GENERAL REQUIREMENTS

3503.1 General. *Hot work* conditions and operations shall comply with this chapter.

3503.2 Temporary and fixed hot work areas. Temporary and fixed *hot work areas* shall comply with this section.

3503.3 Hot work program permit. *Hot work permits*, issued by an *approved responsible* person under a *hot work program*, shall be available for review by the *fire code official* at the time the work is conducted and for 48 hours after work is complete.

3503.4 Qualifications of operators. A permit for *hot work* operations shall not be issued unless the individuals in charge of performing such operations are capable of performing such operations safely. Demonstration of a working knowledge of the provisions of this chapter shall constitute acceptable evidence of compliance with this requirement.

3503.5 Records. The individual responsible for the *hot work area* shall maintain "prework check" reports in accordance with Section 3504.3.1. Such reports shall be maintained on the premises for not less than 48 hours after work is complete.

3503.6 Signage. Visible hazard identification signs shall be provided where required by Chapter 50. Where the *hot work area* is open to persons other than the operator of the *hot work equipment*, conspicuous signs shall be posted to warn others before they enter the *hot work area*. Such signs shall display the following warning:

CAUTION

HOT WORK IN PROGRESS

STAY CLEAR

SECTION 3504
FIRE SAFETY REQUIREMENTS

3504.1 Protection of combustibles. Protection of combustibles shall be in accordance with Sections 3504.1.1 through 3504.1.9.

3504.1.1 Combustibles. *Hot work areas* shall not contain combustibles or shall be provided with appropriate shielding to prevent sparks, slag or heat from igniting exposed combustibles.

3504.1.2 Openings. Openings or cracks in walls, floors, ducts or shafts within the *hot work area* shall be tightly covered to prevent the passage of sparks to adjacent combustible areas, or shielded by metal fire-resistant guards, or curtains shall be provided to prevent passage of sparks or slag.

3504.1.3 Housekeeping. Floors shall be kept clean within the *hot work area*.

3504.1.4 Conveyor systems. Conveyor systems that are capable of carrying sparks to distant combustibles shall be shielded or shut down.

3504.1.5 Partitions. Partitions segregating *hot work areas* from other areas of the building shall be noncombustible. In fixed *hot work areas*, the partitions shall be securely connected to the floor such that gaps do not exist between

INTERNATIONAL CODE COUNCIL®
Copyright © 2019 ICC & NYSDOS. ALL RIGHTS RESERVED. Accessed by Lauren Gualdino (lgualdino@briarcliffmanor.org), (-) Order Number #100880972 on May 08, 2020 07:05 AM (PDT) pursuant to License Agreement with ICC & NYSDOS. No further reproduction, no

100880972

the floor and the partition. Partitions shall prevent the passage of sparks, slag, and heat from the *hot work area*.

3504.1.6 Floors. Fixed *hot work areas* shall have floors with noncombustible surfaces.

3504.1.7 Precautions in hot work. *Hot work* shall not be performed on containers or equipment that contain or have contained flammable liquids, gases or solids until the containers and equipment have been thoroughly cleaned, inerted or purged; except that "hot tapping" shall be allowed on tanks and pipe lines where such work is to be conducted by *approved* personnel. *Hot work* on flammable and *combustible liquid* storage tanks shall be conducted in accordance with Section 3510.

3504.1.8 Sprinkler protection. Automatic sprinkler protection shall not be shut off while *hot work* is performed. Where *hot work* is performed close to automatic sprinklers, noncombustible barriers or damp cloth guards shall shield the individual sprinkler heads and shall be removed when the work is completed. If the work extends over several days, the shields shall be removed at the end of each workday. The *fire code official* shall approve *hot work* where sprinkler protection is impaired.

3504.1.9 Fire detection systems. *Approved* special precautions shall be taken to avoid accidental operation of automatic fire detection systems.

3504.2 Fire watch. Fire watches shall be established and conducted in accordance with Sections 3504.2.1 through 3504.2.6.

3504.2.1 When required. A fire watch shall be provided during *hot work* activities and shall continue for not less than 30 minutes after the conclusion of the work. The *fire code official*, or the responsible manager under a *hot work program*, is authorized to extend the fire watch based on the hazards or work being performed.

Exception: Where the *hot work area* has no fire hazards or combustible exposures.

3504.2.2 Location. The fire watch shall include the entire *hot work area*. *Hot work* conducted in areas with vertical or horizontal fire exposures that are not observable by a single individual shall have additional personnel assigned to fire watches to ensure that exposed areas are monitored.

3504.2.3 Duties. Individuals designated to fire watch duty shall have fire-extinguishing equipment readily available and shall be trained in the use of such equipment. Individuals assigned to fire watch duty shall be responsible for extinguishing spot fires and communicating an alarm.

3504.2.4 Fire training. The individuals responsible for performing the *hot work* and individuals responsible for providing the fire watch shall be trained in the use of portable fire extinguishers.

3504.2.5 Fire hoses. Where hoselines are required, they shall be connected, charged and ready for operation.

3504.2.6 Fire extinguisher. Not less than one portable fire extinguisher complying with Section 906 and with a minimum 2-A:20-B:C rating shall be provided with *ready access* within 30 feet (9144 mm) of the location where *hot work* is performed.

3504.3 Area reviews. Before *hot work* is permitted and not less than once per day while the permit is in effect, the area shall be inspected by the individual responsible for authorizing *hot work* operations to ensure that it is a fire safe area. Information shown on the permit shall be verified prior to signing the permit in accordance with Section 105.6.

3504.3.1 Pre-hot-work check. A pre-hot-work check shall be conducted prior to work to ensure that all equipment is safe and hazards are recognized and protected. A report of the check shall be kept at the work site during the work and available upon request. The pre-hot-work check shall determine all of the following:

1. *Hot work equipment* to be used shall be in satisfactory operating condition and in good repair.
2. *Hot work* site is clear of combustibles or combustibles are protected.
3. Exposed construction is of noncombustible materials or, if combustible, then protected.
4. Openings are protected.
5. Floors are kept clean.
6. Exposed combustibles are not located on the opposite side of partitions, walls, ceilings or floors.
7. Fire watches, where required, are assigned.
8. *Approved* actions have been taken to prevent accidental activation of suppression and detection equipment in accordance with Sections 3504.1.8 and 3504.1.9.
9. Fire extinguishers and fire hoses (where provided) are operable and available.

SECTION 3505
GAS WELDING AND CUTTING

3505.1 General. Devices or attachments mixing air or oxygen with combustible gases prior to consumption, except at the burner or in a standard torch or blow pipe, shall not be allowed unless *approved*.

3505.2 Cylinder and container storage, handling and use. Storage, handling and use of *compressed gas* cylinders, containers and tanks shall be in accordance with this section and Chapter 53.

3505.2.1 Cylinders connected for use. The storage or use of a single cylinder of oxygen and a single cylinder of fuel gas located on a cart shall be allowed without requiring the cylinders to be separated in accordance with Section 5003.9.8 or 5003.10.3.6 when the cylinders are connected to regulators, ready for service, equipped with apparatus designed for cutting or welding and all of the following:

1. Carts shall be kept away from the cutting or welding operation in accordance with Section 3505.5 or fire-resistant shields shall be provided.

INTERNATIONAL CODE COUNCIL®
Copyright © 2019 ICC & NYSDOS. ALL RIGHTS RESERVED. Accessed by Lauren Gualdino (lgualdino@briarcliffmanor.org), (-) Order Number #100880972 on May 08, 2020 07:05 AM (PDT) pursuant to License Agreement with ICC & NYSDOS. No further reproduction, no

100880972

2. Cylinders shall be secured to the cart to resist movement.
3. Carts shall be in accordance with Section 5003.10.3.
4. Cylinder valves not having fixed hand wheels shall have keys, handles or nonadjustable wrenches on valve stems while the cylinders are in service.
5. Cylinder valve outlet connections shall conform to the requirements of CGA V-1.
6. Cylinder valves shall be closed when work is finished.
7. Cylinder valves shall be closed before moving the cart.

3505.2.1.1 Individual cart separation. Individual carts shall be separated from each other in accordance with Section 5003.9.8.

3505.3 Precautions. Cylinders, valves, regulators, hose and other apparatus and fittings for oxygen shall be kept free from oil or grease. Oxygen cylinders, apparatus and fittings shall not be handled with oily hands, oily gloves, or greasy tools or equipment.

3505.4 Acetylene gas. Acetylene gas shall not be piped except in *approved* cylinder manifolds and cylinder manifold connections, or utilized at a pressure exceeding 15 pounds per square inch gauge (psig) (103 kPa) unless dissolved in a suitable solvent in cylinders manufactured in accordance with DOTn 49 CFR Part 178. Acetylene gas shall not be brought in contact with unalloyed copper, except in a blowpipe or torch.

3505.5 Remote locations. Oxygen and fuel-gas cylinders and acetylene generators shall be located away from the *hot work area* to prevent such cylinders or generators from being heated by radiation from heated materials, sparks or slag, or misdirection of the torch flame.

3505.6 Cylinders shutoff. The torch valve shall be closed and the gas supply to the torch completely shut off when gas welding or cutting operations are discontinued for a period of 1 hour or more.

3505.7 Prohibited operation. Welding or cutting work shall not be held or supported on *compressed gas* cylinders or containers.

3505.8 Tests. Tests for leaks in piping systems and equipment shall be made with soapy water. The use of flames shall be prohibited for leak testing.

SECTION 3506
ELECTRIC ARC HOT WORK

3506.1 General. The frame or case of electric *hot work* machines, except internal-combustion-engine-driven machines, shall be grounded. Ground connections shall be mechanically strong and electrically adequate for the required current.

3506.2 Return circuits. Welding current return circuits from the work to the machine shall have proper electrical contact at joints. The electrical contact shall be periodically inspected.

3506.3 Disconnecting. Electrodes shall be removed from the holders when electric arc welding or cutting is discontinued for any period of 1 hour or more. The holders shall be located to prevent accidental contact and the machines shall be disconnected from the power source.

3506.4 Emergency disconnect. A switch or circuit breaker shall be provided so that fixed electric welders and control equipment can be disconnected from the supply circuit. The disconnect shall be installed in accordance with NFPA 70.

3506.5 Damaged cable. Damaged cable shall be removed from service until properly repaired or replaced.

SECTION 3507
CALCIUM CARBIDE SYSTEMS

3507.1 Calcium carbide storage. Storage and handling of calcium carbide shall comply with Chapter 50 of this code and Chapter 9 of NFPA 51.

SECTION 3508
ACETYLENE GENERATORS

3508.1 Use of acetylene generators. The use of acetylene generators shall comply with this section and Chapter 15 of NFPA 55.

3508.2 Portable generators. The minimum volume of rooms containing portable generators shall be 35 times the total gas-generating capacity per charge of all generators in the room. The gas-generating capacity in cubic feet per charge shall be assumed to be 4.5 times the weight of carbide per charge in pounds. The minimum ceiling height of rooms containing generators shall be 10 feet (3048 mm). An acetylene generator shall not be moved by derrick, crane or hoist while charged.

3508.3 Protection against freezing. Generators shall be located where water will not freeze. Common salt such as sodium chloride or other corrosive chemicals shall not be utilized for protection against freezing.

SECTION 3509
PIPING MANIFOLDS AND HOSE SYSTEMS FOR FUEL GASES AND OXYGEN

3509.1 General. The use of piping manifolds and hose systems shall be in accordance with Section 3509.2 through 3509.7, Chapter 53 and Chapter 5 of NFPA 51.

3509.2 Protection. Piping shall be protected against physical damage.

3509.3 Signage. Signage shall be provided for piping and hose systems as follows:

1. Above-ground piping systems shall be marked in accordance with ASME A13.1.
2. Station outlets shall be marked to indicate their intended usage.

INTERNATIONAL CODE COUNCIL®
Copyright © 2019 ICC & NYSDOS. ALL RIGHTS RESERVED. Accessed by Lauren Gualdino (lgualdino@briarcliffmanor.org), (-) Order Number #100880972 on May 08, 2020 07:05 AM (PDT) pursuant to License Agreement with ICC & NYSDOS. No further reproduction, no

100880972

3. Signs shall be posted, indicating clearly the location and identity of section shutoff valves.

3509.4 Manifolding of cylinders. Oxygen manifolds shall not be located in an acetylene generator room. Oxygen manifolds shall be located not less than 20 feet (6096 mm) away from combustible material such as oil or grease, and gas cylinders containing flammable gases, unless the gas cylinders are separated by a *fire partition*.

3509.5 Identification of manifolds. Signs shall be posted for oxygen manifolds with service pressures not exceeding 200 psig (1379 kPa). Such signs shall include the words:

LOW-PRESSURE MANIFOLD

DO NOT CONNECT HIGH-PRESSURE CYLINDERS

MAXIMUM PRESSURE 250 PSIG

3509.6 Clamps. Hose connections shall be clamped or otherwise securely fastened.

3509.7 Inspection. Hoses shall be inspected frequently for leaks, burns, wear, loose connections or other defects rendering the hose unfit for service.

SECTION 3510
HOT WORK ON FLAMMABLE AND COMBUSTIBLE LIQUID STORAGE TANKS

3510.1 General. *Hot work* performed on the interior or exterior of tanks that hold or have held flammable or *combustible liquids* shall be in accordance with Section 3510.2 and Chapters 4, 5, 6, 7 and 10 of NFPA 326.

3510.2 Prevention. The following steps shall be taken to minimize hazards where *hot work* must be performed on a flammable or *combustible liquid* storage container:

1. Use alternative methods to avoid *hot work* where possible.
2. Analyze the hazards prior to performing *hot work*, identify the potential hazards and the methods of hazard control.
3. *Hot work* shall conform to the requirements of the code or standard to which the container was originally fabricated.
4. Test the immediate and surrounding work area with a combustible gas detector and provide for a means of continuing monitoring while conducting the *hot work*.
5. Qualified employees and contractors performing *hot work* shall use an industry-approved *hot work permit* system to control the work.
6. Personnel shall be properly trained on *hot work* policies and procedures regarding equipment, safety, hazard controls and job-specific requirements.
7. On-site safety supervision shall be present where *hot work* is in progress to protect the personnel conducting the *hot work* and provide additional overview of site-specific hazards.

INTERNATIONAL CODE COUNCIL®
Copyright © 2019 ICC & NYSDOS. ALL RIGHTS RESERVED. Accessed by Lauren Gualdino (lgualdino@briarcliffmanor.org), (-) Order Number #100880972 on May 08, 2020 07:05 AM (PDT) pursuant to License Agreement with ICC & NYSDOS. No further reproduction, no

100880972

CHAPTER 36

MARINAS

SECTION 3601
SCOPE

3601.1 Scope. *Marina* facilities shall be in accordance with this chapter.

3601.2 Plans and approvals. Plans for *marina* fire protection facilities shall be *approved* prior to installation. The work shall be subject to final inspection and approval after installation.

SECTION 3602
DEFINITIONS

3602.1 Definitions. The following terms are defined in Chapter 2:

FLOAT.

MARINA.

PIER.

VESSEL.

WHARF.

SECTION 3603
GENERAL PRECAUTIONS

3603.1 Combustible debris. Combustible debris and rubbish shall not be deposited or accumulated on land beneath *marina* structures, *piers* or *wharves*.

3603.2 Sources of ignition. Open-flame devices used for lighting or decoration on the exterior of a *vessel*, *float*, *pier* or wharf shall be *approved*.

3603.3 Flammable or combustible liquid spills. Spills of flammable or *combustible liquids* at or on the water shall be reported immediately to the fire department or jurisdictional authorities.

3603.4 Rubbish containers. Containers with tight-fitting or self-closing lids shall be provided for temporary storage of combustible debris, rubbish and waste material. The rubbish containers shall be constructed entirely of materials that comply with any one of the following:

1. Noncombustible materials.
2. Materials that meet a peak rate of heat release not exceeding 300 kW/m^2 where tested in accordance with ASTM E1354 at an incident heat flux of 50 kW/m^2 in the horizontal orientation.

3603.5 Electrical equipment. Electrical equipment shall be installed and used in accordance with its listing, Section 605 of this code and Chapter 5 of NFPA 303 as required for wet, damp and hazardous locations.

3603.6 Berthing and storage. Berthing and storage shall be in accordance with Chapter 7 of NFPA 303.

3603.7 Slip identification. Slips and mooring spaces shall be individually identified by an *approved* numeric or alphabetic designator. Space designators shall be posted at the space. Signs indicating the space designators located on finger *piers* and *floats* shall be posted at the base of all *piers*, finger *piers*, *floats* and finger *floats*.

SECTION 3604
FIRE PROTECTION EQUIPMENT

3604.1 General. *Piers*, *marinas* and *wharves* with facilities for mooring or servicing five or more *vessels*, and marine motor fuel-dispensing facilities shall be equipped with fire protection equipment in accordance with Sections 3604.2 through 3604.6.

3604.2 Standpipes. *Marinas* and boatyards shall be equipped throughout with standpipe systems in accordance with NFPA 303. Systems shall be provided with hose connections located such that no point on the *marina pier* or *float* system exceeds 150 feet (15 240 mm) from a standpipe hose connection.

3604.2.1 Identification of standpipe outlets. Standpipe hose connection locations shall be clearly identified by a flag or other *approved* means designed to be readily visible from the *pier* accessing the *float* system.

3604.3 Access and water supply. *Piers* and *wharves* shall be provided with fire apparatus access roads and water-supply systems with on-site fire hydrants where required by the *fire code official*. Such roads and water systems shall be provided and maintained in accordance with Sections 503 and 507.

3604.4 Portable fire extinguishers. One portable fire extinguisher of the ordinary (moderate) hazard type shall be provided at each required standpipe hose connection. Additional portable fire extinguishers, suitable for the hazards involved, shall be provided and maintained in accordance with Section 906.

3604.5 Communications. A telephone not requiring a coin to operate or other *approved*, clearly identified means to notify the fire department shall be provided on the site in a location *approved* by the *fire code official*.

3604.6 Emergency operations staging areas. Space shall be provided on all *float* systems for the staging of emergency equipment. Emergency operation staging areas shall provide a minimum of 4 feet wide by 10 feet long (1219 mm by 3048 mm) clear area exclusive of walkways and shall be located at each standpipe hose connection. Emergency operation staging areas shall be provided with a curb or barrier having a minimum height of 4 inches (102 mm) and maximum space between the bottom edge and the surface of the staging area of 2 inches (51 mm) on the outboard sides of the staging area.

An *approved* sign reading FIRE EQUIPMENT STAGING AREA—KEEP CLEAR shall be provided at each staging area.

INTERNATIONAL CODE COUNCIL®
Copyright © 2019 ICC & NYSDOS. ALL RIGHTS RESERVED. Accessed by Lauren Gualdino (lgualdino@briarcliffmanor.org), (-) Order Number #100880972 on May 08, 2020 07:05 AM (PDT) pursuant to License Agreement with ICC & NYSDOS. No further reproduction, no

100880972

SECTION 3605
MARINE MOTOR FUEL-DISPENSING FACILITIES

3605.1 Fuel dispensing. Marine motor fuel-dispensing facilities shall be in accordance with Chapter 23.

INTERNATIONAL CODE COUNCIL®
Copyright © 2019 ICC & NYSDOS. ALL RIGHTS RESERVED. Accessed by Lauren Gualdino (lgualdino@briarcliffmanor.org), (-) Order Number #100880972 on May 08, 2020 07:05 AM (PDT) pursuant to License Agreement with ICC & NYSDOS. No further reproduction, no

100880972

CHAPTER 37
COMBUSTIBLE FIBERS

SECTION 3701
GENERAL

3701.1 Scope. The equipment, processes and operations involving *combustible fibers* shall comply with this chapter.

3701.2 Applicability. Storage of *combustible fibers* in any quantity shall comply with this section.

3701.3 Permits. Permits shall be required as set forth in Section 105.6.

SECTION 3702
DEFINITIONS

3702.1 Definitions. The following terms are defined in Chapter 2:

BALED COTTON.

BALED COTTON, DENSELY PACKED.

COMBUSTIBLE FIBERS.

COTTON.

SEED COTTON.

SECTION 3703
GENERAL PRECAUTIONS

3703.1 Use of combustible receptacles. Ashes, waste, rubbish or sweepings shall not be placed in wood or other combustible receptacles and shall be removed daily from the structure.

3703.2 Vegetation. Grass or weeds shall not be allowed to accumulate at any point on the premises.

3703.3 Clearances. A minimum clearance of 3 feet (914 mm) shall be maintained between automatic sprinklers and the top of piles.

3703.4 Agricultural products. Hay, straw, *seed cotton* or similar agricultural products shall not be stored adjacent to structures or combustible materials unless a clear horizontal distance equal to the height of a pile is maintained between such storage and structures or combustible materials. Storage shall be limited to stacks of 100 tons (91 metric tons) each. Stacks shall be separated by not less than 20 feet (6096 mm) of clear space. Quantities of hay, straw, *seed cotton* and other agricultural products shall not be limited where stored in or near farm structures located outside closely built areas. A permit shall not be required for agricultural storage.

3703.5 Dust collection. Where located within a building, equipment or machinery that generates or emits *combustible fibers* shall be provided with an *approved* dust-collecting and exhaust system. Such systems shall comply with Chapter 22 of this code and Section 511 of the *Mechanical Code of New York State.*

3703.6 Portable fire extinguishers. Portable fire extinguishers shall be provided in accordance with Section 906 as required for extra-hazard occupancy protection as indicated in Table 906.3(1).

3703.7 Sources of ignition. Sources of ignition shall comply with Sections 3703.7.1 and 3703.7.2.

3703.7.1 Smoking. Smoking shall be prohibited and "No Smoking" signs provided as follows:

1. In rooms or areas where materials are stored or dispensed or used in *open systems*.
2. Within 25 feet (7620 mm) of outdoor storage or open use areas.
3. Facilities or areas within facilities that have been designated as totally "no smoking" shall have "No Smoking" signs placed at all entrances to the facility or area. Designated areas within such facilities where smoking is permitted either permanently or temporarily shall be identified with signs designating that smoking is permitted in these areas only.

Signs required by this section shall be in English as a primary language or in symbols allowed by this code and shall comply with Section 310.

3703.7.2 Open flames. Open flames and high-temperature devices shall not be used in a manner that creates a hazardous condition. High-temperature devices and those devices utilizing an open flame shall be *listed* for use with the materials stored or used.

SECTION 3704
LOOSE FIBER STORAGE

3704.1 General. Loose *combustible fibers*, not in suitable bales or packages and stored outdoors in the open, shall comply with Section 2808 of this code. Occupancies involving the indoor storage of loose *combustible fibers* in amounts exceeding the *maximum allowable quantity per control area* as set forth in Section 5003.1 shall comply with Sections 3704.2 through 3704.6.

3704.2 Storage of 100 cubic feet or less. Loose *combustible fibers* in quantities of not more than 100 cubic feet (3 m^3) located in a structure shall be stored in a metal or metal-lined bin equipped with a self-closing cover.

3704.3 Storage of more than 100 cubic feet to 500 cubic feet. Loose *combustible fibers* in quantities exceeding 100 cubic feet (3 m^3) but not exceeding 500 cubic feet (14 m^3) shall be stored in rooms enclosed with 1-hour *fire barriers* constructed in accordance with Section 707 of the *Building Code of New York State* or *horizontal assemblies* constructed in accordance with Section 711 of the *Building Code of New York State*, or both, with openings protected by an *approved* opening protective assembly having a *fire protection rating*

INTERNATIONAL CODE COUNCIL®
Copyright © 2019 ICC & NYSDOS. ALL RIGHTS RESERVED. Accessed by Lauren Gualdino (lgualdino@briarcliffmanor.org), (-) Order Number #100880972 on May 08, 2020 07:05 AM (PDT) pursuant to License Agreement with ICC & NYSDOS. No further reproduction, no

100880972

of $^3/_4$ hour in accordance with the *Building Code of New York State*.

3704.4 Storage of more than 500 cubic feet to 1,000 cubic feet. Loose *combustible fibers* in quantities exceeding 500 cubic feet (14 m^3) but not exceeding 1,000 cubic feet (28 m^3) shall be stored in rooms enclosed with 2-hour *fire barriers* constructed in accordance with Section 707 of the *Building Code of New York State* or *horizontal assemblies* constructed in accordance with Section 711 of the *Building Code of New York State*, or both, with openings protected by an *approved* opening protective assembly having a *fire protection rating* of $1^1/_2$ hours in accordance with the *Building Code of New York State*.

3704.5 Storage of more than 1,000 cubic feet. Loose *combustible fibers* in quantities exceeding 1,000 cubic feet (28 m^3) shall be stored in rooms enclosed with 2-hour *fire barriers* constructed in accordance with Section 707 of the *Building Code of New York State* or *horizontal assemblies* constructed in accordance with Section 711 of the *Building Code of New York State*, or both, with openings protected by an *approved* opening protective assembly having a *fire protection rating* of $1^1/_2$ hours in accordance with the *Building Code of New York State*. The storage room shall be protected by an *automatic sprinkler system* installed in accordance with Section 903.3.1.1.

3704.6 Detached storage structure. Not more than 2,500 cubic feet (70 m^3) of loose *combustible fibers* shall be stored in a detached structure suitably located, with openings protected against entrance of sparks. The structure shall not be occupied for any other purpose.

SECTION 3705
BALED STORAGE

3705.1 Bale size and separation. Baled *combustible fibers* shall be limited to single blocks or piles not more than 25,000 cubic feet (700 m^3) in volume, not including aisles or clearances. Blocks or piles of baled fiber shall be separated from adjacent storage by aisles not less than 5 feet (1524 mm) wide, or by flash-fire barriers constructed of continuous sheets of noncombustible material extending from the floor to a minimum height of 1 foot (305 mm) above the highest point of the piles and projecting not less than 1 foot (305 mm) beyond the sides of the piles.

3705.2 Special baling conditions. Sisal and other fibers in bales bound with combustible tie ropes, jute and other fibers that swell when wet, shall be stored to allow for expansion in any direction without affecting building walls, ceilings or columns. A minimum clearance of 3 feet (914 mm) shall be required between walls and sides of piles, except that where the storage compartment is not more than 30 feet (9144 mm) wide, the minimum clearance at side walls shall be 1 foot (305 mm), provided that a center aisle not less than 5 feet (1524 mm) wide is maintained.

INTERNATIONAL CODE COUNCIL®
Copyright © 2019 ICC & NYSDOS. ALL RIGHTS RESERVED. Accessed by Lauren Gualdino (lgualdino@briarcliffmanor.org), (-) Order Number #100880972 on May 08, 2020 07:05 AM (PDT) pursuant to License Agreement with ICC & NYSDOS. No further reproduction, no

100880972

CHAPTER 38
HIGHER EDUCATION LABORATORIES

SECTION 3801
GENERAL

3801.1 Scope. Higher education laboratories complying with the requirements of this chapter shall be permitted to exceed the maximum allowable quantities of hazardous materials in *control areas* set forth in Chapter 50 without requiring classification as a Group H occupancy. Except as specified in this chapter, such laboratories shall comply with all applicable provisions of this code and the *Building Code of New York State*.

3801.2 Application. The provisions of this chapter shall be applied as exceptions or additions to applicable requirements of this code. Unless specifically modified by this chapter, the storage, use and handling of hazardous materials shall comply with the provisions in Chapters 50 through 67 and the *Building Code of New York State* for quantities not exceeding the maximum allowable quantity.

SECTION 3802
DEFINITIONS

3802.1 Definitions. The following terms are defined in Chapter 2:

CHEMICAL FUME HOOD.

GLOVE BOX.

HIGHER EDUCATION LABORATORY.

LABORATORY SUITE.

SPECIAL EXPERT.

SECTION 3803
GENERAL SAFETY PROVISIONS

3803.1 Scope. Laboratories and *laboratory suites* applying the requirements of this chapter shall be in accordance with the general safety provisions in Sections 3803.1.1 through 3803.2.2.

3803.1.1 Chemical safety reviews. Operating and emergency procedures planning and documentation shall be provided in accordance with Sections 5001.3.3.11 through 5001.3.3.17. Such documentation shall be prepared by laboratory safety personnel or *special experts*, and shall be made available in the workplace for reference and review by employees. Copies of such documentation shall be made available to the *fire code official* for review upon request.

3803.1.2 Chemical handling. Receiving, transporting on site, unpacking and dispensing of hazardous materials shall be carried out by persons trained in proper handling of such materials and shall be performed in accordance with Chapters 50 through 67, as applicable.

3803.1.3 Warning signage. Warning signs shall be provided in accordance with Section 5003.5.

3803.1.4 Maintenance of equipment, machinery and processes. Maintenance of equipment, machinery and processes used with hazardous materials shall comply with Section 5003.2.6.

3803.1.5 Time-sensitive materials. Containers of materials that have the potential to become hazardous during prolonged storage shall be dated when first opened, and shall be managed in accordance with NFPA 45, Section 8.2.4.4.1.

3803.1.6 Hazardous wastes. Storage, dispensing, use and handling of hazardous waste shall comply with this chapter and Chapters 50 through 67, as applicable.

3803.1.7 Automatic fire-extinguishing systems. New laboratories in new or existing buildings that increase maximum allowable quantities of hazardous materials based on the requirements in this chapter shall be equipped throughout with an *approved automatic sprinkler system* in accordance with Section 903.3.1.1.

3803.2 Hazardous materials storage and use. Hazardous materials storage, handling and use in laboratories and laboratory suites complying with Chapter 38 shall be in accordance with this chapter and Chapters 50 through 67.

3803.2.1 Container size. The maximum container size for all hazardous materials shall be 5.3 gallons (20 L) for liquids, 50 pounds (22.7 kg) for solids, 100 cubic feet (2.83 m^3) for *health-hazard* gases per Table 5003.1.1(2) and 500 cubic feet (14.15 m^3) for all other gases in accordance with Table 5003.1.1(1).

Exception: Hazardous waste collection containers, for other than Class I flammable liquids and Class II combustible liquids, are permitted to exceed 5.3 gallons (20 L) where *approved*.

3803.2.2 Density. Quantities of Class I flammable liquids in storage and use shall not exceed 8 gallons (30 L) per 100 square feet (9.29 m^2) of floor area. Densities shall be reduced by 25 percent on the 4th through 6th floors of the building, and by 50 percent above the 6th floor. Regardless of the density, the *maximum allowable quantity per control area* or laboratory suite in accordance with this chapter, shall not be exceeded.

Exception: Designated hazardous waste collection areas or rooms within a laboratory suite or *control area* are not limited, but such materials shall not exceed the maximum allowable quantity per laboratory suite or *control area*.

INTERNATIONAL CODE COUNCIL®
Copyright © 2019 ICC & NYSDOS. ALL RIGHTS RESERVED. Accessed by Lauren Gualdino (lgualdino@briarcliffmanor.org), (-) Order Number #100880972 on May 08, 2020 07:05 AM (PDT) pursuant to License Agreement with ICC & NYSDOS. No further reproduction, no

100880972

SECTION 3804
LABORATORY SUITE CONSTRUCTION

3804.1 General. Where laboratory suites are provided, they shall be constructed in accordance with this chapter and Section 428 of the *Building Code of New York State*.

3804.1.1 Laboratory suites. The number of *laboratory suites* and percentage of maximum allowable quantities of hazardous materials in laboratory suites shall be in accordance with Table 3804.1.1.

3804.1.1.1 Separation from other nonlaboratory areas. Laboratory suites shall be separated from other portions of the building in accordance with the most restrictive of the following:

1. *Fire barriers* and horizontal assemblies as required in Table 3804.1.1. *Fire barriers* shall be constructed in accordance with Section 707 of the *Building Code of New York State* and horizontal assemblies shall be constructed in accordance with Section 711 of the *Building Code of New York State*.

   Exception: Where an individual laboratory suite occupies more than one story, the *fire-resistance rating* of intermediate floors contained within the laboratory suite shall comply with the requirements of the *Building Code of New York State*.

2. Separations as required in Section 508 of the *Building Code of New York State*.

3804.1.1.2 Separation from other laboratory suites. Laboratory suites shall be separated from other laboratory suites in accordance with Table 3804.1.1.

3804.1.1.3 Floor assembly fire-resistance. The floor assembly supporting laboratory suites and the construction supporting the floor of laboratory suites shall have a *fire-resistance rating* of not less than 2 hours.

Exception: The floor assembly of laboratory suites and the construction supporting the floor of laboratory suites are permitted to be 1-hour fire-resistance-rated in buildings of Types IIA, IIIA and VA construction, provided that the building is three or fewer stories.

3804.1.1.4 Maximum number. The maximum number of laboratory suites shall be in accordance with Table 3804.1.1. Where a building contains both laboratory suites and *control areas,* the total number of laboratory suites and *control areas* within a building shall not exceed the maximum number of laboratory suites in accordance with Table 3804.1.1.

3804.1.1.5 Means of egress. *Means of egress* shall be in accordance with Chapter 10.

3804.1.1.6 Standby or emergency power. Higher education laboratory suites shall be provided with emergency or standby power in accordance with Section 1203.2.13.

3804.1.1.7 Ventilation. Ventilation shall be in accordance with Chapter 7 of NFPA 45, and the *Mechanical Code of New York State*.

3804.1.1.8 Liquid-tight floor. Portions of laboratory suites where hazardous materials are present shall be provided with a liquid-tight floor.

3804.1.1.9 Automatic fire-extinguishing systems. Buildings containing laboratory suites shall be equipped throughout with an *approved automatic sprinkler system* in accordance with Section 903.3.1.1.

3804.1.2 Percentage of maximum allowable quantity in each laboratory suite. The percentage of maximum allowable quantities of hazardous materials in each laboratory suite shall be in accordance with Table 3804.1.1.

TABLE 3804.1.1
DESIGN AND NUMBER OF LABORATORY SUITES PER FLOOR

FLOOR LEVEL		PERCENTAGE OF THE MAXIMUM ALLOWABLE QUANTITY PER LAB SUITE[a]	NUMBER OF LAB SUITES PER FLOOR	FIRE-RESISTANCE RATING FOR FIRE BARRIERS IN HOURS[b]
Above grade plane	21+	Not Allowed	Not Allowed	Not Allowed
	16–20	25	1	2[c]
	11–15	50	1	2[c]
	7–10	50	2	2[c]
	4–6	75	4	1
	3	100	4	1
	1–2	100	6	1
Below grade plane	1	75	4	1
	2	50	2	1
	Lower than 2	Not Allowed	Not Allowed	Not Allowed

a. Percentages shall be of the maximum allowable quantity per control area shown in Tables 5003.1.1(1) and 5003.1.1(2), with all increases allowed in the footnotes to those tables.

b. Fire barriers shall include walls, floors and ceilings necessary to provide separation from other portions of the building.

c. Vertical fire barriers separating laboratory suites from other spaces on the same floor are permitted to be 1-hour rated.

INTERNATIONAL CODE COUNCIL®
Copyright © 2019 ICC & NYSDOS. ALL RIGHTS RESERVED. Accessed by Lauren Gualdino (lgualdino@briarcliffmanor.org), (-) Order Number #100880972 on May 08, 2020 07:05 AM (PDT) pursuant to License Agreement with ICC & NYSDOS. No further reproduction, no

100880972

SECTION 3805
NONSPRINKLERED LABORATORIES

3805.1 Scope. Storage and use of hazardous materials in existing laboratories located within existing buildings not equipped throughout with an *automatic sprinkler system* in accordance with Section 903.3.1.1 is permitted where such use complies with Section 3803, Chapters 50 through 67, as applicable, and Sections 3805.2 through 3805.4.

3805.2 Nonsprinklered laboratories. The maximum allowable quantities of hazardous materials in storage and use in *control areas* in laboratories located in buildings not equipped throughout with an *automatic sprinkler system* in accordance with Section 903.3.1.1 shall be in accordance with Tables 5003.1.1(1), 5003.1.1(2) and 5003.8.3.2, except as modified by Sections 3805.2.1 and 3805.2.2.

3805.2.1 Restricted materials storage. Where *approved* by the *fire code official*, storage of the following hazardous materials prohibited by Table 5003.1.1(1) in buildings not equipped throughout with an *automatic sprinkler system* in accordance with Section 903.3.1.1 shall be allowed within a laboratory *control area* at 25 percent of Table 5003.1.1(1) limits for a building equipped throughout with an *automatic sprinkler system*.

1. Pyrophorics.
2. Class 4 Oxidizers.

Additional quantity increases shall be prohibited, and such materials shall be stored in accordance with all of the following:

1. Containers shall be completely sealed and stored in accordance with the manufacturers' recommendations.
2. Storage shall be within *approved* hazardous material storage cabinets in accordance with Section 5003.8.7, or shall be located in an inert atmosphere *glove box* in accordance with NFPA 45, Section 7.11.
3. The storage cabinet or glove box shall not contain any storage of *incompatible materials.*

3805.2.2 Restricted materials use. Where *approved* by the *fire code official*, use of the following hazardous materials prohibited by Table 5003.1.1(1) in buildings not equipped throughout with an *automatic sprinkler system* in accordance with Section 903.3.1.1, shall be allowed within a laboratory *control area* at 25 percent of Table 5003.1.1(1) limits for buildings equipped throughout with an *automatic sprinkler system*.

1. Pyrophorics.
2. Class 4 Oxidizers.

Additional quantity increases shall be prohibited, and such materials shall be stored in accordance with all of the following:

1. Use shall be within an *approved* chemical fume hood listed in accordance with UL 1805, or in an inert atmosphere glove box in accordance with NFPA 45, Section 7.11, or other *approved* equipment designed for the specific hazard of the material.
2. Combustible materials shall be kept not less than 2 feet (610 mm) away from the work area, except for those items directly related to the research.
3. A portable fire extinguisher appropriate for the specific material shall be provided within 20 feet (6096 mm) of the use in accordance with Section 906.

3805.3 Restricted materials automatic fire detection. An automatic fire detection system shall be installed in all existing laboratories in nonsprinklered buildings in accordance with this section. Detectors shall be connected to the building's fire alarm control unit where a fire alarm system is provided. Detector initiation shall activate the occupant notification system in accordance with Section 907.5 where connected to the building's fire alarm control unit. Activation of the detection system shall sound a local alarm in buildings not equipped with a fire alarm notification system.

3805.3.1 System supervision and monitoring. Automatic fire detection systems shall be electronically supervised and monitored by an *approved* supervising station or, where *approved*, shall initiate an audible and visual signal at a constantly attended, on-site location.

3805.4 Percentage of maximum allowable quantity per control area. The percentage of *maximum allowable quantities per control area* of hazardous materials shall be permitted to be increased in accordance with Table 3805.4.

SECTION 3806
EXISTING SPRINKLERED LABORATORIES

3806.1 Scope. Storage and use of hazardous materials in existing laboratories within buildings equipped throughout with an *automatic sprinkler system* in accordance with Section 903.3.1.1 shall be in accordance with Section 3803 and with Chapters 50 through 67, as applicable, except as modified by this section.

3806.2 Hazardous materials storage and use. Storage and use of hazardous materials within *control areas* in new and existing laboratories equipped with an *automatic sprinkler system* shall be in accordance with this section and Chapters 50 through 67, as applicable.

Exception: Existing laboratories in buildings equipped throughout with an automatic sprinkler system meeting the requirements for laboratory suites are permitted to comply with Section 3804.

3806.2.1 Percentage of maximum allowable quantities per control area. The percentage of maximum allowable quantities per control area of hazardous materials shall be in accordance with Table 3806.2.1.

INTERNATIONAL CODE COUNCIL®
Copyright © 2019 ICC & NYSDOS. ALL RIGHTS RESERVED. Accessed by Lauren Gualdino (lgualdino@briarcliffmanor.org), (-) Order Number #100880972 on May 08, 2020 07:05 AM (PDT) pursuant to License Agreement with ICC & NYSDOS. No further reproduction, no

100880972

TABLE 3805.4
DESIGN AND NUMBER OF CONTROL AREAS IN EXISTING NONSPRINKLERED LABORATORIES

FLOOR LEVEL		PERCENTAGE OF THE MAXIMUM ALLOWABLE QUANTITY PER CONTROL AREA[a]	NUMBER OF CONTROL AREAS PER FLOOR	FIRE-RESISTANCE RATING FOR FIRE BARRIERS IN HOURS[b, c, d]
Above grade plane	Higher than 9	5	1	2[c]
	7–9	10	2	2[c]
	4–6	25	2	2[c]
	3	75	2	1
	1–2	100	4	1
Below grade plane	1	100	3	1
	2	75	2	1
	Lower than 2	Not Allowed	Not Allowed	Not Allowed

a. Percentages shall be of the maximum allowable quantity per control area shown in Tables 5003.1.1(1) and 5003.1.1(2), excluding all increases allowed in the footnotes to those tables.
b. Fire barriers shall include walls, floors and ceilings necessary to provide separation from other portions of the building.
c. Vertical fire barriers separating control areas from other spaces on the same floor are permitted to be 1-hour fire-resistance rated.
d. See Section 414.2.4 of the *Building Code of New York State* for additional requirements.

TABLE 3806.2.1
DESIGN AND NUMBER OF CONTROL AREAS IN EXISTING SPRINKLERED LABORATORIES

FLOOR LEVEL		PERCENTAGE OF THE MAXIMUM ALLOWABLE QUANTITY PER CONTROL AREA[a]	NUMBER OF CONTROL AREAS PER FLOOR	FIRE-RESISTANCE RATING FOR FIRE BARRIERS IN HOURS[b, d]
Above grade plane	21+	5	1	2[c]
	11–20	10	1	2[c]
	7–10	25	2	2[c]
	4–6	50	2	2[c]
	3	75	3	1
	1–2	100	4	1
Below grade plane	1	100	3	1
	2	75	2	1
	Lower than 2	Not Allowed	Not Allowed	Not Allowed

a. Percentages shall be of the maximum allowable quantity per control area shown in Tables 5003.1.1(1) and 5003.1.1(2), with all increases allowed in the footnotes to those tables.
b. Fire barriers shall include walls, floors and ceilings necessary to provide separation from other portions of the building.
c. Vertical fire barriers separating control areas from other spaces on the same floor are permitted to be 1-hour fire-resistance rated.
d. See Section 414.2.4 of the *Building Code of New York State* for additional requirements.

INTERNATIONAL CODE COUNCIL®
Copyright © 2019 ICC & NYSDOS. ALL RIGHTS RESERVED. Accessed by Lauren Gualdino (lgualdino@briarcliffmanor.org), (-) Order Number #100880972 on May 08, 2020 07:05 AM (PDT) pursuant to License Agreement with ICC & NYSDOS. No further reproduction, no

100880972

CHAPTER 39
PROCESSING AND EXTRACTION FACILITIES

SECTION 3901
GENERAL

[NY] 3901.1 Scope. Plant processing or extraction facilities utilizing a process that includes the act of extraction of the oils and fats by use of a solvent, desolventizing of the raw material, production of the miscella, distillation of the solvent from the miscella and solvent recovery, shall comply with this chapter and the *Building Code of New York State*. The use, storage, transfilling and handling of hazardous materials in these facilities shall comply with this chapter, other applicable provisions of this code and the *Building Code of New York State*.

[NY] 3901.2 Existing buildings or facilities. Existing buildings or facilities used for the processing of plant oils where the medium of extraction is changed to the use of a solvent shall comply with this chapter.

[NY] 3901.3 Permits. Permits shall be required as set forth in Sections 105.2 and 105.6.

SECTION 3902
DEFINITIONS

3902.1 Definitions. The following terms are defined in Chapter 2:

DESOLVENTIZING.

MISCELLA.

SECTION 3903
PROCESSING AND EXTRACTION

3903.1 Construction. Processing shall be located in a building complying with the *Building Code of New York State*.

3903.2 Prohibited occupancies. Extraction processes utilizing flammable gases or flammable *cryogenic fluids* shall not be located in any building containing a Group A, E, I or R occupancy.

3903.3 Location. The extraction equipment and extraction processes utilizing hydrocarbon solvents shall be located in a room or area dedicated to extraction.

[NY] 3903.4 Post-process purification and winterization. Post-processing and winterization involving the heating or pressurizing of the miscella shall be performed in an appliance listed for such use. Domestic or commercial cooking appliances shall not be used.

3903.4.1 Industrial ovens. The use of industrial ovens shall comply with Chapter 30.

3903.5 Use of flammable and combustible liquids. The use of flammable and *combustible liquids* for liquid extraction processes where the liquid is boiled, distilled or evaporated shall be located within a hazardous exhaust fume hood, rated for exhausting flammable vapors. Electrical equipment used within the hazardous exhaust fume hood shall be rated for use in flammable atmospheres. Heating of flammable or combustible liquids over an open flame is prohibited.

Exception: The use of a heating element not rated for flammable atmospheres, where documentation from the manufacture, or *approved* testing laboratory indicates the element is rated for heating of flammable liquids.

3903.6 Liquefied petroleum gas. Liquefied petroleum gases shall not be released to the atmosphere except where released in accordance with Section 7.3 of NFPA 58.

SECTION 3904
SYSTEMS AND EQUIPMENT

[NY] 3904.1 General requirements. Systems and equipment used with the processing and extraction of oils and oil products from plants shall comply with Sections 3904.2 through 3904.4 and 5003.2, and other applicable provisions of this code, the *Building Code of New York State* and the *Mechanical Code of New York State*.

3904.2 Systems and equipment. Systems or equipment used for the extraction of oils from plant material shall be *listed* or *approved* for the specific use. If the system used for extraction of oils and products from plant material is not *listed*, the system shall be reviewed by a *registered design professional*. The *registered design professional* shall review and consider any information provided by the system's designer or manufacturer. For systems and equipment not *listed* for the specific use, a technical report in accordance with Section 3904.3 shall be prepared and submitted to the *fire code official* for review and approval. The firm or individual preparing the technical report shall be *approved* by the *fire code official* prior to performing the analysis.

[NY] 3904.3 Technical report. A technical report, reviewed and approved by the *fire code official,* if required by Section 3904.2, is required prior to the equipment being located or installed at the facility. The report shall be prepared by a *registered design professional* or other professional approved by the *fire code official*.

3904.3.1 Report content. The technical report shall contain all of the following:

1. Manufacturer information.
2. Preparer of record of the technical report.
3. Date of review and report revision history.
4. Signature page, including all of the following:
   - 4.1. Author of the report.
   - 4.2. Date of report.
   - 4.3. Date and signature of *registered design professional* of record performing the design or peer review.

INTERNATIONAL CODE COUNCIL®
Copyright © 2019 ICC & NYSDOS. ALL RIGHTS RESERVED. Accessed by Lauren Gualdino (lgualdino@briarcliffmanor.org), (-) Order Number #100880972 on May 08, 2020 07:05 AM (PDT) pursuant to License Agreement with ICC & NYSDOS. No further reproduction, no

100880972

5. Model number of the item evaluated. If the equipment is provided with a serial number, the serial number shall be included for verification at the time of site inspection.

6. Methodology of the design or peer review process used to determine minimum safety requirements. Methodology shall consider the basis of design, and shall include a code analysis and code path to demonstrate whether specific codes or standards are applicable.

7. Equipment description. A list of every component and subassembly, such as fittings, hose, quick disconnects, gauges, site glass, gaskets, valves, pumps, vessels, containers and switches, of the system or equipment, indicating the manufacturer, model number, material and solvent compatibility. Manufacturer's data sheets shall be provided.

8. A general flow schematic or general process flow diagram of the process. Post-processing or winterization shall be included in this diagram. Primary components of the process equipment shall be identified and match the equipment list required in Item 7. Operating temperatures, pressures and solvent state of matter shall be identified in each primary step or component. A piping and instrumentation diagram (PID or P&ID) shall be provided.

9. Analysis of the vessel(s) if pressurized beyond standard atmospheric pressure. Analysis shall include purchased and fabricated components.

10. Structural analysis for the frame system supporting the equipment.

11. Process safety analysis of the extraction system, from the introduction of raw product to the end of the extraction process.

12. Comprehensive process hazard analysis considering failure modes and points of failure throughout the process. The process hazard analysis shall include a review of emergency procedure information provided by the manufacturer of the equipment or process and not that of the facility, building or room.

13. Review of the assembly instructions, operational and maintenance manuals provided by the manufacturer.

14. List of references used in the analysis.

[NY] 3904.4 Site inspection. Prior to operation of the extraction equipment, where required by the *fire code official*, the engineer of record or *approved* professional, shall inspect the site of the extraction process once equipment has been installed for compliance with the technical report and the building analysis. The engineer of record or *approved* professional shall provide a report of findings and observations of the site inspection to the *fire code official* prior to the approval of the extraction process. If a field inspection report is required by Section 3904.2, the engineer of record or *approved* professional shall confirm that the equipment installed is the same model and type of equipment identified in the technical report.

SECTION 3905
SAFETY SYSTEMS

3905.1 Gas detection. For extraction processes utilizing flammable gases as solvents, a continuous gas detection system shall be provided. The gas detection threshold shall be not greater than 25 percent of the lower explosive limit/lower flammability limit (LEL/LFL) of the materials.

3905.1.1 System design. The flammable gas detection system shall be *listed* or *approved* and shall be calibrated to the types of fuels or gases used for the extraction process. The gas detection system shall be designed to activate when the level of flammable gas exceeds 25 percent of the LFL.

3905.1.2 Gas detection system components. Gas detection system control units shall be *listed* and *labeled* in accordance with UL 864 or UL 2017. Gas detectors shall be *listed* and *labeled* in accordance with UL 2075 for use with the gases and vapors being detected.

3905.1.3 Operation. Activation of the gas detection system shall result in all the following:

1. Initiation of distinct audible and visual alarm signals in the extraction room.

2. Deactivation of all heating systems located in the extraction room.

3. Activation of the mechanical ventilation system, where the system is interlocked with gas detection.

3905.1.4 Failure of the gas detection system. Failure of the gas detection system shall result in the deactivation of the heating system; activation of the mechanical ventilation system where the system is interlocked with the gas detection system; and initiation of a trouble signal to sound in an *approved* location.

3905.1.5 Interlocks. Electrical components within the extraction room shall be interlocked with the gas detection system. Activation of the gas detection system shall disable all light switches and electrical outlets.

3905.2 Emergency shutoff. Extraction processes utilizing gaseous hydrocarbon-based solvents shall be provided with emergency shutoff systems in accordance with Section 5803.1.3.

INTERNATIONAL CODE COUNCIL®
Copyright © 2019 ICC & NYSDOS. ALL RIGHTS RESERVED. Accessed by Lauren Gualdino (lgualdino@briarcliffmanor.org), (-) Order Number #100880972 on May 08, 2020 07:05 AM (PDT) pursuant to License Agreement with ICC & NYSDOS. No further reproduction, no

100880972

[NY] CHAPTER 40
SUGARHOUSE ALTERNATIVE ACTIVITY PROVISIONS

[NY] SECTION 4001 GENERAL

[NY] 4001.1 Scope. *Alternative activities* conducted in *sugarhouses* shall comply with the requirements of this chapter. Where this chapter and other provisions of the *Uniform Code* specify different requirements, this chapter shall govern.

[NY] 4001.2 Permit required. An *alternative activity* shall not be conducted in a *sugarhouse* unless a *permit* has been issued by the local *authority having jurisdiction*.

[NY] 4001.3 Duration of permit. The duration of a *permit* shall not exceed 60 days, consecutive or otherwise, within a 12-month period. No *alternative activity* shall be conducted after daylight hours unless an approved lighting source is provided.

[NY] 4001.4 Application for permit. The building owner or a duly authorized representative shall provide the *authority having jurisdiction* with the following information along with any other information that the *authority having jurisdiction* may reasonably request for the purpose of determining whether or not the *sugarhouse* and proposed *alternative activity* complies with the requirements of this chapter:

1. The location of the *sugarhouse*.
2. A description of each proposed *alternative activity*.
3. The proposed occupant load determined in accordance with Section 4003.5.4.
4. The dates when each *alternative activity* will occur.
5. A fire safety plan and public safety plan shall be submitted when required by Section 4003.1.1 or 4003.3.3.

[NY] 4001.5 Content and posting of a permit. *Permits* shall be posted in a conspicuous location throughout the duration of the *permit* and shall, at a minimum, specify all of the following:

1. The name, address, and contact information of the owner of the *sugarhouse* or if the permit holder is not the owner, the name, address, and relevant contact information of the permit holder.
2. The premises identification pursuant to Section 4003.3.2.
3. Each *alternative activity* authorized by this *permit*.
4. The occupant load of each room or space.
5. Whether or not a fire safety plan or public safety plan is in place.
6. Fire watch requirements (if any).
7. The dates of each *alternative activity*.
8. Any time limitations placed on each *alternative activity*.

[NY] 4001.6 Inspection. Inspections shall be in accordance with Sections 4001.6.1 through 4001.6.3.

[NY] 4001.6.1 General. Prior to a *permit* being issued, the *fire code official* shall inspect the *sugarhouse* to determine if the *building* complies with the requirements of this chapter. All adverse health and safety conditions and structural defects identified during the inspection that would jeopardize the health or safety of the occupants or the general public if an *alternative activity* were permitted shall be remedied prior to a *permit* being issued. The *fire code official* may require an evaluation of the *building* by a *registered design professional* when conditions warrant.

[NY] 4001.6.2 Repairs, alterations, and additions. Repairs made to satisfy the health and safety provisions of this chapter shall be made in accordance with Chapter 4 of the *Existing Building Code of New York State*. Alterations made to satisfy the health and safety provisions of this chapter shall be made in accordance with Sections 602 through 604 of the *Existing Building Code of New York State*. Additions made to an existing *sugarhouse* shall comply with this chapter and Section 606 of the *Existing Building Code of New York State* when such addition is for the sole purpose of accommodating a higher occupant load during an *alternative activity*.

[NY] 4001.6.3 Periodic inspections. The *fire code official* may conduct periodic inspections throughout the duration of a *permit* at his/her discretion. The provisions of this chapter shall not be deemed to be a limitation on the administration and enforcement duties and powers of the *authority having jurisdiction*. Inspections shall include but shall not be limited to the following:

1. The means of egress.
2. The separation of combustibles from ignition sources.
3. Housekeeping.
4. Storage.
5. The presence of dangerous or hazardous materials and conditions.
6. Structural evaluation when conditions warrant.
7. Evaluation of the existing and proposed floor loads.
8. Exposed portions of mechanical, electrical, and plumbing systems.
9. Portions of the *sugarhouse* and outside adjacent areas that must be secured from entry during the *alternative activity*.
10. Sanitary conditions.
11. The fire service features identified in Section 4003.3.

INTERNATIONAL CODE COUNCIL®
Copyright © 2019 ICC & NYSDOS. ALL RIGHTS RESERVED. Accessed by Lauren Gualdino (lgualdino@briarcliffmanor.org), (-) Order Number #100880972 on May 08, 2020 07:05 AM (PDT) pursuant to License Agreement with ICC & NYSDOS. No further reproduction, no

100880972

[NY] SECTION 4002 DEFINITIONS

[NY] 4002.1 Definitions. Words and phrases used in this chapter, but not defined by this section, shall have the meanings defined in this code unless a different meaning is clearly required by the context.

ALTERNATIVE ACTIVITY. An activity not normally conducted in a *sugarhouse*, which supports the maple product industry. Examples of such activities include product sampling, pancake breakfasts, educational tours and activities, and the marketing and sale of merchandise.

BUILDING. Any structure used or intended for supporting or sheltering any use or occupancy. The term *building* shall not include a *temporary greenhouse*.

MAPLE SAP. The sap or sweet water obtained by tapping a maple tree.

MAPLE SUGAR. Sugar made exclusively by the evaporation of pure *maple syrup*.

MAPLE SYRUP. Syrup made exclusively by the evaporation of pure *maple sap*.

PERMIT. A document issued by the *authority having jurisdiction* that authorizes an *alternative activity* to be conducted in a *sugarhouse*.

REGISTERED DESIGN PROFESSIONAL. An individual who is a registered architect (RA) in accordance with Article 147 of the New York State Education Law or a licensed professional engineer (PE) in accordance with Article 145 of the New York State Education Law.

SUGARHOUSE. A *building* used, in whole or in part, for the collection, storage, or processing of *maple sap* into *maple syrup* and/or *maple sugar*.

TECHNICALLY INFEASIBLE. An alteration of a facility that has little likelihood of being accomplished because the existing structural conditions require the removal or alteration of a load-bearing member that is an essential part of the structural frame, or because other existing physical or site constraints prohibit modification or addition of elements, spaces or features which are in full and strict compliance with the minimum requirements for new construction and which are necessary to provide accessibility.

TEMPORARY GREENHOUSE. Specialized agricultural equipment having a framework covered with demountable polyurethane materials or materials of polyurethane nature and lacking a permanent and continuous foundation, which is specifically designed, constructed and used for the culture and propagation of horticultural commodities. A *temporary greenhouse* may include, but is not limited to, the use of heating devices, water and electrical utilities, and supporting poles embedded in noncontinuous concrete.

[NY] SECTION 4003 GENERAL FIRE PROTECTION AND LIFE SAFETY FEATURES

[NY] 4003.1 Fire safety plan and public safety plan. When required, fire safety plans and public safety plans shall be provided in accordance with Sections 4003.1.1 and 4003.1.2.

[NY] 4003.1.1 Fire safety plan. A written fire safety plan in accordance with Section 404.2.2 shall be submitted to the *authority having jurisdiction* as part of a *permit* application when the occupant load resulting from the *alternative activities* is 50 or more people or when required by Section 4003.3.3. Occupant load calculations shall be in accordance with Section 4003.5.4. Fire safety plans shall include the following information in addition to that required by Section 404.2.2:

1. The premises identification pursuant to Section 4003.3.2.
2. A site and floor plan indicating the seating capacity and arrangement, and the location and type of all heating systems; and the location of the approved emergency telephone.
3. A copy of the fire safety plan shall be provided to the fire watch personnel (when required) and shall be posted in a conspicuous place in each room for reference and review by occupants for the duration of the *permit*.

[NY] 4003.1.2 Public safety plan. When a public safety plan is required by other sections of this chapter and fire watch personnel are required, such plan shall be provided to the fire watch personnel. Public safety plans shall be posted in a conspicuous place in each room for reference and review by the occupants for the duration of the *permit*.

[NY] 4003.2 Fire and safety precautions. The fire and safety precautions identified in Sections 4003.2.1 through 4003.2.10 shall be observed during the duration of a permit.

[NY] 4003.2.1 Open-flame decorative devices. The use of open-flame decorative devices in the *sugarhouse* is prohibited.

[NY] 4003.2.2 Cooking operations. Cooking operations shall comply with this section.

[NY] 4003.2.2.1 Open-flame devices. The use of *flammable solids*, butane, or other similar devices that do not pose an ignition hazard shall be permitted for cooking or producing *maple syrup* and/or *maple sugar*.

[NY] 4003.2.2.2 Outdoor cooking. Outdoor cooking that produces sparks or grease vapors shall not be performed within 20 feet (6.096 m) of the *sugarhouse*.

[NY] 4003.2.3 Open outdoor burning. Open outdoor burning shall not be performed within 50 feet (15.24 m) of the *sugarhouse*.

INTERNATIONAL CODE COUNCIL®
Copyright © 2019 ICC & NYSDOS. ALL RIGHTS RESERVED. Accessed by Lauren Gualdino (lgualdino@briarcliffmanor.org), (-) Order Number #100880972 on May 08, 2020 07:05 AM (PDT) pursuant to License Agreement with ICC & NYSDOS. No further reproduction, no

100880972

[NY] 4003.2.4 Smoking. Smoking shall be prohibited in a *sugarhouse* during an *alternative activity*.

[NY] 4003.2.5 Highly combustible materials. The display or storage of highly combustible materials in main exit access aisles, corridors, or within 5 feet (1.524 m) of required entrances to *exits* and exterior exit doors is prohibited during an *alternative activity*. Highly combustible materials shall include, but shall not be limited to, *flammable* or *combustible liquids,* liquefied flammable gases, oxidizing materials, and pyroxylin plastics.

[NY] 4003.2.6 Agricultural products. The storage of hay, straw, *seed cotton* or similar agricultural products in the *sugarhouse* is prohibited during an *alternative activity*. Firewood used in the production of *maple syrup* and *maple sugar* shall not be considered an agricultural product. The storage of such agricultural products adjacent to the *sugarhouse* is prohibited unless a clear horizontal distance equal to the height of a pile is maintained between such storage and the *sugarhouse*. Storage shall be limited to stacks of 100 tons (91 metric tons) each. Stacks shall be separated by a minimum of 20 feet (6.096 m) of clear space except when approved by the *fire code official*.

[NY] 4003.2.7 Decorative materials. Decorative materials stored or displayed in a *sugarhouse* during an *alternative activity* shall comply with Sections 806 and 807. For the purpose of compliance with this Chapter, an *alternative activity* shall be classified in the occupancy that the *alternative activity* most nearly resembles, as determined by the *fire code official*.

[NY] 4003.2.8 Fireworks, pyrotechnic displays, and sparkling devices. *Fireworks*, pyrotechnic displays, and sparkling devices shall not be permitted in the *sugarhouse* or on the premises during an *alternative activity*.

[NY] 4003.2.9 Secured areas. Rooms or areas that are not associated with an *alternative activity* and deemed a hazard by the *fire code official* shall be secured from entry by the public or otherwise marked with a sign indicating "KEEP OUT."

[NY] 4003.2.10 Temporary greenhouse. *Alternative activities* are prohibited in *temporary greenhouses*.

[NY] 4003.3 Fire service features. The following fire service features shall be provided prior to a *permit* being issued.

[NY] 4003.3.1 Emergency responder access. Approved access shall be provided to the *sugarhouse*. *Fire apparatus access roads*, where provided, shall be in accordance with Section 503 and Appendix D. Where *fire apparatus access roads* are not provided, a public safety plan for gatherings shall be provided if deemed necessary by the *fire code official*. Said plan shall be in accordance with Section 403.12.2.

[NY] 4003.3.2 Premises identification. When the *sugarhouse* has an address, it shall be identified in accordance with Section 505. When the *sugarhouse* does not have an address, the location of the structure shall be identified by monuments, signs, or other means visible from the *public way* and detailed directions to such structure provided to the *authority having jurisdiction*.

[NY] 4003.3.3 Fire protection water supply. An approved water supply capable of supplying the required fire flow for fire protection shall be provided to the *sugarhouse* in accordance with Section 507 except when fire watch personnel in accordance with this section and Sections 403.12.1 through 403.12.1.2 have been provided and a fire safety plan in accordance with Section 404.2.2 has been provided.

[NY] 4003.3.4 Carbon monoxide alarms. *Carbon monoxide alarms* shall be installed in *sugarhouses* during an *alternative activity*. *Carbon monoxide alarms* shall be installed in accordance with Section 915. Combination alarms shall not be allowed.

[NY] 4003.3.5 Smoke alarms. *Smoke alarms* shall be installed in an approved location on each floor and in accordance with Sections 907.2.10.3 and 907.2.10.4.

[NY] 4003.3.6 Portable fire extinguishers. Portable fire extinguishers shall be provided in the *sugarhouse* during an *alternative activity* as specified in Section 906.

[NY] 4003.3.7 Emergency telephone service. An approved, readily accessible emergency telephone shall be provided in an approved location. The premises identification pursuant to Section 4003.3.2 and the telephone number of the fire department shall be posted adjacent to the telephone. Where a land line telephone is not installed, a mobile telephone shall be provided.

[NY] 4003.4 Equipment and appliances. Equipment used in the *sugarhouse* shall comply with Sections 4003.4.1 through 4003.4.5.

[NY] 4003.4.1 General. Equipment and appliances required by this chapter or by any other requirement of the *Uniform Code* shall be listed and labeled for the application for which it is intended.

[NY] 4003.4.2 Cooking equipment and appliances. Cooking equipment and appliances shall comply with Sections 4003.4.2.1 through 4003.4.2.3.

[NY] 4003.4.2.1 Installation and use. Each cooking appliance that may be used during an *alternative activity* shall be installed and used in accordance with the manufacturer's instructions, the appliance's listing and labeling terms, and any other applicable provision of the *Uniform Code*.

[NY] 4003.4.2.2 Portable fire extinguishers for commercial cooking equipment. Portable fire extinguishers shall be in accordance with Sections 906.4 through 906.4.2.

[NY] 4003.4.2.3 Type I hoods. A *Type I hood* shall be installed in accordance with Section 607 when required by Section 607.2.

[NY] 4003.4.2.4 Cooking appliances. Portable cooking appliances that produce grease vapors are prohibited. Electric table top appliances shall be allowed when approved by the *fire code official*.

[NY] 4003.4.3 Temporary heating equipment.

INTERNATIONAL CODE COUNCIL®
Copyright © 2019 ICC & NYSDOS. ALL RIGHTS RESERVED. Accessed by Lauren Gualdino (lgualdino@briarcliffmanor.org), (-) Order Number #100880972 on May 08, 2020 07:05 AM (PDT) pursuant to License Agreement with ICC & NYSDOS. No further reproduction, no

100880972

[NY] 4003.4.3.1 Portable unvented heaters. The use of portable, unvented fuel-fired heating equipment shall be prohibited.

[NY] 4003.4.3.2 Portable, electric space heaters. Portable, electric space heaters shall comply with Section 604.10.

[NY] 4003.4.4 Liquefied petroleum gases. The storage, handling, installation, and use of liquefied petroleum gas (LP-gas) and LP-gas equipment and appliances shall comply with the applicable provisions of Chapter 61.

[NY] 4003.4.4.1 Portable LP-gas containers in buildings. Portable LP-gas containers shall comply with Section 6103.2.1.1 and shall only be allowed in *buildings* under the following situations:

1. Portable LP-gas containers used for demonstrations and public exhibitions in accordance with Section 6103.2.1.5.
2. Portable LP-gas containers that supply approved self-contained torch assemblies or similar appliances in accordance with Section 6103.2.1.6.
3. LP-gas commercial food service appliances used for food preparation in accordance with Section 6103.2.1.7.
4. LP-gas cooking devices having an *LP-gas container* that does not exceed a water capacity of 2.5 pounds (1.13 kg).

[NY] 4003.4.5 Portable generator separation. Portable generators and other internal combustion power sources shall be separated from the *sugarhouse,* agricultural products, and combustible material, such as leaves, weeds, dry grass or similar debris, by a minimum of 10 feet (3.048 m).

[NY] 4003.5 Means of egress. The *means of egress* in the *sugarhouse* shall be maintained in accordance with Section 1031 and Sections 4003.5.1 through 4003.5.14.

[NY] 4003.5.1 Exit discharge locations. The maximum travel distance from any point within the *sugarhouse* to an *exit discharge* shall not exceed 75 feet (22.86 m).

[NY] 4003.5.2 Alternative egress doors. Overhead doors (garage type), sliding doors, and similar alternatives to side-hinged swinging doors shall be permitted within the means of egress system, provided that they remain fully open and are secured to prevent them from being closed during an *alternative activity.*

[NY] 4003.5.3 Locks and latches. Egress doors shall be readily operable from the egress side without the use of a key or special knowledge or effort, except as permitted by Section 1010.1.9.4.

[NY] 4003.5.4 Occupant load. The *occupant load* of the *sugarhouse* or portion thereof during an *alternative activity* shall not exceed the lesser of either of the following:

1. The capacity of the *means of egress* calculated in accordance with Sections 1005.1 and 1006.3.2.
2. One hundred fifty persons calculated in accordance with Section 1004.1 and based on the most restrictive occupant load factor applicable to all proposed alternative activities.

[NY] 4003.5.4.1 Occupancy. For the purpose of compliance with Sections 1005.1 and 1006.3.2, an existing *sugarhouse* shall be considered as a Group U occupancy. For the purpose of compliance with Section 1004.1, an *alternative activity* shall be classified as the function that it most nearly resembles in Table 1004.5.

[NY] 4003.5.4.2 Reduced occupant load. The *fire code official* may require a reduction in the allowable *occupant load* when it is apparent that the floor loading resulting from the proposed *alternative activity* cannot be sustained by the existing structural members. The reduced occupant load shall be determined by a *registered design professional.*

[NY] 4003.5.5 Posting of occupant load. The *occupant load* of each room or space shall be posted in a conspicuous place near the main *exit* or *exit access doorway* from the room or space. Posted signs shall be of an approved, legible, permanent design and shall be maintained by the *owner* or authorized agent.

[NY] 4003.5.6 Overcrowding and general life safety. Overcrowding or admittance of any person beyond the approved capacity of the *sugarhouse* or a portion thereof shall not be allowed. The *fire code official*, upon finding any overcrowding conditions or obstructions in aisles, passageways or other *means of egress*, or upon finding any condition that constitutes a life safety hazard, may stop an event until such condition or obstruction is corrected. The building owner or authorized agent shall be responsible to ensure *buildings*, or portions thereof, are not overcrowded.

[NY] 4003.5.7 Exit signs. Exit signs shall comply with Sections 4003.5.7.1 through 4003.5.7.5.

[NY] 4003.5.7.1 Where required. *Exits* and exit access doors shall be marked by an approved exit sign readily visible from any direction of egress travel. The path of egress travel to *exits* and within *exits* shall be marked by readily visible exit signs to clearly indicate the direction of egress travel in cases where the *exit* or the path of egress travel is not immediately visible to the occupants. Intervening means of egress doors within *exits* shall be marked by exit signs. Exit sign placement shall be such that no point in an exit access corridor or *exit passageway* is more than 100 feet (30.48 m) or the listed viewing distance for the sign, whichever is less, from the nearest visible exit sign.

Exceptions:

1. Exit signs are not required in rooms or areas that require only one *exit* or *exit access.*
2. Main exterior exit doors or gates that are obviously and clearly identifiable as *exits* need not have exit signs where approved by the *fire code official.*

[NY] 4003.5.7.2 Graphics. Every exit sign and directional exit sign shall meet the requirements of Section 1013.6.1.

INTERNATIONAL CODE COUNCIL®
Copyright © 2019 ICC & NYSDOS. ALL RIGHTS RESERVED. Accessed by Lauren Gualdino (lgualdino@briarcliffmanor.org), (-) Order Number #100880972 on May 08, 2020 07:05 AM (PDT) pursuant to License Agreement with ICC & NYSDOS. No further reproduction, no

100880972

[NY] 4003.5.7.3 Stairway exit signs. A tactile sign stating "EXIT" and complying with ICC A117.1 shall be provided adjacent to each door to an egress stairway.

[NY] 4003.5.7.4 Exit sign illumination. Exit signs shall be internally or externally illuminated. The face of an exit sign illuminated from an external source shall have an intensity of not less than 5 footcandles (54 lux). Internally illuminated signs shall provide equivalent luminance and be listed for the purpose.

Exceptions:

1. Approved self-luminous exit signs that provide evenly illuminated letters shall have a minimum luminance of 0.06 foot lamberts ($0.21 cd/m^2$).
2. Tactile signs required by Section 1013.4 need not be provided with illumination.

[NY] 4003.5.7.5 Power source. Exit signs shall be illuminated at all times. To ensure continued illumination for a duration of not less than 90 minutes in case of primary power loss, the sign illumination means shall be connected to an *emergency power system* provided from storage batteries, unit equipment or an on-site generator. The installation of the *emergency power system* shall be in accordance with Section 1203.

Exception: Approved exit sign illumination means that provide continuous illumination independent of external power sources for a duration of not less than 90 minutes, in case of primary power loss, are not required to be connected to an emergency electrical system.

[NY] 4003.5.8 Means of egress illumination. Illumination shall be provided in the *means of egress* in accordance with Section 4003.5.8.1. Under emergency power, *means of egress* illumination shall comply with Section 4003.5.8.2. *Sugarhouses* not authorized to conduct *alternative activities* after daylight hours and where natural lighting is provided shall not be required to comply with the provisions of this section when approved by the *fire code official*.

[NY] 4003.5.8.1 Illumination required. The *means of egress* serving a room or space shall be illuminated at all times that the room or space is occupied.

Exception: Aisle accessways.

[NY] 4003.5.8.1.1 Illumination level under normal power. The *means of egress* illumination level shall be not less than 1 foot candle (11 lux) at the walking surface.

[NY] 4003.5.8.2 Emergency power for illumination. The power supply for *means of egress* illumination shall comply with Sections 1008.3 through 1008.3.5.

[NY] 4003.5.8.2.1 Maintenance. The *emergency power system* shall be maintained as required by Section 1203.

[NY] 4003.5.9 Unobstructed means of egress. The *means of egress* shall be unobstructed at all times and shall be obvious to the occupants.

[NY] 4003.5.10 Aisles. The minimum width of *aisles* and *aisle accessways* serving as a portion of the exit access in the *means of egress* system shall comply with one of the following:

1. Forty-two inches (1067 mm) for *aisles* having seating on both sides.

   Exceptions:

   1. Thirty-six inches (914 mm) where the *aisle* serves less than 50 seats.
   2. Thirty inches (762 mm) where the *aisle* does not serve more than 14 seats.

2. Thirty-six inches (914 mm) for level or ramped *aisles* having seating on only one side.

   Exception: For other than ramped aisles that serve as part of an accessible route, 30 inches (762 mm) where the ramped aisle does not serve more than 14 seats.

3. In sale and marketing areas, the minimum clear aisle width shall be determined by Section 1005.1 for the *occupant load* served, but shall not be less than that required for corridors by Section 1020.2.

[NY] 4003.5.11 Aisle accessway. *Aisle accessway* shall comply with this section.

[NY] 4003.5.11.1 Width. The minimum width of *aisle accessways* serving non-fixed tables shall comply with Section 1029.13.1.1. The minimum width of *aisle accessways* serving non-fixed chairs shall comply with Sections 1029.13.2 through 1029.13.2.2.

[NY] 4003.5.11.2 Length. The length of travel along the *aisle accessway* serving non-fixed tables shall comply with Section 1029.13.1.2.

[NY] 4003.5.12 Handrails. *Handrails* shall be provided in accordance with Sections 4003.5.12.1 through 4003.5.12.3.

[NY] 4003.5.12.1 Ramp handrails. Ramps with a rise greater than 6 inches (152 mm) shall have *handrails* on both sides complying with Section 1014.

[NY] 4003.5.12.2 Stairway handrails. Stairways shall have *handrails* on at least one side. *Handrails* shall be located so that all portions of the stairway width required for egress capacity are within 44 inches (1118 mm) of a *handrail.*

Exception: Aisle stairs provided with a center *handrail* are not required to have additional *handrails.*

[NY] 4003.5.12.3 Height. *Handrail* height, measured above stair tread nosing, shall be uniform, not less than 30 inches (762 mm) and not more than 42 inches (1067 mm).

[NY] 4003.5.13 Stairway discharge identification. An *interior exit stairway* or *ramp* that continues below its

INTERNATIONAL CODE COUNCIL®
Copyright © 2019 ICC & NYSDOS. ALL RIGHTS RESERVED. Accessed by Lauren Gualdino (lgualdino@briarcliffmanor.org), (-) Order Number #100880972 on May 08, 2020 07:05 AM (PDT) pursuant to License Agreement with ICC & NYSDOS. No further reproduction, no

100880972

level of *exit discharge* shall be arranged and marked to make the direction of egress to a public way readily identifiable.

Exception: Stairways that continue one-half story beyond their levels of *exit discharge* need not be provided with barriers where the *exit discharge* is obvious.

[NY] 4003.5.14 Exit discharge. The *exit discharge* from the *sugarhouse* shall comply with Section 1028.

[NY] SECTION 4004 TOILET FACILITIES

[NY] 4004.1 Toilet facilities. Toilet facilities in accordance with this section and Sections 403.1 and 403.1.1 of the *Plumbing Code of New York State* shall be provided for occupants partaking in an *alternative activity*. Where a proposed *alternative activity* is not specifically described in Table 403.1 of the *Plumbing Code of New York State*, such activity shall be classified in the occupancy that the *alternative activity* most nearly resembles, as determined by the *building official*.

[NY] 4004.1.1 Portable restrooms. Portable restrooms that include water closets with lavatories (or hand sanitizers in lieu of lavatories) shall be permitted as toilet facilities to satisfy the requirements of this section. When portable restrooms are provided, at least one shall be accessible and located on an accessible route.

[NY] 4004.1.2 Location of toilet facilities. Travel distance to toilet facilities shall not exceed 500 feet (152 m) and shall not be located more than one story above or below the space required to be provided with a toilet facility. Toilet facilities may be located in adjacent *buildings* that are under the same ownership or control as the *sugarhouse*.

[NY] 4004.1.3 Door locking. The egress door for toilet rooms serving multiple occupants shall not be lockable from inside the toilet room.

[NY] 4004.1.4 Private sewage disposal systems. An onsite sewage treatment system serving a *sugarhouse* shall have the capacity to serve the *alternative activity*. Portable restrooms in accordance with this section shall be provided when such system does not have the required capacity or if capacity cannot be determined.

[NY] SECTION 4005 ACCESSIBILITY

[NY] 4005.1 Accessibility. *Sugarhouses* shall be made accessible in accordance with this section to individuals partaking in an *alternative activity* unless providing accessibility is *technically infeasible*. When it is *technically infeasible* to provide accessibility, accessibility shall be provided to the maximum extent that is feasible. When it is feasible to provide accessibility, such accessibility shall accommodate the widest range of disabilities practicable. (For example, if providing accessibility in conformance with this section to individuals who use wheelchairs would be *technically infeasible,* the facility shall be made accessible to persons with other types of disabilities, such as those who use crutches, those who have impaired vision or hearing, or other impairments.) Work required by this section shall comply with Chapter 11 of the *Building Code of New York State*.

Exception: Accessible elements required by this chapter shall not be required when the area of *alternative activity*, the existing entrance, and the interconnecting rooms and/or spaces are not accessible and alterations and/or repairs to any such area or entrance is not proposed or otherwise required by this chapter.

[NY] 4005.1.1 General. *Sugarhouses* shall have at least one accessible building entrance that serves an area of *alternative activity* and either of the following:

1. An accessible passenger loading zone and an accessible route.
2. Accessible parking and an accessible route.

[NY] 4005.1.1.1 Accessible route and elements. An accessible route shall connect an accessible passenger loading zone or accessible parking to the accessible building entrance.

[NY] 4005.1.2 Alterations and repairs. Portions of a *sugarhouse* that are altered and/or repaired for compliance with other sections of this chapter shall be made accessible when such alterations and/or repairs are located in an area where an *alternative activity* will occur or will affect accessibility to an area where an *alternative activity* will occur from an accessible entrance required by Section 4005.1.1.

[NY] 4005.1.2.1 Alternative activity area expansion. Alterations made to a *sugarhouse* for the sole purpose of accommodating a higher occupant load during an alternative activity shall include the accessible features described in Section 4005.1.1 in addition to at least one accessible route from an accessible building entrance to the *alternative activity* area.

[NY] 4005.1.3 Additions. Additions made to an existing *sugarhouse* shall comply with this section and Section 305.5 of the *Existing Building Code of New York State* when such addition is for the sole purpose of accommodating a higher occupant load during an *alternative activity*.

[NY] 4005.1.4 Ramps. Ramps provided to satisfy the requirements of this section shall be permitted to comply with Section 305.8.5 of the *Existing Building Code of New York State*.

[NY] 4005.1.5 Thresholds. Existing thresholds that have a beveled edge on each side with a slope not exceeding 1 unit vertical to 2 units horizontal may have a maximum height of $^{3}/_{4}$ inch (19 mm). New thresholds shall comply with the requirements for new construction.

INTERNATIONAL CODE COUNCIL®
Copyright © 2019 ICC & NYSDOS. ALL RIGHTS RESERVED. Accessed by Lauren Gualdino (lgualdino@briarcliffmanor.org), (-) Order Number #100880972 on May 08, 2020 07:05 AM (PDT) pursuant to License Agreement with ICC & NYSDOS. No further reproduction, no

100880972

CHAPTERS 41 through 49

RESERVED

INTERNATIONAL CODE COUNCIL®
Copyright © 2019 ICC & NYSDOS. ALL RIGHTS RESERVED. Accessed by Lauren Gualdino (lgualdino@briarcliffmanor.org), (-) Order Number #100880972 on May 08, 2020 07:05 AM (PDT) pursuant to License Agreement with ICC & NYSDOS. No further reproduction, no

100880972

INTERNATIONAL CODE COUNCIL®
Copyright © 2019 ICC & NYSDOS. ALL RIGHTS RESERVED. Accessed by Lauren Gualdino (lgualdino@briarcliffmanor.org), (-) Order Number #100880972 on May 08, 2020 07:05 AM (PDT) pursuant to License Agreement with ICC & NYSDOS. No further reproduction, no

100880972

Part V—Hazardous Materials

CHAPTER 50

HAZARDOUS MATERIALS—GENERAL PROVISIONS

SECTION 5001 GENERAL

5001.1 Scope. Prevention, control and mitigation of dangerous conditions related to storage, dispensing, use and handling of hazardous materials shall be in accordance with this chapter.

This chapter shall apply to all hazardous materials, including those materials regulated elsewhere in this code, except that where specific requirements are provided in other chapters, those specific requirements shall apply in accordance with the applicable chapter. Where a material has multiple hazards, all hazards shall be addressed.

Exceptions:

1. In retail or wholesale sales occupancies, the quantities of medicines, foodstuff or consumer products and cosmetics containing not more than 50 percent by volume of water-miscible liquids and with the remainder of the solutions not being flammable shall not be limited, provided that such materials are packaged in individual containers not exceeding 1.3 gallons (5 L).
2. Quantities of alcoholic beverages in retail or wholesale sales occupancies shall not be limited providing the liquids are packaged in individual containers not exceeding 1.3 gallons (5 L).
3. Application and release of pesticide and agricultural products and materials intended for use in weed abatement, erosion control, soil amendment or similar applications where applied in accordance with the manufacturers' instructions and label directions.
4. The off-site transportation of hazardous materials where in accordance with Department of Transportation (DOTn) regulations.
5. Building materials not otherwise regulated by this code.
6. Refrigeration systems (see Section 605).
7. Stationary storage battery systems regulated by Section 1206.2.
8. The display, storage, sale or use of fireworks and *explosives* in accordance with Chapter 56.
9. *Corrosives* utilized in personal and household products in the manufacturers' original consumer packaging in Group M occupancies.
10. The storage of distilled spirits and wines in wooden barrels and casks.
11. The use of wall-mounted dispensers containing alcohol-based hand rubs classified as Class I or II liquids where in accordance with Section 5705.5.

5001.1.1 Waiver. The provisions of this chapter are waived where the *fire code official* determines that such enforcement is preempted by other codes, statutes or ordinances. The details of any action granting such a waiver shall be recorded and entered in the files of the code enforcement agency.

5001.2 Material classification. Hazardous materials are those chemicals or substances defined as such in this code. Definitions of hazardous materials shall apply to all hazardous materials, including those materials regulated elsewhere in this code.

5001.2.1 Mixtures. Mixtures shall be classified in accordance with hazards of the mixture as a whole. Mixtures of hazardous materials shall be classified in accordance with nationally recognized reference standards; by an *approved* qualified organization, individual, or Safety Data Sheet (SDS); or by other *approved* methods.

5001.2.2 Hazard categories. Hazardous materials shall be classified according to hazard categories. The categories include materials regulated by this chapter and materials regulated elsewhere in this code.

5001.2.2.1 Physical hazards. The material categories listed in this section are classified as *physical hazards*. A material with a primary classification as a *physical hazard* can also pose a *health hazard*.

1. *Explosives* and blasting agents.
2. *Combustible liquids*.
3. Flammable solids, liquids and gases.
4. Organic peroxide solids or liquids.
5. Oxidizer, solids or liquids.
6. Oxidizing gases.
7. Pyrophoric solids, liquids or gases.
8. *Unstable (reactive) materials;* solids, liquids or gases.
9. *Water-reactive materials* solids or liquids.
10. *Cryogenic fluids*.

5001.2.2.2 Health hazards. The material categories listed in this section are classified as *health hazards*. A material with a primary classification as a *health hazard* can also pose a *physical hazard*.

1. Highly toxic and toxic materials.

INTERNATIONAL CODE COUNCIL®
Copyright © 2019 ICC & NYSDOS. ALL RIGHTS RESERVED. Accessed by Lauren Gualdino (lgualdino@briarcliffmanor.org), (-) Order Number #100880972 on May 08, 2020 07:05 AM (PDT) pursuant to License Agreement with ICC & NYSDOS. No further reproduction, no

100880972

2. *Corrosive* materials.

5001.3 Performance-based design alternative. Where *approved* by the *fire code official*, buildings and facilities where hazardous materials are stored, used or handled shall be permitted to comply with this section as an alternative to compliance with the other requirements set forth in this chapter and Chapters 51 through 67.

5001.3.1 Objective. The objective of Section 5001.3 is to protect people and property from the consequences of unauthorized discharge, fires or explosions involving hazardous materials.

5001.3.2 Functional statements. Performance-based design alternatives are based on the following functional statements:

1. Provide safeguards to minimize the risk of unwanted releases, fires or explosions involving hazardous materials.
2. Provide safeguards to minimize the consequences of an unsafe condition involving hazardous materials during normal operations and in the event of an abnormal condition.

5001.3.3 Performance requirements. Where safeguards, systems, documentation, written plans or procedures, audits, process hazards analysis, mitigation measures, engineering controls or construction features are required by Sections 5001.3.3.1 through 5001.3.3.18, the details of the design alternative shall be subject to approval by the *fire code official*. The details of actions granting the use of the design alternatives shall be recorded and entered in the files of the jurisdiction.

5001.3.3.1 Properties of hazardous materials. The physical- and health-hazard properties of hazardous materials on site shall be known and shall be made readily available to employees, neighbors and the *fire code official*.

5001.3.3.2 Reliability of equipment and operations. Equipment and operations involving hazardous materials shall be designed, installed and maintained to ensure that they reliably operate as intended.

5001.3.3.3 Prevention of unintentional reaction or release. Safeguards shall be provided to minimize the risk of an unintentional reaction or release that could endanger people or property.

5001.3.3.4 Spill mitigation. Spill containment systems or means to render a spill harmless to people or property shall be provided where a spill is determined to be a plausible event and where such an event would endanger people or property.

5001.3.3.5 Ignition hazards. Safeguards shall be provided to minimize the risk of exposing combustible hazardous materials to unintended sources of ignition.

5001.3.3.6 Protection of hazardous materials. Safeguards shall be provided to minimize the risk of exposing hazardous materials to a fire or physical damage whereby such exposure could endanger or lead to the endangerment of people or property.

5001.3.3.7 Exposure hazards. Safeguards shall be provided to minimize the risk of and limit damage from a fire or explosion involving explosive hazardous materials whereby such fire or explosion could endanger or lead to the endangerment of people or property.

5001.3.3.8 Detection of gas or vapor release. Where a release of hazardous materials gas or vapor would cause immediate harm to persons or property, means of mitigating the dangerous effects of a release shall be provided.

5001.3.3.9 Reliable power source. Where a power supply is relied on to prevent or control an emergency condition that could endanger people or property, the power supply shall be from a reliable source.

5001.3.3.10 Ventilation. Where ventilation is necessary to limit the risk of creating an emergency condition resulting from normal or abnormal operations, means of ventilation shall be provided.

5001.3.3.11 Process hazard analyses. Process hazard analyses shall be conducted to ensure reasonably the protection of people and property from dangerous conditions involving hazardous materials.

5001.3.3.12 Prestartup safety review. Written documentation of prestartup safety review procedures shall be developed and enforced to ensure that operations are initiated in a safe manner. The process of developing and updating such procedures shall involve the participation of affected employees.

5001.3.3.13 Operating and emergency procedures. Written documentation of operating procedures and procedures for emergency shut down shall be developed and enforced to ensure that operations are conducted in a safe manner. The process of developing and updating such procedures shall involve the participation of affected employees.

5001.3.3.14 Management of change. A written plan for management of change shall be developed and enforced. The process of developing and updating the plan shall involve the participation of affected employees.

5001.3.3.15 Emergency plan. A written emergency plan shall be developed to ensure that proper actions are taken in the event of an emergency, and the plan shall be followed if an emergency condition occurs. The process of developing and updating the plan shall involve the participation of affected employees.

5001.3.3.16 Accident procedures. Written procedures for investigation and documentation of accidents shall be developed, and accidents shall be investigated and documented in accordance with these procedures.

5001.3.3.17 Consequence analysis. Where an accidental release of hazardous materials could endanger people or property, either on or off-site, an analysis of the expected consequences of a plausible release shall be performed and utilized in the analysis and selection of active and passive hazard mitigation controls.

INTERNATIONAL CODE COUNCIL®
Copyright © 2019 ICC & NYSDOS. ALL RIGHTS RESERVED. Accessed by Lauren Gualdino (lgualdino@briarcliffmanor.org), (-) Order Number #100880972 on May 08, 2020 07:05 AM (PDT) pursuant to License Agreement with ICC & NYSDOS. No further reproduction, no

100880972

5001.3.3.18 Safety audits. Safety audits shall be conducted on a periodic basis to verify compliance with the requirements of this section.

5001.4 Retail and wholesale storage and display. For retail and wholesale storage and display of nonflammable solid and nonflammable or noncombustible liquid hazardous materials in Group M occupancies and storage in Group S occupancies, see Section 5003.11.

[NY] 5001.5 Permits. Permits shall be required as set forth in Sections 105.2 and 105.6.

Where required by the *fire code official*, permittees shall apply for approval to permanently close a storage, use or handling facility. Such application shall be submitted not less than 30 days prior to the termination of the storage, use or handling of hazardous materials. The *fire code official* is authorized to require that the application be accompanied by an *approved* facility closure plan in accordance with Section 5001.6.3.

5001.5.1 Hazardous Materials Management Plan. Where required by the *fire code official*, an application for a permit shall include a Hazardous Materials Management Plan (HMMP). The HMMP shall include a facility site plan designating the following:

1. Access to each storage and use area.
2. Location of emergency equipment.
3. Location where liaison will meet emergency responders.
4. Facility evacuation meeting point locations.
5. The general purpose of other areas within the building.
6. Location of all above-ground and underground tanks and their appurtenances including, but not limited to, sumps, vaults, below-grade treatment systems and piping.
7. The hazard classes in each area.
8. Locations of all *control areas* and Group H occupancies.
9. Emergency *exits*.

5001.5.2 Hazardous Materials Inventory Statement (HMIS). Where required by the *fire code official*, an application for a permit shall include an HMIS, such as Superfund Amendments and Reauthorization Act of 1986 (SARA) Title III, Tier II Report or other *approved* statement. The HMIS shall include the following information:

1. Product name.
2. Component.
3. Chemical Abstract Service (CAS) number.
4. Location where stored or used.
5. Container size.
6. Hazard classification.
7. Amount in storage.
8. Amount in use-*closed systems*.
9. Amount in use-*open systems*.

5001.6 Facility closure. Facilities shall be placed out of service in accordance with Sections 5001.6.1 through 5001.6.3.

5001.6.1 Temporarily out-of-service facilities. Facilities that are temporarily out of service shall continue to maintain a permit and be monitored and inspected.

5001.6.2 Permanently out-of-service facilities. Facilities for which a permit is not kept current or is not monitored and inspected on a regular basis shall be deemed to be permanently out of service and shall be closed in an *approved* manner. Where required by the *fire code official*, permittees shall apply for approval to close permanently storage, use or handling facilities. The *fire code official* is authorized to require that such application be accompanied by an *approved* facility closure plan in accordance with Section 5001.6.3.

5001.6.3 Facility closure plan. Where a facility closure plan is required in accordance with Section 5001.5 to terminate storage, dispensing, handling or use of hazardous materials, it shall be submitted to the *fire code official* not less than 30 days prior to facility closure. The plan shall demonstrate that hazardous materials that are stored, dispensed, handled or used in the facility will be transported, disposed of or reused in a manner that eliminates the need for further maintenance and any threat to public health and safety.

SECTION 5002
DEFINITIONS

5002.1 Definitions. The following terms are defined in Chapter 2:

BOILING POINT.
CEILING LIMIT.
CHEMICAL.
CHEMICAL NAME.
CLOSED CONTAINER.
CONTAINER.
CONTROL AREA.
CYLINDER.
DAY BOX.
DEFLAGRATION.
DESIGN PRESSURE.
DETACHED BUILDING.
DISPENSING.
EXCESS FLOW CONTROL.
EXHAUSTED ENCLOSURE.
EXPLOSION.
FLAMMABLE VAPORS OR FUMES.
GAS CABINET.
GAS ROOM.

INTERNATIONAL CODE COUNCIL®
Copyright © 2019 ICC & NYSDOS. ALL RIGHTS RESERVED. Accessed by Lauren Gualdino (lgualdino@briarcliffmanor.org), (-) Order Number #100880972 on May 08, 2020 07:05 AM (PDT) pursuant to License Agreement with ICC & NYSDOS. No further reproduction, no

100880972

HANDLING.
HAZARDOUS MATERIALS.
HEALTH HAZARD.
IMMEDIATELY DANGEROUS TO LIFE AND HEALTH (IDLH).
INCOMPATIBLE MATERIALS.
LIQUID.
LOWER EXPLOSIVE LIMIT (LEL).
LOWER FLAMMABLE LIMIT (LFL).
MAXIMUM ALLOWABLE QUANTITY PER CONTROL AREA.
NORMAL TEMPERATURE AND PRESSURE (NTP).
OUTDOOR CONTROL AREA.
PERMISSIBLE EXPOSURE LIMIT (PEL).
PESTICIDE.
PHYSICAL HAZARD.
PRESSURE VESSEL.
SAFETY CAN.
SAFETY DATA SHEET (SDS).
SECONDARY CONTAINMENT.
SEGREGATED.
SOLID.
STORAGE, HAZARDOUS MATERIALS.
SYSTEM.
TANK, ATMOSPHERIC.
TANK, PORTABLE.
TANK, STATIONARY.
TANK VEHICLE.
UNAUTHORIZED DISCHARGE.
USE (MATERIAL).
VAPOR PRESSURE.

SECTION 5003
GENERAL REQUIREMENTS

5003.1 Scope. The storage, use and handling of all hazardous materials shall be in accordance with this section.

5003.1.1 Maximum allowable quantity per control area. The *maximum allowable quantity per control area* shall be as specified in Tables 5003.1.1(1) through 5003.1.1(4).

For retail and wholesale storage and display in Group M occupancies and Group S storage, see Section 5003.11.

5003.1.2 Conversion. Where quantities are indicated in pounds and where the weight per gallon of the liquid is not provided to the *fire code official*, a conversion factor of 10 pounds per gallon (1.2 kg/L) shall be used.

5003.1.3 Quantities not exceeding the maximum allowable quantity per control area. The storage, use and handling of hazardous materials in quantities not exceeding the *maximum allowable quantity per control area* indicated in Tables 5003.1.1(1) through 5003.1.1(4) shall be in accordance with Sections 5001 and 5003.

5003.1.4 Quantities exceeding the maximum allowable quantity per control area. The storage and use of hazardous materials in quantities exceeding the *maximum allowable quantity per control area* indicated in Tables 5003.1.1(1) through 5003.1.1(4) shall be in accordance with this chapter.

5003.2 Systems, equipment and processes. Systems, equipment and processes utilized for storage, dispensing, use or handling of hazardous materials shall be in accordance with Sections 5003.2.1 through 5003.2.9.

5003.2.1 Design and construction of containers, cylinders and tanks. Containers, cylinders and tanks shall be designed and constructed in accordance with *approved* standards. Containers, cylinders, tanks and other means used for containment of hazardous materials shall be of an *approved* type. Pressure vessels not meeting DOTn requirements for transportation shall comply with the ASME *Boiler and Pressure Vessel Code*.

5003.2.2 Piping, tubing, valves and fittings. Piping, tubing, valves, and fittings conveying hazardous materials shall be designed and installed in accordance with ASME B31 or other *approved* standards, and shall be in accordance with Sections 5003.2.2.1 and 5003.2.2.2.

5003.2.2.1 Design and construction. Piping, tubing, valves, fittings and related components used for hazardous materials shall be in accordance with the following:

1. Piping, tubing, valves, fittings and related components shall be designed and fabricated from materials that are compatible with the material to be contained and shall be of adequate strength and durability to withstand the pressure, structural and seismic stress and exposure to which they are subject.
2. Piping and tubing shall be identified in accordance with ASME A13.1 to indicate the material conveyed.
3. Manual valves or automatic remotely activated fail-safe emergency shutoff valves shall be installed on supply piping and tubing and provided with *ready access* at the following locations:
   3.1. The point of use.
   3.2. The tank, cylinder or bulk source.

INTERNATIONAL CODE COUNCIL®
Copyright © 2019 ICC & NYSDOS. ALL RIGHTS RESERVED. Accessed by Lauren Gualdino (lgualdino@briarcliffmanor.org), (-) Order Number #100880972 on May 08, 2020 07:05 AM (PDT) pursuant to License Agreement with ICC & NYSDOS. No further reproduction, no

Copyright © 2019 ICC & NYSDOS. ALL RIGHTS RESERVED. Accessed by Lauren Gualdino (lgualdino@briarcliffmanor.org). (-) Order Number #100880972 on May 08, 2020 07:05 AM (PDT) pursuant to License Agreement with ICC & NYSDOS. No further reproduction, no

TABLE 5003.1.1(1)
MAXIMUM ALLOWABLE QUANTITY PER CONTROL AREA OF HAZARDOUS MATERIALS POSING A PHYSICAL HAZARD[a, j, m, n, p]

MATERIAL	CLASS	GROUP WHEN THE MAXIMUM ALLOWABLE QUANTITY IS EXCEEDED	STORAGE[b]			USE-CLOSED SYSTEMS[b]			USE-OPEN SYSTEMS[b]	
			Solid pounds (cubic feet)	Liquid gallons (pounds)	Gas (cubic feet at NTP)	Solid pounds (cubic feet)	Liquid gallons (pounds)	Gas (cubic feet at NTP)	Solid pounds (cubic feet)	Liquid gallons (pounds)
Combustible dust	NA	H-2	See Note q	NA	NA	See Note q	NA	NA	See Note q	NA
Combustible fibers[q]	Loose Baled[o]	H-3	(100) (1,000)	NA	NA	(100) (1,000)	NA	NA	(20) (200)	NA
Combustible liquid[c, i]	II IIIA IIIB	H-2 or H-3 H-2 or H-3 NA	NA	120[d, e] 330[d, e] 13,200[e, f]	NA	NA	120[d] 330[d] 13,200[f]	NA	NA	30[d] 80[d] 3,300[f]
Cryogenic Flammable	NA	H-2	NA	45[d]	NA	NA	45[d]	NA	NA	10[d]
Cryogenic Inert	NA	NA	NA	NA	NL	NA	NA	NL	NA	NA
Cryogenic Oxidizing	NA	H-3	NA	45[d]	NA	NA	45[d]	NA	NA	10[d]
Explosives	Division 1.1 Division 1.2 Division 1.3 Division 1.4 Division 1.4G Division 1.5 Division 1.6	H-1 H-1 H-1 or H-2 H-3 H-3 H-1 H-1	1[e, g] 1[e, g] 5[e, g] 50[e, g] 125[e, l] 1[e, g] 1[e, g]	(1)[e, g] (1)[e, g] (5)[e, g] (50)[e, g] NA (1)[e, g] NA	NA	0.25[g] 0.25[g] 1[g] 50[g] NA 0.25[g] NA	(0.25)[g] (0.25)[g] (1)[g] (50)[g] NA (0.25)[g] NA	NA	0.25[g] 0.25[g] 1[g] NA NA 0.25[g] NA	(0.25)[g] (0.25)[g] (1)[g] NA NA (0.25)[g] NA
Flammable gas	Gaseous Liquefied	H-2	NA	NA (150)[d, e]	1,000[d, e] NA	NA	NA (150)[d, e]	1,000[d, e] NA	NA	NA
Flammable liquid[e]	IA IB and IC	H-2 or H-3	NA	30[d, e] 120[d, e]	NA	NA	30[d] 120[d]	NA	NA	10d 30d
Flammable liquid, combination (IA, IB, IC)	NA	H-2 or H-3	NA	120[d, e, h]	NA	NA	120[d, h]	NA	NA	30[d, h]
Flammable solid	NA	H-3	125[d, e]	NA	NA	125[d]	NA	NA	25[d]	NA

(continued)

100880972

TABLE 5003.1.1(1)—continued
MAXIMUM ALLOWABLE QUANTITY PER CONTROL AREA OF HAZARDOUS MATERIALS POSING A PHYSICAL HAZARD[a, j, m, n, p]

MATERIAL	CLASS	GROUP WHEN THE MAXIMUM ALLOWABLE QUANTITY IS EXCEEDED	STORAGE[b]			USE-CLOSED SYSTEMS[b]			USE-OPEN SYSTEMS[b]	
			Solid pounds (cubic feet)	Liquid gallons (pounds)	Gas (cubic feet at NTP)	Solid pounds (cubic feet)	Liquid gallons (pounds)	Gas (cubic feet at NTP)	Solid pounds (cubic feet)	Liquid gallons (pounds)
Inert Gas	Gaseous Liquefied	NA NA	NA NA	NA NA	NL NL	NA NA	NA NA	NL NL	NA NA	NA NA
Organic peroxide	UD I II III IV V	H-1 H-2 H-3 H-3 NA NA	1[e, g] 5[d, e] 50[d, e] 125[d, e] NL NL	(1)[e, g] (5)[d, e] (50)[d, e] (125)[d, e] NL NL	NA	0.25[g] 1[d] 50[d] 125[d] NL NL	(0.25)[g] (1)[d] (50)[d] (125)[d] NL NL	NA	0.25[g] 1[d] 10[d] 25[d] NL NL	(0.25)[g] (1)[d] (10)[d] (25)[d] NL NL
Oxidizer	4 3[k] 2 1	H-1 H-2 or H-3 H-3 NA	1[g] 10[d, e] 250[d, e] 4,000[e,f]	(1)[e, g] (10)[d, e] (250)[d, e] (4,000)[e,f]	NA	0.25[g] 2[d] 250[d] 4,000[f]	(0.25)[g] (2)[d] (250)[d] (4,000)[f]	NA	0.25[g] 2[d] 50[d] 1,000[f]	(0.25)[g] (2)[d] (50)[d] (1,000)[f]
Oxidizing gas	Gaseous Liquefied	H-3	NA	NA (150)[d, e]	1,500[d, e] NA	NA	NA (150)[d, e]	1,500[d, e] NA	NA	NA
Pyrophoric	NA	H-2	4[e, g]	(4)[e, g]	50[e, g]	1[g]	(1)[g]	10[e, g]	0	0
Unstable (reactive)	4 3 2 1	H-1 H-1 or H-2 H-3 NA	1[e, g] 5[d, e] 50[d, e] NL	(1)[e, g] (5)[d, e] (50)[d, e] NL	10[e, g] 50[d, e] 750[d, e] NL	0.25[g] 1[d] 50[d] NL	(0.25)[g] (1)[d] (50)[d] NL	2[e, g] 10[d, e] 750[d, e] NL	0.25[g] 1[d] 10[d] NL	(0.25)[g] (1)[d] (10)[d] NL
Water reactive	3 2 1	H-2 H-3 NA	5[d, e] 50[d, e] NL	(5)[d, e] (50)[d, e] NL	NA	5[d] 50[d] NL	(5)[d] (50)[d] NL	NA	1[d] 10[d] NL	(1)[d] (10)[d] NL

For SI: 1 cubic foot = 0.02832 m^3, 1 pound = 0.454 kg, 1 gallon = 3.785 L.

NA = Not Applicable, NL = Not Limited, UD = Unclassified Detonable.

a. For use of control areas, see Section 5003.8.3.

b. The aggregate quantity in use and storage shall not exceed the quantity listed for storage.

c. The quantities of alcoholic beverages in retail and wholesale sales occupancies shall not be limited providing the liquids are packaged in individual containers not exceeding 1.3 gallons. In retail and wholesale sales occupancies, the quantities of medicines, foodstuff or consumer products and cosmetics containing not more than 50 percent by volume of water-miscible liquids with the remainder of the solutions not being flammable shall not be limited, provided that such materials are packaged in individual containers not exceeding 1.3 gallons.

d. Maximum allowable quantities shall be increased 100 percent in buildings equipped throughout with an approved automatic sprinkler system in accordance with Section 903.3.1.1. Where Note e applies, the increase for both notes shall be applied accumulatively.

(footnotes continued)

Copyright © 2019 ICC & NYSDOS. ALL RIGHTS RESERVED. Accessed by Lauren Gualdino (lgualdino@briarcliffmanor.org). (-) Order Number #100880972 on May 08, 2020 07:05 AM (PDT) pursuant to License Agreement with ICC & NYSDOS. No further reproduction, no

100880972

TABLE 5003.1.1(1)—continued
MAXIMUM ALLOWABLE QUANTITY PER CONTROL AREA OF HAZARDOUS MATERIALS POSING A PHYSICAL HAZARD[a, j, m, n, p]

e. Maximum allowable quantities shall be increased 100 percent where stored in approved storage cabinets, day boxes, gas cabinets, gas rooms, exhausted enclosures or in listed safety cans in accordance with Section 5003.9.10. Where Note d applies, the increase for both notes shall be applied accumulatively.
f. Quantities shall not be limited in a building equipped throughout with an approved automatic sprinkler system in accordance with Section 903.3.1.1.
g. Allowed only in buildings equipped throughout with an approved automatic sprinkler system.
h. Containing not more than the maximum allowable quantity per control area of Class IA, Class IB or Class IC flammable liquids.
i. The maximum allowable quantity shall not apply to fuel oil storage complying with Section 603.3.2.
j. Quantities in parenthesis indicate quantity units in parenthesis at the head of each column.
k. A maximum quantity of 220 pounds of solid or 22 gallons of liquid Class 3 oxidizers is allowed where such materials are necessary for maintenance purposes, operation or sanitation of equipment where the storage containers and the manner of storage are approved.
l. Net weight of pyrotechnic composition of the fireworks. Where the net weight of the pyrotechnic composition of the fireworks is not known, 25 percent of the gross weight of the fireworks including packaging shall be used.
m. For gallons of liquids, divide the amount in pounds by 10 in accordance with Section 5003.1.2.
n. For storage and display quantities in Group M and storage quantities in Group S occupancies complying with Section 5003.11, see Table 5003.11.1.
o. Densely-packed baled cotton that complies with the packing requirements of ISO 8115 shall not be included in this material class.
p. The following shall not be included in determining the maximum allowable quantities:
    1. Liquid or gaseous fuel in fuel tanks on vehicles.
    2. Liquid or gaseous fuel in fuel tanks on motorized equipment operated in accordance with this code.
    3. Gaseous fuels in piping systems and fixed appliances regulated by the *Fuel Gas Code of New York State*.
    4. Liquid fuels in piping systems and fixed appliances regulated by the *Mechanical Code of New York State*.
    5. Alcohol-based hand rubs classified as Class I or II liquids in dispensers that are installed in accordance with Sections 5705.5 and 5705.5.1. The location of the alcohol-based hand rub (ABHR) dispensers shall be provided in the construction documents.
q. Where manufactured, generated or used in such a manner that the concentration and conditions create a fire or explosion hazard based on information prepared.

Copyright © 2019 ICC & NYSDOS. ALL RIGHTS RESERVED. Accessed by Lauren Gualdino (lgualdino@briarcliffmanor.org). (-) Order Number #100880972 on May 08, 2020 07:05 AM (PDT) pursuant to License Agreement with ICC & NYSDOS. No further reproduction, no

100880972

TABLE 5003.1.1(2)
MAXIMUM ALLOWABLE QUANTITY PER CONTROL AREA OF HAZARDOUS MATERIAL POSING A HEALTH HAZARD[a, c, f, h, i]

MATERIAL	STORAGE[b]			USE-CLOSED SYSTEMS[b]			USE-OPEN SYSTEMS[b]	
	Solid pounds[d, e]	Liquid gallons (pounds)[d, e]	Gas cubic feet at NTP (pounds)[d]	Solid pounds[d]	Liquid gallons (pounds)[d]	Gas cubic feet at NTP (pounds)[d]	Solid pounds[d]	Liquid gallons (pounds)[d]
Corrosives	5,000	500	Gaseous 810[e] Liquefied (150)	5,000	500	Gaseous 810[e] Liquefied (150)	1,000	100
Highly Toxics	10	(10)	Gaseous 20[g] Liquefied (4)[g]	10	(10)	Gaseous 20[g] Liquefied (4)[g]	3	(3)
Toxics	500	(500)	Gaseous 810[e] Liquefied (150)[e]	500	(500)	Gaseous 810[e] Liquefied (150)[e]	125	(125)

For SI: 1 cubic foot = 0.02832 m^3, 1 pound = 0.454 kg, 1 gallon = 3.785 L.

a. For use of control areas, see Section 5003.8.3.

b. The aggregate quantity in use and storage shall not exceed the quantity listed for storage.

c. In retail and wholesale sales occupancies, the quantities of medicines, foodstuff or consumer products and cosmetics, containing not more than 50 percent by volume of water-miscible liquids and with the remainder of the solutions not being flammable, shall not be limited, provided that such materials are packaged in individual containers not exceeding 1.3 gallons.

d. Maximum allowable quantities shall be increased 100 percent in buildings equipped throughout with an approved automatic sprinkler system in accordance with Section 903.3.1.1. Where Note e also applies, the increase for both notes shall be applied accumulatively.

e. Maximum allowable quantities shall be increased 100 percent where stored in approved storage cabinets, gas cabinets or exhausted enclosures. Where Note d applies, the increase for both notes shall be applied accumulatively.

f. For storage and display quantities in Group M and storage quantities in Group S occupancies complying with Section 5003.11, see Table 5003.11.1.

g. Allowed only where stored in approved exhausted gas cabinets or exhausted enclosures.

h. Quantities in parentheses indicate quantity units in parentheses at the head of each column.

i. For gallons of liquids, divide the amount in pounds by 10 in accordance with Section 5003.1.2.

Copyright © 2019 ICC & NYSDOS. ALL RIGHTS RESERVED. Accessed by Lauren Gualdino (lgualdino@briarcliffmanor.org). (-) Order Number #100880972 on May 08, 2020 07:05 AM (PDT) pursuant to License Agreement with ICC & NYSDOS. No further reproduction, no

100880972

TABLE 5003.1.1(3)
MAXIMUM ALLOWABLE QUANTITY PER CONTROL AREA OF HAZARDOUS MATERIALS POSING A PHYSICAL HAZARD IN AN OUTDOOR CONTROL AREA[a, b, c, d]

MATERIAL	CLASS	STORAGE[b]			USE-CLOSED SYSTEMS[b]			USE-OPEN SYSTEMS[b]	
		Solid pounds (cubic feet)	Liquid gallons (pounds)[d]	Gas cubic feet at NTP	Solid pounds (cubic feet)	Liquid gallons (pounds)[d]	Gas cubic feet at NTP	Solid pounds (cubic feet)	Liquid gallons (pounds)[d]
Flammable gas	Gaseous Liquefied	Not Applicable	Not Applicable (300)	3,000 Not Applicable	Not Applicable	Not Applicable (150)	1,500 Not Applicable	Not Applicable	Not Applicable
Flammable solid	Not Applicable	500	Not Applicable	Not Applicable	250	Not Applicable	Not Applicable	50	Not Applicable
Inert Gas Cryogenic inert	Gaseous Liquefied Not Applicable	Not Applicable Not Applicable Not Applicable	Not Applicable Not Applicable Not Applicable	Not Limited Not Limited Not Limited	Not Applicable Not Applicable Not Applicable	Not Applicable Not Applicable Not Applicable	Not Limited Not Limited Not Limited	Not Applicable Not Applicable Not Applicable	Not Applicable Not Applicable Not Applicable
Organic peroxide	Unclassified Detonable	1	(1)	Not Applicable	0.25	(0.25)	Not Applicable	0.25	(0.25)
Organic peroxide	I II III IV V	20 200 500 1,000 Not Limited	(20) (200) (500) (1,000) Not Limited	Not Applicable	10 100 250 500 Not Limited	(10) (100) (250) (500) Not Limited	Not Applicable	2 20 50 100 Not Limited	(2) (20) (50) (100) Not Limited
Oxidizer	4 3 2 1	2 40 1,000 Not Limited	(2) (40) (1,000) Not Limited	Not Applicable	1 20 500 Not Limited	(1) (20) (500) Not Limited	Not Applicable	0.25 4 100 Not Limited	(0.25) (4) (100) Not Limited
Oxidizing gas	Gaseous Liquefied	Not Applicable	Not Applicable (600)	6,000 Not Applicable	Not Applicable	Not Applicable (300)	1,500 Not Applicable	Not Applicable	Not Applicable
Pyrophoric materials	Not Applicable	8	(8)	100	4	(4)	10	0	0
Unstable (reactive)	4 3 2 1	2 20 200 Not Limited	(2) (20) (200) Not Limited	20 200 1,000 1,500	1 10 100 Not Limited	(1) (10) (100) Not Limited	2 10 250 Not Limited	0.25 1 10 Not Limited	(0.25) (1) (10) Not Limited
Water reactive	3 2 1	20 200 Not Limited	(20) (200) Not Limited	Not Applicable	10 100 Not Limited	(10) (100) Not Limited	Not Applicable	1 10 Not Limited	(1) (10) Not Limited

For SI: 1 pound = 0.454 kg, 1 gallon = 3.785 L, 1 cubic foot = 0.02832 m^3.

a. For gallons of liquids, divide the amount in pounds by 10 in accordance with Section 5003.1.2.

b. The aggregate quantities in storage and use shall not exceed the quantity listed for storage.

c. The aggregate quantity of nonflammable solid and nonflammable or noncombustible liquid hazardous materials allowed in outdoor storage per single property under the same ownership or control used for retail or wholesale sales is allowed to exceed the maximum allowable quantity per control area where such storage is in accordance with Section 5003.11.

d. Quantities in parentheses indicate quantity units in parentheses at the head of each column.

INTERNATIONAL CODE COUNCIL®
Copyright © 2019 ICC & NYSDOS. ALL RIGHTS RESERVED. Accessed by Lauren Guadalino (lguadalino@briarcliffmanor.org). (-) Order Number #100880972 on May 08, 2020 07:05 AM (PDT) pursuant to License Agreement with ICC & NYSDOS. No further reproduction, no
100880972

TABLE 5003.1.1(4)
MAXIMUM ALLOWABLE QUANTITY PER CONTROL AREA OF HAZARDOUS MATERIALS POSING A HEALTH HAZARD IN AN OUTDOOR CONTROL AREA[a, b, c, f]

MATERIAL	STORAGE			USE-CLOSED SYSTEMS			USE-OPEN SYSTEMS	
	Solid pounds	Liquid gallons (pounds)	Gas cubic feet at NTP (pounds)	Solid pounds	Liquid gallons (pounds)	Gas cubic feet at NTP (pounds)	Solid pounds	Liquid gallons (pounds)
Corrosives	20,000	2,000	Gaseous 1,620 Liquefied (300)	10,000	1,000	Gaseous 810 Liquefied (150)	1,000	100
Highly toxics	20	(20)	Gaseous 40[d] Liquefied (8)[d]	10	(10)	Gaseous 20[d] Liquefied (4)[d]	3	(3)
Toxics	1,000	(l,000)[e]	Gaseous 1,620 Liquefied (300)	500	50[e]	Gaseous 810 Liquefied (150)	125	(125)[e]

For SI: 1 cubic foot = 0.02832 m^3, 1 pound = 0.454 kg, 1 gallon = 3.785 L, 1 pound per square inch absolute = 6.895 kPa,°C = [(°F) - 32]/1.8.

a. For gallons of liquids, divide the amount in pounds by 10 in accordance with Section 5003.1.2.
b. The aggregate quantities in storage and use shall not exceed the quantity listed for storage.
c. The aggregate quantity of nonflammable solid and nonflammable or noncombustible liquid hazardous materials allowed in outdoor storage per single property under the same ownership or control used for retail or wholesale sales is allowed to exceed the maximum allowable quantity per control area where such storage is in accordance with Section 5003.11.
d. Allowed only where used in approved exhausted gas cabinets, exhausted enclosures or under fume hoods.
e. The maximum allowable quantity per control area for toxic liquids with vapor pressures in excess of 1 psia at 77°F shall be the maximum allowable quantity per control area listed for highly toxic liquids.
f. Quantities in parentheses indicate quantity units in parentheses at the head of each column.

Copyright © 2019 ICC & NYSDOS. ALL RIGHTS RESERVED. Accessed by Lauren Gualdino (lgualdino@briarcliffmanor.org). (-) Order Number #100880972 on May 08, 2020 07:05 AM (PDT) pursuant to License Agreement with ICC & NYSDOS. No further reproduction, no

100880972

100880972

4. Manual emergency shutoff valves and controls for remotely activated emergency shutoff valves shall be identified and the location shall have access clearly visible and indicated by means of a sign.
5. Backflow prevention or check valves shall be provided where the backflow of hazardous materials could create a hazardous condition or cause the unauthorized discharge of hazardous materials.

Exceptions:

1. Piping for inlet connections designed to prevent backflow.
2. Piping for pressure relief devices.

5003.2.2.2 Additional regulations for supply piping for health-hazard materials. Supply piping and tubing for gases and liquids having a health-hazard ranking of 3 or 4 in accordance with NFPA 704 shall be in accordance with ASME B31.3 and the following:

1. Piping and tubing utilized for the transmission of highly toxic, toxic or highly volatile *corrosive* liquids and gases shall have welded, threaded or flanged connections throughout except for connections located within a ventilated enclosure if the material is a gas, or an *approved* method of drainage or containment is provided for connections if the material is a liquid.
2. Piping and tubing shall not be located within *corridors*, within any portion of a *means of egress* required to be enclosed in fire-resistance-rated construction or in concealed spaces in areas not classified as Group H occupancies.

Exception: Piping and tubing within the space defined by the walls of *corridors* and the floor or roof above or in concealed spaces above other occupancies where installed in accordance with Section 415.11.6.4 of the *Building Code of New York State* for Group H-5 occupancies.

5003.2.3 Equipment, machinery and alarms. Equipment, machinery and required detection and alarm systems associated with the use, storage or handling of hazardous materials shall be *listed* or *approved*.

5003.2.4 Installation of tanks. Installation of tanks shall be in accordance with Sections 5003.2.4.1 through 5003.2.4.2.1.

5003.2.4.1 Underground tanks. Underground tanks used for the storage of liquid hazardous materials shall be provided with secondary containment. In lieu of providing secondary containment for an underground tank, an above-ground tank in an underground vault complying with Section 5704.2.8 shall be permitted.

5003.2.4.2 Above-ground tanks. Above-ground stationary tanks used for the storage of hazardous materials shall be located and protected in accordance with the requirements for outdoor storage of the particular material involved.

Exception: Above-ground tanks that are installed in vaults complying with Section 5303.16 or 5704.2.8 shall not be required to comply with location and protection requirements for outdoor storage.

5003.2.4.2.1 Marking. Above-ground stationary tanks shall be marked as required by Section 5003.5.

5003.2.5 Empty containers and tanks. Empty containers and tanks previously used for the storage of hazardous materials shall be free from residual material and vapor as defined by DOTn, the Resource Conservation and Recovery Act (RCRA) or other regulating authority or maintained as specified for the storage of hazardous material.

5003.2.6 Maintenance. In addition to the requirements of Section 5003.2.3, equipment, machinery and required detection and alarm systems associated with hazardous materials shall be maintained in an operable condition. Defective containers, cylinders and tanks shall be removed from service, repaired or disposed of in an *approved* manner. Defective equipment or machinery shall be removed from service and repaired or replaced. Required detection and alarm systems shall be replaced or repaired where defective.

5003.2.6.1 Tanks out of service for 90 days. Stationary tanks not used for a period of 90 days shall be properly safeguarded or removed in an *approved* manner. Such tanks shall have the fill line, gauge opening and pump connection secured against tampering. Vent lines shall be properly maintained.

5003.2.6.1.1 Return to service. Tanks that are to be placed back in service shall be tested in an *approved* manner.

5003.2.6.2 Defective containers and tanks. Defective containers and tanks shall be removed from service, repaired in accordance with *approved* standards or disposed of in an *approved* manner.

5003.2.7 Liquid-level limit control. Atmospheric tanks having a capacity greater than 500 gallons (1893 L) and that contain hazardous material liquids shall be equipped with a liquid-level limit control or other *approved* means to prevent overfilling of the tank.

5003.2.8 Seismic protection. Machinery and equipment utilizing hazardous materials shall be braced and anchored in accordance with the seismic design requirements of the *Building Code of New York State* for the seismic design category in which the machinery or equipment is classified.

[NY] 5003.2.9 Testing. The equipment, devices and systems listed in Section 5003.2.9.1 shall be tested at the time of installation and at one of the intervals listed in Section

INTERNATIONAL CODE COUNCIL®
Copyright © 2019 ICC & NYSDOS. ALL RIGHTS RESERVED. Accessed by Lauren Gualdino (lgualdino@briarcliffmanor.org), (-) Order Number #100880972 on May 08, 2020 07:05 AM (PDT) pursuant to License Agreement with ICC & NYSDOS. No further reproduction, no

100880972

5003.2.9.2. Records of the tests conducted or maintenance performed shall be maintained in accordance with the provisions of Section 107.2.1.

Exceptions:

1. Periodic testing shall not be required where *approved* written documentation is provided stating that testing will damage the equipment, device or system and the equipment, device or system is maintained as specified by the manufacturer.
2. Periodic testing shall not be required for equipment, devices and systems that fail in a fail-safe manner.
3. Periodic testing shall not be required for equipment, devices and systems that self-diagnose and report trouble. Records of the self-diagnosis and trouble reporting shall be made available to the *fire code official*.
4. Periodic testing shall not be required if system activation occurs during the required test cycle for the components activated during the test cycle.
5. *Approved* maintenance in accordance with Section 5003.2.6 that is performed not less than annually or in accordance with an *approved* schedule shall be allowed to meet the testing requirements set forth in Sections 5003.2.9.1 and 5003.2.9.2.

5003.2.9.1 Equipment, devices and systems requiring testing. The following equipment, systems and devices shall be tested in accordance with Sections 5003.2.9 and 5003.2.9.2.

1. Gas detection systems, alarms and automatic emergency shutoff valves required by Section 6004.2.2.10 for highly toxic and toxic gases.
2. Limit control systems for liquid level, temperature and pressure required by Sections 5003.2.7, 5004.8 and 5005.1.4.
3. Emergency alarm systems and supervision required by Sections 5004.9 and 5005.4.4.
4. Monitoring and supervisory systems required by Sections 5004.10 and 5005.1.6.
5. Manually activated shutdown controls required by Section 6403.1.1.1 for *compressed gas* systems conveying pyrophoric gases.

5003.2.9.2 Testing frequency. The equipment, systems and devices listed in Section 5003.2.9.1 shall be tested at one of the following frequencies:

1. Not less than annually.
2. In accordance with the *approved* manufacturer's requirements.
3. In accordance with *approved* recognized industry standards.
4. In accordance with an *approved* schedule.

5003.3 Release of hazardous materials. Hazardous materials in any quantity shall not be released into a sewer, storm drain, ditch, drainage canal, creek, stream, river, lake or tidal waterway or on the ground, sidewalk, street, highway or into the atmosphere.

Exceptions:

1. The release or emission of hazardous materials is allowed where in compliance with federal, state or local governmental agencies, regulations or permits.
2. The release of pesticides is allowed where used in accordance with registered label directions.
3. The release of fertilizer and soil amendments is allowed where used in accordance with manufacturer's specifications.

5003.3.1 Unauthorized discharges. In the event hazardous materials are released in quantities reportable under state, federal or local regulations, the *fire code official* shall be notified and the following procedures required in accordance with Sections 5003.3.1.1 through 5003.3.1.4.

5003.3.1.1 Records. Records of the unauthorized discharge of hazardous materials by the permittee shall be maintained.

5003.3.1.2 Preparation. Provisions shall be made for controlling and mitigating unauthorized discharges.

5003.3.1.3 Control. Where an unauthorized discharge caused by primary container failure is discovered, the involved primary container shall be repaired or removed from service.

5003.3.1.4 Responsibility for cleanup. The person, firm or corporation responsible for an unauthorized discharge shall institute and complete all actions necessary to remedy the effects of such unauthorized discharge, whether sudden or gradual, without cost to the jurisdiction. Where deemed necessary by the *fire code official*, cleanup can be initiated by the fire department or by an authorized individual or firm. Costs associated with such cleanup shall be borne by the *owner*, operator or other person responsible for the unauthorized discharge.

5003.4 Safety Data Sheets. Safety Data Sheets (SDS) shall be readily available on the premises for hazardous materials regulated by this chapter. Where a hazardous substance is developed in a laboratory, available information shall be documented.

Exception: Designated hazardous waste.

5003.5 Hazard identification signs. Unless otherwise exempted by the *fire code official*, visible hazard identification signs as specified in NFPA 704 for the specific material contained shall be placed on stationary containers and aboveground tanks and at entrances to locations where hazardous materials are stored, dispensed, used or handled in quantities requiring a permit and at specific entrances and locations designated by the *fire code official*.

5003.5.1 Markings. Individual containers, cartons or packages shall be conspicuously marked or labeled in an approved manner. Rooms or cabinets containing *com-*

INTERNATIONAL CODE COUNCIL®
Copyright © 2019 ICC & NYSDOS. ALL RIGHTS RESERVED. Accessed by Lauren Gualdino (lgualdino@briarcliffmanor.org), (-) Order Number #100880972 on May 08, 2020 07:05 AM (PDT) pursuant to License Agreement with ICC & NYSDOS. No further reproduction, no

100880972

pressed gases shall be conspicuously labeled: COMPRESSED GAS.

5003.6 Signs. Signs and markings required by Sections 5003.5 and 5003.5.1 shall not be obscured or removed, shall be in English as a primary language or in symbols allowed by this code, shall be durable, and the size, color and lettering shall be *approved*.

5003.7 Sources of ignition. Sources of ignition shall comply with Sections 5003.7.1 through 5003.7.3.

5003.7.1 Smoking. Smoking shall be prohibited and "No Smoking" signs provided as follows:

1. In rooms or areas where hazardous materials are stored or dispensed or used in *open systems* in amounts requiring a permit in accordance with Section 5001.5.
2. Within 25 feet (7620 mm) of outdoor storage, dispensing or open use areas.
3. Facilities or areas within facilities that have been designated as totally "no smoking" shall have "No Smoking" signs placed at all entrances to the facility or area. Designated areas within such facilities where smoking is permitted either permanently or temporarily, shall be identified with signs designating that smoking is permitted in these areas only.
4. In rooms or areas where flammable or combustible hazardous materials are stored, dispensed or used.

Signs required by this section shall be in English as a primary language or in symbols allowed by this code and shall comply with Section 310.

5003.7.2 Open flames. Open flames and high-temperature devices shall not be used in a manner that creates a hazardous condition and shall be *listed* for use with the hazardous materials stored or used.

5003.7.3 Industrial trucks. Powered industrial trucks used in areas designated as hazardous (classified) locations shall be in accordance with Section 309.2.

5003.8 Construction requirements. Buildings, *control areas*, enclosures and cabinets for hazardous materials shall be in accordance with Sections 5003.8.1 through 5003.8.7.2.

5003.8.1 Buildings. Buildings, or portions thereof, in which hazardous materials are stored, handled or used shall be constructed in accordance with the *Building Code of New York State*.

5003.8.2 Required detached buildings. Group H occupancies containing quantities of hazardous materials in excess of those set forth in Table 5003.8.2 shall be in detached buildings.

5003.8.3 Control areas. *Control areas* shall comply with Sections 5003.8.3.1 through 5003.8.3.5.3.

Exception: Higher education laboratories in accordance with Chapter 38 of this code and Section 428 of the *Building Code of New York State*.

5003.8.3.1 Construction requirements. *Control areas* shall be separated from each other by *fire barriers* constructed in accordance with Section 707 of the *Building Code of New York State* or *horizontal assemblies* constructed in accordance with Section 711 of the *Building Code of New York State*, or both.

5003.8.3.2 Percentage of maximum allowable quantities. The percentage of maximum allowable quantities of hazardous materials per *control area* allowed at each story within a building shall be in accordance with Table 5003.8.3.2.

5003.8.3.3 Number. The maximum number of *control areas* per floor within a building shall be in accordance with Table 5003.8.3.2.

5003.8.3.4 Fire-resistance-rating requirements. The required *fire-resistance rating* for *fire barriers* shall be in accordance with Table 5003.8.3.2. The floor assembly of the *control area* and the construction supporting the floor of the *control area* shall have a *fire-resistance rating* of not less than 2 hours.

Exception: The floor assembly of the *control area* and the construction supporting the floor of the *control area* is allowed to be 1-hour *fire-resistance* rated in buildings of Types IIA, IIIA, IV and VA construction, provided that both of the following conditions exist:

1. The building is equipped throughout with an *automatic sprinkler system* in accordance with Section 903.3.1.1.
2. The building is three stories or less above grade plane.

5003.8.3.5 Hazardous materials in Group M display and storage areas and in Group S storage areas. Hazardous materials located in Group M and Group S occupancies shall be in accordance with Sections 5003.8.3.5.1 through 5003.8.3.5.3.

5003.8.3.5.1 Nonflammable solids and nonflammable and noncombustible liquids. The aggregate quantity of nonflammable solid and nonflammable or noncombustible liquid hazardous materials allowed within a single *control area* of a Group M display and storage area or a Group S storage area is allowed to exceed the *maximum allowable quantities per control area* specified in Tables 5003.1.1(1) and 5003.1.1(2) without classifying the building or use as a Group H occupancy, provided that the materials are displayed and stored in accordance with Section 5003.11.

5003.8.3.5.2 Flammable and combustible liquids. In Group M occupancy wholesale and retail sales uses, indoor storage of flammable and *combustible liquids* shall not exceed the *maximum allowable quantities per control area* as indicated in Table 5704.3.4.1, provided that the materials are displayed and stored in accordance with Chapter 57.

5003.8.3.5.3 Aerosols. The maximum quantity of aerosol products in Group M occupancy retail display areas, storage areas adjacent to retail display

INTERNATIONAL CODE COUNCIL®
Copyright © 2019 ICC & NYSDOS. ALL RIGHTS RESERVED. Accessed by Lauren Gualdino (lgualdino@briarcliffmanor.org), (-) Order Number #100880972 on May 08, 2020 07:05 AM (PDT) pursuant to License Agreement with ICC & NYSDOS. No further reproduction, no

100880972

areas and retail storage areas shall be in accordance with Chapter 51.

5003.8.4 Gas rooms. Where a gas room is used to increase the *maximum allowable quantity per control area* or provided to comply with the provisions of Chapter 60, the gas room shall be in accordance with Sections 5003.8.4.1 and 5003.8.4.2.

5003.8.4.1 Construction. Gas rooms shall be protected with an *automatic sprinkler system.* Gas rooms shall be separated from the remainder of the building in accordance with the requirements of the *Building Code of New York State* based on the occupancy group into which it has been classified.

5003.8.4.2 Ventilation system. The ventilation system for gas rooms shall be designed to operate at a negative pressure in relation to the surrounding area. Highly toxic and toxic gases shall also comply with Section 6004.2.2.6. The ventilation system shall be installed in accordance with the *Mechanical Code of New York State*.

TABLE 5003.8.2
DETACHED BUILDING REQUIRED

A DETACHED BUILDING IS REQUIRED WHERE THE QUANTITY OF MATERIAL EXCEEDS THAT LISTED HEREIN			
Material	**Class**	**Solids and liquids (tons)[a, b]**	**Gases (cubic feet)[a, b]**
Explosives	Division 1.1 Division 1.2 Division 1.3 Division 1.4 Division 1.4[c] Division 1.5 Division 1.6	Maximum Allowable Quantity Maximum Allowable Quantity Maximum Allowable Quantity Maximum Allowable Quantity 1 Maximum Allowable Quantity Maximum Allowable Quantity	Not Applicable
Oxidizers	Class 4	Maximum Allowable Quantity	Maximum Allowable Quantity
Unstable (reactives) detonable	Class 3 or 4	Maximum Allowable Quantity	Maximum Allowable Quantity
Oxidizer, liquids and solids	Class 3 Class 2	1,200 2,000	Not Applicable
Organic peroxides	Detonable Class I Class II Class III	Maximum Allowable Quantity Maximum Allowable Quantity 25 50	Not Applicable
Unstable (reactives) nondetonable	Class 3 Class 2	1 25	2,000 10,000
Water reactives	Class 3 Class 2	1 25	Not Applicable
Pyrophoric gases	Not Applicable	Not Applicable	2,000

For SI: 1 pound = 0.454 kg, 1 cubic foot = 0.02832 m^3, 1 ton = 2000 lbs. = 907.2 kg.

a. For materials that are detonable, the distance to other buildings or lot lines shall be in accordance with Section 415.6 of the *Building Code of New York State* or Chapter 56 based on the trinitrotoluene (TNT) equivalence of the material, whichever is greater.

b. "Maximum Allowable Quantity" means the maximum allowable quantity per control area set forth in Table 5003.1.1(1).

c. Limited to Division 1.4 materials and articles, including articles packaged for shipment, that are not regulated as an explosive under Bureau of Alcohol, Tobacco, Firearms and Explosives regulations, or unpackaged articles used in process operations that do not propagate a detonation or deflagration between articles, providing the net explosive weight of individual articles does not exceed 1 pound.

TABLE 5003.8.3.2
DESIGN AND NUMBER OF CONTROL AREAS

STORY		**PERCENTAGE OF THE MAXIMUM ALLOWABLE QUANTITY PER CONTROL AREA[a]**	**NUMBER OF CONTROL AREAS PER STORY**	**FIRE-RESISTANCE RATING FOR FIRE BARRIERS IN HOURS[b]**
Above grade plane	Higher than 9	5	1	2
	7-9	5	2	2
	6	12.5	2	2
	5	12.5	2	2
	4	12.5	2	2
	3	50	2	1
	2	75	3	1
	1	100	4	1
Below grade plane	1	75	3	1
	2	50	2	1
	Lower than 2	Not Allowed	Not Allowed	Not Allowed

a. Percentages shall be of the maximum allowable quantity per control area shown in Tables 5003.1.1(1) and 5003.1.1(2), with all increases allowed in the footnotes to those tables.

b. Separation shall include fire barriers and horizontal assemblies as necessary to provide separation from other portions of the building.

INTERNATIONAL CODE COUNCIL®
Copyright © 2019 ICC & NYSDOS. ALL RIGHTS RESERVED. Accessed by Lauren Gualdino (lgualdino@briarcliffmanor.org), (-) Order Number #100880972 on May 08, 2020 07:05 AM (PDT) pursuant to License Agreement with ICC & NYSDOS. No further reproduction, no

100880972

5003.8.5 Exhausted enclosures. Where an exhausted enclosure is used to increase *maximum allowable quantity per control area* or where the location of hazardous materials in exhausted enclosures is provided to comply with the provisions of Chapter 60, the exhausted enclosure shall be in accordance with Sections 5003.8.5.1 through 5003.8.5.3.

5003.8.5.1 Construction. Exhausted enclosures shall be of noncombustible construction.

5003.8.5.2 Ventilation. Exhausted enclosures shall be provided with an exhaust ventilation system. The ventilation system for exhausted enclosures shall be designed to operate at a negative pressure in relation to the surrounding area. Ventilation systems used for highly toxic and toxic gases shall also comply with Items 1, 2 and 3 of Section 6004.1.3. The ventilation system shall be installed in accordance with the *Mechanical Code of New York State*.

5003.8.5.3 Fire-extinguishing system. Exhausted enclosures where flammable materials are used shall be protected by an *approved* automatic fire-extinguishing system in accordance with Chapter 9.

5003.8.6 Gas cabinets. Where a gas cabinet is used to increase the *maximum allowable quantity per control area* or where the location of *compressed gases* in *gas cabinets* is provided to comply with the provisions of Chapter 60, the gas cabinet shall be in accordance with Sections 5003.8.6.1 through 5003.8.6.3.

5003.8.6.1 Construction. Gas cabinets shall be constructed with the following:

1. Not less than 0.097-inch (2.5 mm) (No. 12 gage) steel.
2. Self-closing limited access ports or noncombustible windows to give access to equipment controls.
3. Self-closing doors.
4. Interiors treated, coated or constructed of materials that are compatible with the hazardous materials stored. Such treatment, coating or construction shall include the entire interior of the cabinet.

5003.8.6.2 Ventilation. Gas cabinets shall be provided with an exhaust ventilation system. The ventilation system for gas cabinets shall be designed to operate at a negative pressure in relation to the surrounding area. Ventilation systems used for highly toxic and toxic gases shall also comply with Items 1, 2 and 3 of Section 6004.1.2. The ventilation system shall be installed in accordance with the *Mechanical Code of New York State*.

5003.8.6.3 Maximum number of cylinders per gas cabinet. The number of cylinders contained in a single gas cabinet shall not exceed three.

5003.8.7 Hazardous materials storage cabinets. Where storage cabinets are used to increase *maximum allowable quantity per control area* or to comply with this chapter, such cabinets shall be in accordance with Sections 5003.8.7.1 and 5003.8.7.2.

5003.8.7.1 Construction. The interior of cabinets shall be treated, coated or constructed of materials that are nonreactive with the hazardous material stored. Such treatment, coating or construction shall include the entire interior of the cabinet. Cabinets shall either be *listed* in accordance with UL 1275 as suitable for the intended storage or constructed in accordance with the following:

1. Cabinets shall be of steel having a thickness of not less than 0.0478 inch (1.2 mm) (No. 18 gage). The cabinet, including the door, shall be double walled with a $1^1/_2$-inch (38 mm) airspace between the walls. Joints shall be riveted or welded and shall be tight fitting. Doors shall be well fitted, self-closing and equipped with a self-latching device.
2. The bottoms of cabinets utilized for the storage of liquids shall be liquid tight to a minimum height of 2 inches (51 mm).

Electrical equipment and devices within cabinets used for the storage of hazardous gases or liquids shall be in accordance with NFPA 70.

5003.8.7.2 Warning markings. Cabinets shall be clearly identified in an *approved* manner with red letters on a contrasting background to read:

HAZARDOUS—KEEP FIRE AWAY.

5003.9 General safety precautions. General precautions for the safe storage, handling or care of hazardous materials shall be in accordance with Sections 5003.9.1 through 5003.9.10.

5003.9.1 Personnel training and written procedures. Persons responsible for the operation of areas in which hazardous materials are stored, dispensed, handled or used shall be familiar with the chemical nature of the materials and the appropriate mitigating actions necessary in the event of fire, leak or spill.

5003.9.1.1 Fire department liaison. Responsible persons shall be designated and trained to be liaison personnel to the fire department. These persons shall aid the fire department in preplanning emergency responses and identifying the locations where hazardous materials are located, and shall have access to Safety Data Sheets and be knowledgeable in the site's emergency response procedures.

5003.9.2 Security. Storage, dispensing, use and handling areas shall be secured against unauthorized entry and safeguarded in a manner *approved* by the *fire code official*.

5003.9.3 Protection from vehicles. Guard posts or other *approved* means shall be provided to protect storage tanks and connected piping, valves and fittings; dispensing areas; and use areas subject to vehicular damage in accordance with Section 312.

5003.9.4 Electrical wiring and equipment. Electrical wiring and equipment shall be installed and maintained in accordance with NFPA 70.

INTERNATIONAL CODE COUNCIL®
Copyright © 2019 ICC & NYSDOS. ALL RIGHTS RESERVED. Accessed by Lauren Gualdino (lgualdino@briarcliffmanor.org), (-) Order Number #100880972 on May 08, 2020 07:05 AM (PDT) pursuant to License Agreement with ICC & NYSDOS. No further reproduction, no

100880972

5003.9.5 Static accumulation. Where processes or conditions exist where a flammable mixture could be ignited by static electricity, means shall be provided to prevent the accumulation of a static charge.

5003.9.6 Protection from light. Materials that are sensitive to light shall be stored in containers designed to protect them from such exposure.

5003.9.7 Shock padding. Materials that are shock sensitive shall be padded, suspended or otherwise protected against accidental dislodgement and dislodgement during seismic activity.

5003.9.8 Separation of incompatible materials. *Incompatible materials* in storage and storage of materials that are incompatible with materials in use shall be separated where the stored materials are in containers having a capacity of more than 5 pounds (2 kg), 0.5 gallon (2 L) or any amount of *compressed gases*. Separation shall be accomplished by:

1. Segregating *incompatible materials* in storage by a distance of not less than 20 feet (6096 mm).
2. Isolating *incompatible materials* in storage by a noncombustible partition extending not less than 18 inches (457 mm) above and to the sides of the stored material.
3. Storing liquid and solid materials in hazardous material storage cabinets.
4. Storing *compressed gases* in gas cabinets or exhausted enclosures in accordance with Sections 5003.8.5 and 5003.8.6.

Materials that are incompatible shall not be stored within the same cabinet or exhausted enclosure.

5003.9.9 Shelf storage. Shelving shall be of substantial construction, and shall be braced and anchored in accordance with the seismic design requirements of the *Building Code of New York State* for the seismic zone in which the material is located. Shelving shall be treated, coated or constructed of materials that are compatible with the hazardous materials stored. Shelves shall be provided with a lip or guard where used for the storage of individual containers.

Shelf storage of hazardous materials shall be maintained in an orderly manner.

Exceptions:

1. Storage in hazardous material storage cabinets or laboratory furniture specifically designed for such use.
2. Storage of hazardous materials in amounts not requiring a permit in accordance with Section 5001.5.

5003.9.10 Safety cans. *Safety cans* shall be *listed* in accordance with UL 30 where used to increase the *maximum allowable quantities per control area* of flammable or *combustible liquids* in accordance with Table 5003.1.1(1). *Safety cans listed* in accordance with UL 1313 are allowed for flammable and *combustible liquids* where not used to increase the *maximum allowable quantities per control area* and for other hazardous material liquids in accordance with the listing.

5003.10 Handling and transportation. In addition to the requirements of Section 5003.2, the handling and transportation of hazardous materials in *corridors* or enclosures for stairways and ramps shall be in accordance with Sections 5003.10.1 through 5003.10.3.6.

5003.10.1 Valve protection. Hazardous material gas containers, cylinders and tanks in transit shall have their protective caps in place. Containers, cylinders and tanks of highly toxic or toxic *compressed gases* shall have their valve outlets capped or plugged with an *approved* closure device in accordance with Chapter 53.

5003.10.2 Carts and trucks required. Liquids in containers exceeding 5 gallons (19 L) in a *corridor* or enclosure for a stairway or ramp shall be transported on a cart or truck. Containers of hazardous materials having a hazard ranking of 3 or 4 in accordance with NFPA 704 and transported within *corridors* or interior *exit stairways* and *ramps*, shall be on a cart or truck. Where carts and trucks are required for transporting hazardous materials, they shall be in accordance with Section 5003.10.3.

Exceptions:

1. Two hazardous material liquid containers that are hand carried in acceptable safety carriers.
2. Not more than four drums not exceeding 55 gallons (208 L) each that are transported by suitable drum trucks.
3. Containers and cylinders of *compressed gases* that are transported by *approved* hand trucks, and containers and cylinders not exceeding 25 pounds (11 kg) that are hand carried.
4. Solid hazardous materials not exceeding 100 pounds (45 kg) that are transported by *approved* hand trucks, and a single container not exceeding 50 pounds (23 kg) that is hand carried.

5003.10.3 Carts and trucks. Carts and trucks required by Section 5003.10.2 to be used to transport hazardous materials shall be in accordance with Sections 5003.10.3.1 through 5003.10.3.6.

5003.10.3.1 Design. Carts and trucks used to transport hazardous materials shall be designed to provide a stable base for the commodities to be transported and shall have a means of restraining containers to prevent accidental dislodgement. *Compressed gas* cylinders placed on carts and trucks shall be individually restrained.

5003.10.3.2 Speed-control devices. Carts and trucks shall be provided with a device that will enable the operator to control safely movement by providing stops or speed-reduction devices.

5003.10.3.3 Construction. Construction materials for hazardous material carts or trucks shall be compatible with the material transported. The cart or truck shall be of substantial construction.

INTERNATIONAL CODE COUNCIL®
Copyright © 2019 ICC & NYSDOS. ALL RIGHTS RESERVED. Accessed by Lauren Gualdino (lgualdino@briarcliffmanor.org), (-) Order Number #100880972 on May 08, 2020 07:05 AM (PDT) pursuant to License Agreement with ICC & NYSDOS. No further reproduction, no

100880972

5003.10.3.4 Spill control. Carts and trucks transporting liquids shall be capable of containing a spill from the largest single container transported.

5003.10.3.5 Attendance. Carts and trucks used to transport materials shall not obstruct or be left unattended within any part of a *means of egress*.

5003.10.3.6 Incompatible materials. *Incompatible materials* shall not be transported on the same cart or truck.

5003.11 Group M storage and display and Group S storage. The aggregate quantity of nonflammable solid and nonflammable or noncombustible liquid hazardous materials stored and displayed within a single *control area* of a Group M occupancy, or an outdoor control area, or stored in a single *control area* of a Group S occupancy, is allowed to exceed the *maximum allowable quantity per control area* indicated in Section 5003.1 where in accordance with Sections 5003.11.1 through 5003.11.3.11.

5003.11.1 Maximum allowable quantity per control area in Group M or S occupancies. The aggregate amount of nonflammable solid and nonflammable or noncombustible liquid hazardous materials stored and displayed within a single *control area* of a Group M occupancy or stored in a single *control area* of a Group S occupancy shall not exceed the amounts set forth in Table 5003.11.1.

5003.11.2 Maximum allowable quantity per outdoor control area in Group M or S occupancies. The aggregate amount of nonflammable solid and nonflammable or noncombustible liquid hazardous materials stored and displayed within a single outdoor control area of a Group M occupancy shall not exceed the amounts set forth in Table 5003.11.1.

5003.11.3 Storage and display. Storage and display shall be in accordance with Sections 5003.11.3.1 through 5003.11.3.11.

5003.11.3.1 Density. Storage and display of solids shall not exceed 200 pounds per square foot (976 kg/m^2) of floor area actually occupied by solid merchandise. Storage and display of liquids shall not exceed 20 gallons

TABLE 5003.11.1
MAXIMUM ALLOWABLE QUANTITY PER INDOOR AND OUTDOOR CONTROL AREA IN GROUP M AND S OCCUPANCIES—NONFLAMMABLE SOLIDS, NONFLAMMABLE AND NONCOMBUSTIBLE LIQUIDS[d, e, f]

CONDITION		MAXIMUM ALLOWABLE QUANTITY PER CONTROL AREA	
Material[a]	Class	Solids (pounds)	Liquids (gallons)
A. HEALTH-HAZARD MATERIALS—NONFLAMMABLE AND NONCOMBUSTIBLE SOLIDS AND LIQUIDS			
1. Corrosives[b, c]	Not Applicable	9,750	975
2. Highly Toxics	Not Applicable	20[b, c]	2[b, c]
3. Toxics[b, c]	Not Applicable	1,000	100
B. PHYSICAL-HAZARD MATERIALS—NONFLAMMABLE AND NONCOMBUSTIBLE SOLIDS AND LIQUIDS			
1. Oxidizers[b, c]	4	Not Allowed	Not Allowed
	3	1,350[g]	135
	2	2,250[h]	225
	1	18,000[i, j]	1,800[i, j]
2. Unstable (Reactives)[b, c]	4	Not Allowed	Not Allowed
	3	550	55
	2	1,150	115
	1	Not Limited	Not Limited
3. Water Reactives	3[b, c]	550	55
	2[b, c]	1,150	115
	1	Not Limited	Not Limited

For SI: 1 pound = 0.454 kg, 1 gallon = 3.785 L, 1 cubic foot = 0.02832 m^3.

a. Hazard categories are as specified in Section 5001.2.2.

b. Maximum allowable quantities shall be increased 100 percent in buildings equipped throughout with an approved automatic sprinkler system in accordance with Section 903.3.1.1. Where Note c applies, the increase for both notes shall be applied accumulatively.

c. Maximum allowable quantities shall be increased 100 percent where stored in approved storage cabinets in accordance with Section 5003.8. Where Note b applies, the increase for both notes shall be applied accumulatively.

d. See Table 5003.8.3.2 for design and number of control areas.

e. Maximum allowable quantities for other hazardous material categories shall be in accordance with Section 5003.1.

f. Maximum allowable quantities shall be increased 100 percent in outdoor control areas.

g. Maximum allowable quantities shall be increased to 2,250 pounds where individual packages are in the original sealed containers from the manufacturer or packager and do not exceed 10 pounds each.

h. Maximum allowable quantities shall be increased to 4,500 pounds where individual packages are in the original sealed containers from the manufacturer or packager and do not exceed 10 pounds each.

i. Quantities are unlimited where protected by an automatic sprinkler system.

j. Quantities are unlimited in an outdoor control area.

INTERNATIONAL CODE COUNCIL®
Copyright © 2019 ICC & NYSDOS. ALL RIGHTS RESERVED. Accessed by Lauren Gualdino (lgualdino@briarcliffmanor.org), (-) Order Number #100880972 on May 08, 2020 07:05 AM (PDT) pursuant to License Agreement with ICC & NYSDOS. No further reproduction, no

100880972

per square foot (0.50 L/m^2) of floor area actually occupied by liquid merchandise.

5003.11.3.2 Storage and display height. Display height shall not exceed 6 feet (1829 mm) above the finished floor in display areas of Group M occupancies. Storage height shall not exceed 8 feet (2438 mm) above the finished floor in storage areas of Group M and Group S occupancies.

5003.11.3.3 Container location. Individual containers less than 5 gallons (19 L) or less than 25 pounds (11 kg) shall be stored or displayed on pallets, racks or shelves.

5003.11.3.4 Racks and shelves. Racks and shelves used for storage or display shall be in accordance with Section 5003.9.9.

5003.11.3.5 Container type. Containers shall be *approved* for the intended use and identified as to their content.

5003.11.3.6 Container size. Individual containers shall not exceed 100 pounds (45 kg) for solids or 10 gallons (38 L) for liquids in storage and display areas.

5003.11.3.7 Incompatible materials. *Incompatible materials* shall be separated in accordance with Section 5003.9.8.

5003.11.3.8 Floors. Floors shall be in accordance with Section 5004.12.

5003.11.3.9 Aisles. Aisles 4 feet (1219 mm) in width shall be maintained on three sides of the storage or display area.

5003.11.3.10 Signs. Hazard identification signs shall be provided in accordance with Section 5003.5.

5003.11.3.11 Storage plan. A storage plan illustrating the intended storage arrangement, including the location and dimensions of aisles, and storage racks shall be provided.

5003.12 Outdoor control areas. Outdoor control areas for hazardous materials in amounts not exceeding the maximum allowable quantity per outdoor control area shall be in accordance with the following:

1. Outdoor control areas shall be kept free from weeds, debris and common combustible materials not necessary to the storage. The area surrounding an outdoor control area shall be kept clear of such materials for not less than 15 feet (4572 mm).
2. Outdoor control areas shall be located not closer than 20 feet (6096 mm) from a public street, public alley, public way or *lot line* that can be built on.

   Exceptions:

   1. For solid and liquid hazardous materials, a 2-hour fire-resistance-rated wall without openings extending not less than 30 inches (762 mm) above and to the sides of the storage area shall be allowed in lieu of such distance.
   2. For compressed gas hazardous materials, unless otherwise specified, the minimum required distances shall not apply where *fire barriers* without openings or penetrations having a minimum *fire-resistance rating* of 2 hours interrupt the line of sight between the storage and the exposure. The configuration of the *fire barrier* shall be designed to allow natural ventilation to prevent the accumulation of hazardous gas concentrations.
3. Where a property exceeds 10,000 square feet (929 m^2), a group of two outdoor control areas is allowed where *approved* and where each control area is separated by a minimum distance of 50 feet (15 240 mm).
4. Where a property exceeds 35,000 square feet (3252 m^2), additional groups of outdoor control areas are allowed where *approved* and where each group is separated by a minimum distance of 300 feet (91 440 mm).

SECTION 5004
STORAGE

5004.1 Scope. Storage of hazardous materials in amounts exceeding the *maximum allowable quantity per control area* as set forth in Section 5003.1 shall be in accordance with Sections 5001, 5003 and 5004. Storage of hazardous materials in amounts not exceeding the *maximum allowable quantity per control area* as set forth in Section 5003.1 shall be in accordance with Sections 5001 and 5003. Retail and wholesale storage and display of nonflammable solid and nonflammable and noncombustible liquid hazardous materials in Group M occupancies and Group S storage shall be in accordance with Section 5003.11.

5004.2 Spill control and secondary containment for liquid and solid hazardous materials. Rooms, buildings or areas used for the storage of liquid or solid hazardous materials shall be provided with spill control and secondary containment in accordance with Sections 5004.2.1 through 5004.2.3.

Exception: Outdoor storage of containers on *approved* containment pallets in accordance with Section 5004.2.3.

5004.2.1 Spill control for hazardous material liquids. Rooms, buildings or areas used for the storage of hazardous material liquids in individual vessels having a capacity of more than 55 gallons (208 L), or in which the aggregate capacity of multiple vessels exceeds 1,000 gallons (3785 L), shall be provided with spill control to prevent the flow of liquids to adjoining areas. Floors in indoor locations and similar surfaces in outdoor locations shall be constructed to contain a spill from the largest single vessel by one of the following methods:

1. Liquid-tight sloped or recessed floors in indoor locations or similar areas in outdoor locations.
2. Liquid-tight floors in indoor locations or similar areas in outdoor locations provided with liquid-tight raised or recessed sills or dikes.
3. Sumps and collection systems.
4. Other *approved* engineered systems.

Except for surfacing, the floors, sills, dikes, sumps and collection systems shall be constructed of noncombustible

INTERNATIONAL CODE COUNCIL®
Copyright © 2019 ICC & NYSDOS. ALL RIGHTS RESERVED. Accessed by Lauren Gualdino (lgualdino@briarcliffmanor.org), (-) Order Number #100880972 on May 08, 2020 07:05 AM (PDT) pursuant to License Agreement with ICC & NYSDOS. No further reproduction, no

100880972

material, and the liquid-tight seal shall be compatible with the material stored. Where liquid-tight sills or dikes are provided, they are not required at perimeter openings having an open-grate trench across the opening that connects to an *approved* collection system.

5004.2.2 Secondary containment for hazardous material liquids and solids. Where required by Table 5004.2.2 buildings, rooms or areas used for the storage of hazardous materials liquids or solids shall be provided with secondary containment in accordance with this section where the capacity of an individual vessel or the aggregate capacity of multiple vessels exceeds both of the following:

1. Liquids: Capacity of an individual vessel exceeds 55 gallons (208 L) or the aggregate capacity of multiple vessels exceeds 1,000 gallons (3785 L).
2. Solids: Capacity of an individual vessel exceeds 550 pounds (250 kg) or the aggregate capacity of multiple vessels exceeds 10,000 pounds (4540 kg).

5004.2.2.1 Containment and drainage methods. The building, room or area shall contain or drain the hazardous materials and fire protection water through the use of one of the following methods:

1. Liquid-tight sloped or recessed floors in indoor locations or similar areas in outdoor locations.

TABLE 5004.2.2
REQUIRED SECONDARY CONTAINMENT—HAZARDOUS MATERIAL SOLIDS AND LIQUIDS STORAGE

MATERIAL		INDOOR STORAGE		OUTDOOR STORAGE	
		Solids	Liquids	Solids	Liquids
1. Physical-hazard materials					
Combustible liquids	Class II	Not Applicable	See Chapter 57	Not Applicable	See Chapter 57
	Class IIIA		See Chapter 57		See Chapter 57
	Class IIIB		See Chapter 57		See Chapter 57
Cryogenic fluids			See Chapter 55		See Chapter 55
Explosives		See Chapter 56		See Chapter 56	
Flammable liquids	Class IA	Not Applicable	See Chapter 57	Not Applicable	See Chapter 57
	Class IB		See Chapter 57		See Chapter 57
	Class IC		See Chapter 57		See Chapter 57
Flammable solids		Not Required	Not Applicable	Not Required	Not Applicable
Organic peroxides	Unclassified Detonable	Required	Required	Not Required	Not Required
	Class I				
	Class II				
	Class III				
	Class IV				
	Class V	Not Required	Not Required	Not Required	Not Required
Oxidizers	Class 4	Required	Required	Not Required	Not Required
	Class 3				
	Class 2				
	Class 1	Not Required	Not Required	Not Required	Not Required
Pyrophorics		Not Required	Required	Not Required	Required
Unstable (reactives)	Class 4	Required	Required	Required	Required
	Class 3				
	Class 2				
	Class 1	Not Required	Not Required	Not Required	Not Required
Water reactives	Class 3	Required	Required	Required	Required
	Class 2				
	Class 1	Not Required	Not Required	Not Required	Not Required
2. Health-hazard materials					
Corrosives		Not Required	Required	Not Required	Required
Highly toxics		Required	Required	Required	Required
Toxics					

INTERNATIONAL CODE COUNCIL®
Copyright © 2019 ICC & NYSDOS. ALL RIGHTS RESERVED. Accessed by Lauren Gualdino (lgualdino@briarcliffmanor.org), (-) Order Number #100880972 on May 08, 2020 07:05 AM (PDT) pursuant to License Agreement with ICC & NYSDOS. No further reproduction, no

100880972

2. Liquid-tight floors in indoor locations or similar areas in outdoor locations provided with liquid-tight raised or recessed sills or dikes.
3. Sumps and collection systems.
4. Drainage systems leading to an *approved* location.
5. Other *approved* engineered systems.

5004.2.2.2 Incompatible materials. *Incompatible materials* used in *open systems* shall be separated from each other in the secondary containment system.

5004.2.2.3 Indoor design. Secondary containment for indoor storage areas shall be designed to contain a spill from the largest vessel plus the design flow volume of fire protection water calculated to discharge from the fire-extinguishing system over the minimum required system design area or area of the room or area in which the storage is located, whichever is smaller. The containment capacity shall be designed to contain the flow for a period of 20 minutes.

5004.2.2.4 Outdoor design. Secondary containment for outdoor storage areas shall be designed to contain a spill from the largest individual vessel. If the area is open to rainfall, secondary containment shall be designed to include the volume of a 24-hour rainfall as determined by a 25-year storm and provisions shall be made to drain accumulations of groundwater and rainwater.

5004.2.2.5 Monitoring. An *approved* monitoring method shall be provided to detect hazardous materials in the secondary containment system. The monitoring method is allowed to be visual inspection of the primary or secondary containment, or other *approved* means. Where secondary containment is subject to the intrusion of water, a monitoring method for detecting water shall be provided. Where monitoring devices are provided, they shall be connected to *approved* visual or audible alarms.

5004.2.2.6 Drainage system design. Drainage systems shall be in accordance with the *Plumbing Code of New York State* and all of the following:

1. The slope of floors to drains in indoor locations, or similar areas in outdoor locations shall be not less than 1 percent.
2. Drains from indoor storage areas shall be sized to carry the volume of the fire protection water as determined by the design density discharged from the automatic fire-extinguishing system over the minimum required system design area or area of the room or area in which the storage is located, whichever is smaller.
3. Drains from outdoor storage areas shall be sized to carry the volume of the fire flow and the volume of a 24-hour rainfall as determined by a 25-year storm.
4. Materials of construction for drainage systems shall be compatible with the materials stored.
5. *Incompatible materials* used in *open systems* shall be separated from each other in the drainage system.
6. Drains shall terminate in an *approved* location away from buildings, valves, *means of egress*, fire access roadways, adjoining property and storm drains.

5004.2.3 Containment pallets. Where used as an alternative to spill control and secondary containment for outdoor storage in accordance with the exception in Section 5004.2, containment pallets shall comply with all of the following:

1. A liquid-tight sump with access for visual inspection shall be provided.
2. The sump shall be designed to contain not less than 66 gallons (250 L).
3. Exposed surfaces shall be compatible with material stored.
4. Containment pallets shall be protected to prevent collection of rainwater within the sump.

5004.3 Ventilation. Indoor storage areas and storage buildings shall be provided with mechanical exhaust ventilation or natural ventilation where natural ventilation can be shown to be acceptable for the materials as stored.

Exception: Storage areas for flammable solids complying with Chapter 59.

5004.3.1 System requirements. Exhaust ventilation systems shall comply with all of the following:

1. Installation shall be in accordance with the *Mechanical Code of New York State*.
2. Mechanical ventilation shall be at a rate of not less than 1 cubic foot per minute per square foot [0.00508 $m^3/(s \cdot m^2)$] of floor area over the storage area.
3. Systems shall operate continuously unless alternative designs are *approved*.
4. A manual shutoff control shall be provided outside of the room in a position adjacent to the access door to the room or in an *approved* location. The switch shall be a break-glass or other *approved* type and shall be *labeled*: VENTILATION SYSTEM EMERGENCY SHUTOFF.
5. Exhaust ventilation shall be designed to consider the density of the potential fumes or vapors released. For fumes or vapors that are heavier than air, exhaust shall be taken from a point within 12 inches (305 mm) of the floor. For fumes or vapors that are lighter than air, exhaust shall be taken from a point within 12 inches (305 mm) of the highest point of the room.
6. The location of both the exhaust and inlet air openings shall be designed to provide air movement across all portions of the floor or room to prevent the accumulation of vapors.

INTERNATIONAL CODE COUNCIL®
Copyright © 2019 ICC & NYSDOS. ALL RIGHTS RESERVED. Accessed by Lauren Gualdino (lgualdino@briarcliffmanor.org), (-) Order Number #100880972 on May 08, 2020 07:05 AM (PDT) pursuant to License Agreement with ICC & NYSDOS. No further reproduction, no

100880972

7. Exhaust air shall not be recirculated to occupied areas if the materials stored are capable of emitting hazardous vapors and contaminants have not been removed. Air contaminated with explosive or flammable vapors, fumes or dusts; flammable, highly toxic or toxic gases; or radioactive materials shall not be recirculated.

5004.4 Separation of incompatible hazardous materials. *Incompatible materials* shall be separated in accordance with Section 5003.9.8.

5004.5 Automatic sprinkler systems. Indoor storage areas and storage buildings shall be equipped throughout with an *approved automatic sprinkler system* in accordance with Section 903.3.1.1. The design of the sprinkler system shall be not less than that required for Ordinary Hazard Group 2 with a minimum design area of 3,000 square feet (279 m^2). Where the materials or storage arrangement are required by other regulations to be provided with a higher level of sprinkler system protection, the higher level of sprinkler system protection shall be provided.

5004.6 Explosion control. Indoor storage rooms, areas and buildings shall be provided with explosion control in accordance with Section 911.

5004.7 Standby or emergency power. Where mechanical ventilation, treatment systems, temperature control, alarm, detection or other electrically operated systems are required, such systems shall be provided with an emergency or standby power in accordance with Section 1203.

For storage areas for highly toxic or toxic materials, see Sections 6004.2.2.8 and 6004.3.4.2.

5004.7.1 Exempt applications. Standby or emergency power is not required for mechanical ventilation systems for any of the following:

1. Storage of Class IB and IC *flammable liquids* and Class II and III *combustible liquids* in closed containers not exceeding a capacity of $6^1/_2$ gallons (25 L).
2. Storage of Class 1 and 2 oxidizers.
3. Storage of Class II, III, IV and V organic peroxides.
4. Storage of asphyxiant, irritant and radioactive gases.

5004.7.2 Fail-safe engineered systems. Standby power for mechanical ventilation, treatment systems and temperature control systems shall not be required where an *approved* fail-safe engineered system is installed.

5004.8 Limit controls. Limit controls shall be provided in accordance with Sections 5004.8.1 and 5004.8.2.

5004.8.1 Temperature control. Materials that must be kept at temperatures other than normal ambient temperatures to prevent a hazardous reaction shall be provided with an approved means to maintain the temperature within a safe range. Redundant temperature control equipment that will operate on failure of the primary temperature control system shall be provided. Where *approved*, alternative means that prevent a hazardous reaction are allowed.

5004.8.2 Pressure control. Stationary tanks and equipment containing hazardous material liquids that can generate pressures exceeding design limits because of exposure fires or internal reaction shall have some form of construction or other *approved* means that will relieve excessive internal pressure. The means of pressure relief shall vent to an *approved* location or to an exhaust scrubber or treatment system where required by Chapter 60.

5004.9 Emergency alarm. An *approved* manual emergency alarm system shall be provided in buildings, rooms or areas used for storage of hazardous materials. Emergency alarm-initiating devices shall be installed outside of each interior *exit* or *exit access* door of storage buildings, rooms or areas. Activation of an emergency alarm-initiating device shall sound a local alarm to alert occupants of an emergency situation involving hazardous materials.

5004.10 Supervision and monitoring. Emergency alarm, detection and automatic fire-extinguishing systems required by Section 5004 shall be electrically supervised and monitored by an *approved* supervising station or, where *approved*, shall initiate an audible and visual signal at a constantly attended on-site location.

5004.11 Clearance from combustibles. The area surrounding an outdoor storage area or tank shall be kept clear of combustible materials and vegetation for a minimum distance of 25 feet (7620 mm).

5004.12 Noncombustible floor. Except for surfacing, floors of storage areas shall be of noncombustible construction.

5004.13 Weather protection. Where overhead noncombustible construction is provided for sheltering outdoor hazardous material storage areas, such storage shall not be considered indoor storage where the area is constructed in accordance with the requirements for weather protection as required by the *Building Code of New York State.*

Exception: Storage of *explosive* materials shall be considered as indoor storage.

SECTION 5005
USE, DISPENSING AND HANDLING

5005.1 General. Use, dispensing and handling of hazardous materials in amounts exceeding the *maximum allowable quantity per control area* set forth in Section 5003.1 shall be in accordance with Sections 5001, 5003 and 5005. Use, dispensing and handling of hazardous materials in amounts not exceeding the *maximum allowable quantity per control area* set forth in Section 5003.1 shall be in accordance with Sections 5001 and 5003.

5005.1.1 Separation of incompatible materials. Separation of *incompatible materials* shall be in accordance with Section 5003.9.8.

5005.1.2 Noncombustible floor. Except for surfacing, floors of areas where liquid or solid hazardous materials are dispensed or used in *open systems* shall be of noncombustible, liquid-tight construction.

5005.1.3 Spill control and secondary containment for hazardous material liquids. Where required by other

INTERNATIONAL CODE COUNCIL®
Copyright © 2019 ICC & NYSDOS. ALL RIGHTS RESERVED. Accessed by Lauren Gualdino (lgualdino@briarcliffmanor.org), (-) Order Number #100880972 on May 08, 2020 07:05 AM (PDT) pursuant to License Agreement with ICC & NYSDOS. No further reproduction, no

100880972

provisions of Section 5005, spill control and secondary containment shall be provided for hazardous material liquids in accordance with Section 5004.2.

5005.1.4 Limit controls. Limit controls shall be provided in accordance with Sections 5005.1.4.1 through 5005.1.4.4.

5005.1.4.1 High-liquid-level control. Open tanks in which liquid hazardous materials are used shall be equipped with a liquid-level limit control or other means to prevent overfilling of the tank.

5005.1.4.2 Low-liquid-level control. *Approved* safeguards shall be provided to prevent a low-liquid level in a tank from creating a hazardous condition, including but not limited to, overheating of a tank or its contents.

5005.1.4.3 Temperature control. Temperature control shall be provided in accordance with Section 5004.8.1.

5005.1.4.4 Pressure control. Pressure control shall be provided in accordance with Section 5004.8.2.

5005.1.5 Standby or emergency power. Where mechanical ventilation, treatment systems, temperature control, manual alarm, detection or other electrically operated systems are required by this code, such systems shall be provided with emergency or standby power in accordance with Section 1203.

5005.1.5.1 Exempt applications. Standby power for mechanical ventilation, treatment systems and temperature control systems shall not be required where an *approved* fail-safe engineered system is installed.

5005.1.6 Supervision and monitoring. Manual alarm, detection and automatic fire-extinguishing systems required by other provisions of Section 5005 shall be electrically supervised and monitored by an *approved* supervisory service or, where *approved*, shall initiate an audible and visual signal at a constantly attended on-site location.

5005.1.7 Lighting. Adequate lighting by natural or artificial means shall be provided.

5005.1.8 Fire-extinguishing systems. Indoor rooms or areas in which hazardous materials are dispensed or used shall be protected by an automatic fire-extinguishing system in accordance with Chapter 9. Sprinkler system design shall be not less than that required for Ordinary Hazard, Group 2, with a minimum design area of 3,000 square feet (279 m^2). Where the materials or storage arrangement are required by other regulations to be provided with a higher level of sprinkler system protection, the higher level of sprinkler system protection shall be provided.

5005.1.9 Ventilation. Indoor dispensing and use areas shall be provided with exhaust ventilation in accordance with Section 5004.3.

Exception: Ventilation is not required for dispensing and use of flammable solids other than finely divided particles.

5005.1.10 Liquid transfer. Liquids having a hazard ranking of 3 or 4 in accordance with NFPA 704 shall be transferred by one of the following methods:

1. From safety cans complying with UL 30.
2. Through an *approved* closed piping system.
3. From containers or tanks by an *approved* pump taking suction through an opening in the top of the container or tank.
4. From containers or tanks by gravity through an *approved* self-closing or automatic-closing valve where the container or tank and dispensing operations are provided with spill control and secondary containment in accordance with Section 5004.2. Highly toxic liquids shall not be dispensed by gravity from tanks.
5. *Approved* engineered liquid transfer systems.

Exceptions:

1. Liquids having a hazard ranking of 4 where dispensed from *approved* containers not exceeding 1.3 gallons (5 L).
2. Liquids having a hazard ranking of 3 where dispensed from *approved* containers not exceeding 5.3 gallons (20 L).

5005.1.11 Design. Systems shall be suitable for the use intended and shall be designed by persons competent in such design. Controls shall be designed to prevent materials from entering or leaving the process or reaction system at other than the intended time, rate or path. Where failure of an automatic control could result in a dangerous condition or reaction, the automatic control shall be fail-safe.

5005.1.12 Emergency isolation. Where gases or liquids having a hazard ranking of Health Class 3 or 4, Flammability Class 4 or Instability Class 3 or 4 in accordance with NFPA 704 are carried in pressurized piping above 15 pounds per square inch gauge (psig) (103 kPa), an *approved* means of leak detection and emergency shutoff or excess flow control shall be provided. Where the piping originates from within a hazardous material storage room or area, the excess flow control shall be located within the storage room or area. Where the piping originates from a bulk source, the excess flow control shall be located as close to the bulk source as practical. **

Exceptions:

1. Piping for inlet connections designed to prevent backflow.
2. Piping for pressure relief devices.

5005.2 Indoor dispensing and use. Indoor dispensing and use of hazardous materials shall be in buildings complying with the *Building Code of New York State* and in accordance with Section 5005.1 and Sections 5005.2.1 through 5005.2.2.4.

5005.2.1 Open systems. Dispensing and use of hazardous materials in open containers or systems shall be in accordance with Sections 5005.2.1.1 through 5005.2.1.4.

5005.2.1.1 Ventilation. Where gases, liquids or solids having a hazard ranking of 3 or 4 in accordance with NFPA 704 are dispensed or used, mechanical exhaust

INTERNATIONAL CODE COUNCIL®
Copyright © 2019 ICC & NYSDOS. ALL RIGHTS RESERVED. Accessed by Lauren Gualdino (lgualdino@briarcliffmanor.org), (-) Order Number #100880972 on May 08, 2020 07:05 AM (PDT) pursuant to License Agreement with ICC & NYSDOS. No further reproduction, no

100880972

ventilation shall be provided to capture gases, fumes, mists or vapors at the point of generation.

Exception: Gases, liquids or solids that can be demonstrated not to create harmful gases, fumes, mists or vapors.

5005.2.1.2 Explosion control. Explosion control shall be provided in accordance with Section 5004.6 where an explosive environment can occur because of the characteristics or nature of the hazardous materials dispensed or used, or as a result of the dispensing or use process.

5005.2.1.3 Spill control for hazardous material liquids. Buildings, rooms or areas where hazardous material liquids are dispensed into vessels exceeding a 1.3-gallon (5 L) capacity or used in *open systems* exceeding a 5.3-gallon (20 L) capacity shall be provided with spill control in accordance with Section 5004.2.1.

5005.2.1.4 Secondary containment for hazardous material liquids. Where required by Table 5005.2.1.4, buildings, rooms or areas where hazardous material liquids are dispensed or used in *open systems* shall be provided with secondary containment in accordance with Section 5004.2.2 where the capacity of an individual vessel or system or the capacity of multiple vessels or systems exceeds the following:

1. Individual vessel or system: greater than 1.3 gallons (5 L).
2. Multiple vessels or systems: greater than 5.3 gallons (20 L).

TABLE 5005.2.1.4
REQUIRED SECONDARY CONTAINMENT—HAZARDOUS MATERIAL LIQUIDS USE

MATERIAL	INDOOR LIQUIDS USE	OUTDOOR LIQUIDS USE	
1. Physical-hazard materials			
Combustible liquids	Class II	See Chapter 57	See Chapter 57
	Class IIIA	See Chapter 57	See Chapter 57
	Class IIIB	See Chapter 57	See Chapter 57
Cryogenic fluids		See Chapter 55	See Chapter 55
Explosives		See Chapter 56	See Chapter 56
Flammable liquids	Class IA	See Chapter 57	See Chapter 57
	Class IB	See Chapter 57	See Chapter 57
	Class IC	See Chapter 57	See Chapter 57
Flammable solids		Not Applicable	Not Applicable
Organic peroxides	Unclassified Detonable	Required	Required
	Class I	Required	Required
	Class II		
	Class III		
	Class IV		
	Class V	Not Required	Not Required
Oxidizers	Class 4	Required	Required
	Class 3		
	Class 2		
	Class 1		
Pyrophorics		Required	Required
Unstable (reactives)	Class 4	Required	Required
	Class 3		
	Class 2		
	Class 1	Not Required	Required
Water reactives	Class 3	Required	Required
	Class 2		
	Class 1	Not Required	Required
2. Health-hazard materials			
Corrosives		Required	Required
Highly toxics			
Toxics			

INTERNATIONAL CODE COUNCIL®
Copyright © 2019 ICC & NYSDOS. ALL RIGHTS RESERVED. Accessed by Lauren Gualdino (lgualdino@briarcliffmanor.org), (-) Order Number #100880972 on May 08, 2020 07:05 AM (PDT) pursuant to License Agreement with ICC & NYSDOS. No further reproduction, no

100880972

5005.2.2 Closed systems. Use of hazardous materials in closed containers or systems shall be in accordance with Sections 5005.2.2.1 through 5005.2.2.4.

5005.2.2.1 Ventilation. Where *closed systems* are designed to be opened as part of normal operations, ventilation shall be provided in accordance with Section 5005.2.1.1.

5005.2.2.2 Explosion control. Explosion control shall be provided in accordance with Section 5004.6 where an explosive environment exists because of the hazardous materials dispensed or used, or as a result of the dispensing or use process.

Exception: Where process vessels are designed to contain fully the worst-case explosion anticipated within the vessel under process conditions based on the most likely failure.

5005.2.2.3 Spill control for hazardous material liquids. Buildings, rooms or areas where hazardous material liquids are used in individual vessels exceeding a 55-gallon (208 L) capacity shall be provided with spill control in accordance with Section 5004.2.1.

5005.2.2.4 Secondary containment for hazardous material liquids. Where required by Table 5005.2.1.4, buildings, rooms or areas where hazardous material liquids are used in vessels or systems shall be provided with secondary containment in accordance with Section 5004.2.2 where the capacity of an individual vessel or system or the capacity of multiple vessels or systems exceeds the following:

1. Individual vessel or system: greater than 55 gallons (208 L).
2. Multiple vessels or systems: greater than 1,000 gallons (3785 L).

5005.3 Outdoor dispensing and use. Dispensing and use of hazardous materials outdoors shall be in accordance with Sections 5005.3.1 through 5005.3.9.

5005.3.1 Quantities exceeding the maximum allowable quantity per control area. Outdoor dispensing or use of hazardous materials, in either closed or open containers or systems, in amounts exceeding the *maximum allowable quantity per control area* indicated in Tables 5003.1.1(3) and 5003.1.1(4) shall be in accordance with Sections 5001, 5003, 5005.1 and 5005.3.

5005.3.2 Quantities not exceeding the maximum allowable quantity per control area. Outdoor dispensing or use of hazardous materials, in either closed or open containers or systems, in amounts not exceeding the *maximum allowable quantity per control area* indicated in Tables 5003.1.1(3) and 5003.1.1(4) shall be in accordance with Sections 5001 and 5003.

5005.3.3 Location. Outdoor dispensing and use areas for hazardous materials shall be located as required for outdoor storage in accordance with Section 5004.

5005.3.4 Spill control for hazardous material liquids in open systems. Outdoor areas where hazardous material liquids are dispensed in vessels exceeding a 1.3-gallon (5 L) capacity or used in *open systems* exceeding a 5.3-gallon (20 L) capacity shall be provided with spill control in accordance with Section 5004.2.1.

5005.3.5 Secondary containment for hazardous material liquids in open systems. Where required by Table 5005.2.1.4, outdoor areas where hazardous material liquids are dispensed or used in *open systems* shall be provided with secondary containment in accordance with Section 5004.2.2 where the capacity of an individual vessel or system or the capacity of multiple vessels or systems exceeds the following:

1. Individual vessel or system: greater than 1.3 gallons (5 L).
2. Multiple vessels or systems: greater than 5.3 gallons (20 L).

5005.3.6 Spill control for hazardous material liquids in closed systems. Outdoor areas where hazardous material liquids are used in *closed systems* exceeding 55 gallons (208 L) shall be provided with spill control in accordance with Section 5004.2.1.

5005.3.7 Secondary containment for hazardous material liquids in closed systems. Where required by Table 5005.2.1.4, outdoor areas where hazardous material liquids are dispensed or used in *closed systems* shall be provided with secondary containment in accordance with Section 5004.2.2 where the capacity of an individual vessel or system or the capacity of multiple vessels or systems exceeds the following:

1. Individual vessel or system: greater than 55 gallons (208 L).
2. Multiple vessels or systems: greater than 1,000 gallons (3785 L).

5005.3.8 Clearance from combustibles. The area surrounding an outdoor dispensing or use area shall be kept clear of combustible materials and vegetation for a minimum distance of 30 feet (9144 mm).

5005.3.9 Weather protection. Where overhead noncombustible construction is provided for sheltering outdoor hazardous material use areas, such use shall not be considered indoor use where the area is constructed in accordance with the requirements for weather protection as required in the *Building Code of New York State.*

Exception: Use of *explosive* materials shall be considered as indoor use.

5005.4 Handling. Handling of hazardous materials shall be in accordance with Sections 5005.4.1 through 5005.4.4.

5005.4.1 Quantities exceeding the maximum allowable quantity per control area. Handling of hazardous materials in indoor and outdoor locations in amounts exceeding the *maximum allowable quantity per control area* indicated in Tables 5003.1.1(1) through 5003.1.1(4) shall be in accordance with Sections 5001, 5003, 5005.1 and 5005.4.

5005.4.2 Quantities not exceeding the maximum allowable quantity per control area. Handling of hazardous materials in indoor locations in amounts not exceeding the *maximum allowable quantity per control area* indicated in

INTERNATIONAL CODE COUNCIL®
Copyright © 2019 ICC & NYSDOS. ALL RIGHTS RESERVED. Accessed by Lauren Gualdino (lgualdino@briarcliffmanor.org), (-) Order Number #100880972 on May 08, 2020 07:05 AM (PDT) pursuant to License Agreement with ICC & NYSDOS. No further reproduction, no

100880972

Tables 5003.1.1(1) and 5003.1.1(2) shall be in accordance with Sections 5001, 5003 and 5005.1. Handling of hazardous materials in outdoor locations in amounts not exceeding the *maximum allowable quantity per control area* indicated in Tables 5003.1.1(3) and 5003.1.1(4) shall be in accordance with Sections 5001 and 5003.

5005.4.3 Location. Outdoor handling areas for hazardous materials shall be located as required for outdoor storage in accordance with Section 5004.

5005.4.4 Dispensing, use and handling. Where hazardous materials having a hazard ranking of 3 or 4 in accordance with NFPA 704 are transported through *corridors*, interior *exit stairways* or *ramps* or *exit passageways*, there shall be an emergency telephone system, a local manual alarm station or an approved alarm-initiating device at not more than 150-foot (45 720 mm) intervals and at each *exit* and *exit access* doorway throughout the transport route. The signal shall be relayed to an *approved* central, proprietary or remote station service or constantly attended on-site location and shall initiate a local audible alarm.

INTERNATIONAL CODE COUNCIL®
Copyright © 2019 ICC & NYSDOS. ALL RIGHTS RESERVED. Accessed by Lauren Gualdino (lgualdino@briarcliffmanor.org), (-) Order Number #100880972 on May 08, 2020 07:05 AM (PDT) pursuant to License Agreement with ICC & NYSDOS. No further reproduction, no

100880972

INTERNATIONAL CODE COUNCIL®
Copyright © 2019 ICC & NYSDOS. ALL RIGHTS RESERVED. Accessed by Lauren Gualdino (lgualdino@briarcliffmanor.org), (-) Order Number #100880972 on May 08, 2020 07:05 AM (PDT) pursuant to License Agreement with ICC & NYSDOS. No further reproduction, no

100880972

CHAPTER 51
AEROSOLS

SECTION 5101
GENERAL

5101.1 Scope. The provisions of this chapter, the *Building Code of New York State* and NFPA 30B shall apply to the manufacturing, storage and display of aerosol products. Manufacturing of aerosol products using hazardous materials shall also comply with Chapter 50.

5101.2 Permit required. Permits shall be required as set forth in Section 105.6.

5101.3 Safety Data Sheets. Safety Data Sheet (SDS) information for aerosol products displayed shall be kept on the premises at an *approved* location.

5101.4 Containers. Metal aerosol containers shall be limited to a maximum size of 33.8 fluid ounces (1000 ml). Plastic aerosol containers shall be limited to a maximum 4 fluid ounces (118 ml) except as provided in Section 5104.1.1. Glass aerosol containers shall be limited to a maximum 4 fluid ounces (118 ml).

SECTION 5102
DEFINITIONS

5102.1 Definitions. The following terms are defined in Chapter 2:

AEROSOL CONTAINER.

AEROSOL PRODUCT.

Level 1 aerosol products.

Level 2 aerosol products.

Level 3 aerosol products.

AEROSOL PRODUCT WAREHOUSE.

PROPELLANT.

RETAIL DISPLAY AREA.

SECTION 5103
CLASSIFICATION OF AEROSOL PRODUCTS

5103.1 Classification levels. Aerosol products shall be classified as Level 1, 2 or 3 in accordance with Table 5103.1 and NFPA 30B. Aerosol products in cartons that are not identified in accordance with this section shall be classified as Level 3.

TABLE 5103.1
CLASSIFICATION OF AEROSOL PRODUCTS

CHEMICAL HEAT OF COMBUSTION		AEROSOL CLASSIFICATION
Greater than (Btu/lb)	Less than or equal to (Btu/lb)	
0	8,600	1
8,600	13,000	2
13,000	—	3

For SI: 1 British thermal unit per pound = 0.002326 kJ/g.

5103.2 Identification. Cartons or outer packaging shall be identified on not fewer than one exterior side with the classification level of the aerosol products contained within the carton.

5103.2.1 Aerosol products. Cartons or outer packaging containing aerosol products in metal containers or glass and plastic containers 4 fluid ounces. (118 ml) or less shall be clearly marked as follows:

LEVEL_____AEROSOLS

5103.2.2 Aerosol cooking spray products. Cartons or outer packaging containing aerosol cooking spray products in metal containers shall be clearly marked as follows:

AEROSOL COOKING SPRAY

5103.2.3 Plastic aerosol products. Cartons or outer packaging containing aerosol products in plastic containers greater than 4 fluid ounces (118 ml) shall be clearly marked as follows:

PLASTIC AEROSOL 1 (or X)

SECTION 5104
INSIDE STORAGE OF AEROSOL PRODUCTS

5104.1 General. The inside storage of Level 2 and 3 aerosol products shall comply with Sections 5104.2 through 5104.8 and NFPA 30B. Level 1 aerosol products and those aerosol products covered by Section 5104.1.1 shall be considered to be equivalent to a Class III commodity and shall comply with the requirements for palletized or rack storage in NFPA 13.

5104.1.1 Plastic Level 1 aerosol products. Aerosol products in plastic containers larger than 4 fluid ounces (118 ml), but not to exceed 33.8 fluid ounces (1000 ml), shall be allowed only where in accordance with this section. The commodity classification shall be Class III commodities, as defined in NFPA 13 where any of the following conditions are met:

1. Base product does not have a fire point where tested in accordance with ASTM D92, and nonflammable propellant.
2. Base product does not sustain combustion as tested in accordance with Appendix H, "Method of Testing for Sustained Combustibility," in DOTn 49 CFR Part 173, and nonflammable propellant.
3. Base product contains up to 20 percent by volume (15.8 percent by weight) of ethanol, isopropyl alcohol or a combination thereof in an aqueous mix, and nonflammable propellant.
4. Base product contains 4 percent by weight or less of an emulsified flammable liquefied gas propellant within an aqueous base. The propellant shall remain emulsified for the life of the product. Where such

INTERNATIONAL CODE COUNCIL®
Copyright © 2019 ICC & NYSDOS. ALL RIGHTS RESERVED. Accessed by Lauren Gualdino (lgualdino@briarcliffmanor.org), (-) Order Number #100880972 on May 08, 2020 07:05 AM (PDT) pursuant to License Agreement with ICC & NYSDOS. No further reproduction, no

100880972

propellant is not permanently emulsified, the propellant shall be nonflammable.

5104.1.2 Plastic aerosol X products. Plastic aerosol X products are those products, in containers larger than 4 fluid ounces (118 ml), that do not meet the criteria provided in Section 5104.1.1.

5104.1.2.1 Storage, use or handling. The storage, use or handling of plastic aerosol X products shall be prohibited.

5104.2 Storage in Groups A, B, E, F, I and R. Storage of Level 2 and 3 aerosol products in occupancies in Groups A, B, E, F, I and R shall be limited to the following maximum quantities:

1. A net weight of 1,000 pounds (454 kg) of Level 2 aerosol products.
2. A net weight of 500 pounds (227 kg) of Level 3 aerosol products.
3. A combined net weight of 1,000 pounds (454 kg) of Level 2 and 3 aerosol products.

The maximum quantity shall be increased 100 percent where the excess quantity is stored in storage cabinets in accordance with Section 5704.3.2.

5104.2.1 Excess storage. Storage of quantities exceeding the maximum quantities indicated in Section 5104.2 shall be stored in separate inside flammable liquid storage rooms in accordance with Section 5104.5.

5104.2.2 Aerosol cooking spray products. Storage of aerosol cooking spray products in A, B, E, F and R occupancies shall not be more than 1,000 pounds (454 kg) net weight.

5104.3 Storage in general purpose warehouses. Aerosol product storage in general purpose warehouses utilized only for warehousing-type operations involving mixed commodities shall comply with Section 5104.3.1, 5104.3.2. or 5104.3.3.

5104.3.1 Nonsegregated storage. Storage consisting of solid pile, palletized or rack storage of Level 2 and 3 aerosol products not segregated into areas utilized exclusively for the storage of aerosol products shall comply with Table 5104.3.1.

TABLE 5104.3.1
NONSEGREGATED STORAGE OF LEVEL 2 AND 3 AEROSOL PRODUCTS IN GENERAL PURPOSE WAREHOUSES[b]

AEROSOL LEVEL	MAXIMUM NET WEIGHT PER FLOOR (pounds)[b]			
	Palletized or solid-pile storage		Rack storage	
	Unprotected	Protected[a]	Unprotected	Protected[a]
2	2,500	12,000	2,500	24,000
3	1,000	12,000	1,000	24,000
Combination 2 and 3	2,500	12,000	2,500	24,000

For SI: 1 foot = 304.8 mm, 1 pound = 0.454 kg, 1 square foot = 0.0929 m^2.

a. Approved automatic sprinkler system protection and storage arrangements shall comply with NFPA 30B. Sprinkler system protection shall extend 20 feet beyond the storage area containing the aerosol products.

b. Storage quantities indicated are the maximum permitted in any 50,000-square-foot area.

5104.3.2 Segregated storage. Storage of Level 2 and 3 aerosol products segregated into areas utilized exclusively for the storage of aerosol products shall comply with Table 5104.3.2 and Sections 5104.3.2.1 and 5104.3.2.2.

TABLE 5104.3.2
SEGREGATED STORAGE OF LEVEL 2 AND 3 AEROSOL PRODUCTS IN GENERAL PURPOSE WAREHOUSES

STORAGE SEPARATION	MAXIMUM SEGREGATED STORAGE AREA[a]		SPRINKLER REQUIREMENTS
	Percentage of building area (percent)	Area limitation (square feet)	
Separation area[e, f]	15	20,000	Notes b, c
Chain-link fence enclosure[d]	20	20,000	Notes b, c
1-hour fire-resistance-rated interior walls	20	30,000	Note b
2-hour fire-resistance-rated interior walls	25	40,000	Note b
3-hour fire-resistance-rated interior walls	30	50,000	Note b

For SI: 1 foot = 304.8 mm, 1 square foot = 0.0929 m^2.

a. The maximum segregated storage area shall be limited to the smaller of the two areas resulting from the percentage of building area limitation and the area limitation.

b. Automatic sprinkler system protection in aerosol product storage areas shall comply with NFPA 30B and be approved. Building areas not containing aerosol product storage shall be equipped throughout with an approved automatic sprinkler system in accordance with Section 903.3.1.1.

c. Automatic sprinkler system protection in aerosol product storage areas shall comply with NFPA 30B and be approved. Sprinkler system protection shall extend a minimum 20 feet beyond the aerosol storage area.

d. Chain-link fence enclosures shall comply with Section 5104.3.2.1.

e. A separation area shall be defined as an area extending outward from the periphery of the segregated aerosol product storage area as follows.
   1. The limits of the aerosol product storage shall be clearly marked on the floor.
   2. The separation distance shall be not less than 25 feet and maintained clear of all materials with a commodity classification greater than Class III in accordance with Section 903.3.1.1.

f. Separation areas shall only be permitted where approved.

5104.3.2.1 Chain-link fence enclosures. Chain-link fence enclosures required by Table 5104.3.2 shall comply with the following:

1. The fence shall be not less than No. 9 gage steel wire, woven into a maximum 2-inch (51 mm) diamond mesh.
2. The fence shall be installed from the floor to the underside of the roof or ceiling above.
3. Class IV and high-hazard commodities shall be stored outside of the aerosol storage area and not less than 8 feet (2438 mm) from the fence.
4. Access openings in the fence shall be provided with either self- or automatic-closing devices or a labyrinth opening arrangement preventing aerosol containers from rocketing through the access openings.

INTERNATIONAL CODE COUNCIL®
Copyright © 2019 ICC & NYSDOS. ALL RIGHTS RESERVED. Accessed by Lauren Gualdino (lgualdino@briarcliffmanor.org), (-) Order Number #100880972 on May 08, 2020 07:05 AM (PDT) pursuant to License Agreement with ICC & NYSDOS. No further reproduction, no

100880972

5. Not less than two *means of egress* shall be provided from the fenced enclosure.

5104.3.2.2 Aisles. The minimum aisle requirements for segregated storage in general purpose warehouses shall comply with Table 5104.3.2.2.

TABLE 5104.3.2.2
SEGREGATED STORAGE AISLE WIDTHS AND DISTANCE TO AISLES IN GENERAL PURPOSE WAREHOUSES

STORAGE CONDITION	MINIMUM AISLE WIDTH (feet)	MAXIMUM DISTANCE FROM STORAGE TO AISLE (feet)
Solid pile or palletized[a]	4 feet between piles	25
Racks with ESFR sprinklers[a]	4 feet between racks and adjacent Level 2 and 3 aerosol product storage	25
Racks without ESFR sprinklers[a]	8 feet between racks and adjacent Level 2 and 3 aerosol product storage	25

For SI: 1 foot = 304.8 mm.

a. Sprinklers shall comply with NFPA 30B.

5104.3.3 Aerosol cooking spray products. Solid pile, palletized or rack storage of aerosol cooking spray products in a general purpose warehouse shall not be more than 2,500 pounds (1135 kg) net weight, unless protected in accordance with NFPA 30B.

5104.4 Storage in aerosol product warehouses. The total quantity of Level 2 and 3 aerosol products in a warehouse utilized for the storage, shipping and receiving of aerosol products shall not be restricted in structures complying with Sections 5104.4.1 through 5104.4.4.

5104.4.1 Automatic sprinkler system. Aerosol product warehouses shall be protected by an *approved* wet-pipe *automatic sprinkler system* in accordance with NFPA 30B. Sprinkler protection shall be designed based on the highest classification level of aerosol product present.

5104.4.2 Pile and palletized storage aisles. Solid pile and palletized storage shall be arranged so the maximum travel distance to an aisle is 25 feet (7620 mm). Aisles shall have a minimum width of 4 feet (1219 mm).

5104.4.3 Rack storage aisles. Rack storage shall be arranged with a minimum aisle width of 8 feet (2438 mm) between rows of racks and 8 feet (2438 mm) between racks and adjacent solid pile or palletized storage. Where early suppression fast-response (ESFR) sprinklers provide automatic sprinkler protection, the minimum aisle width shall be 4 feet (1219 mm).

5104.4.4 Combustible commodities. Combustible commodities other than flammable and *combustible liquids* shall be permitted to be stored in an aerosol product warehouse.

Exception: Flammable and *combustible liquids* in 1-quart (946 ml) metal containers and smaller shall be permitted to be stored in an aerosol product warehouse.

5104.5 Storage in inside flammable liquid storage rooms. Inside flammable liquid storage rooms shall comply with Section 5704.3.7. The maximum quantities of aerosol products shall comply with Section 5104.5.1 or 5104.5.2.

5104.5.1 Storage rooms of 500 square feet or less. The storage of aerosol products in flammable liquid storage rooms less than or equal to 500 square feet (46 m^2) in area shall not exceed the following quantities:

1. A net weight of 1,000 pounds (454 kg) of Level 2 aerosol products.
2. A net weight of 500 pounds (227 kg) of Level 3 aerosol products.
3. A combined net weight of 1,000 pounds (454 kg) of Level 2 and 3 aerosol products.

5104.5.2 Storage rooms greater than 500 square feet. The storage of aerosol products in flammable liquid storage rooms greater than 500 square feet (46 m^2) in area shall not exceed the following quantities:

1. A net weight of 2,500 pounds (1135 kg) of Level 2 aerosol products.
2. A net weight of 1,000 pounds (454 kg) of Level 3 aerosol products.
3. A combined net weight of 2,500 pounds (1135 kg) of Level 2 and 3 aerosol products.

The maximum aggregate storage quantity of Level 2 and 3 aerosol products permitted in separate inside storage rooms protected by an *approved automatic sprinkler system* in accordance with NFPA 30B shall be 5,000 pounds (2270 kg).

5104.6 Storage in liquid warehouses. The storage of Level 2 and 3 aerosol products in liquid warehouses shall comply with NFPA 30B. The storage shall be located within segregated storage areas in accordance with Section 5104.3.2 and Sections 5104.6.1 through 5104.6.3.

5104.6.1 Containment. Spill control or drainage shall be provided to prevent the flow of liquid to within 8 feet (2438 mm) of the segregated storage area.

5104.6.2 Sprinkler design. Sprinkler protection shall be designed based on the highest level of aerosol product present.

5104.6.3 Opening protection into segregated storage areas. Fire doors or gates opening into the segregated storage area shall either be self-closing or provided with automatic-closing devices activated by sprinkler water flow or an *approved* fire detection system.

5104.7 Storage in Group M occupancies. Storage of Level 2 and 3 aerosol products and aerosol cooking spray products in occupancies in Group M shall comply with Table 5104.7. Retail display shall comply with Section 5106.

INTERNATIONAL CODE COUNCIL®
Copyright © 2019 ICC & NYSDOS. ALL RIGHTS RESERVED. Accessed by Lauren Gualdino (lgualdino@briarcliffmanor.org), (-) Order Number #100880972 on May 08, 2020 07:05 AM (PDT) pursuant to License Agreement with ICC & NYSDOS. No further reproduction, no

100880972

TABLE 5104.7
MAXIMUM QUANTITIES OF LEVEL 2 AND 3 AEROSOL PRODUCTS AND AEROSOL COOKING SPRAY PRODUCTS IN RETAIL STORAGE AREAS

MAXIMUM NET WEIGHT PER FLOOR (pounds)			
Floor	Nonsegregated storage[a, b]	Segregated storage	
		Storage cabinets[b]	Separated from retail area[c]
Basement	Not Permitted	Not Permitted	Not Permitted
Ground	2,500	5,000	Note d
Upper	500	1,000	Note d

For SI: 1 pound = 0.454 kg, 1 square foot = 0.0929 m^2.

a. The total aggregate quantity on display and in storage shall not exceed the maximum retail display quantity indicated in Section 5106.3.

b. Storage quantities indicated are the maximum permitted in any 50,000-square-foot area.

c. The storage area shall be separated from the retail area with a 1-hour fire-resistance-rated assembly.

d. See Table 5104.3.2.

5104.8 Storage of aerosol cooking spray products. *Aerosol cooking spray products* shall be permitted to be stored in a general purpose warehouse.

5104.8.1 Mixed storage. Where *aerosol cooking spray products* are mixed with other higher-hazard aerosol products, the provided isolation, storage height restrictions and protection shall be based on the highest-hazard aerosol product present.

5104.8.2 Storage conditions. The storage and handling of *aerosol cooking spray products* shall comply with this chapter and NFPA 30B.

SECTION 5105
OUTSIDE STORAGE

5105.1 General. The outside storage of Level 2 and 3 aerosol products, including storage in temporary storage trailers, shall be separated from exposures in accordance with Table 5105.1.

TABLE 5105.1
DISTANCE TO EXPOSURES FOR OUTSIDE STORAGE OF LEVEL 2 AND 3 AEROSOL PRODUCTS

EXPOSURE	MINIMUM DISTANCE FROM AEROSOL STORAGE (feet)[a]
Buildings	50
Exit discharge to a public way	50
Lot lines	20
Other outside storage	50
Public alleys, public ways, public streets	20

For SI: 1 inch = 25.4 mm, 1 foot = 304.8 mm.

a. The minimum separation distance indicated is not required where exterior walls having a 2-hour fire-resistance rating without penetrations separate the storage from the exposure. The walls shall extend not less than 30 inches above and to the sides of Level 2 and 3 aerosol products.

SECTION 5106
RETAIL DISPLAY

5106.1 General. This section shall apply to the retail display of 500 pounds (227 kg) or more of Level 2 and 3 aerosol products and aerosol cooking spray products.

5106.2 Aerosol display and normal merchandising not exceeding 8 feet high. Aerosol display and normal merchandising not exceeding 8 feet (2438 mm) in height shall be in accordance with Sections 5106.2.1 through 5106.2.5.

5106.2.1 Maximum quantities in retail display areas. Aerosol products and aerosol cooking spray products in retail display areas shall not exceed quantities needed for display and normal merchandising and shall not exceed the quantities in Table 5106.2.1.

TABLE 5106.2.1
MAXIMUM QUANTITIES OF LEVEL 2 AND 3 AEROSOL PRODUCTS AND AEROSOL COOKING SPRAY PRODUCTS IN RETAIL DISPLAY AREAS

MAXIMUM NET WEIGHT PER FLOOR (pounds)[b]			
Floor	Unprotected[a]	Protected in accordance with Section 5106.2[a, c]	Protected in accordance with Section 5106.3[c]
Basement	Not Allowed	500	500
Ground	2,500	10,000	10,000
Upper	500	2,000	Not Allowed

For SI: 1 pound = 0.454 kg, 1 square foot = 0.0929 m^2.

a. The total quantity shall not exceed 1,000 pounds net weight in any one 100-square-foot retail display area.

b. Per 25,000-square-foot retail display area.

c. Minimum Ordinary Hazard Group 2 wet-pipe automatic sprinkler system throughout the retail sales occupancy.

5106.2.2 Aerosol cooking spray storage and fire protection. The storage and handling of *aerosol cooking spray products* shall comply with this chapter and NFPA 30B.

5106.2.3 Display of aerosol products. Level 2 and 3 aerosol products shall not be stacked more than 6 feet (1829 mm) high from the base of the aerosol product array to the top of the aerosol product array unless the aerosol products are placed on fixed shelving or otherwise secured in an *approved* manner. Where storage or retail display is on shelves, the height of such storage or retail display to the top of aerosol products shall not exceed 8 feet (2438 mm).

5106.2.4 Combustible cartons. Aerosol products located in retail display areas shall be removed from combustible cartons.

Exceptions:

1. Display areas that use a portion of combustible cartons that consist of only the bottom panel and not more than 2 inches (51 mm) of the side panel are allowed.
2. Where the display area is protected in accordance with Tables 6.4.2.7(a) through 6.4.2.7(l) of NFPA 30B, storage of aerosol products in combustible cartons is allowed.

INTERNATIONAL CODE COUNCIL®
Copyright © 2019 ICC & NYSDOS. ALL RIGHTS RESERVED. Accessed by Lauren Gualdino (lgualdino@briarcliffmanor.org), (-) Order Number #100880972 on May 08, 2020 07:05 AM (PDT) pursuant to License Agreement with ICC & NYSDOS. No further reproduction, no

100880972

5106.2.5 Retail display automatic sprinkler system. Where an *automatic sprinkler system* is required for the protected retail display of aerosol products, the wet-pipe *automatic sprinkler system* shall be in accordance with Section 903.3.1.1. The minimum system design shall be for an Ordinary Hazard Group 2 occupancy. The system shall be provided throughout the retail display area.

5106.3 Aerosol product display and normal merchandising exceeding 8 feet high. Aerosol product display and merchandising exceeding 8 feet (2438 mm) in height shall be in accordance with Sections 5106.3.1 through 5106.3.3.

5106.3.1 Maximum quantities in retail display areas. Aerosol products in retail display areas shall not exceed quantities needed for display and normal merchandising and shall not exceed the quantities in Table 5106.2.1, with fire protection in accordance with Section 5106.3.2.

5106.3.2 Automatic sprinkler protection. Aerosol product display and merchandising areas shall be protected by an *automatic sprinkler system* based on the requirements set forth in Tables 6.4.2.7(a) through 6.4.2.7(l) of NFPA 30B and the following:

1. Protection shall be based on the highest level of aerosol product in the array and the packaging method of the storage located more than 6 feet (1829 mm) above the finished floor.
2. Where using the cartoned aerosol products tables of NFPA 30B, uncartoned or display-cut Level 2 and 3 aerosol products shall not be permitted more than 6 feet (1829 mm) above the finished floor.
3. The design area for Level 2 and 3 aerosol products shall extend not less than 20 feet (6096 mm) beyond the Level 2 and 3 aerosol product display and merchandising areas.
4. Where ordinary and high-temperature ceiling sprinkler systems are adjacent to each other, noncombustible draft curtains shall be installed at the interface.

5106.3.3 Separation of Level 2 and 3 aerosol product areas. Separation of Level 2 and 3 aerosol product areas shall comply with the following:

1. Level 2 and 3 aerosol product display and merchandising areas shall be separated from each other by not less than 25 feet (7620 mm). See Table 5106.2.1.
2. Level 2 and 3 aerosol product display and merchandising areas shall be separated from flammable and *combustible liquids* storage and display areas by one or a combination of the following:
   2.1. Segregating areas from each other by horizontal distance of not less than 25 feet (7620 mm).
   2.2. Isolating areas from each other by a noncombustible partition extending not less than 18 inches (457 mm) above the merchandise.
   2.3. In accordance with Section 5106.5.
3. Where Item 2.2 is used to separate Level 2 or 3 aerosol products from flammable or *combustible liquids*, and the aerosol products are located within 25 feet (7620 mm) of flammable or *combustible liquids*, the area below the noncombustible partition shall be liquid tight at the floor to prevent spilled liquids from flowing beneath the aerosol products.

5106.4 Maximum quantities in storage areas. Aerosol products in storage areas adjacent to retail display areas shall not exceed the quantities in Table 5106.4.

5106.5 Special protection design for Level 2 and 3 aerosol products adjacent to flammable and combustible liquids in double-row racks. The display and merchandising of Level 2 and 3 aerosol products adjacent to flammable and *combustible liquids* in double-row racks shall be in accordance with Section 5106.3.3 or Sections 5106.5.1 through 5106.5.8.

5106.5.1 Fire protection. Fire protection for the display and merchandising of Level 2 and 3 aerosols in double-row racks shall be in accordance with Table 7.5.1 and Figure 7.5.1 of NFPA 30B.

5106.5.2 Cartoned aerosol products. Level 2 and 3 aerosol products displayed or merchandised more than 8 feet (2438 mm) above the finished floor shall be in cartons.

5106.5.3 Shelving. Shelving in racks shall be limited to wire mesh shelving having uniform openings not more than 6 inches (152 mm) apart, with the openings comprising not less than 50 percent of the overall shelf area.

5106.5.4 Aisles. Racks shall be arranged so that aisles not less than $7^1/_2$ feet (2286 mm) wide are maintained between rows of racks and adjacent solid-piled or palletized merchandise.

TABLE 5106.4
MAXIMUM STORAGE QUANTITIES FOR STORAGE AREAS ADJACENT TO RETAIL DISPLAY OF LEVEL 2 AND 3 AEROSOL PRODUCTS

MAXIMUM NET WEIGHT PER FLOOR (pounds)			
Floor	Unseparated[a, b]	Separated	
		Storage Cabinets[b]	1-hour Occupancy Separation
Basement	Not Allowed	Not Allowed	Not Allowed
Ground	2,500	5,000	In accordance with Sections 6.4.4.3 and 6.4.4.4 of NFPA 30B
Upper	500	1,000	In accordance with Sections 6.4.4.3 and 6.4.4.4 of NFPA 30B

For SI: 1 pound = 0.454 kg, 1 square foot = 0.0929 m^2.

a. The aggregate quantity in storage and retail display shall not exceed the quantity limits for retail display.

b. In any 50,000-square-foot area.

INTERNATIONAL CODE COUNCIL®
Copyright © 2019 ICC & NYSDOS. ALL RIGHTS RESERVED. Accessed by Lauren Gualdino (lgualdino@briarcliffmanor.org), (-) Order Number #100880972 on May 08, 2020 07:05 AM (PDT) pursuant to License Agreement with ICC & NYSDOS. No further reproduction, no

100880972

5106.5.5 Flue spaces. Flue spaces in racks shall comply with the following:

1. Transverse flue spaces—Nominal 3-inch (76 mm) transverse flue spaces shall be maintained between merchandise and rack uprights.
2. Longitudinal flue spaces—Nominal 6-inch (152 mm) longitudinal flue spaces shall be maintained.

5106.5.6 Horizontal barriers. Horizontal barriers constructed of minimum $^{3}/_{8}$-inch-thick (10 mm) plywood or minimum 0.034-inch (0.086 mm) (No. 22 gage) sheet metal shall be provided and located in accordance with Table 7.5.1 and Figure 7.5.1 of NFPA 30B where in-rack sprinklers are installed.

5106.5.7 Class I, II, III, IV and plastic commodities. Class I, II, III, IV and plastic commodities located adjacent to Level 2 and 3 aerosol products shall be protected in accordance with NFPA 13.

5106.5.8 Flammable and combustible liquids. Class I, II, III A and III B Liquids shall be allowed to be located adjacent to Level 2 and 3 aerosol products where both of the following conditions are met:

1. Class I, II, IIIA and IIIB liquid containers: Containers for Class I, II, IIIA and IIIB liquids shall be limited to 1.06-gallon (4 L) metal-relieving and nonrelieving style containers and 5.3-gallon (20 L) metal-relieving style containers.
2. Fire protection for Class I, II, IIIA and IIIB Liquids: Automatic sprinkler protection for Class I, II, IIIA and IIIB liquids shall be in accordance with Chapter 57.

SECTION 5107
MANUFACTURING FACILITIES

5107.1 General. Manufacturing facilities shall be in accordance with NFPA 30B.

INTERNATIONAL CODE COUNCIL®
Copyright © 2019 ICC & NYSDOS. ALL RIGHTS RESERVED. Accessed by Lauren Gualdino (lgualdino@briarcliffmanor.org), (-) Order Number #100880972 on May 08, 2020 07:05 AM (PDT) pursuant to License Agreement with ICC & NYSDOS. No further reproduction, no

100880972

CHAPTER 52

RESERVED

INTERNATIONAL CODE COUNCIL®
Copyright © 2019 ICC & NYSDOS. ALL RIGHTS RESERVED. Accessed by Lauren Gualdino (lgualdino@briarcliffmanor.org), (-) Order Number #100880972 on May 08, 2020 07:05 AM (PDT) pursuant to License Agreement with ICC & NYSDOS. No further reproduction, no

100880972

INTERNATIONAL CODE COUNCIL®
Copyright © 2019 ICC & NYSDOS. ALL RIGHTS RESERVED. Accessed by Lauren Gualdino (lgualdino@briarcliffmanor.org), (-) Order Number #100880972 on May 08, 2020 07:05 AM (PDT) pursuant to License Agreement with ICC & NYSDOS. No further reproduction, no

100880972

CHAPTER 53

COMPRESSED GASES

SECTION 5301
GENERAL

5301.1 Scope. Storage, use and handling of *compressed gases* in *compressed gas* containers, cylinders, tanks and systems shall comply with this chapter and NFPA 55, including those gases regulated elsewhere in this code. Partially full *compressed gas* containers, cylinders or tanks containing residual gases shall be considered as full for the purposes of the controls required.

Liquefied natural gas for use as a vehicular fuel shall also comply with NFPA 52 and NFPA 59A.

Compressed gases classified as hazardous materials shall also comply with Chapter 50 for general requirements and chapters addressing specific hazards, including Chapters 58 (Flammable Gases), 60 (Highly Toxic and Toxic Materials), 63 (Oxidizers, Oxidizing Gases and Oxidizing Cryogenic Fluids) and 64 (Pyrophoric Materials).

Compressed hydrogen (CH_2) shall also comply with the applicable portions of Chapters 23 and 58 of this code, the *Fuel Gas Code of New York State* and NFPA 2.

Cutting and welding gases shall also comply with Chapter 35.

Exceptions:

1. Gases used as refrigerants in refrigeration systems (see Section 605).
2. Compressed natural gas (CNG) for use as a vehicular fuel shall comply with Chapter 23, NFPA 52 and the *Fuel Gas Code of New York State*.
3. *Cryogenic fluids* shall comply with Chapter 55.
4. LP-gas shall comply with Chapter 61 and the *Fuel Gas Code of New York State*.

5301.2 Permits. Permits shall be required as set forth in Section 105.6.

SECTION 5302
DEFINITIONS

5302.1 Definitions. The following terms are defined in Chapter 2:

COMPRESSED GAS.

COMPRESSED GAS CONTAINER.

COMPRESSED GAS SYSTEM.

NESTING.

TUBE TRAILER.

SECTION 5303
GENERAL REQUIREMENTS

5303.1 Containers, cylinders and tanks. *Compressed gas* containers, cylinders and tanks shall comply with this section. *Compressed gas* containers, cylinders or tanks that are not designed for refillable use shall not be refilled after use of the original contents.

5303.2 Design and construction. *Compressed gas* containers, cylinders and tanks shall be designed, fabricated, tested, marked with the specifications of manufacture and maintained in accordance with the regulations of DOTn 49 CFR Parts 100-185 or the ASME *Boiler and Pressure Vessel Code*, Section VIII.

5303.3 Pressure relief devices. Pressure relief devices shall be in accordance with Sections 5303.3.1 through 5303.3.5.

5303.3.1 Where required. Pressure relief devices shall be provided to protect containers, cylinders and tanks containing *compressed gases* from rupture in the event of overpressure.

Exception: Cylinders, containers and tanks where exempt from the requirements for pressure relief devices specified by the standards of design *listed* in Section 5303.3.2.

5303.3.2 Design. Pressure relief devices to protect containers shall be designed and provided in accordance with CGA S-1.1, CGA S-1.2, CGA S-1.3 or the ASME *Boiler and Pressure Vessel Code*, Section VIII, as applicable.

5303.3.3 Sizing. Pressure relief devices shall be sized in accordance with the specifications to which the container was fabricated and to material-specific requirements as applicable.

5303.3.4 Arrangement. Pressure relief devices shall be arranged to discharge upward and unobstructed to the open air in such a manner as to prevent any impingement of escaping gas upon the container, adjacent structures or personnel.

Exception: DOTn specification containers having an internal volume of 30 cubic feet (0.855 m^3) or less.

5303.3.5 Freeze protection. Pressure relief devices or vent piping shall be designed or located so that moisture cannot collect and freeze in a manner that would interfere with the operation of the device.

5303.4 Marking. Stationary and portable *compressed gas* containers, cylinders, tanks and systems shall be marked in accordance with Sections 5303.4.1 through 5303.4.3.

5303.4.1 Stationary compressed gas containers, cylinders and tanks. Stationary *compressed gas* containers, cylinders and tanks shall be marked with the name of the

INTERNATIONAL CODE COUNCIL®
Copyright © 2019 ICC & NYSDOS. ALL RIGHTS RESERVED. Accessed by Lauren Gualdino (lgualdino@briarcliffmanor.org), (-) Order Number #100880972 on May 08, 2020 07:05 AM (PDT) pursuant to License Agreement with ICC & NYSDOS. No further reproduction, no

100880972

gas and in accordance with Sections 5003.5 and 5003.6. Markings shall be visible from any direction of approach.

5303.4.2 Portable containers, cylinders and tanks. Portable *compressed gas* containers, cylinders and tanks shall be marked in accordance with CGA C-7.

5303.4.3 Piping systems. Piping systems shall be marked in accordance with ASME A13.1. Markings used for piping systems shall consist of the content's name and include a direction-of-flow arrow. Markings shall be provided at each valve; at wall, floor or ceiling penetrations; at each change of direction; and at not less than every 20 feet (6096 mm) or fraction thereof throughout the piping run.

Exceptions:

1. Piping that is designed or intended to carry more than one gas at various times shall have appropriate signs or markings posted at the manifold, along the piping and at each point of use to provide clear identification and warning.
2. Piping within gas manufacturing plants, gas processing plants, refineries and similar occupancies shall be marked in an *approved* manner.

5303.5 Security. *Compressed gas* containers, cylinders, tanks and systems shall be secured against accidental dislodgement and against access by unauthorized personnel in accordance with Sections 5303.5.1 through 5303.5.3.

5303.5.1 Security of areas. Areas used for the storage, use and handling of *compressed gas* containers, cylinders, tanks and systems shall be secured against unauthorized entry and safeguarded in an *approved* manner.

5303.5.2 Physical protection. *Compressed gas* containers, cylinders, tanks and systems that could be exposed to physical damage shall be protected. Guard posts or other *approved* means shall be provided to protect *compressed gas* containers, cylinders, tanks and systems indoors and outdoors from vehicular damage and shall comply with Section 312.

5303.5.3 Securing compressed gas containers, cylinders and tanks. *Compressed gas* containers, cylinders and tanks shall be secured to prevent falling caused by contact, vibration or seismic activity. Securing of *compressed gas* containers, cylinders and tanks shall be by one of the following methods:

1. Securing containers, cylinders and tanks to a fixed object with one or more restraints.
2. Securing containers, cylinders and tanks on a cart or other mobile device designed for the movement of *compressed gas* containers, cylinders or tanks.
3. *Nesting* of *compressed gas* containers, cylinders and tanks at container filling or servicing facilities or in sellers' warehouses not open to the public. *Nesting* shall be allowed provided that the nested containers, cylinders or tanks, if dislodged, do not obstruct the required *means of egress*.
4. Securing of *compressed gas* containers, cylinders and tanks to or within a rack, framework, cabinet or similar assembly designed for such use.

   Exception: *Compressed gas* containers, cylinders and tanks in the process of examination, filling, transport or servicing.

5303.6 Valve protection. *Compressed gas* container, cylinder and tank valves shall be protected from physical damage by means of protective caps, collars or similar devices in accordance with Sections 5303.6.1 and 5303.6.2.

5303.6.1 Compressed gas container, cylinder or tank protective caps or collars. *Compressed gas* containers, cylinders and tanks designed for protective caps, collars or other protective devices shall have the caps or devices in place except when the containers, cylinders or tanks are in use or are being serviced or filled.

5303.6.2 Caps and plugs. *Compressed gas* containers, cylinders and tanks designed for valve protection caps or other protective devices shall have the caps or devices in place. When outlet caps or plugs are installed, they shall be in place.

Exception: *Compressed gas* containers, cylinders or tanks in use, being serviced or being filled.

5303.7 Separation from hazardous conditions. *Compressed gas* containers, cylinders and tanks and systems in storage or use shall be separated from materials and conditions that pose exposure hazards to or from each other. *Compressed gas* containers, cylinders, tanks and systems in storage or use shall be separated in accordance with Sections 5303.7.1 through 5303.7.11.2.

5303.7.1 Incompatible materials. *Compressed gas* containers, cylinders and tanks shall be separated from each other based on the hazard class of their contents. *Compressed gas* containers, cylinders and tanks shall be separated from *incompatible materials* in accordance with Section 5003.9.8.

5303.7.2 Combustible waste, vegetation and similar materials. Combustible waste, vegetation and similar materials shall be kept not less than 10 feet (3048 mm) from *compressed gas* containers, cylinders, tanks and systems. A noncombustible partition, without openings or penetrations and extending not less than 18 inches (457 mm) above and to the sides of the storage area is allowed in lieu of such distance. The wall shall either be an independent structure, or the exterior wall of the building adjacent to the storage area.

5303.7.3 Ledges, platforms and elevators. *Compressed gas* containers, cylinders and tanks shall not be placed near elevators, unprotected platform ledges or other areas where falling would result in *compressed gas* containers, cylinders or tanks being allowed to drop distances exceeding one-half the height of the container, cylinder or tank.

5303.7.4 Temperature extremes. *Compressed gas* containers, cylinders and tanks, whether full or partially full, shall not be exposed to artificially created high temperatures exceeding 125°F (52°C) or subambient (low) tem-

INTERNATIONAL CODE COUNCIL®
Copyright © 2019 ICC & NYSDOS. ALL RIGHTS RESERVED. Accessed by Lauren Gualdino (lgualdino@briarcliffmanor.org), (-) Order Number #100880972 on May 08, 2020 07:05 AM (PDT) pursuant to License Agreement with ICC & NYSDOS. No further reproduction, no

100880972

peratures unless designed for use under the exposed conditions.

5303.7.5 Falling objects. *Compressed gas* containers, cylinders, tanks and systems shall not be placed in areas where they are capable of being damaged by falling objects.

5303.7.6 Heating. *Compressed gas* containers, cylinders and tanks, whether full or partially full, shall not be heated by devices that could raise the surface temperature of the container, cylinder or tank to above 125°F (52°C). Heating devices shall comply with the *Mechanical Code of New York State* and NFPA 70. *Approved* heating methods involving temperatures of less than 125°F (52°C) are allowed to be used by trained personnel. Devices designed to maintain individual *compressed gas* containers, cylinders or tanks at constant temperature shall be *approved* and shall be designed to be fail-safe.

5303.7.7 Sources of ignition. Open flames and high-temperature devices shall not be used in a manner that creates a hazardous condition.

5303.7.8 Exposure to chemicals. *Compressed gas* containers, cylinders, tanks and systems shall not be exposed to *corrosive* chemicals or fumes that could damage containers, cylinders, tanks, valves or valve-protective caps.

5303.7.9 Exhausted enclosures. Where exhausted enclosures are provided as a means to segregate *compressed gas* containers, cylinders and tanks from exposure hazards, such enclosures shall comply with the requirements of Section 5003.8.5.

5303.7.10 Gas cabinets. Where gas cabinets are provided as a means to separate *compressed gas* containers, cylinders and tanks from exposure hazards, such gas cabinets shall comply with the requirements of Section 5003.8.6.

5303.7.11 Tube trailers. Tube trailers, including those containing compatible *compressed gases,* shall be surrounded by a clear space of not less than 3 feet (914 mm) to allow for maintenance, access and inspection.

5303.7.11.1 Individual tube trailers containing incompatible materials. Increased separation distances between individual tube trailers containing incompatible gases shall be provided where required by Section 5303.7.1.

5303.7.11.2 Connections. Piping systems used to connect tube trailers to a user piping system shall not be viewed as an encroachment into the 3-foot (914 mm) clear space.

5303.8 Wiring and equipment. Electrical wiring and equipment shall comply with NFPA 70. *Compressed gas* containers, cylinders, tanks and systems shall not be located where they could become part of an electrical circuit. *Compressed gas* containers, cylinders, tanks and systems shall not be used for electrical grounding.

5303.9 Service and repair. Service, repair, modification or removal of valves, pressure-relief devices or other *compressed gas* container, cylinder or tank appurtenances shall be performed by trained personnel.

5303.10 Unauthorized use. *Compressed gas* containers, cylinders, tanks and systems shall not be used for any purpose other than to serve as a vessel for containing the product that it is designed to contain.

5303.11 Exposure to fire. *Compressed gas* containers, cylinders and tanks that have been exposed to fire shall be removed from service. Containers, cylinders and tanks so removed shall be handled by *approved*, qualified persons.

5303.12 Leaks, damage or corrosion. Leaking, damaged or corroded *compressed gas* containers, cylinders and tanks shall be removed from service. Leaking, damaged or corroded *compressed gas* systems shall be replaced or repaired in accordance with the following:

1. *Compressed gas* containers, cylinders and tanks that have been removed from service shall be handled in an *approved* manner.
2. *Compressed gas* systems that are determined to be leaking, damaged or corroded shall be repaired to a serviceable condition or removed from service.

5303.13 Surface of unprotected storage or use areas. Unless otherwise specified in Section 5303.14, *compressed gas* containers, cylinders and tanks are allowed to be stored or used without being placed under overhead cover. To prevent bottom corrosion, containers, cylinders and tanks shall be protected from direct contact with soil or unimproved surfaces. The surface of the area on which the containers are placed shall be graded to prevent accumulation of water.

5303.14 Overhead cover. *Compressed gas* containers, cylinders and tanks are allowed to be stored or used in the sun except in locations where extreme temperatures prevail. Where extreme temperatures prevail, overhead covers shall be provided.

5303.15 Lighting. *Approved* lighting by natural or artificial means shall be provided.

5303.16 Vaults. Generation, compression, storage and dispensing equipment for *compressed gases* shall be allowed to be located in either above- or below-grade vaults complying with Sections 5303.16.1 through 5303.16.14.

5303.16.1 Listing required. Vaults shall be *listed* by a nationally recognized testing laboratory.

Exception: Where *approved* by the *fire code official*, below-grade vaults are allowed to be constructed on site, provided that the design is in accordance with the *Building Code of New York State* and that special inspections are conducted to verify structural strength and compliance of the installation with the *approved* design in accordance with Section 1707 of the *Building Code of New York State*. Installation plans for below-grade vaults that are constructed on site shall be prepared by, and the design shall bear the stamp of, a professional engineer. Consideration shall be given to soil and hydrostatic loading on the floors, walls and lid; anticipated seismic forces; uplifting by ground water or flooding; and to loads imposed from above, such as traffic and equipment loading on the vault lid.

INTERNATIONAL CODE COUNCIL®
Copyright © 2019 ICC & NYSDOS. ALL RIGHTS RESERVED. Accessed by Lauren Gualdino (lgualdino@briarcliffmanor.org), (-) Order Number #100880972 on May 08, 2020 07:05 AM (PDT) pursuant to License Agreement with ICC & NYSDOS. No further reproduction, no

100880972

5303.16.2 Design and construction. The vault shall completely enclose generation, compression, storage or dispensing equipment located in the vault. There shall not be openings in the vault enclosure except those necessary for vault ventilation and access, inspection, filling, emptying or venting of equipment in the vault. The walls and floor of the vault shall be constructed of reinforced concrete not less than 6 inches (152 mm) thick. The top of an above-grade vault shall be constructed of noncombustible material and shall be designed to be weaker than the walls of the vault to ensure that the thrust of any explosion occurring inside the vault is directed upward.

The top of an at- or below-grade vault shall be designed to relieve safely or contain the force of an explosion occurring inside the vault. The top and floor of the vault and the tank foundation shall be designed to withstand the anticipated loading, including loading from vehicular traffic, where applicable. The walls and floor of a vault installed below grade shall be designed to withstand anticipated soil and hydrostatic loading. Vaults shall be designed to be wind and earthquake resistant, in accordance with the *Building Code of New York State*.

5303.16.3 Secondary containment. Vaults shall be substantially liquid-tight and there shall not be backfill within the vault. The vault floor shall drain to a sump. For prefabricated vaults, liquid tightness shall be certified as part of the listing provided by a nationally recognized testing laboratory. For field-erected vaults, liquid tightness shall be certified in an *approved* manner.

5303.16.4 Internal clearance. There shall be sufficient clearance within the vault to allow for visual inspection and maintenance of equipment in the vault.

5303.16.5 Anchoring. Vaults and equipment contained therein shall be suitably anchored to withstand uplifting by groundwater or flooding. The design shall verify that uplifting is prevented even where equipment within the vault is empty.

5303.16.6 Vehicle impact protection. Vaults shall be resistant to damage from the impact of a motor vehicle, or vehicle impact protection shall be provided in accordance with Section 312.

5303.16.7 Arrangement. Equipment in vaults shall be *listed* or *approved* for above-ground use. Where multiple vaults are provided, adjacent vaults shall be allowed to share a common wall. The common wall shall be liquid and vapor tight and shall be designed to withstand the load imposed when the vault on either side of the wall is filled with water.

5303.16.8 Connections. Connections shall be provided to permit the venting of each vault to dilute, disperse and remove vapors prior to personnel entering the vault.

5303.16.9 Ventilation. Vaults shall be provided with an exhaust ventilation system installed in accordance with Section 5004.3. The ventilation system shall operate continuously or be designed to operate upon activation of the vapor or liquid detection system. The system shall provide ventilation at a rate of not less than 1 cubic foot per minute (cfm) per square foot [0.00508 $m^3/(s \cdot m^2)$] of floor area, but not less than 150 cfm (4 m^3/min). The exhaust system shall be designed to provide air movement across all parts of the vault floor for gases having a density greater than air and across all parts of the vault ceiling for gases having a density less than air. Supply ducts shall extend to within 3 inches (76 mm), but not more than 12 inches (305 mm), of the floor. Exhaust ducts shall extend to within 3 inches (76 mm), but not more than 12 inches (305 mm) of the floor or ceiling, for heavier-than-air or lighter-than-air gases, respectively. The exhaust system shall be installed in accordance with the *Mechanical Code of New York State*.

5303.16.10 Monitoring and detection. Vaults shall be provided with *approved* vapor and liquid detection systems and equipped with on-site audible and visual warning devices with battery backup. Vapor detection systems shall sound an alarm when the system detects vapors that reach or exceed 25 percent of the lower explosive limit (LEL) or one-half the immediately dangerous to life and health (IDLH) concentration for the gas in the vault. Vapor detectors shall be located not higher than 12 inches (305 mm) above the lowest point in the vault for heavier-than-air gases and not lower than 12 inches (305 mm) below the highest point in the vault for lighter-than-air gases. Liquid detection systems shall sound an alarm upon detection of any liquid, including water. Liquid detectors shall be located in accordance with the manufacturers' instructions. Activation of either vapor or liquid detection systems shall cause a signal to be sounded at an *approved*, constantly attended location within the facility served by the tanks or at an *approved* location. Activation of vapor detection systems shall shut off gas-handling equipment in the vault and dispensers.

5303.16.11 Liquid removal. Means shall be provided to recover liquid from the vault. Where a pump is used to meet this requirement, it shall not be permanently installed in the vault. Electric-powered portable pumps shall be suitable for use in Class I, Division 1 locations, as defined in NFPA 70.

5303.16.12 Relief vents. Vent pipes for equipment in the vault shall terminate not less than 12 feet (3658 mm) above ground level.

5303.16.13 Accessway. Vaults shall be provided with an *approved* personnel accessway with a minimum dimension of 30 inches (762 mm) and with a permanently affixed, nonferrous ladder. Accessways shall be designed to be nonsparking. Travel distance from any point inside a vault to an accessway shall not exceed 20 feet (6096 mm). At each entry point, a warning sign indicating the need for procedures for safe entry into confined spaces shall be posted. Entry points shall be secured against unauthorized entry and vandalism.

5303.16.14 Classified area. The interior of a vault containing a flammable gas shall be designated a Class I, Division 1 location, as defined in NFPA 70.

INTERNATIONAL CODE COUNCIL®
Copyright © 2019 ICC & NYSDOS. ALL RIGHTS RESERVED. Accessed by Lauren Gualdino (lgualdino@briarcliffmanor.org), (-) Order Number #100880972 on May 08, 2020 07:05 AM (PDT) pursuant to License Agreement with ICC & NYSDOS. No further reproduction, no

100880972

SECTION 5304
STORAGE OF COMPRESSED GASES

5304.1 Upright storage. *Compressed gas* containers, cylinders and tanks, except those designed for use in a horizontal position, and all *compressed gas* containers, cylinders and tanks containing nonliquefied gases, shall be stored in an upright position with the valve end up. An upright position shall include conditions where the container, cylinder or tank axis is inclined as much as 45 degrees (0.80 rad) from the vertical.

Exceptions:

1. *Compressed gas* containers with a water volume less than 1.3 gallons (5 L) are allowed to be stored in a horizontal position.
2. Cylinders, containers and tanks containing nonflammable gases, or cylinders, containers and tanks containing nonliquefied flammable gases that have been secured to a pallet for transportation purposes.

5304.2 Material-specific regulations. In addition to the requirements of this section, indoor and outdoor storage of *compressed gases* shall comply with the material-specific provisions of Chapters 54, 58 and 60 through 67.

SECTION 5305
USE AND HANDLING OF COMPRESSED GASES

5305.1 Compressed gas systems. *Compressed gas* systems shall be suitable for the use intended and shall be designed by persons competent in such design. *Compressed gas* equipment, machinery and processes shall be *listed* or *approved*.

5305.2 Controls. *Compressed gas* system controls shall be designed to prevent materials from entering or leaving process or reaction systems at other than the intended time, rate or path. Automatic controls shall be designed to be fail safe.

5305.3 Piping systems. Piping, including tubing, valves, fittings and pressure regulators, shall comply with this section and Chapter 50. Piping, tubing, pressure regulators, valves and other apparatus shall be kept gas tight to prevent leakage.

5305.4 Valves. Valves utilized on *compressed gas* systems shall be suitable for the use intended. Access to such valves shall be provided and maintained. Valve handles or operators for required shutoff valves shall not be removed or otherwise altered to prevent access.

5305.5 Venting. Venting of gases shall be directed to an *approved* location. Venting shall comply with the *Mechanical Code of New York State*.

5305.6 Upright use. *Compressed gas* containers, cylinders and tanks, except those designed for use in a horizontal position, and all *compressed gas* containers, cylinders and tanks containing nonliquefied gases, shall be used in an upright position with the valve end up. An upright position shall include conditions where the container, cylinder or tank axis is inclined as much as 45 degrees (0.80 rad) from the vertical. Use of nonflammable liquefied gases in the inverted position where the liquid phase is used shall not be prohibited provided that the container, cylinder or tank is properly secured and the dispensing apparatus is designed for liquefied gas use.

Exception: *Compressed gas* containers, cylinders and tanks with a water volume less than 1.3 gallons (5 L) are allowed to be used in a horizontal position.

5305.7 Transfer. Transfer of gases between containers, cylinders and tanks shall be performed by qualified personnel using equipment and operating procedures in accordance with CGA P-1.

Exception: The fueling of vehicles with CNG or CH_2, conducted in accordance with Chapter 23.

5305.8 Use of compressed gas for inflation. Inflatable equipment, devices or balloons shall only be pressurized or filled with compressed air or inert gases.

5305.9 Material-specific regulations. In addition to the requirements of this section, indoor and outdoor use of *compressed gases* shall comply with the material-specific provisions of Chapters 54, 58 and 60 through 67.

5305.10 Handling. The handling of *compressed gas* containers, cylinders and tanks shall comply with Sections 5305.10.1 and 5305.10.2.

5305.10.1 Carts and trucks. Containers, cylinders and tanks shall be moved using an *approved* method. Where containers, cylinders or tanks are moved by hand cart, hand truck or other mobile device, such carts, trucks or devices shall be designed for the secure movement of containers, cylinders or tanks. Carts and trucks utilized for transport of *compressed gas* containers, cylinders and tanks within buildings shall comply with Section 5003.10. Carts and trucks utilized for transport of *compressed gas* containers, cylinders and tanks exterior to buildings shall be designed so that the containers, cylinders and tanks will be secured against dropping or otherwise striking against each other or other surfaces.

5305.10.2 Lifting devices. Ropes, chains or slings shall not be used to suspend *compressed gas* containers, cylinders and tanks unless provisions at time of manufacture have been made on the container, cylinder or tank for appropriate lifting attachments, such as lugs.

SECTION 5306
MEDICAL GASES

5306.1 General. Medical gases at health care-related facilities intended for patient or veterinary care shall comply with Sections 5306.2 through 5306.5 in addition to other requirements of this chapter and Section 427 of the *Building Code of New York State*.

[NY] 5306.2 Interior supply location. Medical gases shall be stored in areas dedicated to the storage of such gases without other storage or uses. Where containers of medical gases in quantities greater than the amount listed in Table 5306.2 are located inside buildings, they shall be in a 1-hour exterior room, a 1-hour interior room or a gas cabinet in accordance with Section 5306.2.1, 5306.2.2 or 5306.2.3, respectively. Rooms or areas where medical gases are stored or used in quantities exceeding the maximum allowable quantity per

INTERNATIONAL CODE COUNCIL®
Copyright © 2019 ICC & NYSDOS. ALL RIGHTS RESERVED. Accessed by Lauren Gualdino (lgualdino@briarcliffmanor.org), (-) Order Number #100880972 on May 08, 2020 07:05 AM (PDT) pursuant to License Agreement with ICC & NYSDOS. No further reproduction, no

100880972

control area as set forth in Section 5003.1 shall be in accordance with the *Building Code of New York State* for high-hazard Group H occupancies.

[NY] TABLE 5306.2
QUANTITIES OF COMPRESSED GASES REQUIRING CONTAINMENT

Type of Gas	Amount (cubic feet at NTP)
Corrosive	200
Flammable (except cryogenic fluids and liquefied petroleum gases)	200
Highly toxic	Any Amount
Inert and simple asphyxiant	6,000
Oxidizing (including oxygen)	504
Pyrophoric	Any Amount
Toxic	Any Amount

For SI: 1 cubic foot = 0.02832 m^3.

5306.2.1 One-hour exterior rooms. A 1-hour exterior room shall be a room or enclosure separated from the remainder of the building by *fire barriers* constructed in accordance with Section 707 of the *Building Code of New York State* or horizontal assemblies constructed in accordance with Section 711 of the *Building Code of New York State*, or both, with a *fire-resistance rating* of not less than 1 hour. Openings between the room or enclosure and interior spaces shall be self-closing smoke- and draft-control assemblies having a *fire protection rating* of not less than 1 hour. Rooms shall have not less than one exterior wall that is provided with not less than two vents. Each vent shall have a minimum free opening area of 36 square inches (232 cm^2) for each 1,000 cubic feet (28 m^3) at *normal temperature and pressure* (NTP) of gas stored in the room and shall be not less than 72 square inches (465 cm^2) in aggregate free opening area. One vent shall be within 6 inches (152 mm) of the floor and one shall be within 6 inches (152 mm) of the ceiling. Rooms shall be provided with not less than one automatic sprinkler to provide container cooling in case of fire.

5306.2.2 One-hour interior room. Where an exterior wall cannot be provided for the room, a 1-hour interior room shall be provided and shall be a room or enclosure separated from the remainder of the building by *fire barriers* constructed in accordance with Section 707 of the *Building Code of New York State* or horizontal assemblies constructed in accordance with Section 711 of the *Building Code of New York State*, or both, with a *fire-resistance rating* of not less than 1 hour. Openings between the room or enclosure and interior spaces shall be self-closing, smoke- and draft-control assemblies having a *fire protection rating* of not less than 1 hour. An *automatic sprinkler system* shall be installed within the room. The room shall be exhausted through a duct to the exterior. Supply and exhaust ducts shall be enclosed in a 1-hour-rated shaft enclosure from the room to the exterior. *Approved* mechanical ventilation shall comply with the *Mechanical Code of New York State* and be provided at a minimum rate of 1 cfm per square foot [0.00508 $m^3/(s \cdot m^2)$] of the area of the room.

5306.2.3 Gas cabinets. Gas cabinets shall be constructed in accordance with Section 5003.8.6 and shall comply with the following:

1. Exhausted to the exterior through dedicated exhaust duct system installed in accordance with Chapter 5 of the *Mechanical Code of New York State*.
2. Supply and exhaust ducts shall be enclosed in a 1-hour *fire-resistance-rated* shaft enclosure from the cabinet to the exterior. The average velocity of ventilation at the face of access ports or windows shall be not less than 200 feet per minute (1.02 m/s) with not less than 150 feet per minute (0.76 m/s) at any point of the access port or window.
3. Provided with an *automatic sprinkler system* internal to the cabinet.

5306.3 Exterior supply locations. Oxidizer medical gas systems located on the exterior of a building with quantities greater than the permit amount shall be located in accordance with Section 6304.2.1.

5306.4 Transfilling. Transfilling areas and operations including, but not limited to, ventilation and separation, shall comply with NFPA 99.

5306.5 Medical gas systems. Medical gas systems including, but not limited to, distribution piping, supply manifolds, connections, pressure regulators and relief devices and valves, shall be installed in accordance with NFPA 99 and the general provisions of this chapter. Existing medical gas systems shall be maintained in accordance with the maintenance, inspection and testing provisions of NFPA 99 for medical gas systems.

SECTION 5307
COMPRESSED GASES NOT OTHERWISE REGULATED

5307.1 General. *Compressed gases* in storage or use not regulated by the material-specific provisions of Chapters 6, 54, 55, and 60 through 67, including asphyxiant, irritant and radioactive gases, shall comply with this section in addition to other requirements of this chapter.

5307.2 Ventilation. Indoor storage and use areas and storage buildings shall be provided with ventilation in accordance with Section 5004.3. Where mechanical ventilation is provided, the systems shall be operational during such time as the building or space is occupied.

Exceptions:

1. A gas detection system complying with Section 5307.2.1 shall be permitted in lieu of mechanical ventilation.
2. Areas containing insulated liquid carbon dioxide systems used in beverage dispensing applications shall comply with Section 5307.3.

5307.2.1 Gas detection system. In rooms or areas not provided with ventilation in accordance with Section 5307.2, a

INTERNATIONAL CODE COUNCIL®
Copyright © 2019 ICC & NYSDOS. ALL RIGHTS RESERVED. Accessed by Lauren Gualdino (lgualdino@briarcliffmanor.org), (-) Order Number #100880972 on May 08, 2020 07:05 AM (PDT) pursuant to License Agreement with ICC & NYSDOS. No further reproduction, no

100880972

gas detection system complying with Section 916 or, where *approved*, an oxygen depletion alarm system, either of which initiates audible and visible alarm signals in the room or area where sensors are installed, shall be provided.

5307.3 Insulated liquid carbon dioxide systems used in beverage dispensing applications. Insulated liquid carbon dioxide systems with more than 100 pounds (45.4 kg) of carbon dioxide used in beverage dispensing applications shall comply with Section 5307.3.1.

5307.3.1 Ventilation. Where insulated liquid carbon dioxide storage tanks, cylinders, piping and equipment are located indoors, rooms or areas containing storage tanks, cylinders, piping and equipment, and other areas where a leak of carbon dioxide is expected to accumulate, shall be provided with mechanical ventilation in accordance with Section 5004.3 and designed to maintain the room containing carbon dioxide at a negative pressure in relation to the surrounding area.

Exception: A gas detection system complying with Section 5307.3.2 shall be permitted in lieu of mechanical ventilation.

5307.3.2 Gas detection system. Where ventilation is not provided in accordance with Section 5307.3.1, a gas detection system shall be provided in rooms or indoor areas and in below-grade outdoor locations with insulated carbon dioxide systems. Carbon dioxide sensors shall be provided within 12 inches (305 mm) of the floor in the area where the gas is expected to accumulate or other *approved* locations. The system shall be designed as follows:

1. Activates an audible and visible supervisory alarm at a normally attended location upon detection of a carbon dioxide concentration of 5,000 ppm (9000 mg/m^3).
2. Activates an audible and visible alarm within the room or immediate area where the system is installed upon detection of a carbon dioxide concentration of 30,000 ppm (54 000 mg/m^3).

5307.4 Carbon dioxide enrichment systems. The design, installation and maintenance of carbon dioxide enrichment systems with more than 100 pounds (45.4 kg) of carbon dioxide, and carbon dioxide enrichment systems with any quantity of carbon dioxide having a remote fill connection, shall comply with Sections 5307.4.1 through 5307.4.7.

5307.4.1 Documentation. The following information shall be provided with the application for permit:

1. Total aggregate quantity of liquid carbon dioxide in pounds or cubic feet at *normal temperature and pressure*.
2. Location and total volume of the room where the carbon dioxide enrichment operation will be conducted. Identify whether the room is at grade or below grade.
3. Location of containers relative to equipment, building openings and *means of egress*.
4. Manufacturer's specifications and pressure rating, including cut sheets, of all piping and tubing to be used.
5. A piping and instrumentation diagram that shows piping support and remote fill connections.
6. Details of container venting, including but not limited to vent line size, material and termination location.
7. Alarm and detection system and equipment, if applicable.
8. Seismic support for containers.

5307.4.2 Equipment. Pressure relief, vent piping, fill indicators, fill connections, vent terminations, piping systems and the storage, use and handling of the carbon dioxide shall be in accordance with Chapter 53 and NFPA 55.

5307.4.3 Gas detection system. A gas detection system complying with Section 916 shall be provided in rooms or indoor areas in which the carbon dioxide enrichment process is located, in rooms or indoor areas in which container systems are located, and in other areas where carbon dioxide is expected to accumulate. Carbon dioxide sensors shall be provided within 12 inches (305 mm) of the floor in the area where the gas is expected to accumulate or leaks are most likely to occur. The system shall be designed as follows:

1. Activates a low-level alarm upon detection of a carbon dioxide concentration of 5,000 ppm (9000 mg/m^3).
2. Activates a high-level alarm upon detection of a carbon dioxide concentration of 30,000 ppm (54 000 mg/m^3).

5307.4.3.1 System activation. Activation of the low-level gas detection system alarm shall automatically:

1. Stop the flow of carbon dioxide to the piping system.
2. Activate the mechanical exhaust ventilation system.
3. Activate an audible and visible supervisory alarm signal at an *approved* location within the building.

Activation of the high-level gas detection system alarm shall automatically:

1. Stop the flow of carbon dioxide to the piping system.
2. Activate the mechanical exhaust ventilation system.
3. Activate an audible and visible evacuation alarm both inside and outside of the carbon dioxide enrichment area, and the area in which the carbon dioxide containers are located.

5307.4.4 Pressurization and ventilation. Rooms or indoor areas in which carbon dioxide enrichment is provided shall be maintained at a negative pressure in relation to the surrounding areas in the building. A mechanical ventilation system shall be provided in accordance with

INTERNATIONAL CODE COUNCIL®
Copyright © 2019 ICC & NYSDOS. ALL RIGHTS RESERVED. Accessed by Lauren Gualdino (lgualdino@briarcliffmanor.org), (-) Order Number #100880972 on May 08, 2020 07:05 AM (PDT) pursuant to License Agreement with ICC & NYSDOS. No further reproduction, no

100880972

the *Mechanical Code of New York State* that complies with all of the following:

1. Mechanical ventilation in the room or area shall be at a rate of not less than 1 cfm per square foot [0.00508 $m^3/(s \cdot m^2)$].
2. When activated by the gas detection system, the mechanical ventilation system shall remain on until manually reset.
3. The exhaust system intakes shall be taken from points within 12 inches (305 mm) of the floor.
4. The ventilation system shall discharge to the outdoors in an *approved* location.

5307.4.5 Signage. Hazard identification signs shall be posted at the entrance to the room and indoor areas where the carbon dioxide enrichment process is located, and at the entrance to the room or indoor area where the carbon dioxide containers are located. The sign shall be not less than 8 inches (200 mm) in width and 6 inches (150 mm) in height and indicate:

CAUTION – CARBON DIOXIDE GAS

VENTILATE THE AREA BEFORE ENTERING.
A HIGH CARBON DIOXIDE (CO_2)
GAS CONCENTRATION
IN THIS AREA
CAN CAUSE ASPHYXIATION.

5307.4.6 Seismic and structural design. Carbon dioxide system containers and piping shall comply with the seismic design requirements in Chapter 16 of the *Building Code of New York State* and shall not exceed the floor loading limitation of the building.

5307.4.7 Container refilling. Carbon dioxide containers located indoors shall not be refilled unless filled from a remote connection located outdoors.

INTERNATIONAL CODE COUNCIL®
Copyright © 2019 ICC & NYSDOS. ALL RIGHTS RESERVED. Accessed by Lauren Gualdino (lgualdino@briarcliffmanor.org), (-) Order Number #100880972 on May 08, 2020 07:05 AM (PDT) pursuant to License Agreement with ICC & NYSDOS. No further reproduction, no

100880972

CHAPTER 54
CORROSIVE MATERIALS

SECTION 5401
GENERAL

5401.1 Scope. The storage and use of *corrosive* materials shall be in accordance with this chapter. *Compressed gases* shall also comply with Chapter 53.

Exceptions:

1. Display and storage in Group M and storage in Group S occupancies complying with Section 5003.11.
2. Stationary storage battery systems in accordance with Section 1206.2.
3. This chapter shall not apply to R-717 (ammonia) where used as a refrigerant in a refrigeration system (see Section 605).

5401.2 Permits. Permits shall be required as set forth in Section 105.6.

SECTION 5402
DEFINITION

5402.1 Definition. The following term is defined in Chapter 2:

CORROSIVE.

SECTION 5403
GENERAL REQUIREMENTS

5403.1 Quantities not exceeding the maximum allowable quantity per control area. The storage and use of *corrosive* materials in amounts not exceeding the *maximum allowable quantity per control area* indicated in Section 5003.1 shall be in accordance with Sections 5001, 5003 and 5401.

5403.2 Quantities exceeding the maximum allowable quantity per control area. The storage and use of *corrosive* materials in amounts exceeding the *maximum allowable quantity per control area* indicated in Section 5003.1 shall be in accordance with this chapter and Chapter 50.

SECTION 5404
STORAGE

5404.1 Indoor storage. Indoor storage of *corrosive* materials in amounts exceeding the *maximum allowable quantity per control area* indicated in Table 5003.1.1(2), shall be in accordance with Sections 5001, 5003 and 5004 and this chapter.

5404.1.1 Liquid-tight floor. In addition to the provisions of Section 5004.12, floors in storage areas for *corrosive* liquids shall be of liquid-tight construction.

5404.2 Outdoor storage. Outdoor storage of *corrosive* materials in amounts exceeding the *maximum allowable quantity per control area* indicated in Table 5003.1.1(4) shall be in accordance with Sections 5001, 5003 and 5004 and this chapter.

5404.2.1 Above-ground outside storage tanks. Above-ground outside storage tanks exceeding an aggregate quantity of 1,000 gallons (3785 L) of *corrosive* liquids shall be provided with secondary containment in accordance with Section 5004.2.2.

5404.2.2 Distance from storage to exposures. Outdoor storage of *corrosive* materials shall not be within 20 feet (6096 mm) of buildings not associated with the manufacturing or distribution of such materials, *lot lines*, public streets, public alleys, *public ways* or *means of egress*. A 2-hour *fire barrier* without openings or penetrations, and extending not less than 30 inches (762 mm) above and to the sides of the storage area, is allowed in lieu of such distance. The wall shall either be an independent structure, or the *exterior wall* of the building adjacent to the storage area.

SECTION 5405
USE

5405.1 Indoor use. The indoor use of *corrosive* materials in amounts exceeding the *maximum allowable quantity per control area* indicated in Table 5003.1.1(2) shall be in accordance with Sections 5001, 5003 and 5005 and this chapter.

5405.1.1 Liquid transfer. *Corrosive* liquids shall be transferred in accordance with Section 5005.1.10.

5405.1.2 Ventilation. Where *corrosive* materials are dispensed or used, mechanical exhaust ventilation in accordance with Section 5005.2.1.1 shall be provided.

5405.2 Outdoor use. The outdoor use of *corrosive* materials in amounts exceeding the *maximum allowable quantity per control area* indicated in Table 5003.1.1(4) shall be in accordance with Sections 5001, 5003 and 5005 and this chapter.

5405.2.1 Distance from use to exposures. Outdoor use of *corrosive* materials shall be located in accordance with Section 5404.2.2.

INTERNATIONAL CODE COUNCIL®
Copyright © 2019 ICC & NYSDOS. ALL RIGHTS RESERVED. Accessed by Lauren Gualdino (lgualdino@briarcliffmanor.org), (-) Order Number #100880972 on May 08, 2020 07:05 AM (PDT) pursuant to License Agreement with ICC & NYSDOS. No further reproduction, no

100880972

INTERNATIONAL CODE COUNCIL®
Copyright © 2019 ICC & NYSDOS. ALL RIGHTS RESERVED. Accessed by Lauren Gualdino (lgualdino@briarcliffmanor.org), (-) Order Number #100880972 on May 08, 2020 07:05 AM (PDT) pursuant to License Agreement with ICC & NYSDOS. No further reproduction, no

100880972

CHAPTER 55
CRYOGENIC FLUIDS

SECTION 5501
GENERAL

5501.1 Scope. Storage, use and handling of *cryogenic fluids* shall comply with this chapter and NFPA 55. *Cryogenic fluids* classified as hazardous materials shall also comply with the general requirements of Chapter 50. Partially full containers containing residual *cryogenic fluids* shall be considered as full for the purposes of the controls required.

Exceptions:

1. Fluids used as refrigerants in refrigeration systems (see Section 605).
2. Liquefied natural gas (LNG), which shall comply with NFPA 59A.

Oxidizing *cryogenic fluids*, including oxygen, shall comply with Chapter 63, as applicable.

Flammable *cryogenic fluids*, including hydrogen, methane and carbon monoxide, shall comply with Chapters 23 and 58, as applicable.

Inert *cryogenic fluids*, including argon, helium and nitrogen, shall comply with ANSI/CGA P-18.

5501.2 Permits. Permits shall be required as set forth in Section 105.6.

SECTION 5502
DEFINITIONS

5502.1 Definitions. The following terms are defined in Chapter 2.

CRYOGENIC CONTAINER.

CRYOGENIC FLUID.

CRYOGENIC VESSEL.

FLAMMABLE CRYOGENIC FLUID.

LOW-PRESSURE TANK.

SECTION 5503
GENERAL REQUIREMENTS

5503.1 Containers. Containers employed for storage or use of *cryogenic fluids* shall comply with Sections 5503.1.1 through 5503.1.3.2 and Chapter 50.

5503.1.1 Nonstandard containers. Containers, equipment and devices that are not in compliance with recognized standards for design and construction shall be *approved* upon presentation of satisfactory evidence that they are designed and constructed for safe operation.

5503.1.1.1 Data submitted for approval. The following data shall be submitted to the *fire code official* with reference to the deviation from the recognized standard with the application for approval.

1. Type and use of container, equipment or device.
2. Material to be stored, used or transported.
3. Description showing dimensions and materials used in construction.
4. Design pressure, maximum operating pressure and test pressure.
5. Type, size and setting of pressure relief devices.
6. Other data requested by the *fire code official*.

5503.1.2 Concrete containers. Concrete containers shall be built in accordance with the *Building Code of New York State*. Barrier materials and membranes used in connection with concrete, but not functioning structurally, shall be compatible with the materials contained.

5503.1.3 Foundations and supports. Containers shall be provided with substantial concrete or masonry foundations, or structural steel supports on firm concrete or masonry foundations. Containers shall be supported to prevent the concentration of excessive loads on the supporting portion of the shell. Foundations for horizontal containers shall be constructed to accommodate expansion and contraction of the container. Foundations shall be provided to support the weight of vaporizers or heat exchangers.

5503.1.3.1 Temperature effects. Where container foundations or supports are subject to exposure to temperatures below -130°F (-90°C), the foundations or supports shall be constructed of materials to withstand the low-temperature effects of *cryogenic fluid* spillage.

5503.1.3.2 Corrosion protection. Portions of containers in contact with foundations or saddles shall be painted to protect against corrosion.

5503.2 Pressure relief devices. Pressure relief devices shall be provided in accordance with Sections 5503.2.1 through 5503.2.7 to protect containers and systems containing *cryogenic fluids* from rupture in the event of overpressure. Pressure relief devices shall be designed in accordance with CGA S-1.1, CGA S-1.2 and CGA S-1.3.

5503.2.1 Containers. Containers shall be provided with pressure relief devices.

5503.2.2 Vessels or equipment other than containers. Heat exchangers, vaporizers, insulation casings surrounding containers, vessels and coaxial piping systems in which liquefied *cryogenic fluids* could be trapped because of leakage from the primary container shall be provided with a pressure relief device.

INTERNATIONAL CODE COUNCIL®
Copyright © 2019 ICC & NYSDOS. ALL RIGHTS RESERVED. Accessed by Lauren Gualdino (lgualdino@briarcliffmanor.org), (-) Order Number #100880972 on May 08, 2020 07:05 AM (PDT) pursuant to License Agreement with ICC & NYSDOS. No further reproduction, no

100880972

5503.2.3 Sizing. Pressure relief devices shall be sized in accordance with the specifications to which the container was fabricated. The relief device shall have sufficient capacity to prevent the maximum design pressure of the container or system from being exceeded.

5503.2.4 Accessibility. Pressure relief devices shall be located such that they are provided with *ready access* for inspection and repair.

5503.2.5 Arrangement. Pressure relief devices shall be arranged to discharge unobstructed to the open air in such a manner as to prevent impingement of escaping gas on personnel, containers, equipment and adjacent structures or to enter enclosed spaces.

Exception: DOTn-specified containers with an internal volume of 2 cubic feet (0.057 m^3) or less.

5503.2.6 Shutoffs between pressure relief devices and containers. Shutoff valves shall not be installed between pressure relief devices and containers.

Exceptions:

1. A shutoff valve is allowed on containers equipped with multiple pressure relief device installations where the arrangement of the valves provides the full required flow through the minimum number of required relief devices at all times.
2. A locking-type shutoff valve is allowed to be used upstream of the pressure relief device for service-related work performed by the supplier when in accordance with the requirements of the ASME *Boiler and Pressure Vessel Code*.

5503.2.7 Temperature limits. Pressure relief devices shall not be subjected to *cryogenic fluid* temperatures except when operating.

5503.3 Pressure relief vent piping. Pressure relief vent-piping systems shall be constructed and arranged so as to remain functional and direct the flow of gas to a safe location in accordance with Sections 5503.3.1 and 5503.3.2.

5503.3.1 Sizing. Pressure relief device vent piping shall have a cross-sectional area not less than that of the pressure relief device vent opening and shall be arranged so as not to restrict the flow of escaping gas.

5503.3.2 Arrangement. Pressure relief device vent piping and drains in vent lines shall be arranged so that escaping gas will discharge unobstructed to the open air and not impinge on personnel, containers, equipment and adjacent structures or enter enclosed spaces. Pressure relief device vent lines shall be installed in such a manner to exclude or remove moisture and condensation and prevent malfunction of the pressure relief device because of freezing or ice accumulation.

5503.4 Marking. Cryogenic containers and systems shall be marked in accordance with Sections 5503.4.1 through 5503.4.6.

5503.4.1 Identification signs. Visible hazard identification signs in accordance with NFPA 704 shall be provided at entrances to buildings or areas in which *cryogenic fluids* are stored, handled or used.

5503.4.2 Identification of contents. Stationary and portable containers shall be marked with the name of the gas contained. Stationary above-ground containers shall be placarded in accordance with Sections 5003.5 and 5003.6. Portable containers shall be identified in accordance with CGA C-7.

5503.4.3 Identification of containers. Stationary containers shall be identified with the manufacturing specification and maximum allowable working pressure with a permanent nameplate. The nameplate shall be installed on the container in a location provided with *ready access*. The nameplate shall be marked in accordance with the ASME *Boiler and Pressure Vessel Code* or DOTn 49 CFR Parts 100-185.

5503.4.4 Identification of container connections. Container inlet and outlet connections, liquid-level limit controls, valves and pressure gauges shall be identified with one of the following:

1. A permanent tag or label identifying the function.
2. A schematic drawing that portrays the function and designates whether the connection is to the vapor or liquid space of the container.

Where a schematic drawing is provided, it shall be attached to the container and maintained in a legible condition.

5503.4.5 Identification of piping systems. Piping systems shall be identified in accordance with ASME A13.1.

5503.4.6 Identification of emergency shutoff valves. Emergency shutoff valves shall be identified and the location shall be clearly visible and indicated by means of a sign.

5503.5 Security. Cryogenic containers and systems shall be secured against accidental dislodgement and against access by unauthorized personnel in accordance with Sections 5503.5.1 through 5503.5.4.

5503.5.1 Security of areas. Containers and systems shall be secured against unauthorized entry and safeguarded in an *approved* manner.

5503.5.2 Securing of containers. Stationary containers shall be secured to foundations in accordance with the *Building Code of New York State*. Portable containers subject to shifting or upset shall be secured. Nesting shall be an acceptable means of securing containers.

5503.5.3 Securing of vaporizers. Vaporizers, heat exchangers and similar equipment shall be anchored to a suitable foundation and its connecting piping shall be sufficiently flexible to provide for the effects of expansion and contraction due to temperature changes.

5503.5.4 Physical protection. Containers, piping, valves, pressure relief devices, regulating equipment and other appurtenances shall be protected against physical damage and tampering.

INTERNATIONAL CODE COUNCIL®
Copyright © 2019 ICC & NYSDOS. ALL RIGHTS RESERVED. Accessed by Lauren Gualdino (lgualdino@briarcliffmanor.org), (-) Order Number #100880972 on May 08, 2020 07:05 AM (PDT) pursuant to License Agreement with ICC & NYSDOS. No further reproduction, no

100880972

5503.6 Electrical wiring and equipment. Electrical wiring and equipment shall comply with NFPA 70 and Sections 5503.6.1 and 5503.6.2.

5503.6.1 Location. Containers and systems shall not be located where they could become part of an electrical circuit.

5503.6.2 Electrical grounding and bonding. Containers and systems shall not be used for electrical grounding. Where electrical grounding and bonding is required, the system shall comply with NFPA 70. The grounding system shall be protected against corrosion, including corrosion caused by stray electric currents.

5503.7 Service and repair. Service, repair, modification or removal of valves, pressure relief devices or other container appurtenances shall comply with Sections 5503.7.1 and 5503.7.2 and the ASME *Boiler and Pressure Vessel Code*, Section VIII or DOTn 49 CFR Parts 100-185.

5503.7.1 Containers. Containers that have been removed from service shall be handled in an *approved* manner.

5503.7.2 Systems. Service and repair of systems shall be performed by trained personnel.

5503.8 Unauthorized use. Containers shall not be used for any purpose other than to serve as a vessel for containing the product that it is designed to contain.

5503.9 Leaks, damage and corrosion. Leaking, damaged or corroded containers shall be removed from service. Leaking, damaged or corroded systems shall be replaced, repaired or removed in accordance with Section 5503.7.

5503.10 Lighting. Where required, lighting, including emergency lighting, shall be provided for fire appliances and operating facilities such as walkways, control valves and gates ancillary to stationary containers.

SECTION 5504
STORAGE

5504.1 General. Storage of containers shall comply with this section.

5504.2 Indoor storage. Indoor storage of containers shall be in accordance with Sections 5504.2.1 through 5504.2.2.3.

5504.2.1 Stationary containers. Stationary containers shall be installed in accordance with the provisions applicable to the type of fluid stored and this section.

5504.2.1.1 Containers. Stationary containers shall comply with Section 5503.1.

5504.2.1.2 Construction of indoor areas. *Cryogenic fluids* in stationary containers stored indoors shall be located in buildings, rooms or areas constructed in accordance with the *Building Code of New York State*.

5504.2.1.3 Ventilation. Storage areas for stationary containers shall be ventilated in accordance with the *Mechanical Code of New York State*.

5504.2.2 Portable containers. Indoor storage of portable containers shall comply with the provisions applicable to the type of fluid stored and Sections 5504.2.2.1 through 5504.2.2.3.

5504.2.2.1 Containers. Portable containers shall comply with Section 5503.1.

5504.2.2.2 Construction of indoor areas. *Cryogenic fluids* in portable containers stored indoors shall be stored in buildings, rooms or areas constructed in accordance with the *Building Code of New York State*.

5504.2.2.3 Ventilation. Storage areas shall be ventilated in accordance with the *Mechanical Code of New York State*.

5504.3 Outdoor storage. Outdoor storage of containers shall be in accordance with Sections 5504.3.1 through 5504.3.1.2.3.

5504.3.1 Separation from hazardous conditions. Cryogenic containers and systems in outdoor storage shall be separated from materials and conditions that pose exposure hazards to or from each other in accordance with Sections 5504.3.1.1 through 5504.3.1.1.5.

5504.3.1.1 Stationary containers. Stationary containers shall be separated from exposure hazards in accordance with the provisions applicable to the type of fluid contained and the minimum separation distances indicated in Table 5504.3.1.1.

TABLE 5504.3.1.1
SEPARATION OF STATIONARY CONTAINERS FROM EXPOSURE HAZARDS

EXPOSURE	MINIMUM DISTANCE (feet)
Buildings, regardless of construction type	1
Building exits	10
Wall openings	1
Air intakes	10
Lot lines	5
Places of public assembly	50
Nonambulatory patient areas	50
Combustible materials such as paper, leaves, weeds, dry grass or debris	15
Other hazardous materials	In accordance with Chapter 50

For SI: 1 foot = 304.8 mm.

5504.3.1.1.1 Point-of-fill connections. Remote transfer points and fill connection points shall not be positioned closer to exposures than the minimum distances required for stationary containers.

5504.3.1.1.2 Surfaces beneath containers. Containers shall be placed on surfaces that are compatible with the fluid in the container.

5504.3.1.1.3 Location. Containers of *cryogenic fluids* shall not be located within diked areas containing other hazardous materials.

5504.3.1.1.4 Areas subject to flooding. Stationary containers located in areas subject to flooding shall be securely anchored or elevated to prevent the con-

INTERNATIONAL CODE COUNCIL®
Copyright © 2019 ICC & NYSDOS. ALL RIGHTS RESERVED. Accessed by Lauren Gualdino (lgualdino@briarcliffmanor.org), (-) Order Number #100880972 on May 08, 2020 07:05 AM (PDT) pursuant to License Agreement with ICC & NYSDOS. No further reproduction, no

100880972

tainers from separating from foundations or supports.

5504.3.1.1.5 Drainage. The area surrounding stationary containers shall be provided with a means to prevent accidental discharge of fluids from endangering personnel, containers, equipment and adjacent structures or to enter enclosed spaces. The stationary container shall not be placed where spilled or discharged fluids will be retained around the container.

Exception: These provisions shall not apply where it is determined by the *fire code official* that the container does not constitute a hazard, after consideration of special features such as crushed rock utilized as a heat sink, topographical conditions, nature of occupancy, proximity to structures on the same or adjacent property, and the capacity and construction of containers and character of fluids to be stored.

5504.3.1.2 Outdoor storage of portable containers. Outdoor storage of portable containers shall comply with Section 5503 and Sections 5504.3.1.2.1 through 5504.3.1.2.3.

5504.3.1.2.1 Exposure hazard separation. Portable containers in outdoor storage shall be separated from exposure hazards in accordance with Table 5504.3.1.2.1.

TABLE 5504.3.1.2.1
SEPARATION OF PORTABLE CONTAINERS FROM EXPOSURE HAZARDS

EXPOSURE	MINIMUM DISTANCE (feet)
Building exits	10
Wall openings	1
Air intakes	10
Lot lines	5
Combustible materials such as paper, leaves, weeds, dry grass or debris	15
Other hazardous materials	In accordance with Chapter 50

For SI: 1 foot = 304.8 mm.

5504.3.1.2.2 Surfaces beneath containers. The surface of the area on which stationary containers are placed, including the surface of the area located below the point where connections are made for the purpose of filling such containers, shall be compatible with the fluid in the container.

5504.3.1.2.3 Drainage. The area surrounding portable containers shall be provided with a means to prevent accidental discharge of fluids from endangering adjacent containers, buildings, equipment or adjoining property.

Exception: These provisions shall not apply where it is determined by the *fire code official* that the container does not constitute a hazard.

SECTION 5505
USE AND HANDLING

5505.1 General. Use and handling of *cryogenic fluid* containers and systems shall comply with Sections 5505.1.1 through 5505.5.2.

5505.1.1 Cryogenic fluid systems. *Cryogenic fluid* systems shall be suitable for the use intended and designed by persons competent in such design. Equipment, machinery and processes shall be *listed* or *approved*.

5505.1.2 Piping systems. Piping, tubing, valves and joints and fittings conveying *cryogenic fluids* shall be installed in accordance with the material-specific provisions of Section 5501.1 and Sections 5505.1.2.1 through 5505.1.2.6.

5505.1.2.1 Design and construction. Piping systems shall be suitable for the use intended through the full range of pressure and temperature to which they will be subjected. Piping systems shall be designed and constructed to provide adequate allowance for expansion, contraction, vibration, settlement and fire exposure.

5505.1.2.2 Joints. Joints on container piping and tubing shall be threaded, welded, silver brazed or flanged.

5505.1.2.3 Valves and accessory equipment. Valves and accessory equipment shall be suitable for the intended use at the temperatures of the application and shall be designed and constructed to withstand the maximum pressure at the minimum temperature to which they will be subjected.

5505.1.2.3.1 Shutoff valves on containers. Shutoff valves shall be provided on all container connections except for pressure relief devices. Shutoff valves shall be provided with access thereto and located as close as practical to the container.

5505.1.2.3.2 Shutoff valves on piping. Shutoff valves shall be installed in piping containing *cryogenic fluids* where needed to limit the volume of liquid discharged in the event of piping or equipment failure. Pressure relief valves shall be installed where liquid is capable of being trapped between shutoff valves in the piping system (see Section 5503.2).

5505.1.2.4 Physical protection and support. Piping systems shall be supported and protected from physical damage. Piping passing through walls shall be protected from mechanical damage.

5505.1.2.5 Corrosion protection. Above-ground piping that is subject to corrosion because of exposure to corrosive atmospheres, shall be constructed of materials to resist the corrosive environment or otherwise protected against corrosion. Below-ground piping shall be protected against corrosion.

5505.1.2.6 Testing. Piping systems shall be tested and proven free of leaks after installation as required by the standards to which they were designed and constructed. Test pressures shall be not less than 150 percent of the maximum allowable working pressure where hydraulic

INTERNATIONAL CODE COUNCIL®
Copyright © 2019 ICC & NYSDOS. ALL RIGHTS RESERVED. Accessed by Lauren Gualdino (lgualdino@briarcliffmanor.org), (-) Order Number #100880972 on May 08, 2020 07:05 AM (PDT) pursuant to License Agreement with ICC & NYSDOS. No further reproduction, no

100880972

testing is conducted or 110 percent where testing is conducted pneumatically.

5505.2 Indoor use. Indoor use of *cryogenic fluids* shall comply with the material-specific provisions of Section 5501.1.

5505.3 Outdoor use. Outdoor use of *cryogenic fluids* shall comply with the material specific provisions of Sections 5501.1, 5505.3.1 and 5505.3.2.

5505.3.1 Separation. Distances from *lot lines*, buildings and exposure hazards shall comply with Section 5504.3 and the material-specific provisions of Section 5501.1.

5505.3.2 Emergency shutoff valves. Manual or automatic emergency shutoff valves shall be provided to shut off the *cryogenic fluid* supply in case of emergency. An emergency shutoff valve shall be located at the source of supply and at the point where the system enters the building.

5505.4 Filling and dispensing. Filling and dispensing of *cryogenic fluids* shall comply with Sections 5505.4.1 through 5505.4.3.

5505.4.1 Dispensing areas. Dispensing of *cryogenic fluids* with physical or *health hazards* shall be conducted in *approved* locations. Dispensing indoors shall be conducted in areas constructed in accordance with the *Building Code of New York State*.

5505.4.1.1 Ventilation. Indoor areas where *cryogenic fluids* are dispensed shall be ventilated in accordance with the requirements of the *Mechanical Code of New York State* in a manner that captures any vapor at the point of generation.

Exception: *Cryogenic fluids* that can be demonstrated not to create harmful vapors.

5505.4.1.2 Piping systems. Piping systems utilized for filling or dispensing of *cryogenic fluids* shall be designed and constructed in accordance with Section 5505.1.2.

5505.4.2 Vehicle loading and unloading areas. Loading or unloading areas shall be conducted in an *approved* manner in accordance with the standards referenced in Section 5501.1.

5505.4.3 Limit controls. Limit controls shall be provided to prevent overfilling of stationary containers during filling operations.

5505.5 Handling. Handling of cryogenic containers shall comply with Sections 5505.5.1 and 5505.5.2.

5505.5.1 Carts and trucks. Cryogenic containers shall be moved using an *approved* method. Where cryogenic containers are moved by hand cart, hand truck or other mobile device, such carts, trucks or devices shall be designed for the secure movement of the container.

Carts and trucks used to transport cryogenic containers shall be designed to provide a stable base for the commodities to be transported and shall have a means of restraining containers to prevent accidental dislodgement.

5505.5.2 Closed containers. Pressurized containers shall be transported in a closed condition. Containers designed for use at atmospheric conditions shall be transported with appropriate loose-fitting covers in place to prevent spillage.

INTERNATIONAL CODE COUNCIL®
Copyright © 2019 ICC & NYSDOS. ALL RIGHTS RESERVED. Accessed by Lauren Gualdino (lgualdino@briarcliffmanor.org), (-) Order Number #100880972 on May 08, 2020 07:05 AM (PDT) pursuant to License Agreement with ICC & NYSDOS. No further reproduction, no

100880972

INTERNATIONAL CODE COUNCIL®
Copyright © 2019 ICC & NYSDOS. ALL RIGHTS RESERVED. Accessed by Lauren Gualdino (lgualdino@briarcliffmanor.org), (-) Order Number #100880972 on May 08, 2020 07:05 AM (PDT) pursuant to License Agreement with ICC & NYSDOS. No further reproduction, no

100880972

CHAPTER 56
EXPLOSIVES AND FIREWORKS

SECTION 5601
GENERAL

[NY] 5601.1 Scope. Unless regulated by other laws or regulations, such as Penal Law 405 or Title 12 NYCRR Part 39, the provisions of this chapter shall govern the possession, manufacture, storage, handling, sale and use of explosives, explosive materials, fireworks, and small arms ammunition.

5601.1.1 Explosive material standard. In addition to the requirements of this chapter, NFPA 495 shall govern the manufacture, transportation, storage, sale, handling and use of *explosive* materials.

5601.1.2 Explosive material terminals. In addition to the requirements of this chapter, the operation of *explosive material* terminals shall conform to the provisions of NFPA 498.

5601.1.3 Fireworks. The possession, manufacture, storage, sale, handling and use of fireworks are prohibited.

Exceptions:

1. Storage and handling of fireworks as allowed in Section 5604.
2. Manufacture, assembly and testing of fireworks as allowed in Section 5605.
3. The use of fireworks for fireworks displays as allowed in Section 5608.
4. The possession, storage, sale, handling and use of specific types of Division 1.4G fireworks where allowed by applicable laws, ordinances and regulations, provided that such fireworks and facilities comply with NFPA 1124, CPSC 16 CFR Parts 1500 and 1507, and DOTn 49 CFR Parts 100–185, as applicable for consumer fireworks.

5601.1.4 Rocketry. The storage, handling and use of model and high-power rockets shall comply with the requirements of NFPA 1122, NFPA 1125 and NFPA 1127.

5601.1.5 Ammonium nitrate. The storage and handling of ammonium nitrate shall comply with the requirements of NFPA 400 and Chapter 63.

Exception: Storage of ammonium nitrate in magazines with blasting agents shall comply with the requirements of NFPA 495.

5601.2 Permit required. Permits shall be required as set forth in Section 105.6 and regulated in accordance with this section.

5601.2.1 Residential uses. Persons shall not keep or store, nor shall any permit be issued to keep or store, any *explosives* at any place of habitation, or within 100 feet (30 480 mm) thereof.

Exception: Storage of smokeless propellant, black powder and small arms primers for personal use and not for resale in accordance with Section 5606.

5601.2.2 Sale and retail display. Persons shall not construct a retail display nor offer for sale *explosives*, *explosive materials* or fireworks on highways, sidewalks, public property or in Group A or E occupancies.

5601.2.3 Permit restrictions. The *fire code official* is authorized to limit the quantity of *explosives*, *explosive materials* or fireworks permitted at a given location. Persons possessing a permit for storage of *explosives* at any place, shall not keep or store an amount greater than authorized in such permit. Only the kind of *explosive* specified in such a permit shall be kept or stored.

5601.2.4 Financial responsibility. Before a permit is issued, as required by Section 5601.2, the applicant shall file with the jurisdiction a corporate surety bond in the principal sum of $100,000 or a public liability insurance policy for the same amount, for the purpose of the payment of all damages to persons or property that arise from, or are caused by, the conduct of any act authorized by the permit upon which any judicial judgment results. The *fire code official* is authorized to specify a greater or lesser amount when, in his or her opinion, conditions at the location of use indicate a greater or lesser amount is required. Government entities shall be exempt from this bond requirement.

5601.2.4.1 Blasting. Before approval to do blasting is issued, the applicant for approval shall file a bond or submit a certificate of insurance in such form, amount and coverage as determined by the legal department of the jurisdiction to be adequate in each case to indemnify the jurisdiction against any and all damages arising from permitted blasting.

5601.2.4.2 Fireworks display. The permit holder shall furnish a bond or certificate of insurance in an amount deemed adequate by the *fire code official* for the payment of all potential damages to a person or persons or to property by reason of the permitted display, and arising from any acts of the permit holder, the agent, employees or subcontractors.

5601.3 Prohibited explosives. Permits shall not be issued or renewed for possession, manufacture, storage, handling, sale or use of the following materials and such materials currently in storage or use shall be disposed of in an *approved* manner.

1. Liquid nitroglycerin.
2. Dynamite containing more than 60-percent liquid *explosive* ingredient.
3. Dynamite having an unsatisfactory absorbent or one that permits leakage of a liquid *explosive* ingredient under any conditions liable to exist during storage.

INTERNATIONAL CODE COUNCIL®
Copyright © 2019 ICC & NYSDOS. ALL RIGHTS RESERVED. Accessed by Lauren Gualdino (lgualdino@briarcliffmanor.org), (-) Order Number #100880972 on May 08, 2020 07:05 AM (PDT) pursuant to License Agreement with ICC & NYSDOS. No further reproduction, no

100880972

4. Nitrocellulose in a dry and uncompressed condition in a quantity greater than 10 pounds (4.54 kg) of net weight in one package.
5. Fulminate of mercury in a dry condition and fulminate of all other metals in any condition except as a component of manufactured articles not hereinafter forbidden.
6. *Explosive* compositions that ignite spontaneously or undergo marked decomposition, rendering the products of their use more hazardous, when subjected for 48 consecutive hours or less to a temperature of 167°F (75°C).
7. New *explosive materials* until *approved* by DOTn, except that permits are allowed to be issued to educational, governmental or industrial laboratories for instructional or research purposes.
8. *Explosive materials* forbidden for transport by DOTn.
9. *Explosive materials* containing an ammonium salt and a chlorate.
10. *Explosives* not packed or marked as required by DOTn 49 CFR Parts 100–185.

Exception: Gelatin dynamite.

5601.4 Qualifications. Persons in charge of magazines, blasting, fireworks display or pyrotechnic special effect operations shall not be under the influence of alcohol or drugs that impair sensory or motor skills, shall be not less than 21 years of age and shall demonstrate knowledge of all safety precautions related to the storage, handling or use of *explosives*, *explosive materials* or fireworks.

5601.5 Supervision. The *fire code official* is authorized to require operations permitted under the provisions of Section 5601.2 to be supervised at any time by the *fire code official* in order to determine compliance with all safety and fire regulations.

5601.6 Notification. Whenever a new *explosive material* storage or manufacturing site is established, including a temporary job site, the local law enforcement agency, fire department and local emergency planning committee shall be notified 48 hours in advance, not including Saturdays, Sundays and holidays, of the type, quantity and location of *explosive materials* at the site.

5601.7 Seizure. The *fire code official* is authorized to remove or cause to be removed or disposed of in an *approved* manner, at the expense of the *owner*, *explosives*, *explosive materials* or fireworks offered or exposed for sale, stored, possessed or used in violation of this chapter.

5601.8 Establishment of quantity of explosives and distances. The quantity of *explosives* and distances shall be in accordance with Sections 5601.8.1 through 5601.8.1.4.

5601.8.1 Quantity of explosives. The quantity-distance (Q-D) tables in Sections 5604.5 and 5605.3 shall be used to provide the minimum separation distances from potential explosion sites as set forth in Tables 5601.8.1(1) through 5601.8.1(3). The classification and the weight of the *explosives* are primary characteristics governing the use of these tables. The net *explosive* weight shall be determined in accordance with Sections 5601.8.1.1 through 5601.8.1.4.

5601.8.1.1 Mass-detonating explosives (Division 1.1, 1.2 or 1.5). The total net *explosive* weight of mass-detonating *explosives* (Division 1.1, 1.2 or 1.5) shall be used. See Table 5604.5.2(1) or Table 5605.3, as appropriate.

Exception: Where the TNT equivalence of the *explosive material* has been determined, the equivalence is allowed to be used to establish the net *explosive* weight.

5601.8.1.2 Nonmass-detonating explosives (excluding Division 1.4). Nonmass-detonating *explosives* (excluding Division 1.4) shall be as follows:

1. Division 1.3 propellants. The total weight of the propellants alone shall be the net *explosive* weight. The net weight of propellant shall be used. See Table 5604.5.2(2).
2. Combinations of bulk metal powder and pyrotechnic compositions. The sum of the net weights of metal powders and pyrotechnic compositions in the containers shall be the net *explosive* weight. See Table 5604.5.2(2).

5601.8.1.3 Combinations of mass-detonating and nonmass-detonating explosives (excluding Division 1.4). Combination of mass-detonating and nonmass-detonating *explosives* (excluding Division 1.4) shall be as follows:

1. Where Division 1.1 and 1.2 *explosives* are located in the same site, determine the distance for the total quantity considered first as 1.1 and then as 1.2. The required distance is the greater of the two. Where the Division 1.1 requirements are controlling and the TNT equivalence of the 1.2 is known, the TNT equivalent weight of the 1.2 items shall be allowed to be added to the total *explosive* weight of Division 1.1 items to determine the net *explosive* weight for Division 1.1 distance determination. See Table 5604.5.2(2) or Table 5605.3, as appropriate.
2. Where Division 1.1 and 1.3 *explosives* are located in the same site, determine the distances for the total quantity considered first as 1.1 and then as 1.3. The required distance is the greater of the two. Where the Division 1.1 requirements are controlling and the TNT equivalence of the 1.3 is known, the TNT equivalent weight of the 1.3 items shall be allowed to be added to the total *explosive* weight of Division 1.1 items to determine the net *explosive* weight for Division 1.1 distance determination. See Table 5604.5.2(1), 5604.5.2(2) or 5605.3, as appropriate.

INTERNATIONAL CODE COUNCIL®
Copyright © 2019 ICC & NYSDOS. ALL RIGHTS RESERVED. Accessed by Lauren Gualdino (lgualdino@briarcliffmanor.org), (-) Order Number #100880972 on May 08, 2020 07:05 AM (PDT) pursuant to License Agreement with ICC & NYSDOS. No further reproduction, no

100880972

TABLE 5601.8.1(1)
APPLICATION OF QUANTITY-DISTANCE (Q-D) TABLES—DIVISION 1.1, 1.2 AND 1.5 EXPLOSIVES[a, b, c]

ITEM	MAGAZINE	OPERATING BUILDING	INHABITED BUILDING	PUBLIC TRAFFIC ROUTE
Inhabited building	IBD in Table 5604.5.2(1)	IBD in Table 5604.5.2(1)	Not Applicable	Not Applicable
Magazine	IMD in Table 5604.5.2(1)	ILD or IPD in Table 5605.3	IBD in Table 5604.5.2(1)	PTR in Table 5604.5.2(1)
Operating building	ILD or IPD in Table 5604.5.2(1)	ILD or IPD in Table 5605.3	IBD in Table 5604.5.2(1)	PTR in Table 5604.5.2(1)
Public traffic route	PTR in Table 5604.5.2(1)	PTR in Table 5604.5.2(1)	Not Applicable	Not Applicable

For SI: 1 foot = 304.8 mm.

a. The minimum separation distance shall be 60 feet. Where a building or magazine containing explosives is barricaded, the minimum distance shall be 30 feet.

b. Linear interpolation between tabular values in the referenced Q-D tables shall not be allowed. Nonlinear interpolation of the values shall be allowed subject to an approved technical opinion and report.

c. For definitions of Quantity-Distance abbreviations IBD, ILD, IMD, IPD and PTR, see Chapter 2.

TABLE 5601.8.1(2)
APPLICATION OF QUANTITY-DISTANCE (Q-D) TABLES—DIVISION 1.3 EXPLOSIVES[a, b, c]

ITEM	MAGAZINE	OPERATING BUILDING	INHABITED BUILDING	PUBLIC TRAFFIC ROUTE
Inhabited building	IBD in Table 5604.5.2(2)	IBD in Table 5604.5.2(2)	Not Applicable	Not Applicable
Magazine	IMD in Table 5604.5.2(2)	ILD or IPD in Table 5604.5.2(2)	IBD in Table 5604.5.2(2)	PTR in Table 5604.5.2(2)
Operating building	ILD or IPD in Table 5604.5.2(2)	ILD or IPD in Table 5604.5.2(2)	IBD in Table 5604.5.2(2)	PTR in Table 5604.5.2(2)
Public traffic route	PTR in Table 5604.5.2(2)	PTR in Table 5604.5.2(2)	Not Applicable	Not Applicable

For SI: 1 foot = 304.8 mm.

a. The minimum separation distance hall be not less than 50 feet.

b. Linear interpolation between tabular values in the referenced Q-D table shall be allowed.

c. For definitions of Quantity-Distance abbreviations IBD, ILD, IMD, IPD and PTR, see Chapter 2.

TABLE 5601.8.1(3)
APPLICATION OF QUANTITY-DISTANCE (Q-D) TABLES—DIVISION 1.4 EXPLOSIVES[a, b, c,]

ITEM	MAGAZINE	OPERATING BUILDING	INHABITED BUILDING	PUBLIC TRAFFIC ROUTE
Inhabited building	IBD in Table 5604.5.2(3)	IBD in Table 5604.5.2(3)	Not Applicable	Not Applicable
Magazine	IMD in Table 5604.5.2(3)	ILD or IPD in Table 5604.5.2(3)	IBD in Table 5604.5.2(3)	PTR in Table 5604.5.2(3)
Operating building	ILD or IPD in Table 5604.5.2(3)	ILD or IPD in Table 5604.5.2(3)	IBD in Table 5604.5.2(3)	PTR in Table 5604.5.2(3)
Public traffic route	PTR in Table 5604.5.2(3)	PTR in Table 5604.5.2(3)	Not Applicable	Not Applicable

For SI: 1 foot = 304.8 mm.

a. The minimum separation distance shall be not less than 50 feet.

b. Linear interpolation between tabular values in the referenced Q-D table shall not be allowed.

c. For definitions of Quantity-Distance abbreviations IBD, ILD, IMD, IPD and PTR, see Chapter 2.

INTERNATIONAL CODE COUNCIL®
Copyright © 2019 ICC & NYSDOS. ALL RIGHTS RESERVED. Accessed by Lauren Gualdino (lgualdino@briarcliffmanor.org), (-) Order Number #100880972 on May 08, 2020 07:05 AM (PDT) pursuant to License Agreement with ICC & NYSDOS. No further reproduction, no

100880972

3. Where Division 1.1, 1.2 and 1.3 *explosives* are located in the same site, determine the distances for the total quantity considered first as 1.1, next as 1.2 and finally as 1.3. The required distance is the greatest of the three. As allowed by Items 1 and 2, TNT equivalent weights for 1.2 and 1.3 items are allowed to be used to determine the net weight of *explosives* for Division 1.1 distance determination. Table 5604.5.2(1) or 5605.3 shall be used where TNT equivalency is used to establish the net *explosive* weight.
4. For composite pyrotechnic items Division 1.1 and Division 1.3, the sum of the net weights of the pyrotechnic composition and the *explosives* involved shall be used. See Tables 5604.5.2(1) and 5604.5.2(2).

5601.8.1.4 Moderate fire—no blast hazards (Division 1.4). For Division 1.4 *explosives*, the total weight of the *explosive* material alone is the net weight. The net weight of the *explosive* material shall be used.

SECTION 5602
DEFINITIONS

5602.1 Definitions. The following terms are defined in Chapter 2:

AMMONIUM NITRATE.

BARRICADE.

Artificial barricade.
Natural barricade.

BARRICADED.

BLAST AREA.

BLAST SITE.

BLASTER.

BLASTING AGENT.

BULLET RESISTANT.

[NY] DAY BOX.

DETONATING CORD.

DETONATION.

DETONATOR.

DISCHARGE SITE.

DISPLAY SITE.

EXPLOSIVE.
High explosive.
Low explosive.
Mass-detonating explosives.
UN/DOTn Class 1 explosives.
Division 1.1.
Division 1.2.
Division 1.3.
Division 1.4.
Division 1.5.
Division 1.6.

EXPLOSIVE MATERIAL.

FALLOUT AREA.

FIREWORKS.
Fireworks, 1.3G.
Fireworks, 1.4G.

FIREWORKS DISPLAY.

HIGHWAY.

INHABITED BUILDING.

MAGAZINE.
Indoor.
Type 1.
Type 2.
Type 3.
Type 4.
Type 5.

MORTAR.

NET EXPLOSIVE WEIGHT (net weight).

OPERATING BUILDING.

OPERATING LINE.

PLOSOPHORIC MATERIAL.

PROXIMATE AUDIENCE.

PUBLIC TRAFFIC ROUTE (PTR).

PYROTECHNIC ARTICLE.

PYROTECHNIC COMPOSITION.

PYROTECHNIC SPECIAL EFFECT.

PYROTECHNIC SPECIAL-EFFECT MATERIAL.

PYROTECHNICS.

QUANTITY-DISTANCE (Q-D).
Inhabited building distance (IBD).
Intermagazine distance (IMD).
Intraline distance (ILD) or Intraplant distance (IPD).

RAILWAY.

READY BOX.

SMALL ARMS AMMUNITION.

SMALL ARMS PRIMERS.

SMOKELESS PROPELLANTS.

SPECIAL INDUSTRIAL EXPLOSIVE DEVICE.

THEFT RESISTANT.

SECTION 5603
RECORD KEEPING AND REPORTING

5603.1 General. Records of the receipt, handling, use or disposal of *explosive materials*, and reports of any accidents, thefts or unauthorized activities involving *explosive materials* shall conform to the requirements of this section.

5603.2 Transaction record. The permittee shall maintain a record of all transactions involving receipt, removal, use or disposal of *explosive materials*. Such records shall be maintained for a period of 5 years.

INTERNATIONAL CODE COUNCIL®
Copyright © 2019 ICC & NYSDOS. ALL RIGHTS RESERVED. Accessed by Lauren Gualdino (lgualdino@briarcliffmanor.org), (-) Order Number #100880972 on May 08, 2020 07:05 AM (PDT) pursuant to License Agreement with ICC & NYSDOS. No further reproduction, no

100880972

Exception: Where only Division 1.4G (consumer fireworks) are handled, records need only be maintained for a period of 3 years.

5603.3 Loss, theft or unauthorized removal. The loss, theft or unauthorized removal of *explosive materials* from a magazine or permitted facility shall be reported to the *fire code official*, local law enforcement authorities and the U.S. Department of Treasury, Bureau of Alcohol, Tobacco, Firearms and Explosives within 24 hours.

Exception: Loss of Division 1.4G (consumer fireworks) need not be reported to the Bureau of Alcohol, Tobacco, Firearms and Explosives.

5603.4 Accidents. Accidents involving the use of *explosives*, *explosive materials* and fireworks that result in injuries or property damage shall be reported to the *fire code official* immediately.

5603.5 Misfires. The pyrotechnic display operator or blaster in charge shall keep a record of all aerial shells that fail to fire or charges that fail to detonate.

5603.6 Hazard communication. Manufacturers of *explosive materials* and fireworks shall maintain records of chemicals, chemical compounds and mixtures required by DOL 29 CFR Part 1910.1200, and Section 407.

5603.7 Safety rules. Current safety rules covering the operation of magazines, as described in Section 5604.7, shall be posted on the interior of the magazine in a visible location.

SECTION 5604
EXPLOSIVE MATERIALS STORAGE AND HANDLING

5604.1 General. Storage of *explosives* and *explosive materials*, small arms ammunition, small arms primers, propellant-actuated cartridges and smokeless propellants in magazines shall comply with the provisions of this section.

5604.2 Magazine required. *Explosives* and *explosive materials*, and Division 1.3G fireworks shall be stored in magazines constructed, located, operated and maintained in accordance with the provisions of Section 5604 and NFPA 495 or NFPA 1124.

Exceptions:

1. Storage of fireworks at display sites in accordance with Section 5608.5 and NFPA 1123 or NFPA 1126.
2. Portable or mobile magazines not exceeding 120 square feet (11 m^2) in area shall not be required to comply with the requirements of the *Building Code of New York State.*

5604.3 Magazines. The storage of *explosives* and *explosive materials* in magazines shall comply with Table 5604.3.

5604.3.1 High explosives. *Explosive materials* classified as Division 1.1 or 1.2 or formerly classified as Class A by the U.S. Department of Transportation shall be stored in Type 1, 2 or 3 magazines.

Exceptions:

1. Black powder shall be stored in a Type 1, 2, 3 or 4 magazine.
2. Cap-sensitive *explosive material* that is demonstrated not to be bullet sensitive shall be stored in a Type 1, 2, 3, 4 or 5 magazine.

5604.3.2 Low explosives. *Explosive materials* that are not cap sensitive shall be stored in a Type 1, 2, 3, 4 or 5 magazine.

5604.3.3 Detonating cord. For quantity and distance purposes, detonating cord of 50 grains per foot shall be calculated as equivalent to 8 pounds (4 kg) of high *explosives* per 1,000 feet (305 m). Heavier or lighter core loads shall be rated proportionally.

5604.4 Prohibited storage. Detonators shall be stored in a separate magazine for blasting supplies and shall not be stored in a magazine with other *explosive materials*.

5604.5 Location. The use of magazines for storage of *explosives* and *explosive materials* shall comply with Sections 5604.5.1 through 5604.5.3.3.

5604.5.1 Indoor magazines. The use of indoor magazines for storage of *explosives* and *explosive materials* shall comply with the requirements of Sections 5604.5.1.1 through 5604.5.1.7.

5604.5.1.1 Use. The use of indoor magazines for storage of *explosives* and *explosive materials* shall be limited to occupancies of Group F, H, M or S, and research and development laboratories.

5604.5.1.2 Construction. Indoor magazines shall comply with the following construction requirements:

1. Construction shall be fire resistant and theft resistant.
2. Exterior shall be painted red.
3. Base shall be fitted with wheels, casters or rollers to facilitate removal from the building in an emergency.
4. Lid or door shall be marked with conspicuous white lettering not less than 3 inches (76 mm) high and minimum $^1/_2$ inch (12.7 mm) stroke, reading EXPLOSIVES—KEEP FIRE AWAY.
5. The least horizontal dimension shall not exceed the clear width of the entrance door.

5604.5.1.3 Quantity limit. Not more than 50 pounds (23 kg) of *explosives* or *explosive materials* shall be stored within an indoor magazine.

Exception: Day boxes used for the storage of in-process material in accordance with Section 5605.6.4.1.

INTERNATIONAL CODE COUNCIL®
Copyright © 2019 ICC & NYSDOS. ALL RIGHTS RESERVED. Accessed by Lauren Gualdino (lgualdino@briarcliffmanor.org), (-) Order Number #100880972 on May 08, 2020 07:05 AM (PDT) pursuant to License Agreement with ICC & NYSDOS. No further reproduction, no

100880972

TABLE 5604.3
STORAGE AMOUNTS AND MAGAZINE REQUIREMENTS FOR EXPLOSIVES, EXPLOSIVE MATERIALS AND FIREWORKS, 1.3G MAXIMUM ALLOWABLE QUANTITY PER CONTROL AREA

NEW UN/ DOTn DIVISION	OLD DOTn CLASS	ATF/OSHA CLASS	INDOOR[a] (pounds)				OUTDOOR (pounds)	MAGAZINE TYPE REQUIRED				
			Unprotected	Cabinet	Sprinklers	Sprinklers & cabinet		1	2	3	4	5
1.1[b]	A	High	0	0	1	2	1	X	X	X	—	—
1.2	A	High	0	0	1	2	1	X	X	X	—	—
1.2	B	Low	0	0	1	1	1	X	X	X	X	—
1.3	B	Low	0	0	5	10	1	X	X	X	X	—
1.4	B	Low	0	0	50	100	1	X	X	X	X	—
1.5	C	Low	0	0	1	2	1	X	X	X	X	—
1.5	Blasting Agent	Blasting Agent	0	0	1	2	1	X	X	X	X	X
1.6	Not Applicable	Not Applicable	0	0	1	2	1	X	X	X	X	X

For SI: 1 pound = 0.454 kg, 1 pound per gallon = 0.12 kg per liter, 1 ounce = 28.35 g.

a. A factor of 10 pounds per gallon shall be used for converting pounds (solid) to gallons (liquid) in accordance with Section 5003.1.2.

b. Black powder shall be stored in a Type 1, 2, 3 or 4 magazine as provided for in Section 5604.3.1.

➡

5604.5.1.4 Prohibited use. Indoor magazines shall not be used within buildings containing Group R occupancies.

5604.5.1.5 Location. Indoor magazines shall be located within 10 feet (3048 mm) of an entrance and only on floors at or having ramp access to the exterior grade level.

5604.5.1.6 Number. Not more than two indoor magazines shall be located in the same building. Where two such magazines are located in the same building, one magazine shall be used solely for the storage of not more than 5,000 detonators.

5604.5.1.7 Separation distance. Where two magazines are located in the same building, they shall be separated by a distance of not less than 10 feet (3048 mm).

5604.5.2 Outdoor magazines. Outdoor magazines other than Type 3 shall be located so as to comply with Table 5604.5.2(2) or 5604.5.2(3) as set forth in Tables 5601.8.1(1) through 5601.8.1(3). Where a magazine or group of magazines, as described in Section 5604.5.2.2, contains different classes of *explosive materials*, and Division 1.1 materials are present, the required separations for the magazine or magazine group as a whole shall comply with Table 5604.5.2(2).

5604.5.2.1 Separation. Where two or more storage magazines are located on the same property, each magazine shall comply with the minimum distances specified from inhabited buildings, public transportation routes and operating buildings. Magazines shall be separated from each other by not less than the intermagazine distances (IMD) shown for the separation of magazines.

5604.5.2.2 Grouped magazines. Where two or more magazines are separated from each other by less than the intermagazine distances (IMD), such magazines as a group shall be considered as one magazine and the total quantity of *explosive materials* stored in the group shall be treated as if stored in a single magazine. The location of the group of magazines shall comply with the intermagazine distances (IMD) specified from other magazines or magazine groups, inhabited buildings (IBD), public transportation routes (PTR) and operating buildings (ILD or IPD) as required.

5604.5.3 Special requirements for Type 3 magazines. Type 3 magazines shall comply with Sections 5604.5.3.1 through 5604.5.3.3.

5604.5.3.1 Location. Wherever practicable, Type 3 magazines shall be located away from neighboring inhabited buildings, railways, highways and other magazines in accordance with Table 5604.5.2(2) or 5604.5.2(3), as applicable.

5604.5.3.2 Supervision. Type 3 magazines shall be attended when *explosive materials* are stored within. *Explosive materials* shall be removed to appropriate storage magazines for unattended storage at the end of the workday.

5604.5.3.3 Use. Not more than two Type 3 magazines shall be located at the same blasting site. Where two Type 3 magazines are located at the same blasting site, one magazine shall used solely for the storage of detonators.

5604.6 Construction. Magazines shall be constructed in accordance with Sections 5604.6.1 through 5604.6.5.2.

5604.6.1 Drainage. The ground around a magazine shall be graded so that water drains away from the magazine.

5604.6.2 Heating. Magazines requiring heat shall be heated as prescribed in NFPA 495 by either hot water radi-

INTERNATIONAL CODE COUNCIL®
Copyright © 2019 ICC & NYSDOS. ALL RIGHTS RESERVED. Accessed by Lauren Gualdino (lgualdino@briarcliffmanor.org), (-) Order Number #100880972 on May 08, 2020 07:05 AM (PDT) pursuant to License Agreement with ICC & NYSDOS. No further reproduction, no

100880972

TABLE 5604.5.2(1)
AMERICAN TABLE OF DISTANCES FOR STORAGE OF EXPLOSIVES AS APPROVED BY THE INSTITUTE OF MAKERS OF EXPLOSIVES AND REVISED JUNE 1991[a]

QUANTITY OF EXPLOSIVE MATERIALS[c]		DISTANCES IN FEET							
		Inhabited buildings		Public highways with traffic volume less than 3,000 vehicles per day		Public highways with traffic volume greater than 3,000 vehicles per day and passenger railways		Separation of magazines[d]	
Pounds over	Pounds not over	Barricaded	Unbarricaded	Barricaded	Unbarricaded	Barricaded	Unbarricaded	Barricaded	Unbarricaded
0	5	70	140	30	60	51	102	6	12
5	10	90	180	35	70	64	128	8	16
10	20	110	220	45	90	81	162	10	20
20	30	125	250	50	100	93	186	11	22
30	40	140	280	55	110	103	206	12	24
40	50	150	300	60	120	110	220	14	28
50	75	170	340	70	140	127	254	15	30
75	100	190	380	75	150	139	278	16	32
100	125	200	400	80	160	150	300	18	36
125	150	215	430	85	170	159	318	19	38
150	200	235	470	95	190	175	350	21	42
200	250	255	510	105	210	189	378	23	46
250	300	270	540	110	220	201	402	24	48
300	400	295	590	120	240	221	442	27	54
400	500	320	640	130	260	238	476	29	58
500	600	340	680	135	270	253	506	31	62
600	700	355	710	145	290	266	532	32	64
700	800	375	750	150	300	278	556	33	66
800	900	390	780	155	310	289	578	35	70
900	1,000	400	800	160	320	300	600	36	72
1,000	1,200	425	850	165	330	318	636	39	78
1,200	1,400	450	900	170	340	336	672	41	82
1,400	1,600	470	940	175	350	351	702	43	86
1,600	1,800	490	980	180	360	366	732	44	88
1,800	2,000	505	1,010	185	370	378	756	45	90
2,000	2,500	545	1,090	190	380	408	816	49	98
2,500	3,000	580	1,160	195	390	432	864	52	104
3,000	4,000	635	1,270	210	420	474	948	58	116
4,000	5,000	685	1,370	225	450	513	1,026	61	122
5,000	6,000	730	1,460	235	470	546	1,092	65	130
6,000	7,000	770	1,540	245	490	573	1,146	68	136
7,000	8,000	800	1,600	250	500	600	1,200	72	144
8,000	9,000	835	1,670	255	510	624	1,248	75	150
9,000	10,000	865	1,730	260	520	645	1,290	78	156
10,000	12,000	875	1,750	270	540	687	1,374	82	164
12,000	14,000	885	1,770	275	550	723	1,446	87	174
14,000	16,000	900	1,800	280	560	756	1,512	90	180
16,000	18,000	940	1,880	285	570	786	1,572	94	188
18,000	20,000	975	1,950	290	580	813	1,626	98	196
20,000	25,000	1,055	2,000	315	630	876	1,752	105	210

(continued)

INTERNATIONAL CODE COUNCIL®
Copyright © 2019 ICC & NYSDOS. ALL RIGHTS RESERVED. Accessed by Lauren Gualdino (lgualdino@briarcliffmanor.org), (-) Order Number #100880972 on May 08, 2020 07:05 AM (PDT) pursuant to License Agreement with ICC & NYSDOS. No further reproduction, no

100880972

TABLE 5604.5.2(1)—continued
AMERICAN TABLE OF DISTANCES FOR STORAGE OF EXPLOSIVES AS APPROVED BY THE INSTITUTE OF MAKERS OF EXPLOSIVES AND REVISED JUNE 1991[a]

QUANTITY OF EXPLOSIVE MATERIALS[c]		DISTANCES IN FEET							
		Inhabited buildings		Public highways with traffic volume less than 3,000 vehicles per day		Public highways with traffic volume greater than 3,000 vehicles per day and passenger railways		Separation of magazines[d]	
Pounds over	Pounds not over	Barricaded	Unbarricaded	Barricaded	Unbarricaded	Barricaded	Unbarricaded	Barricaded	Unbarricaded
25,000	30,000	1,130	2,000	340	680	933	1,866	112	224
30,000	35,000	1,205	2,000	360	720	981	1,962	119	238
35,000	40,000	1,275	2,000	380	760	1,026	2,000	124	248
40,000	45,000	1,340	2,000	400	800	1,068	2,000	129	258
45,000	50,000	1,400	2,000	420	840	1,104	2,000	135	270
50,000	55,000	1,460	2,000	440	880	1,140	2,000	140	280
55,000	60,000	1,515	2,000	455	910	1,173	2,000	145	290
60,000	65,000	1,565	2,000	470	940	1,206	2,000	150	300
65,000	70,000	1,610	2,000	485	970	1,236	2,000	155	310
70,000	75,000	1,655	2,000	500	1,000	1,263	2,000	160	320
75,000	80,000	1,695	2,000	510	1,020	1,293	2,000	165	330
80,000	85,000	1,730	2,000	520	1,040	1,317	2,000	170	340
85,000	90,000	1,760	2,000	530	1,060	1,344	2,000	175	350
90,000	95,000	1,790	2,000	540	1,080	1,368	2,000	180	360
95,000	100,000	1,815	2,000	545	1,090	1,392	2,000	185	370
100,000	110,000	1,835	2,000	550	1,100	1,437	2,000	195	390
110,000	120,000	1,855	2,000	555	1,110	1,479	2,000	205	410
120,000	130,000	1,875	2,000	560	1,120	1,521	2,000	215	430
130,000	140,000	1,890	2,000	565	1,130	1,557	2,000	225	450
140,000	150,000	1,900	2,000	570	1,140	1,593	2,000	235	470
150,000	160,000	1,935	2,000	580	1,160	1,629	2,000	245	490
160,000	170,000	1,965	2,000	590	1,180	1,662	2,000	255	510
170,000	180,000	1,990	2,000	600	1,200	1,695	2,000	265	530
180,000	190,000	2,010	2,010	605	1,210	1,725	2,000	275	550
190,000	200,000	2,030	2,030	610	1,220	1,755	2,000	285	570
200,000	210,000	2,055	2,055	620	1,240	1,782	2,000	295	590
210,000	230,000	2,100	2,100	635	1,270	1,836	2,000	315	630
230,000	250,000	2,155	2,155	650	1,300	1,890	2,000	335	670
250,000	275,000	2,215	2,215	670	1,340	1,950	2,000	360	720
275,000	300,000[b]	2,275	2,275	690	1,380	2,000	2,000	385	770

For SI: 1 foot = 304.8 mm, 1 pound = 0.454 kg.

a. This table applies only to the manufacture and permanent storage of commercial explosive materials. It is not applicable to transportation of explosives or any handling or temporary storage necessary or incident thereto. It is not intended to apply to bombs, projectiles or other heavily encased explosives.

b. Storage in excess of 300,000 pounds of explosive materials in one magazine is not allowed.

c. Where a manufacturing building on an explosive materials plant site is designed to contain explosive materials, such building shall be located with respect to its proximity to inhabited buildings, public highways and passenger railways based on the maximum quantity of explosive materials permitted to be in the building at one time.

d. Where two or more storage magazines are located on the same property, each magazine shall comply with the minimum distances specified from inhabited buildings, railways and highways, and, in addition, they should be separated from each other by not less than the distances shown for separation of magazines, except that the quantity of explosives in detonator magazines shall govern in regard to the spacing of said detonator magazines from magazines containing other explosive materials. Where any two or more magazines are separated from each other by less than the specified separation of magazines distances, then two or more such magazines, as a group, shall be considered as one magazine, and the total quantity of explosive materials stored in such group shall be treated as if stored in a single magazine located on the site of any magazine in the group and shall comply with the minimum distances specified from other magazines, inhabited buildings, railways and highways.

INTERNATIONAL CODE COUNCIL®
Copyright © 2019 ICC & NYSDOS. ALL RIGHTS RESERVED. Accessed by Lauren Gualdino (lgualdino@briarcliffmanor.org), (-) Order Number #100880972 on May 08, 2020 07:05 AM (PDT) pursuant to License Agreement with ICC & NYSDOS. No further reproduction, no

100880972

TABLE 5604.5.2(2)
TABLE OF DISTANCES (Q-D) FOR BUILDINGS AND MAGAZINES CONTAINING EXPLOSIVES—DIVISION 1.3 MASS-FIRE HAZARD[a, b, c]

QUANTITY OF DIVISION 1.3 EXPLOSIVES (NET EXPLOSIVES WEIGHT)		DISTANCES IN FEET			
Pounds over	Pounds not over	Inhabited Building Distance (IBD)	Distance to Public Traffic Route (PTR)	Intermagazine Distance (IMD)	Intraline Distance (ILD) or Intraplant Distance (IPD)
0	1,000	75	75	50	50
1,000	5,000	115	115	75	75
5,000	10,000	150	150	100	100
10,000	20,000	190	190	125	125
20,000	30,000	215	215	145	145
30,000	40,000	235	235	155	155
40,000	50,000	250	250	165	165
50,000	60,000	260	260	175	175
60,000	70,000	270	270	185	185
70,000	80,000	280	280	190	190
80,000	90,000	295	295	195	195
90,000	100,000	300	300	200	200
100,000	200,000	375	375	250	250
200,000	300,000	450	450	300	300

For SI: 1 foot = 304.8 mm, 1 pound = 0.454 kg

a. Black powder, where stored in magazines, is defined as low explosive by the Bureau of Alcohol, Tobacco, Firearms and Explosives (BATF).

b. For quantities less than 1,000 pounds, the required distances are those specified for 1,000 pounds. The use of lesser distances is allowed where supported by approved test data or analysis.

c. Linear interpolation of explosive quantities between table entries is allowed.

TABLE 5604.5.2(3)
TABLE OF DISTANCES (Q-D) FOR BUILDINGS AND MAGAZINES CONTAINING EXPLOSIVES—DIVISION 1.4[c]

QUANTITY OF DIVISION 1.4 EXPLOSIVES (NET EXPLOSIVES WEIGHT)		DISTANCES IN FEET			
Pounds over	Pounds not over	Inhabited Building Distance (IBD)	Distance to Public Traffic Route (PTR)	Intermagazine Distance[a, b] (IMD)	Intraline Distance (ILD) or Intraplant Distance[a] (IPD)
50	Not Limited	100	100	50	50

For SI: 1 foot = 304.8 mm, 1 pound = 0.454 kg.

a. A separation distance of 100 feet is required for buildings of other than Type I or Type II construction as defined in the *Building Code of New York State*

b. For earth-covered magazines, specific separation is not required.

1. Earth cover material used for magazines shall be relatively cohesive. Solid or wet clay and similar types of soil are too cohesive and shall not be used. Soil shall be free from unsanitary organic matter, trash, debris and stones heavier than 10 pounds or larger than 6 inches in diameter. Compaction and surface preparation shall be provided, as necessary, to maintain structural integrity and avoid erosion. Where cohesive material cannot be used, as in sandy soil, the earth cover over magazines shall be finished with a suitable material to ensure structural integrity.
2. The earth fill or earth cover between earth-covered magazines shall be either solid or sloped, in accordance with the requirements of other construction features, but not less than 2 feet of earth cover shall be maintained over the top of each magazines. To reduce erosion and facilitate maintenance operations, the cover shall have a slope of 2 horizontal to 1 vertical.

c. Restricted to articles, including articles packaged for shipment, that are not regulated as an explosive under Bureau of Alcohol, Tobacco, Firearms and Explosives regulations, or unpacked articles used in process operations that do not propagate a detonation or deflagration between articles.

ant heating within the magazine or by indirect warm air heating.

5604.6.3 Lighting. Where lighting is necessary within a magazine, electric safety flashlights or electric safety lanterns shall be used, except as provided in NFPA 495.

5604.6.4 Nonsparking materials. In other than Type 5 magazines, there shall not be exposed ferrous metal on the interior of a magazine containing packages of *explosives*.

5604.6.5 Signs and placards. Property on which Type 1 magazines and outdoor magazines of Types 2, 4 and 5 are located shall be posted with signs stating: EXPLOSIVES—KEEP OFF. These signs shall be of contrasting colors with a minimum letter height of 3 inches (76 mm) with a minimum brush stroke of $^1/_2$ inch (12.7 mm). The signs shall be located to minimize the possibility of a bullet shot at the sign hitting the magazine.

5604.6.5.1 Access road signs. At the entrance to *explosive* material manufacturing and storage sites, all access

INTERNATIONAL CODE COUNCIL®
Copyright © 2019 ICC & NYSDOS. ALL RIGHTS RESERVED. Accessed by Lauren Gualdino (lgualdino@briarcliffmanor.org), (-) Order Number #100880972 on May 08, 2020 07:05 AM (PDT) pursuant to License Agreement with ICC & NYSDOS. No further reproduction, no

100880972

roads shall be posted with the following warning sign or other *approved* sign:

DANGER!
NEVER FIGHT EXPLOSIVE FIRES.
EXPLOSIVES ARE STORED ON THIS SITE
CALL _____.

The sign shall be weather-resistant with a reflective surface and have lettering not less than 2 inches (51 mm) high.

5604.6.5.2 Placards. Type 5 magazines containing Division 1.5 blasting agents shall be prominently placarded as required during transportation by DOTn 49 CFR Part 172 and DOTy 27 CFR Part 555.

5604.7 Operation. Magazines shall be operated in accordance with Sections 5604.7.1 through 5604.7.9.

5604.7.1 Security. Magazines shall be kept locked in the manner prescribed in NFPA 495 at all times except during placement or removal of *explosives* or inspection.

5604.7.2 Open flames and lights. Smoking, matches, flame-producing devices, open flames, firearms and firearms cartridges shall not be allowed inside of or within 50 feet (15 240 mm) of magazines.

5604.7.3 Brush. The area located around a magazine shall be kept clear of brush, dried grass, leaves, trash, debris and similar combustible materials for a distance of 25 feet (7620 mm).

5604.7.4 Combustible storage. Combustible materials shall not be stored within 50 feet (15 240 mm) of magazines.

5604.7.5 Unpacking and repacking explosive materials. Containers of *explosive materials*, except fiberboard containers, and packages of damaged or deteriorated *explosive materials* or fireworks shall not be unpacked or repacked inside or within 50 feet (15 240 mm) of a magazine or in close proximity to other *explosive materials*.

5604.7.5.1 Storage of opened packages. Packages of *explosive materials* that have been opened shall be closed before being placed in a magazine.

5604.7.5.2 Nonsparking tools. Tools used for the opening and closing of packages of *explosive materials*, other than metal slitters for opening paper, plastic or fiberboard containers, shall be made of nonsparking materials.

5604.7.5.3 Disposal of packaging. Empty containers and paper and fiber packaging materials that previously contained *explosive materials* shall be disposed of or reused in a *approved* manner.

5604.7.6 Tools and equipment. Metal tools, other than nonferrous transfer conveyors and ferrous metal conveyor stands protected by a coat of paint, shall not be stored in a magazine containing *explosive materials* or detonators.

5604.7.7 Contents. Magazines shall be used exclusively for the storage of *explosive materials*, blasting materials and blasting accessories.

5604.7.8 Compatibility. Corresponding grades and brands of *explosive materials* shall be stored together and in such a manner that the grade and brand marks are visible. Stocks shall be stored so as to be easily counted and checked. Packages of *explosive materials* shall be stacked in a stable manner not exceeding 8 feet (2438 mm) in height.

5604.7.9 Stock rotation. When *explosive material* is removed from a magazine for use, the oldest usable stocks shall be removed first.

5604.8 Maintenance. Maintenance of magazines shall comply with Sections 5604.8.1 through 5604.8.3.

5604.8.1 Housekeeping. Magazine floors shall be regularly swept and be kept clean, dry and free of grit, paper, empty packages and rubbish. Brooms and other cleaning utensils shall not have any spark-producing metal parts. Sweepings from magazine floors shall be disposed of in accordance with the manufacturers' *approved* instructions.

5604.8.2 Repairs. *Explosive materials* shall be removed from the magazine before making repairs to the interior of a magazine. *Explosive materials* shall be removed from the magazine before making repairs to the exterior of the magazine where there is a possibility of causing a fire. *Explosive materials* removed from a magazine under repair shall either be placed in another magazine or placed a safe distance from the magazine, where they shall be properly guarded and protected until repairs have been completed. Upon completion of repairs, the *explosive materials* shall be promptly returned to the magazine. Floors shall be cleaned before and after repairs.

5604.8.3 Floors. Magazine floors stained with liquid shall be dealt with in accordance with instructions obtained from the manufacturer of the *explosive material* stored in the magazine.

5604.9 Inspection. Magazines containing *explosive materials* shall be opened and inspected at maximum seven-day intervals. The inspection shall determine whether there has been an unauthorized or attempted entry into a magazine or an unauthorized removal of a magazine or its contents.

5604.10 Disposal of explosive materials. *Explosive materials* shall be disposed of in accordance with Sections 5604.10.1 through 5604.10.7.

5604.10.1 Notification. The *fire code official* shall be notified immediately where deteriorated or leaking *explosive materials* are determined to be dangerous or unstable and in need of disposal.

5604.10.2 Deteriorated materials. Where an *explosive material* has deteriorated to an extent that it is in an unstable or dangerous condition, or when a liquid has leaked from an *explosive material*, the person in possession of such material shall immediately contact the material's manufacturer to obtain disposal and handling instructions.

5604.10.3 Qualified person. The work of destroying *explosive materials* shall be directed by persons experienced in the destruction of *explosive* materials.

INTERNATIONAL CODE COUNCIL®
Copyright © 2019 ICC & NYSDOS. ALL RIGHTS RESERVED. Accessed by Lauren Gualdino (lgualdino@briarcliffmanor.org), (-) Order Number #100880972 on May 08, 2020 07:05 AM (PDT) pursuant to License Agreement with ICC & NYSDOS. No further reproduction, no

100880972

5604.10.4 Storage of misfires. *Explosive materials* and fireworks recovered from blasting or display misfires shall be placed in a magazine until an experienced person has determined the proper method for disposal.

5604.10.5 Disposal sites. Sites for the destruction of *explosive materials* and fireworks shall be *approved* and located at the maximum practicable safe distance from inhabited buildings, public highways, operating buildings and all other exposures to ensure keeping air blast and ground vibration to a minimum. The location of disposal sites shall not be closer to magazines, inhabited buildings, railways, highways and other rights-of-way than is allowed by Tables 5604.5.2(1), 5604.5.2(2) and 5604.5.2(3). Where possible, *barricades* shall be utilized between the destruction site and inhabited buildings. Areas where *explosives* are detonated or burned shall be posted with adequate warning signs.

5604.10.6 Reuse of site. Unless an *approved* burning site has been thoroughly saturated with water and has passed a safety inspection, 48 hours shall elapse between the completion of a burn and the placement of scrap *explosive* materials for a subsequent burn.

5604.10.7 Personnel safeguards. Once an *explosive* burn operation has been started, personnel shall relocate to a safe location where adequate protection from air blast and flying debris is provided. Personnel shall not return to the burn area until the person in charge has inspected the burn site and determined that it is safe for personnel to return.

SECTION 5605
MANUFACTURE, ASSEMBLY AND TESTING OF EXPLOSIVES, EXPLOSIVE MATERIALS AND FIREWORKS

5605.1 General. The manufacture, assembly and testing of *explosives*, ammunition, blasting agents and fireworks shall comply with the requirements of this section and NFPA 495 or NFPA 1124.

Exceptions:

1. The hand loading of small arms ammunition prepared for personal use and not offered for resale.
2. The mixing and loading of blasting agents at blasting sites in accordance with NFPA 495.
3. The use of binary *explosives* or plosophoric materials in blasting or pyrotechnic special effects applications in accordance with NFPA 495 or NFPA 1126.

5605.2 Emergency planning and preparedness. Emergency plans, emergency drills, employee training and hazard communication shall conform to the provisions of this section and Sections 404, 405, 406 and 407.

5605.2.1 Hazardous Materials Management Plans and Inventory Statements required. Detailed Hazardous Materials Management Plans (HMMP) and Hazardous Materials Inventory Statements (HMIS) complying with the requirements of Section 407 shall be prepared and submitted to the local emergency planning committee, the *fire code official* and the local fire department.

5605.2.2 Maintenance of plans. A copy of the required HMMP and HMIS shall be maintained on site and furnished to the *fire code official* on request.

5605.2.3 Employee training. Workers who handle *explosives* or *explosive* charges or dispose of *explosives* shall be trained in the hazards of the materials and processes in which they are to be engaged and with the safety rules governing such materials and processes.

5605.2.4 Emergency procedures. *Approved* emergency procedures shall be formulated for each plant and shall include personal instruction in any anticipated emergency. Personnel shall be made aware of an emergency warning signal.

5605.3 Intraplant separation of operating buildings. *Explosives* manufacturing buildings and fireworks manufacturing buildings, including those where *explosive* charges are assembled, manufactured, prepared or loaded utilizing Division 1.1, 1.2, 1.3, 1.4 or 1.5 *explosives*, shall be separated from all other buildings, including magazines, within the confines of the manufacturing plant, at a distance not less than those shown in Table 5605.3 or 5604.5.2(3), as appropriate.

The quantity of *explosives* in an operating building shall be the net weight of all *explosives* contained therein. Distances shall be based on the hazard division requiring the greatest separation, unless the aggregate *explosive* weight is divided by *approved* walls or shields designed for that purpose. Where dividing a quantity of *explosives* into smaller stacks, a suitable barrier or adequate separation distance shall be provided to prevent propagation from one stack to another.

Where distance is used as the sole means of separation within a building, such distance shall be established by testing. Testing shall demonstrate that propagation between stacks will not result. Barriers provided to protect against *explosive* effects shall be designed and installed in accordance with *approved* standards.

Exception: Fireworks manufacturing buildings separated in accordance with NFPA 1124.

5605.4 Separation of manufacturing operating buildings from inhabited buildings, public traffic routes and magazines. Where an operating building on an *explosive* materials plant site is designed to contain *explosive* materials, such a building shall be located away from inhabited buildings, public traffic routes and magazines in accordance with Table 5604.5.2(2) or 5604.5.2(3) as appropriate, based on the maximum quantity of *explosive* materials permitted to be in the building at one time (see Section 5601.8).

Exception: Fireworks manufacturing buildings constructed and operated in accordance with NFPA 1124.

5605.4.1 Determination of net explosive weight for operating buildings. In addition to the requirements of Section 5601.8 to determine the net *explosive* weight for materials stored or used in operating buildings, quantities of *explosive materials* stored in magazines located at distances less than intraline distances from the operating building shall be added to the contents of the operating building to determine the net *explosive* weight for the operating building.

INTERNATIONAL CODE COUNCIL®
Copyright © 2019 ICC & NYSDOS. ALL RIGHTS RESERVED. Accessed by Lauren Gualdino (lgualdino@briarcliffmanor.org), (-) Order Number #100880972 on May 08, 2020 07:05 AM (PDT) pursuant to License Agreement with ICC & NYSDOS. No further reproduction, no

100880972

5605.4.1.1 Indoor magazines. The storage of *explosive* materials located in indoor magazines in operating buildings shall be limited to a net *explosive* weight not to exceed 50 pounds (23 kg).

5605.4.1.2 Outdoor magazines with a net explosive weight less than 50 pounds. The storage of *explosive materials* in outdoor magazines located at less than intraline distances from operating buildings shall be limited to a net *explosive* weight not to exceed 50 pounds (23 kg).

5605.4.1.3 Outdoor magazines with a net explosive weight greater than 50 pounds. The storage of *explosive materials* in outdoor magazines in quantities exceeding 50 pounds (23 kg) net *explosive* weight shall be limited to storage in outdoor magazines located not less than intraline distances from the operating building in accordance with Section 5604.5.2.

5605.4.1.4 Net explosive weight of materials stored in combination indoor and outdoor magazines. The aggregate quantity of *explosive materials* stored in any combination of indoor magazines or outdoor magazines located at less than the intraline distances from an operating building shall not exceed 50 pounds (23 kg).

5605.5 Buildings and equipment. Buildings or rooms that exceed the *maximum allowable quantity per control area* of *explosive materials* shall be operated in accordance with this section and constructed in accordance with the requirements of the *Building Code of New York State* for Group H occupancies.

Exception: Fireworks manufacturing buildings constructed and operated in accordance with NFPA 1124.

5605.5.1 Explosives dust. *Explosives* dust shall not be exhausted to the atmosphere.

5605.5.1.1 Wet collector. When collecting *explosives* dust, a wet collector system shall be used. Wetting agents shall be compatible with the *explosives*. Collector systems shall be interlocked with process power supplies so that the process cannot continue without the collector systems operating.

TABLE 5605.3
MINIMUM INTRALINE (INTRAPLANT) SEPARATION DISTANCES (ILD OR IPD) BETWEEN BARRICADED OPERATING BUILDINGS CONTAINING EXPLOSIVES—DIVISION 1.1, 1.2 OR 1.5 MASS-EXPLOSION HAZARD[a]

NET EXPLOSIVE WEIGHT			NET EXPLOSIVE WEIGHT		
Pounds over	Pounds not over	Intraline Distance (ILD) or Intraplant Distance (IPD) (feet)	Pounds over	Pounds not over	Intraline Distance (ILD) or Intraplant Distance (IPD) (feet)
0	50	30	20,000	25,000	265
50	100	40	25,000	30,000	280
100	200	50	30,000	35,000	295
200	300	60	35,000	40,000	310
300	400	65	40,000	45,000	320
400	500	70	45,000	50,000	330
500	600	75	50,000	55,000	340
600	700	80	55,000	60,000	350
700	800	85	60,000	65,000	360
800	900	90	65,000	70,000	370
900	1,000	95	70,000	75,000	385
1,000	1,500	105	75,000	80,000	390
1,500	2,000	115	80,000	85,000	395
2,000	3,000	130	85,000	90,000	400
3,000	4,000	140	90,000	95,000	410
4,000	5,000	150	95,000	100,000	415
5,000	6,000	160	100,000	125,000	450
6,000	7,000	170	125,000	150,000	475
7,000	8,000	180	150,000	175,000	500
8,000	9,000	190	175,000	200,000	525
9,000	10,000	200	200,000	225,000	550
10,000	15,000	225	225,000	250,000	575
15,000	20,000	245	250,000	275,000	600
—	—	—	275,000	300,000	635

For SI: 1 foot = 304.8 mm, 1 pound = 0.454 kg.

a. Where a building or magazine containing explosives is not barricaded, the intraline distances shown in this table shall be doubled.

INTERNATIONAL CODE COUNCIL®
Copyright © 2019 ICC & NYSDOS. ALL RIGHTS RESERVED. Accessed by Lauren Gualdino (lgualdino@briarcliffmanor.org), (-) Order Number #100880972 on May 08, 2020 07:05 AM (PDT) pursuant to License Agreement with ICC & NYSDOS. No further reproduction, no

100880972

5605.5.1.2 Waste disposal and maintenance. *Explosives* dust shall be removed from the collection chamber as often as necessary to prevent overloading. The entire system shall be cleaned at a frequency that will eliminate hazardous concentrations of *explosives* dust in pipes, tubing and ducts.

5605.5.2 Exhaust fans. Squirrel cage blowers shall not be used for exhausting hazardous fumes, vapors or gases. Only nonferrous fan blades shall be used for fans located within the ductwork and through which hazardous materials are exhausted. Motors shall be located outside the duct.

5605.5.3 Work stations. Work stations shall be separated by distance, barrier or other *approved* alternatives so that fire in one station will not ignite material in another work station. Where necessary, the operator shall be protected by a personnel shield located between the operator and the *explosive* device or *explosive material* being processed. This shield and its support shall be capable of withstanding a blast from the maximum amount of *explosives* allowed behind it.

5605.6 Operations. Operations involving *explosives* shall comply with Sections 5605.6.1 through 5605.6.10.

5605.6.1 Isolation of operations. Where the type of material and processing warrants, mechanical operations involving *explosives* in excess of 1 pound (0.454 kg) shall be carried on at isolated stations or at intraplant distances, and machinery shall be controlled from remote locations behind *barricades* or at separations so that workers will be at a safe distance while machinery is operating.

5605.6.2 Static controls. The work area where the screening, grinding, blending and other processing of static-sensitive *explosives* or pyrotechnic materials is done shall be provided with *approved* static controls.

5605.6.3 Approved containers. Bulk *explosives* shall be kept in *approved*, nonsparking containers when not being used or processed. *Explosives* shall not be stored or transported in open containers.

5605.6.4 Quantity limits. The quantity of *explosives* at any particular work station shall be limited to that posted on the load limit signs for the individual work station. The total quantity of *explosives* for multiple workstations shall not exceed that established by the intraplant distances in Table 5605.3 or 5604.5.2(3), as appropriate.

5605.6.4.1 Magazines. Magazines used for storage in processing areas shall be in accordance with the requirements of Section 5604.5.1. *Explosive materials* shall be removed to appropriate storage magazines for unattended storage at the end of the workday. The contents of indoor magazines shall be added to the quantity of *explosives* contained at individual workstations and the total quantity of material stored, processed or used shall be utilized to establish the intraplant separation distances indicated by Table 5605.3 or 5604.5.2(3), as appropriate.

5605.6.5 Waste disposal. *Approved* receptacles with covers shall be provided for each location for disposing of waste material and debris. These waste receptacles shall be emptied and cleaned as often as necessary but not less than once each day or at the end of each shift.

5605.6.6 Safety rules. General safety rules and operating instructions governing the particular operation or process conducted at that location shall be available at each location.

5605.6.7 Personnel limits. The number of occupants in each process building and in each magazine shall not exceed the number necessary for proper conduct of production operations.

5605.6.8 Pyrotechnic and explosive composition quantity limits. Not more than 500 pounds (227 kg) of pyrotechnic or *explosive* composition, including not more than 10 pounds (5 kg) of salute powder shall be allowed at one time in any process building or area. Compositions not in current use shall be kept in covered nonferrous containers.

Exception: Composition that has been loaded or pressed into tubes or other containers as consumer fireworks.

5605.6.9 Posting limits. The maximum number of occupants and maximum weight of pyrotechnic and *explosive* composition permitted in each process building shall be posted in a conspicuous location in each process building or magazine.

5605.6.10 Heat sources. Fireworks, *explosives* or *explosive* charges in *explosive materials* manufacturing, assembly or testing shall not be stored near any source of heat.

Exception: *Approved* drying or curing operations.

5605.7 Maintenance. Maintenance and repair of *explosives*-manufacturing facilities and areas shall comply with Section 5604.8.

5605.8 Explosive materials testing sites. *Detonation* of *explosive* materials or ignition of fireworks for testing purposes shall be done only in isolated areas at sites where distance, protection from missiles, shrapnel or flyrock, and other safeguards provides protection against injury to personnel or damage to property.

5605.8.1 Protective clothing and equipment. Protective clothing and equipment shall be provided to protect persons engaged in the testing, ignition or *detonation* of *explosive materials*.

5605.8.2 Site security. Where tests are being conducted or *explosives* are being detonated, only authorized persons shall be present. Areas where *explosives* are regularly or frequently detonated or burned shall be *approved* and posted with adequate warning signs. Warning devices shall be activated before burning or detonating *explosives* to alert persons approaching from any direction that they are approaching a danger zone.

5605.9 Waste disposal. Disposal of *explosive materials* waste from manufacturing, assembly or testing operations shall be in accordance with Section 5604.10.

INTERNATIONAL CODE COUNCIL®
Copyright © 2019 ICC & NYSDOS. ALL RIGHTS RESERVED. Accessed by Lauren Gualdino (lgualdino@briarcliffmanor.org), (-) Order Number #100880972 on May 08, 2020 07:05 AM (PDT) pursuant to License Agreement with ICC & NYSDOS. No further reproduction, no

100880972

SECTION 5606
SMALL ARMS AMMUNITION AND SMALL ARMS AMMUNITION COMPONENTS

5606.1 General. Indoor storage and display of black powder, smokeless propellants, small arms primers and small arms ammunition shall comply with this section and NFPA 495.

5606.2 Prohibited storage. Small arms ammunition shall not be stored together with Division 1.1, Division 1.2 or Division 1.3 *explosives* unless the storage facility is suitable for the storage of *explosive materials*.

5606.3 Packages. Smokeless propellants shall be stored in *approved* shipping containers conforming to DOTn 49 CFR Part 173.

5606.3.1 Repackaging. The bulk repackaging of smokeless propellants, black powder and small arms primers shall not be performed in retail establishments.

5606.3.2 Damaged packages. Damaged containers shall not be repackaged.

Exception: *Approved* repackaging of damaged containers of smokeless propellant into containers of the same type and size as the original container.

5606.4 Storage in Group R occupancies. The storage of small arms ammunition components in Group R occupancies shall comply with Sections 5606.4.1 through 5606.4.3.

5606.4.1 Black powder. Black powder for personal use in quantities not exceeding 20 pounds (9 kg) shall be stored in original containers in occupancies limited to Group R-3. Quantities exceeding 20 pounds (9 kg) shall not be stored in any Group R occupancy.

5606.4.2 Smokeless propellants. Smokeless propellants for personal use in quantities not exceeding 20 pounds (9 kg) shall be stored in original containers in occupancies limited to Group R-3. Smokeless propellants in quantities exceeding 20 pounds (9 kg) but not exceeding 50 pounds (23 kg) and kept in a wooden box or cabinet having walls of not less than 1 inch (25 mm) nominal thickness shall be allowed to be stored in occupancies limited to Group R-3. Quantities exceeding these amounts shall not be stored in any Group R occupancy.

5606.4.3 Small arms primers. Not more than 10,000 small arms primers shall be stored in occupancies limited to Group R-3.

5606.5 Display and storage in Group M occupancies. The display and storage of small arms ammunition components in Group M occupancies shall comply with Sections 5606.5.1 through 5606.5.2.3.

5606.5.1 Display. Display of small arms ammunition components in Group M occupancies shall comply with Sections 5606.5.1.1 through 5606.5.1.3.

5606.5.1.1 Smokeless propellant. Not more than 20 pounds (9 kg) of smokeless propellants, in containers of 1 pound (0.454 kg) or less capacity each, shall be displayed in Group M occupancies.

5606.5.1.2 Black powder. Not more than 1 pound (0.454 kg) of black powder shall be displayed in Group M occupancies.

5606.5.1.3 Small arms primers. Not more than 10,000 small arms primers shall be displayed in Group M occupancies.

5606.5.2 Storage. Storage of small arms ammunition components shall comply with Sections 5606.5.2.1 through 5606.5.2.3.

5606.5.2.1 Smokeless propellant. Commercial stocks of smokeless propellants shall be stored as follows:

1. Quantities exceeding 20 pounds (9 kg), but not exceeding 100 pounds (45 kg) shall be stored in portable wooden boxes having walls of not less than 1 inch (25 mm) nominal thickness.
2. Quantities exceeding 100 pounds (45 kg), but not exceeding 800 pounds (363 kg), shall be stored in nonportable storage cabinets having walls not less than 1 inch (25 mm) nominal thickness. Not more than 400 pounds (182 kg) shall be stored in any one cabinet, and cabinets shall be separated by a distance of not less than 25 feet (7620 mm) or by a *fire partition* having a *fire-resistance rating* of not less than 1 hour.
3. Storage of quantities exceeding 800 pounds (363 kg), but not exceeding 5,000 pounds (2270 kg) in a building shall comply with all of the following:
   - 3.1. The warehouse or storage room is not open to unauthorized personnel.
   - 3.2. Smokeless propellant shall be stored in nonportable storage cabinets having wood walls not less than 1 inch (25 mm) nominal thickness and having shelves with not more than 3 feet (914 mm) of separation between shelves.
   - 3.3. Not more than 400 pounds (182 kg) is stored in any one cabinet.
   - 3.4. Cabinets shall be located against walls of the storage room or warehouse with not less than 40 feet (12 192 mm) between cabinets.
   - 3.5. The minimum required separation between cabinets shall be 20 feet (6096 mm) provided that *barricades* twice the height of the cabinets are attached to the wall, midway between each cabinet. The *barricades* must extend not less than 10 feet (3048 mm) outward, be firmly attached to the wall and be constructed of steel not less than $^1/_4$ inch thick (6.4 mm), 2-inch (51 mm) nominal thickness wood, brick or concrete block.
   - 3.6. Smokeless propellant shall be separated from materials classified as *combustible liquids*, flammable liquids, flammable solids or oxidizing materials by a distance

INTERNATIONAL CODE COUNCIL®
Copyright © 2019 ICC & NYSDOS. ALL RIGHTS RESERVED. Accessed by Lauren Gualdino (lgualdino@briarcliffmanor.org), (-) Order Number #100880972 on May 08, 2020 07:05 AM (PDT) pursuant to License Agreement with ICC & NYSDOS. No further reproduction, no

100880972

of 25 feet (7620 mm) or by a *fire partition* having a *fire-resistance rating* of 1 hour.

3.7. The building shall be equipped throughout with an *automatic sprinkler system* installed in accordance with Section 903.3.1.1.

4. Smokeless propellants not stored in accordance with Item 1, 2, or 3 shall be stored in a Type 2 or 4 magazine in accordance with Section 5604 and NFPA 495.

5606.5.2.2 Black powder. Commercial stocks of black powder in quantities less than 50 pounds (23 kg) shall be allowed to be stored in Type 2 or 4 indoor or outdoor magazines. Quantities greater than 50 pounds (23 kg) shall be stored in outdoor Type 2 or 4 magazines. Where black powder and smokeless propellants are stored together in the same magazine, the total quantity shall not exceed that permitted for black powder.

5606.5.2.3 Small arms primers. Commercial stocks of small arms primers shall be stored as follows:

1. Quantities not to exceed 750,000 small arms primers stored in a building shall be arranged such that not more than 100,000 small arms primers are stored in any one pile and piles are not less than 15 feet (4572 mm) apart.

2. Quantities exceeding 750,000 small arms primers stored in a building shall comply with all of the following:

2.1. The warehouse or storage building is not open to unauthorized personnel.

2.2. Small arms primers shall be stored in cabinets. Not more than 200,000 small arms primers shall be stored in any one cabinet.

2.3. Shelves in cabinets shall have vertical separation of not less than 2 feet (610 mm).

2.4. Cabinets shall be located against walls of the warehouse or storage room with not less than 40 feet (12 192 mm) between cabinets. The minimum required separation between cabinets shall be allowed to be reduced to 20 feet (6096 mm) provided that *barricades* twice the height of the cabinets are attached to the wall, midway between each cabinet. The *barricades* shall be firmly attached to the wall and shall be constructed of steel not less than $^1/_4$ inch thick (6.4 mm), 2-inch (51 mm) nominal thickness wood, brick or concrete block.

2.5. Small arms primers shall be separated from materials classified as *combustible liquids*, flammable liquids, flammable solids or oxidizing materials by a distance of 25 feet (7620 mm) by a *fire partition* having a *fire-resistance rating* of 1 hour.

2.6. The building shall be protected throughout with an *automatic sprinkler system* installed in accordance with Section 903.3.1.1.

3. Small arms primers not stored in accordance with Item 1 or 2 of this section shall be stored in a magazine meeting the requirements of Section 5604 and NFPA 495.

SECTION 5607
BLASTING

5607.1 General. Blasting operations shall be conducted only by *approved*, competent operators familiar with the required safety precautions and the hazards involved and in accordance with the provisions of NFPA 495.

5607.2 Manufacturer's instructions. Blasting operations shall be performed in accordance with the instructions of the manufacturer of the *explosive materials* being used.

5607.3 Blasting in congested areas. Where blasting is done in a congested area or in close proximity to a structure, railway or highway, or any other installation, precautions shall be taken to minimize earth vibrations and air blast effects. Blasting mats or other protective means shall be used to prevent fragments from being thrown.

5607.4 Restricted hours. Surface-blasting operations shall only be conducted during daylight hours between sunrise and sunset. Other blasting shall be performed during daylight hours unless otherwise *approved* by the *fire code official*.

5607.5 Utility notification. Where blasting is being conducted in the vicinity of utility lines or rights-of-way, the blaster shall notify the appropriate representatives of the utilities not less than 24 hours in advance of blasting, specifying the location and intended time of such blasting. Verbal notices shall be confirmed with written notice.

Exception: In an emergency situation, the time limit shall not apply where *approved*.

5607.6 Electric detonator precautions. Precautions shall be taken to prevent accidental discharge of electric detonators from currents induced by radar and radio transmitters, lightning, adjacent power lines, dust and snow storms, or other sources of extraneous electricity.

5607.7 Nonelectric detonator precautions. Precautions shall be taken to prevent accidental initiation of nonelectric detonators from stray currents induced by lightning or static electricity.

5607.8 Blasting area security. During the time that holes are being loaded or are loaded with *explosive materials*, blasting agents or detonators, only authorized persons engaged in drilling and loading operations or otherwise authorized to enter the site shall be allowed at the blast site. The blast site shall be guarded or barricaded and posted. Blast site security shall be maintained until after the post-blast inspection has been completed.

INTERNATIONAL CODE COUNCIL®
Copyright © 2019 ICC & NYSDOS. ALL RIGHTS RESERVED. Accessed by Lauren Gualdino (lgualdino@briarcliffmanor.org), (-) Order Number #100880972 on May 08, 2020 07:05 AM (PDT) pursuant to License Agreement with ICC & NYSDOS. No further reproduction, no

100880972

5607.9 Drill holes. Holes drilled for the loading of *explosive* charges shall be made and loaded in accordance with NFPA 495.

5607.10 Removal of excess explosive materials. After loading for a blast is completed and before firing, excess *explosive materials* shall be removed from the area and returned to the proper storage facilities.

5607.11 Initiation means. The initiation of blasts shall be by means conforming to the provisions of NFPA 495.

5607.12 Connections. The blaster shall supervise the connecting of the blastholes and the connection of the loadline to the power source or initiation point. Connections shall be made progressively from the blasthole back to the initiation point.

Blasting lead lines shall remain shunted (shorted) and shall not be connected to the blasting machine or other source of current until the blast is to be fired.

5607.13 Firing control. A blast shall not be fired until the blaster has made certain that all surplus *explosive materials* are in a safe place in accordance with Section 5607.10, all persons and equipment are at a safe distance or under sufficient cover and that an adequate warning signal has been given.

5607.14 Post-blast procedures. After the blast, the following procedures shall be observed.

1. Persons shall not return to the blast area until allowed to do so by the blaster in charge.
2. The blaster shall allow sufficient time for smoke and fumes to dissipate and for dust to settle before returning to or approaching the blast area.
3. The blaster shall inspect the entire blast site for misfires before allowing other personnel to return to the blast area.

5607.15 Misfires. Where a misfire is suspected, all initiating circuits shall be traced and a search made for unexploded charges. Where a misfire is found, the blaster shall provide proper safeguards for excluding all personnel from the blast area. Misfires shall be reported to the blasting supervisor immediately. Misfires shall be handled under the direction of the person in charge of the blasting operation in accordance with NFPA 495.

SECTION 5608
FIREWORKS DISPLAY

5608.1 General. Outdoor fireworks displays, use of pyrotechnics before a *proximate audience* and pyrotechnic special effects in motion picture, television, theatrical and group entertainment productions shall comply with Sections 5608.2 through 5608.10 and NFPA 1123 or NFPA 1126.

5608.2 Permit application. Prior to issuing permits for a fireworks display, plans for the fireworks display, inspections of the display site and demonstrations of the display operations shall be *approved*. A plan establishing procedures to follow and actions to be taken in the event that a shell fails to ignite in, or discharge from, a mortar or fails to function over the fallout area or other malfunctions shall be provided to the *fire code official*.

5608.2.1 Outdoor fireworks displays. In addition to the requirements of Section 403, permit applications for outdoor fireworks displays using Division 1.3G fireworks shall include a diagram of the location at which the fireworks display will be conducted, including the site from which fireworks will be discharged; the location of buildings, highways, overhead obstructions and utilities; and the lines behind which the audience will be restrained.

5608.2.2 Use of pyrotechnics before a proximate audience. Where the separation distances required in Section 5608.4 and NFPA 1123 are unavailable or cannot be secured, fireworks displays shall be conducted in accordance with NFPA 1126 for *proximate audiences*. Applications for use of pyrotechnics before a *proximate audience* shall include plans indicating the required clearances for spectators and combustibles, crowd control measures, smoke control measures and requirements for standby personnel and equipment where provision of such personnel or equipment is required by the *fire code official*.

5608.3 Approved fireworks displays. *Approved* fireworks displays shall include only the *approved* fireworks 1.3G, fireworks 1.4G, fireworks 1.4S and pyrotechnic articles 1.4G, which shall be handled by an *approved*, competent operator. The *approved* fireworks shall be arranged, located, discharged and fired in a manner that will not pose a hazard to property or endanger any person.

5608.4 Clearance. Spectators, spectator parking areas, and *dwellings*, buildings or structures shall not be located within the display site.

Exceptions:

1. This provision shall not apply to pyrotechnic special effects and fireworks displays using Division 1.4G materials before a *proximate audience* in accordance with NFPA 1126.
2. This provision shall not apply to unoccupied *dwellings*, buildings and structures with the approval of the building *owner* and the *fire code official*.

5608.5 Storage of fireworks at display site. The storage of fireworks at the display site shall comply with the requirements of this section and NFPA 1123 or NFPA 1126.

5608.5.1 Supervision and weather protection. Beginning as soon as fireworks have been delivered to the display site, they shall not be left unattended.

5608.5.2 Weather protection. Fireworks shall be kept dry after delivery to the display site.

5608.5.3 Inspection. Shells shall be inspected by the operator or assistants after delivery to the display site. Shells having tears, leaks, broken fuses or signs of having been wet shall be set aside and shall not be fired. Aerial shells shall be checked for proper fit in mortars prior to discharge. Aerial shells that do not fit properly shall not be fired. After the fireworks display, damaged, deteriorated or dud shells shall either be returned to the supplier or

INTERNATIONAL CODE COUNCIL®
Copyright © 2019 ICC & NYSDOS. ALL RIGHTS RESERVED. Accessed by Lauren Gualdino (lgualdino@briarcliffmanor.org), (-) Order Number #100880972 on May 08, 2020 07:05 AM (PDT) pursuant to License Agreement with ICC & NYSDOS. No further reproduction, no

100880972

destroyed in accordance with the supplier's instructions and Section 5604.10.

Exception: Minor repairs to fuses shall be allowed. For electrically ignited displays, attachment of electric matches and similar tasks shall be allowed.

5608.5.4 Sorting and separation. After delivery to the display site and prior to the fireworks display, all shells shall be separated according to their size and their designation as salutes.

Exception: For electrically fired displays, or displays where all shells are loaded into mortars prior to the show, separation of shells according to their size or their designation as salutes is not required.

5608.5.5 Ready boxes. Display fireworks, 1.3G, that will be temporarily stored at the site during the fireworks display shall be stored in ready boxes located upwind and not less than 25 feet (7620 mm) from the mortar placement and separated according to their size and their designation as salutes.

Exception: For electrically fired fireworks displays, or fireworks displays where all shells are loaded into mortars prior to the show, separation of shells according to their size, their designation as salutes or for the use of ready boxes is not required.

5608.6 Installation of mortars. Mortars for firing fireworks shells shall be installed in accordance with NFPA 1123 and shall be positioned so that shells are propelled away from spectators and over the fallout area. Mortars shall not be angled toward the spectator viewing area. Prior to placement, mortars shall be inspected for defects, such as dents, bent ends, damaged interiors and damaged plugs. Defective mortars shall not be used.

5608.7 Handling. Aerial shells shall be carried to mortars by the shell body. For the purpose of loading mortars, aerial shells shall be held by the thick portion of the fuse and carefully loaded into mortars.

5608.8 Fireworks display supervision. Whenever in the opinion of the *fire code official* or the operator a hazardous condition exists, the fireworks display shall be discontinued immediately until such time as the dangerous situation is corrected.

5608.9 Post-fireworks display inspection. After the fireworks display, the firing crew shall conduct an inspection of the fallout area for the purpose of locating unexploded aerial shells or live components. This inspection shall be conducted before public access to the site shall be allowed. Where fireworks are displayed at night and it is not possible to inspect the site thoroughly, the operator or designated assistant shall inspect the entire site at first light.

A report identifying any shells that fail to ignite in, or discharge from, a mortar or fail to function over the fallout area or otherwise malfunction, shall be filed with the *fire code official*.

5608.10 Disposal. Any shells found during the inspection required in Section 5608.9 shall not be handled until not less than 15 minutes have elapsed from the time the shells were fired. The fireworks shall then be doused with water and allowed to remain for not less than 5 additional minutes before being placed in a plastic bucket or fiberboard box. The disposal instructions of the manufacturer as provided by the fireworks supplier shall then be followed in disposing of the fireworks in accordance with Section 5604.10.

SECTION 5609
TEMPORARY STORAGE OF CONSUMER FIREWORKS

5609.1 General. Where the display or temporary storage of fireworks 1.4G (consumer fireworks) is allowed by Section 5601.1.3, Exception 4, such display or storage shall comply with the applicable requirements of NFPA 1124.

[NY] SECTION 5610
SPARKLING DEVICES

[NY] 5610.1 Scope. The provisions of this section shall govern the possession, manufacture, storage, handling, sale, and use of sparkling devices. Any building or structure where sparkling devices are manufactured, stored, handled, sold or used shall be subject to the provisions of this section and to all other provisions of the *Uniform Code* applicable to such building or structure.

[NY] 5610.2 Definitions. In this section, the following terms shall have the following meanings unless a different meaning is clearly required by the context:

OPERATING BUILDING. The term operating building means a building occupied in conjunction with the manufacture, transportation or use of explosive materials, sparkling devices, or both. Operating buildings are separated from one another with the use of intraplant or intraline distances.

SPARKLING DEVICES. The term sparkling devices shall have the meaning ascribed to that term by Section 270.00(1)(a)(vi) of the Penal Law, and shall include ground-based or hand-held devices (as defined in subparagraph [i] of this paragraph) and novelties (as defined in subparagraph (ii) of this paragraph).

(i) Ground-based or hand-held devices. The term ground-based or hand-held devices shall include the category of devices described in Section 270.00(1)(a)(vi)(1) of the Penal Law, i.e., sparkling devices which are ground-based or hand-held devices that produce a shower of white, gold, or colored sparks as their primary pyrotechnic effect. Additional effects may include a colored flame, an audible crackling effect, an audible whistle effect, and smoke. These devices do not rise into the air, do not fire inserts or projectiles into the air, and do not explode or produce a report (an audible crackling-type effect is not considered to be a report). Ground-based or hand-held devices that produce a cloud of smoke as their sole pyrotechnic effect are also included in this category. Types of devices in this category include:

(a) Cylindrical fountain. A cylindrical tube containing not more than 75 grams of pyrotechnic composition that may be contained in a differ-

INTERNATIONAL CODE COUNCIL®
Copyright © 2019 ICC & NYSDOS. ALL RIGHTS RESERVED. Accessed by Lauren Gualdino (lgualdino@briarcliffmanor.org), (-) Order Number #100880972 on May 08, 2020 07:05 AM (PDT) pursuant to License Agreement with ICC & NYSDOS. No further reproduction, no

100880972

ent shaped exterior such as a square, rectangle, cylinder or other shape but the interior tubes are cylindrical in shape. Upon ignition, a shower of colored sparks, and sometimes a whistling effect or smoke, is produced. This device may be provided with a spike for insertion into the ground (spike fountain), a wood or plastic base for placing on the ground (base fountain), or a wood or cardboard handle to be hand held (handle fountain). When more than one tube is mounted on a common base, total pyrotechnic composition may not exceed 200 grams, and when tubes are securely attached to a base and the tubes are separated from each other on the base by a distance of not less than a $^1/_2$ inch (12.7 millimeters), a total weight not greater than 500 grams of pyrotechnic composition shall be allowed.

(b) Cone fountain. A cardboard or heavy paper cone containing not more than 50 grams of pyrotechnic composition. The effect is the same as that of a cylindrical fountain. When more than one cone is mounted on a common base, total pyrotechnic composition may not exceed 200 grams, and when cones are securely attached to a base and the cones are separated from each other on the base by a distance of not less than a $^1/_2$ inch (12.7 millimeters), a total weight not greater than 500 grams of pyrotechnic composition shall be allowed.

(c) Wooden sparkler / dipped stick. These devices consist of a wood dowel that has been coated with pyrotechnic composition. Upon ignition of the tip of the device, a shower of sparks is produced. Sparklers may contain up to 100 grams of pyrotechnic composition per item.

(ii) Novelties. The term novelties shall include the category of devices described in Section 270.00(1)(a)(iv)(2) of the Penal Law, i.e., novelties which do not require approval from the United States Department of Transportation and are not regulated as explosives, provided that they are manufactured and packaged as described below:

(a) Party popper. Small devices with paper or plastic exteriors that are actuated by means of friction (a string or trigger is typically pulled to actuate the device). They frequently resemble champagne bottles or toy pistols in shape. Upon activation, the device expels flame-resistant paper streamers, confetti, or other novelties and produces a small report. Devices may contain not greater than 16 milligrams (0.25 grains) of explosive composition, which is limited to potassium chlorate and red phosphorus. These devices must be packaged in an inner packaging which contains not more than 72 devices.

(b) Snapper. Small, paper-wrapped devices containing not more than 1 milligram of silver fulminate coated on small bits of sand or gravel. When dropped, the device explodes, producing a small report. Snappers must be in inner packages with not more than 50 devices each, and the inner packages must contain sawdust or a similar, impact-absorbing material.

[NY] 5610.3 Other applicable laws. The provisions of this section shall be in addition to, and not in limitation of:

1. All other provisions of the *Uniform Code* applicable to any building or structure where sparkling devices are manufactured, stored, handled, sold or used; and
2. All other statutes, rules, regulations, local laws, and ordinances applicable to the possession, manufacture, storage, handling, sale and/or use of sparkling devices, including but not limited to Sections 270.00 and 405.00 of the Penal Law; Section 392-j of the General Business Law; Section 156-h of the Executive Law; Part 225 of Title 9 NYCRR; Part 39 of Title 12 NYCRR (Industrial Code Rule 39); and local laws, ordinances or regulations relating to operating permits as contemplated by Section 1203.3(g) of Title 19 NYCRR. Nothing in this section shall be construed as permitting the possession, manufacture, handling, sale and/or use of sparkling devices in violation of any other law, statute, rule, regulation, local law or ordinance applicable to the possession, manufacture, storage, handling, sale and/or use of sparkling devices. Nothing in this section shall be construed as permitting the possession, manufacture, handling, sale and/or use of sparkling devices in any jurisdiction where the possession, manufacture, handling, sale and/or use of sparking devices has not been made legal in accordance with the provisions of Section 405.00 of the Penal Law.

[NY] 5610.4 Hazardous conditions.

[NY] 5610.4.1 Fire danger rating areas. The New York State Department of Environmental Conservation (DEC) publishes fire danger ratings for each Fire Danger Rating Area (FDRA) in the State. The use of sparkling devices at any location within a FDRA designated by the DEC as having a fire danger rating of extreme (red) at any time when such designation is in effect is prohibited.

[NY] 5610.4.2 Red flag condition areas. The DEC designates certain areas within the State as being subject to red flag conditions. The use of sparkling devices at any location within any area designated by the DEC as being subject to red flag conditions at any time such designation remains in effect is prohibited.

[NY] 5610.5 Use of ground-based or hand-held devices in or near buildings or structures.

[NY] 5610.5.1 Inside buildings or structures. No ground-based or hand-held device shall be used inside any building or structure unless:

1. Such ground-based or hand-held device is listed for indoor use; and
2. The use of such ground-based or hand-held device inside such building or structure has been approved.

INTERNATIONAL CODE COUNCIL®
Copyright © 2019 ICC & NYSDOS. ALL RIGHTS RESERVED. Accessed by Lauren Gualdino (lgualdino@briarcliffmanor.org), (-) Order Number #100880972 on May 08, 2020 07:05 AM (PDT) pursuant to License Agreement with ICC & NYSDOS. No further reproduction, no

100880972

[NY] 5610.5.2 Near buildings or structures. No ground-based or hand-held devices shall be used within 10 feet (3048 mm) of any building or structure unless:

1. Such ground-based or hand-held device is listed for indoor use or for use within 10 feet (3048 mm) of a building or structure; and
2. The use of such ground-based or hand-held device within 10 feet (3048 mm) of such building or structure has been approved.

[NY] 5610.6 Retail sales.

[NY] 5610.6.1 Limitations. No persons shall construct a retail display of sparkling devices or offer sparkling devices for sale upon highways, sidewalks or public property or in a Group A or E occupancy.

[NY] 5610.6.2 Reference standard requirements. Retail sales of sparkling devices shall comply with the applicable requirements of NFPA 1124.

[NY] 5610.6.3 Portable fire extinguisher. Not less than one pressurized-water portable fire extinguisher complying with Section 906 shall be located not more than 15 feet (4572 mm) and not less than 10 feet (3048 mm) from each area where sparkling devices are stored or displayed for retail sale.

[NY] 5610.6.4 No smoking signs. No smoking signs complying with Section 310 shall be conspicuously posted in each area where sparkling devices are stored or displayed for retail sale.

[NY] 5610.7 Storage of sparkling devices. The storage or temporary storage of sparkling devices shall comply with the applicable requirements of NFPA 1124 and, in addition, shall be subject to the provisions of Section 5610.8.

[NY] 5610.8 Limit on quantity. The *fire code official* is authorized to limit the quantity of sparkling devices permitted to be kept or stored at any one- or two-family dwelling, townhouse, or any building or structure containing any Group R occupancy.

[NY] 5610.9 Records. Manufacturers of sparkling devices shall maintain records of chemicals, chemical compounds and mixtures required by the U.S. Department of Labor regulations set forth in 29 CFR part 1910.1200 and Section 407.

[NY] 5610.10 Manufacture, assembly, and testing of sparkling devices.

[NY] 5610.10.1 Reference standard requirements. The manufacture, assembly, and testing of sparkling devices, and facilities where the manufacture, assembly and/or testing of sparkling device occur, shall comply with the requirements of this subdivision and NFPA 495 or NFPA 1124.

[NY] 5610.10.2 Emergency planning. Emergency plans, emergency drills, employee training and hazard communication shall conform to the provisions of this section and Sections 404, 405, 406 and 407.

[NY] 5610.10.3 Management plans and inventory statements. Detailed Hazardous Materials Management Plans (HMMP) and hazardous materials inventory statements (HMIS) complying with the requirements of Section 407 shall be prepared and submitted to the local emergency planning committee, the *fire code official*, and the local fire department. A copy of the required HMMP and HMIS shall be maintained on site and furnished to the *fire code official* on request.

[NY] 5610.10.4 Training. Workers who handle or dispose of sparkling devices shall be trained in the hazards of the materials and processes in which they are to be engaged and with the safety rules governing such materials and processes.

[NY] 5610.10.5 Emergency procedures. Approved emergency procedures shall be formulated for each facility where sparkling devices are manufactured, assembled and/or tested. Such procedures shall include personal instruction in any emergency that may be anticipated. All personnel shall be made aware of an emergency warning signal.

INTERNATIONAL CODE COUNCIL®
Copyright © 2019 ICC & NYSDOS. ALL RIGHTS RESERVED. Accessed by Lauren Gualdino (lgualdino@briarcliffmanor.org), (-) Order Number #100880972 on May 08, 2020 07:05 AM (PDT) pursuant to License Agreement with ICC & NYSDOS. No further reproduction, no

100880972

INTERNATIONAL CODE COUNCIL®
Copyright © 2019 ICC & NYSDOS. ALL RIGHTS RESERVED. Accessed by Lauren Gualdino (lgualdino@briarcliffmanor.org), (-) Order Number #100880972 on May 08, 2020 07:05 AM (PDT) pursuant to License Agreement with ICC & NYSDOS. No further reproduction, no

100880972

CHAPTER 57

FLAMMABLE AND COMBUSTIBLE LIQUIDS

SECTION 5701 GENERAL

5701.1 Scope and application. Prevention, control and mitigation of dangerous conditions related to storage, use, dispensing, mixing and handling of flammable and *combustible liquids* shall be in accordance with Chapter 50 and this chapter.

5701.2 Nonapplicability. This chapter shall not apply to liquids as otherwise provided in other laws or regulations or chapters of this code, including:

1. Specific provisions for flammable liquids in motor fuel-dispensing facilities, repair garages, airports and marinas in Chapter 23.
2. Medicines, foodstuffs, cosmetics and commercial or institutional products containing not more than 50 percent by volume of water-miscible liquids and with the remainder of the solution not being flammable, provided that such materials are packaged in individual containers not exceeding 1.3 gallons (5 L).
3. Quantities of alcoholic beverages in retail or wholesale sales or storage occupancies, provided that the liquids are packaged in individual containers not exceeding 1.3 gallons (5 L).
4. Storage and use of fuel oil in tanks and containers connected to oil-burning equipment. Such storage and use shall be in accordance with Section 603. For abandonment of fuel oil tanks, this chapter applies.
5. Refrigerant liquids and oils in refrigeration systems (see Section 605).
6. Storage and display of aerosol products complying with Chapter 51.
7. Storage and use of liquids that do not have a fire point when tested in accordance with ASTM D92.
8. Liquids with a *flash point* greater than 95°F (35°C) in a water-miscible solution or dispersion with a water and inert (noncombustible) solids content of more than 80 percent by weight, which do not sustain combustion.
9. Liquids without *flash points* that can be flammable under some conditions, such as certain halogenated hydrocarbons and mixtures containing halogenated hydrocarbons.
10. The storage of distilled spirits and wines in wooden barrels and casks.
11. Commercial cooking oil storage tank systems located within a building and designed and installed in accordance with Section 608 and NFPA 30.

5701.3 Referenced documents. The applicable requirements of Chapter 50, other chapters of this code, the *Building Code of New York State* and the *Mechanical Code of New York State* pertaining to flammable liquids shall apply.

[NY] 5701.4 Permits. Permits shall be required as set forth in Sections 105.2 and 105.6.

5701.5 Material classification. Flammable and *combustible liquids* shall be classified in accordance with the definitions in Chapter 2.

When mixed with lower flash-point liquids, Class II or III liquids are capable of assuming the characteristics of the lower flash-point liquids. Under such conditions, the appropriate provisions of this chapter for the actual *flash point* of the mixed liquid shall apply.

When heated above their *flash points*, Class II and III liquids assume the characteristics of Class I liquids. Under such conditions, the appropriate provisions of this chapter for flammable liquids shall apply.

SECTION 5702 DEFINITIONS

5702.1 Definitions. The following terms are defined in Chapter 2:

ALCOHOL-BASED HAND RUB.

BULK PLANT OR TERMINAL.

BULK TRANSFER.

COMBUSTIBLE LIQUID.
Class II.
Class IIIA.
Class IIIB.

FIRE POINT.

FLAMMABLE LIQUID.
Class IA.
Class IB.
Class IC.

FLASH POINT.

FUEL LIMIT SWITCH.

LIQUID STORAGE ROOM.

LIQUID STORAGE WAREHOUSE.

MOBILE FUELING.

PROCESS TRANSFER.

REFINERY.

REMOTE EMERGENCY SHUTOFF DEVICE.

REMOTE SOLVENT RESERVOIR.

SOLVENT DISTILLATION UNIT.

TANK, PRIMARY.

INTERNATIONAL CODE COUNCIL®
Copyright © 2019 ICC & NYSDOS. ALL RIGHTS RESERVED. Accessed by Lauren Gualdino (lgualdino@briarcliffmanor.org), (-) Order Number #100880972 on May 08, 2020 07:05 AM (PDT) pursuant to License Agreement with ICC & NYSDOS. No further reproduction, no

100880972

SECTION 5703
GENERAL REQUIREMENTS

5703.1 Electrical. Electrical wiring and equipment shall be installed and maintained in accordance with Section 604 and NFPA 70.

5703.1.1 Classified locations for flammable liquids. Areas where flammable liquids are stored, handled, dispensed or mixed shall be in accordance with Table 5703.1.1. A classified area shall not extend beyond an unpierced floor, roof or other solid partition.

The extent of the classified area is allowed to be reduced, or eliminated, where sufficient technical justification is provided to the *fire code official* that a concentration in the area in excess of 25 percent of the lower flammable limit (LFL) cannot be generated.

5703.1.2 Classified locations for combustible liquids. Areas where Class II or III liquids are heated above their *flash points* shall have electrical installations in accordance with Section 5703.1.1.

Exception: Solvent distillation units in accordance with Section 5705.4.

5703.1.3 Other applications. The *fire code official* is authorized to determine the extent of the Class I electrical equipment and wiring location where a condition is not specifically covered by these requirements or NFPA 70.

5703.2 Fire protection. Fire protection for the storage, use, dispensing, mixing, handling and on-site transportation of flammable and *combustible liquids* shall be in accordance with this chapter and applicable sections of Chapter 9.

5703.2.1 Portable fire extinguishers and hose lines. Portable fire extinguishers shall be provided in accordance with Section 906. Hose lines shall be provided in accordance with Section 905.

5703.3 Site assessment. In the event of a spill, leak or discharge from a tank system, a site assessment shall be completed by the *owner* or operator of such tank system if the *fire code official* determines that a potential fire or explosion hazard exists. Such site assessments shall be conducted to ascertain potential fire hazards and shall be completed and submitted to the fire department within a time period established by the *fire code official*, not to exceed 60 days.

5703.4 Spill control and secondary containment. Where the *maximum allowable quantity per control area* is exceeded, and where required by Section 5004.2, rooms, buildings or areas used for storage, dispensing, use, mixing or handling of Class I, II and IIIA liquids shall be provided with spill control and secondary containment in accordance with Section 5004.2.

5703.5 Labeling and signage. The *fire code official* is authorized to require warning signs for the purpose of identifying the hazards of storing or using flammable liquids. Signage for identification and warning such as for the inherent hazard of flammable liquids or smoking shall be provided in accordance with this chapter and Sections 5003.5 and 5003.6.

5703.5.1 Style. Warning signs shall be of a durable material. Signs warning of the hazard of flammable liquids shall have white lettering on a red background and shall read: DANGER—FLAMMABLE LIQUIDS. Letters shall be not less than 3 inches (76 mm) in height and $^1/_2$ inch (12.7 mm) in stroke.

5703.5.2 Location. Signs shall be posted in locations as required by the *fire code official*. Piping containing flammable liquids shall be identified in accordance with ASME A13.1.

5703.5.3 Warning labels. Individual containers, packages and cartons shall be identified, marked, labeled and placarded in accordance with federal regulations and applicable state laws.

5703.5.4 Identification. Color coding or other *approved* identification means shall be provided on each loading and unloading riser for flammable or *combustible liquids* to identify the contents of the tank served by the riser.

5703.6 Piping systems. Piping systems, and their component parts, for flammable and *combustible liquids* shall be in accordance with Sections 5703.6.1 through 5703.6.11.

5703.6.1 Nonapplicability. The provisions of Section 5703.6 shall not apply to gas or oil well installations; piping that is integral to stationary or portable engines, including aircraft, watercraft and motor vehicles; and piping in connection with boilers and pressure vessels regulated by the *Mechanical Code of New York State*.

5703.6.2 Design and fabrication of piping systems and components. Piping system components shall be designed and fabricated in accordance with the applicable standard listed in Table 5703.6.2 and Chapter 27 of NFPA 30, except as modified by Section 5703.6.2.1.

TABLE 5703.6.2
PIPING STANDARDS

PIPING USE	STANDARD
Power Piping	ASME B31.1
Process Piping	ASME B31.3
Pipeline Transportation Systems for Liquid Hydrocarbons and Other Liquids	ASME B31.4
Building Services Piping	ASME B31.9

5703.6.2.1 Special materials. Low-melting-point materials (such as aluminum, copper or brass), materials that soften on fire exposure (such as nonmetallic materials) and nonductile material (such as cast iron) shall be acceptable for use underground in accordance with the applicable standard listed in Table 5703.6.2. Where such materials are used outdoors in above-

INTERNATIONAL CODE COUNCIL®
Copyright © 2019 ICC & NYSDOS. ALL RIGHTS RESERVED. Accessed by Lauren Gualdino (lgualdino@briarcliffmanor.org), (-) Order Number #100880972 on May 08, 2020 07:05 AM (PDT) pursuant to License Agreement with ICC & NYSDOS. No further reproduction, no

INTERNATIONAL CODE COUNCIL®

Copyright © 2019 ICC & NYSDOS. ALL RIGHTS RESERVED. Accessed by Lauren Gualdino (lgualdino@briarcliffmanor.org). (-) Order Number #100880972 on May 08, 2020 07:05 AM (PDT) pursuant to License Agreement with ICC & NYSDOS. No further reproduction, no

TABLE 5703.1.1
CLASS I ELECTRICAL EQUIPMENT LOCATIONS[a]

LOCATION	GROUP D DIVISION	EXTENT OF CLASSIFIED AREA
Underground tank fill opening	1	Pits, boxes or spaces below grade level, any part of which is within the Division 1 or 2 classified area.
	2	Up to 18 inches above grade level within a horizontal radius of 10 feet from a loose-fill connection and within a horizontal radius of 5 feet from a tight-fill connection.
Vent—Discharging upward	1	Within 3 feet of open end of vent, extending in all directions.
	2	Area between 3 feet and 5 feet of open end of vent, extending in all directions.
Drum and container filling		
Outdoor or indoor with adequate ventilation	1	Within 3 feet of vent and fill opening, extending in all directions.
	2	Area between 3 feet and 5 feet from vent of fill opening, extending in all directions. Also up to 18 inches above floor or grade level within a horizontal radius of 10 feet from vent or fill opening.
Pumps, bleeders, withdrawal fittings, meters and similar devices		
Indoor	2	Within 5 feet of any edge of such devices, extending in all directions, and up to 3 feet above floor or grade level within 25 feet horizontally from any edge of such devices.
Outdoor	2	Within 3 feet of any edge of such devices, extending in all directions, and up to 18 inches above floor or grade level within 10 feet horizontally from an edge of such devices.
Pits		
Without mechanical ventilation	1	Entire area within pit if any part is within a Division 1 or 2 classified area.
With mechanical ventilation	2	Entire area within pit if any part is within a Division 1 or 2 classified area.
Containing valves, fittings or piping, and not within a Division 1 or 2 classified area	2	Entire pit.
Drainage ditches, separators, impounding basins		
Indoor	1 or 2	Same as pits.
Outdoor	2	Area up to 18 inches above ditch, separator or basin, and up to 18 inches above grade within 15 feet horizontal from any edge.
Tank vehicle and tank car[b]		
Loading through open dome	1	Within 3 feet of edge of dome, extending in all directions.
	2	Area between 3 feet and 15 feet from edge of dome, extending in all directions.
Loading through bottom connections with atmospheric venting	1	Within 3 feet of point of venting to atmosphere, extending in all directions.
	2	Area between 3 feet and 15 feet from point of venting to atmosphere, extending in all directions. Also up to 18 inches above grade within a horizontal radius of 10 feet from point of loading connection.

(continued)

100880972

TABLE 5703.1.1—continued
CLASS I ELECTRICAL EQUIPMENT LOCATIONS[a]

LOCATION	GROUP D DIVISION	EXTENT OF CLASSIFIED AREA
Tank vehicle and tank car[b]—continued		
Loading through closed dome with atmospheric venting	1	Within 3 feet of open end of vent, extending in all directions.
	2	Area between 3 feet and 15 feet from open end of vent, extending in all directions, and within 3 feet of edge of dome, extending in all directions.
Loading through closed dome with vapor control	2	Within 3 feet of point of connection of both fill and vapor lines, extending in all directions.
Bottom loading with vapor control or any bottom unloading	2	Within 3 feet of point of connection, extending in all directions, and up to 18 inches above grade within a horizontal radius of 10 feet from point of connection.
Storage and repair garage for tank vehicles	1	Pits or spaces below floor level.
	2	Area up to 18 inches above floor or grade level for entire storage or repair garage.
Garages for other than tank vehicles	Ordinary	Where there is an opening to these rooms within the extent of an outdoor classified area, the entire room shall be classified the same as the area classification at the point of the opening.
Outdoor drum storage	Ordinary	—
Indoor warehousing where there is no flammable liquid transfer	Ordinary	Where there is an opening to these rooms within the extent of an indoor classified area, the room shall be classified the same as if the wall, curb or partition did not exist.
Indoor equipment where flammable vapor/air mixtures could exist under normal operations	1	Area within 5 feet of any edge of such equipment, extending in all directions.
	2	Area between 5 feet and 8 feet of any edge of such equipment, extending in all directions, and the area up to 3 feet above floor or grade level within 5 feet to 25 feet horizontally from any edge of such equipment.[c]
Outdoor equipment where flammable vapor/air mixtures could exist under normal operations	1	Area within 3 feet of any edge of such equipment, extending in all directions.
	2	Area between 3 feet and 8 feet of any edge of such equipment extending in all directions, and the area up to 3 feet above floor or grade level within 3 feet to 10 feet horizontally from any edge of such equipment.
Tank—Above ground		
Shell, ends or roof and dike area	1	Area inside dike where dike height is greater than the distance from the tank to the dike for more than 50 percent of the tank circumference.
	2	Area within 10 feet from shell, ends or roof of tank. Area inside dikes to level of top of dike.
Vent	1	Area within 5 feet of open end of vent, extending in all directions.
	2	Area between 5 feet and 10 feet from open end of vent, extending in all directions.
Floating roof	1	Area above the roof and within the shell.
Office and restrooms	Ordinary	Where there is an opening to these rooms within the extent of an indoor classified location, the room shall be classified the same as if the wall, curb or partition did not exist.

For SI: 1 inch = 25.4 mm, 1 foot = 304.8 mm.

a. Locations as classified in NFPA 70.

b. When classifying extent of area, consideration shall be given to the fact that tank cars or tank vehicles can be spotted at varying points. Therefore, the extremities of the loading or unloading positions shall be used.

c. The release of Class I liquids can generate vapors to the extent that the entire building, and possibly a zone surrounding it, are considered a Class I, Division 2 location.

INTERNATIONAL CODE COUNCIL®
Copyright © 2019 ICC & NYSDOS. ALL RIGHTS RESERVED. Accessed by Lauren Gualdino (lgualdino@briarcliffmanor.org). (-) Order Number #100880972 on May 08, 2020 07:05 AM (PDT) pursuant to License Agreement with ICC & NYSDOS. No further reproduction, no
100880972

100880972

ground piping systems or within buildings, they shall be in accordance with the applicable standard listed in Table 5703.6.2 and one of the following:

1. Suitably protected against fire exposure.
2. Located where leakage from failure would not unduly expose people or structures.
3. Located where leakage can be readily controlled by operation of remotely located valves in a location provided with *ready access*.

In all cases, nonmetallic piping shall be used in accordance with Section 27.4.6 of NFPA 30.

5703.6.3 Testing. Unless tested in accordance with the applicable section of ASME B31.9, piping, before being covered, enclosed or placed in use, shall be hydrostatically tested to 150 percent of the maximum anticipated pressure of the system, or pneumatically tested to 110 percent of the maximum anticipated pressure of the system, but not less than 5 pounds per square inch gauge (psig) (34.47 kPa) at the highest point of the system. This test shall be maintained for a sufficient time period to complete visual inspection of joints and connections. For not less than 10 minutes, there shall be no leakage or permanent distortion. Care shall be exercised to ensure that these pressures are not applied to vented storage tanks. Such storage tanks shall be tested independently from the piping.

5703.6.3.1 Existing piping. Existing piping shall be tested in accordance with this section where the *fire code official* has reasonable cause to believe that a leak exists. Piping that could contain flammable or *combustible liquids* shall not be tested pneumatically. Such tests shall be at the expense of the *owner* or operator.

Exception: Vapor-recovery piping is allowed to be tested using an inert gas.

5703.6.4 Protection from vehicles. Guard posts or other *approved* means shall be provided to protect piping, valves or fittings subject to vehicular damage in accordance with Section 312.

5703.6.5 Protection from external corrosion and galvanic action. Where subject to external corrosion, piping, related fluid-handling components and supports for both underground and above-ground applications shall be fabricated from noncorrosive materials, and coated or provided with corrosion protection. Dissimilar metallic parts that promote galvanic action shall not be joined.

5703.6.6 Valves. Piping systems shall contain a sufficient number of manual control valves and check valves to operate the system properly and to protect the plant under both normal and emergency conditions. Piping systems in connection with pumps shall contain a sufficient number of such valves to control properly the flow of liquids in normal operation and in the event of physical damage or fire exposure.

5703.6.6.1 Backflow protections. Connections to pipelines or piping by which equipment (such as tank cars, tank vehicles or marine vessels) discharges liquids into storage tanks shall be provided with check valves or block valves for automatic protection against backflow where the piping arrangement is such that backflow from the system is possible. Where loading and unloading is done through a common pipe system, a check valve is not required. However, a block valve, located in an area where it is provided with *ready access* or remotely operable, shall be provided.

5703.6.6.2 Manual drainage. Manual drainage-control valves shall be located at *approved* locations remote from the tanks, diked area, drainage system and impounding basin to ensure their operation in a fire condition.

5703.6.7 Connections. Above-ground tanks with connections located below normal liquid level shall be provided with internal or external isolation valves located as close as practical to the shell of the tank. Except for liquids whose chemical characteristics are incompatible with steel, such valves, where external, and their connections to the tank shall be of steel.

5703.6.8 Piping supports. Piping systems shall be substantially supported and protected against physical damage and excessive stresses arising from settlement, vibration, expansion, contraction or exposure to fire. The supports shall be protected against exposure to fire by one of the following:

1. Draining liquid away from the piping system at a minimum slope of not less than 1 percent.
2. Providing protection with a *fire-resistance rating* of not less than 2 hours.
3. Other *approved* methods.

5703.6.9 Flexible joints. Flexible joints shall be *listed* and *approved* and shall be installed on underground liquid, vapor and vent piping at all of the following locations:

1. Where piping connects to underground tanks.
2. Where piping ends at pump islands and vent risers.
3. At points where differential movement in the piping can occur.

5703.6.9.1 Fiberglass-reinforced plastic piping. Fiberglass-reinforced plastic (FRP) piping is not required to be provided with flexible joints in locations where both of the following conditions are present:

1. Piping does not exceed 4 inches (102 mm) in diameter.
2. Piping has a straight run of not less than 4 feet (1219 mm) on one side of the connection where such connections result in a change of direction.

In lieu of the minimum 4-foot (1219 mm) straight run length, *approved* and *listed* flexible joints are allowed to be used under dispensers and suction pumps, at submerged pumps and tanks, and where vents extend above ground.

5703.6.10 Pipe joints. Joints shall be liquid tight and shall be welded, flanged or threaded except that *listed* flexible connectors are allowed in accordance with Section 5703.6.9. Threaded or flanged joints shall fit tightly by

INTERNATIONAL CODE COUNCIL®
Copyright © 2019 ICC & NYSDOS. ALL RIGHTS RESERVED. Accessed by Lauren Gualdino (lgualdino@briarcliffmanor.org), (-) Order Number #100880972 on May 08, 2020 07:05 AM (PDT) pursuant to License Agreement with ICC & NYSDOS. No further reproduction, no

100880972

using *approved* methods and materials for the type of joint. Joints in piping systems used for Class I liquids shall be welded where located in concealed spaces within buildings.

Nonmetallic joints shall be *approved* and shall be installed in accordance with the manufacturer's instructions.

Pipe joints that are dependent on the friction characteristics or resiliency of combustible materials for liquid tightness of piping shall not be used in buildings. Piping shall be secured to prevent disengagement at the fitting.

5703.6.11 Bends. Pipe and tubing shall be bent in accordance with ASME B31.9.

SECTION 5704
STORAGE

5704.1 General. The storage of flammable and *combustible liquids* in containers and tanks shall be in accordance with this section and the applicable sections of Chapter 50.

5704.2 Tank storage. The provisions of this section shall apply to:

1. The storage of flammable and *combustible liquids* in fixed above-ground and underground tanks.
2. The storage of flammable and *combustible liquids* in fixed above-ground tanks inside of buildings.
3. The storage of flammable and *combustible liquids* in portable tanks whose capacity exceeds 660 gallons (2498 L).
4. The installation of such tanks and portable tanks.

5704.2.1 Change of tank contents. Tanks subject to change in contents shall be in accordance with Section 5704.2.7. Prior to a change in contents, the *fire code official* is authorized to require testing of a tank.

Tanks that have previously contained Class I liquids shall not be loaded with Class II or Class III liquids until such tanks and all piping, pumps, hoses and meters connected thereto have been completely drained and flushed.

5704.2.2 Use of tank vehicles and tank cars as storage tanks. Tank cars and tank vehicles shall not be used as storage tanks.

5704.2.3 Labeling and signs. Labeling and signs for storage tanks and storage tank areas shall comply with Sections 5704.2.3.1 and 5704.2.3.2.

5704.2.3.1 Smoking and open flame. Signs shall be posted in storage areas prohibiting open flames and smoking. Signs shall comply with Section 5703.5.

5704.2.3.2 Label or placard. Tanks more than 100 gallons (379 L) in capacity, which are permanently installed or mounted and used for the storage of Class I, II or III liquids, shall bear a label and placard identifying the material therein. Placards shall be in accordance with NFPA 704.

Exceptions:

1. Tanks of 300-gallon (1136 L) capacity or less located on private property and used for heating and cooking fuels in single-family *dwellings*.
2. Tanks located underground.

5704.2.4 Sources of ignition. Smoking and open flames are prohibited in storage areas in accordance with Section 5003.7.

Exception: Areas designated as smoking and hot work areas, and areas where hot work permits have been issued in accordance with this code.

5704.2.5 Explosion control. Explosion control shall be provided in accordance with Section 911 for indoor tanks.

5704.2.6 Separation from incompatible materials. Storage of flammable and *combustible liquids* shall be separated from *incompatible materials* in accordance with Section 5003.9.8.

Grass, weeds, combustible materials and waste Class I, II or IIIA liquids shall not be accumulated in an unsafe manner at a storage site.

5704.2.7 Design, fabrication and construction requirements for tanks. The design, fabrication and construction of tanks shall comply with NFPA 30. Each tank shall bear a permanent nameplate or marking indicating the standard used as the basis of design.

5704.2.7.1 Materials used in tank construction. The materials used in tank construction shall be in accordance with NFPA 30. The materials of construction for tanks and their appurtenances shall be compatible with the liquids to be stored.

5704.2.7.2 Pressure limitations for tanks. Tanks shall be designed for the pressures to which they will be subjected in accordance with NFPA 30.

5704.2.7.3 Tank vents for normal venting. Tank vents for normal venting shall be installed and maintained in accordance with Sections 5704.2.7.3.1 through 5704.2.7.3.5.3.

5704.2.7.3.1 Vent lines. Vent lines from tanks shall not be used for purposes other than venting unless *approved*.

5704.2.7.3.2 Vent-line flame arresters and pressure-vacuum vents. *Listed* or *approved* flame arresters or pressure-vacuum (PV) vents that remain closed unless venting under pressure or vacuum conditions shall be installed in normal vents of tanks containing Class IB and IC liquids.

Vent-line flame arresters shall be installed in accordance with their listing or API 2000 and maintained in accordance with Section 21.8.6 of NFPA

INTERNATIONAL CODE COUNCIL®
Copyright © 2019 ICC & NYSDOS. ALL RIGHTS RESERVED. Accessed by Lauren Gualdino (lgualdino@briarcliffmanor.org), (-) Order Number #100880972 on May 08, 2020 07:05 AM (PDT) pursuant to License Agreement with ICC & NYSDOS. No further reproduction, no

100880972

30 or API 2000. In-line flame arresters in piping systems shall be installed and maintained in accordance with their listing or API 2028. Pressure-vacuum vents shall be installed in accordance with Section 21.4.3 of NFPA 30 or API 2000 and maintained in accordance with Section 21.8.6 of NFPA 30 or API 2000.

Exception: Where determined by the *fire code official* that the use of these devices can result in damage to the tank.

5704.2.7.3.3 Vent pipe outlets. Vent pipe outlets for tanks storing Class I, II or IIIA liquids shall be located such that the vapors are released at a safe point outside of buildings and not less than 12 feet (3658 mm) above the finished ground level. Vapors shall be discharged upward or horizontally away from adjacent walls to assist in vapor dispersion. Vent outlets shall be located such that flammable vapors will not be trapped by eaves or other obstructions and shall be not less than 5 feet (1524 mm) from building openings or *lot lines* of properties that can be built upon. Vent outlets on atmospheric tanks storing Class IIIB liquids are allowed to discharge inside a building where the vent is a normally closed vent.

Exception: Vent pipe outlets on tanks storing Class IIIB liquid inside buildings and connected to fuel-burning equipment shall be located such that the vapors are released to a safe location outside of buildings.

5704.2.7.3.4 Installation of vent piping. Vent piping shall be designed, sized, constructed and installed in accordance with Section 5703.6. Vent pipes shall be installed such that they will drain toward the tank without sags or traps in which liquid can collect. Vent pipes shall be installed in such a manner so as not to be subject to physical damage or vibration.

5704.2.7.3.5 Manifolding. Tank vent piping shall not be manifolded unless required for special purposes such as vapor recovery, vapor conservation or air pollution control.

5704.2.7.3.5.1 Above-ground tanks. For above-ground tanks, manifolded vent pipes shall be adequately sized to prevent system pressure limits from being exceeded where manifolded tanks are subject to the same fire exposure.

5704.2.7.3.5.2 Underground tanks. For underground tanks, manifolded vent pipes shall be sized to prevent system pressure limits from being exceeded when manifolded tanks are filled simultaneously.

5704.2.7.3.5.3 Tanks storing Class I liquids. Vent piping for tanks storing Class I liquids shall not be manifolded with vent piping for tanks storing Class II and III liquids unless positive means are provided to prevent the vapors from Class I liquids from entering tanks storing Class II and III liquids, to prevent contamination and possible change in classification of less volatile liquid.

5704.2.7.4 Emergency venting. Stationary, above-ground tanks shall be equipped with additional venting that will relieve excessive internal pressure caused by exposure to fires. Emergency vents for Class I, II and IIIA liquids shall not discharge inside buildings. The venting shall be installed and maintained in accordance with Section 22.7 of NFPA 30.

Exceptions:

1. Tanks larger than 12,000 gallons (45 420 L) in capacity storing Class IIIB liquids that are not within the diked area or the drainage path of Class I or II liquids do not require emergency relief venting.
2. Emergency vents on protected above-ground tanks complying with UL 2085 containing Class II or IIIA liquids are allowed to discharge inside the building.

5704.2.7.5 Tank openings other than vents. Tank openings for other than vents shall comply with Sections 5704.2.7.5.1 through 5704.2.7.5.8.

5704.2.7.5.1 Connections below liquid level. Connections for tank openings below the liquid level shall be liquid tight.

5704.2.7.5.2 Filling, emptying and vapor recovery connections. Filling, emptying and vapor recovery connections to tanks containing Class I, II or IIIA liquids shall be located outside of buildings in accordance with Section 5704.2.7.5.6 at a location free from sources of ignition and not less than 5 feet (1524 mm) away from building openings or *lot lines* of property that can be built upon. Such openings shall be properly identified and provided with a liquid-tight cap that shall be closed when not in use.

Filling and emptying connections to indoor tanks containing Class IIIB liquids and connected to fuel-burning equipment shall be located at a finished ground level location outside of buildings. Such openings shall be provided with a liquid-tight cap that shall be closed when not in use. A sign in accordance with Section 5003.6 that displays the following warning shall be permanently attached at the filling location:

TRANSFERRING FUEL OTHER THAN CLASS IIIB COMBUSTIBLE LIQUID TO THIS TANK CONNECTION IS A VIOLATION OF THE FIRE CODE AND IS STRICTLY PROHIBITED

5704.2.7.5.3 Piping, connections and fittings. Piping, connections, fittings and other appurtenances shall be installed in accordance with Section 5703.6.

5704.2.7.5.4 Manual gauging. Openings for manual gauging, if independent of the fill pipe, shall be provided with a liquid-tight cap or cover. Covers

INTERNATIONAL CODE COUNCIL®
Copyright © 2019 ICC & NYSDOS. ALL RIGHTS RESERVED. Accessed by Lauren Gualdino (lgualdino@briarcliffmanor.org), (-) Order Number #100880972 on May 08, 2020 07:05 AM (PDT) pursuant to License Agreement with ICC & NYSDOS. No further reproduction, no

100880972

shall be kept closed when not gauging. If inside a building, such openings shall be protected against liquid overflow and possible vapor release by means of a spring-loaded check valve or other *approved* device.

5704.2.7.5.5 Fill pipes and discharge lines. For top-loaded tanks, a metallic fill pipe shall be designed and installed to minimize the generation of static electricity by terminating the pipe within 6 inches (152 mm) of the bottom of the tank, and it shall be installed in a manner that avoids excessive vibration.

5704.2.7.5.5.1 Class I liquids. For Class I liquids other than crude oil, gasoline and asphalt, the fill pipe shall be designed and installed in a manner that will minimize the possibility of generating static electricity by terminating within 6 inches (152 mm) of the bottom of the tank.

5704.2.7.5.5.2 Underground tanks. For underground tanks, fill pipe and discharge lines shall enter only through the top. Fill lines shall be sloped toward the tank. Underground tanks for Class I liquids having a capacity greater than 1,000 gallons (3785 L) shall be equipped with a tight fill device for connecting the fill hose to the tank.

5704.2.7.5.6 Location of connections that are made or broken. Filling, withdrawal and vapor-recovery connections for Class I, II and IIIA liquids that are made and broken shall be located outside of buildings, not more than 5 feet (1524 mm) above the finished ground level, in an *approved* location in close proximity to the parked delivery vehicle. Such location shall be away from sources of ignition and not less than 5 feet (1524 mm) away from building openings. Such connections shall be closed and liquid tight when not in use and shall be properly identified.

5704.2.7.5.7 Protection against vapor release. Tank openings provided for purposes of vapor recovery shall be protected against possible vapor release by means of a spring-loaded check valve or dry-break connections, or other *approved* device, unless the opening is a pipe connected to a vapor processing system. Openings designed for combined fill and vapor recovery shall be protected against vapor release unless connection of the liquid delivery line to the fill pipe simultaneously connects the vapor recovery line. Connections shall be vapor tight.

5704.2.7.5.8 Overfill prevention. An *approved* means or method in accordance with Section 5704.2.9.7.5 shall be provided to prevent the overfill of all Class I, II and IIIA liquid storage tanks. Storage tanks in refineries, bulk plants or terminals regulated by Section 5706.4 or 5706.7 shall have overfill protection in accordance with API 2350.

An *approved* means or method in accordance with Section 5704.2.9.7.5 shall be provided to prevent the overfilling of Class IIIB liquid storage tanks connected to fuel-burning equipment inside buildings.

Exception: Outside above-ground tanks with a capacity of 1,320 gallons (5000 L) or less.

5704.2.7.6 Repair, alteration or reconstruction of tanks and piping. The repair, *alteration* or reconstruction, including welding, cutting and hot tapping of storage tanks and piping that have been placed in service, shall be in accordance with NFPA 30. Hot work, as defined in Section 202, on such tanks shall be conducted in accordance with Section 3510.

5704.2.7.7 Design of supports. The design of the supporting structure for tanks shall be in accordance with the *Building Code of New York State* and NFPA 30.

5704.2.7.8 Locations subject to flooding. Where a tank is located in an area where it is subject to buoyancy because of a rise in the water table, flooding or accumulation of water from fire suppression operations, uplift protection shall be provided in accordance with Sections 22.14 and 23.14 of NFPA 30.

5704.2.7.9 Corrosion protection. Where subject to external corrosion, tanks shall be fabricated from corrosion-resistant materials, coated or provided with corrosion protection in accordance with Section 23.3.5 of NFPA 30.

5704.2.7.10 Leak reporting. A consistent or accidental loss of liquid, or other indication of a leak from a tank system, shall be reported immediately to the fire department, the *fire code official* and other authorities having jurisdiction.

5704.2.7.10.1 Leaking tank disposition. Leaking tanks shall be promptly emptied, repaired and returned to service, abandoned or removed in accordance with Section 5704.2.13 or 5704.2.14.

5704.2.7.11 Tank lining. Steel tanks are allowed to be lined only for the purpose of protecting the interior from corrosion or providing compatibility with a material to be stored. Only those liquids tested for compatibility with the lining material are allowed to be stored in lined tanks.

5704.2.8 Vaults. Vaults shall be allowed to be either above or below grade and shall comply with Sections 5704.2.8.1 through 5704.2.8.18.

5704.2.8.1 Listing required. Vaults shall be *listed* in accordance with UL 2245.

Exception: Where *approved* by the *fire code official*, below-grade vaults are allowed to be constructed on site, provided that the design is in accordance with the *Building Code of New York State* and that special inspections are conducted to verify structural strength and compliance of the installation with the *approved* design in accordance with Section 1707 of the *Building Code of New York*

INTERNATIONAL CODE COUNCIL®
Copyright © 2019 ICC & NYSDOS. ALL RIGHTS RESERVED. Accessed by Lauren Gualdino (lgualdino@briarcliffmanor.org), (-) Order Number #100880972 on May 08, 2020 07:05 AM (PDT) pursuant to License Agreement with ICC & NYSDOS. No further reproduction, no

100880972

State. Installation plans for below-grade vaults that are constructed on site shall be prepared by, and the design shall bear the stamp of, a professional engineer. Consideration shall be given to soil and hydrostatic loading on the floors, walls and lid; anticipated seismic forces; uplifting by groundwater or flooding; and to loads imposed from above such as traffic and equipment loading on the vault lid.

5704.2.8.2 Design and construction. The vault shall completely enclose each tank. There shall not be openings in the vault enclosure except those necessary for access to, inspection of, and filling, emptying and venting of the tank. The walls and floor of the vault shall be constructed of reinforced concrete not less than 6 inches (152 mm) thick. The top of an above-grade vault shall be constructed of noncombustible material and shall be designed to be weaker than the walls of the vault, to ensure that the thrust of an explosion occurring inside the vault is directed upward before significantly high pressure can develop within the vault.

The top of an at-grade or below-grade vault shall be designed to relieve safely or contain the force of an explosion occurring inside the vault. The top and floor of the vault and the tank foundation shall be designed to withstand the anticipated loading, including loading from vehicular traffic, where applicable. The walls and floor of a vault installed below grade shall be designed to withstand anticipated soil and hydrostatic loading.

Vaults shall be designed to be wind and earthquake resistant, in accordance with the *Building Code of New York State*.

5704.2.8.3 Secondary containment. Vaults shall be substantially liquid tight and there shall not be backfill around the tank or within the vault. The vault floor shall drain to a sump. For premanufactured vaults, liquid tightness shall be certified as part of the listing provided by a nationally recognized testing laboratory. For field-erected vaults, liquid tightness shall be certified in an *approved* manner.

5704.2.8.4 Internal clearance. There shall be sufficient clearance between the tank and the vault to allow for visual inspection and maintenance of the tank and its appurtenances. Dispensing devices are allowed to be installed on tops of vaults.

5704.2.8.5 Anchoring. Vaults and their tanks shall be suitably anchored to withstand uplifting by ground water or flooding, including when the tank is empty.

5704.2.8.6 Vehicle impact protection. Vaults shall be resistant to damage from the impact of a motor vehicle, or vehicle impact protection shall be provided in accordance with Section 312.

5704.2.8.7 Arrangement. Tanks shall be *listed* for above-ground use, and each tank shall be in its own vault. Compartmentalized tanks shall be allowed and shall be considered as a single tank. Adjacent vaults shall be allowed to share a common wall. The common wall shall be liquid and vapor tight and shall be designed to withstand the load imposed when the vault on either side of the wall is filled with water.

5704.2.8.8 Connections. Connections shall be provided to permit venting of each vault to dilute, disperse and remove vapors prior to personnel entering the vault.

5704.2.8.9 Ventilation. Vaults that contain tanks of Class I liquids shall be provided with an exhaust ventilation system installed in accordance with Section 5004.3. The ventilation system shall operate continuously or be designed to operate upon activation of the vapor or liquid detection system. The system shall provide ventilation at a rate of not less than 1 cubic foot per minute (cfm) per square foot of floor area [0.00508 $m^3/(s \cdot m^2)$], but not less than 150 cfm (4 m^3/min). The exhaust system shall be designed to provide air movement across all parts of the vault floor. Supply and exhaust ducts shall extend to within 3 inches (76 mm), but not more than 12 inches (305 mm), of the floor. The exhaust system shall be installed in accordance with the *Mechanical Code of New York State*.

5704.2.8.10 Liquid detection. Vaults shall be equipped with a detection system capable of detecting liquids, including water, and activating an alarm.

5704.2.8.11 Monitoring and detection. Vaults shall be provided with *approved* vapor and liquid detection systems and equipped with on-site audible and visual warning devices with battery backup. Vapor detection systems shall sound an alarm when the system detects vapors that reach or exceed 25 percent of the lower explosive limit (LEL) of the liquid stored. Vapor detectors shall be located not higher than 12 inches (305 mm) above the lowest point in the vault. Liquid detection systems shall sound an alarm upon detection of any liquid, including water. Liquid detectors shall be located in accordance with the manufacturer's instructions. Activation of either vapor or liquid detection systems shall cause a signal to be sounded at an *approved*, constantly attended location within the facility serving the tanks or at an *approved* location. Activation of vapor detection systems shall shut off dispenser pumps.

5704.2.8.12 Liquid removal. Means shall be provided to recover liquid from the vault. Where a pump is used to meet this requirement, the pump shall not be permanently installed in the vault. Electric-powered portable pumps shall be suitable for use in Class I, Division 1, or Zone 0 locations, as defined in NFPA 70.

5704.2.8.13 Normal vents. Vent pipes that are provided for normal tank venting shall terminate not less than 12 feet (3658 mm) above ground level.

5704.2.8.14 Emergency vents. Emergency vents shall be vapor tight and shall be allowed to discharge inside the vault. Long-bolt manhole covers shall not be allowed for this purpose.

5704.2.8.15 Accessway. Vaults shall be provided with an *approved* personnel accessway with a minimum dimension of 30 inches (762 mm) and with a perma-

INTERNATIONAL CODE COUNCIL®
Copyright © 2019 ICC & NYSDOS. ALL RIGHTS RESERVED. Accessed by Lauren Gualdino (lgualdino@briarcliffmanor.org), (-) Order Number #100880972 on May 08, 2020 07:05 AM (PDT) pursuant to License Agreement with ICC & NYSDOS. No further reproduction, no

100880972

nently affixed, nonferrous ladder. Accessways shall be designed to be nonsparking. Travel distance from any point inside a vault to an accessway shall not exceed 20 feet (6096 mm). At each entry point, a warning sign indicating the need for procedures for safe entry into confined spaces shall be posted. Entry points shall be secured against unauthorized entry and vandalism.

5704.2.8.16 Fire protection. Vaults shall be provided with a suitable means to admit a fire suppression agent.

5704.2.8.17 Classified area. The interior of a vault containing a tank that stores a Class I liquid shall be designated a Class I, Division 1, or Zone 0 location, as defined in NFPA 70.

5704.2.8.18 Overfill protection. Overfill protection shall be provided in accordance with Section 5704.2.9.7.5. The use of a float vent valve shall be prohibited.

5704.2.9 Above-ground tanks. Above-ground storage of flammable and *combustible liquids* in tanks shall comply with Section 5704.2 and Sections 5704.2.9.1 through 5704.2.9.7.9.

5704.2.9.1 Existing noncompliant installations. Existing above-ground tanks shall be maintained in accordance with the code requirements that were applicable at the time of installation. Above-ground tanks that were installed in violation of code requirements applicable at the time of installation shall be made code compliant or shall be removed in accordance with Section 5704.2.14, regardless of whether such tank has been previously inspected.

5704.2.9.2 Fire protection. Fire protection for above-ground tanks shall comply with Sections 5704.2.9.2.1 through 5704.2.9.2.4.

5704.2.9.2.1 Required foam fire protection systems. Where required by the *fire code official*, foam fire protection shall be provided for above-ground tanks, other than pressure tanks operating at or above 1 pound per square inch gauge (psig) (6.89 kPa) where such tank, or group of tanks spaced less than 50 feet (15 240 mm) apart measured shell to shell, has a liquid surface area in excess of 1,500 square feet (139 m^2), and is in accordance with one of the following:

1. Used for the storage of Class I or II liquids.
2. Used for the storage of crude oil.
3. Used for in-process products and is located within 100 feet (30 480 mm) of a fired still, heater, related fractioning or processing apparatus or similar device at a processing plant or petroleum refinery as herein defined.
4. Considered by the *fire code official* as posing an unusual exposure hazard because of topographical conditions; nature of occupancy, proximity on the same or adjoining property, and height and character of liquids to be stored; degree of private fire protection to be provided; and facilities of the fire department to cope with flammable liquid fires.

5704.2.9.2.2 Foam fire protection system installation. Where foam fire protection is required, it shall be installed in accordance with NFPA 11.

5704.2.9.2.2.1 Foam storage. Where foam fire protection is required, foam-producing materials shall be stored on the premises.

Exception: Storage of foam-producing materials off the premises is allowed as follows:

1. Such materials stored off the premises shall be of the proper type suitable for use with the equipment at the installation where required.
2. Such materials shall be readily available at the storage location at all times.
3. Adequate loading and transportation facilities shall be provided.
4. The time required to deliver such materials to the required location in the event of fire shall be consistent with the hazards and fire scenarios for which the foam supply is intended.
5. At the time of a fire, these off-premises supplies shall be accumulated in sufficient quantities before placing the equipment in operation to ensure foam production at an adequate rate without interruption until extinguishment is accomplished.

5704.2.9.2.3 Fire protection of supports. Supports or pilings for above-ground tanks storing Class I, II or IIIA liquids elevated more than 12 inches (305 mm) above grade shall have a *fire-resistance rating* of not less than 2 hours in accordance with the fire exposure criteria specified in ASTM E1529.

Exceptions:

1. Structural supports tested as part of a protected above-ground tank in accordance with UL 2085.
2. Stationary tanks located outside of buildings where protected by an *approved* water-spray system designed in accordance with Chapter 9 and NFPA 15.
3. Stationary tanks located inside of buildings equipped throughout with an *approved* automatic sprinkler system designed in accordance with Section 903.3.1.1.

5704.2.9.2.4 Inerting of tanks storing boilover liquids. Liquids with boilover characteristics shall not be stored in fixed roof tanks larger than 150 feet (45 720 mm) in diameter unless an *approved* gas enrichment or inerting system is provided on the tank.

INTERNATIONAL CODE COUNCIL®
Copyright © 2019 ICC & NYSDOS. ALL RIGHTS RESERVED. Accessed by Lauren Gualdino (lgualdino@briarcliffmanor.org), (-) Order Number #100880972 on May 08, 2020 07:05 AM (PDT) pursuant to License Agreement with ICC & NYSDOS. No further reproduction, no

100880972

Exception: Crude oil storage tanks in production fields with no other exposures adjacent to the storage tank.

5704.2.9.3 Supports, foundations and anchorage. Supports, foundations and anchorages for above-ground tanks shall be designed and constructed in accordance with NFPA 30 and the *Building Code of New York State*.

5704.2.9.4 Stairways, platforms and walkways. *Stairways*, platforms and walkways shall be of non-combustible construction and shall be designed and constructed in accordance with NFPA 30 and the *Building Code of New York State*.

5704.2.9.5 Above-ground tanks inside of buildings. Above-ground tanks inside of buildings shall comply with Sections 5704.2.9.5.1 and 5704.2.9.5.2.

5704.2.9.5.1 Overfill prevention. Above-ground tanks storing Class I, II and IIIA liquids inside buildings shall be equipped with a device or other means to prevent overflow into the building including, but not limited to: a float valve; a preset meter on the fill line; a valve actuated by the weight of the tank's contents; a low-head pump that is incapable of producing overflow; or a liquid-tight overflow pipe not less than one pipe size larger than the fill pipe and discharging by gravity back to the outside source of liquid or to an *approved* location. Tanks containing Class IIIB liquids and connected to fuel-burning equipment shall be provided with a means to prevent overflow into buildings in accordance with Section 5704.2.7.5.8.

5704.2.9.5.2 Fill pipe connections. Fill pipe connections for tanks storing Class I, II and IIIA liquids and Class IIIB liquids connected to fuel-burning equipment shall be in accordance with Section 5704.2.9.7.6.

5704.2.9.6 Above-ground tanks outside of buildings. Above-ground tanks outside of buildings shall comply with Sections 5704.2.9.6.1 through 5704.2.9.6.3.

5704.2.9.6.1 Locations where above-ground tanks are prohibited. Storage of Class I and II liquids in above-ground tanks outside of buildings is prohibited within the limits established by law as the limits of districts in which such storage is prohibited **[JURISDICTION TO SPECIFY]**.

5704.2.9.6.1.1 Location of tanks with pressures 2.5 psig or less. Above-ground tanks operating at pressures not exceeding 2.5 psig (17.2 kPa) for storage of Class I, II or IIIA liquids, which are designed with a floating roof, a weak roof-to-shell seam or equipped with emergency venting devices limiting pressure to 2.5 psig (17.2 kPa), shall be located in accordance with Table 22.4.1.1(a) of NFPA 30.

Exceptions:

1. Vertical tanks having a weak roof-to-shell seam and storing Class IIIA liquids are allowed to be located at one-half the distances specified in Table 22.4.1.1(a) of NFPA 30, provided that the tanks are not within a diked area or drainage path for a tank storing Class I or II liquids.
2. Liquids with boilover characteristics and unstable liquids in accordance with Sections 5704.2.9.6.1.3 and 5704.2.9.6.1.4.
3. For protected above-ground tanks in accordance with Section 5704.2.9.7 and tanks in at-grade or above-grade vaults in accordance with Section 5704.2.8, the distances in Table 22.4.1.1(b) of NFPA 30 shall apply and shall be reduced by one-half, but not to less than 5 feet (1524 mm).

5704.2.9.6.1.2 Location of tanks with pressures exceeding 2.5 psig. Above-ground tanks for the storage of Class I, II or IIIA liquids operating at pressures exceeding 2.5 psig (17.2 kPa) or equipped with emergency venting allowing pressures to exceed 2.5 psig (17.2 kPa) shall be located in accordance with Table 22.4.1.3 of NFPA 30.

Exception: Liquids with boilover characteristics and unstable liquids in accordance with Sections 5704.2.9.6.1.3 and 5704.2.9.6.1.4.

5704.2.9.6.1.3 Location of tanks storing boilover liquids. Above-ground tanks for storage of liquids with boilover characteristics shall be located in accordance with Table 22.4.1.4 of NFPA 30.

5704.2.9.6.1.4 Location of tanks storing unstable liquids. Above-ground tanks for the storage of unstable liquids shall be located in accordance with Table 22.4.1.5 of NFPA 30.

5704.2.9.6.1.5 Location of tanks storing Class IIIB liquids. Above-ground tanks for the storage of Class IIIB liquids, excluding unstable liquids, shall be located in accordance with Table 22.4.1.6 of NFPA 30, except where located within a diked area or drainage path for a tank or tanks storing Class I or II liquids. Where a Class IIIB liquid storage tank is within the diked area or drainage path for a Class I or II liquid, distances required by Section 5704.2.9.6.1.1 shall apply.

INTERNATIONAL CODE COUNCIL®
Copyright © 2019 ICC & NYSDOS. ALL RIGHTS RESERVED. Accessed by Lauren Gualdino (lgualdino@briarcliffmanor.org), (-) Order Number #100880972 on May 08, 2020 07:05 AM (PDT) pursuant to License Agreement with ICC & NYSDOS. No further reproduction, no

100880972

5704.2.9.6.1.6 Reduction of separation distances to adjacent property. Where two tank properties of diverse ownership have a common boundary, the *fire code official* is authorized to, with the written consent of the *owners* of the two properties, apply the distances in Sections 5704.2.9.6.1.2 through 5704.2.9.6.1.5 assuming a single property.

5704.2.9.6.2 Separation between adjacent stable or unstable liquid tanks. The separation between tanks containing stable liquids shall be in accordance with Table 22.4.2.1 of NFPA 30. Where tanks are in a diked area containing Class I or II liquids, or in the drainage path of Class I or II liquids, and are compacted in three or more rows or in an irregular pattern, the *fire code official* is authorized to require greater separation than specified in Table 22.4.2.1 of NFPA 30 or other means to make tanks in the interior of the pattern open for fire-fighting purposes.

The separation between tanks containing unstable liquids shall be not less than one-half the sum of their diameters.

Exception: Tanks used for storing Class IIIB liquids are allowed to be spaced 3 feet (914 mm) apart unless within a diked area or drainage path for a tank storing Class I or II liquids.

5704.2.9.6.3 Separation between adjacent tanks containing flammable or combustible liquids and LP-gas. The minimum horizontal separation between an LP-gas container and a Class I, II or IIIA liquid storage tank shall be 20 feet (6096 mm) except in the case of Class I, II or IIIA liquid tanks operating at pressures exceeding 2.5 psig (17.2 kPa) or equipped with emergency venting allowing pressures to exceed 2.5 psig (17.2 kPa), in which case the provisions of Section 5704.2.9.6.2 shall apply.

An *approved* means shall be provided to prevent the accumulation of Class I, II or IIIA liquids under adjacent LP-gas containers such as by dikes, diversion curbs or grading. Where flammable or *combustible liquid* storage tanks are within a diked area, the LP-gas containers shall be outside the diked area and not less than 10 feet (3048 mm) away from the centerline of the wall of the diked area.

Exceptions:

1. Liquefied petroleum gas containers of 125 gallons (473 L) or less in capacity installed adjacent to fuel-oil supply tanks of 660 gallons (2498 L) or less in capacity.
2. Horizontal separation is not required between above-ground LP-gas containers and underground flammable and *combustible liquid* tanks.

5704.2.9.7 Additional requirements for protected above-ground tanks. In addition to the requirements of this chapter for above-ground tanks, the installation of protected above-ground tanks shall be in accordance with Sections 5704.2.9.7.1 through 5704.2.9.7.9.

5704.2.9.7.1 Tank construction. The construction of a protected above-ground tank and its primary tank shall be in accordance with Section 5704.2.7.

5704.2.9.7.2 Normal and emergency venting. Normal and emergency venting for protected above-ground tanks shall be provided in accordance with Sections 5704.2.7.3 and 5704.2.7.4. The vent capacity reduction factor shall not be allowed.

5704.2.9.7.3 Secondary containment. Protected above-ground tanks shall be provided with secondary containment, drainage control or diking in accordance with Section 5004.2. A means shall be provided to establish the integrity of the secondary containment in accordance with NFPA 30.

5704.2.9.7.4 Vehicle impact protection. Where protected above-ground tanks, piping, electrical conduit or dispensers are subject to vehicular impact, they shall be protected therefrom, either by having the impact protection incorporated into the system design in compliance with the impact test protocol of UL 2085, or by meeting the provisions of Section 312, or where necessary, a combination of both. Where guard posts or other *approved* barriers are provided, they shall be independent of each above-ground tank.

5704.2.9.7.5 Overfill prevention. Protected above-ground tanks shall not be filled in excess of 95 percent of their capacity. An overfill prevention system shall be provided for each tank. During tank-filling operations, the system shall comply with one of the following:

1. The overfill prevention system shall include the following:
   1.1. An independent means of notifying the person filling the tank that the fluid level has reached 90 percent of tank capacity by providing an audible or visual alarm signal, providing a tank level gauge marked at 90 percent of tank capacity, or other *approved* means.
   1.2. Automatic shut off of the flow of fuel to the tank when the quantity of liquid in the tank reaches 95 percent of tank capacity. For rigid hose fuel-delivery systems, an *approved* means shall be provided to empty the fill hose into the tank after the automatic shutoff device is activated.
2. The system shall reduce the flow rate to not more than 15 gallons per minute (0.95 L/s) so that at the reduced flow rate, the tank will not overfill for 30 minutes, and automatically shut off flow into the tank so that none of the fittings on the top of the tank are exposed to product because of overfilling.

5704.2.9.7.5.1 Information signs. A permanent sign shall be provided at the fill point for the

INTERNATIONAL CODE COUNCIL®
Copyright © 2019 ICC & NYSDOS. ALL RIGHTS RESERVED. Accessed by Lauren Gualdino (lgualdino@briarcliffmanor.org), (-) Order Number #100880972 on May 08, 2020 07:05 AM (PDT) pursuant to License Agreement with ICC & NYSDOS. No further reproduction, no

100880972

tank, documenting the filling procedure and the tank calibration chart.

Exception: Where climatic conditions are such that the sign may be obscured by ice or snow, or weathered beyond readability or otherwise impaired, said procedures and chart shall be located in the office window, lock box or other area available to the person filling the tank.

5704.2.9.7.5.2 Determination of available tank capacity. The filling procedure shall require the person filling the tank to determine the gallonage (literage) required to fill it to 90 percent of capacity before commencing the fill operation.

5704.2.9.7.6 Fill pipe connections. The fill pipe shall be provided with a means for making a direct connection to the tank vehicle's fuel delivery hose so that the delivery of fuel is not exposed to the open air during the filling operation. Where any portion of the fill pipe exterior to the tank extends below the level of the top of the tank, a check valve shall be installed in the fill pipe not more than 12 inches (305 mm) from the fill hose connection.

5704.2.9.7.7 Spill containers. A spill container having a capacity of not less than 5 gallons (19 L) shall be provided for each fill connection. For tanks with a top fill connection, spill containers shall be noncombustible and shall be fixed to the tank and equipped with a manual drain valve that drains into the primary tank. For tanks with a remote fill connection, a portable spill container shall be allowed.

5704.2.9.7.8 Tank openings. Tank openings in protected above-ground tanks shall be through the top only.

5704.2.9.7.9 Antisiphon devices. *Approved* antisiphon devices shall be installed in each external pipe connected to the protected above-ground tank where the pipe extends below the level of the top of the tank.

5704.2.10 Drainage and diking. The area surrounding a tank or group of tanks shall be provided with drainage control or shall be diked to prevent accidental discharge of liquid from endangering adjacent tanks, adjoining property or reaching waterways.

Exceptions:

1. The *fire code official* is authorized to alter or waive these requirements based on a technical report that demonstrates that such tank or group of tanks does not constitute a hazard to other tanks, waterways or adjoining property, after consideration of special features such as topographical conditions, nature of occupancy and proximity to buildings on the same or adjacent property, capacity, and construction of proposed tanks and character of liquids to be stored, and nature and quantity of private and public fire protection provided.
2. Drainage control and diking is not required for *listed* secondary containment tanks.

5704.2.10.1 Volumetric capacity. The volumetric capacity of the diked area shall be not less than the greatest amount of liquid that can be released from the largest tank within the diked area. The capacity of the diked area enclosing more than one tank shall be calculated by deducting the volume of the tanks other than the largest tank below the height of the dike.

5704.2.10.2 Diked areas containing two or more tanks. Diked areas containing two or more tanks shall be subdivided in accordance with NFPA 30.

5704.2.10.3 Protection of piping from exposure fires. Piping shall not pass through adjacent diked areas or impounding basins, unless provided with a sealed sleeve or otherwise protected from exposure to fire.

5704.2.10.4 Combustible materials in diked areas. Diked areas shall be kept free from combustible materials, drums and barrels.

5704.2.10.5 Equipment, controls and piping in diked areas. Pumps, manifolds and fire protection equipment or controls shall not be located within diked areas or drainage basins or in a location where such equipment and controls would be endangered by fire in the diked area or drainage basin. Piping above ground shall be minimized and located as close as practical to the shell of the tank in diked areas or drainage basins.

Exceptions:

1. Pumps, manifolds and piping integral to the tanks or equipment being served, which is protected by intermediate diking, berms, drainage or fire protection such as water spray, monitors or resistive coating.
2. Fire protection equipment or controls that are appurtenances to the tanks or equipment being protected, such as foam chambers or foam piping and water or foam monitors and hydrants, or hand and wheeled extinguishers.

5704.2.11 Underground tanks. Underground storage of flammable and *combustible liquids* in tanks shall comply with Section 5704.2 and Sections 5704.2.11.1 through 5704.2.11.4.2.

5704.2.11.1 Location. Flammable and *combustible liquid* storage tanks located underground, either outside or under buildings, shall be in accordance with all of the following:

1. Tanks shall be located with respect to existing foundations and supports such that the loads carried by the latter cannot be transmitted to the tank.
2. The distance from any part of a tank storing liquids to the nearest wall of a *basement*, pit, cellar or *lot line* shall be not less than 3 feet (914 mm).
3. A minimum distance of 1 foot (305 mm), shell to shell, shall be maintained between underground tanks.

INTERNATIONAL CODE COUNCIL®
Copyright © 2019 ICC & NYSDOS. ALL RIGHTS RESERVED. Accessed by Lauren Gualdino (lgualdino@briarcliffmanor.org), (-) Order Number #100880972 on May 08, 2020 07:05 AM (PDT) pursuant to License Agreement with ICC & NYSDOS. No further reproduction, no

100880972

5704.2.11.2 Depth and cover. Excavation for underground storage tanks shall be made with due care to avoid undermining of foundations of existing structures. Underground tanks shall be set on firm foundations and surrounded with not less than 6 inches (152 mm) of noncorrosive inert material, such as clean sand.

5704.2.11.3 Overfill protection and prevention systems. Fill pipes shall be equipped with a spill container and an overfill prevention system in accordance with NFPA 30.

5704.2.11.4 Leak prevention. Leak prevention for underground tanks shall comply with Sections 5704.2.11.4.1 and 5704.2.11.4.2.

5704.2.11.4.1 Inventory control. Daily inventory records for underground storage tank systems shall be maintained.

5704.2.11.4.2 Leak detection. Underground storage tank systems shall be provided with an *approved* method of leak detection from any component of the system that is designed and installed in accordance with NFPA 30.

5704.2.12 Testing. Tank testing shall comply with Sections 5704.2.12.1 and 5704.2.12.2.

5704.2.12.1 Acceptance testing. Prior to being placed into service, tanks shall be tested in accordance with Section 21.5 of NFPA 30.

5704.2.12.2 Testing of underground tanks. Before being covered or placed in use, tanks and piping connected to underground tanks shall be tested for tightness in the presence of the *fire code official*. Piping shall be tested in accordance with Section 5703.6.3. The system shall not be covered until it has been *approved*.

5704.2.13 Abandonment and status of tanks. Tanks taken out of service shall be removed in accordance with Section 5704.2.14, or safeguarded in accordance with Sections 5704.2.13.1 through 5704.2.13.2.3 and API 1604.

5704.2.13.1 Underground tanks. Underground tanks taken out of service shall comply with Sections 5704.2.13.1.1 through 5704.2.13.1.5.

5704.2.13.1.1 Temporarily out of service. Underground tanks temporarily out of service shall have the fill line, gauge opening, vapor return and pump connection secure against tampering. Vent lines shall remain open and be maintained in accordance with Sections 5704.2.7.3 and 5704.2.7.4.

5704.2.13.1.2 Out of service for 90 days. Underground tanks not used for a period of 90 days shall be safeguarded in accordance with all the following or be removed in accordance with Section 5704.2.14:

1. Flammable or *combustible liquids* shall be removed from the tank.
2. All piping, including fill line, gauge opening, vapor return and pump connection, shall be capped or plugged and secured from tampering.
3. Vent lines shall remain open and be maintained in accordance with Sections 5704.2.7.3 and 5704.2.7.4.

5704.2.13.1.3 Out of service for one year. Underground tanks that have been out of service for a period of one year shall be removed from the ground in accordance with Section 5704.2.14 or abandoned in place in accordance with Section 5704.2.13.1.4.

5704.2.13.1.4 Tanks abandoned in place. Tanks abandoned in place shall be as follows:

1. Flammable and *combustible liquids* shall be removed from the tank and connected piping.
2. The suction, inlet, gauge, vapor return and vapor lines shall be disconnected.
3. The tank shall be filled completely with an *approved* inert solid material.
4. Remaining underground piping shall be capped or plugged.
5. A record of tank size, location and date of abandonment shall be retained.
6. All exterior above-grade fill piping shall be permanently removed when tanks are abandoned or removed.

5704.2.13.1.5 Reinstallation of underground tanks. Tanks that are to be reinstalled for flammable or *combustible liquid* service shall be in accordance with this chapter, ASME *Boiler and Pressure Vessel Code* (Section VIII), API 12-P, API 1615, UL 58 and UL 1316.

5704.2.13.2 Above-ground tanks. Above-ground tanks taken out of service shall comply with Sections 5704.2.13.2.1 through 5704.2.13.2.3.

5704.2.13.2.1 Temporarily out of service. Above-ground tanks temporarily out of service shall have all connecting lines isolated from the tank and be secured against tampering.

Exception: In-place fire protection (foam) system lines.

5704.2.13.2.2 Out of service for 90 days. Above-ground tanks not used for a period of 90 days shall be safeguarded in accordance with Section 5704.2.13.1.2 or removed in accordance with Section 5704.2.14.

Exceptions:

1. Tanks and containers connected to oil burners that are not in use during the warm season of the year or are used as a backup heating system to gas.
2. In-place, active fire protection (foam) system lines.

5704.2.13.2.3 Out of service for one year. Above-ground tanks that have been out of service for a

INTERNATIONAL CODE COUNCIL®
Copyright © 2019 ICC & NYSDOS. ALL RIGHTS RESERVED. Accessed by Lauren Gualdino (lgualdino@briarcliffmanor.org), (-) Order Number #100880972 on May 08, 2020 07:05 AM (PDT) pursuant to License Agreement with ICC & NYSDOS. No further reproduction, no

100880972

period of one year shall be removed in accordance with Section 5704.2.14.

Exception: Tanks within operating facilities.

5704.2.14 Removal and disposal of tanks. Removal and disposal of tanks shall comply with Sections 5704.2.14.1 and 5704.2.14.2.

5704.2.14.1 Removal. Removal of above-ground and underground tanks shall be in accordance with all of the following:

1. Flammable and *combustible liquids* shall be removed from the tank and connected piping.
2. Piping at tank openings that is not to be used further shall be disconnected.
3. Piping shall be removed from the ground.

   Exception: Piping is allowed to be abandoned in place where the *fire code official* determines that removal is not practical. Abandoned piping shall be capped and safeguarded as required by the *fire code official*.
4. Tank openings shall be capped or plugged, leaving a $^1/_8$-inch to $^1/_4$-inch-diameter (3.2 mm to 6.4 mm) opening for pressure equalization.
5. Tanks shall be purged of vapor and inerted prior to removal.
6. All exterior above-grade fill and vent piping shall be permanently removed.

   Exception: Piping associated with bulk plants, terminal facilities and refineries.

5704.2.14.2 Disposal. Tanks shall be disposed of in accordance with federal, state and local regulations.

5704.2.15 Maintenance. Above-ground tanks, connected piping and ancillary equipment shall be maintained in a safe operating condition. Tanks shall be maintained in accordance with their listings. Damage to above-ground tanks, connected piping or ancillary equipment shall be repaired using materials having equal or greater strength and *fire resistance* or the equipment shall be replaced or taken out of service.

[NY] 5704.2.16 Abandonment of heating oil storage tanks. The abandonment or removal of tanks used for storing heating oil for consumptive use on the premises where stored, referred to in this section as heating oil storage tanks, and related piping in connection with the conversion of liquid fuel burning appliance to alternative fuel shall be in accordance with all of the following:

1. The entire contents of the heating oil storage tank and related piping shall be emptied, cleaned and purged of all vapor. The contents of the storage tank and related piping shall be removed from the premises or property and disposed of in accordance with applicable local, state or federal rules and regulations.
2. If the heating oil storage tank is to be abandoned in place, the vent line shall remain open and intact, unless the tank is filled with an inert material. The oil fill pipe and other related piping shall either be removed, or the oil fill pipe shall be filled with concrete.
3. If the heating oil storage tank is to be removed, the vent line, oil fill pipe and related piping shall also be removed, or the oil fill pipe shall be filled with concrete.
4. An appropriate and qualified inspector, as determined by the local government, shall cause an inspection to be made of the abandonment or removal in connection with the conversion to determine conformity with the *Uniform Code*; provided, however, that the local government official may waive such inspection for good cause shown.
5. No approval of such abandonment or removal shall be granted unless written proof of the heating oil storage tank's oil fill pipe having been removed or filled with concrete, in accordance with appropriate provisions of the *Uniform Code* has been provided by the property owner to the local inspector or, in the event that an inspection has been waived for good cause shown, to the local government.

5704.3 Container and portable tank storage. Storage of flammable and *combustible liquids* in closed containers that do not exceed 60 gallons (227 L) in individual capacity and portable tanks that do not exceed 660 gallons (2498 L) in individual capacity, and limited transfers incidental thereto, shall comply with Sections 5704.3.1 through 5704.3.8.5.

5704.3.1 Design, construction and capacity of containers and portable tanks. The design, construction and capacity of containers for the storage of Class I, II and IIIA liquids shall be in accordance with this section and Section 9.4 of NFPA 30.

5704.3.1.1 Approved containers. Only *approved* containers and portable tanks shall be used.

5704.3.2 Liquid storage cabinets. Where other sections of this code require that liquid containers be stored in storage cabinets, such cabinets and storage shall be in accordance with Sections 5704.3.2.1 through 5704.3.2.2.

5704.3.2.1 Design and construction of storage cabinets. Design and construction of liquid storage cabinets shall be in accordance with Sections 5704.3.2.1.1 through 5704.3.2.1.4.

5704.3.2.1.1 Materials. Cabinets shall be *listed* in accordance with UL 1275, or constructed of *approved* wood or metal in accordance with the following:

1. Unlisted metal cabinets shall be constructed of steel having a thickness of not less than 0.044 inch (1.12 mm) (18 gage). The cabinet, including the door, shall be double walled with $1^1/_2$-inch (38 mm) airspace between the walls. Joints shall be riveted or welded and shall be tight fitting.
2. Unlisted wooden cabinets, including doors, shall be constructed of not less than 1-inch (25

INTERNATIONAL CODE COUNCIL®
Copyright © 2019 ICC & NYSDOS. ALL RIGHTS RESERVED. Accessed by Lauren Gualdino (lgualdino@briarcliffmanor.org), (-) Order Number #100880972 on May 08, 2020 07:05 AM (PDT) pursuant to License Agreement with ICC & NYSDOS. No further reproduction, no

100880972

mm) exterior grade plywood. Joints shall be rabbeted and shall be fastened in two directions with wood screws. Door hinges shall be of steel or brass. Cabinets shall be painted with an intumescent-type paint.

5704.3.2.1.2 Labeling. Cabinets shall be provided with a conspicuous label in red letters on contrasting background that reads: FLAMMABLE—KEEP FIRE AWAY.

5704.3.2.1.3 Doors. Doors shall be well fitted, self-closing and equipped with a three-point latch.

5704.3.2.1.4 Bottom. The bottom of the cabinet shall be liquid tight to a height of not less than 2 inches (51 mm).

5704.3.2.2 Capacity. The combined total quantity of liquids in a cabinet shall not exceed 120 gallons (454 L).

5704.3.3 Indoor storage. Storage of flammable and *combustible liquids* inside buildings in containers and portable tanks shall be in accordance with Sections 5704.3.3.1 through 5704.3.3.10.

Exceptions:

1. Liquids in the fuel tanks of motor vehicles, aircraft, boats or portable or stationary engines.
2. The storage of distilled spirits and wines in wooden barrels or casks.

5704.3.3.1 Portable fire extinguishers. *Approved* portable fire extinguishers shall be provided in accordance with specific sections of this chapter and Section 906.

5704.3.3.2 Incompatible materials. Materials that will react with water or other liquids to produce a hazard shall not be stored in the same room with flammable and combustible liquids except where stored in accordance with Section 5003.9.8.

5704.3.3.3 Clear means of egress. Storage of any liquids, including stock for sale, shall not be stored near or be allowed to obstruct physically the route of egress.

5704.3.3.4 Empty containers or portable tank storage. The storage of empty tanks and containers previously used for the storage of flammable or *combustible liquids*, unless free from explosive vapors, shall be stored as required for filled containers and portable tanks. Portable tanks and containers, when emptied, shall have the covers or plugs immediately replaced in openings.

5704.3.3.5 Shelf storage. Shelving shall be of *approved* construction, adequately braced and anchored. Seismic requirements shall be in accordance with the *Building Code of New York State*.

5704.3.3.5.1 Use of wood. Wood of not less than 1 inch (25 mm) nominal thickness is allowed to be used as shelving, racks, dunnage, scuffboards, floor overlay and similar installations.

5704.3.3.5.2 Displacement protection. Shelves shall be of sufficient depth and provided with a lip or guard to prevent individual containers from being displaced.

Exception: Shelves in storage cabinets or on laboratory furniture specifically designed for such use.

5704.3.3.5.3 Orderly storage. Shelf storage of flammable and *combustible liquids* shall be maintained in an orderly manner.

5704.3.3.6 Rack storage. Where storage on racks is allowed elsewhere in this code, a minimum 4-foot-wide (1219 mm) aisle shall be provided between adjacent rack sections and any adjacent storage of liquids. Main aisles shall be not less than 8 feet (2438 mm) wide.

5704.3.3.7 Pile or palletized storage. Solid pile and palletized storage in liquid warehouses shall be arranged so that piles are separated from each other by not less than 4 feet (1219 mm). Aisles shall be provided and arranged so that containers or portable tanks are not more than 20 feet (6096 mm) from an aisle. Main *aisles* shall be not less than 8 feet (2438 mm) wide.

5704.3.3.8 Limited combustible storage. Limited quantities of combustible commodities are allowed to be stored in liquid storage areas where the ordinary combustibles, other than those used for packaging the liquids, are separated from the liquids in storage by not less than 8 feet (2438 mm) horizontally, either by open aisles or by open racks, and where protection is provided in accordance with Chapter 9.

5704.3.3.9 Idle combustible pallets. Storage of empty or idle combustible pallets inside an unprotected liquid storage area shall be limited to a maximum pile size of 2,500 square feet (232 m^2) and to a maximum storage height of 6 feet (1829 mm). Storage of empty or idle combustible pallets inside a protected liquid storage area shall comply with NFPA 13. Pallet storage shall be separated from liquid storage by aisles that are not less than 8 feet (2438 mm) wide.

5704.3.3.10 Containers in piles. Containers in piles shall be stacked in such a manner as to provide stability and to prevent excessive stress on container walls. Portable tanks stored more than one tier high shall be designed to nest securely, without dunnage. Material-handling equipment shall be suitable to handle containers and tanks safely at the upper tier level.

5704.3.4 Quantity limits for storage. Liquid storage quantity limitations shall comply with Sections 5704.3.4.1 through 5704.3.4.4.

5704.3.4.1 Maximum allowable quantity per control area. For occupancies other than Group M wholesale and retail sales uses, indoor storage of flammable and *combustible liquids* shall not exceed the *maximum allowable quantities per control area* indicated in Table 5003.1.1(1) and shall not exceed the additional limitations set forth in this section.

For Group M occupancy wholesale and retail sales uses, indoor storage of flammable and *combustible liq-*

INTERNATIONAL CODE COUNCIL®
Copyright © 2019 ICC & NYSDOS. ALL RIGHTS RESERVED. Accessed by Lauren Gualdino (lgualdino@briarcliffmanor.org), (-) Order Number #100880972 on May 08, 2020 07:05 AM (PDT) pursuant to License Agreement with ICC & NYSDOS. No further reproduction, no

100880972

uids shall not exceed the *maximum allowable quantities per control area* indicated in Table 5704.3.4.1.

Storage of hazardous production material flammable and *combustible liquids* in Group H-5 occupancies shall be in accordance with Chapter 27.

5704.3.4.2 Occupancy quantity limits. The following limits for quantities of stored flammable or *combustible liquids* shall not be exceeded:

1. Group A occupancies: Quantities in Group A occupancies shall not exceed that necessary for demonstration, treatment, laboratory work, maintenance purposes and operation of equipment, and shall not exceed quantities set forth in Table 5003.1.1(1).
2. Group B occupancies: Quantities in drinking, dining, office and school uses within Group B occupancies shall not exceed that necessary for demonstration, treatment, laboratory work, maintenance purposes and operation of equipment, and shall not exceed quantities set forth in Table 5003.1.1(1).
3. Group E occupancies: Quantities in Group E occupancies shall not exceed that necessary for demonstration, treatment, laboratory work, maintenance purposes and operation of equipment, and shall not exceed quantities set forth in Table 5003.1.1(1).
4. Group F occupancies: Quantities in dining, office, and school uses within Group F occupancies shall not exceed that necessary for demonstration, laboratory work, maintenance purposes and operation of equipment, and shall not exceed quantities set forth in Table 5003.1.1(1).
5. Group I occupancies: Quantities in Group I occupancies shall not exceed that necessary for demonstration, laboratory work, maintenance purposes and operation of equipment, and shall not exceed quantities set forth in Table 5003.1.1(1).
6. Group M occupancies: Quantities in dining, office, and school uses within Group M occupancies shall not exceed that necessary for demonstration, laboratory work, maintenance purposes and operation of equipment, and shall not exceed quantities set forth in Table 5003.1.1(1). The maximum allowable quantities for storage in wholesale and retail sales areas shall be in accordance with Section 5704.3.4.1.
7. Group R occupancies: Quantities in Group R occupancies shall not exceed that necessary for maintenance purposes and operation of equipment, and shall not exceed quantities set forth in Table 5003.1.1(1).
8. Group S occupancies: Quantities in dining and office uses within Group S occupancies shall not exceed that necessary for demonstration, laboratory work, maintenance purposes and operation of equipment, and shall not exceed quantities set forth in Table 5003.1.1(1).

5704.3.4.3 Quantities exceeding limits for control areas. Quantities exceeding those allowed in *control areas* set forth in Section 5704.3.4.1 shall be in liquid storage rooms or liquid storage warehouses in accordance with Sections 5704.3.7 and 5704.3.8.

5704.3.4.4 Liquids for maintenance and operation of equipment. In all occupancies, quantities of flammable and *combustible liquids* in excess of 10 gallons (38 L) used for maintenance purposes and the operation of equipment shall be stored in liquid storage cabinets in accordance with Section 5704.3.2. Quantities not exceeding 10 gallons (38 L) are allowed to be stored outside of a cabinet where in *approved* containers located in private garages or other *approved* locations.

TABLE 5704.3.4.1
MAXIMUM ALLOWABLE QUANTITY PER CONTROL AREA OF FLAMMABLE AND COMBUSTIBLE LIQUIDS IN WHOLESALE AND RETAIL SALES OCCUPANCIES[a]

TYPE OF LIQUID	MAXIMUM ALLOWABLE QUANTITY PER CONTROL AREA (gallons)		
	Sprinklered[b] in accordance with footnote densities and arrangements	Sprinklered in accordance with Tables 5704.3.6.3(4) through 5704.3.6.3(8) and Table 5704.3.7.5.1	Nonsprinklered
Class IA	60	60	30
Class IB, IC, II and IIIA	7,500[c]	15,000[c]	1,600
Class IIIB	Unlimited	Unlimited	13,200

For SI: 1 foot = 304.8 mm, 1 square foot = 0.0929 m^2, 1 gallon = 3.785 L, 1 gallon per minute per square foot = 40.75 L/min/m^2.

a. Control areas shall be separated from each other by not less than a 1-hour fire barrier.

b. To be considered as sprinklered, a building shall be equipped throughout with an approved automatic sprinkler system with a design providing minimum densities as follows:
   1. For uncartoned commodities on shelves 6 feet or less in height where the ceiling height does not exceed 18 feet, quantities are those allowed with a minimum sprinkler design density of Ordinary Hazard Group 2.
   2. For cartoned, palletized or racked commodities where storage is 4 feet 6 inches or less in height and where the ceiling height does not exceed 18 feet, quantities are those allowed with a minimum sprinkler design density of 0.21 gallon per minute per square foot over the most remote 1,500-square-foot area.

c. Where wholesale and retail sales or storage areas exceed 50,000 square feet in area, the maximum allowable quantities are allowed to be increased by 2 percent for each 1,000 square feet of area in excess of 50,000 square feet, up to not more than 100 percent of the table amounts. A control area separation is not required. The cumulative amounts, including amounts attained by having an additional control area, shall not exceed 30,000 gallons.

INTERNATIONAL CODE COUNCIL®
Copyright © 2019 ICC & NYSDOS. ALL RIGHTS RESERVED. Accessed by Lauren Gualdino (lgualdino@briarcliffmanor.org), (-) Order Number #100880972 on May 08, 2020 07:05 AM (PDT) pursuant to License Agreement with ICC & NYSDOS. No further reproduction, no

100880972

5704.3.5 Storage in control areas. Storage of flammable and *combustible liquids* in *control areas* shall be in accordance with Sections 5704.3.5.1 through 5704.3.5.4.

5704.3.5.1 Basement storage. Class I liquids shall be allowed to be stored in *basements* in amounts not exceeding the *maximum allowable quantity per control area* for use-*open systems* in Table 5003.1.1(1), provided that automatic suppression and other fire protection are provided in accordance with Chapter 9. Class II and IIIA liquids shall be allowed to be stored in *basements*, provided that automatic suppression and other fire protection are provided in accordance with Chapter 9.

5704.3.5.2 Storage pile heights. Containers having less than a 30-gallon (114 L) capacity that contain Class I or II liquids shall not be stacked more than 3 feet (914.4 mm) or two containers high, whichever is greater, unless stacked on fixed shelving or otherwise satisfactorily secured. Containers of Class I or II liquids having a capacity of 30 gallons (114 L) or more shall not be stored more than one container high. Containers shall be stored in an upright position.

5704.3.5.3 Storage distance from ceilings and roofs. Piles of containers or portable tanks shall not be stored closer than 3 feet (914 mm) to the nearest beam, chord, girder or other obstruction, and shall be 3 feet (914 mm) below sprinkler deflectors or discharge orifices of water spray or other overhead *fire protection system*.

5704.3.5.4 Combustible materials. In areas that are not open to the public, Class I, II and IIIA liquids shall not be stored in the same pile or rack section as ordinary combustible commodities unless such materials are packaged together as kits.

5704.3.6 Wholesale and retail sales uses. Flammable and *combustible liquids* in Group M occupancy wholesale and retail sales uses shall be in accordance with Sections 5704.3.6.1 through 5704.3.6.5, or Sections 10.10.2, 12.3.8, 16.4.1 through 16.4.3, 16.5.1 through 16.5.2.12, Tables 16.5.2.1 through 16.5.2.12, and Figures 16.4.1(a) through 16.14.1(c) of NFPA 30.

5704.3.6.1 Container type. Containers for Class I liquids shall be metal.

Exception: In sprinklered buildings, an aggregate quantity of 120 gallons (454 L) of water-miscible Class IB and Class IC liquids is allowed in nonmetallic containers, each having a capacity of 16 ounces (0.473 L) or less.

5704.3.6.2 Container capacity. Containers for Class I liquids shall not exceed a capacity of 5 gallons (19 L).

Exception: Metal containers not exceeding 55 gallons (208 L) are allowed to store up to 240 gallons (908 L) of the *maximum allowable quantity per control area* of Class IB and IC liquids in a *control area*. The building shall be equipped throughout with an *approved* automatic sprinkler system in accordance with Table 5704.3.4.1. The containers shall be provided with plastic caps without cap seals and shall be stored upright. Containers shall not be stacked or stored in racks and shall not be located in areas open to the public.

5704.3.6.3 Fire protection and storage arrangements. Fire protection and container storage arrangements shall be in accordance with Table 5704.3.6.3(1) or the following:

1. Storage on shelves shall not exceed 6 feet (1829 mm) in height, and shelving shall be metal.
2. Storage on pallets or in piles greater than 4 feet 6 inches (1372 mm) in height, or where the ceiling exceeds 18 feet (5486 mm) in height, shall be protected in accordance with Table 5704.3.6.3(4), and the storage heights and arrangements shall be limited to those specified in Table 5704.3.6.3(2).
3. Storage on racks greater than 4 feet 6 inches (1372 mm) in height, or where the ceiling exceeds 18 feet (5486 mm) in height shall be protected in accordance with Tables 5704.3.6.3(5), 5704.3.6.3(6), and 5704.3.6.3(7) as appropriate, and the storage heights and arrangements shall be limited to those specified in Table 5704.3.6.3(3).

Combustible commodities shall not be stored above flammable and *combustible liquids*.

TABLE 5704.3.6.3(1)
MAXIMUM STORAGE HEIGHT IN CONTROL AREA

TYPE OF LIQUID	NONSPRINKLERED AREA (feet)	SPRINKLERED AREA[a] (feet)	SPRINKLERED WITH IN-RACK PROTECTION[a, b] (feet)
Flammable liquids:			
Class IA	4	4	4
Class IB	4	8	12
Class IC	4	8	12
Combustible liquids:			
Class II	6	8	12
Class IIIA	8	12	16
Class IIIB	8	12	20

For SI: 1 foot = 304.8 mm.

a In buildings protected by an automatic sprinkler system, the storage height for containers and portable tanks shall not exceed the maximum storage height permitted for the fire protection scheme set forth in NFPA 30 or the maximum storage height demonstrated in a full-scale fire test, whichever is greater. NFPA 30 criteria and fire test results for metallic containers and portable tanks shall not be applied to nonmetallic containers and portable tanks.

b. In-rack protection shall be in accordance with Table 5704.3.6.3(5), 5704.3.6.3(6) or 5704.3.6.3(7).

INTERNATIONAL CODE COUNCIL®
Copyright © 2019 ICC & NYSDOS. ALL RIGHTS RESERVED. Accessed by Lauren Gualdino (lgualdino@briarcliffmanor.org), (-) Order Number #100880972 on May 08, 2020 07:05 AM (PDT) pursuant to License Agreement with ICC & NYSDOS. No further reproduction, no

100880972

TABLE 5704.3.6.3(2)
STORAGE ARRANGEMENTS FOR PALLETIZED OR SOLID-PILE STORAGE IN LIQUID STORAGE ROOMS AND WAREHOUSES

CLASS	STORAGE LEVEL	MAXIMUM STORAGE HEIGHT			MAXIMUM QUANTITY PER PILE (gallons)		MAXIMUM QUANTITY PER ROOM[a] (gallons)	
		Drums	Containers[b] (feet)	Portable tanks[b] (feet)	Containers	Portable tanks	Containers	Portable tanks
IA	Ground floor	1	5	Not Allowed	3,000	Not Allowed	12,000	Not Allowed
	Upper floors	1	5	Not Allowed	2,000	Not Allowed	8,000	Not Allowed
	Basements	0	Not Allowed	Not Allowed	Not Allowed	Not Allowed	Not Allowed	Not Allowed
IB	Ground floor	1	6.5	7	5,000	20,000	15,000	40,000
	Upper floors	1	6.5	7	3,000	10,000	12,000	20,000
	Basements	0	Not Allowed	Not Allowed	Not Allowed	Not Allowed	Not Allowed	Not Allowed
IC	Ground floor[d]	1	6.5[c]	7	5,000	20,000	15,000	40,000
	Upper floors	1	6.5[c]	7	3,000	10,000	12,000	20,000
	Basements	0	Not Allowed	Not Allowed	Not Allowed	Not Allowed	Not Allowed	Not Allowed
II	Ground floor[d]	3	10	14	10,000	40,000	25,000	80,000
	Upper floors	3	10	14	10,000	40,000	25,000	80,000
	Basements	1	5	7	7,500	20,000	7,500	20,000
III	Ground floor	5	20	14	15,000	60,000	50,000	100,000
	Upper floors	5	20	14	15,000	60,000	50,000	100,000
	Basements	3	10	7	10,000	20,000	25,000	40,000

For SI: 1 foot = 304.8 mm, 1 gallon = 3.785 L.

a. See Section 5704.3.8.1 for unlimited quantities in liquid storage warehouses.

b. In buildings protected by an automatic sprinkler system, the storage height for containers and portable tanks shall not exceed the maximum storage height permitted for the fire protection scheme set forth in NFPA 30 or the maximum storage height demonstrated in a full-scale fire test, whichever is greater. NFPA 30 criteria and fire test results for metallic containers and portable tanks shall not be applied to nonmetallic containers and portable tanks.

c. These height limitations are allowed to be increased to 10 feet for containers having a capacity of 5 gallons or less.

d. For palletized storage of unsaturated polyester resins (UPR) in relieving-style metal containers with 50 percent or less by weight Class IC or II liquid and no Class IA or IB liquid, height and pile quantity limits shall be permitted to be 10 feet and 15,000 gallons, respectively, provided that such storage is protected by sprinklers in accordance with NFPA 30 and that the UPR storage area is not located in the same containment area or drainage path for other Class I or II liquids.

TABLE 5704.3.6.3(3)
STORAGE ARRANGEMENTS FOR RACK STORAGE IN LIQUID STORAGE ROOMS AND WAREHOUSES

CLASS	TYPE RACK	STORAGE LEVEL	MAXIMUM STORAGE HEIGHT[b] (feet)	MAXIMUM QUANTITY PER ROOM[a] (gallons)
			Containers	Containers
IA	Double row or Single row	Ground floor	25	7,500
		Upper floors	15	4,500
		Basements	Not Allowed	Not Allowed
IB IC	Double row or Single row	Ground floor	25	15,000
		Upper floors	15	9,000
		Basements	Not Allowed	Not Allowed
II	Double row or Single row	Ground floor	25	24,000
		Upper floors	25	24,000
		Basements	15	9,000
III	Multirow	Ground floor	40	48,000
	Double row	Upper floors	20	48,000
	Single row	Basements	20	24,000

For SI: 1 foot = 304.8 mm, 1 gallon = 3.785 L.

a. See Section 5704.3.8.1 for unlimited quantities in liquid storage warehouses.

b. In buildings protected by an automatic sprinkler system, the storage height for containers and portable tanks shall not exceed the maximum storage height permitted for the fire protection scheme set forth in NFPA 30 or the maximum storage height demonstrated in a full-scale fire test, whichever is greater. NFPA 30 criteria and fire test results for metallic containers and portable tanks shall not be applied to nonmetallic containers and portable tanks.

INTERNATIONAL CODE COUNCIL®
Copyright © 2019 ICC & NYSDOS. ALL RIGHTS RESERVED. Accessed by Lauren Gualdino (lgualdino@briarcliffmanor.org), (-) Order Number #100880972 on May 08, 2020 07:05 AM (PDT) pursuant to License Agreement with ICC & NYSDOS. No further reproduction, no

TABLE 5704.3.6.3(4)
AUTOMATIC SPRINKLER PROTECTION FOR SOLID-PILE AND PALLETIZED STORAGE OF LIQUIDS IN METAL CONTAINERS AND PORTABLE TANKS[a]

STORAGE CONDITIONS		CEILING SPRINKLER DESIGN AND DEMAND				MINIMUM HOSE STREAM DEMAND (gpm)	MINIMUM DURATION SPRINKLERS AND HOSE STREAMS (hours)
Class liquid	Container size and arrangement	Density (gpm/ft^2)	Area (square feet)		Maximum spacing (square feet)		
			High-temperature sprinklers	Ordinary temperature sprinklers			
IA	5 gallons or less, with or without cartons, palletized or solid pile[b]	0.30	3,000	5,000	100	750	2
	Containers greater than 5 gallons, on end or side, palletized or solid pile	0.60	5,000	8,000	80	750	
IB, IC and II	5 gallons or less, with or without cartons, palletized or solid pile[b]	0.30	3,000	5,000	100	500	2
	Containers greater than 5 gallons on pallets or solid pile, one high	0.25	5,000	8,000	100		
II	Containers greater than 5 gallons on pallets or solid pile, more than one high, on end or side	0.60	5,000	8,000	80	750	2
IB, IC and II	Portable tanks, one high	0.30	3,000	5,000	100	500	2
II	Portable tanks, two high	0.60	5,000	8,000	80	750	2
III	5 gallons or less, with or without cartons, palletized or solid pile	0.25	3,000	5,000	120	500	1
	Containers greater than 5 gallons on pallets or solid pile, on end or sides, up to three high	0.25	3,000	5,000	120	500	1
	Containers greater than 5 gallons, on pallets or solid pile, on end or sides, up to 18 feet high	0.35	3,000	5,000	100	750	2
	Portable tanks, one high	0.25	3,000	5,000	120	500	1
	Portable tanks, two high	0.50	3,000	5,000	80	750	2

For SI: 1 foot = 304.8 mm, 1 gallon = 3.785 L, 1 square foot = 0.0929 m^2, 1 gallon per minute = 3.785 L/m, 1 gallon per minute per square foot = 40.75 L/min/m^2.

a. The design area contemplates the use of Class II standpipe systems. Where Class I standpipe systems are used, the area of application shall be increased by 30 percent without revising density.

b. For storage heights above 4 feet or ceiling heights greater than 18 feet, an approved engineering design shall be provided.

INTERNATIONAL CODE COUNCIL®
Copyright © 2019 ICC & NYSDOS. ALL RIGHTS RESERVED. Accessed by Lauren Guaidino (lguaidino@briarcliffmanor.org). (-) Order Number #100880972 on May 08, 2020 07:05 AM (PDT) pursuant to License Agreement with ICC & NYSDOS. No further reproduction, no
100880972

INTERNATIONAL CODE COUNCIL®

TABLE 5704.3.6.3(5)
AUTOMATIC SPRINKLER PROTECTION REQUIREMENTS FOR RACK STORAGE OF LIQUIDS IN METAL CONTAINERS OF 5-GALLON CAPACITY OR LESS WITH OR WITHOUT CARTONS ON CONVENTIONAL WOOD PALLETS[a]

CLASS LIQUID	CEILING SPRINKLER DESIGN AND DEMAND			IN-RACK SPRINKLER ARRANGEMENT AND DEMAND					MINIMUM HOSE STREAM DEMAND (gpm)	MINIMUM DURATION SPRINKLER AND HOSE STREAM (hours)
	Density (gpm/ft^2)	Area (square feet)		Maximum spacing	Racks up to 9 feet deep	Racks more than 9 feet to 12 feet deep	30 psi (standard orifice) / 14 psi (large orifice)	Number of sprinklers operating		
		High-temperature sprinklers	Ordinary temperature sprinklers							
I (maximum 25-foot height) Option 1	0.40	3,000	5,000	80 ft^2/head	1. Ordinary temperature, quick-response sprinklers, maximum 8 feet 3 inches horizontal spacing 2. One line sprinklers above each level of storage 3. Locate in longitudinal flue space, staggered vertical 4. Shields required where multiple-level	1. Ordinary temperature, quick-response sprinklers, maximum 8 feet 3 inches horizontal spacing 2. One line sprinklers above each level of storage 3. Locate in transverse flue spaces, staggered vertical and within 20 inches of aisle 4. Shields required where multiple-level	30 psi (0.5- inch orifice)	1. Eight sprinklers if only one level 2. Six sprinklers each on two levels if only two levels 3. Six sprinklers each on top three levels, if three or more levels 4. Hydraulically most remote	750	2
I (maximum 25-foot height) Option 2	0.55	2,000[b]	Not Applicable	100 ft^2/ head	1. Ordinary temperature, quick-response sprinklers, maximum 8 feet 3 inches horizontal spacing 2. See 2 above 3. See 3 above 4. See 4 above	1. Ordinary temperature, quick-response sprinklers, maximum 8 feet 3 inches horizontal spacing 2. See 2 above 3. See 3 above 4. See 4 above	14 psi (0.53-inch orifice)	See 1 through 4 above	500	2
I and II (maximum 14-foot storage height) (maximum three tiers)	0.55[c]	2,000[d]	Not Applicable	100 ft^2/ head	Not Applicable None for maximum 6-foot-deep racks	Not Applicable	Not Applicable	Not Applicable	500	2
II (maximum 25-foot height)	0.30	3,000	5,000	100 ft^2/ head	1. Ordinary temperature sprinklers 8 feet apart horizontally 2. One line sprinklers between levels at nearest 10-foot vertical intervals 3. Locate in longitudinal flue space, staggered vertical 4. Shields required where multiple-level	1. Ordinary temperature sprinklers 8 feet apart horizontally 2. Two lines between levels at nearest 10-foot vertical intervals 3. Locate in transverse flue spaces, staggered vertical and within 20 inches of aisle 4. Shields required where multiple-level	30 psi	Hydraulically most remote—six sprinklers at each level, up to a maximum of three levels	750	2
III (40-foot height)	0.25	3,000	5,000	120 ft^2/ head	Same as for Class II liquids	Same as for Class II liquids	30 psi	Same as for Class II liquids	500	2

For SI: 1 inch = 25.4 mm, 1 foot = 304.8 mm, 1 square foot = 0.0929 m^2, 1 pound per square inch = 6.895 kPa, 1 gallon = 3.785 L, 1 gallon per minute = 3.785 L/m, 1 gallon per minute per square foot = 40.75 L/min/m^2.

a. The design area contemplates the use of Class II standpipe systems. Where Class I standpipe systems are used, the area of application shall be increased by 30 percent without revising density.

b. Using listed or approved extra-large orifices, high-temperature quick-response or standard element sprinklers under a maximum 30-foot ceiling with minimum 7.5-foot aisles.

c. For friction lid cans and other metal containers equipped with plastic nozzles or caps, the density shall be increased to 0.65 gpm per square foot using listed or approved extra-large orifice, high-temperature quick-response sprinklers.

d. Using listed or approved extra-large orifice, high-temperature quick-response or standard element sprinklers under a maximum 18-foot ceiling with minimum 7.5-foot aisles and metal containers.

Copyright © 2019 ICC & NYSDOS. ALL RIGHTS RESERVED. Accessed by Lauren Gualdino (lgualdino@briarcliffmanor.org). (-) Order Number #100880972 on May 08, 2020 07:05 AM (PDT) pursuant to License Agreement with ICC & NYSDOS. No further reproduction, no

100880972

TABLE 5704.3.6.3(6)
AUTOMATIC SPRINKLER PROTECTION REQUIREMENTS FOR RACK STORAGE OF LIQUIDS IN METAL CONTAINERS GREATER THAN 5-GALLON CAPACITY[a]

CLASS LIQUID	CEILING SPRINKLER DESIGN AND DEMAND			IN-RACK SPRINKLER ARRANGEMENT AND DEMAND					MINIMUM HOSE STREAM DEMAND (gpm)	MINIMUM DURATION SPRINKLER AND HOSE STREAM (hours)
	Density (gpm/ ft^2)	Area (square feet)		Maximum spacing	On-side storage racks up to 9-foot-deep racks	On-end storage (on pallets) up to 9-foot-deep racks	Minimum nozzle pressure	Number of sprinklers operating		
		High-temperature sprinklers	Ordinary temperature sprinklers							
IA (maximum 25-foot height)	0.60	3,000	5,000	80 ft^2/head	1. Ordinary temperature sprinklers 8 feet apart horizontally 2. One line sprinklers above each tier of storage 3. Locate in longitudinal flue space, staggered vertical 4. Shields required where multiple-level	1. Ordinary temperature sprinklers 8 feet apart horizontally 2. One line sprinklers above each tier of storage 3. Locate in longitudinal flue space, staggered vertical 4. Shields required where multiple-level	30 psi	Hydraulically most remote—six sprinklers at each level	1,000	2
IB, IC and II (maximum 25-foot height)	0.60	3,000	5,000	100 ft^2/head	1. See 1 above 2. One line sprinklers every three tiers of storage 3. See 3 above 4. See 4 above	1. See 1 above 2. See 2 above 3. See 3 above 4. See 4 above	30 psi	Hydraulically most remote—six sprinklers at each level	750	2
III (maximum 40-foot height)	0.25	3,000	5,000	120 ft^2/head	1. See 1 above 2. One line sprinklers every sixth level (maximum) 3. See 3 above 4. See 4 above	1. See 1 above 2. One line sprinklers every third level (maximum) 3. See 3 above 4. See 4 above	15 psi	Hydraulically most remote—six sprinklers at each level	500	1

For SI: 1 foot = 304.8 mm, 1 square foot = 0.0929 m^2, 1 pound per square inch = 6.895 kPa, 1 gallon = 3.785 L, 1 gallon per minute = 3.785 L/m, 1 gallon per minute per square foot = 40.75 L/min/m^2.

a. The design assumes the use of Class II standpipe systems. Where a Class I standpipe system is used, the area of application shall be increased by 30 percent without revising density.

INTERNATIONAL CODE COUNCIL®
Copyright © 2019 ICC & NYSDOS. ALL RIGHTS RESERVED. Accessed by Lauren Gualdino (lgualdino@briarcliffmanor.org). (-) Order Number #100880972 on May 08, 2020 07:05 AM (PDT) pursuant to License Agreement with ICC & NYSDOS. No further reproduction, no
100880972

INTERNATIONAL CODE COUNCIL®

Copyright © 2019 ICC & NYSDOS. ALL RIGHTS RESERVED. Accessed by Lauren Gualdino (lgualdino@briarcliffmanor.org). (-) Order Number #100880972 on May 08, 2020 07:05 AM (PDT) pursuant to License Agreement with ICC & NYSDOS. No further reproduction, no

TABLE 5704.3.6.3(7)
AUTOMATIC AFFF WATER PROTECTION REQUIREMENTS FOR RACK STORAGE OF LIQUIDS IN METAL CONTAINERS GREATER THAN 5-GALLON CAPACITY[a, b]

CLASS LIQUID	CEILING SPRINKLER DESIGN AND DEMAND			IN-RACK SPRINKLER ARRANGEMENT AND DEMAND[c]				DURATION AFFF SUPPLY (minimum)	DURATION WATER SUPPLY (hours)
	Density (gpm/ft²)	Area (square feet)		On-end storage of drums on pallets, up to 25 feet	Minimum nozzle pressure (psi)	Number of sprinklers operating	Hose stream demand[d] (gpm)		
		High-temperature sprinklers	Ordinary temperature sprinklers						
IA, IB, IC and II	0.30	1,500	2,500	1. Ordinary temperature sprinkler up to 10 feet apart horizontally 2. One line sprinklers above each level of storage 3. Locate in longitudinal flue space, staggered vertically 4. Shields required for multiple-level	30	Three sprinklers per level	500	15	2

For SI: 1 inch = 25.4 mm, 1 foot = 304.8 mm, 1 square foot = 0.0929 m², 1 pound per square inch = 6.895 kPa, 1 gallon = 3.785 L, 1 gallon per minute = 3.785 L/m, 1 gallon per minute per square foot = 40.75 L/min/m².

a. System shall be a closed-head wet system with approved devices for proportioning aqueous film-forming foam.

b. Except as modified herein, in-rack sprinklers shall be installed in accordance with NFPA 13.

c. The height of storage shall not exceed 25 feet.

d. Hose stream demand includes $1^{1}/_{2}$-inch inside hose connections, where required.

TABLE 5704.3.6.3(8)
AUTOMATIC SPRINKLER PROTECTION REQUIREMENTS FOR CLASS I LIQUID STORAGE IN METAL CONTAINERS OF 1-GALLON CAPACITY OR LESS WITH UNCARTONED OR CASE-CUT SHELF DISPLAY UP TO 6.5 FEET, AND PALLETIZED STORAGE ABOVE IN A DOUBLE-ROW RACK ARRAY[a]

STORAGE HEIGHT	CEILING SPRINKLER DESIGN AND DEMAND				IN-RACK SPRINKLER ARRANGEMENT AND DEMAND				MINIMUM HOSE STREAM DEMAND (gpm)	MINIMUM DURATION SPRINKLERS AND HOSE STREAM (hours)
	Density (gpm/ft²)	Area (square feet)		Maximum spacing	Racks up to 9 feet deep	Racks 9 to 12 feet	Minimum nozzle pressure	Number of sprinklers operating		
		High temperature	Ordinary temperature							
Maximum 20-foot storage height	0.60	2,000[b]	Not Applicable	100 ft²/head	1. Ordinary temperature, quick-response sprinklers, maximum 8 feet 3 inches horizontal spacing 2. One line of sprinklers at the 6-foot level and the 11.5-foot level of storage 3. Locate in longitudinal flue space, staggered vertical 4. Shields required where multiple-level	Not Applicable	30 psi (standard orifice) or 14 psi (large orifice)	1. Six sprinklers each on two levels 2. Hydraulically most remote 12 sprinklers	500	2

For SI: 1 inch = 25.4 mm, 1 foot = 304.8 mm, 1 square foot = 0.0929 m², 1 pound per square inch = 6.895 kPa, 1 gallon = 3.785 L, 1 gallon per minute = 3.785 L/m, 1 gallon per minute per square foot = 40.75 L/min/m².

a. This table shall not apply to racks with solid shelves.

b. Using extra-large orifice sprinklers under a ceiling 30 feet or less in height. Minimum aisle width is 7.5 feet.

100880972

100880972

5704.3.6.4 Warning for containers. Cans, containers and vessels containing flammable liquids or flammable liquid compounds or mixtures offered for sale shall be provided with a warning indicator, painted or printed on the container and stating that the liquid is flammable, and shall be kept away from heat and an open flame.

5704.3.6.5 Storage plan. Where required by the *fire code official*, *aisle* and storage plans shall be submitted in accordance with Chapter 50.

5704.3.7 Liquid storage rooms. Liquid storage rooms shall comply with Sections 5704.3.7.1 through 5704.3.7.5.2.

5704.3.7.1 General. Quantities of liquids exceeding those set forth in Section 5704.3.4.1 for storage in *control areas* shall be stored in a liquid storage room complying with this section and constructed and separated as required by the *Building Code of New York State*.

5704.3.7.2 Quantities and arrangement of storage. The quantity limits and storage arrangements in liquid storage rooms shall be in accordance with Tables 5704.3.6.3(2) and 5704.3.6.3(3) and Sections 5704.3.7.2.1 through 5704.3.7.2.3.

5704.3.7.2.1 Mixed storage. Where two or more classes of liquids are stored in a pile or rack section, both of the following shall apply:

1. The quantity in that pile or rack shall not exceed the smallest of the maximum quantities for the classes of liquids stored in accordance with Table 5704.3.6.3(2) or 5704.3.6.3(3).
2. The height of storage in that pile or rack shall not exceed the smallest of the maximum heights for the classes of liquids stored in accordance with Table 5704.3.6.3(2) or 5704.3.6.3(3).

5704.3.7.2.2 Separation and aisles. Piles shall be separated from each other by not less than 4-foot (1219 mm) aisles. Aisles shall be provided so that all containers are 20 feet (6096 mm) or less from an aisle. Where the storage of liquids is on racks, a minimum 4-foot-wide (1219 mm) aisle shall be provided between adjacent rows of racks and adjacent storage of liquids. Main aisles shall be not less than 8 feet (2438 mm) wide.

Additional aisles shall be provided for access to doors, required windows and ventilation openings, standpipe connections, mechanical equipment and switches. Such aisles shall be not less than 3 feet (914 mm) in width, unless greater widths are required for separation of piles or racks, in which case the greater width shall be provided.

5704.3.7.2.3 Stabilizing and supports. Containers and piles shall be separated by pallets or dunnage to provide stability and to prevent excessive stress to container walls. Portable tanks stored over one tier shall be designed to nest securely without dunnage.

Requirements for portable tank design shall be in accordance with Chapters 9 and 12 of NFPA 30. Shelving, racks, dunnage, scuffboards, floor overlay and similar installations shall be of noncombustible construction or of wood not less than a 1-inch (25 mm) nominal thickness. Adequate material-handling equipment shall be available to handle tanks safely at upper tier levels.

5704.3.7.3 Spill control and secondary containment. Liquid storage rooms shall be provided with spill control and secondary containment in accordance with Section 5004.2.

5704.3.7.4 Ventilation. Liquid storage rooms shall be ventilated in accordance with Section 5004.3.

5704.3.7.5 Fire protection. Fire protection for liquid storage rooms shall comply with Sections 5704.3.7.5.1 and 5704.3.7.5.2.

5704.3.7.5.1 Fire-extinguishing systems. Liquid storage rooms shall be protected by *automatic sprinkler systems* installed in accordance with Chapter 9 and Tables 5704.3.6.3(4) through 5704.3.6.3(7) and Table 5704.3.7.5.1. In-rack sprinklers shall also comply with NFPA 13.

Automatic foam-water systems and automatic aqueous film-forming foam (AFFF) water sprinkler systems shall not be used except where *approved*.

TABLE 5704.3.7.5.1
AUTOMATIC AFFF-WATER PROTECTION REQUIREMENTS FOR SOLID-PILE AND PALLETIZED STORAGE OF LIQUIDS IN METAL CONTAINERS OF 5-GALLON CAPACITY OR LESS[a, b]

PACKAGE TYPE	CLASS LIQUID	CEILING SPRINKLER DESIGN AND DEMAND					STORAGE HEIGHT (feet)	HOSE DEMAND (gpm)[c]	DURATION AFFF SUPPLY (minimum)	DURATION WATER SUPPLY (hours)
		Density (gpm/ft^2)	Area (square feet)	Temperature rating	Maximum spacing	Orifice size (inch)				
Cartoned	IB, IC, II and III	0.40	2,000	286°F	100 ft^2/ head	0.531	11	500	15	2
Uncartoned	IB, IC, II and III	0.30	2,000	286°F	100 ft^2/ head	0.5 or 0.531	12	500	15	2

For SI: 1 inch = 25.4 mm, 1 foot = 304.8 mm, 1 square foot = 0.0929 m^2, 1 gallon per minute = 3.785 L/m, 1 gallon per minute per square foot = 40.75 $L/min/m^2$, °C = [(°F) - 32]/1.8.

a. System shall be a closed-head wet system with approved devices for proportioning aqueous film-forming foam.

b. Maximum ceiling height of 30 feet.

c. Hose stream demand includes $1^1/_2$-inch inside hose connections, where required.

INTERNATIONAL CODE COUNCIL®
Copyright © 2019 ICC & NYSDOS. ALL RIGHTS RESERVED. Accessed by Lauren Gualdino (lgualdino@briarcliffmanor.org), (-) Order Number #100880972 on May 08, 2020 07:05 AM (PDT) pursuant to License Agreement with ICC & NYSDOS. No further reproduction, no

100880972

Protection criteria developed from fire modeling or full-scale fire testing conducted at an *approved* testing laboratory are allowed in lieu of the protection as shown in Tables 5704.3.6.3(2) through 5704.3.6.3(7) and Table 5704.3.7.5.1 where *approved*.

5704.3.7.5.2 Portable fire extinguishers. Not less than one *approved* portable fire extinguisher complying with Section 906 and having a rating of not less than 20-B shall be located not less than 10 feet (3048 mm) or more than 50 feet (15 240 mm) from any Class I or II liquid storage area located outside of a liquid storage room.

Not less than one portable fire extinguisher having a rating of not less than 20-B shall be located outside of, but not more than 10 feet (3048 mm) from, the door opening into a liquid storage room.

5704.3.8 Liquid storage warehouses. Buildings used for storage of flammable or *combustible liquids* in quantities exceeding those set forth in Section 5704.3.4 for *control areas* and Section 5704.3.7 for liquid storage rooms shall comply with Sections 5704.3.8.1 through 5704.3.8.5 and shall be constructed and separated as required by the *Building Code of New York State*.

5704.3.8.1 Quantities and storage arrangement. The total quantities of liquids in a liquid storage warehouse shall not be limited. The arrangement of storage shall be in accordance with Table 5704.3.6.3(2) or 5704.3.6.3(3).

5704.3.8.1.1 Mixed storage. Mixed storage shall be in accordance with Section 5704.3.7.2.1.

5704.3.8.1.2 Separation and aisles. Separation and *aisles* shall be in accordance with Section 5704.3.7.2.2.

5704.3.8.2 Spill control and secondary containment. Liquid storage warehouses shall be provided with spill control and secondary containment as set forth in Section 5004.2.

5704.3.8.3 Ventilation. Liquid storage warehouses storing containers greater than 5 gallons (19 L) in capacity shall be ventilated at a rate of not less than 0.25 cfm per square foot (0.075 $m^3/s \cdot m^2$) of floor area over the storage area.

5704.3.8.4 Automatic sprinkler systems. Liquid storage warehouses shall be protected by *automatic sprinkler systems* installed in accordance with Chapter 9 and Tables 5704.3.6.3(4) through 5704.3.6.3(7) and Table 5704.3.7.5.1, or Sections 16.4.1 through 16.4.3, 16.5.1 through 16.5.2.12, and Tables 16.5.2.1 through 16.5.2.12 and Figures 16.4.1(a) through 16.4.1(c) of NFPA 30. In-rack sprinklers shall also comply with NFPA 13.

Automatic foam-water systems and automatic AFFF water sprinkler systems shall not be used except where *approved*.

Protection criteria developed from fire modeling or full-scale fire testing conducted at an *approved* testing laboratory are allowed in lieu of the protection as shown in Tables 5704.3.6.3(2) through 5704.3.6.3(7) and Table 5704.3.7.5.1 where *approved*.

5704.3.8.5 Warehouse hose lines. In liquid storage warehouses, either $1^1/_2$-inch (38 mm) lined or 1-inch (25 mm) hard rubber hose lines shall be provided in sufficient number to reach all liquid storage areas and shall be in accordance with Section 903 or 905.

5704.4 Outdoor storage of containers and portable tanks. Storage of flammable and *combustible liquids* in closed containers and portable tanks outside of buildings shall be in accordance with Section 5703 and Sections 5704.4.1 through 5704.4.8. Capacity limits for containers and portable tanks shall be in accordance with Section 5704.3.

5704.4.1 Plans. Storage shall be in accordance with *approved* plans.

5704.4.2 Location on property. Outdoor storage of liquids in containers and portable tanks shall be in accordance with Table 5704.4.2. Storage of liquids near buildings located on the same lot shall be in accordance with this section.

5704.4.2.1 Mixed liquid piles. Where two or more classes of liquids are stored in a single pile, the quantity

TABLE 5704.4.2
OUTDOOR LIQUID STORAGE IN CONTAINERS AND PORTABLE TANKS

CLASS OF LIQUID	CONTAINER STORAGE—MAXIMUM PER PILE		PORTABLE TANK STORAGE—MAXIMUM PER PILE		MINIMUM DISTANCE BETWEEN PILES OR RACKS (feet)	MINIMUM DISTANCE TO LOT LINE OF PROPERTY THAT CAN BE BUILT UPON[c, d] (feet)	MINIMUM DISTANCE TO PUBLIC STREET, PUBLIC ALLEY OR PUBLIC WAY[d] (feet)
	Quantity[a, b] (gallons)	Height (feet)	Quantity[a, b] (gallons)	Height (feet)			
IA	1,100	10	2,200	7	5	50	10
IB	2,200	12	4,400	14	5	50	10
IC	4,400	12	8,800	14	5	50	10
II	8,800	12	17,600	14	5	25	5
III	22,000	18	44,000	14	5	10	5

For SI: 1 foot = 304.8 mm, 1 gallon 3.785 L.

a. For mixed class storage, see Section 5704.4.2.

b. For storage in racks, the quantity limits per pile do not apply, but the rack arrangement shall be limited to not more than 50 feet in length and two rows or 9 feet in depth.

c. If protection by a public fire department or private fire brigade capable of providing cooling water streams is not available, the distance shall be doubled.

d. Where the total quantity stored does not exceed 50 percent of the maximum allowed per pile, the distances are allowed to be reduced 50 percent, but not less than 3 feet.

INTERNATIONAL CODE COUNCIL®
Copyright © 2019 ICC & NYSDOS. ALL RIGHTS RESERVED. Accessed by Lauren Gualdino (lgualdino@briarcliffmanor.org), (-) Order Number #100880972 on May 08, 2020 07:05 AM (PDT) pursuant to License Agreement with ICC & NYSDOS. No further reproduction, no

100880972

in the pile shall not exceed the smallest of maximum quantities for the classes of material stored.

5704.4.2.2 Access. Storage of containers or portable tanks shall be provided with fire apparatus access roads in accordance with Chapter 5.

5704.4.2.3 Security. The storage area shall be protected against tampering or trespassers where necessary and shall be kept free from weeds, debris and other combustible materials not necessary to the storage.

5704.4.2.4 Storage adjacent to buildings. Not more than 1,100 gallons (4163 L) of liquids stored in closed containers and portable tanks is allowed adjacent to a building located on the same premises and under the same management, provided that one of the following requirements is met:

1. The building does not exceed one story in height. Such building shall be of fire-resistance-rated construction with noncombustible exterior surfaces or noncombustible construction and shall be used principally for the storage of liquids.
2. The exterior building wall adjacent to the storage area shall have a *fire-resistance rating* of not less than 2 hours, having no openings to above-grade areas within 10 feet (3048 mm) horizontally of such storage and no openings to below-grade areas within 50 feet (15 240 mm) horizontally of such storage.

The quantity of liquids stored adjacent to a building protected in accordance with Item 2 is allowed to exceed 1,100 gallons (4163 L), provided that the maximum quantity per pile does not exceed 1,100 gallons (4163 L) and each pile is separated by a 10-foot-minimum (3048 mm) clear space along the common wall.

Where the quantity stored exceeds 1,100 gallons (4163 L) adjacent to a building complying with Item 1, or the provisions of Item 1 cannot be met, a minimum distance in accordance with Table 5704.4.2, column 7 ("Minimum Distance to Lot Line of Property That Can Be Built Upon") shall be maintained between buildings and the nearest container or portable tank.

5704.4.3 Spill control and secondary containment. Storage areas shall be provided with spill control and secondary containment in accordance with Section 5703.4.

Exception: Containers stored on *approved* containment pallets in accordance with Section 5004.2.3 and containers stored in cabinets and lockers with integral spill containment.

5704.4.4 Security. Storage areas shall be protected against tampering or trespassers by fencing or other *approved* control measures.

5704.4.5 Protection from vehicles. Guard posts or other means shall be provided to protect exterior storage tanks from vehicular damage. Where guard posts are installed, the posts shall be installed in accordance with Section 312.

5704.4.6 Clearance from combustibles. The storage area shall be kept free from weeds, debris and combustible materials not necessary to the storage. The area surrounding an exterior storage area shall be kept clear of such materials for a minimum distance of 15 feet (4572 mm).

5704.4.7 Weather protection. Weather protection for outdoor storage shall be in accordance with Section 5004.13.

5704.4.8 Empty containers and tank storage. The storage of empty tanks and containers previously used for the storage of flammable or *combustible liquids*, unless free from explosive vapors, shall be stored as required for filled containers and tanks. Tanks and containers when emptied shall have the covers or plugs immediately replaced in openings.

SECTION 5705
DISPENSING, USE, MIXING AND HANDLING

5705.1 Scope. Dispensing, use, mixing and handling of flammable liquids shall be in accordance with Section 5703 and this section. Tank vehicle and tank car loading and unloading and other special operations shall be in accordance with Section 5706.

Exception: Containers of organic coatings having no fire point and which are opened for pigmentation are not required to comply with this section.

5705.2 Liquid transfer. Liquid transfer equipment and methods for transfer of Class I, II and IIIA liquids shall be *approved* and be in accordance with Sections 5705.2.1 through 5705.2.6.

5705.2.1 Pumps. Where positive-displacement pumps are used, they shall be provided with pressure relief discharging back to the tank, pump suction or other *approved* location, or shall be provided with interlocks to prevent overpressure.

5705.2.2 Pressured systems. Where gases are introduced to provide for transfer of Class I liquids, or Class II and III liquids transferred at temperatures at or above their *flash points* by pressure, only inert gases shall be used. Controls, including pressure relief devices, shall be provided to limit the pressure so that the maximum working pressure of tanks, containers and piping systems cannot be exceeded. Where devices operating through pressure within a tank or container are used, the tank or container shall be a pressure vessel *approved* for the intended use. Air or oxygen shall not be used for pressurization.

Exception: Air transfer of Class II and III liquids at temperatures below their *flash points*.

5705.2.3 Piping, hoses and valves. Piping, hoses and valves used in liquid transfer operations shall be *approved* or *listed* for the intended use.

5705.2.4 Class I, II and III liquids. Class I liquids or, when heated to or above their flash points, Class II and Class III liquids, shall be transferred by one of the following methods:

1. From safety cans complying with UL 30.
2. Through an *approved* closed piping system.

INTERNATIONAL CODE COUNCIL®
Copyright © 2019 ICC & NYSDOS. ALL RIGHTS RESERVED. Accessed by Lauren Gualdino (lgualdino@briarcliffmanor.org), (-) Order Number #100880972 on May 08, 2020 07:05 AM (PDT) pursuant to License Agreement with ICC & NYSDOS. No further reproduction, no

100880972

3. From containers or tanks by an *approved* pump taking suction through an opening in the top of the container or tank.
4. For Class IB, IC, II and III liquids, from containers or tanks by gravity through an *approved* self-closing or automatic-closing valve where the container or tank and dispensing operations are provided with spill control and secondary containment in accordance with Section 5703.4. Class IA liquids shall not be dispensed by gravity from tanks.
5. *Approved* engineered liquid transfer systems.

Exception: Liquids in original shipping containers not exceeding a 5.3-gallon (20 L) capacity.

5705.2.5 Manual container filling operations. Class I liquids or Class II and Class III liquids that are heated up to or above their *flash points* shall not be transferred into containers unless the nozzle and containers are electrically interconnected. Acceptable methods of electrical interconnection include either of the following:

1. Metallic floor plates on which containers stand while filling, where such floor plates are electrically connected to the fill stem.
2. Where the fill stem is bonded to the container during filling by means of a bond wire.

5705.2.6 Automatic container-filling operations for Class I liquids. Container-filling operations for Class I liquids involving conveyor belts or other automatic-feeding operations shall be designed to prevent static accumulations.

5705.3 Use, dispensing and mixing inside of buildings. Indoor use, dispensing and mixing of flammable and *combustible liquids* shall be in accordance with Section 5705.2 and Sections 5705.3.1 through 5705.3.5.3.

5705.3.1 Closure of mixing or blending vessels. Vessels used for mixing or blending of Class I liquids and Class II or III liquids heated up to or above their *flash points* shall be provided with self-closing, tight-fitting, noncombustible lids that will control a fire within such vessel.

Exception: Where such devices are impractical, *approved* automatic or manually controlled fire-extinguishing devices shall be provided.

5705.3.2 Bonding of vessels. Where differences of potential could be created, vessels containing Class I liquids or liquids handled at or above their *flash points* shall be electrically connected by bond wires, ground cables, piping or similar means to a static grounding system to maintain equipment at the same electrical potential to prevent sparking.

5705.3.3 Heating, lighting and cooking appliances. Heating, lighting and cooking appliances that utilize Class I liquids shall not be operated within a building or structure.

Exception: Operation in single-family *dwellings*.

TABLE 5705.3.4(1)
SEPARATION OF PROCESSING VESSELS FROM LOT LINES

PROCESSING VESSELS WITH EMERGENCY RELIEF VENTING	LOCATION[a]	
	Stable liquids	Unstable liquids
Not in excess of 2.5 psig	Table 5705.3.4(2)	2.5 times Table 5705.3.4(2)
Over 2.5 psig	1.5 times Table 5705.3.4(2)	4 times Table 5705.3.4(2)

For SI: 1 pound per square inch gauge = 6.895 kPa.

a. Where protection of exposures by a public fire department or private fire brigade capable of providing cooling water streams on structures is not provided, distances shall be doubled.

TABLE 5705.3.4(2)
REFERENCE TABLE FOR USE WITH TABLE 5705.3.4(1)

TANK CAPACITY (gallons)	MINIMUM DISTANCE FROM LOT LINE OF A LOT THAT IS OR CAN BE BUILT UPON, INCLUDING THE OPPOSITE SIDE OF A PUBLIC WAY (feet)	MINIMUM DISTANCE FROM NEAREST SIDE OF ANY PUBLIC WAY OR FROM NEAREST IMPORTANT BUILDING ON THE SAME PROPERTY (feet)
275 or less	5	5
276 to 750	10	5
751 to 12,000	15	5
12,001 to 30,000	20	5
30,001 to 50,000	30	10
50,001 to 100,000	50	15
100,001 to 500,000	80	25
500,001 to 1,000,000	100	35
1,000,001 to 2,000,000	135	45
2,000,001 to 3,000,000	165	55
3,000,001 or more	175	60

For SI: 1 foot = 304.8 mm, 1 gallon = 3.785 L.

INTERNATIONAL CODE COUNCIL®
Copyright © 2019 ICC & NYSDOS. ALL RIGHTS RESERVED. Accessed by Lauren Gualdino (lgualdino@briarcliffmanor.org), (-) Order Number #100880972 on May 08, 2020 07:05 AM (PDT) pursuant to License Agreement with ICC & NYSDOS. No further reproduction, no

100880972

5705.3.4 Location of processing vessels. Processing vessels shall be located with respect to distances to *lot lines* of adjoining property that can be built on, in accordance with Tables 5705.3.4(1) and 5705.3.4(2).

Exception: Where the exterior wall facing the adjoining *lot line* is a blank wall having a *fire-resistance rating* of not less than 4 hours, the *fire code official* is authorized to modify the distances. The distance shall be not less than that set forth in the *Building Code of New York State*, and where Class IA or unstable liquids are involved, explosion control shall be provided in accordance with Section 911.

5705.3.5 Quantity limits for use. Liquid use quantity limitations shall comply with Sections 5705.3.5.1 through 5705.3.5.3.

5705.3.5.1 Maximum allowable quantity per control area. Indoor use, dispensing and mixing of flammable and *combustible liquids* shall not exceed the *maximum allowable quantity per control area* indicated in Table 5003.1.1(1) and shall not exceed the additional limitations set forth in Section 5705.3.5.

Use of hazardous production material flammable and *combustible liquids* in Group H-5 occupancies shall be in accordance with Chapter 27.

Exception: Cleaning with Class I, II and IIIA liquids shall be in accordance with Section 5705.3.6.

5705.3.5.2 Occupancy quantity limits. The following limits for quantities of flammable and *combustible liquids* used, dispensed or mixed based on occupancy classification shall not be exceeded:

Exception: Cleaning with Class I, II, or IIIA liquids shall be in accordance with Section 5705.3.6.

1. Group A occupancies: Quantities in Group A occupancies shall not exceed that necessary for demonstration, treatment, laboratory work, maintenance purposes and operation of equipment, and shall not exceed quantities set forth in Table 5003.1.1(1).
2. Group B occupancies: Quantities in drinking, dining, office and school uses within Group B occupancies shall not exceed that necessary for demonstration, treatment, laboratory work, maintenance purposes and operation of equipment, and shall not exceed quantities set forth in Table 5003.1.1(1).
3. Group E occupancies: Quantities in Group E occupancies shall not exceed that necessary for demonstration, treatment, laboratory work, maintenance purposes and operation of equipment and shall not exceed quantities set forth in Table 5003.1.1(1).
4. Group F occupancies: Quantities in dining, office and school uses within Group F occupancies shall not exceed that necessary for demonstration, laboratory work, maintenance purposes and operation of equipment, and shall not exceed quantities set forth in Table 5003.1.1(1).
5. Group I occupancies: Quantities in Group I occupancies shall not exceed that necessary for demonstration, laboratory work, maintenance purposes and operation of equipment, and shall not exceed quantities set forth in Table 5003.1.1(1).
6. Group M occupancies: Quantities in dining, office and school uses within Group M occupancies shall not exceed that necessary for demonstration, laboratory work, maintenance purposes and operation of equipment, and shall not exceed quantities set forth in Table 5003.1.1(1).
7. Group R occupancies: Quantities in Group R occupancies shall not exceed that necessary for maintenance purposes and operation of equipment, and shall not exceed quantities set forth in Table 5003.1.1(1).
8. Group S occupancies: Quantities in dining and office uses within Group S occupancies shall not exceed that necessary for demonstration, laboratory work, maintenance purposes and operation of equipment and shall not exceed quantities set forth in Table 5003.1.1(1).

5705.3.5.3 Quantities exceeding limits for control areas. Quantities exceeding the *maximum allowable quantity per control area* indicated in Sections 5705.3.5.1 and 5705.3.5.2 shall be in accordance with the following:

1. For *open systems,* indoor use, dispensing and mixing of flammable and *combustible liquids* shall be within a room or building complying with the *Building Code of New York State* and Sections 5705.3.7.1 through 5705.3.7.5.3.
2. For *closed systems,* indoor use, dispensing and mixing of flammable and *combustible liquids* shall be within a room or building complying with the *Building Code of New York State* and Sections 5705.3.7 through 5705.3.7.4 and Section 5705.3.7.6.

5705.3.6 Cleaning with flammable and combustible liquids. Cleaning with Class I, II and IIIA liquids shall be in accordance with Sections 5705.3.6.1 through 5705.3.6.2.7.

Exceptions:

1. Dry cleaning shall be in accordance with Chapter 21.
2. Spray-nozzle cleaning shall be in accordance with Section 2403.3.5.

5705.3.6.1 Cleaning operations. Class IA liquids shall not be used for cleaning. Cleaning with Class IB, IC or II liquids shall be conducted as follows:

1. In a room or building, Section 5705.3.7; or

INTERNATIONAL CODE COUNCIL®
Copyright © 2019 ICC & NYSDOS. ALL RIGHTS RESERVED. Accessed by Lauren Gualdino (lgualdino@briarcliffmanor.org), (-) Order Number #100880972 on May 08, 2020 07:05 AM (PDT) pursuant to License Agreement with ICC & NYSDOS. No further reproduction, no

100880972

2. In a parts cleaner *listed*, *labeled* and approved for the purpose, Section 5705.3.6.2.

Exception: Materials used in commercial and industrial process-related cleaning operations in accordance with other provisions of this code and not involving facilities maintenance cleaning operations.

5705.3.6.2 Listed and approved machines. Parts cleaning and degreasing conducted in *listed* and *approved* machines in accordance with Section 5705.3.6.1 shall be in accordance with Sections 5705.3.6.2.1 through 5705.3.6.2.7.

5705.3.6.2.1 Solvents. Solvents shall be classified and shall be compatible with the machines within which they are used.

5705.3.6.2.2 Machine capacities. The quantity of solvent shall not exceed the *listed* design capacity of the machine for the solvent being used with the machine.

5705.3.6.2.3 Solvent quantity limits. Solvent quantities shall be limited as follows:

1. Machines without remote solvent reservoirs shall be limited to quantities set forth in Section 5705.3.5.
2. Machines with remote solvent reservoirs using Class I liquids shall be limited to quantities set forth in Section 5705.3.5.
3. Machines with remote solvent reservoirs using Class II liquids shall be limited to 35 gallons (132 L) per machine. The total quantities shall not exceed an aggregate of 240 gallons (908 L) per *control area* in buildings not equipped throughout with an *approved* automatic sprinkler system and an aggregate of 480 gallons (1817 L) per *control area* in buildings equipped throughout with an *approved* automatic sprinkler system in accordance with Section 903.3.1.1.
4. Machines with remote solvent reservoirs using Class IIIA liquids shall be limited to 80 gallons (303 L) per machine.

5705.3.6.2.4 Immersion soaking of parts. Work areas of machines with remote solvent reservoirs shall not be used for immersion soaking of parts.

5705.3.6.2.5 Separation. Multiple machines shall be separated from each other by a distance of not less than 30 feet (9144 mm) or by a *fire barrier* with a minimum 1-hour *fire-resistance rating*.

5705.3.6.2.6 Ventilation. Machines shall be located in areas adequately ventilated to prevent accumulation of vapors.

5705.3.6.2.7 Installation. Machines shall be installed in accordance with their listings.

5705.3.7 Rooms or buildings for quantities exceeding the maximum allowable quantity per control area. Where required by Section 5705.3.5.3 or 5705.3.6.1, rooms or buildings used for the use, dispensing or mixing of flammable and *combustible liquids* in quantities exceeding the *maximum allowable quantity per control area* shall be in accordance with Sections 5705.3.7.1 through 5705.3.7.6.3.

5705.3.7.1 Construction, location and fire protection. Rooms or buildings classified in accordance with the *Building Code of New York State* as Group H-2 or H-3 occupancies based on use, dispensing or mixing of flammable or *combustible liquids* shall be constructed in accordance with the *Building Code of New York State*.

5705.3.7.2 Basements. In rooms or buildings classified in accordance with the *Building Code of New York State* as Group H-2 or H-3, dispensing or mixing of flammable or *combustible liquids* shall not be conducted in *basements*.

5705.3.7.3 Fire protection. Rooms or buildings classified in accordance with the *Building Code of New York State* as Group H-2 or H-3 occupancies shall be equipped with an *approved* automatic fire-extinguishing system in accordance with Chapter 9.

5705.3.7.4 Doors. Interior doors to rooms or portions of such buildings shall be self-closing fire doors in accordance with the *Building Code of New York State*.

5705.3.7.5 Open systems. Use, dispensing and mixing of flammable and *combustible liquids* in *open systems* shall be in accordance with Sections 5705.3.7.5.1 through 5705.3.7.5.3.

5705.3.7.5.1 Ventilation. Continuous mechanical ventilation shall be provided at a rate of not less than 1 cfm per square foot [0.00508 $m^3/(s \cdot m^2)$] of floor area over the design area. Provisions shall be made for introduction of makeup air in such a manner to include all floor areas or pits where vapors can collect. Local or spot ventilation shall be provided where needed to prevent the accumulation of hazardous vapors. Ventilation system design shall comply with the *Building Code of New York State* and *Mechanical Code of New York State*.

Exception: Where natural ventilation can be shown to be effective for the materials used, dispensed or mixed.

5705.3.7.5.2 Explosion control. Explosion control shall be provided in accordance with Section 911.

5705.3.7.5.3 Spill control and secondary containment. Spill control shall be provided in accordance with Section 5703.4 where Class I, II or IIIA liquids are dispensed into containers exceeding a 1.3-gallon (5 L) capacity or mixed or used in open containers or systems exceeding a 5.3-gallon (20 L) capacity. Spill control and secondary containment shall be provided in accordance with Section 5703.4 where the capacity of an individual container exceeds 55 gallons (208 L) or the aggregate capacity of multiple containers or tanks exceeds 100 gallons (378.5 L).

INTERNATIONAL CODE COUNCIL®
Copyright © 2019 ICC & NYSDOS. ALL RIGHTS RESERVED. Accessed by Lauren Gualdino (lgualdino@briarcliffmanor.org), (-) Order Number #100880972 on May 08, 2020 07:05 AM (PDT) pursuant to License Agreement with ICC & NYSDOS. No further reproduction, no

100880972

5705.3.7.6 Closed systems. Use or mixing of flammable or *combustible liquids* in *closed systems* shall be in accordance with Sections 5705.3.7.6.1 through 5705.3.7.6.3.

5705.3.7.6.1 Ventilation. *Closed systems* designed to be opened as part of normal operations shall be provided with ventilation in accordance with Section 5705.3.7.5.1.

5705.3.7.6.2 Explosion control. Explosion control shall be provided where an explosive environment can occur as a result of the mixing or use process. Explosion control shall be designed in accordance with Section 911.

Exception: Where process vessels are designed to contain fully the worst-case explosion anticipated within the vessel under process conditions considering the most likely failure.

5705.3.7.6.3 Spill control and secondary containment. Spill control shall be provided in accordance with Section 5703.4 where flammable or *combustible liquids* are dispensed into containers exceeding a 1.3-gallon (5 L) capacity or mixed or used in open containers or systems exceeding a 5.3-gallon (20 L) capacity. Spill control and secondary containment shall be provided in accordance with Section 5703.4 where the capacity of an individual container exceeds 55 gallons (208 L) or the aggregate capacity of multiple containers or tanks exceeds 1,000 gallons (3785 L).

5705.3.8 Use, dispensing and handling outside of buildings. Outside use, dispensing and handling shall be in accordance with Sections 5705.3.8.1 through 5705.3.8.4.

Dispensing of liquids into motor vehicle fuel tanks at motor fuel-dispensing facilities shall be in accordance with Chapter 23.

5705.3.8.1 Spill control. Outside use, dispensing and handling areas shall be provided with spill control as set forth in Section 5703.4.

5705.3.8.2 Location on property. Dispensing activities that exceed the quantities set forth in Table 5705.3.8.2 shall not be conducted within 15 feet (4572 mm) of buildings or combustible materials or within 25 feet (7620 mm) of building openings, *lot lines*, public streets, public alleys or *public ways*. Dispensing activities that exceed the quantities set forth in Table 5705.3.8.2 shall not be conducted within 15 feet (4572 mm) of storage of Class I, II or III liquids unless such liquids are stored in tanks that are *listed* and *labeled* as 2-hour protected tank assemblies in accordance with UL 2085.

Exceptions:

1. The requirements shall not apply to areas where only the following are dispensed: Class III liquids; liquids that are heavier than water; water-miscible liquids; and liquids with viscosities greater than 10,000 centipoise (cp) (10 Pa · s).
2. Flammable and *combustible liquid* dispensing in refineries, chemical plants, process facilities, gas and crude oil production facilities and oil-blending and packaging facilities, terminals and bulk plants.

TABLE 5705.3.8.2
MAXIMUM ALLOWABLE QUANTITIES FOR DISPENSING FLAMMABLE AND COMBUSTIBLE LIQUIDS IN OUTDOOR CONTROL AREAS[a, b]

CLASS OF LIQUID	QUANTITY (gallons)
Flammable	
Class IA	10
Class IB	15
Class IC	20
Combination Class IA, IB and IC	30[c]
Combustible	
Class II	30
Class IIIA	80
Class IIIB	3,300

For SI: 1 gallon = 3.785 L.

a. For definition of "Outdoor Control Area," see Section 202.

b. The fire code official is authorized to impose special conditions regarding locations, types of containers, dispensing units, fire control measures and other factors involving fire safety.

c. Containing not more than the maximum allowable quantity per control area of each individual class.

5705.3.8.3 Location of processing vessels. Processing vessels shall be located with respect to distances to *lot lines* that can be built on in accordance with Table 5705.3.4(1).

Exception: In refineries and distilleries.

5705.3.8.4 Weather protection. Weather protection for outdoor use shall be in accordance with Section 5005.3.9.

5705.4 Solvent distillation units. Solvent distillation units shall comply with Sections 5705.4.1 through 5705.4.9.

5705.4.1 Unit with a capacity of 60 gallons or less. Solvent distillation units used to recycle Class I, II or IIIA liquids having a distillation chamber capacity of 60 gallons (227 L) or less shall be *listed*, *labeled* and installed in accordance with Section 5705.4 and UL 2208.

Exceptions:

1. Solvent distillation units used in continuous through-put industrial processes where the source of heat is remotely supplied using steam, hot water, oil or other heat transfer fluids, the temperature of which is below the auto-ignition point of the solvent.
2. *Approved* research, testing and experimental processes.

5705.4.2 Units with a capacity exceeding 60 gallons. Solvent distillation units used to recycle Class I, II or IIIA liquids, having a distillation chamber capacity exceeding 60 gallons (227 L) shall be used in locations that comply with the use and mixing requirements of Section 5705 and other applicable provisions in this chapter.

INTERNATIONAL CODE COUNCIL®
Copyright © 2019 ICC & NYSDOS. ALL RIGHTS RESERVED. Accessed by Lauren Gualdino (lgualdino@briarcliffmanor.org), (-) Order Number #100880972 on May 08, 2020 07:05 AM (PDT) pursuant to License Agreement with ICC & NYSDOS. No further reproduction, no

100880972

5705.4.3 Prohibited processing. Class I, II and IIIA liquids that are classified as unstable (reactive) shall not be processed in solvent distillation units.

Exception: Appliances *listed* for the distillation of unstable (reactive) solvents.

5705.4.4 Labeling. A permanent label shall be affixed to the unit by the manufacturer. The label shall indicate the capacity of the distillation chamber, and the distance the unit shall be placed away from sources of ignition. The label shall indicate the products for which the unit has been *listed* for use or refer to the instruction manual for a list of the products.

5705.4.5 Manufacturer's instruction manual. An instruction manual shall be provided. The manual shall be readily available for the user and the *fire code official*. The manual shall include installation, use and servicing instructions. It shall identify the liquids for which the unit has been *listed* for distillation purposes along with each liquid's *flash point* and auto-ignition temperature. For units with adjustable controls, the manual shall include directions for setting the heater temperature for each liquid to be instilled.

5705.4.6 Location. Solvent distillation units shall be used in locations in accordance with the listing. Solvent distillation units shall not be used in *basements*.

5705.4.7 Storage of liquids. Distilled liquids and liquids awaiting distillation shall be stored in accordance with Section 5704.

5705.4.8 Storage of residues. Hazardous residue from the distillation process shall be stored in accordance with Section 5704 and Chapter 50.

5705.4.9 Portable fire extinguishers. *Approved* portable fire extinguishers shall be provided in accordance with Section 906. Not less than one portable fire extinguisher having a rating of not less than 40-B shall be located not less than 10 feet (3048 mm) or more than 30 feet (9144 mm) from any solvent distillation unit.

5705.5 Alcohol-based hand rubs classified as Class I or II liquids. The use of wall-mounted dispensers containing alcohol-based hand rubs classified as Class I or II liquids shall be in accordance with all of the following:

1. The maximum capacity of each dispenser shall be 68 ounces (2 L).
2. The minimum separation between dispensers shall be 48 inches (1219 mm).
3. The dispensers shall not be installed above, below, or closer than 1 inch (25 mm) to an electrical receptacle, switch, appliance, device or other ignition source. The wall space between the dispenser and the floor or intervening counter top shall be free of electrical receptacles, switches, appliances, devices or other ignition sources.
4. Dispensers shall be mounted so that the bottom of the dispenser is not less than 42 inches (1067 mm) and not more than 48 inches (1219 mm) above the finished floor.
5. Dispensers shall not release their contents except when the dispenser is manually activated. Facilities shall be permitted to install and use automatically activated "touch free" alcohol-based hand-rub dispensing devices with the following requirements:
    5.1. The facility or persons responsible for the dispensers shall test the dispensers each time a new refill is installed in accordance with the manufacturer's care and use instructions.
    5.2. Dispensers shall be designed and must operate in a manner that ensures accidental or malicious activations of the dispensing device are minimized. At a minimum, all devices subject to or used in accordance with this section shall have the following safety features:
        5.2.1. Any activations of the dispenser shall only occur when an object is placed within 4 inches (98 mm) of the sensing device.
        5.2.2. The dispenser shall not dispense more than the amount required for hand hygiene consistent with label instructions as regulated by the United States Food and Drug Administration (USFDA).
        5.2.3. An object placed within the activation zone and left in place will cause only one activation.
6. Storage and use of alcohol-based hand rubs shall be in accordance with the applicable provisions of Sections 5704 and 5705.
7. Dispensers installed in occupancies with carpeted floors shall only be allowed in smoke compartments or *fire areas* equipped throughout with an *approved* automatic sprinkler system in accordance with Section 903.3.1.1 or 903.3.1.2.

5705.5.1 Corridor installations. In addition to the provisions of Section 5705.5, where wall-mounted dispensers containing alcohol-based hand rubs are installed in *corridors* or rooms and areas open to the *corridor*, they shall be in accordance with all of the following:

1. Level 2 and 3 aerosol containers shall not be allowed in *corridors*.
2. The maximum capacity of each Class I or II liquid dispenser shall be 41 ounces (1.21 L) and the maximum capacity of each Level 1 aerosol dispenser shall be 18 ounces (0.51 kg).
3. The maximum quantity allowed in a *corridor* within a *control area* shall be 10 gallons (37.85 L) of Class I or II liquids or 1135 ounces (32.2 kg) of Level 1 aerosols, or a combination of Class I or II liquids and Level 1 aerosols not to exceed, in total, the equivalent of 10 gallons (37.85 L) or 1,135 ounces (32.2 kg) such that the sum of the ratios of the liquid and aerosol quantities divided by the allowable

INTERNATIONAL CODE COUNCIL®
Copyright © 2019 ICC & NYSDOS. ALL RIGHTS RESERVED. Accessed by Lauren Gualdino (lgualdino@briarcliffmanor.org), (-) Order Number #100880972 on May 08, 2020 07:05 AM (PDT) pursuant to License Agreement with ICC & NYSDOS. No further reproduction, no

100880972

quantity of liquids and aerosols, respectively, shall not exceed one.

4. The minimum *corridor* width shall be 72 inches (1829 mm).
5. Projections into a *corridor* shall be in accordance with Section 1003.3.3.

SECTION 5706
SPECIAL OPERATIONS

5706.1 General. This section shall cover the provisions for special operations that include, but are not limited to, storage, use, dispensing, mixing or handling of flammable and *combustible liquids*. The following special operations shall be in accordance with Sections 5701, 5703, 5704 and 5705, except as provided in Section 5706.

1. Storage and dispensing of flammable and *combustible liquids* on farms and construction sites.
2. Well drilling and operating.
3. Bulk plants or terminals.
4. Bulk transfer and process transfer operations utilizing tank vehicles and tank cars.
5. Tank vehicles and tank vehicle operation.
6. Refineries.
7. Vapor recovery and vapor-processing systems.

5706.2 Storage and dispensing of flammable and combustible liquids on farms and construction sites. Permanent and temporary storage and dispensing of Class I and II liquids for private use on farms and rural areas and at construction sites, earth-moving projects, gravel pits or borrow pits shall be in accordance with Sections 5706.2.1 through 5706.2.8.1.

Exception: Storage and use of fuel oil and containers connected with oil-burning equipment regulated by Section 603 and the *Mechanical Code of New York State*.

5706.2.1 Combustibles and open flames near tanks. Storage areas shall be kept free from weeds and extraneous combustible material. Open flames and smoking are prohibited in flammable or *combustible liquid* storage areas.

5706.2.2 Marking of tanks and containers. Tanks and containers for the storage of liquids above ground shall be conspicuously marked with the name of the product that they contain and the words: FLAMMABLE—KEEP FIRE AND FLAME AWAY. Tanks shall bear the additional marking: KEEP 50 FEET FROM BUILDINGS.

5706.2.3 Containers for storage and use. Metal containers used for storage of Class I or II liquids shall be in accordance with DOTn requirements or shall be of an *approved* design.

Discharge devices shall be of a type that do not develop an internal pressure on the container. Pumping devices or *approved* self-closing faucets used for dispensing liquids shall not leak and shall be well-maintained. Individual containers shall not be interconnected and shall be kept closed when not in use.

Containers stored outside of buildings shall be in accordance with Section 5704 and the *Building Code of New York State*.

5706.2.4 Permanent and temporary tanks. The capacity of permanent above-ground tanks containing Class I or II liquids shall not exceed 1,100 gallons (4164 L). The capacity of temporary above-ground tanks containing Class I or II liquids shall not exceed 10,000 gallons (37 854 L). Tanks shall be of the single-compartment design.

Exception: Permanent above-ground tanks of greater capacity that meet the requirements of Section 5704.2.

5706.2.4.1 Fill-opening security. Fill openings shall be equipped with a locking closure device. Fill openings shall be separate from vent openings.

5706.2.4.2 Vents. Tanks shall be provided with a method of normal and emergency venting. Normal vents shall be in accordance with Section 5704.2.7.3.

Emergency vents shall be in accordance with Section 5704.2.7.4. Emergency vents shall be arranged to discharge in a manner that prevents localized overheating or flame impingement on any part of the tank in the event that vapors from such vents are ignited.

5706.2.4.3 Location. Tanks containing Class I or II liquids shall be kept outside and not less than 50 feet (15 240 mm) from buildings and combustible storage. Additional distance shall be provided where necessary to ensure that vehicles, equipment and containers being filled directly from such tanks will not be less than 50 feet (15 240 mm) from structures, haystacks or other combustible storage.

5706.2.4.4 Locations where above-ground tanks are prohibited. The storage of Class I and II liquids in above-ground tanks is prohibited within the limits established by law as the limits of districts in which such storage is prohibited **[JURISDICTION TO SPECIFY]**.

5706.2.5 Type of tank. Tanks shall be provided with top openings only or shall be elevated for gravity discharge.

5706.2.5.1 Tanks with top openings only. Tanks with top openings shall be mounted in accordance with either of the following:

1. On well-constructed metal legs connected to shoes or runners designed so that the tank is stabilized and the entire tank and its supports can be moved as a unit.
2. For stationary tanks, on a stable base of timbers or blocks approximately 6 inches (152 mm) in height that prevents the tank from contacting the ground.

5706.2.5.1.1 Pumps and fittings. Tanks with top openings only shall be equipped with a tightly and permanently attached, *approved* pumping device having an *approved* hose of sufficient length for filling vehicles, equipment or containers to be served from the tank. Either the pump or the hose shall be equipped with a padlock to its hanger to prevent tampering. An effective antisiphoning device shall

INTERNATIONAL CODE COUNCIL®
Copyright © 2019 ICC & NYSDOS. ALL RIGHTS RESERVED. Accessed by Lauren Gualdino (lgualdino@briarcliffmanor.org), (-) Order Number #100880972 on May 08, 2020 07:05 AM (PDT) pursuant to License Agreement with ICC & NYSDOS. No further reproduction, no

100880972

be included in the pump discharge unless a self-closing nozzle is provided. Siphons or internal pressure discharge devices shall not be used.

5706.2.5.2 Tanks for gravity discharge. Tanks with a connection in the bottom or the end for gravity-dispensing liquids shall be mounted and equipped as follows:

1. Supports to elevate the tank for gravity discharge shall be designed to carry all required loads and provide stability.
2. Bottom or end openings for gravity discharge shall be equipped with a valve located adjacent to the tank shell that will close automatically in the event of fire through the operation of an effective heat-activated releasing device. Where this valve cannot be operated manually, it shall be supplemented by a second, manually operated valve.

The gravity discharge outlet shall be provided with an *approved* hose equipped with a self-closing valve at the discharge end of a type that can be padlocked to its hanger.

5706.2.6 Spill control drainage control and diking. Indoor storage and dispensing areas shall be provided with spill control and drainage control as set forth in Section 5703.4. Outdoor storage areas shall be provided with drainage control or diking as set forth in Section 5704.2.10.

5706.2.7 Portable fire extinguishers. Portable fire extinguishers with a minimum rating of 20-B:C and complying with Section 906 shall be provided where required by the *fire code official*.

5706.2.8 Dispensing from tank vehicles. Where *approved*, liquids used as fuels are allowed to be transferred from tank vehicles into the tanks of motor vehicles or special equipment, provided that:

1. The tank vehicle's specific function is that of supplying fuel to motor vehicle fuel tanks.
2. The dispensing hose does not exceed 100 feet (30 480 mm) in length.
3. The dispensing nozzle is an *approved* type.
4. The dispensing hose is properly placed on an *approved* reel or in a compartment provided before the tank vehicle is moved.
5. Signs prohibiting smoking or open flames within 25 feet (7620 mm) of the vehicle or the point of refueling are prominently posted on the tank vehicle.
6. Electrical devices and wiring in areas where fuel dispensing is conducted are in accordance with NFPA 70.
7. Tank vehicle-dispensing equipment is operated only by designated personnel who are trained to handle and dispense motor fuels.
8. Provisions are made for controlling and mitigating unauthorized discharges.

5706.2.8.1 Location. Dispensing from tank vehicles shall be conducted not less than 50 feet (15 240 mm) from structures or combustible storage.

5706.3 Well drilling and operating. Wells for oil and natural gas shall be drilled and operated in accordance with Sections 5706.3.1 through 5706.3.8.

5706.3.1 Location. The location of wells shall comply with Sections 5706.3.1.1 through 5706.3.1.3.2.

5706.3.1.1 Storage tanks and sources of ignition. Storage tanks or boilers, fired heaters, open-flame devices or other sources of ignition shall not be located within 25 feet (7620 mm) of well heads. Smoking is prohibited at wells or tank locations except as designated and in *approved* posted areas.

Exception: Engines used in the drilling, production and serving of wells.

5706.3.1.2 Streets and railways. Wells shall not be drilled within 75 feet (22 860 mm) of any dedicated public street, highway or nearest rail of an operating railway.

5706.3.1.3 Buildings. Wells shall not be drilled within 100 feet (30 480 mm) of buildings not necessary to the operation of the well.

5706.3.1.3.1 Group A, E or I buildings. Wells shall not be drilled within 300 feet (91 440 mm) of buildings with an occupancy in Group A, E or I.

5706.3.1.3.2 Existing wells. Where wells are existing, buildings shall not be constructed within the distances set forth in Section 5706.3.1 for separation of wells or buildings.

5706.3.2 Waste control. Control of waste materials associated with wells shall comply with Sections 5706.3.2.1 and 5706.3.2.2.

5706.3.2.1 Discharge on a street or water channel. Liquids containing crude petroleum or its products shall not be discharged into or on streets, highways, drainage canals or ditches, storm drains or flood control channels.

5706.3.2.2 Discharge and combustible materials on ground. The surface of the ground under, around or near wells, pumps, boilers, oil storage tanks or buildings shall be kept free from oil, waste oil, refuse or waste material.

5706.3.3 Sumps. Sumps associated with wells shall comply with Sections 5706.3.3.1 through 5706.3.3.3.

5706.3.3.1 Maximum width. Sumps or other basins for the retention of oil or petroleum products shall not exceed 12 feet (3658 mm) in width.

5706.3.3.2 Backfilling. Sumps or other basins for the retention of oil or petroleum products larger than 6 feet by 6 feet by 6 feet (1829 mm by 1829 mm by 1829 mm) shall not be maintained longer than 60 days after the cessation of drilling operations.

INTERNATIONAL CODE COUNCIL®
Copyright © 2019 ICC & NYSDOS. ALL RIGHTS RESERVED. Accessed by Lauren Gualdino (lgualdino@briarcliffmanor.org), (-) Order Number #100880972 on May 08, 2020 07:05 AM (PDT) pursuant to License Agreement with ICC & NYSDOS. No further reproduction, no

100880972

5706.3.3.3 Security. Sumps, diversion ditches and depressions used as sumps shall be securely fenced or covered.

5706.3.4 Prevention of blowouts. Protection shall be provided to control and prevent the blowout of a well. Protection equipment shall meet federal, state and other applicable jurisdiction requirements.

5706.3.5 Storage tanks. Storage of flammable or *combustible liquids* in tanks shall be in accordance with Section 5704. Oil storage tanks or groups of tanks shall have posted in a conspicuous place, on or near such tank or tanks, an *approved* sign with the name of the *owner* or operator, or the lease number and the telephone number where a responsible person can be reached at any time.

5706.3.6 Soundproofing. Where soundproofing material is required during oil field operations, such material shall be noncombustible.

5706.3.7 Signs. Well locations shall have posted in a conspicuous place on or near such tank or tanks an *approved* sign with the name of the *owner* or operator, name of the leasee or the lease number, the well number and the telephone number where a responsible person can be reached at any time. Such signs shall be maintained on the premises from the time materials are delivered for drilling purposes until the well is abandoned.

5706.3.8 Field-loading racks. Field-loading racks shall be in accordance with Section 5706.5.

5706.4 Bulk plants or terminals. Portions of properties where flammable and *combustible liquids* are received by tank vessels, pipelines, tank cars or tank vehicles and stored or blended in bulk for the purpose of distribution by tank vessels, pipelines, tanks cars, tank vehicles or containers shall be in accordance with Sections 5706.4.1 through 5706.4.10.4.

5706.4.1 Building construction. Buildings shall be constructed in accordance with the *Building Code of New York State*.

5706.4.2 Means of egress. Rooms in which liquids are stored, used or transferred by pumps shall have *means of egress* arranged to prevent occupants from being trapped in the event of fire.

5706.4.3 Heating. Rooms in which Class I liquids are stored or used shall be heated only by means not constituting a source of ignition, such as steam or hot water. Rooms containing heating appliances involving sources of ignition shall be located and arranged to prevent entry of flammable vapors.

5706.4.4 Ventilation. Ventilation shall be provided for rooms, buildings and enclosures in which Class I liquids are pumped, used or transferred. Design of ventilation systems shall consider the relatively high specific gravity of the vapors. Where natural ventilation is used, adequate openings in outside walls at floor level, unobstructed except by louvers or coarse screens, shall be provided. Where natural ventilation is inadequate, mechanical ventilation shall be provided in accordance with the *Mechanical Code of New York State*.

5706.4.4.1 Basements and pits. Class I liquids shall not be stored or used within a building having a *basement* or pit into which flammable vapors can travel, unless such area is provided with ventilation designed to prevent the accumulation of flammable vapors therein.

5706.4.4.2 Dispensing of Class I liquids. Containers of Class I liquids shall not be drawn from or filled within buildings unless a provision is made to prevent the accumulation of flammable vapors in hazardous concentrations. Where mechanical ventilation is required, it shall be kept in operation while flammable vapors could be present.

5706.4.5 Storage. Storage of Class I, II and IIIA liquids in bulk plants shall be in accordance with the applicable provisions of Section 5704.

5706.4.6 Overfill protection of Class I and II liquids. Manual and automatic systems shall be provided to prevent overfill during the transfer of Class I and II liquids from mainline pipelines and marine vessels in accordance with API 2350.

5706.4.7 Wharves. This section shall apply to all wharves, piers, bulkheads and other structures over or contiguous to navigable water having a primary function of transferring liquid cargo in bulk between shore installations and tank vessels, ships, barges, lighter boats or other mobile floating craft.

Exception: Marine motor fuel-dispensing facilities in accordance with Chapter 23.

5706.4.7.1 Transferring approvals. Handling packaged cargo of liquids, including full and empty drums, bulk fuel and stores, over a wharf during cargo transfer shall be subject to the approval of the wharf supervisor and the senior deck officer on duty.

5706.4.7.2 Transferring location. Wharves at which liquid cargoes are to be transferred in bulk quantities to or from tank vessels shall be not less than 100 feet (30 480 mm) from any bridge over a navigable waterway; or from an entrance to, or superstructure of, any vehicular or railroad tunnel under a waterway. The termination of the fixed piping used for loading or unloading at a wharf shall be not less than 200 feet (60 960 mm) from a bridge or from an entrance to, or superstructures of, a tunnel.

5706.4.7.3 Superstructure and decking material. Superstructure and decking shall be designed for the intended use. Decking shall be constructed of materials that will afford the desired combination of flexibility, resistance to shock, durability, strength and *fire resistance*.

5706.4.7.4 Tanks allowed. Tanks used exclusively for ballast water or Class II or III liquids are allowed to be installed on suitably designed wharves.

5706.4.7.5 Transferring equipment. Loading pumps capable of building up pressures in excess of the safe working pressure of cargo hose or loading arms shall be provided with bypasses, relief valves or other arrange-

INTERNATIONAL CODE COUNCIL®
Copyright © 2019 ICC & NYSDOS. ALL RIGHTS RESERVED. Accessed by Lauren Gualdino (lgualdino@briarcliffmanor.org), (-) Order Number #100880972 on May 08, 2020 07:05 AM (PDT) pursuant to License Agreement with ICC & NYSDOS. No further reproduction, no

100880972

ments to protect the loading facilities against excessive pressure. Relief devices shall be tested not less than annually to determine that they function satisfactorily at their set pressure.

5706.4.7.6 Piping, valves and fittings. Piping valves and fittings shall be in accordance with Section 5703.6 except as modified by the following:

1. Flexibility of piping shall be ensured by appropriate layout and arrangement of piping supports so that motion of the wharf structure resulting from wave action, currents, tides or the mooring of vessels will not subject the pipe to repeated excessive strain.
2. Pipe joints that depend on the friction characteristics of combustible materials or on the grooving of pipe ends for mechanical continuity of piping shall not be used.
3. Swivel joints are allowed in piping to which hoses are connected and for articulated, swivel-joint transfer systems, provided that the design is such that the mechanical strength of the joint will not be impaired if the packing materials fail such as by exposure to fire.
4. Each line conveying Class I or II liquids leading to a wharf shall be provided with a block valve that has *ready access* and that is on shore, near the approach to the wharf and outside of any diked area. Where more than one line is involved, the valves shall be grouped in one location.
5. Means shall be provided for easy access to cargo line valves located below the wharf deck.
6. Piping systems shall contain a sufficient number of valves to operate the system properly and to control the flow of liquid in normal operation and in the event of physical damage.
7. Piping on wharves shall be bonded and grounded where Class I and II liquids are transported. Where excessive stray currents are encountered, insulating joints shall be installed. Bonding and grounding connections on piping shall be located on the wharf side of hose riser insulating flanges, where used, and shall be in a location provided with *ready access* for inspection.
8. Hose or articulated swivel-joint pipe connections used for cargo transfer shall be capable of accommodating the combined effects of change in draft and maximum tidal range, and mooring lines shall be kept adjusted to prevent surge of the vessel from placing stress on the cargo transfer system.
9. Hoses shall be supported to avoid kinking and damage from chafing.

5706.4.7.7 Loading and unloading. Loading or discharging shall not commence until the wharf superintendent and officer in charge of the tank vessel agree that the tank vessel is properly moored and connections are properly made.

5706.4.7.8 Mechanical work. Mechanical work shall not be performed on the wharf during cargo transfer, except under special authorization by the *fire code official* based on a review of the area involved, methods to be employed and precautions necessary.

5706.4.8 Sources of ignition. Class I, II or IIIA liquids shall not be used, drawn or dispensed where flammable vapors can reach a source of ignition. Smoking shall be prohibited except in designated locations. "No Smoking" signs complying with Section 310 shall be conspicuously posted where a hazard from flammable vapors is normally present.

5706.4.9 Drainage control. Loading and unloading areas shall be provided with drainage control in accordance with Section 5704.2.10.

5706.4.10 Fire protection. Fire protection shall be in accordance with Chapter 9 and Sections 5706.4.10.1 through 5706.4.10.4.

5706.4.10.1 Portable fire extinguishers. Portable fire extinguishers with a rating of not less than 20-B and complying with Section 906 shall be located within 75 feet (22 860 mm) of hose connections, pumps and separator tanks.

5706.4.10.2 Fire hoses. Where piped water is available, ready-connected fire hose in a size appropriate for the water supply shall be provided in accordance with Section 905 so that manifolds where connections are made and broken can be reached by not less than one hose stream.

5706.4.10.3 Obstruction of equipment. Material shall not be placed on wharves in such a manner that would obstruct access to fire-fighting equipment or important pipeline control valves.

5706.4.10.4 Fire apparatus access. Where the wharf is designed for vehicular traffic, an unobstructed fire apparatus access road to the shore end of the wharf shall be maintained in accordance with Chapter 5.

5706.5 Bulk transfer and process transfer operations. Bulk transfer and process transfer operations shall be *approved* and be in accordance with Sections 5706.5.1 through 5706.5.4.5. Motor fuel-dispensing facilities shall comply with Chapter 23.

5706.5.1 General. The provisions of Sections 5706.5.1.1 through 5706.5.1.18 shall apply to bulk transfer and process transfer operations; Sections 5706.5.2 and 5706.5.2.1 shall apply to bulk transfer operations; Sections 5706.5.3 through 5706.5.3.3 shall apply to process transfer operations and Sections 5706.5.4 through 5706.5.4.5 shall apply to dispensing from tank vehicles and tank cars.

5706.5.1.1 Location. Bulk transfer and process transfer operations shall be conducted in *approved* locations. Tank cars shall be unloaded only on private sidings or railroad-siding facilities equipped for transferring flammable or *combustible liquids*. Tank vehicles and tank

INTERNATIONAL CODE COUNCIL®
Copyright © 2019 ICC & NYSDOS. ALL RIGHTS RESERVED. Accessed by Lauren Gualdino (lgualdino@briarcliffmanor.org), (-) Order Number #100880972 on May 08, 2020 07:05 AM (PDT) pursuant to License Agreement with ICC & NYSDOS. No further reproduction, no

100880972

cars engaged in bulk transfer or process transfer operations shall be separated from buildings, above-ground tanks, combustible materials, *lot lines*, public streets, public alleys or *public ways* by a distance of 25 feet (7620 mm) for Class I liquids and 15 feet (4572 mm) for Class II and IIIA liquids measured from the nearest loading or unloading valve on the tank vehicle or tank car.

Exception: Buildings for pumps and shelters for personnel supporting transfer operations shall not be required to be separated from tank vehicles and tank cars engaged in bulk transfer or process transfer operations.

5706.5.1.2 Weather protection canopies. Where weather protection canopies are provided, they shall be constructed in accordance with Section 5004.13. Weather protection canopies shall not be located within 15 feet (4572 mm) of a building or combustible material or within 25 feet (7620 mm) of building openings, *lot lines*, public streets, public alleys or *public ways*.

5706.5.1.3 Ventilation. Ventilation shall be provided to prevent accumulation of vapors in accordance with Section 5705.3.7.5.1.

5706.5.1.4 Sources of ignition. Sources of ignition shall be controlled or eliminated in accordance with Section 5003.7.

5706.5.1.5 Spill control and secondary containment. Areas where transfer operations are located shall be provided with spill control and secondary containment in accordance with Section 5703.4. The spill control and secondary containment system shall have a design capacity capable of containing the capacity of the largest tank compartment located in the area where transfer operations are conducted. Containment of the rainfall volume specified in Section 5004.2.2.6 is not required.

5706.5.1.6 Fire protection. Fire protection shall be in accordance with Section 5703.2.

5706.5.1.7 Static protection. Static protection shall be provided to prevent the accumulation of static charges during transfer operations. Bonding facilities shall be provided during the transfer through open domes where Class I liquids are transferred, or where Class II and III liquids are transferred into tank vehicles or tank cars that could contain vapors from previous cargoes of Class I liquids.

Protection shall consist of a metallic bond wire permanently electrically connected to the fill stem. The fill pipe assembly shall form a continuous electrically conductive path downstream from the point of bonding. The free end of such bond wire shall be provided with a clamp or equivalent device for convenient attachment to a metallic part in electrical contact with the cargo tank of the tank vehicle or tank car. For tank vehicles, protection shall consist of a flexible bond wire of adequate strength for the intended service and the electrical resistance shall not exceed 1 megohm. For tank cars, bonding shall be provided where the resistance of a tank car to ground through the rails is 25 ohms or greater.

Such bonding connection shall be fastened to the vehicle, car or tank before dome covers are raised and shall remain in place until filling is complete and all dome covers have been closed and secured.

Exceptions:

1. Where vehicles and cars are loaded exclusively with products not having a static-accumulating tendency, such as asphalt, cutback asphalt, most crude oils, residual oils and water-miscible liquids.
2. Where Class I liquids are not handled at the transfer facility and the tank vehicles are used exclusively for Class II and III liquids.
3. Where vehicles and cars are loaded or unloaded through closed top or bottom connections whether the hose is conductive or nonconductive.

Filling through open domes into the tanks of tank vehicles or tank cars that contain vapor-air mixtures within the flammable range, or where the liquid being filled can form such a mixture, shall be by means of a downspout that extends to near the bottom of the tank.

5706.5.1.8 Stray current protection. Tank car loading facilities where Class I, II or IIIA liquids are transferred through open domes shall be protected against stray currents by permanently bonding the pipe to not less than one rail and to the transfer apparatus. Multiple pipes entering the transfer areas shall be permanently electrically bonded together. In areas where excessive stray currents are known to exist, all pipes entering the transfer area shall be provided with insulating sections to isolate electrically the transfer apparatus from the pipelines.

5706.5.1.9 Top loading. When top loading a tank vehicle with Class I and II liquids without vapor control, valves used for the final control of flow shall be of the self-closing type and shall be manually held open except where automatic means are provided for shutting off the flow when the tank is full. Where used, automatic shutoff systems shall be provided with a manual shutoff valve located at a safe distance from the loading nozzle to stop the flow if the automatic system fails.

When top loading a tank vehicle with vapor control, flow control shall be in accordance with Section 5706.5.1.10. Self-closing valves shall not be tied or locked in the open position.

5706.5.1.10 Bottom loading. When bottom loading a tank vehicle or tank car with or without vapor control, a positive means shall be provided for loading a predetermined quantity of liquid, together with an automatic secondary shutoff control to prevent overfill. The connecting components between the transfer equipment and the tank vehicle or tank car required to operate the secondary control shall be functionally compatible.

INTERNATIONAL CODE COUNCIL®
Copyright © 2019 ICC & NYSDOS. ALL RIGHTS RESERVED. Accessed by Lauren Gualdino (lgualdino@briarcliffmanor.org), (-) Order Number #100880972 on May 08, 2020 07:05 AM (PDT) pursuant to License Agreement with ICC & NYSDOS. No further reproduction, no

100880972

5706.5.1.10.1 Dry disconnect coupling. When bottom loading a tank vehicle, the coupling between the liquid loading hose or pipe and the truck piping shall be a dry disconnect coupling.

5706.5.1.10.2 Venting. When bottom loading a tank vehicle or tank car that is equipped for vapor control and vapor control is not used, the tank shall be vented to the atmosphere to prevent pressurization of the tank. Such venting shall be at a height equal to or greater than the top of the cargo tank.

5706.5.1.10.3 Vapor-tight connection. Connections to the plant vapor control system shall be designed to prevent the escape of vapor to the atmosphere when not connected to a tank vehicle or tank car.

5706.5.1.10.4 Vapor-processing equipment. Vapor-processing equipment shall be separated from above-ground tanks, warehouses, other plant buildings, transfer facilities or nearest *lot line* of adjoining property that can be built on by a distance of not less than 25 feet (7620 mm). Vapor-processing equipment shall be protected from physical damage by remote location, guard rails, curbs or fencing.

5706.5.1.11 Switch loading. Tank vehicles or tank cars that have previously contained Class I liquids shall not be loaded with Class II or III liquids until such vehicles and all piping, pumps, hoses and meters connected thereto have been completely drained and flushed.

5706.5.1.12 Loading racks. Where provided, loading racks, *stairways* or platforms shall be constructed of noncombustible materials. Buildings for pumps or for shelter of loading personnel are allowed to be part of the loading rack. Wiring and electrical equipment located within 25 feet (7620 mm) of any portion of the loading rack shall be in accordance with Section 5703.1.1.

5706.5.1.13 Transfer apparatus. Bulk and process transfer apparatus shall be of an *approved* type.

5706.5.1.14 Inside buildings. Tank vehicles and tank cars shall not be located inside a building while transferring Class I, II or IIIA liquids, unless *approved* by the *fire code official*.

Exception: Tank vehicles are allowed under weather protection canopies and canopies of automobile motor vehicle fuel-dispensing stations.

5706.5.1.15 Tank vehicle and tank car certification. Certification shall be maintained for tank vehicles and tank cars in accordance with DOTn 49 CFR Parts 100-185.

5706.5.1.16 Tank vehicle and tank car stability. Tank vehicles and tank cars shall be stabilized against movement during loading and unloading in accordance with Sections 5706.5.1.16.1 through 5706.5.1.16.3.

5706.5.1.16.1 Tank vehicles. When the vehicle is parked for loading or unloading, the cargo trailer portion of the tank vehicle shall be secured in a manner that will prevent unintentional movement.

5706.5.1.16.2 Chock blocks. Not less than two chock blocks not less than 5 inches by 5 inches by 12 inches (127 mm by 127 mm by 305 mm) in size and dished to fit the contour of the tires shall be used during transfer operations of tank vehicles.

5706.5.1.16.3 Tank cars. Brakes shall be set and the wheels shall be blocked to prevent rolling.

5706.5.1.17 Monitoring. Transfer operations shall be monitored by an *approved* monitoring system or by an attendant. Where monitoring is by an attendant, the operator or other competent person shall be present at all times.

5706.5.1.18 Security. Transfer operations shall be surrounded by a noncombustible fence not less than 5 feet (1524 mm) in height. Tank vehicles and tank cars shall not be loaded or unloaded unless such vehicles are entirely within the fenced area.

Exceptions:

1. Motor fuel-dispensing facilities complying with Chapter 23.
2. Installations where adequate public safety exists because of isolation, natural barriers or other factors as determined appropriate by the *fire code official*.
3. Facilities or properties that are entirely enclosed or protected from entry.

5706.5.2 Bulk transfer. Bulk transfer shall be in accordance with Sections 5706.5.1 and 5706.5.2.1.

5706.5.2.1 Vehicle motor. Motors of tank vehicles or tank cars shall be shut off during the making and breaking of hose connections and during the unloading operation.

Exception: Where unloading is performed with a pump deriving its power from the tank vehicle motor.

5706.5.3 Process transfer. Process transfer shall be in accordance with Section 5706.5.1 and Sections 5706.5.3.1 through 5706.5.3.3.

5706.5.3.1 Piping, valves, hoses and fittings. Piping, valves, hoses and fittings that are not a part of the tank vehicle or tank car shall be in accordance with Section 5703.6. Caps or plugs that prevent leakage or spillage shall be provided at all points of connection to transfer piping.

5706.5.3.1.1 Shutoff valves. *Approved* automatically or manually activated shutoff valves shall be provided where the transfer hose connects to the process piping, and on both sides of any exterior fire-resistance-rated wall through which the piping passes. Manual shutoff valves shall be arranged so that they are able to be accessed from grade. Valves shall not be locked in the open position.

INTERNATIONAL CODE COUNCIL®
Copyright © 2019 ICC & NYSDOS. ALL RIGHTS RESERVED. Accessed by Lauren Gualdino (lgualdino@briarcliffmanor.org), (-) Order Number #100880972 on May 08, 2020 07:05 AM (PDT) pursuant to License Agreement with ICC & NYSDOS. No further reproduction, no

100880972

5706.5.3.1.2 Hydrostatic relief. Hydrostatic pressure-limiting or relief devices shall be provided where pressure buildup in trapped sections of the system could exceed the design pressure of the components of the system.

Devices shall relieve to other portions of the system or to another *approved* location.

5706.5.3.1.3 Antisiphon valves. Antisiphon valves shall be provided where the system design would allow siphonage.

5706.5.3.2 Vents. Normal and emergency vents shall be maintained operable at all times.

5706.5.3.3 Motive power. Motors of tank vehicles or tank cars shall be shut off during the making and breaking of hose connections and during the unloading operation.

Exception: When unloading is performed with a pump deriving its power from the tank vehicle motor.

5706.5.4 Dispensing from tank vehicles and tank cars. Dispensing from tank vehicles and tank cars into the fuel tanks of motor vehicles shall be prohibited unless allowed by and conducted in accordance with Sections 5706.5.4.1 through 5706.5.4.5.

5706.5.4.1 Marine craft and special equipment. Liquids intended for use as motor fuels are allowed to be transferred from tank vehicles into the fuel tanks of marine craft and special equipment where *approved* by the *fire code official*, and where:

1. The tank vehicle's specific function is that of supplying fuel to fuel tanks.
2. The operation is not performed where the public has access or where there is unusual exposure to life and property.
3. The dispensing line does not exceed 50 feet (15 240 mm) in length.
4. The dispensing nozzle is *approved*.

5706.5.4.2 Emergency refueling. Where *approved* by the *fire code official*, dispensing of motor vehicle fuel from tank vehicles into the fuel tanks of motor vehicles is allowed during emergencies. Dispensing from tank vehicles shall be in accordance with Sections 5706.2.8 and 5706.6.

5706.5.4.3 Aircraft fueling. Transfer of liquids from tank vehicles to the fuel tanks of aircraft shall be in accordance with Chapter 20.

5706.5.4.4 Fueling of vehicles at farms, construction sites and similar areas. Transfer of liquid from tank vehicles to motor vehicles for private use on farms and rural areas and at construction sites, earth-moving projects, gravel pits and borrow pits is allowed in accordance with Section 5706.2.8.

5706.5.4.5 Commercial, industrial, governmental or manufacturing. Dispensing of Class II and III motor vehicle fuel from tank vehicles into the fuel tanks of motor vehicles located at commercial, industrial, governmental or manufacturing establishments is allowed where permitted, provided that such dispensing operations are conducted in accordance with the following:

1. Dispensing shall occur only at sites that have been issued a permit to conduct mobile fueling.
2. The *owner* of a mobile fueling operation shall provide to the jurisdiction a written response plan that demonstrates readiness to respond to a fuel spill and carry out appropriate mitigation measures, and describes the process to dispose properly of contaminated materials.
3. A detailed site plan shall be submitted with each application for a permit. The site plan shall indicate: all buildings, structures and appurtenances on site and their use or function; all uses adjacent to the *lot lines* of the site; the locations of all storm drain openings, adjacent waterways or wetlands; information regarding slope, natural drainage, curbing, impounding and how a spill will be retained upon the site property; and the scale of the site plan.

   Provisions shall be made to prevent liquids spilled during dispensing operations from flowing into buildings or off-site. Acceptable methods include, but shall not be limited to, grading driveways, raising doorsills or other *approved* means.
4. The *fire code official* is allowed to impose limits on the times and days during which mobile fueling operations is allowed to take place, and specific locations on a site where fueling is permitted.
5. Mobile fueling operations shall be conducted in areas not open to the public or shall be limited to times when the public is not present.
6. Mobile fueling shall not take place within 15 feet (4572 mm) of buildings, property lines, combustible storage or storm drains.

   Exceptions:

   1. The distance to storm drains shall not apply where an *approved* storm drain cover or an *approved* equivalent that will prevent any fuel from reaching the drain is in place prior to fueling or a fueling hose being placed within 15 feet (4572 mm) of the drain. Where placement of a storm drain cover will cause the accumulation of excessive water or difficulty in conducting the fueling, such cover shall not be used and the fueling shall not take place within 15 feet (4572 mm) of a drain.

INTERNATIONAL CODE COUNCIL®
Copyright © 2019 ICC & NYSDOS. ALL RIGHTS RESERVED. Accessed by Lauren Gualdino (lgualdino@briarcliffmanor.org), (-) Order Number #100880972 on May 08, 2020 07:05 AM (PDT) pursuant to License Agreement with ICC & NYSDOS. No further reproduction, no

100880972

2. The distance to storm drains shall not apply for drains that direct influent to *approved* oil interceptors.

7. The tank vehicle shall comply with the requirements of NFPA 385 and local, state and federal requirements. The tank vehicle's specific functions shall include that of supplying fuel to motor vehicle fuel tanks. The vehicle and all its equipment shall be maintained in good repair.
8. Signs prohibiting smoking or open flames within 25 feet (7620 mm) of the tank vehicle or the point of fueling shall be prominently posted on three sides of the vehicle including the back and both sides.
9. A portable fire extinguisher with a minimum rating of 40:BC shall be provided on the vehicle with signage clearly indicating its location.
10. The dispensing nozzles and hoses shall be of an *approved* and *listed* type.
11. The dispensing hose shall not be extended from the reel more than 100 feet (30 480 mm) in length.
12. Absorbent materials, nonwater-absorbent pads, a 10-foot-long (3048 mm) containment boom, an *approved* container with lid and a nonmetallic shovel shall be provided to mitigate a minimum 5-gallon (19 L) fuel spill.
13. Tank vehicles shall be equipped with a "fuel limit" switch such as a count-back switch, to limit the amount of a single fueling operation to not more than 500 gallons (1893 L) before resetting the limit switch.

    Exception: Tank vehicles where the operator carries and can utilize a remote emergency shutoff device that, when activated, immediately causes flow of fuel from the tank vehicle to cease.

14. Persons responsible for dispensing operations shall be trained in the appropriate mitigating actions in the event of a fire, leak or spill. Training records shall be maintained by the dispensing company.
15. Operators of tank vehicles used for mobile fueling operations shall have in their possession at all times an emergency communications device to notify the proper authorities in the event of an emergency.
16. The tank vehicle dispensing equipment shall be constantly attended and operated only by designated personnel who are trained to handle and dispense motor fuels.
17. Fuel dispensing shall be prohibited within 25 feet (7620 mm) of any source of ignition.
18. The engines of vehicles being fueled shall be shut off during dispensing operations.
19. Nighttime fueling operations shall only take place in adequately lighted areas.
20. The tank vehicle shall be positioned with respect to vehicles being fueled to prevent traffic from driving over the delivery hose.
21. During fueling operations, tank vehicle brakes shall be set, chock blocks shall be in place and warning lights shall be in operation.
22. Motor vehicle fuel tanks shall not be topped off.
23. The dispensing hose shall be properly placed on an *approved* reel or in an *approved* compartment prior to moving the tank vehicle.
24. The *fire code official* and other appropriate authorities shall be notified when a reportable spill or unauthorized discharge occurs.
25. Operators shall place a drip pan or an absorbent pillow under each fuel fill opening prior to and during dispensing operations. Drip pans shall be liquid-tight. The pan or absorbent pillow shall have a capacity of not less than 3 gallons (11.36 L). Spills retained in the drip pan or absorbent pillow need not be reported. Operators, when fueling, shall have on their person an absorbent pad capable of capturing diesel fuel overfills. Except during fueling, the nozzle shall face upward and an absorbent pad shall be kept under the nozzle to catch drips. Contaminated absorbent pads or pillows shall be disposed of regularly in accordance with local, state and federal requirements.

5706.6 Tank vehicles and vehicle operation. Tank vehicles shall be designed, constructed, equipped and maintained in accordance with NFPA 385 and Sections 5706.6.1 through 5706.6.4.

5706.6.1 Operation of tank vehicles. Tank vehicles shall be utilized and operated in accordance with NFPA 385 and Sections 5706.6.1.1 through 5706.6.1.11.

5706.6.1.1 Vehicle maintenance. Tank vehicles shall not be operated unless they are in proper state of repair and free from accumulation of grease, oil or other flammable substance, and leaks.

5706.6.1.2 Leaving vehicle unattended. The driver, operator or attendant of a tank vehicle shall not remain in the vehicle cab and shall not leave the vehicle while it is being filled or discharged. The delivery hose, when attached to a tank vehicle, shall be considered to be a part of the tank vehicle.

5706.6.1.3 Vehicle motor shutdown. Motors of tank vehicles or tractors shall be shut down during the making or breaking of hose connections. If loading or unloading is performed without the use of a power pump, the tank vehicle or tractor motor shall be shut down throughout such operations.

5706.6.1.4 Outage. A cargo tank or compartment thereof used for the transportation of flammable or *combustible liquids* shall not be loaded to absolute

INTERNATIONAL CODE COUNCIL®
Copyright © 2019 ICC & NYSDOS. ALL RIGHTS RESERVED. Accessed by Lauren Gualdino (lgualdino@briarcliffmanor.org), (-) Order Number #100880972 on May 08, 2020 07:05 AM (PDT) pursuant to License Agreement with ICC & NYSDOS. No further reproduction, no

100880972

capacity. The vacant space in a cargo tank or compartment thereof used in the transportation of flammable or *combustible liquids* shall be not less than 1 percent. Sufficient space shall be left vacant to prevent leakage from or distortion of such tank or compartment by expansion of the contents caused by rise in temperature in transit.

5706.6.1.5 Overfill protection. The driver, operator or attendant of a tank vehicle shall, before making delivery to a tank, determine the unfilled capacity of such tank by a suitable gauging device. To prevent overfilling, the driver, operator or attendant shall not deliver in excess of that amount.

5706.6.1.6 Securing hatches. During loading, hatch covers shall be secured on all but the receiving compartment.

5706.6.1.7 Liquid temperature. Materials shall not be loaded into or transported in a tank vehicle at a temperature above the material's ignition temperature unless safeguarded in an *approved* manner.

5706.6.1.8 Bonding to underground tanks. An external bond-wire connection or bond-wire integral with a hose shall be provided for the transferring of flammable liquids through open connections into underground tanks.

5706.6.1.9 Smoking. Smoking by tank vehicle drivers, helpers or other personnel is prohibited while they are driving, making deliveries, filling or making repairs to tank vehicles.

5706.6.1.10 Hose connections. Delivery of flammable liquids to underground tanks with a capacity of more than 1,000 gallons (3785 L) shall be made by means of *approved* liquid and vapor-tight connections between the delivery hose and tank fill pipe. Where underground tanks are equipped with any type of vapor recovery system, all connections required to be made for the safe and proper functioning of the particular vapor recovery process shall be made. Such connections shall be made liquid and vapor tight and remain connected throughout the unloading process. Vapors shall not be discharged at grade level during delivery.

5706.6.1.10.1 Simultaneous delivery. Simultaneous delivery to underground tanks of any capacity from two or more discharge hoses shall be made by means of mechanically tight connections between the hose and fill pipe.

5706.6.1.11 Hose protection. Upon arrival at a point of delivery and prior to discharging any flammable or *combustible liquids* into underground tanks, the driver, operator or attendant of the tank vehicle shall ensure that all hoses utilized for liquid delivery and vapor recovery, where required, will be protected from physical damage by motor vehicles. Such protection shall be provided by positioning the tank vehicle to prevent motor vehicles from passing through the area or areas occupied by hoses, or by other *approved* equivalent means.

5706.6.2 Parking. Parking of tank vehicles shall be in accordance with Sections 5706.6.2.1 through 5706.6.2.3.

Exception: In cases of accident, breakdown or other emergencies, tank vehicles are allowed to be parked and left unattended at any location while the operator is obtaining assistance.

5706.6.2.1 Parking near residential, educational and institutional occupancies and other high-risk areas. Tank vehicles shall not be left unattended at any time on residential streets, or within 500 feet (152 m) of a residential area, apartment or hotel complex, educational facility, hospital or care facility. Tank vehicles shall not be left unattended at any other place that would, in the opinion of the fire chief, pose an extreme life hazard.

5706.6.2.2 Parking on thoroughfares. Tank vehicles shall not be left unattended on a public street, highway, public avenue or public alley.

Exceptions:

1. The necessary absence in connection with loading or unloading the vehicle. During actual fuel transfer, Section 5706.6.1.2 shall apply. The vehicle location shall be in accordance with Section 5706.6.2.1.
2. Stops for meals during the day or night, where the street is well lighted at the point of parking. The vehicle location shall be in accordance with Section 5706.6.2.1.

5706.6.2.3 Duration exceeding 1 hour. Tank vehicles parked at one point for longer than 1 hour shall be located off of public streets, highways, public avenues or alleys, and in accordance with either of the following:

1. Inside of a bulk plant and either 25 feet (7620 mm) or more from the nearest *lot line* or within a building *approved* for such use.
2. At other *approved* locations not less than 50 feet (15 240 mm) from the buildings other than those *approved* for the storage or servicing of such vehicles.

5706.6.3 Garaging. Tank vehicles shall not be parked or garaged in buildings other than those specifically *approved* for such use by the *fire code official*.

5706.6.4 Portable fire extinguisher. Tank vehicles shall be equipped with a portable fire extinguisher complying with Section 906 and having a minimum rating of 2-A:20-B:C.

During unloading of the tank vehicle, the portable fire extinguisher shall be out of the carrying device on the vehicle and shall be 15 feet (4572 mm) or more from the unloading valves.

5706.7 Refineries. Plants and portions of plants in which flammable liquids are produced on a scale from crude petroleum, natural gasoline or other hydrocarbon sources shall be in accordance with Sections 5706.7.1 through 5706.7.3. Petroleum-processing plants and facilities or portions of

INTERNATIONAL CODE COUNCIL®
Copyright © 2019 ICC & NYSDOS. ALL RIGHTS RESERVED. Accessed by Lauren Gualdino (lgualdino@briarcliffmanor.org), (-) Order Number #100880972 on May 08, 2020 07:05 AM (PDT) pursuant to License Agreement with ICC & NYSDOS. No further reproduction, no

100880972

plants or facilities in which flammable or *combustible liquids* are handled, treated or produced on a commercial scale from crude petroleum, natural gasoline, or other hydrocarbon sources shall also be in accordance with API 651, API 653, API 752, API 1615, API 2001, API 2003, API 2009, API 2015, API 2023, API 2201 and API 2350.

5706.7.1 Corrosion protection. Above-ground tanks and piping systems shall be protected against corrosion in accordance with API 651.

5706.7.2 Cleaning of tanks. The safe entry and cleaning of petroleum storage tanks shall be conducted in accordance with API 2015.

5706.7.3 Storage of heated petroleum products. Where petroleum-derived asphalts and residues are stored in heated tanks at refineries and bulk storage facilities or in tank vehicles, such products shall be in accordance with API 2023.

5706.8 Vapor recovery and vapor-processing systems. Vapor-processing systems in which the vapor source operates at pressures from vacuum, up to and including 1 psig (6.9 kPa) or in which a potential exists for vapor mixtures in the flammable range, shall comply with Sections 5706.8.1 through 5706.8.5.

Exceptions:

1. Marine systems complying with federal transportation waterway regulations such as DOTn 33 CFR Parts 154 through 156, and CGR 46 CFR Parts 30, 32, 35 and 39.
2. Motor fuel-dispensing facility systems complying with Chapter 23.

5706.8.1 Over-pressure/vacuum protection. Tanks and equipment shall have independent venting for over-pressure or vacuum conditions that might occur from malfunction of the vapor recovery or processing system.

Exception: For tanks, venting shall comply with Section 5704.2.7.3.

5706.8.2 Vent location. Vents on vapor-processing equipment shall be not less than 12 feet (3658 mm) from adjacent ground level, with outlets located and directed so that flammable vapors will disperse to below the lower flammable limit (LFL) before reaching locations containing potential ignition sources.

5706.8.3 Vapor collection systems and overfill protection. The design and operation of the vapor collection system and overfill protection shall be in accordance with this section and Section 19.5 of NFPA 30.

5706.8.4 Liquid-level monitoring. A liquid knock-out vessel used in the vapor collection system shall have means to verify the liquid level and a high-liquid-level sensor that activates an alarm. For unpopulated facilities, the high-liquid-level sensor shall initiate the shutdown of liquid transfer into the vessel and shutdown of vapor recovery or vapor-processing systems.

5706.8.5 Overfill protection. Storage tanks served by vapor recovery or processing systems shall be equipped with overfill protection in accordance with Section 5704.2.7.5.8.

[NY] SECTION 5707
RESERVED

INTERNATIONAL CODE COUNCIL®
Copyright © 2019 ICC & NYSDOS. ALL RIGHTS RESERVED. Accessed by Lauren Gualdino (lgualdino@briarcliffmanor.org), (-) Order Number #100880972 on May 08, 2020 07:05 AM (PDT) pursuant to License Agreement with ICC & NYSDOS. No further reproduction, no

100880972

INTERNATIONAL CODE COUNCIL®
Copyright © 2019 ICC & NYSDOS. ALL RIGHTS RESERVED. Accessed by Lauren Gualdino (lgualdino@briarcliffmanor.org), (-) Order Number #100880972 on May 08, 2020 07:05 AM (PDT) pursuant to License Agreement with ICC & NYSDOS. No further reproduction, no

100880972

CHAPTER 58

FLAMMABLE GASES AND FLAMMABLE CRYOGENIC FLUIDS

SECTION 5801 GENERAL

5801.1 Scope. The storage and use of flammable gases and flammable *cryogenic fluids* shall be in accordance with this chapter, NFPA 2 and NFPA 55. *Compressed gases* shall also comply with Chapter 53 and *cryogenic fluids* shall also comply with Chapter 55. Flammable *cryogenic fluids* shall comply with Section 5806. Hydrogen motor fuel-dispensing stations and repair garages and their associated above-ground hydrogen storage systems shall also be designed, constructed and maintained in accordance with Chapter 23.

Exceptions:

1. Gases used as refrigerants in refrigeration systems (see Section 605).
2. Liquefied petroleum gases and natural gases regulated by Chapter 61.
3. Fuel-gas systems and appliances regulated under the *Fuel Gas Code of New York State* other than gaseous hydrogen systems and appliances.
4. Pyrophoric gases in accordance with Chapter 64.

5801.2 Permits. Permits shall be required as set forth in Section 105.6.

SECTION 5802 DEFINITIONS

5802.1 Definitions. The following terms are defined in Chapter 2:

FLAMMABLE GAS.

FLAMMABLE LIQUEFIED GAS.

GAS DECTECTION SYSTEM.

GASEOUS HYDROGEN SYSTEM.

HYDROGEN FUEL GAS ROOM.

METAL HYDRIDE.

METAL HYDRIDE STORAGE SYSTEM.

SECTION 5803 GENERAL REQUIREMENTS

5803.1 Quantities not exceeding the maximum allowable quantity per control area. The storage and use of flammable gases in amounts not exceeding the *maximum allowable quantity per control area* indicated in Section 5003.1 shall be in accordance with Sections 5001, 5003, 5801 and 5803.

5803.1.1 Special limitations for indoor storage and use. Flammable gases shall not be stored or used in Group A, E, I or R occupancies or in offices in Group B occupancies.

Exceptions:

1. Cylinders of nonliquefied *compressed gases* not exceeding a capacity of 250 cubic feet (7.08 m^3) or liquefied gases not exceeding a capacity of 40 pounds (18 kg) each at *normal temperature and pressure (NTP)* used for maintenance purposes, patient care or operation of equipment.
2. Food service operations in accordance with Section 6103.2.1.7.
3. Hydrogen gas systems located in a hydrogen fuel gas room constructed in accordance with Section 421 of the *Building Code of New York State*.

5803.1.1.1 Medical gases. Medical gas system supply cylinders shall be located in medical gas storage rooms or gas cabinets as set forth in Section 5306.

5803.1.1.2 Aggregate quantity. The aggregate quantities of flammable gases used for maintenance purposes and operation of equipment shall not exceed the *maximum allowable quantity per control area* indicated in Table 5003.1.1(1).

5803.1.2 Storage containers. Cylinders and pressure vessels for flammable gases shall be designed, constructed, installed, tested and maintained in accordance with Chapter 53.

5803.1.3 Emergency shutoff. *Compressed gas* systems conveying flammable gases shall be provided with *approved* manual or automatic emergency shutoff valves that can be activated at each point of use and at each source.

5803.1.3.1 Shutoff at source. A manual or automatic fail-safe emergency shutoff valve shall be installed on supply piping at the cylinder or bulk source. Manual or automatic cylinder valves are allowed to be used as the required emergency shutoff valve where the source of supply is limited to unmanifolded cylinder sources.

5803.1.3.2 Shutoff at point of use. A manual or automatic emergency shutoff valve shall be installed on the supply piping at the point of use or at a point where the equipment using the gas is connected to the supply system.

5803.1.4 Ignition source control. Ignition sources in areas containing flammable gases in storage or in use shall be controlled in accordance with Section 5003.7.

Exception: Fuel gas systems connected to building service utilities in accordance with the *Fuel Gas Code of New York State*.

INTERNATIONAL CODE COUNCIL®
Copyright © 2019 ICC & NYSDOS. ALL RIGHTS RESERVED. Accessed by Lauren Gualdino (lgualdino@briarcliffmanor.org), (-) Order Number #100880972 on May 08, 2020 07:05 AM (PDT) pursuant to License Agreement with ICC & NYSDOS. No further reproduction, no

100880972

5803.1.4.1 Static-producing equipment. Static-producing equipment located in flammable gas storage areas shall be grounded.

5803.1.4.2 Signs. "No Smoking" signs shall be posted at entrances to rooms and in areas containing flammable gases in accordance with Section 5003.7.1.

5803.1.5 Electrical. Electrical wiring and equipment shall be installed and maintained in accordance with Section 604 and NFPA 70.

5803.1.5.1 Bonding of electrically conductive materials and equipment. Exposed noncurrent-carrying metal parts, including metal gas piping systems, that are part of flammable gas supply systems located in a hazardous (electrically classified) location shall be bonded to a grounded conductor in accordance with the provisions of NFPA 70.

5803.1.5.2 Static-producing equipment. Static-producing equipment located in flammable gas storage or use areas shall be grounded.

5803.1.6 Liquefied flammable gases and flammable gases in solution. Containers of liquefied flammable gases and flammable gases in solution shall be positioned in the upright position or positioned so that the pressure relief valve is in direct contact with the vapor space of the container.

Exceptions:

1. Containers of flammable gases in solution with a capacity of 1.3 gallons (5 L) or less.
2. Containers of flammable liquefied gases, with a capacity not exceeding 1.3 gallons (5 L), designed to preclude the discharge of liquid from safety relief devices.

5803.2 Quantities exceeding the maximum allowable quantity per control area. The storage and use of flammable gases in amounts exceeding the *maximum allowable quantity per control area* indicated in Section 5003.1 shall be in accordance with Chapter 50 and this chapter.

SECTION 5804
STORAGE

5804.1 Indoor storage. Indoor storage of flammable gases in amounts exceeding the *maximum allowable quantity per control area* indicated in Table 5003.1.1(1), shall be in accordance with Sections 5001, 5003 and 5004, and this chapter.

5804.1.1 Explosion control. Buildings or portions thereof containing flammable gases shall be provided with explosion control in accordance with Section 911.

5804.2 Outdoor storage. Outdoor storage of flammable gases in amounts exceeding the *maximum allowable quantity per control area* indicated in Table 5003.1.1(3) shall be in accordance with Sections 5001, 5003 and 5004, and this chapter.

SECTION 5805
USE

5805.1 General. The use of flammable gases in amounts exceeding the *maximum allowable quantity per control area* indicated in Table 5003.1.1(1) or 5003.1.1(3) shall be in accordance with Sections 5001, 5003 and 5005, and this chapter.

SECTION 5806
FLAMMABLE CRYOGENIC FLUIDS

5806.1 General. The storage and use of flammable *cryogenic fluids* shall be in accordance with Sections 5806.2 through 5806.4.8.3 and Chapter 55.

5806.2 Limitations. Storage of flammable *cryogenic fluids* in stationary containers outside of buildings is prohibited within the limits established by law as the limits of districts in which such storage is prohibited.

5806.3 Above-ground tanks for liquid hydrogen. Above-ground tanks for the storage of liquid hydrogen shall be in accordance with Sections 5806.3.1 through 5806.3.2.1.

5806.3.1 Construction of the inner vessel. The inner vessel of storage tanks in liquid hydrogen service shall be designed and constructed in accordance with Section VIII, Division 1, of the ASME *Boiler and Pressure Vessel Code* and shall be vacuum jacketed in accordance with Section 5806.3.2.

5806.3.2 Construction of the vacuum jacket (outer vessel). The vacuum jacket used as an outer vessel for storage tanks in liquid hydrogen service shall be of welded steel construction designed to withstand the maximum internal and external pressure to which it will be subjected under operating conditions to include conditions of emergency pressure relief of the annular space between the inner and outer vessel. The jacket shall be designed to withstand a minimum collapsing pressure differential of 30 psi (207 kPa).

5806.3.2.1 Vacuum-level monitoring. A connection shall be provided on the exterior of the vacuum jacket to allow measurement of the pressure within the annular space between the inner and outer vessel. The connection shall be fitted with a bellows-sealed or diaphragm-type valve equipped with a vacuum gauge tube that is shielded to protect against damage from impact.

5806.4 Underground tanks for liquid hydrogen. Underground tanks for the storage of liquid hydrogen shall be in accordance with Sections 5806.4.1 through 5806.4.8.3.

5806.4.1 Construction. Storage tanks for liquid hydrogen shall be designed and constructed in accordance with ASME *Boiler and Pressure Vessel Code* (Section VIII, Division 1) and shall be vacuum jacketed in accordance with Section 5806.4.8.

5806.4.2 Location. Storage tanks shall be located outside in accordance with the following:

INTERNATIONAL CODE COUNCIL®
Copyright © 2019 ICC & NYSDOS. ALL RIGHTS RESERVED. Accessed by Lauren Gualdino (lgualdino@briarcliffmanor.org), (-) Order Number #100880972 on May 08, 2020 07:05 AM (PDT) pursuant to License Agreement with ICC & NYSDOS. No further reproduction, no

100880972

1. Tanks and associated equipment shall be located with respect to foundations and supports of other structures such that the loads carried by the latter cannot be transmitted to the tank.
2. The distance from any part of the tank to the nearest wall of a *basement*, pit, cellar or *lot line* shall be not less than 3 feet (914 mm).
3. A minimum distance of 1 foot (305 mm), shell to shell, shall be maintained between underground tanks.

5806.4.3 Depth, cover and fill. The tank shall be buried such that the top of the vacuum jacket is covered with not less than 1 foot (305 mm) of earth and with concrete not less than 4 inches (102 mm) thick placed over the earthen cover. The concrete shall extend not less than 1 foot (305 mm) horizontally beyond the footprint of the tank in all directions. Underground tanks shall be set on firm foundations constructed in accordance with the *Building Code of New York State* and surrounded with not less than 6 inches (152 mm) of noncorrosive inert material, such as sand.

Exception: The vertical extension of the vacuum jacket as required for service connections.

5806.4.4 Anchorage and security. Tanks and systems shall be secured against accidental dislodgement in accordance with this chapter.

5806.4.5 Venting of underground tanks. Vent pipes for underground storage tanks shall be in accordance with Section 5503.3.

5806.4.6 Underground liquid hydrogen piping. Underground liquid hydrogen piping shall be vacuum jacketed or protected by *approved* means and designed in accordance with Chapter 55.

5806.4.7 Overfill protection and prevention systems. An *approved* means or method shall be provided to prevent the overfill of all storage tanks.

5806.4.8 Vacuum jacket construction. The vacuum jacket shall be designed and constructed in accordance with Section VIII of ASME *Boiler and Pressure Vessel Code* and shall be designed to withstand the anticipated loading, including loading from vehicular traffic, where applicable. Portions of the vacuum jacket installed below grade shall be designed to withstand anticipated soil, seismic and hydrostatic loading.

5806.4.8.1 Material. The vacuum jacket shall be constructed of stainless steel or other *approved* corrosion-resistant material.

5806.4.8.2 Corrosion protection. The vacuum jacket shall be protected by *approved* or *listed* corrosion-resistant materials or an engineered cathodic protection system. Where cathodic protection is utilized, an *approved* maintenance schedule shall be established. Exposed components shall be inspected not less than twice a year. Records of maintenance and inspection events shall be maintained.

5806.4.8.3 Vacuum-level monitoring. An *approved* method shall be provided to indicate loss of vacuum within the vacuum jacket(s).

SECTION 5807
METAL HYDRIDE STORAGE SYSTEMS

5807.1 General requirements. The storage and use of metal hydride storage systems shall be in accordance with Sections 5801, 5803, 5804, 5805 and 5807. Those portions of the system that are used as a means to store or supply hydrogen shall also comply with Chapters 50 and 53 as applicable.

5807.1.1 Classification. The hazard classification of the metal hydride storage system, as required by Section 5001.2.2, shall be based on the hydrogen stored without regard to the metal hydride content.

5807.1.2 Listed or approved systems. Metal hydride storage systems shall be *listed* or *approved* for the application and designed in a manner that prevents the addition or removal of the metal hydride by other than the original equipment manufacturer.

5807.1.3 Containers, design and construction. *Compressed gas* containers, cylinders and tanks shall be designed and constructed in accordance with Section 5303.2.

5807.1.4 Service life and inspection of containers. Metal hydride storage system cylinders, containers or tanks shall be inspected, tested and requalified for service at not less than 5-year intervals.

5807.1.5 Marking and labeling. Marking and labeling of cylinders, containers, tanks and systems shall be in accordance with Section 5303.4 and Sections 5807.1.5.1 through 5807.1.5.4.

5807.1.5.1 System marking. Metal hydride storage systems shall be marked with all of the following:

1. Manufacturer's name.
2. Service life indicating the last date the system can be used.
3. A unique code or serial number specific to the unit.
4. System name or product code that identifies the system by the type of chemistry used in the system.
5. Emergency contact name, telephone number or other contact information.
6. Limitations on refilling of containers to include rated charging pressure and capacity.

5807.1.5.2 Valve marking. Metal hydride storage system valves shall be marked with all of the following:

1. Manufacturer's name.
2. Service life indicating the last date the valve can be used.

INTERNATIONAL CODE COUNCIL®
Copyright © 2019 ICC & NYSDOS. ALL RIGHTS RESERVED. Accessed by Lauren Gualdino (lgualdino@briarcliffmanor.org), (-) Order Number #100880972 on May 08, 2020 07:05 AM (PDT) pursuant to License Agreement with ICC & NYSDOS. No further reproduction, no

100880972

3. Metal hydride service in which the valve can be used, or a product code that is traceable to this information.

5807.1.5.3 Pressure relief device marking. Metal hydride storage system pressure relief devices shall be marked with all of the following:

1. Manufacturer's name.
2. Metal hydride service in which the device can be used, or a product code that is traceable to this information.
3. Activation parameters to include temperature, pressure or both.

5807.1.5.3.1 Pressure relief devices integral to container valves. The required markings for pressure relief devices that are integral components of valves used on cylinders, containers and tanks shall be allowed to be placed on the valve.

5807.1.5.4 Pressure vessel markings. Cylinders, containers and tanks used in metal hydride storage systems shall be marked with all of the following:

1. Manufacturer's name.
2. Design specification to which the vessel was manufactured.
3. Authorized body approving the design and initial inspection and test of the vessel.
4. Manufacturer's original test date.
5. Unique serial number for the vessel.
6. Service life identifying the last date the vessel can be used.
7. System name or product code that identifies the system by the type of chemistry used in the system.

5807.1.6 Temperature extremes. Metal hydride storage systems, whether full or partially full, shall not be exposed to artificially created high temperatures exceeding 125°F (52°C) or subambient (low) temperatures unless designed for use under the exposed conditions.

5807.1.7 Falling objects. Metal hydride storage systems shall not be placed in areas where they are capable of being damaged by falling objects.

5807.1.8 Piping systems. Piping, including tubing, valves, fittings and pressure regulators, serving metal hydride storage systems, shall be maintained gas tight to prevent leakage.

5807.1.8.1 Leaking systems. Leaking systems shall be removed from service.

5807.1.9 Refilling of containers. The refilling of *listed* or *approved* metal hydride storage systems shall be in accordance with the listing requirements and manufacturer's instructions.

5807.1.9.1 Industrial trucks. The refilling of metal hydride storage systems serving powered industrial trucks shall be in accordance with Section 309.

5807.1.9.2 Hydrogen purity. The purity of hydrogen used for the purpose of refilling containers shall be in accordance with the listing and the manufacturer's instructions.

5807.1.10 Electrical. Electrical components for metal hydride storage systems shall be designed, constructed and installed in accordance with NFPA 70.

5807.2 Portable containers or systems. Portable containers or systems shall comply with Sections 5807.2.1 through 5807.2.2.

5807.2.1 Securing containers. Containers, cylinders and tanks shall be secured in accordance with Section 5303.5.3.

5807.2.1.1 Use on mobile equipment. Where a metal hydride storage system is used on mobile equipment, the equipment shall be designed to restrain containers, cylinders or tanks from dislodgement, slipping or rotating when the equipment is in motion.

5807.2.1.2 Motorized equipment. Metal hydride storage systems used on motorized equipment, shall be installed in a manner that protects valves, pressure regulators, fittings and controls against accidental impact.

5807.2.1.2.1 Protection from damage. Metal hydride storage systems, including cylinders, containers, tanks and fittings, shall not extend beyond the platform of the mobile equipment.

5807.2.2 Valves. Valves on containers, cylinders and tanks shall remain closed except when containers are connected to *closed systems* and ready for use.

SECTION 5808
HYDROGEN FUEL GAS ROOMS

5808.1 General. Where required by this code, hydrogen fuel gas rooms shall be designed and constructed in accordance with Sections 5808.1 through 5808.7 and the *Building Code of New York State*.

5808.2 Location. Hydrogen fuel gas rooms shall not be located below grade.

5808.3 Design and construction. Hydrogen fuel gas rooms not exceeding the *maximum allowable quantity per control area* in Table 5003.1.1(1) shall be separated from other areas of the building in accordance with Section 509.1 of the *Building Code of New York State*.

5808.3.1 Pressure control. Hydrogen fuel gas rooms shall be provided with a ventilation system designed to maintain the room at a negative pressure in relation to surrounding rooms and spaces.

5808.3.2 Windows. Operable windows in interior walls shall not be permitted. Fixed windows shall be permitted where in accordance with Section 716 of the *Building Code of New York State*.

5808.4 Exhaust ventilation. Hydrogen fuel gas rooms shall be provided with mechanical exhaust ventilation in accordance with the applicable provisions of Section 2311.8.2.

INTERNATIONAL CODE COUNCIL®
Copyright © 2019 ICC & NYSDOS. ALL RIGHTS RESERVED. Accessed by Lauren Gualdino (lgualdino@briarcliffmanor.org), (-) Order Number #100880972 on May 08, 2020 07:05 AM (PDT) pursuant to License Agreement with ICC & NYSDOS. No further reproduction, no

100880972

5808.5 Gas detection system. Hydrogen fuel gas rooms shall be provided with a gas detection system that complies with Sections 916, 5808.5.1 and 5808.5.2.

5808.5.1 System activation. Activation of a gas detection system alarm shall result in both of the following:

1. Initiation of distinct audible and visible alarm signals both inside and outside of the hydrogen fuel gas room.
2. Automatic activation of the mechanical exhaust ventilation system.

5808.5.2 Failure of the gas detection system. Failure of the gas detection system shall automatically activate the mechanical exhaust ventilation system, stop hydrogen generation and cause a trouble signal to sound at an *approved* location.

5808.6 Explosion control. Explosion control shall be provided where required by Section 911.

5808.7 Standby power. Mechanical ventilation and gas detection systems shall be connected to a standby power system in accordance with Section 1203.

INTERNATIONAL CODE COUNCIL®
Copyright © 2019 ICC & NYSDOS. ALL RIGHTS RESERVED. Accessed by Lauren Gualdino (lgualdino@briarcliffmanor.org), (-) Order Number #100880972 on May 08, 2020 07:05 AM (PDT) pursuant to License Agreement with ICC & NYSDOS. No further reproduction, no

INTERNATIONAL CODE COUNCIL®
Copyright © 2019 ICC & NYSDOS. ALL RIGHTS RESERVED. Accessed by Lauren Gualdino (lgualdino@briarcliffmanor.org), (-) Order Number #100880972 on May 08, 2020 07:05 AM (PDT) pursuant to License Agreement with ICC & NYSDOS. No further reproduction, no

100880972

CHAPTER 59
FLAMMABLE SOLIDS

SECTION 5901
GENERAL

5901.1 Scope. The storage and use of flammable solids shall be in accordance with this chapter.

5901.2 Permits. Permits shall be required as set forth in Section 105.6.

SECTION 5902
DEFINITIONS

5902.1 Definitions. The following terms are defined in Chapter 2:

FLAMMABLE SOLID.

MAGNESIUM.

SECTION 5903
GENERAL REQUIREMENTS

5903.1 Quantities not exceeding the maximum allowable quantity per control area. The storage and use of flammable solids in amounts not exceeding the *maximum allowable quantity per control area* as indicated in Section 5003.1 shall be in accordance with Sections 5001, 5003 and 5901.

5903.2 Quantities exceeding the maximum allowable quantity per control area. The storage and use of flammable solids exceeding the *maximum allowable quantity per control area* as indicated in Section 5003.1 shall be in accordance with Chapter 50 and this chapter.

SECTION 5904
STORAGE

5904.1 Indoor storage. Indoor storage of flammable solids in amounts exceeding the *maximum allowable quantity per control area* indicated in Table 5003.1.1(1) shall be in accordance with Sections 5001, 5003, 5004 and this chapter.

5904.1.1 Pile size limits and location. Flammable solids stored in quantities greater than 1,000 cubic feet (28 m^3) shall be separated into piles each not larger than 1,000 cubic feet (28 m^3).

5904.1.2 Aisles. Aisle widths between piles shall be not less than the height of the piles or 4 feet (1219 mm), whichever is greater.

5904.1.3 Basement storage. Flammable solids shall not be stored in *basements*.

5904.2 Outdoor storage. Outdoor storage of flammable solids in amounts exceeding the *maximum allowable quantities per control area* indicated in Table 5003.1.1(1) shall be in accordance with Sections 5001, 5003, 5004 and this chapter. Outdoor storage of magnesium shall be in accordance with Section 5906.

5904.2.1 Distance from storage to exposures. Outdoor storage of flammable solids shall not be located within 20 feet (6096 mm) of a building, *lot line*, public street, public alley, *public way* or *means of egress*. A 2-hour *fire barrier* without openings or penetrations and extending 30 inches (762 mm) above and to the sides of the storage area is allowed in lieu of such distance. The wall shall either be an independent structure, or the *exterior wall* of the building adjacent to the storage area.

5904.2.2 Pile size limits. Outdoor storage of flammable solids shall be separated into piles not larger than 5,000 cubic feet (141 m^3) each. Piles shall be separated by aisles with a minimum width of not less than one-half the pile height or 10 feet (3048 mm), whichever is greater.

SECTION 5905
USE

5905.1 General. The use of flammable solids in amounts exceeding the *maximum allowable quantity per control area* indicated in Table 5003.1.1(1) or 5003.1.1(3) shall be in accordance with Sections 5001, 5003, 5005 and this chapter. The use of magnesium shall be in accordance with Section 5906.

SECTION 5906
MAGNESIUM

5906.1 General. Storage, use, handling and processing of magnesium, including the pure metal and alloys of which the major part is magnesium, shall be in accordance with Chapter 50 and Sections 5906.2 through 5906.5.8.

5906.2 Storage of magnesium articles. The storage of magnesium shall comply with Sections 5906.2.1 through 5906.4.3.

5906.2.1 Storage of greater than 50 cubic feet. Magnesium storage in quantities greater than 50 cubic feet (1.4 m^3) shall be separated from storage of other materials that are either combustible or in combustible containers by aisles. Piles shall be separated by aisles with a minimum width of not less than the pile height.

5906.2.2 Storage of greater than 1,000 cubic feet. Magnesium storage in quantities greater than 1,000 cubic feet (28 m^3) shall be separated into piles not larger than 1,000 cubic feet (28 m^3) each. Piles shall be separated by aisles with a minimum width of not less than the pile height. Such storage shall not be located in nonsprinklered buildings of Type III, IV or V construction, as defined in the *Building Code of New York State*.

5906.2.3 Storage in combustible containers or within 30 feet of other combustibles. Where in nonsprinklered buildings of Type III, IV or V construction, as defined in

INTERNATIONAL CODE COUNCIL®
Copyright © 2019 ICC & NYSDOS. ALL RIGHTS RESERVED. Accessed by Lauren Gualdino (lgualdino@briarcliffmanor.org), (-) Order Number #100880972 on May 08, 2020 07:05 AM (PDT) pursuant to License Agreement with ICC & NYSDOS. No further reproduction, no

100880972

the *Building Code of New York State*, magnesium shall not be stored in combustible containers or within 30 feet (9144 mm) of other combustibles.

5906.2.4 Storage in foundries and processing plants. The size of storage piles of magnesium articles in foundries and processing plants shall not exceed 1,250 cubic feet (35 m^3). Piles shall be separated by aisles with a minimum width of not less than one-half the pile height.

5906.3 Storage of pigs, ingots and billets. The storage of magnesium pigs, ingots and billets shall comply with Sections 5906.3.1 and 5906.3.2.

5906.3.1 Indoor storage. Indoor storage of pigs, ingots and billets shall only be on floors of noncombustible construction. Piles shall not be larger than 500,000 pounds (226.8 metric tons) each. Piles shall be separated by aisles with a minimum width of not less than one-half the pile height.

5906.3.2 Outdoor storage. Outdoor storage of magnesium pigs, ingots and billets shall be in piles not exceeding 1,000,000 pounds (453.6 metric tons) each. Piles shall be separated by aisles with a minimum width of not less than one-half the pile height. Piles shall be separated from combustible materials or buildings on the same or adjoining property by a distance of not less than the height of the nearest pile.

5906.4 Storage of fine magnesium scrap. The storage of scrap magnesium shall comply with Sections 5906.4.1 through 5906.4.3.

5906.4.1 Separation. Magnesium fines shall be kept separate from other combustible materials.

5906.4.2 Storage of 50 to 1,000 cubic feet. Storage of fine magnesium scrap in quantities greater than 50 cubic feet (1.4 m^3) [six 55-gallon (208 L) steel drums] shall be separated from other occupancies by an open space of not less than 50 feet (15 240 mm) or by a *fire barrier* constructed in accordance with Section 707 of the *Building Code of New York State*.

5906.4.3 Storage of greater than 1,000 cubic feet. Storage of fine magnesium scrap in quantities greater than 1,000 cubic feet (28 m^3) shall be separated from all buildings other than those used for magnesium scrap recovery operations by a distance of not less than 100 feet (30 480 mm).

5906.5 Use of magnesium. The use of magnesium shall comply with Sections 5906.5.1 through 5906.5.8.

5906.5.1 Melting pots. Floors under and around melting pots shall be of noncombustible construction.

5906.5.2 Heat-treating ovens. *Approved* means shall be provided for control of magnesium fires in heat-treating ovens.

5906.5.3 Dust collection. Magnesium grinding, buffing and wire-brushing operations, other than rough finishing of castings, shall be provided with *approved* hoods or enclosures for dust collection that are connected to a liquid-precipitation type of separator that converts dust to sludge without contact (in a dry state) with any high-speed moving parts.

5906.5.3.1 Duct construction. Connecting ducts or suction tubes shall be completely grounded, as short as possible, and without bends. Ducts shall be fabricated and assembled with a smooth interior, with internal lap joints pointing in the direction of airflow and without unused capped side outlets, pockets or other dead-end spaces that allow an accumulation of dust.

5906.5.3.2 Independent dust separators. Each machine shall be equipped with an individual dust-separating unit.

Exceptions:

1. One separator is allowed to serve two dust-producing units on multiunit machines.
2. One separator is allowed to serve not more than four portable dust-producing units in a single enclosure or stand.

5906.5.4 Power supply interlock. Power supply to machines shall be interlocked with exhaust airflow, and liquid pressure level or flow. The interlock shall be designed to shut down the machine it serves when the dust removal or separator system is not operating properly.

5906.5.5 Electrical equipment. Electric wiring, fixtures and equipment in the immediate vicinity of and attached to dust-producing machines, including those used in connection with separator equipment, shall be of *approved* types and shall be *approved* for use in Class II, Division 1 hazardous locations in accordance with NFPA 70.

5906.5.6 Grounding. Equipment shall be securely grounded by permanent ground wires in accordance with NFPA 70.

5906.5.7 Fire-extinguishing materials. Fire-extinguishing materials shall be provided for every operator performing machining, grinding or other processing operation on magnesium in accordance with either of the following:

1. Within 30 feet (9144 mm), a supply of extinguishing materials in an *approved* container with a hand scoop or shovel for applying the material.
2. Within 75 feet (22 860 mm), a portable fire extinguisher complying with Section 906.

All extinguishing materials shall be *approved* for use on magnesium fires. Where extinguishing materials are stored in cabinets or other enclosed areas, the enclosures shall be openable without the use of a key or special knowledge.

5906.5.8 Collection of chips, turnings and fines. Chips, turnings and other fine magnesium scrap shall be collected from the pans or spaces under machines and from other places where they collect not less than once each working day. Such material shall be placed in a covered, vented steel container and removed to an *approved* location.

INTERNATIONAL CODE COUNCIL®
Copyright © 2019 ICC & NYSDOS. ALL RIGHTS RESERVED. Accessed by Lauren Gualdino (lgualdino@briarcliffmanor.org), (-) Order Number #100880972 on May 08, 2020 07:05 AM (PDT) pursuant to License Agreement with ICC & NYSDOS. No further reproduction, no

100880972

CHAPTER 60
HIGHLY TOXIC AND TOXIC MATERIALS

SECTION 6001
GENERAL

6001.1 Scope. The storage and use of highly toxic and toxic materials shall comply with this chapter. *Compressed gases* shall also comply with Chapter 53.

Exceptions:

1. Display and storage in Group M and storage in Group S occupancies complying with Section 5003.11.
2. Conditions involving pesticides or agricultural products as follows:
   - 2.1. Application and release of pesticide, agricultural products and materials intended for use in weed abatement, erosion control, soil amendment or similar applications when applied in accordance with the manufacturer's instruction and label directions.
   - 2.2. Transportation of pesticides in compliance with the Federal Hazardous Materials Transportation Act and regulations thereunder.
   - 2.3. Storage in *dwellings* or private garages of pesticides registered by the U.S. Environmental Protection Agency to be utilized in and around the home, garden, pool, spa and patio.

6001.2 Permits. Permits shall be required as set forth in Section 105.6.

SECTION 6002
DEFINITIONS

6002.1 Definitions. The following terms are defined in Chapter 2:

CONTAINMENT SYSTEM.

CONTAINMENT VESSEL.

EXCESS FLOW VALVE.

HIGHLY TOXIC.

OZONE-GAS GENERATOR.

PHYSIOLOGICAL WARNING THRESHOLD.

REDUCED FLOW VALVE.

TOXIC.

SECTION 6003
HIGHLY TOXIC AND TOXIC SOLIDS AND LIQUIDS

6003.1 Indoor storage and use. The indoor storage and use of highly toxic and toxic materials shall comply with Sections 6003.1.1 through 6003.1.5.3.

6003.1.1 Quantities not exceeding the maximum allowable quantity per control area. The indoor storage or use of highly toxic and toxic solids or liquids in amounts not exceeding the *maximum allowable quantity per control area* indicated in Table 5003.1.1(2) shall be in accordance with Sections 5001, 5003 and 6001.

6003.1.2 Quantities exceeding the maximum allowable quantity per control area. The indoor storage or use of highly toxic and toxic solids or liquids in amounts exceeding the *maximum allowable quantity per control area* set forth in Table 5003.1.1(2) shall be in accordance with Section 6001, Sections 6003.1.3 through 6003.1.5.3 and Chapter 50.

6003.1.3 Treatment system—highly toxic liquids. Exhaust scrubbers or other systems for processing vapors of highly toxic liquids shall be provided where a spill or accidental release of such liquids can be expected to release highly toxic vapors at *normal temperature and pressure*. Treatment systems and other processing systems shall be installed in accordance with the *Mechanical Code of New York State*.

6003.1.4 Indoor storage. Indoor storage of highly toxic and toxic solids and liquids shall comply with Sections 6003.1.4.1 and 6003.1.4.2.

6003.1.4.1 Floors. In addition to the requirements set forth in Section 5004.12, floors of storage areas where highly toxic and toxic liquids are stored shall be of liquid-tight construction.

6003.1.4.2 Separation—highly toxic solids and liquids. In addition to the requirements set forth in Section 5003.9.8, highly toxic solids and liquids in storage shall be located in *approved* hazardous material storage cabinets or isolated from other hazardous material storage by construction in accordance with the *Building Code of New York State*.

6003.1.5 Indoor use. Indoor use of highly toxic and toxic solids and liquids shall comply with Sections 6003.1.5.1 through 6003.1.5.3.

6003.1.5.1 Liquid transfer. Highly toxic and toxic liquids shall be transferred in accordance with Section 5005.1.10.

6003.1.5.2 Exhaust ventilation for open systems. Mechanical exhaust ventilation shall be provided for highly toxic and toxic liquids used in *open systems* in accordance with Section 5005.2.1.1.

Exception: Liquids that do not generate highly toxic or toxic fumes, mists or vapors.

6003.1.5.3 Exhaust ventilation for closed systems. Mechanical exhaust ventilation shall be provided for highly toxic and toxic liquids used in *closed systems* in accordance with Section 5005.2.2.1.

INTERNATIONAL CODE COUNCIL®
Copyright © 2019 ICC & NYSDOS. ALL RIGHTS RESERVED. Accessed by Lauren Gualdino (lgualdino@briarcliffmanor.org), (-) Order Number #100880972 on May 08, 2020 07:05 AM (PDT) pursuant to License Agreement with ICC & NYSDOS. No further reproduction, no

100880972

Exception: Liquids that do not generate highly toxic or toxic fumes, mists or vapors.

6003.2 Outdoor storage and use. Outdoor storage and use of highly toxic and toxic materials shall comply with Sections 6003.2.1 through 6003.2.6.

6003.2.1 Quantities not exceeding the maximum allowable quantity per control area. The outdoor storage or use of highly toxic and toxic solids or liquids in amounts not exceeding the *maximum allowable quantity per control area* indicated in Table 5003.1.1(4) shall be in accordance with Sections 5001, 5003 and 6001.

6003.2.2 Quantities exceeding the maximum allowable quantity per control area. The outdoor storage or use of highly toxic and toxic solids or liquids in amounts exceeding the *maximum allowable quantity per control area* set forth in Table 5003.1.1(4) shall be in accordance with Sections 6001 and 6003.2 and Chapter 50.

6003.2.3 General outdoor requirements. The general requirements applicable to the outdoor storage of highly toxic or toxic solids and liquids shall be in accordance with Sections 6003.2.3.1 and 6003.2.3.2.

6003.2.3.1 Location. Outdoor storage or use of highly toxic or toxic solids and liquids shall not be located within 20 feet (6096 mm) of *lot lines*, public streets, public alleys, *public ways*, *exit discharges* or *exterior wall* openings. A 2-hour *fire barrier* without openings or penetrations extending not less than 30 inches (762 mm) above and to the sides of the storage is allowed in lieu of such distance. The wall shall either be an independent structure, or the exterior wall of the building adjacent to the storage area.

6003.2.3.2 Treatment system—highly toxic liquids. Exhaust scrubbers or other systems for processing vapors of highly toxic liquid shall be provided where a spill or accidental release of such liquids can be expected to release highly toxic vapors at *normal temperature and pressure (NTP)*. Treatment systems and other processing systems shall be installed in accordance with the *Mechanical Code of New York State*.

6003.2.4 Outdoor storage piles. Outdoor storage piles of highly toxic and toxic solids and liquids shall be separated into piles not larger than 2,500 cubic feet (71 m^3). Aisle widths between piles shall be not less than one-half the height of the pile or 10 feet (3048 mm), whichever is greater.

6003.2.5 Weather protection for highly toxic liquids and solids—outdoor storage or use. Where overhead weather protection is provided for outdoor storage or use of highly toxic liquids or solids, and the weather protection is attached to a building, the storage or use area shall either be equipped throughout with an *approved automatic sprinkler system* in accordance with Section 903.3.1.1, or storage or use vessels shall be fire resistive. Weather protection shall be provided in accordance with Section 5004.13 for storage and Section 5005.3.9 for use.

6003.2.6 Outdoor liquid transfer. Highly toxic and toxic liquids shall be transferred in accordance with Section 5005.1.10.

SECTION 6004
HIGHLY TOXIC AND TOXIC COMPRESSED GASES

6004.1 General. The storage and use of highly toxic and toxic *compressed gases* shall comply with this section.

6004.1.1 Special limitations for indoor storage and use by occupancy. The indoor storage and use of highly toxic and toxic *compressed gases* in certain occupancies shall be subject to the limitations contained in Sections 6004.1.1.1 through 6004.1.1.3.

6004.1.1.1 Group A, E, I or U occupancies. Toxic and highly toxic *compressed gases* shall not be stored or used within Group A, E, I or U occupancies.

Exception: Cylinders not exceeding 20 cubic feet (0.566 m^3) at *normal temperature and pressure (NTP)* are allowed within gas cabinets or fume hoods.

6004.1.1.2 Group R occupancies. Toxic and highly toxic *compressed gases* shall not be stored or used in Group R occupancies.

6004.1.1.3 Offices, retail sales and classrooms. Toxic and highly toxic *compressed gases* shall not be stored or used in offices, retail sales or classroom portions of Group B, F, M or S occupancies.

Exception: In classrooms of Group B occupancies, cylinders with a capacity not exceeding 20 cubic feet (0.566 m^3) at *NTP* are allowed in gas cabinets or fume hoods.

6004.1.2 Gas cabinets. Gas cabinets containing highly toxic or toxic *compressed gases* shall comply with Section 5003.8.6 and the following requirements:

1. The average ventilation velocity at the face of gas cabinet access ports or windows shall be not less than 200 feet per minute (1.02 m/s) with not less than 150 feet per minute (0.76 m/s) at any point of the access port or window.
2. Gas cabinets shall be connected to an exhaust system.
3. Gas cabinets shall not be used as the sole means of exhaust for any room or area.
4. The maximum number of cylinders located in a single gas cabinet shall not exceed three, except that cabinets containing cylinders not exceeding 1 pound (0.454 kg) net contents are allowed to contain up to 100 cylinders.
5. Gas cabinets required by Section 6004.2 or 6004.3 shall be equipped with an *approved automatic sprinkler system* in accordance with Section 903.3.1.1. Alternative fire-extinguishing systems shall not be used.

INTERNATIONAL CODE COUNCIL®
Copyright © 2019 ICC & NYSDOS. ALL RIGHTS RESERVED. Accessed by Lauren Gualdino (lgualdino@briarcliffmanor.org), (-) Order Number #100880972 on May 08, 2020 07:05 AM (PDT) pursuant to License Agreement with ICC & NYSDOS. No further reproduction, no

100880972

6004.1.3 Exhausted enclosures. Exhausted enclosures containing highly toxic or toxic *compressed gases* shall comply with Section 5003.8.5 and the following requirements:

1. The average ventilation velocity at the face of the enclosure shall be not less than 200 feet per minute (1.02 m/s) with not less than 150 feet per minute (0.76 m/s).
2. Exhausted enclosures shall be connected to an exhaust system.
3. Exhausted enclosures shall not be used as the sole means of exhaust for any room or area.
4. Exhausted enclosures required by Section 6004.2 or 6004.3 shall be equipped with an *approved automatic sprinkler system* in accordance with Section 903.3.1.1. Alternative fire-extinguishing systems shall not be used.

6004.2 Indoor storage and use. The indoor storage and use of highly toxic or toxic *compressed gases* shall be in accordance with Sections 6004.2.1 through 6004.2.2.10.3.

6004.2.1 Applicability. The applicability of regulations governing the indoor storage and use of highly toxic and toxic *compressed gases* shall be as set forth in Sections 6004.2.1.1 through 6004.2.1.3.

6004.2.1.1 Quantities not exceeding the maximum allowable quantity per control area. The indoor storage or use of highly toxic and toxic gases in amounts not exceeding the *maximum allowable quantity per control area* set forth in Table 5003.1.1(2) shall be in accordance with Sections 5001, 5003, 6001 and 6004.1.

6004.2.1.2 Quantities exceeding the maximum allowable quantity per control area. The indoor storage or use of highly toxic and toxic gases in amounts exceeding the *maximum allowable quantity per control area* set forth in Table 5003.1.1(2) shall be in accordance with Sections 6001, 6004.1, 6004.2 and Chapter 50.

6004.2.1.3 Ozone gas generators. The indoor use of ozone gas-generating equipment shall be in accordance with Section 6005.

6004.2.2 General indoor requirements. The general requirements applicable to the indoor storage and use of highly toxic and toxic *compressed gases* shall be in accordance with Sections 6004.2.2.1 through 6004.2.2.10.3.

6004.2.2.1 Cylinder and tank location. Cylinders shall be located within gas cabinets, exhausted enclosures or gas rooms. Portable and stationary tanks shall be located within gas rooms or exhausted enclosures.

6004.2.2.2 Ventilated areas. The room or area in which gas cabinets or exhausted enclosures are located shall be provided with exhaust ventilation. Gas cabinets or exhausted enclosures shall not be used as the sole means of exhaust for any room or area.

6004.2.2.3 Leaking cylinders and tanks. One or more gas cabinets or exhausted enclosures shall be provided to handle leaking cylinders, containers or tanks.

Exceptions:

1. Where cylinders, containers or tanks are located within gas cabinets or exhausted enclosures.
2. Where *approved* containment vessels or containment systems are provided in accordance with all of the following:
   2.1. Containment vessels or containment systems shall be capable of fully containing or terminating a release.
   2.2. Trained personnel shall be available at an *approved* location.
   2.3. Containment vessels or containment systems shall be capable of being transported to the leaking cylinder, container or tank.

6004.2.2.3.1 Location. Gas cabinets and exhausted enclosures shall be located in gas rooms and connected to an exhaust system.

6004.2.2.4 Local exhaust for portable tanks. A means of local exhaust shall be provided to capture leaks from portable tanks. The local exhaust shall consist of portable ducts or collection systems designed to be applied to the site of a leak in a valve or fitting on the tank. The local exhaust system shall be located in a gas room. Exhaust shall be directed to a treatment system in accordance with Section 6004.2.2.7.

6004.2.2.5 Piping and controls—stationary tanks. In addition to the requirements of Section 5003.2.2, piping and controls on stationary tanks shall comply with the following requirements:

1. Pressure relief devices shall be vented to a treatment system designed in accordance with Section 6004.2.2.7.

   Exception: Pressure relief devices on outdoor tanks provided exclusively for relieving pressure due to fire exposure are not required to be vented to a treatment system provided that:

   1. The material in the tank is not flammable.
   2. The tank is not located in a diked area with other tanks containing combustible materials.
   3. The tank is located not less than 30 feet (9144 mm) from combustible materials or structures or is shielded by a *fire barrier* complying with Section 6004.3.2.1.1.

2. Filling or dispensing connections shall be provided with a means of local exhaust. Such exhaust shall be designed to capture fumes and vapors. The exhaust shall be directed to a treatment system in accordance with Section 6004.2.2.7.

INTERNATIONAL CODE COUNCIL®
Copyright © 2019 ICC & NYSDOS. ALL RIGHTS RESERVED. Accessed by Lauren Gualdino (lgualdino@briarcliffmanor.org), (-) Order Number #100880972 on May 08, 2020 07:05 AM (PDT) pursuant to License Agreement with ICC & NYSDOS. No further reproduction, no

100880972

3. Stationary tanks shall be provided with a means of excess flow control on all tank inlet or outlet connections.

Exceptions:

1. Inlet connections designed to prevent backflow.
2. Pressure relief devices.

6004.2.2.6 Gas rooms. Gas rooms shall comply with Section 5003.8.4 and both of the following requirements:

1. The exhaust ventilation from gas rooms shall be directed to an exhaust system.
2. Gas rooms shall be equipped with an *approved automatic sprinkler system*. Alternative fire-extinguishing systems shall not be used.

6004.2.2.7 Treatment systems. The exhaust ventilation from gas cabinets, exhausted enclosures and gas rooms, and local exhaust systems required in Sections 6004.2.2.4 and 6004.2.2.5 shall be directed to a treatment system. The treatment system shall be utilized to handle the accidental release of gas and to process exhaust ventilation. The treatment system shall be designed in accordance with Sections 6004.2.2.7.1 through 6004.2.2.7.5 and Section 510 of the *Mechanical Code of New York State*.

Exceptions:

1. Highly toxic and toxic gases—storage. A treatment system is not required for cylinders, containers and tanks in storage where all of the following controls are provided:
   1.1. Valve outlets are equipped with gas-tight outlet plugs or caps.
   1.2. Handwheel-operated valves have handles secured to prevent movement.
   1.3. *Approved* containment vessels or containment systems are provided in accordance with Section 6004.2.2.3.
2. Toxic gases—use. Treatment systems are not required for toxic gases supplied by cylinders or portable tanks not exceeding 1,700 pounds (772 kg) water capacity where a gas detection system complying with Section 6004.2.2.10 and *listed* or *approved* automatic-closing fail-safe valves are provided. The gas detection system shall have a sensing interval not exceeding 5 minutes. Automatic-closing fail-safe valves shall be located immediately adjacent to cylinder valves and shall close when gas is detected at the permissible exposure limit (PEL) by a gas sensor monitoring the exhaust system at the point of discharge from the gas cabinet, exhausted enclosure, ventilated enclosure or gas room.

6004.2.2.7.1 Design. Treatment systems shall be capable of diluting, adsorbing, absorbing, containing, neutralizing, burning or otherwise processing the contents of the largest single vessel of compressed gas. Where a total containment system is used, the system shall be designed to handle the maximum anticipated pressure of release to the system when it reaches equilibrium.

6004.2.2.7.2 Performance. Treatment systems shall be designed to reduce the maximum allowable discharge concentrations of the gas to one-half immediate by dangerous to life and health (IDLH) at the point of discharge to the atmosphere. Where more than one gas is emitted to the treatment system, the treatment system shall be designed to handle the worst-case release based on the release rate, the quantity and the IDLH for all *compressed gases* stored or used.

6004.2.2.7.3 Sizing. Treatment systems shall be sized to process the maximum worst-case release of gas based on the maximum flow rate of release from the largest vessel utilized. The entire contents of the largest *compressed gas* vessel shall be considered.

6004.2.2.7.4 Stationary tanks. Stationary tanks shall be labeled with the maximum rate of release for the *compressed gas* contained based on valves or fittings that are inserted directly into the tank. Where multiple valves or fittings are provided, the maximum flow rate of release for valves or fittings with the highest flow rate shall be indicated. Where liquefied *compressed gases* are in contact with valves or fittings, the liquid flow rate shall be utilized for computation purposes. Flow rates indicated on the label shall be converted to cubic feet per minute (cfm/min) (m^3/s) of gas at *normal temperature and pressure (NTP).*

6004.2.2.7.5 Portable tanks and cylinders. The maximum flow rate of release for portable tanks and cylinders shall be calculated based on the total release from the cylinder or tank within the time specified in Table 6004.2.2.7.5. Where portable tanks or cylinders are equipped with *approved* excess flow or reduced flow valves, the worst-case release shall be determined by the maximum achievable flow from the valve as determined by the valve manufacturer or *compressed gas* supplier. Reduced flow and excess flow valves shall be permanently marked by the valve manufacturer to indicate the maximum design flow rate. Such markings shall indicate the flow rate for air under *normal temperature and pressure.*

TABLE 6004.2.2.7.5
RATE OF RELEASE FOR CYLINDERS AND PORTABLE TANKS

VESSEL TYPE	NONLIQUEFIED (minutes)	LIQUEFIED (minutes)
Containers	5	30
Portable tanks	40	240

INTERNATIONAL CODE COUNCIL®
Copyright © 2019 ICC & NYSDOS. ALL RIGHTS RESERVED. Accessed by Lauren Gualdino (lgualdino@briarcliffmanor.org), (-) Order Number #100880972 on May 08, 2020 07:05 AM (PDT) pursuant to License Agreement with ICC & NYSDOS. No further reproduction, no

100880972

6004.2.2.8 Emergency power. Emergency power shall be provided for the following systems in accordance with Section 1203:

1. Exhaust ventilation system.
2. Treatment system.
3. Gas detection system.
4. Smoke detection system.
5. Temperature control system.
6. Fire alarm system.
7. Emergency alarm system.

6004.2.2.8.1 Fail-safe engineered systems. Emergency power shall not be required for mechanical exhaust ventilation, treatment systems and temperature control systems where *approved* fail-safe engineered systems are installed.

6004.2.2.9 Automatic fire detection system—highly toxic compressed gases. An *approved* automatic fire detection system shall be installed in rooms or areas where highly toxic *compressed gases* are stored or used. Activation of the detection system shall sound a local alarm. The fire detection system shall comply with Section 907.

6004.2.2.10 Gas detection system. A gas detection system complying with Section 916 shall be provided to detect the presence of gas at or below the PEL or ceiling limit of the gas for which detection is provided. The system shall be capable of monitoring the discharge from the treatment system at or below one-half the IDLH limit and shall initiate a response in accordance with Sections 6004.2.2.10.1 through 6004.2.2.10.3 if the gas detection alarm is activated.

Exception: A gas detection system is not required for toxic gases when the physiological warning threshold level for the gas is at a level below the accepted PEL for the gas.

6004.2.2.10.1 Alarms. The gas detection system shall initiate a local alarm and transmit a signal to a constantly attended control station when a short-term hazard condition is detected. The alarm shall be both audible and visible and shall provide warning both inside and outside the area where gas is detected. The audible alarm shall be distinct from all other alarms.

Exception: Signal transmission to a constantly attended control station is not required where not more than one cylinder of highly toxic or toxic gas is stored.

6004.2.2.10.2 Shut off of gas supply. The gas-detection system shall automatically close the shut-off valve at the source on gas supply piping and tubing related to the system being monitored for whichever gas is detected.

Exception: Automatic shutdown is not required for reactors utilized for the production of highly toxic or toxic *compressed gases* where such reactors are:

1. Operated at pressures less than 15 pounds per square inch gauge (psig) (103.4 kPa).
2. Constantly attended.
3. Provided with emergency shutoff valves that have *ready access*.

6004.2.2.10.3 Valve closure. Automatic closure of shutoff valves shall be in accordance with the following:

1. Where the gas-detection sampling point initiating the gas detection system alarm is within a gas cabinet or exhausted enclosure, the shutoff valve in the gas cabinet or exhausted enclosure for the specific gas detected shall automatically close.
2. Where the gas-detection sampling point initiating the gas detection system alarm is within a gas room and *compressed gas* containers are not in gas cabinets or exhausted enclosures, the shutoff valves on all gas lines for the specific gas detected shall automatically close.
3. Where the gas-detection sampling point initiating the gas detection system alarm is within a piping distribution manifold enclosure, the shutoff valve for the compressed container of specific gas detected supplying the manifold shall automatically close.

Exception: Where the gas-detection sampling point initiating the gas-detection system alarm is at a use location or within a gas valve enclosure of a branch line downstream of a piping distribution manifold, the shutoff valve in the gas valve enclosure for the branch line located in the piping distribution manifold enclosure shall automatically close.

6004.3 Outdoor storage and use. The outdoor storage and use of highly toxic and toxic *compressed gases* shall be in accordance with Sections 6004.3.1 through 6004.3.4.

6004.3.1 Applicability. The applicability of regulations governing the outdoor storage and use of highly toxic and toxic *compressed gases* shall be as set forth in Sections 6004.3.1.1 through 6004.3.1.3.

6004.3.1.1 Quantities not exceeding the maximum allowable quantity per control area. The outdoor storage or use of highly toxic and toxic gases in amounts not exceeding the *maximum allowable quantity per control area* set forth in Table 5003.1.1(4) shall be in accordance with Sections 5001, 5003 and 6001.

6004.3.1.2 Quantities exceeding the maximum allowable quantity per control area. The outdoor storage or use of highly toxic and toxic gases in amounts exceeding the *maximum allowable quantity per control area* set forth in Table 5003.1.1(4) shall be in accordance with Sections 6001 and 6004.3 and Chapter 50.

INTERNATIONAL CODE COUNCIL®
Copyright © 2019 ICC & NYSDOS. ALL RIGHTS RESERVED. Accessed by Lauren Gualdino (lgualdino@briarcliffmanor.org), (-) Order Number #100880972 on May 08, 2020 07:05 AM (PDT) pursuant to License Agreement with ICC & NYSDOS. No further reproduction, no

100880972

6004.3.1.3 Ozone gas generators. The outdoor use of ozone gas-generating equipment shall be in accordance with Section 6005.

6004.3.2 General outdoor requirements. The general requirements applicable to the outdoor storage and use of highly toxic and toxic *compressed gases* shall be in accordance with Sections 6004.3.2.1 through 6004.3.2.4.

6004.3.2.1 Location. Outdoor storage or use of highly toxic or toxic *compressed gases* shall be located in accordance with Sections 6004.3.2.1.1 through 6004.3.2.1.3.

Exception: *Compressed gases* located in gas cabinets complying with Sections 5003.8.6 and 6004.1.2 and located 5 feet (1524 mm) or more from buildings and 25 feet (7620 mm) or more from an *exit discharge*.

6004.3.2.1.1 Distance limitation to exposures. Outdoor storage or use of highly toxic or toxic *compressed gases* shall not be located within 75 feet (22 860 mm) of a *lot line*, public street, public alley, *public way*, *exit discharge* or building not associated with the manufacture or distribution of such gases, unless all of the following conditions are met:

1. Storage is shielded by a 2-hour *fire barrier* that interrupts the line of sight between the storage and the exposure.
2. The 2-hour *fire barrier* shall be located not less than 5 feet (1524 mm) from any exposure.
3. The 2-hour *fire barrier* shall not have more than two sides at approximately 90-degree (1.57 rad) directions, or three sides with connecting angles of approximately 135 degrees (2.36 rad).

6004.3.2.1.2 Openings in exposed buildings. Where the storage or use area is located closer than 75 feet (22 860 mm) to a building not associated with the manufacture or distribution of highly toxic or toxic *compressed gases*, openings into a building other than for piping are not allowed above the height of the top of the 2-hour *fire barrier* or within 50 feet (15 240 mm) horizontally from the storage area whether or not shielded by a *fire barrier*.

6004.3.2.1.3 Air intakes. The storage or use area shall not be located within 75 feet (22 860 mm) of air intakes.

6004.3.2.2 Leaking cylinders and tanks. The requirements of Section 6004.2.2.3 shall apply to outdoor cylinders and tanks. Gas cabinets and exhausted enclosures shall be located within or immediately adjacent to outdoor storage or use areas.

6004.3.2.3 Local exhaust for portable tanks. Local exhaust for outdoor portable tanks shall be provided in accordance with the requirements set forth in Section 6004.2.2.4.

6004.3.2.4 Piping and controls—stationary tanks. Piping and controls for outdoor stationary tanks shall be in accordance with the requirements set forth in Section 6004.2.2.5.

6004.3.3 Outdoor storage weather protection for portable tanks and cylinders. Weather protection in accordance with Section 5004.13 shall be provided for portable tanks and cylinders located outdoors and not within gas cabinets or exhausted enclosures. The storage area shall be equipped with an *approved automatic sprinkler system* in accordance with Section 903.3.1.1.

Exception: An *automatic sprinkler system* is not required where:

1. All materials under the weather protection structure, including hazardous materials and the containers in which they are stored, are noncombustible.
2. The weather protection structure is located not less than 30 feet (9144 mm) from combustible materials or structures or is separated from such materials or structures using a *fire barrier* complying with Section 6004.3.2.1.1.

6004.3.4 Outdoor use of cylinders, containers and portable tanks. Cylinders, containers and portable tanks in outdoor use shall be located in gas cabinets or exhausted enclosures and shall comply with Sections 6004.3.4.1 through 6004.3.4.3.

6004.3.4.1 Treatment systems. The treatment system requirements set forth in Section 6004.2.2.7 shall apply to highly toxic or toxic gases located outdoors.

6004.3.4.2 Emergency power. The requirements for emergency power set forth in Section 6004.2.2.8 shall apply to highly toxic or toxic gases located outdoors.

6004.3.4.3 Gas detection system. The gas detection system requirements set forth in Section 6004.2.2.10 shall apply to highly toxic or toxic gases located outdoors.

SECTION 6005
OZONE GAS GENERATORS

6005.1 Scope. Ozone gas generators having a maximum ozone-generating capacity of 0.5 pound (0.23 kg) or more over a 24-hour period shall be in accordance with Sections 6005.2 through 6005.6.

Exceptions:

1. Ozone-generating equipment used in Group R-3 occupancies.
2. Ozone-generating equipment where used in Group H-5 occupancies where in compliance with Chapters 27 and 50 and the other provisions in this chapter for highly toxic gases.

6005.2 Design. Ozone gas generators shall be designed, fabricated and tested in accordance with NEMA 250.

INTERNATIONAL CODE COUNCIL®
Copyright © 2019 ICC & NYSDOS. ALL RIGHTS RESERVED. Accessed by Lauren Gualdino (lgualdino@briarcliffmanor.org), (-) Order Number #100880972 on May 08, 2020 07:05 AM (PDT) pursuant to License Agreement with ICC & NYSDOS. No further reproduction, no

100880972

6005.3 Location. Ozone generators shall be located in *approved* cabinets or ozone generator rooms in accordance with Section 6005.3.1 or 6005.3.2.

Exception: An ozone gas generator within an *approved* pressure vessel where located outside of buildings.

6005.3.1 Cabinets. Ozone cabinets shall be constructed of *approved* materials and compatible with ozone. Cabinets shall display an *approved* sign stating: OZONE GAS GENERATOR—HIGHLY TOXIC—OXIDIZER.

Cabinets shall be braced for seismic activity in accordance with the *Building Code of New York State*.

Cabinets shall be mechanically ventilated in accordance with the *Mechanical Code of New York State* with not less than six air changes per hour.

The average velocity of ventilation at makeup air openings with cabinet doors closed shall be not less than 200 feet per minute (1.02 m/s).

6005.3.2 Ozone gas generator rooms. Ozone gas generator rooms shall be mechanically ventilated in accordance with the *Mechanical Code of New York State* with not less than six air changes per hour. Ozone gas generator rooms shall be equipped with a gas detection system complying with Section 916 that will shut off the generator and sound a local alarm when concentrations above the permissible exposure limit (PEL) occur.

Ozone gas generator rooms shall not be normally occupied, and such rooms shall be kept free of combustible and hazardous material storage. Room access doors shall display an *approved* sign stating: OZONE GAS GENERATOR—HIGHLY TOXIC—OXIDIZER.

6005.4 Piping, valves and fittings. Piping, valves, fittings and related components used to convey ozone shall be in accordance with Sections 6005.4.1 through 6005.4.3.

6005.4.1 Piping. Piping shall be welded stainless steel piping or tubing.

Exceptions:

1. Double-walled piping.
2. Piping, valves, fittings and related components located in exhausted enclosures.

6005.4.2 Materials. Materials shall be compatible with ozone and shall be rated for the design operating pressures.

6005.4.3 Identification. Piping shall be identified with the following: OZONE GAS—HIGHLY TOXIC—OXIDIZER.

6005.5 Automatic shutdown. Ozone gas generators shall be designed to shut down automatically under the following conditions:

1. When the dissolved ozone concentration in the water being treated is above saturation when measured at the point where the water is exposed to the atmosphere.
2. When the process using generated ozone is shut down.
3. Failure of the ventilation system for the cabinet or ozone generator room.
4. Failure of the gas detection system in an ozone gas generator room.

6005.6 Manual shutdown. Manual shutdown controls shall be provided at the generator and, where in a room, within 10 feet (3048 mm) of the main *exit* or *exit access* door.

INTERNATIONAL CODE COUNCIL®
Copyright © 2019 ICC & NYSDOS. ALL RIGHTS RESERVED. Accessed by Lauren Gualdino (lgualdino@briarcliffmanor.org), (-) Order Number #100880972 on May 08, 2020 07:05 AM (PDT) pursuant to License Agreement with ICC & NYSDOS. No further reproduction, no

100880972

INTERNATIONAL CODE COUNCIL®
Copyright © 2019 ICC & NYSDOS. ALL RIGHTS RESERVED. Accessed by Lauren Gualdino (lgualdino@briarcliffmanor.org), (-) Order Number #100880972 on May 08, 2020 07:05 AM (PDT) pursuant to License Agreement with ICC & NYSDOS. No further reproduction, no

100880972

CHAPTER 61
LIQUEFIED PETROLEUM GASES

SECTION 6101
GENERAL

6101.1 Scope. Storage, handling and transportation of liquefied petroleum gas (LP-gas) and the installation of LP-gas equipment pertinent to systems for such uses shall comply with this chapter and NFPA 58. Properties of LP-gases shall be determined in accordance with Appendix B of NFPA 58.

[NY] 6101.2 Permits. Permits shall be required as set forth in Sections 105.2 and 105.6.

Distributors shall not fill an LP-gas container for which a permit is required unless a permit for installation has been issued for that location by the *fire code official*.

6101.3 Construction documents. Where a single LP-gas container is more than 2,000 gallons (7570 L) in water capacity or the aggregate water capacity of LP-gas containers is more than 4,000 gallons (15 140 L), the installer shall submit *construction documents* for such installation.

SECTION 6102
DEFINITIONS

6102.1 Definitions. The following terms are defined in Chapter 2:

LIQUEFIED PETROLEUM GAS (LP-gas).

LP-GAS CONTAINER.

SECTION 6103
INSTALLATION OF EQUIPMENT

6103.1 General. LP-gas equipment shall be installed in accordance with the *Fuel Gas Code of New York State* and NFPA 58, except as otherwise provided in this chapter.

6103.2 Use of LP-gas containers in buildings. The use of LP-gas containers in buildings shall be in accordance with Sections 6103.2.1 and 6103.2.2.

6103.2.1 Portable containers. Portable LP-gas containers, as defined in NFPA 58, shall not be used in buildings except as specified in NFPA 58 and Sections 6103.2.1.1 through 6103.2.1.7.

6103.2.1.1 Use in basement, pit or similar location. LP-gas containers shall not be used in a *basement*, pit or similar location where heavier-than-air gas might collect. LP-gas containers shall not be used in an above-grade underfloor space or *basement* unless such location is provided with an *approved* means of ventilation.

Exception: Use with self-contained torch assemblies in accordance with Section 6103.2.1.6.

6103.2.1.2 Construction and temporary heating. Portable LP-gas containers are allowed to be used in buildings or areas of buildings undergoing construction or for temporary heating as set forth in Sections 6.22.4, 6.22.5 and 6.22.8 of NFPA 58.

6103.2.1.3 Group F occupancies. In Group F occupancies, portable LP-gas containers are allowed to be used to supply quantities necessary for processing, research or experimentation. Where manifolded, the aggregate water capacity of such containers shall not exceed 735 pounds (334 kg) per manifold. Where multiple manifolds of such containers are present in the same room, each manifold shall be separated from other manifolds by a distance of not less than 20 feet (6096 mm).

6103.2.1.4 Research and experimentation. In Group I occupancies and laboratories for educational use in Group B and E occupancies, portable LP-gas containers are allowed to be used for research and experimentation. Such containers shall not be used in classrooms. Such containers shall not exceed a 50-pound (23 kg) water capacity in occupancies used for educational purposes and shall not exceed a 12-pound (5 kg) water capacity in occupancies used for institutional purposes. Where more than one such container is present in the same room, each container shall be separated from other containers by a distance of not less than 20 feet (6096 mm).

6103.2.1.5 Demonstration uses. Portable LP-gas containers are allowed to be used temporarily for demonstrations and public exhibitions. Such containers shall not exceed a water capacity of 12 pounds (5 kg). Where more than one such container is present in the same room, each container shall be separated from other containers by a distance of not less than 20 feet (6096 mm).

6103.2.1.6 Use with self-contained torch assemblies. Portable LP-gas containers are allowed to be used to supply *approved* self-contained torch assemblies or similar appliances. Such containers shall not exceed a water capacity of 2.7 pounds (1.2 kg).

6103.2.1.7 Use for food preparation. Where *approved*, *listed* LP-gas commercial food service appliances are allowed to be used for food-preparation within restaurants and in attended commercial food-catering operations in accordance with the *Fuel Gas Code of New York State,* the *Mechanical Code of New York State* and NFPA 58.

6103.2.2 Industrial vehicles and floor maintenance machines. LP-gas containers on industrial vehicles and floor maintenance machines shall comply with Sections 11.13 and 11.14 of NFPA 58.

6103.3 Location of equipment and piping. Equipment and piping shall not be installed in locations where such equip-

INTERNATIONAL CODE COUNCIL®
Copyright © 2019 ICC & NYSDOS. ALL RIGHTS RESERVED. Accessed by Lauren Gualdino (lgualdino@briarcliffmanor.org), (-) Order Number #100880972 on May 08, 2020 07:05 AM (PDT) pursuant to License Agreement with ICC & NYSDOS. No further reproduction, no

100880972

ment and piping is prohibited by the *Fuel Gas Code of New York State*.

SECTION 6104
LOCATION OF LP-GAS CONTAINERS

6104.1 General. The storage and handling of LP-gas and the installation and maintenance of related equipment shall comply with NFPA 58 and be subject to the approval of the *fire code official*, except as provided in this chapter.

[NY] 6104.2 Maximum capacity within established limits. Within the limits established by law restricting the storage of liquefied petroleum gas for the protection of heavily populated or congested areas, the aggregate capacity of any one installation shall not exceed a water capacity of 2,000 gallons (7570 L).

Exception: In particular installations, this capacity limit shall be determined by the *fire code official*, after consideration of special features such as topographical conditions, nature of occupancy, and proximity to buildings, capacity of proposed LP-gas containers, degree of fire protection to be provided and capabilities of the local fire department.

6104.3 Container location. LP-gas containers shall be located with respect to buildings and *lot lines* of adjoining property that can be built upon, in accordance with Table 6104.3.

6104.3.1 Installation on roof prohibited. LP-gas containers used in stationary installations shall not be located on the roofs of buildings.

6104.3.2 Special hazards. LP-gas containers shall be located with respect to special hazards including, but not limited to, above-ground flammable or *combustible liquid* tanks, oxygen or gaseous hydrogen containers, flooding or electric power lines as specified in Section 6.5.3 of NFPA 58.

6104.4 Multiple LP-gas container installations. Multiple LP-gas container installations with a total water storage capacity of more than 180,000 gallons (681 300 L) [150,000-gallon (567 750 L) LP-gas capacity] shall be subdivided into groups containing not more than 180,000 gallons (681 300 L) in each group. Such groups shall be separated by a distance of not less than 50 feet (15 240 mm), unless the containers are protected in accordance with one of the following:

1. Mounded in an *approved* manner.
2. Protected with *approved* insulation on areas that are subject to impingement of ignited gas from pipelines or other leakage.
3. Protected by fire walls of *approved* construction.
4. Protected by an *approved* system for application of water as specified in Table 6.5.1.2 of NFPA 58.
5. Protected by other *approved* means.

Where one of these forms of protection is provided, the separation shall be not less than 25 feet (7620 mm) between LP-gas container groups.

SECTION 6105
PROHIBITED USE OF LP-GAS

6105.1 Nonapproved equipment. LP-gas shall not be used for the purpose of operating devices or equipment unless such device or equipment is *approved* for use with LP-gas.

6105.2 Release to the atmosphere. LP-gas shall not be released to the atmosphere, except in accordance with Section 7.3 of NFPA 58.

SECTION 6106
DISPENSING AND OVERFILLING

6106.1 Attendants. Dispensing of LP-gas shall be performed by a qualified attendant.

6106.2 Overfilling. LP-gas containers shall not be filled or maintained with LP-gas in excess of either the volume determined using the fixed liquid-level gauge installed in accordance with the manufacturer's specifications and in accordance with Section 5.9.5 of NFPA 58 or the weight determined by the required percentage of the water capacity marked on the container. Portable LP-gas containers shall not be refilled unless equipped with an overfilling prevention device (OPD) where required by Section 5.9.3 of NFPA 58.

6106.3 Dispensing locations. The point of transfer of LP-gas from one LP-gas container to another shall be separated from exposures as specified in NFPA 58.

SECTION 6107
SAFETY PRECAUTIONS AND DEVICES

6107.1 Safety devices. Safety devices on LP-gas containers, equipment and systems shall not be tampered with or made ineffective.

6107.2 Smoking and other sources of ignition. "No Smoking" signs complying with Section 310 shall be posted where required by the *fire code official.* Smoking within 25 feet (7620 mm) of a point of transfer, while filling operations are in progress at LP-gas containers or vehicles, shall be prohibited.

Control of other sources of ignition shall comply with Chapter 3 of this code and Section 6.25 of NFPA 58.

6107.3 Clearance to combustibles. Weeds, grass, brush, trash and other combustible materials shall be kept not less than 10 feet (3048 mm) from LP-gas tanks or containers.

6107.4 Protecting containers from vehicles. Where exposed to vehicular damage due to proximity to alleys, driveways or parking areas, LP-gas containers, regulators and piping shall be protected in accordance with NFPA 58.

SECTION 6108
FIRE PROTECTION

6108.1 General. Fire protection shall be provided for installations having LP-gas storage containers with a water capacity of more than 4,000 gallons (15 140 L), as required by Section 6.29 of NFPA 58.

INTERNATIONAL CODE COUNCIL®
Copyright © 2019 ICC & NYSDOS. ALL RIGHTS RESERVED. Accessed by Lauren Gualdino (lgualdino@briarcliffmanor.org), (-) Order Number #100880972 on May 08, 2020 07:05 AM (PDT) pursuant to License Agreement with ICC & NYSDOS. No further reproduction, no

100880972

6108.2 Portable fire extinguishers. Portable fire extinguishers complying with Section 906 shall be provided as specified in NFPA 58.

SECTION 6109
STORAGE OF PORTABLE LP-GAS CONTAINERS AWAITING USE OR RESALE

6109.1 General. Storage of portable LP-gas containers of 1,000 pounds (454 kg) or less, whether filled, partially filled or empty, at consumer sites or distribution points, and for resale by dealers or resellers shall comply with Sections 6109.2 through 6109.15.1.

Exceptions:

1. LP-gas containers that have not previously been in LP-gas service.
2. LP-gas containers at distribution plants.
3. LP-gas containers at consumer sites or distribution points, which are connected for use.

TABLE 6104.3
LOCATION OF LP-GAS CONTAINERS

LP-GAS CONTAINER CAPACITY (water gallons)	MINIMUM SEPARATION BETWEEN LP-GAS CONTAINERS AND BUILDINGS, PUBLIC WAYS[g] OR LOT LINES OF ADJOINING PROPERTY THAT CAN BE BUILT UPON		MINIMUM SEPARATION BETWEEN LP-GAS CONTAINERS[b, c] (feet)
	Mounded or underground LP-gas containers[a] (feet)	Above-ground LP-gas containers[b] (feet)	
Less than 125[c, d]	10	5[e]	None
125 to 250	10	10	None
251 to 500	10	10	3
501 to 2,000	10	25[e, f]	3
2,001 to 30,000	50	50	5
30,001 to 70,000	50	75	(0.25 of sum of diameters of adjacent LP-gas containers)
70,001 to 90,000	50	100	
90,001 to 120,000	50	125	

For SI: 1 foot = 304.8 mm, 1 gallon = 3.785 L.

a. Minimum distance for underground LP-gas containers shall be measured from the pressure relief device and the filling or liquid-level gauge vent connection at the container, except that all parts of an underground LP-gas container shall be not less than 10 feet from a building or lot line of adjoining property that can be built upon.

b. For other than installations in which the overhanging structure is 50 feet or more above the relief-valve discharge outlet. In applying the distance between buildings and ASME LP-gas containers with a water capacity of 125 gallons or more, not less than 50 percent of this horizontal distance shall also apply to all portions of the building that project more than 5 feet from the building wall and that are higher than the relief valve discharge outlet. This horizontal distance shall be measured from a point determined by projecting the outside edge of such overhanging structure vertically downward to grade or other level on which the LP-gas container is installed. Distances to the building wall shall be not less than those prescribed in this table.

c. Where underground multicontainer installations are composed of individual LP-gas containers having a water capacity of 125 gallons or more, such containers shall be installed so as to provide access at their ends or sides to facilitate working with cranes or hoists.

d. At a consumer site, if the aggregate water capacity of a multiple-container installation, comprised of individual LP-gas containers having a water capacity of less than 125 gallons, is 500 gallons or more, the minimum distance shall comply with the appropriate portion of this table, applying the aggregate capacity rather than the capacity per LP-gas container. If more than one such installation is made, each installation shall be separated from other installations by not less than 25 feet. Minimum distances between LP-gas containers need not be applied.

e. The following shall apply to above-ground containers installed alongside buildings:
   1. LP-gas containers of less than a 125-gallon water capacity are allowed without a separation distance where in compliance with Items 2, 3 and 4.
   2. Department of Transportation (DOTn) specification LP-gas containers shall be located and installed so that the discharge from the container pressure relief device is not less than 3 feet horizontally from building openings below the level of such discharge and shall not be beneath buildings unless the space is well ventilated to the outside and is not enclosed for more than 50 percent of its perimeter. The discharge from LP-gas container pressure relief devices shall be located not less than 5 feet from exterior sources of ignition, openings into direct-vent (sealed combustion system) appliances or mechanical ventilation air intakes.
   3. ASME LP-gas containers of less than a 125-gallon water capacity shall be located and installed such that the discharge from pressure relief devices shall not terminate in or beneath buildings and shall be located not less than 5 feet horizontally from building openings below the level of such discharge and not less than 5 feet from exterior sources of ignition, openings into direct vent (sealed combustion system) appliances, or mechanical ventilation air intakes.
   4. The filling connection and the vent from liquid-level gauges on either DOTn or ASME LP-gas containers filled at the point of installation shall be not less than 10 feet from exterior sources of ignition, openings into direct vent (sealed combustion system) appliances or mechanical ventilation air intakes.

f. This distance is allowed to be reduced to not less than 10 feet for a single LP-gas container of 1,200-gallon water capacity or less, provided that such container is not less than 25 feet from other LP-gas containers of more than 125-gallon water capacity.

g. Above-ground LP-gas containers with a water capacity of 2,000 gallons or less shall be separated from public ways by a distance of not less than 5 feet. Containers with a water capacity greater than 2,000 gallons shall be separated from public ways in accordance with this table.

INTERNATIONAL CODE COUNCIL®
Copyright © 2019 ICC & NYSDOS. ALL RIGHTS RESERVED. Accessed by Lauren Gualdino (lgualdino@briarcliffmanor.org), (-) Order Number #100880972 on May 08, 2020 07:05 AM (PDT) pursuant to License Agreement with ICC & NYSDOS. No further reproduction, no

100880972

6109.2 Exposure hazards. LP-gas containers in storage shall be located in a manner that minimizes exposure to excessive temperature rise, physical damage or tampering.

6109.3 Position. LP-gas containers in storage having individual water capacity greater than 2.7 pounds (1.2 kg) [nominal 1-pound (0.454 kg) LP-gas capacity] shall be positioned with the pressure relief valve in direct communication with the vapor space of the container.

6109.4 Separation from means of egress. LP-gas containers stored in buildings in accordance with Sections 6109.9 and 6109.11 shall not be located near *exit access* doors, *exits*, *stairways* or in areas normally used, or intended to be used, as a *means of egress.*

6109.5 Quantity. Empty LP-gas containers that have been in LP-gas service shall be considered as full containers for the purpose of determining the maximum quantities of LP-gas allowed in Sections 6109.9 and 6109.11.

6109.6 Storage on roofs. LP-gas containers that are not connected for use shall not be stored on roofs.

6109.7 Storage in basement, pit or similar location. LP-gas containers shall not be stored in a *basement*, pit or similar location where heavier-than-air gas might collect. LP-gas containers shall not be stored in above-grade underfloor spaces or *basements* unless such location is provided with an *approved* means of ventilation.

Exception: Department of Transportation (DOTn) specification cylinders with a maximum water capacity of 2.7 pounds (1.2 kg) for use in completely self-contained hand torches and similar applications. The quantity of LP-gas shall not exceed 20 pounds (9 kg).

6109.8 Protection of valves on LP-gas containers in storage. LP-gas DOT cylinder valves shall be protected by screw-on-type caps or collars that shall be securely in place on all containers stored regardless of whether they are full, partially full or empty. Container and tank outlet valves shall be closed or plugged.

6109.9 Storage within buildings open to the public. Department of Transportation (DOTn) specification cylinders with maximum water capacity of 2.7 pounds (1.2 kg) used in completely self-contained hand torches and similar applications are allowed to be stored or displayed in a building open to the public. The quantity of LP-gas shall not exceed 200 pounds (91 kg) except as provided in Section 6109.11.

6109.10 Storage within buildings not open to the public. The maximum quantity allowed in one storage location in buildings not open to the public, such as industrial buildings, shall not exceed a water capacity of 735 pounds (334 kg) [nominal 300 pounds (136 kg) of LP-gas]. Where additional storage locations are required on the same floor within the same building, they shall be separated by not less than 300 feet (91 440 mm). Storage beyond these limitations shall comply with Section 6109.11.

6109.10.1 Quantities on equipment and vehicles. LP-gas containers carried as part of service equipment on highway mobile vehicles need not be considered in the total storage capacity in Section 6109.10, provided that such vehicles are stored in private garages and do not carry more than three LP-gas containers with a total aggregate LP-gas capacity not exceeding 100 pounds (45.4 kg) per vehicle. LP-gas container valves shall be closed.

6109.11 Storage within rooms used for gas manufacturing. Storage within buildings or rooms used for gas manufacturing, gas storage, gas-air mixing and vaporization, and compressors not associated with liquid transfer shall comply with Sections 6109.11.1 and 6109.11.2.

6109.11.1 Quantity limits. The maximum quantity of LP-gas shall be 10,000 pounds (4540 kg).

6109.11.2 Construction. The construction of such buildings and rooms shall comply with requirements for Group H occupancies in the *Building Code of New York State*, Chapter 10 of NFPA 58 and both of the following:

1. Adequate vents shall be provided to the outside at both top and bottom, located not less than 5 feet (1524 mm) from building openings.
2. The entire area shall be classified for the purposes of ignition source control in accordance with Section 6.25 of NFPA 58.

6109.12 Location of storage outside of buildings. Storage outside of buildings of LP-gas containers awaiting use, resale or part of a cylinder exchange program shall be located in accordance with Table 6109.12.

6109.13 Protection of containers. LP-gas containers shall be stored within a suitable enclosure or otherwise protected against tampering. Vehicle impact protection shall be provided as required by Section 6107.4.

Exception: Vehicle impact protection shall not be required for protection of LP-gas containers where the containers are kept in lockable, ventilated cabinets of metal construction.

6109.14 Alternative location and protection of storage. Where the provisions of Sections 6109.12 and 6109.13 are impractical at construction sites, or at buildings or structures undergoing major renovation or repairs, the storage of containers shall be as required by the *fire code official*.

6109.15 LP-gas cylinder exchange for resale. In addition to other applicable requirements of this chapter, facilities operating LP-gas cylinder exchange stations that are open to the public shall comply with the following requirements.

1. Cylinders shall be secured in a lockable, ventilated metal cabinet or other *approved* enclosure.
2. Cylinders shall be available only by authorized personnel or by use of an automated exchange system in accordance with Section 6109.15.1.
3. A sign shall be posted on the entry door of the business operating the cylinder exchange stating "DO NOT BRING LP-GAS CYLINDERS INTO THE BUILDING" or similar *approved* wording.
4. An emergency contact information sign shall be posted within 10 feet (3048 mm) of the cylinder storage cabinet. The content, lettering, size, color and location of the required sign shall be as required by the *fire code official*.

INTERNATIONAL CODE COUNCIL®
Copyright © 2019 ICC & NYSDOS. ALL RIGHTS RESERVED. Accessed by Lauren Gualdino (lgualdino@briarcliffmanor.org), (-) Order Number #100880972 on May 08, 2020 07:05 AM (PDT) pursuant to License Agreement with ICC & NYSDOS. No further reproduction, no

100880972

6109.15.1 Automated cylinder exchange stations. Cylinder exchange stations that include an automated vending system for exchanging cylinders shall comply with the following additional requirements:

1. The vending system shall only permit access to a single cylinder per individual transaction.
2. Cabinets storing cylinders shall be designed such that cylinders can only be placed inside when they are oriented in the upright position.
3. Devices operating door releases for access to stored cylinders shall be permitted to be pneumatic, mechanical or electrically powered.
4. Electrical equipment inside of or within 5 feet (1524 mm) of a cabinet storing cylinders, including but not limited to electronics associated with vending operations, shall comply with the requirements for Class I, Division 2 equipment in accordance with NFPA 70.
5. A manual override control shall be permitted for use by authorized personnel. On newly installed cylinder exchange stations, the vending system shall not be capable of returning to automatic operation after a manual override until the system has been inspected and reset by authorized personnel.
6. Inspections shall be conducted by authorized personnel to verify that all cylinders are secured, access doors are closed and the station has no visible damage or obvious defects that necessitate placing the station out of service. The frequency of inspections shall be as specified by the *fire code official*.

SECTION 6110
LP-GAS CONTAINERS NOT IN SERVICE

6110.1 Temporarily out of service. LP-gas containers whose use has been temporarily discontinued shall comply with all of the following:

1. Be disconnected from appliance piping.
2. Have LP-gas container outlets, except relief valves, closed or plugged.
3. Be positioned with the relief valve in direct communication with the LP-gas container vapor space.

6110.2 Permanently out of service. LP-gas containers to be placed permanently out of service shall be removed from the site.

SECTION 6111
PARKING AND GARAGING OF LP-GAS TANK VEHICLES

6111.1 General. Parking of LP-gas tank vehicles shall comply with Sections 6111.2 and 6111.3.

Exception: In cases of accident, breakdown or other emergencies, LP-gas tank vehicles are allowed to be parked and left unattended at any location while the operator is obtaining assistance.

6111.2 Unattended parking. The unattended parking of LP-gas tank vehicle shall be in accordance with Sections 6111.2.1 and 6111.2.2.

6111.2.1 Near residential, educational and institutional occupancies and other high-risk areas. LP-gas tank vehicles shall not be left unattended at any time on residential streets or within 500 feet (152 m) of a residential area, apartment or hotel complex, educational facility, hospital or care facility. Tank vehicles shall not be left unattended at any other place that would, in the opinion of the *fire code official*, pose an extreme life hazard.

6111.2.2 Durations exceeding 1 hour. LP-gas tank vehicles parked at any one point for longer than 1 hour shall be located as follows:

1. Off public streets, highways, public avenues or public alleys.
2. Inside of a bulk plant.
3. At other *approved* locations not less than 50 feet (15 240 mm) from buildings other than those

TABLE 6109.12
SEPARATION FROM EXPOSURES OF LP-GAS CONTAINERS AWAITING USE, RESALE OR EXCHANGE STORED OUTSIDE OF BUILDINGS

QUANTITY OF LP-GAS STORED (pounds)	MINIMUM SEPARATION DISTANCE FROM STORED LP-GAS CYLINDERS TO (feet):						
	Nearest important building or group of buildings or line of adjoining property that may be built upon	Line of adjoining property occupied by schools, places of religious worship, hospitals, athletic fields or other points of public gathering; busy thoroughfares; or sidewalks	LP-gas dispensing station	Doorway or opening to a building with two or more means of egress	Doorway or opening to a building with one means of egress	Combustible materials	Motor vehicle fuel dispenser
720 or less	0	0	5	5	10	10	20
721–2,500	0	10	10	5	10	10	20
2,501–6,000	10	10	10	10	10	10	20
6,001–10,000	20	20	20	20	20	10	20
Over 10,000	25	25	25	25	25	10	20

For SI: 1 foot = 304.8 mm, 1 pound = 0.454 kg.

INTERNATIONAL CODE COUNCIL®
Copyright © 2019 ICC & NYSDOS. ALL RIGHTS RESERVED. Accessed by Lauren Gualdino (lgualdino@briarcliffmanor.org), (-) Order Number #100880972 on May 08, 2020 07:05 AM (PDT) pursuant to License Agreement with ICC & NYSDOS. No further reproduction, no

100880972

approved for the storage or servicing of such vehicles.

6111.3 Garaging. Garaging of LP-gas tank vehicles shall be as specified in NFPA 58. Vehicles with LP-gas fuel systems are allowed to be stored or serviced in garages as specified in Section 11.16 of NFPA 58.

INTERNATIONAL CODE COUNCIL®
Copyright © 2019 ICC & NYSDOS. ALL RIGHTS RESERVED. Accessed by Lauren Gualdino (lgualdino@briarcliffmanor.org), (-) Order Number #100880972 on May 08, 2020 07:05 AM (PDT) pursuant to License Agreement with ICC & NYSDOS. No further reproduction, no

100880972

CHAPTER 62
ORGANIC PEROXIDES

SECTION 6201
GENERAL

6201.1 Scope. The storage and use of organic peroxides shall be in accordance with this chapter and Chapter 50.

Unclassified detonable organic peroxides that are capable of *detonation* in their normal shipping containers under conditions of fire exposure shall be stored in accordance with Chapter 56.

6201.2 Permits. Permits shall be required for organic peroxides as set forth in Section 105.6.

SECTION 6202
DEFINITION

6202.1 Definition. The following term is defined in Chapter 2:

ORGANIC PEROXIDE.
Class I.
Class II.
Class III.
Class IV.
Class V.
Unclassified detonable.

SECTION 6203
GENERAL REQUIREMENTS

6203.1 Quantities not exceeding the maximum allowable quantity per control area. The storage and use of organic peroxides in amounts not exceeding the *maximum allowable quantity per control area* indicated in Section 5003.1 shall be in accordance with Sections 5001, 5003, 6201 and 6203.

6203.1.1 Special limitations for indoor storage and use by occupancy. The indoor storage and use of organic peroxides shall be in accordance with Sections 6203.1.1.1 through 6203.1.1.4.

6203.1.1.1 Group A, E, I or U occupancies. In Group A, E, I or U occupancies, any amount of unclassified detonable and Class I organic peroxides shall be stored in accordance with the following:

1. Unclassified detonable and Class I organic peroxides shall be stored in hazardous materials storage cabinets complying with Section 5003.8.7.
2. The hazardous materials storage cabinets shall not contain other storage.

6203.1.1.2 Group R occupancies. Unclassified detonable and Class I organic peroxides shall not be stored or used within Group R occupancies.

6203.1.1.3 Group B, F, M or S occupancies. Unclassified detonable and Class I organic peroxides shall not be stored or used in offices, or retail sales areas of Group B, F, M or S occupancies.

6203.1.1.4 Classrooms. In classrooms in Group B, F or M occupancies, any amount of unclassified detonable and Class 1 organic peroxides shall be stored in accordance with the following.

1. Unclassified detonable and Class 1 organic peroxides shall be stored in hazardous materials storage cabinets complying with Section 5003.8.7.
2. The hazardous materials storage cabinets shall not contain other storage.

6203.2 Quantities exceeding the maximum allowable quantity per control area. The storage and use of organic peroxides in amounts exceeding the *maximum allowable quantity per control area* indicated in Section 5003.1 shall be in accordance with Chapter 50 and this chapter.

SECTION 6204
STORAGE

6204.1 Indoor storage. Indoor storage of organic peroxides in amounts exceeding the *maximum allowable quantity per control area* indicated in Table 5003.1.1(1) shall be in accordance with Sections 5001, 5003, 5004 and this chapter.

Indoor storage of unclassified detonable organic peroxides that are capable of *detonation* in their normal shipping containers under conditions of fire exposure shall be stored in accordance with Chapter 56.

6204.1.1 Detached storage. Storage of organic peroxides shall be in detached buildings where required by Section 5003.8.2.

6204.1.2 Distance from detached buildings to exposures. In addition to the requirements of the *Building Code of New York State*, detached storage buildings for Class I, II, III, IV and V organic peroxides shall be located in accordance with Table 6204.1.2. Detached buildings containing quantities of unclassified detonable organic peroxides in excess of those set forth in Table 5003.8.2 shall be located in accordance with Table 5604.5.2(1).

6204.1.3 Liquid-tight floor. In addition to the requirements of Section 5004.12, floors of storage areas shall be of liquid-tight construction.

6204.1.4 Electrical wiring and equipment. In addition to the requirements of Section 5003.9.4, electrical wiring and equipment in storage areas for Class I or II organic peroxides shall comply with the requirements for electrical Class I, Division 2 locations.

6204.1.5 Smoke detection. An *approved* supervised smoke detection system in accordance with Section 907

INTERNATIONAL CODE COUNCIL®
Copyright © 2019 ICC & NYSDOS. ALL RIGHTS RESERVED. Accessed by Lauren Gualdino (lgualdino@briarcliffmanor.org), (-) Order Number #100880972 on May 08, 2020 07:05 AM (PDT) pursuant to License Agreement with ICC & NYSDOS. No further reproduction, no

100880972

shall be provided in rooms or areas where Class I, II or III organic peroxides are stored. Activation of the smoke detection system shall sound a local alarm.

Exception: A smoke detection system shall not be required in detached storage buildings equipped throughout with an *approved* automatic fire-extinguishing system complying with Chapter 9.

6204.1.6 Maximum quantities. Maximum allowable quantities per building in a mixed occupancy building shall not exceed the amounts set forth in Table 5003.8.2. Maximum allowable quantities per building in a detached storage building shall not exceed the amounts specified in Table 6204.1.2.

6204.1.7 Storage arrangement. Storage arrangements for organic peroxides shall be in accordance with Table 6204.1.7 and shall comply with all of the following:

1. Containers and packages in storage areas shall be closed.
2. Bulk storage shall not be in piles or bins.
3. A minimum 2-foot (610 mm) clear space shall be maintained between storage and uninsulated metal walls.
4. Fifty-five-gallon (208 L) drums shall not be stored more than one drum high.

6204.1.8 Location in building. The storage of Class I or II organic peroxides shall be on the ground floor. Class III organic peroxides shall not be stored in *basements*.

6204.1.9 Contamination. Organic peroxides shall be stored in their original DOTn shipping containers. Organic peroxides shall be stored in a manner to prevent contamination.

6204.1.10 Explosion control. Indoor storage rooms, areas and buildings containing unclassified detonable and Class I organic peroxides shall be provided with explosion control in accordance with Section 911.

6204.1.11 Standby power. Standby power shall be provided in accordance with Section 1203 for the following systems used to protect Class I and unclassified detonable organic peroxide:

1. Exhaust ventilation system.
2. Treatment system.
3. Smoke detection system.
4. Temperature control system.
5. Fire alarm system.
6. Emergency alarm system.

6204.1.11.1 Fail-safe engineered systems. Standby power shall not be required for mechanical exhaust ventilation, treatment systems and temperature control

TABLE 6204.1.2
ORGANIC PEROXIDES—DISTANCE TO EXPOSURES FROM DETACHED STORAGE BUILDINGS OR OUTDOOR STORAGE AREAS

ORGANIC PEROXIDE CLASS	MAXIMUM STORAGE QUANTITY (POUNDS) AT MINIMUM SEPARATION DISTANCE					
	Distance to buildings, lot lines, public streets, public alleys, public ways or means of egress			Distance between individual detached storage buildings or individual outdoor storage areas		
	50 feet	100 feet	150 feet	20 feet	75 feet	100 feet
I	2,000	20,000	175,000	2,000	20,000	175,000
II	100,000	200,000	No Limit	100,000[a]	No Limit	No Limit
III	200,000	No Limit	No Limit	200,000[a]	No Limit	No Limit
IV	No Limit	No Limit	No Limit	No Limit	No Limit	No Limit
V	No Limit	No Limit	No Limit	No Limit	No Limit	No Limit

For SI: 1 foot = 304.8 mm, 1 pound = 0.454 kg.

a. Where the amount of organic peroxide stored exceeds this amount, the minimum separation shall be 50 feet.

TABLE 6204.1.7
STORAGE OF ORGANIC PEROXIDES

ORGANIC PEROXIDE CLASS	PILE CONFIGURATION				MAXIMUM QUANTITY PER BUILDING
	Maximum width (feet)	Maximum height (feet)	Minimum distance to next pile (feet)	Minimum distance to walls (feet)	
I	6	8	4[a]	4[b]	Note c
II	10	8	4[a]	4[b]	Note c
III	10	8	4[a]	4[b]	Note c
IV	16	10	3[a, d]	4[b]	No Requirement
V	No Requirement	No Requirement	No Requirement	No Requirement	No Requirement

For SI: 1 foot = 304.8 mm.

a. Not less than one main aisle with a minimum width of 8 feet shall divide the storage area.

b. Distance to noncombustible walls is allowed to be reduced to 2 feet.

c. See Table 6204.1.2 for maximum quantities.

d. The distance shall be not less than one-half the pile height.

INTERNATIONAL CODE COUNCIL®
Copyright © 2019 ICC & NYSDOS. ALL RIGHTS RESERVED. Accessed by Lauren Gualdino (lgualdino@briarcliffmanor.org), (-) Order Number #100880972 on May 08, 2020 07:05 AM (PDT) pursuant to License Agreement with ICC & NYSDOS. No further reproduction, no

100880972

systems where *approved* fail-safe engineered systems are installed.

6204.2 Outdoor storage. Outdoor storage of organic peroxides in amounts exceeding the *maximum allowable quantities per control area* indicated in Table 5003.1.1(3) shall be in accordance with Sections 5001, 5003, 5004 and this chapter.

6204.2.1 Distance from storage to exposures. Outdoor storage areas for organic peroxides shall be located in accordance with Table 6204.1.2.

6204.2.2 Electrical wiring and equipment. In addition to the requirements of Section 5003.9.4, electrical wiring and equipment in outdoor storage areas containing unclassified detonable, Class I or II organic peroxides shall comply with the requirements for electrical Class I, Division 2 locations.

6204.2.3 Maximum quantities. Maximum quantities of organic peroxides in outdoor storage shall be in accordance with Table 6204.1.2.

6204.2.4 Storage arrangement. Storage arrangements shall be in accordance with Table 6204.1.7.

6204.2.5 Separation. In addition to the requirements of Section 5003.9.8, outdoor storage areas for organic peroxides in amounts exceeding those specified in Table 5003.8.2 shall be located a minimum distance of 50 feet (15 240 mm) from other hazardous material storage.

SECTION 6205
USE

6205.1 General. The use of organic peroxides in amounts exceeding the *maximum allowable quantity per control area* indicated in Table 5003.1.1(1) or 5003.1.1(3) shall be in accordance with Sections 5001, 5003, 5005 and this chapter.

INTERNATIONAL CODE COUNCIL®
Copyright © 2019 ICC & NYSDOS. ALL RIGHTS RESERVED. Accessed by Lauren Gualdino (lgualdino@briarcliffmanor.org), (-) Order Number #100880972 on May 08, 2020 07:05 AM (PDT) pursuant to License Agreement with ICC & NYSDOS. No further reproduction, no

100880972

INTERNATIONAL CODE COUNCIL®
Copyright © 2019 ICC & NYSDOS. ALL RIGHTS RESERVED. Accessed by Lauren Gualdino (lgualdino@briarcliffmanor.org), (-) Order Number #100880972 on May 08, 2020 07:05 AM (PDT) pursuant to License Agreement with ICC & NYSDOS. No further reproduction, no

100880972

CHAPTER 63

OXIDIZERS, OXIDIZING GASES AND OXIDIZING CRYOGENIC FLUIDS

SECTION 6301 GENERAL

6301.1 Scope. The storage and use of oxidizing materials shall be in accordance with this chapter and Chapter 50. Oxidizing gases shall also comply with Chapter 53. Oxidizing *cryogenic fluids* shall also comply with Chapter 55.

Exceptions:

1. Display and storage in Group M and storage in Group S occupancies complying with Section 5003.11.
2. Bulk oxygen systems at industrial and institutional consumer sites shall be in accordance with NFPA 55.
3. Liquid oxygen stored or used in home health care in Group I-1, I-4 and R occupancies in accordance with Section 6306.

6301.2 Permits. Permits shall be required as set forth in Section 105.6.

SECTION 6302 DEFINITIONS

6302.1 Definitions. The following terms are defined in Chapter 2:

BULK OXYGEN SYSTEM.

LIQUID OXYGEN AMBULATORY CONTAINER.

LIQUID OXYGEN HOME CARE CONTAINER.

OXIDIZER.
Class 4.
Class 3.
Class 2.
Class 1.

OXIDIZING CRYOGENIC FLUID.

OXIDIZING GAS.

SECTION 6303 GENERAL REQUIREMENTS

6303.1 Quantities not exceeding the maximum allowable quantity per control area. The storage and use of oxidizing materials in amounts not exceeding the *maximum allowable quantity per control area* indicated in Section 5003.1 shall be in accordance with Sections 5001, 5003, 6301 and 6303. Oxidizing gases shall also comply with Chapter 53.

6303.1.1 Special limitations for indoor storage and use by occupancy. The indoor storage and use of oxidizing materials shall be in accordance with Sections 6303.1.1.1 through 6303.1.1.3.

6303.1.1.1 Class 4 liquid and solid oxidizers. The storage and use of Class 4 liquid and solid oxidizers shall comply with Sections 6303.1.1.1.1 through 6303.1.1.1.4.

6303.1.1.1.1 Group A, E, I or U occupancies. In Group A, E, I or U occupancies, any amount of Class 4 liquid and solid oxidizers shall be stored in accordance with the following:

1. Class 4 liquid and solid oxidizers shall be stored in hazardous materials storage cabinets complying with Section 5003.8.7.
2. The hazardous materials storage cabinets shall not contain other storage.

6303.1.1.1.2 Group R occupancies. Class 4 liquid and solid oxidizers shall not be stored or used within Group R occupancies.

6303.1.1.1.3 Offices and retail sales areas. Class 4 liquid and solid oxidizers shall not be stored or used in offices or retail sales areas of Group B, F, M or S occupancies.

6303.1.1.1.4 Classrooms. In classrooms of Group B, F or M occupancies, any amount of Class 4 liquid and solid oxidizers shall be stored in accordance with the following:

1. Class 4 liquid and solid oxidizers shall be stored in hazardous materials storage cabinets complying with Section 5003.8.7.
2. Hazardous materials storage cabinets shall not contain other storage.

6303.1.1.2 Class 3 liquid and solid oxidizers. Not more than 220 pounds (99 kg) of solid or 22 gallons (83 L) of liquid Class 3 oxidizer is allowed in storage and use where such materials are necessary for maintenance purposes or operation of equipment. The oxidizers shall be stored in *approved* containers and in an *approved* manner.

6303.1.1.3 Oxidizing gases. Except for cylinders of nonliquefied *compressed gases* not exceeding a capacity of 250 cubic feet (7 m^3) or liquefied *compressed gases* not exceeding a capacity of 46 pounds (21 kg) each used for maintenance purposes, patient care or operation of equipment, oxidizing gases shall not be stored or used in Group A, E, I or R occupancies or in offices in Group B occupancies.

The aggregate quantities of gases used for maintenance purposes and operation of equipment shall not exceed the *maximum allowable quantity per control area* listed in Table 5003.1.1(1).

Medical gas systems and medical gas supply cylinders shall also be in accordance with Section 5306.

INTERNATIONAL CODE COUNCIL®
Copyright © 2019 ICC & NYSDOS. ALL RIGHTS RESERVED. Accessed by Lauren Gualdino (lgualdino@briarcliffmanor.org), (-) Order Number #100880972 on May 08, 2020 07:05 AM (PDT) pursuant to License Agreement with ICC & NYSDOS. No further reproduction, no

100880972

6303.1.2 Emergency shutoff. *Compressed gas* systems conveying oxidizing gases shall be provided with *approved* manual or automatic emergency shutoff valves that can be activated at each point of use and at each source.

6303.1.2.1 Shutoff at source. A manual or automatic fail-safe emergency shutoff valve shall be installed on supply piping at the cylinder or bulk source. Manual or automatic cylinder valves are allowed to be used as the required emergency shutoff valve where the source of supply is limited to unmanifolded cylinder sources.

6303.1.2.2 Shutoff at point of use. A manual or automatic emergency shutoff valve shall be installed on the supply piping at the point of use or at a point where the equipment using the gas is connected to the supply system.

6303.1.3 Ignition source control. Ignition sources in areas containing oxidizing gases shall be controlled in accordance with Section 5003.7.

6303.2 Class 1 oxidizer storage configuration. The storage configuration of Class 1 liquid and solid oxidizers shall be as set forth in Table 6303.2.

TABLE 6303.2
STORAGE OF CLASS 1 OXIDIZER LIQUIDS AND SOLIDS

STORAGE CONFIGURATION	LIMITS (feet)
Piles	
Maximum width	24
Maximum height	20
Maximum distance to aisle	12
Minimum distance to next pile[a]	4
Minimum distance to walls[b]	2
Maximum quantity per pile	200 tons
Maximum quantity per building	No Limit

For SI: 1 foot = 304.8 mm, 1 pound = 0.454 kg, 1 ton = 0.907185 metric ton.

a. The minimum aisle width shall be equal to the pile height, but not less than 4 feet and not greater than 8 feet.

b. There shall not be a minimum distance from the pile to a wall for amounts less than 9,000 pounds.

SECTION 6304
STORAGE

6304.1 Indoor storage. Indoor storage of oxidizing materials in amounts exceeding the *maximum allowable quantity per control area* indicated in Table 5003.1.1(1) shall be in accordance with Sections 5001, 5003 and 5004 and this chapter.

6304.1.1 Explosion control. Indoor storage rooms, areas and buildings containing Class 4 liquid or solid oxidizers shall be provided with explosion control in accordance with Section 911.

6304.1.2 Automatic sprinkler system. The *automatic sprinkler system* for oxidizer storage shall be designed in accordance with NFPA 400.

6304.1.3 Liquid-tight floor. In addition to Section 5004.12, floors of storage areas for liquid and solid oxidizers shall be of liquid-tight construction.

6304.1.4 Smoke detection. An *approved* supervised smoke detection system in accordance with Section 907 shall be installed in liquid and solid oxidizer storage areas. Activation of the smoke detection system shall sound a local alarm.

Exception: Detached storage buildings protected by an *approved* automatic fire-extinguishing system.

6304.1.5 Storage conditions. The maximum quantity of oxidizers per building in storage buildings shall not exceed those quantities set forth in Tables 6304.1.5(1) through 6304.1.5(3).

The storage configuration for liquid and solid oxidizers shall be as set forth in Table 6303.2 and Tables 6304.1.5(1) through 6304.1.5(3).

Class 2 oxidizers shall not be stored in *basements* except where such storage is in stationary tanks.

Class 3 and 4 oxidizers in amounts exceeding the *maximum allowable quantity per control area* set forth in Section 5003.1 shall be stored on the ground floor only.

TABLE 6304.1.5(1)
STORAGE OF CLASS 2 OXIDIZER LIQUIDS AND SOLIDS

STORAGE CONFIGURATION	LIMITS		
	Control area storage	Group H occupancy storage	Detached storage
Piles			
Maximum width	16 feet	25 feet	25 feet
Maximum height	Note a	Note a	Note a
Maximum distance to aisle	8 feet	12 feet	12 feet
Minimum distance to next pile	Note b	Note b	Note b
Minimum distance to walls	2 feet	2 feet[c]	2 feet[c]
Maximum quantity per pile	MAQ	100 tons	100 tons
Maximum quantity per building	MAQ	2000 tons	No Limit

For SI: 1 foot = 304.8 mm, 1 pound = 0.454 kg, 1 ton = 0.907185 metric ton.

a. Maximum storage height in nonsprinklered buildings is limited to 6 feet. In sprinklered buildings see NFPA 400 for storage heights based on ceiling sprinkler protection.

b. The minimum aisle width shall be equal to the pile height, but not less than 4 feet and not greater than 8 feet.

c. For protection level and detached storage under 4,500 pounds, there shall not be a minimum separation distance between the pile and any wall.

TABLE 6304.1.5(2)
STORAGE OF CLASS 3 OXIDIZER LIQUIDS AND SOLIDS

STORAGE CONFIGURATION	LIMITS		
	Control area storage	Group H occupancy storage	Detached storage
Piles			
Maximum width	12 feet	16 feet	20 feet
Maximum height	Note a	Note a	Note a
Maximum distance to aisle	8 feet	10 feet	10 feet
Minimum distance to next pile	Note b	Note b	Note b
Minimum distance to walls	4 feet	4 feet[c]	4 feet[c]
Maximum quantity per pile	NA	30 tons	100 tons
Maximum quantity per building	MAQ	1200 tons	No Limit

For SI: 1 foot = 304.8 mm, 1 pound = 0.454 kg, 1 ton = 0.907185 metric ton.

a. Maximum storage height in nonsprinklered buildings is limited to 6 feet. In sprinklered buildings see NFPA 400 for storage heights based on ceiling sprinkler protection.

b. The minimum aisle width shall be equal to the pile height, but not less than 4 feet and not greater than 8 feet.

c. For protection level and detached storage under 2,300 pounds, there shall not be a minimum separation distance between the pile and any wall.

INTERNATIONAL CODE COUNCIL®
Copyright © 2019 ICC & NYSDOS. ALL RIGHTS RESERVED. Accessed by Lauren Gualdino (lgualdino@briarcliffmanor.org), (-) Order Number #100880972 on May 08, 2020 07:05 AM (PDT) pursuant to License Agreement with ICC & NYSDOS. No further reproduction, no

100880972

TABLE 6304.1.5(3)
STORAGE OF CLASS 4 OXIDIZER LIQUIDS AND SOLIDS

STORAGE CONFIGURATION	LIMITS (feet)
Piles Maximum length Maximum width Maximum height Minimum distance to next pile	 10 4 8 8
Maximum quantity per building	No Limit

For SI: 1 foot = 304.8 mm.

6304.1.6 Separation of Class 4 oxidizers from other materials. In addition to the requirements in Section 5003.9.8, Class 4 oxidizer liquids and solids shall be separated from other hazardous materials by not less than a 1-hour *fire barrier* or stored in hazardous materials storage cabinets.

6304.1.7 Contamination. Liquid and solid oxidizers shall not be stored on or against combustible surfaces. Liquid and solid oxidizers shall be stored in a manner to prevent contamination.

6304.1.8 Detached storage. Storage of liquid and solid oxidizers shall be in detached buildings where required by Section 5003.8.2.

6304.1.8.1 Separation distance. Detached storage buildings for Class 4 oxidizer liquids and solids shall be located not less than 50 feet (15 240 mm) from other hazardous materials storage.

6304.2 Outdoor storage. Outdoor storage of oxidizing materials in amounts exceeding the *maximum allowable quantities per control area* set forth in Table 5003.1.1(3) shall be in accordance with Sections 5001, 5003, 5004 and this chapter. Oxidizing gases shall also comply with Chapter 53.

6304.2.1 Distance from storage to exposures for oxidizing gases. Outdoor storage areas for oxidizing gases shall be located in accordance with Table 6304.2.1.

6304.2.1.1 Oxidizing cryogenic fluids. Outdoor storage areas for oxidizing *cryogenic fluids* shall be located in accordance with Chapter 55.

6304.2.2 Storage configuration for liquid and solid oxidizers. Storage configuration for liquid and solid oxidizers shall be in accordance with Table 6303.2 and Tables 6304.1.5(1) through 6304.1.5(3).

6304.2.3 Storage configuration for oxidizing gases. Storage configuration for oxidizing gases shall be in accordance with Table 6304.2.1.

SECTION 6305
USE

6305.1 Scope. The use of oxidizers in amounts exceeding the *maximum allowable quantity per control area* indicated in Table 5003.1.1(1) or 5003.1.1(3) shall be in accordance with Sections 5001, 5003, 5005 and this chapter. Oxidizing gases shall also comply with Chapter 53.

SECTION 6306
LIQUID OXYGEN IN HOME HEALTH CARE

6306.1 General. The storage and use of liquid oxygen (LOX) in home health care in Group I-1, I-4 and R occupancies shall comply with Sections 6306.2 through 6306.6, or shall be stored and used accordance with Chapter 50.

6306.2 Information and instructions to be provided. The seller of liquid oxygen shall provide the user with information in written form that includes, but is not limited to, the following:

1. Manufacturer's instructions and labeling for safe storage and use of the containers.
2. Locating containers away from ignition sources, *exits*, electrical hazards and high-temperature devices in accordance with Section 6306.3.3.
3. Restraint of containers to prevent falling in accordance with Section 6306.3.4.
4. Requirements for handling containers in accordance with Section 6306.3.5.
5. Safeguards for refilling containers in accordance with Section 6306.3.6.
6. Signage requirements in accordance with Section 6306.6.

6306.3 Liquid oxygen home care containers. Containers of liquid oxygen in home health care shall be in accordance with Sections 6306.3.1 through 6306.3.6.3.

6306.3.1 Maximum individual container capacity. Liquid oxygen home care containers shall not exceed an individual capacity of 15.8 gallons (60 L) in Group I-1, I-4

TABLE 6304.2.1
OXIDIZER GASES—DISTANCE FROM STORAGE TO EXPOSURES[a]

QUANTITY OF GAS STORED (cubic feet at NTP)	DISTANCE TO A BUILDING NOT ASSOCIATED WITH THE MANUFACTURE OR DISTRIBUTION OF OXIDIZING GASES OR PUBLIC WAY OR LOT LINE THAT CAN BE BUILT UPON (feet)	DISTANCE BETWEEN STORAGE AREAS (feet)
0 – 50,000	5	5
50,001 – 100,000	10	10
100,001 or greater	15	10

For SI: 1 foot = 304.8 mm, 1 cubic foot = 0.02832 m^3.

a. The minimum required distances shall not apply where fire barriers without openings or penetrations having a minimum fire-resistance rating of 2 hours interrupt the line of sight between the storage and the exposure. The configuration of the fire barrier shall be designed to allow natural ventilation to prevent the accumulation of hazardous gas concentrations.

INTERNATIONAL CODE COUNCIL®
Copyright © 2019 ICC & NYSDOS. ALL RIGHTS RESERVED. Accessed by Lauren Gualdino (lgualdino@briarcliffmanor.org), (-) Order Number #100880972 on May 08, 2020 07:05 AM (PDT) pursuant to License Agreement with ICC & NYSDOS. No further reproduction, no

100880972

and R occupancies. Liquid oxygen ambulatory containers are allowed in Group I-1, I-4 and R occupancies. Containers of liquid oxygen in home health care shall also be stored, used and filled in accordance with Section 6306 and Sections 5503.1 and 5503.2.

6306.3.2 Manufacturer's instructions and labeling. Containers shall be stored, used and operated in accordance with the manufacturer's instructions and labeling.

6306.3.3 Locating containers. Containers shall not be located in areas where any of the following conditions exist:

1. They can be overturned due to operation of a door.
2. They are in the direct path of egress.
3. They are subject to falling objects.
4. They can become part of an electrical circuit.
5. Open flames and high-temperature devices can cause a hazard.

6306.3.4 Restraining containers. Liquid oxygen home care containers shall be restrained while in storage or use to prevent falling caused by contact, vibration or seismic activity. Containers shall be restrained by one of the following methods:

1. Restraining containers to a fixed object with one or more restraints.
2. Restraining containers within a framework, stand or assembly designed to secure the container.
3. Restraining containers by locating a container against two points of contact such as the walls of a corner of a room or a wall and a secure furnishing or object such as a desk.

6306.3.5 Container handling. Containers shall be handled by use of a cart or hand truck designed for such use.

Exceptions:

1. Liquid oxygen home care containers equipped with a roller base.
2. Liquid oxygen ambulatory containers are allowed to be hand carried.

6306.3.6 Filling of containers. The filling of containers shall be in accordance with Sections 6306.3.6.1 through 6306.3.6.3.

6306.3.6.1 Filling location. Liquid oxygen home care containers and ambulatory containers shall be filled outdoors.

Exception: Liquid oxygen ambulatory containers are allowed to be filled indoors where the supply container is specifically designed for filling such containers and written instructions are provided by the container manufacturer.

6306.3.6.2 Incompatible surfaces. A drip pan compatible with liquid oxygen shall be provided under home care container fill and vent connections during the filling process in order to protect against liquid oxygen spillage from coming into contact with combustible surfaces, including asphalt.

6306.3.6.3 Open flames and high-temperature devices. The use of open flames and high-temperature devices shall be in accordance with Section 5003.7.2.

6306.4 Maximum aggregate quantity. The maximum aggregate quantity of liquid oxygen allowed in storage and in use in each *dwelling unit* shall be 31.6 gallons (120 L).

Exceptions:

1. The maximum aggregate quantity of liquid oxygen allowed in Group I-4 occupancies shall be limited by the maximum allowable quantity set forth in Table 5003.1.1(1).
2. Where individual sleeping rooms are separated from the remainder of the *dwelling unit* by *fire barriers* constructed in accordance with Section 707 of the *Building Code of New York State*, and *horizontal assemblies* constructed in accordance with Section 711 of the *Building Code of New York State*, or both, having a minimum *fire-resistance rating* of 1 hour, the maximum aggregate quantity per *dwelling unit* shall be increased to allow not more than 31.6 gallons (120 L) of liquid oxygen per sleeping room.

6306.5 Smoking prohibited. Smoking shall be prohibited in rooms or areas where liquid oxygen is in use.

6306.6 Signs. Warning signs for occupancies using home health care liquid oxygen shall be in accordance with Sections 6306.6.1 and 6306.6.2.

6306.6.1 No smoking sign. A sign stating "OXYGEN—NO SMOKING" shall be posted in each room or area where liquid oxygen containers are stored, used or filled.

6306.6.2 Premises signage. Where required by the *fire code official*, each *dwelling unit* or *sleeping unit* shall have an *approved* sign indicating that the unit contains liquid oxygen home care containers.

6306.7 Fire department notification. Where required by the *fire code official*, the liquid oxygen seller shall notify the fire department of the locations of liquid oxygen home care containers.

INTERNATIONAL CODE COUNCIL®
Copyright © 2019 ICC & NYSDOS. ALL RIGHTS RESERVED. Accessed by Lauren Gualdino (lgualdino@briarcliffmanor.org), (-) Order Number #100880972 on May 08, 2020 07:05 AM (PDT) pursuant to License Agreement with ICC & NYSDOS. No further reproduction, no

100880972

CHAPTER 64
PYROPHORIC MATERIALS

SECTION 6401
GENERAL

6401.1 Scope. The storage and use of pyrophoric materials shall be in accordance with this chapter. *Compressed gases* shall also comply with Chapter 53.

6401.2 Permits. Permits shall be required as set forth in Section 105.6.

SECTION 6402
DEFINITION

6402.1 Definition. The following term is defined in Chapter 2:

PYROPHORIC.

SECTION 6403
GENERAL REQUIREMENTS

6403.1 Quantities not exceeding the maximum allowable quantity per control area. The storage and use of pyrophoric materials in amounts not exceeding the *maximum allowable quantity per control area* indicated in Section 5003.1 shall be in accordance with Sections 5001, 5003, 6401 and 6403.

6403.1.1 Emergency shutoff. *Compressed gas* systems conveying pyrophoric gases shall be provided with *approved* manual or automatic emergency shutoff valves that can be activated at each point of use and at each source.

6403.1.1.1 Shutoff at source. An automatic emergency shutoff valve shall be installed on supply piping at the cylinder or bulk source. The shutoff valve shall be operated by a remotely located manually activated shutdown control located not less than 15 feet (4572 mm) from the source of supply. Manual or automatic cylinder valves are allowed to be used as the required emergency shutoff valve where the source of supply is limited to unmanifolded cylinder sources.

6403.1.1.2 Shutoff at point of use. A manual or automatic emergency shutoff valve shall be installed on the supply piping at the point of use or at a point where the equipment using the gas is connected to the supply system.

6403.2 Quantities exceeding the maximum allowable quantity per control area. The storage and use of pyrophoric materials in amounts exceeding the *maximum allowable quantity per control area* indicated in Section 5003.1 shall be in accordance with Chapter 50 and this chapter.

SECTION 6404
STORAGE

6404.1 Indoor storage. Indoor storage of pyrophoric materials in amounts exceeding the *maximum allowable quantity per control area* indicated in Table 5003.1.1(1), shall be in accordance with Sections 5001, 5003 and 5004 and this chapter.

The storage of silane gas, and gas mixtures with a silane concentration of 1.37 percent or more by volume, shall be in accordance with ANSI/CGA G-13.

6404.1.1 Liquid-tight floor. In addition to the requirements of Section 5004.12, floors of storage areas containing pyrophoric liquids shall be of liquid-tight construction.

6404.1.2 Pyrophoric solids and liquids. Storage of pyrophoric solids and liquids shall be limited to a maximum area of 100 square feet (9.3 m^2) per pile. Storage shall not exceed 5 feet (1524 mm) in height. Individual containers shall not be stacked.

Aisles between storage piles shall be not less than 10 feet (3048 mm) in width.

Individual tanks or containers shall not exceed 500 gallons (1893 L) in capacity.

6404.1.3 Pyrophoric gases. Storage of pyrophoric gases shall be in detached buildings where required by Section 5003.8.2.

6404.1.4 Separation from incompatible materials. In addition to the requirements of Section 5003.9.8, indoor storage of pyrophoric materials shall be isolated from incompatible hazardous materials by 1-hour *fire barriers* with openings protected in accordance with the *Building Code of New York State*.

Exception: Storage in *approved* hazardous materials storage cabinets constructed in accordance with Section 5003.8.7.

6404.2 Outdoor storage. Outdoor storage of pyrophoric materials in amounts exceeding the *maximum allowable quantity per control area* indicated in Table 5003.1.1(3) shall be in accordance with Sections 5001, 5003 and 5004, and this chapter.

The storage of silane gas, and gas mixtures with a silane concentration of 1.37 percent or more by volume, shall be in accordance with ANSI/CGA G-13.

6404.2.1 Distance from storage to exposures. The separation of pyrophoric solids, liquids and gases from buildings, *lot lines*, public streets, public alleys, *public ways* or *means of egress* shall be in accordance with the following:

INTERNATIONAL CODE COUNCIL®
Copyright © 2019 ICC & NYSDOS. ALL RIGHTS RESERVED. Accessed by Lauren Gualdino (lgualdino@briarcliffmanor.org), (-) Order Number #100880972 on May 08, 2020 07:05 AM (PDT) pursuant to License Agreement with ICC & NYSDOS. No further reproduction, no

100880972

1. Solids and liquids. Two times the separation required by Chapter 57 for Class IB flammable liquids.
2. Gases. The location and maximum amount of pyrophoric gas per storage area shall be in accordance with Table 6404.2.1.

6404.2.2 Weather protection. Where overhead construction is provided for sheltering outdoor storage areas of pyrophoric materials, the storage areas shall be provided with *approved* automatic fire-extinguishing system protection.

SECTION 6405
USE

6405.1 General. The use of pyrophoric materials in amounts exceeding the *maximum allowable quantity per control area* indicated in Table 5003.1.1(1) or 5003.1.1(3) shall be in accordance with Sections 5001, 5003, 5005 and this chapter.

6405.2 Weather protection. Where overhead construction is provided for sheltering of outdoor use areas of pyrophoric materials, the use areas shall be provided with *approved* automatic fire-extinguishing system protection.

6405.3 Silane gas. The use of silane gas, and gas mixtures with a silane concentration of 1.37 percent or more by volume, shall be in accordance with ANSI/CGA G-13.

TABLE 6404.2.1
PYROPHORIC GASES—DISTANCE FROM STORAGE TO EXPOSURES[a]

MAXIMUM AMOUNT PER STORAGE AREA (cubic feet)	MINIMUM DISTANCE BETWEEN STORAGE AREAS (feet)	MINIMUM DISTANCE TO LOT LINES OF PROPERTY THAT CAN BE BUILT UPON (feet)	MINIMUM DISTANCE TO PUBLIC STREETS, PUBLIC ALLEYS OR PUBLIC WAYS (feet)	MINIMUM DISTANCE TO BUILDINGS ON THE SAME PROPERTY		
				Nonrated construction or openings within 25 feet	Two-hour construction and no openings within 25 feet	Four-hour construction and no openings within 25 feet
250	5	25	5	5	0	0
2,500	10	50	10	10	5	0
7,500	20	100	20	20	10	0

For SI: 1 foot = 304.8 mm, 1 cubic foot = 0.02832 m^3.

a. The minimum required distances shall be reduced to 5 feet where protective structures having a minimum fire resistance of 2 hours interrupt the line of sight between the container and the exposure. The protective structure shall be not less than 5 feet from the exposure. The configuration of the protective structure shall allow natural ventilation to prevent the accumulation of hazardous gas concentrations.

INTERNATIONAL CODE COUNCIL®
Copyright © 2019 ICC & NYSDOS. ALL RIGHTS RESERVED. Accessed by Lauren Gualdino (lgualdino@briarcliffmanor.org), (-) Order Number #100880972 on May 08, 2020 07:05 AM (PDT) pursuant to License Agreement with ICC & NYSDOS. No further reproduction, no

100880972

CHAPTER 65
PYROXYLIN (CELLULOSE NITRATE) PLASTICS

SECTION 6501
GENERAL

6501.1 Scope. This chapter shall apply to the storage and handling of plastic substances, materials or compounds with cellulose nitrate as a base, by whatever name known, in the form of blocks, sheets, tubes or fabricated shapes.

Cellulose nitrate motion picture film shall comply with the requirements of Section 306.

6501.2 Permits. Permits shall be required as set forth in Section 105.6.

SECTION 6502
DEFINITIONS

6502.1 Terms defined in Chapter 2. Words and terms used in this chapter and defined in Chapter 2 shall have the meanings ascribed to them as defined therein.

SECTION 6503
GENERAL REQUIREMENTS

6503.1 Displays. Cellulose nitrate (pyroxylin) plastic articles are allowed to be placed on tables not more than 3 feet (914 mm) wide and 10 feet (3048 mm) long. Tables shall be spaced not less than 3 feet (914 mm) apart. Where articles are displayed on counters, they shall be arranged in a like manner.

6503.2 Space under tables. Spaces underneath tables shall be kept free from storage of any kind and accumulation of paper, refuse and other combustible material.

6503.3 Location. Sales or display tables shall be so located that in the event of a fire at the table, the table will not interfere with free *means of egress* from the room in not less than one direction.

6503.4 Lighting. Lighting shall not be located directly above cellulose nitrate (pyroxylin) plastic material, unless provided with a suitable guard to prevent heated particles from falling.

SECTION 6504
STORAGE AND HANDLING

6504.1 Raw material. Raw cellulose nitrate (pyroxylin) plastic material in a Group F building shall be stored and handled in accordance with Sections 6504.1.1 through 6504.1.7.

6504.1.1 Storage of incoming material. Where raw material in excess of 25 pounds (11 kg) is received in a building or *fire area*, an *approved* vented cabinet or *approved* vented vault equipped with an *approved automatic sprinkler system* shall be provided for the storage of material.

6504.1.2 Capacity limitations. Cabinets in any one workroom shall not contain more than 1,000 pounds (454 kg) of raw material. Each cabinet shall not contain more than 500 pounds (227 kg). Each compartment shall not contain more than 250 pounds (114 kg).

6504.1.3 Storage of additional material. Raw material in excess of that allowed by Section 6504.1.2 shall be kept in vented vaults not exceeding 1,500-cubic-foot capacity (43 m^3) of total vault space, and with *approved* construction, venting and sprinkler protection.

6504.1.4 Heat sources. Cellulose nitrate (pyroxylin) plastic shall not be stored within 2 feet (610 mm) of heat-producing appliances, steam pipes, radiators or chimneys.

6504.1.5 Accumulation of material. In factories manufacturing articles of cellulose nitrate (pyroxylin) plastics, *approved* sprinklered and vented cabinets, vaults or storage rooms shall be provided to prevent the accumulation in workrooms of raw stock in process or finished articles.

6504.1.6 Operators. In workrooms of cellulose nitrate (pyroxylin) plastic factories, operators shall not be stationed closer together than 3 feet (914 mm), and the amount of material per operator shall not exceed one shift's supply and shall be limited to the capacity of three tote boxes, including material awaiting removal or use.

6504.1.7 Waste material. Waste cellulose nitrate (pyroxylin) plastic materials such as shavings, chips, turnings, sawdust, edgings and trimmings shall be kept under water in metal receptacles until removed from the premises.

6504.2 Fire protection. The manufacture or storage of articles of cellulose nitrate (pyroxylin) plastic in quantities exceeding 100 pounds (45 kg) shall be located in a building or portion thereof equipped throughout with an *approved automatic sprinkler system* in accordance with Section 903.3.1.1.

6504.3 Sources of ignition. Sources of ignition shall not be located in rooms in which cellulose nitrate (pyroxylin) plastic in excess of 25 pounds (11 kg) is handled or stored.

6504.4 Heating. Rooms in which cellulose nitrate (pyroxylin) plastic is handled or stored shall be heated by low-pressure steam or hot water radiators.

INTERNATIONAL CODE COUNCIL®
Copyright © 2019 ICC & NYSDOS. ALL RIGHTS RESERVED. Accessed by Lauren Gualdino (lgualdino@briarcliffmanor.org), (-) Order Number #100880972 on May 08, 2020 07:05 AM (PDT) pursuant to License Agreement with ICC & NYSDOS. No further reproduction, no

100880972

INTERNATIONAL CODE COUNCIL®
Copyright © 2019 ICC & NYSDOS. ALL RIGHTS RESERVED. Accessed by Lauren Gualdino (lgualdino@briarcliffmanor.org), (-) Order Number #100880972 on May 08, 2020 07:05 AM (PDT) pursuant to License Agreement with ICC & NYSDOS. No further reproduction, no

100880972

CHAPTER 66
UNSTABLE (REACTIVE) MATERIALS

SECTION 6601
GENERAL

6601.1 Scope. The storage and use of unstable (reactive) materials shall be in accordance with this chapter. *Compressed gases* shall also comply with Chapter 53.

Exceptions:

1. Display and storage in Group M and storage in Group S occupancies complying with Section 5003.11.
2. Detonable unstable (reactive) materials shall be stored in accordance with Chapter 56.

6601.2 Permits. Permits shall be required as set forth in Section 105.6.

SECTION 6602
DEFINITION

6602.1 Definition. The following term is defined in Chapter 2:

UNSTABLE (REACTIVE) MATERIAL.
Class 4.
Class 3.
Class 2.
Class 1.

SECTION 6603
GENERAL REQUIREMENTS

6603.1 Quantities not exceeding the maximum allowable quantity per control area. Quantities of unstable (reactive) materials not exceeding the *maximum allowable quantity per control area* shall be in accordance with Sections 6603.1.1 through 6603.1.2.5.

6603.1.1 General. The storage and use of unstable (reactive) materials in amounts not exceeding the *maximum allowable quantity per control area* indicated in Section 5003.1 shall be in accordance with Sections 5001, 5003, 6601 and 6603.

6603.1.2 Limitations for indoor storage and use by occupancy. The indoor storage of unstable (reactive) materials shall be in accordance with Sections 6603.1.2.1 through 6603.1.2.5.

6603.1.2.1 Group A, E, I or U occupancies. In Group A, E, I or U occupancies, any amount of Class 3 and 4 unstable (reactive) materials shall be stored in accordance with the following:

1. Class 3 and 4 unstable (reactive) materials shall be stored in hazardous material storage cabinets complying with Section 5003.8.7.
2. The hazardous material storage cabinets shall not contain other storage.

6603.1.2.2 Group R occupancies. Class 3 and 4 unstable (reactive) materials shall not be stored or used within Group R occupancies.

6603.1.2.3 Group M occupancies. Class 4 unstable (reactive) materials shall not be stored or used in retail sales portions of Group M occupancies.

6603.1.2.4 Offices. Class 3 and 4 unstable (reactive) materials shall not be stored or used in offices of Group B, F, M or S occupancies.

6603.1.2.5 Classrooms. In classrooms in Group B, F or M occupancies, any amount of Class 3 and 4 unstable (reactive) materials shall be stored in accordance with the following:

1. Class 3 and 4 unstable (reactive) materials shall be stored in hazardous material storage cabinets complying with Section 5003.8.7.
2. The hazardous material storage cabinets shall not contain other storage.

6603.2 Quantities exceeding the maximum allowable quantity per control area. The storage and use of unstable (reactive) materials in amounts exceeding the *maximum allowable quantity per control area* indicated in Section 5003.1 shall be in accordance with Chapter 50 and this chapter.

SECTION 6604
STORAGE

6604.1 Indoor storage. Indoor storage of unstable (reactive) materials in amounts exceeding the *maximum allowable quantity per control area* indicated in Table 5003.1.1(1) shall be in accordance with Sections 5001, 5003, 5004 and this chapter.

In addition, Class 3 and 4 unstable (reactive) detonable materials shall be stored in accordance with the *Building Code of New York State* requirements for *explosives*.

6604.1.1 Detached storage. Storage of unstable (reactive) materials shall be in detached buildings where required in Section 5003.8.2.

6604.1.2 Explosion control. Indoor storage rooms, areas and buildings containing Class 3 or 4 unstable (reactive) materials shall be provided with explosion control in accordance with Section 911.

6604.1.3 Liquid-tight floor. In addition to Section 5004.12, floors of storage areas for liquids and solids shall be of liquid-tight construction.

6604.1.4 Storage configuration. Unstable (reactive) materials stored in quantities greater than 500 cubic feet

INTERNATIONAL CODE COUNCIL®
Copyright © 2019 ICC & NYSDOS. ALL RIGHTS RESERVED. Accessed by Lauren Gualdino (lgualdino@briarcliffmanor.org), (-) Order Number #100880972 on May 08, 2020 07:05 AM (PDT) pursuant to License Agreement with ICC & NYSDOS. No further reproduction, no

100880972

(14 m^3) shall be separated into piles, each not larger than 500 cubic feet (14 m^3). Aisle width shall be not less than the height of the piles or 4 feet (1219 mm), whichever is greater.

Exception: Materials stored in tanks.

6604.1.5 Location in building. Unstable (reactive) materials shall not be stored in *basements*.

6604.2 Outdoor storage. Outdoor storage of unstable (reactive) materials in amounts exceeding the *maximum allowable quantities per control area* indicated in Table 5003.1.1(3) shall be in accordance with Sections 5001, 5003, 5004 and this chapter.

6604.2.1 Distance from storage to exposures Class 4 and 3 (detonable) materials. Outdoor storage of Class 4 or 3 (detonable) unstable (reactive) material shall be in accordance with Table 5604.5.2(2). The number of pounds of material listed in the table shall be the net weight of the material present. Alternatively, the number of pounds of material shall be based on a trinitrotoluene (TNT) equivalent weight.

6604.2.2 Distance from storage to exposures Class 3 (deflagratable) materials. Outdoor storage of deflagratable Class 3 unstable (reactive) materials shall be in accordance with Table 5604.5.2(3). The number of pounds of material listed shall be the net weight of the material present.

6604.2.3 Distance from storage to exposures Class 2 and 1 materials. Outdoor storage of Class 2 or 1 unstable (reactive) materials shall not be located within 20 feet (6096 mm) of buildings not associated with the manufacture or distribution of such materials, *lot lines*, public streets, public alleys, *public ways* or *means of egress*. The minimum required distance shall not apply where *fire barriers* without openings or penetrations having a minimum *fire-resistance rating* of 2 hours interrupt the line of sight between the storage and the exposure. The *fire barrier* shall either be an independent structure or the exterior wall of the building adjacent to the storage area.

6604.2.4 Storage configuration. Piles of unstable (reactive) materials shall not exceed 1,000 cubic feet (28 m^3).

6604.2.5 Aisle widths. Aisle widths between piles shall be not less than one-half the height of the pile or 10 feet (3048 mm), whichever is greater.

SECTION 6605
USE

6605.1 General. The use of unstable (reactive) materials in amounts exceeding the *maximum allowable quantity per control area* indicated in Table 5003.1.1(1) or 5003.1.1(3) shall be in accordance with Sections 5001, 5003, 5005 and this chapter.

INTERNATIONAL CODE COUNCIL®
Copyright © 2019 ICC & NYSDOS. ALL RIGHTS RESERVED. Accessed by Lauren Gualdino (lgualdino@briarcliffmanor.org), (-) Order Number #100880972 on May 08, 2020 07:05 AM (PDT) pursuant to License Agreement with ICC & NYSDOS. No further reproduction, no

100880972

CHAPTER 67

WATER-REACTIVE SOLIDS AND LIQUIDS

SECTION 6701 GENERAL

6701.1 Scope. The storage and use of water-reactive solids and liquids shall be in accordance with this chapter.

Exceptions:

1. Display and storage in Group M and storage in Group S occupancies complying with Section 5003.11.
2. Detonable water-reactive solids and liquids shall be stored in accordance with Chapter 56.

6701.2 Permits. Permits shall be required as set forth in Section 105.6.

SECTION 6702 DEFINITION

6702.1 Definition. The following term is defined in Chapter 2:

WATER-REACTIVE MATERIAL.
Class 3.
Class 2.
Class 1.

SECTION 6703 GENERAL REQUIREMENTS

6703.1 Quantities not exceeding the maximum allowable quantity per control area. The storage and use of water-reactive solids and liquids in amounts not exceeding the *maximum allowable quantity per control area* indicated in Section 5003.1 shall be in accordance with Sections 5001, 5003, 6701 and 6703.

6703.2 Quantities exceeding the maximum allowable quantity per control area. The storage and use of water-reactive solids and liquids in amounts exceeding the *maximum allowable quantity per control area* indicated in Section 5003.1 shall be in accordance with Chapter 50 and this chapter.

SECTION 6704 STORAGE

6704.1 Indoor storage. Indoor storage of water-reactive solids and liquids in amounts exceeding the *maximum allowable quantity per control area* indicated in Table 5003.1.1(1), shall be in accordance with Sections 5001, 5003, 5004 and this chapter.

6704.1.1 Detached storage. Storage of water-reactive solids and liquids shall be in detached buildings where required by Section 5003.8.2.

6704.1.2 Liquid-tight floor. In addition to the provisions of Section 5004.12, floors in storage areas for water-reactive solids and liquids shall be of liquid-tight construction.

6704.1.3 Waterproof room. Rooms or areas used for the storage of water-reactive solids and liquids shall be constructed in a manner that resists the penetration of water through the use of waterproof materials. Piping carrying water for other than *approved automatic sprinkler systems* shall not be within such rooms or areas.

6704.1.4 Water-tight containers. Where Class 3 water-reactive solids and liquids are stored in areas equipped with an *automatic sprinkler system*, the materials shall be stored in closed water-tight containers.

6704.1.5 Storage configuration. Water-reactive solids and liquids stored in quantities greater than 500 cubic feet (14 m^3) shall be separated into piles, each not larger than 500 cubic feet (14 m^3). Aisle widths between piles shall be not less than the height of the pile or 4 feet (1219 mm), whichever is greater.

Exception: Water-reactive solids and liquids stored in tanks.

Class 2 water-reactive solids and liquids shall not be stored in *basements* unless such materials are stored in closed water-tight containers or tanks.

Class 3 water-reactive solids and liquids shall not be stored in *basements*.

Class 2 or 3 water-reactive solids and liquids shall not be stored with flammable liquids.

6704.1.6 Explosion control. Indoor storage rooms, areas and buildings containing Class 2 or 3 water-reactive solids and liquids shall be provided with explosion control in accordance with Section 911.

6704.2 Outdoor storage. Outdoor storage of water-reactive solids and liquids in quantities exceeding the *maximum allowable quantity per control area* indicated in Table 5003.1.1(3) shall be in accordance with Sections 5001, 5003, 5004 and this chapter.

6704.2.1 General. Outdoor storage of water-reactive solids and liquids shall be within tanks or closed water-tight containers and shall be in accordance with Sections 6704.2.2 through 6704.2.5.

6704.2.2 Class 3 distance to exposures. Outdoor storage of Class 3 water-reactive solids and liquids shall not be within 75 feet (22 860 mm) of buildings, *lot lines*, public streets, public alleys, *public ways* or *means of egress*.

INTERNATIONAL CODE COUNCIL®
Copyright © 2019 ICC & NYSDOS. ALL RIGHTS RESERVED. Accessed by Lauren Gualdino (lgualdino@briarcliffmanor.org), (-) Order Number #100880972 on May 08, 2020 07:05 AM (PDT) pursuant to License Agreement with ICC & NYSDOS. No further reproduction, no

100880972

6704.2.3 Class 2 distance to exposures. Outdoor storage of Class 2 water-reactive solids and liquids shall not be within 20 feet (6096 mm) of buildings, *lot lines*, public streets, public alleys, *public ways* or *means of egress*. A 2-hour *fire barrier* without openings or penetrations, and extending not less than 30 inches (762 mm) above and to the sides of the storage area, is allowed in lieu of such distance. The wall shall either be an independent structure, or the exterior wall of the building adjacent to the storage area.

6704.2.4 Storage conditions. Class 3 water-reactive solids and liquids shall be limited to piles not greater than 500 cubic feet (14 m^3).

Class 2 water-reactive solids and liquids shall be limited to piles not greater than 1,000 cubic feet (28 m^3).

Aisle widths between piles shall be not less than one-half the height of the pile or 10 feet (3048 mm), whichever is greater.

6704.2.5 Containment. Secondary containment shall be provided in accordance with the provisions of Section 5004.2.2.

SECTION 6705
USE

6705.1 General. The use of water-reactive solids and liquids in amounts exceeding the *maximum allowable quantity per control area* indicated in Table 5003.1.1(1) or 5003.1.1(3) shall be in accordance with Sections 5001, 5003, 5005 and this chapter.

INTERNATIONAL CODE COUNCIL®
Copyright © 2019 ICC & NYSDOS. ALL RIGHTS RESERVED. Accessed by Lauren Gualdino (lgualdino@briarcliffmanor.org), (-) Order Number #100880972 on May 08, 2020 07:05 AM (PDT) pursuant to License Agreement with ICC & NYSDOS. No further reproduction, no

100880972

CHAPTERS 68 through 79

RESERVED

INTERNATIONAL CODE COUNCIL®
Copyright © 2019 ICC & NYSDOS. ALL RIGHTS RESERVED. Accessed by Lauren Gualdino (lgualdino@briarcliffmanor.org), (-) Order Number #100880972 on May 08, 2020 07:05 AM (PDT) pursuant to License Agreement with ICC & NYSDOS. No further reproduction, no

100880972

INTERNATIONAL CODE COUNCIL®
Copyright © 2019 ICC & NYSDOS. ALL RIGHTS RESERVED. Accessed by Lauren Gualdino (lgualdino@briarcliffmanor.org), (-) Order Number #100880972 on May 08, 2020 07:05 AM (PDT) pursuant to License Agreement with ICC & NYSDOS. No further reproduction, no

100880972

Part VI—Referenced Standards

CHAPTER 80
REFERENCED STANDARDS

User note:

This chapter lists the standards that are referenced in various sections of this document. The standards are listed herein by the promulgating agency of the standard, the standard identification, the effective date and title, and the section or sections of this document that reference the standard. The application of the referenced standards shall be as specified in Section 102.9.

**Denotes standards that have been incorporated by reference into 19 NYCRR Part 1225.*

AASHTO

American Association of State Highway and Transportation Officials
444 North Capitol Street, NW, Suite 249
Washington, DC 20001

***HB-17—2002: Specification for Highway Bridges, 17th Edition 2002**
503.2.6

AFSI

Architectural Fabric Structures Institute
c/o Industrial Fabric Association International
1801 County Road B West
Roseville, MN 55113

***FSAAS—1977: Fabric Structures Associated Air Structures 2016**
3103.10.2

ANSI

American National Standards Institute
25 West 43rd Street, 4th Floor
New York, NY 10036

***ANSI E1.21—2013: Entertainment Technology: Temporary Ground Supported Overhead Structures Used to Cover the Stage Areas and Support Equipment in the Production of Outdoor Entertainment Events**
3105.1, 3105.4, 3105.5

ANSI Z21.69/CSA 6.16—09: Connectors for Movable Gas Appliances
319.5, 607.4

API

American Petroleum Institute
1220 L Street, NW
Washington, DC 20005

***Spec 12P—1995: Specification for Fiberglass Reinforced Plastic Tanks**
5704.2.13.1.5

***RP 651—3rd Edition (2007): Cathodic Protection of Aboveground Petroleum Storage Tanks**
5706.7, 5706.7.1

***Std 653—4th Edition (2009): Tank Inspection, Repair, Alteration and Reconstruction**
5706.7

RP 752—3rd Edition (2009): Management of Hazards Associated with Location of Process Plant Buildings, CMA Managers Guide
5706.7

INTERNATIONAL CODE COUNCIL®
Copyright © 2019 ICC & NYSDOS. ALL RIGHTS RESERVED. Accessed by Lauren Gualdino (lgualdino@briarcliffmanor.org), (-) Order Number #100880972 on May 08, 2020 07:05 AM (PDT) pursuant to License Agreement with ICC & NYSDOS. No further reproduction, no

100880972

API—continued

***RP 1604—3rd Edition (1996 R2010): Closure of Underground Petroleum Storage Tanks**
5704.2.13

RP 1615—(1996) 6th Edition (2011): Installation of Underground-petroleum Storage Systems
5704.2.13.1.5, 5706.7

Std 2000—6th Edition (2009): Venting Atmosphere and Low-pressure Storage Tanks: Nonrefrigerated and Refrigerated
5704.2.7.3.2

RP 2001—9th Edition (2012): Fire Protection in Refineries, 8th Edition
5706.7

RP 2003—7th Edition (2008): Protection Against Ignitions Arising out of Static, Lightning and Stray Currents
5706.7

***Publ 2009—7th Edition (2002): Safe Welding and Cutting Practices in Refineries, Gas Plants and Petrochemical Plants**
5706.7

***Std 2015—6th Edition 2001: Safe Entry and Clearing of Petroleum Storage Tanks**
5706.7, 5706.7.2

***RP 2023—3rd Edition (2001): Guide for Safe Storage and Handling of Heated Petroleum-derived Asphalt Products and Crude-oil Residue**
5706.7, 5706.7.3

***Publ 2028 3rd Edition—(2002): Flame Arrestors in Piping Systems**
5704.2.7.3.2

***Publ 2201 5th Edition—(2003): Procedures for Welding or Hot Tapping on Equipment in Service**
5706.7

RP 2350— 4th Edition (2012): Overfill Protection for Storage Tanks in Petroleum Facilities, 3rd Edition
5704.2.7.5.8, 5706.4.6, 5706.7

ASCE/SEI

American Society of Civil Engineers
Structural Engineering Institute
1801 Alexander Bell Drive
Reston, VA 20191-4400

***ASCE/SEI 24—14: Flood Resistant Design and Construction**
1203.1.8

ASHRAE

ASHRAE
1791 Tullie Circle NE
Atlanta, GA 30329

***15—2016: Safety Standard for Refrigeration Systems**
605.1.1, 605.17.2

ASME

American Society of Mechanical Engineers
Two Park Avenue
New York, NY 10016-5990

***A13.1—2007: Scheme for the Identification of Piping Systems**
3509.3, 5003.2.2.1, 5303.4.3, 5503.4.5, 5703.5.2

***ASME A17.1—2016/CSA B44—16: Safety Code for Elevators and Escalators**
508.1.6, 606.1, 907.3.3, 1009.4.1

***A17.3—2015: Safety Code for Existing Elevators and Escalators**
1103.3.1, 1103.3.2

B16.18—2012: Cast Copper-Alloy Solder Joint Pressure Fittings
909.13.1

B16.22—2013: Wrought Copper and Copper-alloy Solder-joint Pressure Fittings
909.13.1

B31.1—2016: Power Piping
5003.2.2, Table 5703.6.2

INTERNATIONAL CODE COUNCIL®
Copyright © 2019 ICC & NYSDOS. ALL RIGHTS RESERVED. Accessed by Lauren Gualdino (lgualdino@briarcliffmanor.org), (-) Order Number #100880972 on May 08, 2020 07:05 AM (PDT) pursuant to License Agreement with ICC & NYSDOS. No further reproduction, no

100880972

ASME—continued

B31.3—2016: Process Piping
5003.2.2.2, Table 5703.6.2

B31.4—2015: Pipeline Transportation Systems for Liquids and Slurries
Table 5703.6.2

***B31.9—2011: Building Services Piping**
Table 5703.6.2, 5703.6.3, 5703.6.11

BPVC—2015: ASME Boiler and Pressure Vessel Code (Sections I, II, IV, V & VI, VIII)
5003.2.1, 5303.2, 5303.3.2, 5503.2.6, 5503.4.3, 5503.7, 5704.2.13.1.5, 5806.3.1, 5806.4.1, 5806.4.8

ASSE

American Society of Safety Engineers
520 N. Northwest Highway
Park Ridge, IL 60068

***ANSI/ASSE Z359.1—2007: Requirements for the ANSI/ASSE Z359 Fall Protection Code**
1015.6, 1015.7

ASTM

ASTM International
100 Barr Harbor Drive, P.O. Box C700
West Conshohocken, PA 19428-2959

B42—2015A: Specification for Seamless Copper Pipe, Standard Sizes
909.13.1

B43—15: Specification for Seamless Red Brass Pipe, Standard Sizes
909.13.1

B68/B58M—11: Specification for Seamless Copper Tube, Bright Annealed (Metric)
909.13.1

B88—14: Specification for Seamless Copper Water Tube
909.13.1

B251—10: Specification for General Requirements for Wrought Seamless Copper and Copper-alloy Tube
909.13.1

B280—13: Specification for Seamless Copper Tube for Air Conditioning and Refrigeration Field Service
909.13.1

D56—05(2010): Test Method for Flash Point by Tag Closed Cup Tester
202

D86—15: Test Method for Distillation of Petroleum Products at Atmospheric Pressure
202

D92—12b: Test Method for Flash and Fire Points by Cleveland Open Cup Tester
202, 2401.2, 5104.1.1, 5701.2

D93—15: Test Method for Flash Point by Pensky-Martens Closed Up Tester
202

D323—2015A: Test Method for Vapor Pressure of Petroleum Products (Reid Method)
202

D2859—16: Standard Test Method for Ignition Characteristics of Finished Textile Floor Covering Materials
804.3.3.1, 804.3.3.2

D3278—96(2011): Test Methods for Flash Point of Liquids by Small Scale Closed-cup Apparatus
202

E84—2016: Standard Test Method for Surface Burning Characteristics of Building Materials
202, 803.1, 803.1.2, 803.3, 803.5.2, 803.10, 803.12, 803.13, 804.1.1, 804.1.2, 804.2.4

E108—2016: Standard Test Methods for Fire Tests of Roof Coverings
317.2, 317.3

E648—15e1: Standard Test Method for Critical Radiant Flux of Floor-covering Systems Using a Radiant Heat Energy Source
804.3.1, 804.3.2, 804.4

INTERNATIONAL CODE COUNCIL®
Copyright © 2019 ICC & NYSDOS. ALL RIGHTS RESERVED. Accessed by Lauren Gualdino (lgualdino@briarcliffmanor.org), (-) Order Number #100880972 on May 08, 2020 07:05 AM (PDT) pursuant to License Agreement with ICC & NYSDOS. No further reproduction, no

100880972

ASTM—continued

E681—09(2015): Test Method for Concentration Limits of Flammability of Chemicals (Vapors and Gases)
202

E1354—2016: Standard Test Method for Heat and Visible Smoke Release Rates for Materials and Products Using an Oxygen Consumption Calorimeter
304.3.2, 304.3.4, 318.1, 808.1, 808.2, 2310.5.3, 3304.2.3, 3603.4

E1529—14a: Standard Test Method for Determining Effects of Large Hydrocarbon Pool Fires on Structural Members and Assemblies
5704.2.9.2.3

E1537—2015: Test Method for Fire Testing of Upholstered Furniture
805.1.1.2, 805.2.1.2, 805.3.1.2, 805.4.1.2

E1590—13: Test Method for Fire Testing of Mattresses
805.1.2.2, 805.2.2.2, 805.3.2.2.1, 805.4.2.2

E1966—2015: Standard Test Method for Fire-resistant Joint Systems
202

E2072—14: Standard Specification for Photoluminescent (Phosphorescent) Safety Markings
1025.4

E2404—15a: Standard Practice for Specimen Preparation and Mounting of Textile, Paper or Polymeric (Including Vinyl) and Wood Wall or Ceiling Coverings, Facing and Veneers to Assess Surface Burning Characteristics:
803.5.1, 803.5.2, 803.12

E2573—12: Standard Practice for Specimen Preparation and Mounting of Site-fabricated Stretch Systems to Assess Surface Burning Characteristics
803.10

E2579—13: Standard Practice for Specimen Preparation and Mounting of Wood Products to Assess Surface Burning Characteristics
803.13

F1085—14: Standard Specification for Mattress and Box Springs for Use in Berths in Marine Vessels
805.3.2.2.2

F2006—17: Standard/Safety Specification for Window Fall Prevention Devices for Non-emergency Escape (Egress) and Rescue (Ingress) Windows
1015.8

F2090—17: Specification for Window Fall Prevention Devices with Emergency Escape (Egress) Release Mechanisms
1015.8, 1015.8.1, 1030.1.1

F2200—14: Standard Specification for Automated Vehicular Gate Construction
503.5, 503.6

BHMA

Builders Hardware Manufacturers' Association
355 Lexington Avenue, 15th Floor
New York, NY 10017

***A156.10—2011: American National Standard for Power-operated Pedestrian Doors**
1010.1.4.2

***A156.19—2013: American National Standard for Power Assist and Low-energy Power-operated Doors**
1010.1.4.2

***A156.27—2011: Power- and Manual-operated Revolving Pedestrian Doors**
1010.1.4.1, 1010.1.4.1.1

A156.38—2014: Low-energy Power-operated Sliding and Folding Doors
1010.1.4.2

INTERNATIONAL CODE COUNCIL®
Copyright © 2019 ICC & NYSDOS. ALL RIGHTS RESERVED. Accessed by Lauren Gualdino (lgualdino@briarcliffmanor.org), (-) Order Number #100880972 on May 08, 2020 07:05 AM (PDT) pursuant to License Agreement with ICC & NYSDOS. No further reproduction, no

100880972

CA

State of California Department of Consumer Affairs
Bureau of Electronics and Appliance Repair, Home Furnishings and Thermal Insulation
4244 South Market Court, Suite D
Sacramento, CA 95834-1243

California Technical Bulletin 129—1992: Flammability Test Procedure for Mattresses for Use in Public Buildings
805.1.2.2, 805.2.2.2, 805.3.2.2.1, 805.4.2.2

California Technical Bulletin 133—1991: Flammability Test Procedure for Seating Furniture for Use in Public Occupancies
805.1.1.2, 805.2.1.2, 805.4.1.2

CGA

Compressed Gas Association
14501 George Carter Way, Suite 103
Chantilly, VA 20151

C-7—(2014): Guide to Classification and Labeling of Compressed Gases
5303.4.2, 5503.4.2

ANSI/CGA G-13—(2015): Storage and Handling of Silane and Silane Mixtures (an American National Standard)
6404.1, 6404.2, 6405.3

P-1—(2015): Standard for Safe Handling of Compressed Gases in Containers
5305.7

ANSI/CGA P-18—(2013): Standard for Bulk Inert Gas Systems
5501.1

S-1.1—(2017): Pressure Relief Device Standards—Part 1—Cylinders for Compressed Gases
5303.3.2, 5503.2

S-1.2—(2009): Pressure Relief Device Standards—Part 2—Cargo and Portable Tanks for Compressed Gases
5303.3.2, 5503.2

S-1.3—(2016): Pressure Relief Device Standards—Part 3—Stationary Storage Containers for Compressed Gases
5303.3.2, 5503.2

V-1—(2013): Standard for Gas Cylinder Valve Outlet and Inlet Connections
3505.2.1

CGR

Coast Guard Regulations
c/o Superintendent of Documents
U.S. Government Printing Office
Washington, DC 20402-9325

***46 CFR Parts 30, 32, 35 & 39—1999: Shipping**
5706.8

CPSC

Consumer Product Safety Commission
4330 East-West Highway
Bethesda, MD 20814

16 CFR Part 1500—2009: Hazardous Substances and Articles; Administration and Enforcement Regulations
202, 5601.1.3

16 CFR Part 1500.41—2009: Method for Testing Primary Irritant Substances
202

16 CFR Part 1500.42—2009: Test for Eye Irritants
202

16 CFR Part 1500.44—2009: Method for Testing Extremely Flammable and Flammable Solids
202

16 CFR Part 1507—2002: Fireworks Devices
202, 5601.1.3

16 CFR Part 1630—2007: Standard for the Surface Flammability of Carpets and Rugs
804.3.3.1, 804.3.3.2

INTERNATIONAL CODE COUNCIL®
Copyright © 2019 ICC & NYSDOS. ALL RIGHTS RESERVED. Accessed by Lauren Gualdino (lgualdino@briarcliffmanor.org), (-) Order Number #100880972 on May 08, 2020 07:05 AM (PDT) pursuant to License Agreement with ICC & NYSDOS. No further reproduction, no

100880972

DOC

U.S. Department of Commerce
1401 Constitution Avenue, NW
Washington, DC 20230

16 CFR Part 1632—2015: Standard for the Flammability of Mattress and Mattress Pads (FF 4-72, Amended)
805.1.2.1, 805.2.2.1, 805.3.2.1, 805.4.2.1

DOL

U.S. Department of Labor
c/o Superintendent of Documents
U.S. Government Printing Office
Washington, DC 20402-9325

29 CFR Part 1910.1000—2015: Air Contaminants
202, 2104.2.1

29 CFR Part 1910.1200—2015: Hazard Communication
202, 5603.6

DOTn

U.S. Department of Transportation
Office of Hazardous Material Safety
1200 New Jersey Avenue SE
East Building, 2nd Floor
Washington, DC 20590

33 CFR Part 154—2015: Facilities Transferring Oil or Hazardous Material in Bulk
5706.8

33 CFR Part 155—2015: Oil or Hazardous Material Pollution Prevention Regulations for Vessels
5706.8

33 CFR Part 156 —2015: Oil and Hazardous Material Transfer Operations
5706.8

49 CFR Parts 100-185—2015: Hazardous Materials Regulations
202, 3505.4, 5303.2, 5503.4.3, 5503.7, 5601.1, 5601.1.3, 5601.3, 5706.5.1.15

49 CFR Part 172—2015: Hazardous Materials Tables, Special Provisions, Hazardous Materials Communications, Emergency Response Information and Training Requirements
5604.6.5.2

***49 CFR Part 173—2009: Shippers—General Requirements for Shipments and Packagings**
5104.1.1, 5606.3

***49 CFR Part 173.137—2009: Shippers—General Requirements for Shipments and Packagings: Class 8—Assignment of Packing Group**
202

DOTy

U.S. Department of Treasury
c/o Superintendent of Documents
U.S. Government Printing Office
Washington, DC 20402-9325

27 CFR Part 555—2015: Commerce in Explosives, as amended through April 1, 1998
202, 5604.6.5.2

EN

European Committee for Standardization (EN)
Central Secretariat
Rue de Stassart 36
B-10 50 Brussels

European Standard EN 1081—1998: Resilient Floor Coverings—Determination of the Electrical Resistance
2309.5.1.1

INTERNATIONAL CODE COUNCIL®
Copyright © 2019 ICC & NYSDOS. ALL RIGHTS RESERVED. Accessed by Lauren Gualdino (lgualdino@briarcliffmanor.org), (-) Order Number #100880972 on May 08, 2020 07:05 AM (PDT) pursuant to License Agreement with ICC & NYSDOS. No further reproduction, no

100880972

FCC

Federal Communications Commission
Wireless Telecommunications Bureau (WTB)
445 12th Street SW
Washington, DC 20554

47 CFR Part 90.219—2014: Private Land Mobile Radio Services—Use of Signal Boosters
510.5.4

FM

FM Approvals
Headquarters Office
1151 Boston-Providence Turnpike
P.O. Box 9102
Norwood, MA 02062

4430—12: Approval Standard for Heat and Smoke Vents
910.3.1

ANSI/FM 4996—15: Approval Standard for Classification of Pallets and Other Material Handling Products as Equivalent to Wood Pallets
315.7.5, 3206.4.1.1

ICC

International Code Council, Inc.
500 New Jersey Avenue, NW
6th Floor
Washington, DC 20001

***ICC A117.1—09: Accessible and Usable Buildings and Facilities**
907.5.2.3.3, 1009.8.2, 1009.9, 1009.11, 1010.1.9.8.1, 1012.1, 1012.6.5, 1012.10, 1013.4, 1023.9

***ICC 300—17: Standard on Bleachers, Folding and Telescopic Seating and Grandstands**
1029.1.1, 1029.17

***BCNYS—20: Building Code of New York State**
102.4, 201.3, 202, 304.1.3, 306.1, 311.3, 313.1, 317.1, 403.8.3.2, 403.11.4, 404.2.1, 504.1, 508.1, 508.1.2, 603.2, 603.3.2.5, 603.6.1, 603.8, 606.3, 606.4, 606.5, 606.6, 701.1, 801.1, 803.1, Table 803.3, 803.11.1, 803.11.2, 803.15, 807.2, 807.5.1.2, 808.1, 808.2, 901.4.1, 901.4.2, 901.4.3, 903.2, 903.2.5.2, 903.2.9.1, 903.2.10, 903.3.1.1.1, 903.3.1.2, 903.3.1.2.1, 903.3.1.2.3, 903.3.2, 904.13, 907.1.1, 907.2.1, 907.2.6.2, 907.2.6.3.3, 907.2.7, 907.2.12, 907.2.17, 907.2.20, 907.5.2.1, 907.6.6, 909.1, 909.2, 909.3, 909.4.3, 909.5, 909.5.3, 909.5.3.1, 909.5.3.2, 909.6.3, 909.10.5, 909.11.1, 909.18.8, 909.21.1, 910.4.5, Table 911.1, 911.2, 913.2.1, 914.1, 914.2.1, 914.3.1, 914.3.2, 914.4.1, 914.5.3, Table 914.8.3, 914.8.3.2, 914.10, 915.1.6, 1003.2, 1003.5, Table 1004.5, 1004.6, 1005.7.2, 1006.2.1, Table 1006.2.1, 1008.3.4, 1009.2, 1009.4.1, 1009.4.2, 1009.5, 1009.6.4, 1009.7.2, 1010.1.4.1, 1010.1.4.3, 1010.1.5, 1010.1.7, 1010.1.9.1, 1010.1.9.12, 1011.10, 1011.11, 1011.12.2, 1012.6.3, 1012.6.4, 1014.1, 1015.2, 1015.2.1, 1016.2, Table 1017.2, 1018.3, 1018.5, 1019.3, 1019.4, 1020.1, Table 1020.1, 1020.1.1, 1021.4, 1023.2, 1023.3.1, 1023.4, 1023.5, 1023.6, 1023.7, 1023.11, 1023.11.1, 1023.11.2, 1024.3, 1024.5, 1024.6, 1024.7, 1026.2, 1026.3, 1026.4.1, 1027.5, 1028.1, 1029.1.1.1, 1029.14.1, 1029.16.4, 1103.3.2, 1103.4.1, 1103.4.8, 1103.4.9.1, 1103.4.9.2.1, 1103.4.9.2.2, 1103.4.9.4, 1103.4.9.5, 1103.4.10, 1104.5, 1104.17, 1104.17.1, 1104.18, Table 1104.18, 1105.4.1, 1105.4.3.1, 1105.4.3.2, 1105.5.7, 1105.7.2, 1105.7.3, 1105.7.4, 1105.7.5, 1105.7.6, 1105.8, 1203.1, 1203.1.3, 1203.1.8, 1203.2.1, 1203.2.7, 1203.2.8, 1203.2.10, 1203.2.15, 1203.2.18, 1204.1, 1205.6.2, 1206.2.3.2, 1206.2.4, 1206.2.8.2, 1206.2.8.3, 1206.2.9, 1206.3.2.2, 1206.3.3, 2004.6, 2006.17, 2007.1, 2007.4, 2103.3, 2107.1, 2301.1, 2301.4, 2303.1, 2307.4, 2308.3, 2308.3.1, 2308.3.1.2, 2309.3.1.5.1, 2309.3.2, 2310.1, 2311.1, 2311.3.1, 2311.4.1, 2311.8.3, 2404.2, 2404.3.1, 2404.3.3.6, 2404.3.4, 2405.2, 2701.1, 2701.4, 2703.2.2, 2703.3.1, 2703.3.2, 2703.3.3, 2703.3.4, 2703.3.8, 2703.14, 2703.14.1, 2703.14.2, 2703.15.1, 2704.3.1, 2705.2.3.2, 2705.3.1, 2705.3.2.1, 2705.3.3, 2803.1, 2905.1, 2909.2, 2909.4, 2909.6, 3101.1, 3103.1, 3103.3.1, 3103.8.2, 3103.8.4, 3103.9.1, 3103.9.2, 3103.9.3, 3104.1, 3105.5, 3201.3, 3206.3.2, 3206.9, 3207.2, 3208.2, 3314.1, 3403.1, 3704.3, 3704.4, 3704.5, 3801.1, 3801.2, 3804.1, 3804.1.1.1, Table 3805.4, Table 3806.2.1, 3901.1, 3903.1, 3904.1, 5003.2.2.2, 5003.2.8, 5003.8.1, Table 5003.8.2, 5003.8.3, 5003.8.3.1, 5003.8.4.1, 5003.9.9, 5004.13, 5005.2, 5005.3.9, 5101.1, 5303.16.1, 5303.16.2, 5306.1, 5306.2, 5306.2.1, 5306.2.2, 5307.4.6, 5503.1.2, 5503.5.2, 5504.2.1.2, 5504.2.2.2, 5505.4.1, 5604.2,

INTERNATIONAL CODE COUNCIL®
Copyright © 2019 ICC & NYSDOS. ALL RIGHTS RESERVED. Accessed by Lauren Gualdino (lgualdino@briarcliffmanor.org), (-) Order Number #100880972 on May 08, 2020 07:05 AM (PDT) pursuant to License Agreement with ICC & NYSDOS. No further reproduction, no

100880972

ICC—continued

Table 5604.5.2(3), 5605.5, 5701.3, 5704.2.7.7, 5704.2.8.1, 5704.2.8.2, 5704.2.9.3, 5704.2.9.4, 5704.3.3.5, 5704.3.7.1, 5704.3.8, 5705.3.4, 5705.3.5.3, 5705.3.7.1, 5705.3.7.2, 5705.3.7.3, 5705.3.7.4, 5705.3.7.5.1, 5706.2.3, 5706.4.1, 5803.1.1, 5806.4.3, 5808.1, 5808.3, 5808.3.2, 5906.2.2, 5906.2.3, 5906.4.2, 6003.1.4.2, 6005.3.1, 6109.11.2, 6204.1.2, 6306.4, 6404.1.4, 6604.1

***EBCNYS—20: Existing Building Code of New York State**

102.3, 1011.5.2, 1103.1 1104.18, 1105.5.2

***FGCNYS—20: Fuel Gas Code of New York State**

201.3, 603.1, 603.1.2, 603.5.2, 603.8, 1205.9, 2301.1, 2301.6, 2309.3.1.2, 2309.3.1.5, 2504.5, 3001.1, 3003.1, 3004.1, 3004.2, 3107.12.1, 3107.12.2, 3107.13.1, 3303.3, 3306.2.1, Table 5003.1.1(1), 5301.1, 5801.1, 5803.1.4, 6103.1, 6103.2.1.7, 6103.3

***MCNYS—20: Mechanical Code of New York State**

201.3, 308.3, 603.1, 603.1.2, 603.2, 603.3, 603.3.2.4, 603.5.2, 603.8, 605.1, 605.2, 605.3, 605.4, 605.7, 605.8.1, 605.9, 605.16, 607.1, 607.2, 903.2.11.4, 904.12, 907.3.1, 909.1, 909.10.2, 909.13.1, 910.4.7, 915.6.1, 1006.2.2.3, 1011.16, 1020.5.1, 1206.2.11.3, 1206.3.5.3, 2104.2.1, 2105.3, 2301.1, 2301.6, 2309.3.1.2, 2311.3.1, 2311.4.3, 2311.8.2, 2311.8.8, 2311.8.10, 2404.7, 2404.7.2, 2504.5, 2703.2.2, 2703.10.4, 2703.14, 2803.2, 2803.3, 3001.1, 3003.1, 3004.2, 3107.12.1, 3107.12.2, 3703.5, 3804.1.1.7, 3904.1, Table 5003.1.1(1), 5003.8.4.2, 5003.8.5.2, 5003.8.6.2, 5004.3.1, 5303.7.6, 5303.16.9, 5305.5, 5306.2.2, 5306.2.3, 5307.4.4, 5504.2.1.3, 5504.2.2.3, 5505.4.1.1, 5701.3, 5703.6.1, 5704.2.8.9, 5705.3.7.5.1, 5706.2, 5706.4.4, 6003.1.3, 6003.2.3.2, 6004.2.2.7, 6005.3.1, 6005.3.2, 6103.2.1.7

***PCNYS—20: Plumbing Code of New York State**

201.3, 903.3.5, 904.11.1.3, 912.6, 2311.2.3, 5004.2.2.6

***RCNYS—20: Residential Code of New York State**

102.5, 202, 1001.1, 1204.1, 1204.2.1

IWUIC—18: International Wildland-Urban Interface Code®

304.1.2

IIAR

International Institute of Ammonia Refrigeration
1001 N. Fairfax Street, Suite 503
Alexandria, VA 22314

ANSI/IIAR-2—2014: Safe Design of Closed-circuit Ammonia Refrigerating Systems

605.1.2, 605.8

ANSI/IIAR-7—2013: Developing Operating Procedures for Closed-circuit Ammonia Mechanical Refrigerating Systems

605.1.2

ANSI/IIAR-8—2015: Decommissioning of Closed-circuit Ammonia Refrigerating Systems

605.1.2

IKECA

International Kitchen Exhaust Cleaning Association
100 North 20th Street, Suite 400
Philadelphia, PA 19103

C10—2016: IKECA C10, Standard for the Methodology for Cleaning of Commercial Kitchen Exhaust Systems

607.3.3.2

ISO

International Organization for Standardization (ISO)
ISO Central Secretariat
1 ch, de la Voie-Creuse, Case postale 56
CH-1211 Geneva 20, Switzerland

ISO 8115—86: Cotton Bales—Dimensions and Density

Table 2704.2.2.1, Table 5003.1.1(1)

INTERNATIONAL CODE COUNCIL®
Copyright © 2019 ICC & NYSDOS. ALL RIGHTS RESERVED. Accessed by Lauren Gualdino (lgualdino@briarcliffmanor.org), (-) Order Number #100880972 on May 08, 2020 07:05 AM (PDT) pursuant to License Agreement with ICC & NYSDOS. No further reproduction, no

100880972

NEMA

National Electrical Manufacturer's Association
1300 North 17th Street
Suite 900
Rosslyn, VA 22209

250—2014: Enclosures for Electrical Equipment (1,000 Volt Maximum)
6005.2

NFPA

National Fire Protection Association
1 Batterymarch Park
Quincy, MA 02169-7471

***02—16: Hydrogen Technologies Code**
1205.3, 1205.4, 2309.3.1.1, 2309.3.1.2, 2309.6, 2311.8, 2311.8.2, 2311.8.10, 2311.8.11, 5301.1, 5801.1

***04—15: Standard for Integrated Fire Protection and Life Safety System Testing**
901.6.2.1, 901.6.2.2

***10—18: Standard for Portable Fire Extinguishers**
Table 901.6.1, 906.2, Table 906.3(1), Table 906.3(2), 906.3.2, 906.3.4, 3006.3

***11—16: Standard for Low-, Medium-, and High-expansion Foam**
904.7, 5704.2.9.2.2

***12—15: Standard on Carbon Dioxide Extinguishing Systems**
Table 901.6.1, 904.8, 904.12

***12A—15: Standard on Halon 1301 Fire Extinguishing Systems**
Table 901.6.1, 904.9

***13—16: Standard for the Installation of Sprinkler Systems**
903.3.1.1, 903.3.2, 903.3.8.2, 903.3.8.5, 904.12, 905.3.4, 907.6.4, 914.3.2, 1019.3, 1103.4.8, 1206.2.11.1, 1206.3.5.1, 3201.1, 3204.2, Table 3206.2, 3206.4.1, 3206.10, 3207.2, 3207.2.1, 3208.2.2, 3208.2.2.1, 3208.4, 3210.1, 3401.1, 5104.1, 5104.1.1, 5106.5.7, 5704.3.3.9, Table 5704.3.6.3(7), 5704.3.7.5.1, 5704.3.8.4

***13D—16: Standard for the Installation of Sprinkler Systems in One- and Two-family Dwellings and Manufactured Homes**
903.3.1.3

***13R—16: Standard for the Installation of Sprinkler Systems in Low-rise Residential Occupancies**
903.3.1.2, 903.3.5.2, 903.4

***14—16: Standard for the Installation of Standpipe and Hose Systems**
905.2, 905.3.4, 905.4.2, 905.6.2, 905.8

***15—17: Standard for Water Spray Fixed Systems for Fire Protection**
5704.2.9.2.3

***16—15: Standard for the Installation of Foam-water Sprinkler and Foam-water Spray Systems**
904.7, 904.12

***17—17: Standard for Dry Chemical Extinguishing Systems**
Table 901.6.1, 904.6, 904.12

***17A—17: Standard for Wet Chemical Extinguishing Systems**
Table 901.6.1, 904.5, 904.12

***20—16: Standard for the Installation of Stationary Pumps for Fire Protection**
913.1, 913.2, 913.5.1

***22—18: Standard for Water Tanks for Private Fire Protection**
507.2.2

***24—16: Standard for Installation of Private Fire Service Mains and Their Appurtenances**
507.2.1, 2809.5

***25—17: Standard for the Inspection, Testing and Maintenance of Water-based Fire Protection Systems**
507.5.3, Table 901.6.1, 904.7.1, 912.7, 913.5

INTERNATIONAL CODE COUNCIL®
Copyright © 2019 ICC & NYSDOS. ALL RIGHTS RESERVED. Accessed by Lauren Gualdino (lgualdino@briarcliffmanor.org), (-) Order Number #100880972 on May 08, 2020 07:05 AM (PDT) pursuant to License Agreement with ICC & NYSDOS. No further reproduction, no

100880972

NFPA—continued

***30—18: Flammable and Combustible Liquids Code**
608.1, 5701.2, 5703.6.2, 5703.6.2.1, 5704.2.7, 5704.2.7.1, 5704.2.7.2, 5704.2.7.3.2, 5704.2.7.4, 5704.2.7.6, 5704.2.7.7, 5704.2.7.8, 5704.2.7.9, 5704.2.9.3, 5704.2.9.4, 5704.2.9.6.1.1, 5704.2.9.6.1.2, 5704.2.9.6.1.3, 5704.2.9.6.1.4, 5704.2.9.6.1.5, 5704.2.9.6.2, 5704.2.9.7.3, 5704.2.10.2, 5704.2.11.3, 5704.2.11.4.2, 5704.2.12.1, 5704.3.1, 5704.3.6, Table 5704.3.6.3(1), Table 5704.3.6.3(2), Table 5704.3.6.3(3), 5704.3.7.2.3, 5704.3.8.4, 5706.8.3

***30A—18: Code for Motor Fuel-dispensing Facilities and Repair Garages**
2301.4, 2301.5, 2301.6, 2306.6.3, 2310.1

***30B—15: Code for the Manufacture and Storage of Aerosol Products**
5101.1, 5103.1, 5104.1, Table 5104.3.1, Table 5104.3.2, Table 5104.3.2.2, 5104.3.3, 5104.4.1, 5104.5.2, 5104.6, 5104.8.2, 5106.2.2, 5106.2.4, 5106.3.2, Table 5106.4, 5106.5.1, 5106.5.6, 5107.1

***31—16: Standard for the Installation of Oil-burning Equipment**
603.1.7, 603.3.1, 603.3.3

***32—16: Standard for Dry Cleaning Plants**
2107.1, 2107.3

***33—15: Standard for Spray Application Using Flammable or Combustible Materials**
2403.3

***34—15: Standard for Dipping, Coating and Printing Processes Using Flammable or Combustible Liquids**
2405.3, 2405.4.1.1

***35—16: Standard for the Manufacture of Organic Coatings**
2901.3, 2905.4

***40—16: Standard for the Storage and Handling of Cellulose Nitrate Film**
306.2

***45—15: Standard on Fire Protection for Laboratories Using Chemicals (2015 Edition)**
3803.1.5, 3804.1.1.7, 3805.2.1, 3805.2.2

***51—18: Standard for the Design and Installation of Oxygen-fuel Gas Systems for Welding, Cutting and Allied Processes**
3501.5, 3507.1, 3509.1

***52—16: Vehicular Gaseous Fuel System Code**
319.9.2, 5301.1

***55—16: Compressed Gases and Cryogenic Fluids Code**
3508.1, 5301.1, 5307.4.2, 5501.1, 5801.1, 6301.1

***56—17: Standard for Fire and Explosion Prevention during Cleaning and Purging of Flammable Gas Piping Systems**
3306.2.1

***58—17: Liquefied Petroleum Gas Code**
319.8.3, 603.4.2.1.1, 2311.5, 3903.6, 6101.1, 6103.1, 6103.2.1, 6103.2.1.2, 6103.2.1.7, 6103.2.2, 6104.1, 6104.3.2, 6104.4, 6105.2, 6106.2, 6106.3, 6107.2, 6107.4, 6108.1, 6108.2, 6109.11.2, 6111.3

***59A—16: Standard for the Production, Storage and Handling of Liquefied Natural Gas (LNG)**
5301.1, 5501.1

***61—17: Standard for the Prevention of Fires and Dust Explosions in Agricultural and Food Processing Facilities**
Table 2204.1

***69—14: Standard on Explosion Prevention Systems**
911.1, 911.3, Table 2204.1

***70—17: National Electrical Code®**
309.2, 603.1.3, 603.1.7, 603.5.2, 604.3, 604.3.1, 604.4, 604.9, 605.16, 605.17, 608.6, 608.7, 904.3.1, 907.6.1, 909.12.2, 909.16.3, 910.4.6, 1201.2, 1203.1.3, 1204.1, 1205.4, 1206.2.8.6.1, 1206.3, 1206.3.2.5, 2006.3.4, 2104.2.3, 2108.2, Table 2204.1, 2301.5, 2305.4, 2308.8.1.2.4, 2309.2.3, 2311.3.1, 2311.8.10, 2403.2.1, 2403.2.1.1, 2403.2.1.4, 2403.2.5, 2404.6.1.2.2, 2404.9.4, 2504.5, 2603.2.1, 2703.7.1, 2703.7.2, 2703.7.3, 2803.4, 2904.1, 3103.12.6.1, 3106.6, 3107.12.7, 3304.7, 3506.4, 5003.8.7.1, 5003.9.4, 5303.7.6, 5303.8, 5303.16.11, 5303.16.14, 5503.6, 5503.6.2, 5703.1, Table 5703.1.1, 5703.1.3, 5704.2.8.12, 5704.2.8.17, 5706.2.8, 5803.1.5, 5803.1.5.1, 5807.1.10, 5906.5.5, 5906.5.6, 6109.15.1

***72—16: National Fire Alarm and Signaling Code®**
508.1.6, Table 901.6.1, 903.4.1, 904.3.5, 907.1.2, 907.2, 907.2.6, 907.2.9.3, 907.2.10, 907.2.12.2, 907.3, 907.3.3, 907.3.4, 907.5.2.1.2, 907.5.2.2, 907.5.2.2.5, 907.6, 907.6.1, 907.6.2, 907.6.6, 907.7, 907.7.1, 907.7.2, 907.8, 907.8.2, 907.8.5, 917.1, 1103.3.2, 1203.2.4, 2810.11

INTERNATIONAL CODE COUNCIL®
Copyright © 2019 ICC & NYSDOS. ALL RIGHTS RESERVED. Accessed by Lauren Gualdino (lgualdino@briarcliffmanor.org), (-) Order Number #100880972 on May 08, 2020 07:05 AM (PDT) pursuant to License Agreement with ICC & NYSDOS. No further reproduction, no

100880972

NFPA—continued

***80—16: Standard for Fire Doors and Other Opening Protectives**
705.2, 706.1, 1010.1.4.3, 1031.2.2

***85—15: Boiler and Combustion System Hazards Code**
Table 2204.1

***86—15: Standard for Ovens and Furnaces**
3001.1

***92—15: Standard for Smoke Control Systems**
909.7, 909.8

***96—17: Standard for Ventilation Control and Fire Protection of Commercial Cooking Operations**
607.2, 904.12

***99—18: Health Care Facilities Code**
609.1, 1105.11.1, 1105.11.2, 1203.4.1, 1203.5.1, 5306.4, 5306.5

***101—18: Life Safety Code®**
1029.6.2

***105—16: Standard for Smoke Door Assemblies and Other Opening Protectives**
705.2, 706.1

***110—16: Standard for Emergency and Standby Power Systems**
913.5.2, 913.5.3, 1203.1.3, 1203.4, 1203.5

***111—13: Standard on Stored Electrical Energy Emergency and Standby Power Systems**
1203.1.3, 1203.4, 1203.5

***120—15: Standard for Fire Prevention and Control in Coal Mines**
Table 2204.1

***160—16: Standard for the Use of Flame Effects Before an Audience**
308.3.2

***170—18: Standard for Fire Safety and Emergency Symbols**
1025.2.6.1

***204—15: Standard for Smoke and Heat Venting**
Table 901.6.1, 910.5.1, 910.5.2

***211—16: Standard for Chimneys, Fireplaces, Vents and Solid Fuel-burning Appliances**
603.2

***241—13: Standard for Safeguarding Construction, Alteration and Demolition Operations**
3301.1, 3308.2

***253—15: Standard Method of Test for Critical Radiant Flux of Floor Covering Systems Using a Radiant Heat Energy Source**
804.3.1, 804.3.2, 804.4

***260—13: Methods of Tests and Classification System for Cigarette Ignition Resistance of Components of Upholstered Furniture**
805.1.1.1, 805.2.1.1, 805.3.1.1, 805.4.1.1

***261—18: Standard Method of Test for Determining Resistance of Mock-up Upholstered Furniture Material Assemblies to Ignition by Smoldering Cigarettes**
805.2.1.1, 805.3.1.1, 805.4.1.1, 805.1.1.1

***265—15: Standard Methods of Fire Tests for Evaluating Room Fire Growth Contribution of Textile Wall Coverings in Full Height Panels and Walls**
803.5.1, 803.5.1.1

***286—15: Standard Methods of Fire Tests for Evaluating Contribution of Wall and Ceiling Interior Finish to Room Fire Growth**
803.1, 803.1.1, 803.1.1.1, 803.3, 803.12, 803.13, 804.1.1, 804.2.4

***289—13: Standard Method of Fire Test for Individual Fuel Packages**
807.3, 807.4.1, 807.5.1.1, 808.3

***303—16: Fire Protection Standard for Marinas and Boatyards**
3603.5, 3603.6, 3604.2

***318—18: Standard for the Protection of Semiconductor Fabrication Facilities**
2703.16

***326—15: Standard for the Safeguarding of Tanks and Containers for Entry, Cleaning or Repair**
3510.1

INTERNATIONAL CODE COUNCIL®
Copyright © 2019 ICC & NYSDOS. ALL RIGHTS RESERVED. Accessed by Lauren Gualdino (lgualdino@briarcliffmanor.org), (-) Order Number #100880972 on May 08, 2020 07:05 AM (PDT) pursuant to License Agreement with ICC & NYSDOS. No further reproduction, no

100880972

NFPA—continued

***385—17: Standard for Tank Vehicles for Flammable and Combustible Liquids**
5706.5.4.5, 5706.6, 5706.6.1

***400—13: Hazardous Materials Code**
5601.1.5, 6304.1.2, Table 6304.1.5(1), Table 6304.1.5(2)

***407—17: Standard for Aircraft Fuel Servicing**
2006.2, 2006.3

***409—16: Standard for Aircraft Hangars**
914.8.3, Table 914.8.3, 914.8.3.1, 914.8.6

***410—15: Standard on Aircraft Maintenance**
2004.7

***484—15: Standard for Combustible Metals**
Table 2204.1

***495—18: Explosive Materials Code**
202, 911.1, 911.4, 5601.1.1, 5601.1.5, 5604.2, 5604.6.2, 5604.6.3, 5604.7.1, 5605.1, 5606.1, 5606.5.2.1, 5605.2.3, 5607.1, 5607.9, 5607.11, 5607.15

***498—18: Standard for Safe Havens and Interchange Lots for Vehicles Transporting Explosives**
5601.1.2

***505—18: Fire Safety Standard for Powered Industrial Trucks, Including Type Designations, Areas of Use, Maintenance and Operation**
309.2

***652—16: The Fundamentals of Combustible Dust**
2201.1, 2203.1, 2203.2

***654—17: Standard for Prevention of Fire and Dust Explosions from the Manufacturing, Processing and Handling of Combustible Particulate Solids**
Table 2204.1

***655—17: Standard for the Prevention of Sulfur Fires and Explosions**
Table 2204.1

***664—17: Standard for the Prevention of Fires and Explosions in Wood Processing and Woodworking Facilities**
Table 2204.1, 2805.3

***701—15: Standard Methods of Fire Tests for Flame-propagation of Textiles and Films**
807.3, 807.4.1, 807.5.1.2, 2603.5, 3104.2

***703—18: Standard for Fire Retardant-Wood and Fire-Retardant Coatings for Building Materials**
803.4

***704—17: Standard System for Identification of the Hazards of Materials for Emergency Response**
202, 605.7, 5003.2.2.2, 5003.5, 5003.10.2, 5005.1.10, 5005.1.12, 5005.2.1.1, 5005.4.4, 5503.4.1, 5704.2.3.2

***720—15: Standard for the Installation of Carbon Monoxide (CO) Detection and Warning Equipment**
915.5.1, 915.5.2, 915.6

***750—15: Standard on Water Mist Fire Protection Systems**
202, Table 901.6.1, 904.11.1.1, 904.12

***853—15: Installation of Stationary Fuel Cell Power Systems**
1205.3, 1205.4, 1205.6.2, 1205.11, 1205.12

***914—15: Code for Fire Protection of Historic Structures**
1103.1.1

***1122—18: Code for Model Rocketry**
5601.1.4

***1123—18: Code for Fireworks Display**
202, 5604.2, 5608.1, 5608.2.2, 5608.5, 5608.6

***1124—06: Code for the Manufacture, Transportation, Storage and Retail Sales of Fireworks and Pyrotechnic Articles**
202, 5601.1.3, 5604.2, 5605.1, 5605.3, 5605.4, 5605.5, 5609.1

***1125—17: Code for the Manufacture of Model Rocket and High Power Rocket Motors**
5601.1.4

INTERNATIONAL CODE COUNCIL®
Copyright © 2019 ICC & NYSDOS. ALL RIGHTS RESERVED. Accessed by Lauren Gualdino (lgualdino@briarcliffmanor.org), (-) Order Number #100880972 on May 08, 2020 07:05 AM (PDT) pursuant to License Agreement with ICC & NYSDOS. No further reproduction, no

100880972

NFPA—continued

***1126—16: Standard for the Use of Pyrotechnics Before a Proximate Audience**
5604.2, 5605.1, 5608.1, 5608.2.2, 5608.4, 5608.5

***1127—18: Code for High Power Rocketry**
5601.1.4

***1142—17: Standard on Water Supplies for Suburban and Rural Fire Fighting**
507.2

***1221—16: Standard for the Installation, Maintenance and Use of Emergency Services Communications Systems**
510.4.2, 510.5

***1402—19: Guide to Building Fire Service Training Centers**
320.1

***1403—18: Standard on Live Fire Training Evolutions**
320.1

***2001—15: Standard on Clean Agent Fire Extinguishing Systems**
Table 901.6.1, 904.10

***2010—15: Standard for Fixed Aerosol Fire-extinguishing Systems**
Table 901.6.1, 904.14

UL

Underwriters Laboratories LLC
333 Pfingsten Road
Northbrook, IL 60062

10C—09: Positive Pressure Fire Tests of Door Assemblies—with revisions through February 2015
1010.1.10.1

30—95: Metal Safety Cans—with revisions through June 2014
5003.9.10, 5005.1.10, 5705.2.4

58—96: Steel Underground Tanks for Flammable and Combustible Liquids—with revisions through July 1998
5704.2.13.1.5

80—07: Steel Tanks for Oil-burner Fuels and Other Combustible Liquids—with revisions through January 2014
319.7.1, 603.3.2.1, 608.2

87A—15: Outline of Investigation for Power-operated Dispensing Devices for Gasoline and Gasoline/Ethanol Blends with Nominal Ethanol Concentrations up to 85 Percent
2306.8.1

142—06: Steel Aboveground Tanks for Flammable and Combustible Liquids—with revisions through August 2014
319.7.1, 603.3.2.1, 608.2, 2306.2.3

199E—04: Outline of Investigation for Fire Testing of Sprinklers and Water Spray Nozzles for Protection of Deep Fat Fryers
904.12.4.1

217—06: Single and Multiple Station Smoke Alarms—with revisions through October 2015
907.2.10, 915.4.4

268—09: Smoke Detectors for Fire Alarm Systems
907.2.6.2, 907.2.10.7, 915.5.3

294—1999: Access Control System Units—with revisions through February 2015
1010.1.9.7, 1010.1.9.8.1, 1010.1.9.9, 1010.1.9.10

300—05(R2010): Fire Testing of Fire Extinguishing Systems for Protection of Commercial Cooking Equipment—with revisions through December 2014
904.12

300A—06: Outline of Investigation for Extinguishing System Units for Residential Range Top Cooking Surfaces
904.13.1.1

305—2012: Panic Hardware—with revisions through August 2014
1010.1.10.1

325—02: Door, Drapery, Gate, Louver and Window Operators and Systems—with revisions through May 2015
503.5, 503.6

499—05: Standard for Electrical Heating Appliances—with revisions through November 2014
608.6

INTERNATIONAL CODE COUNCIL®
Copyright © 2019 ICC & NYSDOS. ALL RIGHTS RESERVED. Accessed by Lauren Gualdino (lgualdino@briarcliffmanor.org), (-) Order Number #100880972 on May 08, 2020 07:05 AM (PDT) pursuant to License Agreement with ICC & NYSDOS. No further reproduction, no

100880972

UL—continued

647—93: Standard for Unvented Kerosene-fired Room Heaters and Portable Heaters—with revisions through April 2010
603.4

710—2012: Exhaust Hoods for Commercial Cooking Equipment—with revisions through November 2013
607.2

710B—2011: Recirculating Systems—with revisions through August 2014
607.2, 904.12

723—08: Standard for Test for Surface Burning Characteristics of Building Materials—with revisions through August 2013
202, 803.1, 803.1.2, 803.3, 803.5.2, 803.10, 803.12, 803.13, 804.1.1, 804.1.2, 804.2.4

790—04: Standard Test Methods for Fire Tests of Roof Coverings—with revisions through July 2014
317.2, 317.3

793—08: Automatically Operated Roof Vents for Smoke and Heat—with revisions through September 2011
910.3.1

817—2015: Standard for Cord Sets and Power-supply Cords—with revisions through March 2015
604.5

864—03: Control Units and Accessories for Fire Alarm Systems—with revisions through December 2014
909.12, 3905.1.2

900—04: Air Filter Units—with revisions through April 2015
2404.7.8

924—06: Standard for Safety Emergency Lighting and Power Equipment—with revisions through April 2014
1013.5, 3103.12.6.1

1037—99: Antitheft Alarms and Devices—with revisions through December 2009
506.1

1046—2010: Grease Filters for Exhaust Ducts—with revisions through January 2012
607.3.1

1275—05: Flammable Liquid Storage Cabinets—with revisions through November 2014
5003.8.7.1, 5704.3.2.1.1

1313—93: Standard for Nonmetallic Safety Cans for Petroleum Products—with revisions through November 2012
5003.9.10

1315—95: Standard for Safety for Metal Waste Paper Containers—with revisions through September 2012
808.1, 808.2

1316—94: Glass Fiber Reinforced Plastic Underground Storage Tanks for Petroleum Products, Alcohols and Alcohol-gasoline Mixtures—with revisions through May 2006
5704.2.13.1.5

1363—07: Relocatable Power Taps—with revisions through September 2015
604.4.1

1564—2015: Industrial Battery Chargers
1206.2.10.4, 1206.3.4.4

1741—2015: Inverters, Converters, Controllers and Interconnection System Equipment for Use with Distributed Energy Resources
1206.2.10.5

1805—2002: Standard for Laboratory Hoods and Cabinets
3805.2.2

1973—13: Standard for Batteries for Use in Light Electric Rail (LER) Applications and Stationary Applications.
1206.2.10.1, 1206.3.4.1

1975—06: Fire Tests for Foamed Plastics Used for Decorative Purpose
807.5.1.1, 808.3

1994—04: Standard for Luminous Egress Path Marking Systems—with revisions through May 2015
1008.2.1, 1025.2.1, 1025.2.3, 1025.2.4, 1025.2.5, 1025.4

2017—08: General-purpose Signaling Devices and Systems—with revisions through May 2011
3905.1.2

2034—08: Single and Multiple Station Carbon Monoxide Alarms—with revisions through March 2015
915.4.2, 915.4.4

2075—2013: Standard for Gas and Vapor Detectors and Sensors
915.5.1, 915.5.3, 3905.1.2

INTERNATIONAL CODE COUNCIL®
Copyright © 2019 ICC & NYSDOS. ALL RIGHTS RESERVED. Accessed by Lauren Gualdino (lgualdino@briarcliffmanor.org), (-) Order Number #100880972 on May 08, 2020 07:05 AM (PDT) pursuant to License Agreement with ICC & NYSDOS. No further reproduction, no

100880972

UL—continued

2079—04: Tests for Fire Resistance of Building Joint Systems—with revisions through August 2015
202

2085—97: Protected Above-ground Tanks for Flammable and Combustible Liquids—with revisions through September 2010
202, 603.3.2.1, 2306.2.2, 2306.2.3, 5704.2.7.4, 5704.2.9.2.3, 5704.2.9.7.4, 5705.3.8.2

2152—15: Outline of Investigation for Special Purpose Nonmetallic Containers and Tanks for Specific Combustible or Noncombustible Liquids
608.3

2196—2001: Tests for Fire Resistive Cables—with revisions through March 2012
913.2.2, 1203.3

2200—2012: Stationary Engine Generator Assemblies—with revisions through July 2015
1203.1.1

2208—2010: Solvent Distillation Units—with revisions through September 2015
5705.4.1

2245—06: Below-grade Vaults for Flammable Liquid Storage Tanks
5704.2.8.1

2335—10: Fire Tests of Storage Pallets—with revisions through September 2012
315.7.5, 3206.4.1.1

2360—00: Test Methods for Determining the Combustibility Characteristics of Plastics Used in Semi-Conductor Tool Construction—with revisions through May 2013
2703.10.1.2

9540—14: Outline of Investigation for Energy Storage Systems and Equipment
1206.2.10.1, 1206.3.4.1

USC

United States Code
c/o Superintendent of Documents
U.S. Government Printing Office
Washington, DC 20402-9325

18 USC Part 1, Chapter 40: Importation, Manufacture, Distribution and Storage of Explosive Materials
202

21 USC Chapter 9: United States Food, Drug and Cosmetic Act
202

INTERNATIONAL CODE COUNCIL®
Copyright © 2019 ICC & NYSDOS. ALL RIGHTS RESERVED. Accessed by Lauren Gualdino (lgualdino@briarcliffmanor.org), (-) Order Number #100880972 on May 08, 2020 07:05 AM (PDT) pursuant to License Agreement with ICC & NYSDOS. No further reproduction, no

100880972

INTERNATIONAL CODE COUNCIL®
Copyright © 2019 ICC & NYSDOS. ALL RIGHTS RESERVED. Accessed by Lauren Gualdino (lgualdino@briarcliffmanor.org), (-) Order Number #100880972 on May 08, 2020 07:05 AM (PDT) pursuant to License Agreement with ICC & NYSDOS. No further reproduction, no

100880972

Part VII—Appendices

[NY] APPENDIX A

RESERVED

INTERNATIONAL CODE COUNCIL®
Copyright © 2019 ICC & NYSDOS. ALL RIGHTS RESERVED. Accessed by Lauren Gualdino (lgualdino@briarcliffmanor.org), (-) Order Number #100880972 on May 08, 2020 07:05 AM (PDT) pursuant to License Agreement with ICC & NYSDOS. No further reproduction, no

100880972

INTERNATIONAL CODE COUNCIL®
Copyright © 2019 ICC & NYSDOS. ALL RIGHTS RESERVED. Accessed by Lauren Gualdino (lgualdino@briarcliffmanor.org), (-) Order Number #100880972 on May 08, 2020 07:05 AM (PDT) pursuant to License Agreement with ICC & NYSDOS. No further reproduction, no

100880972

APPENDIX B

FIRE-FLOW REQUIREMENTS FOR BUILDINGS

This appendix is informative and is not part of this code.

SECTION B101
GENERAL

B101.1 Scope. The procedure for determining fire-flow requirements for buildings or portions of buildings hereafter constructed shall be in accordance with this appendix. This appendix does not apply to structures other than buildings.

SECTION B102
DEFINITIONS

B102.1 Definitions. For the purpose of this appendix, certain terms are defined as follows:

FIRE FLOW. The flow rate of a water supply, measured at 20 pounds per square inch (psi) (138 kPa) residual pressure, that is available for fire fighting.

FIRE-FLOW CALCULATION AREA. The floor area, in square feet (m^2), used to determine the required fire flow.

SECTION B103
MODIFICATIONS

B103.1 Decreases. The *fire code official* is authorized to reduce the *fire-flow* requirements for isolated buildings or a group of buildings in rural areas or small communities where the development of full *fire-flow* requirements is impractical.

B103.2 Increases. The *fire code official* is authorized to increase the *fire-flow* requirements where conditions indicate an unusual susceptibility to group fires or conflagrations. An increase shall be not more than twice that required for the building under consideration.

B103.3 Areas without water supply systems. For information regarding water supplies for fire-fighting purposes in rural and suburban areas in which adequate and reliable water supply systems do not exist, the *fire code official* is authorized to utilize NFPA 1142 or the *International Wildland-Urban Interface Code.*

SECTION B104
FIRE-FLOW CALCULATION AREA

B104.1 General. The *fire-flow calculation area* shall be the total floor area of all floor levels within the *exterior walls*, and under the horizontal projections of the roof of a building, except as modified in Section B104.3.

B104.2 Area separation. Portions of buildings that are separated by *fire walls* without openings, constructed in accordance with the *International Building Code,* are allowed to be considered as separate *fire-flow calculation areas.*

B104.3 Type IA and Type IB construction. The *fire-flow calculation area* of buildings constructed of Type IA and Type IB construction shall be the area of the three largest successive floors.

Exception: *Fire-flow calculation area* for open parking garages shall be determined by the area of the largest floor.

SECTION B105
FIRE-FLOW REQUIREMENTS FOR BUILDINGS

B105.1 One- and two-family dwellings, Group R-3 and R-4 buildings and townhouses. The minimum *fire-flow* and flow duration requirements for one- and two-family *dwellings*, Group R-3 and R-4 buildings and *townhouses* shall be as specified in Tables B105.1(1) and B105.1(2).

B105.2 Buildings other than one- and two-family dwellings, Group R-3 and R-4 buildings and townhouses. The minimum *fire-flow* and flow duration for buildings other than one- and two-family *dwellings*, Group R-3 and R-4 buildings and *townhouses* shall be as specified in Tables B105.2 and B105.1(2).

B105.3 Water supply for buildings equipped with an automatic sprinkler system. For buildings equipped with an *approved automatic sprinkler system*, the water supply shall be capable of providing the greater of:

1. The *automatic sprinkler system* demand, including hose stream allowance.
2. The required *fire flow*.

SECTION B106
REFERENCED STANDARDS

ICC	IBC—18	International Building Code	B104.2
ICC	IWUIC—18	International Wildland-Urban Interface Code	B103.3
ICC	IRC—18	International Residential Code	Table B105.1(1)
NFPA	1142—17	Standard on Water Supplies for Suburban and Rural Fire Fighting	B103.3

INTERNATIONAL CODE COUNCIL®
Copyright © 2019 ICC & NYSDOS. ALL RIGHTS RESERVED. Accessed by Lauren Gualdino (lgualdino@briarcliffmanor.org), (-) Order Number #100880972 on May 08, 2020 07:05 AM (PDT) pursuant to License Agreement with ICC & NYSDOS. No further reproduction, no

100880972

TABLE B105.1(1)
REQUIRED FIRE FLOW FOR ONE- AND TWO-FAMILY DWELLINGS, GROUP R-3 AND R-4 BUILDINGS AND TOWNHOUSES

FIRE-FLOW CALCULATION AREA (square feet)	AUTOMATIC SPRINKLER SYSTEM (Design Standard)	MINIMUM FIRE FLOW (gallons per minute)	FLOW DURATION (hours)
0–3,600	No automatic sprinkler system	1,000	1
3,601 and greater	No automatic sprinkler system	Value in Table B105.1(2)	Duration in Table B105.1(2) at the required fire-flow rate
0–3,600	Section 903.3.1.3 of the *International Fire Code* or Section P2904 of the *International Residential Code*	500	1/2
3,601 and greater	Section 903.3.1.3 of the *International Fire Code* or Section P2904 of the *International Residential Code*	1/2 value in Table B105.1(2)	1

For SI: 1 square foot = 0.0929 m^2, 1 gallon per minute = 3.785 L/m.

TABLE B105.1(2)
REFERENCE TABLE FOR TABLES B105.1(1) AND B105.2

FIRE-FLOW CALCULATION AREA (square feet)					FIRE FLOW (gallons per minute)[b]	FLOW DURATION (hours)
Type IA and IB[a]	Type IIA and IIIA[a]	Type IV and V-A[a]	Type IIB and IIIB[a]	Type V-B[a]		
0-22,700	0-12,700	0-8,200	0-5,900	0-3,600	1,500	2
22,701-30,200	12,701-17,000	8,201-10,900	5,901-7,900	3,601-4,800	1,750	
30,201-38,700	17,001-21,800	10,901-12,900	7,901-9,800	4,801-6,200	2,000	
38,701-48,300	21,801-24,200	12,901-17,400	9,801-12,600	6,201-7,700	2,250	
48,301-59,000	24,201-33,200	17,401-21,300	12,601-15,400	7,701-9,400	2,500	
59,001-70,900	33,201-39,700	21,301-25,500	15,401-18,400	9,401-11,300	2,750	
70,901-83,700	39,701-47,100	25,501-30,100	18,401-21,800	11,301-13,400	3,000	3
83,701-97,700	47,101-54,900	30,101-35,200	21,801-25,900	13,401-15,600	3,250	
97,701-112,700	54,901-63,400	35,201-40,600	25,901-29,300	15,601-18,000	3,500	
112,701-128,700	63,401-72,400	40,601-46,400	29,301-33,500	18,001-20,600	3,750	
128,701-145,900	72,401-82,100	46,401-52,500	33,501-37,900	20,601-23,300	4,000	4
145,901-164,200	82,101-92,400	52,501-59,100	37,901-42,700	23,301-26,300	4,250	
164,201-183,400	92,401-103,100	59,101-66,000	42,701-47,700	26,301-29,300	4,500	
183,401-203,700	103,101-114,600	66,001-73,300	47,701-53,000	29,301-32,600	4,750	
203,701-225,200	114,601-126,700	73,301-81,100	53,001-58,600	32,601-36,000	5,000	
225,201-247,700	126,701-139,400	81,101-89,200	58,601-65,400	36,001-39,600	5,250	
247,701-271,200	139,401-152,600	89,201-97,700	65,401-70,600	39,601-43,400	5,500	
271,201-295,900	152,601-166,500	97,701-106,500	70,601-77,000	43,401-47,400	5,750	
295,901-Greater	166,501-Greater	106,501-115,800	77,001-83,700	47,401-51,500	6,000	
—	—	115,801-125,500	83,701-90,600	51,501-55,700	6,250	
—	—	125,501-135,500	90,601-97,900	55,701-60,200	6,500	
—	—	135,501-145,800	97,901-106,800	60,201-64,800	6,750	
—	—	145,801-156,700	106,801-113,200	64,801-69,600	7,000	
—	—	156,701-167,900	113,201-121,300	69,601-74,600	7,250	
—	—	167,901-179,400	121,301-129,600	74,601-79,800	7,500	
—	—	179,401-191,400	129,601-138,300	79,801-85,100	7,750	
—	—	191,401-Greater	138,301-Greater	85,101-Greater	8,000	

For SI: 1 square foot = 0.0929 m^2, 1 gallon per minute = 3.785 L/m, 1 pound per square inch = 6.895 kPa.

a. Types of construction are based on the *International Building Code.*

b. Measured at 20 psi residual pressure.

INTERNATIONAL CODE COUNCIL®
Copyright © 2019 ICC & NYSDOS. ALL RIGHTS RESERVED. Accessed by Lauren Gualdino (lgualdino@briarcliffmanor.org), (-) Order Number #100880972 on May 08, 2020 07:05 AM (PDT) pursuant to License Agreement with ICC & NYSDOS. No further reproduction, no

100880972

TABLE B105.2
REQUIRED FIRE FLOW FOR BUILDINGS OTHER THAN ONE- AND TWO-FAMILY DWELLINGS, GROUP R-3 AND R-4 BUILDINGS AND TOWNHOUSES

AUTOMATIC SPRINKLER SYSTEM (Design Standard)	MINIMUM FIRE FLOW (gallons per minute)	FLOW DURATION (hours)
No automatic sprinkler system	Value in Table B105.1(2)	Duration in Table B105.1(2)
Section 903.3.1.1 of the *International Fire Code*	25% of the value in Table B105.1(2)[a]	Duration in Table B105.1(2) at the reduced flow rate
Section 903.3.1.2 of the *International Fire Code*	25% of the value in Table B105.1(2)[b]	Duration in Table B105.1(2) at the reduced flow rate

For SI: 1 gallon per minute = 3.785 L/m.

a. The reduced fire flow shall be not less than 1,000 gallons per minute.

b. The reduced fire flow shall be not less than 1,500 gallons per minute.

INTERNATIONAL CODE COUNCIL®
Copyright © 2019 ICC & NYSDOS. ALL RIGHTS RESERVED. Accessed by Lauren Gualdino (lgualdino@briarcliffmanor.org), (-) Order Number #100880972 on May 08, 2020 07:05 AM (PDT) pursuant to License Agreement with ICC & NYSDOS. No further reproduction, no

100880972

INTERNATIONAL CODE COUNCIL®
Copyright © 2019 ICC & NYSDOS. ALL RIGHTS RESERVED. Accessed by Lauren Gualdino (lgualdino@briarcliffmanor.org), (-) Order Number #100880972 on May 08, 2020 07:05 AM (PDT) pursuant to License Agreement with ICC & NYSDOS. No further reproduction, no

100880972

APPENDIX C
FIRE HYDRANT LOCATIONS AND DISTRIBUTION

This appendix is informative and is not part of this code.

SECTION C101
GENERAL

C101.1 Scope. In addition to the requirements of Section 507.5.1, fire hydrants shall be provided in accordance with this appendix for the protection of buildings, or portions of buildings, hereafter constructed or moved into the jurisdiction.

SECTION C102
NUMBER OF FIRE HYDRANTS

C102.1 Minimum number of fire hydrants for a building. The number of fire hydrants available to a building shall be not less than the minimum specified in Table C102.1.

SECTION C103
FIRE HYDRANT SPACING

C103.1 Hydrant spacing. Fire apparatus access roads and public streets providing required access to buildings in accordance with Section 503 shall be provided with one or more fire hydrants, as determined by Section C102.1. Where more than one fire hydrant is required, the distance between required fire hydrants shall be in accordance with Sections C103.2 and C103.3.

C103.2 Average spacing. The average spacing between fire hydrants shall be in accordance with Table C102.1.

Exception: The average spacing shall be permitted to be increased by 10 percent where existing fire hydrants provide all or a portion of the required number of fire hydrants.

TABLE C102.1
REQUIRED NUMBER AND SPACING OF FIRE HYDRANTS[h]

FIRE-FLOW REQUIREMENT (gpm)	MINIMUM NUMBER OF HYDRANTS	AVERAGE SPACING BETWEEN HYDRANTS[a, b, c, f, g] (feet)	MAXIMUM DISTANCE FROM ANY POINT ON STREET OR ROAD FRONTAGE TO A HYDRANT[d, f, g]
1,750 or less	1	500	250
1,751–2,250	2	450	225
2,251–2,750	3	450	225
2,751–3,250	3	400	225
3,251–4,000	4	350	210
4,001–5,000	5	300	180
5,001–5,500	6	300	180
5,501–6,000	6	250	150
6,001–7,000	7	250	150
7,001 or more	8 or more[e]	200	120

For SI: 1 foot = 304.8 mm, 1 gallon per minute = 3.785 L/m.

a. Reduce by 100 feet for dead-end streets or roads.

b. Where streets are provided with median dividers that cannot be crossed by fire fighters pulling hose lines, or where arterial streets are provided with four or more traffic lanes and have a traffic count of more than 30,000 vehicles per day, hydrant spacing shall average 500 feet on each side of the street and be arranged on an alternating basis.

c. Where new water mains are extended along streets where hydrants are not needed for protection of structures or similar fire problems, fire hydrants shall be provided at spacing not to exceed 1,000 feet to provide for transportation hazards.

d. Reduce by 50 feet for dead-end streets or roads.

e. One hydrant for each 1,000 gallons per minute or fraction thereof.

f. A 50-percent spacing increase shall be permitted where the building is equipped throughout with an approved automatic sprinkler system in accordance with Section 903.3.1.1 of the *International Fire Code*.

g. A 25-percent spacing increase shall be permitted where the building is equipped throughout with an approved automatic sprinkler system in accordance with Section 903.3.1.2 or 903.3.1.3 of the *International Fire Code* or Section P2904 of the *International Residential Code*.

h. The fire code official is authorized to modify the location, number and distribution of fire hydrants based on site-specific constraints and hazards.

INTERNATIONAL CODE COUNCIL®
Copyright © 2019 ICC & NYSDOS. ALL RIGHTS RESERVED. Accessed by Lauren Gualdino (lgualdino@briarcliffmanor.org), (-) Order Number #100880972 on May 08, 2020 07:05 AM (PDT) pursuant to License Agreement with ICC & NYSDOS. No further reproduction, no

100880972

C103.3 Maximum spacing. The maximum spacing between fire hydrants shall be in accordance with Table C102.1.

SECTION C104
CONSIDERATION OF EXISTING FIRE HYDRANTS

C104.1 Existing fire hydrants. Existing fire hydrants on public streets are allowed to be considered as available to meet the requirements of Sections C102 and C103. Existing fire hydrants on adjacent properties are allowed to be considered as available to meet the requirements of Sections C102 and C103 provided that a fire apparatus access road extends between properties and that an easement is established to prevent obstruction of such roads.

SECTION C105
REFERENCED STANDARD

ICC	IRC—18	International Residential Code	Table C102.1

INTERNATIONAL CODE COUNCIL®
Copyright © 2019 ICC & NYSDOS. ALL RIGHTS RESERVED. Accessed by Lauren Gualdino (lgualdino@briarcliffmanor.org), (-) Order Number #100880972 on May 08, 2020 07:05 AM (PDT) pursuant to License Agreement with ICC & NYSDOS. No further reproduction, no

100880972

APPENDIX D
FIRE APPARATUS ACCESS ROADS

SECTION D101
GENERAL

D101.1 Scope. Fire apparatus access roads shall be in accordance with this appendix and all other applicable requirements of the *Fire Code of New York State*.

SECTION D102
REQUIRED ACCESS

D102.1 Access and loading. Facilities, buildings or portions of buildings hereafter constructed shall be accessible to fire department apparatus by way of an *approved* fire apparatus access road with an asphalt, concrete or other *approved* driving surface capable of supporting the imposed load of fire apparatus weighing up to 75,000 pounds (34 050 kg).

SECTION D103
MINIMUM SPECIFICATIONS

D103.1 Access road width with a hydrant. Where a fire hydrant is located on a fire apparatus access road, the minimum road width shall be 26 feet (7925 mm), exclusive of shoulders (see Figure D103.1).

D103.2 Grade. Fire apparatus access roads shall not exceed 10 percent in grade.

Exception: Grades steeper than 10 percent as *approved* by the *fire code official*.

D103.3 Turning radius. The minimum turning radius shall be determined by the *fire code official*.

D103.4 Dead ends. Dead-end fire apparatus access roads in excess of 150 feet (45 720 mm) shall be provided with width and turnaround provisions in accordance with Table D103.4.

TABLE D103.4
REQUIREMENTS FOR DEAD-END FIRE APPARATUS ACCESS ROADS

LENGTH (feet)	WIDTH (feet)	TURNAROUNDS REQUIRED
0–150	20	None required
151–500	20	120-foot Hammerhead, 60-foot "Y" or 96-foot diameter cul-de-sac in accordance with Figure D103.1
501–750	26	120-foot Hammerhead, 60-foot "Y" or 96-foot diameter cul-de-sac in accordance with Figure D103.1
Over 750	Special approval required	

For SI: 1 foot = 304.8 mm.

D103.5 Fire apparatus access road gates. Gates securing the fire apparatus access roads shall comply with all of the following criteria:

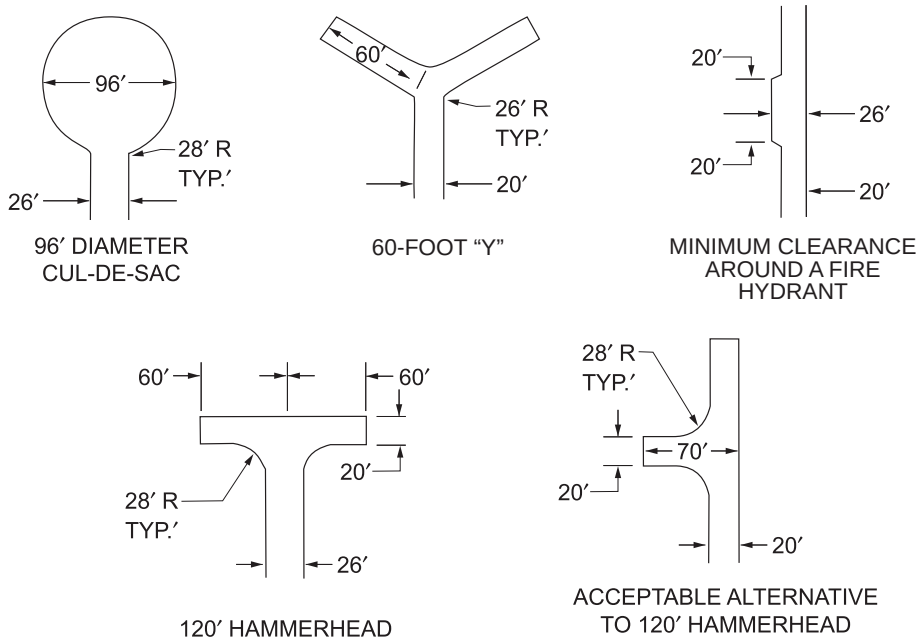

For SI: 1 foot = 304.8 mm.

FIGURE D103.1
DEAD-END FIRE APPARATUS ACCESS ROAD TURNAROUND

INTERNATIONAL CODE COUNCIL®
Copyright © 2019 ICC & NYSDOS. ALL RIGHTS RESERVED. Accessed by Lauren Gualdino (lgualdino@briarcliffmanor.org), (-) Order Number #100880972 on May 08, 2020 07:05 AM (PDT) pursuant to License Agreement with ICC & NYSDOS. No further reproduction, no

100880972

1. Where a single gate is provided, the gate width shall be not less than 20 feet (6096 mm). Where a fire apparatus road consists of a divided roadway, the gate width shall be not less than 12 feet (3658 mm).
2. Gates shall be of the swinging or sliding type.
3. Construction of gates shall be of materials that allow manual operation by one person.
4. Gate components shall be maintained in an operative condition at all times and replaced or repaired when defective.
5. Electric gates shall be equipped with a means of opening the gate by fire department personnel for emergency access. Emergency opening devices shall be *approved* by the *fire code official*.
6. Methods of locking shall be submitted for approval by the *fire code official*.
7. Electric gate operators, where provided, shall be *listed* in accordance with UL 325.
8. Gates intended for automatic operation shall be designed, constructed and installed to comply with the requirements of ASTM F2200.

D103.6 Signs. Where required by the *fire code official*, fire apparatus access roads shall be marked with permanent NO PARKING—FIRE LANE signs complying with Figure D103.6. Signs shall have a minimum dimension of 12 inches (305 mm) wide by 18 inches (457 mm) high and have red letters on a white reflective background. Signs shall be posted on one or both sides of the fire apparatus road as required by Section D103.6.1 or D103.6.2.

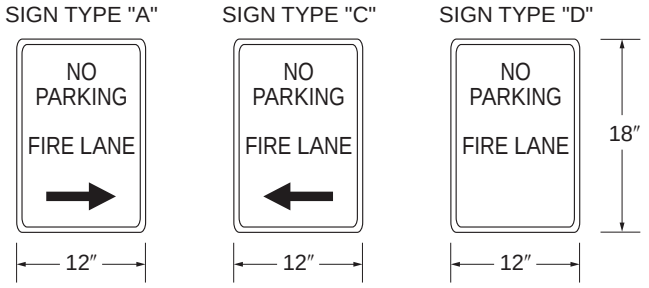

FIGURE D103.6
FIRE LANE SIGNS

D103.6.1 Roads 20 to 26 feet in width. *Fire lane* signs as specified in Section D103.6 shall be posted on both sides of fire apparatus access roads that are 20 to 26 feet wide (6096 to 7925 mm).

D103.6.2 Roads more than 26 feet in width. *Fire lane* signs as specified in Section D103.6 shall be posted on one side of fire apparatus access roads more than 26 feet wide (7925 mm) and less than 32 feet wide (9754 mm).

SECTION D104
COMMERCIAL AND INDUSTRIAL DEVELOPMENTS

D104.1 Buildings exceeding three stories or 30 feet in height. Buildings or facilities exceeding 30 feet (9144 mm) or three stories in height shall have not fewer than two means of fire apparatus access for each structure.

D104.2 Buildings exceeding 62,000 square feet in area. Buildings or facilities having a gross *building area* of more than 62,000 square feet (5760 m^2) shall be provided with two separate and *approved* fire apparatus access roads.

Exception: Projects having a gross *building area* of up to 124,000 square feet (11 520 m^2) that have a single *approved* fire apparatus access road where all buildings are equipped throughout with *approved automatic sprinkler systems.*

D104.3 Remoteness. Where two fire apparatus access roads are required, they shall be placed a distance apart equal to not less than one half of the length of the maximum overall diagonal dimension of the lot or area to be served, measured in a straight line between accesses.

SECTION D105
AERIAL FIRE APPARATUS ACCESS ROADS

[NY] D105.1 Where required. Where the vertical distance between the grade plane and the highest roof surface exceeds 30 feet (9144 mm), *approved* aerial fire apparatus access roads shall be provided. For purposes of this section, the highest roof surface shall be determined by measurement to the eave of a pitched roof, the intersection of the roof to the exterior wall, or the top of parapet walls, whichever is greater.

Exception: Where approved by the *fire code official,* buildings of Type IA, Type IB, or Type IIA Construction, equipped throughout with an automatic sprinkler system in accordance to Section 903.3.1.1; and having fire fighter access through an enclosed stairway with a Class I Standpipe, in conformance with NFPA 14, from the lowest level of fire department vehicle access to all roof surfaces.

D105.2 Width. Aerial fire apparatus access roads shall have a minimum unobstructed width of 26 feet (7925 mm), exclusive of shoulders, in the immediate vicinity of the building or portion thereof.

D105.3 Proximity to building. One or more of the required access routes meeting this condition shall be located not less than 15 feet (4572 mm) and not greater than 30 feet (9144 mm) from the building, and shall be positioned parallel to one entire side of the building. The side of the building on which the aerial fire apparatus access road is positioned shall be approved by the *fire code official*.

D105.4 Obstructions. Overhead utility and power lines shall not be located over the aerial fire apparatus access road or between the aerial fire apparatus road and the building. Other obstructions shall be permitted to be placed with the approval of the *fire code official*.

SECTION D106
MULTIPLE-FAMILY RESIDENTIAL DEVELOPMENTS

D106.1 Projects having more than 100 dwelling units. Multiple-family residential projects having more than 100

INTERNATIONAL CODE COUNCIL®
Copyright © 2019 ICC & NYSDOS. ALL RIGHTS RESERVED. Accessed by Lauren Gualdino (lgualdino@briarcliffmanor.org), (-) Order Number #100880972 on May 08, 2020 07:05 AM (PDT) pursuant to License Agreement with ICC & NYSDOS. No further reproduction, no

100880972

dwelling units shall be equipped throughout with two separate and *approved* fire apparatus access roads.

Exception: Projects having up to 200 *dwelling units* shall have not fewer than one *approved* fire apparatus access road where all buildings, including nonresidential occupancies, are equipped throughout with *approved automatic sprinkler systems* installed in accordance with Section 903.3.1.1 or 903.3.1.2.

D106.2 Projects having more than 200 dwelling units. Multiple-family residential projects having more than 200 *dwelling units* shall be provided with two separate and *approved* fire apparatus access roads regardless of whether they are equipped with an *approved automatic sprinkler system*.

D106.3 Remoteness. Where two fire apparatus access roads are required, they shall be placed a distance apart equal to not less than one-half of the length of the maximum overall diagonal dimension of the property or area to be served, measured in a straight line between accesses.

SECTION D107
ONE- OR TWO-FAMILY RESIDENTIAL DEVELOPMENTS

[NY] D107.1 One- or two-family dwelling residential developments. Developments of one- or two-family *dwellings* where the number of *dwelling units* exceeds 30 shall be provided with two separate and *approved* fire apparatus access roads.

Exceptions:

1. Construction of dwellings on premises which have had local site plan approval prior to January 1, 2011, with no modification to *approved* site plan.
2. Where there are more than 30 *dwelling units* on a single public or private fire apparatus access road and all *dwelling units* are equipped throughout with an *approved automatic sprinkler system* in accordance with Section 903.3.1.1, 903.3.1.2 or 903.3.1.3, access from two directions shall not be required.
3. The number of *dwelling units* on a single fire apparatus access road shall not be increased unless fire apparatus access roads will connect with future development, as determined by the *fire code official*.

D107.2 Remoteness. Where two fire apparatus access roads are required, they shall be placed a distance apart equal to not less than one-half of the length of the maximum overall diagonal dimension of the property or area to be served, measured in a straight line between accesses.

SECTION D108
REFERENCED STANDARDS

ASTM	F2200—14	Standard Specification for Automated Vehicular Gate Construction	D103.5
UL	325—02	Door, Drapery, Gate, Louver, and Window Operators and Systems, with Revisions through May 2015	D103.5

INTERNATIONAL CODE COUNCIL®
Copyright © 2019 ICC & NYSDOS. ALL RIGHTS RESERVED. Accessed by Lauren Gualdino (lgualdino@briarcliffmanor.org), (-) Order Number #100880972 on May 08, 2020 07:05 AM (PDT) pursuant to License Agreement with ICC & NYSDOS. No further reproduction, no

100880972

INTERNATIONAL CODE COUNCIL®
Copyright © 2019 ICC & NYSDOS. ALL RIGHTS RESERVED. Accessed by Lauren Gualdino (lgualdino@briarcliffmanor.org), (-) Order Number #100880972 on May 08, 2020 07:05 AM (PDT) pursuant to License Agreement with ICC & NYSDOS. No further reproduction, no

100880972

APPENDIX E
HAZARD CATEGORIES

This appendix is informative and is not part of this code.

SECTION E101
GENERAL

E101.1 Scope. This appendix provides information, explanations and examples to illustrate and clarify the hazard categories contained in Chapter 50 of the *International Fire Code*. The hazard categories are based on the DOL 29 CFR. Where numerical classifications are included, they are in accordance with nationally recognized standards.

This appendix should not be used as the sole means of hazardous materials classification.

SECTION E102
HAZARD CATEGORIES

E102.1 Physical hazards. Materials classified in this section pose a *physical hazard*.

E102.1.1 Explosives and blasting agents. The current UN/DOT classification system recognized by international authorities, the Department of Defense and others classifies all *explosives* as Class 1 materials. They are then divided into six separate divisions to indicate their relative hazard. There is not a direct correlation between the designations used by the old DOT system and those used by the current system nor is there correlation with the system (high and low) established by the Bureau of Alcohol, Tobacco, Firearms and Explosives (BATF). Table 5604.3 provides some guidance with regard to the current categories and their relationship to the old categories. Some items appear in more than one division, depending on factors such as the degree of confinement or separation, by type of packaging, storage configuration or state of assembly.

In order to determine the level of hazard presented by *explosive materials*, testing to establish quantitatively their *explosive* nature is required. There are numerous test methods that have been used to establish the character of an *explosive material*. Standardized tests, required for finished goods containing *explosives* or *explosive materials* in a packaged form suitable for shipment or storage, have been established by UN/DOT and BATF. However, these tests do not consider key elements that should be examined in a manufacturing situation. In manufacturing operations, the condition and/or the state of a material may vary within the process. Potentially, material classification and the requirements used to determine that classification during manufacturing will differ from the classification of the same material found in finished goods. A classification methodology must be used that recognizes the hazards commensurate with the application to the variable physical conditions as well as potential variations of physical character and type of *explosive* under consideration.

Test methods or guidelines for hazard classification of energetic materials used for in-process operations shall be *approved* by the *fire code official*. Test methods used shall be DOD, BATF, UN/DOT or other *approved* criteria. The results of such testing shall become a portion of the files of the jurisdiction and be included as an independent section of any Hazardous Materials Management Plan (HMMP) required by Section 5605.2.1. Also see Section 104.7.2.

Examples of materials in various Divisions are as follows:

1. Division 1.1 (High *Explosives*). Consists of *explosives* that have a mass explosion hazard. A mass explosion is one that affects almost the entire pile of material instantaneously. Includes substances that, where tested in accordance with *approved* methods, can be caused to detonate by means of a blasting cap where unconfined or will transition from *deflagration* to a *detonation* where confined or unconfined. Examples: dynamite, TNT, nitroglycerine, C-3, HMX, RDX, encased *explosives*, military ammunition.
2. Division 1.2 (Low *Explosives*). Consists of *explosives* that have a projection hazard, but not a mass explosion hazard. Examples: nondetonating encased *explosives*, military ammunition and the like.
3. Division 1.3 (Low *Explosives*). Consists of *explosives* that have a fire hazard and either a minor blast hazard or a minor projection hazard or both, but not a mass explosion hazard. The major hazard is radiant heat or violent burning, or both. Can be deflagrated where confined. Examples: smokeless powder, propellant *explosives*, display fireworks.
4. Division 1.4. Consists of *explosives* that pose a minor explosion hazard. The *explosive* effects are largely confined to the package and no projection of fragments of appreciable size or range is expected. An internal fire must not cause virtually instantaneous explosion of almost the entire contents of the package. Examples: squibs (nondetonating igniters), *explosive* actuators, *explosive* trains (low-level detonating cord).
5. Division 1.5 (Blasting Agents). Consists of very insensitive *explosives*. This division comprises substances that have a mass explosion hazard, but are so insensitive that there is very little probability of initiation or of transition from burning to *detonation* under normal conditions of transport. Materials are

INTERNATIONAL CODE COUNCIL®
Copyright © 2019 ICC & NYSDOS. ALL RIGHTS RESERVED. Accessed by Lauren Gualdino (lgualdino@briarcliffmanor.org), (-) Order Number #100880972 on May 08, 2020 07:05 AM (PDT) pursuant to License Agreement with ICC & NYSDOS. No further reproduction, no

100880972

not cap sensitive; however, they are mass detonating where provided with sufficient input. Examples: oxidizer and liquid fuel slurry mixtures and gels, ammonium nitrate combined with fuel oil.

6. Division 1.6. Consists of extremely insensitive articles that do not have a mass *explosive* hazard. This division comprises articles that contain only extremely insensitive detonating substances and that demonstrate a negligible probability of accidental initiation or propagation. Although this category of materials has been defined, the primary application is currently limited to military uses. Examples: Low vulnerability military weapons.

Explosives in each division are assigned a compatibility group letter by the Associate Administrator for Hazardous Materials Safety (DOT) based on criteria specified by DOTn 49 CFR. Compatibility group letters are used to specify the controls for the transportation and storage related to various materials to prevent an increase in hazard that might result if certain types of *explosives* were stored or transported together. Altogether, there are 35 possible classification codes for *explosives*, for example, 1.1A, 1.3C, 1.4S.

E102.1.2 Compressed gases. Examples include:

1. Flammable: acetylene, carbon monoxide, ethane, ethylene, hydrogen, methane. Ammonia will ignite and burn although its flammable range is too narrow for it to fit the definition of "Flammable gas."

   For binary mixtures where the hazardous component is diluted with a nonflammable gas, the mixture shall be categorized in accordance with CGA P-23.

2. Oxidizing: oxygen, ozone, oxides of nitrogen, chlorine and fluorine. Chlorine and fluorine do not contain oxygen but reaction with flammables is similar to that of oxygen.
3. *Corrosive*: ammonia, hydrogen chloride, fluorine.
4. Highly toxic: arsine, cyanogen, fluorine, germane, hydrogen cyanide, nitric oxide, phosphine, hydrogen selenide, stibine.
5. Toxic: chlorine, hydrogen fluoride, hydrogen sulfide, phosgene, silicon tetrafluoride.
6. Inert (chemically unreactive): argon, helium, krypton, neon, nitrogen, xenon.
7. Pyrophoric: diborane, dichloroborane, phosphine, silane.
8. Unstable (reactive): butadiene (unstabilized), ethylene oxide, vinyl chloride.

E102.1.3 Flammable and combustible liquids. Examples include:

1. Flammable liquids.

   Class IA liquids shall include those having *flash points* below 73°F (23°C) and having a *boiling point* at or below 100°F (38°C).

   Class IB liquids shall include those having *flash points* below 73°F (23°C) and having a *boiling point* at or above 100°F (38°C).

   Class IC liquids shall include those having *flash points* at or above 73°F (23°C) and below 100°F (38°C).

2. *Combustible liquids*.

   Class II liquids shall include those having *flash points* at or above 100°F (38°C) and below 140°F (60°C).

   Class IIIA liquids shall include those having *flash points* at or above 140°F (60°C) and below 200°F (93°C).

   Class IIIB liquids shall include those liquids having *flash points* at or above 200°F (93°C).

E102.1.4 Flammable solids. Examples include:

1. Organic solids: camphor, cellulose nitrate, naphthalene.
2. Inorganic solids: decaborane, lithium amide, phosphorous heptasulfide, phosphorous sesquisulfide, potassium sulfide, anhydrous sodium sulfide, sulfur.
3. Combustible metals (except dusts and powders): cesium, magnesium, zirconium.

E102.1.5 Combustible dusts and powders. Finely divided solids that could be dispersed in air as a dust cloud: wood sawdust, plastics, coal, flour, powdered metals (few exceptions).

E102.1.6 Combustible fibers. See Section 5202.1.

E102.1.7 Oxidizers. Examples include:

1. Gases: oxygen, ozone, oxides of nitrogen, fluorine and chlorine (reaction with flammables is similar to that of oxygen).
2. Liquids: bromine, hydrogen peroxide, nitric acid, perchloric acid, sulfuric acid.
3. Solids: chlorates, chromates, chromic acid, iodine, nitrates, nitrites, perchlorates, peroxides.

E102.1.7.1 Examples of liquid and solid oxidizers according to hazard.

Class 4: ammonium perchlorate (particle size greater than 15 microns), ammonium permanganate, guanidine nitrate, hydrogen peroxide solutions more than 91 percent by weight, perchloric acid solutions more than 72.5 percent by weight, potassium superoxide, tetranitromethane.

Class 3: ammonium dichromate, calcium hypochlorite (over 50 percent by weight), chloric acid (10 percent maximum concentration), hydrogen peroxide solutions (greater than 52 percent up to 91 percent), mono-(trichloro)-tetra-(monopotassium dichloro)-penta-s-triazinetrione, nitric acid, (fuming - more than 86 percent concentration), perchloric acid solutions (60 percent to 72 percent by weight), potassium bromate, potassium chlorate, potassium dichloro-s-triazinetrione (potassium dichloro-isocy-

INTERNATIONAL CODE COUNCIL®
Copyright © 2019 ICC & NYSDOS. ALL RIGHTS RESERVED. Accessed by Lauren Gualdino (lgualdino@briarcliffmanor.org), (-) Order Number #100880972 on May 08, 2020 07:05 AM (PDT) pursuant to License Agreement with ICC & NYSDOS. No further reproduction, no

100880972

anurate), potassium perchlorate (99 percent), potassium permanganate (greater than 97.5 percent), sodium bromate, sodium chlorate and sodium chlorite (over 40 percent by weight).

Class 2: barium bromate, barium chlorate, barium hypochlorite, barium perchlorate, barium permanganate, 1-bromo-3-chloro-5, 5-dimethylhydantoin, calcium chlorate, calcium chlorite, calcium hypochlorite (50 percent or less by weight), calcium perchlorate, calcium permanganate, calcium peroxide (75 percent), chromium trioxide (chromic acid), copper chlorate, halane (1, 3-dichloro-5, 5-dimethylhydantoin), hydrogen peroxide (greater than 27.5 percent up to 52 percent), lead perchlorate, lithium chlorate, lithium hypochlorite (more than 39 percent available chlorine), lithium perchlorate, magnesium bromate, magnesium chlorate, magnesium perchlorate, mercurous chlorate, nitric acid (more than 40 percent but less than 86 percent), perchloric acid solutions (more than 50 percent but less than 60 percent), potassium peroxide, potassium superoxide, silver peroxide, sodium chlorite (40 percent or less by weight), sodium dichloro-s-triazinetrione anhydrous (sodium dichloroisocyanurate anhydrous), sodium perchlorate, sodium perchlorate monohydrate, sodium permanganate, sodium peroxide, sodium persulfate (99 percent), strontium chlorate, strontium perchlorate, thallium chlorate, urea hydrogen peroxide, zinc bromate, zinc chlorate and zinc permanganate.

Class 1: all inorganic nitrates (unless otherwise classified), all inorganic nitrites (unless otherwise classified), ammonium persulfate, barium peroxide, hydrogen peroxide solutions (greater than 8 percent up to 27.5 percent), lead dioxide, lithium hypochlorite (39 percent or less available chlorine), lithium peroxide, magnesium peroxide, manganese dioxide, nitric acid (40 percent concentration or less), perchloric acid solutions (less than 50 percent by weight), potassium dichromate, potassium monopersulfate (45 percent $KHSO_5$ or 90 percent triple salt), potassium percarbonate, potassium persulfate, sodium carbonate peroxide, sodium dichloro-s-triazinetrione dihydrate, sodium dichromate, sodium perborate (anhydrous), sodium perborate monohydrate, sodium perborate tetra-hydrate, sodium percarbonate, strontium peroxide, trichloro-s-triazinetrione (trichloroisocyanuric acid) and zinc peroxide.

E102.1.8 Organic peroxides. Organic peroxides contain the double oxygen or peroxy (-o-o) group. Some are flammable compounds and subject to explosive decomposition. They are available as:

1. Liquids.
2. Pastes.
3. Solids (usually finely divided powders).

E102.1.8.1 Classification of organic peroxides according to hazard.

Unclassified: Unclassified organic peroxides are capable of *detonation* and are regulated in accordance with Chapter 56.

Class I: acetyl cyclohexane sulfonyl 60-65 percent concentration by weight, fulfonyl peroxide, benzoyl peroxide over 98 percent concentration, t-butyl hydroperoxide 90 percent, t-butyl peroxyacetate 75 percent, t-butyl peroxyisopropylcarbonate 92 percent, diisopropyl peroxydicarbonate 100 percent, di-n-propyl peroxydicarbonate 98 percent, and di-n-propyl peroxydicarbonate 85 percent.

Class II: acetyl peroxide 25 percent, t-butyl hydroperoxide 70 percent (with DTBP and t-BuOH diluents), t-butyl peroxybenzoate 98 percent, t-butyl peroxy-2-ethylhexanoate 97 percent, t-butyl peroxyisobutyrate 75 percent, t-butyl peroxyisopropyl-carbonate 75 percent, t-butyl peroxypivalate 75 percent, dybenzoyl peroxydicarbonate 85 percent, di-sec-butyl peroxydicarbonate 98 percent, di-sec-butyl peroxydicarbonate 75 percent, 1,1-di-(t-butylperoxy)-3,5,5-trimethyecyclohexane 95 percent, di-(2-ethythexyl) peroxydicarbonate 97 percent, 2,5-dymethyl-2-5 di (benzoylperoxy) hexane 92 percent, and peroxyacetic acid 43 percent.

Class III: acetyl cyclohexane sulfonal peroxide 29 percent, benzoyl peroxide 78 percent, benzoyl peroxide paste 55 percent, benzoyl peroxide paste 50 percent peroxide/50 percent butylbenzylphthalate diluent, cumene hydroperoxide 86 percent, di-(4-butylcyclohexyl) peroxydicarbonate 98 percent, t-butyl peroxy-2-ethylhexanoate 97 percent, t-butyl peroxyneodecanoate 75 percent, decanoyl peroxide 98.5 percent, di-t-butyl peroxide 99 percent, 1,1-di-(t-butylperoxy)3,5,5-trimethylcyclohexane 75 percent, 2,4-dichlorobenzoyl peroxide 50 percent, di-isopropyl peroxydicarbonate 30 percent, 2,-5-di-methyl-2,5-di-(2-ethylhexanolyperoxy)-hexane 90 percent, 2,5-dimethyl-2,5-di-(t-butylperoxy) hexane 90 percent and methyl ethyl ketone peroxide 9 percent active oxygen diluted in dimethyl phthalate.

Class IV: benzoyl peroxide 70 percent, benzoyl peroxide paste 50 percent peroxide/15 percent water/35 percent butylphthalate diluent, benzoyl peroxide slurry 40 percent, benzoyl peroxide powder 35 percent, t-butyl hydroperoxide 70 percent, (with water diluent), t-butyl peroxy-2-ethylhexanoate 50 percent, decumyl peroxide 98 percent, di-(2-ethylhexal) peroxydicarbonate 40 percent, laurel peroxide 98 percent, p-methane hydroperoxide 52.5 percent, methyl ethyl ketone peroxide 5.5 percent active oxygen and methyl ethyl ketone peroxide 9 percent active oxygen diluted in water and glycols.

Class V: benzoyl peroxide 35 percent, 1,1-di-t-butyl peroxy 3,5,5-trimethylcyclohexane 40 per-

INTERNATIONAL CODE COUNCIL®
Copyright © 2019 ICC & NYSDOS. ALL RIGHTS RESERVED. Accessed by Lauren Gualdino (lgualdino@briarcliffmanor.org), (-) Order Number #100880972 on May 08, 2020 07:05 AM (PDT) pursuant to License Agreement with ICC & NYSDOS. No further reproduction, no

100880972

cent, 2,5-di-(t-butyl peroxy) hexane 47 percent and 2,4-pentanedione peroxide 4 percent active oxygen.

E102.1.9 Pyrophoric materials. Examples include:

1. Gases: diborane, phosphine, silane.
2. Liquids: diethylaluminum chloride, di-ethylberyllium, diethylphosphine, diethylzinc, dimethylarsine, triethylaluminum etherate, tri-ethylbismuthine, triethylboron, trimethylaluminum, trimethylgallium.
3. Solids: cesium, hafnium, lithium, white or yellow phosphorous, plutonium, potassium, rubidium, sodium, thorium.

E102.1.10 Unstable (reactive) materials. Examples include:

Class 4: acetyl peroxide, dibutyl peroxide, dinitrobenzene, ethyl nitrate, peroxyacetic acid and picric acid (dry) trinitrobenzene.

Class 3: hydrogen peroxide (greater than 52 percent), hydroxylamine, nitromethane, paranitroaniline, perchloric acid and tetrafluoroethylene monomer.

Class 2: acrolein, acrylic acid, hydrazine, methacrylic acid, sodium perchlorate, styrene and vinyl acetate.

Class 1: acetic acid, hydrogen peroxide 35 percent to 52 percent, paraldehyde and tetrahydrofuran.

E102.1.11 Water-reactive materials. Examples include:

Class 3: aluminum alkyls such as triethylaluminum, isobutylaluminum and trimethylaluminum; bromine pentafluoride, bromine trifluoride, chlorodiethylaluminium and diethylzinc.

Class 2: calcium carbide, calcium metal, cyanogen bromide, lithium hydride, methyldichlorosilane, potassium metal, potassium peroxide, sodium metal, sodium peroxide, sulfuric acid and trichlorosilane.

Class 1: acetic anhydride, sodium hydroxide, sulfur monochloride and titanium tetrachloride.

E102.1.12 Cryogenic fluids. The cryogenics listed will exist as *compressed gases* where they are stored at ambient temperatures.

1. Flammable: carbon monoxide, deuterium (heavy hydrogen), ethylene, hydrogen, methane.
2. Oxidizing: fluorine, nitric oxide, oxygen.
3. *Corrosive*: fluorine, nitric oxide.
4. Inert (chemically unreactive): argon, helium, krypton, neon, nitrogen, xenon.
5. Highly toxic: fluorine, nitric oxide.

E102.2 Health hazards. Materials classified in this section pose a *health hazard*.

E102.2.1 Highly toxic materials. Examples include:

1. Gases: arsine, cyanogen, diborane, fluorine, germane, hydrogen cyanide, nitric oxide, nitrogen dioxide, ozone, phosphine, hydrogen selenide, stibine.
2. Liquids: acrolein, acrylic acid, 2-chloroethanol (ethylene chlorohydrin), hydrazine, hydrocyanic acid, 2-methylaziridine (propylenimine), 2-methyl-acetonitrile (acetone cyanohydrin), methyl ester isocyanic acid (methyl isocyanate), nicotine, tetranitromethane and tetraethylstannane (tetraethyltin).
3. Solids: (aceto) phenylmercury (phenyl mercuric acetate), 4-aminopyridine, arsenic pentoxide, arsenic trioxide, calcium cyanide, 2-chloroacetophenone, aflatoxin B, decaborane(14), mercury (II) bromide (mercuric bromide), mercury (II) chloride (*corrosive* mercury chloride), pentachlorophenol, methyl parathion, phosphorus (white) and sodium azide.

E102.2.2 Toxic materials. Examples include:

1. Gases: boron trichloride, boron trifluoride, chlorine, chlorine trifluoride, hydrogen fluoride, hydrogen sulfide, phosgene, silicon tetrafluoride.
2. Liquids: acrylonitrile, allyl alcohol, alpha-chlorotoluene, aniline, 1-chloro-2,3-epoxypropane, chloroformic acid (allyl ester), 3-chloropropene (allyl chloride), o-cresol, crotonaldehyde, dibromomethane, diisopropylamine, diethyl ester sulfuric acid, dimethyl ester sulfuric acid, 2-furaldehyde (furfural), furfural alcohol, phosphorus chloride, phosphoryl chloride (phosphorus oxychloride) and thionyl chloride.
3. Solids: acrylamide, barium chloride, barium (II) nitrate, benzidine, p-benzoquinone, beryllium chloride, cadmium chloride, cadmium oxide, chloroacetic acid, chlorophenylmercury (phenyl mercuric chloride), chromium (VI) oxide (chromic acid, solid), 2,4-dinitrotoluene, hydroquinone, mercury chloride (calomel), mercury (II) sulfate (mercuric sulfate), osmium tetroxide, oxalic acid, phenol, P-phenylenediamine, phenylhydrazine, 4-phenylmorpholine, phosphorus sulfide, potassium fluoride, potassium hydroxide, selenium (IV) disulfide and sodium fluoride.

E102.2.3 Corrosives. Examples include:

1. Acids: Examples: chromic, formic, hydrochloric (muriatic) greater than 15 percent, hydrofluoric, nitric (greater than 6 percent, perchloric, sulfuric (4 percent or more).
2. Bases (alkalis): hydroxides-ammonium (greater than 10 percent), calcium, potassium (greater than 1 percent), sodium (greater than 1 percent); certain carbonates-potassium.
3. Other *corrosives*: bromine, chlorine, fluorine, iodine, ammonia.

Note: *Corrosives* that are oxidizers (for example, nitric acid, chlorine, fluorine), *compressed gases* (for example, ammonia, chlorine, fluorine), or water-reactive (for example, concentrated sulfuric acid, sodium hydroxide) are *physical hazards* in addition to being *health hazards*.

INTERNATIONAL CODE COUNCIL®
Copyright © 2019 ICC & NYSDOS. ALL RIGHTS RESERVED. Accessed by Lauren Gualdino (lgualdino@briarcliffmanor.org), (-) Order Number #100880972 on May 08, 2020 07:05 AM (PDT) pursuant to License Agreement with ICC & NYSDOS. No further reproduction, no

100880972

SECTION E103
EVALUATION OF HAZARDS

E103.1 Degree of hazard. The degree of hazard present depends on many variables that should be considered individually and in combination. Some of these variables are as shown in Sections E103.1.1 through E103.1.5.

E103.1.1 Chemical properties of the material. Chemical properties of the material determine self reactions and reactions that could occur with other materials. Generally, materials within subdivisions of hazard categories will exhibit similar chemical properties. However, materials with similar chemical properties could pose very different hazards. Each individual material should be researched to determine its hazardous properties and then considered in relation to other materials that it might contact and the surrounding environment.

E103.1.2 Physical properties of the material. Physical properties, such as whether a material is a solid, liquid or gas at ordinary temperatures and pressures, considered along with chemical properties will determine requirements for containment of the material. Specific gravity (weight of a liquid compared to water) and vapor density (weight of a gas compared to air) are both physical properties that are important in evaluating the hazards of a material.

E103.1.3 Amount and concentration of the material. The amount of material present and its concentration must be considered along with physical and chemical properties to determine the magnitude of the hazard. Hydrogen peroxide, for example, is used as an antiseptic and a hair bleach in low concentrations (approximately 8 percent in water solution). Over 8 percent, hydrogen peroxide is classed as an oxidizer and is toxic. Above 90 percent, it is a Class 4 oxidizer "that can undergo an explosive reaction when catalyzed or exposed to heat, shock or friction," a definition that, incidentally, places hydrogen peroxide over 90-percent concentration in the unstable (reactive) category. Small amounts at high concentrations could present a greater hazard than large amounts at low concentrations.

E103.1.3.1 Mixtures. Gases—toxic and highly toxic gases include those gases that have an LC_{50} of 2,000 parts per million (ppm) or less when rats are exposed for a period of 1 hour or less. To maintain consistency with the definitions for these materials, exposure data for periods other than 1 hour must be normalized to 1 hour. To classify mixtures of *compressed gases* that contain one or more toxic or highly toxic components, the LC_{50} of the mixture must be determined. Mixtures that contain only two components are binary mixtures. Those that contain more than two components are multicomponent mixtures. Where two or more hazardous substances (components) having an LC_{50} below 2,000 ppm are present in a mixture, their combined effect, rather than that of the individual substance components, must be considered. The effects of the hazards present must be considered as additive, except where there is a good reason to believe that the principal effects of the different harmful substances (components) are not additive.

For binary mixtures where the hazardous component is diluted with a nontoxic gas such as an inert gas, the LC_{50} of the mixture is estimated by use of the methodology contained in CGA P-20. The hazard zones specified in CGA P-20 are applicable for DOTn purposes and shall not be used for hazard classification.

E103.1.4 Actual use, activity or process involving the material. The definition of handling, storage and use in *closed systems* refers to materials in packages or containers. Dispensing and use in open containers or systems describes situations where a material is exposed to ambient conditions or vapors are liberated to the atmosphere. Dispensing and use in *open systems*, then, are generally more hazardous situations than handling, storage or use in *closed systems*. The actual use or process could include heating, electric or other sparks, catalytic or reactive materials and many other factors that could affect the hazard and must therefore be thoroughly analyzed.

E103.1.5 Surrounding conditions. Conditions such as other materials or processes in the area, type of construction of the structure, fire protection features (for example, *fire walls*, sprinkler systems, alarms), occupancy (use) of adjoining areas, normal temperatures, exposure to weather, etc., must be taken into account in evaluating the hazard.

E103.2 Evaluation questions. The following are sample evaluation questions:

1. What is the material? Correct identification is important; exact spelling is vital. Checking labels and SDS and asking responsible persons should be among the highest priorities.
2. What are the concentration and strength?
3. What is the physical form of the material? Liquids, gases and finely divided solids have differing requirements for spill and leak control and containment.
4. How much material is present? Consider in relation to permit amounts, *maximum allowable quantity per control area* (from Group H occupancy requirements), amounts that require detached storage and overall magnitude of the hazard.
5. What other materials (including furniture, equipment and building components) are close enough to interact with the material?
6. What are the likely reactions?
7. What is the activity involving the material?
8. How does the activity impact the hazardous characteristics of the material? Consider vapors released or hazards otherwise exposed.
9. What must the material be protected from? (For example, other materials, temperature, shock, pressure.)
10. What effects of the material must people and the environment be protected from?
11. How can protection be accomplished? Consider:
    11.1. Proper containers and equipment.

INTERNATIONAL CODE COUNCIL®
Copyright © 2019 ICC & NYSDOS. ALL RIGHTS RESERVED. Accessed by Lauren Gualdino (lgualdino@briarcliffmanor.org), (-) Order Number #100880972 on May 08, 2020 07:05 AM (PDT) pursuant to License Agreement with ICC & NYSDOS. No further reproduction, no

100880972

11.2. Separation by distance or construction.

11.3. Enclosure in cabinets or rooms.

11.4. Spill control, drainage and containment.

11.5. Control systems-ventilation, special electrical, detection and alarm, extinguishment, explosion venting, limit controls, exhaust scrubbers and excess flow control.

11.6. Administrative (operational) controls-signs, ignition source control, security, personnel training, established procedures, storage plans and emergency plans.

Evaluation of the hazard is a strongly subjective process; therefore, the person charged with this responsibility must gather as much relevant data as possible so that the decision will be objective and within the limits prescribed in laws, policies and standards.

It could be necessary to cause the responsible persons in charge to have tests made by qualified persons or testing laboratories to support contentions that a particular material or process is or is not hazardous. See Section 104.7.2

SECTION E104
REFERENCED STANDARDS

CGA (2009)	P-20—	Standard for Classification of Toxic Mixtures	E103.1.3.1
CGA (2008)	P-23—	Standard for Categorizing Gas Mixtures Containing Flammable and Nonflammable Components	E102.1.2

INTERNATIONAL CODE COUNCIL®
Copyright © 2019 ICC & NYSDOS. ALL RIGHTS RESERVED. Accessed by Lauren Gualdino (lgualdino@briarcliffmanor.org), (-) Order Number #100880972 on May 08, 2020 07:05 AM (PDT) pursuant to License Agreement with ICC & NYSDOS. No further reproduction, no

100880972

APPENDIX F
HAZARD RANKING

This appendix is informative and is not part of this code.

SECTION F101
GENERAL

F101.1 Scope. Assignment of levels of hazards to be applied to specific hazard classes as required by NFPA 704 shall be in accordance with this appendix. The appendix is based on application of the degrees of hazard as defined in NFPA 704 arranged by hazard class as for specific categories defined in Chapter 2 of the *International Fire Code* and used throughout.

F101.2 General. The hazard rankings shown in Table F101.2 have been established by using guidelines found within NFPA 704. As noted in Section 4.2 of NFPA 704, there could be specific reasons to alter the degree of hazard assigned to a specific material; for example, ignition temperature, flammable range or susceptibility of a container to rupture by an internal combustion explosion or to metal failure while under pressure or because of heat from external fire. As a result, the degree of hazard assigned for the same material can vary when assessed by different people of equal competence.

The hazard rankings assigned to each class represent reasonable minimum hazard levels for a given class based on the use of criteria established by NFPA 704. Specific cases of use or storage may dictate the use of higher degrees of hazard in certain cases.

SECTION F102
REFERENCED STANDARD

NFPA	704—17	Identification of the Hazards of Materials for Emergency Response	F101.1, F101.2

INTERNATIONAL CODE COUNCIL®
Copyright © 2019 ICC & NYSDOS. ALL RIGHTS RESERVED. Accessed by Lauren Gualdino (lgualdino@briarcliffmanor.org), (-) Order Number #100880972 on May 08, 2020 07:05 AM (PDT) pursuant to License Agreement with ICC & NYSDOS. No further reproduction, no

100880972

TABLE F101.2
FIRE FIGHTER WARNING PLACARD DESIGNATIONS BASED ON HAZARD CLASSIFICATION CATEGORIES

HAZARD CATEGORY	DESIGNATION
Combustible liquid II	F2
Combustible liquid IIIA	F2
Combustible liquid IIIB	F1
Combustible dust	F3 or F2[a]
Combustible fiber	F3
Cryogenic flammable	F4, H3
Cryogenic oxidizing	OX, H3
Explosive	R4
Flammable solid	F2
Flammable gas (gaseous)	F4
Flammable gas (liquefied)	F4
Flammable liquid IA	F4
Flammable liquid IB	F3
Flammable liquid IC	F3
Organic peroxide UD	R4
Organic peroxide I	F4, R3
Organic peroxide II	F3, R3
Organic peroxide III	F2, R2
Organic peroxide IV	F1, R1
Organic peroxide V	None
Oxidizing gas (gaseous)	OX
Oxidizing gas (liquefied)	OX
Oxidizer 4	OX4
Oxidizer 3	OX3
Oxidizer 2	OX2
Oxidizer 1	OX1
Pyrophoric gases	F4
Pyrophoric solids, liquids	F3
Unstable reactive 4D	R4
Unstable reactive 3D	R4
Unstable reactive 3N	R2
Unstable reactive 2	R2
Unstable reactive 1	None
Water reactive 3	W3
Water reactive 2	W2
Corrosive	H3, COR
Toxic	H3
Highly toxic	H4

a. F3 = Finely divided solids, typically less than 75 micrometers (μm) (200 mesh), that pose an elevated risk of forming an ignitable dust cloud, such as finely divided sulfur, *National Electric Code* Group E dusts (for example, aluminum, zirconium and titanium) and bisphenol A. F2 = Finely divided solids less than 420 μm (40 mesh) that pose an ordinary risk of forming an ignitable dust cloud.

F—Flammable category.
R—Reactive category.
H—Health category.
W—Special hazard: water reactive.
OX—Special hazard: oxidizing properties.
COR—Corrosive.
UD—Unclassified detonable material.
4D—Class 4 detonable material.
3D—Class 3 detonable material.
3N—Class 3 nondetonable material.

INTERNATIONAL CODE COUNCIL®
Copyright © 2019 ICC & NYSDOS. ALL RIGHTS RESERVED. Accessed by Lauren Gualdino (lgualdino@briarcliffmanor.org), (-) Order Number #100880972 on May 08, 2020 07:05 AM (PDT) pursuant to License Agreement with ICC & NYSDOS. No further reproduction, no

100880972

APPENDIX G

CRYOGENIC FLUIDS—WEIGHT AND VOLUME EQUIVALENTS

This appendix is informative and is not part of this code.

SECTION G101 GENERAL

G101.1 Scope. This appendix is used to convert from liquid to gas for *cryogenic fluids*.

G101.2 Conversion. Table G101.2 shall be used to determine the equivalent amounts of *cryogenic fluids* in either the liquid or gas phase.

G101.2.1 Use of the table. To use Table G101.2, read horizontally across the line of interest. For example, to determine the number of cubic feet of gas contained in 1.0 gallon (3.785 L) of liquid argon, find 1.000 in the column entitled "Volume of Liquid at Normal Boiling Point." Reading across the line under the column entitled "Volume of Gas at NTP" (70°F and 1 atmosphere/14.7 psia), the value of 112.45 cubic feet (3.184 m^3) is found.

G101.2.2 Other quantities. If other quantities are of interest, the numbers can be multiplied or divided to obtain the quantity of interest. For example, to determine the number of cubic feet of argon gas contained in a volume of 1,000 gallons (3785 L) of liquid argon at its normal *boiling point*, multiply 112.45 by 1,000 to obtain 112,450 cubic feet (3184 m^3).

INTERNATIONAL CODE COUNCIL®
Copyright © 2019 ICC & NYSDOS. ALL RIGHTS RESERVED. Accessed by Lauren Gualdino (lgualdino@briarcliffmanor.org), (-) Order Number #100880972 on May 08, 2020 07:05 AM (PDT) pursuant to License Agreement with ICC & NYSDOS. No further reproduction, no

100880972

TABLE G101.2
WEIGHT AND VOLUME EQUIVALENTS FOR COMMON CRYOGENIC FLUIDS

CRYOGENIC FLUID	WEIGHT OF LIQUID OR GAS		VOLUME OF LIQUID AT NORMAL BOILING POINT		VOLUME OF GAS AT NTP	
	Pounds	Kilograms	Liters	Gallons	Cubic feet	Cubic meters
Argon	1.000	0.454	0.326	0.086	9.67	0.274
	2.205	1.000	0.718	0.190	21.32	0.604
	3.072	1.393	1.000	0.264	29.71	0.841
	11.628	5.274	3.785	1.000	112.45	3.184
	10.340	4.690	3.366	0.889	100.00	2.832
	3.652	1.656	1.189	0.314	35.31	1.000
Helium	1.000	0.454	3.631	0.959	96.72	2.739
	2.205	1.000	8.006	2.115	213.23	6.038
	0.275	0.125	1.000	0.264	26.63	0.754
	1.042	0.473	3.785	1.000	100.82	2.855
	1.034	0.469	3.754	0.992	100.00	2.832
	0.365	0.166	1.326	0.350	35.31	1.000
Hydrogen	1.000	0.454	6.409	1.693	191.96	5.436
	2.205	1.000	14.130	3.733	423.20	11.984
	0.156	0.071	1.000	0.264	29.95	0.848
	0.591	0.268	3.785	1.000	113.37	3.210
	0.521	0.236	3.339	0.882	100.00	2.832
	0.184	0.083	1.179	0.311	35.31	1.000
Oxygen	1.000	0.454	0.397	0.105	12.00	0.342
	2.205	1.000	0.876	0.231	26.62	0.754
	2.517	1.142	1.000	0.264	30.39	0.861
	9.527	4.321	3.785	1.000	115.05	3.250
	8.281	3.756	3.290	0.869	100.00	2.832
	2.924	1.327	1.162	0.307	35.31	1.000
Nitrogen	1.000	0.454	0.561	0.148	13.80	0.391
	2.205	1.000	1.237	0.327	30.43	0.862
	1.782	0.808	1.000	0.264	24.60	0.697
	6.746	3.060	3.785	1.000	93.11	2.637
	7.245	3.286	4.065	1.074	100.00	2.832
	2.558	1.160	1.436	0.379	35.31	1.000
LNG[a]	1.000	0.454	1.052	0.278	22.968	0.650
	2.205	1.000	2.320	0.613	50.646	1.434
	0.951	0.431	1.000	0.264	21.812	0.618
	3.600	1.633	3.785	1.000	82.62	2.340
	4.356	1.976	4.580	1.210	100.00	2.832
	11.501	5.217	1.616	0.427	35.31	1.000

For SI: 1 pound = 0.454 kg, 1 gallon = 3.785 L, 1 cubic foot = 0.02832 m^3, °C = [(°F) - 32]/1.8, 1 pound per square inch atmosphere = 6.895 kPa.

a. The values listed for liquefied natural gas (LNG) are “typical” values. LNG is a mixture of hydrocarbon gases, and no two LNG streams have exactly the same composition.

INTERNATIONAL CODE COUNCIL®
Copyright © 2019 ICC & NYSDOS. ALL RIGHTS RESERVED. Accessed by Lauren Gualdino (lgualdino@briarcliffmanor.org), (-) Order Number #100880972 on May 08, 2020 07:05 AM (PDT) pursuant to License Agreement with ICC & NYSDOS. No further reproduction, no

100880972

APPENDIX H

HAZARDOUS MATERIALS MANAGEMENT PLAN (HMMP) AND HAZARDOUS MATERIALS INVENTORY STATEMENT (HMIS) INSTRUCTIONS

This appendix is informative and is not part of this code.

SECTION H101 HMMP

H101.1 Part A (see Example Format in Figure 1).

1. Fill out items and sign the declaration.
2. Part A of this section is required to be updated and submitted annually, or within 30 days of a process or management change.

H101.2 Part B–General Facility Description/Site Plan (see Example Format in Figure 2).

1. Provide a site plan on $8^1/_2$-inch by 11-inch (215 mm by 279 mm) paper, showing the locations of all buildings, structures, outdoor chemical control or storage and use areas, parking lots, internal roads, storm and sanitary sewers, wells and adjacent property uses. Indicate the approximate scale, northern direction and date the drawing was completed.

H101.3 Part C–Facility Storage Map–Confidential Information (see Example Format in Figure 3).

1. Provide a floor plan of each building identified on the site plan as containing hazardous materials on $8^1/_2$-inch by 11-inch (215 mm by 279 mm) paper, identifying the northern direction and showing the location of each storage and use area.
2. Identify storage and use areas, including hazard waste storage areas.
3. Show the following:
    - 3.1. Accesses to each storage and use area.
    - 3.2. Location of emergency equipment.
    - 3.3. Location where liaison will meet emergency responders.
    - 3.4. Facility evacuation meeting point locations.
    - 3.5. The general purpose of other areas within the building.
    - 3.6. Location of all aboveground and underground tanks to include sumps, vaults, below-grade treatment systems, piping, etc.
    - 3.7. Hazard classes in each area.
    - 3.8. Locations of all Group H occupancies, *control areas*, and exterior storage and use areas.
    - 3.9. Emergency *exits*.

SECTION H102 HMIS

H102.1 Inventory statement contents.

1. HMIS Summary Report (see Example Format in Figure 4).
    - 1.1. Complete a summary report for each *control area* and Group H occupancy.
    - 1.2. The storage summary report includes the HMIS Inventory Report amounts in storage, use-closed and use-open conditions.
    - 1.3. Provide separate summary reports for storage, use-closed and use-open conditions.
    - 1.4. IBC/IFC Hazard Class.
    - 1.5. Inventory Amount [Solid (lb), Liquid (gal), Gas (cu ft, gal or lbs)].
    - 1.6. IBC/IFC *Maximum Allowable Quantity per control area* (MAQ). (If applicable, double MAQ for sprinkler protection and/or storage in cabinets. For wholesale and retail sales occupancies, go to Tables 5003.11.1 and 5704.3.4.1 of the *International Fire Code* for MAQs.)
2. HMIS Inventory Report (see Example Format in Figure 5).
    - 2.1. Complete an inventory report by listing products by location.
    - 2.2. Product Name.
    - 2.3. Components. (For mixtures specify percentages of major components if available.)
    - 2.4. Chemical Abstract Service (CAS) Number. (For mixtures list CAS Numbers of major components if available.)
    - 2.5. Location. (Identify the *control area* or, if it is a Group H occupancy, provide the classification, such as H-2 or H-3.)
    - 2.6. Container with a capacity of greater than 55 gallons (208 L). (If product container, vessel or tank could exceed 55 gallons, indicate yes in column.)
    - 2.7. Hazard Classification. (List applicable classifications for each product.)

INTERNATIONAL CODE COUNCIL®
Copyright © 2019 ICC & NYSDOS. ALL RIGHTS RESERVED. Accessed by Lauren Gualdino (lgualdino@briarcliffmanor.org), (-) Order Number #100880972 on May 08, 2020 07:05 AM (PDT) pursuant to License Agreement with ICC & NYSDOS. No further reproduction, no

100880972

2.8. Stored. (Amount of product in storage conditions.)

2.9. Closed. (Amount of product in use-closed systems.)

2.10. Open. (Amount of product in use-open systems.)

Facilities that have prepared, filed and submitted a Tier II Inventory Report required by the U.S. Environmental Protection Agency (USEPA) or required by a state that has secured USEPA approval for a similar form shall be deemed to have complied with this section.

SECTION H103
EMERGENCY PLAN

1. Emergency Notification. (See Example Format in Figure 6.)
2. Where OSHA or state regulations require a facility to have either an Emergency Action Plan (EAP) or an Emergency Response Plan (ERP), the EAP or ERP shall be included as part of the HMMP.

SECTION H104
REFERENCED STANDARD

ICC	IBC—18	International Building Code	H102.1

INTERNATIONAL CODE COUNCIL®
Copyright © 2019 ICC & NYSDOS. ALL RIGHTS RESERVED. Accessed by Lauren Gualdino (lgualdino@briarcliffmanor.org), (-) Order Number #100880972 on May 08, 2020 07:05 AM (PDT) pursuant to License Agreement with ICC & NYSDOS. No further reproduction, no

100880972

FIGURE 1
HAZARDOUS MATERIALS MANAGEMENT PLAN
SECTION I: FACILITY DESCRIPTION

1. Business Name:_____ Phone:_____
   Address:_____

2. Person Responsible for the Business

Name:	Title:	Phone:
_____	_____	_____

3. Emergency Contacts:

Name:	Title:	Home Number:	Work Number:
_____	_____	_____	_____
_____	_____	_____	_____
_____	_____	_____	_____
_____	_____	_____	_____
_____	_____	_____	_____

4. Person Responsible for the Application/Principal Contact:

Name:	Title:	Phone:
_____	_____	_____

5. Principal Business Activity:

   _____
   _____
   _____

6. Number of Employees:_____

7. Number of Shifts: _____
   a. Number of Employees per Shift:

      _____
      _____
      _____

8. Hours of Operation: _____

INTERNATIONAL CODE COUNCIL®
Copyright © 2019 ICC & NYSDOS. ALL RIGHTS RESERVED. Accessed by Lauren Gualdino (lgualdino@briarcliffmanor.org), (-) Order Number #100880972 on May 08, 2020 07:05 AM (PDT) pursuant to License Agreement with ICC & NYSDOS. No further reproduction, no

APPENDIX H—HAZARDOUS MATERIALS MANAGEMENT PLAN (HMMP) AND HAZARDOUS MATERIALS INVENTORY STATEMENT (HMIS) INSTRUCTIONS

FIGURE 2
HAZARDOUS MATERIALS MANAGEMENT PLAN SECTION I: FACILITY DESCRIPTION

INTERNATIONAL CODE COUNCIL®
Copyright © 2019 ICC & NYSDOS. ALL RIGHTS RESERVED. Accessed by Lauren Gualdino (lgualdino@briarcliffmanor.org), (-) Order Number #100880972 on May 08, 2020 07:05 AM (PDT) pursuant to License Agreement with ICC & NYSDOS. No further reproduction, no

100880972

FIGURE 3
HAZARDOUS MATERIALS MANAGEMENT PLAN SECTION I: FACILITY DESCRIPTION PART C—FACILITY MAP

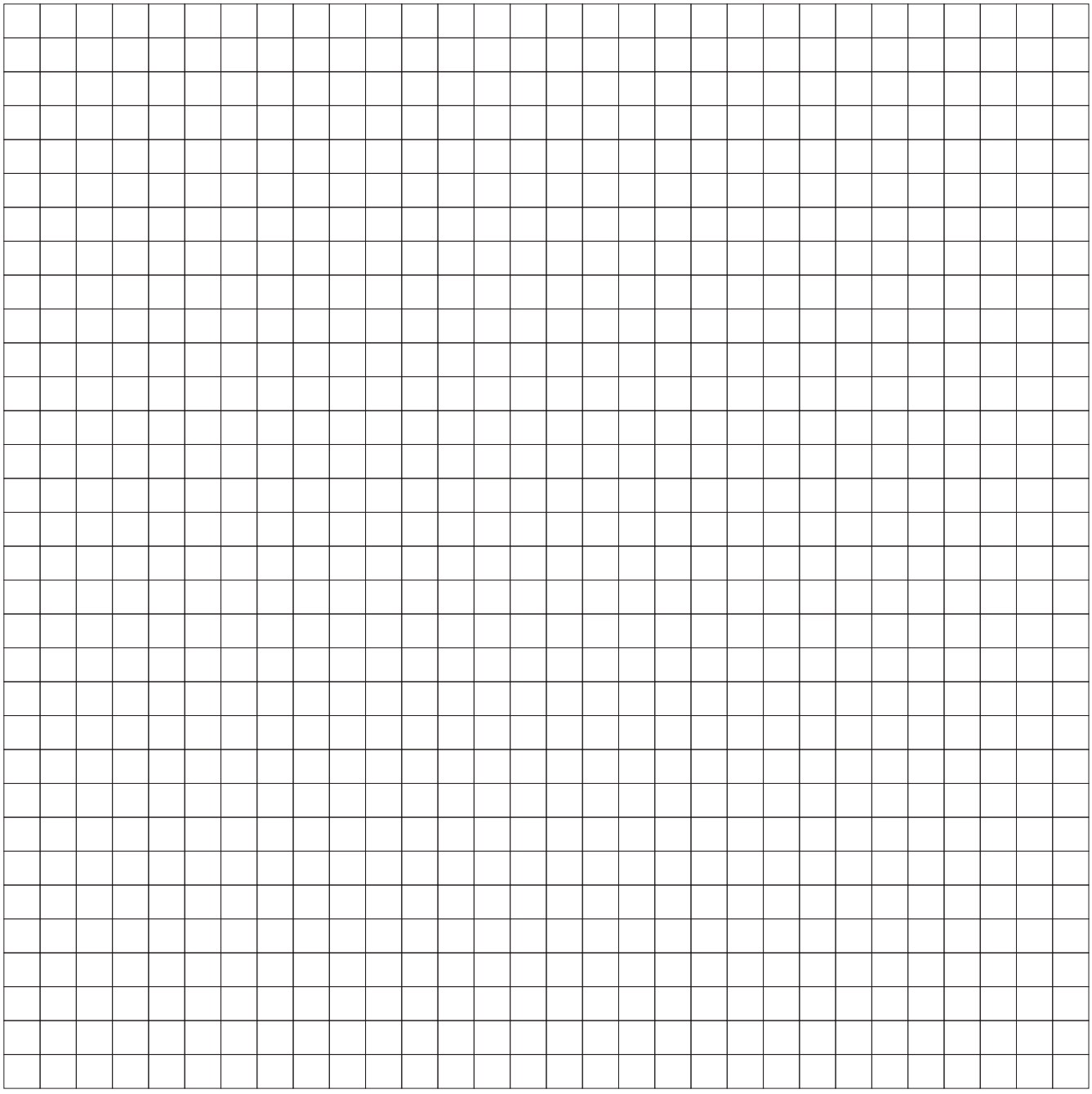

Business Name	Date
Address	Page of

INTERNATIONAL CODE COUNCIL®
Copyright © 2019 ICC & NYSDOS. ALL RIGHTS RESERVED. Accessed by Lauren Gualdino (lgualdino@briarcliffmanor.org), (-) Order Number #100880972 on May 08, 2020 07:05 AM (PDT) pursuant to License Agreement with ICC & NYSDOS. No further reproduction, no

100880972

FIGURE 4
SECTION II—HAZARDOUS MATERIALS INVENTORY STATEMENT (HMIS) SUMMARY REPORT[a] (Storage[b] Conditions)[c]

IBC/IFC HAZARD CLASS	HAZARD CLASS	INVENTORY AMOUNT			IBC/IFC MAXIMUM ALLOWABLE QUANTITY[d]		
	(Abbrev)	Solid (lb)	Liquid (gal)	Gas (cu ft, gal, lb)	Solid (lb)	Liquid (gal)	Gas (cu ft, gal, lb)
Combustible Liquid	C2		5			120	
	C3A					330	
	C3B		6			13,200	
Combustible Fiber	Loose/Baled						
Cryogenics, Flammable	Cryo-Flam					45	
Cryogenic, Oxidizing	Cryo-OX					45	
Flammable Gas	FLG						
(Gaseous)				150			1,000
(Liquefied)						30	
Flammable Liquid	F1A					30	
	F1B & F1C		5			120	
Combination (1A, 1B, 1C)			5			120	
Flammable Solid	FLS				125		
Organic Peroxide	OPU				0		
	OP1				5		
	OP2				50		
	OP3				125		
	OP4				NL		
	OP5				NL		
Oxidizer	OX4				0		
	OX3				10		
	OX2				250		
	OX1				4,000		

a. Complete a summary report for each control area and Group H occupancy.
b. Storage = storage + use-closed + use-open systems.
c. Separate reports are required for use-closed and use-open systems.
d. Include increases for sprinklers or storage in cabinets, if applicable.
(This is an example; add additional hazard classes as needed.)

INTERNATIONAL CODE COUNCIL®
Copyright © 2019 ICC & NYSDOS. ALL RIGHTS RESERVED. Accessed by Lauren Gualdino (lgualdino@briarcliffmanor.org), (-) Order Number #100880972 on May 08, 2020 07:05 AM (PDT) pursuant to License Agreement with ICC & NYSDOS. No further reproduction, no

100880972

FIGURE 5
SECTION II — HAZARDOUS MATERIALS INVENTORY STATEMENT (HMIS) INVENTORY REPORT
(Sort Products Alphabetically by Location of Product and then Alphabetically by Product Name)

Product Name (Components)[c]	CAS Number	Location[a]	Container > 55 gal[b]	Haz Class 1	Haz Class 2	Haz Class 3	Stored (lbs)	Stored (gal)	Stored (gas)[d]	Closed (lbs)	Closed (gal)	Closed gas[d]	Open (lbs)	Open (gal)
ACETYLENE (Acetylene gas)	74-86-2	Control Area 1		FLG	UR2				150					
BLACK AEROSOL SPRAY PAINT (Mixture)	Mixture	Control Area 1		A-L3			24							
GASOLINE, UNLEADED (Gasoline-Mixture) Methyl-t-Butyl-Ether-15% Diisopropyl Ether-7% Ethanol-11% Toluene-12% Xylene-11%	8006-61-9 1634-04-4 108-20-3 64-17-5 108-88-3 1330-20-7	Control Area 1		F1B				5						
MOTOR OIL-10W40 (Hydrotreated Heavy Paraffinic Distillate-85%; Additives-20%)	64742-54-7 Mixture	Control Area 1		C3B				3						
DIESEL (Diesel-99-100%; Additives)	68476-34-6 Proprietary	Control Area 2	Yes	C2				225						
TRANSMISSION FLUID (Oil-Solvent-Neutral; Performance Additives)	64742-65-0	Control Area 2		C3B				3						
OXYGEN, GAS (Oxygen)	7782-44-7	H-3		OXG					5,000					

a. Identify the control area or, if it is a Group H occupancy, provide the classification, such as H-2, H-3, etc.
b. If the product container, vessel or tank could exceed 55 gallons, indicate yes in the column.
c. Specify percentages of main components if available.
d. In cubic feet, gallons or pounds.
(This is an example; add additional hazard classes as needed.)

INTERNATIONAL CODE COUNCIL®
Copyright © 2019 ICC & NYSDOS. ALL RIGHTS RESERVED. Accessed by Lauren Gualdino (lgualdino@briarcliffmanor.org), (-) Order Number #100880972 on May 08, 2020 07:05 AM (PDT) pursuant to License Agreement with ICC & NYSDOS. No further reproduction, no

100880972

FIGURE 6
HAZARDOUS MATERIALS MANAGEMENT PLAN
SECTION III: EMERGENCY PLAN

1. In the event of an emergency, the following shall be notified:
   a. Facility Liaison

Name	Title	Home Number	Work Number
_____	_____	_____	_____
_____	_____	_____	_____
_____	_____	_____	_____
_____	_____	_____	_____
_____	_____	_____	_____

   b. Agency

Agency	Contact	Phone Number
Fire Department	_____	_____
LEPC	_____	_____
Other	_____	_____

INTERNATIONAL CODE COUNCIL®
Copyright © 2019 ICC & NYSDOS. ALL RIGHTS RESERVED. Accessed by Lauren Gualdino (lgualdino@briarcliffmanor.org), (-) Order Number #100880972 on May 08, 2020 07:05 AM (PDT) pursuant to License Agreement with ICC & NYSDOS. No further reproduction, no

100880972

APPENDIX I

FIRE PROTECTION SYSTEMS—NONCOMPLIANT CONDITIONS

This appendix is informative and is not part of this code.

SECTION I101
NONCOMPLIANT CONDITIONS

I101.1 General. This appendix is intended to identify conditions that can occur where *fire protection systems* are not properly maintained or components have been damaged. This appendix is not intended to provide comprehensive inspection, testing and maintenance requirements, which are found in NFPA 10, 25 and 72. Rather, it is intended to identify problems that are readily observable during fire inspections.

I101.2 Noncompliant conditions requiring component replacement. The following conditions shall be deemed noncompliant and shall cause the related component(s) to be replaced to comply with the provisions of this code:

1. Sprinkler heads having any of the following conditions:
   - 1.1. Signs of leakage.
   - 1.2. Paint or other ornamentation that is not factory applied.
   - 1.3. Evidence of corrosion including, but not limited to, discoloration or rust.
   - 1.4. Deformation or damage of any part.
   - 1.5. Improper orientation of sprinkler head.
   - 1.6. Empty glass bulb.
   - 1.7. Sprinkler heads manufactured prior to 1920.
   - 1.8. Replacement sprinkler heads that do not match existing sprinkler heads in orifice size, K-factor temperature rating, coating or deflector type.
   - 1.9. Sprinkler heads for the protection of cooking equipment that have not been replaced within one year.
2. Water pressure and air pressure gauges that have been installed for more than 5 years and have not been tested to within 3 percent accuracy.

I101.3 Noncompliant conditions requiring component repair or replacement. The following shall be deemed noncompliant conditions and shall cause the related component(s) to be repaired or replaced to comply with the provisions of this code:

1. Sprinkler and standpipe system piping and fittings having any of the following conditions:
   - 1.1. Signs of leakage.
   - 1.2. Evidence of corrosion.
   - 1.3. Misalignment.
   - 1.4. Mechanical damage.
2. Sprinkler piping support having any of the following conditions:
   - 2.1. Materials resting on or hung from sprinkler piping.
   - 2.2. Damaged or loose hangers or braces.
3. Class II and Class III standpipe systems having any of the following conditions:
   - 3.1. No hose or nozzle, where required.
   - 3.2. Hose threads incompatible with fire department hose threads.
   - 3.3. Hose connection cap missing.
   - 3.4. Mildew, cuts, abrasions and deterioration evident.
   - 3.5. Coupling damaged.
   - 3.6. Gaskets missing or deteriorated.
   - 3.7. Nozzle missing or obstructed.
4. Hose racks and cabinets having any of the following conditions:
   - 4.1. Difficult to operate or damaged.
   - 4.2. Hose improperly racked or rolled.
   - 4.3. Inability of rack to swing 90 degrees (1.57 rad) out of the cabinet.
   - 4.4. Cabinet locked, except as permitted by this code.
   - 4.5. Cabinet door will not fully open.
   - 4.6. Door glazing cracked or broken.
5. Portable fire extinguishers having any of the following conditions:
   - 5.1. Broken seal or tamper indicator.
   - 5.2. Expired maintenance tag.
   - 5.3. Pressure gauge indicator in “red.”
   - 5.4. Signs of leakage or corrosion.
   - 5.5. Mechanical damage, denting or abrasion of tank.
   - 5.6. Presence of repairs such as welding, soldering or brazing.
   - 5.7. Damaged threads.
   - 5.8. Damaged hose assembly, couplings or swivel joints.
6. Fire alarm and detection control equipment, initiating devices and notification appliances having any of the following conditions:
   - 6.1. Corroded or leaking batteries or terminals.
   - 6.2. Smoke detectors having paint or other ornamentation that is not factory-applied.
   - 6.3. Mechanical damage to heat or smoke detectors.

INTERNATIONAL CODE COUNCIL®
Copyright © 2019 ICC & NYSDOS. ALL RIGHTS RESERVED. Accessed by Lauren Gualdino (lgualdino@briarcliffmanor.org), (-) Order Number #100880972 on May 08, 2020 07:05 AM (PDT) pursuant to License Agreement with ICC & NYSDOS. No further reproduction, no

100880972

6.4. Tripped fuses.

7. Fire department connections having any of the following conditions:
   7.1. Fire department connections are not visible or able to be accessed from the fire apparatus access road.
   7.2. Couplings or swivels are damaged.
   7.3. Plugs and caps are missing or damaged.
   7.4. Gaskets are deteriorated.
   7.5. Check valve is leaking.
   7.6. Identification signs are missing.
8. Fire pumps having any of the following conditions:
   8.1. Pump room temperature is less than 40°F (4.4°C).
   8.2. Ventilating louvers are not freely operable.
   8.3. Corroded or leaking system piping.
   8.4. Diesel fuel tank is less than two-thirds full.
   8.5. Battery readings, lubrication oil or cooling water levels are abnormal.

SECTION I102
REFERENCED STANDARDS

NFPA	10—17	Portable Fire Extinguishers	I101.1
NFPA	25—17	Inspection, Testing and Maintenance of Water-based Fire Protection Systems	I101.1
NFPA	72—16	National Fire Alarm Code	I101.1

INTERNATIONAL CODE COUNCIL®
Copyright © 2019 ICC & NYSDOS. ALL RIGHTS RESERVED. Accessed by Lauren Gualdino (lgualdino@briarcliffmanor.org), (-) Order Number #100880972 on May 08, 2020 07:05 AM (PDT) pursuant to License Agreement with ICC & NYSDOS. No further reproduction, no

100880972

APPENDIX J
BUILDING INFORMATION SIGN

This appendix is informative and is not part of this code.

SECTION J101
GENERAL

J101.1 Scope. New buildings shall have a building information sign(s) that shall comply with Sections J101.1.1 through J101.7. Existing buildings shall be brought into conformance with Sections J101.1 through J101.9 when one of the following occurs:

1. The fire department conducts an annual inspection intended to verify compliance with this section, or any required inspection.
2. A change in use or occupancy has occurred.

Exceptions:

1. Group U occupancies.
2. One- and two-family *dwellings*.

J101.1.1 Sign location. The building information sign shall be placed at one of the following locations:

1. On the entry door or sidelight at a minimum height of 42 inches (1067 mm) above the walking surface on the address side of the building or structure.
2. On the exterior surface of the building or structure on either side of the entry door, not more than 3 feet (76 mm) from the entrance door, at a minimum height of 42 inches (1067 mm) above the walking surface on the address side of the building or structure.
3. Conspicuously placed inside an enclosed entrance lobby, on any vertical surface within 10 feet (254 mm) of the entrance door at a minimum height of 42 inches (1067 mm) above the walking surface.
4. Inside the building's *fire command center*.
5. On the exterior of the fire alarm control unit or on the wall immediately adjacent to the fire alarm control unit door where the alarm panel is located in the enclosed main lobby.

J101.1.2 Sign features. The building information sign shall consist of all of the following:

1. White reflective background with red letters.
2. Durable material.
3. Numerals shall be Roman or Latin numerals, as required, or alphabet letters.
4. Permanently affixed to the building or structure in an *approved* manner.

J101.1.3 Sign shape. The building information sign shall be a Maltese cross as shown in Figure J101.1.3.

J101.1.4 Sign size and lettering. The minimum size of the building information sign and lettering shall be in accordance with the following:

1. The width and height shall be 6 inches by 6 inches (152 mm by 152 mm).
2. The height or width of each Maltese cross wing area shall be $1^1/_8$ inches (29 mm) and have a stroke width of $^1/_2$ inch (13 mm).
3. The center of the Maltese cross, a circle or oval, shall be 3 inches (76 mm) in diameter and have a stroke width of $^1/_2$ inch (6 mm).
4. All Roman numerals and alphabetic designations, shall be $1^1/_4$ inch (32 mm) height and have a stroke width of $^1/_4$ inch (6 mm).

J101.2 Sign designations. Designations shall be made based on the construction type, content, hazard, *fire protection sys-*

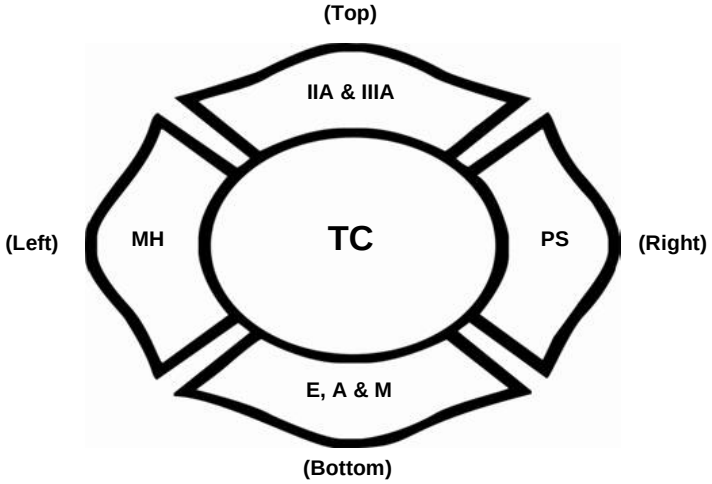

FIGURE J101.1.3
EXAMPLE OF COMPLETED BUILDING INFORMATION SIGN

INTERNATIONAL CODE COUNCIL®
Copyright © 2019 ICC & NYSDOS. ALL RIGHTS RESERVED. Accessed by Lauren Gualdino (lgualdino@briarcliffmanor.org), (-) Order Number #100880972 on May 08, 2020 07:05 AM (PDT) pursuant to License Agreement with ICC & NYSDOS. No further reproduction, no

100880972

tems, life safety and occupancy. Where multiple designations occur within a classification category, the designation used shall be based on the greatest potential risk.

J101.3 Construction type (top wing). The construction types shall be designated by assigning the appropriate Roman numeral, and letter, placed inside the top wing of the Maltese cross. The hourly rating provided is for the structural framing in accordance with Table 601 of the *International Building Code*,

CONSTRUCTION TYPE	FIRE-RESISTANCE RATING
IA—Noncombustible	3 Hours
IB—Noncombustible	2 Hours
IIA—Noncombustible	1 Hour
IIB—Noncombustible	0 Hours
IIIA—Noncombustible/combustible	1 Hour
IIIB—Noncombustible/combustible	0 Hours
IV—Heavy timber (HT)	HT
VA—Combustible	1 Hour
VB—Combustible	0 Hours

J101.4 Fire protection systems (right wing). The *fire protection system* shall be designated by determining its level of protection and assigning the appropriate designation to the right wing of the Maltese cross. Where multiple systems are provided, all shall be listed:

AS *Automatic sprinkler system* installed throughout

CES Chemical extinguishing system and designated area

CS Combination sprinkler and standpipe system

DS Dry sprinkler system and designated areas

FA Fire alarm system

FP Fire pump

FW *Fire wall* and designated areas

PAS Pre-action sprinkler system and designated floor

PS Partial *automatic sprinkler system*, and designated floor

S Standpipe system

NS No system installed

J101.5 Occupancy type (bottom wing). The occupancy of a building or structure shall be designated in accordance with the occupancy classification found in Section 302.1 of the *International Building Code a*nd the corresponding designation shall be placed in the bottom wing of the Maltese cross. Where a building or structure contains a mixture of uses and occupancies, all uses and occupancies shall be identified.

A Assembly

B Business

E Educational

F Factory or Industrial

H High Hazard

I Institutional

M Mercantile

R Residential

J101.6 Hazards of content (left wing). The hazards of building contents shall be designated by one of the following classifications as defined in NFPA 13 and the appropriate designation shall be placed inside the left wing of the Maltese cross:

LH Light hazard

MH Moderate hazard

HH High hazard

J101.7 Tactical considerations (center circle). The center circle shall include the name of the local fire service and, where required, the letters "TC" for "tactical considerations." Where fire fighters conduct preplan operations, a unique situation(s) for tactical considerations shall be identified and the information provided to the fire dispatch communications center to further assist fire fighters in identifying that there is special consideration(s) for this occupancy. Special consideration designations include, but are not limited to:

1. Impact-resistant drywall.
2. Impact-resistant glazing, such as blast or hurricane-type glass.
3. All types of roof and floor structural members including but not limited to post-tension concrete, bar joists, solid wood joists, rafters, trusses, cold-formed galvanized steel, I-joists and I-beams; green roof with vegetation, soil and plants.
4. Hazardous materials (such as explosives, chemicals, plastics).
5. Solar panels and DC electrical energy.
6. HVAC system; and smoke management system for pressurization and exhaust methods.
7. Other unique characteristic(s) within the building that are ranked according to a potential risk to occupants and fire fighters.

J101.8 Sign classification maintenance, building information. Sign maintenance shall comply with each of the following:

1. Fire departments in the jurisdiction shall define the designations to be placed within the sign.
2. Fire departments in the jurisdiction shall conduct annual inspections to verify compliance with this section of the code and shall notify the *owner*, or the *owner's* agent, of any required updates to the sign in accordance with fire department designations and the *owner*, or the *owner's* agent, shall comply within 30 days.
3. The owner of a building shall be responsible for the maintenance and updates to the sign in accordance with fire department designations.

J101.9 Training. Jurisdictions shall train fire department personnel on Sections J101.1 through J101.8.

INTERNATIONAL CODE COUNCIL®
Copyright © 2019 ICC & NYSDOS. ALL RIGHTS RESERVED. Accessed by Lauren Gualdino (lgualdino@briarcliffmanor.org), (-) Order Number #100880972 on May 08, 2020 07:05 AM (PDT) pursuant to License Agreement with ICC & NYSDOS. No further reproduction, no

100880972

SECTION J102
REFERENCED STANDARDS

ICC	IBC—18	International Building Code	J101.3, J101.5
NFPA	13—16	Installation of Sprinkler Systems	J101.6

INTERNATIONAL CODE COUNCIL®
Copyright © 2019 ICC & NYSDOS. ALL RIGHTS RESERVED. Accessed by Lauren Gualdino (lgualdino@briarcliffmanor.org), (-) Order Number #100880972 on May 08, 2020 07:05 AM (PDT) pursuant to License Agreement with ICC & NYSDOS. No further reproduction, no

100880972

INTERNATIONAL CODE COUNCIL®
Copyright © 2019 ICC & NYSDOS. ALL RIGHTS RESERVED. Accessed by Lauren Gualdino (lgualdino@briarcliffmanor.org), (-) Order Number #100880972 on May 08, 2020 07:05 AM (PDT) pursuant to License Agreement with ICC & NYSDOS. No further reproduction, no

100880972

[NY] APPENDIX K

RESERVED

INTERNATIONAL CODE COUNCIL®
Copyright © 2019 ICC & NYSDOS. ALL RIGHTS RESERVED. Accessed by Lauren Gualdino (lgualdino@briarcliffmanor.org), (-) Order Number #100880972 on May 08, 2020 07:05 AM (PDT) pursuant to License Agreement with ICC & NYSDOS. No further reproduction, no

100880972

INTERNATIONAL CODE COUNCIL®
Copyright © 2019 ICC & NYSDOS. ALL RIGHTS RESERVED. Accessed by Lauren Gualdino (lgualdino@briarcliffmanor.org), (-) Order Number #100880972 on May 08, 2020 07:05 AM (PDT) pursuant to License Agreement with ICC & NYSDOS. No further reproduction, no

100880972

APPENDIX L

REQUIREMENTS FOR FIRE FIGHTER AIR REPLENISHMENT SYSTEMS

This appendix is informative and is not part of this code.

SECTION L101 GENERAL

L101.1 Scope. *Fire fighter air replenishment systems (FARS)* shall be provided in accordance with this appendix. The adopting ordinance shall specify building characteristics or special hazards that establish thresholds triggering a requirement for the installation of a FARS. The requirement shall be based on the fire department's capability of replenishing fire fighter breathing air during sustained emergency operations. Considerations shall include:

1. Building characteristics, such as number of stories above or below grade plane, floor area, type of construction and fire-resistance of the primary structural *frame* to allow sustained fire-fighting operations based on a rating of not less than 2 hours.
2. Special hazards, other than buildings, that require unique accommodations to allow the fire department to replenish fire fighter breathing air.
3. Fire department staffing level.
4. Availability of a fire department breathing air replenishment vehicle.

SECTION L102 DEFINITIONS

L102.1 Definitions. For the purpose of this appendix, certain terms are defined as follows:

FIRE FIGHTER AIR REPLENISHMENT SYSTEM (FARS). A permanently installed arrangement of piping, valves, fittings and equipment to facilitate the replenishment of breathing air in self-contained breathing apparatus (SCBA) for fire fighters engaged in emergency operations.

SECTION L103 PERMITS

L103.1 Permits. Permits shall be required to install and maintain a FARS. Permits shall be in accordance with Sections L103.2 and L103.3.

L103.2 Construction permit. A construction permit is required for installation of or modification to a *FARS*. The construction permit application shall include documentation of an acceptance and testing plan as specified in Section L105.

L103.3 Operational permit. An operational permit is required to maintain a *FARS*.

SECTION L104 DESIGN AND INSTALLATION

L104.1 Design and installation. A *FARS* shall be designed and installed in accordance with Sections L104.2 through L104.15.3.

L104.2 Standards. *Fire fighter air replenishment systems* shall be in accordance with Sections L104.2.1 and L104.2.2.

L104.2.1 Pressurized system components. Pressurized system components shall be designed and installed in accordance with ASME B31.3.

L104.2.2 Air quality. The system shall be designed to convey breathing air complying with NFPA 1989.

L104.3 Design and operating pressure. The minimum design pressure shall be 110 percent of the fire department's normal SCBA fill pressure. The system design pressure shall be marked in an *approved* manner at the supply connections, and adjacent to pressure gauges on any fixed air supply components. Pressure shall be maintained in the system within 5 percent of the design pressure.

L104.4 Cylinder refill rate. The *FARS* shall be capable of refilling breathing air cylinders of a size and pressure used by the fire department at a rate of not less than two empty cylinders in 2 minutes.

L104.5 Breathing air supply. Where a fire department mobile air unit is available, the *FARS* shall be supplied by an external mobile air connection in accordance with Section L104.14. Where a fire department mobile air unit is not available, a stored pressure air supply shall be provided in accordance with Section L104.5.1. A stored pressure air supply shall be permitted to be added to a system supplied by an external mobile air connection provided that a means to bypass the stored pressure air supply is located at the external mobile air connection.

L104.5.1. Stored pressure air supply. A stored pressure air supply shall be designed based on Chapter 24 of NFPA 1901 except that provisions applicable only to mobile apparatus or not applicable to system design shall not apply. A stored pressure air supply shall be capable of refilling not less than 50 empty breathing air cylinders of a size and pressure used by the fire department.

L104.5.2. Retrofit of external mobile air connection. A *FARS* not initially provided with an external mobile air connection due to the lack of a mobile air unit shall be retrofitted with an external mobile air connection where a mobile air unit becomes available. Where an external mobile air connection is provided, a means to bypass the

INTERNATIONAL CODE COUNCIL®
Copyright © 2019 ICC & NYSDOS. ALL RIGHTS RESERVED. Accessed by Lauren Gualdino (lgualdino@briarcliffmanor.org), (-) Order Number #100880972 on May 08, 2020 07:05 AM (PDT) pursuant to License Agreement with ICC & NYSDOS. No further reproduction, no

100880972

stored pressure air supply shall be located at the external mobile air connection. The retrofit shall be completed not more than 12 months after notification by the *fire code official*.

L104.6 Isolation valves. System isolation valves that are accessible to the fire department shall be installed on the system riser to allow piping beyond any air cylinder refill panel to be blocked.

L104.7 Pressure relief valve. Pressure relief valves shall be installed at each point of supply and at the top or end of every riser. The relief valve shall meet the requirements of CGA S-1.3 and shall not be field adjustable. Pressure relief valves shall discharge in a manner that does not endanger personnel who are in the area. Valves, plugs or caps shall not be installed in the discharge of a pressure relief valve. Where discharge piping is used the end shall not be threaded.

L104.8 Materials and equipment. Pressurized system components shall be *listed* or *approved* for their intended use and rated for the maximum allowable design pressure in the system. Piping and fittings shall be stainless steel.

L104.9 Welded connections. Piping connections that are concealed shall be welded.

L104.10 Protection of piping. System piping shall be protected from physical damage in an *approved* manner.

L104.11 Compatibility. Fittings and connections intended to be used by the fire department shall be compatible with the fire department's equipment.

L104.12 Security. Connections to a *FARS* shall be safeguarded from unauthorized access in an *approved* manner.

L104.13 Fill stations. Fire fighter air replenishment fill stations shall comply with Section L104.13.1 through L104.13.3.

L104.13.1 Location. Fill stations for refilling breathing air cylinders shall be located as follows:

1. Fill stations shall be provided at the fifth floor above and below the ground level floor and every third floor level thereafter.
2. On floor levels requiring fill stations, one fill station shall be provided adjacent to a required exit stair at a location designated by the *fire code official*. In buildings required to have three or more exit stairs, additional fill stations shall be provided at a ratio of one fill station for every three stairways.

L104.13.2 Design. Fill stations for breathing air cylinders shall be designed to meet the following requirements:

1. A pressure gauge and pressure-regulating devices and controls shall be provided to allow the operator to control the fill pressure and fill rate on each cylinder fill hose.
2. Valves controlling cylinder fill hoses shall be slow-operating valves.
3. A separate flow restriction device shall be provided on each fill hose.
4. A method shall be provided to bleed each cylinder fill hose.
5. The fill station shall be designed to provide a containment area that fully encloses any cylinder being filled and flexible cylinder fill hoses, and directs the energy from a failure away from personnel. Fill stations shall be designed to prohibit filling of cylinders that are not enclosed within the containment area.

   Exception: Where required or *approved* by the fire chief, fill stations providing for the direct refilling of the fire fighters' breathing air cylinders using Rapid Intervention Crew/Company Universal Air Connection (RIC/UAC) fittings shall be used in lieu of cylinder fill stations that utilize containment areas.

L104.13.3 Cylinder refill rate. Fill stations shall be capable of simultaneously filling two or more empty breathing air cylinders equivalent to those used by the fire department to the cylinders' design pressure within 2 minutes.

L104.14 External mobile air connection. An external mobile air connection shall be provided for fire department mobile air apparatus where required by Section L104.5 to supply the system with breathing air.

L104.14.1 Location. The location of the external mobile air connection shall be accessible to mobile air apparatus and *approved* by the *fire code official*.

L104.14.2 Protection from vehicles. A means of vehicle impact protection in accordance with Section 312 shall be provided to protect mobile air connections that are subject to vehicular impact.

L104.14.3 Clear space around connections. A working space of not less than 36 inches (914 mm) in width, 36 inches (914 mm) in depth and 78 inches (1981 mm) in height shall be provided and maintained in front of and to the sides of external mobile air connections.

L104.15 Air monitoring system. An *approved* air monitoring system shall be provided. The system shall automatically monitor air quality, moisture and pressure on a continual basis. The air monitoring system shall be equipped with not less than two content analyzers capable of detecting carbon monoxide, carbon dioxide, nitrogen, oxygen, moisture and hydrocarbons.

L104.15.1 Alarm conditions. The air monitoring system shall transmit a supervisory signal when any of the following levels are detected:

1. Carbon monoxide exceeds 5 ppm.
2. Carbon dioxide exceeds 1,000 ppm.
3. An oxygen level below 19.5 percent or above 23.5 percent.
4. A nitrogen level below 75 percent or above 81 percent.
5. Hydrocarbon (condensed) content exceeds 5 milligrams per cubic meter of air.

INTERNATIONAL CODE COUNCIL®
Copyright © 2019 ICC & NYSDOS. ALL RIGHTS RESERVED. Accessed by Lauren Gualdino (lgualdino@briarcliffmanor.org), (-) Order Number #100880972 on May 08, 2020 07:05 AM (PDT) pursuant to License Agreement with ICC & NYSDOS. No further reproduction, no

100880972

6. The moisture concentration exceeds 24 ppm by volume.

7. The pressure falls below 90 percent of the maintenance pressure specified in Section L104.3.

L104.15.2 Alarm supervision, monitoring and notification. The air monitoring system shall be electrically supervised and monitored by an *approved* supervising station, or where *approved*, shall initiate audible and visual supervisory signals at a constantly attended location.

L104.15.3 Air quality status display. Air quality status shall be visually displayed at the external mobile air connection required by Section L104.14.

SECTION L105
ACCEPTANCE TESTS

L105.1 Acceptance tests. Upon completion of the installation, a *FARS* shall be acceptance tested to verify compliance with equipment manufacturers' instructions and design documents. Oversight of the acceptance tests shall be provided by a *registered design professional.* Acceptance testing shall include all of the following:

1. A pneumatic test in accordance with ASME B31.3 of the complete system at a minimum test pressure of 110 percent of the system design pressure using oil free dry air, nitrogen or argon shall be conducted. Test pressure shall be maintained for not less than 24 hours. During this test, all fittings, joints and system components shall be inspected for leaks. Defects in the system or leaks detected shall be documented and repaired.

2. A cylinder-filling performance test shall be conducted to verify compliance with the required breathing air cylinder refill rate from the exterior mobile air connection and, where provided, a stored air pressure supply system.

3. The air quality monitoring system shall be tested to verify both of the following conditions:

   3.1. Visual indicators required by Section L104.15.1 function properly.

   3.2. Supervisory signals are transmitted as required by Section L104.15.2 for each sensor based on a sensor function test.

4. Connections intended for fire department use shall be confirmed as compatible with the fire department's mobile air unit, SCBA cylinders and, where provided, RIC/UAC connections.

5. Air samples shall be taken from not less than two fill stations and submitted to an *approved* gas analysis laboratory to verify compliance with NFPA 1989. The *FARS* shall not be placed into service until a written report verifying compliance with NFPA 1989 has been provided to the *fire code official*.

SECTION L106
INSPECTION, TESTING AND MAINTENANCE

L106.1 Periodic inspection, testing and maintenance. A *FARS* shall be continuously maintained in an operative condition and shall be inspected not less than annually. Not less than quarterly, an air sample shall be taken from the system and tested to verify compliance with NFPA 1989. The laboratory test results shall be maintained on site and readily available for review by the *fire code official*.

SECTION L107
REFERENCED STANDARDS

ASME	B31.1—2016	Process Piping	L104.2.1, L105.1
CGA	S-1.3—2016	Pressure Relief Device Standards—Part 3 Stationary Storage Containers for Compressed Gases	L104.7
NFPA	1901—16	Standard for Automotive Fire Apparatus	L104.5.1
NFPA	1989—13	Breathing Air Quality for Fire Emergency Services Respiratory Protection	L104.2.2, L105.1, L106.1

INTERNATIONAL CODE COUNCIL®
Copyright © 2019 ICC & NYSDOS. ALL RIGHTS RESERVED. Accessed by Lauren Gualdino (lgualdino@briarcliffmanor.org), (-) Order Number #100880972 on May 08, 2020 07:05 AM (PDT) pursuant to License Agreement with ICC & NYSDOS. No further reproduction, no

100880972

INTERNATIONAL CODE COUNCIL®
Copyright © 2019 ICC & NYSDOS. ALL RIGHTS RESERVED. Accessed by Lauren Gualdino (lgualdino@briarcliffmanor.org), (-) Order Number #100880972 on May 08, 2020 07:05 AM (PDT) pursuant to License Agreement with ICC & NYSDOS. No further reproduction, no

100880972

[NY] APPENDIX M

RESERVED

INTERNATIONAL CODE COUNCIL®
Copyright © 2019 ICC & NYSDOS. ALL RIGHTS RESERVED. Accessed by Lauren Gualdino (lgualdino@briarcliffmanor.org), (-) Order Number #100880972 on May 08, 2020 07:05 AM (PDT) pursuant to License Agreement with ICC & NYSDOS. No further reproduction, no

100880972

INTERNATIONAL CODE COUNCIL®
Copyright © 2019 ICC & NYSDOS. ALL RIGHTS RESERVED. Accessed by Lauren Gualdino (lgualdino@briarcliffmanor.org), (-) Order Number #100880972 on May 08, 2020 07:05 AM (PDT) pursuant to License Agreement with ICC & NYSDOS. No further reproduction, no

100880972

APPENDIX N
INDOOR TRADE SHOWS AND EXHIBITIONS

This appendix is informative and is not part of this code.

SECTION N101
GENERAL

N101.1 Scope. Indoor trade shows and exhibitions with temporary vendor displays or booths within any indoor occupancy classification shall be in accordance with this appendix and all other applicable requirements of this code.

Compliance with this appendix is not required where Section N101.1.1 or N101.1.2 is applicable.

N101.1.1 Nonsprinklered buildings. In a building that is not equipped throughout with an *automatic sprinkler system*, the aggregate exhibit area must be less than 1,500 square feet (139 m^2) of floor area and meet both of the following conditions:

1. The exhibit area does not include any covered or multiple-level exhibits or booths.
2. Not fewer than two remote *exits* or *exit access* doors in compliance with Chapter 10 are provided.

N101.1.2 Sprinklered buildings. In a building that is equipped throughout with an *automatic sprinkler system* with a minimum design density of ordinary hazard Group 1, the aggregate exhibit area must be less than 4,500 square feet (418 m^2) of floor area and meet both of the following conditions:

1. The exhibit area does not include any covered or multiple-level exhibits or booths.
2. Not fewer than two remote *exits* or *exit access* doors in compliance with Chapter 10 are provided.

N101.2 Permit required. An operational permit for trade shows and exhibitions shall be required as set forth in Section 105.6.

N101.3 Application. A permit application for a trade show or exhibition shall be submitted to the *fire code official* prior to the start of the event in a time frame established by the jurisdiction. The application shall include documentation that identifies all of the following:

1. The *means of egress.*
2. The locations and widths of *exits* and *aisles*.
3. The locations of *exit* signs.
4. The total square footage (square meters) of spaces.
5. The location and arrangement of all booths and cooking equipment.
6. The location of all fire protection equipment.
7. The type and location of any heating and electrical equipment, where applicable.
8. The location of any covered or multiple-level booths.
9. *Construction documents* for any covered or multiple-level booths.
10. The storage locations and quantities of any highly combustible goods.
11. The location and type of any vehicle displays, where applicable.

SECTION N102
DEFINITIONS

N102.1 Definitions. For the purpose of this appendix, certain terms are defined as follows:

COOKING. Heating food products to a temperature of 145°F (63°C) or higher by baking, braising, boiling, frying or grilling.

COVERED BOOTH. An exhibit that has an obstruction placed over the exhibit above floor level that resembles a roof, canopy, tent or other obstruction, other than vertical signs or banners.

MULTIPLE-LEVEL BOOTH. An exhibit that has a second level or tier constructed on top of the exhibit or portion of the exhibit that is accessible to the public, or includes a live load above the exhibit area floor level.

SECTION N103
PUBLIC SAFETY FOR EVENTS

N103.1 Fire safety and evacuation plan. A fire safety and evacuation plan shall be provided in accordance with Section 404.2.

Exception: Where the *fire code official* determines that the nature of the exhibition, display or the activities therein does not pose an increased hazard to public safety.

N103.2 Fire watch personnel. Where, in the opinion of the *fire code official*, it is essential for public safety in a trade show or exhibition, either because of the number or persons present or because of the nature of the performance, exhibition, display or activity, the *owner* or *owner's* authorized agent shall provide one or more *fire watch* personnel in accordance with Section 403.12.1.

N103.3 Crowd managers. Where events involve a gathering of more than 1,000 people, trained crowd managers shall be provided in accordance with Section 403.12.3.

INTERNATIONAL CODE COUNCIL®
Copyright © 2019 ICC & NYSDOS. ALL RIGHTS RESERVED. Accessed by Lauren Gualdino (lgualdino@briarcliffmanor.org), (-) Order Number #100880972 on May 08, 2020 07:05 AM (PDT) pursuant to License Agreement with ICC & NYSDOS. No further reproduction, no

100880972

SECTION N104
INTERIOR FINISH AND DECORATIVE MATERIALS

N104.1 General. Interior finish, interior trim, furniture, furnishings and decorative materials, including decorative vegetation, used in exhibition areas shall comply with the requirements of this section and Chapter 8.

N104.2 Interior wall and ceiling finish. The materials used for interior wall and ceiling finish of exhibit booths and displays in exhibition areas shall comply with one of the following:

1. Where the building is not equipped throughout with an *automatic sprinkler system* in accordance with Section 903.3.1.1, the wall and ceiling finish materials are required to be Class A in accordance with Section 803.
2. Where the building is equipped throughout with an *automatic sprinkler system* in accordance with Section 903.3.1.1, the wall and ceiling finish materials are required to be not less than Class B in accordance with Section 803.

SECTION N105
MULTIPLE-LEVEL BOOTHS

N105.1 Construction documents. *Construction documents* for all multiple-level booths shall be stamped by a *registered design professional* and shall be submitted with the permit application to the *fire code official* or the *building code official*, as appropriate.

N105.2 Structural design. Multiple-level booths shall be designed and constructed in accordance with Chapter 16 of the *Building Code of New York State*.

N105.3 Means of egress. Upper levels of multiple-level booths with an *occupant load* greater than 10 persons shall have not fewer than two *exits* or *exit access* that are separated in accordance with Section 1007.1.1.

N105.4 Automatic sprinkler systems. An *approved automatic sprinkler system* in accordance with Section 903.3.1.1 shall be provided in multiple-level booths exceeding 400 square feet (37.2 m^2) in floor area per level.

N105.5 Inspection. Inspection to verify that multiple-level booths are constructed in accordance with the *construction documents* and structural design details required by this section shall be *approved* by the *building code official*.

N105.6 Fire alarm and detection. Each multiple-level booth with a floor area exceeding 120 square feet (11.1 m^2) on any level shall be provided with an approved fire alarm system in accordance with Section 907.2.

SECTION N106
COVERED BOOTHS

N106.1 Automatic sprinkler systems. An *approved automatic sprinkler system* in accordance with Section 903.3.1.1 of this code shall be provided in covered booths exceeding 100 square feet (9.3 m^2) in floor area per level.

N106.2 Fire alarm and detection. Each covered booth with a floor area exceeding 120 square feet (11.1 m^2) on any level shall be provided with an *approved fire alarm system* in accordance with Section 907.2.

SECTION N107
DISPLAY AND STORAGE OF HAZARDOUS AND COMBUSTIBLE MATERIALS

N107.1 Hazardous materials. The display of hazardous materials shall comply with Section 314 and Chapters 50 through 67. The storage of hazardous materials in indoor trade shows and exhibition areas shall be prohibited.

N107.1.1 Display near exit. The display of hazardous materials within 5 feet (1524 mm) of an *exit* shall be prohibited.

N107.2 Storage of combustible materials. Storage of combustible materials shall comply with Section 315.

N107.3 Vehicles. The display of liquid- or gas-fueled vehicles, boats or other motor craft in indoor trade shows and exhibition areas shall comply with Sections 314.4 and N107.3.1 through N107.3.3.

N107.3.1 Batteries in vehicles. Vehicle batteries shall be rendered inoperable. Batteries in liquid- and gas-fueled vehicles shall be disconnected. Batteries in electric vehicles shall be rendered inoperable by the removal of fuses or other *approved* methods but shall not be required to be disconnected.

N107.3.2 Vehicle fuel. Vehicle fuel shall comply with Sections N107.3.2.1 through N107.3.2.4.

N107.3.2.1 Fueling within the structure. Vehicles shall not be fueled or defueled within the structure.

N107.3.2.2 Vehicle fuel tanks. Vehicle fuel tanks shall contain not more than one quarter of the tank capacity or 5 gallons (18.93 L) of fuel, whichever is less.

N107.3.2.3 Vehicle fuel systems. Vehicle fuel systems shall be inspected for leaks prior to the vehicle being brought into the structure.

N107.3.2.4 Vehicle fuel tank openings. Vehicle fuel tank openings shall be locked and sealed to prevent the escape of vapors.

N107.3.3 Obstruction by vehicles. Vehicles shall not be located in such a manner that they obstruct a *means of egress*.

N107.3.4 Gas-powered vehicles. Compressed natural gas (CNG), liquefied petroleum gas (LPG) or hydrogen-powered vehicles present in indoor trade shows and exhibition areas shall comply with sections N107.3.4.1 through N107.3.4.3.

N107.3.4.1 Shutoff valves. Shutoff valves shall be closed and the engine shall be operated until it stops. Valves shall remain closed until the vehicle is removed.

N107.3.4.2 Battery hot lead. The hot lead of the battery shall be disconnected.

INTERNATIONAL CODE COUNCIL®
Copyright © 2019 ICC & NYSDOS. ALL RIGHTS RESERVED. Accessed by Lauren Gualdino (lgualdino@briarcliffmanor.org), (-) Order Number #100880972 on May 08, 2020 07:05 AM (PDT) pursuant to License Agreement with ICC & NYSDOS. No further reproduction, no

100880972

N107.3.4.3 Dual-fuel vehicles equipped to operate on gasoline. Dual-fuel vehicles equipped to operate on gasoline as well as on CNG, LPG or hydrogen shall comply with Section 3104.18.

N107.3.5 Competitions or demonstrations. Competitions or demonstrations using any type of vehicle shall comply with Section 3104.18.5.

N107.4 Fueled equipment other than vehicles. Fueled equipment other than vehicles shall comply with Section 313.

N107.5 Liquid propane gas containers. Liquid propane (LP) gas containers shall comply with Sections N107.5.1 through N107.5.5.

N107.5.1 LP-gas containers exceeding 12 pounds (5 kg) of water capacity. The use of LP-gas containers exceeding 12 pounds (5 kg) of water capacity shall be prohibited.

N107.5.2 Where more than one LP-gas container is present in the same area. Where more than one LP-gas container is present in the same area, the aggregate weight of all containers in the area shall not exceed 12 pounds (5 kg) of water capacity.

N107.5.3 Equipment for LP-gas containers. Equipment for LP-gas containers, including tanks, piping, hoses, fittings, valves, tubing and other related components, shall be *approved* and shall comply with Chapter 61 and with the applicable requirements of the *International Fuel Gas Code*.

N107.5.4 Securing of LP-gas containers. Portable LP-gas containers shall be securely fastened in place to prevent unauthorized movement.

N107.5.5 Spare LP-gas containers. Spare LP-gas containers not connected to an *approved* appliance shall be stored in a location and manner *approved* by the *fire code official*.

N107.6 Cooking and open-flame devices. All cooking equipment and any open-flame devices shall comply with the requirements of Section 308 of this code and with Chapter 5 of the *International Mechanical Code*. Cooking equipment shall be separated from combustible material display or storage by a horizontal distance of not less than 5 feet (1524 mm).

SECTION N108
MEANS OF EGRESS

N108.1 Means of egress from the indoor trade show or exhibition area. *Means of egress* from the indoor trade show or exhibition area shall comply with Chapter 10 and with Sections N108.2 and N108.3.

N108.2 Design of means of egress. The design of *means of egress* shall take into consideration the exhibit layout and the anticipated crowd movement during the event.

N108.3 Aisles and corridors. *Aisles* and *corridors* within the exhibit area shall be kept free of obstructions when the public is present. Storage of any kind in *aisles* or *corridors* within the exhibit area is not permitted.

SECTION N109
REFERENCED STANDARDS

ICC	IBC—18	International Building Code	N105.2
ICC	IFGC—18	International Fuel Gas Code	N107.5.3
ICC	IMC—18	International Mechanical Code	N107.6

INTERNATIONAL CODE COUNCIL®
Copyright © 2019 ICC & NYSDOS. ALL RIGHTS RESERVED. Accessed by Lauren Gualdino (lgualdino@briarcliffmanor.org), (-) Order Number #100880972 on May 08, 2020 07:05 AM (PDT) pursuant to License Agreement with ICC & NYSDOS. No further reproduction, no

100880972

INTERNATIONAL CODE COUNCIL®
Copyright © 2019 ICC & NYSDOS. ALL RIGHTS RESERVED. Accessed by Lauren Gualdino (lgualdino@briarcliffmanor.org), (-) Order Number #100880972 on May 08, 2020 07:05 AM (PDT) pursuant to License Agreement with ICC & NYSDOS. No further reproduction, no

100880972

INDEX

A

24-HOUR BASIS
Defined 202
ABANDONED PREMISES (see VACANT PREMISES)
ABANDONMENT
Flammable and combustible liquid tanks 5704.2.13
ACCEPTANCE TESTING
Fire protection system installations 901.5, 904.4, 907.7
Fire pumps 913.5.1
Flammable and combustible liquid tanks 5704.2.12.1
Single- and multiple-station smoke alarms 907.7.1
Smoke control systems 909.18
ACCESS, FIRE DEPARTMENT
Aviation facilities 2003.4
Construction and demolition sites 3310.1
Doors for 504.2, 3205.4, 3206.7
Equipment to 509
High-piled storage buildings 3206.6
Tire storage 3406
ACCESS ROADS, FIRE APPARATUS 503
Aviation facilities 2003.4
Bridges 503.2.6
Building openings and roofs 504
Defined 202
High-piled storage 3206.6
Lumber yards 2803.6, 2809.3
Obstructions 503.4
Tents and membrane structures 3103.8.1
ACCESSIBLE MEANS OF EGRESS 1009
Defined 202
Standby power 1203.2.2
ACCESSIBLE ROUTE
Defined 202
ACETYLENE (see WELDING AND OTHER HOT WORK)
Gas 3505.4
Generators 3508
ADDRESS NUMBER (see PREMISES IDENTIFICATION)
ADMINISTRATION
Alternative methods and materials 104.3, 501.4
Applicability 102
Application for variance and appeal 103.3
Approval 105.2.3, 401.2, 603.1.2, 2307.2, 2308.2, 3103.2, 5706.4.7.1
Approved materials and equipment 104.1
General 101
Inspections 105.3, 113.3
Maintenance 107
Permits 105
Unsafe structures and equipment 108
Violations 105.7, 113.6
AEROSOL CONTAINER
Defined 202
Glass 5101.4
Plastic 5101.4, 5104.1.1
AEROSOL FIRE-EXTINGUISHING SYSTEMS 904.14
AEROSOL PRODUCT WAREHOUSE 5104.4
Defined 202
AEROSOLS . . . . . Chapter 51
Classification levels 5103.1
Classification of products . . . . . Table 5103.1
Defined 202
Inside storage 5104
Manufacturing facilities 5107
Nonsegregated storage . . . . . 5104.3.1, Table 5104.3.1
Outside storage 5105
Retail display 5106
Segregated storage . . . . . 5104.3.2, Table 5104.3.2
AGENCY
Defined 202
AGENT
Defined 202
AGRICULTURAL BUILDING (Occupancy Group U)
Defined 202
Occupant load . . . . . Table 1004.5
AGRICULTURAL PRODUCTS 3703.4, 6001.1
AGRO-INDUSTRIAL
Defined 202
By-products 2801.1
Facilities 2804.1, 2808.1
AIR-INFLATED STRUCTURES (see TENTS AND OTHER MEMBRANE STRUCTURES)
Defined 202
AIR-SUPPORTED STRUCTURES (see TENTS AND OTHER MEMBRANE STRUCTURES) . . . . . Chapter 31
Defined 202

INTERNATIONAL CODE COUNCIL®
Copyright © 2019 ICC & NYSDOS. ALL RIGHTS RESERVED. Accessed by Lauren Gualdino (lgualdino@briarcliffmanor.org), (-) Order Number #100880972 on May 08, 2020 07:05 AM (PDT) pursuant to License Agreement with ICC & NYSDOS. No further reproduction, no

100880972

AIRCRAFT
Defueling 2006.5, 2006.18
Fueling 2006
Hangars 914.8.3
Maintenance 2004
AIRCRAFT MOTOR-VEHICLE FUEL-DISPENSING FACILITY 2006.1, 2301.1
Defined 202
AIRCRAFT OPERATION AREA (AOA)
Defined 202
Housekeeping in 2003.3
Smoking prohibited 2003.2
AIRCRAFT-RELATED OCCUPANCIES, FIRE PROTECTION FOR 914.8
AIRPORT
Defined 202
AIRPORT TRAFFIC CONTROL TOWERS . . . 907.2.21, 914.8.1, 914.8.2
AISLE ACCESSWAY 1018.4
Defined 202
AISLE(S) 308.1.7.1, 1018
Assembly 1029
Cross 1029.17.2
Defined 202
Fixed seating 1004.6
Hazardous materials 5003.11.3.9
High-piled combustible storage 3205.4, 3206.10
Obstruction of 1031.3, 1031.5
Tents 3103.12.5
Travel distance 1029.7
Walking surface 1003.4
Width 1018.3, 1029.9.1, 1104.22, 3206.10.1, 5904.1.2
ALARM 903.4.2, 2405.9.3, 2703.13.2.1, 6004.2.2.10.1
Activations 401.3.2
Audible 907.5.2.1
Coded signals 403.8.2.3
Signals 903.4.1, 2703.12.3
Testing 901.5, 901.6, 904.4.2
Visible 907.5.2.3
Warning signs 904.3.4
ALARM NOTIFICATION APPLIANCE 907.5.2
Defined 202
ALARM, NUISANCE
Defined 202
ALARM SIGNAL
Defined 202
ALARM, SMOKE
Defined 202
ALARM VERIFICATION FEATURE
Defined 202
ALCOHOL-BASED HAND RUB 5001.1, 5705.5
Defined 202
ALCOHOL-BLENDED FUELS
Defined 202
Compatibility of components 2306.8.2
Dispensing 2306.8
Listed equipment 2306.8.1
ALTERATION
Defined 202
ALTERNATING TREAD DEVICE 1011.14
Defined 202
ALTERNATIVE ACTIVITY
Defined 4002.1
ALTERNATIVE AUTOMATIC FIRE-EXTINGUISHING SYSTEMS 904
ALTERNATIVE MATERIALS AND METHODS 104.9
AMBULATORY CARE FACILITY (Occupancy Group B)
Automatic sprinklers 903.2.2
Defined 202
Fire alarm systems 907.2.2.1
AMMONIA
Diffusion systems 605.12.6
Refrigerant 605.12.3
AMMONIUM NITRATE 5601.1.5
Defined 202
AMMUNITION, SMALL ARMS 5606
Defined 202
Storage and handling 5601.2.1, 5604
AMUSEMENT BUILDING, SPECIAL (see SPECIAL AMUSEMENT BUILDING)
AMUSEMENT PARK STRUCTURES (Assembly, Group A-5)
Defined 202
ANNUNCIATOR
Defined 202
APPEALS, BOARD OF 109
APPENDICES 101.2.1
APPLIANCES 605.7
Chimneys 603.6
Commercial kitchen hoods 607
Cooking 5705.3.3
Fuel-fired 603
Gas piping connection 607.4

INTERNATIONAL CODE COUNCIL®
Copyright © 2019 ICC & NYSDOS. ALL RIGHTS RESERVED. Accessed by Lauren Gualdino (lgualdino@briarcliffmanor.org), (-) Order Number #100880972 on May 08, 2020 07:05 AM (PDT) pursuant to License Agreement with ICC & NYSDOS. No further reproduction, no

100880972

Heat-producing 2301.6
Heating 603.5, 604.10, 5705.3.3
Lighting 5705.3.3
Unsafe 603.7
APPLICABILITY (of the code) 102
APPROVED
Defined 202
ARC WELDING
(see WELDING AND OTHER HOT WORK)
AREA, BUILDING
Defined 202
AREA OF REFUGE 1009.6
Defined 202
ARRAY (storage) 3205.7, 3207.4
Defined 202
ARRAY, CLOSED (storage) 3205.7, 3207.4
Defined 202
ARTIFICIAL BARRICADE (see BARRICADE)
ASH TRAYS 310.6
ASHES, HOT 305.2
ASPHALT (TAR) KETTLES 303, 3317.2
ASPHYXIANT GASES 5004.7.1, 5307.1
ASSEMBLY OCCUPANCIES (Group A)
Aisles 1029
Announcements 403.2.2
Automatic sprinklers 903.2
Candles 308
Cellulose nitrate film 306
Decorative materials 806, 807
Defined (Occupancy classification) 202
Doors 1010
Egress . . . . . Chapter 10
Emergency evacuation drill 405
Employee training 406
Evacuation plans 404
Fire alarm systems 907.2.1
Fire safety plans 404
Furnishings 807.5.1Interior finish803
LP-gas installations . . . . . Chapter 61
Motion picture projection rooms 306.1
Multiple fire areas 903.2.1.7
Obstruction of exits 1031.3
Occupant load calculation 1004
On roofs 903.2.1.6
Open-flame devices 308.3
Panic hardware 1010.1.10
Portable fire extinguishers 906
Posting maximum occupant load 1004.3
Prohibit smoking 310
Pyroxylin-coated fabric 807.5.1.4
Pyroxylin plastic motion picture film storage . . . 306.1
Seating 1029
Seating plan 403.2.1
Standpipe systems 905
Storage, flammable liquids 5704.3.4.2
Tents . . . . . Chapter 31
Vehicles in 3107.15.4
ASSISTED RESCUE AREAS, EXTERIOR 1009.7
ATRIUM
Defined 202
Sprinklers 914.4.1
ATRIUM FIRE PROTECTION 907.2.14, 914.4
ATTIC
Defined 202
ATTIC STORAGE 315.3.4, 903.3.1.2.3
AUDIBLE ALARM NOTIFICATION APPLIANCE 907.5.2.1
Defined 202
AUTOMATED RACK STORAGE
Defined 202
Emergency shutdown 3209.4
AUTOMATIC
Defined 202
AUTOMATIC FIRE-EXTINGUISHING SYSTEM
(see FIRE-EXTINGUISHING SYSTEMS, ALTERNATIVE)
AUTOMATIC SMOKE DETECTION SYSTEM
Defined 202
AUTOMATIC SPRINKLER SYSTEM 2108.2, 2703.10, 2804.3, 3206.4, 3209.2, 3314, 6304.1.2
Aerosol product warehouses 5104.4.1
Alarms 903.4.2, 2703.10.5
Attics 903.3.1.2.3
Basements 903.2.11.1.3
Chutes 1103.4.9.3
Defined 202
Dip-tank operations 2405.4
Gas rooms 5003.8.4.1
Group A 903.2.1, 1103.5.1
Group B 903.2.2
Group E 903.2.3
Group F-1 . . . . . 903.2.4
Group H 903.2.5
Group I 903.2.6, 1103.5.2, 1103.5.3
Group M 903.2.7
Group R 903.2.8
Group S-1 . . . . . 903.2.9
Group S-2 . . . . . 903.2.10

INTERNATIONAL CODE COUNCIL®
Copyright © 2019 ICC & NYSDOS. ALL RIGHTS RESERVED. Accessed by Lauren Gualdino (lgualdino@briarcliffmanor.org), (-) Order Number #100880972 on May 08, 2020 07:05 AM (PDT) pursuant to License Agreement with ICC & NYSDOS. No further reproduction, no

100880972

Hazardous exhaust ducts 903.2.11.4
High-piled storage 903.2.7.1
Hose threads 903.3.6
Installation requirements 903.3
Kitchen exhaust hood and ducts systems 903.2.11.5
Limited area 903.3.8
Monitoring 903.4
NFPA 13 sprinkler systems 903.3.1.1
NFPA 13D sprinkler systems 903.3.1.3
NFPA 13R sprinkler systems 903.3.1.2
Open-ended corridors 903.3.1.2.2
Pyroxylin plastics 903.2.5.3, 1103.5.4
Repair garages 903.2.9.1
Riser rooms 901.4.6
Rubbish and linen chutes 903.2.11.2
Secondary water supply 914.3.2
Spray rooms 2404.4
Water supplies 903.3.5
Windowless stories 903.2.11.1
Woodworking operations 903.2.4.1
Zones 907.6.4

AUTOMATIC SPRINKLERS
Defined 202
Early Suppression Fast Response (ESFR) . . . . . 910.2, Table 3206.2, Table 3208.3, Table 5104.3.2.2, 5104.4.3
Obstructions to discharge 315.3.1, 903.3.3
Quick response (QR) . . . . . 903.3.2, Table 5704.3.6.3(5)
Residential 903.3.2

AUTOMATIC WATER MIST SYSTEM 904.11
Defined 202

AUTOMOBILE UNDERCOATING (see SPRAY FINISHING)

AUTOMOTIVE MOTOR FUEL-DISPENSING FACILITY . . . . . Chapter 23
Defined 202

AVERAGE AMBIENT SOUND LEVEL . . . 907.5.2.1.1
Defined 202

AVIATION FACILITIES . . . . . Chapter 20
(see also AIRCRAFT-RELATED OCCUPANCIES, FIRE PROTECTION FOR)
Cleaning parts 2004.3
Combustible storage 2003.6
Dispensing hoses and nozzles 2006.3.3
Dispensing of flammable and combustible liquids 2003.5
Fire protection 914.8
Fueling and defueling 2006
Portable fire extinguishers 2005
Radar equipment 2006.21

AWNING
Defined 202

B

BACKFLOW PREVENTION 903.3.5, 912.6
BALCONIES 308.1.4, 903.3.1.2.1, 1021

BARRICADE
Artificial defined (for explosives) 202
Defined (for explosives) 202
Fire apparatus access road 503.5, 503.5.1
Natural defined (for explosives) 202
Placement at fire scene 104.11.1

BARRICADED (explosives)
Defined 202

BASEMENT 603.3.2.7, 903.2.11.1.3, 905.3.1, 1006.2, 1030.1, 2311.4.3, 2903.1, 3003.1, 5704.3.5.1, 5705.3.7.2, 5705.4.6, 5706.4.4.1, 5904.1.3, 6103.2.1.1, 6109.7, 6204.1.8, 6304.1.5, 6604.1.5, 6704.1.5
Defined 202

BATTERY CHARGING (see POWERED INDUSTRIAL TRUCKS)

BATTERY SYSTEM, STATIONARY LEAD-ACID
Defined 202

BATTERY SYSTEM, STATIONARY STORAGE 1206.2
Defined 202
Room design 1206.2.8
Signs 1205.2.8.6
Ventilation 1205.2.11.3

BATTERY TYPES—Defined
Lithium metal polymer 202
Lithium-ion 202
Nickel cadmium 202
Nonrecombinant 202
Recombinant 202
Stationary storage 202
Valve-regulated lead acid 202
Vented (flooded) lead acid 202

BIN BOX 3208.1
Defined 202

BIOFUEL, SOLID (see SOLID BIOFUEL)

BIOMASS
Defined 202

BIOMASS FEEDSTOCK, SOLID (see SOLID BIOMASS FEEDSTOCK)

INTERNATIONAL CODE COUNCIL®
Copyright © 2019 ICC & NYSDOS. ALL RIGHTS RESERVED. Accessed by Lauren Gualdino (lgualdino@briarcliffmanor.org), (-) Order Number #100880972 on May 08, 2020 07:05 AM (PDT) pursuant to License Agreement with ICC & NYSDOS. No further reproduction, no

100880972

BLAST AREA
Defined 202
BLAST SITE
Defined 202
BLASTER
Defined 202
BLASTING AGENT (see also EXPLOSIVES AND FIREWORKS)
Defined 202
BLEACHERS 1029.1.1
Defined 202
Occupant load 1004.4
BOARDING HOUSE (Occupancy Group R)
Defined 202
BOILING POINT
Defined 202
BOND
For explosives 5601.2.4.1
For fireworks display 5601.2.4.2
BONDING AND GROUNDING 2104.2.4, 2106.3.4
Aircraft fueling 2006.3.7.1, 2006.5.2
CNG motor fuel-dispensing facilities 2308.8.1.2.4
Cryogenic fluids 5503.6.2
Organic coating 2904.3
Piping, valves and fittings 5706.4.7.6
Powdered coating 2406.6.4
Roll-coating operations 2405.11
Underground tanks 5706.6.1.8
Vessels 5705.3.2
BONFIRES 307.4.1
Defined 202
Permit 307.2
BREAKAWAY PROTECTION (see EMERGENCY BREAKAWAY DEVICES)
BREAKOUT 1010.1.4
Defined 202
BREATHING APPARATUS 2603.3.2
BRIDGES (see ACCESS ROADS, FIRE APPARATUS)
BRITISH THERMAL UNIT (BTU)
Defined 202
BUILDING
Defined 202
Vacant (see Vacant premises)
BUILDING INFORMATION CARD . . . . . 508.1.6(13)
BUILDING OFFICIAL 403.11.1.4, 510.1, 3105.2, 3105.5
Defined 202
BUILDING SERVICES AND SYSTEMS . . . . Chapter 6
BULK OXYGEN SYSTEM . . . . . Chapter 63
Defined 202
BULK PLANT OR TERMINAL 5706.4
Defined 202
BULK TRANSFER 5706.5
Defined 202
BULLET RESISTANT
Defined 202
BURNING (see OPEN BURNING)
BUTANE (see LIQUEFIED PETROLEUM GAS)
BUTYLENE (see LIQUEFIED PETROLEUM GAS)

C

CABINETS
Fire equipment 905.7, 906.8, 2005.7.1
Flammable liquid 5704.3.2
Hazardous material 5003.8.7
Ozone 6005.3.1
CABINETS, GAS 2703.3.5, 2703.10.2, 2703.13.1.3, 5003.8.6, 5306.2.3, 6004.1.2, 6004.2.2.3, 6004.3.4
CANDLES 308, 806.3
CANOPY
Defined 202
CANOPY, TEMPORARY STAGE (see TEMPORARY STAGE CANOPY)
CAPACITOR ENERGY STORAGE SYSTEM . . 1206.3
Defined 202
Location 1206.3.2
Outdoor installations 1206.3.2.6
CAPTIONS, EMERGENCY VOICE/ALARM COMMUNICATION SYSTEM 907.5.2.2.4
CARBON DIOXIDE ENRICHMENT SYSTEMS 5307.4
CARBON DIOXIDE EXTINGUISHING SYSTEM
Commercial cooking systems 904.12.3
Defined 202
Emergency alarms for 5307.5.2
CARBON DIOXIDE SYSTEMS USED IN BEVERAGE DISPENSING 5307.3
CARBON MONOXIDE ALARMS AND DETECTION SYSTEMS 915, 1103.9
CARE, 24-HOUR (Occupancy Group I)
Defined 202
CARE FACILITY 903.2.8.4
CARE SUITE
Defined 202
CARNIVALS AND FAIRS
Place of assembly tent 3103.3

INTERNATIONAL CODE COUNCIL®
Copyright © 2019 ICC & NYSDOS. ALL RIGHTS RESERVED. Accessed by Lauren Gualdino (lgualdino@briarcliffmanor.org), (-) Order Number #100880972 on May 08, 2020 07:05 AM (PDT) pursuant to License Agreement with ICC & NYSDOS. No further reproduction, no

100880972

CARTON
Combustible 5106.2.4
Defined 202
CEILING LIMIT
Defined 202
CELLULOSE NITRATE MOTION PICTURE FILM 306
CELLULOSE NITRATE PLASTICS [see PYROXYLIN (CELLULOSE NITRATE) PLASTICS]
CERTIFICATION OF SERVICE PERSONNEL
Automatic fire-extinguishing systems 904.1.1
Portable fire extinguishers 906.2.1
CHANGE OF OCCUPANCY 102.4, 105.5.2
Defined 202
CHANGE OF USE 102.4, 105.5.2
CHEMICAL
Defined 202
CHEMICAL NAME
Defined 202
CHIMNEY 603.2, 603.6
Defined 202
Factory-built 603.6.4
Masonry 603.6.1
Metal 603.6.2
CHRISTMAS TREE (see DECORATIVE VEGETATION)
CHUTES, RUBBISH AND LINEN 903.2.11.2
CLASSIFICATION
Aerosols 5103
Commodity 3203
Dry cleaning plants and systems 2103.2
Dry cleaning solvent or liquid 202, 2103.1
Flammable and combustible liquids 202
Floor finish materials 804.3.1
Hazardous materials 5001.2
Occupancy 202
Refrigerant 605.3
CLEAN AGENT
Defined 202
CLEANING
Cooking equipment 607.3.3
Flammable liquids used for 2004.3
Powder coating 2406.5.1
Piping 3306.2
Repair garages 2311.2.1
Tanks 5706.7.2
Tire rebuilding buffing areas 3403.3
CLEARANCE
Storage to ceiling or sprinklers 315.3.1, 903.3.3, 5704.3.5.3
CLINIC, OUTPATIENT (Occupancy Group B)
Defined 202
CLOSED CONTAINER 5505.5.2
Defined 202
CLOSED SYSTEM 5705.3.7.6
Defined 202
CNG MOTOR FUEL-DISPENSING FACILITIES 2308
COLD DECK 2806.2
Defined 202
COLLEGE AND UNIVERSITY BUILDINGS, GROUP R-2 . . . . . 403.10.2.1, Table 405.2, 907.2.9.3
COMBUSTIBLE DUST
Defined 202
COMBUSTIBLE DUST-PRODUCING OPERATIONS . . . . . Chapter 22
COMBUSTIBLE FIBERS . . . . . Chapter 37
Defined 202
General precautions 3703
Portable fire extinguishers 3703.6
COMBUSTIBLE GAS DETECTOR 3510.2
Defined 202
COMBUSTIBLE LIQUID . . . . . 2306, 3107.4, 3107.14, Chapter 57
Classified locations 5703.1.2
Defined 202
Dispensing, use, mixing and handling 5705.3, 5705.3.8
Heated 5701.5
Indoor storage 5704.3.3
Mixtures 5701.5
Outdoor storage 5704.4
Portable fire extinguisher 5706.2.7
Special operations 5706
Tank storage 5704.2
Waste control 5706.3.2
Wholesale and resale use 5704.3.6
COMBUSTIBLE MATERIAL STORAGE 315, 2003.6
COMBUSTIBLE WASTE MATERIAL 304, 2505
At construction sites 3304.2
Containers 304.3
Storage 304.2
COMMERCIAL COOKING APPLIANCES
Defined 202
COMMERCIAL KITCHEN COOKING OIL STORAGE TANK SYSTEMS 608
COMMERCIAL KITCHEN HOODS 607

INTERNATIONAL CODE COUNCIL®
Copyright © 2019 ICC & NYSDOS. ALL RIGHTS RESERVED. Accessed by Lauren Gualdino (lgualdino@briarcliffmanor.org), (-) Order Number #100880972 on May 08, 2020 07:05 AM (PDT) pursuant to License Agreement with ICC & NYSDOS. No further reproduction, no

100880972

COMMERCIAL MOTOR VEHICLE 903.2.9, 903.2.9.1, 903.2.10.1
Defined 202
COMMODITY
Classifications 3203
Defined 202
COMMON PATH OF EGRESS TRAVEL . . . . . 1006.2.1, 1018.4, 1029.8, Table 1104.18
Defined 202
COMMON USE AREAS 907.5.2.3.1
Defined 202
COMPATIBILITY (Hazardous materials) (see INCOMPATIBLE MATERIALS)
COMPRESSED GAS . . . . . Chapter 53
Containers, cylinders, tanks 5303.1
Defined 202
Medical gas 5306
Not otherwise regulated 5307
Requirements 5303
Storage 5304
Use and handling 5305
Wiring 5303.8
COMPRESSED GAS CONTAINER
Defined 202
COMPRESSED GAS SYSTEM
Defined 202
Motor fuel-dispensing facilities 2308
COMPRESSED NATURAL GAS (CNG) 5301.1
CONFLICTING PROVISIONS 102.9.1
CONGREGATE CARE FACILITY (Occupancy Group I)
Defined 202
CONGREGATE LIVING FACILITY (Occupancy Group R)
Defined 202
CONSTANTLY ATTENDED LOCATION 903.4.1, 907.2.1.1, 907.2.6, 907.2.7.1, 907.2.11.1, 907.2.12, 907.2.12, 907.2.17.2, 907.3, 907.3.1, 907.5, 907.5.1, 913.4, 5704.2.8.11
Defined 202
CONSTRUCTION AND DEMOLITION FIRE SAFETY . . . . . Chapter 33
CONSTRUCTION DOCUMENTS 106.2
Defined 202
CONSTRUCTION EQUIPMENT, MOTORIZED (see MOTORIZED CONSTRUCTION EQUIPMENT)
CONTAINER
Defined 202
CONTAINER AND PORTABLE TANK STORAGE . . . . . 5704.3, Table 5704.3.6.3(4), 5704.4, Table 5704.4.2
CONTAINMENT PALLETS
Flammable and combustible liquids 5704.4.3
Hazardous materials 5004.2.3
CONTAINMENT SYSTEM
Defined 202
CONTAINMENT VESSEL
Defined 202
CONTINUOUS GAS DETECTION SYSTEM (see GAS DETECTION SYSTEM, CONTINUOUS)
CONTROL AREAS 5003.8.3
Defined 202
COOKING
Appliances, commercial, defined 202
Commercial, automatic sprinkler systems 903.2.11.5
Commercial, fire-extinguishing systems 904.12
Commercial, hoods 607
Commercial, oil storage tank systems 608
Commercial, portable fire extinguishers 906.4
Devices, open-flame 308.1.4
Domestic 904.13
Group I-2 . . . . . 904.13
On balconies 308.1.4
CORRIDOR 1020, 1104.17
Defined 202
Open-ended (see OPEN-ENDED CORRIDOR)
CORROSION PROTECTION
Cryogenic fluid containers 5503.1.3.2
Cryogenic fluid piping 5505.1.2.5
General 5703.6.5
Tanks and piping 5704.2.7.9, 5706.7.1
CORROSIVE
Defined 202
CORROSIVE MATERIALS . . . . . Chapter 54
Indoor storage 5404.1
Indoor use 5405.1
Outdoor storage 5404.2
Outdoor use 5405.2
Requirements 5403
COTTON, BALED . . . . . Table 5003.1.1(1), 3705
Defined 202
COTTON, DENSELY PACKED BALED . . . . . Table 5003.1.1(1)
Defined 202
COTTON, SEED 3703.4
Defined 202

INTERNATIONAL CODE COUNCIL®
Copyright © 2019 ICC & NYSDOS. ALL RIGHTS RESERVED. Accessed by Lauren Gualdino (lgualdino@briarcliffmanor.org), (-) Order Number #100880972 on May 08, 2020 07:05 AM (PDT) pursuant to License Agreement with ICC & NYSDOS. No further reproduction, no

100880972

COURT
Defined 202
COURT, EGRESS 1028.4
Defined 202
COVERED AND OPEN MALL BUILDINGS
Automatic sprinkler system 914.2.1
Defined 202
Emergency planning 403.11.1
Emergency voice/alarm communication system 907.2.19, 914.2.3
Standpipe system 905.3.3, 914.2.2
Tenant identification 403.11.1.5
Unoccupied tenant spaces 311.6, 403.11.1.6
CRANKCASE OIL (see WASTE OIL)
CRITICAL CIRCUIT 1203.3
Defined 202
CROP-RIPENING AND COLORING PROCESSES (see FRUIT AND CROP RIPENING)
CROWD MANAGERS 403.12.3, 3106.4.3, 3107.17.2
CRYOGENIC CONTAINER
Defined 202
Handling 5505.5
Marking 5503.4
Security 5503.5
CRYOGENIC FLUIDS . . . . . Chapter 55
Containers 5503.1
Defined 202
Filling 5505.4
Flammable 5806
Indoor storage 5504.2
Indoor use 5505.2
Outdoor storage 5504.3
Outdoor use 5505.3
Requirements 5503
Underground storage tanks 5806.4.5
CRYOGENIC VESSEL
Defined 202
CUSTODIAL CARE (Occupancy Group I)
Defined 202
CUTTING AND WELDING (see WELDING AND OTHER HOT WORK)
CYLINDER
Defined 202

D

DAMPER
Defined 202
DANGER, IMMINENT 109.1
DAY BOX (Magazine, Type 3) 202
Defined 202
DEAD END 1020.4
DECORATIONS 807
Exit obstruction 1031.6
DECORATIVE MATERIALS 807
Defined 202
DECORATIVE VEGETATION
Artificial 807.4
Natural 806
DEFLAGRATION
Defined 202
DEFUELING
Aircraft 2006.5
Hydrogen fuel tanks 2309.6
DELAYED EGRESS LOCKS . . 1010.1.9.8.1, 1031.2.1
DELUGE SYSTEM 903.4, 2805.2
Defined 202
DEMOLITION OF BUILDINGS FIRE SAFETY . . . . . Chapter 33
DESIGN PRESSURE
Defined 202
DETACHED BUILDING
Defined 202
Group H occupancies 5003.8.2
Storage . . . . . 6204.1.1, 6304.1.1, Table 6204.1.2
DETEARING
Defined 202
DETECTOR, HEAT
Defined 202
DETONATING CORD
Defined 202
DETONATION
Defined 202
DETONATOR
Defined 202
DETOXIFICATION FACILITY (Group I-2)
Defined 202
DIP TANK 2405
Defined 202
DIPPING OPERATIONS 2405
DISCHARGE, EXIT (see EXIT DISCHARGE)
DISCHARGE OF HAZARDOUS MATERIAL (see RELEASE OF HAZARDOUS MATERIAL)
DISCHARGE SITE
Defined 202
DISPENSING
Aircraft fueling 2006
Defined 202
Fire extinguishers 2305.5

INTERNATIONAL CODE COUNCIL®
Copyright © 2019 ICC & NYSDOS. ALL RIGHTS RESERVED. Accessed by Lauren Gualdino (lgualdino@briarcliffmanor.org), (-) Order Number #100880972 on May 08, 2020 07:05 AM (PDT) pursuant to License Agreement with ICC & NYSDOS. No further reproduction, no

100880972

Location 2303.1
Motor fuel-dispensing operations 2304
Requirements 2305, 5005
DISPENSING DEVICE, OVERHEAD-TYPE
Defined 202
DISPLAY SITE (Fireworks)
Defined 202
DISPLAYS
Aerosol products 5106
Cellulose nitrate (pyroxylin) plastic 314.3, 6503.1
Fireworks 5608
Group M 5003.11
Indoor 314
Motor vehicles 314.4, 3107.15
Retail 5001.4, 5106, 5601.2.2
Storage 5003.11.3
DOOR, BALANCED 1010.1.10.2
Defined 202
DOOR, DUTCH
Defined 202
DOOR, LOW ENGERY POWER-OPERATED 1010.1.4.2
Defined 202
DOOR, POWER-ASSISTED 1010.1.4.2
Defined 202
DOOR, POWER-OPERATED 1010.1.4.2, 1010.1.4.3
Defined 202
DOORWAY, EXIT ACCESS 1006
Defined 202
DORMITORIES (see OCCUPANCY CLASSIFICATION, Residential Group R and COLLEGE AND UNIVERSITY BUILDINGS, Group R-2)
DRAFT CURTAIN
Defined 202
Installation 1019.3, 1103.4.5, 1103.4.6, 1103.4.8, 5106.3.2
DRAFTSTOP
Defined 202
Maintenance 707.1
DRAINAGE CONTROL 2903.10, 2905.3, 5004.2.2.6, 5705.3.8.1, 5706.2.6, 5706.4.9
DRAINS
Dip-tank bottom 2405.3.2
Exhaust duct sprinkler system 2703.10.4.4.3
HPM liquids 2705.2.3.3
Magazines 5604.6.1
Outdoor cryogenic fluid storage containers 5504.3.1.1.5
Portable containers 5504.3.1.2.3
DRAPERIES 807.2, 1031.6
DRILLING, WELL 5706.3
DRY-CHEMICAL EXTINGUISHING AGENT
Defined 202
DRY CLEANING . . . . . Chapter 21
Classifications 2103.1
Defined 202
Fire protection 2108
Requirements, general 2104
Requirements, operating 2105
Solvent or liquid classifications 202
Spotting and pretreating 2106
Systems 2107
DRY CLEANING PLANT
Defined 202
DRY CLEANING ROOM
Defined 202
DRY CLEANING SYSTEM
Defined 202
DRYING APPARATUS 2404.6.1.2
DRYING OVENS (see INDUSTRIAL OVENS)
DRYING ROOMS 914.10
DUCT SMOKE DETECTORS 907.3.1
DUMPSTERS 304.3
DUST COLLECTION 3703.5, 5906.5.3
DUST EXPLOSION HAZARDS . . . . Chapter 22, 2803
Explosion venting 2803.2.1
DWELLING
Defined 202
DWELLING UNIT
Defined 202

E

EARLY SUPPRESSION FAST-RESPONSE SPRINKLER (ESFR) (see AUTOMATIC SPRINKLERS)
EGRESS (see MEANS OF EGRESS)
ELECTRICAL EQUIPMENT 604
Aviation facilities 2006.14
Dust-producing machines 5906.5.5
Signs 604.3.1, 1206.2.8.6
Workstations in HPM facilities 2703.7.2
ELECTROSTATIC APPARATUS 2407
ELECTROSTATIC FLUIDIZED BED
Defined 202
ELEVATOR GROUP
Defined 202

INTERNATIONAL CODE COUNCIL®
Copyright © 2019 ICC & NYSDOS. ALL RIGHTS RESERVED. Accessed by Lauren Gualdino (lgualdino@briarcliffmanor.org), (-) Order Number #100880972 on May 08, 2020 07:05 AM (PDT) pursuant to License Agreement with ICC & NYSDOS. No further reproduction, no

100880972

Emergency voice/alarm communication system in 907.5.2.2
ELEVATOR HOISTWAYS 704.1, 1103.4
Pressurization 909.21
Water protection 606.6
ELEVATOR KEYS, FIRE SERVICE (see KEYS, FIRE SERVICE ELEVATOR)
ELEVATOR KEYS, NONSTANDARDIZED FIRE SERVICE
Key boxes for 506.1.2
ELEVATOR RECALL/ EMERGENCY OPERATION 606
EMERGENCY ALARM SYSTEM 908, 5004.9, 5005.4.4
Defined 202
EMERGENCY BREAKAWAY DEVICES 2306.7.5.1, 2307.6.3
EMERGENCY CONTROL STATION 2703.1
Defined 202
EMERGENCY ESCAPE AND RESCUE OPENING 1030
Defined 202
EMERGENCY EVACUATION DRILL 405
Defined 202
Frequency . . . . . 405.2, Table 405.2
EMERGENCY LIGHTING EQUIPMENT
Inspection and testing 1031.10
EMERGENCY PLANNING AND PREPAREDNESS . . . . . Chapter 4
EMERGENCY POWER SYSTEMS 1203
Defined 202
EMERGENCY RELIEF VENTING 2306.6.2.5, 5704.2.7.4
EMERGENCY REPAIRS 113.7
EMERGENCY RESPONDER RADIO COVERAGE 510
EMERGENCY SHUTOFF VALVE 5003.2.2.1, 5503.4.6, 5505.3.2, 5803.1.3, 6303.1.2, 6403.1.1
Defined 202
EMERGENCY SHUTOFF VALVE, AUTOMATIC 2305.2.4, 2306.7.4, 5003.2.9.1, 5505.3.2, 5803.1.3, 5803.1.3.2, 6303.1.2, 6303.1.2.2, 6403.1.1, 6403.1.1.1, 6403.1.1.2
Defined 202
EMERGENCY SHUTOFF VALVE, MANUAL 2309.5.2, 2309.5.2.1, 5505.3.2, 5803.1.3, 5803.1.3.2, 6303.1.2, 6303.1.2.2, 6403.1.1, 6403.1.1.2
Defined 202
EMERGENCY VEHICLE ACCESS 511
EMERGENCY VENTING FOR TANKS 608.5, 2306.5, 5704.2.7.4, 5704.2.9.6.1.1, 5704.2.9.6.1.2, 5704.2.9.6.3, 5704.2.9.7.2, 5706.2.4.2
EMERGENCY VOICE/ALARM COMMUNICATIONS 907.5.2.2
Atriums 907.2.13
Captions 907.5.2.2.4
Covered mall buildings 907.2.19
Deep underground buildings 907.2.18
Defined 202
Group A 907.2.1.1
High-rise building 907.2.12
Special amusement buildings 907.2.11.3
EMPLOYEE TRAINING 406
EMPLOYEE WORK AREA
Defined 202
ENERGY SYSTEMS . . . . . Chapter 12
Electrical energy storage systems 1206
Emergency and standby power systems 1203
Solar and photovoltaic systems 1204
Stationary fuel cell power systems 1205
EQUIPMENT, FUELED 313
EQUIPMENT PLATFORM
Defined 202
Guards required 1015.2
ESCALATOR OPENINGS (see FLOOR OPENINGS AND SHAFTS)
ESCAPE OPENINGS 1030
ESFR SPRINKLERS (see AUTOMATIC SPRINKLERS)
ETHYLENE
Gas 2503
Generators 2506
EVACUATION 2603.3.4, 2603.3.5
EVACUATION DIAGRAMS 403.10.1.1, 403.10.2.3
EVACUATION DRILLS 405
Frequency . . . . . 405.2, Table 405.2
Notification 405.6
Recall and reentry 405.9
EVACUATION PLANS 404
EXCESS FLOW CONTROL
Defined 202
EXCESS FLOW VALVE
Defined 202
EXHAUSTED ENCLOSURE 5003.8.5
Defined 202
EXHIBIT GALLERY
Occupancy load . . . . . Table 1004.1.2
EXHIBITION HALLS (Occupancy Group A-3) . . . 202

INTERNATIONAL CODE COUNCIL®
Copyright © 2019 ICC & NYSDOS. ALL RIGHTS RESERVED. Accessed by Lauren Gualdino (lgualdino@briarcliffmanor.org), (-) Order Number #100880972 on May 08, 2020 07:05 AM (PDT) pursuant to License Agreement with ICC & NYSDOS. No further reproduction, no

100880972

EXISTING
Defined 202
EXISTING BUILDINGS . . . . . Chapter 11
Group I-2 1105
Outdoor occupancies 1106
EXIT 1022
Defined 202
Enclosure 1023
Horizontal 1026
Number required 1006
Passageways 1024
EXIT, HORIZONTAL 1026
Defined 202
EXIT ACCESS 1016
Defined 202
Doorway 202
Ramp 202
Stairway 202
EXIT DISCHARGE 1028
Defined 202
EXIT DISCHARGE, LEVEL OF
Defined 202
EXIT DOORS, EXTERIOR 1022
EXIT PASSAGEWAY 1024
Defined 202
EXIT RAMP, EXTERIOR 1006.3, 1008.3.2, 1027
Defined 202
EXIT STAIRWAY, EXTERIOR 1027
Defined 202
EXPANDED PLASTIC . . . . . Figure 3203.9(1), Figure 3203.9(2)
Defined 202
EXPANDED VINYL WALL OR CEILING COVERINGS 803.7, 803.8
EXPLOSION
Defined 202
EXPLOSION CONTROL 911, 2204.1, 2803.2, 2803.2.1, 2905.4, 5004.6, 5005.2.1.2, 5005.2.2.2, 5704.2.5, 5705.3.4, 5705.3.7.5.2, 5705.3.7.6.2, 5804.1.1, 5808.6, 6204.1.10, 6304.1.1, 6604.1.2, 6704.1.6
EXPLOSIVE MATERIAL . . . . . Chapter 56
Buildings under construction or demolition 3307
Defined 202
EXPLOSIVES AND FIREWORKS . . . . . Chapter 56
Defined 202
Manufacture, Assembly and Testing 5605
Temporary Storage of Consumer Fireworks 5609
EXTENSION CORDS 604.5
EXTERIOR ASSISTED RESCUE AREAS 1009.7
EXTERIOR WALL
Defined 202
EXTINGUISHERS
(see FIRE EXTINGUISHERS, PORTABLE)
EXTRA-HIGH-RACK COMBUSTIBLE STORAGE
Approval 3208.5
Defined 202
Fire protection 3208.5.1

F

FABRICATION AREA 2705.2
Construction 2703.3.1
Defined 202
Electrical wiring and equipment 2703.7.1
Existing 2701.4
Gas detection 2703.13.1.1
Storage 2704.2
FACILITY
Defined 202
FAIL-SAFE 5003.2.2.1, 5004.7.2, 5005.1.5.1, 5005.1.11, 6004.2.2.7, 6004.2.2.8.1, 6204.1.11.1
Defined 202
FALLOUT AREA
Defined 202
FALSE ALARM
Defined 202
FEES 113.5
FILL PIPE CONNECTIONS 5704.2.9.5.2
FILM, CELLULOSE NITRATE MOTION PICTURE 306
Projection rooms 306.1
Storage 306.2
FINES (in woodworking operations) (see also VIOLATION PENALTIES)
Defined (in woodworking operations) 202
Storage and processing (in woodworking operations) 2808
FINISHED PRODUCTS 2909.6
FIRE, RECREATIONAL (see RECREATIONAL FIRE)
FIRE, REPORTING OF UNWANTED . . . 401.3.1, 3309
FIRE, UNWANTED (see UNWANTED FIRE)
FIRE ALARM
Defined 202
Reporting 401.3.2, 3309
FIRE ALARM BOX (see MANUAL FIRE ALARM BOX)
FIRE ALARM CONTROL UNIT
Defined 202

INTERNATIONAL CODE COUNCIL®
Copyright © 2019 ICC & NYSDOS. ALL RIGHTS RESERVED. Accessed by Lauren Gualdino (lgualdino@briarcliffmanor.org), (-) Order Number #100880972 on May 08, 2020 07:05 AM (PDT) pursuant to License Agreement with ICC & NYSDOS. No further reproduction, no

100880972

FIRE ALARM SIGNAL
Defined 202
FIRE ALARM SYSTEM
Annunciation 907.6.3.1, 907.6.4.1
Defined 202
Existing buildings 907.9, 1103.7
Maintenance 907.8
Monitoring 907.6.6
Notification appliances 907.5
Out of service 901.7
Power supply 907.6.2
Presignal feature 907.5.1
Telephone dialing devices 907.6.6.1
Testing 907.8
Where required, existing buildings 1103.7
Where required, new buildings 907.2
Zones 907.6.4
FIRE AND SMOKE PROTECTION FEATURES . . . . . Chapter 7
FIRE APPARATUS ACCESS ROAD 503
Defined 202
Gates and barricades 503.5, 503.6
Obstructions 503.4
FIRE AREA 901.4.3
Defined 202
FIRE BARRIER
Defined 202
Maintenance 704.1
FIRE CHIEF 907.6.6.1, 2603.3, 3308.3, 5706.6.2.1
Defined 202
FIRE CODE OFFICIAL
Defined 202
FIRE COMMAND CENTER 508
Defined 202
Storage prohibited 315.3.3, 508.1.5
FIRE DAMPER
Defined 202
FIRE DEPARTMENT COMMUNICATION SYSTEM 907.2.12.2
FIRE DEPARTMENT CONNECTIONS 903.3.7, 905.2, 912
FIRE DEPARTMENT MASTER KEY
Defined 202
FIRE DEPARTMENT NOTIFICATION [see NOTIFICATION (of fire department)]
FIRE DEPARTMENT OPERATIONS 401.4
FIRE DETECTOR, AUTOMATIC
Defined 202
FIRE DOOR
Defined 202
FIRE DOOR ASSEMBLY
Defined 202
FIRE DRILL (see EMERGENCY EVACUATION DRILL)
FIRE EQUIPMENT, TAMPERING WITH 901.8
FIRE ESCAPE STAIRWAYS 1104.16
FIRE EXIT HARDWARE 1010.1.10
Defined 202
FIRE EXTINGUISHERS, PORTABLE 906
Asphalt kettles 303.5
Aviation facilities 2005
Buildings under construction or demolition 3315
Commercial cooking equipment 906.4
Dry cleaning plants 2108.4
Flammable finishes 2404.4.1, 2405.4.2, 2406.4.2
Lumber yards 2804.2, 2808.8
FIRE FIGHTERS
Hazards to 316
Pitfalls 316.3
FIRE HYDRANT
Obstruction 507.5.4
Standpipe system 507.5.1.1
Tampering 901.8
Testing 507.5.2, 901.5
FIRE LANE
Defined 202
FIRE PARTITION
Defined 202
Maintenance 701.2
FIRE POINT
Defined 202
FIRE PROTECTION EQUIPMENT 509
FIRE PROTECTION RATING
Defined 202
FIRE PROTECTION SYSTEM . . . . . Chapter 9
Defined 202
Nonrequired 901.4.2
Out of service 901.7
Owner's responsibility during construction or demolition 3308
FIRE PUMP ROOMS 901.4.6, 913.2.1, 1008.3.3
FIRE PUMPS 913
FIRE RESISTANCE
Defined 202
FIRE SAFETY DURING CONSTRUCTION AND DEMOLITION . . . . . Chapter 33
FIRE SAFETY FUNCTIONS 907.3
Defined 202
FIRE SAFETY PLANS 404, 3404.5

INTERNATIONAL CODE COUNCIL®
Copyright © 2019 ICC & NYSDOS. ALL RIGHTS RESERVED. Accessed by Lauren Gualdino (lgualdino@briarcliffmanor.org), (-) Order Number #100880972 on May 08, 2020 07:05 AM (PDT) pursuant to License Agreement with ICC & NYSDOS. No further reproduction, no

100880972

FIRE SEPARATION DISTANCE
Defined 202
FIRE SERVICE ELEVATOR KEYS (see KEYS, FIRE SERVICE ELEVATOR)
FIRE SERVICE FEATURES . . . . . Chapter 5
FIRE WALL
Defined 202
Maintenance 701.2
FIRE WATCH (see also STANDBY PERSONNEL)
Construction/demolition sites 3304.5
Defined 202
During construction 3304.5.1
Fire protection impairments 901.7
Hot work 3504.2.2
Location and records 3304.5.3
Personnel 3304.5.2
Places of assembly 403.12.1
FIREBLOCKING
Defined 202
Maintenance 707.1
FIRE-EXTINGUISHING SYSTEMS, ALTERNATIVE 904
Commercial cooking 904.12
Fire alarm system interconnection . . . 904.3.5, 907.6
Flammable and combustible liquids 5704.3.7.5.1, 5704.3.8.4
Flammable finishing 2404.4, 2405.4.1, 2406.4, 2407.4
Hazardous materials 5005.1.8
Monitoring 904.3.5
Required 904.2
FIRE-FLOW REQUIREMENTS 507.3
FIREPLACES, PORTABLE OUTDOOR (see PORTABLE OUTDOOR FIREPLACES)
FIRE-RESISTANCE RATING
Defined 202
FIRE-RESISTANCE-RATED CONSTRUCTION 701.2
FIRE-RESISTANT JOINT SYSTEM
Defined 202
FIRE-RETARDANT COATINGS 803.4
FIREWORKS (see EXPLOSIVES AND FIREWORKS)
Defined 202
Prohibited 5601.1.3
Retail display and sale 5609.1
FIREWORKS DISPLAY
Damage from 5601.2.4.2
Defined 202
FIXED BASE OPERATOR
Defined 202
FIXED SEATING 1004.6
Defined 202
Occupant load factor 1004.5
FLAME ARRESTORS 5704.2.7.3.2
FLAME RETARDANT (see also FIRE-RETARDANT COATINGS)
Tents, air-supported, air-inflated and tensioned membrane structures 3104.2
FLAME SPREAD
Defined 202
FLAME SPREAD INDEX
Defined 202
FLAMING FOODS AND BEVERAGES 308.1.8
FLAMMABLE CRYOGENIC FLUID
Defined 202
FLAMMABLE FINISHES . . . . . Chapter 24
Defined 202
Dipping operations 2405
Electrostatic apparatus 2407
Floor surfacing 2410
Powder coating 2406
Protection of operations 2403
Spray finishing 2404
Ventilation 2404.7, 2405.7, 2406.7, 2407.7, 2409.6, 2410.5
FLAMMABLE GAS . . . . . Chapter 58
Buildings under construction or demolition 3306
Defined 202
Nonodorized 2311.8.9
Prohibited for pipe cleaning 3306.2
Requirements 5803
Storage 3306.1, 5804
Use 3306.1, 5805
FLAMMABLE LIQUEFIED GAS
Defined 202
FLAMMABLE LIQUIDS . . . . . Chapter 57
Buildings under construction or demolition 3305
Classified locations 5703.1.1
Defined 202
Dispensing, use, mixing and handling 5705.3, 5705.3.8
In construction and demolition operations 3305
Indoor storage 5704.3.3
Labeling and signage 5703.5
Motor fuel 2306
Outdoor storage 5704.4
Portable fire extinguisher 5706.2.7
Special operations 5706
Tank storage 5704.2

INTERNATIONAL CODE COUNCIL®
Copyright © 2019 ICC & NYSDOS. ALL RIGHTS RESERVED. Accessed by Lauren Gualdino (lgualdino@briarcliffmanor.org), (-) Order Number #100880972 on May 08, 2020 07:05 AM (PDT) pursuant to License Agreement with ICC & NYSDOS. No further reproduction, no

100880972

Tents, air-supported, air-inflated and tensioned membrane structures 3107.14
Waste control 5706.3.3
Wholesale and resale use 5704.3.6
FLAMMABLE MATERIAL
Defined 202
FLAMMABLE SOLID . . . . . Chapter 59
Defined 202
Indoor storage 5904.1
Magnesium 5906
Outdoor storage 5906
Requirements 5903
Use 5905
FLAMMABLE VAPOR AREA
Alarms 2404.8.1.1
Defined 202
Electrical equipment 2403.2.1
Ignition sources 2403.2
Ventilation 2404.7, 2405.7
Warning signs 2403.2.7
FLAMMABLE VAPORS OR FUMES
Defined 202
FLASH POINT
Defined 202
FLEET VEHICLE MOTOR FUEL-DISPENSING FACILITY
Defined 202
Tanks 2306.2.4.2
FLEXIBLE JOINTS 2306.7.9.1.4, 5703.6.9
FLIGHT (stairs)
Defined 202
FLOOR AREA, GROSS
Defined 202
FLOOR AREA, NET
Defined 202
FLOOR CONSTRUCTION 2404.3.2, 2404.3.3.3, 2404.3.4.1, 5004.12, 6003.1.4.1, 6304.1.3
FLOOR COVERING (interior finish) 804.3
FLOOR FINISHING 2410
FLOOR IDENTIFICATION SIGNS 1023.9, 1031.9, 1104.24
FLOOR OPENINGS AND SHAFTS 704, 1103.4
FLUE SPACES 3208.3
Defined 202
FLUIDIZED BED
Defined 202
FOAM PLASTICS 803.11.1, 803.11.2, 807.5.1.1
FOAM-EXTINGUISHING SYSTEMS 904.7
Defined 202
FOGGING, INSECTICIDAL (see FUMIGATION AND INSECTICIDAL FOGGING)
FOLDING AND TELESCOPIC SEATING
Defined 202
FOSTER CARE FACILITIES (Occupancy Group I)
Defined 202
FRUIT AND CROP RIPENING . . . . . Chapter 25
Ethylene gas 2503
Heating 2504.5
Sources of ignition 2504
Warning signs 2507
FUEL CELL SYSTEMS 1205
Indoor installations 1205.6
Outdoor installations 1205.8
FUEL LIMIT SWITCH
Defined 202
FUEL OIL
Grade 603.1.4
Storage 603.3
FUEL-FIRED APPLIANCES 603
Chimneys 603.2, 603.6
Heating 603.5
Installation 603.1
FUMIGANT
Defined 202
FUMIGATION AND INSECTICIDAL FOGGING . . . . . Chapter 26
Breathing apparatus 2603.3.2
Clean up 2603.6
Defined 202
Fire safety requirements 2603
Notification 2603.3
Sealing of buildings 2603.5
Warning signs 2603.3.1
Watch personnel 2603.3.3
FURNACE CLASS A, B, C, D
Defined 202
FURNISHINGS 808, 1031.6
FURNITURE, UPHOLSTERED 805, 903.2.4,
FUSIBLE LINKS 705.2, 904.12.5.3, 910.5.1

G

GARAGE (see REPAIR GARAGE)
GARAGING (see PARKING AND GARAGING)
GAS CABINET 2703.10.2, 2703.13.1.3, 5003.8.6, 5303.7.10, 5306.2.3, 6004.1.1,
Defined 202

INTERNATIONAL CODE COUNCIL®
Copyright © 2019 ICC & NYSDOS. ALL RIGHTS RESERVED. Accessed by Lauren Gualdino (lgualdino@briarcliffmanor.org), (-) Order Number #100880972 on May 08, 2020 07:05 AM (PDT) pursuant to License Agreement with ICC & NYSDOS. No further reproduction, no

100880972

GAS DETECTION SYSTEM 916
Defined 202
HPM gases 2703.13
Hydrogen motor fuel 2311.8.9
LNG 2311.8.9
Ozone gas 6005.3.2
Processing and extraction 3905.1
GAS DETECTOR (see COMBUSTIBLE GAS DETECTOR)
GAS METERS 603.9
GAS ROOM 5003.8.4, 6004.2.2.6
Defined 202
GASEOUS HYDROGEN SYSTEM 5801.1
Defined 202
GAS- OR LIQUID-FUELED VEHICLES 314.4, 3107.14
GATES
Means of egress 1010.2
GATES, FIRE APPARATUS ROAD 503.5, 503.6
GENERAL REQUIREMENTS . . . . . Chapter 3
GENERATORS
Acetylene 3508
Ethylene 2506
Ozone Gas 6005
Stationary 1203.1.1
GLASS-FIBER-REINFORCED PLASTICS
Manufacturing 2409
Storage 2409.4
Ventilation 2409.6
GRADE FLOOR OPENING
Defined 202
GRADE PLANE
Defined 202
GRANDSTAND 1029.1.1, 1029.1.1.1
Defined 202
GROUP HOME (Occupancy Group R-4)
Defined 202
GUARD 1015, 1029.17, 1104.6
Defined 202
GUEST ROOM
Defined 202
GYPSUM BOARD
Defined 202

H

HABITABLE SPACE
Defined 202
HALOGENATED EXTINGUISHING SYSTEM
Defined 202
HAND RUB, ALCOHOL-BASED (see ALCOHOL-BASED HAND RUB)
HANDLING
Defined 202
HANDRAIL 1014
Defined 202
HANGARS, AIRCRAFT (see AIRCRAFT-RELATED OCCUPANCIES, FIRE PROTECTION FOR)
HANGERS, FIRE EXTINGUISHER 906.7
HARDENING TANKS 2405.9
HARDWARE, EXIT DOOR 1010.1.9
HARDWARE, PANIC 1010.1.10
HAY
Combustible fiber 202, 3703.4
Combustible waste 304.1.1
Storage 3107.2, 3703.4
HAZARD COMMUNICATION 407
Hazardous Materials Inventory Statement 407.5, 5001.5.2
Hazardous Materials Management Plan 407.6 5001.5.1
Training 407.4
HAZARDOUS MATERIALS
Defined 202
Fire-extinguishing systems 5004.5, 5005.1.8
General . . . . . Chapter 50
Groups M and S 5003.11
Identification signs 5003.5
Mixtures 5001.2.1
Outdoor control areas 5003.12
Personnel training 407.4
Power systems 1203.2.9
Requirements 5003
Storage 5004
Use, dispensing and handling 5005
HAZARDOUS MATERIALS INVENTORY STATEMENT 407.5, 5001.5.2
HAZARDOUS MATERIALS MANAGEMENT PLAN 407.6, 5001.5.1
HAZARDOUS PRODUCTION MATERIAL (HPM)
Defined 202
HAZARDS TO FIRE FIGHTERS 316
HEALTH HAZARD . . . . . 5001.2.2.2, Table 5003.1.1(2), Table 5003.1.1(4)
Defined 202
HEAT VENTS (see SMOKE AND HEAT VENTS)
HEATERS, PATIO (see PORTABLE OUTDOOR GAS-FIRED HEATING APPLIANCES)
HEATERS, PORTABLE ELECTRIC SPACE . . 605.10

INTERNATIONAL CODE COUNCIL®
Copyright © 2019 ICC & NYSDOS. ALL RIGHTS RESERVED. Accessed by Lauren Gualdino (lgualdino@briarcliffmanor.org), (-) Order Number #100880972 on May 08, 2020 07:05 AM (PDT) pursuant to License Agreement with ICC & NYSDOS. No further reproduction, no

100880972

HEATERS, PORTABLE UNVENTED 603.4
HEATING APPLIANCES 603.5
HEATING EQUIPMENT, TEMPORARY, DURING CONSTRUCTION. 3303
HEIGHT, BUILDING
Defined 202
HELIPORT 2007
Defined 202
HELISTOP 2007
Defined 202
HI-BOY
Construction. 303.7
Defined 202
HIGHER EDUCATION LABORATORIES . . . . . Chapter 38
Existing sprinklered laboratories 3806
General safety provisions 3803
Laboratory suite construction. 3804
Nonsprinklered laboratories. 3805
HIGHLY TOXIC AND TOXIC MATERIALS . . . . . Chapter 60
Compressed gases 6004
Defined 202
Indoor storage and use 6003.1
Outdoor storage and use 6003.2
Solids and liquids. 6003
HIGH-PILED COMBUSTIBLE STORAGE . . . . . Chapter 32
Aisles 3206.9
Automated storage 3209
Automatic sprinklers 3206.4, 3209.2
Classifications, commodities 3203
Defined 202
Fire protection . . . . . 3206, Table 3206.2
Housekeeping 3205
Pallets 3206.4.1
Plastic pallets. 3206.4.1.1
HIGH-PILED STORAGE AREA
Defined 202
Designations 3204
HIGH-RISE BUILDING
Automatic sprinkler system 903.2.11.3, 914.3.1
Automatic sprinkler system, floor control valves required 903.4.3
Automatic sprinkler system, secondary water supply required 914.3.2
Defined 202
Emergency responder radio coverage. 914.3.6
Emergency voice/alarm communications system 907.2.12, 914.3.5
Fire alarm system 907.2.12, 914.3.3
Fire alarm system zoning 907.6.4.2
Fire command center 508.1, 914.3.7
Fire department communications system 907.2.12.2
Fire safety and evacuation plans 403.11.2
Smokeproof exit stairway enclosures. 1023.11
Standby power system. 1203.2.10
Standpipe system. 905.3.1
HIGH-VOLTAGE TRANSMISSION LINE
Defined. 202
Storage under 315.5, 316.6
HIGHWAY
Defined. 202
HISTORIC BUILDINGS
Defined. 202
HOGGED MATERIALS 2807, 2808
Defined. 202
HOOD 607
Defined. 202
HORIZONTAL ASSEMBLY
Defined. 202
HORIZONTAL PROJECTIONS 1003.3.3
HOSE 2307.6.2, 2310.3.3
Aircraft fueling 2006
Conductive 2006.5.2.1
Connections for standpipes 905.3.4.1, 905.4, 905.5, 905.6
Dispensing 2006.3.3, 2306.7.5
Protection. 2006.7, 5706.6.1.11
Removal of occupant hose lines 901.8.2
System 904.8.4, 904.9.3, 904.10.3
Threads 903.3.6, 912.3
HOSPITALS AND PSYCHIATRIC HOSPITALS (Group I-2)
Defined. 202
HOT WORK (see WELDING AND OTHER HOT WORK)
Defined. 202
HOT WORK AREA
Defined. 202
HOT WORK EQUIPMENT
Defined. 202
HOT WORK PERMITS
Defined. 202
HOT WORK PROGRAM
Defined. 202
HPM FACILITY (see SEMICONDUCTOR FABRICATION FACILITY)
HPM ROOM
Defined. 202
HYDRANTS (see FIRE HYDRANT)

INTERNATIONAL CODE COUNCIL®
Copyright © 2019 ICC & NYSDOS. ALL RIGHTS RESERVED. Accessed by Lauren Gualdino (lgualdino@briarcliffmanor.org), (-) Order Number #100880972 on May 08, 2020 07:05 AM (PDT) pursuant to License Agreement with ICC & NYSDOS. No further reproduction, no

100880972

HYDROGEN 5501.1, 5801.1
HYDROGEN FUEL GAS ROOMS 5808
Defined 202
HYDROGEN MOTOR FUEL-DISPENSING FACILITIES 2309
HYPERBARIC FACILITIES 609

I

IDENTIFICATION
Alcohol-blended fuel-dispensing facilities 2306.8.4
Building (address) 505.1
Elevator lobby 1023.10
Exit discharge 1023.8, 1104.21
Floor level 1023.9, 1031.9
Fire protection equipment 509.1, 905.7.1
Hazardous materials 5003.5, 5503.4, 5703.5.4, 6005.4.3
Hot work hazards 3503.6
Streets and roads 505.2
Tenant spaces in covered malls 403.11.1.5
Utilities 509.1.1
Vacant premises 311.5.4
IGNITION SOURCES 305, 3703.7
IMMEDIATELY DANGEROUS TO LIFE AND HEALTH (IDLH)
Defined 202
IMPACT PROTECTION, VEHICLE 312, 6107.4, 6109.13
IMPAIRMENT COORDINATOR 901.7.1
Defined 202
INCAPABLE OF SELF-PRESERVATION (Occupancy Group I)
Defined 202
INCINERATORS 603.8, 1103.4.10
Room egress 1006.2.2.1
INCOMPATIBLE MATERIALS 2704.3.3, 5003.9.8, 5003.10.3.6, 5003.11.3.7, 5004.2.2.2, 5004.2.2.6, 5004.4, 5005.1.1, 5303.7.1, 5303.7.11.1, 5704.2.6, 5704.3.3.2, 6404.1.4
Defined 202
INCOMPATIBLE SURFACES 6306.3.6.2
INDOOR TRADE SHOWS . . . . . Appendix N
Covered booths N106
Display and storage of hazardous and combustible materials N107
Interior finish and decorative materials N104
Means of egress N108
Multiple-level booths N105
Public safety for events N103
INDUSTRIAL OVENS . . . . . Chapter 30
Fire protection 3006
Fuel piping 3004
Interlocks 3005
Location 3003
Operation and maintenance 3007
INERT GAS . . . . . 2501.1, 2906.4, Table 5003.1.1(1), Table 5003.1.1(3), 5305.8, 5703.6.3.1, 5705.2.2
Defined 202
INHABITED BUILDING
Defined 202
INITIATING DEVICE
Defined 202
Identification 907.6.3
INSECTICIDAL FOGGING (see FUMIGATION AND INSECTICIDAL FOGGING)
INSPECTION 105.3, 901.6
Emergency and standby power system 1203.4
Fire department connections 912.7
Fire hydrant 507.5.2
Fireworks display 5608.5.3, 5608.9
Hose 3509.7
Magazines 5604.9
Masonry chimneys 603.6.1
Tents 3103.7
INSTITUTIONAL OCCUPANCIES
Defined 202
INTEGRATED TESTING 901.6.2
INTERCONNECTION
Fire-extinguishing systems with cooking appliances 904.12.2
Smoke alarms 907.2.10.5, 1103.8.2
Standpipe risers 905.4.2
INTERIOR EXIT RAMP
Defined 202
INTERIOR EXIT STAIRWAY
Defined 202
INTERIOR FINISH . . . . . Chapter 8
Defined 202
INTERIOR FLOOR-WALL BASE 804.4
Defined 202
INTERIOR WALL AND CEILING FINISH 803, 804
Defined 202
INTERIOR WALL AND CEILING FINISH AND TRIM 803, 804

INTERNATIONAL CODE COUNCIL®
Copyright © 2019 ICC & NYSDOS. ALL RIGHTS RESERVED. Accessed by Lauren Gualdino (lgualdino@briarcliffmanor.org), (-) Order Number #100880972 on May 08, 2020 07:05 AM (PDT) pursuant to License Agreement with ICC & NYSDOS. No further reproduction, no

100880972

IRRITANT
Defined 202
Gases 5004.7.1, 5307.1
ISO-BUTANE (see LIQUEFIED PETROLEUM GAS)

J

JURISDICTION
Defined 202

K

KETTLES
[see ORGANIC COATING or ASPHALT (TAR) KETTLES]
KEY BOXES 506
Defined 202
Maintenance 506.2
Nonstandard fire service elevator keys 506.1.2
Required 506.1
KEYS, FIRE SERVICE ELEVATOR 606.8

L

LABELED
Defined 202
LADDERS 1006.2.2.1, 1006.2.2.2, 1011.15, 1030.4.2, 1104.16.6, 5704.2.8.15
LANDING
Ramps 1012.6, 1012.10
Stairs and stairways 1010.1.5, 1010.1.6, 1011.6, 1025.2.2, 1025.2.4
LANDSCAPED ROOFS
(see also ROOFTOP GARDENS) 317
LAUNDRY CARTS 318.1
LEAD-ACID BATTERY SYSTEM, STATIONARY
(see BATTERY SYSTEMS, STATIONARY STORAGE)
LEAD-ACID BATTERY SYSTEM, VALVE-REGULATED (see BATTERY SYSTEMS, STATIONARY STORAGE)
LEAKS
Compressed gases 5303.12
Cryogenic fluids 5503.9
Explosive materials 5604.10
Flammable and combustible liquids 2006.11, 2305.2.3, 2306.7.7.1, 3305.6, 5703.3, 5703.6.3.1, 5704.2.7.10, 5704.2.11.4, 5706.6.1.1
Highly toxic and toxic materials 6004.2.2.3, 6004.2.2.4, 6004.3.2.2
LEVEL OF EXIT DISCHARGE
(see EXIT DISCHARGE, LEVEL OF)
LIABILITY 113.4.2
LIMITED SPRAYING SPACE
Defined 202
LINEN CHUTES 903.2.11.2
LINEN CONTAINERS 808.1
LIQUEFIED NATURAL GAS (LNG) 2311.6 5301.1, 5501.1
Defined 202
LIQUEFIED PETROLEUM GAS
(LP-gas) . . . . . Chapter 61
Container defined 202
Containers not in service 6110
Cooking devices 308.1.4
Cylinder exchange 6109
Defined 202
Dispensing and overfilling 6106
Fire protection 6108
Installation of equipment 6103
Location of containers . . . . . 6104, Table 6104.3
Motor fuel-dispensing facilities 2307
Parking and garaging of LPG-fueled vehicles 6111
Parking and garaging of tank vehicles 6111
Prohibited use 6105
Safety precautions and devices 6107
Storage 6109
LIQUID
Defined 202
LIQUID LEVEL LIMIT CONTROL 5003.2.7, 5005.1.4.1, 5005.1.4.2
LIQUID OXYGEN
AMBULATORY CONTAINER 6306.3.1, 6306.3.5, 6306.3.6.1
Defined 202
LIQUID OXYGEN HOME
CARE CONTAINER 6306.3
Defined 202
LIQUID OXYGEN IN HOME
HEALTH CARE 6306
LIQUID STORAGE ROOM 5704.3.7
Defined 202
LIQUID STORAGE WAREHOUSE 5704.3.8
Defined 202
LIQUID- OR GAS-FUELED
VEHICLES 314.4, 3107.15

INTERNATIONAL CODE COUNCIL®
Copyright © 2019 ICC & NYSDOS. ALL RIGHTS RESERVED. Accessed by Lauren Gualdino (lgualdino@briarcliffmanor.org), (-) Order Number #100880972 on May 08, 2020 07:05 AM (PDT) pursuant to License Agreement with ICC & NYSDOS. No further reproduction, no

100880972

LISTED
Defined 202
LOADING RACKS 5706.3.8, 5706.5.1.12
LOCKDOWN
Defined 202
Plans 404.2.3
LOCKERS, COMBUSTIBLE 808.4
LODGING HOUSE
Defined 202
Occupancy group 202
LONGITUDINAL FLUE SPACE (see FLUE SPACES)
LOT
Defined 202
LOT LINE
Defined 202
LOWER EXPLOSIVE LIMIT (LEL)
Defined 202
LOWER FLAMMABLE LIMIT (LFL)
Defined 202
LOW-PRESSURE TANK
Defined 202
LP-GAS (see LIQUEFIED PETROLEUM GAS)
LUMBER YARDS, AGRO-INDUSTRIAL, SOLID BIOMASS AND WOODWORKING FACILITIES . . . . . Chapter 28
Access plan 2803.7
Emergency plan 2808.10
Fire alarms 2804.2
Fire protection 2804
General 2803
Log storage areas 2806
Open yards 2803.1
Size of piles 2807.2, 2808.3
Waste removal 2803.3
LUMINOUS EGRESS PATH MARKINGS 1025, 1104.25

M

MAGAZINE
Defined 202
MAGNESIUM
Defined 202
Storage 5906.2, 5906.3, 5906.4
Use 5906.5
MAINTENANCE 107
MALL (see COVERED MALL BUILDING)
MANIFOLDS
Cylinders 3509.4
Identification 3509.5
Piping 3509
MANUAL FIRE ALARM BOX 907.4.2
Defined 202
MANUAL STOCKING METHODS
Defined 202
MANUFACTURE OF ORGANIC COATINGS . . . . . Chapter 29
MARINAS . . . . . Chapter 36
MARINE MOTOR FUEL-DISPENSING FACILITY 2310, 3605
Defined 202
Fire protection 2310.6
Fueling 2310.4
General 2310.1
Nozzles 2310.3.3
MARKING (see also PLACARDS; PLACARDING) 503.3, 909.14, 5003.5.1
Compressed gas 5303.2
Cryogenic containers 5503.4
Shaftway 316.2
Tank 5706.2.2
Warnings 5003.8.7.2
MASS NOTIFICATION SYSTEMS 917
MATERIAL SAFETY DATA SHEET (MSDS) (see SAFETY DATA SHEET) 5003.4
MATTRESSES (in Groups I and R) 805
MAXIMUM ALLOWABLE QUANTITY PER CONTROL AREA . . . . . Tables 5003.1.1(1) through 5003.1.1(4), 5003.11
Defined 202
MEANS OF EGRESS . . . . . Chapter 10, 1104, 3311
Accessible means of egress 1009
Assembly 1029
Bleachers 1029.1.1
Buildings under construction or demolition 3311
Corridors 1020, 1104.17
Defined 202
Egress court 202, 1028.4
Elevators, escalators and moving walks 1003.7, 1104.2
Emergency escape and rescue 1030
Existing buildings 1104
Exit access 1016
Exit discharge 1028
Exits 1006
Guards 1015, 1104.6
Handrails 1014
Illumination 1008, 1104.3
Locks, latches 1010.1.9.4
Maintenance of 1031
Membrane structures 3103.12
Monitoring and recording of 1010.1.9.3

INTERNATIONAL CODE COUNCIL®
Copyright © 2019 ICC & NYSDOS. ALL RIGHTS RESERVED. Accessed by Lauren Gualdino (lgualdino@briarcliffmanor.org), (-) Order Number #100880972 on May 08, 2020 07:05 AM (PDT) pursuant to License Agreement with ICC & NYSDOS. No further reproduction, no

100880972

Obscuration of 316.4, 1031.4, 1031.6
Obstructions. 1031.3, 1031.3.1
Outdoor assembly events 3106.3
Ramps 1012
Signs 1013
Sizing 1005
Stairways 1023, 1027
Tents 3103.12

MECHANICAL REFRIGERATION (see REFRIGERATION SYSTEM)

MECHANICAL STOCKING METHODS 3206.10.1.1
Defined 202

MEDICAL CARE (Occupancy Group I)
Defined 202

MEDICAL GAS SYSTEMS 5306.5

MEDICAL GASES 5306

MEMBRANE STRUCTURE . . . . . Chapter 31
Defined 202

MERCHANDISE PAD 1018.4
Defined 202

METAL HYDRIDE AND METAL HYDRIDE STORAGE SYSTEMS 5807
Defined 202

METERS, GAS 603.9

MEZZANINE 1004.2.2
Ceiling height 1003.2
Defined 202

MILLS
Composite board 2805
Plywood 2805
Process 2806
Veneer 2805

MIRRORS 1010.1, 1031.6

MIXTURES (Hazardous materials) 5001.2.1

MOBILE FOOD PREPARATION VEHICLES 319

MOBILE FUELING 5706.5.4.5
Defined 202

MONITORING (sprinkler and fire alarm systems) 903.4.1, 907.6.6
Hazardous materials 5004.2.2.5
Termination of 907.6.6.2

MORTAR
Defined 202

MOTION PICTURE PROJECTION ROOMS AND FILM 306
Film storage 306.2

MOTOR FUEL-DISPENSING FACILITIES (see also by type of fuel) . . . . . Chapter 23

MOTOR VEHICLE REPAIR BOOTHS 2311.8.4

MOTORIZED CONSTRUCTION EQUIPMENT 3316

MOVING WALKS 1103.3

MSDS (see SAFETY DATA SHEET)

MULTIPLE-STATION ALARM DEVICE
Defined 202

MULTIPLE-STATION SMOKE ALARM 907.2.10, 1103.8
Defined 202

MUSEUMS (Occupancy Group A-3)
Occupant load . . . . . Table 1004.5

N

NATURAL BARRICADE (see BARRICADE)

NATURAL CUT TREES . . . . . 806.1 through 806.1.3, 806.3

NESTING
Defined 202

NET EXPLOSIVE WEIGHT
Defined 202

NITROCELLULOSE 2908.1, 2909.4

NORMAL TEMPERATURE AND PRESSURE (NTP)
Defined 202

NOSING
Defined 202

NOTIFICATION (of Fire department/Fire code official) 401.3, 2006.11.5, 2304.3.6, 5003.3.1

NOTIFICATION (of Fumigation) 2603.3

NOTIFICATION APPLIANCE (see ALARM NOTIFICATION APPLIANCE)

NOTIFICATION ZONE (see ZONE, NOTIFICATION)

NOZZLES
Fuel delivery 2306.7.6
Fuel transfer 2006.3.3
Marine craft 2310.3.3

NUISANCE ALARM
Defined 202

NURSING HOME (Occupancy Group I-2)
Defined 202

O

OBSTRUCTIONS
Fire apparatus access roads 503.4
Fire department connections 912.3
Fire hydrants 507.5.4
Fire protection equipment 509.2, 2310.6.2

INTERNATIONAL CODE COUNCIL®
Copyright © 2019 ICC & NYSDOS. ALL RIGHTS RESERVED. Accessed by Lauren Gualdino (lgualdino@briarcliffmanor.org), (-) Order Number #100880972 on May 08, 2020 07:05 AM (PDT) pursuant to License Agreement with ICC & NYSDOS. No further reproduction, no

100880972

Fuel-dispensing view 2304.2.4
Manual fire alarm boxes 907.4.2.6
Means of egress 806.2, 1003.6, 1020.3, 1029.9.6, 1031.2, 1031.3, 1031.3.1, 1031.6
Portable fire extinguishers 906.6
On rooftops 316.4
Spraying operation ventilation 2404.7.4
Sprinkler discharge 315.3.1, 903.3.3

OCCUPANCY, CHANGE OF (see CHANGE OF OCCUPANCY)

OCCUPANCY CLASSIFICATION
Defined 202
Assembly Group A
Defined 202
Business Group B
Defined 202
Educational Group E
Defined 202
Factory Industrial Group F
Defined 202
High-hazard Group H
Defined 202
Institutional Group I
Defined 202
Mercantile Group M
Defined 202
Miscellaneous Group U
Defined 202
Residential Group R
Defined 202
Storage Group S
Defined 202

OCCUPANT LOAD
Defined 202
Posting 1004.3

OIL, COOKING 608

OIL, FUEL (see FUEL OIL and COMBUSTIBLE LIQUID)

OIL, MOTOR (see COMBUSTIBLE LIQUID)

OIL, WASTE (see WASTE OIL)

OIL-BURNING EQUIPMENT (see FUEL-FIRED APPLIANCES)

OPEN BURNING 307
Defined 202
Permit 307.2
Precautions in tire storage areas 3404.1

OPEN FLAMES 308, 806.3, 2004.6, 2903.6, 5003.7.2, 5604.7.2, 5706.2.1
Devices 308.1.6
Group A occupancies 308.3
Permit 308.2

OPEN MALL AND OPEN MALL BUILDING (see COVERED MALL BUILDING)
Defined 202

OPEN PARKING GARAGE
Defined 202

OPEN SYSTEM (hazardous materials)
Defined 202

OPEN-ENDED CORRIDOR 903.3.1.2.2, 1027.6, 1104.22
Defined 202

OPERATING BUILDING
Defined 202
Separation distances 5605.3

OPERATING PRESSURE
Defined 202

ORGANIC COATINGS . . . . . Chapter 29
Defined 202
Electrical equipment and protection 2904
General 2903
Kettles 2906
Manufacture . . . . . Chapter 29
Process structures 2905

ORGANIC PEROXIDE . . . . . 2408, Chapter 62
Defined 202
Indoor storage 6204.1
Outdoor storage . . . . . 6204.2, Table 6204.1.2, Table 6204.1.7
Requirements 6203
Use 6205

OUTDOOR ASSEMBLY EVENT
Electrical equipment and wiring 3106.6
Occupancy and means of egress 3106.3
Public safety 3106.4.1

OUTDOOR CONTROL AREA
Defined 202
Hazardous materials 5003.12

OUTDOOR FIREPLACE, PORTABLE (see PORTABLE OUTDOOR FIREPLACES)

OUTPATIENT CLINIC (Occupancy Group B)
Defined 202

OVENS (see INDUSTRIAL OVENS)

OVERCROWDING
Defined 202

OVERFILL PREVENTION AND PROTECTION 2006.18, 2306.6.2.3, 5704.2.7.5.8, 5704.2.8.18, 5704.2.9.7.5, 5704.2.11.4, 5706.4.6, 5706.6.1.5, 5706.8.3, 5706.8.5, 6106.2

OWNER
Defined 202

INTERNATIONAL CODE COUNCIL®
Copyright © 2019 ICC & NYSDOS. ALL RIGHTS RESERVED. Accessed by Lauren Gualdino (lgualdino@briarcliffmanor.org), (-) Order Number #100880972 on May 08, 2020 07:05 AM (PDT) pursuant to License Agreement with ICC & NYSDOS. No further reproduction, no

100880972

OXIDIZERS, OXIDIZING GASES AND OXIDIZING CRYOGENIC FLUIDS . . . . . Chapter 63
Defined 202
Indoor storage 6304.1
Outdoor storage 6304.2
Requirements 6303
Use 6305
OXIDIZING CRYOGENIC FLUID
Defined 202
OXIDIZING GAS
Defined 202
OXYGEN IN HOME HEALTH CARE 6306
OZONE-GAS GENERATOR 6005
Automatic shutdown 6005.5
Defined 202
Location 6005.3
Manual shutdown 6005.6

P

PALLETS
Containment pallets 5004.2.3
High-piled storage sprinkler protection 3206.4.1
Idle combustible 2505
Table 3203.8, 5704.3.3.9
Outdoor pallet storage 315.7, 2810
Plastic 3206.4.1.1
PANIC HARDWARE 1010.1.10, 1010.2.1
Defined 202
PARKING AND GARAGING
Aircraft-fueling vehicles 2006.5.1.3, 2006.20
Flammable- and combustible-liquid tank vehicles 5706.6.2, 5706.6.3
LP-gas tank vehicles 6111
LP-gas-fueled vehicles 6111.3
PASS-THROUGH 2703.3.2, 2703.10.3
Defined 202
PATIO HEATERS (see PORTABLE OUTDOOR GAS-FIRED HEATING APPLIANCES)
PENTHOUSE
Defined 202
PERMISSIBLE EXPOSURE LIMIT (PEL)
Defined 202
PERMITS 105
Defined 202
Hot work program 3503.3
PERSON
Defined 202
PERSONAL CARE SERVICE
Defined 202
PESTICIDE
Defined 202
PHOTOLUMINESCENT 1013.5, 1025, 1025.4, 1104.25
Defined 202
PHYSICAL HAZARD . . . . . 5001.2.2.1, Table 5003.1.1(1), Table 5003.1.1(3)
Defined 202
PIPELINES 5703.6.6.1, 5706.4, 5706.4.6
PIPING, VALVES AND FITTINGS
Flammable and combustible liquids 2306.6, 2306.7.9.1.3, 5706.4.7.6
Hazardous materials 5003.2.2
Highly toxic and toxic gases 6004.2.2.5
LP-gas in membrane structures 3107.13
Organic coating manufacturing 2907
Ozone-gas 6005
Protection from vehicles 5003.9.3
PLACARDS; PLACARDING (see also SIGNS)
Cryogenic fluid containers 5503.4.2
Explosives 5604.6.5, 5604.6.5.2
Flammable and combustible liquid tanks 5703.5.3, 5704.2.3.2
Vacant buildings 311.5
PLANS (see also CONSTRUCTION DOCUMENTS)
Diagrams 403.7.1.1
Evacuation 404.2.1
Facility closure 407.7
Fire safety 404.2.2
Hazardous materials management 5605.2.1
Lockdown 404.2.3
Maintenance of 5605.2.2
Prefire 5608.2
Storage 5704.4.1
PLASTICS
Cellulose nitrate . . . . . Chapter 65
Classifications of 3203.7
Foam 803.8, 804.2, 808.3
Manufacturing of glass-fiber-reinforced 2409
Pyroxylin . . . . . 314.3, 807.5.1.4, 903.2.5.3, Chapter 65, 1103.5.4
PLENUM 315.6, 604.11
Defined 202
PLOSOPHORIC MATERIAL 5605.1
Defined 202
PLYWOOD AND VENEER MILLS
Defined 202
Fire alarm system 907.2.17, 2804.2
PORTABLE FIRE EXTINGUISHERS (see FIRE EXTINGUISHERS, PORTABLE)
PORTABLE OUTDOOR FIREPLACES 307.4.3, 307.5
Defined 202

INTERNATIONAL CODE COUNCIL®
Copyright © 2019 ICC & NYSDOS. ALL RIGHTS RESERVED. Accessed by Lauren Gualdino (lgualdino@briarcliffmanor.org), (-) Order Number #100880972 on May 08, 2020 07:05 AM (PDT) pursuant to License Agreement with ICC & NYSDOS. No further reproduction, no

100880972

PORTABLE OUTDOOR GAS-FIRED HEATING APPLIANCES 603.4.2
PORTABLE TANKS
Defined 202
Design, construction and capacity 5704.3.1
Empty 5704.3.3.4
Flammable liquids 2306.2.5
Flow rate . . . . . 6004.2.2.7.5, Table 6004.2.2.7.5
Indoor storage 5704.3.3
Local exhaust 6004.2.2.4, 6004.3.2.3
Outdoor storage . . . . . 5704.4, Table 5704.4, 6004.3.4
Piles 5704.3.3.10, 5704.3.7.2.3
POSTING
Evacuation diagrams (Group R-1) 403.10.1.1, 403.10.1.1
Explosives and pyrotechnic amounts 5605.6.9
No smoking signs 310.3
Occupant load 1004.3, 5605.6.9
Permits 105.2.6
Tenant identification 403.11.1.5
POWDER COATING 2406
POWERED INDUSTRIAL TRUCKS 309
Battery charging 309.2
Defined 202
Fire extinguishers 309.5
Refueling 309.6
Repairs 309.7
Ventilation 309.4
PRECAUTIONS AGAINST FIRE 301.1, 3304, 3305.4, 3404
PREMISES IDENTIFICATION 505
PRESPOTTING (see DRY CLEANING)
PRESSURE VESSEL
Defined 202
PRIMARY CONTAINMENT
Defined 202
PRIMARY TANK
Defined 202
PRIVATE GARAGE 915.1.5
Defined 202
PROCESS
Piping 2907
Raw materials 2908, 2909
PROCESS TRANSFER
Defined 202
Operations 5706.5
PROCESSING AND EXTRACTION FACILITIES . . . . . Chapter 39
Processing and extraction of marijuana 3903
Safety systems 3905
Systems and equipment 3904
PROPANE (see LIQUEFIED PETROLEUM GAS)
PROPELLANT (Aerosol)
Defined 202
PROPELLANT, SMOKELESS (see SMOKELESS PROPELLANT)
PROPYLENE (see LIQUEFIED PETROLEUM GAS)
PROTRUDING OBJECTS 1003.3
PROXIMATE AUDIENCE
Defined 202
Displays 5608.2.2
PSYCHIATRIC HOSPITAL (see HOSPITALS AND PSYCHIATRIC HOSPITALS)
PUBLIC ASSEMBLAGES AND EVENTS 403
PUBLIC USE AREAS 907.5.2.3.1
Defined 202
PUBLIC WAY 1028.5
Defined 202
PYROPHORIC
Defined 202
Indoor storage 6404.1
Materials . . . . . Chapter 64
Outdoor storage 6404.2
Requirements 6403
Use 6405
PYROTECHNIC ARTICLE
Defined 202
PYROTECHNIC COMPOSITION
Defined 202
PYROTECHNIC SPECIAL EFFECT
Defined 202
PYROTECHNIC SPECIAL EFFECTS MATERIAL
Defined 202
PYROTECHNICS
Defined 202
PYROXYLIN (CELLULOSE NITRATE) PLASTICS
Decorative materials 807.5.1.4
Fire protection system 903.2.5.3, 1103.5.4, 6504.2
Raw material 6504.1
Requirements 6503
Storage and handling 6504

Q

QUICK-RESPONSE (QR) SPRINKLERS (see AUTOMATIC SPRINKLERS)

INTERNATIONAL CODE COUNCIL®
Copyright © 2019 ICC & NYSDOS. ALL RIGHTS RESERVED. Accessed by Lauren Gualdino (lgualdino@briarcliffmanor.org), (-) Order Number #100880972 on May 08, 2020 07:05 AM (PDT) pursuant to License Agreement with ICC & NYSDOS. No further reproduction, no

100880972

R

RACK STORAGE 3208, 5104.4.3, 5704.3.3.6
RADIOACTIVE
Gases 5004.7, 5307.1
Materials 5004.3.1
RAILWAY
Defined 202
RAMPS 1012, 1023, 1027
Defined 202
RAW PRODUCT (Wood products)
Defined 202
Storage and processing 2808
REACTIVE MATERIALS [see UNSTABLE (REACTIVE) MATERIALS or WATER REACTIVE MATERIALS]
READY BOX 5608.5.5
Defined 202
RECALL, FIRE PROTECTION SYSTEM COMPONENT 901.10
RECORD DRAWINGS (fire alarm system) . . . 907.7.3
Defined 202
RECORDS/RECORD KEEPING 107.2.1, 405.5, 605.6, 605.15, 607.3.3.3, 901.6.3, 2006.5.3.2.2, 3210.1, 3503.5, 5003.3.1.1, 5603
RECREATIONAL FIRE 307.4.2
Defined 202
RECYCLING FACILITIES 2808
REDUCED FLOW VALVE 6004.2.2.7.5
Defined 202
REFERENCED STANDARDS . . . . . 102.7, Chapter 80
REFINERY
Defined 202
Petroleum 5706.7
REFRIGERANT 605.2
Classification 605.3
Defined 202
Detector 605.8
Discharge 605.12
Storage 605.11
Type 605.4
REFRIGERATION MACHINERY ROOMS 1006.2.2.2
REFRIGERATION SYSTEM 605.9.1
Defined 202
REFUGE AREA ASSOCIATED WITH SMOKE BARRIERS AND HORIZONTAL EXITS 404.2.2
REFUGE, AREA OF (see AREA OF REFUGE)
REGISTERED DESIGN PROFESSIONAL 106.2.9, 909.9, 909.18.8.3
Defined 202
RELEASE OF HAZARDOUS MATERIAL 5003.3
REMOTE EMERGENCY SHUTOFF DEVICE
Defined 202
Use of 5706.5.4.5
REMOTE SOLVENT RESERVOIR 5705.3.6.2.3
Defined 202
REPAIR GARAGES 2311
Defined 202
Gas detection system 2311.8.9
LP-gas-fueled vehicles 6111.3
Motor vehicle repair booths 2311.8.4
Sources of ignition 2311.3
Sprinklers required 903.2.9.1
Ventilation 2311.4.3
REPAIRS, EMERGENCY (see EMERGENCY REPAIRS)
REPORTING
Aviation facilities fire extinguisher use 2005.8
Emergencies 401.1
Fire 3309
Fire alarm 3309
Leak 5704.2.7.10
Record keeping 5603
RESIN APPLICATION AREA 2403.2.5, 2409.3, 2409.5, 2409.6
Defined 202
RESPONSE PROCEDURES 406
RESPONSIBLE PERSON
Defined 202
RETAIL DISPLAY AREA (for aerosols)
Defined 202
Manufacturing facilities 5107.1
Maximum quantities . . . . . 5106.2, Table 5106.2, Table 5106.4
REVOCATION OF PERMITS 105.2.5
ROADWAYS, ACCESS FOR FIRE APPARATUS (see FIRE APPARATUS ACCESS ROAD)
ROCKETS AND ROCKETRY 5601.1.4
ROLL COATING
Defined 202
ROOF, LANDSCAPED (see ROOFTOP GARDENS)
ROOF VENTS 910
ROOFING OPERATIONS SAFEGUARDS 3317
ROOFS
Safeguarding operations 3317
Stairway access 504.3, 1011.12, 1011.16

INTERNATIONAL CODE COUNCIL®
Copyright © 2019 ICC & NYSDOS. ALL RIGHTS RESERVED. Accessed by Lauren Gualdino (lgualdino@briarcliffmanor.org), (-) Order Number #100880972 on May 08, 2020 07:05 AM (PDT) pursuant to License Agreement with ICC & NYSDOS. No further reproduction, no

100880972

ROOFTOP GARDENS AND LANDSCAPED ROOFS 317, 905.3.8
ROOFTOP HELIPORT (see HELIPORT)
RUBBISH (TRASH) 3304.2
Chutes, automatic sprinkler protection . . . 903.2.11.2
Containers 304.3
Defined 202

S

SAFETY CAN 5003.9.10
Defined 202
SAFETY DATA SHEET (SDS) 5003.4
Aerosols 5101.3
Defined 202
Hazard communication 407.2
SAFETY RULES (Explosives) 5603.7, 5605.6.6
SCISSOR STAIRWAY
Defined 202
Use of 1007.1.1
SCREEN PORCHES AND DECKS 1015.5
SDS (see SAFETY DATA SHEET)
SEAT STABILITY 1029.14
SEATING, FOLDING AND TELESCOPIC . . . 1029.1.1
Defined 202
SECONDARY CONTAINMENT
Above-ground tanks 2306.5
Defined 202
Hazardous materials 5004.2, 5004.2.2, 5005.1.3, 5005.2.1.4, 5005.2.2.4, 5005.3.5, 5005.3.7
Indoor storage 5004.2.2.3
Outdoor storage 5004.2.2.4
Type II dry cleaning systems 2107.2.3
Underground tanks 5003.2.4.1
SECONDARY WATER SUPPLY (see WATER SUPPLY)
SECURITY DEVICES 316.5, 1031.2.1
SEGREGATED
Defined 202
SELF-CLOSING
Defined 202
SELF-LUMINOUS 1013.5, 1025.4
Defined 202
SELF-SERVICE MOTOR FUEL-DISPENSING FACILITY 2304
Defined 202
SEMICONDUCTOR FABRICATION FACILITY . . . . . Chapter 27
Automatic sprinkler system 2703.10
Defined 202
Emergency alarm system 2703.12
Emergency power 1203.2.16, 2703.15
General safety provisions 2703
Manual fire alarm system 2703.11
Quantity limits . . . . . Table 2704.2.2.1
Storage 2704
Transportation and handling 2705.3
Use and handling 2705
SERVICE CORRIDOR 2703.3.8, 2703.9, 2703.12.1.1, 2705.3.3
Defined 202
SERVICE PERSONNEL, CERTIFICATION OF (see CERTIFICATION OF SERVICE PERSONNEL)
SERVICE UTILITIES 110
SHAFTS 701.2, 1103.4
SHAFTWAY MARKINGS 316.2
SHELF STORAGE 3207
Defined 202
Specialty storage 3210
SHOCK PADDING 5003.9.7
SHROUDS, DECORATIVE (on chimneys) . . . 603.6.3
SIGNS (see also PLACARDS; PLACARDING)
Access roads 5604.6.5.1
Alarms and warning 904.3.4, 2507, 2305.6, 2310.5.5.1, 2603.3.1, 5703.5.1
Electrical rooms 604.3.1
Electrostatic apparatus 2407.5.2
Emergency 605.7, 606.3
Exit 1013, 1203.2.5, 3103.12.6
Fire alarm boxes 907.4.2.4
Fire department connection 912.5
Fire protection equipment rooms 509.1
Fire-resistance-rated construction 705.2.2
Foam plastic 808.3
Hazardous identification 5003.5, 5003.6, 5003.11.3.10, 5503.4.1
Illumination 1013.5
Marking 503.3
No smoking 310.3, 2305.6, 2308.8.1.2.6, 2403.2.6, 5003.7.1, 5704.2.3.1
Placards 311.5, 5604.6.5
Removal 310.4
Stairway exit 1013.5, 1013.6.2
Stationary storage battery systems 1206.2
Storage tanks 5704.2.3, 5706.3.7
Street or road 505.2
Vacant buildings 311.5
Welding 2403.2.7
SILANE GAS 6401.1, 6404.2, 6405.3

INTERNATIONAL CODE COUNCIL®
Copyright © 2019 ICC & NYSDOS. ALL RIGHTS RESERVED. Accessed by Lauren Gualdino (lgualdino@briarcliffmanor.org), (-) Order Number #100880972 on May 08, 2020 07:05 AM (PDT) pursuant to License Agreement with ICC & NYSDOS. No further reproduction, no

100880972

SINGLE-STATION SMOKE ALARM 907.2.10, 1103.8
Defined 202
SITE
Defined 202
SITE-FABRICATED STRETCH SYSTEMS 803.10
Defined 202
SKY LANTERNS 308.1.6.3
Defined 202
SLEEPING UNIT
Defined 202
SMALL ARMS AMMUNITION AND SMALL ARMS AMMUNITION COMPONENTS 5606
Defined 202
SMALL ARMS PRIMERS
Defined 202
Group M 5606.5.1.3
Group R-3 . . . . . 5606.4.3
Storage 5606.5.2.3
SMOKE ALARM 907.2.10, 1030.5, 1103.8
Defined 202
Maintenance 907.10
Replacement 907.10
Smoke detection system as alternative to 907.2.10.7
SMOKE AND HEAT VENTS 910, 3206.8
SMOKE BARRIERS
Construction 909.5
Defined 202
Maintenance 701.3, 704.1
Opening protectives in 703.2, 909.5.3
Pressure differential 909.18.6
SMOKE COMPARTMENT
Defined 202
SMOKE CONTROL SYSTEMS 909
SMOKE DAMPER
Defined 202
SMOKE DETECTOR 907.2.10.7, 907.2.12.1.2, 907.3.1,907.2.17.1, 907.4.1, 907.4.3
Defined 202
SMOKE PARTITIONS 701.4
SMOKE REMOVAL 910.4
SMOKE-DEVELOPED INDEX
Defined 202
SMOKELESS PROPELLANTS
Defined 202
General 5606
Storage and handling 5604
SMOKEPROOF ENCLOSURE
Defined 202
SMOKE-PROTECTED ASSEMBLY SEATING 1029.6.2
Defined 202
SMOKING 310, 2003.2, 2006.3.8, 2310.5.5.1, 2403.2.6, 2803.5.3, 2903.7, 3304.1, 3404.3, 5003.7.1, 5704.2.3.1, 5706.6.1.9
Signs 310.3
SOLAR PHOTOVOLTAIC POWER SYSTEMS 1204
SOLID (material state)
Defined 202
SOLID BIOFUEL 2809.4
Defined 202
SOLID BIOMASS FEEDSTOCK 2809.4
Defined 202
SOLID SHELVING
Defined 202
Fire protection 3208.2.2.1
Racks 3208.2.2
SOLVENT DISTILLATION UNIT 5705.4
Defined 202
SOLVENT OR LIQUID CLASSIFICATIONS, DRY CLEANING 2103
Defined 202
SPACE HEATERS 604.10, 3303
SPARKLING DEVICES 5610
SPECIAL AMUSEMENT BUILDING
Defined 202
Exit access travel distance . . . . . Table 1017.2
Fire alarm system 907.2.11, 914.7.2
Sprinklers . . . . . Table 903.2.11.6, 914.7.1
SPECIAL INDUSTRIAL EXPLOSIVE DEVICE 5601.1
Defined 202
SPILL CONTROL
Carts and trucks 5003.10.3.4
Dry cleaning 2107.2.3
Flammable and combustible liquids 5703.4, 5704.3.7.3, 5704.3.8.2, 5704.4.3, 5705.3.7.5.3, 5705.3.7.6.3, 5705.3.8.1, 5706.2.6, 5706.5.1.5
Hazardous materials 5004.2, 5005.1.3, 5005.2.1.3, 5005.2.2.4, 5005.3.4, 5005.3.6
Lead-acid battery systems 1206.2
Service stations and repair garages 2305.3
SPILLS 2004.4, 2006.11, 2310.5.2, 3107.15.5.3, 3305.6
SPONTANEOUS IGNITION HAZARDS 304.3.1, 305.2, 3304.2.4
SPOTTING (see DRY CLEANING)

INTERNATIONAL CODE COUNCIL®
Copyright © 2019 ICC & NYSDOS. ALL RIGHTS RESERVED. Accessed by Lauren Gualdino (lgualdino@briarcliffmanor.org), (-) Order Number #100880972 on May 08, 2020 07:05 AM (PDT) pursuant to License Agreement with ICC & NYSDOS. No further reproduction, no

100880972

SPRAY BOOTH
Areas adjacent to 2403.2.1.3
Construction 2404.3.3
Defined 202
Ventilation 2403.3.5.2
SPRAY FINISHING 2404
SPRAY ROOM
Construction 2404.3.1
Defined 202
Ventilation 2403.3.5.2
SPRAYING SPACE
Defined 202
SPRINKLER SYSTEM
(see AUTOMATIC SPRINKLER SYSTEM)
STAGE CANOPY, TEMPORARY
(see TEMPORARY STAGE CANOPY)
STAGES, FIRE PROTECTION FOR . . . 905.3.4, 914.6
STAIR
Defined 202
STAIRWAY 1011
Defined 202
Identification 1023.8, 1023.9, 1104.21, 1104.24
On flammable and combustible liquid loading racks 5706.5.1.12
On flammable and combustible liquid storage tanks 5704.2.9.4
STAIRWAY, EXTERIOR EXIT 1027
Defined 202
STAIRWAY, SPIRAL 1011.10
Defined 202
STANDBY PERSONNEL
(see also FIRE WATCH) 3107.17
STANDBY POWER SYSTEM 1203, 5005.1.5
Defined 202
STANDPIPE SYSTEM, CLASSES OF
Defined 202
STANDPIPE, TYPES OF
Defined 202
STANDPIPES 905
Buildings under construction/demolition 3313
Dry 905.8
Existing buildings 1103.6, 1103.6.1
Heliports and helistops . . . 905.3.6, 1103.6.2, 2007.5
Landscaped roofs 905.3.8
Rooftop gardens 905.3.8
STATIC PILES (wood products)
Defined 202
Protection 2808.6
STATIC PROTECTION 5706.5.1.7
STATIONARY STORAGE BATTERY SYSTEMS
(see BATTERY SYSTEM, STATIONARY STORAGE)
STEEL
Defined 202
STILLS, DRY CLEANING 2104.2.4, 2107.1
STOP WORK ORDERS 105.4
STORAGE
Aerosol, inside 5104
Ammunition 5606
Attics 315.3.4
Automated 3209
Boiler rooms 315.3.3
Calcium carbide 3507.1
Carousel 3209.3
Combustible fibers, baled 3705
Combustible fibers, detached structure 3704.6
Combustible fibers, loose 3704
Combustible liquids 5704
Combustible materials 315, 2003.6
Compressed gas 5304
Concealed spaces 315.3.4
Corridors and lobbies in Group E 807.5.2.1
Corrosive materials 5404
Cryogenic fluids 5504
Cylinder and container, welding 3505.2
Electrical rooms 315.3.3
Elevator (occupant evacuation) lobbies 606.5
Explosives 5604
Exterior, finished lumber 2809
Fire command centers 315.3.3, 508.1.6
Flammable gases 5804
Flammable liquids 5704
Flammable solids 5904
Foam 5704.2.9.2.2.1
Fuel oil 603.3
Hazardous materials 5004
Hazardous materials storage defined 202
High-piled combustible . . . . . Chapter 32
Hogged material 2807, 2808
Indoor 315
Log areas 2806
Loose combustible fibers 3704
LP-gas 6109
Means of egress 315.3.2, 807.1, 807.5.2.1, 807.5.5.1, 1031.2, 1031.3
Mechanical refrigeration rooms 605.10
Mechanical rooms 315.3.3
Nitrocellulose 2909.4
Organic peroxide 2909.5, 6204
Outside 315.4

INTERNATIONAL CODE COUNCIL®
Copyright © 2019 ICC & NYSDOS. ALL RIGHTS RESERVED. Accessed by Lauren Gualdino (lgualdino@briarcliffmanor.org), (-) Order Number #100880972 on May 08, 2020 07:05 AM (PDT) pursuant to License Agreement with ICC & NYSDOS. No further reproduction, no

100880972

Oxidizers 6304
Plan 5003.11.3.11
Plenums 315.6
Pyrophoric materials 6404
Pyroxylin (cellulose nitrate) plastics 6504
Rack 3208
Semiconductor fabrication facilities 2704
Solid-piled and shelf 3207
Specialty 3210
Tank 2909.2, 5704.2
Tire 3405, 3409
Under floors 315.3.4
Under high-voltage transmission lines 315.5
Unstable (reactive) materials 6604
Water-reactive solids and liquids 6704
Wood chips 2807, 2808

STORAGE BATTERY SYSTEMS, STATIONARY 1206.2
Room design 1205.6.2
Signs 1206.2.8.6
Ventilation 1206.2.11.3

STORY
Defined 202

STORY ABOVE GRADE PLANE
Defined 202

STRAW 3107.2, 3709.4
Waste material 304.1.1

SUB-ATMOSPHERIC PRESSURE GAS SYSTEMS (SAGS) 2703.16

SUGARHOUSE ALTERNATIVE ACTIVITY PROVISIONS . . . . . Chapter 40

SUMPS 5706.3.3

SUPERVISING STATION 903.4.1, 905.9
Defined 202

SUPERVISION 903.3.8.4, 903.4, 904.11.2, 905.9, 913.4

SUPERVISORY SERVICE
Defined 202

SUPERVISORY SIGNAL 903.4.1, 905.9
Defined 202

SUPERVISORY SIGNAL-INITIATING DEVICE
Defined 202

SYSTEM (hazardous materials)
Defined 202

T

TAGS 901.7.2, 901.7.3, 901.8.1, 904.9.2

TANK
Abandonment of 5704.2.13, 5704.2.13.1.4
Above-ground 2306.2.2, 2306.2.3, 2306.2.4, 5404.2.1, 5003.2.4.2, 5704.2.7.3.5.1, 5704.2.9, 5704.2.13.2
Anchoring 5704.2.8.5
Capacity 2305.1.2
Capacity, available 5704.2.9.7.5.2
Compressed gas 5303.1, 5303.4.2
Construction 5704.2.9.6.1
Cooking oil storage 608
Defective 5003.2.6.2
Defined 202
Design and construction 5003.2.1, 5704.2.7, 5704.2.9.6.1
Diking 5704.2.10.2
Discharge 5704.2.7.5.5.2
Dispensing 5706.2.8, 5706.5.4
Drainage control 2306.5
Empty 5003.2.5, 5704.3.3.4, 5704.4.8
Filling operations 2305.1, 5706.6.1.10
Fill pipe connections 5704.2.9.7.6
Hot work on 3510, 5704.2.7.6
Inside buildings 2306.2.2, 5704.2.9.5
Installation 5003.2.4, 5704.2.7
Lining 5704.2.7.11
Low-pressure 202
Maintenance 2903.9
Manifolding 5704.2.7.3.5
Marking 5706.2.2
Openings 2306.6.2.1, 5704.2.7.5, 5704.2.9.7.8
Out of service 5003.2.6.1, 5704.2.13.1.1
Outside buildings 5704.2.9.6
Overfill protection 5704.2.7.5.8, 5704.2.9.7.6, 5704.2.11.3, 5706.4.6, 5706.6.1.5, 5706.8.3, 5706.8.5, 5806.4.7
Permanent and temporary 5706.2.4
Piping 2306.6.3
Piping, valves and fittings 2306.6.2
Portable 2306.2.5, 5704.3
Preparation for fueling 2310.5.6
Pressure 2409.3, 5704.2.7.2
Primary 202
Protected above-ground (see above-ground)
Removal 5704.2.14
Repair, alteration or reconstruction 5704.2.7.6
Secondary containment 5704.2.9.7.3
Security 2306.3
Solvent storage 2107.3
Stationary 6004.2.2.7.4
Storage 2909.2, 5704, 5706.3.1.1, 5706.3.5

INTERNATIONAL CODE COUNCIL®
Copyright © 2019 ICC & NYSDOS. ALL RIGHTS RESERVED. Accessed by Lauren Gualdino (lgualdino@briarcliffmanor.org), (-) Order Number #100880972 on May 08, 2020 07:05 AM (PDT) pursuant to License Agreement with ICC & NYSDOS. No further reproduction, no

100880972

Testing 5704.2.12
Underground. 2306.2.1, 5003.2.4.1, 5704.2.7.3.5.2, 5704.2.11, 5704.2.13.1
Vaults 2306.2.4, 5704.2.8
Vehicle 2909.3, 5706.5.1.15, 5706.5.1.16, 5706.6
Venting 5704.2.7.3, 5706.2.4.2
Water 507.2.2, 507.5.3

TANK, ATMOSPHERIC
Defined 202

TANK, PORTABLE
Defined 202

TANK, PRIMARY
Defined 202

TANK, PROTECTED ABOVE-GROUND
Defined 202

TANK, STATIONARY
Defined 202

TANK CARS (see also BULK TRANSFER) 5706.5.1
Loading racks or stations 2909.3, 5706.5.1.12
Use as storage tank 5704.2.2

TANK VEHICLE 2904.3.2, 5706.5.1.16.1, 5706.6
Aircraft fuel-servicing 2005.4
Certification. 5706.5.1.15
Construction 5003.2.1
Defined 202
Dispensing from 5706.2.8, 5706.5.4
Fire protection. 5706.6.4
Garaging. 5706.6.3, 6111.3
Loading racks or stations 2909.3
Operation 5706.6.1
Parking 5706.6.3, 6111
Smoking 5706.6.1.9
Stability. 5706.5.1.16
Use as storage tank 5704.2.2

TAR KETTLE [see ASPHALT (TAR) KETTLES]

TELEPHONE DIALING-DEVICES, AUTOMATIC 907.6.6.1

TEMPORARY HEATING EQUIPMENT ...604.10, 3303

TEMPORARY SPECIAL EVENT STRUCTURES. 3105
Defined 202

TEMPORARY WIRING 604.9, 3304.7

TENANT IDENTIFICATION (see COVERED AND OPEN MALL BUILDINGS)

TENANT SPACES, VACANT (see VACANT PREMISES)

TENTS AND OTHER MEMBRANE STRUCTURES. . . . . Chapter 31
Access 3103.8.1
Air-inflated structure 3102.1
Air-supported structure 3102.1, 3103.10
Approval 3103.2
Crowd managers. 3106.4.3, 3107.17.2
Defined 202
Fire safety requirements 3104.2
Generators 3106.6.2, 3107.16
Heating and cooking equipment 3107.12, 3107.12.7
Location 3105.8
LP-gas. 3107.13
Means of egress 3103.12
Occupant load. 3107.11
On buildings 3103.8.4
Operational requirements 3107
Portable fire extinguisher 3105.9, 3106.4.4, 3106.5.2, 3106.6.3, 3107.9
Seating 3103.11
Structural stability 3103.9
Umbrella structures. 202
Waste 3107.19

TESTING, ACCEPTANCE (see ACCEPTANCE TESTING)

THEFT RESISTANT 5604.5.1.2
Defined 202

TIMBER AND LUMBER PRODUCTION FACILITIES 2807
Defined 202

TIRE REBUILDING 3403
Precautions against fire 3404

TIRE STORAGE . . . . . Chapter 34
Access 3406
Fencing 3407
Indoor 3409
Outdoor. 3405
Precautions against fire 3404

TIRES, BULK STORAGE OF
Defined 202

TOOL (semiconductor fabrication)
Defined 202

TORCH-APPLIED ROOF SYSTEM
Defined 202

TORCHES 308.4

TOWNHOUSE
Defined 202

TOXIC
Defined 202
Materials (see Highly toxic and toxic materials)

TRADE-OFFS FOR SPRINKLERS 904.2.1

TRAFFIC CALMING DEVICES 503.4.1
Defined 202

TRAINING, EMPLOYEE EMERGENCY 406

TRANSIENT
Defined 202

INTERNATIONAL CODE COUNCIL®
Copyright © 2019 ICC & NYSDOS. ALL RIGHTS RESERVED. Accessed by Lauren Gualdino (lgualdino@briarcliffmanor.org), (-) Order Number #100880972 on May 08, 2020 07:05 AM (PDT) pursuant to License Agreement with ICC & NYSDOS. No further reproduction, no

100880972

TRANSIENT AIRCRAFT 914.8.3
Defined 202
TRANSPORTATION
Hazardous materials 2705.3, 5003.10
LP-gas 6101.1
TRANSVERSE FLUE SPACE (see FLUE SPACES)
TRASH (see RUBBISH)
TRAVEL DISTANCE, EXIT ACCESS 1016
TREATMENT SYSTEMS 605.12.5, 2703.14.3, 6003.1.3, 6003.2.3.2, 6004.2.2.7, 6004.3.4.1
TREES (see NATURAL CUT TREES)
TROUBLE SIGNAL 903.4.1, 906.2, 916.5, 2311.8.9.2, 3905.1.4, 5808.5.2
Defined 202
TUBE TRAILERS 5303.7.11
Defined 202
TURNSTILES 1010
TWENTY-FOUR HOUR BASIS
Defined 202

U

UMBRELLA STRUCTURE DEFINED 202
UNAUTHORIZED DISCHARGE . . . 5003.3.1, 5706.2.8
Defined 202
UNDERGROUND BUILDINGS . . . . . 403.11.3, 905.3.5, 907.2.17, 907.2.18, 914.5, Table 1103.1, 1203.2.18
UNOCCUPIED TENANT SPACE 311.6
UNSAFE BUILDINGS (see BUILDING)
UNSAFE HEATING APPLIANCES 603.7
UNSTABLE (REACTIVE) MATERIAL . . . . Chapter 66
Defined 202
Indoor storage 6604.1
Outdoor storage 6604.2
Requirements 6603
Use 6605.1
UNVENTED HEATERS 603.4
UNWANTED FIRE
Defined 202
Ignitions 305.5
Reporting 401.3, 3309
UPHOLSTERED FURNITURE (see FURNITURE, UPHOLSTERED)
USE (MATERIAL)
Defined 202
USE, CHANGE OF (see CHANGE OF USE)
UTILITY IDENTIFICATION 509.1.1

V

VACANT PREMISES 311
Fire protection systems 311.2.2
Placarding 311.5
Removal of hazardous materials 311.4
Safeguarding 311.2
Tenant spaces 311.1.2, 311.6, 403.11.1.6
Waste removal 311.3
VAPOR AREA, FLAMMABLE
Defined 202
VAPOR BALANCE SYSTEM 2306.7.9.1
VAPOR PRESSURE
Defined 202
VAPOR-PROCESSING SYSTEM 2306.7.9.2, 5706.8
VAPOR-RECOVERY SYSTEM 2306.7.9, 5706.8
VEHICLE IMPACT PROTECTION (see IMPACT PROTECTION, VEHICLE)
VEHICLES 314.4
Compressed natural gas powered 2308
Gas-fueled 3107.15
Industrial 6103.2.2
Liquid-fueled 3107.15
LP-gas-powered 2307
Overfilling 2307.7
Storage of, in buildings 313.2
Tank 2909.3, 5704.2.2, 5706.5.1.15, 5706.5.1.16, 5706.6
VENTILATION
Battery systems 1206.2.11.3
Defined 202
Dry cleaning 2104.2.1, 2105.2.3, 2106.3.3
Electrostatic equipment 2406.7
Exhaust 2703.14, 2703.15.2
Floor surfacing 2410.5
Hazardous materials 5003.8.4.2, 5003.8.5.2, 5003.8.6.2, 5005.2.1.1, 5005.2.2.1
Indoor dispensing 5005.1.9
Indoor storage areas 5004.3
Industrial ovens 3003.1
Powered industrial trucks 309.4
Process structures 2905.5
Refrigeration machinery room 605.13
Reinforced plastics manufacturing 2409.6
Repair garages 2311.4.3, 2311.8.8
Spray finishing 2404.7, 2404.7.4, 2404.9.3, 2406.7
VENTS, SMOKE AND HEAT (see SMOKE AND HEAT VENTS)
VIOLATIONS 105.7

INTERNATIONAL CODE COUNCIL®
Copyright © 2019 ICC & NYSDOS. ALL RIGHTS RESERVED. Accessed by Lauren Gualdino (lgualdino@briarcliffmanor.org), (-) Order Number #100880972 on May 08, 2020 07:05 AM (PDT) pursuant to License Agreement with ICC & NYSDOS. No further reproduction, no

100880972

VISIBLE ALARM NOTIFICATION APPLIANCE 907.5.2.3
Defined 202

W

WAREHOUSE
Aerosol . . . . . 5102.1, 5104.3, Table 5104.3.2, 5104.4
Liquid . . . . . 5104.6, Table 5704.3.6(2), Table 5704.3.6.3(3), 5704.3.8, 5704.3.8.5
WARNING SIGNS
Compressed gas vaults 5303.16.13
Explosives 5604.10.5, 5605.8.2
Fire-extinguishing systems 904.3.4
Flammable and combustible liquid vaults 5704.2.8.15
Flammable finish operations 2403.2.7
Flammable liquids storage 5703.5
Fruit and crop ripening 2507
Fuel dispensing 2305.6
Fumigation and insecticidal fogging 2603.3.1
Hazard communication (haz-mat) 407.3, 5003.5
Oxygen in home health care 6306.6
Shaftways 316.2.1, 316.2.2
WASTE MATERIALS, COMBUSTIBLE 304, 3304.2
WASTE OIL 603.1.4, 2311.2.2
WASTEBASKETS AND WASTE CONTAINERS 304.3, 808.1, 3304.2.3
WATCH, FIRE (see FIRE WATCH)
WATER MIST SYSTEM (see AUTOMATIC WATER MIST SYSTEM)
WATER SUPPLY
Buildings under construction or demolition, standpipes 3313
Fire protection 507, 3312
Required 507.1
Secondary for high-rise 914.3.2
Sprinklers 903.3.5
Standpipes 3313
Test 507.4
WATER-REACTIVE MATERIAL . . . . . Chapter 67
Defined 202
Indoor storage 6704.1
Outdoor storage 6704.2
Requirements 6703
Use 6705
WEATHER PROTECTION 5004.13, 5005.3.9, 5608.5.2, 5704.4.7, 5705.3.8.4, 5706.5.1.2, 6003.2.5, 6004.3.3, 6404.2.2, 6405.2
WELDING AND OTHER HOT WORK . . . . . Chapter 35
Cutting 3505
Defined 202
Electric arc 3506
Flammable and combustible liquid tanks 3504.1.7, 3510, 5704.2.7.6
Gas 3505
Requirements 3503, 3504
Tire storage yards 3404.2
Warning signs in flammable finish operations 2403.2.7
WELL DRILLING 5706.3
WET FUELING (see MOBILE FUELING)
WET HOSING (see MOBILE FUELING)
WET-CHEMICAL EXTINGUISHING AGENT . . . 904.5
Defined 202
WHARVES 2310.3.1, 2310.5.5, 5706.4.7
WILDFIRE RISK AREA 308.1.6, 308.2
Defined 202
WINDER 1011.5.3, 1011.9
Defined 202
WINDOW WELLS 1030.4
WINDOWLESS STORIES OR AREAS 903.2.11.1
WIRELESS PROTECTION SYSTEM 907.6.1
Defined 202
WIRING, ELECTRICAL
Abandoned in plenums 604.11
Hazards 604
WOOD PRODUCTS 2807, 2808
WOOD VENEERS 803.12
WOODWORKING FACILITIES (see LUMBER YARDS AND WOODWORKING FACILITIES) 903.2.4.1
WORKSTATION (semiconductor manufacturing)
Defined 202

Y

YARD
Defined 202

Z

ZONE, FIRE ALARM 907.6.3
Defined 202
ZONE, NOTIFICATION
Defined 202
ZONING INDICATOR PANEL 907.6.4.1

INTERNATIONAL CODE COUNCIL®
Copyright © 2019 ICC & NYSDOS. ALL RIGHTS RESERVED. Accessed by Lauren Gualdino (lgualdino@briarcliffmanor.org), (-) Order Number #100880972 on May 08, 2020 07:05 AM (PDT) pursuant to License Agreement with ICC & NYSDOS. No further reproduction, no

100880972

INTERNATIONAL CODE COUNCIL®
Copyright © 2019 ICC & NYSDOS. ALL RIGHTS RESERVED. Accessed by Lauren Gualdino (lgualdino@briarcliffmanor.org), (-) Order Number #100880972 on May 08, 2020 07:05 AM (PDT) pursuant to License Agreement with ICC & NYSDOS. No further reproduction, no

INTERNATIONAL CODE COUNCIL®

People Helping People Build a Safer World®









Helpful tools for Your Fire Code

a. Fire Inspector's Guide: Based on the 2018 International Fire Code®

Your ideal pocket-sized resource for effective, accurate, consistent, and complete fire inspections.

- Learn the most important and most relevant fire-inspection information from the fire code.
- Quickly identify the relevant IFC section for each topic listed.
- Increase the efficiency of fire inspections based on an occupancy-specific format.
- Become aware of common hazards and the most frequently violated safety issues for various uses.
- Increase fire inspection effectiveness by focusing on the most relevant issues.
- Increase fire inspection consistency based on a common listing of important subjects.

SOFT COVER #4401S18
PDF DOWNLOAD #8748P18

b. Fire Code Essentials: Based on the 2018 IFC®

Explores those code provisions essential to understanding the application of the IFC in a straightforward and easy-to-read format. The user-friendly approach of the text simplifies critical concepts so that users can achieve a more complete understanding of the code's intent. Full-color illustrations, examples and simplified tables assist the reader in visualizing the code requirements. This up-to-date, step-by-step guide's topic organization reflects the intent of the IFC and facilitates understanding and application of the code provisions.

SOFT COVER #4431S18
PDF DOWNLOAD #8951P012

c. 2018 International Fire Code® Study Companion

A comprehensive self-study guide for the requirements of the 2018 IFC. It addresses occupancy classification, types of construction, fire protection systems, fire-resistance-rated construction, means of egress, and more. The Companion's 19 study sessions contain practical learning assignments, specific learning objectives, applicable code text and commentary. Helpful quizzes are provided at the end of each study session with 665 total questions.

SOFT COVER #4407S18
PDF DOWNLOAD #8950P834

d. 2018 IFC® Code and Commentary

This helpful tool contains the full text of 2018 IFC, including tables and figures, followed by corresponding commentary at the end of each section to help code users understand the intent of the code provisions and learn how to apply them effectively.

SOFT COVER #3410S18
PDF DOWNLOAD #874P18
SOFT + PDF COMBO #3410SP18

Turbo Tabs for 2018 International Fire Code

Flip right to the most commonly used sections of the code! Full-page inserts feature key sections of the code printed on the tabs in an easy-to-read format.

#0401TL18

19-17989

Order Your Fire Code Tools Today! 1-800-786-4452 | www.iccsafe.org/books

This insert is not part of the official text of the New York State Uniform Fire Prevention and Building Code or New York State Energy Conservation Construction Code.

INTERNATIONAL CODE COUNCIL®

Copyright © 2019 ICC & NYSDOS. ALL RIGHTS RESERVED. Accessed by Lauren Gualdino (lgualdino@briarcliffmanor.org), (-) Order Number #100880972 on May 08, 2020 07:05 AM (PDT) pursuant to License Agreement with ICC & NYSDOS. No further reproduction, no

100880972



ICC INTERNATIONAL CODE COUNCIL®

People Helping People Build a Safer World®

Get FREE access to hundreds of ICC resources and view the largest collection of code titles

ICC's Digital Codes Library (codes.iccsafe.org) conveniently provides access to the latest code text while on the go, at home or in the office, in an easy-to-navigate format.



Available anywhere 24/7

Use on any mobile or digital device

View over 800+ ICC titles

19-17447

Learn how to use this powerful tool at *codes.iccsafe.org*

This insert is not part of the official text of the New York State Uniform Fire Prevention and Building Code or New York State Energy Conservation Construction Code.

INTERNATIONAL CODE COUNCIL®

Copyright © 2019 ICC & NYSDOS. ALL RIGHTS RESERVED. Accessed by Lauren Gualdino (lgualdino@briarcliffmanor.org), (-) Order Number #100880972 on May 08, 2020 07:05 AM (PDT) pursuant to License Agreement with ICC & NYSDOS. No further reproduction, no

100880972

ICC Membership

An Essential Tool to advance your Building Safety Career!

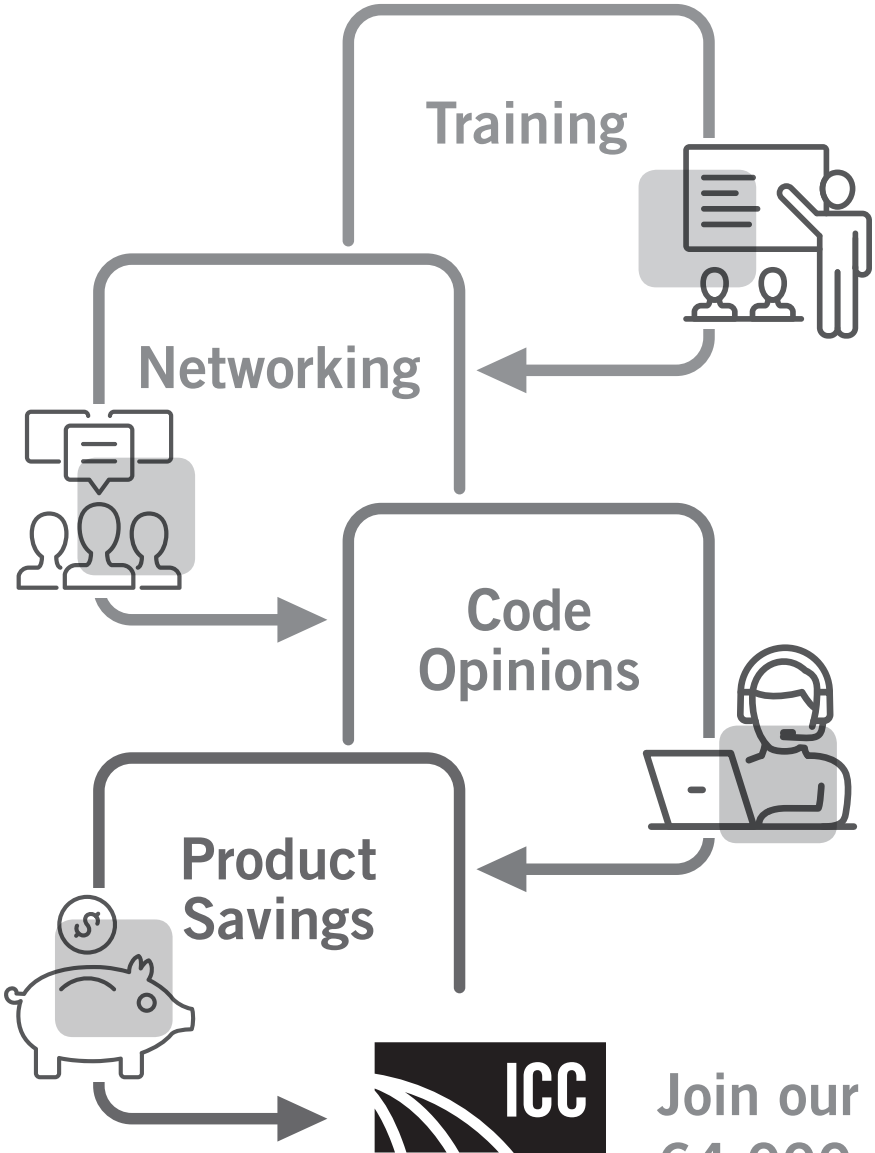

ICC
INTERNATIONAL CODE COUNCIL®

Join our 64,000+ members today!

Put the benefits of ICC Membership to work for you and your career!

Visit **www.iccsafe.org/memnow** or
call **1-888-ICC-SAFE (422-7233), ext. 33804** to learn more.

19-17662

This insert is not part of the official text of the New York State Uniform Fire Prevention and Building Code or New York State Energy Conservation Construction Code.

INTERNATIONAL CODE COUNCIL®

Copyright © 2019 ICC & NYSDOS. ALL RIGHTS RESERVED. Accessed by Lauren Gualdino (lgualdino@briarcliffmanor.org),(-) Order Number #100880972 on May 08, 2020 07:05 AM (PDT) pursuant to License Agreement with ICC & NYSDOS. No further reproduction, no



The ICC Assessment Center (formerly known as ICC Certification & Testing) provides nationally recognized credentials that demonstrate a confirmed commitment to protect public health, safety, and welfare. Raise the professionalism of your department and further your career by pursuing an ICC Certification.

ICC Certifications offer:

- Nationwide recognition
- Increased earning potential
- Career advancement
- Superior knowledge
- Validation of your expertise
- Personal and professional satisfaction

Exams are developed and maintained to the highest standards, which includes continuous peer review by national committees of experienced, practicing professionals. ICC is continually evolving exam offerings, testing options, and technology to ensure that all building and fire safety officials have access to the tools and resources needed to advance in today's fast-paced and rapidly-changing world.

Enhancing Exam Options

Effective July 2018, the Assessment Center enhanced and streamlined exam options and now offers only computer based testing (CBT) at a test site and PRONTO. We no longer offer paper/pencil exams.

Proctored Remote Online Testing Option (PRONTO)

Taking your next ICC certification exam is more convenient, more comfortable and more efficient than ever before with PRONTO.

PRONTO provides a convenient testing experience that is accessible 24 hours a day, 7 days a week, 365 days a year. Required hardware/software is minimal – you will need a webcam and microphone, as well as a reasonably recent operating system.

pronto
ICC ONLINE EXAMS

Whether testing in your office or in the comfort of your home, your ICC exam will continue to maintain its credibility while offering more convenience, allowing you to focus on achieving your professional goals. The Assessment Center continues to add exams to the PRONTO exam catalog regularly.

18-15617

Checkout all the ICC Assessment Center has to offer at iccsafe.org/certification

This insert is not part of the official text of the New York State Uniform Fire Prevention and Building Code or New York State Energy Conservation Construction Code.

INTERNATIONAL CODE COUNCIL®

Copyright © 2019 ICC & NYSDOS. ALL RIGHTS RESERVED. Accessed by Lauren Gualdino (lgualdino@briarcliffmanor.org), (-) Order Number #100880972 on May 08, 2020 07:05 AM (PDT) pursuant to License Agreement with ICC & NYSDOS. No further reproduction, no

100880972

ANDREW M. CUOMO GOVERNOR
ROSSANA ROSADO SECRETARY OF STATE



2020 ENERGY CONSERVATION CONSTRUCTION CODE of NEW YORK STATE

NEW YORK STATE OF OPPORTUNITY.

Building Standards and Codes

ICC INTERNATIONAL CODE COUNCIL®

INTERNATIONAL CODE COUNCIL®

Copyright © 2019 ICC & NYSDOS. ALL RIGHTS RESERVED. Accessed by Lauren Gualdino (lgualdino@briarcliffmanor.org), (-) Order Number #100880972 on May 08, 2020 07:05 AM (PDT) pursuant to License Agreement with ICC & NYSDOS. No further reproduction, no

100880972

ANDREW M. CUOMO GOVERNOR
ROSSANA ROSADO SECRETARY OF STATE

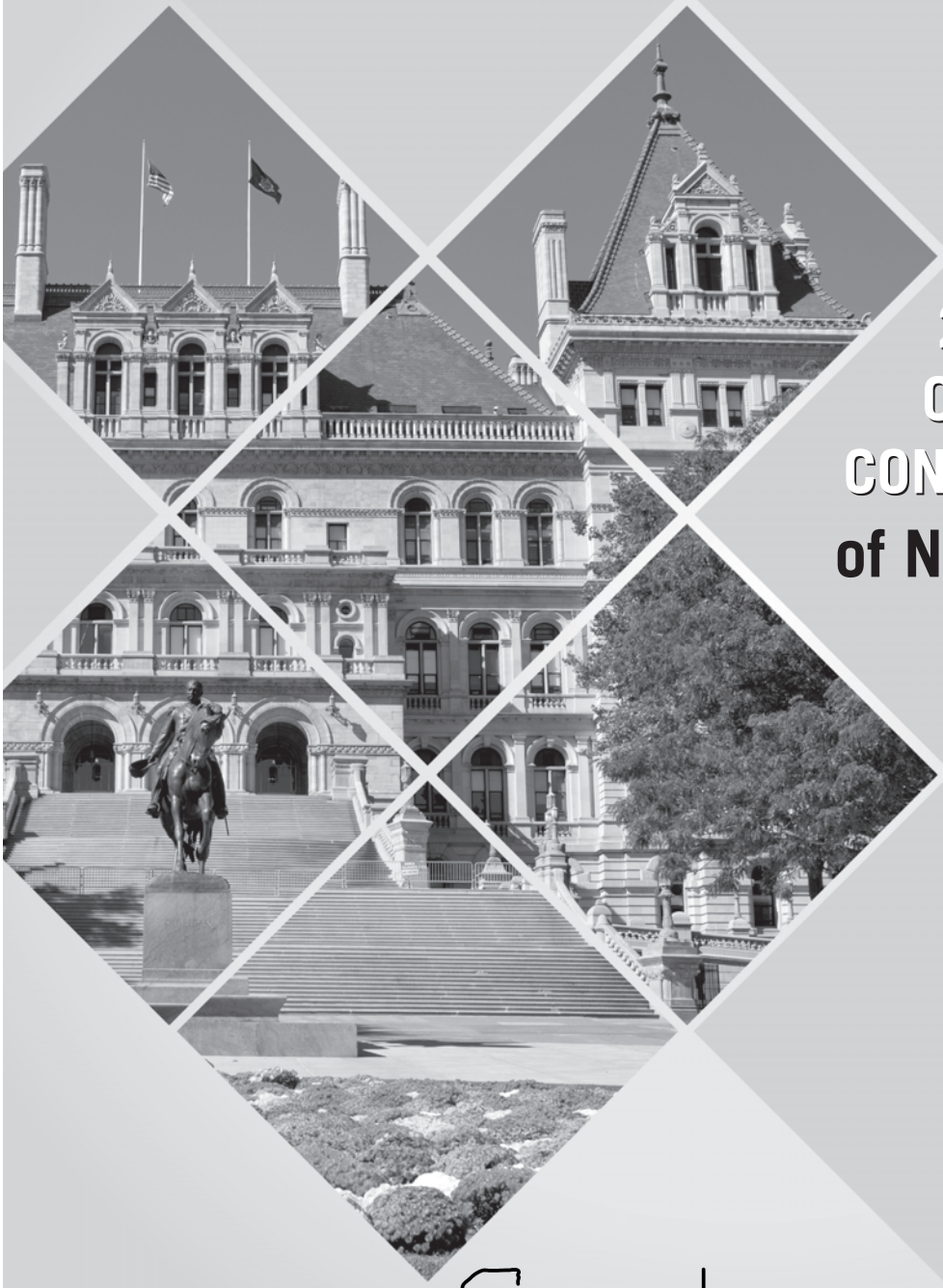

2020 ENERGY CONSERVATION CONSTRUCTION CODE of NEW YORK STATE

NEW YORK STATE OF OPPORTUNITY.

Building Standards and Codes

ICC INTERNATIONAL CODE COUNCIL®

INTERNATIONAL CODE COUNCIL®

Copyright © 2019 ICC & NYSDOS. ALL RIGHTS RESERVED. Accessed by Lauren Gualdino (lgualdino@briarcliffmanor.org), (-) Order Number #100880972 on May 08, 2020 07:05 AM (PDT) pursuant to License Agreement with ICC & NYSDOS. No further reproduction, no

100880972

2020 Energy Conservation Construction Code of New York State

Publication Date: November 2019

ISBN: 978-1-60983-942-0

COPYRIGHT © 2019
by
INTERNATIONAL CODE COUNCIL, INC.
and
NEW YORK STATE DEPARTMENT OF STATE

ALL RIGHTS RESERVED. This 2020 *Energy Conservation Construction Code of New York State* is a copyrighted work owned by the International Code Council, Inc. ("ICC"). This work contains: (1) portions of the ICC International Codes® (I-Codes®); (2) material that is a derivative of the I-Codes; and (3) wholly original materials prepared by the New York State Department of State (NYSDOS) or by the New York State Fire Prevention and Building Code Council (the "Code Council"). The International Code Council, Inc., has copyright ownership of the I-Codes. The International Code Council and the New York State Department of State have joint copyright ownership of the material that is a derivative of the I-Codes. The New York State Department of State has copyright ownership of the wholly original materials prepared by the New York State Department of State and/or by the Code Council. As to the ICC International Codes, all rights, including the right of reproduction in whole or in part in any form, are reserved to the International Code Council. As to the material that is derivative of the I-Codes, all rights, including the right of reproduction in whole or in part in any form, are reserved to the International Code Council and the New York State Department of State, jointly. As to the wholly original materials prepared by the New York State Department of State or by the Code Council, all rights, including the right of reproduction in whole or in part in any form, are reserved to the New York State Department of State. Without advance written permission from the copyright owner, no part of this book may be reproduced, distributed or transmitted in any form or by any means, including, without limitation, electronic, optical or mechanical means (by way of example, and not limitation, photocopying or recording by or in an information storage retrieval system). For information on use rights and permissions, please contact: ICC Publications, 4051 Flossmoor Road, Country Club Hills, IL 60478. Phone 1-888-ICC-SAFE (422-7233).

Trademarks: "International Code Council," the "International Code Council" logo, "ICC," the "ICC" logo, "International Energy Conservation Code," "IECC" and other names and trademarks appearing in this book are registered trademarks of the International Code Council, Inc., and/or its licensors (as applicable), and may not be used without permission.

T024581

PRINTED IN THE USA

INTERNATIONAL CODE COUNCIL®

Copyright © 2019 ICC & NYSDOS. ALL RIGHTS RESERVED. Accessed by Lauren Gualdino (lgualdino@briarcliffmanor.org), (-) Order Number #100880972 on May 08, 2020 07:05 AM (PDT) pursuant to License Agreement with ICC & NYSDOS. No further reproduction, no

100880972

ACKNOWLEDGMENTS

With gratitude, the Department of State acknowledges the contributions of the following individuals in the creation of the 2020 Codes of New York State:

STATE FIRE PREVENTION AND BUILDING CODE COUNCIL

Rossana Rosado	Chair – Secretary of State, New York State Department of State Designee - Matthew W. Tebo, Esq.
Francis J. Nerney, Jr.	State Fire Administrator, Office of Fire Prevention and Control Designee - Paul Martin
RuthAnne Visnauskas	Commissioner, Division of Housing and Community Renewal Designee - Michael Weber Designee - Joseph Palozzola
Roberta Reardon	Commissioner, New York State Department of Labor Designee - Vincent R. Rapacciuolo
Honorable Bill de Blasio	Mayor, City of New York Designee - Keith Wen, NYC Department of Buildings
Honorable Michael R. Sabatino, Jr.	Councilmember, City of Yonkers
Claudia K. Braymer, Esq.	County Board of Supervisors, Warren County
David A. Seeley	Supervisor, Town of Irondequoit
Timothy DeRuyscher, P.E. FSFPE	Professional Engineer Representative
Patrick Dolan	Trade Union Representative, Steamfitters Union, 638
Shawn Hamlin, R.A.	Registered Architect Representative, Hamlin Design Group
Robert Hughes	Code Enforcement Representative, Village of Pleasantville
Dominic Marinelli	Persons with Disabilities Representative, United Spinal Association
Joseph J. Toomey	Fire Service Representative, Albany Fire Department
William W. Tuyn	Builders Representative, Forbes Capretto Homes

DEPARTMENT OF STATE

Rossana Rosado	Secretary of State
Brendan Hughes	Executive Deputy Secretary of State
James W. Leary, Esq.	Assistant Executive Deputy Secretary of State
Mark P. Pattison	Deputy Secretary of State for Local Government
Matthew W. Tebo, Esq.	Deputy Secretary of State for Agency Transformation and External Affairs
John R. Addario, P.E.	Director of the Division of Building Standards and Codes
Brian Tollisen, P.E.	Deputy Director of the Division of Building Standards and Codes
Gerard A. Hathaway, R.A.	Assistant Director for Code Development
Kevin Duerr-Clark, P.E.	Assistant Director for Technical Support
Francis “Nick” McAndrew, P.E.	Assistant Director for Educational Services
Joseph Hill, R.A.	Assistant Director for Code Administration
Jeffrey M. Hinderliter, P.E.	Professional Engineer
Emma Gonzalez-Laders, R.A., LEED AP	Senior Architect
Daniel Carroll	Code Compliance Specialist I
Janet Miller	Program Aide
Joseph P. Ball, Esq.	Supervising Attorney
Panagiota K. Hyde, Esq.	Senior Attorney

IN MEMORIAM

John H. Flanagan	Code Enforcement Representative, Code Council Member (2003–2017)
Honorable Judith Kennedy	Mayor, City of Newburgh, Code Council Member (2013–2018)
Brendan Fitzgerald	Executive Deputy Secretary of State (2016–2018)

INTERNATIONAL CODE COUNCIL®
Copyright © 2019 ICC & NYSDOS. ALL RIGHTS RESERVED. Accessed by Lauren Gualdino (lgualdino@briarcliffmanor.org), (-) Order Number #100880972 on May 08, 2020 07:05 AM (PDT) pursuant to License Agreement with ICC & NYSDOS. No further reproduction, no

100880972

INTERNATIONAL CODE COUNCIL®
Copyright © 2019 ICC & NYSDOS. ALL RIGHTS RESERVED. Accessed by Lauren Gualdino (lgualdino@briarcliffmanor.org), (-) Order Number #100880972 on May 08, 2020 07:05 AM (PDT) pursuant to License Agreement with ICC & NYSDOS. No further reproduction, no

100880972

PREFACE

Introduction

The *Energy Conservation Construction Code of New York State* (ECCCNYS) establishes minimum requirements for energy-efficient buildings using prescriptive and performance-related provisions. It is founded on broad-based principles that make possible the use of new materials and new energy-efficient designs. This 2020 edition was developed as a derivative work of the 2018 edition of the *International Energy Conservation Code®* (IECC®) published by the International Code Council® (ICC®).

This code contains separate provisions for commercial buildings and for low-rise residential buildings (3 stories or less in height above grade). Each set of provisions, IECC—Commercial Provisions and IECC—Residential Provisions, is separately applied to buildings within its respective scope. Each set of provisions is to be treated separately. Each contains a Scope and Administration chapter, a Definitions chapter, a General Requirements chapter, a chapter containing energy efficiency requirements and existing building provisions applicable to buildings within its scope.

Intention

This code is founded on principles intended to establish provisions consistent with the scope of an energy conservation code that adequately conserves energy; provisions that do not unnecessarily increase construction costs; provisions that do not restrict the use of new materials, products or methods of construction; and provisions that do not give preferential treatment to particular types or classes of materials, products or methods of construction.

Letter Designations in Front of Section Numbers

The bracketed letter designations for the party responsible for portions of this code are as follows:

ICC Code Development Committee

[CE] = International Commercial Energy Conservation Code Development Committee

[RE] = International Residential Energy Conservation Code Development Committee

New York State Code Development

[NY] = New York State Department of State

Marginal Markings

Solid vertical lines in the margins within the body of the code indicate a technical change from the requirements of the 2015 edition of the I-Codes®. Deletion indicators in the form of an arrow (➡) are provided in the margin where an entire section, paragraph, exception or table has been deleted or an item in a list of items or a table has been deleted.

Italicized Terms

Selected words and terms defined in Chapter 2, Definitions, are italicized where they appear in code text and the Chapter 2 definition applies. Where such words and terms are not italicized, common-use definitions apply. The words and terms selected have code-specific definitions that the user should read carefully to facilitate better understanding of the code.

INTERNATIONAL CODE COUNCIL®
Copyright © 2019 ICC & NYSDOS. ALL RIGHTS RESERVED. Accessed by Lauren Gualdino (lgualdino@briarcliffmanor.org), (-) Order Number #100880972 on May 08, 2020 07:05 AM (PDT) pursuant to License Agreement with ICC & NYSDOS. No further reproduction, no

100880972

INTERNATIONAL CODE COUNCIL®

Copyright © 2019 ICC & NYSDOS. ALL RIGHTS RESERVED. Accessed by Lauren Gualdino (lgualdino@briarcliffmanor.org), (-) Order Number #100880972 on May 08, 2020 07:05 AM (PDT) pursuant to License Agreement with ICC & NYSDOS. No further reproduction, no

100880972

EFFECTIVE USE OF THE ENERGY CONSERVATION CONSTRUCTION CODE OF NEW YORK STATE

The *Energy Conservation Construction Code of New York State* (ECCCNYS) is a code that regulates minimum energy conservation requirements for new buildings. The ECCCNYS addresses energy conservation requirements for all aspects of energy uses in both commercial and residential construction, including heating and ventilating, lighting, water heating, and power usage for appliances and building systems.

The ECCCNYS is a design document. For example, before one constructs a building, the designer must determine the minimum insulation *R*-values and fenestration *U*-factors for the building exterior envelope. Depending on whether the building is for residential use or for commercial use, the ECCCNYS sets forth minimum requirements for exterior envelope insulation, window and door *U*-factors and SHGC ratings, duct insulation, lighting and power efficiency, and water distribution insulation.

Arrangement and Format of the 2020 ECCCNYS

The ECCCNYS contains two separate sets of provisions—one for commercial buildings and one for residential buildings. Each set of provisions is applied separately to buildings within their scope. The ECCCNYS—Commercial Provisions apply to all buildings except for residential buildings three stories or less in height. The ECCCNYS—Residential Provisions apply to detached one- and two-family dwellings and multiple single-family dwellings as well as *Group R*-2, R-3 and R-4 buildings three stories or less in height. These scopes are based on the definitions of "Commercial building" and "Residential building," respectively, in Chapter 2 of each set of provisions. Note that the ECCCNYS—Commercial Provisions therefore contain provisions for residential buildings four stories or greater in height. Each set of provisions is divided into five different parts:

Chapters	Subjects
1–2	Administration and definitions
3	Climate zones and general materials requirements
4	Energy efficiency requirements
5	Existing buildings
6	Referenced standards

The following is a chapter-by-chapter synopsis of the scope and intent of the provisions of the *Energy Conservation Construction Code of New York State* and applies to both the commercial and residential energy provisions:

Chapter 1 Scope and Administration. This chapter contains provisions for the application, enforcement and administration of subsequent requirements of the code. In addition to establishing the scope of the code, Chapter 1 identifies which buildings and structures come under its purview.

Chapter 2 Definitions. Chapter 2 is the repository of the definitions of terms used in the body of the code. Codes are technical documents and every word, term and punctuation mark can impact the meaning of the code text and the intended results. The code often uses terms that have a unique meaning in the code and the code meaning can differ substantially from the ordinarily understood meaning of the term as used outside of the code.

The terms defined in Chapter 2 are deemed to be of prime importance in establishing the meaning and intent of the code text. The user of the code should be familiar with and consult this chapter because the definitions are essential to the correct interpretation of the code and the user may not be aware that a term is defined.

INTERNATIONAL CODE COUNCIL®
Copyright © 2019 ICC & NYSDOS. ALL RIGHTS RESERVED. Accessed by Lauren Gualdino (lgualdino@briarcliffmanor.org), (-) Order Number #100880972 on May 08, 2020 07:05 AM (PDT) pursuant to License Agreement with ICC & NYSDOS. No further reproduction, no

100880972

Where understanding of a term's definition is especially key to or necessary for understanding of a particular code provision, the term is shown in *italics*. This is true only for those terms that have a meaning that is unique to the code. In other words, the generally understood meaning of a term or phrase might not be sufficient or consistent with the meaning prescribed by the code; therefore, it is essential that the code-defined meaning be known.

Guidance regarding tense, gender and plurality of defined terms as well as guidance regarding terms not defined in this code is provided.

Chapter 3 General Requirements. Chapter 3 specifies the climate zones that will serve to establish the exterior design conditions. In addition, Chapter 3 provides interior design conditions that are used as a basis for assumptions in heating and cooling load calculations, and provides basic material requirements for insulation materials and fenestration materials.

Climate has a major impact on the energy use of most buildings. The code establishes many requirements such as wall and roof insulation *R*-values, window and door thermal transmittance (*U*-factors) and provisions that affect the mechanical systems based on the climate where the building is located. This chapter contains information that will be used to properly assign the building location into the correct climate zone and is used as the basis for establishing or eliminating requirements.

Chapter 4 Energy Efficiency. Chapter 4 of each set of provisions contains the technical requirements for energy efficiency.

Commercial Energy Efficiency. Chapter 4 of the ECCCNYS—Commercial Provisions contains the energy-efficiency-related requirements for the design and construction of most types of commercial buildings and residential buildings greater than three stories in height above grade. This chapter defines requirements for the portions of the building and building systems that impact energy use in new commercial construction and new residential construction greater than three stories in height, and promotes the effective use of energy. In addition to energy conservation requirements for the building envelope, this chapter contains requirements that impact energy efficiency for the HVAC systems, the electrical systems and the plumbing systems. It should be noted, however, that requirements are contained in other codes that have an impact on energy conservation. For instance, requirements for water flow rates are regulated by the *Plumbing Code of New York State*.

Residential Energy Efficiency. Chapter 4 of the ECCCNYS—Residential Provisions contains the energy-efficiency-related requirements for the design and construction of residential buildings regulated under this code. It should be noted that the definition of a *residential building* in this code is unique for this code. In this code, a *residential building* is a detached one- and two-family dwelling and multiple single-family dwellings as well as R-2, R-3 or R-4 buildings three stories or less in height. All other buildings, including residential buildings greater than three stories in height, are regulated by the energy conservation requirements in the ECCCNYS—Commercial Provisions. The applicable portions of a residential building must comply with the provisions within this chapter for energy efficiency. This chapter defines requirements for the portions of the building and building systems that impact energy use in new residential construction and promotes the effective use of energy. The provisions within the chapter promote energy efficiency in the building envelope, the heating and cooling system and the service water heating system of the building.

Chapter 5 Existing Buildings. Chapter 5 of each set of provisions contains the technical energy efficiency requirements for existing buildings. Chapter 5 provisions address the maintenance of buildings in compliance with the code as well as how additions, alterations, repairs and changes of occupancy need to be addressed from the standpoint of energy efficiency. Specific provisions are provided for historic buildings.

Chapter 6 Referenced Standards. The code contains numerous references to standards that are used to regulate materials and methods of construction. Chapter 6 contains a comprehensive list of all standards that are referenced in the code. The standards are part of the code to the extent of the reference to the standard. Compliance with the referenced standard is necessary for compliance with this code. By providing specifically adopted standards, the construction and installation requirements necessary for compliance with the code can be readily determined. The basis for code compliance is, therefore, established and available on an equal basis to the building official, contractor, designer and owner.

INTERNATIONAL CODE COUNCIL®
Copyright © 2019 ICC & NYSDOS. ALL RIGHTS RESERVED. Accessed by Lauren Gualdino (lgualdino@briarcliffmanor.org), (-) Order Number #100880972 on May 08, 2020 07:05 AM (PDT) pursuant to License Agreement with ICC & NYSDOS. No further reproduction, no

100880972

Chapter 6 is organized in a manner that makes it easy to locate specific standards. It lists all of the referenced standards, alphabetically, by acronym of the promulgating agency of the standard. Each agency's standards are then listed in either alphabetical or numeric order based on the standard identification. The list also contains the title of the standard; the edition (date) of the standard referenced; any addenda; and the section or sections of this code that reference the standard.

Abbreviations and Notations

The following is a list of common abbreviations and units of measurement used in this code. Some of the abbreviations are for terms defined in Chapter 2. Others are terms used in various tables and text of the code.

AFUE	Annual fuel utilization efficiency
bhp	Brake horsepower (fans)
Btu	British thermal unit
Btu/h-ft^2	Btu per hour per square foot
C-factor	See Chapter 2—Definitions
CDD	Cooling degree days
cfm	Cubic feet per minute
cfm/ft^2	Cubic feet per minute per square foot
ci	Continuous insulation
COP	Coefficient of performance
DCV	Demand control ventilation
°C	Degrees Celsius
°F	Degrees Fahrenheit
DWHR	Drain water heat recovery
DX	Direct expansion
E_c	Combustion efficiency
E_v	Ventilation efficiency
E_t	Thermal efficiency
EER	Energy efficiency ratio
EF	Energy factor
ERI	Energy rating index
F-factor	See Chapter 2—Definitions
FDD	Fault detection and diagnostics
FEG	Fan efficiency grade
FL	Full load
ft^2	Square foot
gpm	Gallons per minute
HDD	Heating degree days
hp	Horsepower
HSPF	Heating seasonal performance factor
HVAC	Heating, ventilating and air conditioning
IEER	Integrated energy efficiency ratio
IPLV	Integrated Part Load Value

INTERNATIONAL CODE COUNCIL®
Copyright © 2019 ICC & NYSDOS. ALL RIGHTS RESERVED. Accessed by Lauren Gualdino (lgualdino@briarcliffmanor.org), (-) Order Number #100880972 on May 08, 2020 07:05 AM (PDT) pursuant to License Agreement with ICC & NYSDOS. No further reproduction, no

100880972

Kg/m^2	Kilograms per square meter
kW	Kilowatt
LPD	Light power density (lighting power allowance)
L/s	Liters per second
Ls	Liner system
m^2	Square meters
MERV	Minimum efficiency reporting value
NAECA	National Appliance Energy Conservation Act
NPLV	Nonstandard Part Load Value
Pa	Pascal
PF	Projection factor
pcf	Pounds per cubic foot
psf	Pounds per square foot
PTAC	Packaged terminal air conditioner
PTHP	Packaged terminal heat pump
R-value	See Chapter 2—Definitions
SCOP	Sensible coefficient of performance
SEER	Seasonal energy efficiency ratio
SHGC	Solar Heat Gain Coefficient
SPVAC	Single packaged vertical air conditioner
SPVHP	Single packaged vertical heat pump
SRI	Solar reflectance index
SWHF	Service water heat recovery factor
U-factor	See Chapter 2—Definitions
VAV	Variable air volume
VRF	Variable refrigerant flow
VT	Visible transmittance
W	Watts
w.c.	Water column
w.g.	Water gauge

INTERNATIONAL CODE COUNCIL®
Copyright © 2019 ICC & NYSDOS. ALL RIGHTS RESERVED. Accessed by Lauren Gualdino (lgualdino@briarcliffmanor.org), (-) Order Number #100880972 on May 08, 2020 07:05 AM (PDT) pursuant to License Agreement with ICC & NYSDOS. No further reproduction, no

100880972

TABLE OF CONTENTS

ECCCNYS—COMMERCIAL PROVISIONS C-1

CHAPTER 1 SCOPE AND ADMINISTRATION C-3

CHAPTER 2 DEFINITIONS C-9

CHAPTER 3 GENERAL REQUIREMENTS C-17

CHAPTER 4 COMMERCIAL ENERGY EFFICIENCY C-19

CHAPTER 5 EXISTING BUILDINGS C-87

CHAPTER 6 REFERENCED STANDARDS C-91

APPENDIX CA SOLAR-READY ZONE—COMMERCIAL C-99

INDEX C-101

ECCCNYS—RESIDENTIAL PROVISIONS R-1

CHAPTER 1 SCOPE AND ADMINISTRATION R-3

CHAPTER 2 DEFINITIONS R-9

CHAPTER 3 GENERAL REQUIREMENTS R-13

CHAPTER 4 RESIDENTIAL ENERGY EFFICIENCY R-17

CHAPTER 5 EXISTING BUILDINGS R-33

CHAPTER 6 REFERENCED STANDARDS R-37

APPENDIX RA SOLAR-READY PROVISIONS—DETACHED ONE- AND TWO-FAMILY DWELLINGS AND TOWNHOUSES R-41

INDEX R-43

INTERNATIONAL CODE COUNCIL®
Copyright © 2019 ICC & NYSDOS. ALL RIGHTS RESERVED. Accessed by Lauren Gualdino (lgualdino@briarcliffmanor.org), (-) Order Number #100880972 on May 08, 2020 07:05 AM (PDT) pursuant to License Agreement with ICC & NYSDOS. No further reproduction, no

100880972

INTERNATIONAL CODE COUNCIL®
Copyright © 2019 ICC & NYSDOS. ALL RIGHTS RESERVED. Accessed by Lauren Gualdino (lgualdino@briarcliffmanor.org), (-) Order Number #100880972 on May 08, 2020 07:05 AM (PDT) pursuant to License Agreement with ICC & NYSDOS. No further reproduction, no

100880972

ECCCNYS—COMMERCIAL PROVISIONS

TABLE OF CONTENTS

CHAPTER 1 SCOPE AND ADMINISTRATION C-3

Section

C101 Scope and General Requirements. C-3

C102 Applicability. C-4

C103 Interpretations of Energy Code Requirements C-5

C104 Alternative Materials, Designs, Methods of Construction and Insulating Systems C-6

C105 Construction Documents C-6

C106 Inspections C-7

CHAPTER 2 DEFINITIONS C-9

Section

C201 General C-9

C202 General Definitions C-9

CHAPTER 3 GENERAL REQUIREMENTS. C-17

Section

C301 Climate Zones. C-17

C302 Design Conditions C-17

C303 Materials, Systems and Equipment C-17

CHAPTER 4 COMMERCIAL ENERGY EFFICIENCY C-19

Section

C401 General C-19

C402 Building Envelope Requirements. C-19

C403 Building Mechanical Systems C-29

C404 Service Water Heating (Mandatory) C-57

C405 Electrical Power and Lighting Systems C-61

C406 Additional Efficiency Packages C-71

C407 Total Building Performance C-76

C408 Maintenance Information and System Commissioning C-78

CHAPTER 5 EXISTING BUILDINGS C-87

Section

C501 General C-87

C502 Additions C-87

C503 Alterations C-88

C504 Repairs C-89

C505 Change of Occupancy or Use C-89

CHAPTER 6 REFERENCED STANDARDS C-91

APPENDIX CA SOLAR-READY ZONE—COMMERCIAL C-99

Section

CA101 Scope. C-99

CA102 General Definition C-99

CA103 Solar-ready Zone. C-99

INDEX C-101

INTERNATIONAL CODE COUNCIL®

Copyright © 2019 ICC & NYSDOS. ALL RIGHTS RESERVED. Accessed by Lauren Gualdino (lgualdino@briarcliffmanor.org), (-) Order Number #100880972 on May 08, 2020 07:05 AM (PDT) pursuant to License Agreement with ICC & NYSDOS. No further reproduction, no

100880972

INTERNATIONAL CODE COUNCIL®

Copyright © 2019 ICC & NYSDOS. ALL RIGHTS RESERVED. Accessed by Lauren Gualdino (lgualdino@briarcliffmanor.org), (-) Order Number #100880972 on May 08, 2020 07:05 AM (PDT) pursuant to License Agreement with ICC & NYSDOS. No further reproduction, no

100880972

ECCCNYS—COMMERCIAL PROVISIONS

CHAPTER 1 [CE]

SCOPE AND ADMINISTRATION

[NY] SECTION C101
SCOPE AND GENERAL REQUIREMENTS

[NY] C101.1 The Energy Code. The *New York State Energy Conservation Construction Code* promulgated pursuant to Article 11 of the Energy Law (hereinafter referred to as the "Energy Code") is contained in Title 19 of the New York Codes, Rules and Regulations Part 1240 ("19 NYCRR Part 1240", and in the publications incorporated by reference in 19 NYCRR Part 1240.

This publication (the 2020 *Energy Conservation Construction Code of New York State*, hereinafter referred to as the "ECCCNYS") is one of the publications incorporated by reference in 19 NYCRR Part 1240. The provisions set forth in this publication are part of the *Energy Code*.

The *Energy Conservation Construction Code of New York State* has two separate sets of provisions. This set of provisions (the "ECCCNYS—Commercial Provisions") includes provisions applicable to *commercial buildings*. The other set of provisions (the "ECCCNYS—Residential Provisions") includes provisions applicable to *residential buildings*.

[NY] C101.1.1 Administration and enforcement. The *Energy Code* shall be administered and enforced in accordance with the strictest of any of the following:

1. The requirements of the code enforcement program established by the governmental unit or agency responsible for administration and enforcement of the *Energy Code* with respect to the building in question.
2. The minimum requirements established by the regulations adopted by the Department of State pursuant to Section 381(1) of the New York State Executive Law.
3. The requirements set forth in this Chapter 1 [CE] and, as applicable, in Chapter 1 [RE] of this publication.

[NY] C101.2 Title. This portion of the ECCCNYS shall be known as the "ECCCNYS—Commercial Provisions," and shall be cited as such. References in the ECCCNYS—Commercial Provisions to "this code" shall be construed as references to the ECCCNYS—Commercial Provisions.

[NY] C101.3 Scope. This code applies to commercial buildings and the buildings' sites and associated systems and equipment.

Exception: The *Energy Code* shall not apply to any of the following, provided that the energy use of the building is not increased:

1. Storm windows installed over existing fenestration;
2. Glass only replacements in an existing sash and frame;
3. Existing ceiling, wall or floor cavities exposed during construction provided that these cavities are filled with insulation;
4. Construction where the existing roof, wall or floor cavity is not exposed;
5. Reroofing for roofs where neither the sheathing nor the insulation is exposed; roofs without insulation in the cavity and where the sheathing or insulation is exposed during reroofing shall be insulated either above or below the sheathing;
6. Replacement of existing doors that separate conditioned space from the exterior shall not require the installation of a vestibule or revolving door, provided, however, that an existing vestibule that separates such conditioned space from the exterior shall not be removed;
7. Alterations that replace less than fifty percent of the luminaries in a space, provided that such alterations do not increase the installed interior lighting power; or alterations that replace only the bulb and ballast within the existing luminaries in a space provided that the alteration does not increase the installed interior lighting power.

[NY] C101.3.1 Appendices. Provisions in the following appendix have not been adopted and are included for informational purposes only:

Appendix CA Solar-Ready Zone – Commercial

[NY] C101.4 Intent. The ECCCNYS—Commercial Provisions regulate the design and construction of new *commercial buildings*; *additions* to, *alterations* of, and/or renovations of existing *commercial buildings;* and *additions* to, *alterations* of, and/or renovations of *building systems* in existing *commercial buildings* for the use and conservation of energy over the life of each such *commercial building*.

The ECCCNYS—Commercial Provisions are intended to provide flexibility to permit the use of innovative approaches and techniques to achieve the objectives set forth in the preceding paragraph. However, nothing in this Section C101.4 shall be construed as permitting any building official, or any governmental unit or agency charged with the administration and enforcement of the *Energy Code*, to waive, vary, modify, or otherwise alter any standard or requirement of the ECCCNYS—Commercial Provisions or any other standard or requirement of the *Energy Code*. Standards or requirements of the *Energy Code* may be varied or modified only pursuant to Section 11-106 of the New York State Energy Law.

INTERNATIONAL CODE COUNCIL®
Copyright © 2019 ICC & NYSDOS. ALL RIGHTS RESERVED. Accessed by Lauren Gualdino (lgualdino@briarcliffmanor.org), (-) Order Number #100880972 on May 08, 2020 07:05 AM (PDT) pursuant to License Agreement with ICC & NYSDOS. No further reproduction, no

100880972

The ECCCNYS—Commercial Provisions are not intended to abridge safety, health or environmental requirements contained in other applicable statutes, laws, rules, regulations, codes or ordinances. However, nothing in Section C101.4 shall be construed as limiting the provisions of Section 11-103(3) of the New York State Energy Law, which provides that (1) any code, rule, or regulation promulgated or enacted prior to June 19, 1978 by any state agency other than the State Fire Prevention and Building Code Council, incorporating specific energy conservation requirements applicable to the construction of any building, is superseded by the *Energy Code* and (2) on and after June 19, 1978, the State Fire Prevention and Building Code Council, in accordance with the mandate under Article 11 of the New York State Energy Law, shall have exclusive authority among state agencies to promulgate a construction code incorporating energy conservation features.

[NY] C101.5 Compliance. *Residential buildings* shall meet the provisions of ECCCNYS—Residential Provisions.

Commercial buildings shall meet the provisions of ECCCNYS—Commercial Provisions. To the extent permitted by 19 NYCRR Part 1240, commercial buildings may comply *with ASHRAE 90.1—2016* (as amended) in lieu of complying with the ECCCNYS—Commercial Provisions.

[NY] C101.5.1 Compliance software. Compliance with the ECCCNYS—Commercial Provisions or, if applicable, with *ASHRAE 90.1—2016* (as amended) can be demonstrated using:

1. Computer software that is developed by the United States Department of Energy (such as COMcheck) specifically for the ECCCNYS—Commercial Provisions or, if applicable, specifically for *ASHRAE 90.1—2016* (as amended), including DOE-2 modeling software as allowed by Section C407, or
2. Other software that shall have been expressly approved in writing by the New York Secretary of State as acceptable for demonstrating compliance with the ECCCNYS—Commercial Provisions or, if applicable, for demonstrating compliance with *ASHRAE 90.1—2016*, as amended.

Software programs used to demonstrate compliance must indicate compliance with the ECCCNYS—Commercial Provisions or, if applicable, compliance with *ASHRAE 90.1—2016*, as amended), and must reflect the actual requirements of the ECCCNYS—Commercial Provisions or, if applicable, the actual requirements of *ASHRAE 90.1—2016* as amended.

[NY] C101.5.2 Mandatory provisions. The use of the software approach to demonstrate compliance with the ECCCNYS—Commercial Provisions does not excuse compliance with any mandatory provision of the ECCCNYS—Commercial Provisions. When using the software approach to demonstrate compliance with the provisions of the ECCCNYS—Commercial Provisions, compliance with all applicable mandatory provisions of the ECCCNYS—Commercial Provisions will still be required.

The use of the software approach to demonstrate compliance with *ASHRAE 90.1—2016* (as amended) does not excuse compliance with any mandatory provision of *ASHRAE 90.1—2016* (as amended). When using the software approach to demonstrate compliance with *ASHRAE 90.1—2016* (as amended), compliance with all applicable mandatory provisions of *ASHRAE 90.1—2016* (as amended), will still be required.

[NY] C101.6 Statutory limitations. In the event of an *addition to or alteration* of an existing building or building system in an existing building, nothing in the ECCCNYS—Commercial Provisions or in any other provision of the *Energy Code* shall be interpreted to require any unaltered portion of such existing building or building system to comply with the *Energy Code*.

[NY] C101.7 Historic buildings. *Historic buildings* are exempt from the *Energy Code*.

[NY] SECTION C102 APPLICABILITY

[NY] C102.1 Applicability. The ECCCNYS—Commercial Provisions apply to (1) the construction of new *commercial buildings*, (2*) additions to and alterations* of existing *commercial buildings*, (3*) additions to and alterations* of building systems in existing *commercial buildings*.

Where, in any specific case, different sections of this code specify different materials, methods of construction or other requirements, the most restrictive shall govern. Where there is a conflict between a general requirement and a specific requirement, the specific requirement shall govern.

[NY] C102.1.1 Mixed residential and commercial buildings. Where a building includes both *residential building* and *commercial building* portions, each portion shall be separately considered and:

1. Each *commercial building* portion shall meet the applicable provisions of *ECCCNYS—Commercial Provisions* or, to the extent permitted by 19 NYCRR Part 1240, the applicable provisions of *ASHRAE 90.1—2016* (as amended), and
2. Each *residential building* portion shall meet the applicable provisions of the *ECCCNYS—Residential Provisions*.

[NY] C102.2 Other laws and regulations. The *ECCCNYS—Commercial Provisions* shall not be deemed to nullify any provisions of local, state or federal law, statute, rule, regulation or ordinance relating to any matter as to which the *ECCCNYS—Commercial Provisions* does not provide.

[NY] C102.2.1 Other agencies' regulations. Pursuant to Section 11-103(3) of the New York State Energy Law, (1) any code, rule, or regulation promulgated or enacted prior to June 19, 1978 by any state agency other than the State Fire Prevention and Building Code Council, incorporating specific energy conservation requirements applicable to the construction of any building, is superseded by the *Energy Code* and (2) on and after June 19, 1978, the State

INTERNATIONAL CODE COUNCIL®
Copyright © 2019 ICC & NYSDOS. ALL RIGHTS RESERVED. Accessed by Lauren Gualdino (lgualdino@briarcliffmanor.org), (-) Order Number #100880972 on May 08, 2020 07:05 AM (PDT) pursuant to License Agreement with ICC & NYSDOS. No further reproduction, no

100880972

Fire Prevention and Building Code Council, in accordance with the mandate under Article 11 of the New York State Energy Law, shall have exclusive authority among state agencies to promulgate a construction code incorporating energy conservation features.

[NY] C102.2.2 More stringent local energy codes. Pursuant to Section 11-109 of the New York State Energy Law, and subject to the provisions and requirements of that section, any municipality has the power to promulgate a local energy conservation construction code that is more stringent than the *Energy Code*.

[NY] C102.3 Application of references. References to chapter or section numbers, or to provisions not specifically identified by number, shall be construed to refer to such chapter, section or provision of the *ECCCNYS—Commercial Provisions*.

[NY] C102.4 Referenced codes and standards. The codes and standards referenced in the *ECCCNYS—Commercial Provisions* shall be those *listed* in Chapter 6 [CE], and such codes and standards shall be considered as part of the requirements of the *ECCCNYS—Commercial Provisions* to the prescribed extent of each such reference and as further regulated in Sections C102.4.1 and C102.4.2.

[NY] C102.4.1 Conflicts. Where conflicts occur between provisions of the *ECCCNYS—Commercial Provisions* and referenced codes and standards, the provisions of the *ECCCNYS—Commercial Provisions* shall apply.

[NY] C102.4.2 Provisions in referenced codes and standards. Where the extent of the reference to a referenced code or standard includes subject matter that is within the scope of the *ECCCNYS—Commercial Provisions*, the provisions of the *ECCCNYS—Commercial Provisions*, as applicable, shall take precedence over the provisions in the referenced code or standard.

[NY] C102.5 Partial invalidity. If a portion of the *Energy Code* is held to be illegal or void by a court of competent jurisdiction, such a decision shall not affect the validity of the remainder of the *Energy Code*.

[NY] SECTION C103 INTERPRETATIONS OF ENERGY CODE REQUIREMENTS

[NY] C103.1 General. The Secretary of State is authorized by Section 11-103(4) of the New York State Energy Law to issue written interpretations of the *Energy Code* upon written request of a permit applicant or the building official responsible for the administration and enforcement of the provisions of the *Energy Code.*

[NY] C103.2 Procedure. A request for an interpretation shall be signed by the building permit applicant and the building official, or by one or the other, individually, and shall include the following information in order to be considered complete:

1. Name, address, and telephone number of the building permit applicant and the building official;
2. A detailed description of the proposed construction, including a copy of the building permit application and plans and specifications that have been filed by the building permit applicant with the building official, as well as any other floor plans, elevations, cross-sections, details specifications, or construction documents necessary to describe adequately the proposed construction;
3. Identification of each requirement of the *Energy Code* for which an interpretation is requested;
4. A concise summary of the disagreement concerning the application of each such requirement for which an interpretation is requested; and
5. A copy of the building permit application denial if one was issued by the building official.

[NY] C103.3 Incomplete information. If the request is incomplete or does not otherwise contain sufficient information necessary to issue an interpretation, the Secretary of State may request clarification of the information provided or additional information necessary to issue the requested interpretation.

[NY] C103.4 Notification. Upon receipt of a complete request for an interpretation signed by only the building permit applicant or the building official, the Secretary of State shall provide written notification to the party who has not signed the request for an interpretation that such request for an interpretation has been filed with the Department of State. The party receiving such notification shall have 20 days from the date of such notification in which to provide, in writing, any comments or additional information pertaining to the request for an interpretation, provided that the Secretary of State may waive this deadline when warranted by extenuating circumstances.

[NY] C103.5 Issuing interpretation. The Secretary of State shall either issue the interpretation or provide notification of the intent not to issue an interpretation to the building permit applicant and the building official within 45 days of any of the following:

1. Receipt of a complete request for an interpretation signed by both the building permit applicant and the building official,
2. Receipt of comments when the request for an interpretation is signed by only one party, or
3. The expiration of the 20-day comment period when the request for an interpretation is signed by only one party.

[NY] C103.6 Enforcement. Subsequent enforcement of the *Energy Code* shall be consistent with the interpretations issued by the Secretary of State pursuant to Section 11-103(4) of the New York State Energy Law.

[NY] C103.7 Interpretation of more stringent local energy code provisions. If a municipality has adopted a local energy code in accordance with the provisions of Section 11-109 of the New York State Energy Law, and if such local energy code shall have become effective in such municipality in accordance with the provisions of Section 11-109 of the New York State Energy Law, such municipality or any official designated by such municipality is permitted to interpret those provisions of such local energy code that are (1) in addition to the provisions of the *Energy Code* or (2) more stringent than the provisions of the *Energy Code*. However,

INTERNATIONAL CODE COUNCIL®
Copyright © 2019 ICC & NYSDOS. ALL RIGHTS RESERVED. Accessed by Lauren Gualdino (lgualdino@briarcliffmanor.org), (-) Order Number #100880972 on May 08, 2020 07:05 AM (PDT) pursuant to License Agreement with ICC & NYSDOS. No further reproduction, no

100880972

no such interpretation shall be deemed to be an interpretation of the *Energy Code* by the Secretary of State pursuant to Section 11-103(4) of the New York State Energy Law. In addition, if such municipality or an official designated by such municipality interprets a provision of a local energy code in a manner that makes such provision less stringent that the corresponding provision of the *Energy Code*, the corresponding provision of the *Energy Code* shall supersede such provision of the local energy code.

[NY] SECTION C104 ALTERNATIVE MATERIALS, DESIGNS, METHODS OF CONSTRUCTION AND INSULATING SYSTEMS

[NY] C104.1 General. The *ECCCNYS—Commercial Provisions* are not intended to prevent the use of any material design or method of construction, or insulating system not specifically prescribed by this code, provided that such alternative shall have been *approved* by the building official, in writing, as (1) meeting the intent of the provisions of this code, and (2) achieving energy savings that is equivalent or greater than that which would be achieved by the prescribed material, design, method, or insulating system.

However, nothing in this Section C102.1 shall be construed as permitting any building official or any governmental unit or agency responsible for administration and enforcement of the *Energy Code* to waive, vary, modify, or otherwise alter any provision, standard, or requirement of the *Energy Code*. Provisions, standards, or requirements of the *Energy Code* may be waived, varied, modified, or otherwise altered only pursuant to Section 11-106 of the New York State Energy Law.

SECTION C105 CONSTRUCTION DOCUMENTS

[NY] C105.1 General. Construction documents and other supporting data shall be submitted in one or more sets with each application for a permit. The construction documents shall be prepared by a *registered design professional* as required by the New York State Education Law Articles 145 and 147.

[NY] C105.2 Information on construction documents. Construction documents shall be drawn to scale on suitable material. Electronic media documents are permitted to be submitted where *approved* by the *building official*. Construction documents shall be of sufficient clarity to indicate the location, nature and extent of the work proposed, and show in sufficient detail pertinent data and features of the building, systems and equipment as herein governed. Details shall include, but are not limited to, the following as applicable:

1. Insulation materials and their *R-values*.
2. *Fenestration U-factor*s and *solar heat gain coefficients* (SHGCs).
3. Area-weighted *U-factor* and *solar heat gain coefficient* (SHGC) calculations.
4. Mechanical system design criteria.
5. Mechanical and *service water heating* systems and equipment types, sizes and efficiencies.
6. Economizer description.
7. Equipment and system controls.
8. Fan motor horsepower (hp) and controls.
9. Duct sealing, duct and pipe insulation and location.
10. Lighting fixture schedule with wattage and control narrative.
11. Location of *daylight zones* on floor plans.
12. Air sealing details.

[NY] C105.2.1 Building thermal envelope depiction. The *building thermal envelope* shall be represented on the construction drawings.

[NY] C105.2.2 Written statement. When plans or specifications bear the seal and signature of a *registered design professional*, such *registered design professional* shall also include a written statement that to the best of his or her knowledge, belief and professional judgment, such plans or specifications are in compliance with the *Energy Code*.

[NY] C105.3 Examination of documents. The *building official* shall examine or cause to be examined the accompanying construction documents and shall ascertain whether the construction indicated and described is in accordance with the requirements of the *Energy Code* and other pertinent laws or ordinances. The *building official* is authorized to utilize a *registered design professional*, or other *approved* entity not affiliated with the building design or construction, in conducting the review of the plans and specifications for compliance with the *Energy Code*.

[NY] C105.3.1 Approval of construction documents. When the *building official* issues a permit where construction documents are required, the construction documents shall be endorsed in writing and stamped "Reviewed for *Energy Code* Compliance." Such *approved* construction documents shall not be changed, modified or altered without authorization from the *building official*. Work shall be done in accordance with the *approved* construction documents.

One set of construction documents so reviewed shall be retained by the *building official*. The other set shall be returned to the applicant, kept at the site of work and shall be open to inspection by the *building official* or a duly authorized representative.

[NY] C105.3.2 Previous approvals. The *Energy Code* shall not require changes in the construction documents, construction or designated occupancy of a structure for which a lawful permit has been issued prior to the effective date of the rule making the ECCCNYS part of the *Energy Code*, and the construction of which has been pursued in good faith within 180 days after the effective date of such rule and is thereafter diligently pursued through completion.

[NY] C105.3.3 Phased approval. The *building official* shall have the authority to issue a permit for the construction of part of an energy conservation system before the

INTERNATIONAL CODE COUNCIL®
Copyright © 2019 ICC & NYSDOS. ALL RIGHTS RESERVED. Accessed by Lauren Gualdino (lgualdino@briarcliffmanor.org), (-) Order Number #100880972 on May 08, 2020 07:05 AM (PDT) pursuant to License Agreement with ICC & NYSDOS. No further reproduction, no

100880972

construction documents for the entire system have been submitted or *approved*, provided that adequate information and detailed statements have been filed complying with all pertinent requirements of this code. The holders of such permit shall proceed at their own risk without assurance that the permit for the entire energy conservation system will be granted.

[NY] C105.4 Amended construction documents. Changes made during construction that are not in compliance with the *approved* construction documents shall be resubmitted for approval as an amended set of construction documents.

[NY] SECTION C106 INSPECTIONS

[NY] C106.1 General. Construction or work for which a permit is required shall be subject to inspection by the building official or an inspector who is (i) qualified to perform the inspections (such qualifications to include, where required, completion of the training required by 19 NYCRR Part 1208) and (ii) approved by the building official.

[NY] C106.1.1 Required approvals. Work shall not be done beyond the point indicated in each successive inspection without first obtaining the approval of the building official. The permit holder or the permit holder's agent shall notify the building official when work has progressed to the point where the next required inspection described in Section C106.2 can be made.

The building official (or other qualified inspector approved by the building official pursuant to Section C105.1), shall make such inspection, and the building official shall either indicate the portion of the construction that is satisfactory as completed, or notify the permit holder or the permit holder's agent wherein the same fails to comply with the *Energy Code*. Any portions that do not comply shall be corrected and such portion shall not be covered or concealed until authorized by the building official. In the case of a *building* that is subject to the New York City Construction Codes, such required approvals and inspections shall be subject to the provisions of Title 28 of the New York City Administrative Code.

[NY] C106.2 Required inspections. The *building official* (or other qualified inspector approved by the building official pursuant to Section C106.1), upon notification, shall make the inspections set forth in Sections C106.2.1 through C106.2.6.

[NY] C106.2.1 Footing and foundation insulation. Inspections shall verify the footing and foundation insulation *R-value*, location, thickness, depth of burial and protection of insulation as required by the code, *approved* plans and specifications.

[NY] C106.2.2 Thermal envelope. Inspections shall verify the correct type of insulation, *R-values*, location of insulation, *fenestration*, *U-factor*, SHGC and VT, and that air leakage controls are properly installed, as required by the code, *approved* plans and specifications.

[NY] C106.2.3 Plumbing system. Inspections shall verify the type of insulation, *R-values*, protection required, controls and *heat trap*s as required by the code, *approved* plans and specifications.

[NY] C106.2.4 Mechanical system. Inspections shall verify the installed HVAC equipment for the correct type and size, controls, insulation, *R-values*, system and damper air leakage, minimum fan efficiency, energy recovery and economizer as required by the code, *approved* plans and specifications.

[NY] C106.2.5 Electrical system. Inspections shall verify lighting system controls, components, and meters as required by the code, *approved* plans and specifications.

[NY] C106.2.6 Final inspection. The *building* shall have a final inspection and shall not be occupied until approved. The final inspection shall include verification of the installation and proper operation of all required building controls, and documentation verifying activities associated with required *building commissioning* have been conducted and findings of noncompliance corrected. *Buildings*, or portions thereof, shall not be considered for a final inspection until the building official has received a letter of transmittal from the building owner acknowledging that the building owner has received the Preliminary Commissioning Report as required in Section C408.2.4.

[NY] C106.2.6.1 HVAC System certification. A *registered design professional* shall provide to the building official a written certification that (1) all required HVAC system inspections, HVAC system calibrations, and overall HVAC equipment functionality tests have been performed and (2) in the professional opinion of the *registered design professional*, the HVAC system is operating as designed. The *registered design professional* shall retain copies of the inspection, calibration, and test reports, and shall provide such reports to the building official, if requested. In the case of a building that is subject to the New York City Construction Codes, all required HVAC system inspections, HVAC system calibrations, and overall HVAC equipment functionality tests shall be special or progress inspections and shall be performed by approved agencies.

[NY] C106.3 Reinspection. A *building* shall be reinspected where determined necessary by the *building official*.

[NY] C106.4 Approved inspection agencies. The *building official* is authorized to accept reports of third-party inspection agencies not affiliated with the *building* design or construction, provided that such agencies are *approved* as to qualifications and reliability relevant to the *building* components and *building* systems that they are inspecting.

[NY] C106.5 Inspection requests. It shall be the duty of the holder of the permit or their duly authorized agent to notify the *building official* when work is ready for inspection. It shall be the duty of the permit holder to provide *access* to and means for inspections of such work.

[NY] C106.6 Reinspection and retesting. Where any work or installation does not pass an initial test or inspection, the necessary corrections shall be made to achieve compliance

INTERNATIONAL CODE COUNCIL®
Copyright © 2019 ICC & NYSDOS. ALL RIGHTS RESERVED. Accessed by Lauren Gualdino (lgualdino@briarcliffmanor.org), (-) Order Number #100880972 on May 08, 2020 07:05 AM (PDT) pursuant to License Agreement with ICC & NYSDOS. No further reproduction, no

100880972

with the *Energy Code*. The work or installation shall then be resubmitted to the *building official* for reinspection and retesting.

[NY] C106.7 Approval. After the prescribed tests and inspections indicate that the work complies in all respects with the *Energy Code*, a notice of approval shall be issued by the *building official*.

[NY] C106.7.1 Revocation. The *building official* is authorized to suspend or revoke, in writing, a notice of approval issued wherever the building official determines the notice is issued in error, or on the basis of incorrect information supplied, or where it is determined that the *building* or structure, premise, or portion thereof is in violation of any provision of the *Energy Code*; any provision of the *Uniform code* or New York City Construction Codes, as applicable; or any other any applicable law, statute, rule, regulation or ordinance. Any such suspension or revocation shall be in writing, signed by the building official or by his or her designated agent.

INTERNATIONAL CODE COUNCIL®
Copyright © 2019 ICC & NYSDOS. ALL RIGHTS RESERVED. Accessed by Lauren Gualdino (lgualdino@briarcliffmanor.org), (-) Order Number #100880972 on May 08, 2020 07:05 AM (PDT) pursuant to License Agreement with ICC & NYSDOS. No further reproduction, no

100880972

CHAPTER 2 [CE]

DEFINITIONS

SECTION C201
GENERAL

[NY] C201.1 Scope. Unless stated otherwise, the following words and terms in the ECCCNYS—Commercial Provisions shall have the meanings indicated in Chapter 2 [CE].

C201.2 Interchangeability. Words used in the present tense include the future; words in the masculine gender include the feminine and neuter; the singular number includes the plural and the plural includes the singular.

C201.3 Terms defined in other codes. Terms that are not defined in Chapter 2 [CE] but are defined in the *Building Code of New York State, Fire Code of New York State, Fuel Gas Code of New York State, Mechanical Code of New York State, Plumbing Code of New York State or the Residential Code of New York State* shall have the meanings ascribed to them in those codes.

[NY] C201.4 Terms not defined. Terms not defined by Chapter 2 [CE] or in *the Building Code of New York State, Fire Code of New York State, Fuel Gas Code of New York State, Mechanical Code of New York State, Plumbing Code of New York State or the Residential Code of New York State* shall have ordinarily accepted meanings such as the context implies.

SECTION C202
GENERAL DEFINITIONS

ABOVE-GRADE WALL. See "Wall, above-grade."

ACCESS (TO). That which enables a device, appliance or equipment to be reached by ready access or by a means that first requires the removal or movement of a panel, or similar obstruction.

ADDITION. An extension or increase in the *conditioned space* floor area, number of stories or height of a building or structure.

AIR BARRIER. One or more materials joined together in a continuous manner to restrict or prevent the passage of air through the building thermal envelope and its assemblies.

AIR CURTAIN. A device, installed at the building entrance, that generates and discharges a laminar air stream intended to prevent the infiltration of external, unconditioned air into the conditioned spaces, or the loss of interior, conditioned air to the outside.

[NY] AIR-IMPERMEABLE INSULATION. An insulation having an air permeance equal to, or less than 0.02 L/s-m^2 at 75 Pa pressure differential tested according to ASTM E2178 or E283.

ALTERATION. Any construction, retrofit or renovation to an existing structure other than repair or addition. Also, a change in a building, electrical, gas, mechanical or plumbing system that involves an extension, *addition* or change to the arrangement, type or purpose of the original installation.

[NY] AREA-WEIGHTED AVERAGE. A mathematical technique for combining different amounts of various components, based on proportional relevance, into a single number. Weighted averaging may be used where there is more than one *R-value* for floor, wall, or ceiling insulation, or more than one *U-factor* for fenestration in a *building*. As an example, the *area-weighted average* for window fenestration *U-factor*s equals (Area 1 × *U-factor* 1) + (Area 2 × *U-factor* 2) + …/ Total Area = maximum allowable fenestration *U-factor*.

[NY] ASHRAE 90.1—2016. The publication entitled "ANSI/ASHRAE/IES Standard 90.1—2016, Energy Standard for Buildings Except Low-rise Residential Buildings" (October 2016 printing) published by ASHRAE, formerly known as the American Society of Heating, Refrigerating and Air-Conditioning Engineers, Inc. *(ASHRAE 90.1—2016* is published by ASHRAE and jointly sponsored by the Illuminating Engineering Society of North America and the American National Standards Institute, and is also known as "ANSI/ASHRAE/IES 90.1—2016" or "ANSI/ASHRAE/IESNA 90.1—2016.")

[NY] ASHRAE 90.1—2016 (AS AMENDED). *ASHRAE 90.1—2016*, as said publication is deemed to be amended by 19 NYCRR Part 1240.

APPROVED. Acceptable to the building official.

APPROVED AGENCY. An established and recognized agency that is regularly engaged in conducting tests or furnishing inspection services, or furnishing product certification, where such agency has been approved by the *building official*.

AUTOMATIC. Self-acting, operating by its own mechanism when actuated by some impersonal influence, as, for example, a change in current strength, pressure, temperature or mechanical configuration (see "Manual").

BELOW-GRADE WALL. See "Wall, below-grade."

BOILER, MODULATING. A boiler that is capable of more than a single firing rate in response to a varying temperature or heating load.

BOILER SYSTEM. One or more boilers, their piping and controls that work together to supply steam or hot water to heat output devices remote from the boiler.

BUBBLE POINT. The refrigerant liquid saturation temperature at a specified pressure.

[NY] BUILDING. Any structure used or intended for supporting or sheltering any use or occupancy or for affording shelter to persons, animals or property, together with: (1) any mechanical systems, service water heating systems and electric power and lighting systems located in such structure, and (2) any mechanical systems, service water heating systems, and electric power and lighting systems located on the building site and supporting such structure. The term Building shall include, but shall not be limited to, factory manufactured homes (as defined in Section 372(8) of the Executive

INTERNATIONAL CODE COUNCIL® Copyright © 2019 ICC & NYSDOS. ALL RIGHTS RESERVED. Accessed by Lauren Gualdino (lgualdino@briarcliffmanor.org), (-) Order Number #100880972 on May 08, 2020 07:05 AM (PDT) pursuant to License Agreement with ICC & NYSDOS. No further reproduction, no

100880972

Law) and mobile homes (as defined in Section 372(13) of the Executive Law).

[NY] BUILDING CODE OF NEW YORK STATE. The 2020 edition of the publication entitled "Building Code of New York State," published by the International Code Council, Inc. (publication date November 2019).

BUILDING COMMISSIONING. A process that verifies and documents that the selected building systems have been designed, installed, and function according to the owner's project requirements and construction documents, and to minimum code requirements.

BUILDING ENTRANCE. Any door, set of doors, doorway, or other form of portal that is used to gain access to the building from the outside by the public.

BUILDING SITE. A contiguous area of land that is under the ownership or control of one entity.

[NY] BUILDING OFFICIAL. The officer or other designated authority charged with the administration and enforcement of this code, or a duly authorized representative.

[NY] BUILDING SYSTEM. The term "*building system*" means a combination of central or terminal equipment or components or controls, accessories, interconnecting means, and terminal devices by which energy is transformed so as to perform a specific function, such as heating, *ventilation* and air conditioning, service water heating or illumination

[NY] BUILDING THERMAL ENVELOPE. The *exterior walls* (above and below grade), floors, ceilings, roofs and any other building element assemblies that enclose conditioned space or provide a boundary between conditioned space and unconditioned space.

***C*-FACTOR (THERMAL CONDUCTANCE).** The coefficient of heat transmission (surface to surface) through a building component or assembly, equal to the time rate of heat flow per unit area and the unit temperature difference between the warm side and cold side surfaces (Btu/h • ft^2 • °F) [W/(m^2 • K)].

CAPTIVE KEY OVERRIDE. A lighting control that will not release the key that activates the override when the lighting is on.

CAVITY INSULATION. Insulating material located between framing members.

CHANGE OF OCCUPANCY. A change in the use of a building or a portion of a building that results in any of the following:

1. A *change of occupancy* classification.
2. A change from one group to another group within an occupancy classification.
3. Any change in use within a group for which there is a change in the application of the requirements of this code.

CIRCULATING HOT WATER SYSTEM. A specifically designed water distribution system where one or more pumps are operated in the service hot water piping to circulate heated water from the water-heating equipment to the fixture supply and back to the water-heating equipment.

CLIMATE ZONE. A geographical region based on climatic criteria as specified in this code.

COEFFICENT OF PERFORMANCE (COP) – COOLING. The ratio of the rate of heat removal to the rate of energy input, in consistent units, for a complete refrigerating system or some specific portion of that system under designated operating conditions.

COEFFICIENT OF PERFORMANCE (COP) – HEATING. The ratio of the rate of heat delivered to the rate of energy input, in consistent units, for a complete heat pump system, including the compressor and, if applicable, auxiliary heat, under designated operating conditions.

COMMERCIAL BUILDING. For this code, all buildings that are not included in the definition of "Residential building."

[NY] COMMISSIONING PLAN. See Section C408.2.1, Commissioning plan.

COMPUTER ROOM. A room whose primary function is to house equipment for the processing and storage of electronic data and that has a design electronic data equipment power density of less than 20 watts per square foot (20 watts per 0.092 m^2) of *conditioned floor area* or a connected design electronic data equipment load of less than 10 kW.

CONDENSING UNIT. A factory-made assembly of refrigeration components designed to compress and liquefy a specific refrigerant. The unit consists of one or more refrigerant compressors, refrigerant condensers (air-cooled, evaporatively cooled, or water-cooled), condenser fans and motors (where used) and factory-supplied accessories.

CONDITIONED FLOOR AREA. The horizontal projection of the floors associated with the *conditioned space*.

[NY] CONDITIONED SPACE. An area, or room that is enclosed within the *building thermal envelope* and is directly or indirectly heated or cooled using fossil fuel or electricity as the energy source. Spaces are indirectly heated or cooled where they communicate through openings with conditioned spaces, where they are separated from conditioned spaces by uninsulated walls, floors or ceilings, or where they contain uninsulated ducts, piping or other sources of heating or cooling using fossil fuel or electricity.

CONTINUOUS INSULATION (ci). Insulating material that is continuous across all structural members without thermal bridges other than fasteners and service openings. It is installed on the interior or exterior or is integral to any opaque surface of the building envelope.

CRAWL SPACE WALL. The opaque portion of a wall that encloses a crawl space and is partially or totally below grade.

CURTAIN WALL. Fenestration products used to create an external nonload-bearing wall that is designed to separate the exterior and interior environments.

DAYLIGHT RESPONSIVE CONTROL. A device or system that provides automatic control of electric light levels based on the amount of daylight in a space.

DAYLIGHT ZONE. That portion of a building's interior floor area that is illuminated by natural light.

DEMAND CONTROL VENTILATION (DCV). A *ventilation* system capability that provides for the automatic reduction of outdoor air intake below design rates when the actual occupancy of spaces served by the system is less than design occupancy.

INTERNATIONAL CODE COUNCIL®
Copyright © 2019 ICC & NYSDOS. ALL RIGHTS RESERVED. Accessed by Lauren Gualdino (lgualdino@briarcliffmanor.org), (-) Order Number #100880972 on May 08, 2020 07:05 AM (PDT) pursuant to License Agreement with ICC & NYSDOS. No further reproduction, no

100880972

DEMAND RECIRCULATION WATER SYSTEM. A water distribution system having one or more recirculation pumps that pump water from a heated water supply pipe back to the heated water source through a cold water supply pipe.

DUCT. A tube or conduit utilized for conveying air. The air passages of self-contained systems are not to be construed as air ducts.

DUCT SYSTEM. A continuous passageway for the transmission of air that, in addition to ducts, includes duct fittings, dampers, plenums, fans and accessory air-handling equipment and appliances.

DWELLING UNIT. A single unit providing complete independent living facilities for one or more persons, including permanent provisions for living, sleeping, eating, cooking and sanitation.

DYNAMIC GLAZING. Any fenestration product that has the fully reversible ability to change its performance properties, including *U-factor*, solar heat gain coefficient (SHGC), or *visible transmittance* (VT).

ECONOMIZER, AIR. A duct and damper arrangement and automatic control system that allows a cooling system to supply outside air to reduce or eliminate the need for mechanical cooling during mild or cold weather.

ECONOMIZER, WATER. A system where the supply air of a cooling system is cooled indirectly with water that is itself cooled by heat or mass transfer to the environment without the use of mechanical cooling.

ENCLOSED SPACE. A volume surrounded by solid surfaces such as walls, floors, roofs, and openable devices such as doors and operable windows.

ENERGY ANALYSIS. A method for estimating the annual energy use of the *proposed design* and *standard reference design* based on estimates of energy use.

[NY] ENERGY CODE. The New York State Energy Conservation Construction Code, adopted pursuant to Article 11 of the New York State Energy Law.

ENERGY COST. The total estimated annual cost for purchased energy for the building functions regulated by this code, including applicable demand charges.

ENERGY RECOVERY VENTILATION SYSTEM. Systems that employ air-to-air heat exchangers to recover energy from exhaust air for the purpose of preheating, precooling, humidifying or dehumidifying outdoor *ventilation* air prior to supplying the air to a space, either directly or as part of an HVAC system.

ENERGY SIMULATION TOOL. An *approved* software program or calculation-based methodology that projects the annual energy use of a building.

ENTRANCE DOOR. A vertical fenestration product used for occupant ingress, egress and access in nonresidential buildings, including, but not limited to, exterior entrances utilizing latching hardware and automatic closers and containing over 50 percent glazing specifically designed to withstand heavy-duty usage.

EQUIPMENT ROOM. A space that contains either electrical equipment, mechanical equipment, machinery, water pumps or hydraulic pumps that are a function of the building's services.

[NY] EXISTING BUILDING CODE OF NEW YORK STATE. The 2020 edition of the publication entitled "Existing Building Code of New York State," published by the International Code Council, Inc. (publication date November 2019).

EXTERIOR WALL. Walls including both above-grade walls and basement walls.

FAN BRAKE HORSEPOWER (BHP). The horsepower delivered to the fan's shaft. Brake horsepower does not include the mechanical drive losses such as that from belts and gears.

FAN EFFICIENCY GRADE (FEG). A numerical rating identifying the fan's aerodynamic ability to convert shaft power, or impeller power in the case of a direct-driven fan, to air power.

FAN SYSTEM BHP. The sum of the fan brake horsepower of all fans that are required to operate at fan system design conditions to supply air from the heating or cooling source to the *conditioned spaces* and return it to the source or exhaust it to the outdoors.

FAN SYSTEM DESIGN CONDITIONS. Operating conditions that can be expected to occur during normal system operation that result in the highest supply fan airflow rate to conditioned spaces served by the system, other than during air economizer operation.

FAN SYSTEM MOTOR NAMEPLATE HP. The sum of the motor nameplate horsepower of all fans that are required to operate at design conditions to supply air from the heating or cooling source to the *conditioned spaces* and return it to the source or exhaust it to the outdoors.

FENESTRATION. Products classified as either skylights or vertical fenestration.

Skylights. Glass or other transparent or translucent glazing material installed at a slope of less than 60 degrees (1.05 rad) from horizontal, including unit skylights, tubular daylighting devices and glazing materials in solariums, sunrooms, roofs and sloped walls.

Vertical fenestration. Windows that are fixed or operable, opaque doors, glazed doors, glazed block and combination opaque and glazed doors composed of glass or other transparent or translucent glazing materials and installed at a slope of not less than 60 degrees (1.05 rad) from horizontal.

FENESTRATION PRODUCT, FIELD-FABRICATED. A fenestration product whose frame is made at the construction site of standard dimensional lumber or other materials that were not previously cut, or otherwise formed with the specific intention of being used to fabricate a fenestration product or exterior door. Field fabricated does not include site-built fenestration.

FENESTRATION PRODUCT, SITE-BUILT. A fenestration product designed to be made up of field-glazed or field-assembled units using specific factory cut or otherwise factory-formed framing and glazing units. Examples of site-built fenestration include storefront systems, curtain walls, and atrium roof systems.

***F*-FACTOR.** The perimeter heat loss factor for slab-on-grade floors (Btu/h • ft • °F) [W/(m • K)].

INTERNATIONAL CODE COUNCIL®
Copyright © 2019 ICC & NYSDOS. ALL RIGHTS RESERVED. Accessed by Lauren Gualdino (lgualdino@briarcliffmanor.org), (-) Order Number #100880972 on May 08, 2020 07:05 AM (PDT) pursuant to License Agreement with ICC & NYSDOS. No further reproduction, no

100880972

[NY] FIRE CODE OF NEW YORK STATE. The 2020 edition of the publication entitled "Fire Code of New York State," published by the International Code Council, Inc. (publication date November 2019).

FLOOR AREA, NET. The actual occupied area not including unoccupied accessory areas such as corridors, stairways, toilet rooms, mechanical rooms and closets.

[NY] FUEL GAS CODE OF NEW YORK STATE. The 2020 edition of the publication entitled "Fuel Gas Code of New York State," published by the International Code Council, Inc. (publication date November 2019).

GENERAL LIGHTING. Lighting that provides a substantially uniform level of illumination throughout an area. *General lighting* shall not include decorative lighting or lighting that provides a dissimilar level of illumination to serve a specialized application or feature within such area.

➡

GREENHOUSE. A structure or a thermally isolated area of a building that maintains a specialized sunlit environment exclusively used for, and essential to, the cultivation, protection or maintenance of plants.

[NY] GROUP R. Buildings or portions of buildings that contain any of the following occupancies as established in the *Building Code of New York State*:

1. *Group R*-1.
2. *Group R*-2 where located more than three stories in height above grade plane.
3. *Group R*-4 where located more than three stories in height above grade plane.

HEAT TRAP. An arrangement of piping and fittings, such as elbows, or a commercially available heat trap that prevents thermosyphoning of hot water during standby periods.

HEATED SLAB. Slab-on-grade construction in which the heating elements, hydronic tubing, or hot air distribution system is in contact with, or placed within or under, the slab.

HIGH SPEED DOOR. A nonswinging door used primarily to facilitate vehicular access or material transportation, with a minimum opening rate of 32 inches (813 mm) per second, a minimum closing rate of 24 inches (610 mm) per second and that includes an automatic-closing device.

[NY] HISTORIC BUILDING. The term historic building means an existing building or structure that:

1. is listed in the New York State Register of Historic Places, either individually or as a contributing building to a historic district; or
2. is listed in the National Register of Historic Places, either individually or as a contributing building to a historic district; or
3. has been determined to be eligible for listing in either the New York State or National Register of Historic Places, either individually or as a contributing building to a historic district, by the New York State Commissioner of Parks, Recreation and Historic Preservation; or
4. has been determined to be eligible for listing in the National Register of Historic Places, either individually or as a contributing building to a historic district, by the U.S. Secretary of the Interior.

HUMIDISTAT. A regulatory device, actuated by changes in humidity, used for automatic control of relative humidity.

IEC DESIGN H MOTOR. An electric motor that meets all of the following:

1. It is an induction motor designed for use with three-phase power.
2. It contains a cage rotor.
3. It is capable of direct-on-line starting.
4. It has four, six or eight poles.
5. It is rated from 0.4 kW to 1600 kW at a frequency of 60 hertz.

IEC DESIGN N MOTOR. An electric motor that meets all of the following:

1. It is an induction motor designed for use with three-phase power.
2. It contains a cage rotor.
3. It is capable of direct-on-line starting.
4. It has two, four, six or eight poles.
5. It is rated from 0.4 kW to 1600 kW at a frequency of 60 hertz.

INFILTRATION. The uncontrolled inward air leakage into a building caused by the pressure effects of wind or the effect of differences in the indoor and outdoor air density or both.

INTEGRATED PART LOAD VALUE (IPLV). A single-number figure of merit based on part-load EER, COP or kW/ton expressing part-load efficiency for air-conditioning and heat pump equipment on the basis of weighted operation at various load capacities for equipment.

ISOLATION DEVICES. Devices that isolate HVAC zones so that they can be operated independently of one another. *Isolation devices* include separate systems, isolation dampers, and controls providing shutoff at terminal boxes.

LABELED. Equipment, materials or products to which have been affixed a label, seal, symbol or other identifying mark of a nationally recognized testing laboratory, approved agency or other organization concerned with product evaluation that maintains periodic inspection of the production of the *labeled* items and whose labeling indicates either that the equipment, material or product meets identified standards or has been tested and found suitable for a specified purpose.

LINER SYSTEM (Ls). A system that includes the following:

1. A continuous vapor barrier liner membrane that is installed below the purlins and that is uninterrupted by framing members.
2. An uncompressed, unfaced insulation resting on top of the liner membrane and located between the purlins.

For multilayer installations, the last rated *R-value* of insulation is for unfaced insulation draped over purlins and then compressed when the metal roof panels are attached.

LISTED. Equipment, materials, products or services included in a list published by an organization acceptable to the *build-*

INTERNATIONAL CODE COUNCIL®
Copyright © 2019 ICC & NYSDOS. ALL RIGHTS RESERVED. Accessed by Lauren Gualdino (lgualdino@briarcliffmanor.org), (-) Order Number #100880972 on May 08, 2020 07:05 AM (PDT) pursuant to License Agreement with ICC & NYSDOS. No further reproduction, no

100880972

ing official and concerned with evaluation of products or services that maintains periodic inspection of production of *listed* equipment or materials or periodic evaluation of services and whose listing states either that the equipment, material, product or service meets identified standards or has been tested and found suitable for a specified purpose.

LOW-SLOPED ROOF. A roof having a slope less than 2 units vertical in 12 units horizontal.

LOW-VOLTAGE DRY-TYPE DISTRIBUTION TRANSFORMER. A transformer that is air-cooled, does not use oil as a coolant, has an input voltage less than or equal to 600 volts and is rated for operation at a frequency of 60 hertz.

LUMINAIRE-LEVEL LIGHTING CONTROLS. A lighting system consisting of one or more luminaires with embedded lighting control logic, occupancy and ambient light sensors, wireless networking capabilities and local override switching capability, where required.

MANUAL. Capable of being operated by personal intervention (see "Automatic").

[NY] MECHANICAL CODE OF NEW YORK STATE. The 2020 edition of the publication entitled "Mechanical Code of New York State," published by the International Code Council, Inc. (publication date November 2019).

NAMEPLATE HORSEPOWER. The nominal motor output power rating stamped on the motor nameplate.

NEMA DESIGN A MOTOR. A squirrel-cage motor that meets all of the following:

1. It is designed to withstand full-voltage starting and develop locked-rotor torque as shown in paragraph 12.38.1 of NEMA MG 1.
2. It has pull-up torque not less than the values shown in paragraph 12.40.1 of NEMA MG 1.
3. It has breakdown torque not less than the values shown in paragraph 12.39.1 of NEMA MG 1.
4. It has a locked-rotor current higher than the values shown in paragraph 12.35.1 of NEMA MG 1 for 60 hertz and paragraph 12.35.2 of NEMA MG 1 for 50 hertz.
5. It has a slip at rated load of less than 5 percent for motors with fewer than 10 poles.

NEMA DESIGN B MOTOR. A squirrel-cage motor that meets all of the following:

1. It is designed to withstand full-voltage starting.
2. It develops locked-rotor, breakdown, and pull-up torques adequate for general application as specified in Sections 12.38, 12.39 and 12.40 of NEMA MG1.
3. It draws locked-rotor current not to exceed the values shown in Section 12.35.1 for 60 hertz and Section 12.35.2 for 50 hertz of NEMA MG1.
4. It has a slip at rated load of less than 5 percent for motors with fewer than 10 poles.

NEMA DESIGN C MOTOR. A squirrel-cage motor that meets all of the following:

1. Designed to withstand full-voltage starting and develop locked-rotor torque for high-torque applications up to the values shown in paragraph 12.38.2 of NEMA MG1 (incorporated by reference, see A§431.15).
2. It has pull-up torque not less than the values shown in paragraph 12.40.2 of NEMA MG1.
3. It has breakdown torque not less than the values shown in paragraph 12.39.2 of NEMA MG1.
4. It has a locked-rotor current not to exceed the values shown in paragraph 12.35.1 of NEMA MG1 for 60 hertz and paragraph 12.35.2 for 50 hertz.
5. It has a slip at rated load of less than 5 percent.

NETWORKED GUESTROOM CONTROL SYSTEM. A control system, accessible from the front desk or other central location associated with a *Group R*-1 building, that is capable of identifying the occupancy status of each guestroom according to a timed schedule and is capable of controlling HVAC in each hotel and motel guestroom separately.

NONSTANDARD PART LOAD VALUE (NPLV). A single-number part-load efficiency figure of merit calculated and referenced to conditions other than IPLV conditions, for units that are not designed to operate at AHRI standard rating conditions.

OCCUPANT SENSOR CONTROL. An automatic control device or system that detects the presence or absence of people within an area and causes lighting, equipment or appliances to be regulated accordingly.

ON-SITE RENEWABLE ENERGY. Energy derived from solar radiation, wind, waves, tides, landfill gas, biogas, biomass or the internal heat of the earth. The energy system providing on-site renewable energy shall be located on the project site.

OPAQUE DOOR. A door that is not less than 50-percent opaque in surface area.

[NY] PLUMBING CODE OF NEW YORK STATE. The 2020 edition of the publication entitled "Plumbing Code of New York State," published by the International Code Council, Inc. (publication date November 2019).

POWERED ROOF/WALL VENTILATORS. A fan consisting of a centrifugal or axial impeller with an integral driver in a weather-resistant housing and with a base designed to fit, usually by means of a curb, over a wall or roof opening.

PROPOSED DESIGN. A description of the proposed building used to estimate annual energy use for determining compliance based on total building performance.

RADIANT HEATING SYSTEM. A heating system that transfers heat to objects and surfaces within a conditioned space, primarily by infrared radiation.

READY ACCESS (TO). That which enables a device, appliance or equipment to be directly reached, without requiring the removal or movement of any panel or similar obstruction.

INTERNATIONAL CODE COUNCIL®
Copyright © 2019 ICC & NYSDOS. ALL RIGHTS RESERVED. Accessed by Lauren Gualdino (lgualdino@briarcliffmanor.org), (-) Order Number #100880972 on May 08, 2020 07:05 AM (PDT) pursuant to License Agreement with ICC & NYSDOS. No further reproduction, no

100880972

REFRIGERANT DEW POINT. The refrigerant vapor saturation temperature at a specified pressure.

REFRIGERATED WAREHOUSE COOLER. An enclosed storage space capable of being refrigerated to temperatures above 32°F (0°C), that can be walked into and has a total chilled storage area of not less than 3,000 square feet (279 m^2).

REFRIGERATED WAREHOUSE FREEZER. An enclosed storage space capable of being refrigerated to temperatures at or below 32°F (0°C), that can be walked into and has a total chilled storage area of not less than 3,000 square feet (279 m^2).

REFRIGERATION SYSTEM, LOW TEMPERATURE. Systems for maintaining food product in a frozen state in refrigeration applications.

REFRIGERATION SYSTEM, MEDIUM TEMPERATURE. Systems for maintaining food product above freezing in refrigeration applications.

[NY] REGISTERED DESIGN PROFESSIONAL. An individual who is a licensed and registered architect (RA) in accordance with Article 147 of the New York State Education Law or a licensed and registered professional engineer (PE) in accordance with Article 145 of the New York State Education Law.

REPAIR. The reconstruction or renewal of any part of an existing building for the purpose of its maintenance or to correct damage.

REROOFING. The process of recovering or replacing an existing roof covering. See "*Roof recover*" and "Roof replacement."

[NY] RESIDENTIAL BUILDING. For this code, includes:

1. Detached one-family dwellings having not more than three stories above grade plane;
2. Detached two-family dwellings having not more than three stories above grade plane;
3. Buildings that (i) consist of three or more attached *townhouse* units and (ii) have not more than three stories above grade plane;
4. Buildings that (i) are classified in accordance with Chapter 3 of the *Building Code of New York State* in *Group R*-2, *R*-3 or *R*-4 and (ii) have not more than three stories above grade plane;
5. Factory manufactured homes (as defined in Section 372(8) of the New York State Executive Law); and
6. Mobile homes (as defined in Section 372(13) of the New York State Executive Law).

For the purposes of this definition of the term "Residential building," the term "Townhouse unit" means a single-family dwelling unit constructed in a group of three or more attached units in which each unit (1) extends from the foundation to roof, (2) has open space on at least two sides, and (3) has a separate means of egress.

[NY] RESIDENTIAL CODE OF NEW YORK STATE. The 2020 edition of the publication entitled "Residential Code of New York State," published by the International Code Council, Inc. (publication date November 2019).

ROOF ASSEMBLY. A system designed to provide weather protection and resistance to design loads. The system consists of a roof covering and roof deck or a single component serving as both the roof covering and the roof deck. A *roof assembly* includes the roof covering, underlayment, roof deck, insulation, vapor retarder and interior finish.

ROOF RECOVER. The process of installing an additional roof covering over an existing roof covering without removing the existing roof covering.

ROOF REPAIR. Reconstruction or renewal of any part of an existing roof for the purpose of its maintenance.

ROOF REPLACMENT. The process of removing the existing roof covering, repairing any damaged substrate and installing a new roof covering.

ROOFTOP MONITOR. A raised section of a roof containing vertical fenestration along one or more sides.

***R*-VALUE (THERMAL RESISTANCE).** The inverse of the time rate of heat flow through a body from one of its bounding surfaces to the other surface for a unit temperature difference between the two surfaces, under steady state conditions, per unit area (h • ft^2 • °F/Btu) [(m^2 • K)/W].

SATURATED CONDENSING TEMPERATURE. The saturation temperature corresponding to the measured refrigerant pressure at the condenser inlet for single component and azeotropic refrigerants, and the arithmetic average of the dew point and *bubble point* temperatures corresponding to the refrigerant pressure at the condenser entrance for zeotropic refrigerants.

SERVICE WATER HEATING. Supply of hot water for purposes other than comfort heating.

SLEEPING UNIT. A room or space in which people sleep, that can include permanent provisions for living, eating, and either sanitation or kitchen facilities but not both. Such rooms and spaces that are part of a dwelling unit are not *sleeping units*.

SMALL ELECTRIC MOTOR. A general purpose, alternating current, single speed induction motor.

SOLAR HEAT GAIN COEFFICIENT (SHGC). The ratio of the solar heat gain entering the space through the fenestration assembly to the incident solar radiation. Solar heat gain includes directly transmitted solar heat and absorbed solar radiation, that is then reradiated, conducted or convected into the space.

[NY] STANDARD REFERENCE DESIGN. A version of the *proposed design* that meets the minimum prescriptive and mandatory baseline requirements of this code. The *standard reference design*, as the code baseline, is used to determine the maximum annual energy use requirement for compliance. The *proposed design* is measured against the *standard reference design* in an annual energy use simulation and is based on total building performance. Parameters of the *standard reference design* and the *proposed design* are specified in tables contained in Section C407.

STOREFRONT. A system of doors and windows mulled as a composite fenestration structure that has been designed to resist

INTERNATIONAL CODE COUNCIL®
Copyright © 2019 ICC & NYSDOS. ALL RIGHTS RESERVED. Accessed by Lauren Gualdino (lgualdino@briarcliffmanor.org), (-) Order Number #100880972 on May 08, 2020 07:05 AM (PDT) pursuant to License Agreement with ICC & NYSDOS. No further reproduction, no

100880972

heavy use. *Storefront* systems include, but are not limited to, exterior fenestration systems that span from the floor level or above to the ceiling of the same story on commercial buildings, with or without mulled windows and doors.

THERMOSTAT. An automatic control device used to maintain temperature at a fixed or adjustable setpoint.

TIME SWITCH CONTROL. An automatic control device or system that controls lighting or other loads, including switching off, based on time schedules.

[NY] TOWNHOUSE, OR TOWNHOUSE UNIT. A single-family dwelling unit constructed in a group of three or more attached units in which each unit (1) extends from the foundation to roof, (2) has open space on at least two sides, and (3) has a separate means of egress.

***U*-FACTOR (THERMAL TRANSMITTANCE).** The coefficient of heat transmission (air to air) through a building component or assembly, equal to the time rate of heat flow per unit area and unit temperature difference between the warm side and cold side air films (Btu/h • ft^2 • °F) [W/(m^2 • K)].

[NY] UNIFORM CODE. The *New York State Uniform Fire Prevention and Building Code* adopted pursuant to Article 18 of the New York State Executive Law, as currently in effect and as hereafter amended from time to time.

VARIABLE REFRIGERANT FLOW SYSTEM. An engineered direct-expansion (DX) refrigerant system that incorporates a common condensing unit, at least one variable-capacity compressor, a distributed refrigerant piping network to multiple indoor fan heating and cooling units each capable of individual zone temperature control, through integral zone temperature control devices and a common communications network. Variable refrigerant flow utilizes three or more steps of control on common interconnecting piping.

VENTILATION. The natural or mechanical process of supplying conditioned or unconditioned air to, or removing such air from, any space.

VENTILATION AIR. That portion of supply air that comes from outside (outdoors) plus any recirculated air that has been treated to maintain the desired quality of air within a designated space.

VISIBLE TRANSMITTANCE [VT]. The ratio of visible light entering the space through the fenestration product assembly to the incident visible light. *Visible transmittance* includes the effects of glazing material and frame and is expressed as a number between 0 and 1.

VOLTAGE DROP. A decrease in voltage caused by losses in the wiring systems that connect the power source to the load.

WALK-IN COOLER. An enclosed storage space capable of being refrigerated to temperatures above 32°F (0°C) and less than 55°F (12.8°C) that can be walked into, has a ceiling height of not less than 7 feet (2134 mm) and has a total chilled storage area of less than 3,000 square feet (279 m^2).

WALK-IN FREEZER. An enclosed storage space capable of being refrigerated to temperatures at or below 32°F (0°C) that can be walked into, has a ceiling height of not less than 7 feet (2134 mm) and has a total chilled storage area of less than 3,000 square feet (279 m^2).

WALL, ABOVE-GRADE. A wall associated with the *building thermal envelope* that is more than 15 percent above grade and is on the exterior of the building or any wall that is associated with the *building thermal envelope* that is not on the exterior of the building.

WALL, BELOW-GRADE. A wall associated with the basement or first story of the building that is part of the *building thermal envelope*, is not less than 85 percent below grade and is on the exterior of the building.

WATER HEATER. Any heating appliance or equipment that heats potable water and supplies such water to the potable hot water distribution system.

ZONE. A space or group of spaces within a building with heating or cooling requirements that are sufficiently similar so that desired conditions can be maintained throughout using a single controlling device.

INTERNATIONAL CODE COUNCIL®
Copyright © 2019 ICC & NYSDOS. ALL RIGHTS RESERVED. Accessed by Lauren Gualdino (lgualdino@briarcliffmanor.org), (-) Order Number #100880972 on May 08, 2020 07:05 AM (PDT) pursuant to License Agreement with ICC & NYSDOS. No further reproduction, no

100880972

INTERNATIONAL CODE COUNCIL®
Copyright © 2019 ICC & NYSDOS. ALL RIGHTS RESERVED. Accessed by Lauren Gualdino (lgualdino@briarcliffmanor.org), (-) Order Number #100880972 on May 08, 2020 07:05 AM (PDT) pursuant to License Agreement with ICC & NYSDOS. No further reproduction, no

CHAPTER 3 [CE]

GENERAL REQUIREMENTS

SECTION C301
CLIMATE ZONES

[NY] C301.1 General. *Climate zones* from Table C301.1 shall be used for determining the applicable requirements from Chapter 4.

[NY] TABLE C301.1
NEW YORK STATE CLIMATE ZONES BY COUNTY

Zone 4A	Zone 5A	Zone 6A
Bronx	Albany	Allegany
Kings	Cayuga	Broome
Nassau	Chautauqua	Cattaraugus
New York	Chemung	Chenango
Queens	Columbia	Clinton
Richmond	Cortland	Delaware
Suffolk	Dutchess	Essex
Westchester	Erie	Franklin
	Genesee	Fulton
	Greene	Hamilton
	Livingston	Herkimer
	Monroe	Jefferson
	Niagara	Lewis
	Onondaga	Madison
	Ontario	Montgomery
	Orange	Oneida
	Orleans	Otsego
	Oswego	Schoharie
	Putnam	Schuyler
	Rensselaer	Steuben
	Rockland	St. Lawrence
	Saratoga	Sullivan
	Schenectady	Tompkins
	Seneca	Ulster
	Tioga	Warren
	Washington	Wyoming
	Wayne	
	Yates	

SECTION C302
DESIGN CONDITIONS

C302.1 Interior design conditions. The interior design temperatures used for heating and cooling load calculations shall be a maximum of 72°F (22°C) for heating and minimum of 75°F (24°C) for cooling.

SECTION C303
MATERIALS, SYSTEMS AND EQUIPMENT

C303.1 Identification. Materials, systems and equipment shall be identified in a manner that will allow a determination of compliance with the applicable provisions of this code.

C303.1.1 Building thermal envelope insulation. An *R-value* identification mark shall be applied by the manufacturer to each piece of *building thermal envelope* insulation 12 inches (305 mm) or greater in width. Alternatively, the insulation installers shall provide a certification listing the type, manufacturer and *R-value* of insulation installed in each element of the *building thermal envelope*. For blown-in or sprayed fiberglass and cellulose insulation, the initial installed thickness, settled thickness, settled *R-value*, installed density, coverage area and number of bags installed shall be *listed* on the certification. For sprayed polyurethane foam (SPF) insulation, the installed thickness of the areas covered and *R-value* of installed thickness shall be *listed* on the certification. For insulated siding, the *R-value* shall be *labeled* on the product's package and shall be *listed* on the certification. The insulation installer shall sign, date and post the certification in a conspicuous location on the job site.

Exception: For roof insulation installed above the deck, the *R-value* shall be *labeled* as required by the material standards specified in Table 1508.2 of the *Building Code of New York State*.

C303.1.1.1 Blown-in or sprayed roof/ceiling insulation. The thickness of blown-in or sprayed fiberglass and cellulose roof/ceiling insulation shall be written in inches (mm) on markers and one or more of such markers shall be installed for every 300 square feet (28 m^2) of attic area throughout the attic space. The markers shall be affixed to the trusses or joists and marked with the minimum initial installed thickness with numbers not less than 1 inch (25 mm) in height. Each marker shall face the attic *access* opening. Spray polyurethane foam thickness and installed *R-value* shall be *listed* on certification provided by the insulation installer.

[NY] TABLE C301.3(2)
INTERNATIONAL CLIMATE ZONE DEFINITIONS

ZONE NUMBER	THERMAL CRITERIA	
	IP Units	SI Units
4	CDD50°F ≤ 4500 AND HDD65°F ≤ 5400	CDD10°C ≤ 2500 AND HDD18°C ≤ 3000
5	5400 < HDD65°F ≤ 7200	3000 < HDD18°C ≤ 4000
6	7200 < HDD65°F ≤ 9000	4000 < HDD18°C ≤ 5000

For SI: °C = [(°F) - 32]/1.8.

INTERNATIONAL CODE COUNCIL®
Copyright © 2019 ICC & NYSDOS. ALL RIGHTS RESERVED. Accessed by Lauren Gualdino (lgualdino@briarcliffmanor.org), (-) Order Number #100880972 on May 08, 2020 07:05 AM (PDT) pursuant to License Agreement with ICC & NYSDOS. No further reproduction, no

100880972

C303.1.2 Insulation mark installation. Insulating materials shall be installed such that the manufacturer's *R-value* mark is readily observable upon inspection.

C303.1.3 Fenestration product rating. *U-factors* of fenestration products shall be determined as follows:

1. For windows, doors and skylights, *U-factor* ratings shall be determined in accordance with NFRC 100.
2. Where required for garage doors and rolling doors, *U-factor* ratings shall be determined in accordance with either NFRC 100 or ANSI/DASMA 105.

U-factors shall be determined by an accredited, independent laboratory, and *labeled* and certified by the manufacturer.

Products lacking such a *labeled U-factor* shall be assigned a default *U-factor* from Table C303.1.3(1) or C303.1.3(2). The solar heat gain coefficient (SHGC) and *visible transmittance* (VT) of glazed fenestration products (windows, glazed doors and skylights) shall be determined in accordance with NFRC 200 by an accredited, independent laboratory, and *labeled* and certified by the manufacturer. Products lacking such a *labeled* SHGC or VT shall be assigned a default SHGC or VT from Table C303.1.3(3).

TABLE C303.1.3(1)
DEFAULT GLAZED WINDOW, GLASS DOOR AND SKYLIGHT *U*-FACTORS

FRAME TYPE	WINDOW AND GLASS DOOR		SKYLIGHT	
	Single	Double	Single	Double
Metal	1.20	0.80	2.00	1.30
Metal with Thermal Break	1.10	0.65	1.90	1.10
Nonmetal or Metal Clad	0.95	0.55	1.75	1.05
Glazed Block	0.60			

TABLE C303.1.3(2)
DEFAULT OPAQUE DOOR *U*-FACTORS

DOOR TYPE	OPAQUE *U*-FACTOR
Uninsulated Metal	1.20
Insulated Metal (Rolling)	0.90
Insulated Metal (Other)	0.60
Wood	0.50
Insulated, nonmetal edge, max 45% glazing, any glazing double pane	0.35

TABLE C303.1.3(3)
DEFAULT GLAZED FENESTRATION SHGC AND VT

	SINGLE GLAZED		DOUBLE GLAZED		GLAZED BLOCK
	Clear	Tinted	Clear	Tinted	
SHGC	0.8	0.7	0.7	0.6	0.6
VT	0.6	0.3	0.6	0.3	0.6

C303.1.4 Insulation product rating. The thermal resistance (*R-value*) of insulation shall be determined in accordance with the U.S. Federal Trade Commission *R-value* rule (CFR Title 16, Part 460) in units of h • ft^2 • °F/Btu at a mean temperature of 75°F (24°C).

C303.1.4.1 Insulated siding. The thermal resistance (*R-value*) of insulated siding shall be determined in accordance with ASTM C1363. Installation for testing shall be in accordance with the manufacturer's instructions.

[NY] C303.2 Installation. Materials, systems and equipment shall be installed in accordance with the manufacturer's instructions and the applicable provisions of the *Uniform Code* or the *New York City Construction Code,* as applicable.

C303.2.1 Protection of exposed foundation insulation. Insulation applied to the exterior of basement walls, crawl space walls and the perimeter of slab-on-grade floors shall have a rigid, opaque and weather-resistant protective covering to prevent the degradation of the insulation's thermal performance. The protective covering shall cover the exposed exterior insulation and extend not less than 6 inches (153 mm) below grade.

C303.2.2 Multiple layers of continuous insulation board. Where two or more layers of continuous insulation board are used in a construction assembly, the continuous insulation boards shall be installed in accordance with Section C303.2. Where the continuous insulation board manufacturer's instructions do not address installation of two or more layers, the edge joints between each layer of continuous insulation boards shall be staggered.

INTERNATIONAL CODE COUNCIL®
Copyright © 2019 ICC & NYSDOS. ALL RIGHTS RESERVED. Accessed by Lauren Gualdino (lgualdino@briarcliffmanor.org), (-) Order Number #100880972 on May 08, 2020 07:05 AM (PDT) pursuant to License Agreement with ICC & NYSDOS. No further reproduction, no

100880972

CHAPTER 4 [CE]

COMMERCIAL ENERGY EFFICIENCY

SECTION C401
GENERAL

C401.1 Scope. The provisions in this chapter are applicable to commercial *buildings* and their *building sites.*

[NY] C401.2 Application. Commercial buildings shall comply with one of the following:

1. ASHRAE Compliance Path: The requirements of ANSI/ASHRAE/IESNA 90.1, as amended by 19 NYCRR Part 1240.
2. Prescriptive Compliance Path: The requirements of Sections C402 through C405 and C408. In addition, commercial buildings shall comply with Section C406 and tenant spaces shall comply with Section C406.1.1.
3. The requirements of Sections C402.5, C403.2, C403.3 through C403.3.2, C403.4 through C403.4.2.3, C403.5.5, C403.7, C403.8.1 through C403.8.4, C403.10.1 through C403.10.3, C403.11, C403.12, C404, C405, C407 and C408. The building energy cost shall be equal to or less than 85 percent of the *standard reference design building*.

➡ **C401.2.1 Application to replacement fenestration products.** Where some or all of an existing *fenestration* unit is replaced with a new *fenestration* product, including sash and glazing, the replacement *fenestration* unit shall meet the applicable requirements for *U-factor* and *SHGC* in Table C402.4.

Exception: An *area-weighted average* of the *U-factor* of replacement fenestration products being installed in the building for each fenestration product category *listed* in Table C402.4 shall be permitted to satisfy the *U-factor* requirements for each fenestration product category *listed* in Table C402.4. Individual fenestration products from different product categories *listed* in Table C402.4 shall not be combined in calculating the *area-weighted average U-factor*.

SECTION C402
BUILDING ENVELOPE REQUIREMENTS

C402.1 General (Prescriptive). *Building thermal envelope* assemblies for buildings that are intended to comply with the code on a prescriptive basis in accordance with the compliance path described in Item 2 of Section C401.2, shall comply with the following:

1. The opaque portions of the building thermal envelope shall comply with the specific insulation requirements of Section C402.2 and the thermal requirements of either the *R-value*-based method of Section C402.1.3; the *U*-, *C*- and *F*-factor-based method of Section C402.1.4; or the component performance alternative of Section C402.1.5.
2. Roof solar reflectance and thermal emittance shall comply with Section C402.3.
3. Fenestration in building envelope assemblies shall comply with Section C402.4.
4. Air leakage of building envelope assemblies shall comply with Section C402.5.

Alternatively, where buildings have a vertical fenestration area or skylight area exceeding that allowed in Section C402.4, the building and building thermal envelope shall comply with Section C401.2, Item 1 or Section C401.2, Item 3.

Walk-in coolers, walk-in freezers, refrigerated warehouse coolers and refrigerated warehouse freezers shall comply with Section C403.10.1 or C403.10.2.

C402.1.1 Low-energy buildings. The following low-energy buildings, or portions thereof separated from the remainder of the building by *building thermal envelope* assemblies complying with this section, shall be exempt from the *building thermal envelope* provisions of Section C402.

1. Those with a peak design rate of energy usage less than 3.4 Btu/h • ft^2 (10.7 W/m^2) or 1.0 watt per square foot (10.7 W/m^2) of floor area for space conditioning purposes.
2. Those that do not contain *conditioned space*.
3. *Greenhouses.*

C402.1.2 Equipment buildings. Buildings that comply with the following shall be exempt from the *building thermal envelope* provisions of this code:

1. Are separate buildings with floor area not more than 500 square feet (50 m^2).
2. Are intended to house electronic equipment with installed equipment power totaling not less than 7 watts per square foot (75 W/m^2) and not intended for human occupancy.
3. Have a heating system capacity not greater than (17,000 Btu/h) (5 kW) and a heating thermostat setpoint that is restricted to not more than 50°F (10°C).
4. Have an average wall and roof *U-factor* less than 0.200 in *Climate Zones* 1 through 5 and less than 0.120 in *Climate Zones* 6 through 8.
5. Comply with the roof solar reflectance and thermal emittance provisions for *Climate Zone* 1.

C402.1.3 Insulation component *R*-value-based method. *Building thermal envelope* opaque assemblies shall comply with the requirements of Sections C402.2 and C402.4 based on the *climate zone* specified in Chapter 3. For opaque portions of the *building thermal envelope* intended to comply on an insulation component *R-value* basis, the *R-values* for insulation shall be not less than that specified in Table C402.1.3. Commercial buildings or portions of commercial buildings enclosing *Group R* occupancies shall use the *R-values* from the "*Group R*" column of Table C402.1.3. Commercial buildings or portions of commercial buildings

INTERNATIONAL CODE COUNCIL®
Copyright © 2019 ICC & NYSDOS. ALL RIGHTS RESERVED. Accessed by Lauren Gualdino (lgualdino@briarcliffmanor.org), (-) Order Number #100880972 on May 08, 2020 07:05 AM (PDT) pursuant to License Agreement with ICC & NYSDOS. No further reproduction, no

100880972

enclosing occupancies other than *Group R* shall use the *R-values* from the "All other" column of Table C402.1.3.

C402.1.4 Assembly *U*-factor, *C*-factor or *F*-factor-based method. Building thermal envelope opaque assemblies shall meet the requirements of Sections C402.2 and C402.4 based on the climate zone specified in Chapter 3. Building thermal envelope opaque assemblies intended to comply on an assembly *U*-, *C*- or *F*-factor basis shall have a *U*-, *C*- or *F*-factor not greater than that specified in Table C402.1.4. Commercial buildings or portions of commercial buildings enclosing *Group R* occupancies shall use the *U*-, *C*- or *F*-factor from the "*Group R*" column of Table C402.1.4. Commercial buildings or portions of commercial buildings enclosing occupancies other than *Group R* shall use the *U*-, *C*- or *F*-factor from the "All other" column of Table C402.1.4

C402.1.4.1 Thermal resistance of cold-formed steel walls. *U-factors* of walls with cold-formed steel studs shall be permitted to be determined in accordance with Equation 4-1:

$$U = 1/[R_s + (ER)] \qquad \textbf{(Equation 4-1)}$$

where:

R_s = The cumulative *R-value* of the wall components along the path of heat transfer, excluding the *cavity insulation* and steel studs.

ER = The effective *R-value* of the *cavity insulation* with steel studs as specified in Table C402.1.4.1.

C402.1.5 Component performance alternative. Building envelope values and fenestration areas determined in accordance with Equation 4-2 shall be an alternative to compliance with the *U*-, *F*- and *C*-factors in Tables C402.1.4 and C402.4 and the maximum allowable fenestration areas in Section C402.4.1. *Fenestration* shall meet the applicable SHGC requirements of Section C402.4.3.

$$A + B + C + D + E \le \text{Zero} \qquad \textbf{(Equation 4-2)}$$

where:

A = Sum of the (UA Dif) values for each distinct assembly type of the building thermal envelope, other than slabs on grade and below-grade walls.

UA Dif = UA Proposed - UA Table.

UA Proposed = Proposed *U*-value × Area.

UA Table = (*U*-factor from Table C402.1.3, C402.1.4 or C402.4 × Area.

B = Sum of the (FL Dif) values for each distinct slab-on-grade perimeter condition of the building thermal envelope.

FL Dif = FL Proposed - FL Table.

FL Proposed = Proposed *F*-value × Perimeter length.

FL Table = (*F*-factor specified in Table C402.1.4) × Perimeter length.

C = Sum of the (CA Dif) values for each distinct below-grade wall assembly type of the building thermal envelope.

CA Dif = CA Proposed - CA Table.

CA Proposed = Proposed *C*-value × Area.

CA Table = (Maximum allowable *C*-factor specified in Table C402.1.4) × Area.

Where the proposed vertical glazing area is less than or equal to the maximum vertical glazing area allowed by Section C402.4.1, the value of D (Excess Vertical Glazing Value) shall be zero. Otherwise:

D = (DA × UV) - (DA × U Wall), but not less than zero.

DA = (Proposed Vertical Glazing Area) - (Vertical Glazing Area allowed by Section C402.4.1).

UA Wall = Sum of the (UA Proposed) values for each opaque assembly of the exterior wall.

U Wall = *Area-weighted average U*-value of all above-grade wall assemblies.

UAV = Sum of the (UA Proposed) values for each vertical glazing assembly.

UV = UAV/total vertical glazing area.

Where the proposed skylight area is less than or equal to the skylight area allowed by Section C402.4.1, the value of E (Excess Skylight Value) shall be zero. Otherwise:

E = (EA × US) - (EA × U Roof), but not less than zero.

EA = (Proposed Skylight Area) - (Allowable Skylight Area as specified in Section C402.4.1).

U Roof = *Area-weighted average U*-value of all roof assemblies.

UAS = Sum of the (UA Proposed) values for each skylight assembly.

US = UAS/total skylight area.

INTERNATIONAL CODE COUNCIL®
Copyright © 2019 ICC & NYSDOS. ALL RIGHTS RESERVED. Accessed by Lauren Gualdino (lgualdino@briarcliffmanor.org), (-) Order Number #100880972 on May 08, 2020 07:05 AM (PDT) pursuant to License Agreement with ICC & NYSDOS. No further reproduction, no

100880972

[NY] TABLE C402.1.3
OPAQUE THERMAL ENVELOPE INSULATION COMPONENT MINIMUM REQUIREMENTS, R-VALUE METHOD[a, i]

CLIMATE ZONE	4 EXCEPT MARINE		5 AND MARINE 4		6	
	All other	Group R	All other	Group R	All other	Group R
Roofs						
Insulation entirely above roof deck	R-30ci	R-30ci	R-30ci	R-30ci	R-30ci	R-30ci
Metal buildings[b]	R-19 + R-11 LS	R-19 + R-11 LS	R-19 + R-11 LS	R-19 + R-11 LS	R-25 + R-11 LS	R-25 + R-11 LS
Attic and other	R-38	R-38	R-38	R-49	R-49	R-49
Walls, above grade						
Mass[g]	R-9.5ci	R-11.4ci	R-11.4ci	R-13.3ci	R-13.3ci	R-15.2ci
Metal building	R-13 + R-13ci	R-13 + R-13ci	R-13 + R-13ci	R-13 + R-13ci	R-13 + R-13ci	R-13 + R-13ci
Metal framed	R-13 + R-7.5ci	R-13 + R-7.5ci	R-13 + R-7.5ci	R-13 + R-7.5ci	R-13 + R-7.5ci	R-13 + R-7.5ci
Wood framed and other	R-13 + R-3.8ci or R-20	R-13 + R-3.8ci or R-20	R-13 + R-3.8ci or R-20	R-13 + R-7.5ci or R-20 + R-3.8ci	R-13 + R-7.5ci or R-20 + R-3.8ci	R-13 + R-7.5ci or R-20 + R-3.8ci
Walls, below grade						
Below-grade wall[c]	R-7.5ci	R-7.5ci	R-7.5ci	R-7.5ci	R-7.5ci	R-7.5ci
Floors						
Mass[e]	R-10ci	R-10.4ci	R-10ci	R-12.5ci	R-12.5ci	R-12.5ci
Joist/framing	R-30	R-30	R-30	R-30	R-30	R-30[e]
Slab-on-grade floors						
Unheated slabs	R-10 for 24″ below	R-10 for 24″ below	R-10 for 24″ below	R-10 for 24″ below	R-10 for 24″ below	R-15 for 24″ below
Heated slabs[h]	R-15 for 24″ below + R-5 full slab	R-15 for 24″ below + R-5 full slab	R-15 for 36″ below + R-5 full slab	R-15 for 36″ below + R-5 full slab	R-15 for 36″ below + R-5 full slab	R-20 for 48″ below + R-5 full slab
Opaque doors						
Nonswinging	R-4.75	R-4.75	R-4.75	R-4.75	R-4.75	R-4.75

For SI: 1 inch = 25.4 mm, 1 pound per square foot = 4.88 kg/m^2, 1 pound per cubic foot = 16 kg/m^3.

ci = *Continuous insulation*, NR = No Requirement, LS = *Liner System*.

a. Assembly descriptions can be found in ANSI/ASHRAE/IESNA Appendix A.
b. Where using *R*-value compliance method, a thermal spacer block shall be provided, otherwise use the *U*-factor compliance method in Table C402.1.4.
c. Reserved.
d. Where heated slabs are below grade, below-grade walls shall comply with the exterior insulation requirements for heated slabs.
e. "Mass floors" shall be in accordance with Section C402.2.3.
f. Steel floor joist systems shall be insulated to R-38.
g. "Mass walls" shall be in accordance with Section C402.2.2.
h. The first value is for perimeter insulation and the second value is for slab insulation. Perimeter insulation is not required to extend below the bottom of the slab.
i. Not applicable to garage doors. See Table C402.1.4.

INTERNATIONAL CODE COUNCIL®
Copyright © 2019 ICC & NYSDOS. ALL RIGHTS RESERVED. Accessed by Lauren Gualdino (lgualdino@briarcliffmanor.org), (-) Order Number #100880972 on May 08, 2020 07:05 AM (PDT) pursuant to License Agreement with ICC & NYSDOS. No further reproduction, no

100880972

[NY] TABLE C402.1.4
OPAQUE THERMAL ENVELOPE ASSEMBLY MAXIMUM REQUIREMENTS, *U*-FACTOR METHOD[a, b]

CLIMATE ZONE	4 EXCEPT MARINE		5 AND MARINE 4		6	
	All other	Group R	All other	Group R	All other	Group R
Roofs						
Insulation entirely above roof deck	U-0.032	U-0.032	U-0.032	U-0.032	U-0.032	U-0.032
Metal buildings	U-0.035	U-0.035	U-0.035	U-0.035	U-0.031	U-0.031
Attic and other	U-0.027	U-0.027	U-0.027	U-0.021	U-0.021	U-0.021
Walls, above grade						
Mass[g]	U-0.104	U-0.090	U-0.090	U-0.080	U-0.080	U-0.071
Metal building	U-0.052	U-0.052	U-0.052	U-0.052	U-0.052	U-0.052
Metal framed	U-0.064	U-0.064	U-0.064	U-0.064	U-0.064	U-0.064
Wood framed and other[c]	U-0.064	U-0.064	U-0.064	U-0.064	U-0.051	U-0.051
Walls, below grade						
Below-grade wall[c]	C-0.119	C-0.119	C-0.119	C-0.119	C-0.119	C-0.119
Floors						
Mass[d]	U-0.076	U-0.074	U-0.074	U-0.064	U-0.064	U-0.064
Joist/framing	U-0.033	U-0.033	U-0.033	U-0.033	U-0.033	U-0.033
Slab-on-grade floors						
Unheated slabs	F-0.54	F-0.54	F-0.54	F-0.54	F-0.54	F-0.52
Heated slabs[f]	F-0.86 0.64	F-0.86 0.64	F-0.79 0.64	F-0.79 0.64	F-0.79 0.55	F-0.69 0.55
Opaque doors						
Swinging door	U-0.61	U-0.61	U-0.37	U-0.37	U-0.37	U-0.37
Garage door <14% glazing	U-0.31	U-0.31	U-0.31	U-0.31	U-0.31	U-0.31

For SI: 1 pound per square foot = 4.88 kg/m^2, 1 pound per cubic foot = 16 kg/m^3.
ci = *Continuous insulation*, NR = No Requirement, LS = *Liner System*.

a. Where assembly *U*-factors, *C*-factors, and *F*-factors are established in ANSI/ASHRAE/IESNA 90.1 Appendix A, such opaque assemblies shall be a compliance alternative where those values meet the criteria of this table, and provided that the construction, excluding the cladding system on walls, complies with the appropriate construction details from ANSI/ASHRAE/ISNEA 90.1 Appendix A.

b. Where *U*-factors have been established by testing in accordance with ASTM C1363, such opaque assemblies shall be a compliance alternative where those values meet the criteria of this table. The *R*-value of continuous insulation shall be permitted to be added to or subtracted from the original tested design.

c. Where heated slabs are below grade, below-grade walls shall comply with the *U*-factor requirements for above-grade mass walls.

d. "Mass floors" shall be in accordance with Section C402.2.3.

e. Reserved.

f. The first value is for perimeter insulation and the second value is for full slab insulation.

g. "Mass walls" shall be in accordance with Section C402.2.2.

INTERNATIONAL CODE COUNCIL®
Copyright © 2019 ICC & NYSDOS. ALL RIGHTS RESERVED. Accessed by Lauren Gualdino (lgualdino@briarcliffmanor.org), (-) Order Number #100880972 on May 08, 2020 07:05 AM (PDT) pursuant to License Agreement with ICC & NYSDOS. No further reproduction, no

100880972

TABLE C402.1.4.1
EFFECTIVE *R*-VALUES FOR STEEL STUD WALL ASSEMBLIES

NOMINAL STUD DEPTH (inches)	SPACING OF FRAMING (inches)	CAVITY *R*-VALUE (insulation)	CORRECTION FACTOR (F_c)	EFFECTIVE *R*-VALUE (ER) (Cavity *R*-Value × F_c)
$3^1/_2$	16	13	0.46	5.98
		15	0.43	6.45
$3^1/_2$	24	13	0.55	7.15
		15	0.52	7.80
6	16	19	0.37	7.03
		21	0.35	7.35
6	24	19	0.45	8.55
		21	0.43	9.03
8	16	25	0.31	7.75
	24	25	0.38	9.50

C402.2 Specific building thermal envelope insulation requirements (Prescriptive). Insulation in building thermal envelope opaque assemblies shall comply with Sections C402.2.1 through C402.2.7 and Table C402.1.3.

[NY] C402.2.1 Roof assembly. The minimum thermal resistance (*R-value*) of the insulating material installed either between the roof framing or continuously on the *roof assembly* shall be as specified in Table C402.1.3, based on construction materials used in the *roof assembly*. Insulation installed on a suspended ceiling having removable ceiling tiles shall not be considered as part of the minimum thermal resistance of the roof insulation. *Continuous insulation* board shall be installed in not less than 2 layers and the edge joints between each layer of insulation shall be staggered.

Exceptions:

1. Continuously insulated roof assemblies where the thickness of insulation varies 1 inch (25 mm) or less and where the area-weighted *U-factor* is equivalent to the same assembly with the *R-value* specified in Table C402.1.3.
2. Where tapered insulation is used with insulation entirely above deck, the *R-value* where the insulation thickness varies 1 inch (25 mm) or less from the minimum thickness of tapered insulation shall comply with the *R-value* specified in Table C402.1.3.
3. Two layers of insulation are not required where insulation tapers to the roof deck, such as at roof drains.
4. The insulation thickness variation is not limited to 1 inch (25 mm) or less where an alternative compliance method is chosen by roof assembly *U*-Factor (Section C402.1.4) or component performance alternative (C402.1.5).

C402.2.1.1 Skylight curbs. Skylight curbs shall be insulated to the level of roofs with insulation entirely above the deck or R-5, whichever is less.

Exception: Unit skylight curbs included as a component of a skylight *listed* and *labeled* in accordance with NFRC 100 shall not be required to be insulated.

C402.2.2 Above-grade walls. The minimum thermal resistance (*R-value*) of materials installed in the wall cavity between framing members and continuously on the walls shall be as specified in Table C402.1.3, based on framing type and construction materials used in the wall assembly. The *R-value* of integral insulation installed in concrete masonry units shall not be used in determining compliance with Table C402.1.3 except as otherwise noted in the table. In determining compliance with Table C402.1.4, the use of the *U-factor* of concrete masonry units with integral insulation shall be permitted.

"Mass walls" where used as a component in the thermal envelope of a building shall comply with one of the following:

1. Weigh not less than 35 pounds per square foot (171 kg/m^2) of wall surface area.
2. Weigh not less than 25 pounds per square foot (122 kg/m^2) of wall surface area where the material weight is not more than 120 pcf (1900 kg/m^3).
3. Have a heat capacity exceeding 7 Btu/ft^2 • °F (144 kJ/m^2 • K).
4. Have a heat capacity exceeding 5 Btu/ft^2 • °F (103 kJ/m^2 • K), where the material weight is not more than 120 pcf (1900 kg/m^3).

C402.2.3 Floors. The thermal properties (component *R-values* or assembly *U*-, *C*- or *F*-factors) of floor assemblies over outdoor air or unconditioned space shall be as specified in Table C402.1.3 or C402.1.4 based on the construction materials used in the floor assembly. Floor framing *cavity insulation* or structural slab insulation shall be installed to maintain permanent contact with the underside of the subfloor decking or structural slabs.

"Mass floors" where used as a component of the thermal envelope of a building shall provide one of the following weights:

1. 35 pounds per square foot (171 kg/m^2) of floor surface area.

INTERNATIONAL CODE COUNCIL®
Copyright © 2019 ICC & NYSDOS. ALL RIGHTS RESERVED. Accessed by Lauren Gualdino (lgualdino@briarcliffmanor.org), (-) Order Number #100880972 on May 08, 2020 07:05 AM (PDT) pursuant to License Agreement with ICC & NYSDOS. No further reproduction, no

100880972

2. 25 pounds per square foot (122 kg/m^2) of floor surface area where the material weight is not more than 120 pounds per cubic foot (1923 kg/m^3).

Exceptions:

1. The floor framing *cavity insulation* or structural slab insulation shall be permitted to be in contact with the top side of sheathing or *continuous insulation* installed on the bottom side of floor assemblies where combined with insulation that meets or exceeds the minimum *R-value* in Table C402.1.3 for "Metal framed" or "Wood framed and other" values for "Walls, Above Grade" and extends from the bottom to the top of all perimeter floor framing or floor assembly members.
2. Insulation applied to the underside of concrete floor slabs shall be permitted an airspace of not more than 1 inch (25 mm) where it turns up and is in contact with the underside of the floor under walls associated with the *building thermal envelope.*

C402.2.4 Slabs-on-grade perimeter insulation. Where the slab on grade is in contact with the ground, the minimum thermal resistance (*R-value*) of the insulation around the perimeter of unheated or *heated slab*-on-grade floors designed in accordance with the *R-value* method of Section C402.1.3 shall be as specified in Table C402.1.3. The perimeter insulation shall be placed on the outside of the foundation or on the inside of the foundation wall. The perimeter insulation shall extend downward from the top of the slab for the minimum distance shown in the table or to the top of the footing, whichever is less, or downward to not less than the bottom of the slab and then horizontally to the interior or exterior for the total distance shown in the table. Insulation extending away from the building shall be protected by pavement or by not less than of 10 inches (254 mm) of soil.

Exception: Where the slab-on-grade floor is greater than 24 inches (61 mm) below the finished exterior grade, perimeter insulation is not required.

C402.2.5 Below-grade walls. The *C*-factor for the below-grade *exterior walls* shall be in accordance with Table C402.1.4. The *R-value* of the insulating material installed continuously within or on the below-grade *exterior walls* of the building envelope shall be in accordance with Table C402.1.3. The *C*-factor or *R-value* required shall extend to a depth of not less than 10 feet (3048 mm) below the outside finished ground level, or to the level of the lowest floor of the *conditioned space* enclosed by the below-grade wall, whichever is less.

C402.2.6 Insulation of radiant heating systems. *Radiant heating system* panels, and their associated components that are installed in interior or exterior assemblies shall be insulated to an *R-value* of not less than R-3.5 on all surfaces not facing the space being heated. *Radiant heating system* panels that are installed in the *building thermal envelope* shall be separated from the exterior of the building or unconditioned or exempt spaces by not less than the *R-value* of insulation installed in the opaque assembly in which they are installed or the assembly shall comply with Section C402.1.4.

Exception: *Heated slabs* on grade insulated in accordance with Section C402.2.4.

C402.2.7 Airspaces. Where the thermal properties of airspaces are used to comply with this code in accordance with Section C401.2, such airspaces shall be enclosed in an unventilated cavity constructed to minimize airflow into and out of the enclosed airspace. Airflow shall be deemed minimized where the enclosed airspace is located on the interior side of the continuous *air barrier* and is bounded on all sides by building components.

Exception: The thermal resistance of airspaces located on the exterior side of the continuous *air barrier* and adjacent to and behind the *exterior wall*-covering material shall be determined in accordance with ASTM C1363 modified with an airflow entering the bottom and exiting the top of the airspace at an air movement rate of not less than 70 mm/second.

[NY] C402.2.8 Fireplaces. New wood-burning fireplaces shall have tight-fitting flue dampers or doors, and outdoor combustion air. Where using tight-fitting doors on factory-built fireplaces *listed* and *labeled* in accordance with UL 127, the doors shall be tested and *listed* for the fireplace.

C402.3 Roof solar reflectance and thermal emittance. Low-sloped roofs directly above cooled conditioned spaces in *Climate Zones* 1, 2 and 3 shall comply with one or more of the options in Table C402.3.

Exceptions: The following roofs and portions of roofs are exempt from the requirements of Table C402.3:

1. Portions of the roof that include or are covered by the following:
   1.1. Photovoltaic systems or components.
   1.2. Solar air or water-heating systems or components.
   1.3. Roof gardens or landscaped roofs.
   1.4. Above-roof decks or walkways.
   1.5. Skylights.
   1.6. HVAC systems and components, and other opaque objects mounted above the roof.
2. Portions of the roof shaded during the peak sun angle on the summer solstice by permanent features of the building or by permanent features of adjacent buildings.
3. Portions of roofs that are ballasted with a minimum stone ballast of 17 pounds per square foot [74 kg/m^2] or 23 psf [117 kg/m^2] pavers.
4. Roofs where not less than 75 percent of the roof area complies with one or more of the exceptions to this section.

C402.3.1 Aged roof solar reflectance. Where an aged solar reflectance required by Section C402.3 is not available, it shall be determined in accordance with Equation 4-3.

$$R_{aged} = [0.2 + 0.7(R_{initial} - 0.2)] \quad \textbf{(Equation 4-3)}$$

INTERNATIONAL CODE COUNCIL®
Copyright © 2019 ICC & NYSDOS. ALL RIGHTS RESERVED. Accessed by Lauren Gualdino (lgualdino@briarcliffmanor.org), (-) Order Number #100880972 on May 08, 2020 07:05 AM (PDT) pursuant to License Agreement with ICC & NYSDOS. No further reproduction, no

100880972

TABLE C402.3
MINIMUM ROOF REFLECTANCE AND EMITTANCE OPTIONS[a]

Three-year-aged solar reflectance index[b] of 55 and 3-year aged thermal emittance[c] of 0.75
Three-year-aged solar reflectance index[d] of 64

a. The use of *area-weighted averages* to comply with these requirements shall be permitted. Materials lacking 3-year-aged tested values for either solar reflectance or thermal emittance shall be assigned both a 3-year-aged solar reflectance in accordance with Section C402.3.1 and a 3-year-aged thermal emittance of 0.90.
b. Aged solar reflectance tested in accordance with ASTM C1549, ASTM E903 or ASTM E1918 or CRRC-S100.
c. Aged thermal emittance tested in accordance with ASTM C1371 or ASTM E408 or CRRC-S100.
d. Solar reflectance index (SRI) shall be determined in accordance with ASTM E1980 using a convection coefficient of 2.1 Btu/h • ft^2 •°F (12W/m^2 • K). Calculation of aged SRI shall be based on aged tested values of solar reflectance and thermal emittance.

where:

R_{aged} = The aged solar reflectance.

$R_{initial}$ = The initial solar reflectance determined in accordance with CRRC-S100.

C402.4 Fenestration (Prescriptive). Fenestration shall comply with Sections C402.4.1 through C402.4.5 and Table C402.4. Daylight responsive controls shall comply with this section and Section C405.2.3.1.

[NY] TABLE C402.4
BUILDING ENVELOPE FENESTRATION MAXIMUM *U*-FACTOR AND SHGC REQUIREMENTS

CLIMATE ZONE	4	5	6
Vertical fenestration			
***U*-factor**			
Fixed fenestration	0.38	0.38	0.36
Operable fenestration	0.45	0.45	0.43
Entrance doors	0.77	0.77	0.77
SHGC			
PF < 0.2	0.36	0.38	0.40
0.2 ≤ PF < 0.5	0.43	0.46	0.48
PF ≥ 0.5	0.58	0.61	0.64
Skylights			
U-factor	0.50	0.50	0.50
SHGC	0.40	0.40	0.40

PF = Projection Factor.

C402.4.1 Maximum area. The vertical fenestration area, not including opaque doors and opaque spandrel panels, shall be not greater than 30 percent of the gross above-grade wall area. The skylight area shall be not greater than 3 percent of the gross roof area.

C402.4.1.1 Increased vertical fenestration area with daylight responsive controls. In *Climate Zones* 1 through 6, not more than 40 percent of the gross above-grade wall area shall be vertical fenestration, provided that all of the following requirements are met:

1. In buildings not greater than two stories above grade, not less than 50 percent of the net floor area is within a *daylight zone.*
2. In buildings three or more stories above grade, not less than 25 percent of the net floor area is within a *daylight zone.*
3. *Daylight responsive controls* complying with Section C405.2.3.1 are installed in *daylight zones.*
4. *Visible transmittance* (VT) of vertical fenestration is not less than 1.1 times solar heat gain coefficient (SHGC).

   Exception: Fenestration that is outside the scope of NFRC 200 is not required to comply with Item 4.

C402.4.1.2 Increased skylight area with daylight responsive controls. The skylight area shall be not more than 6 percent of the roof area provided that *daylight responsive controls* complying with Section C405.2.3.1 are installed in toplit *zones*.

C402.4.2 Minimum skylight fenestration area. In an enclosed space greater than 2,500 square feet (232 m^2) in floor area, directly under a roof with not less than 75 percent of the ceiling area with a ceiling height greater than 15 feet (4572 mm), and used as an office, lobby, atrium, concourse, corridor, storage space, gymnasium/exercise center, convention center, automotive service area, space where manufacturing occurs, nonrefrigerated warehouse, retail store, distribution/sorting area, transportation depot or workshop, the total toplit *daylight zone* shall be not less than half the floor area and shall provide one of the following:

1. A minimum skylight area to toplit *daylight zone* of not less than 3 percent where all skylights have a VT of not less than 0.40 as determined in accordance with Section C303.1.3.
2. A minimum skylight effective aperture of not less than 1 percent, determined in accordance with Equation 4-4.

$$\text{Skylight Effective Aperture} = \frac{0.85 \times \text{Skylight Area} \times \text{Skylight VT} \times \text{WF}}{\text{Toplit Zone}} \quad \textbf{(Equation 4-4)}$$

where:

Skylight area = Total fenestration area of skylights.

Skylight VT = *Area-weighted average* visible transmittance of skylights.

WF = *Area-weighted average* well factor, where well factor is 0.9 if light well depth is less than 2 feet (610 mm), or 0.7 if light well depth is 2 feet (610 mm) or greater.

INTERNATIONAL CODE COUNCIL®
Copyright © 2019 ICC & NYSDOS. ALL RIGHTS RESERVED. Accessed by Lauren Gualdino (lgualdino@briarcliffmanor.org), (-) Order Number #100880972 on May 08, 2020 07:05 AM (PDT) pursuant to License Agreement with ICC & NYSDOS. No further reproduction, no

100880972

Light well depth = Measure vertically from the underside of the lowest point of the skylight glazing to the ceiling plane under the skylight.

Exception: Skylights above *daylight zones* of enclosed spaces are not required in:

1. Buildings in *Climate Zones* 6 through 8.
2. Spaces where the designed *general lighting* power densities are less than 0.5 W/ft^2 (5.4 W/m^2).
3. Areas where it is documented that existing structures or natural objects block direct beam sunlight on not less than half of the roof over the enclosed area for more than 1,500 daytime hours per year between 8 a.m. and 4 p.m.
4. Spaces where the *daylight zone* under *rooftop monitors* is greater than 50 percent of the enclosed space floor area.
5. Spaces where the total area minus the area of sidelight *daylight zones* is less than 2,500 square feet (232 m^2), and where the lighting is controlled in accordance with Section C405.2.3.

C402.4.2.1 Lighting controls in toplit daylight zones. *Daylight responsive controls* complying with Section C405.2.3.1 shall be provided to control all electric lights within toplit *zones*.

C402.4.2.2 Haze factor. Skylights in office, storage, automotive service, manufacturing, nonrefrigerated warehouse, retail store and distribution/sorting area spaces shall have a glazing material or diffuser with a haze factor greater than 90 percent when tested in accordance with ASTM D1003.

Exception: Skylights designed and installed to exclude direct sunlight entering the occupied space by the use of fixed or automated baffles or the geometry of skylight and light well.

C402.4.3 Maximum *U*-factor and SHGC. The maximum *U-factor* and solar heat gain coefficient (SHGC) for *fenestration* shall be as specified in Table C402.4.

The window projection factor shall be determined in accordance with Equation 4-5.

$$PF = A/B \qquad \textbf{(Equation 4-5)}$$

where:

PF = Projection factor (decimal).

A = Distance measured horizontally from the farthest continuous extremity of any overhang, eave or permanently attached shading device to the vertical surface of the glazing.

B = Distance measured vertically from the bottom of the glazing to the underside of the overhang, eave or permanently attached shading device.

Where different windows or glass doors have different *PF* values, they shall each be evaluated separately.

C402.4.3.1 Increased skylight SHGC. In *Climate Zones* 1 through 6, skylights shall be permitted a maximum SHGC of 0.60 where located above *daylight zones* provided with *daylight responsive controls*.

C402.4.3.2 Increased skylight *U*-factor. Where skylights are installed above *daylight zones* provided with *daylight responsive controls*, a maximum *U-factor* of 0.9 shall be permitted in *Climate Zones* 1 through 3 and a maximum *U-factor* of 0.75 shall be permitted in *Climate Zones* 4 through 8.

C402.4.3.3 Dynamic glazing. Where dynamic glazing is intended to satisfy the SHGC and VT requirements of Table C402.4, the ratio of the higher to lower *labeled* SHGC shall be greater than or equal to 2.4, and the *dynamic glazing* shall be automatically controlled to modulate the amount of solar gain into the space in multiple steps. Dynamic glazing shall be considered separately from other fenestration, and *area-weighted averaging* with other fenestration that is not *dynamic glazing* shall not be permitted.

Exception: Dynamic glazing is not required to comply with this section where both the lower and higher *labeled* SHGC already comply with the requirements of Table C402.4.

C402.4.3.4 Area-weighted *U*-factor. An area-weighted average shall be permitted to satisfy the *U-factor* requirements for each fenestration product category *listed* in Table C402.4. Individual fenestration products from different fenestration product categories *listed* in Table C402.4 shall not be combined in calculating area-weighted average *U-factor*.

C402.4.4 Daylight zones. *Daylight zones* referenced in Sections C402.4.1.1 through C402.4.3.2 shall comply with Sections C405.2.3.2 and C405.2.3.3, as applicable. *Daylight zones* shall include toplit *zones* and sidelit *zones.*

C402.4.5 Doors. Opaque swinging doors shall comply with Table C402.1.4. Opaque nonswinging doors shall comply with Table C402.1.3. Opaque doors shall be considered as part of the gross area of above-grade walls that are part of the *building thermal envelope*. Other doors shall comply with the provisions of Section C402.4.3 for vertical fenestration.

C402.5 Air leakage—thermal envelope (Mandatory). The *thermal envelope* of *buildings* shall comply with Sections C402.5.1 through C402.5.8, or the building *thermal envelope* shall be tested in accordance with ASTM E779 at a pressure differential of 0.3 inch water gauge (75 Pa) or an equivalent method approved by the building official and deemed to comply with the provisions of this section when the tested air leakage rate of the *building thermal envelope* is not greater than 0.40 cfm/ft^2 (2.0 L/s • m^2). Where compliance is based on such testing, the *building* shall also comply with Sections C402.5.5, C402.5.6 and C402.5.7.

C402.5.1 Air barriers. A continuous air barrier shall be provided throughout the building thermal envelope. The air barriers shall be permitted to be located on the inside or outside of the building envelope, located within the assemblies composing the envelope, or any combination thereof. The air barrier shall comply with Sections C402.5.1.1 and C402.5.1.2.

Exception: Air barriers are not required in buildings located in *Climate Zone* 2B.

INTERNATIONAL CODE COUNCIL®
Copyright © 2019 ICC & NYSDOS. ALL RIGHTS RESERVED. Accessed by Lauren Gualdino (lgualdino@briarcliffmanor.org), (-) Order Number #100880972 on May 08, 2020 07:05 AM (PDT) pursuant to License Agreement with ICC & NYSDOS. No further reproduction, no

100880972

C402.5.1.1 Air barrier construction. The *continuous air barrier* shall be constructed to comply with the following:

1. The *air barrier* shall be continuous for all assemblies that are the thermal envelope of the building and across the joints and assemblies.
2. *Air barrier* joints and seams shall be sealed, including sealing transitions in places and changes in materials. The joints and seals shall be securely installed in or on the joint for its entire length so as not to dislodge, loosen or otherwise impair its ability to resist positive and negative pressure from wind, stack effect and mechanical *ventilation*.
3. Penetrations of the *air barrier* shall be caulked, gasketed or otherwise sealed in a manner compatible with the construction materials and location. Sealing shall allow for expansion, contraction and mechanical vibration. Joints and seams associated with penetrations shall be sealed in the same manner or taped. Sealing materials shall be securely installed around the penetration so as not to dislodge, loosen or otherwise impair the penetrations' ability to resist positive and negative pressure from wind, stack effect and mechanical *ventilation*. Sealing of concealed fire sprinklers, where required, shall be in a manner that is recommended by the manufacturer. Caulking or other adhesive sealants shall not be used to fill voids between fire sprinkler cover plates and walls or ceilings.
4. Recessed lighting fixtures shall comply with Section C402.5.8. Where similar objects are installed that penetrate the air barrier, provisions shall be made to maintain the integrity of the *air barrier*.

C402.5.1.2 Air barrier compliance options. A continuous *air barrier* for the opaque building envelope shall comply with Section C402.5.1.2.1 or C402.5.1.2.2.

C402.5.1.2.1 Materials. Materials with an air permeability not greater than 0.004 cfm/ft^2 (0.02 L/s • m^2) under a pressure differential of 0.3 inch water gauge (75 Pa) when tested in accordance with ASTM E2178 shall comply with this section. Materials in Items 1 through 16 shall be deemed to comply with this section, provided that joints are sealed and materials are installed as *air barriers* in accordance with the manufacturer's instructions.

1. Plywood with a thickness of not less than $^3/_8$ inch (10 mm).
2. Oriented strand board having a thickness of not less than $^3/_8$ inch (10 mm).
3. Extruded polystyrene insulation board having a thickness of not less than $^1/_2$ inch (12.7 mm).
4. Foil-back polyisocyanurate insulation board having a thickness of not less than $^1/_2$ inch (12.7 mm).
5. Closed-cell spray foam having a minimum density of 1.5 pcf (2.4 kg/m^3) and having a thickness of not less than $1^1/_2$ inches (38 mm).
6. Open-cell spray foam with a density between 0.4 and 1.5 pcf (0.6 and 2.4 kg/m^3) and having a thickness of not less than 4.5 inches (113 mm).
7. Exterior or interior gypsum board having a thickness of not less than $^1/_2$ inch (12.7 mm).
8. Cement board having a thickness of not less than $^1/_2$ inch (12.7 mm).
9. Built-up roofing membrane.
10. Modified bituminous roof membrane.
11. Fully adhered single-ply roof membrane.
12. A Portland cement/sand parge, or gypsum plaster having a thickness of not less than $^5/_8$ inch (15.9 mm).
13. Cast-in-place and precast concrete.
14. Fully grouted concrete block masonry.
15. Sheet steel or aluminum.
16. Solid or hollow masonry constructed of clay or shale masonry units.

C402.5.1.2.2 Assemblies. Assemblies of materials and components with an average air leakage not greater than 0.04 cfm/ft^2 (0.2 L/s • m^2) under a pressure differential of 0.3 inch of water gauge (w.g.)(75 Pa) when tested in accordance with ASTM E2357, ASTM E1677 or ASTM E283 shall comply with this section. Assemblies *listed* in Items 1 through 3 shall be deemed to comply, provided that joints are sealed and the requirements of Section C402.5.1.1 are met.

1. Concrete masonry walls coated with either one application of block filler or two applications of a paint or sealer coating.
2. Masonry walls constructed of clay or shale masonry units with a nominal width of 4 inches (102 mm) or more.
3. A Portland cement/sand parge, stucco or plaster not less than $^1/_2$ inch (12.7 mm) in thickness.

C402.5.2 Air leakage of fenestration. The air leakage of *fenestration* assemblies shall meet the provisions of Table C402.5.2. Testing shall be in accordance with the applicable reference test standard in Table C402.5.2 by an accredited, independent testing laboratory and *labeled* by the manufacturer.

Exceptions:

1. Field-fabricated *fenestration* assemblies that are sealed in accordance with Section C402.5.1.
2. *Fenestration* in buildings that comply with the testing alternative of Section C402.5 are not required to meet the air leakage requirements in Table C402.5.2.

INTERNATIONAL CODE COUNCIL®
Copyright © 2019 ICC & NYSDOS. ALL RIGHTS RESERVED. Accessed by Lauren Gualdino (lgualdino@briarcliffmanor.org), (-) Order Number #100880972 on May 08, 2020 07:05 AM (PDT) pursuant to License Agreement with ICC & NYSDOS. No further reproduction, no

100880972

TABLE C402.5.2
MAXIMUM AIR LEAKAGE RATE
FOR FENESTRATION ASSEMBLIES

FENESTRATION ASSEMBLY	MAXIMUM RATE (CFM/FT^2)	TEST PROCEDURE
Windows	0.20 [a]	AAMA/WDMA/ CSA101/I.S.2/A440 or NFRC 400
Sliding doors	0.20 [a]	
Swinging doors	0.20 [a]	
Skylights – with condensation weepage openings	0.30	
Skylights – all other	0.20 [a]	
Curtain walls	0.06	NFRC 400 or ASTM E283 at 1.57 psf (75 Pa)
Storefront glazing	0.06	
Commercial glazed swinging entrance doors	1.00	
Power-operated sliding doors and power-operated folding doors	1.00	
Revolving doors	1.00	
Garage doors	0.40	ANSI/DASMA 105, NFRC 400, or ASTM E283 at 1.57 psf (75 Pa)
Rolling doors	1.00	
High-speed doors	1.30	

For SI: 1 cubic foot per minute = 0.47 L/s, 1 square foot = 0.093 m^2.

a. The maximum rate for windows, sliding and swinging doors, and skylights is permitted to be 0.3 cfm per square foot of fenestration or door area when tested in accordance with AAMA/WDMA/CSA101/I.S.2/A440 at 6.24 psf (300 Pa).

[NY] C402.5.3 Rooms containing fuel-burning appliances. In *Climate Zones* 3 through 8, where combustion air is supplied through openings in an *exterior wall* to a room or space containing a space-conditioning fuel-burning appliance, one of the following shall apply:

1. The room or space containing the appliance shall be located outside of the *building thermal envelope*.
2. The room or space containing the appliance shall be enclosed and isolated from conditioned spaces inside the *building thermal envelope*. Such rooms shall comply with all of the following:
   - 2.1. The walls, floors and ceilings that separate the enclosed room or space from conditioned spaces shall be insulated to be not less than equivalent to the insulation requirement of below-grade walls as specified in Table C402.1.3 or C402.1.4.
   - 2.2. The walls, floors and ceilings that separate the enclosed room or space from conditioned spaces shall be sealed in accordance with Section C402.5.1.1.
   - 2.3. The doors into the enclosed room or space shall be shall be fully gasketed.
   - 2.4. Water lines and ducts in the enclosed room or space shall be insulated in accordance with Section C403.
   - 2.5. Where an air duct supplying combustion air to the enclosed room or space passes through conditioned space, the duct shall be insulated to an *R-value* of not less than R-8.

Exception: Fireplaces and stoves complying with Sections 901 through 905 of the *Mechanical Code of New York State,* and Section 2111.14 of the *Building Code of New York State* (or in the case of a fireplace or stove located in a building that is subject to the New York City Construction Codes, complying with the corresponding provisions of the New York City Construction Codes).

C402.5.4 Doors and *access* openings to shafts, chutes, stairways and elevator lobbies. Doors and *access* openings from conditioned space to shafts, chutes stairways and elevator lobbies not within the scope of the fenestration assemblies covered by Section C402.5.2 shall be gasketed, weatherstripped or sealed.

Exceptions:

1. Door openings required to comply with Section 716 of the *Building Code of New York State.*
2. Doors and door openings required to comply with UL 1784 by the *Building Code of New York State.*

C402.5.5 Air intakes, exhaust openings, stairways and shafts. Stairway enclosures, elevator shaft vents and other outdoor air intakes and exhaust openings integral to the building envelope shall be provided with dampers in accordance with Section C403.7.7.

C402.5.6 Loading dock weatherseals. Cargo door openings and loading door openings shall be equipped with weatherseals that restrict *infiltration* and provide direct contact along the top and sides of vehicles that are parked in the doorway.

C402.5.7 Vestibules. Building entrances shall be protected with an enclosed vestibule, with all doors opening into and out of the vestibule equipped with self-closing devices. Vestibules shall be designed so that in passing through the vestibule it is not necessary for the interior and exterior doors to open at the same time. The installation of one or more revolving doors in the building entrance shall not eliminate the requirement that a vestibule be provided on any doors adjacent to revolving doors.

Exceptions: Vestibules are not required for the following:

1. Buildings in *Climate Zones* 1 and 2.
2. Doors not intended to be used by the public, such as doors to mechanical or electrical *equipment rooms*, or intended solely for employee use.
3. Doors opening directly from a *sleeping unit* or *dwelling unit.*
4. Doors that open directly from a space less than 3,000 square feet (298 m^2) in area.
5. Revolving doors.
6. Doors used primarily to facilitate vehicular movement or material handling and adjacent personnel doors.
7. Doors that have an *air curtain* with a velocity of not less than 6.56 feet per second (2 m/s) at the

INTERNATIONAL CODE COUNCIL®
Copyright © 2019 ICC & NYSDOS. ALL RIGHTS RESERVED. Accessed by Lauren Gualdino (lgualdino@briarcliffmanor.org), (-) Order Number #100880972 on May 08, 2020 07:05 AM (PDT) pursuant to License Agreement with ICC & NYSDOS. No further reproduction, no

100880972

floor that have been tested in accordance with ANSI/AMCA 220 and installed in accordance with the manufacturer's instructions. Manual or automatic controls shall be provided that will operate the *air curtain* with the opening and closing of the door. *Air curtains* and their controls shall comply with Section C408.2.3.

C402.5.8 Recessed lighting. Recessed luminaires installed in the *building thermal envelope* shall be all of the following:

1. IC-rated.
2. *Labeled* as having an air leakage rate of not more 2.0 cfm (0.944 L/s) when tested in accordance with ASTM E283 at a 1.57 psf (75 Pa) pressure differential.
3. Sealed with a gasket or caulk between the housing and interior wall or ceiling covering.

SECTION C403
BUILDING MECHANICAL SYSTEMS

C403.1 General. Mechanical systems and equipment serving the building heating, cooling, ventilating or refrigerating needs shall comply with this section.

[NY] C403.1.1 Calculation of heating and cooling loads (Mandatory). Design loads associated with heating, ventilating and air conditioning of the building shall be determined in accordance with ANSI/ASHRAE/ACCA Standard 183 or by an *approved* equivalent computational procedure using the design parameters specified in Chapter 3. Heating and cooling loads shall be adjusted to account for load reductions that are achieved where energy recovery systems are utilized in the HVAC system in accordance with the ASHRAE *HVAC Systems and Equipment Handbook* by an approved equivalent computational procedure.

C403.2 System design (Mandatory). Mechanical systems shall be designed to comply with Sections C403.2.1 and C403.2.2. Where elements of a building's mechanical systems are addressed in Sections C403.3 through C403.12, such elements shall comply with the applicable provisions of those sections.

C403.2.1 Zone isolation required (Mandatory). HVAC systems serving *zones* that are over 25,000 square feet (2323 m^2) in floor area or that span more than one floor and are designed to operate or be occupied nonsimultaneously shall be divided into isolation areas. Each isolation area shall be equipped with *isolation devices* and controls configured to automatically shut off the supply of conditioned air and outdoor air to and exhaust air from the isolation area. Each isolation area shall be controlled independently by a device meeting the requirements of Section C403.4.2.2. Central systems and plants shall be provided with controls and devices that will allow system and equipment operation for any length of time while serving only the smallest isolation area served by the system or plant.

Exceptions:

1. Exhaust air and outdoor air connections to isolation areas where the fan system to which they connect is not greater than 5,000 cfm (2360 L/s).
2. Exhaust airflow from a single isolation area of less than 10 percent of the design airflow of the exhaust system to which it connects.
3. Isolation areas intended to operate continuously or intended to be inoperative only when all other isolation areas in a *zone* are inoperative.

C403.2.2 Ventilation (Mandatory). *Ventilation,* either natural or mechanical, shall be provided in accordance with Chapter 4 of the *Mechanical Code of New York State*. Where mechanical *ventilation* is provided, the system shall provide the capability to reduce the outdoor air supply to the minimum required by Chapter 4 of the *Mechanical Code of New York State.*

C403.3 Heating and cooling equipment efficiencies (Mandatory). Heating and cooling equipment installed in mechanical systems shall be sized in accordance with Section C403.3.1 and shall be not less efficient in the use of energy than as specified in Section C403.3.2.

C403.3.1 Equipment sizing (Mandatory). The output capacity of heating and cooling equipment shall be not greater than that of the smallest available equipment size that exceeds the loads calculated in accordance with Section C403.1.1. A single piece of equipment providing both heating and cooling shall satisfy this provision for one function with the capacity for the other function as small as possible, within available equipment options.

Exceptions:

1. Required standby equipment and systems provided with controls and devices that allow such systems or equipment to operate automatically only when the primary equipment is not operating.
2. Multiple units of the same equipment type with combined capacities exceeding the design load and provided with controls that are configured to sequence the operation of each unit based on load.

C403.3.2 HVAC equipment performance requirements (Mandatory). Equipment shall meet the minimum efficiency requirements of Tables C403.3.2(1) through C403.3.2(9) when tested and rated in accordance with the applicable test procedure. Plate-type liquid-to-liquid heat exchangers shall meet the minimum requirements of Table C403.3.2(10). The efficiency shall be verified through certification under an approved certification program or, where a certification program does not exist, the equipment efficiency ratings shall be supported by data furnished by the manufacturer. Where multiple rating

INTERNATIONAL CODE COUNCIL®
Copyright © 2019 ICC & NYSDOS. ALL RIGHTS RESERVED. Accessed by Lauren Gualdino (lgualdino@briarcliffmanor.org), (-) Order Number #100880972 on May 08, 2020 07:05 AM (PDT) pursuant to License Agreement with ICC & NYSDOS. No further reproduction, no

100880972

conditions or performance requirements are provided, the equipment shall satisfy all stated requirements. Where components, such as indoor or outdoor coils, from different manufacturers are used, calculations and supporting data shall be furnished by the designer that demonstrates that the combined efficiency of the specified components meets the requirements herein.

C403.3.2.1 Water-cooled centrifugal chilling packages (Mandatory). Equipment not designed for operation at AHRI Standard 550/590 test conditions of 44°F (7°C) leaving chilled-water temperature and 2.4 gpm/ton evaporator fluid flow and 85°F (29°C) entering condenser water temperature with 3 gpm/ton (0.054 l/s • kW) condenser water flow shall have maximum full-load kW/ton (FL) and part-load ratings requirements adjusted using Equations 4-6 and 4-7.

$$FL_{adj} = FL/K_{adj} \quad \textbf{(Equation 4-6)}$$

$$PLV_{adj} = IPLV/K_{adj} \quad \textbf{(Equation 4-7)}$$

where:

K_{adj} = A × B

FL = Full-load kW/ton value as specified in Table C403.3.2(7).

FL_{adj} = Maximum full-load kW/ton rating, adjusted for nonstandard conditions.

$IPLV$ = Value as specified in Table C403.3.2(7).

PLV_{adj} = Maximum *NPLV* rating, adjusted for nonstandard conditions.

A = $0.00000014592 \times (LIFT)^4 - 0.0000346496 \times (LIFT)^3 + 0.00314196 \times (LIFT)^2 - 0.147199 \times (LIFT) + 3.9302$

B = $0.0015 \times L_{vg}E_{vap} + 0.934$

$LIFT$ = $L_{vg}Cond - L_{vg}E_{vap}$

$L_{vg}Cond$ = Full-load condenser leaving fluid temperature (°F).

$L_{vg}E_{vap}$ = Full-load evaporator leaving temperature (°F).

The FL_{adj} and PLV_{adj} values are only applicable for centrifugal chillers meeting all of the following full-load design ranges:

1. Minimum evaporator leaving temperature: 36°F.
2. Maximum condenser leaving temperature: 115°F.
3. 20°F ≤ LIFT ≤ 80°F.

C403.3.2.2 Positive displacement (air- and water-cooled) chilling packages (Mandatory). Equipment with a leaving fluid temperature higher than 32°F (0°C) and water-cooled positive displacement chilling packages with a condenser leaving fluid temperature below 115°F (46°C) shall meet the requirements of Table C403.3.2(7) when tested or certified with water at standard rating conditions, in accordance with the referenced test procedure.

C**403.3.3 Hot gas bypass limitation.** Cooling systems shall not use hot gas bypass or other evaporator pressure control systems unless the system is designed with multiple steps of unloading or continuous capacity modulation. The capacity of the hot gas bypass shall be limited as indicated in Table C403.3.3, as limited by Section C403.5.1.

TABLE C403.3.3
MAXIMUM HOT GAS BYPASS CAPACITY

RATED CAPACITY	MAXIMUM HOT GAS BYPASS CAPACITY (% of total capacity)
≤ 240,000 Btu/h	50
> 240,000 Btu/h	25

For SI: 1 British thermal unit per hour = 0.2931 W.

C403.3.4 Boiler turndown. *Boiler systems* with design input of greater than 1,000,000 Btu/h (293 kW) shall comply with the turndown ratio specified in Table C403.3.4.

The system turndown requirement shall be met through the use of multiple single-input boilers, one or more *modulating boilers* or a combination of single-input and *modulating boilers*.

TABLE C403.3.4
BOILER TURNDOWN

BOILER SYSTEM DESIGN INPUT (Btu/h)	MINIMUM TURNDOWN RATIO
≥ 1,000,000 and less than or equal to 5,000,000	3 to 1
> 5,000,000 and less than or equal to 10,000,000	4 to 1
> 10,000,000	5 to 1

For SI: 1 British thermal unit per hour = 0.2931 W.

C403.4 Heating and cooling system controls (Mandatory). Each heating and cooling system shall be provided with controls in accordance with Sections C403.4.1 through C403.4.5.

C403.4.1 Thermostatic controls (Mandatory). The supply of heating and cooling energy to each *zone* shall be controlled by individual thermostatic controls capable of responding to temperature within the *zone*. Where humidification or dehumidification or both is provided, not fewer than one humidity control device shall be provided for each humidity control system.

Exception: Independent perimeter systems that are designed to offset only building envelope heat losses, gains or both serving one or more perimeter *zones* also served by an interior system provided that both of the following conditions are met:

1. The perimeter system includes not fewer than one thermostatic control *zone* for each building expo-

INTERNATIONAL CODE COUNCIL®
Copyright © 2019 ICC & NYSDOS. ALL RIGHTS RESERVED. Accessed by Lauren Gualdino (lgualdino@briarcliffmanor.org), (-) Order Number #100880972 on May 08, 2020 07:05 AM (PDT) pursuant to License Agreement with ICC & NYSDOS. No further reproduction, no

100880972

TABLE C403.3.2(1)
MINIMUM EFFICIENCY REQUIREMENTS:
ELECTRICALLY OPERATED UNITARY AIR CONDITIONERS AND CONDENSING UNITS

EQUIPMENT TYPE	SIZE CATEGORY	HEATING SECTION TYPE	SUBCATEGORY OR RATING CONDITION	MINIMUM EFFICIENCY	TEST PROCEDURE[a]
Air conditioners, air cooled	< 65,000 Btu/h[b]	All	Split System	13.0 SEER	AHRI 210/240
			Single Package	14.0 SEER	
Through-the-wall (air cooled)	≤ 30,000 Btu/h[b]	All	Split system	12.0 SEER	
			Single Package	12.0 SEER	
Small-duct high-velocity (air cooled)	< 65,000 Btu/h[b]	All	Split System	11.0 SEER	
Air conditioners, air cooled	≥ 65,000 Btu/h and < 135,000 Btu/h	Electric Resistance (or None)	Split System and Single Package	11.2 EER 12.8 IEER	AHRI 340/360
		All other	Split System and Single Package	11.0 EER 12.6 IEER	
	≥ 135,000 Btu/h and < 240,000 Btu/h	Electric Resistance (or None)	Split System and Single Package	11.0 EER 12.4 IEER	
		All other	Split System and Single Package	10.8 EER 12.2 IEER	
	≥ 240,000 Btu/h and < 760,000 Btu/h	Electric Resistance (or None)	Split System and Single Package	10.0 EER 11.6 IEER	
		All other	Split System and Single Package	9.8 EER 11.4 IEER	
	≥ 760,000 Btu/h	Electric Resistance (or None)	Split System and Single Package	9.7 EER 11.2 IEER	
		All other	Split System and Single Package	9.5 EER 11.0 IEER	
Air conditioners, water cooled	< 65,000 Btu/h[b]	All	Split System and Single Package	12.1 EER 12.3 IEER	AHRI 210/240
	≥ 65,000 Btu/h and < 135,000 Btu/h	Electric Resistance (or None)	Split System and Single Package	12.1 EER 13.9 IEER	AHRI 340/360
		All other	Split System and Single Package	11.9 EER 13.7 IEER	
	≥ 135,000 Btu/h and < 240,000 Btu/h	Electric Resistance (or None)	Split System and Single Package	12.5 EER 13.9 IEER	
		All other	Split System and Single Package	12.3 EER 13.7 IEER	
	≥ 240,000 Btu/h and < 760,000 Btu/h	Electric Resistance (or None)	Split System and Single Package	12.4 EER 13.6 IEER	
		All other	Split System and Single Package	12.2 EER 13.4 IEER	
	≥ 760,000 Btu/h	Electric Resistance (or None)	Split System and Single Package	12.2 EER 13.5 IEER	
		All other	Split System and Single Package	12.0 EER 13.3 IEER	

(continued)

INTERNATIONAL CODE COUNCIL®
Copyright © 2019 ICC & NYSDOS. ALL RIGHTS RESERVED. Accessed by Lauren Gualdino (lgualdino@briarcliffmanor.org), (-) Order Number #100880972 on May 08, 2020 07:05 AM (PDT) pursuant to License Agreement with ICC & NYSDOS. No further reproduction, no

100880972

TABLE C403.3.2(1)—continued
MINIMUM EFFICIENCY REQUIREMENTS:
ELECTRICALLY OPERATED UNITARY AIR CONDITIONERS AND CONDENSING UNITS

EQUIPMENT TYPE	SIZE CATEGORY	HEATING SECTION TYPE	SUB-CATEGORY OR RATING CONDITION	MINIMUM EFFICIENCY	TEST PROCEDURE[a]
Air conditioners, evaporatively cooled	< 65,000 Btu/h[b]	All	Split System and Single Package	12.1 EER 12.3 IEER	AHRI 210/240
	≥ 65,000 Btu/h and < 135,000 Btu/h	Electric Resistance (or None)	Split System and Single Package	12.1 EER 12.3 IEER	AHRI 340/360
		All other	Split System and Single Package	11.9 EER 12.1 IEER	
	≥ 135,000 Btu/h and < 240,000 Btu/h	Electric Resistance (or None)	Split System and Single Package	12.0 EER 12.2 IEER	
		All other	Split System and Single Package	11.8 EER 12.0 IEER	
	≥ 240,000 Btu/h and < 760,000 Btu/h	Electric Resistance (or None)	Split System and Single Package	11.9 EER 12.1 IEER	
		All other	Split System and Single Package	11.7 EER 11.9 IEER	
	≥ 760,000 Btu/h	Electric Resistance (or None)	Split System and Single Package	11.7 EER 11.9 IEER	
		All other	Split System and Single Package	11.5 EER 11.7 IEER	
Condensing units, air cooled	≥ 135,000 Btu/h	—	—	10.5 EER 11.8 IEER	AHRI 365
Condensing units, water cooled	≥ 135,000 Btu/h	—	—	13.5 EER 14.0 IEER	
Condensing units, evaporatively cooled	≥ 135,000 Btu/h	—	—	13.5 EER 14.0 IEER	

For SI: 1 British thermal unit per hour = 0.2931 W.

a. Chapter 6 contains a complete specification of the referenced test procedure, including the reference year version of the test procedure.

b. Single-phase, air-cooled air conditioners less than 65,000 Btu/h are regulated by NAECA. SEER values are those set by NAECA.

INTERNATIONAL CODE COUNCIL®
Copyright © 2019 ICC & NYSDOS. ALL RIGHTS RESERVED. Accessed by Lauren Gualdino (lgualdino@briarcliffmanor.org), (-) Order Number #100880972 on May 08, 2020 07:05 AM (PDT) pursuant to License Agreement with ICC & NYSDOS. No further reproduction, no

100880972

TABLE C403.3.2(2)
MINIMUM EFFICIENCY REQUIREMENTS:
ELECTRICALLY OPERATED UNITARY AND APPLIED HEAT PUMPS

EQUIPMENT TYPE	SIZE CATEGORY	HEATING SECTION TYPE	SUBCATEGORY OR RATING CONDITION	MINIMUM EFFICIENCY	TEST PROCEDURE[a]
Air cooled (cooling mode)	< 65,000 Btu/h[b]	All	Split System	14.0 SEER	AHRI 210/240
			Single Package	14.0 SEER	
Through-the-wall, air cooled	≤ 30,000 Btu/h[b]	All	Split System	12.0 SEER	
			Single Package	12.0 SEER	
Single-duct high-velocity air cooled	< 65,000 Btu/h[b]	All	Split System	11.0 SEER	
Air cooled (cooling mode)	≥ 65,000 Btu/h and < 135,000 Btu/h	Electric Resistance (or None)	Split System and Single Package	11.0 EER 12.0 IEER	AHRI 340/360
		All other	Split System and Single Package	10.8 EER 11.8 IEER	
	≥ 135,000 Btu/h and < 240,000 Btu/h	Electric Resistance (or None)	Split System and Single Package	10.6 EER 11.6 IEER	
		All other	Split System and Single Package	10.4 EER 11.4 IEER	
	≥ 240,000 Btu/h	Electric Resistance (or None)	Split System and Single Package	9.5 EER 10.6 IEER	
		All other	Split System and Single Package	9.3 EER 9.4 IEER	
Water to Air: Water Loop (cooling mode)	< 17,000 Btu/h	All	86°F entering water	12.2 EER	ISO 13256-1
	≥ 17,000 Btu/h and < 65,000 Btu/h	All	86°F entering water	13.0 EER	
	≥ 65,000 Btu/h and < 135,000 Btu/h	All	86°F entering water	13.0 EER	
Water to Air: Ground Water (cooling mode)	< 135,000 Btu/h	All	59°F entering water	18.0 EER	ISO 13256-1
Brine to Air: Ground Loop (cooling mode)	< 135,000 Btu/h	All	77°F entering water	14.1 EER	ISO 13256-1
Water to Water: Water Loop (cooling mode)	< 135,000 Btu/h	All	86°F entering water	10.6 EER	ISO 13256-2
Water to Water: Ground Water (cooling mode)	< 135,000 Btu/h	All	59°F entering water	16.3 EER	
Brine to Water: Ground Loop (cooling mode)	< 135,000 Btu/h	All	77°F entering fluid	12.1 EER	

(continued)

INTERNATIONAL CODE COUNCIL®
Copyright © 2019 ICC & NYSDOS. ALL RIGHTS RESERVED. Accessed by Lauren Gualdino (lgualdino@briarcliffmanor.org), (-) Order Number #100880972 on May 08, 2020 07:05 AM (PDT) pursuant to License Agreement with ICC & NYSDOS. No further reproduction, no

100880972

TABLE C403.3.2(2)—continued
MINIMUM EFFICIENCY REQUIREMENTS:
ELECTRICALLY OPERATED UNITARY AND APPLIED HEAT PUMPS

EQUIPMENT TYPE	SIZE CATEGORY	HEATING SECTION TYPE	SUBCATEGORY OR RATING CONDITION	MINIMUM EFFICIENCY	TEST PROCEDURE[a]
Air cooled (heating mode)	< 65,000 Btu/h[b]	—	Split System	8.2 HSPF	AHRI 210/240
		—	Single Package	8.0 HSPF	
Through-the-wall, (air cooled, heating mode)	≤ 30,000 Btu/h[b] (cooling capacity)	—	Split System	7.4 HSPF	
		—	Single Package	7.4 HSPF	
Small-duct high velocity (air cooled, heating mode)	< 65,000 Btu/h[b]	—	Split System	6.8 HSPF	
Air cooled (heating mode)	≥ 65,000 Btu/h and < 135,000 Btu/h (cooling capacity)	—	47ºF db/43ºF wb outdoor air	3.3 COP	AHRI 340/360
			17ºF db/15ºF wb outdoor air	2.25 COP	
	≥ 135,000 Btu/h (cooling capacity)	—	47ºF db/43ºF wb outdoor air	3.2 COP	
			17ºF db/15ºF wb outdoor air	2.05 COP	
Water to Air: Water Loop (heating mode)	< 135,000 Btu/h (cooling capacity)	—	68°F entering water	4.3 COP	ISO 13256-1
Water to Air: Ground Water (heating mode)	< 135,000 Btu/h (cooling capacity)	—	50°F entering water	3.7 COP	
Brine to Air: Ground Loop (heating mode)	< 135,000 Btu/h (cooling capacity)	—	32°F entering fluid	3.2 COP	
Water to Water: Water Loop (heating mode)	< 135,000 Btu/h (cooling capacity)	—	68°F entering water	3.7 COP	ISO 13256-2
Water to Water: Ground Water (heating mode)	< 135,000 Btu/h (cooling capacity)	—	50°F entering water	3.1 COP	
Brine to Water: Ground Loop (heating mode)	< 135,000 Btu/h (cooling capacity)	—	32°F entering fluid	2.5 COP	

For SI: 1 British thermal unit per hour = 0.2931 W, °C = [(°F) - 32]/1.8.

a. Chapter 6 contains a complete specification of the referenced test procedure, including the reference year version of the test procedure.

b. Single-phase, air-cooled heat pumps less than 65,000 Btu/h are regulated by NAECA. SEER and HSPF values are those set by NAECA.

INTERNATIONAL CODE COUNCIL®
Copyright © 2019 ICC & NYSDOS. ALL RIGHTS RESERVED. Accessed by Lauren Gualdino (lgualdino@briarcliffmanor.org), (-) Order Number #100880972 on May 08, 2020 07:05 AM (PDT) pursuant to License Agreement with ICC & NYSDOS. No further reproduction, no

100880972

TABLE C403.3.2(3)
MINIMUM EFFICIENCY REQUIREMENTS:
ELECTRICALLY OPERATED PACKAGED TERMINAL AIR CONDITIONERS, PACKAGED TERMINAL HEAT PUMPS, SINGLE-PACKAGE VERTICAL AIR CONDITIONERS, SINGLE VERTICAL HEAT PUMPS, ROOM AIR CONDITIONERS AND ROOM AIR-CONDITIONER HEAT PUMPS

EQUIPMENT TYPE	SIZE CATEGORY (INPUT)	SUBCATEGORY OR RATING CONDITION	MINIMUM EFFICIENCY	TEST PROCEDURE[a]
PTAC (cooling mode) new construction	All Capacities	95°F db outdoor air	14.0 – (0.300 × Cap/1000) EER	AHRI 310/380
PTAC (cooling mode) replacements[b]	All Capacities	95°F db outdoor air	10.9 - (0.213 × Cap/1000) EER	
PTHP (cooling mode) new construction	All Capacities	95°F db outdoor air	14.0 - (0.300 × Cap/1000) EER	
PTHP (cooling mode) replacements[b]	All Capacities	95°F db outdoor air	10.8 - (0.213 × Cap/1000) EER	
PTHP (heating mode) new construction	All Capacities	—	3.2 - (0.026 × Cap/1000) COP	
PTHP (heating mode) replacements[b]	All Capacities	—	2.9 - (0.026 × Cap/1000) COP	
SPVAC (cooling mode)	< 65,000 Btu/h	95°F db/ 75°F wb outdoor air	9.0 EER	AHRI 390
	≥ 65,000 Btu/h and < 135,000 Btu/h	95°F db/ 75°F wb outdoor air	8.9 EER	
	≥ 135,000 Btu/h and < 240,000 Btu/h	95°F db/ 75°F wb outdoor air	8.6 EER	
SPVHP (cooling mode)	< 65,000 Btu/h	95°F db/ 75°F wb outdoor air	9.0 EER	
	≥ 65,000 Btu/h and < 135,000 Btu/h	95°F db/ 75°F wb outdoor air	8.9 EER	
	≥ 135,000 Btu/h and < 240,000 Btu/h	95°F db/ 75°F wb outdoor air	8.6 EER	
SPVHP (heating mode)	< 65,000 Btu/h	47°F db/ 43°F wb outdoor air	3.0 COP	AHRI 390
	≥ 65,000 Btu/h and < 135,000 Btu/h	47°F db/ 43°F wb outdoor air	3.0 COP	
	≥ 135,000 Btu/h and < 240,000 Btu/h	47°F db/ 75°F wb outdoor air	2.9 COP	
Room air conditioners, with louvered sides	< 6,000 Btu/h	—	11.0 CEER	ANSI/ AHAM RAC-1
	≥ 6,000 Btu/h and < 8,000 Btu/h	—	11.0 CEER	
	≥ 8,000 Btu/h and < 14,000 Btu/h	—	10.9 CEER	
	≥ 14,000 Btu/h and < 20,000 Btu/h	—	10.7 CEER	
	≥ 20,000 Btu/h and ≤ 25,000 Btu/h	—	9.4 CEER	
	> 25,000 Btu/h	—	9.0 CEER	
Room air conditioners, without louvered sides	< 6,000 Btu/h	—	10.0 CEER	
	≥ 6,000 Btu/h and < 8,000 Btu/h	—	10.0 CEER	
	≥ 8,000 Btu/h and < 11,000 Btu/h	—	9.6 CEER	
	≥ 11,000 Btu/h and < 14,000 Btu/h	—	9.5 CEER	
	≥ 14,000 Btu/h and < 20,000 Btu/h	—	9.3 CEER	
	≥ 20,000 Btu/h	—	9.4 CEER	
Room air-conditioner heat pumps with louvered sides	< 20,000 Btu/h	—	9.8 CEER	
	≥ 20,000 Btu/h	—	9.3 CEER	
Room air-conditioner heat pumps without louvered sides	< 14,000 Btu/h	—	9.3 CEER	
	≥ 14,000 Btu/h	—	8.7 CEER	

(continued)

INTERNATIONAL CODE COUNCIL®
Copyright © 2019 ICC & NYSDOS. ALL RIGHTS RESERVED. Accessed by Lauren Gualdino (lgualdino@briarcliffmanor.org), (-) Order Number #100880972 on May 08, 2020 07:05 AM (PDT) pursuant to License Agreement with ICC & NYSDOS. No further reproduction, no

TABLE C403.3.2(3)—continued
MINIMUM EFFICIENCY REQUIREMENTS:
ELECTRICALLY OPERATED PACKAGED TERMINAL AIR CONDITIONERS, PACKAGED TERMINAL HEAT PUMPS, SINGLE-PACKAGE VERTICAL AIR CONDITIONERS, SINGLE VERTICAL HEAT PUMPS, ROOM AIR CONDITIONERS AND ROOM AIR-CONDITIONER HEAT PUMPS

EQUIPMENT TYPE	SIZE CATEGORY (INPUT)	SUBCATEGORY OR RATING CONDITION	MINIMUM EFFICIENCY	TEST PROCEDURE[a]
Room air conditioner casement only	All capacities	—	9.5 CEER	ANSI/ AHAM RAC-1
Room air conditioner casement-slider	All capacities	—	10.4 CEER	

For SI: 1 British thermal unit per hour = 0.2931 W, °C = [(°F) - 32]/1.8, wb = wet bulb, db = dry bulb.

"Cap" = The rated cooling capacity of the project in Btu/h. Where the unit's capacity is less than 7000 Btu/h, use 7000 Btu/h in the calculation. Where the unit's capacity is greater than 15,000 Btu/h, use 15,000 Btu/h in the calculations.

a. Chapter 6 contains a complete specification of the referenced test procedure, including the referenced year version of the test procedure.

b. Replacement unit shall be factory *labeled* as follows: "MANUFACTURED FOR REPLACEMENT APPLICATIONS ONLY: NOT TO BE INSTALLED IN NEW CONSTRUCTION PROJECTS." Replacement efficiencies apply only to units with existing sleeves less than 16 inches (406 mm) in height and less than 42 inches (1067 mm) in width.

TABLE C403.3.2(4)
WARM-AIR FURNACES AND COMBINATION WARM-AIR FURNACES/AIR-CONDITIONING UNITS, WARM-AIR DUCT FURNACES AND UNIT HEATERS, MINIMUM EFFICIENCY REQUIREMENTS

EQUIPMENT TYPE	SIZE CATEGORY (INPUT)	SUBCATEGORY OR RATING CONDITION	MINIMUM EFFICIENCY[d, e]	TEST PROCEDURE[a]
Warm-air furnaces, gas fired	< 225,000 Btu/h	—	80% AFUE or 80%E_t[c]	DOE 10 CFR Part 430 or ANSI Z21.47
	≥ 225,000 Btu/h	Maximum capacity[c]	80%E_t[f]	ANSI Z21.47
Warm-air furnaces, oil fired	< 225,000 Btu/h	—	83% AFUE or 80%E_t[c]	DOE 10 CFR Part 430 or UL 727
	≥ 225,000 Btu/h	Maximum capacity[b]	81%E_t[g]	UL 727
Warm-air duct furnaces, gas fired	All capacities	Maximum capacity[b]	80%E_c	ANSI Z83.8
Warm-air unit heaters, gas fired	All capacities	Maximum capacity[b]	80%E_c	ANSI Z83.8
Warm-air unit heaters, oil fired	All capacities	Maximum capacity[b]	80%E_c	UL 731

For SI: 1 British thermal unit per hour = 0.2931 W.

a. Chapter 6 contains a complete specification of the referenced test procedure, including the referenced year version of the test procedure.

b. Minimum and maximum ratings as provided for and allowed by the unit's controls.

c. Combination units not covered by the National Appliance Energy Conservation Act of 1987 (NAECA) (3-phase power or cooling capacity greater than or equal to 65,000 Btu/h [19 kW]) shall comply with either rating.

d. E_t = Thermal efficiency. See test procedure for detailed discussion.

e. E_c = Combustion efficiency (100% less flue losses). See test procedure for detailed discussion.

f. E_c = Combustion efficiency. Units shall also include an IID, have jackets not exceeding 0.75 percent of the input rating, and have either power venting or a flue damper. A vent damper is an acceptable alternative to a flue damper for those furnaces where combustion air is drawn from the conditioned space.

g. E_t = Thermal efficiency. Units shall also include an IID, have jacket losses not exceeding 0.75 percent of the input rating, and have either power venting or a flue damper. A vent damper is an acceptable alternative to a flue damper for those furnaces where combustion air is drawn from the conditioned space.

INTERNATIONAL CODE COUNCIL®

Copyright © 2019 ICC & NYSDOS. ALL RIGHTS RESERVED. Accessed by Lauren Gualdino (lgualdino@briarcliffmanor.org), (-) Order Number #100880972 on May 08, 2020 07:05 AM (PDT) pursuant to License Agreement with ICC & NYSDOS. No further reproduction, no

100880972

TABLE C403.3.2(5)
MINIMUM EFFICIENCY REQUIREMENTS: GAS- AND OIL-FIRED BOILERS

EQUIPMENT TYPE[a]	SUBCATEGORY OR RATING CONDITION	SIZE CATEGORY (INPUT)	MINIMUM EFFICIENCY[d, e]	TEST PROCEDURE
Boilers, hot water	Gas-fired	< 300,000 Btu/h[f, g]	82% AFUE	10 CFR Part 430
		≥ 300,000 Btu/h and ≤ 2,500,000 Btu/h[b]	80% E_t	10 CFR Part 431
		> 2,500,000 Btu/h[a]	82% E_c	
	Oil-fired[c]	< 300,000 Btu/h[g]	84% AFUE	10 CFR Part 430
		≥ 300,000 Btu/h and ≤ 2,500,000 Btu/h[b]	82% E_t	10 CFR Part 431
		> 2,500,000 Btu/h[a]	84% E_c	
Boilers, steam	Gas-fired	< 300,000 Btu/h[f]	80% AFUE	10 CFR Part 430
	Gas-fired- all, except natural draft	≥ 300,000 Btu/h and ≤ 2,500,000 Btu/h[b]	79% E_t	10 CFR Part 431
		> 2,500,000 Btu/h[a]	79% E_t	
	Gas-fired-natural draft	≥ 300,000 Btu/h and ≤ 2,500,000 Btu/h[b]	77% E_t	
		> 2,500,000 Btu/h[a]	77% E_t	
	Oil-fired[c]	< 300,000 Btu/h	82% AFUE	10 CFR Part 430
		≥ 300,000 Btu/h and ≤ 2,500,000 Btu/h[b]	81% E_t	10 CFR Part 431
		> 2,500,000 Btu/h[a]	81% E_t	

For SI: 1 British thermal unit per hour = 0.2931 W.

a. These requirements apply to boilers with rated input of 8,000,000 Btu/h or less that are not packaged boilers and to all packaged boilers. Minimum efficiency requirements for boilers cover all capacities of packaged boilers.

b. Maximum capacity – minimum and maximum ratings as provided for and allowed by the unit's controls.

c. Includes oil-fired (residual).

d. E_c = Combustion efficiency (100 percent less flue losses).

e. E_t = Thermal efficiency. See referenced standard for detailed information.

f. Boilers shall not be equipped with a constant-burning ignition pilot.

g. A boiler not equipped with a tankless domestic water heating coil shall be equipped with an automatic means for adjusting the temperature of the water such that an incremental change in inferred heat load produces a corresponding incremental change in the temperature of the water supplied.

TABLE C403.3.2(6)
MINIMUM EFFICIENCY REQUIREMENTS:
CONDENSING UNITS, ELECTRICALLY OPERATED

EQUIPMENT TYPE	SIZE CATEGORY	MINIMUM EFFICIENCY[b]	TEST PROCEDURE[a]
Condensing units, air cooled	≥ 135,000 Btu/h	10.1 EER 11.2 IPLV	AHRI 365
Condensing units, water or evaporatively cooled	≥ 135,000 Btu/h	13.1 EER 13.1 IPLV	

For SI: 1 British thermal unit per hour = 0.2931 W.

a. Chapter 6 contains a complete specification of the referenced test procedure, including the referenced year version of the test procedure.

b. IPLVs are only applicable to equipment with capacity modulation.

INTERNATIONAL CODE COUNCIL®
Copyright © 2019 ICC & NYSDOS. ALL RIGHTS RESERVED. Accessed by Lauren Gualdino (lgualdino@briarcliffmanor.org), (-) Order Number #100880972 on May 08, 2020 07:05 AM (PDT) pursuant to License Agreement with ICC & NYSDOS. No further reproduction, no

100880972

TABLE C403.3.2(7)
WATER CHILLING PACKAGES – EFFICIENCY REQUIREMENTS[a, b, d]

EQUIPMENT TYPE	SIZE CATEGORY	UNITS	BEFORE 1/1/2015		AS OF 1/1/2015		TEST PROCEDURE[c]
			Path A	Path B	Path A	Path B	
Air-cooled chillers	< 150 Tons	EER (Btu/W)	≥ 9.562 FL	NA[c]	≥ 10.100 FL	≥ 9.700 FL	AHRI 550/590
			≥ 12.500 IPLV		≥ 13.700 IPLV	≥ 15,800 IPLV	
	≥ 150 Tons		≥ 9.562 FL	NA[c]	≥ 10.100 FL	≥ 9.700 FL	
			≥ 12.500 IPLV		≥ 14.000 IPLV	≥ 16.100 IPLV	
Air cooled without condenser, electrically operated	All capacities	EER (Btu/W)	Air-cooled chillers without condenser shall be rated with matching condensers and complying with air-cooled chiller efficiency requirements.				
Water cooled, electrically operated positive displacement	< 75 Tons	kW/ton	≤ 0.780 FL	≤ 0.800 FL	≤ 0.750 FL	≤ 0.780 FL	
			≤ 0.630 IPLV	≤ 0.600 IPLV	≤ 0.600 IPLV	≤ 0.500 IPLV	
	≥ 75 tons and < 150 tons		≤ 0.775 FL	≤ 0.790 FL	≤ 0.720 FL	≤ 0.750 FL	
			≤ 0.615 IPLV	≤ 0.586 IPLV	≤ 0.560 IPLV	≤ 0.490 IPLV	
	≥ 150 tons and < 300 tons		≤ 0.680 FL	≤ 0.718 FL	≤ 0.660 FL	≤ 0.680 FL	
			≤ 0.580 IPLV	≤ 0.540 IPLV	≤ 0.540 IPLV	≤ 0.440 IPLV	
	≥ 300 tons and < 600 tons		≤ 0.620 FL	≤ 0.639 FL	≤ 0.610 FL	≤ 0.625 FL	
			≤ 0.540 IPLV	≤ 0.490 IPLV	≤ 0.520 IPLV	≤ 0.410 IPLV	
	≥ 600 tons		≤ 0.620 FL	≤ 0.639 FL	≤ 0.560 FL	≤ 0.585 FL	
			≤ 0.540 IPLV	≤ 0.490 IPLV	≤ 0.500 IPLV	≤ 0.380 IPLV	
Water cooled, electrically operated centrifugal	< 150 Tons	kW/ton	≤ 0.634 FL	≤ 0.639 FL	≤ 0.610 FL	≤ 0.695 FL	
			≤ 0.596 IPLV	≤ 0.450 IPLV	≤ 0.550 IPLV	≤ 0.440 IPLV	
	≥ 150 tons and < 300 tons		≤ 0.634 FL	≤ 0.639 FL	≤ 0.610 FL	≤ 0.635 FL	
			≤ 0.596 IPLV	≤ 0.450 IPLV	≤ 0.550 IPLV	≤ 0.400 IPLV	
	≥ 300 tons and < 400 tons		≤ 0.576 FL	≤ 0.600 FL	≤ 0.560 FL	≤ 0.595 FL	
			≤ 0.549 IPLV	≤ 0.400 IPLV	≤ 0.520 IPLV	≤ 0.390 IPLV	
	≥ 400 tons and < 600 tons		≤ 0.576 FL	≤ 0.600 FL	≤ 0.560 FL	≤ 0.585 FL	
			≤ 0.549 IPLV	≤ 0.400 IPLV	≤ 0.500 IPLV	≤ 0.380 IPLV	
	≥ 600 Tons		≤ 0.570 FL	≤ 0.590 FL	≤ 0.560 FL	≤ 0.585 FL	
			≤ 0.539 IPLV	≤ 0.400 IPLV	≤ 0.500 IPLV	≤ 0.380 IPLV	
Air cooled, absorption, single effect	All capacities	COP	≥ 0.600 FL	NA[c]	≥ 0.600 FL	NA[c]	AHRI 560
Water cooled absorption, single effect	All capacities	COP	≥ 0.700 FL	NA[c]	≥ 0.700 FL	NA[c]	
Absorption, double effect, indirect fired	All capacities	COP	≥ 1.000 FL	NA[c]	≥ 1.000 FL	NA[c]	
			≥ 1.050 IPLV		≥ 1.050 IPLV		
Absorption double effect direct fired	All capacities	COP	≥ 1.000 FL	NA[c]	≥ 1.000 FL	NA[c]	
			≥ 1.000 IPLV		≥ 1.050 IPLV		

a. The requirements for centrifugal chiller shall be adjusted for nonstandard rating conditions in accordance with Section C403.3.2.1 and are only applicable for the range of conditions *listed* in Section C403.3.2.1. The requirements for air-cooled, water-cooled positive displacement and absorption chillers are at standard rating conditions defined in the reference test procedure.

b. Both the full-load and IPLV requirements shall be met or exceeded to comply with this standard. Where there is a Path B, compliance can be with either Path A or Path B for any application.

c. NA means the requirements are not applicable for Path B and only Path A can be used for compliance.

d. FL represents the full-load performance requirements and IPLV the part-load performance requirements.

INTERNATIONAL CODE COUNCIL®
Copyright © 2019 ICC & NYSDOS. ALL RIGHTS RESERVED. Accessed by Lauren Gualdino (lgualdino@briarcliffmanor.org), (-) Order Number #100880972 on May 08, 2020 07:05 AM (PDT) pursuant to License Agreement with ICC & NYSDOS. No further reproduction, no

100880972

TABLE C403.3.2(8)
MINIMUM EFFICIENCY REQUIREMENTS:
HEAT REJECTION EQUIPMENT

EQUIPMENT TYPE[a]	TOTAL SYSTEM HEAT REJECTION CAPACITY AT RATED CONDITIONS	SUBCATEGORY OR RATING CONDITION[i]	PERFORMANCE REQUIRED[b, c, d, g, h]	TEST PROCEDURE[e, f]
Propeller or axial fan open-circuit cooling towers	All	95°F entering water 85°F leaving water 75°F entering wb	≥ 40.2 gpm/hp	CTI ATC-105 and CTI STD-201 RS
Centrifugal fan open-circuit cooling towers	All	95°F entering water 85°F leaving water 75°F entering wb	≥ 20.0 gpm/hp	CTI ATC-105 and CTI STD-201 RS
Propeller or axial fan closed-circuit cooling towers	All	102°F entering water 90°F leaving water 75°F entering wb	≥ 16.1 gpm/hp	CTI ATC-105S and CTI STD-201 RS
Centrifugal fan closed- circuit cooling towers	All	102°F entering water 90°F leaving water 75°F entering wb	≥ 7.0 gpm/hp	CTI ATC-105S and CTI STD-201 RS
Propeller or axial fan evaporative condensers	All	Ammonia Test Fluid 140°F entering gas temperature 96.3°F condensing temperature 75°F entering wb	≥ 134,000 Btu/h × hp	CTI ATC-106
Centrifugal fan evaporative condensers	All	Ammonia Test Fluid 140°F entering gas temperature 96.3°F condensing temperature 75°F entering wb	≥110,000 Btu/h × hp	CTI ATC-106
Propeller or axial fan evaporative condensers	All	R-507A Test Fluid 165°F entering gas temperature 105°F condensing temperature 75°F entering wb	≥ 157,000 Btu/h × hp	CTI ATC-106
Centrifugal fan evaporative condensers	All	R-507A Test Fluid 165°F entering gas temperature 105°F condensing temperature 75°F entering wb	≥ 135,000 Btu/h × hp	CTI ATC-106
Air-cooled condensers	All	125°F Condensing Temperature 190°F Entering Gas Temperature 15°F subcooling 95°F entering db	≥ 176,000 Btu/h × hp	AHRI 460

For SI: °C = [(°F) - 32]/1.8, L/s • kW = (gpm/hp)/(11.83), COP = (Btu/h • hp)/(2550.7),
db = dry bulb temperature, °F, wb = wet bulb temperature, °F.

a. The efficiencies and test procedures for both open- and closed-circuit cooling towers are not applicable to hybrid cooling towers that contain a combination of wet and dry heat exchange sections.
b. For purposes of this table, open circuit cooling tower performance is defined as the water flow rating of the tower at the thermal rating condition, divided by the fan nameplate-rated motor power.
c. For purposes of this table, closed-circuit cooling tower performance is defined as the water flow rating of the tower at the thermal rating condition, divided by the sum of the fan nameplate-rated motor power and the spray pump nameplate-rated motor power.
d. For purposes of this table, air-cooled condenser performance is defined as the heat rejected from the refrigerant divided by the fan nameplate-rated motor power.
e. Chapter 6 contains a complete specification of the referenced test procedure, including the referenced year version of the test procedure. The certification requirements do not apply to field-erected cooling towers.
f. Where a certification program exists for a covered product and it includes provisions for verification and challenge of equipment efficiency ratings, then the product shall be *listed* in the certification program; or, where a certification program exists for a covered product, and it includes provisions for verification and challenge of equipment efficiency ratings, but the product is not *listed* in the existing certification program, the ratings shall be verified by an independent laboratory test report.
g. Cooling towers shall comply with the minimum efficiency *listed* in the table for that specific type of tower with the capacity effect of any project-specific accessories or options included in the capacity of the cooling tower.
h. For purposes of this table, evaporative condenser performance is defined as the heat rejected at the specified rating condition in the table divided by the sum of the fan motor nameplate power and the integral spray pump nameplate power.
i. Requirements for evaporative condensers are *listed* with ammonia (R-717) and R-507A as test fluids in the table. Evaporative condensers intended for use with halocarbon refrigerants other than R-507A shall meet the minimum efficiency requirements *listed* in this table with R-507A as the test fluid.

INTERNATIONAL CODE COUNCIL®
Copyright © 2019 ICC & NYSDOS. ALL RIGHTS RESERVED. Accessed by Lauren Gualdino (lgualdino@briarcliffmanor.org), (-) Order Number #100880972 on May 08, 2020 07:05 AM (PDT) pursuant to License Agreement with ICC & NYSDOS. No further reproduction, no

100880972

TABLE C403.3.2(9)
MINIMUM EFFICIENCY AIR CONDITIONERS AND CONDENSING UNITS SERVING COMPUTER ROOMS

EQUIPMENT TYPE	NET SENSIBLE COOLING CAPACITY[a]	MINIMUM SCOP-127[b] EFFICIENCY DOWNFLOW UNITS / UPFLOW UNITS	TEST PROCEDURE
Air conditioners, air cooled	< 65,000 Btu/h	2.20 / 2.09	ANSI/ASHRAE 127
	≥ 65,000 Btu/h and < 240,000 Btu/h	2.10 / 1.99	
	≥ 240,000 Btu/h	1.90 / 1.79	
Air conditioners, water cooled	< 65,000 Btu/h	2.60 / 2.49	
	≥ 65,000 Btu/h and < 240,000 Btu/h	2.50 / 2.39	
	≥ 240,000 Btu/h	2.40 /2.29	
Air conditioners, water cooled with fluid economizer	< 65,000 Btu/h	2.55 /2.44	
	≥ 65,000 Btu/h and < 240,000 Btu/h	2.45 / 2.34	
	≥ 240,000 Btu/h	2.35 / 2.24	
Air conditioners, glycol cooled (rated at 40% propylene glycol)	< 65,000 Btu/h	2.50 / 2.39	
	≥ 65,000 Btu/h and < 240,000 Btu/h	2.15 / 2.04	
	≥ 240,000 Btu/h	2.10 / 1.99	
Air conditioners, glycol cooled (rated at 40% propylene glycol) with fluid economizer	< 65,000 Btu/h	2.45 / 2.34	
	≥ 65,000 Btu/h and < 240,000 Btu/h	2.10 / 1.99	
	≥ 240,000 Btu/h	2.05 / 1.94	

For SI: 1 British thermal unit per hour = 0.2931 W.

a. Net sensible cooling capacity: the total gross cooling capacity less the latent cooling less the energy to the air movement system. (Total Gross – latent – Fan Power).

b. Sensible coefficient of performance (SCOP-127): a ratio calculated by dividing the net sensible cooling capacity in watts by the total power input in watts (excluding reheaters and humidifiers) at conditions defined in ASHRAE Standard 127. The net sensible cooling capacity is the gross sensible capacity minus the energy dissipated into the cooled space by the fan system.

TABLE C403.3.2(10)
HEAT TRANSFER EQUIPMENT

EQUIPMENT TYPE	SUBCATEGORY	MINIMUM EFFICIENCY	TEST PROCEDURE[a]
Liquid-to-liquid heat exchangers	Plate type	NR	AHRI 400

NR = No Requirement.

a. Chapter 6 contains a complete specification of the referenced test procedure, including the referenced year version of the test procedure.

sure having *exterior walls* facing only one orientation (within ± 45 degrees) (0.8 rad) for more than 50 contiguous feet (15 240 mm).

2. The perimeter system heating and cooling supply is controlled by thermostats located within the *zones* served by the system.

C403.4.1.1 Heat pump supplementary heat (Mandatory). Heat pumps having supplementary electric resistance heat shall have controls that, except during defrost, prevent supplementary heat operation where the heat pump can provide the heating load.

C403.4.1.2 Deadband (Mandatory). Where used to control both heating and cooling, *zone* thermostatic controls shall be configured to provide a temperature range or deadband of not less than 5°F (2.8°C) within which the supply of heating and cooling energy to the *zone* is shut off or reduced to a minimum.

Exceptions:

1. Thermostats requiring manual changeover between heating and cooling modes.
2. Occupancies or applications requiring precision in indoor temperature control as *approved* by the *building official*.

C403.4.1.3 Setpoint overlap restriction (Mandatory). Where a *zone* has a separate heating and a separate cooling thermostatic control located within the *zone*, a limit switch, mechanical stop or direct digital control system with software programming shall be configured to prevent the heating setpoint from exceeding the cooling setpoint and to maintain a deadband in accordance with Section C403.4.1.2.

C403.4.1.4 Heated or cooled vestibules (Mandatory). The heating system for heated vestibules and *air curtains* with integral heating shall be provided with controls configured to shut off the source of heating when the outdoor air temperature is greater than 45°F (7°C). Vestibule heating and cooling systems shall be controlled by a thermostat located in the vestibule configured to limit heating to a temperature not greater than 60°F (16°C) and cooling to a temperature not less than 85°F (29°C).

INTERNATIONAL CODE COUNCIL®
Copyright © 2019 ICC & NYSDOS. ALL RIGHTS RESERVED. Accessed by Lauren Gualdino (lgualdino@briarcliffmanor.org), (-) Order Number #100880972 on May 08, 2020 07:05 AM (PDT) pursuant to License Agreement with ICC & NYSDOS. No further reproduction, no

100880972

Exception: Control of heating or cooling provided by site-recovered energy or transfer air that would otherwise be exhausted.

C403.4.1.5 Hot water boiler outdoor temperature setback control (Mandatory). Hot water boilers that supply heat to the building through one- or two-pipe heating systems shall have an outdoor setback control that lowers the boiler water temperature based on the outdoor temperature.

C403.4.2 Off-hour controls (Mandatory). Each *zone* shall be provided with thermostatic setback controls that are controlled by either an automatic time clock or programmable control system.

Exceptions:

1. *Zones* that will be operated continuously.
2. *Zones* with a full HVAC load demand not exceeding 6,800 Btu/h (2 kW) and having a manual shutoff switch located with *ready access*.

C403.4.2.1 Thermostatic setback (Mandatory). Thermostatic setback controls shall be configured to set back or temporarily operate the system to maintain *zone* temperatures down to 55°F (13°C) or up to 85°F (29°C).

C403.4.2.2 Automatic setback and shutdown (Mandatory). Automatic time clock or programmable controls shall be capable of starting and stopping the system for seven different daily schedules per week and retaining their programming and time setting during a loss of power for not fewer than 10 hours. Additionally, the controls shall have a manual override that allows temporary operation of the system for up to 2 hours; a manually operated timer configured to operate the system for up to 2 hours; or an occupancy sensor.

C403.4.2.3 Automatic start (Mandatory). Automatic start controls shall be provided for each HVAC system. The controls shall be configured to automatically adjust the daily start time of the HVAC system in order to bring each space to the desired occupied temperature immediately prior to scheduled occupancy.

C403.4.3 Hydronic systems controls. The heating of fluids that have been previously mechanically cooled and the cooling of fluids that have been previously mechanically heated shall be limited in accordance with Sections C403.4.3.1 through C403.4.3.3. Hydronic heating systems comprised of multiple-packaged boilers and designed to deliver conditioned water or steam into a common distribution system shall include automatic controls configured to sequence operation of the boilers. Hydronic heating systems composed of a single boiler and greater than 500,000 Btu/h (146.5 kW) input design capacity shall include either a multistaged or modulating burner.

C403.4.3.1 Three-pipe system. Hydronic systems that use a common return system for both hot water and chilled water are prohibited.

C403.4.3.2 Two-pipe changeover system. Systems that use a common distribution system to supply both heated and chilled water shall be designed to allow a deadband between changeover from one mode to the other of not less than 15°F (8.3°C) outside air temperatures; be designed to and provided with controls that will allow operation in one mode for not less than 4 hours before changing over to the other mode; and be provided with controls that allow heating and cooling supply temperatures at the changeover point to be not more than 30°F (16.7°C) apart.

C403.4.3.3 Hydronic (water loop) heat pump systems. Hydronic heat pump systems shall comply with Sections C403.4.3.3.1 through C403.4.3.3.3.

C403.4.3.3.1 Temperature deadband. Hydronic heat pumps connected to a common heat pump water loop with central devices for heat rejection and heat addition shall have controls that are configured to provide a heat pump water supply temperature deadband of not less than 20°F (11°C) between initiation of heat rejection and heat addition by the central devices.

Exception: Where a system loop temperature optimization controller is installed and can determine the most efficient operating temperature based on real-time conditions of demand and capacity, deadbands of less than 20°F (11°C) shall be permitted.

C403.4.3.3.2 Heat rejection. The following shall apply to hydronic water loop heat pump systems in *Climate Zones* 3 through 8:

1. Where a closed-circuit cooling tower is used directly in the heat pump loop, either an automatic valve shall be installed to bypass the flow of water around the closed-circuit cooling tower, except for any flow necessary for freeze protection, or low-leakage positive-closure dampers shall be provided.
2. Where an open-circuit cooling tower is used directly in the heat pump loop, an automatic valve shall be installed to bypass all heat pump water flow around the open-circuit cooling tower.
3. Where an open-circuit cooling tower is used in conjunction with a separate heat exchanger to isolate the open-circuit cooling tower from the heat pump loop, heat loss shall be controlled by shutting down the circulation pump on the cooling tower loop.

Exception: Where it can be demonstrated that a heat pump system will be required to reject heat throughout the year.

C403.4.3.3.3 Two-position valve. Each hydronic heat pump on the hydronic system having a total pump system power exceeding 10 hp (7.5 kW) shall have a two-position valve.

C403.4.4 Part-load controls. Hydronic systems greater than or equal to 300,000 Btu/h (87.9 kW) in design output capacity supplying heated or chilled water to comfort conditioning

INTERNATIONAL CODE COUNCIL®
Copyright © 2019 ICC & NYSDOS. ALL RIGHTS RESERVED. Accessed by Lauren Gualdino (lgualdino@briarcliffmanor.org), (-) Order Number #100880972 on May 08, 2020 07:05 AM (PDT) pursuant to License Agreement with ICC & NYSDOS. No further reproduction, no

100880972

systems shall include controls that are configured to do all of the following:

1. Automatically reset the supply-water temperatures in response to varying building heating and cooling demand using coil valve position, *zone*-return water temperature, building-return water temperature or outside air temperature. The temperature shall be reset by not less than 25 percent of the design supply-to-return water temperature difference.
2. Automatically vary fluid flow for hydronic systems with a combined pump motor capacity of 2 hp (1.5 kW) or larger with three or more control valves or other devices by reducing the system design flow rate by not less than 50 percent or the maximum reduction allowed by the equipment manufacturer for proper operation of equipment by valves that modulate or step open and close, or pumps that modulate or turn on and off as a function of load.
3. Automatically vary pump flow on heating-water systems, chilled-water systems and heat rejection loops serving water-cooled unitary air conditioners as follows:
   3.1. Where pumps operate continuously or operate based on a time schedule, pumps with nominal output motor power of 2 hp or more shall have a variable speed drive.
   3.2. Where pumps have automatic direct digital control configured to operate pumps only when *zone* heating or cooling is required, a variable speed drive shall be provided for pumps with motors having the same or greater nominal output power indicated in Table C403.4.4 based on the *climate zone* and system served.
4. Where a variable speed drive is required by Item 3 of this Section, pump motor power input shall be not more than 30 percent of design wattage at 50 percent of the design water flow. Pump flow shall be controlled to maintain one control valve nearly wide open or to satisfy the minimum differential pressure.

Exceptions:

1. Supply-water temperature reset is not required for chilled-water systems supplied by off-site district chilled water or chilled water from ice storage systems.
2. Variable pump flow is not required on dedicated coil circulation pumps where needed for freeze protection.
3. Variable pump flow is not required on dedicated equipment circulation pumps where configured in primary/secondary design to provide the minimum flow requirements of the equipment manufacturer for proper operation of equipment.
4. Variable speed drives are not required on heating water pumps where more than 50 percent of annual heat is generated by an electric boiler.

C403.4.5 Pump isolation. Chilled water plants including more than one chiller shall be capable of and configured to reduce flow automatically through the chiller plant when a chiller is shut down. Chillers piped in series for the purpose of increased temperature differential shall be considered as one chiller.

Boiler systems including more than one boiler shall be capable of and configured to reduce flow automatically through the boiler system when a boiler is shut down.

[NY] C403.5 Economizers (Prescriptive). Economizers shall comply with Sections C403.5.1 through C403.5.5.

An air or water economizer shall be provided for the following cooling systems:

1. Chilled water systems with a total cooling capacity, less cooling capacity provided with air economizers, as specified in Table C403.5(1).
2. Individual fan systems with cooling capacity greater than or equal to 54,000 Btu/h (15.8 kW) serving other than a *Group R* occupancies.

   The total supply capacity of all fan cooling units not provided with economizers shall not exceed 20 percent of the total supply capacity of all fan cooling units in the building or 300,000 Btu/h (88 kW), whichever is greater.
3. Individual fan systems with cooling capacity greater than or equal to 270,000 Btu/h (79.1 kW) serving *Group R* occupancies.

   The total supply capacity of all fan cooling units not provided with economizers shall not exceed 20 percent of the total supply capacity of all fan cooling units in the building or 1,500,000 Btu/h (440 kW), whichever is greater.

Exceptions: Economizers are not required for the following systems.

1. Individual fan systems not served by chilled water for buildings located in *Climate Zones* 1A and 1B.
2. Where more than 25 percent of the air designed to be supplied by the system is to spaces that are

[NY] TABLE C403.4.4
VARIABLE SPEED DRIVE (VSD) REQUIREMENTS FOR DEMAND-CONTROLLED PUMPS

CHILLED WATER AND HEAT REJECTION LOOP PUMPS IN THESE CLIMATE ZONES	HEATING WATER PUMPS IN THESE CLIMATE ZONES	VSD REQUIRED FOR MOTORS WITH RATED OUTPUT OF:
4A	—	≥ 5 hp
5A, 6A	5A, 6A	≥ 7.5 hp
—	4	≥ 10 hp

INTERNATIONAL CODE COUNCIL®
Copyright © 2019 ICC & NYSDOS. ALL RIGHTS RESERVED. Accessed by Lauren Gualdino (lgualdino@briarcliffmanor.org), (-) Order Number #100880972 on May 08, 2020 07:05 AM (PDT) pursuant to License Agreement with ICC & NYSDOS. No further reproduction, no

100880972

designed to be humidified above 35°F (1.7°C) dew-point temperature to satisfy process needs.

3. Systems expected to operate less than 20 hours per week.
4. Systems serving supermarket areas with open refrigerated casework.
5. Where the cooling efficiency is greater than or equal to the efficiency requirements in Table C403.5(2).
6. Systems that include a heat recovery system in accordance with Section C403.9.5.

[NY] TABLE C403.5(2)
EQUIPMENT EFFICIENCY PERFORMANCE EXCEPTION FOR ECONOMIZERS

CLIMATE ZONES	COOLING EQUIPMENT PERFORMANCE IMPROVEMENT (EER OR IPLV)
4A	20% efficiency improvement

C403.5.1 Integrated economizer control. Economizer systems shall be integrated with the mechanical cooling system and be configured to provide partial cooling even where additional mechanical cooling is required to provide the remainder of the cooling load. Controls shall not be capable of creating a false load in the mechanical cooling systems by limiting or disabling the economizer or any other means, such as hot gas bypass, except at the lowest stage of mechanical cooling.

Units that include an air economizer shall comply with the following:

1. Unit controls shall have the mechanical cooling capacity control interlocked with the air economizer controls such that the outdoor air damper is at the 100-percent open position when mechanical cooling is on and the outdoor air damper does not begin to close to prevent coil freezing due to minimum compressor run time until the leaving air temperature is less than 45°F (7°C).
2. Direct expansion (DX) units that control 75,000 Btu/h (22 kW) or greater of rated capacity of the capacity of the mechanical cooling directly based on occupied space temperature shall have not fewer than two stages of mechanical cooling capacity.
3. Other DX units, including those that control space temperature by modulating the airflow to the space, shall be in accordance with Table C403.5.1.

C403.5.2 Economizer heating system impact. HVAC system design and economizer controls shall be such that economizer operation does not increase building heating energy use during normal operation.

Exception: Economizers on variable air volume (VAV) systems that cause *zone* level heating to increase because of a reduction in supply air temperature.

C403.5.3 Air economizers. Where economizers are required by Section C403.5, air economizers shall comply with Sections C403.5.3.1 through C403.5.3.5.

C403.5.3.1 Design capacity. Air economizer systems shall be configured to modulate *outdoor air* and return air dampers to provide up to 100 percent of the design supply air quantity as *outdoor air* for cooling.

C403.5.3.2 Control signal. Economizer controls and dampers shall be configured to sequence the dampers with the mechanical cooling equipment and shall not be controlled by only mixed-air temperature.

Exception: The use of mixed-air temperature limit control shall be permitted for systems controlled from space temperature (such as single-*zone* systems).

[NY] TABLE C403.5(1)
MINIMUM CHILLED-WATER SYSTEM COOLING CAPACITY FOR DETERMINING ECONOMIZER COOLING REQUIREMENTS

CLIMATE ZONES (COOLING)	TOTAL CHILLED-WATER SYSTEM CAPACITY LESS CAPACITY OF COOLING UNITS WITH AIR ECONOMIZERS	
	Local Water-cooled Chilled-water Systems	Air-cooled Chilled-water Systems or District Chilled-Water Systems
4A	720,000 Btu/h	940,000 Btu/h
5A, 6A	1,320,000 Btu/h	1,720,000 Btu/h

For SI: 1 British thermal unit per hour = 0.2931 W.

TABLE C403.5.1
DX COOLING STAGE REQUIREMENTS FOR MODULATING AIRFLOW UNITS

RATING CAPACITY	MINIMUM NUMBER OF MECHANICAL COOLING STAGES	MINIMUM COMPRESSOR DISPLACEMENT[a]
≥ 65,000 Btu/h and < 240,000 Btu/h	3 stages	≤ 35% of full load
≥ 240,000 Btu/h	4 stages	≤ 25% full load

For SI: 1 British thermal unit per hour = 0.2931 W.

a. For mechanical cooling stage control that does not use variable compressor displacement, the percent displacement shall be equivalent to the mechanical cooling capacity reduction evaluated at the full load rating conditions for the compressor.

INTERNATIONAL CODE COUNCIL®
Copyright © 2019 ICC & NYSDOS. ALL RIGHTS RESERVED. Accessed by Lauren Gualdino (lgualdino@briarcliffmanor.org), (-) Order Number #100880972 on May 08, 2020 07:05 AM (PDT) pursuant to License Agreement with ICC & NYSDOS. No further reproduction, no

100880972

C403.5.3.3 High-limit shutoff. Air economizers shall be configured to automatically reduce *outdoor air* intake to the design minimum *outdoor air* quantity when *outdoor air* intake will not reduce cooling energy usage. High-limit shutoff control types for specific climates shall be chosen from Table C403.5.3.3. High-limit shutoff control settings for these control types shall be those specified in Table C403.5.3.3.

C403.5.3.4 Relief of excess outdoor air. Systems shall be capable of relieving excess *outdoor air* during air economizer operation to prevent overpressurizing the building. The relief air outlet shall be located to avoid recirculation into the building.

C403.5.3.5 Economizer dampers. Return, exhaust/relief and outdoor air dampers used in economizers shall comply with Section C403.7.7.

C403.5.4 Water-side economizers. Where economizers are required by Section C403.5, water-side economizers shall comply with Sections C403.5.4.1 and C403.5.4.2.

C403.5.4.1 Design capacity. Water economizer systems shall be configured to cool supply air by indirect evaporation and providing up to 100 percent of the expected system cooling load at *outdoor air* temperatures of not greater than 50°F (10°C) dry bulb/45°F (7°C) wet bulb.

Exceptions:

1. Systems primarily serving computer rooms in which 100 percent of the expected system cooling load at 40°F (4°C) dry bulb/35°F (1.7°C) wet bulb is met with evaporative water economizers.
2. Systems primarily serving computer rooms with dry cooler water economizers that satisfy 100 percent of the expected system cooling load at 35°F (1.7°C) dry bulb.
3. Systems where dehumidification requirements cannot be met using outdoor air temperatures of 50°F (10°C) dry bulb/45°F (7°C) wet bulb and where 100 percent of the expected system cooling load at 45°F (7°C) dry bulb/40°F (4°C) wet bulb is met with evaporative water economizers.

C403.5.4.2 Maximum pressure drop. Precooling coils and water-to-water heat exchangers used as part of a water economizer system shall either have a water-side pressure drop of less than 15 feet (45 kPa) of water or a secondary loop shall be created so that the coil or heat exchanger pressure drop is not seen by the circulating pumps when the system is in the normal cooling (noneconomizer) mode.

C403.5.5 Economizer fault detection and diagnostics (Mandatory). Air-cooled unitary direct-expansion units *listed* in Tables C403.3.2(1) through C403.3.2(3) and variable refrigerant flow (VRF) units that are equipped with an economizer in accordance with Sections C403.5 through C403.5.4 shall include a fault detection and diagnostics system complying with the following:

1. The following temperature sensors shall be permanently installed to monitor system operation:
   1.1. Outside air.
   1.2. Supply air.
   1.3. Return air.
2. Temperature sensors shall have an accuracy of ±2°F (1.1°C) over the range of 40°F to 80°F (4°C to 26.7°C).
3. Refrigerant pressure sensors, where used, shall have an accuracy of ±3 percent of full scale.
4. The unit controller shall be configured to provide system status by indicating the following:
   4.1. Free cooling available.
   4.2. Economizer enabled.
   4.3. Compressor enabled.

TABLE C403.5.3.3
HIGH-LIMIT SHUTOFF CONTROL SETTING FOR AIR ECONOMIZERS[b]

DEVICE TYPE	CLIMATE ZONE	REQUIRED HIGH LIMIT (ECONOMIZER OFF WHEN):	
		Equation	Description
Fixed dry bulb	5A, 6A	$T_{OA} > 70°F$	Outdoor air temperature exceeds 70°F
	4A	$T_{OA} > 65°F$	Outdoor air temperature exceeds 65°F
Differential dry bulb	5A, 6A	$T_{OA} > T_{RA}$	Outdoor air temperature exceeds return air temperature
Fixed enthalpy with fixed dry-bulb temperatures	All	$h_{OA} > 28$ Btu/lb[a] or $T_{OA} > 75°F$	Outdoor air enthalpy exceeds 28 Btu/lb of dry air[a] or Outdoor air temperature exceeds 75°F
Differential enthalpy with fixed dry-bulb temperature	All	$h_{OA} > h_{RA}$ or $T_{OA} > 75°F$	Outdoor air enthalpy exceeds return air enthalpy or Outdoor air temperature exceeds 75°F

For SI: 1 foot = 305 mm, °C = (°F - 32)/1.8, 1 Btu/lb = 2.33 kJ/kg.

a. At altitudes substantially different than sea level, the fixed enthalpy limit shall be set to the enthalpy value at 75°F and 50-percent relative humidity. As an example, at approximately 6,000 feet elevation, the fixed enthalpy limit is approximately 30.7 Btu/lb.

b. Devices with selectable setpoints shall be capable of being set to within 2°F and 2 Btu/lb of the setpoint *listed*.

INTERNATIONAL CODE COUNCIL®
Copyright © 2019 ICC & NYSDOS. ALL RIGHTS RESERVED. Accessed by Lauren Gualdino (lgualdino@briarcliffmanor.org), (-) Order Number #100880972 on May 08, 2020 07:05 AM (PDT) pursuant to License Agreement with ICC & NYSDOS. No further reproduction, no

100880972

4.4. Heating enabled.

4.5. Mixed air low limit cycle active.

4.6. The current value of each sensor.

5. The unit controller shall be capable of manually initiating each operating mode so that the operation of compressors, economizers, fans and the heating system can be independently tested and verified.

6. The unit shall be configured to report faults to a fault management application available for *access* by day-to-day operating or service personnel, or annunciated locally on *zone* thermostats.

7. The fault detection and diagnostics system shall be configured to detect the following faults:

7.1. Air temperature sensor failure/fault.

7.2. Not economizing when the unit should be economizing.

7.3. Economizing when the unit should not be economizing.

7.4. Damper not modulating.

7.5. Excess outdoor air.

C403.6 Requirements for mechanical systems serving multiple zones. Sections C403.6.1 through C403.6.9 shall apply to mechanical systems serving multiple zones.

C403.6.1 Variable air volume and multiple-zone systems. Supply air systems serving multiple *zones* shall be variable air volume (VAV) systems that have zone controls configured to reduce the volume of air that is reheated, recooled or mixed in each zone to one of the following:

1. Twenty percent of the *zone* design peak supply for systems with DDC and 30 percent for other systems.
2. Systems with DDC where all of the following apply:

2.1. The airflow rate in the deadband between heating and cooling does not exceed 20 percent of the *zone* design peak supply rate or higher allowed rates under Items 3, 4 and 5 of this section.

2.2. The first stage of heating modulates the *zone* supply air temperature setpoint up to a maximum setpoint while the airflow is maintained at the deadband flow rate.

2.3. The second stage of heating modulates the airflow rate from the deadband flow rate up to the heating maximum flow rate that is less than 50 percent of the *zone* design peak supply rate.

3. The outdoor airflow rate required to meet the minimum ventilation requirements of Chapter 4 of the *Mechanical Code of New York State*.
4. Any higher rate that can be demonstrated to reduce overall system annual energy use by offsetting reheat/recool energy losses through a reduction in outdoor air intake for the system as approved by the building official.
5. The airflow rate required to comply with applicable codes or accreditation standards such as pressure relationships or minimum air change rates.

Exception: The following individual *zones* or entire air distribution systems are exempted from the requirement for VAV control:

1. *Zones* or supply air systems where not less than 75 percent of the energy for reheating or for providing warm air in mixing systems is provided from a site-recovered, including condenser heat, or site-solar energy source.
2. Systems that prevent reheating, recooling, mixing or simultaneous supply of air that has been previously cooled, either mechanically or through the use of economizer systems, and air that has been previously mechanically heated.

C403.6.2 Single-duct VAV systems, terminal devices. Single-duct VAV systems shall use terminal devices capable of and configured to reduce the supply of primary supply air before reheating or recooling takes place.

C403.6.3 Dual-duct and mixing VAV systems, terminal devices. Systems that have one warm air duct and one cool air duct shall use terminal devices that are configured to reduce the flow from one duct to a minimum before mixing of air from the other duct takes place.

C403.6.4 Single-fan dual-duct and mixing VAV systems, economizers. Individual dual-duct or mixing heating and cooling systems with a single fan and with total capacities greater than 90,000 Btu/h [(26.4 kW) 7.5 tons] shall not be equipped with air economizers.

C403.6.5 Supply-air temperature reset controls. Multiple-*zone* HVAC systems shall include controls that automatically reset the supply-air temperature in response to representative building loads, or to outdoor air temperature. The controls shall be configured to reset the supply air temperature not less than 25 percent of the difference between the design supply-air temperature and the design room air temperature.

Exceptions:

1. Systems that prevent reheating, recooling or mixing of heated and cooled supply air.
2. Seventy-five percent of the energy for reheating is from site-recovered or site-solar energy sources.
3. *Zones* with peak supply air quantities of 300 cfm (142 L/s) or less.

C403.6.6 Multiple-zone VAV system ventilation optimization control. Multiple-*zone* VAV systems with direct digital control of individual zone boxes reporting to a central control panel shall have automatic controls configured to reduce outdoor air intake flow below design rates in response to changes in system *ventilation* efficiency (E_v) as defined by the *Mechanical Code of New York State*.

Exceptions:

1. VAV systems with zonal transfer fans that recirculate air from other *zones* without directly mix-

INTERNATIONAL CODE COUNCIL®
Copyright © 2019 ICC & NYSDOS. ALL RIGHTS RESERVED. Accessed by Lauren Gualdino (lgualdino@briarcliffmanor.org), (-) Order Number #100880972 on May 08, 2020 07:05 AM (PDT) pursuant to License Agreement with ICC & NYSDOS. No further reproduction, no

100880972

ing it with outdoor air, dual-duct dual-fan VAV systems, and VAV systems with fan-powered terminal units.

2. Systems where total design exhaust airflow is more than 70 percent of total design outdoor air intake flow requirements.

C403.6.7 Parallel-flow fan-powered VAV air terminal control. Parallel-flow fan-powered VAV air terminals shall have automatic controls configured to:

1. Turn off the terminal fan except when space heating is required or where required for *ventilation*.
2. Turn on the terminal fan as the first stage of heating before the heating coil is activated.
3. During heating for warmup or setback temperature control, either:
   3.1. Operate the terminal fan and heating coil without primary air.
   3.2. Reverse the terminal damper logic and provide heating from the central air handler by primary air.

C403.6.8 Setpoints for direct digital control. For systems with direct digital control of individual *zones* reporting to the central control panel, the static pressure setpoint shall be reset based on the *zone* requiring the most pressure. In such case, the setpoint is reset lower until one *zone* damper is nearly wide open. The direct digital controls shall be capable of monitoring *zone* damper positions or shall have an alternative method of indicating the need for static pressure that is configured to provide all of the following:

1. Automatic detection of any *zone* that excessively drives the reset logic.
2. Generation of an alarm to the system operational location.
3. Allowance for an operator to readily remove one or more *zones* from the reset algorithm.

C403.6.9 Static pressure sensor location. Static pressure sensors used to control VAV fans shall be located such that the controller setpoint is not greater than 1.2 inches w.c. (299 Pa). Where this results in one or more sensors being located downstream of major duct splits, not less than one sensor shall be located on each major branch to ensure that static pressure can be maintained in each branch.

C403.7 Ventilation and exhaust systems (Mandatory). In addition to other requirements of Section C403 applicable to the provision of *ventilation* air or the exhaust of air, *ventilation* and exhaust systems shall be in accordance with Sections C403.7.1 through C403.7.7.

C403.7.1 Demand control ventilation (Mandatory). Demand control *ventilation* (DCV) shall be provided for spaces larger than 500 square feet (46.5 m^2) and with an average occupant load of 25 people or greater per 1,000 square feet (93 m^2) of floor area, as established in Table 403.3.1.1 of the *Mechanical Code of New York State*, and served by systems with one or more of the following:

1. An air-side economizer.
2. Automatic modulating control of the outdoor air damper.
3. A design outdoor airflow greater than 3,000 cfm (1416 L/s).

Exceptions:

1. Systems with energy recovery complying with Section C403.7.4.
2. Multiple-*zone* systems without direct digital control of individual *zones* communicating with a central control panel.
3. Systems with a design outdoor airflow less than 1,200 cfm (566 L/s).
4. Spaces where the supply airflow rate minus any makeup or outgoing transfer air requirement is less than 1,200 cfm (566 L/s).
5. *Ventilation* provided only for process loads.

C403.7.2 Enclosed parking garage ventilation controls (Mandatory). Enclosed parking garages used for storing or handling automobiles operating under their own power shall employ contamination-sensing devices and automatic controls configured to stage fans or modulate fan average airflow rates to 50 percent or less of design capacity, or intermittently operate fans less than 20 percent of the occupied time or as required to maintain acceptable contaminant levels in accordance with *Mechanical Code of New York State* provisions. Failure of contamination-sensing devices shall cause the exhaust fans to operate continuously at design airflow.

Exceptions:

1. Garages with a total exhaust capacity less than 22,500 cfm (10 620 L/s) with *ventilation* systems that do not utilize heating or mechanical cooling.
2. Garages that have a garage area to ventilation system motor nameplate power ratio that exceeds 1125 cfm/hp (710 L/s/kW) and do not utilize heating or mechanical cooling.

C403.7.3 Ventilation air heating control (Mandatory). Units that provide *ventilation* air to multiple *zones* and operate in conjunction with *zone* heating and cooling systems shall not use heating or heat recovery to warm supply air to a temperature greater than 60°F (16°C) when representative building loads or outdoor air temperatures indicate that the majority of *zones* require cooling.

C403.7.4 Energy recovery ventilation systems (Mandatory). Where the supply airflow rate of a fan system exceeds the values specified in Tables C403.7.4(1) and C403.7.4(2), the system shall include an energy recovery system. The energy recovery system shall be configured to provide a change in the enthalpy of the outdoor air supply of not less than 50 percent of the difference between the outdoor air and return air enthalpies, at design conditions. Where an air economizer is required, the energy recovery system shall include a bypass or controls that permit operation of the economizer as required by Section C403.5.

INTERNATIONAL CODE COUNCIL®
Copyright © 2019 ICC & NYSDOS. ALL RIGHTS RESERVED. Accessed by Lauren Gualdino (lgualdino@briarcliffmanor.org), (-) Order Number #100880972 on May 08, 2020 07:05 AM (PDT) pursuant to License Agreement with ICC & NYSDOS. No further reproduction, no

100880972

Exception: An energy recovery *ventilation* system shall not be required in any of the following conditions:

1. Where energy recovery systems are prohibited by the *Mechanical Code of New York State*.
2. Laboratory fume hood systems that include not fewer than one of the following features:
   2.1. Variable-air-volume hood exhaust and room supply systems configured to reduce exhaust and makeup air volume to 50 percent or less of design values.
   2.2. Direct makeup (auxiliary) air supply equal to or greater than 75 percent of the exhaust rate, heated not warmer than 2°F (1.1°C) above room setpoint, cooled to not cooler than 3°F (1.7°C) below room setpoint, with no humidification added, and no simultaneous heating and cooling used for dehumidification control.
3. Systems serving spaces that are heated to less than 60°F (15.5°C) and that are not cooled.
4. Where more than 60 percent of the outdoor heating energy is provided from site-recovered or site-solar energy.
5. Heating energy recovery in *Climate Zones* 1 and 2.
6. Cooling energy recovery in *Climate Zones* 3C, 4C, 5B, 5C, 6B, 7 and 8.
7. Systems requiring dehumidification that employ energy recovery in series with the cooling coil.
8. Where the largest source of air exhausted at a single location at the building exterior is less than 75 percent of the design *outdoor air* flow rate.
9. Systems expected to operate less than 20 hours per week at the *outdoor air* percentage covered by Table C403.7.4(1).
10. Systems exhausting toxic, flammable, paint or corrosive fumes or dust.
11. Commercial kitchen hoods used for collecting and removing grease vapors and smoke.

C403.7.5 Kitchen exhaust systems (Mandatory). Replacement air introduced directly into the exhaust hood cavity shall not be greater than 10 percent of the hood exhaust airflow rate. Conditioned supply air delivered to any space shall not exceed the greater of the following:

1. The *ventilation* rate required to meet the space heating or cooling load.
2. The hood exhaust flow minus the available transfer air from adjacent space where available transfer air is considered to be that portion of outdoor ventilation air not required to satisfy other exhaust needs, such as restrooms, and not required to maintain pressurization of adjacent spaces.

Where total kitchen hood exhaust airflow rate is greater than 5,000 cfm (2360 L/s), each hood shall be a factory-built commercial exhaust hood *listed* by a nationally recognized testing laboratory in compliance with UL 710. Each hood shall have a maximum exhaust rate as specified in Table C403.7.5 and shall comply with one of the following:

1. Not less than 50 percent of all replacement air shall be transfer air that would otherwise be exhausted.
2. Demand ventilation systems on not less than 75 percent of the exhaust air that are configured to provide not less than a 50-percent reduction in exhaust and replacement air system airflow rates, including controls necessary to modulate airflow in response to appliance operation and to maintain full capture and containment of smoke, effluent and combustion products during cooking and idle.

[NY] TABLE C403.7.4(1)
ENERGY RECOVERY REQUIREMENT
(Ventilation systems operating less than 8,000 hours per year)

CLIMATE ZONE	PERCENT (%) OUTDOOR AIR AT FULL DESIGN AIRFLOW RATE							
	≥ 10% and < 20%	≥ 20% and < 30%	≥ 30% and < 40%	≥ 40% and < 50%	≥ 50% and < 60%	≥ 60% and < 70%	≥ 70% and < 80%	≥ 80%
	DESIGN SUPPLY FAN AIRFLOW RATE (cfm)							
4A, 5A, 6A	≥ 26,000	≥ 16,000	≥ 5,500	≥ 4,500	≥ 3,500	≥ 2,000	≥ 1,000	> 120

For SI: 1 cfm = 0.4719 L/s.
NR = Not Required.

[NY] TABLE C403.7.4(2)
ENERGY RECOVERY REQUIREMENT
(Ventilation systems operating not less than 8,000 hours per year)

CLIMATE ZONE	PERCENT (%) OUTDOOR AIR AT FULL DESIGN AIRFLOW RATE							
	≥ 10% and < 20%	≥ 20% and < 30%	≥ 30% and < 40%	≥ 40% and < 50%	≥ 50% and < 60%	≥ 60% and < 70%	≥ 70% and < 80%	≥ 80%
	Design Supply Fan Airflow Rate (cfm)							
4A, 5A, 6A	≥ 200	≥ 130	≥ 100	≥ 80	≥ 70	≥ 60	≥ 50	≥ 40

For SI: 1 cfm = 0.4719 L/s.
NR = Not Required.

INTERNATIONAL CODE COUNCIL®
Copyright © 2019 ICC & NYSDOS. ALL RIGHTS RESERVED. Accessed by Lauren Gualdino (lgualdino@briarcliffmanor.org), (-) Order Number #100880972 on May 08, 2020 07:05 AM (PDT) pursuant to License Agreement with ICC & NYSDOS. No further reproduction, no

100880972

3. *Listed* energy recovery devices with a sensible heat recovery effectiveness of not less than 40 percent on not less than 50 percent of the total exhaust airflow.

Where a single hood, or hood section, is installed over appliances with different duty ratings, the maximum allowable flow rate for the hood or hood section shall be based on the requirements for the highest appliance duty rating under the hood or hood section.

Exception: Where not less than 75 percent of all the replacement air is transfer air that would otherwise be exhausted.

C403.7.6 Automatic control of HVAC systems serving guestrooms (Mandatory). In *Group R*-1 buildings containing more than 50 guestrooms, each guestroom shall be provided with controls complying with the provisions of Sections C403.7.6.1 and C403.7.6.2. Card key controls comply with these requirements.

C403.7.6.1 Temperature setpoint controls. Controls shall be provided on each HVAC system that are capable of and configured to automatically raise the cooling setpoint and lower the heating setpoint by not less than 4°F (2°C) from the occupant setpoint within 30 minutes after the occupants have left the guestroom. The controls shall be capable of and configured to automatically raise the cooling setpoint to not lower than 80°F (27°C) and lower the heating setpoint to not higher than 60°F (16°C) when the guestroom is unrented or has not been continuously occupied for more than 16 hours or a *networked guestroom control system* indicates that the guestroom is unrented and the guestroom is unoccupied for more than 30 minutes. A *networked guestroom control system* that is capable of returning the thermostat setpoints to default occupied setpoints 60 minutes prior to the time a guestroom is scheduled to be occupied is not precluded by this section. Cooling that is capable of limiting relative humidity with a setpoint not lower than 65-percent relative humidity during unoccupied periods is not precluded by this section.

C403.7.6.2 Ventilation controls. Controls shall be provided on each HVAC system that are capable of and configured to automatically turn off the ventilation and exhaust fans within 30 minutes of the occupants leaving the guestroom, or *isolation devices* shall be provided to each guestroom that are capable of automatically shutting off the supply of outdoor air to and exhaust air from the guestroom.

Exception: Guestroom ventilation systems are not precluded from having an automatic daily pre-occupancy purge cycle that provides daily outdoor air *ventilation* during unrented periods at the design ventilation rate for 60 minutes, or at a rate and duration equivalent to one air change.

C403.7.7 Shutoff dampers (Mandatory). Outdoor air intake and exhaust openings and stairway and shaft vents shall be provided with Class I motorized dampers. The dampers shall have an air leakage rate not greater than 4 cfm/ft^2 (20.3 L/s • m^2) of damper surface area at 1.0 inch water gauge (249 Pa) and shall be *labeled* by an *approved agency* when tested in accordance with AMCA 500D for such purpose.

Outdoor air intake and exhaust dampers shall be installed with automatic controls configured to close when the systems or spaces served are not in use or during unoccupied period warm-up and setback operation, unless the systems served require outdoor or exhaust air in accordance with the *Mechanical Code of New York State* or the dampers are opened to provide intentional economizer cooling.

Stairway and shaft vent dampers shall be installed with automatic controls configured to open upon the activation of any fire alarm initiating device of the building's fire alarm system or the interruption of power to the damper.

Exception: Nonmotorized gravity dampers shall be an alternative to motorized dampers for exhaust and relief openings as follows:

1. In buildings less than three stories in height above grade plane.
2. In buildings of any height located in *Climate Zones* 1, 2 or 3.
3. Where the design exhaust capacity is not greater than 300 cfm (142 L/s).

Nonmotorized gravity dampers shall have an air leakage rate not greater than 20 cfm/ft^2 (101.6 L/s • m^2) where not less than 24 inches (610 mm) in either dimension and 40 cfm/ft^2 (203.2 L/s • m^2) where less than 24 inches (610 mm) in either dimension. The rate of air leakage shall be determined at 1.0 inch water gauge (249 Pa) when tested

TABLE C403.7.5
MAXIMUM NET EXHAUST FLOW RATE,
CFM PER LINEAR FOOT OF HOOD LENGTH

TYPE OF HOOD	LIGHT-DUTY EQUIPMENT	MEDIUM-DUTY EQUIPMENT	HEAVY-DUTY EQUIPMENT	EXTRA-HEAVY-DUTY EQUIPMENT
Wall-mounted canopy	140	210	280	385
Single island	280	350	420	490
Double island (per side)	175	210	280	385
Eyebrow	175	175	NA	NA
Backshelf/Pass-over	210	210	280	NA

For SI:1 cfm = 0.4719 L/s; 1 foot = 305 mm.
NA = Not Allowed.

INTERNATIONAL CODE COUNCIL®
Copyright © 2019 ICC & NYSDOS. ALL RIGHTS RESERVED. Accessed by Lauren Gualdino (lgualdino@briarcliffmanor.org), (-) Order Number #100880972 on May 08, 2020 07:05 AM (PDT) pursuant to License Agreement with ICC & NYSDOS. No further reproduction, no

100880972

in accordance with AMCA 500D for such purpose. The dampers shall be *labeled* by an *approved agency*.

C403.8 Fans and fan controls. Fans in HVAC systems shall comply with Sections C403.8.1 through C403.8.5.1.

C403.8.1 Allowable fan horsepower (Mandatory). Each HVAC system having a total fan system motor nameplate horsepower exceeding 5 hp (3.7 kW) at fan system design conditions shall not exceed the allowable *fan system motor nameplate hp* (Option 1) or *fan system bhp* (Option 2) shown in Table C403.8.1(1). This includes supply fans, exhaust fans, return/relief fans, and fan-powered terminal units associated with systems providing heating or cooling capability. Single-zone variable air volume systems shall comply with the constant volume fan power limitation.

Exceptions:

1. Hospital, vivarium and laboratory systems that utilize flow control devices on exhaust or return to maintain space pressure relationships necessary for occupant health and safety or environmental control shall be permitted to use variable volume fan power limitation.
2. Individual exhaust fans with motor nameplate horsepower of 1 hp (0.746 kW) or less are exempt from the allowable fan horsepower requirement.

C403.8.2 Motor nameplate horsepower (Mandatory). For each fan, the fan brake horsepower shall be indicated on the construction documents and the selected motor shall be not larger than the first available motor size greater than the following:

1. For fans less than 6 bhp (4413 W), 1.5 times the *fan brake horsepower*.
2. For fans 6 bhp (4413 W) and larger, 1.3 times the *fan brake horsepower*.
3. Systems complying with Section C403.8.1 *fan system motor nameplate hp* (Option 1).

Exception: Fans with motor nameplate horsepower less than 1 hp (746 W) are exempt from this section.

C403.8.3 Fan efficiency (Mandatory). Fans shall have a fan efficiency grade (FEG) of not less than 67, as determined in accordance with AMCA 205 by an *approved*, independent testing laboratory and *labeled* by the manufacturer. The total efficiency of the fan at the design point of operation shall be within 15 percentage points of the maximum total efficiency of the fan.

Exception: The following fans are not required to have a fan efficiency grade:

1. Fans of 5 hp (3.7 kW) or less as follows:
   1.1. Individual fans with a motor nameplate horsepower of 5 hp (3.7 kW) or less, unless Exception 1.2 applies.
   1.2. Multiple fans in series or parallel that have a combined motor nameplate horsepower of 5 hp (3.7 kW) or less and are operated as the functional equivalent of a single fan.
2. Fans that are part of equipment covered in Section C403.3.2.
3. Fans included in an equipment package certified by an *approved agency* for air or energy performance.
4. Powered wall/roof ventilators.
5. Fans outside the scope of AMCA 205.
6. Fans that are intended to operate only during emergency conditions.

C403.8.4 Fractional hp fan motors (Mandatory). Motors for fans that are not less than $^1/_{12}$ hp (0.062 kW) and less than 1 hp (0.746 kW) shall be electronically commutated motors or shall have a minimum motor efficiency of 70 percent, rated in accordance with DOE 10 CFR 431. These motors shall have the means to adjust motor speed for either balancing or remote control. The use of belt-driven fans to sheave adjustments for airflow balancing instead of a varying motor speed shall be permitted.

Exceptions: The following motors are not required to comply with this section:

1. Motors in the airstream within fan coils and terminal units that only provide heating to the space served.
2. Motors in space-conditioning equipment that comply with Section C403.3.2 or Sections C403.8.1. through C403.8.3.
3. Motors that comply with Section C405.7.

TABLE C403.8.1(1)
FAN POWER LIMITATION

	LIMIT	CONSTANT VOLUME	VARIABLE VOLUME
Option 1: Fan system motor nameplate hp	Allowable nameplate motor hp	$hp \le CFM_S \times 0.0011$	$hp \le CFM_S \times 0.0015$
Option 2: Fan system bhp	Allowable fan system bhp	$bhp \le CFM_S \times 0.00094 + A$	$bhp \le CFM_S \times 0.0013 + A$

For SI: 1 bhp = 735.5 W, 1 hp = 745.5 W, 1 cfm = 0.4719 L/s.

where:

CFM_S = The maximum design supply airflow rate to conditioned spaces served by the system in cubic feet per minute.
hp = The maximum combined motor nameplate horsepower.
bhp = The maximum combined fan brake horsepower.
A = Sum of $[PD \times CFM_D / 4131]$.

where:

PD = Each applicable pressure drop adjustment from Table C403.8.1(2) in. w.c.
CFM_D = The design airflow through each applicable device from Table C403.8.1(2) in cubic feet per minute.

INTERNATIONAL CODE COUNCIL®
Copyright © 2019 ICC & NYSDOS. ALL RIGHTS RESERVED. Accessed by Lauren Gualdino (lgualdino@briarcliffmanor.org), (-) Order Number #100880972 on May 08, 2020 07:05 AM (PDT) pursuant to License Agreement with ICC & NYSDOS. No further reproduction, no

100880972

TABLE C403.8.1(2)
FAN POWER LIMITATION PRESSURE DROP ADJUSTMENT

DEVICE	ADJUSTMENT
Credits	
Return air or exhaust systems required by code or accreditation standards to be fully ducted, or systems required to maintain air pressure differentials between adjacent rooms	0.5 inch w.c. (2.15 inches w.c. for laboratory and vivarium systems)
Return and exhaust airflow control devices	0.5 inch w.c.
Exhaust filters, scrubbers or other exhaust treatment	The pressure drop of device calculated at fan system design condition
Particulate filtration credit: MERV 9 thru 12	0.5 inch w.c.
Particulate filtration credit: MERV 13 thru 15	0.9 inch w.c.
Particulate filtration credit: MERV 16 and greater and electronically enhanced filters	Pressure drop calculated at 2x clean filter pressure drop at fan system design condition.
Carbon and other gas-phase air cleaners	Clean filter pressure drop at fan system design condition.
Biosafety cabinet	Pressure drop of device at fan system design condition.
Energy recovery device, other than coil runaround loop	For each airstream, (2.2 × energy recovery effectiveness – 0.5) inch w.c.
Coil runaround loop	0.6 inch w.c. for each airstream.
Evaporative humidifier/cooler in series with another cooling coil	Pressure drop of device at fan system design conditions.
Sound attenuation section (fans serving spaces with design background noise goals below NC35)	0.15 inch w.c.
Exhaust system serving fume hoods	0.35 inch w.c.
Laboratory and vivarium exhaust systems in high-rise buildings	0.25 inch w.c./100 feet of vertical duct exceeding 75 feet.
Deductions	
Systems without central cooling device	- 0.6 inch w.c.
Systems without central heating device	- 0.3 inch w.c.
Systems with central electric resistance heat	- 0.2 inch w.c.

For SI: 1 inch w.c. = 249 Pa, 1 inch = 25.4 mm.
w.c. = water column, NC = Noise criterion.

C403.8.5 Fan control. Controls shall be provided for fans in accordance with Section C403.8.5.1 and as required for specific systems provided in Section C403.

C403.8.5.1 Fan airflow control. Each cooling system *listed* in Table C403.8.5.1 shall be designed to vary the indoor fan airflow as a function of load and shall comply with the following requirements:

1. Direct expansion (DX) and chilled water cooling units that control the capacity of the mechanical cooling directly based on space temperature shall have not fewer than two stages of fan control. Low or minimum speed shall not be greater than 66 percent of full speed. At low or minimum speed, the fan system shall draw not more than 40 percent of the fan power at full fan speed. Low or minimum speed shall be used during periods of low cooling load and *ventilation*-only operation.
2. Other units including DX cooling units and chilled water units that control the space temperature by modulating the airflow to the space shall have modulating fan control. Minimum speed shall be not greater than 50 percent of full speed. At minimum speed the fan system shall draw not more than 30 percent of the power at full fan speed. Low or minimum speed shall be used during periods of low cooling load and *ventilation*-only operation.
3. Units that include an air-side economizer in accordance with Section C403.5 shall have not fewer than two speeds of fan control during economizer operation.

Exceptions:

1. Modulating fan control is not required for chilled water and evaporative cooling units with fan motors of less than 1 hp (0.746 kW) where the units are not used to provide *ventilation air* and the indoor fan cycles with the load.
2. Where the volume of outdoor air required to comply with the *ventilation* requirements of the *Mechanical Code of New York State* at low speed exceeds the air that would be delivered at the speed defined in Section C403.8.5, the minimum speed shall be selected to provide the required *ventilation air*.

INTERNATIONAL CODE COUNCIL®
Copyright © 2019 ICC & NYSDOS. ALL RIGHTS RESERVED. Accessed by Lauren Gualdino (lgualdino@briarcliffmanor.org), (-) Order Number #100880972 on May 08, 2020 07:05 AM (PDT) pursuant to License Agreement with ICC & NYSDOS. No further reproduction, no

100880972

TABLE C403.8.5.1
COOLING SYSTEMS

COOLING SYSTEM TYPE	FAN MOTOR SIZE	MECHANICAL COOLING CAPACITY
DX cooling	Any	≥ 65,000 Btu/h
Chilled water and evaporative cooling	≥ 1/4 hp	Any

For SI: 1 British thermal unit per hour = 0.2931 W; 1 hp = 0.746 kW.

C403.9 Heat rejection equipment. Heat rejection equipment, including air-cooled condensers, dry coolers, open-circuit cooling towers, closed-circuit cooling towers and evaporative condensers, shall comply with this section.

Exception: Heat rejection devices where energy usage is included in the equipment efficiency ratings *listed* in Tables C403.3.2(6) and C403.3.2(7).

C403.9.1 Fan speed control. Each fan system powered by an individual motor or array of motors with connected power, including the motor service factor, totaling 5 hp (3.7 kW) or more shall have controls and devices configured to automatically modulate the fan speed to control the leaving fluid temperature or condensing temperature and pressure of the heat rejection device. Fan motor power input shall be not more than 30 percent of design wattage at 50 percent of the design airflow.

Exceptions:

1. Fans serving multiple refrigerant or fluid cooling circuits.
2. Condenser fans serving flooded condensers.

C403.9.2 Multiple-cell heat rejection equipment. Multiple-cell heat rejection equipment with variable speed fan drives shall be controlled to operate the maximum number of fans allowed that comply with the manufacturer's requirements for all system components and so that all fans operate at the same fan speed required for the instantaneous cooling duty, as opposed to staged on and off operation. The minimum fan speed shall be the minimum allowable speed of the fan drive system in accordance with the manufacturer's recommendations.

C403.9.3 Limitation on centrifugal fan open-circuit cooling towers. Centrifugal fan open-circuit cooling towers with a combined rated capacity of 1,100 gpm (4164 L/m) or greater at 95°F (35°C) condenser water return, 85°F (29°C) condenser water supply, and 75°F (24°C) outdoor air wet-bulb temperature shall meet the energy efficiency requirement for axial fan open-circuit cooling towers *listed* in Table C403.3.2(8).

Exception: Centrifugal open-circuit cooling towers that are designed with inlet or discharge ducts or require external sound attenuation.

C403.9.4 Tower flow turndown. Open-circuit cooling towers used on water-cooled chiller systems that are configured with multiple- or variable-speed condenser water pumps shall be designed so that all open- circuit cooling tower cells can be run in parallel with the larger of the flow that is produced by the smallest pump at its minimum expected flow rate or at 50 percent of the design flow for the cell.

C403.9.5 Heat recovery for service water heating. Condenser heat recovery shall be installed for heating or reheating of service hot water provided that the facility operates 24 hours a day, the total installed heat capacity of water-cooled systems exceeds 6,000,000 Btu/hr (1758 kW) of heat rejection, and the design *service water heating* load exceeds 1,000,000 Btu/h (293 kW).

The required heat recovery system shall have the capacity to provide the smaller of the following:

1. Sixty percent of the peak heat rejection load at design conditions.
2. The preheating required to raise the peak service hot water draw to 85°F (29°C).

Exceptions:

1. Facilities that employ condenser heat recovery for space heating or reheat purposes with a heat recovery design exceeding 30 percent of the peak water-cooled condenser load at design conditions.
2. Facilities that provide 60 percent of their service water heating from site solar or site recovered energy or from other sources.

C403.10 Refrigeration equipment performance. Refrigeration equipment shall have an energy use in kWh/day not greater than the values of Tables C403.10.1(1) and C403.10.1(2) when tested and rated in accordance with AHRI Standard 1200. The energy use shall be verified through certification under an approved certification program or, where a certification program does not exist, the energy use shall be supported by data furnished by the equipment manufacturer.

C403.10.1 Walk-in coolers, walk-in freezers, refrigerated warehouse coolers and refrigerated warehouse freezers (Mandatory). *Refrigerated warehouse* coolers and *refrigerated warehouse freezers* shall comply with this section. *Walk-in coolers* and *walk-in freezers* that are neither site assembled nor site constructed shall comply with the following:

1. Be equipped with automatic door-closers that firmly close walk-in doors that have been closed to within 1 inch (25 mm) of full closure.

   Exception: Automatic closers are not required for doors more than 45 inches (1143 mm) in width or more than 7 feet (2134 mm) in height.

2. Doorways shall have strip doors, curtains, spring-hinged doors or other method of minimizing infiltration when doors are open.
3. *Walk-in coolers* and *refrigerated warehouse coolers* shall contain wall, ceiling, and door insulation of not less than R-25 and *walk-in freezers* and *refrigerated warehouse freezers* shall contain wall, ceiling and door insulation of not less than R-32.

INTERNATIONAL CODE COUNCIL®
Copyright © 2019 ICC & NYSDOS. ALL RIGHTS RESERVED. Accessed by Lauren Gualdino (lgualdino@briarcliffmanor.org), (-) Order Number #100880972 on May 08, 2020 07:05 AM (PDT) pursuant to License Agreement with ICC & NYSDOS. No further reproduction, no

100880972

Exception: Glazed portions of doors or structural members need not be insulated.

4. *Walk-in freezers* shall contain floor insulation of not less than R-28.
5. Transparent reach-in doors for *walk-in freezers* and windows in *walk-in freezer* doors shall be of triple-pane glass, either filled with inert gas or with heat-reflective treated glass.
6. Windows and transparent reach-in doors for *walk-in coolers* shall be of double-pane or triple-pane, inert gas-filled, heat-reflective treated glass.
7. Evaporator fan motors that are less than 1 hp (0.746 kW) and less than 460 volts shall use electronically commutated motors, brushless direct-current motors, or 3-phase motors.
8. Condenser fan motors that are less than 1 hp (0.746 kW) shall use electronically commutated motors, permanent split capacitor-type motors or 3-phase motors.
9. Where antisweat heaters without antisweat heater controls are provided, they shall have a total door rail, glass and frame heater power draw of not more than 7.1 W/ft^2 (76 W/m^2) of door opening for *walk-in freezers* and 3.0 W/ft^2 (32 W/m^2) of door opening for *walk-in coolers*.
10. Where antisweat heater controls are provided, they shall reduce the energy use of the antisweat heater as a function of the relative humidity in the air outside the door or to the condensation on the inner glass pane.
11. Lights in *walk-in coolers*, *walk-in freezers*, *refrigerated warehouse coolers* and *refrigerated warehouse freezers* shall either use light sources with an efficacy of not less than 40 lumens per watt, including ballast losses, or shall use light sources with an efficacy of not less than 40 lumens per watt, including ballast losses, in conjunction with a device that turns off the lights within 15 minutes when the space is not occupied.

C403.10.2 Walk-in coolers and walk-in freezers (Mandatory). Site-assembled or site-constructed *walk-in coolers* and *walk-in freezers* shall comply with the following:

1. Automatic door closers shall be provided that fully close walk-in doors that have been closed to within 1 inch (25 mm) of full closure.

   Exception: Closers are not required for doors more than 45 inches (1143 mm) in width or more than 7 feet (2134 mm) in height.

2. Doorways shall be provided with strip doors, curtains, spring-hinged doors or other method of minimizing *infiltration* when the doors are open.
3. Walls shall be provided with insulation having a thermal resistance of not less than R-25, ceilings shall be provided with insulation having a thermal resistance of not less than R-25 and doors of *walk-in coolers* and *walk-in freezers* shall be provided with insulation having a thermal resistance of not less than R-32.

   Exception: Insulation is not required for glazed portions of doors or at structural members associated with the walls, ceiling or door frame.

4. The floor of *walk-in freezers* shall be provided with insulation having a thermal resistance of not less than R-28.
5. Transparent reach-in doors for and windows in opaque *walk-in freezer* doors shall be provided with triple-pane glass having the interstitial spaces filled with inert gas or provided with heat-reflective treated glass.
6. Transparent reach-in doors for and windows in opaque *walk-in cooler* doors shall be double-pane heat-reflective treated glass having the interstitial space gas filled.
7. Evaporator fan motors that are less than 1 hp (0.746 kW) and less than 460 volts shall be electronically commutated motors or 3-phase motors.
8. Condenser fan motors that are less than 1 hp (0.746 kW) in capacity shall be of the electronically commutated or permanent split capacitor-type or shall be 3-phase motors.

   Exception: Fan motors in *walk-in coolers* and *walk-in freezers* combined in a single enclosure greater than 3,000 square feet (279 m^2) in floor area are exempt.

9. Antisweat heaters that are not provided with antisweat heater controls shall have a total door rail, glass and frame heater power draw not greater than 7.1 W/ft^2 (76 W/m^2) of door opening for *walk-in freezers*, and not greater than 3.0 W/ft^2 (32 W/m^2) of door opening for *walk-in coolers*.
10. Antisweat heater controls shall be configured to reduce the energy use of the antisweat heater as a function of the relative humidity in the air outside the door or to the condensation on the inner glass pane.
11. Light sources shall have an efficacy of not less than 40 lumens per Watt, including any ballast losses, or shall be provided with a device that automatically turns off the lights within 15 minutes of when the *walk-in cooler* or *walk-in freezer* was last occupied.

C403.10.2.1 Performance standards (Mandatory). Effective January 1, 2020, *walk-in coolers* and *walk-in freezers* shall meet the requirements of Tables C403.10.2.1(1), C403.10.2.1(2) and C403.10.2.1(3).

C403.10.3 Refrigerated display cases (Mandatory). Site-assembled or site-constructed refrigerated display cases shall comply with the following:

1. Lighting and glass doors in refrigerated display cases shall be controlled by one of the following:

INTERNATIONAL CODE COUNCIL®
Copyright © 2019 ICC & NYSDOS. ALL RIGHTS RESERVED. Accessed by Lauren Gualdino (lgualdino@briarcliffmanor.org), (-) Order Number #100880972 on May 08, 2020 07:05 AM (PDT) pursuant to License Agreement with ICC & NYSDOS. No further reproduction, no

100880972

TABLE C403.10.1(1)
MINIMUM EFFICIENCY REQUIREMENTS: COMMERCIAL REFRIGERATION

EQUIPMENT TYPE	APPLICATION	ENERGY USE LIMITS (kWh per day)[a]	TEST PROCEDURE
Refrigerator with solid doors	Holding Temperature	0.10 × V + 2.04	AHRI 1200
Refrigerator with transparent doors		0.12 × V + 3.34	
Freezers with solid doors		0.40 × V + 1.38	
Freezers with transparent doors		0.75 × V + 4.10	
Refrigerators/freezers with solid doors		the greater of 0.12 × V + 3.34 or 0.70	
Commercial refrigerators	Pulldown	0.126 × V + 3.51	

a. V = volume of the chiller or frozen compartment as defined in AHAM-HRF-1.

TABLE C403.10.1(2)
MINIMUM EFFICIENCY REQUIREMENTS: COMMERCIAL REFRIGERATORS AND FREEZERS

EQUIPMENT TYPE				ENERGY USE LIMITS (kWh/day)[a, b]	TEST PROCEDURE
Equipment Class[c]	Family Code	Operating Mode	Rating Temperature		
VOP.RC.M	Vertical open	Remote condensing	Medium	0.82 × TDA + 4.07	AHRI 1200
SVO.RC.M	Semivertical open	Remote condensing	Medium	0.83 × TDA + 3.18	
HZO.RC.M	Horizontal open	Remote condensing	Medium	0.35 × TDA + 2.88	
VOP.RC.L	Vertical open	Remote condensing	Low	2.27 × TDA + 6.85	
HZO.RC.L	Horizontal open	Remote condensing	Low	0.57 × TDA + 6.88	
VCT.RC.M	Vertical transparent door	Remote condensing	Medium	0.22 × TDA + 1.95	
VCT.RC.L	Vertical transparent door	Remote condensing	Low	0.56 × TDA + 2.61	
SOC.RC.M	Service over counter	Remote condensing	Medium	0.51 × TDA + 0.11	
VOP.SC.M	Vertical open	Self-contained	Medium	1.74 × TDA + 4.71	
SVO.SC.M	Semivertical open	Self-contained	Medium	1.73 × TDA + 4.59	
HZO.SC.M	Horizontal open	Self-contained	Medium	0.77 × TDA + 5.55	
HZO.SC.L	Horizontal open	Self-contained	Low	1.92 × TDA + 7.08	
VCT.SC.I	Vertical transparent door	Self-contained	Ice cream	0.67 × TDA + 3.29	
VCS.SC.I	Vertical solid door	Self-contained	Ice cream	0.38 × V + 0.88	
HCT.SC.I	Horizontal transparent door	Self-contained	Ice cream	0.56 × TDA + 0.43	
SVO.RC.L	Semivertical open	Remote condensing	Low	2.27 × TDA + 6.85	
VOP.RC.I	Vertical open	Remote condensing	Ice cream	2.89 × TDA + 8.7	
SVO.RC.I	Semivertical open	Remote condensing	Ice cream	2.89 × TDA + 8.7	
HZO.RC.I	Horizontal open	Remote condensing	Ice cream	0.72 × TDA + 8.74	
VCT.RC.I	Vertical transparent door	Remote condensing	Ice cream	0.66 × TDA + 3.05	
HCT.RC.M	Horizontal transparent door	Remote condensing	Medium	0.16 × TDA + 0.13	

(continued)

INTERNATIONAL CODE COUNCIL®
Copyright © 2019 ICC & NYSDOS. ALL RIGHTS RESERVED. Accessed by Lauren Gualdino (lgualdino@briarcliffmanor.org), (-) Order Number #100880972 on May 08, 2020 07:05 AM (PDT) pursuant to License Agreement with ICC & NYSDOS. No further reproduction, no

100880972

TABLE C403.10.1(2)—continued
MINIMUM EFFICIENCY REQUIREMENTS: COMMERCIAL REFRIGERATORS AND FREEZERS

EQUIPMENT TYPE				ENERGY USE LIMITS (kWh/day)[a, b]	TEST PROCEDURE
Equipment Class[c]	Family Code	Operating Mode	Rating Temperature		
HCT.RC.L	Horizontal transparent door	Remote condensing	Low	0.34 × TDA + 0.26	AHRI 1200
HCT.RC.I	Horizontal transparent door	Remote condensing	Ice cream	0.4 × TDA + 0.31	
VCS.RC.M	Vertical solid door	Remote condensing	Medium	0.11 × V + 0.26	
VCS.RC.L	Vertical solid door	Remote condensing	Low	0.23 × V + 0.54	
VCS.RC.I	Vertical solid door	Remote condensing	Ice cream	0.27 × V + 0.63	
HCS.RC.M	Horizontal solid door	Remote condensing	Medium	0.11 × V + 0.26	
HCS.RC.L	Horizontal solid door	Remote condensing	Low	0.23 × V + 0.54	
HCS.RC.I	Horizontal solid door	Remote condensing	Ice cream	0.27 × V + 0.63	
HCS.RC.I	Horizontal solid door	Remote condensing	Ice cream	0.27 × V + 0.63	
SOC.RC.L	Service over counter	Remote condensing	Low	1.08 × TDA + 0.22	
SOC.RC.I	Service over counter	Remote condensing	Ice cream	1.26 × TDA + 0.26	
VOP.SC.L	Vertical open	Self-contained	Low	4.37 × TDA + 11.82	
VOP.SC.I	Vertical open	Self-contained	Ice cream	5.55 × TDA + 15.02	
SVO.SC.L	Semivertical open	Self-contained	Low	4.34 × TDA + 11.51	
SVO.SC.I	Semivertical open	Self-contained	Ice cream	5.52 × TDA + 14.63	
HZO.SC.I	Horizontal open	Self-contained	Ice cream	2.44 × TDA + 9.0	
SOC.SC.I	Service over counter	Self-contained	Ice cream	1.76 × TDA + 0.36	
HCS.SC.I	Horizontal solid door	Self-contained	Ice cream	0.38 × V + 0.88	

a. V = Volume of the case, as measured in accordance with Appendix C of AHRI 1200.
b. TDA = Total display area of the case, as measured in accordance with Appendix D of AHRI 1200.
c. Equipment class designations consist of a combination [in sequential order separated by periods (AAA).(BB).(C)] of:
(AAA) An equipment family code where:
VOP = vertical open
SVO = semivertical open
HZO = horizontal open
HCT = horizontal transparent doors
HCS = horizontal solid doors
SOC = service over counter
(BB) An operating mode code:
RC = remote condensing
SC = self-contained
(C) A rating temperature code:
M = medium temperature (38°F)
L = low temperature (0°F)
I = ice-cream temperature (15°F)
For example, "VOP.RC.M" refers to the "vertical-open, remote-condensing, medium-temperature" equipment class.

1.1. Time-switch controls to turn off lights during nonbusiness hours. Timed overrides for display cases shall turn the lights on for up to 1 hour and shall automatically time out to turn the lights off.

1.2. Motion sensor controls on each display case section that reduce lighting power by not less than 50 percent within 3 minutes after the area within the sensor range is vacated.

2. Low-temperature display cases shall incorporate temperature-based defrost termination control with a

INTERNATIONAL CODE COUNCIL®
Copyright © 2019 ICC & NYSDOS. ALL RIGHTS RESERVED. Accessed by Lauren Gualdino (lgualdino@briarcliffmanor.org), (-) Order Number #100880972 on May 08, 2020 07:05 AM (PDT) pursuant to License Agreement with ICC & NYSDOS. No further reproduction, no

100880972

time-limit default. The defrost cycle shall terminate first on an upper temperature limit breach and second upon a time limit breach.

3. Antisweat heater controls shall reduce the energy use of the antisweat heater as a function of the relative humidity in the air outside the door or to the condensation on the inner glass pane.

C403.10.4 Refrigeration systems. Refrigerated display cases, *walk-in coolers* or *walk-in freezers* that are served by remote compressors and remote condensers not located in a *condensing unit*, shall comply with Sections C403.10.4.1 and C403.10.4.2.

Exception: Systems where the working fluid in the refrigeration cycle goes through both subcritical and super-critical states (transcritical) or that use ammonia refrigerant are exempt.

C403.10.4.1 Condensers serving refrigeration systems. Fan-powered condensers shall comply with the following:

1. The design *saturated condensing temperatures* for air-cooled condensers shall not exceed the design dry-bulb temperature plus 10°F (5.6°C) for low-*temperature refrigeration systems*, and the design dry- bulb temperature plus 15°F (8°C) for *medium temperature refrigeration systems* where the *saturated condensing temperature* for blend refrigerants shall be determined using the average of liquid and vapor temperatures as converted from the condenser drain pressure.
2. Condenser fan motors that are less than 1 hp (0.75 kW) shall use electronically commutated motors, permanent split-capacitor-type motors or 3-phase motors.
3. Condenser fans for air-cooled condensers, evaporatively cooled condensers, air- or water-cooled fluid coolers or cooling towers shall reduce fan motor demand to not more than 30 percent of design wattage at 50 percent of design air volume, and incorporate one of the following continuous variable speed fan control approaches:
   3.1. Refrigeration system condenser control for air-cooled condensers shall use variable setpoint control logic to reset the condensing temperature setpoint in response to ambient dry-bulb temperature.
   3.2. Refrigeration system condenser control for evaporatively cooled condensers shall use variable setpoint control logic to reset the condensing temperature setpoint in response to ambient wet-bulb temperature.
4. Multiple fan condensers shall be controlled in unison.
5. The minimum condensing temperature setpoint shall be not greater than 70°F (21°C).

C403.10.4.2 Compressor systems. Refrigeration compressor systems shall comply with the following:

TABLE C403.10.2.1(1)
WALK-IN COOLER AND FREEZER DISPLAY DOOR EFFICIENCY REQUIREMENTS[a]

CLASS DESCRIPTOR	CLASS	MAXIMUM ENERGY CONSUMPTION (kWh/day)[a]
Display door, medium temperature	DD, M	$0.04 \times A_{dd} + 0.41$
Display door, low temperature	DD, L	$0.15 \times A_{dd} + 0.29$

a. A_{dd} is the surface area of the display door.

TABLE C403.10.2.1(2)
WALK-IN COOLER AND FREEZER NONDISPLAY DOOR EFFICIENCY REQUIREMENTS[a]

CLASS DESCRIPTOR	CLASS	MAXIMUM ENERGY CONSUMPTION (kWh/day)[a]
Passage door, medium temperature	PD, M	$0.05 \times A_{nd} + 1.7$
Passage door, low temperature	PD, L	$0.14 \times A_{nd} + 4.8$
Freight door, medium temperature	FD, M	$0.04 \times A_{nd} + 1.9$
Freight door, low temperature	FD, L	$0.12 \times A_{nd} + 5.6$

a. A_{nd} is the surface area of the nondisplay door.

TABLE C403.10.2.1(3)
WALK-IN COOLER AND FREEZER REFRIGERATION SYSTEM EFFICIENCY REQUIREMENTS

CLASS DESCRIPTOR	CLASS	MINIMUM ANNUAL WALK-IN ENERGY FACTOR AWEF (Btu/W-h)
Dedicated condensing, medium temperature, indoor system	DC.M.I	5.61
Dedicated condensing, medium temperature, indoor system, > 9,000 Btu/h capacity	DC.M.I, > 9,000	5.61
Dedicated condensing, medium temperature, outdoor system	DC.M.I	7.60
Dedicated condensing, medium temperature, outdoor system, > 9,000 Btu/h capacity	DC.M.I, > 9,000	7.60

INTERNATIONAL CODE COUNCIL®
Copyright © 2019 ICC & NYSDOS. ALL RIGHTS RESERVED. Accessed by Lauren Gualdino (lgualdino@briarcliffmanor.org), (-) Order Number #100880972 on May 08, 2020 07:05 AM (PDT) pursuant to License Agreement with ICC & NYSDOS. No further reproduction, no

100880972

1. Compressors and multiple-compressor system suction groups shall include control systems that use floating suction pressure control logic to reset the target suction pressure temperature based on the temperature requirements of the attached refrigeration display cases or walk-ins.

   Exception: Controls are not required for the following:

   1. Single-compressor systems that do not have variable capacity capability.
   2. Suction groups that have a design saturated suction temperature of 30°F (-1.1°C) or higher, suction groups that comprise the high stage of a two-stage or cascade system, or suction groups that primarily serve chillers for secondary cooling fluids.

2. Liquid subcooling shall be provided for all low-temperature compressor systems with a design cooling capacity equal to or greater than 100,000 Btu/h (29.3 kW) with a design-saturated suction temperature of -10°F (-23°C) or lower. The subcooled liquid temperature shall be controlled at a maximum temperature setpoint of 50°F (10°C) at the exit of the subcooler using either compressor economizer (interstage) ports or a separate compressor suction group operating at a saturated suction temperature of 18°F (-7.8°C) or higher.

   2.1. Insulation for liquid lines with a fluid operating temperature less than 60°F (15.6°C) shall comply with Table C403.11.3.

3. Compressors that incorporate internal or external crankcase heaters shall provide a means to cycle the heaters off during compressor operation.

C403.11 Construction of HVAC system elements (Mandatory). Ducts, plenums, piping and other elements that are part of an HVAC system shall be constructed and insulated in accordance with Sections C403.11.1 through C403.11.3.1.

C403.11.1 Duct and plenum insulation and sealing (Mandatory). Supply and return air ducts and plenums shall be insulated with not less than R-6 insulation where located in unconditioned spaces and where located outside the building with not less than R-8 insulation in *Climate Zones* 1 through 4 and not less than R-12 insulation in *Climate Zones* 5 through 8. Where located within a building envelope assembly, the duct or plenum shall be separated from the building exterior or unconditioned or exempt spaces by not less than R-8 insulation in *Climate Zones* 1 through 4 and not less than R-12 insulation in *Climate Zones* 5 through 8.

Exceptions:

1. Where located within equipment.
2. Where the design temperature difference between the interior and exterior of the duct or plenum is not greater than 15°F (8°C).

Ducts, air handlers and filter boxes shall be sealed. Joints and seams shall comply with Section 603.9 of the *Mechanical Code of New York State*.

C403.11.2 Duct construction (Mandatory). Ductwork shall be constructed and erected in accordance with the *Mechanical Code of New York State*.

[NY] C403.11.2.1 Low-pressure duct systems (Mandatory). Longitudinal and transverse joints, seams and connections of supply and return ducts operating at a static pressure less than or equal to 2 inches water gauge (w.g.) (498 Pa) shall be securely fastened and sealed with welds, gaskets, mastics (adhesives), mastic-plus-embedded-fabric systems or tapes installed in accordance with the manufacturer's instructions. Pressure classifications specific to the duct system shall be clearly indicated on the construction documents in accordance with the *Mechanical Code of New York State*.

Exception: Locking-type longitudinal joints and seams, other than the snap-lock and button-lock types, need not be sealed as specified in this section.

C403.11.2.2 Medium-pressure duct systems (Mandatory). Ducts and plenums designed to operate at a static pressure greater than 2 inches water gauge (w.g.) (498 Pa) but less than 3 inches w.g. (747 Pa) shall be insulated and sealed in accordance with Section C403.11.1. Pressure classifications specific to the duct system shall be clearly indicated on the construction documents in accordance with the *Mechanical Code of New York State*.

C403.11.2.3 High-pressure duct systems (Mandatory). Ducts and plenums designed to operate at static pressures equal to or greater than 3 inches water gauge (747 Pa) shall be insulated and sealed in accordance with Section C403.11.1. In addition, ducts and plenums shall be leak tested in accordance with the SMACNA HVAC Air Duct Leakage Test Manual and shown to have a rate of air leakage (CL) less than or equal to 4.0 as determined in accordance with Equation 4-8.

$$CL = F/P^{0.65} \qquad \textbf{(Equation 4-8)}$$

where:

F = The measured leakage rate in cfm per 100 square feet of duct surface.

P = The static pressure of the test.

Documentation shall be furnished by the designer demonstrating that representative sections totaling not less than 25 percent of the duct area have been tested and that all tested sections comply with the requirements of this section.

C403.11.3 Piping insulation (Mandatory). Piping serving as part of a heating or cooling system shall be thermally insulated in accordance with Table C403.11.3.

INTERNATIONAL CODE COUNCIL®
Copyright © 2019 ICC & NYSDOS. ALL RIGHTS RESERVED. Accessed by Lauren Gualdino (lgualdino@briarcliffmanor.org), (-) Order Number #100880972 on May 08, 2020 07:05 AM (PDT) pursuant to License Agreement with ICC & NYSDOS. No further reproduction, no

100880972

Exceptions:

1. Factory-installed piping within HVAC equipment tested and rated in accordance with a test procedure referenced by this code.
2. Factory-installed piping within room fan-coils and unit ventilators tested and rated according to AHRI 440 (except that the sampling and variation provisions of Section 6.5 shall not apply) and AHRI 840, respectively.
3. Piping that conveys fluids that have a design operating temperature range between 60°F (15°C) and 105°F (41°C).
4. Piping that conveys fluids that have not been heated or cooled through the use of fossil fuels or electric power.
5. Strainers, control valves, and balancing valves associated with piping 1 inch (25 mm) or less in diameter.
6. Direct buried piping that conveys fluids at or below 60°F (15°C).

C403.11.3.1 Protection of piping insulation (Mandatory). Piping insulation exposed to the weather shall be protected from damage, including that caused by sunlight, moisture, equipment maintenance and wind, and shall provide shielding from solar radiation that can cause degradation of the material. Adhesive tape shall not be permitted.

C403.12 Mechanical systems located outside of the building thermal envelope (Mandatory). Mechanical systems providing heat outside of the thermal envelope of a building shall comply with Sections C403.12.1 through C403.12.3.

C403.12.1 Heating outside a building. Systems installed to provide heat outside a building shall be radiant systems.

Such heating systems shall be controlled by an occupancy sensing device or a timer switch, so that the system is automatically de-energized when occupants are not present.

C403.12.2 Snow- and ice-melt system controls. Snow- and ice-melting systems shall include automatic controls configured to shut off the system when the pavement temperature is above 50°F (10°C) and precipitation is not falling, and an automatic or manual control that is configured to shut off when the outdoor temperature is above 40°F (4°C).

C403.12.3 Freeze protection system controls. Freeze protection systems, such as heat tracing of outdoor piping and heat exchangers, including self-regulating heat tracing, shall include automatic controls configured to shut off the systems when outdoor air temperatures are above 40°F (4°C) or when the conditions of the protected fluid will prevent freezing.

SECTION C404
SERVICE WATER HEATING (MANDATORY)

C404.1 General. This section covers the minimum efficiency of, and controls for, service water-heating equipment and insulation of service hot water piping.

C404.2 Service water-heating equipment performance efficiency. Water-heating equipment and hot water storage tanks shall meet the requirements of Table C404.2. The efficiency shall be verified through data furnished by the manufacturer of the equipment or through certification under an

TABLE C403.11.3
MINIMUM PIPE INSULATION THICKNESS (in inches)[a, c]

FLUID OPERATING TEMPERATURE RANGE AND USAGE (°F)	INSULATION CONDUCTIVITY		NOMINAL PIPE OR TUBE SIZE (inches)				
	Conductivity Btu • in./(h • ft² • °F)[b]	Mean Rating Temperature, °F	< 1	1 to < 1 1/2	1 1/2 to < 4	4 to < 8	≥ 8
> 350	0.32 – 0.34	250	4.5	5.0	5.0	5.0	5.0
251 – 350	0.29 – 0.32	200	3.0	4.0	4.5	4.5	4.5
201 – 250	0.27 – 0.30	150	2.5	2.5	2.5	3.0	3.0
141 – 200	0.25 – 0.29	125	1.5	1.5	2.0	2.0	2.0
105 – 140	0.21 – 0.28	100	1.0	1.0	1.5	1.5	1.5
40 – 60	0.21 – 0.27	75	0.5	0.5	1.0	1.0	1.0
< 40	0.20 – 0.26	50	0.5	1.0	1.0	1.0	1.5

For SI: 1 inch = 25.4 mm, °C = [(°F) - 32]/1.8.

a. For piping smaller than 1 1/2 inches and located in partitions within conditioned spaces, reduction of these thicknesses by 1 inch shall be permitted (before thickness adjustment required in footnote b) but not to a thickness less than 1 inch.

b. For insulation outside the stated conductivity range, the minimum thickness (T) shall be determined as follows:

$T = r\,[(1 + t/r)^{K/k} - 1]$

where:

T = minimum insulation thickness,
r = actual outside radius of pipe,
t = insulation thickness *listed* in the table for applicable fluid temperature and pipe size,
K = conductivity of alternate material at mean rating temperature indicated for the applicable fluid temperature (Btu • in/h • ft² • °F) and
k = the upper value of the conductivity range *listed* in the table for the applicable fluid temperature.

c. For direct-buried heating and hot water system piping, reduction of these thicknesses by 1 1/2 inches (38 mm) shall be permitted (before thickness adjustment required in footnote b but not to thicknesses less than 1 inch.

INTERNATIONAL CODE COUNCIL®
Copyright © 2019 ICC & NYSDOS. ALL RIGHTS RESERVED. Accessed by Lauren Gualdino (lgualdino@briarcliffmanor.org), (-) Order Number #100880972 on May 08, 2020 07:05 AM (PDT) pursuant to License Agreement with ICC & NYSDOS. No further reproduction, no

100880972

approved certification program. Water-heating equipment intended to be used to provide space heating shall meet the applicable provisions of Table C404.2.

C404.2.1 High input service water-heating systems. Gas-fired water-heating equipment installed in new buildings shall be in compliance with this section. Where a singular piece of water-heating equipment serves the entire building and the input rating of the equipment is 1,000,000 Btu/h (293 kW) or greater, such equipment shall have a thermal efficiency, E_t, of not less than 90 percent. Where multiple pieces of water-heating equipment serve the building and the combined input rating of the water-heating equipment is 1,000,000 Btu/h (293 kW) or greater, the combined input-capacity-weighted-average thermal efficiency, E_t, shall be not less than 90 percent.

Exceptions:

1. Where not less than 25 percent of the annual *service water-heating* requirement is provided by *on-site renewable energy* or site-recovered energy, the minimum thermal efficiency requirements of this section shall not apply.
2. The input rating of water heaters installed in individual *dwelling units* shall not be required to be included in the total input rating of *service water-heating* equipment for a building.
3. The input rating of water heaters with an input rating of not greater than 100,000 Btu/h (29.3 kW) shall not be required to be included in the total input rating of *service water-heating* equipment for a building.

C404.3 Heat traps for hot water storage tanks. Storage tank-type water heaters and hot water storage tanks that have vertical water pipes connecting to the inlet and outlet of the tank shall be provided with integral *heat traps* at those inlets and outlets or shall have pipe-configured *heat traps* in the piping connected to those inlets and outlets. Tank inlets and outlets associated with solar water heating system circulation loops shall not be required to have *heat traps*.

C404.4 Insulation of piping. Piping from a water heater to the termination of the heated water fixture supply pipe shall be insulated in accordance with Table C403.11.3. On both the inlet and outlet piping of a storage water heater or heated water storage tank, the piping to a *heat trap* or the first 8 feet (2438 mm) of piping, whichever is less, shall be insulated. Piping that is heat traced shall be insulated in accordance with Table C403.11.3 or the heat trace manufacturer's instructions. Tubular pipe insulation shall be installed in accordance with the insulation manufacturer's instructions. Pipe insulation shall be continuous except where the piping passes through a framing member. The minimum insulation thickness requirements of this section shall not supersede any greater insulation thickness requirements necessary for the protection of piping from freezing temperatures or the protection of personnel against external surface temperatures on the insulation.

Exception: Tubular pipe insulation shall not be required on the following:

1. The tubing from the connection at the termination of the fixture supply piping to a plumbing fixture or plumbing appliance.
2. Valves, pumps, strainers and threaded unions in piping that is 1 inch (25 mm) or less in nominal diameter.
3. Piping from user-controlled shower and bath mixing valves to the water outlets.
4. Cold-water piping of a *demand recirculation water* system.
5. Tubing from a hot drinking-water heating unit to the water outlet.
6. Piping at locations where a vertical support of the piping is installed.
7. Piping surrounded by building insulation with a thermal resistance (*R-value*) of not less than R-3.

C404.5 Heated water supply piping. Heated water supply piping shall be in accordance with Section C404.5.1 or C404.5.2. The flow rate through $^1/_4$-inch (6.4 mm) piping shall be not greater than 0.5 gpm (1.9 L/m). The flow rate through $^5/_{16}$-inch (7.9 mm) piping shall be not greater than 1 gpm (3.8 L/m). The flow rate through $^3/_8$-inch (9.5 mm) piping shall be not greater than 1.5 gpm (5.7 L/m).

C404.5.1 Maximum allowable pipe length method. The maximum allowable piping length from the nearest source of heated water to the termination of the fixture supply pipe shall be in accordance with the following. Where the piping contains more than one size of pipe, the largest size of pipe within the piping shall be used for determining the maximum allowable length of the piping in Table C404.5.1.

1. For a public lavatory faucet, use the "Public lavatory faucets" column in Table C404.5.1.
2. For all other plumbing fixtures and plumbing appliances, use the "Other fixtures and appliances" column in Table C404.5.1.

C404.5.2 Maximum allowable pipe volume method. The water volume in the piping shall be calculated in accordance with Section C404.5.2.1. Water heaters, circulating water systems and heat trace temperature maintenance systems shall be considered to be sources of heated water.

The volume from the nearest source of heated water to the termination of the fixture supply pipe shall be as follows:

1. For a public lavatory faucet: not more than 2 ounces (0.06 L).
2. For other plumbing fixtures or plumbing appliances; not more than 0.5 gallon (1.89 L).

C404.5.2.1 Water volume determination. The volume shall be the sum of the internal volumes of pipe, fittings, valves, meters and manifolds between the nearest source of heated water and the termination of the

INTERNATIONAL CODE COUNCIL®
Copyright © 2019 ICC & NYSDOS. ALL RIGHTS RESERVED. Accessed by Lauren Gualdino (lgualdino@briarcliffmanor.org), (-) Order Number #100880972 on May 08, 2020 07:05 AM (PDT) pursuant to License Agreement with ICC & NYSDOS. No further reproduction, no

100880972

TABLE C404.2
MINIMUM PERFORMANCE OF WATER-HEATING EQUIPMENT

EQUIPMENT TYPE	SIZE CATEGORY (input)	SUBCATEGORY OR RATING CONDITION	PERFORMANCE REQUIRED[a, b]	TEST PROCEDURE
Water heaters, electric	≤ 12 kW[d]	Tabletop[e], ≥ 20 gallons and ≤ 120 gallons	0.93 - 0.00132*V*, EF	DOE 10 CFR Part 430
		Resistance ≥ 20 gallons and ≤ 55 gallons	0.960 - 0.0003*V*, EF	
		Grid-enabled[f] > 75 gallons and ≤ 120 gallons	1.061 - 0.00168*V*, EF	
	> 12 kW	Resistance	$(0.3 + 27/V_m)$, %/h	ANSI Z21.10.3
	≤ 24 amps and ≤ 250 volts	Heat pump > 55 gallons and ≤ 120 gallons	2.057 - 0.00113*V*, EF	DOE 10 CFR Part 430
Storage water heaters, gas	≤ 75,000 Btu/h	≥ 20 gallons and ≤ 55 gallons	0.675 - 0.0015*V*, EF	DOE 10 CFR Part 430
		> 55 gallons and ≤ 100 gallons	0.8012 - 0.00078*V*, EF	
	> 75,000 Btu/h and ≤ 155,000 Btu/h	< 4,000 Btu/h/gal	80% E_t $(Q/800 + 110\sqrt{V})SL$, Btu/h	ANSI Z21.10.3
	> 155,000 Btu/h	< 4,000 Btu/h/gal	80% E_t $(Q/800 + 110\sqrt{V})SL$, Btu/h	
Instantaneous water heaters, gas	> 50,000 Btu/h and < 200,000 Btu/h[c]	≥ 4,000 Btu/h/gal and < 2 gal	0.82 - 0.00 19*V*, EF	DOE 10 CFR Part 430
	≥ 200,000 Btu/h	≥ 4,000 Btu/h/gal and < 10 gal	80% E_t	ANSI Z21.10.3
	≥ 200,000 Btu/h	≥ 4,000 Btu/h/gal and ≥ 10 gal	80% E_t $(Q/800 + 110\sqrt{V})SL$, Btu/h	
Storage water heaters, oil	≤ 105,000 Btu/h	≥ 20 gal and ≤ 50 gallons	0.68 - 0.0019*V*, EF	DOE 10 CFR Part 430
	≥ 105,000 Btu/h	< 4,000 Btu/h/gal	80% E_t $(Q/800 + 110\sqrt{V})SL$, Btu/h	ANSI Z21.10.3
Instantaneous water heaters, oil	≤ 210,000 Btu/h	≥ 4,000 Btu/h/gal and < 2 gal	0.59 - 0.0019*V*, EF	DOE 10 CFR Part 430
	> 210,000 Btu/h	≥ 4,000 Btu/h/gal and < 10 gal	80% E_t	ANSI Z21.10.3
	> 210,000 Btu/h	≥ 4,000 Btu/h/gal and ≥ 10 gal	78% E_t $(Q/800 + 110\sqrt{V})SL$, Btu/h	
Hot water supply boilers, gas and oil	≥ 300,000 Btu/h and < 12,500,000 Btu/h	≥ 4,000 Btu/h/gal and < 10 gal	80% E_t	ANSI Z21.10.3
Hot water supply boilers, gas	≥ 300,000 Btu/h and < 12,500,000 Btu/h	≥ 4,000 Btu/h/gal and ≥ 10 gal	80% E_t $(Q/800 + 110\sqrt{V})SL$, Btu/h	
Hot water supply boilers, oil	> 300,000 Btu/h and < 12,500,000 Btu/h	> 4,000 Btu/h/gal and > 10 gal	78% E_t $(Q/800 + 110\sqrt{V})SL$, Btu/h	
Pool heaters, gas and oil	All	—	82% E_t	ASHRAE 146

(continued)

INTERNATIONAL CODE COUNCIL®
Copyright © 2019 ICC & NYSDOS. ALL RIGHTS RESERVED. Accessed by Lauren Gualdino (lgualdino@briarcliffmanor.org), (-) Order Number #100880972 on May 08, 2020 07:05 AM (PDT) pursuant to License Agreement with ICC & NYSDOS. No further reproduction, no

100880972

TABLE C404.2—continued
MINIMUM PERFORMANCE OF WATER-HEATING EQUIPMENT

EQUIPMENT TYPE	SIZE CATEGORY (input)	SUBCATEGORY OR RATING CONDITION	PERFORMANCE REQUIRED[a, b]	TEST PROCEDURE
Heat pump pool heaters	All	—	4.0 COP	AHRI 1160
Unfired storage tanks	All	—	Minimum insulation requirement R-12.5 (h • ft^2 • °F)/Btu	(none)

For SI: 1 foot = 304.8 mm, 1 square foot = 0.0929 m^2,°C = [(°F) - 32]/1.8, 1 British thermal unit per hour = 0.2931 W, 1 gallon = 3.785 L, 1 British thermal unit per hour per gallon = 0.078 W/L.

a. Energy factor (EF) and thermal efficiency (E_t) are minimum requirements. In the EF equation, V is the rated volume in gallons.

b. Standby loss (SL) is the maximum Btu/h based on a nominal 70°F temperature difference between stored water and ambient requirements. In the SL equation, Q is the nameplate input rate in Btu/h. In the equations for electric water heaters, V is the rated volume in gallons and V_m is the measured volume in gallons. In the SL equation for oil and gas water heaters and boilers, V is the rated volume in gallons.

c. Instantaneous water heaters with input rates below 200,000 Btu/h shall comply with these requirements where the water heater is designed to heat water to temperatures 180°F or higher.

d. Electric water heaters with an input rating of 12 kW (40,950 Btu/h) or less that are designed to heat water to temperatures of 180°F or greater shall comply with the requirements for electric water heaters that have an input rating greater than 12 kW (40,950 Btu/h).

e A tabletop water heater is a water heater that is enclosed in a rectangular cabinet with a flat top surface not more than 3 feet in height.

f. A grid-enabled water heater is an electric resistance water heater that meets all of the following:

1. Has a rated storage tank volume of more than 75 gallons.
2. Was manufactured on or after April 16, 2015.
3. Is equipped at the point of manufacture with an activation lock.
4. Bears a permanent label applied by the manufacturer that complies with all of the following:
   4.1. Is made of material not adversely affected by water.
   4.2. Is attached by means of nonwater-soluble adhesive.
   4.3. Advises purchasers and end users of the intended and appropriate use of the product with the following notice printed in 16.5 point Arial Narrow Bold font: "IMPORTANT INFORMATION: This water heater is intended only for use as part of an electric thermal storage or demand response program. It will not provide adequate hot water unless enrolled in such a program and activated by your utility company or another program operator. Confirm the availability of a program in your local area before purchasing or installing this product."

fixture supply pipe. The volume in the piping shall be determined from the "Volume" column in Table C404.5.1. The volume contained within fixture shutoff valves, within flexible water supply connectors to a fixture fitting and within a fixture fitting shall not be included in the water volume determination. Where heated water is supplied by a recirculating system or heat-traced piping, the volume shall include the portion of the fitting on the branch pipe that supplies water to the fixture.

C404.6 Heated-water circulating and temperature maintenance systems. Heated-water circulation systems shall be in accordance with Section C404.6.1. Heat trace temperature maintenance systems shall be in accordance with Section C404.6.2. Controls for hot water storage shall be in accordance with Section C404.6.3. Automatic controls, temperature sensors and pumps shall be in a location with *access*. Manual controls shall be in a location with *ready access*.

C404.6.1 Circulation systems. Heated-water circulation systems shall be provided with a circulation pump. The system return pipe shall be a dedicated return pipe or a cold water supply pipe. Gravity and thermo-syphon circulation systems shall be prohibited. Controls for *circulating hot water system* pumps shall start the pump based on the identification of a demand for hot water within the occupancy. The controls shall automatically turn off the pump when the water in the circulation loop is at the desired temperature and when there is not a demand for hot water.

C404.6.2 Heat trace systems. Electric heat trace systems shall comply with IEEE 515.1. Controls for such systems shall be able to automatically adjust the energy input to the heat tracing to maintain the desired water temperature in the piping in accordance with the times when heated water is used in the occupancy. Heat trace shall be arranged to be turned off automatically when there is not a demand for hot water.

C404.6.3 Controls for hot water storage. The controls on pumps that circulate water between a water heater and a heated-water storage tank shall limit operation of the pump from heating cycle startup to not greater than 5 minutes after the end of the cycle.

C404.7 Demand recirculation controls. *Demand recirculation water systems* shall have controls that comply with both of the following:

1. The controls shall start the pump upon receiving a signal from the action of a user of a fixture or appliance, sensing the presence of a user of a fixture or sensing the flow of hot or tempered water to a fixture fitting or appliance.
2. The controls shall limit the temperature of the water entering the cold-water piping to not greater than 104°F (40°C).

C404.8 Drain water heat recovery units. Drain water heat recovery units shall comply with CSA B55.2. Potable water-side pressure loss shall be less than 10 psi (69 kPa) at maximum design flow. For *Group R* occupancies, the efficiency of

INTERNATIONAL CODE COUNCIL®
Copyright © 2019 ICC & NYSDOS. ALL RIGHTS RESERVED. Accessed by Lauren Gualdino (lgualdino@briarcliffmanor.org), (-) Order Number #100880972 on May 08, 2020 07:05 AM (PDT) pursuant to License Agreement with ICC & NYSDOS. No further reproduction, no

100880972

TABLE C404.5.1
PIPING VOLUME AND MAXIMUM PIPING LENGTHS

NOMINAL PIPE SIZE (inches)	VOLUME (liquid ounces per foot length)	MAXIMUM PIPING LENGTH (feet)	
		Public lavatory faucets	Other fixtures and appliances
1/4	0.33	6	50
5/16	0.5	4	50
3/8	0.75	3	50
1/2	1.5	2	43
5/8	2	1	32
3/4	3	0.5	21
7/8	4	0.5	16
1	5	0.5	13
1 1/4	8	0.5	8
1 1/2	11	0.5	6
2 or larger	18	0.5	4

For SI: 1 inch = 25.4 mm, 1 foot = 304.8 mm, 1 liquid ounce = 0.030 L, 1 gallon = 128 ounces.

drain water heat recovery unit efficiency shall be in accordance with CSA B55.1.

C404.9 Energy consumption of pools and permanent spas (Mandatory). The energy consumption of pools and permanent spas shall be controlled by the requirements in Sections C404.9.1 through C404.9.3.

C404.9.1 Heaters. The electric power to all heaters shall be controlled by an on-off switch that is an integral part of the heater, mounted on the exterior of the heater, or external to and within 3 feet (914 mm) of the heater in a location with *ready access*. Operation of such switch shall not change the setting of the heater thermostat. Such switches shall be in addition to a circuit breaker for the power to the heater. Gas-fired heaters shall not be equipped with continuously burning ignition pilots.

C404.9.2 Time switches. Time switches or other control methods that can automatically turn off and on heaters and pump motors according to a preset schedule shall be installed for heaters and pump motors. Heaters and pump motors that have built-in time switches shall be in compliance with this section.

Exceptions:

1. Where public health standards require 24-hour pump operation.
2. Pumps that operate solar- and waste-heat-recovery pool heating systems.

C404.9.3 Covers. Outdoor heated pools and outdoor permanent spas shall be provided with a vapor-retardant cover or other *approved* vapor-retardant means.

Exception: Where more than 75 percent of the energy for heating, computed over an operating season of not fewer than 3 calendar months, is from site-recovered energy such as from a heat pump or on-site renewable energy system, covers or other vapor-retardant means shall not be required.

C404.10 Energy consumption of portable spas (Mandatory). The energy consumption of electric-powered portable spas shall be controlled by the requirements of APSP 14.

SECTION C405
ELECTRICAL POWER AND LIGHTING SYSTEMS

C405.1 General (Mandatory). This section covers lighting system controls, the maximum lighting power for interior and exterior applications and electrical energy consumption.

Dwelling units within multifamily buildings shall comply with Section R404.1. All other *dwelling units* shall comply with Section R404.1, or with Sections C405.2.4 and C405.3. *Sleeping units* shall comply with Section C405.2.4, and with Section R404.1 or C405.3. Lighting installed in walk-in coolers, *walk-in freezers*, refrigerated warehouse coolers and refrigerated warehouse freezers shall comply with the lighting requirements of Section C403.10.1 or C403.10.2.

C405.2 Lighting controls (Mandatory). Lighting systems shall be provided with controls that comply with one of the following.

1. Lighting controls as specified in Sections C405.2.1 through C405.2.6.
2. Luminaire level lighting controls (LLLC) and lighting controls as specified in Sections C405.2.1, C405.2.4 and C405.2.5. The LLLC luminaire shall be independently capable of:
   2.1. Monitoring occupant activity to brighten or dim lighting when occupied or unoccupied, respectively.
   2.2. Monitoring ambient light, both electric light and daylight, and brighten or dim artificial light to maintain desired light level.
   2.3. For each control strategy, configuration and reconfiguration of performance parameters

INTERNATIONAL CODE COUNCIL®
Copyright © 2019 ICC & NYSDOS. ALL RIGHTS RESERVED. Accessed by Lauren Gualdino (lgualdino@briarcliffmanor.org), (-) Order Number #100880972 on May 08, 2020 07:05 AM (PDT) pursuant to License Agreement with ICC & NYSDOS. No further reproduction, no

100880972

including; bright and dim setpoints, timeouts, dimming fade rates, sensor sensitivity adjustments, and wireless zoning configurations.

Exceptions: Lighting controls are not required for the following:

1. Areas designated as security or emergency areas that are required to be continuously lighted.
2. Interior exit stairways, interior exit ramps and exit passageways.
3. Emergency egress lighting that is normally off.

C405.2.1 Occupant sensor controls. Occupant *sensor controls* shall be installed to control lights in the following space types:

1. Classrooms/lecture/training rooms.
2. Conference/meeting/multipurpose rooms.
3. Copy/print rooms.
4. Lounges/breakrooms.
5. Enclosed offices.
6. Open plan office areas.
7. Restrooms.
8. Storage rooms.
9. Locker rooms.
10. Other spaces 300 square feet (28 m^2) or less that are enclosed by floor-to-ceiling height partitions.
11. Warehouse storage areas.

C405.2.1.1 Occupant sensor control function. Occupant sensor controls in warehouses shall comply with Section C405.2.1.2. Occupant sensor controls in open plan office areas shall comply with Section C405.2.1.3. Occupant sensor controls for all other spaces specified in Section C405.2.1 shall comply with the following:

1. They shall automatically turn off lights within 20 minutes after all occupants have left the space.
2. They shall be manual on or controlled to automatically turn on the lighting to not more than 50-percent power.

   Exception: Full automatic-on controls shall be permitted to control lighting in public corridors, stairways, restrooms, primary building entrance areas and lobbies, and areas where manual-on operation would endanger the safety or security of the room or building occupants.
3. They shall incorporate a manual control to allow occupants to turn off lights.

C405.2.1.2 Occupant sensor control function in warehouses. In warehouses, the lighting in aisleways and open areas shall be controlled with occupant sensors that automatically reduce lighting power by not less than 50 percent when the areas are unoccupied. The occupant sensors shall control lighting in each aisleway independently and shall not control lighting beyond the aisleway being controlled by the sensor.

C405.2.1.3 Occupant sensor control function in open plan office areas. Occupant sensor controls in open plan office spaces less than 300 square feet (28 m^2) in area shall comply with Section C405.2.1.1. Occupant sensor controls in all other open plan office spaces shall comply with all of the following:

1. The controls shall be configured so that *general lighting* can be controlled separately in control *zones* with floor areas not greater than 600 square feet (55 m^2) within the open plan office space.
2. The controls shall automatically turn off *general lighting* in all control *zones* within 20 minutes after all occupants have left the open plan office space.
3. The controls shall be configured so that *general lighting* power in each control *zone* is reduced by not less than 80 percent of the full *zone general lighting* power in a reasonably uniform illumination pattern within 20 minutes of all occupants leaving that control *zone*. Control functions that switch control *zone* lights completely off when the *zone* is vacant meet this requirement.
4. The controls shall be configured such that any daylight responsive control will activate open plan office space *general lighting* or control *zone general lighting* only when occupancy for the same area is detected.

C405.2.2 Time-switch controls. Each area of the building that is not provided with *occupant sensor controls* complying with Section C405.2.1.1 shall be provided with *time-switch controls* complying with Section C405.2.2.1.

Exception: Where a *manual control* provides light reduction in accordance with Section C405.2.2.2, *time-switch controls* shall not be required for the following:

1. Spaces where patient care is directly provided.
2. Spaces where an automatic shutoff would endanger occupant safety or security.
3. Lighting intended for continuous operation.
4. Shop and laboratory classrooms.

C405.2.2.1 Time-switch control function. Each space provided with *time-switch controls* shall be provided with a *manual control* for light reduction in accordance with Section C405.2.2.2. Time-switch *controls* shall include an override switching device that complies with the following:

1. Have a minimum 7-day clock.
2. Be capable of being set for seven different day types per week.
3. Incorporate an automatic holiday "shutoff" feature, which turns off all controlled lighting loads for not fewer than 24 hours and then resumes normally scheduled operations.
4. Have program backup capabilities, which prevent the loss of program and time settings for not fewer than 10 hours, if power is interrupted.

INTERNATIONAL CODE COUNCIL®
Copyright © 2019 ICC & NYSDOS. ALL RIGHTS RESERVED. Accessed by Lauren Gualdino (lgualdino@briarcliffmanor.org), (-) Order Number #100880972 on May 08, 2020 07:05 AM (PDT) pursuant to License Agreement with ICC & NYSDOS. No further reproduction, no

100880972

5. Include an override switch that complies with the following:
   5.1. The override switch shall be a manual control.
   5.2. The override switch, when initiated, shall permit the controlled lighting to remain on for not more than 2 hours.
   5.3. Any individual override switch shall control the lighting for an area not larger than 5,000 square feet (465 m^2).

Exceptions:

1. Within mall concourses, auditoriums, sales areas, manufacturing facilities and sports arenas:
   1.1. The time limit shall be permitted to be greater than 2 hours, provided that the switch is a captive key device.
   1.2. The area controlled by the override switch shall not be limited to 5,000 square feet (465 m^2) provided that such area is less than 20,000 square feet (1860 m^2).
2. Where provided with *manual control*, the following areas are not required to have light reduction control:
   2.1. Spaces that have only one luminaire with a rated power of less than 100 watts.
   2.2. Spaces that use less than 0.6 watts per square foot (6.5 W/m^2).
   2.3. Corridors, lobbies, electrical rooms and or mechanical rooms.

C405.2.2.2 Light-reduction controls. Spaces required to have light-reduction controls shall have a *manual control* that allows the occupant to reduce the connected lighting load in a reasonably uniform illumination pattern by not less than 50 percent. Lighting reduction shall be achieved by one of the following or another *approved* method:

1. Controlling all lamps or luminaires.
2. Dual switching of alternate rows of luminaires, alternate luminaires or alternate lamps.
3. Switching the middle lamp luminaires independently of the outer lamps.
4. Switching each luminaire or each lamp.

Exception: Light reduction controls are not required in *daylight zones* with *daylight responsive controls* complying with Section C405.2.3.

C405.2.3 Daylight-responsive controls. *Daylight-responsive controls* complying with Section C405.2.3.1 shall be provided to control the electric lights within *daylight zones* in the following spaces:

1. Spaces with a total of more than 150 watts of *general lighting* within sidelit *zones* complying with Section C405.2.3.2 *General lighting* does not include lighting that is required to have specific application control in accordance with Section C405.2.4.
2. Spaces with a total of more than 150 watts of *general lighting* within toplit *zones* complying with Section C405.2.3.3.

Exceptions: Daylight responsive controls are not required for the following:

1. Spaces in health care facilities where patient care is directly provided.
2. Lighting that is required to have specific application control in accordance with Section C405.2.4.
3. Sidelit *zones* on the first floor above grade in Group A-2 and Group M occupancies.
4. New buildings where the total connected lighting power calculated in accordance with Section C405.3.1 is not greater than the adjusted interior lighting power allowance (LPA_{adj}) calculated in accordance with Equation 4-9:

$$LPA_{adj} = [LPA_{norm} \times (1.0 - 0.4 \times UDZFA / TBFA)]$$

(Equation 4-9)

where:

LPA_{adj} = Adjusted building interior lighting power allowance in watts.

LPA_{norm} = Normal building lighting power allowance in watts calculated in accordance with Section C405.3.2 and reduced in accordance with Section C406.3 where Option 2 of Section C406.1 is used to comply with the requirements of Section C406.

UDZFA = Uncontrolled daylight *zone* floor area is the sum of all sidelit and toplit *zones*, calculated in accordance with Sections C405.2.3.2 and C405.2.3.3, that do not have daylight responsive controls.

TBFA = Total building floor area is the sum of all floor areas included in the lighting power allowance calculation in Section C405.3.2.

[NY] C405.2.3.1 Daylight-responsive control function. Where required, *daylight-responsive controls* shall be provided within each space for control of lights in that space and shall comply with all of the following:

1. Lights in toplit *zones* in accordance with Section C405.2.3.3 shall be controlled independently of lights in sidelit *zones* in accordance with Section C405.2.3.2.
2. *Daylight responsive controls* within each space shall be configured so that they can be calibrated from within that space by authorized personnel.

INTERNATIONAL CODE COUNCIL®
Copyright © 2019 ICC & NYSDOS. ALL RIGHTS RESERVED. Accessed by Lauren Gualdino (lgualdino@briarcliffmanor.org), (-) Order Number #100880972 on May 08, 2020 07:05 AM (PDT) pursuant to License Agreement with ICC & NYSDOS. No further reproduction, no

100880972

3. Calibration mechanisms shall be in a location with *ready access.*
4. *Daylight responsive controls* shall dim lights continuously from full *design* light power to 40 percent of full design light power or lower.
5. *Daylight responsive controls* shall be configured to completely shut off all controlled lights.
6. Lights in sidelit *zones* in accordance with Section C405.2.3.2 facing different cardinal orientations [within 45 degrees (0.79 rad) of due north, east, south, west] shall be controlled independently of each other.

Exception: Up to 150 watts of lighting in each space is permitted to be controlled together with lighting in a daylight *zone* facing a different cardinal orientation.

C405.2.3.2 Sidelit zone. The sidelit *zone* is the floor area adjacent to vertical *fenestration* that complies with all of the following:

1. Where the fenestration is located in a wall, the sidelit *zone* shall extend laterally to the nearest full-height wall, or up to 1.0 times the height from the floor to the top of the fenestration, and longitudinally from the edge of the fenestration to the nearest full-height wall, or up to 2 feet (610 mm), whichever is less, as indicated in Figure C405.2.3.2.
2. The area of the fenestration is not less than 24 square feet (2.23 m^2).
3. The distance from the fenestration to any building or geological formation that would block *access* to daylight is greater than the height from the bottom of the fenestration to the top of the building or geologic formation.
4. The *visible transmittance* of the fenestration is not less than 0.20.

C405.2.3.3 Toplit zone. The toplit *zone* is the floor area underneath a roof fenestration assembly that complies with all of the following:

1. The toplit *zone* shall extend laterally and longitudinally beyond the edge of the roof fenestration assembly to the nearest obstruction that is taller than 0.7 times the ceiling height, or up to 0.7 times the ceiling height, whichever is less, as indicated in Figure C405.2.3.3(1).
2. Where the fenestration is located in a *rooftop monitor*, the toplit *zone* shall extend laterally to the nearest obstruction that is taller than 0.7 times the ceiling height, or up to 1.0 times the height from the floor to the bottom of the fenestration, whichever is less, and longitudinally from the edge of the fenestration to the nearest obstruction that is taller than 0.7 times the ceiling height, or up to 0.25 times the height from the floor to the bottom of the fenestration, whichever is less, as indicated in Figures C405.2.3.3(2) and C405.2.3.3(3).
3. Direct sunlight is not blocked from hitting the roof fenestration assembly at the peak solar angle on the summer solstice by buildings or geological formations.
4. The product of the *visible transmittance* of the roof fenestration assembly and the area of the rough opening of the roof fenestration assembly divided by the area of the toplit *zone* is not less than 0.008.

C405.2.4 Specific application controls. Specific application controls shall be provided for the following:

1. The following lighting shall be controlled by an occupant sensor complying with Section C405.2.1.1 or a time-switch control complying with Section C405.2.2.1. In addition, a manual control shall be provided to control such lighting separately from the *general lighting* in the space:
   1.1. Display and accent.
   1.2. Lighting in display cases.
   1.3. Supplemental task lighting, including permanently installed under-shelf or under-cabinet lighting.
   1.4. Lighting equipment that is for sale or demonstration in lighting education.
2. *Sleeping units* shall have control devices or systems that are configured to automatically switch off all permanently installed luminaires and switched receptacles within 20 minutes after all occupants have left the unit.

   Exceptions:

   1. Lighting and switched receptacles controlled by card key controls.
   2. Spaces where patient care is directly provided.
3. Permanently installed luminaires within *dwelling units* shall be provided with controls complying with Section C405.2.1.1 or C405.2.2.2.
4. Lighting for nonvisual applications, such as plant growth and food warming, shall be controlled by a *time switch control* complying with Section C405.2.2.1 that is independent of the controls for other lighting within the room or space.

C405.2.5 Manual controls. Where required by this code, manual controls for lights shall comply with the following:

1. They shall be in a location with *ready access* to occupants.
2. They shall be located where the controlled lights are visible, or shall identify the area served by the lights and indicate their status.

C405.2.6 Exterior lighting controls. Exterior lighting systems shall be provided with controls that comply with Sections C405.2.6.1 through C405.2.6.4. Decorative light-

INTERNATIONAL CODE COUNCIL®
Copyright © 2019 ICC & NYSDOS. ALL RIGHTS RESERVED. Accessed by Lauren Gualdino (lgualdino@briarcliffmanor.org), (-) Order Number #100880972 on May 08, 2020 07:05 AM (PDT) pursuant to License Agreement with ICC & NYSDOS. No further reproduction, no

100880972

ing systems shall comply with Sections C405.2.6.1, C405.2.6.2 and C405.2.6.4.

Exceptions:

1. Lighting for covered vehicle entrances and exits from buildings and parking structures where required for eye adaptation.
2. Lighting controlled from within *dwelling units*.

C405.2.6.1 Daylight shutoff. Lights shall be automatically turned off when daylight is present and satisfies the lighting needs.

C405.2.6.2 Decorative lighting shutoff. Building facade and landscape lighting shall automatically shut off from not later than 1 hour after business closing to not earlier than 1 hour before business opening.

[NY] C405.2.6.3 Lighting setback. Lighting that is not controlled in accordance with Section C405.2.6.2 shall be controlled so that the total wattage of such lighting is automatically reduced by not less than 30 percent by selectively switching off or dimming luminaires at one of the following times:

1. From not later than midnight to not earlier than 6 a.m.
2. From not later than one hour after business closing to not earlier than one hour before business opening.
3. During any time where activity has not been detected for 15 minutes or more.
4. Luminaires serving outdoor parking areas and having a rated input wattage of greater than 78 W and a mounting height of 24 feet (7315 mm) or less above the ground shall be controlled to automatically reduce the power of each luminaire by a minimum of 50 percent when no activity has been detected in the area illuminated by the controlled luminaires for a time of no longer than 15 minutes. No more than 1500 W of lighting power shall be controlled together.

C405.2.6.4 Exterior time-switch control function. Time-switch controls for exterior lighting shall comply with the following:

1. They shall have a clock capable of being programmed for not fewer than 7 days.

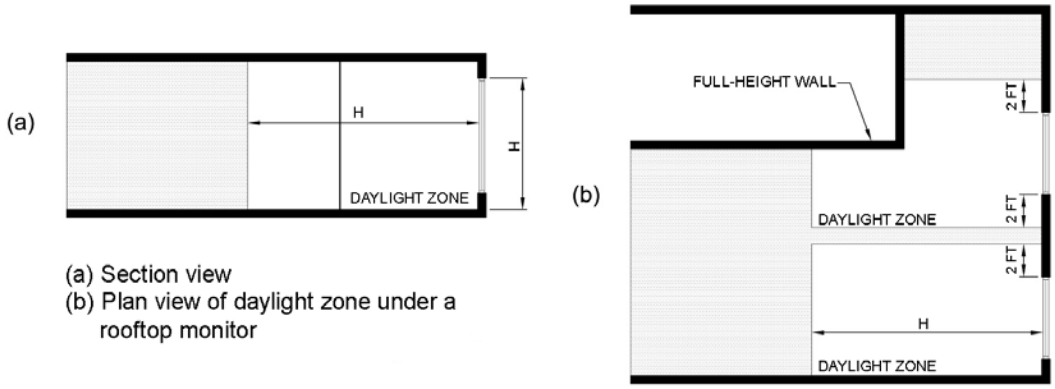

(a) Section view
(b) Plan view of daylight zone under a rooftop monitor

FIGURE C405.2.3.2
SIDELIT ZONE

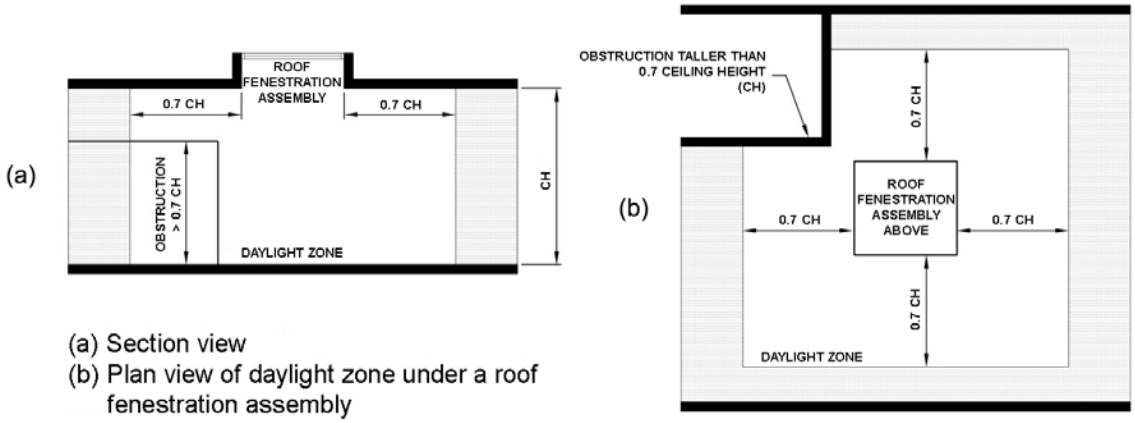

(a) Section view
(b) Plan view of daylight zone under a roof fenestration assembly

FIGURE C405.2.3.3(1)
TOPLIT ZONE

INTERNATIONAL CODE COUNCIL®
Copyright © 2019 ICC & NYSDOS. ALL RIGHTS RESERVED. Accessed by Lauren Gualdino (lgualdino@briarcliffmanor.org), (-) Order Number #100880972 on May 08, 2020 07:05 AM (PDT) pursuant to License Agreement with ICC & NYSDOS. No further reproduction, no

100880972

2. They shall be capable of being set for seven different day types per week.
3. They shall incorporate an automatic holiday setback feature.
4. They shall have program backup capabilities that prevent the loss of program and time settings for a period of not less than 10 hours in the event that power is interrupted.

C405.3 Interior lighting power requirements (Prescriptive). A building complies with this section where its total connected interior lighting power calculated under Section C405.3.1 is not greater than the interior lighting power allowance calculated under Section C405.3.2.

C405.3.1 Total connected interior lighting power. The total connected interior lighting power shall be determined in accordance with Equation 4-10.

$$TCLP = [LVL + BLL + LED + TRK + \text{Other}] \quad \textbf{(Equation 4-10)}$$

where:

TCLP = Total connected lighting power (watts).

LVL = For luminaires with lamps connected directly to building power, such as line voltage lamps, the rated wattage of the lamp.

BLL = For luminaires incorporating a ballast or transformer, the rated input wattage of the ballast or transformer when operating that lamp.

LED = For light-emitting diode luminaires with either integral or remote drivers, the rated wattage of the luminaire.

TRK = For lighting track, cable conductor, rail conductor, and plug-in busway systems that allow the addition and relocation of luminaires

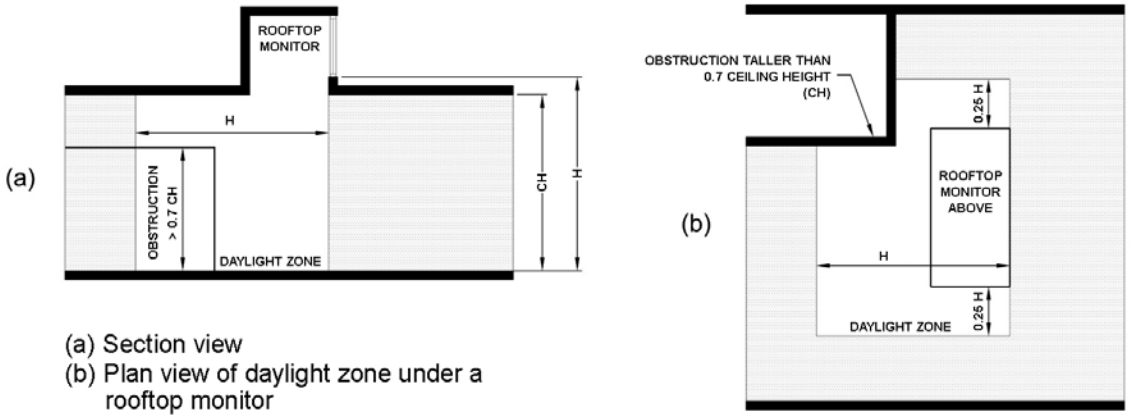

(a) Section view
(b) Plan view of daylight zone under a rooftop monitor

FIGURE C405.2.3.3(2)
DAYLIGHT ZONE UNDER A ROOFTOP MONITOR

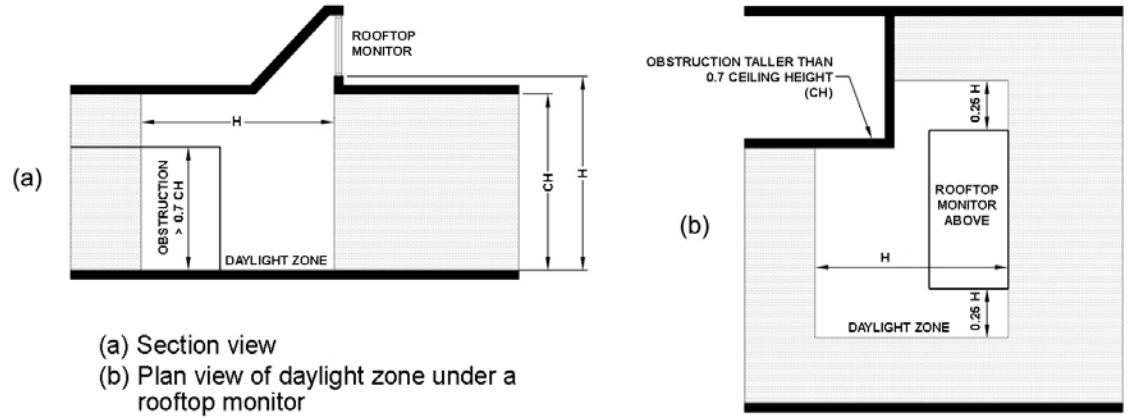

(a) Section view
(b) Plan view of daylight zone under a rooftop monitor

FIGURE C405.2.3.3(3)
DAYLIGHT ZONE UNDER A SLOPED ROOFTOP MONITOR

INTERNATIONAL CODE COUNCIL®
Copyright © 2019 ICC & NYSDOS. ALL RIGHTS RESERVED. Accessed by Lauren Gualdino (lgualdino@briarcliffmanor.org), (-) Order Number #100880972 on May 08, 2020 07:05 AM (PDT) pursuant to License Agreement with ICC & NYSDOS. No further reproduction, no

100880972

without rewiring, the wattage shall be one of the following:

1. The specified wattage of the luminaires, but not less than 8 W per linear foot (25 W/lin m).
2. The wattage limit of the permanent current-limiting devices protecting the system.
3. The wattage limit of the transformer supplying the system.

Other = The wattage of all other luminaires and lighting sources not covered previously and associated with interior lighting verified by data supplied by the manufacturer or other *approved* sources.

The connected power associated with the following lighting equipment and applications is not included in calculating total connected lighting power.

1. Television broadcast lighting for playing areas in sports arenas.
2. Emergency lighting automatically off during normal building operation.
3. Lighting in spaces specifically designed for use by occupants with special lighting needs, including those with visual impairment and other medical and age-related issues.
4. Casino gaming areas.
5. Mirror lighting in dressing rooms.
6. Task lighting for medical and dental purposes that is in addition to *general lighting* and controlled by an independent control device.
7. Display lighting for exhibits in galleries, museums and monuments that is in addition to *general lighting* and controlled by an independent control device.
8. Lighting for theatrical purposes, including performance, stage, film production and video production.
9. Lighting for photographic processes.
10. Lighting integral to equipment or instrumentation and installed by the manufacturer.
11. Task lighting for plant growth or maintenance.
12. Advertising signage or directional signage.
13. Lighting for food warming.
14. Lighting equipment that is for sale.
15. Lighting demonstration equipment in lighting education facilities.
16. Lighting approved because of safety considerations.
17. Lighting in retail display windows, provided that the display area is enclosed by ceiling-height partitions.
18. Furniture-mounted supplemental task lighting that is controlled by automatic shutoff.
19. Exit signs.

C405.3.2 Interior lighting power allowance. The total interior lighting power allowance (watts) is determined according to Table C405.3.2(1) using the Building Area Method, or Table C405.3.2(2) using the Space-by-Space Method, for all areas of the building covered in this permit.

C405.3.2.1 Building Area Method. For the Building Area Method, the interior lighting power allowance is the floor area for each building area type *listed* in Table C405.3.2(1) times the value from Table C405.3.2(1) for that area. For the purposes of this method, an "area" shall be defined as all contiguous spaces that accommodate or are associated with a single building area type, as *listed* in Table C405.3.2(1). Where this method is used to calculate the total interior lighting power for an entire building, each building area type shall be treated as a separate area.

C405.3.2.2 Space-by-Space Method. For the Space-by-Space Method, the interior lighting power allowance is determined by multiplying the floor area of each space times the value for the space type in Table C405.3.2(2) that most closely represents the proposed use of the space, and then summing the lighting power allowances for all spaces. Tradeoffs among spaces are permitted.

C405.3.2.2.1 Additional interior lighting power. Where using the Space-by-Space Method, an increase in the interior lighting power allowance is permitted for specific lighting functions. Additional power shall be permitted only where the specified lighting is installed and automatically controlled separately from the *general lighting*, to be turned off during nonbusiness hours. This additional power shall be used only for the specified luminaires and shall not be used for any other purpose. An increase in the interior lighting power allowance is permitted in the following cases:

1. For lighting equipment to be installed in sales areas specifically to highlight merchandise, the additional lighting power shall be determined in accordance with Equation 4-11.

   Additional interior lighting power allowance = 1000 W + (Retail Area 1 × 0.45 W/ft^2) + (Retail Area 2 × 0.45W/ft^2) + (Retail Area 3 × 1.05 W/ft^2) + (Retail Area 4 × 1.87 W/ft^2)

   For SI units:

   Additional interior lighting power allowance = 1000 W + (Retail Area 1 × 4.8 W/m^2) + (Retail Area 2 × 4.84 W/m^2) + (Retail Area 3 × 11 W/m^2) + (Retail Area 4 × 20 W/m^2)

   (Equation 4-11)

   where:

   Retail Area 1 = The floor area for all products not *listed* in Retail Area 2, 3 or 4.

INTERNATIONAL CODE COUNCIL® Copyright © 2019 ICC & NYSDOS. ALL RIGHTS RESERVED. Accessed by Lauren Gualdino (lgualdino@briarcliffmanor.org), (-) Order Number #100880972 on May 08, 2020 07:05 AM (PDT) pursuant to License Agreement with ICC & NYSDOS. No further reproduction, no

100880972

TABLE C405.3.2(1)
INTERIOR LIGHTING POWER ALLOWANCES: BUILDING AREA METHOD

BUILDING AREA TYPE	LPD (w/ft^2)
Automotive facility	0.71
Convention center	0.76
Courthouse	0.90
Dining: bar lounge/leisure	0.90
Dining: cafeteria/fast food	0.79
Dining: family	0.78
Dormitory[a, b]	0.61
Exercise center	0.65
Fire station[a]	0.53
Gymnasium	0.68
Health care clinic	0.82
Hospital[a]	1.05
Hotel/Motel[a, b]	0.75
Library	0.78
Manufacturing facility	0.90
Motion picture theater	0.83
Multifamily[c]	0.68
Museum	1.06
Office	0.79
Parking garage	0.15
Penitentiary	0.75
Performing arts theater	1.18
Police station	0.80
Post office	0.67
Religious building	0.94
Retail	1.06
School/university	0.81
Sports arena	0.87
Town hall	0.80
Transportation	0.61
Warehouse	0.48
Workshop	0.90

a. Where *sleeping units* are excluded from lighting power calculations by application of Section R405.1, neither the area of the *sleeping units* nor the wattage of lighting in the *sleeping units* is counted.

b. Where *dwelling units* are excluded from lighting power calculations by application of Section R405.1, neither the area of the *dwelling units* nor the wattage of lighting in the *dwelling units* is counted.

c. *Dwelling units* are excluded. Neither the area of the dwelling units nor the wattage of lighting in the *dwelling units* is counted.

TABLE C405.3.2(2)
INTERIOR LIGHTING POWER ALLOWANCES: SPACE-BY-SPACE METHOD

COMMON SPACE TYPES[a]	LPD (watts/sq.ft)
Atrium	
Less than 40 feet in height	0.03 per foot in total height
Greater than 40 feet in height	0.40 + 0.02 per foot in total height
Audience seating area	
In an auditorium	0.63
In a convention center	0.82
In a gymnasium	0.65
In a motion picture theater	1.14
In a penitentiary	0.28
In a performing arts theater	2.03
In a religious building	1.53
In a sports arena	0.43
Otherwise	0.43
Banking activity area	0.86
Breakroom (See Lounge/breakroom)	
Classroom/lecture hall/training room	
In a penitentiary	1.34
Otherwise	0.96
Computer room	1.33
Conference/meeting/multipurpose room	1.07
Copy/print room	0.56
Corridor	
In a facility for the visually impaired (and not used primarily by the staff)[b]	0.92
In a hospital	0.92
In a manufacturing facility	0.29
Otherwise	0.66
Courtroom	1.39
Dining area	
In bar/lounge or leisure dining	0.93
In cafeteria or fast food dining	0.63
In a facility for the visually impaired (and not used primarily by the staff)[b]	2.00
In family dining	0.71
In a penitentiary	0.96
Otherwise	0.63
Electrical/mechanical room	0.43
Emergency vehicle garage	0.41

(continued)

INTERNATIONAL CODE COUNCIL®
Copyright © 2019 ICC & NYSDOS. ALL RIGHTS RESERVED. Accessed by Lauren Gualdino (lgualdino@briarcliffmanor.org), (-) Order Number #100880972 on May 08, 2020 07:05 AM (PDT) pursuant to License Agreement with ICC & NYSDOS. No further reproduction, no

100880972

TABLE C405.3.2(2)—continued
INTERIOR LIGHTING POWER ALLOWANCES: SPACE-BY-SPACE METHOD

COMMON SPACE TYPES[a]	LPD (watts/sq.ft)
Food preparation area	1.06
Guestroom[c, d]	0.77
Laboratory	
In or as a classroom	1.20
Otherwise	1.45
Laundry/washing area	0.43
Loading dock, interior	0.58
Lobby	
For an elevator	0.68
In a facility for the visually impaired (and not used primarily by the staff)[b]	2.03
In a hotel	1.06
In a motion picture theater	0.45
In a performing arts theater	1.70
Otherwise	1.0
Locker room	0.48
Lounge/breakroom	
In a healthcare facility	0.78
Otherwise	0.62
Office	
Enclosed	0.93
Open plan	0.81
Parking area, interior	0.14
Pharmacy area	1.34
Restroom	
In a facility for the visually impaired (and not used primarily by the staff[b]	0.96
Otherwise	0.85
Sales area	1.22
Seating area, general	0.42
Stairway (see Space containing stairway)	
Stairwell	0.58
Storage room	0.46
Vehicular maintenance area	0.56
Workshop	1.14
BUILDING TYPE SPECIFIC SPACE TYPES[a]	**LPD (watts/sq.ft)**
Automotive (see Vehicular maintenance area)	
Convention Center—exhibit space	0.88
Dormitory—living quarters[c, d]	0.54
Facility for the visually impaired[b]	
In a chapel (and not used primarily by the staff)	1.06
In a recreation room (and not used primarily by the staff)	1.80
Fire Station—sleeping quarters[c]	0.20
Gymnasium/fitness center	
In an exercise area	0.50
In a playing area	0.82

(continued)

TABLE C405.3.2(2)—continued
INTERIOR LIGHTING POWER ALLOWANCES: SPACE-BY-SPACE METHOD

BUILDING TYPE SPECIFIC SPACE TYPES[a]	LPD (watts/sq.ft)
Healthcare facility	
In an exam/treatment room	1.68
In an imaging room	1.06
In a medical supply room	0.54
In a nursery	1.00
In a nurse's station	0.81
In an operating room	2.17
In a patient room[c]	0.62
In a physical therapy room	0.84
In a recovery room	1.03
Library	
In a reading area	0.82
In the stacks	1.20
Manufacturing facility	
In a detailed manufacturing area	0.93
In an equipment room	0.65
In an extra-high-bay area (greater than 50′ floor-to-ceiling height)	1.05
In a high-bay area (25-50′ floor-to-ceiling height)	0.75
In a low-bay area (less than 25′ floor-to-ceiling height)	0.96
Museum	
In a general exhibition area	1.05
In a restoration room	0.85
Performing arts theater—dressing room	0.36
Post office—sorting area	0.68
Religious buildings	
In a fellowship hall	0.55
In a worship/pulpit/choir area	1.53
Retail facilities	
In a dressing/fitting room	0.50
In a mall concourse	0.90
Sports arena—playing area	
For a Class I facility[e]	2.47
For a Class II facility[f]	1.96
For a Class III facility[g]	1.70
For a Class IV facility[h]	1.13
Transportation facility	
In a baggage/carousel area	0.45
In an airport concourse	0.31
At a terminal ticket counter	0.62

(continued)

INTERNATIONAL CODE COUNCIL®
Copyright © 2019 ICC & NYSDOS. ALL RIGHTS RESERVED. Accessed by Lauren Gualdino (lgualdino@briarcliffmanor.org), (-) Order Number #100880972 on May 08, 2020 07:05 AM (PDT) pursuant to License Agreement with ICC & NYSDOS. No further reproduction, no

100880972

TABLE C405.3.2(2)—continued
INTERIOR LIGHTING POWER ALLOWANCES: SPACE-BY-SPACE METHOD

BUILDING TYPE SPECIFIC SPACE TYPES[a]	LPD (watts/sq.ft)
Warehouse—storage area	
For medium to bulky, palletized items	0.35
For smaller, hand-carried items	0.69

a. In cases where both a common space type and a building area specific space type are *listed*, the building area specific space type shall apply.
b. A 'Facility for the Visually Impaired' is a facility that is licensed or will be licensed by local or state authorities for senior long-term care, adult daycare, senior support or people with special visual needs.
c. Where *sleeping units* are excluded from lighting power calculations by application of Section R405.1, neither the area of the *sleeping units* nor the wattage of lighting in the *sleeping units* is counted.
d. Where *dwelling units* are excluded from lighting power calculations by application of Section R405.1, neither the area of the *dwelling units* nor the wattage of lighting in the *dwelling units* is counted.
e. Class I facilities consist of professional facilities; and semiprofessional, collegiate, or club facilities with seating for 5,000 or more spectators.
f. Class II facilities consist of collegiate and semiprofessional facilities with seating for fewer than 5,000 spectators; club facilities with seating for between 2,000 and 5,000 spectators; and amateur league and high-school facilities with seating for more than 2,000 spectators.
g. Class III facilities consist of club, amateur league and high-school facilities with seating for 2,000 or fewer spectators.
h. Class IV facilities consist of elementary school and recreational facilities; and amateur league and high-school facilities without provision for spectators.

Retail Area 2 = The floor area used for the sale of vehicles, sporting goods and small electronics.

Retail Area 3 = The floor area used for the sale of furniture, clothing, cosmetics and artwork.

Retail Area 4 = The floor area used for the sale of jewelry, crystal and china.

Exception: Other merchandise categories are permitted to be included in Retail Areas 2 through 4, provided that justification documenting the need for additional lighting power based on visual inspection, contrast, or other critical display is approved by the *building official*.

2. For spaces in which lighting is specified to be installed in addition to the *general lighting* for the purpose of decorative appearance or for highlighting art or exhibits, provided that the additional lighting power shall be not more than 0.9 W/ft^2 (9.7 W/m^2) in lobbies and not more than 0.75 W/ft^2 (8.1 W/m^2) in other spaces.

C405.4 Exterior lighting power requirements (Mandatory). The total connected exterior lighting power calculated in accordance with Section C405.4.1 shall be not greater than the exterior lighting power allowance calculated in accordance with Section C405.4.2.

C405.4.1 Total connected exterior building exterior lighting power. The total exterior connected lighting power shall be the total maximum rated wattage of all lighting that is powered through the energy service for the building.

Exception: Lighting used for the following applications shall not be included.

1. Lighting *approved* because of safety considerations.
2. Emergency lighting automatically off during normal business operation.
3. Exit signs.
4. Specialized signal, directional and marker lighting associated with transportation.
5. Advertising signage or directional signage.
6. Integral to equipment or instrumentation and installed by its manufacturer.
7. Theatrical purposes, including performance, stage, film production and video production.
8. Athletic playing areas.
9. Temporary lighting.
10. Industrial production, material handling, transportation sites and associated storage areas.
11. Theme elements in theme/amusement parks.
12. Used to highlight features of art, public monuments, and the national flag.
13. Lighting for water features and swimming pools.
14. Lighting controlled from within *dwelling units*, where the lighting complies with Section R404.1.

C405.4.2 Exterior lighting power allowance. The total exterior lighting power allowance is the sum of the base site allowance plus the individual allowances for areas that are to be illuminated by lighting that is powered through the energy service for the building. Lighting power allowances are as specified in Table C405.4.2(2). The lighting *zone* for the building exterior is determined in accordance with Table C405.4.2(1) unless otherwise specified by the *building official*.

TABLE C405.4.2(1)
EXTERIOR LIGHTING ZONES

LIGHTING ZONE	DESCRIPTION
1	Developed areas of national parks, state parks, forest land, and rural areas
2	Areas predominantly consisting of residential zoning, neighborhood business districts, light industrial with limited nighttime use and residential mixed-use areas
3	All other areas not classified as lighting *zone* 1, 2 or 4
4	High-activity commercial districts in major metropolitan areas as designated by the local land use planning authority

INTERNATIONAL CODE COUNCIL®
Copyright © 2019 ICC & NYSDOS. ALL RIGHTS RESERVED. Accessed by Lauren Gualdino (lgualdino@briarcliffmanor.org), (-) Order Number #100880972 on May 08, 2020 07:05 AM (PDT) pursuant to License Agreement with ICC & NYSDOS. No further reproduction, no

100880972

C405.4.2.1 Additional exterior lighting power. Any increase in the exterior lighting power allowance is limited to the specific lighting applications indicated in Table C405.4.2(3). The additional power shall be used only for the luminaires that are serving these applications and shall not be used for any other purpose.

C405.4.3 Gas lighting (Mandatory). Gas-fired lighting appliances shall not be equipped with continuously burning pilot ignition systems.

C405.5 Dwelling electrical meter (Mandatory). Each *dwelling unit* located in a *Group R*-2 building shall have a separate electrical meter.

C405.6 Electrical transformers (Mandatory). Low-voltage dry-type distribution electric transformers shall meet the minimum efficiency requirements of Table C405.6 as tested and rated in accordance with the test procedure *listed* in DOE 10 CFR 431. The efficiency shall be verified through certification under an approved certification program or, where a certification program does not exist, the equipment efficiency ratings shall be supported by data furnished by the transformer manufacturer.

Exceptions: The following transformers are exempt:

1. Transformers that meet the *Energy Policy Act of 2005* exclusions based on the DOE 10 CFR 431 definition of special purpose applications.
2. Transformers that meet the *Energy Policy Act of 2005* exclusions that are not to be used in general purpose applications based on information provided in DOE 10 CFR 431.
3. Transformers that meet the *Energy Policy Act of 2005* exclusions with multiple voltage taps where the highest tap is not less than 20 percent more than the lowest tap.
4. Drive transformers.
5. Rectifier transformers.
6. Auto-transformers.
7. Uninterruptible power system transformers.
8. Impedance transformers.
9. Regulating transformers.
10. Sealed and nonventilating transformers.
11. Machine tool transformers.
12. Welding transformers.
13. Grounding transformers.
14. Testing transformers.

C405.7 Electric motors (Mandatory). Electric motors shall meet the minimum efficiency requirements of Tables C405.7(1) through C405.7(4) when tested and rated in accordance with the DOE 10 CFR 431. The efficiency shall be verified through certification under an approved certification program or, where a certification program does not exist, the equipment efficiency ratings shall be supported by data furnished by the motor manufacturer.

Exception: The standards in this section shall not apply to the following exempt electric motors:

1. Air-over electric motors.
2. Component sets of an electric motor.
3. Liquid-cooled electric motors.
4. Submersible electric motors.
5. Inverter-only electric motors.

C405.8 Vertical and horizontal transportation systems and equipment. Vertical and horizontal transportation systems and equipment shall comply with this section.

C405.8.1 Elevator cabs. For the luminaires in each elevator cab, not including signals and displays, the sum of the lumens divided by the sum of the watts shall be not less than 35 lumens per watt. *Ventilation* fans in elevators that do not have their own air-conditioning system shall not consume more than 0.33 watts/cfm at the maximum rated speed of the fan. Controls shall be provided that will de-energize *ventilation* fans and lighting systems when the elevator is stopped, unoccupied and with its doors closed for over 15 minutes.

C405.8.2 Escalators and moving walks. Escalators and moving walks shall comply with ASME A17.1/CSA B44 and shall have automatic controls configured to reduce speed to the minimum permitted speed in accordance with ASME A17.1/CSA B44 or applicable local code when not conveying passengers.

Exception: A variable voltage drive system that reduces operating voltage in response to light loading conditions is an alternative to the reduced speed function.

C405.8.2.1 Regenerative drive. An escalator designed either for one-way down operation only or for reversible operation shall have a variable frequency regenerative drive that supplies electrical energy to the building electrical system when the escalator is loaded with passengers whose combined weight exceeds 750 pounds (340 kg).

C405.9 Voltage drop in feeders and branch circuits. The total *voltage drop* across the combination of feeders and branch circuits shall not exceed 5 percent.

SECTION C406
ADDITIONAL EFFICIENCY PACKAGES

C406.1 Requirements. Buildings shall comply with one or more of the following:

1. More efficient HVAC performance in accordance with Section C406.2.
2. Reduced lighting power in accordance with Section C406.3.
3. Enhanced lighting controls in accordance with Section C406.4.
4. On-site supply of renewable energy in accordance with Section C406.5.
5. Provision of a dedicated outdoor air system for certain HVAC equipment in accordance with Section C406.6.

INTERNATIONAL CODE COUNCIL®
Copyright © 2019 ICC & NYSDOS. ALL RIGHTS RESERVED. Accessed by Lauren Gualdino (lgualdino@briarcliffmanor.org), (-) Order Number #100880972 on May 08, 2020 07:05 AM (PDT) pursuant to License Agreement with ICC & NYSDOS. No further reproduction, no

100880972

TABLE C405.4.2(2)
LIGHTING POWER ALLOWANCES FOR BUILDING EXTERIORS

	LIGHTING ZONES			
	Zone 1	Zone 2	Zone 3	Zone 4
Base Site Allowance	350 W	400 W	500 W	900 W
Uncovered Parking Areas				
Parking areas and drives	0.03W/ft^2	0.04 W/ft^2	0.06 W/ft^2	0.08 W/ft^2
Building Grounds				
Walkways and ramps less than 10 feet wide	0.5 W/linear foot	0.5 W/linear foot	0.6 W/linear foot	0.7 W/linear foot
Walkways and ramps 10 feet wide or greater, plaza areas, special feature areas	0.10 W/ft^2	0.10 W/ft^2	0.11 W/ft^2	0.14 W/ft^2
Dining areas	0.65 W/ft^2	0.65 W/ft^2	0.75 W/ft^2	0.95 W/ft^2
Stairways	0.6 W/ft^2	0.7 W/ft^2	0.7 W/ft^2	0.7 W/ft^2
Pedestrian tunnels	0.12 W/ft^2	0.12 W/ft^2	0.14 W/ft^2	0.21 W/ft^2
Landscaping	0.03 W/ft^2	0.04 W/ft^2	0.04 W/ft^2	0.04 W/ft^2
Building Entrances and Exits				
Pedestrian and vehicular entrances and exits	14 W/linear foot of opening	14 W/linear foot of opening	21 W/linear foot of opening	21 W/linear foot of opening
Entry canopies	0.20 W/ft^2	0.25 W/ft^2	0.4 W/ft^2	0.4 W/ft^2
Loading docks	0.35 W/ft^2	0.35 W/ft^2	0.35 W/ft^2	0.35 W/ft^2
Sales Canopies				
Free-standing and attached	0.40 W/ft^2	0.40 W/ft^2	0.6 W/ft^2	0.7 W/ft^2
Outdoor Sales				
Open areas (including vehicle sales lots)	0.20 W/ft^2	0.20 W/ft^2	0.35 W/ft^2	0.50 W/ft^2
Street frontage for vehicle sales lots in addition to “open area” allowance	No allowance	7 W/linear foot	7 W/linear foot	21 W/linear foot

For SI: 1 foot = 304.8 mm, 1 watt per square foot = W/0.0929 m^2.
W = watts.

TABLE C405.4.2(3)
INDIVIDUAL LIGHTING POWER ALLOWANCES FOR BUILDING EXTERIORS

	LIGHTING ZONES			
	Zone 1	Zone 2	Zone 3	Zone 4
Building facades	No allowance	0.075 W/ft^2 of gross above-grade wall area	0.113 W/ft^2 of gross above-grade wall area	0.15 W/ft^2 of gross above-grade wall area
Automated teller machines (ATM) and night depositories	135 W per location plus 45 W per additional ATM per location			
Uncovered entrances and gatehouse inspection stations at guarded facilities	0.5 W/ft^2 of area			
Uncovered loading areas for law enforcement, fire, ambulance and other emergency service vehicles	0.35 W/ft^2 of area			
Drive-up windows and doors	200 W per drive through			
Parking near 24-hour retail entrances.	400 W per main entry			

For SI: 1 watt per square foot = W/0.0929 m^2.
W = watts.

INTERNATIONAL CODE COUNCIL®
Copyright © 2019 ICC & NYSDOS. ALL RIGHTS RESERVED. Accessed by Lauren Gualdino (lgualdino@briarcliffmanor.org), (-) Order Number #100880972 on May 08, 2020 07:05 AM (PDT) pursuant to License Agreement with ICC & NYSDOS. No further reproduction, no

100880972

TABLE C405.6
MINIMUM NOMINAL EFFICIENCY LEVELS FOR 10 CFR 431 LOW-VOLTAGE DRY-TYPE DISTRIBUTION TRANSFORMERS

SINGLE-PHASE TRANSFORMERS		THREE-PHASE TRANSFORMERS	
kVA[a]	Efficiency (%)[b]	kVA[a]	Efficiency (%)[b]
15	97.70	15	97.89
25	98.00	30	98.23
37.5	98.20	45	98.40
50	98.30	75	98.60
75	98.50	112.5	98.74
100	98.60	150	98.83
167	98.70	225	98.94
250	98.80	300	99.02
333	98.90	500	99.14
—	—	750	99.23
—	—	1000	99.28

a. kiloVolt-Amp rating.
b. Nominal efficiencies shall be established in accordance with the DOE 10 CFR 431 test procedure for low-voltage dry-type transformers.

6. High-efficiency *service water heating* in accordance with Section C406.7.
7. Enhanced envelope performance in accordance with Section C406.8.
8. Reduced air *infiltration* in accordance with Section C406.9.

C406.1.1 Tenant spaces. Tenant spaces shall comply with Section C406.2, C406.3, C406.4, C406.6 or C406.7. Alternatively, tenant spaces shall comply with Section C406.5 where the entire building is in compliance.

Exception: Previously occupied tenant spaces that comply with this code in accordance with Section C501.

C406.2 More efficient HVAC equipment performance. Equipment shall exceed the minimum efficiency requirements *listed* in Tables C403.3.2(1) through C403.3.2(7) by 10 percent, in addition to the requirements of Section C403. Where multiple performance requirements are provided, the equipment shall exceed all requirements by 10 percent. *Variable refrigerant flow systems* shall exceed the energy efficiency provisions of ANSI/ASHRAE/IESNA 90.1 by 10 percent. Equipment not *listed* in Tables C403.3.2(1) through C403.3.2(7) shall be limited to 10 percent of the total *building system* capacity.

C406.3 Reduced lighting power. The total connected interior lighting power calculated in accordance with Section C405.3.1 shall be less than 90 percent of the total lighting power allowance calculated in accordance with Sections C405.2.1 through C405.2.3.

C406.4 Enhanced digital lighting controls. Interior lighting in the building shall have the following enhanced lighting controls that shall be located, scheduled and operated in accordance with Sections C405.2.1 through C405.2.3.

1. Luminaires shall be configured for continuous dimming.
2. Luminaires shall be addressed individually. Where individual addressability is not available for the luminaire class type, a controlled group of not more than four luminaries shall be allowed.
3. Not more than eight luminaires shall be controlled together in a *daylight zone.*
4. Fixtures shall be controlled through a digital control system that includes the following function:
   4.1. Control reconfiguration based on digital addressability.
   4.2. Load shedding.
   4.3. Individual user control of overhead general illumination in open offices.
   4.4. Occupancy sensors shall be capable of being reconfigured through the digital control system.
5. Construction documents shall include submittal of a Sequence of Operations, including a specification outlining each of the functions in Item 4.
6. Functional testing of lighting controls shall comply with Section C408.

C406.5 On-site renewable energy. The total minimum ratings of on-site renewable energy systems shall be one of the following:

1. Not less than 1.71 Btu/h per square foot (5.4 W/m^2) or 0.50 watts per square foot (5.4 W/m^2) of *conditioned floor area*.
2. Not less than 3 percent of the energy used within the building for building mechanical and *service water heating* equipment and lighting regulated in Chapter 4.

C406.6 Dedicated outdoor air system. Buildings containing equipment or systems regulated by Section C403.3.4, C403.4.3, C403.4.4, C403.4.5, C403.6, C403.8.4, C403.8.5, C403.8.5.1, C403.9.1, C403.9.2, C403.9.3 or C403.9.4 shall be equipped with an independent *ventilation* system designed to provide not less than the minimum 100-percent outdoor air to each individual occupied space, as specified by the *Mechanical Code of New York State.* The *ventilation* system shall be capable of total energy recovery. The HVAC system shall

INTERNATIONAL CODE COUNCIL®
Copyright © 2019 ICC & NYSDOS. ALL RIGHTS RESERVED. Accessed by Lauren Gualdino (lgualdino@briarcliffmanor.org), (-) Order Number #100880972 on May 08, 2020 07:05 AM (PDT) pursuant to License Agreement with ICC & NYSDOS. No further reproduction, no

100880972

TABLE C405.7(1)
MINIMUM NOMINAL FULL-LOAD EFFICIENCY FOR NEMA DESIGN A, NEMA DESIGN B, AND *IEC DESIGN N MOTORS* (EXCLUDING FIRE PUMP) ELECTRIC MOTORS AT 60 HZ[a, b]

MOTOR HORSEPOWER (STANDARD KILOWATT EQUIVALENT)	NOMINAL FULL-LOAD EFFICIENCY (%) AS OF JUNE 1, 2016							
	2 Pole		4 Pole		6 Pole		8 Pole	
	Enclosed	Open	Enclosed	Open	Enclosed	Open	Enclosed	Open
1 (0.75)	77.0	77.0	85.5	85.5	82.5	82.5	75.5	75.5
1.5 (1.1)	84.0	84.0	86.5	86.5	87.5	86.5	78.5	77.0
2 (1.5)	85.5	85.5	86.5	86.5	88.5	87.5	84.0	86.5
3 (2.2)	86.5	85.5	89.5	89.5	89.5	88.5	85.5	87.5
5 (3.7)	88.5	86.5	89.5	89.5	89.5	89.5	86.5	88.5
7.5 (5.5)	89.5	88.5	91.7	91.0	91.0	90.2	86.5	89.5
10 (7.5)	90.2	89.5	91.7	91.7	91.0	91.7	89.5	90.2
15 (11)	91.0	90.2	92.4	93.0	91.7	91.7	89.5	90.2
20 (15)	91.0	91.0	93.0	93.0	91.7	92.4	90.2	91.0
25 (18.5)	91.7	91.7	93.6	93.6	93.0	93.0	90.2	91.0
30 (22)	91.7	91.7	93.6	94.1	93.0	93.6	91.7	91.7
40 (30)	92.4	92.4	94.1	94.1	94.1	94.1	91.7	91.7
50 (37)	93.0	93.0	94.5	94.5	94.1	94.1	92.4	92.4
60 (45)	93.6	93.6	95.0	95.0	94.5	94.5	92.4	93.0
75 (55)	93.6	93.6	95.4	95.0	94.5	94.5	93.6	94.1
100 (75)	94.1	93.6	95.4	95.4	95.0	95.0	93.6	94.1
125 (90)	95.0	94.1	95.4	95.4	95.0	95.0	94.1	94.1
150 (110)	95.0	94.1	95.8	95.8	95.8	95.4	94.1	94.1
200 (150)	95.4	95.0	96.2	95.8	95.8	95.4	94.5	94.1
250 (186)	95.8	95.0	96.2	95.8	95.8	95.8	95.0	95.0
300 (224)	95.8	95.4	96.2	95.8	95.8	95.8		
350 (261)	95.8	95.4	96.2	95.8	95.8	95.8		
400 (298)	95.8	95.8	96.2	95.8				
450 (336)	95.8	96.2	96.2	96.2				
500 (373)	95.8	96.2	96.2	96.2				

a. Nominal efficiencies shall be established in accordance with DOE 10 CFR 431.

b. For purposes of determining the required minimum nominal full-load efficiency of an electric motor that has a horsepower or kilowatt rating between two horsepower or two kilowatt ratings *listed* in this table, each such motor shall be deemed to have a *listed* horsepower or kilowatt rating, determined as follows:

1. A horsepower at or above the midpoint between the two consecutive horsepowers shall be rounded up to the higher of the two horsepowers.
2. A horsepower below the midpoint between the two consecutive horsepowers shall be rounded down to the lower of the two horsepowers.
3. A kilowatt rating shall be directly converted from kilowatts to horsepower using the formula: 1 kilowatt = (1/0.746) horsepower. The conversion should be calculated to three significant decimal places, and the resulting horsepower shall be rounded in accordance with No. 1 or No. 2 above, as applicable.

INTERNATIONAL CODE COUNCIL®
Copyright © 2019 ICC & NYSDOS. ALL RIGHTS RESERVED. Accessed by Lauren Gualdino (lgualdino@briarcliffmanor.org), (-) Order Number #100880972 on May 08, 2020 07:05 AM (PDT) pursuant to License Agreement with ICC & NYSDOS. No further reproduction, no

100880972

TABLE C405.7(2)
MINIMUM NOMINAL FULL-LOAD EFFICIENCY FOR NEMA DESIGN C AND *IEC DESIGN H MOTORS* AT 60 HZ[a, b]

MOTOR HORSEPOWER (STANDARD KILOWATT EQUIVALENT)	NOMINAL FULL-LOAD EFFICIENCY (%) AS OF JUNE 1, 2016					
	4 Pole		6 Pole		8 Pole	
	Enclosed	Open	Enclosed	Open	Enclosed	Open
1 (0.75)	85.5	85.5	82.5	82.5	75.5	75.5
1.5 (1.1)	86.5	86.5	87.5	86.5	78.5	77.0
2 (1.5)	86.5	86.5	88.5	87.5	84.0	86.5
3 (2.2)	89.5	89.5	89.5	88.5	85.5	87.5
5 (3.7)	89.5	89.5	89.5	89.5	86.5	88.5
7.5 (5.5)	91.7	91.0	91.0	90.2	86.5	89.5
10 (7.5)	91.7	91.7	91.0	91.7	89.5	90.2
15 (11)	92.4	93.0	91.7	91.7	89.5	90.2
20 (15)	93.0	93.0	91.7	92.4	90.2	91.0
25 (18.5)	93.6	93.6	93.0	93.0	90.2	91.0
30 (22)	93.6	94.1	93.0	93.6	91.7	91.7
40 (30)	94.1	94.1	94.1	94.1	91.7	91.7
50 (37)	94.5	94.5	94.1	94.1	92.4	92.4
60 (45)	95.0	95.0	94.5	94.5	92.4	93.0
75 (55)	95.4	95.0	94.5	94.5	93.6	94.1
100 (75)	95.4	95.4	95.0	95.0	93.6	94.1
125 (90)	95.4	95.4	95.0	95.0	94.1	94.1
150 (110)	95.8	95.8	95.8	95.4	94.1	94.1
200 (150)	96.2	95.8	95.8	95.4	94.5	94.1

a. Nominal efficiencies shall be established in accordance with DOE 10 CFR 431.

b. For purposes of determining the required minimum nominal full-load efficiency of an electric motor that has a horsepower or kilowatt rating between two horsepower or two kilowatt ratings *listed* in this table, each such motor shall be deemed to have a *listed* horsepower or kilowatt rating, determined as follows:
   1. A horsepower at or above the midpoint between the two consecutive horsepowers shall be rounded up to the higher of the two horsepowers.
   2. A horsepower below the midpoint between the two consecutive horsepowers shall be rounded down to the lower of the two horsepowers.
   3. A kilowatt rating shall be directly converted from kilowatts to horsepower using the formula: 1 kilowatt = (1/0.746) horsepower. The conversion should be calculated to three significant decimal places, and the resulting horsepower shall be rounded in accordance with No. 1 or No. 2 above, as applicable.

TABLE C405.7(3)
MINIMUM AVERAGE FULL-LOAD EFFICIENCY POLYPHASE SMALL ELECTRIC MOTORS[a]

MOTOR HORSEPOWER	OPEN MOTORS			
	Number of Poles	2	4	6
	Synchronous Speed (RPM)	3600	1800	1200
0.25		65.6	69.5	67.5
0.33		69.5	73.4	71.4
0.50		73.4	78.2	75.3
0.75		76.8	81.1	81.7
1		77.0	83.5	82.5
1.5		84.0	86.5	83.8
2		85.5	86.5	N/A
3		85.5	86.9	N/A

a. Average full-load efficiencies shall be established in accordance with DOE 10 CFR 431.

INTERNATIONAL CODE COUNCIL®
Copyright © 2019 ICC & NYSDOS. ALL RIGHTS RESERVED. Accessed by Lauren Gualdino (lgualdino@briarcliffmanor.org), (-) Order Number #100880972 on May 08, 2020 07:05 AM (PDT) pursuant to License Agreement with ICC & NYSDOS. No further reproduction, no

100880972

TABLE C405.7(4)
MINIMUM AVERAGE FULL-LOAD EFFICIENCY FOR
CAPACITOR-START CAPACITOR-RUN AND CAPACITOR-START INDUCTION-RUN SMALL ELECTRIC MOTORS[a]

MOTOR HORSEPOWER	OPEN MOTORS			
	Number of Poles	2	4	6
	Synchronous Speed (RPM)	3600	1800	1200
0.25		66.6	68.5	62.2
0.33		70.5	72.4	66.6
0.50		72.4	76.2	76.2
0.75		76.2	81.8	80.2
1		80.4	82.6	81.1
1.5		81.5	83.8	N/A
2		82.9	84.5	N/A
3		84.1	N/A	N/A

a. Average full-load efficiencies shall be established in accordance with DOE 10 CFR 431.

include supply-air temperature controls that automatically reset the supply-air temperature in response to representative building loads, or to outdoor air temperatures. The controls shall reset the supply-air temperature not less than 25 percent of the difference between the design supply-air temperature and the design room-air temperature.

C406.7 Reduced energy use in service water heating. Buildings shall be of the following types to use this compliance method:

1. *Group R*-1: Boarding houses, hotels or motels.
2. Group I-2: Hospitals, psychiatric hospitals and nursing homes.
3. Group A-2: Restaurants and banquet halls or buildings containing food preparation areas.
4. Group F: Laundries.
5. *Group R*-2.
6. Group A-3: Health clubs and spas.
7. Buildings showing a service hot water load of 10 percent or more of total building energy loads, as shown with an *energy analysis* as described in Section C407.

C406.7.1 Load fraction. The building service water-heating system shall have one or more of the following that are sized to provide not less than 60 percent of the building's annual hot water requirements, or sized to provide 100 percent of the building's annual hot water requirements if the building shall otherwise comply with Section C403.9.5:

1. Waste heat recovery from service hot water, heat-recovery chillers, building equipment, or process equipment.
2. *On-site renewable energy* water-heating systems.

C406.8 Enhanced envelope performance. The total UA of the *building thermal envelope* as designed shall be not less than 15 percent below the total UA of the *building thermal envelope* in accordance with Section C402.1.5.

C406.9 Reduced air infiltration. Air *infiltration* shall be verified by whole-building pressurization testing conducted in accordance with ASTM E779 or ASTM E1827 by an independent third party. The measured air-leakage rate of the building envelope shall not exceed 0.25 cfm/ft^2 (2.0 L/s × m^2) under a pressure differential of 0.3 inches water column (75 Pa), with the calculated surface area being the sum of the above- and below-grade building envelope. A report that includes the tested surface area, floor area, air by volume, stories above grade, and leakage rates shall be submitted to the *building official* and the building owner.

Exception: For buildings having over 250,000 square feet (25 000 m^2) of *conditioned floor area*, air leakage testing need not be conducted on the whole building where testing is conducted on representative above-grade sections of the building. Tested areas shall total not less than 25 percent of the *conditioned floor area* and shall be tested in accordance with this section.

SECTION C407
TOTAL BUILDING PERFORMANCE

C407.1 Scope. This section establishes criteria for compliance using total building performance. The following systems and loads shall be included in determining the total building performance: heating systems, cooling systems, *service water heating*, fan systems, lighting power, receptacle loads and process loads.

Exception: Energy used to recharge or refuel vehicles that are used for on-road and off-site transportation purposes.

C407.2 Mandatory requirements. Compliance with this section requires compliance with Sections C402.5, C403.2, C403.3 through C403.3.2, C403.4 through C403.4.2.3, C403.5.5, C403.7, C403.8.1 through C403.8.4, C403.10.1 through C403.10.3, C403.11, C403.12, C404 and C405.

C407.3 Performance-based compliance. Compliance based on total building performance requires that a proposed building (*proposed design*) be shown to have an annual *energy*

INTERNATIONAL CODE COUNCIL®
Copyright © 2019 ICC & NYSDOS. ALL RIGHTS RESERVED. Accessed by Lauren Gualdino (lgualdino@briarcliffmanor.org), (-) Order Number #100880972 on May 08, 2020 07:05 AM (PDT) pursuant to License Agreement with ICC & NYSDOS. No further reproduction, no

100880972

cost that is less than or equal to the annual energy cost of the *standard reference design*. Energy prices shall be taken from a source *approved* by the *building official*, such as the Department of Energy, Energy Information Administration's *State Energy Price and Expenditure Report. Building officials* shall be permitted to require time-of-use pricing in *energy cost* calculations. The reduction in *energy cost* of the *proposed design* associated with *on-site renewable energy* shall be not more than 5 percent of the total energy cost. The amount of renewable energy purchased from off-site sources shall be the same in the *standard reference design* and the *proposed design*.

Exception: Jurisdictions that require site energy (1 kWh = 3413 Btu) rather than *energy cost* as the metric of comparison.

C407.4 Documentation. Documentation verifying that the methods and accuracy of compliance software tools conform to the provisions of this section shall be provided to the *building official*.

C407.4.1 Compliance report. Permit submittals shall include a report documenting that the *proposed design* has annual *energy costs* less than or equal to the annual *energy costs* of the *standard reference design*. The compliance documentation shall include the following information:

1. Address of the building.
2. An inspection checklist documenting the building component characteristics of the *proposed design* as specified in Table C407.5.1(1). The inspection checklist shall show the estimated annual *energy cost* for both the *standard reference design* and the *proposed design*.
3. Name of individual completing the compliance report.
4. Name and version of the compliance software tool.

C407.4.2 Additional documentation. The *building official* shall be permitted to require the following documents:

1. Documentation of the building component characteristics of the *standard reference design*.
2. Thermal zoning diagrams consisting of floor plans showing the thermal zoning scheme for *standard reference design* and *proposed design*.
3. Input and output reports from the *energy analysis* simulation program containing the complete input and output files, as applicable. The output file shall include energy use totals and energy use by energy source and end-use served, total hours that space conditioning loads are not met and any errors or warning messages generated by the simulation tool as applicable.
4. An explanation of any error or warning messages appearing in the simulation tool output.
5. A certification signed by the builder providing the building component characteristics of the *proposed design* as given in Table C407.5.1(1).
6. Documentation of the reduction in energy use associated with *on-site renewable energy*.

C407.5 Calculation procedure. Except as specified by this section, the *standard reference design* and *proposed design* shall be configured and analyzed using identical methods and techniques.

C407.5.1 Building specifications. The *standard reference design* and *proposed design* shall be configured and analyzed as specified by Table C407.5.1(1). Table C407.5.1(1) shall include by reference all notes contained in Table C402.1.4.

C407.5.2 Thermal blocks. The *standard reference design* and *proposed design* shall be analyzed using identical thermal blocks as specified in Section C407.5.2.1, C407.5.2.2 or C407.5.2.3.

C407.5.2.1 HVAC zones designed. Where HVAC *zones* are defined on HVAC design drawings, each HVAC *zone* shall be modeled as a separate thermal block.

Exception: Different HVAC *zones* shall be allowed to be combined to create a single thermal block or identical thermal blocks to which multipliers are applied, provided that:

1. The space use classification is the same throughout the thermal block.
2. All HVAC *zones* in the thermal block that are adjacent to glazed *exterior walls* face the same orientation or their orientations are within 45 degrees (0.79 rad) of each other.
3. All of the *zones* are served by the same HVAC system or by the same kind of HVAC system.

C407.5.2.2 HVAC zones not designed. Where HVAC *zones* have not yet been designed, thermal blocks shall be defined based on similar internal load densities, occupancy, lighting, thermal and temperature schedules, and in combination with the following guidelines:

1. Separate thermal blocks shall be assumed for interior and perimeter spaces. Interior spaces shall be those located more than 15 feet (4572 mm) from an *exterior wall*. Perimeter spaces shall be those located closer than 15 feet (4572 mm) from an *exterior wall*.
2. Separate thermal blocks shall be assumed for spaces adjacent to glazed *exterior walls*: a separate *zone* shall be provided for each orientation, except orientations that differ by not more than 45 degrees (0.79 rad) shall be permitted to be considered to be the same orientation. Each *zone* shall include floor area that is 15 feet (4572 mm) or less from a glazed

INTERNATIONAL CODE COUNCIL®
Copyright © 2019 ICC & NYSDOS. ALL RIGHTS RESERVED. Accessed by Lauren Gualdino (lgualdino@briarcliffmanor.org), (-) Order Number #100880972 on May 08, 2020 07:05 AM (PDT) pursuant to License Agreement with ICC & NYSDOS. No further reproduction, no

100880972

perimeter wall, except that floor area within 15 feet (4572 mm) of glazed perimeter walls having more than one orientation shall be divided proportionately between *zones*.

3. Separate thermal blocks shall be assumed for spaces having floors that are in contact with the ground or exposed to ambient conditions from *zones* that do not share these features.
4. Separate thermal blocks shall be assumed for spaces having exterior ceiling or roof assemblies from *zones* that do not share these features.

C407.5.2.3 Group R-2 occupancy buildings. *Group R-2* occupancy spaces shall be modeled using one thermal block per space except that those facing the same orientations are permitted to be combined into one thermal block. Corner units and units with roof or floor loads shall only be combined with units sharing these features.

C407.6 Calculation software tools. Calculation procedures used to comply with this section shall be software tools capable of calculating the annual energy consumption of all building elements that differ between the *standard reference design* and the *proposed design* and shall include the following capabilities.

1. Building operation for a full calendar year (8,760 hours).
2. Climate data for a full calendar year (8,760 hours) and shall reflect *approved* coincident hourly data for temperature, solar radiation, humidity and wind speed for the building location.
3. Ten or more thermal zones.
4. Thermal mass effects.
5. Hourly variations in occupancy, illumination, receptacle loads, thermostat settings, mechanical *ventilation*, HVAC equipment availability, service hot water usage and any process loads.
6. Part-load performance curves for mechanical equipment.
7. Capacity and efficiency correction curves for mechanical heating and cooling equipment.
8. Printed *building official* inspection checklist listing each of the *proposed design* component characteristics from Table C407.5.1(1) determined by the analysis to provide compliance, along with their respective performance ratings including, but not limited to, *R-value*, *U-factor*, SHGC, HSPF, AFUE, SEER, EF.

C407.6.1 Specific approval. Performance analysis tools complying with the applicable subsections of Section C407 and tested according to ASHRAE Standard 140 shall be permitted to be *approved*. Tools are permitted to be *approved* based on meeting a specified threshold for a jurisdiction. The *building official* shall be permitted to approve tools for a specified application or limited scope.

C407.6.2 Input values. Where calculations require input values not specified by Sections C402, C403, C404 and C405, those input values shall be taken from an *approved* source.

C407.6.3 Exceptional calculation methods. Where the simulation program does not model a design, material or device of the *proposed design*, an exceptional calculation method shall be used where approved by the *building official*. Where there are multiple designs, materials or devices that the simulation program does not model, each shall be calculated separately and exceptional savings determined for each. The total exceptional savings shall not constitute more than half of the difference between the baseline building performance and the proposed building performance. Applications for approval of an exceptional method shall include all of the following:

1. Step-by-step documentation of the exceptional calculation method performed, detailed enough to reproduce the results.
2. Copies of all spreadsheets used to perform the calculations.
3. A sensitivity analysis of energy consumption where each of the input parameters is varied from half to double the value assumed.
4. The calculations shall be performed on a time step basis consistent with the simulation program used.
5. The performance rating calculated with and without the exceptional calculation method.

SECTION C408
MAINTENANCE INFORMATION AND SYSTEM COMMISSIONING

C408.1 General. This section covers the provision of maintenance information and the commissioning of, and the functional testing requirements for, *building systems.*

C408.1.1 Building operations and maintenance information. The building operations and maintenance documents shall be provided to the owner and shall consist of manufacturers' information, specifications and recommendations; programming procedures and data points; narratives; and other means of illustrating to the owner how the building, equipment and systems are intended to be installed, maintained and operated. Required regular maintenance actions for equipment and systems shall be clearly stated on a readily visible label. The label shall include the title or publication number for the operation and maintenance manual for that particular model and type of product.

C408.2 Mechanical systems and service water-heating systems commissioning and completion requirements. Prior to the final mechanical and plumbing inspections, the

INTERNATIONAL CODE COUNCIL®
Copyright © 2019 ICC & NYSDOS. ALL RIGHTS RESERVED. Accessed by Lauren Gualdino (lgualdino@briarcliffmanor.org), (-) Order Number #100880972 on May 08, 2020 07:05 AM (PDT) pursuant to License Agreement with ICC & NYSDOS. No further reproduction, no

100880972

TABLE C407.5.1(1)
SPECIFICATIONS FOR THE STANDARD REFERENCE AND PROPOSED DESIGNS

BUILDING COMPONENT CHARACTERISTICS	STANDARD REFERENCE DESIGN	PROPOSED DESIGN
Space use classification	Same as proposed	The space use classification shall be chosen in accordance with Table C405.5.2 for all areas of the building covered by this permit. Where the space use classification for a building is not known, the building shall be categorized as an office building.
Roofs	Type: Insulation entirely above deck	As proposed
	Gross area: same as proposed	As proposed
	U-factor: as specified in Table C402.1.4	As proposed
	Solar absorptance: 0.75	As proposed
	Emittance: 0.90	As proposed
Walls, above-grade	Type: Mass wall where proposed wall is mass; otherwise steel-framed wall	As proposed
	Gross area: same as proposed	As proposed
	U-factor: as specified in Table C402.1.4	As proposed
	Solar absorptance: 0.75	As proposed
	Emittance: 0.90	As proposed
Walls, below-grade	Type: Mass wall	As proposed
	Gross area: same as proposed	As proposed
	U-factor: as specified in Table C402.1.4 with insulation layer on interior side of walls	As proposed
Floors, above-grade	Type: joist/framed floor	As proposed
	Gross area: same as proposed	As proposed
	U-factor: as specified in Table C402.1.4	As proposed
Floors, slab-on-grade	Type: Unheated	As proposed
	F-factor: as specified in Table C402.1.4	As proposed
Opaque doors	Type: Swinging	As proposed
	Area: Same as proposed	As proposed
	U-factor: as specified in Table C402.1.4	As proposed
Vertical fenestration other than opaque doors	Area 1. The proposed vertical fenestration area; where the proposed vertical fenestration area is less than 40 percent of above-grade wall area. 2. 40 percent of above-grade wall area; where the proposed vertical fenestration area is 40 percent or more of the above-grade wall area.	As proposed
	U-factor: as specified in Table C402.4	As proposed
	SHGC: as specified in Table C402.4 except that for climates with no requirement (NR) SHGC = 0.40 shall be used	As proposed
	External shading and PF: None	As proposed
Skylights	Area 1. The proposed skylight area; where the proposed skylight area is less than that permitted by Section C402.1. 2. The area permitted by Section C402.1; where the proposed skylight area exceeds that permitted by Section C402.1	As proposed
	U-factor: as specified in Table C402.4	As proposed
	SHGC: as specified in Table C402.4 except that for climates with no requirement (NR) SHGC = 0.40 shall be used.	As proposed
Lighting, interior	The interior lighting power shall be determined in accordance with Section C405.3.2. Where the occupancy of the building is not known, the lighting power density shall be 1.0 Watt per square foot (10.7 W/m^2) based on the categorization of buildings with unknown space classification as offices.	As proposed
Lighting, exterior	The lighting power shall be determined in accordance with Table C405.4.2(2) and C405.4.2(3). Areas and dimensions of surfaces shall be the same as proposed.	As proposed

(continued)

INTERNATIONAL CODE COUNCIL®
Copyright © 2019 ICC & NYSDOS. ALL RIGHTS RESERVED. Accessed by Lauren Gualdino (lgualdino@briarcliffmanor.org), (-) Order Number #100880972 on May 08, 2020 07:05 AM (PDT) pursuant to License Agreement with ICC & NYSDOS. No further reproduction, no

100880972

TABLE C407.5.1(1)—continued
SPECIFICATIONS FOR THE STANDARD REFERENCE AND PROPOSED DESIGNS

BUILDING COMPONENT CHARACTERISTICS	STANDARD REFERENCE DESIGN	PROPOSED DESIGN
Internal gains	Same as proposed	Receptacle, motor and process loads shall be modeled and estimated based on the space use classification. End-use load components within and associated with the building shall be modeled to include, but not be limited to, the following: exhaust fans, parking garage *ventilation* fans, exterior building lighting, swimming pool heaters and pumps, elevators, escalators, refrigeration equipment and cooking equipment.
Schedules	Same as proposed **Exception:** Thermostat settings and schedules for HVAC systems that utilize radiant heating, radiant cooling and elevated air speed, provided that equivalent levels of occupant thermal comfort are demonstrated by means of equal Standard Effective Temperature as calculated in Normative Appendix B of ASHRAE Standard 55.	Operating schedules shall include hourly profiles for daily operation and shall account for variations between weekdays, weekends, holidays and any seasonal operation. Schedules shall model the time-dependent variations in occupancy, illumination, receptacle loads, thermostat settings, mechanical *ventilation*, HVAC equipment availability, service hot water usage and any process loads. The schedules shall be typical of the proposed building type as determined by the designer and approved by the jurisdiction.
Mechanical ventilation	Same as proposed	As proposed, in accordance with Section C403.2.2.
Heating systems	Fuel type: same as *proposed design*	As proposed
	Equipment type[a]: as specified in Tables C407.5.1(2) and C407.5.1(3)	As proposed
	Efficiency: as specified in Tables C403.3.2(4) and C403.3.2(5)	As proposed
	Capacity[b]: sized proportionally to the capacities in the proposed design based on sizing runs, and shall be established such that no smaller number of unmet heating load hours and no larger heating capacity safety factors are provided than in the *proposed design*.	As proposed
Cooling systems	Fuel type: same as *proposed design*	As proposed
	Equipment type[c]: as specified in Tables C407.5.1(2) and C407.5.1(3)	As proposed
	Efficiency: as specified in Tables C403.3.2(1), C403.3.2(2) and C403.3.2(3)	As proposed
	Capacity[b]: sized proportionally to the capacities in the *proposed design* based on sizing runs, and shall be established such that no smaller number of unmet cooling load hours and no larger cooling capacity safety factors are provided than in the *proposed design*.	As proposed
	Economizer[d]: same as proposed, in accordance with Section C403.5.	As proposed
Service water heating[e]	Fuel type: same as proposed	As proposed
	Efficiency: as specified in Table C404.2	For *Group R*, as proposed multiplied by SWHF. For other than *Group R*, as proposed multiplied by efficiency as provided by the manufacturer of the DWHR unit.
	Capacity: same as proposed	As proposed
	Where no service water hot water system exists or is specified in the *proposed design*, no service hot water heating shall be modeled.	

SWHF = Service water heat recovery factor, DWHR = Drain water heat recovery.

a. Where no heating system exists or has been specified, the heating system shall be modeled as fossil fuel. The system characteristics shall be identical in both the *standard reference design* and *proposed design*.

b. The ratio between the capacities used in the annual simulations and the capacities determined by sizing runs shall be the same for both the *standard reference design* and *proposed design*.

c. Where no cooling system exists or no cooling system has been specified, the cooling system shall be modeled as an air-cooled single-*zone* system, one unit per thermal *zone*. The system characteristics shall be identical in both the *standard reference design* and *proposed design*.

d. If an economizer is required in accordance with Table C403.5(1) and where no economizer exists or is specified in the *proposed design*, then a supply-air economizer shall be provided in the *standard reference design* in accordance with Section C403.5.

e. The SWHF shall be applied as follows:

1. Where potable water from the DWHR unit supplies not less than one shower and not greater than two showers, of which the drain water from the same showers flows through the DWHR unit then SWHF = [1 – (DWHR unit efficiency • 0.36)].
2. Where potable water from the DWHR unit supplies not less than three showers and not greater than four showers, of which the drain water from the same showers flows through the DWHR unit then SWHF = [1 – (DWHR unit efficiency • 0.33)].
3. Where potable water from the DWHR unit supplies not less than five showers and not greater than six showers, of which the drain water from the same showers flows through the DWHR unit, then SWHF = [1 – (DWHR unit efficiency • 0.26)].
4. Where Items 1 through 3 are not met, SWHF = 1.0.

INTERNATIONAL CODE COUNCIL®
Copyright © 2019 ICC & NYSDOS. ALL RIGHTS RESERVED. Accessed by Lauren Gualdino (lgualdino@briarcliffmanor.org), (-) Order Number #100880972 on May 08, 2020 07:05 AM (PDT) pursuant to License Agreement with ICC & NYSDOS. No further reproduction, no

100880972

TABLE C407.5.1(2)
HVAC SYSTEMS MAP

CONDENSER COOLING SOURCE[a]	HEATING SYSTEM CLASSIFICATION[b]	STANDARD REFERENCE DESIGN HVC SYSTEM TYPE[c]		
		Single-zone Residential System	Single-zone Nonresidential System	All Other
Water/ground	Electric resistance	System 5	System 5	System 1
	Heat pump	System 6	System 6	System 6
	Fossil fuel	System 7	System 7	System 2
Air/none	Electric resistance	System 8	System 9	System 3
	Heat pump	System 8	System 9	System 3
	Fossil fuel	System 10	System 11	System 4

a. Select "water/ground" where the *proposed design* system condenser is water or evaporatively cooled; select "air/none" where the condenser is air cooled. Closed-circuit dry coolers shall be considered to be air cooled. Systems utilizing district cooling shall be treated as if the condenser water type were "water." Where mechanical cooling is not specified or the mechanical cooling system in the *proposed design* does not require heat rejection, the system shall be treated as if the condenser water type were "Air." For *proposed designs* with ground-source or groundwater-source heat pumps, the *standard reference design* HVAC system shall be water-source heat pump (System 6).

b. Select the path that corresponds to the *proposed design* heat source: electric resistance, heat pump (including air source and water source), or fuel fired. Systems utilizing district heating (steam or hot water) and systems without heating capability shall be treated as if the heating system type were "fossil fuel." For systems with mixed fuel heating sources, the system or systems that use the secondary heating source type (the one with the smallest total installed output capacity for the spaces served by the system) shall be modeled identically in the *standard reference design* and the primary heating source type shall be used to determine *standard reference design* HVAC system type.

c. Select the *standard reference design* HVAC system category: The system under "single-*zone* residential system" shall be selected where the HVAC system in the *proposed design* is a single-*zone* system and serves a Group R occupancy. The system under "single-*zone* nonresidential system" shall be selected where the HVAC system in the *proposed design* is a single-*zone* system and serves other than Group R occupancy. The system under "all other" shall be selected for all other cases.

INTERNATIONAL CODE COUNCIL®
Copyright © 2019 ICC & NYSDOS. ALL RIGHTS RESERVED. Accessed by Lauren Gualdino (lgualdino@briarcliffmanor.org), (-) Order Number #100880972 on May 08, 2020 07:05 AM (PDT) pursuant to License Agreement with ICC & NYSDOS. No further reproduction, no

100880972

TABLE C407.5.1(3)
SPECIFICATIONS FOR THE STANDARD REFERENCE DESIGN HVAC SYSTEM DESCRIPTIONS

SYSTEM NO.	SYSTEM TYPE	FAN CONTROL	COOLING TYPE	HEATING TYPE
1	Variable air volume with parallel fan-powered boxes[a]	VAV[d]	Chilled water[e]	Electric resistance
2	Variable air volume with reheat[b]	VAV[d]	Chilled water[e]	Hot water fossil fuel boiler[f]
3	Packaged variable air volume with parallel fan-powered boxes[a]	VAV[d]	Direct expansion[c]	Electric resistance
4	Packaged variable air volume with reheat[b]	VAV[d]	Direct expansion[c]	Hot water fossil fuel boiler[f]
5	Two-pipe fan coil	Constant volume[i]	Chilled water[e]	Electric resistance
6	Water-source heat pump	Constant volume[i]	Direct expansion[c]	Electric heat pump and boiler[g]
7	Four-pipe fan coil	Constant volume[i]	Chilled water[e]	Hot water fossil fuel boiler[f]
8	Packaged terminal heat pump	Constant volume[i]	Direct expansion[c]	Electric heat pump[h]
9	Packaged rooftop heat pump	Constant volume[i]	Direct expansion[c]	Electric heat pump[h]
10	Packaged terminal air conditioner	Constant volume[i]	Direct expansion	Hot water fossil fuel boiler[f]
11	Packaged rooftop air conditioner	Constant volume[i]	Direct expansion	Fossil fuel furnace

For SI: 1 foot = 304.8 mm, 1 cfm/ft^2 = 0.4719 L/s, 1 Btu/h = 0.293/W, °C = [(°F) - 32]/1.8.

a. **VAV with parallel boxes:** Fans in parallel VAV fan-powered boxes shall be sized for 50 percent of the peak design flow rate and shall be modeled with 0.35 W/cfm fan power. Minimum volume setpoints for fan-powered boxes shall be equal to the minimum rate for the space required for *ventilation* consistent with Section C403.6.1, Item 3. Supply air temperature setpoint shall be constant at the design condition.

b. **VAV with reheat:** Minimum volume setpoints for VAV reheat boxes shall be 0.4 cfm/ft^2 of floor area. Supply air temperature shall be reset based on *zone* demand from the design temperature difference to a 10°F temperature difference under minimum load conditions. Design airflow rates shall be sized for the reset supply air temperature, i.e., a 10°F temperature difference.

c. **Direct expansion:** The fuel type for the cooling system shall match that of the cooling system in the *proposed design*.

d. **VAV:** Where the *proposed design* system has a supply, return or relief fan motor 25 hp or larger, the corresponding fan in the VAV system of the *standard reference design* shall be modeled assuming a variable-speed drive. For smaller fans, a forward-curved centrifugal fan with inlet vanes shall be modeled. Where the *proposed design's* system has a direct digital control system at the *zone* level, static pressure setpoint reset based on *zone* requirements in accordance with Section C403.8.5 shall be modeled.

e. **Chilled water:** For systems using purchased chilled water, the chillers are not explicitly modeled and chilled water costs shall be based as determined in Sections C407.3 and C407.5.2. Otherwise, the *standard reference design's* chiller plant shall be modeled with chillers having the number as indicated in Table C407.5.1(4) as a function of standard reference building chiller plant load and type as indicated in Table C407.5.1(5) as a function of individual chiller load. Where chiller fuel source is mixed, the system in the *standard reference design* shall have chillers with the same fuel types and with capacities having the same proportional capacity as the *proposed design's* chillers for each fuel type. Chilled water supply temperature shall be modeled at 44°F design supply temperature and 56°F return temperature. Piping losses shall not be modeled in either building model. Chilled water supply water temperature shall be reset in accordance with Section C403.9.3. Pump system power for each pumping system shall be the same as the *proposed design*; where the *proposed design* has no chilled water pumps, the *standard reference design* pump power shall be 22 W/gpm (equal to a pump operating against a 75-foot head, 65-percent combined impeller and motor efficiency). The chilled water system shall be modeled as primary-only variable flow with flow maintained at the design rate through each chiller using a bypass. Chilled water pumps shall be modeled as riding the pump curve or with variable-speed drives where required in Section C403.9.3. The heat rejection device shall be an axial fan cooling tower with two-speed fans where required in Section C403.9. Condenser water design supply temperature shall be 85°F or 10°F approach to design wet-bulb temperature, whichever is lower, with a design temperature rise of 10°F. The tower shall be controlled to maintain a 70°F leaving water temperature where weather permits, floating up to leaving water temperature at design conditions. Pump system power for each pumping system shall be the same as the *proposed design*; where the *proposed design* has no condenser water pumps, the *standard reference design* pump power shall be 19 W/gpm (equal to a pump operating against a 60-foot head, 60-percent combined impeller and motor efficiency). Each chiller shall be modeled with separate condenser water and chilled water pumps interlocked to operate with the associated chiller.

f. **Fossil fuel boiler:** For systems using purchased hot water or steam, the boilers are not explicitly modeled and hot water or steam costs shall be based on actual utility rates. Otherwise, the boiler plant shall use the same fuel as the *proposed design* and shall be natural draft. The *standard reference design* boiler plant shall be modeled with a single boiler where the *standard reference design* plant load is 600,000 Btu/h and less and with two equally sized boilers for plant capacities exceeding 600,000 Btu/h. Boilers shall be staged as required by the load. Hot water supply temperature shall be modeled at 180°F design supply temperature and 130°F return temperature. Piping losses shall not be modeled in either building model. Hot water supply water temperature shall be reset in accordance with Section C403.9.3. Pump system power for each pumping system shall be the same as the *proposed design*; where the *proposed design* has no hot water pumps, the *standard reference design* pump power shall be 19 W/gpm (equal to a pump operating against a 60-foot head, 60-percent combined impeller and motor efficiency). The hot water system shall be modeled as primary only with continuous variable flow. Hot water pumps shall be modeled as riding the pump curve or with variable speed drives where required by Section C403.9.3.

g. **Electric heat pump and boiler:** Water-source heat pumps shall be connected to a common heat pump water loop controlled to maintain temperatures between 60°F and 90°F. Heat rejection from the loop shall be provided by an axial fan closed-circuit evaporative fluid cooler with two-speed fans where required in Section C403.8.5. Heat addition to the loop shall be provided by a boiler that uses the same fuel as the *proposed design* and shall be natural draft. Where no boilers exist in the *proposed design*, the standard reference building boilers shall be fossil fuel. The *standard reference design* boiler plant shall be modeled with a single boiler where the *standard reference design* plant load is 600,000 Btu/h or less and with two equally sized boilers for plant capacities exceeding 600,000 Btu/h. Boilers shall be staged as required by the load. Piping losses shall not be modeled in either building model. Pump system power shall be the same as the *proposed design*; where the *proposed design* has no pumps, the *standard reference design* pump power shall be 22 W/gpm, which is equal to a pump operating against a 75-foot head, with a 65-percent combined impeller and motor efficiency. Loop flow shall be variable with flow shutoff at each heat pump when its compressor cycles off as required by Section C403.9.3. Loop pumps shall be modeled as riding the pump curve or with variable speed drives where required by Section C403.9.3.

h. **Electric heat pump:** Electric air-source heat pumps shall be modeled with electric auxiliary heat. The system shall be controlled with a multistage space thermostat and an outdoor air thermostat wired to energize auxiliary heat only on the last thermostat stage and when outdoor air temperature is less than 40°F.

i. **Constant volume:** Fans shall be controlled in the same manner as in the *proposed design*; i.e., fan operation whenever the space is occupied or fan operation cycled on calls for heating and cooling. Where the fan is modeled as cycling and the fan energy is included in the energy efficiency rating of the equipment, fan energy shall not be modeled explicitly.

INTERNATIONAL CODE COUNCIL®
Copyright © 2019 ICC & NYSDOS. ALL RIGHTS RESERVED. Accessed by Lauren Gualdino (lgualdino@briarcliffmanor.org), (-) Order Number #100880972 on May 08, 2020 07:05 AM (PDT) pursuant to License Agreement with ICC & NYSDOS. No further reproduction, no

100880972

TABLE C407.5.1(4)
NUMBER OF CHILLERS

TOTAL CHILLER PLANT CAPACITY	NUMBER OF CHILLERS
≤ 300 tons	1
> 300 tons, < 600 tons	2, sized equally
≥ 600 tons	2 minimum, with chillers added so that all are sized equally and none is larger than 800 tons

For SI: 1 ton = 3517 W.

TABLE C407.5.1(5)
WATER CHILLER TYPES

INDIVIDUAL CHILLER PLANT CAPACITY	ELECTRIC CHILLER TYPE	FOSSIL FUEL CHILLER TYPE
≤ 100 tons	Reciprocating	Single-effect absorption, direct fired
> 100 tons, < 300 tons	Screw	Double-effect absorption, direct fired
≥ 300 tons	Centrifugal	Double-effect absorption, direct fired

For SI: 1 ton = 3517 W.

registered design professional or approved agency shall provide evidence of mechanical systems *commissioning* and completion in accordance with the provisions of this section.

Construction document notes shall clearly indicate provisions for *commissioning* and completion requirements in accordance with this section and are permitted to refer to specifications for further requirements. Copies of all documentation shall be given to the owner or owner's authorized agent and made available to the *building official* upon request in accordance with Sections C408.2.4 and C408.2.5.

Exceptions: The following systems are exempt:

1. Mechanical systems and service water heater systems in buildings where the total mechanical equipment capacity is less than 480,000 Btu/h (140.7 kW) cooling capacity and 600,000 Btu/h (175.8 kW) combined service water-heating and space-heating capacity.
2. Systems included in Section C403.5 that serve individual *dwelling units* and *sleeping units*.

C408.2.1 Commissioning plan. A *commissioning plan* shall be developed by a *registered design professional* or *approved agency* and shall include the following items:

1. A narrative description of the activities that will be accomplished during each phase of *commissioning*, including the personnel intended to accomplish each of the activities.
2. A listing of the specific equipment, appliances or systems to be tested and a description of the tests to be performed.
3. Functions to be tested including, but not limited to, calibrations and economizer controls.
4. Conditions under which the test will be performed. Testing shall affirm winter and summer design conditions and full outside air conditions.
5. Measurable criteria for performance.

C408.2.2 Systems adjusting and balancing. HVAC systems shall be balanced in accordance with generally accepted engineering standards. Air and water flow rates shall be measured and adjusted to deliver final flow rates within the tolerances provided in the product specifications. Test and balance activities shall include air system and hydronic system balancing.

C408.2.2.1 Air systems balancing. Each supply air outlet and *zone* terminal device shall be equipped with means for air balancing in accordance with the requirements of Chapter 6 of the *Mechanical Code of New York State*. Discharge dampers used for air-system balancing are prohibited on constant-volume fans and variable-volume fans with motors 10 hp (18.6 kW) and larger. Air systems shall be balanced in a manner to first minimize throttling losses then, for fans with system power of greater than 1 hp (0.746 kW), fan speed shall be adjusted to meet design flow conditions.

Exception: Fans with fan motors of 1 hp (0.74 kW) or less are not required to be provided with a means for air balancing.

C408.2.2.2 Hydronic systems balancing. Individual hydronic heating and cooling coils shall be equipped with means for balancing and measuring flow. Hydronic systems shall be proportionately balanced in a manner to first minimize throttling losses, then the pump impeller shall be trimmed or pump speed shall be adjusted to meet design flow conditions. Each hydronic system shall have either the capability to measure pressure across the pump, or test ports at each side of each pump.

Exception: The following equipment is not required to be equipped with a means for balancing or measuring flow:

1. Pumps with pump motors of 5 hp (3.7 kW) or less.

INTERNATIONAL CODE COUNCIL®
Copyright © 2019 ICC & NYSDOS. ALL RIGHTS RESERVED. Accessed by Lauren Gualdino (lgualdino@briarcliffmanor.org), (-) Order Number #100880972 on May 08, 2020 07:05 AM (PDT) pursuant to License Agreement with ICC & NYSDOS. No further reproduction, no

100880972

2. Where throttling results in not greater than 5 percent of the nameplate horsepower draw above that required if the impeller were trimmed.

C408.2.3 Functional performance testing. Functional performance testing specified in Sections C408.2.3.1 through C408.2.3.3 shall be conducted.

C408.2.3.1 Equipment. Equipment functional performance testing shall demonstrate the installation and operation of components, systems, and system-to-system interfacing relationships in accordance with approved plans and specifications such that operation, function, and maintenance serviceability for each of the commissioned systems is confirmed. Testing shall include all modes and sequence of operation, including under full-load, part-load and the following emergency conditions:

1. All modes as described in the sequence of operation.
2. Redundant or *automatic* back-up mode.
3. Performance of alarms.
4. Mode of operation upon a loss of power and restoration of power.

Exception: Unitary or packaged HVAC equipment *listed* in Tables C403.3.2(1) through C403.3.2(3) that do not require supply air economizers.

C408.2.3.2 Controls. HVAC and service water-heating control systems shall be tested to document that control devices, components, equipment and systems are calibrated and adjusted and operate in accordance with approved plans and specifications. Sequences of operation shall be functionally tested to document they operate in accordance with *approved* plans and specifications.

C408.2.3.3 Economizers. Air economizers shall undergo a functional test to determine that they operate in accordance with manufacturer's specifications.

C408.2.4 Preliminary commissioning report. A preliminary report of *commissioning* test procedures and results shall be completed and certified by the r*egistered design professional* or *approved agency* and provided to the building owner or owner's authorized agent. The report shall be organized with mechanical and service hot water findings in separate sections to allow independent review. The report shall be identified as "Preliminary Commissioning Report," shall include the completed Commissioning Compliance Checklist, Figure C408.2.4, and shall identify:

1. Itemization of deficiencies found during testing required by this section that have not been corrected at the time of report preparation.
2. Deferred tests that cannot be performed at the time of report preparation because of climatic conditions.
3. Climatic conditions required for performance of the deferred tests.
4. Results of functional performance tests.
5. Functional performance test procedures used during the commissioning process, including measurable criteria for test acceptance.

C408.2.4.1 Acceptance of report. Buildings, or portions thereof, shall not be considered as acceptable for a final inspection pursuant to Section C106.2.6 until the *building official* has received the Preliminary Commissioning Report from the building owner or owner's authorized agent.

C408.2.4.2 Copy of report. The *building official* shall be permitted to require that a copy of the Preliminary Commissioning Report be made available for review by the *building official*.

C408.2.5 Documentation requirements. The construction documents shall specify that the documents described in this section be provided to the building owner or owner's authorized agent within 90 days of the date of receipt of the *certificate of occupancy*.

C408.2.5.1 System balancing report. A written report describing the activities and measurements completed in accordance with Section C408.2.2.

C408.2.5.2 Final commissioning report. A report of test procedures and results identified as "Final Commissioning Report" shall be delivered to the building owner or owner's authorized agent. The report shall be organized with mechanical system and service hot water system findings in separate sections to allow independent review. The report shall include the following:

1. Results of functional performance tests.
2. Disposition of deficiencies found during testing, including details of corrective measures used or proposed.
3. Functional performance test procedures used during the commissioning process including measurable criteria for test acceptance, provided herein for repeatability.

Exception: Deferred tests that cannot be performed at the time of report preparation due to climatic conditions.

C408.3 Functional testing of lighting controls. Automatic lighting controls required by this code shall comply with this section.

C408.3.1 Functional testing. Prior to passing final inspection, the *registered design professional* shall provide evidence that the lighting control systems have been tested to ensure that control hardware and software are calibrated, adjusted, programmed and in proper working condition in accordance with the construction documents and manufacturer's instructions. Functional testing shall be in accordance with Sections C408.3.1.1 through C408.3.1.3 for the applicable control type.

C408.3.1.1 Occupant sensor controls. Where *occupant sensor controls* are provided, the following procedures shall be performed:

INTERNATIONAL CODE COUNCIL®
Copyright © 2019 ICC & NYSDOS. ALL RIGHTS RESERVED. Accessed by Lauren Gualdino (lgualdino@briarcliffmanor.org), (-) Order Number #100880972 on May 08, 2020 07:05 AM (PDT) pursuant to License Agreement with ICC & NYSDOS. No further reproduction, no

100880972

1. Certify that the *occupant sensor* has been located and aimed in accordance with manufacturer recommendations.
2. For projects with seven or fewer *occupant sensors*, each sensor shall be tested.
3. For projects with more than seven *occupant sensors*, testing shall be done for each unique combination of sensor type and space geometry. Where multiples of each unique combination of sensor type and space geometry are provided, not less than 10 percent and in no case fewer than one, of each combination shall be tested unless the *building official* or design professional requires a higher percentage to be tested. Where 30 percent or more of the tested controls fail, all remaining identical combinations shall be tested.

   For *occupant sensor controls* to be tested, verify the following:

   3.1. Where *occupant sensor controls* include status indicators, verify correct operation.

   3.2. The controlled lights turn off or down to the permitted level within the required time.

   3.3. For auto-on *occupant sensor controls*, the lights turn on to the permitted level when an occupant enters the space.

   3.4. For manual-on *occupant sensor controls*, the lights turn on only when manually activated.

   3.5. The lights are not incorrectly turned on by movement in adjacent areas or by HVAC operation.

C408.3.1.2 Time-switch controls. Where *time-switch controls* are provided, the following procedures shall be performed:

1. Confirm that the *time-switch control* is programmed with accurate weekday, weekend and holiday schedules.
2. Provide documentation to the owner of *time-switch controls* programming including weekday, weekend, holiday schedules, and set-up and preference program settings.
3. Verify the correct time and date in the time switch.
4. Verify that any battery back-up is installed and energized.
5. Verify that the override time limit is set to not more than 2 hours.
6. Simulate occupied condition. Verify and document the following:

   6.1. All lights can be turned on and off by their respective area control switch.

   6.2. The switch only operates lighting in the enclosed space in which the switch is located.

7. Simulate unoccupied condition. Verify and document the following:

   7.1. Nonexempt lighting turns off.

   7.2. Manual override switch allows only the lights in the enclosed space where the override switch is located to turn on or remain on until the next scheduled shutoff occurs.

8. Additional testing as specified by the *registered design professional.*

C408.3.1.3 Daylight responsive controls. Where *daylight responsive controls* are provided, the following shall be verified:

1. Control devices have been properly located, field calibrated and set for accurate setpoints and threshold light levels.
2. Daylight controlled lighting loads adjust to light level setpoints in response to available daylight.
3. The calibration adjustment equipment is located for *ready access* only by authorized personnel.

C408.3.2 Documentation requirements. The construction documents shall specify that the documents described in this section be provided to the building owner or owner's authorized agent within 90 days of the date of receipt of the *certificate of occupancy*.

C408.3.2.1 Drawings. Construction documents shall include the location and catalogue number of each piece of equipment.

C408.3.2.2 Manuals. An operating and maintenance manual shall be provided and include the following:

1. Name and address of not less than one service agency for installed equipment.
2. A narrative of how each system is intended to operate, including recommended setpoints.
3. Submittal data indicating all selected options for each piece of lighting equipment and lighting controls.
4. Operation and maintenance manuals for each piece of lighting equipment. Required routine maintenance actions, cleaning and recommended relamping shall be clearly identified.
5. A schedule for inspecting and recalibrating all lighting controls.

C408.3.2.3 Report. A report of test results shall be provided and include the following:

1. Results of functional performance tests.
2. Disposition of deficiencies found during testing, including details of corrective measures used or proposed.

INTERNATIONAL CODE COUNCIL®
Copyright © 2019 ICC & NYSDOS. ALL RIGHTS RESERVED. Accessed by Lauren Gualdino (lgualdino@briarcliffmanor.org), (-) Order Number #100880972 on May 08, 2020 07:05 AM (PDT) pursuant to License Agreement with ICC & NYSDOS. No further reproduction, no

100880972

Project Information:_____ Project Name: _____

Project Address: _____

Commissioning Authority: _____

Commissioning Plan (Section C408.2.1)

☐ Commissioning Plan was used during construction and includes all items required by Section C408.2.1

☐ Systems Adjusting and Balancing has been completed.

☐ HVAC Equipment Functional Testing has been executed. If applicable, deferred and follow-up testing is scheduled to be provided on:_____

☐ HVAC Controls Functional Testing has been executed. If applicable, deferred and follow-up testing is scheduled to be provided on:_____

☐ Economizer Functional Testing has been executed. If applicable, deferred and follow-up testing is scheduled to be provided on:_____

☐ Lighting Controls Functional Testing has been executed. If applicable, deferred and follow-up testing is scheduled to be provided on:_____

☐ Service Water Heating System Functional Testing has been executed. If applicable, deferred and follow-up testing is scheduled to be provided on:_____

☐ Manual, record documents and training have been completed or scheduled

☐ Preliminary Commissioning Report submitted to owner and includes all items required by Section C408.2.4

I hereby certify that the commissioning provider has provided me with evidence of mechanical, service water heating and lighting systems commissioning in accordance with the 2018 IECC.

Signature of Building Owner or Owner's Representative _____ Date_____

FIGURE C408.2.4
COMMISSIONING COMPLIANCE CHECKLIST

INTERNATIONAL CODE COUNCIL®
Copyright © 2019 ICC & NYSDOS. ALL RIGHTS RESERVED. Accessed by Lauren Gualdino (lgualdino@briarcliffmanor.org), (-) Order Number #100880972 on May 08, 2020 07:05 AM (PDT) pursuant to License Agreement with ICC & NYSDOS. No further reproduction, no

100880972

CHAPTER 5 [CE]

EXISTING BUILDINGS

SECTION C501 GENERAL

C501.1 Scope. The provisions of this chapter shall control the *alteration*, *repair*, *addition* and *change of occupancy* of existing buildings and structures.

C501.2 Existing buildings. Except as specified in this chapter, this code shall not be used to require the removal, *alteration* or abandonment of, nor prevent the continued use and maintenance of, an existing *building* or *building* system lawfully in existence at the time of adoption of this code.

C501.3 Maintenance. *Buildings* and structures, and parts thereof, shall be maintained in a safe and sanitary condition. Devices and systems required by this code shall be maintained in conformance to the code edition under which they were installed. The owner or the owner's authorized agent shall be responsible for the maintenance of buildings and structures. The requirements of this chapter shall not provide the basis for removal or abrogation of energy conservation, fire protection and safety systems and devices in existing structures.

[NY] C501.4 Compliance. *Alterations*, *repairs*, *additions* and changes of occupancy to, or relocation of, existing *buildings* and structures shall comply with the provisions for *alterations*, *repairs*, *additions* and changes of occupancy or relocation, respectively, in this code and in the *Building Code of New York State*, *Existing Building Code of New York State, Fire Code of New York State*, *Fuel Gas Code of New York State*, *Mechanical Code of New York State*, *Plumbing Code of New York State*, *Property Maintenance Code of New York State* and NFPA 70.

Exception: In the case of a building that is subject to the New York City Construction Codes, *alterations, repairs, additions* and changes of occupancy to, or relocation of, existing buildings and structures shall comply with: (i) all applicable provisions of the ECCCNYS—Commercial Provisions, (ii) the provisions for *alterations, repairs, additions and changes of occupancy or relocation*, respectively, in the New York City Construction Codes, and (iii) the New York City Electrical Code.

C501.5 New and replacement materials. Except as otherwise required or permitted by this code, materials permitted by the applicable code for new construction shall be used. Like materials shall be permitted for *repairs*, provided that hazards to life, health or property are not created. Hazardous materials shall not be used where the code for new construction would not allow use of these materials in buildings of similar occupancy, purpose and location.

[NY] C501.6 Historic buildings. Provisions of this code relating to the construction, *repair, alteration*, restoration and movement of structures, and *change of occupancy* shall not be mandatory for *historic buildings*.

[NY] C501.7 Compliance alternative. *Additions, alterations, repairs, and changes of occupancy* are permitted to comply with the requirements of *ASHRAE 90.1—2016* (as amended) in lieu of compliance with the requirements of Sections C502, C503, C504 and C505, as applicable.

SECTION C502 ADDITIONS

C502.1 General. *Additions* to an existing *building*, *building* system or portion thereof shall conform to the provisions of this code as those provisions relate to new construction without requiring the unaltered portion of the existing *building* or *building* system to comply with this code. *Additions* shall not create an unsafe or hazardous condition or overload existing *building* systems. An *addition* shall be deemed to comply with this code if the *addition* alone complies or if the existing building and *addition* comply with this code as a single building. *Additions* shall comply with Sections C402, C403, C404, C405 and C502.2.

Additions complying with ANSI/ASHRAE/IESNA 90.1. need not comply with Sections C402, C403, C404 and C405.

C502.2 Prescriptive compliance. *Additions* shall comply with Sections C502.2.1 through C502.2.6.2.

C502.2.1 Vertical fenestration. New *vertical fenestration* area that results in a total building *fenestration* area less than or equal to that specified in Section C402.4.1 shall comply with Section C402.1.5, C402.4.3 or C407. *Additions* with *vertical fenestration* that result in a total building *fenestration* area greater than Section C402.4.1 or *additions* that exceed the fenestration area greater than Section C402.4.1 shall comply with Section C402.4.1.1 for the *addition* only. *Additions* that result in a total building vertical fenestration area exceeding that specified in Section C402.4.1.1 shall comply with Section C402.1.5 or C407.

C502.2.2 Skylight area. New *skylight* area that results in a total building *fenestration* area less than or equal to that specified in Section C402.4.1 shall comply with Section C402.1.5 or C407. *Additions* with *skylight* area that result in a total building *skylight* area greater than C402.4.1 or additions that exceed the *skylight* area shall comply with Section C402.4.1.2 for the *addition* only. *Additions* that result in a total building *skylight* area exceeding that specified in Section C402.4.1.2 shall comply with Section C402.1.5 or C407.

C502.2.3 Building mechanical systems. New mechanical systems and equipment that are part of the *addition* and serve the building heating, cooling and *ventilation* needs shall comply with Section C403.

C502.2.4 Service water-heating systems. New service water-heating equipment, controls and *service water heating* piping shall comply with Section C404.

C502.2.5 Pools and inground permanently installed spas. New pools and inground permanently installed spas shall comply with Section C404.10.

INTERNATIONAL CODE COUNCIL®
Copyright © 2019 ICC & NYSDOS. ALL RIGHTS RESERVED. Accessed by Lauren Gualdino (lgualdino@briarcliffmanor.org), (-) Order Number #100880972 on May 08, 2020 07:05 AM (PDT) pursuant to License Agreement with ICC & NYSDOS. No further reproduction, no

100880972

C502.2.6 Lighting power and systems. New lighting systems that are installed as part of the *addition* shall comply with Section C405.

C502.2.6.1 Interior lighting power. The total interior lighting power for the *addition* shall comply with Section C405.3.2 for the *addition* alone, or the existing building and the *addition* shall comply as a single building.

C502.2.6.2 Exterior lighting power. The total exterior lighting power for the *addition* shall comply with Section C405.4.2 for the *addition* alone, or the existing building and the *addition* shall comply as a single building.

SECTION C503
ALTERATIONS

[NY] C503.1 General. *Alterations* to any *building* or structure shall comply with the requirements of Section C503 and the code for new construction. *Alterations* shall be such that the existing *building* or structure is not less conforming to the provisions of this code than the existing *building* or structure was prior to the *alteration*. *Alterations* to an existing *building*, *building* system or portion thereof shall conform to the provisions of this code as those provisions relate to new construction without requiring the unaltered portions of the existing *building* or *building* system to comply with this code. *Alterations* shall not create an unsafe or hazardous condition or overload existing *building* systems.

Alterations complying with ANSI/ASHRAE/IESNA 90.1. need not comply with Sections C402, C403, C404 and C405.

Exception: The following *alterations* need not comply with the requirements for new construction, provided that the energy use of the building is not increased:

1. Storm windows installed over existing *fenestration*.
2. Surface-applied window film installed on existing single-pane *fenestration* assemblies reducing solar heat gain, provided that the code does not require the glazing or *fenestration* to be replaced.
3. Existing ceiling, wall or floor cavities exposed during construction, provided that these cavities are filled with insulation.
4. Construction where the existing roof, wall or floor cavity is not exposed.
5. *Roof recover*.
6. Roofs without insulation in the cavity and where the sheathing or insulation is exposed during reroofing shall be insulated either above or below the sheathing.
7. *Air barriers* shall not be required for *roof recover* and roof replacement where the *alterations* or renovations to the building do not include *alterations*, renovations or *repairs* to the remainder of the building envelope.
8. *Alterations* that replace less than fifty percent of the luminaires in a space, provided that such alterations do not increase the installed interior lighting power.

C503.2 Change in space conditioning. Any nonconditioned or low-energy space that is altered to become *conditioned space* shall be required to be brought into full compliance with this code.

Exceptions:

1. Where the component performance alternative in Section C402.1.5 is used to comply with this section, the proposed UA shall be not greater than 110 percent of the target UA.
2. Where the total building performance option in Section C407 is used to comply with this section, the annual energy cost of the *proposed design* shall be not greater than 110 percent of the annual energy cost otherwise permitted by Section C407.3.

C503.3 Building envelope. New building envelope assemblies that are part of the *alteration* shall comply with Sections C402.1 through C402.5.

Exception: Where the existing building exceeds the fenestration area limitations of Section C402.4.1 prior to alteration, the building is exempt from Section C402.4.1 provided that there is not an increase in fenestration area.

C503.3.1 Roof replacement. *Roof replacements* shall comply with Section C402.1.3, C402.1.4, C402.1.5 or C407 where the existing *roof assembly* is part of the *building thermal envelope* and contains insulation entirely above the roof deck.

C503.3.2 Vertical fenestration. The addition of *vertical fenestration* that results in a total building *fenestration* area less than or equal to that specified in Section C402.4.1 shall comply with Section C402.1.5, C402.4.3 or C407. The addition of *vertical fenestration* that results in a total building *fenestration* area greater than Section C402.4.1 shall comply with Section C402.4.1.1 for the space adjacent to the new fenestration only. *Alterations* that result in a total building *vertical fenestration* area exceeding that specified in Section C402.4.1.1 shall comply with Section C402.1.5 or C407. Provided that the vertical fenestration area is not changed, using the same vertical fenestration area in the *standard reference design* as the building prior to alteration shall be an alternative to using the vertical fenestration area specified in Table C407.5.1(1).

C503.3.3 Skylight area. New *skylight* area that results in a total building *skylight* area less than or equal to that specified in Section C402.4.1 shall comply with Section C402.1.5, C402.4 or C407. The addition of *skylight* area that results in a total building skylight area greater than Section C402.4.1 shall comply with Section C402.4.1.2 for the space adjacent to the new skylights. *Alterations* that result in a total building skylight area exceeding that specified in Section C402.4.1.2 shall comply with Section C402.1.5 or C407. Provided that the skylight area is not changed, using the same skylight area in the *standard reference design* as the building prior to alteration shall be an alternative to using the skylight area specified in Table C407.5.1(1).

INTERNATIONAL CODE COUNCIL®
Copyright © 2019 ICC & NYSDOS. ALL RIGHTS RESERVED. Accessed by Lauren Gualdino (lgualdino@briarcliffmanor.org), (-) Order Number #100880972 on May 08, 2020 07:05 AM (PDT) pursuant to License Agreement with ICC & NYSDOS. No further reproduction, no

100880972

C503.4 Heating and cooling systems. New heating, cooling and *duct systems* that are part of the *alteration* shall comply with Sections C403.

C503.4.1 Economizers. New cooling systems that are part of *alteration* shall comply with Section C403.5.

C503.5 Service hot water systems. New service hot water systems that are part of the *alteration* shall comply with Section C404.

C503.6 Lighting systems. New lighting systems that are part of the *alteration* shall comply with Section C405.

Exception. *Alterations* that replace less than 10 percent of the luminaires in a space, provided that such *alterations* do not increase the installed interior lighting power.

SECTION C504
REPAIRS

C504.1 General. *Buildings* and structures, and parts thereof, shall be repaired in compliance with Section C501.3 and this section. Work on nondamaged components that is necessary for the required *repair* of damaged components shall be considered to be part of the *repair* and shall not be subject to the requirements for *alterations* in this chapter. Routine maintenance required by Section C501.3, ordinary *repairs* exempt from *permit* and abatement of wear due to normal service conditions shall not be subject to the requirements for *repairs* in this section.

Where a building was constructed to comply with ANSI/ASHRAE/IESNA 90.1, repairs shall comply with the standard and need not comply with Sections C402, C403, C404 and C405.

C504.2 Application. For the purposes of this code, the following shall be considered to be repairs:

1. Glass-only replacements in an existing sash and frame.
2. *Roof repairs.*
3. *Air barriers* shall not be required for *roof repair* where the repairs to the building do not include *alterations*, renovations or *repairs* to the remainder of the building envelope.
4. Replacement of existing doors that separate conditioned space from the exterior shall not require the installation of a vestibule or revolving door, provided that an existing vestibule that separates a conditioned space from the exterior shall not be removed.
5. *Repairs* where only the bulb, the ballast or both within the existing luminaires in a space are replaced, provided that the replacement does not increase the installed interior lighting power.

SECTION C505
CHANGE OF OCCUPANCY OR USE

C505.1 General. Spaces undergoing a *change in occupancy* that would result in an increase in demand for either fossil fuel or electrical energy shall comply with this code. Where the use in a space changes from one use in Table C405.3.2(1) or C405.3.2(2) to another use in Table C405.3.2(1) or C405.3.2(2), the installed lighting wattage shall comply with Section C405.3. Where the space undergoing a change in occupancy or use is in a building with a *fenestration* area that exceeds the limitations of Section C402.4.1, the space is exempt from Section C402.4.1 provided that there is not an increase in *fenestration* area.

Exceptions:

1. Where the component performance alternative in Section C402.1.5 is used to comply with this section, the proposed UA shall be not greater than 110 percent of the target UA.
2. Where the total building performance option in Section C407 is used to comply with this section, the annual energy cost of the *proposed design* shall be not greater than 110 percent of the annual energy cost otherwise permitted by Section C407.3.

INTERNATIONAL CODE COUNCIL®
Copyright © 2019 ICC & NYSDOS. ALL RIGHTS RESERVED. Accessed by Lauren Gualdino (lgualdino@briarcliffmanor.org), (-) Order Number #100880972 on May 08, 2020 07:05 AM (PDT) pursuant to License Agreement with ICC & NYSDOS. No further reproduction, no

100880972

INTERNATIONAL CODE COUNCIL®

Copyright © 2019 ICC & NYSDOS. ALL RIGHTS RESERVED. Accessed by Lauren Gualdino (lgualdino@briarcliffmanor.org), (-) Order Number #100880972 on May 08, 2020 07:05 AM (PDT) pursuant to License Agreement with ICC & NYSDOS. No further reproduction, no

100880972

CHAPTER 6 [CE]
REFERENCED STANDARDS

User note:

This chapter lists the standards that are referenced in various sections of this document. The standards are listed herein by the promulgating agency of the standard, the standard identification, the effective date and title, and the section or sections of this document that reference the standard. The application of the referenced standards shall be as specified in Section 102.4.

**Denotes standards that are incorporated by reference into 19 NYCRR Part 1240.*

AAMA

American Architectural Manufacturers Association
1827 Walden Office Square
Suite 550
Schaumburg, IL 60173-4268

AAMA/WDMA/CSA 101/I.S.2/A C440—17: North American Fenestration Standard/Specifications for Windows, Doors and Unit Skylights
Table C402.5.2

AHAM

Association of Home Appliance Manufacturers
1111 19th Street NW, Suite 402
Washington, DC 20036

ANSI/AHAM RAC-1—2008: Room Air Conditioners
Table C403.3.2(3)

AHAM HRF-1—2016: Energy, Performance and Capacity of Household Refrigerators, Refrigerator-Freezers and Freezers
Table C403.10.1

AHRI

Air-Conditioning, Heating, & Refrigeration Institute
2111 Wilson Blvd, Suite 500
Arlington, VA 22201

ISO/AHRI/ASHRAE 13256-1 (1998 RA2014): Water-to-Air and Brine-to-Air Heat Pumps—Testing and Rating for Performance
Table C403.3.2(2)

ISO/AHRI/ASHRAE 13256-2 (1998 RA2014): Water-to-Water and Brine-to-Water Heat Pumps —Testing and Rating for Performance
Table C403.3.2(2)

210/240—2016: Performance Rating of Unitary Air-conditioning and Air-source Heat Pump Equipment
Table C403.3.2(1), Table C403.3.2(2)

310/380—2014 (CSA-C744-04): Standard for Packaged Terminal Air Conditioners and Heat Pumps
Table C403.3.2(3)

340/360—2015: Performance Rating of Commercial and Industrial Unitary Air-conditioning and Heat Pump Equipment
Table C403.3.2(1), Table C403.3.2(2)

365(I-P)—2009: Commercial and Industrial Unitary Air-conditioning Condensing Units
Table C403.3.2(1), Table C403.3.2(6)

390 (I-P)—2015: Performance Rating of Single Package Vertical Air-conditioners and Heat Pumps
Table C403.3.2(3)

400 (I-P)—2015: Performance Rating of Liquid to Liquid Heat Exchangers
Table C403.3.2(10)

***440—2008: Performance Rating of Room Fan Coils—with Addendum 1**
C403.11.3

INTERNATIONAL CODE COUNCIL®
Copyright © 2019 ICC & NYSDOS. ALL RIGHTS RESERVED. Accessed by Lauren Gualdino (lgualdino@briarcliffmanor.org), (-) Order Number #100880972 on May 08, 2020 07:05 AM (PDT) pursuant to License Agreement with ICC & NYSDOS. No further reproduction, no

100880972

AHRI—continued

460—2005: Performance Rating of Remote Mechanical-draft Air-cooled Refrigerant Condensers
Table C403.3.2(8)

550/590 (I-P)—2015: Performance Rating of Water-chilling and Heat Pump Water-heating Packages Using the Vapor Compression Cycle
C403.3.2.1, Table C403.3.2(7)

560—00: Absorption Water Chilling and Water Heating Packages
Table C403.3.2(7)

840—15: Performance Rating of Unit Ventilators
C403.11.3

1160 (I-P) —2014: Performance Rating of Heat Pump Pool Heaters
Table C404.2

1200 (I-P)—2013: Performance Rating of Commercial Refrigerated Display Merchandisers and Storage Cabinets
C403.10, Table C403.10.1(1), Table C403.10.1(2)

AMCA

Air Movement and Control Association International
30 West University Drive
Arlington Heights, IL 60004-1806

205—12: Energy Efficiency Classification for Fans
C403.8.3

220—08 (R2012): Laboratory Methods of Testing Air Curtain Units for Aerodynamic Performance Rating
C402.5.6

500D—12: Laboratory Methods for Testing Dampers for Rating
C403.7.7

ANSI

American National Standards Institute
25 West 43rd Street, 4th Floor
New York, NY 10036

Z21.10.3/CSA 4.3—11: Gas Water Heaters, Volume III—Storage Water Heaters with Input Ratings Above 75,000 Btu per Hour, Circulating Tank and Instantaneous
Table C404.2

Z21.47/CSA 2.3—12: Gas-fired Central Furnaces
Table C403.3.2(4)

Z83.8/CSA 2.6—09: Gas Unit Heaters, Gas Packaged Heaters, Gas Utility Heaters and Gas-fired Duct Furnaces
Table C403.3.2(4)

APSP

The Association of Pool & Spa Professionals
2111 Eisenhower Avenue, Suite 580
Alexandria, VA 22314

14—2014: American National Standard for Portable Electric Spa Energy Efficiency
C404.8

ASHRAE

ASHRAE
1791 Tullie Circle NE
Atlanta, GA 30329

ASHRAE 127-2007: Method of Testing for Rating Computer
Table C403.3.2(9)

***ANSI/ASHRAE/ACCA Standard 183—2007 (RA2014): Peak Cooling and Heating Load Calculations in Buildings, Except Low-rise Residential Buildings**
C403.1.1

ASHRAE—2016: ASHRAE HVAC Systems and Equipment Handbook
C403.1.1

INTERNATIONAL CODE COUNCIL®
Copyright © 2019 ICC & NYSDOS. ALL RIGHTS RESERVED. Accessed by Lauren Gualdino (lgualdino@briarcliffmanor.org), (-) Order Number #100880972 on May 08, 2020 07:05 AM (PDT) pursuant to License Agreement with ICC & NYSDOS. No further reproduction, no

100880972

ASHRAE—continued

ISO/AHRI/ASHRAE 13256-1 (1998 RA2014): Water-to-Air and Brine-to-Air Heat Pumps—Testing and Rating for Performance
Table C403.3.2(2)

ISO/AHRI/ASHRAE 13256-2 (1998 RA2014): Water-to-Water and Brine-to-Water Heat Pumps—Testing and Rating for Performance
Table C403.3.2(2)

55—2013: Thermal Environmental Conditions for Human Occupancy
Table C407.5.1

***90.1—2016: Energy Standard for Buildings Except Low-rise Residential Buildings**
C401.2, Table C402.1.3, Table C402.1.4, C406.2, Table C407.6.1, C502.1, C503.1, C504.1

140—2014: Standard Method of Test for the Evaluation of Building Energy Analysis Computer Programs
C407.6.1

146—2011: Testing and Rating Pool Heaters
Table C404.2

ASME

American Society of Mechanical Engineers
Two Park Avenue
New York, NY 10016-5990

ASME A17.1—2016/CSA B44—16: Safety Code for Elevators and Escalators
C405.8.2

ASTM

ASTM International
100 Barr Harbor Drive, P.O. Box C700
West Conshohocken, PA 19428-2959

C90—14: Specification for Load-bearing Concrete Masonry Units
Table C401.3

C1363—11: Standard Test Method for Thermal Performance of Building Materials and Envelope Assemblies by Means of a Hot Box Apparatus
C303.1.4.1, Table C402.1.4, 402.2.7

C1371—15: Standard Test Method for Determination of Emittance of Materials Near Room Temperature Using Portable Emissometers
Table C402.3

C1549—09(2014): Standard Test Method for Determination of Solar Reflectance Near Ambient Temperature Using a Portable Solar Reflectometer
Table C402.3

D1003—13: Standard Test Method for Haze and Luminous Transmittance of Transparent Plastics
C402.4.2.2

E283—04(2012): Test Method for Determining the Rate of Air Leakage Through Exterior Windows, Curtain Walls and Doors Under Specified Pressure Differences Across the Specimen
C402.5.1.2.2, Table C402.5.2, C402.5.7

E408—13: Test Methods for Total Normal Emittance of Surfaces Using Inspection-meter Techniques
Table C402.3

***E779—10: Standard Test Method for Determining Air Leakage Rate by Fan Pressurization**
C402.5

E903—12: Standard Test Method Solar Absorptance, Reflectance and Transmittance of Materials Using Integrating Spheres (Withdrawn 2005)
Table C402.3

***E1677—11: Specification for Air Barrier (AB) Material or Systems for Low-rise Framed Building Walls**
C402.5.1.2.2

***E1827—11: Standard Test Methods for Determining Airtightness of Building Using an Orifice Blower Door**
C402.5, C406.9, C606.4

E1918—06(2015): Standard Test Method for Measuring Solar Reflectance of Horizontal or Low-sloped Surfaces in the Field
Table C402.3

INTERNATIONAL CODE COUNCIL®
Copyright © 2019 ICC & NYSDOS. ALL RIGHTS RESERVED. Accessed by Lauren Gualdino (lgualdino@briarcliffmanor.org), (-) Order Number #100880972 on May 08, 2020 07:05 AM (PDT) pursuant to License Agreement with ICC & NYSDOS. No further reproduction, no

100880972

ASTM—continued

E1980—11: Standard Practice for Calculating Solar Reflectance Index of Horizontal and Low-sloped Opaque Surfaces
Table C402.3, C402.3.2

E2178—13: Standard Test Method for Air Permanence of Building Materials
C402.5.1.2.1

E2357—11: Standard Test Method for Determining Air Leakage of Air Barriers Assemblies
C402.5.1.2.2

CRRC

Cool Roof Rating Council
449 15th Street, Suite 400
Oakland, CA 94612

ANSI/CRRC-S100—2016: Standard Test Methods for Determining Radiative Properties of Materials
Table C402.3, C402.3.1

CSA

CSA Group
8501 East Pleasant Valley Road
Cleveland, OH 44131-5516

AAMA/WDMA/CSA 101/I.S.2/A440—17: North American Fenestration Standard/Specification for Windows, Doors and Unit Skylights
Table C402.5.2

CSA B55.1—2015: Test Method for Measuring Efficiency and Pressure Loss of Drain Water Heat Recovery Units
C404.8

CSA B55.2—2015: Drain Water Heat Recovery Units
C404.8

CTI

Cooling Technology Institute
P. O. Box 681807
Houston, TX 77268

ATC 105 (00): Acceptance Test Code for Water Cooling Tower
Table C403.3.2(8)

ATC 105S—11: Acceptance Test Code for Closed Circuit Cooling Towers
Table C403.3.2(8)

ATC 106—11: Acceptance Test for Mechanical Draft Evaporative Vapor Condensers
Table C403.3.2(8)

STD 201—11: Standard for Certification of Water Cooling Towers Thermal Performances
Table C403.3.2(8)

CTI STD 201 RS(15): Performance Rating of Evaporative Heat Rejection Equipment
Table C403.3.2(8)

DASMA

Door & Access Systems Manufacturers Association, International
1300 Sumner Avenue
Cleveland, OH 44115-2851

105—2016: Test Method for Thermal Transmittance and Air Infiltration of Garage Doors and Rolling Doors
C303.1.3, Table C402.5.2

DOE

U.S. Department of Energy
c/o Superintendent of Documents
1000 Independence Avenue SW
Washington, DC 20585

10 CFR, Part 430—2015: Energy Conservation Program for Consumer Products: Test Procedures and Certification and Enforcement Requirement for Plumbing Products; and Certification and Enforcement Requirements for Residential Appliances; Final Rule
Table C403.3.2(4), Table C403.3.2(5), Table C404.2

INTERNATIONAL CODE COUNCIL®
Copyright © 2019 ICC & NYSDOS. ALL RIGHTS RESERVED. Accessed by Lauren Gualdino (lgualdino@briarcliffmanor.org), (-) Order Number #100880972 on May 08, 2020 07:05 AM (PDT) pursuant to License Agreement with ICC & NYSDOS. No further reproduction, no

100880972

DOE—continued

10 CFR, Part 430, Subpart B, Appendix N—(2015): Uniform Test Method for Measuring the Energy Consumption of Furnaces and Boilers
C202

10 CFR, Part 431—2015: Energy Efficiency Program for Certain Commercial and Industrial Equipment: Test Procedures and Efficiency Standards; Final Rules
Table C403.3.2(5), C405.6, Table C405.6, C405.7

10 CFR 431 Subpart B App B: Uniform Test Method for Measuring Nominal Full Load Efficiency of Electric Motors
C403.8.4, Table C405.7(1), Table C405.7(2), Table C405.7(3), C405.7(4)

NAECA 87—(88): National Appliance Energy Conservation Act 1987 [Public Law 100-12 (with Amendments of 1988-P.L. 100-357)]
Table C403.3.2(1), Table C403.3.2(2), Table C403.3.2(4)

ICC

International Code Council, Inc.
500 New Jersey Avenue NW
6th Floor
Washington, DC 20001

***BCNYS—20: Building Code of New York State**
C201.3, C303.2, C402.5.3, C501.4

***FCNYS—20: Fire Code of New York State**
C201.3, C501.4

***FGCNYS—20: Fuel Gas Code of New York State**
C201.3, C501.4

***MCNYS—20: Mechanical Code of New York State**
C403.7.7, C403.2.2, C403.7.1, C403.7.2, C403.7.4, C403.7.5, C403.11.1, C403.11.2.1, C403.11.2.2, C403.6, C403.6.6, C406.6, C501.4

***PCNYS—20: Plumbing Code of New York State**
C201.3, C501.4

***PMCNYS—20: Property Maintenance Code of New York State**
C501.4

***RCNYS—20: Residential Code of New York State**
C201.3

***EBCNYS—20: Existing Building Code of New York State**
C501.4

IEEE

Institute of Electrical and Electronic Engineers
3 Park Avenue, 17th Floor
New York, NY 10016

IEEE 515.1—2012: IEE Standard for the Testing, Design, Installation, and Maintenance of Electrical Resistance Trace Heating for Commercial Applications
C404.6.2

IES

Illuminating Engineering Society
120 Wall Street, 17th Floor
New York, NY 10005-4001

***ANSI/ASHRAE/IESNA 90.1—2016: Energy Standard for Buildings, Except Low-rise Residential Buildings**
C401.2, Table C402.1.3, Table C402.1.4, C406.2, C502.1, C503.1, C504.1

INTERNATIONAL CODE COUNCIL®
Copyright © 2019 ICC & NYSDOS. ALL RIGHTS RESERVED. Accessed by Lauren Gualdino (lgualdino@briarcliffmanor.org), (-) Order Number #100880972 on May 08, 2020 07:05 AM (PDT) pursuant to License Agreement with ICC & NYSDOS. No further reproduction, no

100880972

ISO

International Organization for Standardization
Chemin de Blandonnet 8, CP 401, 1214 Vernier
Geneva, Switzerland

ISO/AHRI/ASHRAE 13256-1(1998 RA2014): Water-to-Air and Brine-to-Air Heat Pumps -Testing and Rating for Performance
Table C403.3.2(2)

ISO/AHRI/ASHRAE 13256-2(1998 RA2014): Water-to-Water and Brine-to-Water Heat Pumps -Testing and Rating for Performance
Table C403.3.2(2)

NEMA

National Electrical Manufacturers Association
1300 North 17th Street, Suite 900
Rosslyn, VA 22209

MG1—2014: Motors and Generators
C202

NFPA

National Fire Protection Association
1 Batterymarch Park
Quincy, MA 02169-7471

***70—17: National Electrical Code**
C501.4

NFRC

National Fenestration Rating Council, Inc.
6305 Ivy Lane, Suite 140
Greenbelt, MD 20770

100—2017: Procedure for Determining Fenestration Products *U-factors*
C303.1.3, C402.2.1.1

200—2017: Procedure for Determining Fenestration Product Solar Heat Gain Coefficients and Visible Transmittance at Normal Incidence
C303.1.3, C402.4.1.1

400—2017: Procedure for Determining Fenestration Product Air Leakage
Table C402.5.2

SMACNA

Sheet Metal and Air Conditioning Contractors' National Association, Inc.
4021 Lafayette Center Drive
Chantilly, VA 20151-1219

SMACNA—2012: HVAC Air Duct Leakage Test Manual Second Edition
C403.2.11.2.3

UL

UL LLC
333 Pfingsten Road
Northbrook, IL 60062-2096

710—12: Exhaust Hoods for Commercial Cooking Equipment—with Revisions through November 2013
C403.7.5

727—06: Oil-fired Central Furnaces—with Revisions through October 2013
Table C403.3.2(4)

731—95: Oil-fired Unit Heaters—with Revisions through October 2013
Table C403.3.2(4)

1784—01: Air Leakage Tests of Door Assemblies—with Revisions through February 2015
C402.5.4

INTERNATIONAL CODE COUNCIL®
Copyright © 2019 ICC & NYSDOS. ALL RIGHTS RESERVED. Accessed by Lauren Gualdino (lgualdino@briarcliffmanor.org), (-) Order Number #100880972 on May 08, 2020 07:05 AM (PDT) pursuant to License Agreement with ICC & NYSDOS. No further reproduction, no

100880972

US-FTC

United States-Federal Trade Commission
600 Pennsylvania Avenue NW
Washington, DC 20580

CFR Title 16 (2015): *R*-value Rule
C303.1.4

WDMA

Window and Door Manufacturers Association
2025 M Street NW, Suite 800
Washington, DC 20036-3309

AAMA/WDMA/CSA 101/I.S.2/A440—17: North American Fenestration Standard/Specification for Windows, Doors and Unit Skylights
Table C402.5.2

INTERNATIONAL CODE COUNCIL®
Copyright © 2019 ICC & NYSDOS. ALL RIGHTS RESERVED. Accessed by Lauren Gualdino (lgualdino@briarcliffmanor.org), (-) Order Number #100880972 on May 08, 2020 07:05 AM (PDT) pursuant to License Agreement with ICC & NYSDOS. No further reproduction, no

100880972

INTERNATIONAL CODE COUNCIL®
Copyright © 2019 ICC & NYSDOS. ALL RIGHTS RESERVED. Accessed by Lauren Gualdino (lgualdino@briarcliffmanor.org), (-) Order Number #100880972 on May 08, 2020 07:05 AM (PDT) pursuant to License Agreement with ICC & NYSDOS. No further reproduction, no

100880972

APPENDIX CA
SOLAR-READY ZONE—COMMERCIAL

This appendix is informative and is not part of this code.

SECTION CA101
SCOPE

CA101.1 General. These provisions shall be applicable for new construction where solar-ready provisions are required.

SECTION CA102
GENERAL DEFINITION

SOLAR-READY ZONE. A section or sections of the roof or building overhang designated and reserved for the future installation of a solar photovoltaic or solar thermal system.

SECTION CA103
SOLAR-READY ZONE

CA103.1 General. A solar-ready zone shall be located on the roof of buildings that are five stories or less in height above grade plane, and are oriented between 110 degrees and 270 degrees of true north or have low-slope roofs. Solar-ready zones shall comply with Sections CA103.2 through CA103.8.

Exceptions:

1. A building with a permanently installed, on-site renewable energy system.
2. A building with a solar-ready zone that is shaded for more than 70 percent of daylight hours annually.
3. A building where the licensed design professional certifies that the incident solar radiation available to the building is not suitable for a solar-ready zone.
4. A building where the licensed design professional certifies that the solar zone area required by Section CA103.3 cannot be met because of extensive rooftop equipment, skylights, vegetative roof areas or other obstructions.

CA103.2 Construction document requirements for a solar-ready zone. Construction documents shall indicate the solar-ready zone.

CA103.3 Solar-ready zone area. The total solar-ready zone area shall be not less than 40 percent of the roof area calculated as the horizontally projected gross roof area less the area covered by skylights, occupied roof decks, vegetative roof areas and mandatory *access* or set back areas as required by the *International Fire Code*. The solar-ready zone shall be a single area or smaller, separated sub-zone areas. Each sub-zone shall be not less than 5 feet (1524 mm) in width in the narrowest dimension.

CA103.4 Obstructions. Solar ready zones shall be free from obstructions, including pipes, vents, ducts, HVAC equipment, skylights and roof-mounted equipment.

CA103.5 Roof loads and documentation. A collateral dead load of not less than 5 pounds per square foot (5 psf) (24.41 kg/m^2) shall be included in the gravity and lateral design calculations for the solar-ready zone. The structural design loads for roof dead load and roof live load shall be indicated on the construction documents.

CA103.6 Interconnection pathway. Construction documents shall indicate pathways for routing of conduit or piping from the solar-ready zone to the electrical service panel or service hot water system.

CA103.7 Electrical service reserved space. The main electrical service panel shall have a reserved space to allow installation of a dual-pole circuit breaker for future solar electric installation and shall be *labeled* "For Future Solar Electric." The reserved space shall be positioned at the end of the panel that is opposite from the panel supply conductor connection.

CA103.8 Construction documentation certificate. A permanent certificate, indicating the solar-ready zone and other requirements of this section, shall be posted near the electrical distribution panel, water heater or other conspicuous location by the builder or *registered design professional*.

INTERNATIONAL CODE COUNCIL®
Copyright © 2019 ICC & NYSDOS. ALL RIGHTS RESERVED. Accessed by Lauren Gualdino (lgualdino@briarcliffmanor.org), (-) Order Number #100880972 on May 08, 2020 07:05 AM (PDT) pursuant to License Agreement with ICC & NYSDOS. No further reproduction, no

100880972

INTERNATIONAL CODE COUNCIL®

Copyright © 2019 ICC & NYSDOS. ALL RIGHTS RESERVED. Accessed by Lauren Gualdino (lgualdino@briarcliffmanor.org), (-) Order Number #100880972 on May 08, 2020 07:05 AM (PDT) pursuant to License Agreement with ICC & NYSDOS. No further reproduction, no

100880972

INDEX

A

ACCESSIBLE
Controls C402.2.3, C404.6, C404.9.1, C405.2.2.3, C405.2.3.1
Defined C202
ADDITIONAL EFFICIENCY PACKAGE C406
ADDITIONS
Defined C202
Historic buildings C501.6
Requirements C502
ADMINISTRATION . . . . . Chapter 1
AIR BARRIER C402.5
Access openings C402.5.4
Assemblies C402.5.1.2.2
Compliance options C402.5.1.2
Construction C402.5.1.1
Dampers C402.5.5, C403.7.7
Doors other than fenestration C402.5.4
Fenestration . . . . . C402.5.2, Table C402.5.2
Materials C402.5.1.2.1
Penetrations C402.5.1.1
Recessed lighting C402.5.8
Rooms with fuel burning appliances C402.5.3
Testing C402.5
Vestibules C402.5.7
AIR CONDITIONERS
Efficiency requirements . . . . . Tables C403.3.2(1, 3)
AIR CURTAIN
Defined C202
Vestibules C402.5.7
AIR ECONOMIZERS
Defined C202
Requirements C403.5, C403.5.1, C403.5.2, C403.5.3, C403.5.4
AIR INFILTRATION (see AIR BARRIER)
Defined C202
AIR INTAKES AND EXHAUSTS. C402.5.5, C403.7.7
AIR LEAKAGE—THERMAL ENVELOPE (see AIR BARRIER)
AIR SYSTEM BALANCING C408.2.2.1, C408.2.2.2, C408.2.5.3
ALTERATIONS
Defined C202
Historic buildings C501.6
Replacement fenestration. C401.2.1
Requirements C503
ALTERNATE MATERIALS C104
APPROVED
Defined C202
APPROVED AGENCY
Defined C202
Inspections C106.4
AREA-WEIGHTED *U*-FACTOR. C402.4.3.4
AUTOMATIC
Defined C202

B

BASEMENT WALLS (see WALL, BELOW GRADE)
Requirements C303.2.1
BELOW-GRADE WALLS (see WALL, BELOW GRADE)
BOILERS
Defined C202
Requirements . . . . . Table C403.3.2(5), C403.3.4, C403.4.3, C404.2, Table C404.2
Setback controls C403.4.1.5
Turndown controls C403.3.4
BUILDING
Defined C202
Multifamily residential C407.5.2.3
BUILDING COMMISSIONING
Defined C202
Requirements C408
BUILDING ENTRANCE
Defined C202
Exterior lighting . . . . . Table C405.4.2(2)
Lighting controls C405.2.1.1
Vestibules C402.5.7
BUILDING ENVELOPE
Compliance documentation C105.2, C105.2.1, C105.2.2
Defined C202
Exemptions C402.1.1, C402.1.2
Insulation. C303.1.1
Insulation and fenestration criteria . . . . C402.1.3, Table C402.1.3, C402.1.4, Table C402.1.4
Requirements C402
Performance method C407.3
BUILDING OFFICIAL
Approval of Alternate Methods C102
Approval of Construction Documents C103.3.1
Defined C202
Examination of Construction Documents C103.3
Inspections C105

INTERNATIONAL CODE COUNCIL®
Copyright © 2019 ICC & NYSDOS. ALL RIGHTS RESERVED. Accessed by Lauren Gualdino (lgualdino@briarcliffmanor.org), (-) Order Number #100880972 on May 08, 2020 07:05 AM (PDT) pursuant to License Agreement with ICC & NYSDOS. No further reproduction, no

100880972

BUILDING THERMAL ENVELOPE
Air leakage and barriers. C402.5
Defined C202
Doors C402.4.5
Low-energy buildings. C402.1.1
Performance C402.1, C402.1.3, C402.1.4, C402.1.5
Rooms with fuel-burning appliances C402.5.3
Specific insulation C402.2

C

C-FACTOR
Defined C202
Assembly *U*-, *C*- or *F*-factor method . . . . . .C402.1.4, Table C402.1.4
CAULKING AND WEATHERSTRIPPING . . .C402.5.1.1, C402.5.1.2.1, C402.5.1.2.2, C402.5.3, C402.5.4, C402.5.6, C402.5.8
CHANGE OF OCCUPANCY C501.4, C505
CHILLERS . . . . Table C403.3.2(7), Table C407.5.1(4)
Positive displacement chilling packages C403.3.2.2
Water-cooled centrifugal chiller packages . . . . . C403.3.2.1, Table C403.3.2(7), Table C407.5.1(5)
CIRCULATING HOT WATER SYSTEM
Defined C202
Requirements C404.6.1, C404.6.3
CIRCULATING PUMPS C403.4.3.3
CIRCULATING SYSTEMS. C403.4.3.3, C404.6
CLIMATE ZONES
Climate Zone Definitions . . . . . Table C301.3(2)
Defined C202
Established . . . . . C301, Table C301.1
By County . . . . . .Table C301.1
COEFFICIENT OF PERFORMANCE (COP)
Defined C202
Requirements . . . . . Table C403.3.2(2), Table C403.3.2(7)
COMMERCIAL BUILDINGS
Compliance . . . . . .C101.3, C101.5.1, C101.6, C401.1, C401.2, Chapter 5
Defined C202
Total building performance C407
COMMISSIONING C408
COMPLIANCE AND ENFORCEMENT
Enforcement C110.6
General C101.5
Existing buildings. C501.4
COMPRESSOR (REFRIGERATION) SYSTEMS C403.10.4.2
COMPONENT PERFORMANCE APPROACH. C402.1.5
COMPUTER ROOM
Air conditioning. . . . . .Table C403.3.2(9)
Defined. C202
CONDENSING UNITS
Defined. C202
Efficiency requirements . . . . . Tables C403.3.2(1, 6)
CONDITIONED FLOOR AREA
Defined. C202
Renewable energy C406.5
CONDITIONED SPACE
Defined. C202
Change from nonconditioned or low energy C503.2
Roof solar reflectance C402.3
Rooms containing fuel-burning appliances. C402.5.3
CONSTRUCTION DOCUMENTS C105
Amended C105.4
Approval C105.3.1
Examination C105.3
Information required. C105.2
Phased approvals C105.3.3
Previous approvals. C105.3.2
Revocation C106.7.1
CONTINUOUS AIR BARRIER
Defined. C202
Required. C402.5.1
CONTINUOUS INSULATION
Defined. C202
Requirements. . . . . C303.2.2, C402.1.3, Table C402.1.3, C402.2.2, C402.2.3
CONTROLS
Capabilities. C403, C403.3.1, C403.4.1, C403.4.1.2, C403.4.2.1, C403.4.2.2, C403.4.3.3.1, C403.4.5, C403.7.1, C404.6, 404.7
Chilled water plants C403.4.5
Economizers . . . . . .C403.5, C403.5.1, C403.5.3.2, C403.5.3.3, Table C403.5.3.3
Energy recovery systems. C403.7.4
Fan speed C403.8.1, C403.8.5, C403.8.5.1, C403.9
Freeze protection system. C403.12.3
Glazing. C402.4.3.3
Heat pump C403.4.1.1, C403.4.3.3
Heating and cooling C403.3.1, C403.4, C403.5.1
Hot water system C404.6

INTERNATIONAL CODE COUNCIL®
Copyright © 2019 ICC & NYSDOS. ALL RIGHTS RESERVED. Accessed by Lauren Gualdino (lgualdino@briarcliffmanor.org), (-) Order Number #100880972 on May 08, 2020 07:05 AM (PDT) pursuant to License Agreement with ICC & NYSDOS. No further reproduction, no

100880972

Humidity C403.4.1, C403.5.1, C403.7.4
HVAC C403.4, C408.2.3.2
Hydronic systems C403.4.3
Lighting C402.4, C402.4.1.1, C402.4.1.2, C402.4.2.1, C402.4.3.1, C405.2, C405.4.1
Lighting, digital C406.4
Off hour C403.4.2
Service water heating C403.3.3, C404.5, C404.6
Shutoff dampers C403.4.4, C403.7.7
Snow melt system C403.12.2
Temperature C403.4.1, C403.4.2, C403.4.2.1, C403.4.2.2, C403.4.2.3, C403.4.3, C403.7.7
Three-pipe system C403.4.3.1
Two-pipe changeover system C403.4.3.2
Variable air volume systems C403.5.2, C403.6
Ventilation C403.2.6

COOLING SYSTEMS
Hot gas bypass limitation C403.2.2

COOLING TOWER C403.9.3, C403.9.4

COOLING WITH OUTDOOR AIR C403.5.1

CRAWL SPACE WALLS
Defined C202
Requirements C303.2.1

CURTAIN WALL
Defined C202
Air leakage of fenestration . . . . . Table C402.5.2

D

DAMPERS C402.5.5, C403.7.7

DAYLIGHT RESPONSIVE CONTROL
Defined C202
Required C402.4.1.1, C402.4.1.2, C402.4.2.1, C402.4.3.1, C402.4.3.2, C405.2.3.1

DAYLIGHT ZONE C402.4.4, C405.2.3.2, C405.2.3.3
Defined C202
Under skylights . . . C402.4.1.2, C402.4.2, C405.2.2.3

DAYLIGHT ZONE CONTROL C405.2.3

DEADBAND C403.4.1.2, C403.4.1.3, C403.4.3.3.1

DEFINITIONS . . . . . Chapter 2

DEGREE DAY COOLING (CDD) . . . . Table C301.3(2)

DEGREE DAY HEATING (HDD) . . . . . Table C301.3(2)

DEMAND CONTROL VENTILATION (DCV)
Defined C202
Requirements C403.7.1

DEMAND RECIRCULATION WATER SYSTEM
Defined C202
Requirements C404.7

DESIGN CONDITIONS C302

DIRECT EXPANSION (DX) C403.8.5.1

DOORS
Default *U*-factors . . . . . Table C303.1.3(2)
Garage doors C303.1.3
Loading docks C402.5.6
Opaque C402.2.7
Performance requirements . . . . . Table C402.1.3, Table C402.1.4, C402.4, C402.4.5, 402.5.4
Vestibules C402.5.7

DRAIN WATER HEAT RECOVERY C404.8

DUAL DUCT VAV C403.6.3, C403.6.4

DUCTS
Defined C202
Insulation C105.2, C403.11.1, C403.11.2, C403.11.2.1, C403.11.2.2, C403.11.2.3
Sealing C105.2, C403.11.1, C403.11.2.1, C403.11.2.2, C403.11.2.3

DUCT SYSTEM
Defined C202
Requirements C403.11.2

DWELLING UNIT
Defined C202
Electrical Meter C405.5
Lighting C405.1
Vestibules C402.5.7

DYNAMIC GLAZING
Defined C202
Requirements C402.4.3.3

E

ECONOMIZER
Air . . . . . Table C403.5(1), C403.5.3
Controls C403.5.1, C403.6.8, C403.6.9
Defined C202
Fault detection and diagnostics (FDD) . . . C403.2.5.5
High-limit shutoff control . . . . . C403.5.3.3, Table C403.5.3.3
Requirements C403.5.3, C403.5.4
Water C403.5.4

EFFICIENCY, ADDITIONAL C406

ELECTRICAL METERS C405.5

ELECTRICAL MOTORS C405.7

ELECTRICAL POWER AND LIGHTING C405

ELECTRICAL TRANSFORMERS C405.6

INTERNATIONAL CODE COUNCIL®
Copyright © 2019 ICC & NYSDOS. ALL RIGHTS RESERVED. Accessed by Lauren Gualdino (lgualdino@briarcliffmanor.org), (-) Order Number #100880972 on May 08, 2020 07:05 AM (PDT) pursuant to License Agreement with ICC & NYSDOS. No further reproduction, no

100880972

ELEVATOR POWER C405.8.1, C405.8.2
ELEVATOR SHAFTS C402.5.4, C402.5.5
ENCLOSED SPACE
Defined C202
Under skylights C402.4.2
ENERGY ANALYSIS, ANNUAL
Defined C202
Documentation. C407
Requirements C407
ENERGY COST
Compliance performance. C401.2
Defined C202
Performance basis. C407.3
ENERGY EFFICIENCY RATIO (EER) . . . . . .C403.3.2, Tables C403.3.2(1, 2, 3, 6, 7)
ENERGY RECOVERY VENTILATION SYSTEMS
Defined C202
Requirements C403.1.1, C403.7.4
ENERGY SIMULATION TOOL
Defined C202
Requirements/use C101.5.1, C407, C407.2, C407.5
ENTRANCE DOOR
Air leakage. . . . . Table C402.5.2
Defined C202
Thermal performance . . . . . .Table C402.4
ENVELOPE, BUILDING THERMAL
Defined C202
ENVELOPE DESIGN METHODS. C402.1.3, C402.1.4, C402.1.5
EQUIPMENT BUILDINGS C402.1.2
EQUIPMENT EFFICIENCIES. C105.2, C403.3.2, C403.5.1, C403.8.5, C404.2
EQUIPMENT PERFORMANCE REQUIREMENTS C403.3.2
Boilers . . . . . Table C403.3.2(5)
Condensing units. . . . . Table C403.3.2(6)
Economizer exception . . . . . Tables C403.5(2)
Heat rejection equipment. . . . . Table C403.3.2(8)
Packaged terminal air conditioners and heat pump. . . . . Table C403.3.2(3)
Unitary air conditioners and condensing units. . . . . Table C403.3.2(1)
Unitary and applied heat pumps . . Table C403.3.2(2)
Warm air duct furnaces and unit heaters. . . . . Table C403.3.2(4)
Warm air furnaces . . . . . Table C403.3.2(4)
Warm air furnaces/ air-conditioning units. . . . . Table C403.3.2(4)
Water chilling packages, standard . . . . . Table C403.3.2(7)
Water heating. . . . . Table C404.2, C404.2.1
EQUIPMENT ROOM
Defined. C202
Lower power allowance . . . . . Table C405.4.2(2)
ESCALATORS C405.8.2
EXEMPT BUILDINGS. C401.1.1, C402.1.2
EXHAUSTS. C402.5.5
EXIT SIGNS C405.2, C405.3.1
EXISTING BUILDINGS. . . . . Chapter 5
EXTERIOR LIGHTING C405.2.5, C405.4
EXTERNAL SHADING . . . . . Table C407.5.1(1)
EXTERIOR WALLS
Defined. C202
Thermal performance. C402, C402.2.2

F

F–FACTOR
Defined. C202
Assembly *U*-, *C*- or F-factor method . . . . . .C402.1.4, Table C402.1.4
FAN BRAKE HORSEPOWER (BHP)
Defined. C202
FAN EFFICIENCY GRADE (FEG)
Defined. C202
Requirements. C403.8.3
FAN FLOOR HORSEPOWER C403.8.1
FAN POWER LIMITATION. . . . . .Tables C403.8.1(1, 2)
FAN SYSTEM BHP
Allowable C403.8.1
Defined. C202
FAN SYSTEM DESIGN CONDITIONS
Allowable C403.8.2
Defined. C202
FAN SYSTEM MOTOR NAMEPLATE HP
Defined. C202
FAULT DETECTION & DIAGNOSTICS (FDD)
Economizers C403.2.5.5
FENESTRATION (see also DOORS) C303.1.3, C402.4
Air leakage (infiltration) rate . . . . . C402.5.2, Table C402.5.2
Defined. C202
Maximum area C402.4.1, C402.4.1.2
Rating and labeling C303.1.3, C402.1.3
Skylights. C402.4.1.2, C402.4.2, C402.4.2.1, C402.4.2.2, C402.4.3, C502.2.2, C503.3.3
Solar heat gain (SHGC) . . . . C402.4.3, Table C402.4
Vertical . . . . . .C402.1, C402.4.1.1, C402.4.3, Table C402.4, C502.2.1, C503.3.2

INTERNATIONAL CODE COUNCIL®
Copyright © 2019 ICC & NYSDOS. ALL RIGHTS RESERVED. Accessed by Lauren Gualdino (lgualdino@briarcliffmanor.org), (-) Order Number #100880972 on May 08, 2020 07:05 AM (PDT) pursuant to License Agreement with ICC & NYSDOS. No further reproduction, no

100880972

FENESTRATION PRODUCT, FIELD-FABRICATED
Defined C202
Air leakage C402.5.2
FENESTRATION PRODUCT, SITE-BUILT
Defined C202
FLOOR AREA, NET
Defined C202
Fenestration increase C402.4.1.1
FLOORS
Slab on grade C402.2.4
Thermal properties C402.2.3
FREEZE PROTECTION SYSTEMS C403.12.3
FURNACE EFFICIENCY . . . . . Table C403.3.2(4)

G

GENERAL LIGHTING
Additional lighting C405.3.2.2.1
Daylight controls C405.2.3
Defined C202
Interior lighting power C405.3.1
GENERAL PURPOSE ELECTRIC MOTORS
Defined C202
GREENHOUSE
Defined C202
Building envelope C402.1.1
GUESTROOMS (see SLEEPING UNIT)
GLAZING AREA
Default fenestration *U*-factors . . . . Table C303.1.3(1)
Dynamic C402.4.3.3

H

HAZE FACTOR C402.4.2.2
HEAT PUMP . . . . . Tables C403.3.2(2, 3), C403.4.1.1, C403.4.3.3
HEAT RECOVERY
Drain water C404.8, C406.7.1
Economizer exemption C403.5
Kitchen exhaust C403.7.5
Service water C403.9.5
HEAT REJECTION EQUIPMENT . . . . . C403.9, Table C403.3.2(8)
HEAT TRACE SYSTEMS C404.6.2
HEAT TRANSFER EQUIPMENT . . . . . Table C403.3.2(9)
HEAT TRAPS
Defined C202
Required C404.3, C404.4
HEATED SLAB
Defined C202
Insulation . . . . . Table C402.1.3, Table C402.1.4, C402.2.6
HEATING AND COOLING LOADS C302.1, C403.1.1, C403.3.1, C403.3.2, C403.4.1.1, C403.5
HEATING OUTSIDE A BUILDING C403.12.1
HIGH-SPEED DOOR
Air leakage . . . . . Table C402.5.2
Defined C202
HISTORIC BUILDINGS
Defined C202
Compliance C501.6
HOT GAS BYPASS . . . . . C403.3.3, Table C403.3.3
HOT WATER C404.2, C404.6
Efficient delivery C404.5
Piping insulation C403.11.3, C404.4
System controls C403.9.5, C404.6
HUMIDISTAT
Defined C202
Requirements C403.4.1, C403.7.4
HVAC EQUIPMENT
Automatic setback and shutdown C403.4.2.2
Automatic start capabilities C403.4.2.3
Increased efficiency C406.2
Performance requirements C403.3.2
Supply-air temperature reset C403.6.5
System map zones . . . . . Table C407.5.1(2), C407.5.2.1
HVAC SYSTEMS C403, C408.2
Manuals C408.2.5.2
Plan C408.2.1
Report C408.2.4, C408.2.4.1, C408.2.4.2, C408.2.5.4
HYDRONIC HEAT PUMP SYSTEMS C403.4.3.3

I

ICE MELT SYSTEMS C403.12.2
IDENTIFICATION (MATERIALS, EQUIPMENT AND SYSTEM) C303.1
INDIRECTLY CONDITIONED SPACE (see CONDITIONED SPACE)
INFILTRATION (air leakage) (see AIR BARRIER)
Defined C202
INSPECTIONS C106
Inspection agencies C106.4
INSULATED SIDING C303.1.4.1
INSULATION
Continuous insulation . . . . . C303.2.2, C402.1.3, Table C402.1.3, C402.2.1
Duct C403.11.1

INTERNATIONAL CODE COUNCIL®
Copyright © 2019 ICC & NYSDOS. ALL RIGHTS RESERVED. Accessed by Lauren Gualdino (lgualdino@briarcliffmanor.org), (-) Order Number #100880972 on May 08, 2020 07:05 AM (PDT) pursuant to License Agreement with ICC & NYSDOS. No further reproduction, no

100880972

Identification. C303.1, C303.1.2
Installation C303.1.1, C303.1.1.1, C303.1.2, C303.2
Mechanical system piping C403.11.3
Piping. C404.4
Plenum. C403.11.1
Product rating C303.1.4
Protection of exposed foundation C303.2.1
Protection of piping insulation C403.11.3.1
Radiant heating systems C402.2.6
Requirements . . . . . C402.1.3, Table C402.1.3, C402.2 through C402.2.6

INTEGRATED PART LOAD VALUE (IPLV)
Defined C202
Requirements . . . . . Tables C403.3.2(6, 7), C403.3.2.1, Table 403.3(2)

INTERIOR LIGHTING POWER C405.3, C405.3.2

K

KITCHEN EXHAUST . . . . . .C403.7.5, Table C403.7.5

L

LABELED
Dampers C403.7.7
Defined C202
Fans. C403.8.3
Glazing, skylights. C402.2.1.1, C402.4.2.4, C402.5.2
HVAC equipment. . . . . .Table C403.3.2(3)
Lighting C402.5.8, C405.3.1
Requirements . . . . . .C303.1.3, C303.3, Table C403.3.2(3)

LIGHTING POWER
Additional lighting. C405.3.2.2.1, C405.4.1
Design procedures. C405.3.2, C405.3.2.1, C405.3.2.2

Exterior connected. . . . . .C405.4, C405.4.1, Tables C405.4.2(1, 2)
Interior connected . . . . C405.3, C405.3.1, C405.3.2, Tables C405.3.2(1, 2), C406.3
Reduced lighting power density. C406.3

LIGHTING SYSTEMS. C405, C406.3
Controls, exterior . . . . . .C405.2.5, Tables C405.4.2(1, 2), C405.4.1
Controls, interior . . . . . .C405.2.2, C405.3, C405.3.1, C405.3.2, Tables C405.3.2(1, 2), C406.4
Daylight responsive C405.2.3, C405.2.3.1
Dwelling and *sleeping units* C405.1, C405.2.2, C405.2.3, C405.2.4, C405.3.1
Existing buildings C502.1, C502.2.6, C503.1, C503.6, 504.1
Light reduction C405.2.2.2
Occupant sensor controls C405.2.1, C405.2.1.1, C405,2.1.2
Recessed. C402.5.8
Retail display C405.3.2.2.1
Specific applications. C405.2.4
Time switch controls. C405.2.2, C405.2.2.1

LINER SYSTEM (Ls)
Defined. C202
Insulation . . . . . Table C402.1.3

LISTED
Defined. C202
Kitchen exhaust hoods. C403.7.5
Skylights. C402.2.1.1

LOADING DOCK WEATHERSEALS. C402.5.6
LOW-ENERGY BUILDINGS. C402.1.1

LOW-SLOPED ROOF
Defined. C202
Roof solar reflectance C402.3

LUMINAIRE
Controls C405.2, C405.2.1, C405.2.2, C405.2.3, C405.2.4
Sealed C402.5.8
Wattage C405.3.1, C405.4.1

M

MAINTENANCE
General C501.2, C501.3
Instructions for equipment and systems. C303.3
Owner responsibility. C501.3

MANUAL
Defined. C202

MASS
Floor. . . . . .Table C402.1.3, Table C402.1.4
Wall C402.2.2

MATERIALS AND EQUIPMENT C303

MECHANICAL SYSTEMS AND EQUIPMENT C403
Existing buildings C501.5, C502.1, C502.2.3, C503.4, C504

MECHANICAL VENTILATION C403.1, C403.2.2

METERS, ELECTRICAL. C405.5

MOTOR NAMEPLATE HORSEPOWER. C403.8.2
Efficiency C405.7

MOVING WALKWAYS C405.8.2

INTERNATIONAL CODE COUNCIL®
Copyright © 2019 ICC & NYSDOS. ALL RIGHTS RESERVED. Accessed by Lauren Gualdino (lgualdino@briarcliffmanor.org), (-) Order Number #100880972 on May 08, 2020 07:05 AM (PDT) pursuant to License Agreement with ICC & NYSDOS. No further reproduction, no

100880972

MULTIFAMILY
RESIDENTIAL BUILDINGS C407.5.2.3
MULTIPLE-ZONE SYSTEMS C403.6, C403.6.5

N

NAMEPLATE HORSEPOWER
Defined C202
NET FLOOR AREA (see FLOOR AREA, NET)
NONCONDITIONED SPACE
Alterations. C503.2
NONSTANDARD PART LOAD VALUE
Defined C202

O

OCCUPANCY
Complex HVAC systems C403.6
Compliance. C101.5
Lighting power allowances. . . . . C405.2.2, C405.3.2, C405.3.2.1, Tables C405.3.2(1, 2)
Mixed occupancies C102.1.1
OCCUPANT SENSOR CONTROL
Commissioning C408.3.1.1
Defined C202
Lighting C406.4
Outdoor heating C403.12.1
Required C405.2.1, C405.2.1.1, C405.2.1.2
OFF-HOUR, CONTROLS C403.4.2, C403.7.7, C405.2.2.1
ON-SITE RENEWABLE ENERGY
Defined C202
Efficiency package C406.5
OPAQUE AREAS . . . . . C402.1, Table C402.1.3, Table C402.1.4
OPAQUE DOORS
Defined C202
Regulated . . . . . Table C402.1.3, C402.1.4, C402.4.5
OPERATING & MAINTENANCE MANUAL. C408.2.5.2
ORIENTATION
Daylight Responsive controls C405.2.3.1
Fenestration . . . . . Table C402.4
Thermostatic controls C403.4.1, C407.5.2.2

P

PACKAGED TERMINAL AIR CONDITIONER (PTAC)
Requirements . . . . . Table C403.3.2(3)
PACKAGED TERMINAL HEAT PUMP
Requirements . . . . . Table C403.3.2(3)
PARKING GARAGE VENTILATION. C403.7.2
PERFORMANCE ANALYSIS C407
PIPE INSULATION . . . . . C403.11.3, Table C403.11.3, C404.4
PLANS AND SPECIFICATIONS. C105
PLENUMS
Insulation and sealing C403.11.1
POOLS. C404.9
Controls. C404.9.1, 404.9.2
Covers. C404.9.3
Existing buildings C502.2.5
POWER DENSITY. C406.3
POWERED ROOF/WALL VENTILATORS
Defined C202
Fan efficiency exemption C403.8.3
PROPOSED DESIGN
Defined C202
Requirements C407
PUBLIC LAVATORY. C404.5
PUMPING SYSTEMS C403.4.3.3, C404.6, C408.2.2.2

R

***R*-VALUE**
Above-grade walls C402.2.2
Defined C202
Insulation component method. . . . . C402.1.3, Table C402.1.3
Roof assemblies C402.2.1
Slabs on grade C402.2.4
Steel stud walls . . . . . C402.1.4.1, Table C402.1.4.1
RADIANT HEATING SYSTEM
Defined C202
Insulation. C402.2.6

READY ACCESS
Defined C202
Lighting controls C405.2.2.3, C405.2.3.1
RECOOLING C403.6
REFERENCED STANDARDS. . . . . C102.4, Chapter 6
REFRIGERATED WAREHOUSE COOLER
Defined C202
Requirements C403.10.1
REFRIGERATED WAREHOUSE FREEZER
Defined C202
Requirements C403.10.1
REFRIGERATION EQUIPMENT
Performance . . . . . .C403.10, Tables C403.10.1(1, 2)

INTERNATIONAL CODE COUNCIL®
Copyright © 2019 ICC & NYSDOS. ALL RIGHTS RESERVED. Accessed by Lauren Gualdino (lgualdino@briarcliffmanor.org), (-) Order Number #100880972 on May 08, 2020 07:05 AM (PDT) pursuant to License Agreement with ICC & NYSDOS. No further reproduction, no

100880972

REGISTERED DESIGN PROFESSIONAL
Commissioning C408
Defined C202
REHEATING C403.6.5, C403.9.5
RENEWABLE/NONDEPLETABLE ENERGY SOURCES C406.5
REPAIR
Defined C202
Historic buildings C501.6
Requirements C501.5, C504
REPLACEMENT MATERIALS C501.5
Replacement fenestration C401.2.1
REROOFING
Defined C202
RESET CONTROL C403.6.5
RESIDENTIAL BUILDINGS
Compliance C101.3, C101.5.1
Defined C202
ROOF ASSEMBLY
Air barriers C402.5.1.2.1
Defined C202
Fenestration C402.4.1, C402.4.1.2, C402.4.2, C405.2.3.3
Recover C503.1
Reflectance and emittance options . . . . . Table C402.3
Repairs C504.1
Replacement C503.3.1
Requirements C303.1.1.1, C402.2.1
Solar reflectance and thermal emittance C402.3
ROOF RECOVER
Defined C202
Exemption C503.1
ROOF REPAIR
Defined C202
Exemption C504.1
ROOF REPLACEMENT
Defined C202
Requirements C503.3.1
ROOFTOP MONITOR
Daylight zones C405.2.3.2
Defined C202
Skylights required C402.4.2
ROOF VENTILATORS (see POWERED ROOF/ WALL VENTILATORS)
ROOMS WITH FUEL-BURNING APPLIANCES C402.5.3

S

SATURATED CONDENSING TEMPERATURE
Defined C202
Refrigeration systems C403.10.4.1
SCOPE OF CODE C101.3
SCREW LAMP HOLDERS
Defined C202
Requirements C405.3.1
SEASONAL ENERGY EFFICIENCY RATIO (SEER) . . . . . Tables C403.3.2(1, 2, 3)
SERVICE WATER HEATING
Defined C202
Drain water heat recovery C404.8
Efficiency C404.2.1, 404.5
Existing buildings C502.2.4, C503.5, C504.1
Reduced use C406.7
Requirements C403.9.5, C404, C404.2, C404.2.1, 404.5, 404.6, 404.7
SETBACK THERMOSTAT C403.4.2, C403.4.2.1, C403.4.2.2
SHADING C402.3, C402.4.3
SHGC (see SOLAR HEAT GAIN COEFFICIENT)
SHUTOFF DAMPERS C402.5.5, C403.7.7
SIMULATED PERFORMANCE ALTERNATIVE C407
SIMULATION TOOL (see ENERGY SIMULATION TOOL)
SINGLE ZONE C403.5
SIZING
Equipment and system C403.3.1
SKYLIGHTS . . . . . C402.1.5, C402.3, Table C402.4, C402.4.3.1, C402.4.3.2
Additions C502.2.2
Air leakage (infiltration) . . . . . Table C402.5.2
Alterations C503.3.3
Curb insulation C402.2.1.1
Defined (see Fenestration) C202
Haze factor C402.4.2.2
Lighting controls C402.4.2.1
Maximum area C402.4.1, C402.4.1.2
Minimum area C402.4.2
SLAB-EDGE INSULATION C303.2.1, C402.2.4
SLEEPING UNIT
Defined C202
Lighting C405.1, C405.2.2, C405.2.4, C405.2.3
SMALL ELECTRIC MOTOR
Defined C202
Minimum efficiency C405.7

INTERNATIONAL CODE COUNCIL®
Copyright © 2019 ICC & NYSDOS. ALL RIGHTS RESERVED. Accessed by Lauren Gualdino (lgualdino@briarcliffmanor.org), (-) Order Number #100880972 on May 08, 2020 07:05 AM (PDT) pursuant to License Agreement with ICC & NYSDOS. No further reproduction, no

100880972

SNOW MELT AND ICE SYSTEM CONTROLS C403.12.2
SOLAR HEAT GAIN COEFFICIENT (SHGC) . . . . C103.2, Table C303.1.3(3), C402.4.1.1, C402.4.3, Table C402.4, C402.4.3.1
Defined C202
Dynamic glazing C402.4.3.3
Replacement products C401.2.1
SPAS C404.9, C404.10
STAIRWAYS . . . . . C402.5.4, C402.5.5, C403.7.7, C405.2, C405.2.1.1, Table C405.3.2(2)
STANDARD REFERENCE DESIGN
Defined C202
Requirements . . . . . C407, Tables C407.5.1(1, 3)
STEEL FRAMING . . . . . Table C402.1.3, Table C402.1.4, C402.1.4.1
STOREFRONT
Defined C202
Glazing . . . . . Table C402.5.2
SUPPLY AIR TEMPERATURE RESET CONTROLS C403.6.5
SUSPENDED CEILINGS C402.2.1
SWIMMING POOLS C404.9

T

TEMPERATURE DEADBAND C403.4.3.3.1
TENANT SPACES C406.1.1
THERMAL CONDUCTANCE (see C-Factor)
THERMAL MASS (see MASS)
THERMAL RESISTANCE (see *R*-VALUE)
THERMAL TRANSMITTANCE (see *U*-FACTOR)
THERMOSTAT
Defined C202
Pools and spa heaters C404.9.1
Requirements C403.4, C403.4.1, C403.2.4.1.2, C403.4.1.3, C403.4.2, C403.6
Setback capabilities C403.4.2
TIME SWITCH CONTROL
Defined C202
Requirements C405.2.2, C405.2.2.1
TOTAL BUILDING PERFORMANCE C407
TOWNHOUSE (see RESIDENTIAL BUILDINGS)
TRANSFORMERS, ELECTRIC C405.6

U

***U*-FACTOR**
Area-weighted *U*-factor fenestration C402.4.3.4
Assembly *U*-, *C*- or F-factor method . . . . . C402.1.4, Table C402.1.4
Component performance alternative C402.1.5
Default door . . . . . Table C303.1.3(2)
Default glazed fenestration . . . . . Table C303.1.3(1)
Defined C202
Fenestration . . . . C401.2.1, C402.4.3, Table C402.4
Skylights . . . . . Table C402.4, C402.4.3.2
Steel framing C402.1.4.1

V

VARIABLE AIR VOLUME SYSTEMS (VAV) . . . . . C403.4.5.6, C403.5.2, C403.6.2, C403.6.3, C403.6.5, C403.6.7, C403.6.9, C403.9.5, Table C407.5.1(3)
VARIABLE REFRIGERANT FLOW SYSTEM
Defined C202
Increased efficiencies C406.2
VENTILATION C403.2.2
Defined C202
Demand control ventilation (DCV) C403.7.1
Energy recovery system C403.7.4, C406.6
Parking garages C403.7.2
VENTILATION AIR
Defined C202
Energy recovery C403.7.4
Fan controls C403.8.5.1
Kitchen exhaust C403.7.5
VERTICAL FENESTRATION (see FENESTRATION)
VESTIBULES C402.5.7, C403.4.1.4
VISIBLE TRANSMITTANCE (VT)
Default glazed fenestration . . . . . Table C303.1.3(3)
Defined C202
Dynamic glazing C402.4.3.3
Increased fenestration C402.4.1.1
Skylights C402.4.2, C405.2.3.3

W

WALK-IN COOLER
Defined C202
Requirements C403.10.1, C403.2.16
WALK-IN FREEZER
Defined C202
Requirements C403.10.1, C403.10.2
WALL
Above-grade wall, defined C202
Thermal resistance . . . . . Table C402.1.3, Table C402.1.4, C402.2.2
Below-grade wall, defined C202
Thermal resistance . . . . . Table C402.1.3, Table C402.1.4, C402.1.5
Crawl space wall, defined C202

INTERNATIONAL CODE COUNCIL®
Copyright © 2019 ICC & NYSDOS. ALL RIGHTS RESERVED. Accessed by Lauren Gualdino (lgualdino@briarcliffmanor.org), (-) Order Number #100880972 on May 08, 2020 07:05 AM (PDT) pursuant to License Agreement with ICC & NYSDOS. No further reproduction, no

100880972

Exterior wall, defined C202
Steel framed . . . . . .C402.1.4.1, Table C402.1.4.1
WALLS (see EXTERIOR WALLS and ENVELOPE, BUILDING THERMAL)
WALLS ADJACENT TO UNCONDITIONED SPACE (see BUILDING THERMAL ENVELOPE)
WALL VENTILATORS (see POWERED ROOF/ WALL VENTILATORS)
WATER ECONOMIZER C403.5, C403.5.4, C403.5.4.1, C403.5.4.2
WATER HEATER
Defined C202
Efficiency . . . . . Table C404.2, C404.2.1
WATER HEATING . . . . . C404, Table C404.2
WINDOW AREA (see FENESTRATION and GLAZING AREA)

Z

ZONE (see also CLIMATE ZONES)
Defined C202
Requirements C403.4, C403.5, C407.5.2.1, C407.5.2.2

INTERNATIONAL CODE COUNCIL®
Copyright © 2019 ICC & NYSDOS. ALL RIGHTS RESERVED. Accessed by Lauren Gualdino (lgualdino@briarcliffmanor.org), (-) Order Number #100880972 on May 08, 2020 07:05 AM (PDT) pursuant to License Agreement with ICC & NYSDOS. No further reproduction, no

100880972

ECCCNYS—RESIDENTIAL PROVISIONS

TABLE OF CONTENTS

CHAPTER 1 SCOPE AND ADMINISTRATION R-3

Section

R101 Scope and General Requirements R-3

R102 Applicability R-4

R103 Interpretations of Energy Code Requirements . . . R-5

R104 Alternative Materials, Designs, Methods of Construction and Insulating Systems R-6

R105 Construction Documents R-6

R106 Inspections R-7

CHAPTER 2 DEFINITIONS R-9

Section

R201 General R-9

R202 General Definitions R-9

CHAPTER 3 GENERAL REQUIREMENTS R-13

Section

R301 Climate Zones R-13

R302 Design Conditions R-13

R303 Materials, Systems and Equipment R-13

CHAPTER 4 RESIDENTIAL ENERGY EFFICIENCY R-17

Section

R401 General R-17

R402 Building Thermal Envelope R-17

R403 Systems R-23

R404 Electrical Power and Lighting Systems. R-26

R405 Simulated Performance Alternative (Performance) R-26

R406 Energy Rating Index Compliance Alternative R-31

CHAPTER 5 EXISTING BUILDINGS R-33

Section

R501 General R-33

R502 Additions R-33

R503 Alterations R-34

R504 Repairs R-34

R505 Change of Occupancy or Use R-35

CHAPTER 6 REFERENCED STANDARDS R-37

APPENDIX RA SOLAR-READY PROVISIONS—DETACHED ONE- AND TWO-FAMILY DWELLINGS AND TOWNHOUSES. R-41

Section

RA101 Scope R-41

RA102 General Definition R-41

RA103 Solar-ready Zone R-41

INDEX R-43

INTERNATIONAL CODE COUNCIL®

Copyright © 2019 ICC & NYSDOS. ALL RIGHTS RESERVED. Accessed by Lauren Gualdino (lgualdino@briarcliffmanor.org), (-) Order Number #100880972 on May 08, 2020 07:05 AM (PDT) pursuant to License Agreement with ICC & NYSDOS. No further reproduction, no

INTERNATIONAL CODE COUNCIL®

Copyright © 2019 ICC & NYSDOS. ALL RIGHTS RESERVED. Accessed by Lauren Gualdino (lgualdino@briarcliffmanor.org), (-) Order Number #100880972 on May 08, 2020 07:05 AM (PDT) pursuant to License Agreement with ICC & NYSDOS. No further reproduction, no

100880972

ECCCNYS—RESIDENTIAL PROVISIONS

CHAPTER 1 [RE]

SCOPE AND ADMINISTRATION

[NY] SECTION R101
SCOPE AND GENERAL REQUIREMENTS

[NY] R101.1 The Energy Code. The *New York State Energy Conservation Construction Code* promulgated pursuant to Article 11 of the Energy Law (hereinafter referred to as the "*Energy Code*") is contained in Title 19 of the New York Codes, Rules and Regulations, Part 1240 ("19 NYCRR Part 1240"), and in the publications incorporated by reference in 19 NYCRR Part 1240.

This publication (the 2020 *Energy Conservation Construction Code of New York State*, hereinafter referred to as the "ECCCNYS") is one of the publications incorporated by reference in 19 NYCRR Part 1240. The provisions set forth in this publication are part of the *Energy Code*.

The *Energy Conservation Construction Code of New York State* has two separate sets of provisions. This set of provisions (the "ECCCNYS—Residential Provisions") includes provisions applicable to *residential building*s. The other set of provisions (the "ECCCNYS—Commercial Provisions") includes provisions applicable to *commercial building*s.

[NY] R101.1.1 Administration and enforcement. The *Energy Code* shall be administered and enforced in accordance with the strictest of:

1. The requirements of the code enforcement program established by the governmental unit or agency responsible for administration and enforcement of the *Energy Code* with respect to the building in question,
2. The minimum requirements established by the regulations adopted by the Department of State pursuant to section 381(1) of the New York State Executive Law, or
3. The requirements set forth in this Chapter 1 [RE] and, as applicable, in Chapter 1 [CE] of this publication.

[NY] R101.2 Title. This portion of the ECCCNYS shall be known as "*ECCCNYS—Residential Provisions*." References in the *ECCCNYS—Residential Provisions* to "this code" shall be construed as references to the *ECCCNYS—Residential Provisions*.

[NY] R101.3 Scope. This code applies to *residential buildings* and the *building* sites and associated systems and equipment.

Exceptions:

The *Energy Code* shall not apply to any of the following, provided that the energy use of the *building* is not increased:

1. Storm windows installed over existing fenestration;
2. Glass only replacements in an existing sash and frame;
3. Existing ceiling, wall or floor cavities exposed during construction provided that these cavities are filled with insulation;
4. Construction where the existing roof, wall or floor cavity is not exposed;
5. Reroofing for roofs where neither the sheathing nor the insulation is exposed; roofs without insulation in the cavity and where the sheathing or insulation is exposed during reroofing shall be insulated either above or below the sheathing;
6. Replacement of existing doors that separate conditioned space from the exterior shall not require the installation of a vestibule or revolving door, provided, however, that an existing vestibule that separates such conditioned space from the exterior shall not be removed;
7. Alterations that replace less than fifty percent of the luminaires in a space, provided that such alterations do not increase the installed interior lighting power; or
8. Alterations that replace only the bulb and ballast within the existing luminaires in a space provided that the alteration does not increase the installed interior lighting power.

[NY] R101.3.1 Appendices. Provisions in the following appendix have not been adopted and are included for informational purposes only:

Appendix RA Solar-Ready Zone – Residential

[NY] R101.4 Intent. The *ECCCNYS—Residential Provisions* regulate the design and construction of new *residential building*s; *additions* to, *alterations* of, and/or renovations of existing *residential buildings;* and *additions* to, *alterations* of, and/or renovations of *building systems* in existing *residential building*s for the use and conservation of energy over the life of each such *residential building*.

The *ECCCNYS—Residential Provisions* are intended to provide flexibility to permit the use of innovative approaches and techniques to achieve the objectives set forth in the preceding paragraph. However, nothing in this Section R101.4 shall be construed as permitting any *building official*, or any governmental unit or agency charged with the administration and enforcement of the *Energy Code*, to waive, vary, modify, or otherwise alter any standard or requirement of the *ECCCNYS—Residential Provisions* or any other standard or requirement of the *Energy Code*. Standards or requirements of the *Energy Code* may be varied or modified only pursuant to Section 11-106 of the New York State Energy Law.

INTERNATIONAL CODE COUNCIL®
Copyright © 2019 ICC & NYSDOS. ALL RIGHTS RESERVED. Accessed by Lauren Gualdino (lgualdino@briarcliffmanor.org), (-) Order Number #100880972 on May 08, 2020 07:05 AM (PDT) pursuant to License Agreement with ICC & NYSDOS. No further reproduction, no

100880972

The *ECCCNYS—Residential Provisions* are not intended to abridge safety, health or environmental requirements contained in other applicable statutes, laws, rules, regulations, codes or ordinances. However, nothing in Section R101.4 shall be construed as limiting the provisions of Section 11-103(3) of the New York State Energy Law, which provides that (1) any code, rule, or regulation promulgated or enacted prior to June 19, 1978 by any state agency other than the State Fire Prevention and Building Code Council, incorporating specific energy conservation requirements applicable to the construction of any building, is superseded by the *Energy Code* and (2) on and after June 19, 1978, the State Fire Prevention and Building Code Council, in accordance with the mandate under Article 11 of the New York State Energy Law, shall have exclusive authority among state agencies to promulgate a construction code incorporating energy conservation features.

[NY] R101.5 Compliance. *Residential buildings* shall meet the provisions of *ECCCNYS—Residential Provisions*.

Commercial buildings shall meet the provisions of ECCCNYS—Commercial Provisions. To the extent permitted by 19 NYCRR Part 1240, *commercial building*s may comply with *ASHRAE 90.1—2016* (as amended) in lieu of complying with the *ECCCNYS—Commercial Provisions*.

[NY] R101.5.1 Compliance software. Compliance with the *ECCCNYS—Residential Provisions* can be demonstrated using either of the following:

1. Computer software that is developed by the United States Department of Energy (such as REScheck) specifically for the *ECCCNYS—Residential Provisions*, or
2. Other software that shall have been expressly approved in writing by the New York Secretary of State as acceptable for demonstrating compliance with the *ECCCNYS—Residential Provisions*.

Software programs used to demonstrate compliance must indicate compliance with the *ECCCNYS—Residential Provisions* and must reflect the actual requirements of the *ECCCNYS—Residential Provisions*.

[NY] R101.5.2 Mandatory provisions. The use of the software approach to demonstrate compliance with the *ECCCNYS—Residential Provisions* does not excuse compliance with any mandatory provision of the *ECCCNYS—Residential Provisions*. When using the software approach to demonstrate compliance with the provisions of the *ECCCNYS—Residential Provisions*, compliance with all applicable mandatory provisions of the *ECCCNYS—Residential Provisions* will still be required.

[NY] R101.6 Statutory limitations. In the event of an *addition to or alteration* of an existing building or *building system* in an existing building, nothing in the *ECCCNYS—Residential Provisions* or in any other provision of the *Energy Code* shall be interpreted to require any unaltered portion of such existing building or *building system* to comply with the *Energy Code*.

[NY] R101.7 Historic buildings. *Historic buildings* are exempt from the *Energy Code*.

[NY] SECTION R102 APPLICABILITY

[NY] R102.1 Applicability. The *ECCCNYS—Residential Provisions* apply to (1) the construction of new *residential building*s, (2) *additions to and alterations* of existing *residential building*s, (3) *additions to and alterations* of *building system*s in existing *residential building*s.

Where, in any specific case, different sections of this code specify different materials, methods of construction or other requirements, the most restrictive shall govern. Where there is a conflict between a general requirement and a specific requirement, the specific requirement shall govern.

[NY] R102.1.1 Mixed residential and commercial buildings. Where a *building* includes both *residential building* and *commercial building* portions, each portion shall be separately considered and:

1. Each *commercial building* portion shall meet the applicable provisions of *ECCCNYS—Commercial Provisions* or, to the extent permitted by 19 NYCRR Part 1240, the applicable provisions of *ASHRAE 90.1—2016* (as amended), and
2. Each *residential building* portion shall meet the applicable provisions of the *ECCCNYS—Residential Provisions*.

[NY] R102.2 Other laws and regulations. The provisions of this code shall not be deemed to nullify any provisions of local, state or federal law, statute, rule, regulation or ordinance relating to any matter as to which the *Energy Code* does not provide.

[NY] R102.2.1 Other agencies' regulations. Pursuant to Section 11-103(3) of the New York State Energy Law, any other code, rule or regulation heretofore promulgated or enacted by any state agency other than the State Fire Prevention and Building Code Council, incorporating specific energy conservation requirements applicable to the construction of any building, shall be superseded by the *Energy Code*.

[NY] R102.2.2 More stringent local energy codes. Pursuant to Section 11-109 of the New York State Energy Law, and subject to the provisions and requirements of that section, any municipality has the power to promulgate a local energy conservation construction code that is more stringent than the *Energy Code*.

[NY] R102.3 Application of references. References to chapter or section numbers, or to provisions not specifically identified by number, shall be construed to refer to such chapter, section or provision of the *ECCCNYS—Residential Provisions*.

[NY] R102.4 Referenced codes and standards. The codes and standards referenced in the *ECCCNYS—Residential Provisions* shall be those indicated in Chapter 6 [RE], and such codes and standards shall be considered as part of the requirements of the *ECCCNYS—Residential Provisions* to the prescribed extent of each such reference and as further regulated in Sections R102.4.1 and R102.4.2.

[NY] R102.4.1 Conflicts. Where conflicts occur between provisions of the *ECCCNYS—Residential Provisions* and

INTERNATIONAL CODE COUNCIL®
Copyright © 2019 ICC & NYSDOS. ALL RIGHTS RESERVED. Accessed by Lauren Gualdino (lgualdino@briarcliffmanor.org), (-) Order Number #100880972 on May 08, 2020 07:05 AM (PDT) pursuant to License Agreement with ICC & NYSDOS. No further reproduction, no

100880972

referenced codes and standards, the provisions of the *ECCCNYS—Residential Provisions* shall apply.

[NY] R102.4.2 Provisions in referenced codes and standards. Where the extent of the reference to a referenced code or standard includes subject matter that is within the scope of the *ECCCNYS—Residential Provisions*, the provisions of the *ECCCNYS—Residential Provisions*, as applicable, shall take precedence over the provisions in the referenced code or standard.

[NY] R102.5 Partial invalidity. If a portion of the *Energy Code* is held to be illegal or void by a court of competent jurisdiction, such a decision shall not affect the validity of the remainder of the *Energy Code*.

[NY] SECTION R103
INTERPRETATIONS OF ENERGY CODE REQUIREMENTS

[NY] R103.1 General. The Secretary of State is authorized by Section 11-103(4) of the New York State Energy Law to issue written interpretations of the *Energy Code* upon written request of a permit applicant or the *building official* responsible for the administration and enforcement of the provisions of the *Energy Code.*

[NY] R103.2 Procedure. A request for an interpretation shall be signed by the building permit applicant and the *building official,* or by one or the other, individually, and shall include the following information in order to be considered complete:

1. Name, address, and telephone number of the building permit applicant and the *building official*;
2. A detailed description of the proposed construction, including a copy of the building permit application and plans and specifications that have been filed by the building permit applicant with the *building official*, as well as any other floor plans, elevations, cross-sections, details specifications, or construction documents necessary to describe adequately the proposed construction;
3. Identification of each requirement of the *Energy Code* for which an interpretation is requested;
4. A concise summary of the disagreement concerning the application of each such requirement for which an interpretation is requested; and
5. A copy of the building permit application denial if one was issued by the *building official.*

[NY] R103.3 Incomplete information. If the request is incomplete or does not otherwise contain sufficient information necessary to issue an interpretation, the Secretary of State may request clarification of the information provided or additional information necessary to issue the requested interpretation.

[NY] R103.4 Notification. Upon receipt of a complete request for an interpretation signed by only the building permit applicant or the *building official*, the Secretary of State shall provide written notification to the party who has not signed the request for an interpretation that such request for an interpretation has been filed with the Department of State. The party receiving such notification shall have 20 days from the date of such notification in which to provide, in writing, any comments or additional information pertaining to the request for an interpretation, provided that the Secretary of State may waive this deadline when warranted by extenuating circumstances.

[NY] R103.5 Issuing interpretation. The Secretary of State shall either issue the interpretation or provide notification of the intent not to issue an interpretation to the building permit applicant and the *building official* within 45 days of any of the following:

1. Receipt of a complete request for an interpretation signed by both the building permit applicant and the *building official*,
2. Receipt of comments when the request for an interpretation is signed by only one party, or
3. The expiration of the 20-day comment period when the request for an interpretation is signed by only one party.

[NY] R103.6 Enforcement. Subsequent enforcement of the *Energy Code* shall be consistent with the interpretations issued by the Secretary of State pursuant to Section 11-103(4) of the New York State Energy Law.

[NY] R103.7 Interpretation of more stringent local energy code provisions. If a municipality has adopted a local *energy code* in accordance with the provisions of Section 11-109 of the New York State Energy Law, and if such local *energy code* shall have become effective in such municipality in accordance with the provisions of Section 11-109 of the New York State Energy Law, such municipality or any official designated by such municipality is permitted to interpret those provisions of such local *energy code* that are (1) in addition to the provisions of the *Energy Code* or (2) more stringent than the provisions of the *Energy Code*. However, no such interpretation shall be deemed to be an interpretation of the *Energy Code* by the Secretary of State pursuant to Section 11-103(4) of the New York State Energy Law. In addition, if a municipality or an official designated by a municipality interprets a provision of a local *energy code* in a manner that makes such provision less stringent that the corresponding provision of the *Energy Code,* the corresponding provision of the *Energy Code* shall supersede such provision of the local *energy code.*

[NY] SECTION R104
ALTERNATIVE MATERIALS, DESIGNS, METHODS OF CONSTRUCTION AND INSULATING SYSTEMS

[NY] R104.1 General. The ECCCNYS—Residential Provisions are not intended to prevent the use of any material, design or method of construction, or insulating system not specifically prescribed by this code, provided that such alternative shall have been approved by the *building official*, in writing, as (1) meeting the intent of the provisions of this code and (2) achieving energy savings that is equivalent or greater than that which would be achieved by the prescribed method of construction, design or insulating system.

However, nothing in this Section R104.1 shall be construed as permitting any *building official* or any governmen-

INTERNATIONAL CODE COUNCIL®
Copyright © 2019 ICC & NYSDOS. ALL RIGHTS RESERVED. Accessed by Lauren Gualdino (lgualdino@briarcliffmanor.org), (-) Order Number #100880972 on May 08, 2020 07:05 AM (PDT) pursuant to License Agreement with ICC & NYSDOS. No further reproduction, no

100880972

tal unit or agency responsible for administration and enforcement of the *Energy Code* to waive, vary, modify, or otherwise alter any provision, standard, or requirement of the *Energy Code*. Provisions, standards, or requirements of the *Energy Code* may be waived, varied, modified, or otherwise altered only pursuant to Section 11-106 of the New York State Energy Law.

[NY] SECTION R105
CONSTRUCTION DOCUMENTS

[NY] R105.1 General. Construction documents, technical reports and other supporting data shall be submitted in one or more sets with each application for a permit. The construction documents and technical reports shall be prepared by a *registered design professional* as required by New York State Education Law Articles 145 and 147.

[NY] R105.2 Information on construction documents. Construction documents shall be drawn to scale on suitable material. Electronic media documents are permitted to be submitted where *approved* by the *building official*. Construction documents shall be of sufficient clarity to indicate the location, nature and extent of the work proposed, and show in sufficient detail pertinent data and features of the *building*, systems and equipment as herein governed. Details shall include the following as applicable:

1. Insulation materials and their *R-value*s.
2. *Fenestration U-factor*s and *solar heat gain coefficients* (SHGC).
3. Area-weighted *U-factor* and *solar heat gain coefficients* (SHGC) calculations.
4. Mechanical system design criteria.
5. Mechanical and *service water-heating* systems and equipment types, sizes and efficiencies.
6. Equipment and system controls.
7. Duct sealing, duct and pipe insulation and location.
8. Air sealing details.

[NY] R105.2.1 Building thermal envelope depiction. The *building thermal envelope* shall be represented on the construction documents.

[NY] R105.2.2 Written statement. When plans or specifications bear the seal and signature of a *registered design professional*, such *registered design professional* shall also include a written statement that to the best of his or her knowledge, belief and professional judgment, such plans or specifications are in compliance with the *Energy Code*.

[NY] R105.3 Examination of documents. The *building official* shall examine or cause to be examined the accompanying construction documents and shall ascertain whether the construction indicated and described is in accordance with the requirements of this code and other pertinent laws or ordinances. The *building official* is authorized to utilize a *registered design professional*, or other *approved* entity not affiliated with the building design or construction, in conducting the review of the plans and specifications for compliance with the code.

[NY] R105.3.1 Approval of construction documents. When the *building official* issues a permit where construction documents are required, the construction documents shall be endorsed in writing and stamped "Reviewed for Energy Code Compliance." Such *approved* construction documents shall not be changed, modified or altered without authorization from the *building official*. Work shall be done in accordance with the *approved* construction documents.

One set of construction documents so reviewed shall be retained by the *building official*. The other set shall be returned to the applicant, kept at the site of work and shall be open to inspection by the *building official* or a duly authorized representative.

[NY] R105.3.2 Previous approvals. The *ECCCNYS—Residential Provisions* shall not require changes in the construction documents, construction or designated occupancy of a structure for which a lawful permit has been issued prior to the effective date of the rule making the ECCCNYS part of the *Energy Code*, and the construction of which has been pursued in good faith within 180 days after the effective date of such rule and is thereafter diligently pursued through completion.

[NY] R105.3.3 Phased approval. The *building official* shall have the authority to issue a permit for the construction of part of an energy conservation system before the construction documents for the entire system have been submitted or *approved*, provided adequate information and detailed statements have been filed complying with all pertinent requirements of this code. The holders of such permit shall proceed at their own risk without assurance that the permit for the entire energy conservation system will be granted.

[NY] R105.4 Amended construction documents. Work shall be installed in accordance with the *approved* construction documents, and any changes made during construction that are not in compliance with the *approved* construction documents shall be resubmitted for approval as an amended set of construction documents.

[NY] SECTION R106
INSPECTIONS

[NY] R106.1 General. Construction or work for which a permit is required shall be subject to inspection by the *building official* or an inspector who is (1) qualified to perform the inspections (such qualifications to include, where required, completion of the training required by 19 NYCRR Part 1208) and (2) approved by the *building official*.

[NY] R106.1.1 Required approvals. Work shall not be done beyond the point indicated in each successive inspection without first obtaining the approval of the *building official*. The permit holder or the permit holder's agent shall notify the *building official* when work has progressed to the point where the next required inspection described in Section R106.2 can be made.

The *building official* (or other qualified inspector approved by the *building official* pursuant to Section

INTERNATIONAL CODE COUNCIL®
Copyright © 2019 ICC & NYSDOS. ALL RIGHTS RESERVED. Accessed by Lauren Gualdino (lgualdino@briarcliffmanor.org), (-) Order Number #100880972 on May 08, 2020 07:05 AM (PDT) pursuant to License Agreement with ICC & NYSDOS. No further reproduction, no

100880972

R106.1), shall make such inspection, and the *building official* shall either indicate the portion of the construction that is satisfactory as completed, or notify the permit holder or the permit holder's agent wherein the same fails to comply with the *Energy Code*. Any portions that do not comply shall be corrected and such portion shall not be covered or concealed until authorized by the *building official*. In the case of a building that is subject to the New York City Construction Codes, such required approvals and inspections shall be subject to the provisions of Title 28 of the New York City Administrative Code.

[NY] R106.2 Required inspections. The *building official* (or other qualified inspector approved by the *building official* pursuant to Section R106.1), upon notification, shall make the inspections set forth in Sections R106.2.1 through R106.2.5.

[NY] R106.2.1 Footing and foundation inspection. Inspections associated with footings and foundations shall verify compliance with the code as to *R-value*, location, thickness, depth of burial and protection of insulation as required by the code and *approved* plans and specifications.

[NY] R106.2.2 Framing and rough-in inspection. Inspections at framing and rough-in shall be made before application of interior finish and shall verify compliance with the code as to: types of insulation and corresponding *R-values* and their correct location and proper installation; *fenestration* properties such as *U-factor* and SHGC and proper installation; and air leakage controls as required by the code; and approved plans and specifications.

[NY] R106.2.3 Plumbing rough-in inspection. Inspections at plumbing rough-in shall verify compliance as required by the code and *approved* plans and specifications as to types of insulation and corresponding *R-value*s and protection, and required controls.

[NY] R106.2.4 Mechanical rough-in inspection. Inspections at mechanical rough-in shall verify compliance as required by the code and *approved* plans and specifications as to installed HVAC equipment type and size, required controls, system insulation and corresponding *R-value*, system air leakage control, programmable *thermostat*s, dampers, whole-house *ventilation*, and minimum fan efficiency.

Exception: Systems serving multiple *dwelling unit*s shall be inspected in accordance with Section C106.2.4 of the *ECCCNYS—Commercial Provisions*.

[NY] R106.2.5 Final inspection. The *building* shall have a final inspection and shall not be occupied until *approved*. The final inspection shall include verification of the installation of all required *building system*s, equipment and controls and their proper operation and the required number of *high-efficacy lamps* and fixtures.

[NY] R106.3 Reinspection. A *building* shall be reinspected where determined necessary by the *building official*.

[NY] R106.4 Approved inspection agencies. The *building official* is authorized to accept reports of third-party inspection agencies not affiliated with the *building* design or construction, provided that such agencies are *approved* as to qualifications and reliability relevant to the *building* components and *building system*s that they are inspecting.

[NY] R106.5 Inspection requests. It shall be the duty of the holder of the permit or their duly authorized agent to notify the *building official* when work is ready for inspection. It shall be the duty of the permit holder to provide *access* to and means for inspections of such work that are required by this code.

[NY] R106.6 Reinspection and testing. Where any work or installation does not pass an initial test or inspection, the necessary corrections shall be made to achieve compliance with the *ECCCNYS—Residential Provisions*. The work or installation shall then be resubmitted to the *building official* for reinspection and retesting.

[NY] R106.7 Approval. After the prescribed tests and inspections indicate that the work complies in all respects with this code, a notice of approval shall be issued by the *building official*.

[NY] R106.7.1 Revocation. The *building official* is authorized to, in writing, suspend or revoke a notice of approval issued wherever the *building official* determines the notice is issued in error, or on the basis of incorrect information supplied, or where it is determined that the *building* or structure, premise, or portion thereof is in violation of any provision of the *Energy Code*; any provision of the *Uniform code* or New York City Construction Codes, as applicable; or any other any applicable law, statute, rule, regulation or ordinance. Any such suspension or revocation shall be in writing, signed by the *building official* or by his or her designated agent.

INTERNATIONAL CODE COUNCIL®
Copyright © 2019 ICC & NYSDOS. ALL RIGHTS RESERVED. Accessed by Lauren Gualdino (lgualdino@briarcliffmanor.org), (-) Order Number #100880972 on May 08, 2020 07:05 AM (PDT) pursuant to License Agreement with ICC & NYSDOS. No further reproduction, no

100880972

INTERNATIONAL CODE COUNCIL®
Copyright © 2019 ICC & NYSDOS. ALL RIGHTS RESERVED. Accessed by Lauren Gualdino (lgualdino@briarcliffmanor.org), (-) Order Number #100880972 on May 08, 2020 07:05 AM (PDT) pursuant to License Agreement with ICC & NYSDOS. No further reproduction, no

100880972

CHAPTER 2 [RE]

DEFINITIONS

SECTION R201
GENERAL

[NY] R201.1 Scope. Unless stated otherwise, the following words and terms in the ECCCNYS—Residential Provisions shall have the meanings indicated in this Chapter 2[RE].

R201.2 Interchangeability. Words used in the present tense include the future; words in the masculine gender include the feminine and neuter; the singular number includes the plural and the plural includes the singular.

R201.3 Terms defined in other codes. Terms that are not defined in this Chapter 2 [RE] but are defined in the *Building Code of New York State*, *Fire Code of New York State*, *Fuel Gas Code of New York State*, *Mechanical Code of New York State*, *Plumbing Code of New York State* or the *Residential Code of New York State* shall have the meanings ascribed to them in those codes.

[NY] R201.4 Terms not defined. Terms not defined in this Chapter 2 [RE] or in the *Building Code of New York State, Fire Code of New York State, Fuel Gas Code of New York State, Mechanical Code of New York State, Plumbing Code of New York State*, or the *Residential Code of New York State* shall have ordinarily accepted meanings such as the context implies.

SECTION R202
GENERAL DEFINITIONS

ABOVE-GRADE WALL. A wall more than 50 percent above grade and enclosing *conditioned space*. This includes between-floor spandrels, peripheral edges of floors, roof and basement knee walls, dormer walls, gable end walls, walls enclosing a mansard roof and *skylight* shafts.

ACCESSIBLE. Admitting close approach as a result of not being guarded by locked doors, elevation or other effective means (see "Readily *accessible*").

ADDITION. An extension or increase in the *conditioned space* floor area, number of stories or height of a building or structure.

AIR BARRIER. One or more materials joined together in a continuous manner to restrict or prevent the passage of air through the *building thermal envelope* and its assemblies.

[NY] AIR-IMPERMEABLE INSULATION. An insulation having an air permeance equal to, or less than 0.02 L/s-m^2 at 75 Pa pressure differential tested according to ASTM E2178 or E283.

ALTERATION. Any construction, retrofit or renovation to an existing structure other than *repair* or *addition*. Also, a change in a building, electrical, gas, mechanical or plumbing system that involves an extension, addition or change to the arrangement, type or purpose of the original installation.

APPROVED. Acceptable to the *building official*.

APPROVED AGENCY. An established and recognized agency that is regularly engaged in conducting tests furnishing inspection services, or furnishing product certification, where such agency has been *approved* by the *building official*.

[NY] AREA WEIGHTED AVERAGE. A mathematical technique for combining different amounts of various components, based on proportional relevance, into a single number. Weighted averaging may be used where there is more than one *R-value* for floor, wall, or ceiling insulation, or more than one *U-factor* for fenestration in a building. As an example, the area weighted average for window fenestration *U-factor*s equals (Area 1 × *U-factor* 1) + (Area 2 × *U-factor* 2) + …/ Total Area = maximum allowable fenestration *U-factor*.

[NY] ASHRAE 90.1—2016. The publication entitled "ANSI/ASHRAE/IES Standard 90.1—2016, Energy Standard for Buildings Except Low-rise *Residential Building*s" (October 2016, printing) published by ASHRAE, formerly known as the American Society of Heating, Refrigerating and Air-Conditioning Engineers, Inc. (ASHRAE 90.1—2016 is published by ASHRAE and is jointly sponsored by the Illuminating Engineering Society of North America and the American National Standards Institute, and is also known as "ANSI/ASHRAE/IES 90.1—2016" or "ANSI/ASHRAE/IESNA 90.1—2016.").

[NY] ASHRAE 90.1—2016 (AS AMENDED). *ASHRAE 90.1—2016*, as said publication is deemed to be amended by 19 NYCRR Part 1240.

AUTOMATIC. Self-acting, operating by its own mechanism when actuated by some impersonal influence, as, for example, a change in current strength, pressure, temperature or mechanical configuration (see "Manual").

BASEMENT WALL. A wall 50 percent or more below grade and enclosing *conditioned space*.

[NY] BUILDING. Any structure used or intended for supporting or sheltering any use or occupancy or for affording shelter to persons, animals or property, including any (i) mechanical systems, *service water heating* systems and electric power and lighting systems located in such structure, and (ii) any mechanical systems, *service water heating systems,* and electric power and lighting systems located on the building site and supporting the building. The term "building" shall include, but shall not be limited to, factory manufactured homes (as defined in Section 372(8) of the Executive Law) and mobile homes (as defined in Section 372(13) of the Executive Law).

BUILDING SITE. A contiguous area of land that is under the ownership or control of one entity.

[NY] BUILDING CODE OF NEW YORK STATE. The 2020 edition of the publication entitled "Building Code of New York State," published by the International Code Council, Inc. (publication date November 2019).

INTERNATIONAL CODE COUNCIL®
Copyright © 2019 ICC & NYSDOS. ALL RIGHTS RESERVED. Accessed by Lauren Gualdino (lgualdino@briarcliffmanor.org), (-) Order Number #100880972 on May 08, 2020 07:05 AM (PDT) pursuant to License Agreement with ICC & NYSDOS. No further reproduction, no

100880972

[NY] BUILDING OFFICIAL. The officer or other designated authority charged with the administration and enforcement of this code, or a duly authorized representative.

[NY] BUILDING SYSTEM. The term "building system" means a combination of central or terminal equipment or components or controls, accessories, interconnecting means, and terminal devices by which energy is transformed so as to perform a specific function, such as heating, *ventilation* and air conditioning, *service water heating* or illumination.

[NY] BUILDING THERMAL ENVELOPE. The *exterior walls* (above and below grade), floors, ceiling, roofs and any other *building* element assemblies that enclose *conditioned space* or provide a boundary between *conditioned space* and unconditioned space.

CIRCULATING HOT WATER SYSTEM. A specifically designed water distribution system where one or more pumps are operated in the service hot water piping to circulate heated water from the water-heating equipment to fixtures and back to the water-heating equipment.

CLIMATE ZONE. A geographical region based on climatic criteria as specified in this code.

COMMERCIAL BUILDING. For this code, all buildings that are not included in the definition of "Residential building."

CONDITIONED FLOOR AREA. The horizontal projection of the floors associated with the *conditioned space*.

[NY] CONDITIONED SPACE. An area or room that is enclosed within the *building thermal envelope* and that is directly or indirectly heated or cooled using fossil fuel or electricity as the energy source. Spaces are indirectly heated or cooled where they communicate through openings with conditioned spaces, where they are separated from conditioned spaces by uninsulated walls, floors or ceilings, or where they contain uninsulated ducts, piping or other sources of heating or cooling using fossil fuel or electricity.

CONTINUOUS AIR BARRIER. A combination of materials and assemblies that restrict or prevent the passage of air through the *building thermal envelope*.

CONTINUOUS INSULATION (ci). Insulating material that is continuous across all structural members without thermal bridges other than fasteners and service openings. It is installed on the interior or exterior, or is integral to any opaque surface, of the *building* envelope.

CRAWL SPACE WALL. The opaque portion of a wall that encloses a crawl space and is partially or totally below grade.

CURTAIN WALL. Fenestration products used to create an external nonload-bearing wall that is designed to separate the exterior and interior environments.

DEMAND RECIRCULATION WATER SYSTEM. A water distribution system having one or more recirculation pumps that pump water from a heated water supply pipe back to the heated water source through a cold water supply pipe.

DUCT. A tube or conduit utilized for conveying air. The air passages of self-contained systems are not to be construed as air ducts.

DUCT SYSTEM. A continuous passageway for the transmission of air that, in addition to ducts, includes duct fittings, dampers, plenums, fans and accessory air-handling equipment and appliances.

DWELLING UNIT. A single unit providing complete independent living facilities for one or more persons, including permanent provisions for living, sleeping, eating, cooking and sanitation.

ENERGY ANALYSIS. A method for estimating the annual energy use of the *proposed design* and *standard reference design* based on estimates of energy use.

[NY] ENERGY CODE. The New York State Energy Conservation Construction Code adopted pursuant to Article 11 of the New York State Energy Law.

ENERGY COST. The total estimated annual cost for purchased energy for the building functions regulated by this code, including applicable demand charges.

ENERGY SIMULATION TOOL. An *approved* software program or calculation-based methodology that projects the annual energy use of a *building*.

[NY] ERI REFERENCE DESIGN. A version of the *rated design* that meets the minimum requirements of the 2006 *International Energy Conservation Code*, and which establishes the index value of 100 on the Energy Rating Index scale.

[NY] EXISTING BUILDING CODE OF NEW YORK STATE. The 2020 edition of the publication entitled "Existing Building Code of New York State," published by the International Code Council, Inc. (publication date November 2019).

EXTERIOR WALL. Walls including both above-grade walls and *basement walls*.

FENESTRATION. Products classified as either *vertical fenestration* or *skylights*.

Skylights. Glass or other transparent or translucent glazing material installed at a slope of less than 60 degrees (1.05 rad) from horizontal.

Vertical fenestration. Windows that are fixed or operable, opaque doors, glazed doors, glazed block and combination opaque/glazed doors composed of glass or other transparent or translucent glazing materials and installed at a slope of not less than 60 degrees (1.05 rad) from horizontal.

FENESTRATION PRODUCT, SITE-BUILT. A fenestration designed to be made up of field-glazed or field-assembled units using specific factory cut or otherwise factory-formed framing and glazing units. Examples of site-built fenestration include *storefront* systems, curtain walls and atrium roof systems.

[NY] FIRE CODE OF NEW YORK STATE. The 2020 edition of the publication entitled "Fire Code of New York State," published by the International Code Council, Inc. (publication date November 2019).

INTERNATIONAL CODE COUNCIL®
Copyright © 2019 ICC & NYSDOS. ALL RIGHTS RESERVED. Accessed by Lauren Gualdino (lgualdino@briarcliffmanor.org), (-) Order Number #100880972 on May 08, 2020 07:05 AM (PDT) pursuant to License Agreement with ICC & NYSDOS. No further reproduction, no

100880972

HEATED SLAB. Slab-on-grade construction in which the heating elements, hydronic tubing, or hot air distribution system is in contact with, or placed within or under, the slab.

HIGH-EFFICACY LAMPS. Compact fluorescent lamps, light-emitting diode (LED) lamps, T-8 or smaller diameter linear fluorescent lamps, or other lamps with an efficacy of not less than the following:

1. 60 lumens per watt for lamps over 40 watts.
2. 50 lumens per watt for lamps over 15 watts to 40 watts.
3. 40 lumens per watt for lamps 15 watts or less.

[NY] HISTORIC BUILDING. The term historic building means an existing building or structure that:

1. is listed in the New York State Register of Historic Places, either individually or as a contributing building to a historic district; or
2. is listed in the National Register of Historic Places, either individually or as a contributing building to a historic district; or
3. has been determined to be eligible for listing in either the New York State or National Register of Historic Places, either individually or as a contributing building to a historic district, by the New York State Commissioner of Parks, Recreation and Historic Preservation; or
4. has been determined to be eligible for listing in the National Register of Historic Places, either individually or as a contributing building to a historic district, by the U.S. Secretary of the Interior.

INFILTRATION. The uncontrolled inward air leakage into a *building* caused by the pressure effects of wind or the effect of differences in the indoor and outdoor air density or both.

[NY] INSULATED SIDING. A type of *continuous insulation* with manufacturer-installed insulating material as an integral part of the cladding product having an *R-value* of not less than R-2.

LABELED. Equipment, materials or products to which have been affixed a label, seal, symbol or other identifying mark of a nationally recognized testing laboratory, *approved* agency or other organization concerned with product evaluation that maintains periodic inspection of the production of such *labeled* items and whose labeling indicates either that the equipment, material or product meets identified standards or has been tested and found suitable for a specified purpose.

LISTED. Equipment, materials, products or services included in a list published by an organization acceptable to the *building official* and concerned with evaluation of products or services that maintains periodic inspection of production of *listed* equipment or materials or periodic evaluation of services and whose listing states either that the equipment, material, product or service meets identified standards or has been tested and found suitable for a specified purpose.

LOW-VOLTAGE LIGHTING. Lighting equipment powered through a transformer such as a cable conductor, a rail conductor and track lighting.

MANUAL. Capable of being operated by personal intervention (see "Automatic").

[NY] MECHANICAL CODE OF NEW YORK STATE. The 2020 edition of the publication entitled "Mechanical Code of New York State," published by the International Code Council, Inc. (publication date November 2019).

OPAQUE DOOR. A door that is not less than 50-percent opaque in surface area.

[NY] PLUMBING CODE OF NEW YORK STATE. The 2020 edition of the publication entitled "Plumbing Code of New York State," published by the International Code Council, Inc. (publication date November 2019).

PROPOSED DESIGN. A description of the proposed *building* used to estimate annual energy use for determining compliance based on total building performance.

RATED DESIGN. A description of the proposed *building* used to determine the energy rating index.

READILY ACCESSIBLE. Capable of being reached quickly for operation, renewal or inspection without requiring those to whom ready access is requisite to climb over or remove obstacles or to resort to portable ladders or access equipment (see "*Accessible*").

[NY] REGISTERED DESIGN PROFESSIONAL. An individual who is a licensed and registered architect (RA) in accordance with Article 147 of the New York State Education Law or a licensed and registered professional engineer (PE) in accordance with Article 145 of the New York State Education Law.

REPAIR. The reconstruction or renewal of any part of an existing *building* for the purpose of its maintenance or to correct damage.

REROOFING. The process of recovering or replacing an existing roof covering. See "*Roof recover*" and "Roof replacement."

[NY] RESIDENTIAL BUILDING. For this code, includes the following:

1. Detached one-family dwellings having not more than three stories above grade plane;
2. Detached two-family dwellings having not more than three stories above grade plane;
3. Buildings that (i) consist of three or more attached *townhouse* units and (ii) have not more than three stories above grade plane;
4. Buildings that (i) are classified in accordance with Chapter 3 of the *Building Code of New York State* in Group R-2, R-3 or R-4 and (ii) have not more than three stories above grade plane;
5. Factory manufactured homes (as defined in Section 372(8) of the New York State Executive Law); and
6. Mobile homes (as defined in Section 372(13) of the New York State Executive Law).

For the purposes of this definition of the term "*Residential building*," the term "*Townhouse unit*" means a single-family *dwelling unit* constructed in a group of three or more attached

INTERNATIONAL CODE COUNCIL®
Copyright © 2019 ICC & NYSDOS. ALL RIGHTS RESERVED. Accessed by Lauren Gualdino (lgualdino@briarcliffmanor.org), (-) Order Number #100880972 on May 08, 2020 07:05 AM (PDT) pursuant to License Agreement with ICC & NYSDOS. No further reproduction, no

100880972

units in which each unit (1) extends from the foundation to roof, (2) has open space on at least two sides, and (3) has a separate *means of egress*.

[NY] RESIDENTIAL CODE OF NEW YORK STATE. The 2020 edition of the publication entitled "Residential Code of New York State," published by the International Code Council, Inc. (publication date November 2019).

ROOF ASSEMBLY. A system designed to provide weather protection and resistance to design loads. The system consists of a roof covering and roof deck or a single component serving as both the roof covering and the roof deck. A *roof assembly* includes the roof covering, underlayment and roof deck, and can also include a thermal barrier, an ignition barrier, insulation or a vapor retarder.

ROOF RECOVER. The process of installing an additional roof covering over a prepared existing roof covering without removing the existing roof covering.

ROOF REPAIR. Reconstruction or renewal of any part of an existing roof for the purposes of its maintenance.

ROOF REPLACEMENT. The process of removing the existing roof covering, repairing any damaged substrate and installing a new roof covering.

***R*-VALUE (THERMAL RESISTANCE).** The inverse of the time rate of heat flow through a body from one of its bounding surfaces to the other surface for a unit temperature difference between the two surfaces, under steady state conditions, per unit area ($h \cdot ft^2 \cdot °F/Btu$) [$(m^2 \cdot K)/W$].

SERVICE WATER HEATING. Supply of hot water for purposes other than comfort heating.

SOLAR HEAT GAIN COEFFICIENT (SHGC). The ratio of the solar heat gain entering the space through the fenestration assembly to the incident solar radiation. Solar heat gain includes directly transmitted solar heat and absorbed solar radiation that is then reradiated, conducted or convected into the space.

[NY] STANDARD REFERENCE DESIGN. A version of the *proposed design* that meets the minimum prescriptive and mandatory baseline requirements of this code. The *standard reference design*, as the code baseline, is used to determine the maximum allowable annual energy use requirement for compliance. The *proposed design* is measured against the *standard reference design* in an annual energy use simulation and is based on total building performance. Parameters of the standard reference design and the proposed design are specified in tables contained in Section R405.

SUNROOM. A one-story structure attached to a dwelling with a glazing area in excess of 40 percent of the gross area of the structure's *exterior walls* and roof.

THERMAL ISOLATION. Physical and space conditioning separation from *conditioned spaces*. The *conditioned spaces* shall be controlled as separate zones for heating and cooling or conditioned by separate equipment.

THERMOSTAT. An automatic control device used to maintain temperature at a fixed or adjustable setpoint.

[NY] TOWNHOUSE, OR TOWNHOUSE UNIT. A single-family dwelling unit constructed in a group of three or more attached units in which each unit (1) extends from the foundation to roof, (2) has open space on at least two sides, and (3) has a separate *means of egress*.

***U*-FACTOR (THERMAL TRANSMITTANCE).** The coefficient of heat transmission (air to air) through a building component or assembly, equal to the time rate of heat flow per unit area and unit temperature difference between the warm side and cold side air films ($Btu/h \cdot ft^2 \cdot °F$) [$W/(m^2 \cdot K)$].

[NY] UNIFORM CODE. The New York State Uniform Fire Prevention and Building Code adopted pursuant to Article 18 of the New York State Executive Law, as currently in effect and as hereafter amended from time to time.

VENTILATION. The natural or mechanical process of supplying conditioned or unconditioned air to, or removing such air from, any space.

VENTILATION AIR. That portion of supply air that comes from outside (outdoors) plus any recirculated air that has been treated to maintain the desired quality of air within a designated space.

VISIBLE TRANSMITTANCE (VT). The ratio of visible light entering the space through the fenestration product assembly to the incident visible light, *Visible Transmittance*, includes the effects of glazing material and frame and is expressed as a number between 0 and 1.

WHOLE HOUSE MECHANICAL VENTILATION SYSTEM. An exhaust system, supply system, or combination thereof that is designed to mechanically exchange indoor air with outdoor air when operating continuously or through a programmed intermittent schedule to satisfy the whole house ventilation rates.

ZONE. A space or group of spaces within a *building* with heating or cooling requirements that are sufficiently similar so that desired conditions can be maintained throughout using a single controlling device.

INTERNATIONAL CODE COUNCIL®
Copyright © 2019 ICC & NYSDOS. ALL RIGHTS RESERVED. Accessed by Lauren Gualdino (lgualdino@briarcliffmanor.org), (-) Order Number #100880972 on May 08, 2020 07:05 AM (PDT) pursuant to License Agreement with ICC & NYSDOS. No further reproduction, no

100880972

CHAPTER 3 [RE]

GENERAL REQUIREMENTS

SECTION R301
CLIMATE ZONES

[NY] R301.1 General. *Climate zones* from Table R301.1 shall be used for determining the applicable requirements from Chapter 4.

[NY] TABLE R301.1
NEW YORK STATE CLIMATE ZONES BY COUNTY

Zone 4A	Zone 5A	Zone 6A
Bronx	Albany	Allegany
Kings	Cayuga	Broome
Nassau	Chautauqua	Cattaraugus
New York	Chemung	Chenango
Queens	Columbia	Clinton
Richmond	Cortland	Delaware
Suffolk	Dutchess	Essex
Westchester	Erie	Franklin
	Genesee	Fulton
	Greene	Hamilton
	Livingston	Herkimer
	Monroe	Jefferson
	Niagara	Lewis
	Onondaga	Madison
	Ontario	Montgomery
	Orange	Oneida
	Orleans	Otsego
	Oswego	Schoharie
	Putnam	Schuyler
	Rensselaer	Steuben
	Rockland	St. Lawrence
	Saratoga	Sullivan
	Schenectady	Tompkins
	Seneca	Ulster
	Tioga	Warren
	Washington	Wyoming
	Wayne	
	Yates	

SECTION R302
DESIGN CONDITIONS

R302.1 Interior design conditions. The interior design temperatures used for heating and cooling load calculations shall be a maximum of 72°F (22°C) for heating and minimum of 75°F (24°C) for cooling.

SECTION R303
MATERIALS, SYSTEMS AND EQUIPMENT

R303.1 Identification. Materials, systems and equipment shall be identified in a manner that will allow a determination of compliance with the applicable provisions of this code.

R303.1.1 Building thermal envelope insulation. An *R-value* identification mark shall be applied by the manufacturer to each piece of *building thermal envelope* insulation that is 12 inches (305 mm) or greater in width. Alternatively, the insulation installers shall provide a certification that indicates the type, manufacturer and *R-value* of insulation installed in each element of the *building thermal envelope*. For blown-in or sprayed fiberglass and cellulose insulation, the initial installed thickness, settled thickness, settled *R-value*, installed density, coverage area and number of bags installed shall be indicated on the certification. For sprayed polyurethane foam (SPF) insulation, the installed thickness of the areas covered and the *R-value* of the installed thickness shall be indicated on the certification. For insulated siding, the *R-value* shall be on a label on the product's package and shall be indicated on the certification. The insulation installer shall sign, date and post the certification in a conspicuous location on the job site.

Exception: For roof insulation installed above the deck, the *R-value* shall be *labeled* as required by the material standards specified in Table 1508.2 of the *Building Code of New York State* or Table R906.2 of the *Residential Code of New York State*, as applicable.

R303.1.1.1 Blown-in or sprayed roof and ceiling insulation. The thickness of blown-in or sprayed fiberglass and cellulose roof and ceiling insulation shall be written in inches (mm) on markers that are installed at not less than one for every 300 square feet (28 m^2) throughout the attic space. The markers shall be affixed to the trusses or joists and marked with the minimum initial installed thickness with numbers not less than 1 inch (25 mm) in height. Each marker shall face the attic access opening. The thickness and installed *R-value* of sprayed polyurethane foam insulation shall be indicated on the certification provided by the insulation installer.

R303.1.2 Insulation mark installation. Insulating materials shall be installed such that the manufacturer's *R-value* mark is readily observable at inspection.

[NY] TABLE R301.3(2)
INTERNATIONAL CLIMATE ZONE DEFINITIONS

ZONE NUMBER	THERMAL CRITERIA	
	IP Units	SI Units
4A	CDD50°F ≤ 4500 AND HDD65°F ≤ 5400	CDD10°C ≤ 2500 AND HDD18°C ≤ 3000
5	5400 < HDD65°F ≤ 7200	3000 < HDD18°C ≤ 4000
6	7200 < HDD65°F ≤ 9000	4000 < HDD18°C ≤ 5000

For SI: °C = [(°F) - 32]/1.8.

INTERNATIONAL CODE COUNCIL®
Copyright © 2019 ICC & NYSDOS. ALL RIGHTS RESERVED. Accessed by Lauren Gualdino (lgualdino@briarcliffmanor.org), (-) Order Number #100880972 on May 08, 2020 07:05 AM (PDT) pursuant to License Agreement with ICC & NYSDOS. No further reproduction, no

100880972

R303.1.3 Fenestration product rating. *U-factors* of fenestration products such as windows, doors and *skylights* shall be determined in accordance with NFRC 100.

Exception: Where required, garage door *U-factors* shall be determined in accordance with either NFRC 100 or ANSI/DASMA 105.

U-factors shall be determined by an accredited, independent laboratory, and *labeled* and certified by the manufacturer.

Products lacking such a *labeled U-factor* shall be assigned a default *U-factor* from Table R303.1.3(1) or R303.1.3(2). The *solar heat gain coefficient* (SHGC) and *visible transmittance* (VT) of glazed fenestration products such as windows, glazed doors and *skylights* shall be determined in accordance with NFRC 200 by an accredited, independent laboratory, and *labeled* and certified by the manufacturer. Products lacking such a *labeled* SHGC or VT shall be assigned a default SHGC or VT from Table R303.1.3(3).

TABLE R303.1.3(1)
DEFAULT GLAZED WINDOW, GLASS DOOR AND SKYLIGHT *U*-FACTORS

FRAME TYPE	WINDOW AND GLASS DOOR		SKYLIGHT	
	Single pane	Double pane	Single	Double
Metal	1.20	0.80	2.00	1.30
Metal with Thermal Break	1.10	0.65	1.90	1.10
Nonmetal or Metal Clad	0.95	0.55	1.75	1.05
Glazed Block	0.60			

TABLE R303.1.3(2)
DEFAULT OPAQUE DOOR *U*-FACTORS

DOOR TYPE	OPAQUE *U*-FACTOR
Uninsulated Metal	1.20
Insulated Metal	0.60
Wood	0.50
Insulated, nonmetal edge, not exceeding 45% glazing, any glazing double pane	0.35

TABLE R303.1.3(3)
DEFAULT GLAZED FENESTRATION SHGC AND VT

	SINGLE GLAZED		DOUBLE GLAZED		GLAZED BLOCK
	Clear	Tinted	Clear	Tinted	
SHGC	0.8	0.7	0.7	0.6	0.6
VT	0.6	0.3	0.6	0.3	0.6

R303.1.4 Insulation product rating. The thermal resistance, *R-value*, of insulation shall be determined in accordance with Part 460 of US-FTC CFR Title 16 in units of h • ft^2 • °F/Btu at a mean temperature of 75°F (24°C).

R303.1.4.1 Insulated siding. The thermal resistance, *R-value*, of insulated siding shall be determined in accordance with ASTM C1363. Installation for testing shall be in accordance with the manufacturer's instructions.

[NY] R303.2 Installation. Materials, systems and equipment shall be installed in accordance with the manufacturer's instructions and the *Uniform Code*, as applicable.

Exception: In the case of a building that is subject to the New York City Construction Codes, materials, systems and equipment shall be installed in accordance with the manufacturer's installation instructions and the applicable provisions of the New York City Construction Codes.

R303.2.1 Protection of exposed foundation insulation. Insulation applied to the exterior of *basement walls*, crawl space walls and the perimeter of slab-on-grade floors shall have a rigid, opaque and weather-resistant protective covering to prevent the degradation of the insulation's thermal performance. The protective covering shall cover the exposed exterior insulation and extend not less than 6 inches (153 mm) below grade.

R303.3 Maintenance information. Maintenance instructions shall be furnished for equipment and systems that require preventive maintenance. Required regular maintenance actions shall be clearly stated and incorporated on a readily *accessible* label. The label shall include the title or publication number for the operation and maintenance manual for that particular model and type of product.

INTERNATIONAL CODE COUNCIL®
Copyright © 2019 ICC & NYSDOS. ALL RIGHTS RESERVED. Accessed by Lauren Gualdino (lgualdino@briarcliffmanor.org), (-) Order Number #100880972 on May 08, 2020 07:05 AM (PDT) pursuant to License Agreement with ICC & NYSDOS. No further reproduction, no

100880972

CHAPTER 4 [RE]

RESIDENTIAL ENERGY EFFICIENCY

SECTION R401
GENERAL

R401.1 Scope. This chapter applies to *residential buildings.*

R401.2 Compliance. Projects shall comply with one of the following:

1. Sections R401 through R404.
2. Section R405 and the provisions of Sections R401 through R404 indicated as "Mandatory."
3. The energy rating index (ERI) approach in Section R406.

[NY] R401.2.1 Reserved.

R401.3 Certificate (Mandatory). A permanent certificate shall be completed by the builder or other *approved* party and posted on a wall in the space where the furnace is located, a utility room or an *approved* location inside the *building*. Where located on an electrical panel, the certificate shall not cover or obstruct the visibility of the circuit directory label, service disconnect label or other required labels. The certificate shall indicate the predominant *R-values* of insulation installed in or on ceilings, roofs, walls, foundation components such as slabs, *basement walls*, crawl space walls and floors and ducts outside *conditioned spaces*; *U-factors* of fenestration and the *solar heat gain coefficient* (SHGC) of fenestration, and the results from any required *duct system* and *building* envelope air leakage testing performed on the *building*. Where there is more than one value for each component, the certificate shall indicate the value covering the largest area. The certificate shall indicate the types and efficiencies of heating, cooling and *service water heating* equipment. Where a gas-fired unvented room heater, electric furnace or baseboard electric heater is installed in the residence, the certificate shall indicate "gas-fired unvented room heater," "electric furnace" or "baseboard electric heater," as appropriate. An efficiency shall not be indicated for gas-fired unvented room heaters, electric furnaces and electric baseboard heaters.

SECTION R402
BUILDING THERMAL ENVELOPE

R402.1 General (Prescriptive). The *building thermal envelope* shall comply with the requirements of Sections R402.1.1 through R402.1.5.

Exceptions:

1. The following low-energy *buildings*, or portions thereof, separated from the remainder of the building by *building thermal envelope* assemblies complying with this section shall be exempt from the *building thermal envelope* provisions of Section R402.
   1.1. Those with a peak design rate of energy usage less than 3.4 Btu/h • ft^2 (10.7 W/m^2) or 1.0 watt/ft^2 of floor area for space-conditioning purposes.
   1.2. Those that do not contain *conditioned space*.
2. Log homes designed in accordance with ICC 400.

R402.1.1 Vapor retarder. Wall assemblies in the *building thermal envelope* shall comply with the vapor retarder requirements of Section R702.7 of the *Residential Code of New York State* or Section 1404.3 of the *Building Code of New York State,* as applicable.

[NY] R402.1.2 Insulation and fenestration criteria. The *building thermal envelope* shall meet the requirements of Table R402.1.2, based on the *climate zone* specified in Chapter 3. In *climate zone* 6, the *building thermal envelope* shall meet either the requirements of the *climate zone* 6 "Option 1" row in Table R402.1.2 or the requirements of the *climate zone* 6 "Option 2" row in Table R402.1.2.

R402.1.3 *R*-value computation. Insulation material used in layers, such as framing *cavity insulation* or *continuous insulation,* shall be summed to compute the corresponding component *R-value.* The manufacturer's settled *R-value* shall be used for blown-in insulation. Computed *R-values* shall not include an *R-value* for other building materials or air films. Where insulated siding is used for the purpose of complying with the continuous insulation requirements of Table R402.1.2, the manufacturer's *labeled R-value* for the insulated siding shall be reduced by R-0.6.

R402.1.4 *U*-factor alternative. An assembly with a *U-factor* equal to or less than that specified in Table R402.1.4 shall be an alternative to the *R-value* in Table R402.1.2.

R402.1.5 Total UA alternative. Where the total *building thermal envelope* UA, the sum of *U-factor* times assembly area, is less than or equal to the total UA resulting from multiplying the *U-factors* in Table R402.1.4 by the same assembly area as in the proposed *building*, the *building* shall be considered to be in compliance with Table R402.1.2. The UA calculation shall be performed using a method consistent with the ASHRAE *Handbook of Fundamentals* and shall include the thermal bridging effects of framing materials. In addition to UA compliance, the SHGC requirements shall be met.

R402.2 Specific insulation requirements (Prescriptive). In addition to the requirements of Section R402.1, insulation shall meet the specific requirements of Sections R402.2.1 through R402.2.13.

R402.2.1 Ceilings with attic spaces. Where Section R402.1.2 requires R-38 insulation in the ceiling, installing R-30 over 100 percent of the ceiling area requiring insulation shall satisfy the requirement for R-38 wherever the full height of uncompressed R-30 insulation extends over the wall top plate at the eaves. Where Section R402.1.2 requires R-49 insulation in the ceiling, installing R-38 over 100 percent of the ceiling area requiring insulation shall satisfy the requirement for R-49 insulation wherever the full height of uncompressed R-38 insulation extends over the wall top plate at the eaves. This reduction shall not apply to the *U-factor* alternative approach in Section

INTERNATIONAL CODE COUNCIL®
Copyright © 2019 ICC & NYSDOS. ALL RIGHTS RESERVED. Accessed by Lauren Gualdino (lgualdino@briarcliffmanor.org), (-) Order Number #100880972 on May 08, 2020 07:05 AM (PDT) pursuant to License Agreement with ICC & NYSDOS. No further reproduction, no

100880972

R402.1.4 and the Total UA alternative in Section R402.1.5.

R402.2.2 Ceilings without attic spaces. Where Section R402.1.2 requires insulation *R-values* greater than R-30 in the ceiling and the design of the roof/ceiling assembly does not allow sufficient space for the required insulation, the minimum required insulation *R-value* for such roof/ceiling assemblies shall be R-30. Insulation shall extend over the top of the wall plate to the outer edge of such plate and shall not be compressed. This reduction of insulation from the requirements of Section R402.1.2 shall be limited to 500 square feet (46 m^2) or 20 percent of the total insulated ceiling area, whichever is less. This reduction shall not apply to the *U-factor* alternative approach in Section R402.1.4 and the Total UA alternative in Section R402.1.5.

R402.2.3 Eave baffle. For air-permeable insulations in vented attics, a baffle shall be installed adjacent to soffit and eave vents. Baffles shall maintain an opening equal or greater than the size of the vent. The baffle shall extend over the top of the attic insulation. The baffle shall be permitted to be any solid material.

[NY] TABLE R402.1.2
INSULATION AND FENESTRATION REQUIREMENTS BY COMPONENT[a]

CLIMATE ZONE	FENESTRATION *U*-FACTOR[b]	SKYLIGHT[b] *U*-FACTOR	GLAZED FENESTRATION SHGC[b, e]	CEILING *R*-VALUE	WOOD FRAME WALL *R*-VALUE	MASS WALL *R*-VALUE[i]	FLOOR *R*-VALUE	BASEMENT[c] WALL *R*-VALUE	SLAB[d] *R*-VALUE & DEPTH	CRAWL SPACE[c] WALL *R*-VALUE
4	0.32	0.55	0.40	49	20 or 13+5[h]	8/13	19	10 /13	10, 2 ft	10/13
5	0.30	0.55	NR	49	20 or 13+5[h]	13/17	30[g]	15/19	10, 2 ft	15/19
6 Option 1	0.30	0.55	NR	49	20+5[h] or 13+10[h]	15/20	30[g]	15/19	10, 4 ft	15/19
6 Option 2	0.28	0.55	NR	60	23 cavity	19/21	30[g]	15/19	10, 4 ft	15/19

NR = Not Required.

For SI: 1 foot = 304.8 mm.

a. *R-values* are minimums. *U-factors* and SHGC are maximums. Where insulation is installed in a cavity that is less than the label or design thickness of the insulation, the installed *R-value* of the insulation shall be not less than the *R-value* specified in the table.

b. The fenestration *U*-factor column excludes skylights. The SHGC column applies to all glazed fenestration.

c. "10/13" means R-10 continuous insulation on the interior or exterior of the home or R-13 cavity insulation on the interior of the basement wall. "15/19" means R-15 continuous insulation on the interior or exterior of the home or R-19 cavity insulation at the interior of the basement wall. Alternatively, compliance with "15/19" shall be R-13 cavity insulation on the interior of the basement wall plus R-5 continuous insulation on the interior or exterior of the home.

d. R-5 insulation shall be provided under the full slab area of a *heated slab* in addition to the required slab edge insulation *R-value* for slabs. as indicated in the table. The slab edge insulation for *heated slabs* shall not be required to extend below the slab.

e. Reserved.

f. Reserved.

g. Alternatively, insulation sufficient to fill the framing cavity and providing not less than an *R-value* of R-19.

h. The first value is cavity insulation, the second value is continuous insulation. Therefore, as an example, "13+5" means R-13 cavity insulation plus R-5 continuous insulation.

i. Mass walls shall be in accordance with Section R402.2.5. The second *R-value* applies where more than half of the insulation is on the interior of the mass wall.

[NY] TABLE R402.1.4
EQUIVALENT *U*-FACTORS[a]

CLIMATE ZONE	FENESTRATION *U*-FACTOR	SKYLIGHT *U*-FACTOR	CEILING *U*-FACTOR	FRAME WALL *U*-FACTOR	MASS WALL *U*-FACTOR[b]	FLOOR *U*-FACTOR	BASEMENT WALL *U*-FACTOR	CRAWL SPACE WALL *U*-FACTOR
4	0.32	0.55	0.026	0.060	0.098	0.047	0.059	0.065
5	0.30	0.55	0.026	0.060	0.082	0.033	0.050	0.055
6	0.30	0.55	0.026	0.045	0.060	0.033	0.050	0.055

a. Nonfenestration *U-factors* shall be obtained from measurement, calculation or an approved source.

b. Mass walls shall be in accordance with Section R402.2.5. Where more than half the insulation is on the interior, the mass wall U-factors shall not exceed 0.087 in Climate Zone 4 except Marine, 0.065 in Climate Zone 5 and Marine 4, and 0.057 in Climate Zone 6.

c. In warm-humid locations as defined by Figure R301.1 and Table R301.1, the basement wall *U-factor* shall not exceed 0.360.

INTERNATIONAL CODE COUNCIL®
Copyright © 2019 ICC & NYSDOS. ALL RIGHTS RESERVED. Accessed by Lauren Gualdino (lgualdino@briarcliffmanor.org), (-) Order Number #100880972 on May 08, 2020 07:05 AM (PDT) pursuant to License Agreement with ICC & NYSDOS. No further reproduction, no

100880972

R402.2.4 Access hatches and doors. Access doors from *conditioned spaces* to unconditioned spaces such as attics and crawl spaces shall be weatherstripped and insulated to a level equivalent to the insulation on the surrounding surfaces. Access that prevents damaging or compressing the insulation shall be provided to all equipment. Where loose-fill insulation is installed, a wood-framed or equivalent baffle or retainer shall be installed to prevent the loose-fill insulation from spilling into the living space when the attic access is opened. The baffle or retainer shall provide a permanent means of maintaining the installed *R-value* of the loose-fill insulation.

Exception: Vertical doors providing access from *conditioned spaces* to unconditioned spaces comply with the fenestration requirements of Table R402.1.2 based on the applicable *climate zone* specified in Chapter 3.

R402.2.5 Mass walls. Mass walls where used as a component of the *building thermal envelope* shall be one of the following:

1. Above-ground walls of concrete block, concrete, insulated concrete form, masonry cavity, brick but not brick veneer, adobe, compressed earth block, rammed earth, solid timber or solid logs.
2. Any wall having a heat capacity greater than or equal to 6 Btu/ft^2 • °F (123 kJ/m^2 • K).

R402.2.6 Steel-frame ceilings, walls and floors. Steel-frame ceilings, walls, and floors shall comply with the insulation requirements of Table R402.2.6 or the *U-factor* requirements of Table R402.1.4. The calculation of the *U-factor* for a steel-frame envelope assembly shall use a series-parallel path calculation method.

R402.2.7 Walls with partial structural sheathing. Where Section R402.1.2 requires *continuous insulation* on *exterior walls* and structural sheathing covers 40 percent or less of the gross area of all *exterior walls*, the required *continuous insulation R-value* shall be permitted to be reduced by an amount necessary, but not more than R-3 to result in a consistent total sheathing thickness on areas of the walls covered by structural sheathing. This reduction shall not apply to the *U-factor* alternative in Section R402.1.4 and the Total UA alternative in Section R402.1.5.

R402.2.8 Floors. Floor framing-*cavity insulation* shall be installed to maintain permanent contact with the underside of the subfloor decking.

Exception: As an alternative, the floor framing-*cavity insulation* shall be in contact with the topside of sheathing or *continuous insulation* installed on the bottom side of floor framing where combined with insulation that meets or exceeds the minimum wood frame wall *R-value* in Table R402.1.2 and that extends from the bottom to the top of all perimeter floor framing members.

R402.2.9 Basement walls. Walls associated with conditioned basements shall be insulated from the top of the *basement wall* down to 10 feet (3048 mm) below grade or to the basement floor, whichever is less. Walls associated with unconditioned basements shall comply with this requirement except where the floor overhead is insulated in accordance with Sections R402.1.2 and R402.2.8.

R402.2.10 Slab-on-grade floors. Slab-on-grade floors with a floor surface less than 12 inches (305 mm) below grade shall be insulated in accordance with Table R402.1.2. The insulation shall extend downward from the top of the slab on the outside or inside of the foundation wall. Insulation located below grade shall be extended the distance provided in Table R402.1.2 by any combination of vertical insulation, insulation extending under the slab or insulation extending out from the *building*. Insulation extending away from the *building* shall be protected by pavement or by not less than 10 inches (254 mm) of soil. The top edge of the insulation installed between the *exterior wall* and the edge of the interior slab shall be permitted to be cut at a 45-degree (0.79 rad) angle away from the *exterior wall*. Slab-edge

TABLE R402.2.6
STEEL-FRAME CEILING, WALL AND FLOOR INSULATION *R*-VALUES

WOOD FRAME *R*-VALUE REQUIREMENT	COLD-FORMED STEEL-FRAME EQUIVALENT *R*-VALUE[a]
Steel Truss Ceilings[b]	
R-30	R-38 or R-30 + 3 or R-26 + 5
R-38	R-49 or R-38 + 3
R-49	R-38 + 5
Steel Joist Ceilings[b]	
R-30	R-38 in 2 × 4 or 2 × 6 or 2 × 8 R-49 in any framing
R-38	R-49 in 2 × 4 or 2 × 6 or 2 × 8 or 2 × 10
Steel-Framed Wall, 16 inches on center	
R-13	R-13 + 4.2 or R-21 + 2.8 or R-0 + 9.3 or R-15 + 3.8 or R-21 + 3.1
R-13 + 3	R-0 + 11.2 or R-13 + 6.1 or R-15 + 5.7 or R-19 + 5.0 or R-21 + 4.7
R-20	R-0 + 14.0 or R-13 + 8.9 or R-15 + 8.5 or R-19 + 7.8 or R-19 + 6.2 or R-21 + 7.5
R-20 + 5	R-13 + 12.7 or R-15 + 12.3 or R-19 + 11.6 or R-21 + 11.3 or R-25 + 10.9
R-21	R-0 + 14.6 or R-13 + 9.5 or R-15 + 9.1 or R-19 + 8.4 or R-21 + 8.1 or R-25 + 7.7
Steel Framed Wall, 24 inches on center	
R-13	R-0 + 9.3 or R-13 + 3.0 or R-15 + 2.4
R-13 + 3	R-0 + 11.2 or R-13 + 4.9 or R-15 + 4.3 or R-19 + 3.5 or R-21 + 3.1
R-20	R-0 + 14.0 or R-13 + 7.7 or R-15 + 7.1 or R-19 + 6.3 or R-21 + 5.9
R-20 + 5	R-13 + 11.5 or R-15 + 10.9 or R-19 + 10.1 or R-21 + 9.7 or R-25 + 9.1
R-21	R-0 + 14.6 or R-13 + 8.3 or R-15 + 7.7 or R-19 + 6.9 or R-21 + 6.5 or R-25 + 5.9
Steel Joist Floor	
R-13	R-19 in 2 × 6, or R-19 + 6 in 2 × 8 or 2 × 10
R-19	R-19 + 6 in 2 × 6, or R-19 + 12 in 2 × 8 or 2 × 10

a. The first value is cavity insulation *R-value*, the second value is continuous insulation *R-value*. Therefore, for example, "R-30+3" means R-30 cavity insulation plus R-3 continuous insulation.
b. Insulation exceeding the height of the framing shall cover the framing.

INTERNATIONAL CODE COUNCIL®
Copyright © 2019 ICC & NYSDOS. ALL RIGHTS RESERVED. Accessed by Lauren Gualdino (lgualdino@briarcliffmanor.org), (-) Order Number #100880972 on May 08, 2020 07:05 AM (PDT) pursuant to License Agreement with ICC & NYSDOS. No further reproduction, no

100880972

insulation is not required in jurisdictions designated by the *building official* as having a very heavy termite infestation.

R402.2.11 Crawl space walls. As an alternative to insulating floors over crawl spaces, crawl space walls shall be insulated provided that the crawl space is not vented to the outdoors. Crawl space wall insulation shall be permanently fastened to the wall and shall extend downward from the floor to the finished grade elevation and then vertically or horizontally for not less than an additional 24 inches (610 mm). Exposed earth in unvented crawl space foundations shall be covered with a continuous Class I vapor retarder in accordance with the *Building Code of New York State* or *Residential Code of New York State*, as applicable. Joints of the vapor retarder shall overlap by 6 inches (153 mm) and be sealed or taped. The edges of the vapor retarder shall extend not less than 6 inches (153 mm) up stem walls and shall be attached to the stem walls.

R402.2.12 Masonry veneer. Insulation shall not be required on the horizontal portion of a foundation that supports a masonry veneer.

R402.2.13 Sunroom insulation. *Sunrooms* enclosing *conditioned space* shall meet the insulation requirements of this code.

Exception: For *sunrooms* with *thermal isolation*, and enclosing *conditioned space*, the following exceptions to the insulation requirements of this code shall apply:

1. The minimum ceiling insulation *R-values* shall be R-19 in *Climate Zones* 1 through 4 and R-24 in *Climate Zones* 5 through 8.
2. The minimum wall insulation *R-value* shall be R-13 in all *climate zones*. Walls separating a *sunroom* with a *thermal isolation* from *conditioned space* shall comply with the *building thermal envelope* requirements of this code.

R402.3 Fenestration (Prescriptive). In addition to the requirements of Section R402, *fenestration* shall comply with Sections R402.3.1 through R402.3.5.

R402.3.1 *U*-factor. An area-weighted average of fenestration products shall be permitted to satisfy the *U-factor* requirements.

R402.3.2 Glazed fenestration SHGC. An area-weighted average of *fenestration* products more than 50-percent glazed shall be permitted to satisfy the SHGC requirements.

Dynamic glazing shall be permitted to satisfy the SHGC requirements of Table R402.1.2 provided that the ratio of the higher to lower *labeled* SHGC is greater than or equal to 2.4, and the *dynamic glazing* is automatically controlled to modulate the amount of solar gain into the space in multiple steps. *Dynamic glazing* shall be considered separately from other fenestration, and area-weighted averaging with other fenestration that is not *dynamic glazing* shall be prohibited.

Exception: *Dynamic glazing* shall not be required to comply with this section where both the lower and higher *labeled* SHGC comply with the requirements of Table R402.1.2.

R402.3.3 Glazed fenestration exemption. Not greater than 15 square feet (1.4 m^2) of glazed *fenestration* per *dwelling unit* shall be exempt from the *U-factor* and SHGC requirements in Section R402.1.2. This exemption shall not apply to the *U-factor* alternative in Section R402.1.4 and the Total UA alternative in Section R402.1.5.

R402.3.4 Opaque door exemption. One side-hinged opaque door assembly not greater than 24 square feet (2.22 m^2) in area shall be exempt from the *U-factor* requirement in Section R402.1.2. This exemption shall not apply to the *U-factor* alternative in Section R402.1.4 and the Total UA alternative in Section R402.1.5.

R402.3.5 Sunroom fenestration. *Sunrooms* enclosing *conditioned space* shall comply with the fenestration requirements of this code.

Exception: In *Climate Zones* 2 through 8, for *sunrooms* with *thermal isolation* and enclosing *conditioned space*, the fenestration *U-factor* shall not exceed 0.45 and the *skylight U-factor* shall not exceed 0.70.

New fenestration separating the *sunroom* with *thermal isolation* from *conditioned space* shall comply with the *building thermal envelope* requirements of this code.

R402.4 Air leakage (Mandatory). The *building thermal envelope* shall be constructed to limit air leakage in accordance with the requirements of Sections R402.4.1 through R402.4.5.

R402.4.1 Building thermal envelope. The *building thermal envelope* shall comply with Sections R402.4.1.1 and R402.4.1.2. The sealing methods between dissimilar materials shall allow for differential expansion and contraction.

R402.4.1.1 Installation. The components of the *building thermal envelope* as indicated in Table R402.4.1.1 shall be installed in accordance with the manufacturer's instructions and the criteria indicated in Table R402.4.1.1, as applicable to the method of construction. Where required by the *building official*, an *approved* third party shall inspect all components and verify compliance.

[NY] R402.4.1.2 Testing. The *building* or *dwelling unit* shall be tested and verified as having an air leakage rate not exceeding three air changes per hour. Testing shall be conducted in accordance with RESNET/ICC 380, ASTM E779 or ASTM E1827 and reported at a pressure of 0.2 inch w.g. (50 Pascals). Testing shall be performed at any time after creation of all penetrations of the *building thermal envelope*.

During testing:

1. Exterior windows and doors, fireplace and stove doors shall be closed, but not sealed, beyond the intended weatherstripping or other infiltration control measures.
2. Dampers including exhaust, intake, makeup air, backdraft and flue dampers shall be closed, but not sealed beyond intended infiltration control measures.

INTERNATIONAL CODE COUNCIL®
Copyright © 2019 ICC & NYSDOS. ALL RIGHTS RESERVED. Accessed by Lauren Gualdino (lgualdino@briarcliffmanor.org), (-) Order Number #100880972 on May 08, 2020 07:05 AM (PDT) pursuant to License Agreement with ICC & NYSDOS. No further reproduction, no

100880972

3. Interior doors, where installed at the time of the test, shall be open.
4. Exterior *doors* for continuous *ventilation* systems and heat recovery ventilators shall be closed and sealed.
5. Heating and cooling systems, where installed at the time of the test, shall be turned off.
6. Supply and return registers, where installed at the time of the test, shall be fully open.

Where required by the *building official*, testing shall be conducted by an approved third party. A written report of the results of the test shall be prepared and signed by the party conducting the test and provided to the *building official*. The written report shall include:

1. The name and place of business of the party conducting the test;
2. The address of the building that was tested;
3. The *conditioned floor area* of the dwelling, calculated in accordance with ANSI/BOMA Z65.1, except that *conditioned floor area* shall include areas where the ceiling height is less than 5 feet (1524 mm);
4. Measurement of the air volume lost at an internal pressurization of 0.2 inches w.g. (50 Pascals);
5. The date(s) of the test;
6. A certification by the party conducting the test of the accuracy of the test results; and
7. The signature of the party conducting the test.

[NY] R402.4.1.3 Optional testing procedure for buildings with two or more dwelling units within the building thermal envelope. Where two or more *dwelling units* are located within the *building thermal envelope* of a *building*, the testing procedure specified in Section R402.4.1.3 shall be permitted as an alternative to compliance with Section R402.4.1.2.

In this section, each *dwelling unit* and each other conditioned occupied space located within the *building thermal envelope* of the *building* shall be referred to as a "testing unit," and the "enclosure surface area" within a testing unit shall be equal to the sum of the areas of (i) each *exterior wall* in such testing unit, (ii) each interior wall in such testing unit that abuts other testing unit(s), (iii) each ceiling in such testing unit that abuts other testing unit(s) or abuts unconditioned space, and (iv) each floor in such testing unit that abuts other testing unit(s) or abuts *unconditioned space*.

Each testing unit shall be tested and verified as having an air leakage rate not exceeding 0.3 cubic feet per minute per square foot of enclosure surface area within the testing area. Testing shall be conducted with a blower door at a pressure of 0.2 inches w.g. (50 Pascals), and shall be conducted in accordance with ASTM E779. Testing shall be performed at any time after creation of all penetrations of the *building thermal envelope*.

During testing:

1. Exterior windows and doors, fireplace and stove doors shall be closed, but not sealed, beyond the intended weather-stripping or other *infiltration* control measures.
2. Dampers including exhaust, intake, makeup air, backdraft and flue dampers shall be closed, but not sealed beyond intended *infiltration* control measures.
3. Interior doors, if installed at the time of the test, shall be open.
4. Exterior doors for continuous *ventilation* systems and heat recovery ventilators shall be closed and sealed.
5. Heating and cooling systems, if installed at the time of the test, shall be turned off.
6. Supply and return registers, if installed at the time of the test, shall be fully open. Where required by the *building official*, testing shall be conducted by an approved third party.

A written report of the results of the test shall be prepared and signed by the party conducting the test and provided to the *building official*. The written report shall include:

1. The name and place of business of the party conducting the test;
2. The address of the building which was tested;
3. The *conditioned floor area* of dwelling, calculated in accordance with ANSI/BOMA Z65.1, except that *conditioned floor area* shall include areas where the ceiling height is less than 5 feet (1524 mm);
4. Measurement of the air leakage rate of each testing unit;
5. The date(s) of the test;
6. A certification by the party conducting the test of the accuracy of the test results; and
7. The signature of the party conducting the test.

[NY] R402.4.1.3.1 Buildings with more than seven dwelling units. When the optional testing procedure authorized by Section R402.4.1.3 is used for a *building* with more than seven *dwelling units*, testing each testing unit shall not be required, and testing of sample testing units selected in accordance with the provisions set forth below in this shall be permitted, when approved by the *building official*.

1. Testing units shall be grouped into sample sets of not more than seven testing units and common rooms in each sample set. Each sample set shall contain testing units that are representative of all *dwelling unit* types and all other conditioned occupied spaces.

INTERNATIONAL CODE COUNCIL®
Copyright © 2019 ICC & NYSDOS. ALL RIGHTS RESERVED. Accessed by Lauren Gualdino (lgualdino@briarcliffmanor.org), (-) Order Number #100880972 on May 08, 2020 07:05 AM (PDT) pursuant to License Agreement with ICC & NYSDOS. No further reproduction, no

100880972

TABLE R402.4.1.1
AIR BARRIER AND INSULATION INSTALLATION[a]

COMPONENT	AIR BARRIER CRITERIA	INSULATION INSTALLATION CRITERIA
General requirements	A continuous *air barrier* shall be installed in the building envelope. The exterior thermal envelope contains a continuous *air barrier*. Breaks or joints in the air barrier shall be sealed.	Air-permeable insulation shall not be used as a sealing material.
Ceiling/attic	The *air barrier* in any dropped ceiling or soffit shall be aligned with the insulation and any gaps in the *air barrier* shall be sealed. Access openings, drop down stairs or knee wall doors to unconditioned attic spaces shall be sealed.	The insulation in any dropped ceiling/soffit shall be aligned with the *air barrier*.
Walls	The junction of the foundation and sill plate shall be sealed. The junction of the top plate and the top of *exterior walls* shall be sealed. Knee walls shall be sealed.	Cavities within corners and headers of frame walls shall be insulated by completely filling the cavity with a material having a thermal resistance, *R-value*, of not less than R-3 per inch. Exterior thermal envelope insulation for framed walls shall be installed in substantial contact and continuous alignment with the *air barrier*.
Windows, skylights and doors	The space between framing and skylights, and the jambs of windows and doors, shall be sealed.	—
Rim joists	Rim joists shall include the *air barrier*.	Rim joists shall be insulated.
Floors, including cantilevered floors and floors above garages	The *air barrier* shall be installed at any exposed edge of insulation.	Floor framing cavity insulation shall be installed to maintain permanent contact with the underside of subfloor decking. Alternatively, floor framing cavity insulation shall be in contact with the top side of sheathing, or *continuous insulation* installed on the underside of floor framing; and shall extend from the bottom to the top of all perimeter floor framing members.
Crawl space walls	Exposed earth in unvented crawl spaces shall be covered with a Class I vapor retarder with overlapping joints taped.	Crawl space insulation, where provided instead of floor insulation, shall be permanently attached to the walls.
Shafts, penetrations	Duct shafts, utility penetrations, and flue shafts opening to exterior or unconditioned space shall be sealed.	—
Narrow cavities	—	Batts to be installed in narrow cavities shall be cut to fit or narrow cavities shall be filled with insulation that on installation readily conforms to the available cavity space.
Garage separation	Air sealing shall be provided between the garage and conditioned spaces.	—
Recessed lighting	Recessed light fixtures installed in the *building thermal envelope* shall be sealed to the finished surface.	Recessed light fixtures installed in the building thermal envelope shall be air tight and IC rated.
Plumbing and wiring	—	In *exterior walls*, batt insulation shall be cut neatly to fit around wiring and plumbing, or insulation, that on installation readily conforms to available space, shall extend behind piping and wiring.
Shower/tub on *exterior wall*	The *air barrier* installed at *exterior walls* adjacent to showers and tubs shall separate the wall from the shower or tub.	*Exterior walls* adjacent to showers and tubs shall be insulated.
Electrical/phone box on *exterior walls*	The *air barrier* shall be installed behind electrical and communication boxes. Alternatively, air-sealed boxes shall be installed.	—
HVAC register boots	HVAC supply and return register boots that penetrate *building thermal envelope* shall be sealed to the subfloor, wall covering or ceiling penetrated by the boot.	—
Concealed sprinklers	Where required to be sealed, concealed fire sprinklers shall only be sealed in a manner that is recommended by the manufacturer. Caulking or other adhesive sealants shall not be used to fill voids between fire sprinkler cover plates and walls or ceilings.	—

a. Inspection of log walls shall be in accordance with the provisions of ICC 400.

INTERNATIONAL CODE COUNCIL®
Copyright © 2019 ICC & NYSDOS. ALL RIGHTS RESERVED. Accessed by Lauren Gualdino (lgualdino@briarcliffmanor.org), (-) Order Number #100880972 on May 08, 2020 07:05 AM (PDT) pursuant to License Agreement with ICC & NYSDOS. No further reproduction, no

100880972

2. If all testing units in the first sample set tested are verified as having an air leakage rate not exceeding 0.3 cubic feet per minute per square foot of enclosure surface area within the testing area, remaining sample sets shall be permitted to be tested at the rate of one testing unit per sample set.
3. If any testing unit tested in accordance with paragraph 2 above is not verified as having an air leakage rate not exceeding 0.3 cubic feet per minute per square foot of enclosure surface area within the testing area, two additional testing units in the sample set shall be tested.
4. If any testing unit tested in accordance with paragraph 3 above is not verified as having an air leakage rate not exceeding 0.3 cubic feet per minute per square foot of enclosure surface area within the testing area, all testing units in the sample set shall be tested, and all testing units in the subsequent sample set, if any, shall be tested.
5. If all testing units in the sample set tested in accordance with paragraph 4 above are verified as having an air leakage rate not exceeding 0.3 cubic feet per minute per square foot of enclosure surface area within the testing area, subsequent sample sets shall be permitted to be tested in accordance with paragraph 2 above, where approved by the *building official*.

R402.4.2 Fireplaces. New wood-burning fireplaces shall have tight-fitting flue dampers or doors, and outdoor combustion air. Where using tight-fitting doors on factory-built fireplaces *listed* and *labeled* in accordance with UL 127, the doors shall be tested and *listed* for the fireplace.

R402.4.3 Fenestration air leakage. Windows, *skylights* and sliding glass doors shall have an air *infiltration* rate of not greater than 0.3 cfm per square foot (1.5 L/s/m^2), and for swinging doors, not greater than 0.5 cfm per square foot (2.6 L/s/m^2), when tested in accordance with NFRC 400 or AAMA/WDMA/CSA 101/I.S.2/A440 by an accredited, independent laboratory and *listed* and *labeled* by the manufacturer.

Exception: Site-built windows, *skylights* and doors.

R402.4.4 Rooms containing fuel-burning appliances. In *Climate Zones* 3 through 8, where open combustion air ducts provide combustion air to open combustion fuel burning appliances, the appliances and combustion air opening shall be located outside the *building thermal envelope* or enclosed in a room that is isolated from inside the thermal envelope. Such rooms shall be sealed and insulated in accordance with the envelope requirements of Table R402.1.2, where the walls, floors and ceilings shall meet not less than the *basement wall R-value* requirement. The door into the room shall be fully gasketed and any water lines and ducts in the room insulated in accordance with Section R403. The combustion air duct shall be insulated where it passes through *conditioned space* to an *R-value* of not less than R-8.

Exceptions:

1. Direct vent appliances with both intake and exhaust pipes installed continuous to the outside.
2. Fireplaces and stoves complying with Section R402.4.2 and Section R1006 of the *Residential Code of New York State*.

R402.4.5 Recessed lighting. Recessed luminaires installed in the *building thermal envelope* shall be sealed to limit air leakage between conditioned and unconditioned spaces. Recessed luminaires shall be IC-rated and *labeled* as having an air leakage rate of not greater than 2.0 cfm (0.944 L/s) when tested in accordance with ASTM E283 at a pressure differential of 1.57 psf (75 Pa). Recessed luminaires shall be sealed with a gasket or caulked between the housing and the interior wall or ceiling covering.

[NY] R402.4.6 Tenant separation walls (Mandatory). Fire separations between *dwelling unit*s in two-family dwellings and multiple single-family dwellings (*townhouse*s) shall be insulated to no less than R-10 and the walls shall be air sealed in accordance with Section R402.4. of this chapter.

R402.5 Maximum fenestration *U*-factor and SHGC (Mandatory). The *area-weighted average* maximum *fenestration U-factor* permitted using tradeoffs from Section R402.1.5 or R405 shall be 0.48 in *Climate Zones* 4 and 5 and 0.40 in *Climate Zones* 6 through 8 for vertical *fenestration*, and 0.75 in *Climate Zones* 4 through 8 for *skylights*. The *area-weighted average* maximum *fenestration* SHGC permitted using tradeoffs from Section R405 in *Climate Zones* 1 through 3 shall be 0.50.

SECTION R403
SYSTEMS

R403.1 Controls (Mandatory). Not less than one thermostat shall be provided for each separate heating and cooling system.

R403.1.1 Programmable thermostat. The thermostat controlling the primary heating or cooling system of the *dwelling unit* shall be capable of controlling the heating and cooling system on a daily schedule to maintain different temperature setpoints at different times of the day. This thermostat shall include the capability to set back or temporarily operate the system to maintain *zone* temperatures of not less than 55°F (13°C) to not greater than 85°F (29°C). The thermostat shall be programmed initially by the manufacturer with a heating temperature setpoint of not greater than 70°F (21°C) and a cooling temperature setpoint of not less than 78°F (26°C).

R403.1.2 Heat pump supplementary heat (Mandatory). Heat pumps having supplementary electric-resistance heat shall have controls that, except during defrost, prevent supplemental heat operation when the heat pump compressor can meet the heating load.

INTERNATIONAL CODE COUNCIL®
Copyright © 2019 ICC & NYSDOS. ALL RIGHTS RESERVED. Accessed by Lauren Gualdino (lgualdino@briarcliffmanor.org), (-) Order Number #100880972 on May 08, 2020 07:05 AM (PDT) pursuant to License Agreement with ICC & NYSDOS. No further reproduction, no

100880972

R403.2 Hot water boiler outdoor temperature setback. Hot water boilers that supply heat to the *building* through one- or two-pipe heating systems shall have an outdoor setback control that decreases the boiler water temperature based on the outdoor temperature.

R403.3 Ducts. Ducts and air handlers shall be installed in accordance with Sections R403.3.1 through R403.3.7.

R403.3.1 Insulation (Prescriptive). Supply and return ducts in attics shall be insulated to an *R-value* of not less than R-8 for ducts 3 inches (76 mm) in diameter and larger and not less than R-6 for ducts smaller than 3 inches (76 mm) in diameter. Supply and return ducts in other portions of the *building* shall be insulated to not less than R-6 for ducts 3 inches (76 mm) in diameter and not less than R-4.2 for ducts smaller than 3 inches (76 mm) in diameter.

Exception: Ducts or portions thereof located completely inside the *building thermal envelope*.

[NY] R403.3.2 Sealing (Mandatory). Ducts, air handlers and filter boxes shall be sealed. Joints and seams shall comply with either the *Mechanical Code of New York State* or *Residential Code of New York State,* or the *New York City Construction Code*, as applicable.

Exceptions:

1. Air-impermeable spray foam products shall be permitted to be applied without additional joint seals.
2. For ducts having a static pressure classification of less than 2 inches of water column (500 Pa), additional closure systems shall not be required for continuously welded joints and seams, and locking-type joints and seams of other than the snap-lock and button-lock types.

R403.3.2.1 Sealed air handler. Air handlers shall have a manufacturer's designation for an air leakage of not greater than 2 percent of the design airflow rate when tested in accordance with ASHRAE 193.

R403.3.3 Duct testing (Mandatory). Ducts shall be pressure tested to determine air leakage by one of the following methods:

1. Rough-in test: Total leakage shall be measured with a pressure differential of 0.1 inch w.g. (25 Pa) across the system, including the manufacturer's air handler enclosure if installed at the time of the test. Registers shall be taped or otherwise sealed during the test.
2. Postconstruction test: Total leakage shall be measured with a pressure differential of 0.1 inch w.g. (25 Pa) across the entire system, including the manufacturer's air handler enclosure. Registers shall be taped or otherwise sealed during the test.

Exceptions:

1. A duct air-leakage test shall not be required where the ducts and air handlers are located entirely within the *building thermal envelope*.
2. A duct air-leakage test shall not be required for ducts serving heat or energy recovery ventilators that are not integrated with ducts serving heating or cooling systems.

A written report of the results of the test shall be signed by the party conducting the test and provided to the *building official*.

R403.3.4 Duct leakage (Prescriptive). The total leakage of the ducts, where measured in accordance with Section R403.3.3, shall be as follows:

1. Rough-in test: The total leakage shall be less than or equal to 4 cubic feet per minute (113.3 L/min) per 100 square feet (9.29 m^2) of *conditioned floor area* where the air handler is installed at the time of the test. Where the air handler is not installed at the time of the test, the total leakage shall be less than or equal to 3 cubic feet per minute (85 L/min) per 100 square feet (9.29 m^2) of *conditioned floor area*.
2. Postconstruction test: Total leakage shall be less than or equal to 4 cubic feet per minute (113.3 L/min) per 100 square feet (9.29 m^2) of *conditioned floor area*.

R403.3.5 Building cavities (Mandatory). *Building* framing cavities shall not be used as ducts or plenums.

[NY] R403.3.6 Ducts buried within ceiling insulation. Where supply and return air ducts are partially or completely buried in ceiling insulation, such ducts shall comply with all of the following:

1. The supply and return ducts shall have an insulation *R-value* not less than R-8.
2. At all points along each duct, the sum of the ceiling insulation *R-value* against and above the top of the duct, and against and below the bottom of the duct, shall be not less than R-19, excluding the *R-value* of the duct insulation.

R403.3.6.1 Effective *R*-value of deeply buried ducts. Where using a simulated energy performance analysis, sections of ducts that are: installed in accordance with Section R403.3.6; located directly on, or within 5.5 inches (140 mm) of the ceiling; surrounded with blown-in attic insulation having an *R-value* of R-30 or greater and located such that the top of the duct is not less than 3.5 inches (89 mm) below the top of the insulation, shall be considered as having an effective duct insulation *R-value* of R-25.

R403.3.7 Ducts located in conditioned space. For ducts to be considered as inside a *conditioned space*, such ducts shall comply with either of the following:

1. The *duct system* shall be located completely within the continuous *air barrier* and within the *building thermal envelope*.
2. The ducts shall be buried within ceiling insulation in accordance with Section R403.3.6 and all of the following conditions shall exist:

INTERNATIONAL CODE COUNCIL®
Copyright © 2019 ICC & NYSDOS. ALL RIGHTS RESERVED. Accessed by Lauren Gualdino (lgualdino@briarcliffmanor.org), (-) Order Number #100880972 on May 08, 2020 07:05 AM (PDT) pursuant to License Agreement with ICC & NYSDOS. No further reproduction, no

100880972

2.1. The air handler is located completely within the *continuous air barrier* and within the *building thermal envelope*.

2.2. The duct leakage, as measured either by a rough-in test of the ducts or a post-construction total system leakage test to outside the *building thermal envelope* in accordance with Section R403.3.4, is less than or equal to 1.5 cubic feet per minute (42.5 L/min) per 100 square feet (9.29 m^2) of *conditioned floor area* served by the duct system.

2.3. The ceiling insulation *R-value* installed against and above the insulated duct is greater than or equal to the proposed ceiling insulation *R-value*, less the *R-value* of the insulation on the duct.

R403.4 Mechanical system piping insulation (Mandatory). Mechanical system piping capable of carrying fluids greater than 105°F (41°C) or less than 55°F (13°C) shall be insulated to an *R-value* of not less than R-3.

R403.4.1 Protection of piping insulation. Piping insulation exposed to weather shall be protected from damage, including that caused by sunlight, moisture, equipment maintenance and wind. The protection shall provide shielding from solar radiation that can cause degradation of the material. Adhesive tape shall be prohibited.

R403.5 Service hot water systems. Energy conservation measures for service hot water systems shall be in accordance with Sections R403.5.1 through R403.5.4.

R403.5.1 Heated water circulation and temperature maintenance systems (Mandatory). Heated water circulation systems shall be in accordance with Section R403.5.1.1. Heat trace temperature maintenance systems shall be in accordance with Section R403.5.1.2. Automatic controls, temperature sensors and pumps shall be *accessible*. Manual controls shall be readily *accessible*.

R403.5.1.1 Circulation systems. Heated water circulation systems shall be provided with a circulation pump. The system return pipe shall be a dedicated return pipe or a cold water supply pipe. Gravity and thermosyphon circulation systems shall be prohibited. Controls for *circulating hot water system* pumps shall start the pump based on the identification of a demand for hot water within the occupancy. The controls shall automatically turn off the pump when the water in the circulation loop is at the desired temperature and when there is no demand for hot water.

R403.5.1.2 Heat trace systems. Electric heat trace systems shall comply with IEEE 515.1 or UL 515. Controls for such systems shall automatically adjust the energy input to the heat tracing to maintain the desired water temperature in the piping in accordance with the times when heated water is used in the occupancy.

R403.5.2 Demand recirculation water systems. *Demand recirculation water systems* shall have controls that comply with both of the following:

1. The controls shall start the pump upon receiving a signal from the action of a user of a fixture or appliance, sensing the presence of a user of a fixture or sensing the flow of hot or tempered water to a fixture fitting or appliance.
2. The controls shall limit the temperature of the water entering the cold water piping to not greater than 104ºF (40ºC).

R403.5.3 Hot water pipe insulation (Prescriptive). Insulation for hot water piping with a thermal resistance, *R-value*, of not less than R-3 shall be applied to the following:

1. Piping $^3/_4$ inch (19.1 mm) and larger in nominal diameter.
2. Piping serving more than one *dwelling unit*.
3. Piping located outside the *conditioned space*.
4. Piping from the water heater to a distribution manifold.
5. Piping located under a floor slab.
6. Buried piping.
7. Supply and return piping in recirculation systems other than demand recirculation systems.

R403.5.4 Drain water heat recovery units. Drain water heat recovery units shall comply with CSA B55.2. Drain water heat recovery units shall be tested in accordance with CSA B55.1. Potable water-side pressure loss of drain water heat recovery units shall be less than 3 psi (20.7 kPa) for individual units connected to one or two showers. Potable water-side pressure loss of drain water heat recovery units shall be less than 2 psi (13.8 kPa) for individual units connected to three or more showers.

TABLE R403.6.1
WHOLE-HOUSE MECHANICAL VENTILATION SYSTEM FAN EFFICACY[a]

FAN LOCATION	AIR FLOW RATE MINIMUM (CFM)	MINIMUM EFFICACY (CFM/WATT)	AIR FLOW RATE MAXIMUM (CFM)
HRV or ERV	Any	1.2 cfm/watt	Any
Range hoods	Any	2.8 cfm/watt	Any
In-line fan	Any	2.8 cfm/watt	Any
Bathroom, utility room	10	1.4 cfm/watt	< 90
Bathroom, utility room	90	2.8 cfm/watt	Any

For SI: 1 cfm = 28.3 L/min.

a. When tested in accordance with HVI Standard 916.

INTERNATIONAL CODE COUNCIL®
Copyright © 2019 ICC & NYSDOS. ALL RIGHTS RESERVED. Accessed by Lauren Gualdino (lgualdino@briarcliffmanor.org), (-) Order Number #100880972 on May 08, 2020 07:05 AM (PDT) pursuant to License Agreement with ICC & NYSDOS. No further reproduction, no

100880972

R403.6 Mechanical ventilation (Mandatory). The *building* shall be provided with *ventilation* that complies with the requirements of the *Residential Code of New York State* or *Mechanical Code of New York State or New York City Construction Code*, as applicable, or with other *approved* means of *ventilation*. Outdoor air intakes and exhausts shall have automatic or gravity dampers that close when the *ventilation* system is not operating.

R403.6.1 Whole-house mechanical ventilation system fan efficacy. Fans used to provide whole-house mechanical *ventilation* shall meet the efficacy requirements of Table R403.6.1.

Exception: Where an air handler that is integral to tested and *listed* HVAC equipment is used to provide whole-house mechanical ventilation, the air handler shall be powered by an electronically commutated motor.

R403.7 Equipment sizing and efficiency rating (Mandatory). Heating and cooling equipment shall be sized in accordance with ACCA Manual S based on *building* loads calculated in accordance with ACCA Manual J or other *approved* heating and cooling calculation methodologies. New or replacement heating and cooling equipment shall have an efficiency rating equal to or greater than the minimum required by federal law for the geographic location where the equipment is installed.

R403.8 Systems serving multiple dwelling units (Mandatory). Systems serving multiple dwelling units shall comply with Sections C403 and C404 of the *Energy Conservation Construction Code of New York State*—Commercial Provisions instead of Section R403.

R403.9 Snow melt and ice system controls (Mandatory). Snow- and ice-melting systems, supplied through energy service to the building, shall include automatic controls capable of shutting off the system when the pavement temperature is greater than 50°F (10°C) and precipitation is not falling, and an automatic or manual control that will allow shutoff when the outdoor temperature is greater than 40°F (4.8°C).

R403.10 Pools and permanent spa energy consumption (Mandatory). The energy consumption of pools and permanent spas shall be in accordance with Sections R403.10.1 through R403.10.3.

R403.10.1 Heaters. The electric power to heaters shall be controlled by a readily *accessible* on-off switch that is an integral part of the heater mounted on the exterior of the heater, or external to and within 3 feet (914 mm) of the heater. Operation of such switch shall not change the setting of the heater thermostat. Such switches shall be in addition to a circuit breaker for the power to the heater. Gas-fired heaters shall not be equipped with continuously burning ignition pilots.

R403.10.2 Time switches. Time switches or other control methods that can automatically turn off and on according to a preset schedule shall be installed for heaters and pump motors. Heaters and pump motors that have built-in time switches shall be in compliance with this section.

Exceptions:

1. Where public health standards require 24-hour pump operation.
2. Pumps that operate solar- and waste-heat-recovery pool heating systems.

[NY] R403.10.3 Covers. Outdoor heated pools and outdoor permanent spas shall be provided with a vapor-retardant cover or other *approved* vapor-retardant means. Outdoor heated pools and outdoor heated permanent spas heated to more than 90°F (32°C) shall have a pool cover with a minimum insulation value of R-12.

Exception: Where more than 60 percent of the energy for heating is from site-recovered energy or a solar energy source, covers or other vapor-retardant means shall not be required.

R403.11 Portable spas (Mandatory). The energy consumption of electric-powered portable spas shall be controlled by the requirements of APSP 14.

R403.12 Residential pools and permanent residential spas. Residential swimming pools and permanent residential spas that are accessory to detached one- and two-family dwellings and *townhouses* three stories or less in height above grade plane and that are available only to the household and its guests shall be in accordance with APSP 15a.

SECTION R404
ELECTRICAL POWER AND LIGHTING SYSTEMS

R404.1 Lighting equipment (Mandatory). Not less than 90 percent of the permanently installed lighting fixtures shall contain only high-efficacy lamps.

R404.1.1 Lighting equipment (Mandatory). Fuel gas lighting systems shall not have continuously burning pilot lights.

SECTION R405
SIMULATED PERFORMANCE ALTERNATIVE (PERFORMANCE)

R405.1 Scope. This section establishes criteria for compliance using simulated energy performance analysis. Such analysis shall include heating, cooling, mechanical *ventilation* and *service water heating* energy only.

R405.2 Mandatory requirements. Compliance with this section requires that the mandatory provisions identified in Section R401.2 be met. Supply and return ducts not completely inside the *building thermal envelope* shall be insulated to an *R-value* of not less than R-6.

R405.3 Performance-based compliance. Compliance based on simulated energy performance requires that a proposed residence (*proposed design)* be shown to have an annual *energy cost* that is less than or equal to the annual *energy cost*

INTERNATIONAL CODE COUNCIL®
Copyright © 2019 ICC & NYSDOS. ALL RIGHTS RESERVED. Accessed by Lauren Gualdino (lgualdino@briarcliffmanor.org), (-) Order Number #100880972 on May 08, 2020 07:05 AM (PDT) pursuant to License Agreement with ICC & NYSDOS. No further reproduction, no

100880972

[NY] TABLE R405.5.2(1)
SPECIFICATIONS FOR THE STANDARD REFERENCE AND PROPOSED DESIGNS

BUILDING COMPONENT	STANDARD REFERENCE DESIGN	PROPOSED DESIGN
Above-grade walls	Type: mass, where the proposed wall is a mass wall; otherwise, wood frame.	As proposed
	Gross area: same as proposed.	As proposed
	U-factor: as specified in Table R402.1.4.	As proposed
	Solar absorptance = 0.75.	As proposed
	Emittance = 0.90.	As proposed
Basement and crawl space walls	Type: same as proposed.	As proposed
	Gross area: same as proposed.	As proposed
	U-factor: as specified in Table R402.1.4, with the insulation layer on the interior side of the walls.	As proposed
Above-grade floors	Type: wood frame.	As proposed
	Gross area: same as proposed.	As proposed
	U-factor: as specified in Table R402.1.4.	As proposed
Ceilings	Type: wood frame.	As proposed
	Gross area: same as proposed.	As proposed
	U-factor: as specified in Table R402.1.4.	As proposed
Roofs	Type: composition shingle on wood sheathing.	As proposed
	Gross area: same as proposed.	As proposed
	Solar absorptance = 0.75.	As proposed
	Emittance = 0.90.	As proposed
Attics	Type: vented with an aperture of 1 ft^2 per 300 ft^2 of ceiling area.	As proposed
Foundations	Type: same as proposed.	As proposed
	Foundation wall area above and below grade and soil characteristics: same as proposed.	As proposed
Opaque doors	Area: 40 ft^2.	As proposed
	Orientation: North.	As proposed
	U-factor: same as fenestration as specified Table R402.1.4.	As proposed
Vertical fenestration other than opaque doors	Total area[h] = (a) The proposed glazing area, where the proposed glazing area is less than 15 percent of the *conditioned floor area* (b) 15 percent of the conditioned floor area, where the proposed glazing area is 15 percent or more of the *conditioned floor area*.	As proposed
	Orientation: equally distributed to four cardinal compass orientations (N, E, S & W).	As proposed
	U-factor: as specified in Table R402.1.4.	As proposed
	SHGC: as specified in Table R402.1.2 except for climate zones without an SHGC requirement, the SHGC shall be equal to 0.40.	As proposed
	Interior shade fraction: 0.92-(0.21 × SHGC for the *standard reference design*).	Interior shade fraction: 0.92-(0.21 × SHGC as proposed)
	External shading: none.	As proposed
Skylights	None.	As proposed
Thermally isolated sunrooms	None.	As proposed
Air exchange rate	The air leakage rate at a pressure of 0.2 inch w.g. (50 Pa) shall be *Climate Zones* 1 and 2: 5 air changes per hour. *Climate Zones* 3 through 8: 3 air changes per hour. The mechanical *ventilation* rate shall be in addition to the air leakage rate and shall be the same as in the *proposed design*, but not greater than $0.03 \times CFA + 7.5 \times (N_{br} + 1)$ where: *CFA* = *conditioned floor area*, ft^2. N_{br} = number of bedrooms. Energy recovery shall not be assumed for mechanical *ventilation*.	The measured air exchange rate.[a] The mechanical *ventilation* rate[b] shall be in addition to the air leakage rate and shall be as proposed.

(continued)

INTERNATIONAL CODE COUNCIL®
Copyright © 2019 ICC & NYSDOS. ALL RIGHTS RESERVED. Accessed by Lauren Gualdino (lgualdino@briarcliffmanor.org), (-) Order Number #100880972 on May 08, 2020 07:05 AM (PDT) pursuant to License Agreement with ICC & NYSDOS. No further reproduction, no

100880972

TABLE R405.5.2(1)—continued
SPECIFICATIONS FOR THE STANDARD REFERENCE AND PROPOSED DESIGNS

BUILDING COMPONENT	STANDARD REFERENCE DESIGN	PROPOSED DESIGN
Mechanical ventilation	Where mechanical *ventilation* is not specified in the *proposed design*: None Where mechanical *ventilation* is specified in the *proposed design*, the annual vent fan energy use, in units of kWh/yr, shall equal: $(1/e_f) \times [0.0876 \times CFA + 65.7 \times (N_{br} + 1)]$ where: e_f = the minimum exhaust fan efficacy, as specified in Table R403.6.1, corresponding to a flow rate of $0.03 \times CFA + 7.5 \times (N_{br}+1)$ CFA = *conditioned floor area,* ft^2. N_{br} = number of bedrooms.	As proposed
Internal gains	IGain, in units of Btu/day per dwelling unit, shall equal: $17{,}900 + 23.8 \times CFA + 4{,}104 \times N_{br}$ where: CFA = *conditioned floor area*, ft^2. N_{br} = number of bedrooms.	Same as *standard reference design.*
Internal mass	Internal mass for furniture and contents: 8 pounds per square foot of floor area.	Same as *standard reference design,* plus any additional mass specifically designed as a thermal storage element[c] but not integral to the building envelope or structure.
Structural mass	For masonry floor slabs: 80 percent of floor area covered by R-2 carpet and pad, and 20 percent of floor directly exposed to room air.	As proposed
	For masonry basement walls: as proposed, but with insulation as specified in Table R402.1.4, located on the interior side of the walls.	As proposed
	For other walls, ceilings, floors, and interior walls: wood frame construction.	As proposed
Heating systems[d, e]	For other than electric heating without a heat pump: as proposed. Where the *proposed design* utilizes electric heating without a heat pump, the *standard reference design* shall be an air source heat pump meeting the requirements of Section C403 of the IECC—Commercial Provisions. Capacity: sized in accordance with Section R403.7.	As proposed
Cooling systems[d, f]	As proposed. Capacity: sized in accordance with Section R403.7.	As proposed
Service water heating[d, e, f, g]	As proposed. Use: same as *proposed design*.	As proposed Use, in units of gal/day = $30 + (10 \times N_{br})$ where: N_{br} = number of bedrooms.
Thermal distribution systems	Duct insulation: in accordance with Section R403.3.1. A thermal distribution system efficiency (DSE) of 0.88 shall be applied to both the heating and cooling system efficiencies for all systems other than tested duct systems. **Exception:** For nonducted heating and cooling systems that do not have a fan, the *standard reference design* thermal distribution system efficiency (DSE) shall be 1. For tested duct systems, the leakage rate shall be 4 cfm (113.3 L/min) per 100 ft^2 (9.29 m^2) of *conditioned floor area* at a pressure of differential of 0.1 inch w.g. (25 Pa).	Duct insulation: as proposed. As tested or, where not tested, as specified in Table R405.5.2(2)
Thermostat	Type: Manual, cooling temperature setpoint = 75°F; heating temperature setpoint = 72°F.	Same as *standard reference design.*

(continued)

INTERNATIONAL CODE COUNCIL®
Copyright © 2019 ICC & NYSDOS. ALL RIGHTS RESERVED. Accessed by Lauren Gualdino (lgualdino@briarcliffmanor.org), (-) Order Number #100880972 on May 08, 2020 07:05 AM (PDT) pursuant to License Agreement with ICC & NYSDOS. No further reproduction, no

100880972

TABLE R405.5.2(1)—continued
SPECIFICATIONS FOR THE STANDARD REFERENCE AND PROPOSED DESIGNS

For SI: 1 square foot = 0.93 m^2, 1 British thermal unit = 1055 J, 1 pound per square foot = 4.88 kg/m^2, 1 gallon (US) = 3.785 L, °C = (°F - 32)/1.8, 1 degree = 0.79 rad.

a. Where required by the building official, testing shall be conducted by an approved party. Hourly calculations as specified in the ASHRAE *Handbook of Fundamentals*, or the equivalent, shall be used to determine the energy loads resulting from infiltration.

b. The combined air exchange rate for infiltration and mechanical *ventilation* shall be determined in accordance with Equation 43 of 2001 ASHRAE *Handbook of Fundamentals*, page 26.24 and the "Whole-house *Ventilation*" provisions of 2001 ASHRAE *Handbook of Fundamentals*, page 26.19 for intermittent mechanical *ventilation*.

c. Thermal storage element shall mean a component that is not part of the floors, walls or ceilings that is part of a passive solar system, and that provides thermal storage such as enclosed water columns, rock beds, or phase-change containers. A thermal storage element shall be in the same room as fenestration that faces within 15 degrees (0.26 rad) of true south, or shall be connected to such a room with pipes or ducts that allow the element to be actively charged.

d. For a *proposed design* with multiple heating, cooling or water heating systems using different fuel types, the applicable *standard reference design* system capacities and fuel types shall be weighted in accordance with their respective loads as calculated by accepted engineering practice for each equipment and fuel type present.

e. For a *proposed design* without a proposed heating system, a heating system having the prevailing federal minimum efficiency shall be assumed for both the *standard reference design* and *proposed design*.

f. For a proposed design home without a proposed cooling system, an electric air conditioner having the prevailing federal minimum efficiency shall be assumed for both the *standard reference design* and the *proposed design*.

g. For a *proposed design* with a nonstorage-type water heater, a 40-gallon storage-type water heater having the prevailing federal minimum energy factor for the same fuel as the predominant heating fuel type shall be assumed. For a *proposed design* without a proposed water heater, a 40-gallon storage-type water heater having the prevailing federal minimum efficiency for the same fuel as the predominant heating fuel type shall be assumed for both the *proposed design* and *standard reference design*.

h. For residences with conditioned basements, R-2 and R-4 residences, and for townhouses, the following formula shall be used to determine glazing area:

$AF = A_s \times FA \times F$

where:

AF = Total glazing area.

A_s = *Standard reference design* total glazing area.

FA = (Above-grade thermal boundary gross wall area)/(above-grade boundary wall area + 0.5 × below-grade boundary wall area).

F = (above-grade thermal boundary wall area)/(above-grade thermal boundary wall area + common wall area) or 0.56, whichever is greater.

and where:

Thermal boundary wall is any wall that separates conditioned space from unconditioned space or ambient conditions.

Above-grade thermal boundary wall is any thermal boundary wall component not in contact with soil.

Below-grade boundary wall is any thermal boundary wall in soil contact.

Common wall area is the area of walls shared with an adjoining dwelling unit. L and CFA are in the same units.

TABLE R405.5.2(2)
DEFAULT DISTRIBUTION SYSTEM EFFICIENCIES FOR PROPOSED DESIGNS[a]

DISTRIBUTION SYSTEM CONFIGURATION AND CONDITION	FORCED AIR SYSTEMS	HYDRONIC SYSTEMS[b]
Distribution system components located in unconditioned space	—	0.95
Untested distribution systems entirely located in conditioned space[c]	0.88	1
"Ductless" systems[d]	1	—

For SI: 1 cubic foot per minute = 0.47 L/s, 1 square foot = 0.093 m^2, 1 pound per square inch = 6895 Pa, 1 inch water gauge = 1250 Pa.

a. Default values in this table are for untested distribution systems, which must still meet minimum requirements for duct system insulation.

b. Hydronic systems shall mean those systems that distribute heating and cooling energy directly to individual spaces using liquids pumped through closed-loop piping and that do not depend on ducted, forced airflow to maintain space temperatures.

c. Entire system in conditioned space shall mean that no component of the distribution system, including the air-handler unit, is located outside of the conditioned space.

d. Ductless systems shall be allowed to have forced airflow across a coil but shall not have any ducted airflow external to the manufacturer's air-handler enclosure.

INTERNATIONAL CODE COUNCIL®
Copyright © 2019 ICC & NYSDOS. ALL RIGHTS RESERVED. Accessed by Lauren Gualdino (lgualdino@briarcliffmanor.org), (-) Order Number #100880972 on May 08, 2020 07:05 AM (PDT) pursuant to License Agreement with ICC & NYSDOS. No further reproduction, no

100880972

of the *standard reference design.* Energy prices shall be taken from a source *approved* by the *building official,* such as the Department of Energy, Energy Information Administration's State Energy Data System Prices and Expenditures reports. *Building officials* shall be permitted to require time-of-use pricing in *energy cost* calculations.

Exception: The energy use based on source energy expressed in Btu or Btu per square foot of *conditioned floor area* shall be permitted to be substituted for the *energy cost.* The source energy multiplier for electricity shall be 3.16. The source energy multiplier for fuels other than electricity shall be 1.1.

R405.4 Documentation. Documentation of the software used for the performance design and the parameters for the *building* shall be in accordance with Sections R405.4.1 through R405.4.3.

R405.4.1 Compliance software tools. Documentation verifying that the methods and accuracy of the compliance software tools conform to the provisions of this section shall be provided to the *building official.*

R405.4.2 Compliance report. Compliance software tools shall generate a report that documents that the *proposed design* complies with Section R405.3. A compliance report on the *proposed design* shall be submitted with the application for the *building* permit. Upon completion of the *building*, a compliance report based on the as-built condition of the *building* shall be submitted to the *building official* before a certificate of occupancy is issued. Batch sampling of *buildings* to determine *Energy Code* compliance shall only be allowed for stacked multiple-family units.

Compliance reports shall include information in accordance with Sections R405.4.2.1 and R405.4.2.2. Where the *proposed design* of a *building* could be built on different sites where the cardinal orientation of the building on each site is different, compliance of the *proposed design* for the purposes of the application for the building permit shall be based on the worst-case orientation, worst-case configuration, worst-case *building* air leakage and worst- case duct leakage. Such worst-case parameters shall be used as inputs to the compliance software for *energy analysis*.

R405.4.2.1 Compliance report for permit application. A compliance report submitted with the application for building permit shall include the following:

1. Building street address, or other *building site* identification.
2. A statement indicating that the *proposed design* complies with Section R405.3.
3. An inspection checklist documenting the building component characteristics of the *proposed design* as indicated in Table R405.5.2(1). The inspection checklist shall show results for both the *standard reference design* and the *proposed design* with user inputs to the compliance software to generate the results.
4. A site-specific *energy analysis* report that is in compliance with Section R405.3.
5. The name of the individual performing the analysis and generating the report.
6. The name and version of the compliance software tool.

R405.4.2.2 Compliance report for certificate of occupancy. A compliance report submitted for obtaining the certificate of occupancy shall include the following:

1. Building street address, or other *building site* identification.
2. A statement indicating that the as-built building complies with Section R405.3.
3. A certificate indicating that the building passes the performance matrix for code compliance and indicating the energy saving features of the buildings.
4. A site-specific *energy analysis* report that is in compliance with Section R405.3.
5. The name of the individual performing the analysis and generating the report.
6. The name and version of the compliance software tool.

R405.4.3 Additional documentation. The *building official* shall be permitted to require the following documents:

1. Documentation of the building component characteristics of the *standard reference design.*
2. A certification signed by the builder providing the building component characteristics of the *proposed design* as given in Table R405.5.2(1).
3. Documentation of the actual values used in the software calculations for the *proposed design.*

R405.5 Calculation procedure. Calculations of the performance design shall be in accordance with Sections R405.5.1 and R405.5.2.

R405.5.1 General. Except as specified by this section, the *standard reference design* and *proposed design* shall be configured and analyzed using identical methods and techniques.

R405.5.2 Residence specifications. The *standard reference design* and *proposed design* shall be configured and analyzed as specified by Table R405.5.2(1). Table R405.5.2(1) shall include, by reference, all notes contained in Table R402.1.2.

R405.6 Calculation software tools. Calculation software, where used, shall be in accordance with Sections R405.6.1 through R405.6.3.

R405.6.1 Minimum capabilities. Calculation procedures used to comply with this section shall be software tools capable of calculating the annual energy consumption of all building elements that differ between the *standard reference design* and the *proposed design* and shall include the following capabilities:

1. Computer generation of the *standard reference design* using only the input for the *proposed design.* The calculation procedure shall not allow the user to

INTERNATIONAL CODE COUNCIL®
Copyright © 2019 ICC & NYSDOS. ALL RIGHTS RESERVED. Accessed by Lauren Gualdino (lgualdino@briarcliffmanor.org), (-) Order Number #100880972 on May 08, 2020 07:05 AM (PDT) pursuant to License Agreement with ICC & NYSDOS. No further reproduction, no

100880972

directly modify the building component characteristics of the *standard reference design.*

2. Calculation of whole-building (as a single *zone*) sizing for the heating and cooling equipment in the *standard reference design* residence in accordance with Section R403.6.
3. Calculations that account for the effects of indoor and outdoor temperatures and part-load ratios on the performance of heating, ventilating and air-conditioning equipment based on climate and equipment sizing.
4. Printed *building official* inspection checklist listing each of the *proposed design* component characteristics from Table R405.5.2(1) determined by the analysis to provide compliance, along with their respective performance ratings such as *R-value*, *U-factor*, SHGC, HSPF, AFUE, SEER and EF.

R405.6.2 Specific approval. Performance analysis tools meeting the applicable provisions of Section R405 shall be permitted to be *approved.* Tools are permitted to be *approved* based on meeting a specified threshold for a jurisdiction. The *building official* shall be permitted to approve such tools for a specified application or limited scope.

R405.6.3 Input values. When calculations require input values not specified by Sections R402, R403, R404 and R405, those input values shall be taken from an *approved* source.

SECTION R406
ENERGY RATING INDEX COMPLIANCE ALTERNATIVE

R406.1 Scope. This section establishes criteria for compliance using an Energy Rating Index (ERI) analysis.

R406.2 Mandatory requirements. Compliance with this section requires that the provisions identified in Sections R401 through R404 indicated as "Mandatory" and Section R403.5.3 be met. The *building thermal envelope* shall be greater than or equal to levels of efficiency and *Solar Heat Gain Coefficients* in Table 402.1.1 or 402.1.3 of the 2010 *Energy Conservation Construction Code of New York State*.

Exception: Supply and return ducts not completely inside the *building thermal envelope* shall be insulated to an *R-value* of not less than R-6.

R406.3 Energy Rating Index. The Energy Rating Index (ERI) shall be determined in accordance with RESNET/ICC 301 except for buildings covered by the *Residential Code of New York State*, the ERI Reference Design *Ventilation* rate shall be in accordance with Equation 4-1.

➡ Ventilation rate, CFM = (0.03 × total square foot area of house) + [7.5 × (number of bedrooms + 1)]

(Equation 4-1)

Energy used to recharge or refuel a vehicle used for transportation on roads that are not on the building site shall not be included in the *ERI reference design* or the *rated design*.

R406.4 ERI-based compliance. Compliance based on an ERI analysis requires that the *rated design* be shown to have an ERI less than or equal to the appropriate value indicated in Table R406.4 when compared to the *ERI reference design*.

[NY] TABLE R406.4
MAXIMUM ENERGY RATING INDEX

CLIMATE ZONE	ENERGY RATING INDEX[a]
4	62
5	61
6	61

a. Where on-site renewable energy is included for compliance using the ERI analysis of Section R406.4, the building shall meet the mandatory requirements of Section R406.2, and the building thermal envelope shall be greater than or equal to the levels of efficiency and SHGC in Table R402.1.2 or Table R402.1.4 of the 2015 International Energy Conservation Code, second printing: May 2015.

R406.5 Verification by approved agency. Verification of compliance with Section R406 shall be completed by an *approved* third party.

R406.6 Documentation. Documentation of the software used to determine the ERI and the parameters for the *residential building* shall be in accordance with Sections R406.6.1 through R406.6.3.

R406.6.1 Compliance software tools. Software tools used for determining ERI shall be Approved Software Rating Tools in accordance with RESNET/ICC 301.

R406.6.2 Compliance report. Compliance software tools shall generate a report that documents that the ERI of the *rated design* complies with Sections R406.3 and R406.4. The compliance documentation shall include the following information:

1. Address or other identification of the residential building.
2. An inspection checklist documenting the building component characteristics of the *rated design*. The inspection checklist shall show results for both the *ERI reference design* and the rated design, and shall document all inputs entered by the user necessary to reproduce the results.
3. Name of individual completing the compliance report.
4. Name and version of the compliance software tool.

Exception: Where an otherwise identical building model is offered in multiple orientations, compliance for any orientation shall be permitted by documenting that the building meets the performance requirements in each of the four (north, east, south and west) cardinal orientations.

R406.6.3 Additional documentation. The *building official* shall be permitted to require the following documents:

1. Documentation of the building component characteristics of the *ERI reference design*.
2. A certification signed by the builder providing the building component characteristics of the *rated design.*

INTERNATIONAL CODE COUNCIL®
Copyright © 2019 ICC & NYSDOS. ALL RIGHTS RESERVED. Accessed by Lauren Gualdino (lgualdino@briarcliffmanor.org), (-) Order Number #100880972 on May 08, 2020 07:05 AM (PDT) pursuant to License Agreement with ICC & NYSDOS. No further reproduction, no

100880972

3. Documentation of the actual values used in the software calculations for the *rated design*.

➡

R406.6.4 Specific approval. Performance analysis tools meeting the applicable sections of Section R406 shall be *approved*. Documentation demonstrating the approval of performance analysis tools in accordance with Section R406.6.1 shall be provided.

R406.6.5 Input values. Where calculations require input values not specified by Sections R402, R403, R404 and R405, those input values shall be taken from RESNET/ICC 301.

INTERNATIONAL CODE COUNCIL®
Copyright © 2019 ICC & NYSDOS. ALL RIGHTS RESERVED. Accessed by Lauren Gualdino (lgualdino@briarcliffmanor.org), (-) Order Number #100880972 on May 08, 2020 07:05 AM (PDT) pursuant to License Agreement with ICC & NYSDOS. No further reproduction, no

100880972

CHAPTER 5 [RE]
EXISTING BUILDINGS

SECTION R501
GENERAL

R501.1 Scope. The provisions of this chapter shall control the *alteration*, *repair*, *addition* and *change of occupancy* of existing *buildings* and structures.

R501.1.1 Additions, alterations, or repairs: General. *Additions*, *alterations*, or *repairs* to an existing *building*, *building* system or portion thereof shall comply with Section R502, R503 or R504. Unaltered portions of the existing *building* or *building* supply system shall not be required to comply with this code.

R501.2 Existing buildings. Except as specified in this chapter, this code shall not be used to require the removal, *alteration* or abandonment of, nor prevent the continued use and maintenance of, an existing *building* or *building* system lawfully in existence at the time of adoption of this code.

R501.3 Maintenance. *Buildings* and structures, and parts thereof, shall be maintained in a safe and sanitary condition. Devices and systems that are required by this code shall be maintained in conformance to the code edition under which installed. The owner or the owner's authorized agent shall be responsible for the maintenance of *buildings* and structures. The requirements of this chapter shall not provide the basis for removal or abrogation of energy conservation, fire protection and safety systems and devices in existing structures.

[NY] R501.4 Compliance. *Alterations*, *repairs*, *additions* and changes of occupancy to, or relocation of, existing *buildings* and structures shall comply with the provisions for *alterations*, *repairs*, *additions* and changes of occupancy or relocation, respectively, in this code and the *Residential Code of New York State*, *Building Code of New York State*, *Existing Building Code of New York State*, *Fire Code of New York State*, *Fuel Gas Code of New York State*, *Mechanical Code of New York State*, *Plumbing Code of New York State*, *Property Maintenance Code of New York State* and NFPA 70.

Exception: In the case of a building that is subject to the New York City Construction Codes, *alterations, repairs, additions and changes of occupancy to, or relocation of*, existing buildings and structures shall comply with (i) all applicable provisions of the *Residential Code of New York State* (ii) the provisions for *alterations, repairs, additions and changes of occupancy or relocation*, respectively, in the New York City Construction Codes, and (iii) the *New York City Electrical Code.*

R501.5 New and replacement materials. Except as otherwise required or permitted by this code, materials permitted by the applicable code for new construction shall be used. Like materials shall be permitted for *repairs*, provided that hazards to life, health or property are not created. Hazardous materials shall not be used where the code for new construction would not allow their use in *buildings* of similar occupancy, purpose and location.

[NY] R501.6 Historic buildings. Provisions of this code relating to the construction, *repair, alteration,* restoration and *change of occupancy* shall not be mandatory for *historic buildings*.

SECTION R502
ADDITIONS

R502.1 General. *Additions* to an existing *building*, *building* system or portion thereof shall conform to the provisions of this code as those provisions relate to new construction without requiring the unaltered portion of the existing *building* or *building* system to comply with this code. *Additions* shall not create an unsafe or hazardous condition or overload existing *building* systems. An *addition* shall be deemed to comply with this code where the *addition* alone complies, where the existing *building* and *addition* comply with this code as a single *building*, or where the *building* with the *addition* does not use more energy than the existing *building*. *Additions* shall be in accordance with Section R502.1.1 or R502.1.2.

R502.1.1 Prescriptive compliance. *Additions* shall comply with Sections R502.1.1.1 through R502.1.1.4.

[NY] R502.1.1.1 Building envelope. New *building* envelope assemblies that are part of the *addition* shall comply with Sections R402.1, R402.2, R402.3.1 through R402.3.5.

Exception: Where unconditioned space is changed to *conditioned space*, the *building* envelope of the *addition* shall comply where the Total UA, as determined in Section R402.1.5, of the existing *building* and the *addition*, and any *alterations* that are part of the project, is less than or equal to the Total UA generated for the existing *building*.

R502.1.1.2 Heating and cooling systems. New heating, cooling and *duct systems* that are part of the *addition* shall comply with Section R403.

Exception: Where ducts from an existing heating and cooling system are extended to an *addition*, duct systems with less than 40 linear feet (12.19 m) in unconditioned spaces shall not be required to be tested in accordance with Section R403.3.3.

R502.1.1.3 Service hot water systems. New service hot water systems that are part of the *addition* shall comply with Section R403.5.

R502.1.1.4 Lighting. New lighting systems that are part of the *addition* shall comply with Section R404.1.

R502.1.2 Existing plus addition compliance (Simulated Performance Alternative). Where unconditioned space is changed to *conditioned space*, the *addition* shall comply where the annual energy cost or energy use of the *addition* and the existing *building*, and any *alterations* that are part of the project, is less than or equal to the annual energy

INTERNATIONAL CODE COUNCIL®
Copyright © 2019 ICC & NYSDOS. ALL RIGHTS RESERVED. Accessed by Lauren Gualdino (lgualdino@briarcliffmanor.org), (-) Order Number #100880972 on May 08, 2020 07:05 AM (PDT) pursuant to License Agreement with ICC & NYSDOS. No further reproduction, no

100880972

cost of the existing *building* when modeled in accordance with Section R405. The *addition* and any *alterations* that are part of the project shall comply with Section R405 in its entirety.

SECTION R503
ALTERATIONS

R503.1 General. *Alterations* to any *building* or structure shall comply with the requirements of the code for new construction. *Alterations* shall be such that the existing *building* or structure is not less conforming to the provisions of this code than the existing *building* or structure was prior to the *alteration*.

Alterations to an existing *building*, *building* system or portion thereof shall conform to the provisions of this code as they relate to new construction without requiring the unaltered portions of the existing *building* or *building* system to comply with this code. *Alterations* shall not create an unsafe or hazardous condition or overload *existing* building systems. *Alterations* shall be such that the existing *building* or structure does not use more energy than the existing *building* or structure prior to the *alteration*. *Alterations* to existing *buildings* shall comply with Sections R503.1.1 through R503.2.

[NY] R503.1.1 Building envelope. *Building* envelope assemblies that are part of the *alteration* shall comply with Section R402.1.2 or R402.1.4, Sections R402.2.1 through R402.2.13, R402.3.1, R402.3.2, R402.4.3 and R402.4.5.

Exception: The following *alterations* shall not be required to comply with the requirements for new construction provided that the energy use of the *building* is not increased:

1. Storm windows installed over existing fenestration.
2. Existing ceiling, wall or floor cavities exposed during construction provided that these cavities are filled with insulation.
3. Construction where the existing roof, wall or floor cavity is not exposed.
4. Roof re-cover.
5. Roofs without insulation in the cavity and where the sheathing or insulation is exposed during reroofing shall be insulated either above or below the sheathing.
6. Surface-applied window film installed on existing single pane fenestration assemblies to reduce solar heat gain provided that the code does not require the glazing or fenestration assembly to be replaced.
7. Alterations which replace less than 50 percent of the luminaries within a space, provided that such alterations do not increase the installed interior lighting power.

R503.1.1.1 Replacement fenestration. Where some or all of an existing fenestration unit is replaced with a new fenestration product, including sash and glazing, the replacement fenestration unit shall meet the applicable requirements for *U-factor* and SHGC as specified in Table R402.1.2. Where more than one replacement *fenestration* unit is to be installed, an area-weighted average of the *U-factor,* SHGC or both of all replacement *fenestration* units shall be an alternative that can be used to show compliance.

R503.1.2 Heating and cooling systems. New heating, cooling and duct systems that are part of the *alteration* shall comply with Section R403.

Exception: Where ducts from an existing heating and cooling system are extended, duct systems with less than 40 linear feet (12.19 m) in unconditioned spaces shall not be required to be tested in accordance with Section R403.3.3.

R503.1.3 Service hot water systems. New service hot water systems that are part of the *alteration* shall comply with Section R403.5.

R503.1.4 Lighting. New lighting systems that are part of the *alteration* shall comply with Section R404.1.

Exception: *Alterations* that replace less than 50 percent of the luminaires in a space, provided that such *alterations* do not increase the installed interior lighting power.

R503.2 Change in space conditioning. Any nonconditioned or low-energy space that is altered to become *conditioned space* shall be required to be brought into full compliance with this code.

Exception: Where the simulated performance option in Section R405 is used to comply with this section, the annual energy cost of the *proposed design* is permitted to be 110 percent of the annual energy cost otherwise allowed by Section R405.3.

SECTION R504
REPAIRS

R504.1 General. *Buildings*, structures and parts thereof shall be repaired in compliance with Section R501.3 and this section. Work on nondamaged components necessary for the required *repair* of damaged components shall be considered to be part of the *repair* and shall not be subject to the requirements for *alterations* in this chapter. Routine maintenance required by Section R501.3, ordinary *repairs* exempt from *permit*, and abatement of wear due to normal service conditions shall not be subject to the requirements for *repairs* in this section.

[NY] R504.2 Application. For the purposes of this code, the following shall be considered to be *repairs*:

1. Glass-only replacements in an existing sash and frame.
2. Roof *repairs*.
3. *Repairs* where only the bulb, ballast or both within the existing luminaires in a space are replaced provided that the replacement does not increase the installed interior lighting power.

INTERNATIONAL CODE COUNCIL®
Copyright © 2019 ICC & NYSDOS. ALL RIGHTS RESERVED. Accessed by Lauren Gualdino (lgualdino@briarcliffmanor.org), (-) Order Number #100880972 on May 08, 2020 07:05 AM (PDT) pursuant to License Agreement with ICC & NYSDOS. No further reproduction, no

100880972

4. Replacement of existing doors that separate conditioned space from the exterior shall not require the installation of a vestibule provided, however, that an existing vestibule that separates conditioned space from the exterior shall not be removed.

SECTION R505
CHANGE OF OCCUPANCY OR USE

R505.1 General. Spaces undergoing a change in occupancy that would result in an increase in demand for either fossil fuel or electrical energy shall comply with this code.

R505.2 General. Any space that is converted to a *dwelling unit* or portion thereof from another use or occupancy shall comply with this code.

Exception: Where the simulated performance option in Section R405 is used to comply with this section, the annual *energy cost* of the *proposed design* is permitted to be 110 percent of the annual *energy cost* allowed by Section R405.3.

INTERNATIONAL CODE COUNCIL®
Copyright © 2019 ICC & NYSDOS. ALL RIGHTS RESERVED. Accessed by Lauren Gualdino (lgualdino@briarcliffmanor.org), (-) Order Number #100880972 on May 08, 2020 07:05 AM (PDT) pursuant to License Agreement with ICC & NYSDOS. No further reproduction, no

INTERNATIONAL CODE COUNCIL®
Copyright © 2019 ICC & NYSDOS. ALL RIGHTS RESERVED. Accessed by Lauren Gualdino (lgualdino@briarcliffmanor.org), (-) Order Number #100880972 on May 08, 2020 07:05 AM (PDT) pursuant to License Agreement with ICC & NYSDOS. No further reproduction, no

100880972

CHAPTER 6 [RE]
REFERENCED STANDARDS

User note:

This chapter lists the standards that are referenced in various sections of this document. The standards are listed herein by the promulgating agency of the standard, the standard identification, the effective date and title, and the section or sections of this document that reference the standard. The application of the referenced standards shall be as specified in Section 102.4.

**Denotes standards that are incorporated by reference into 19 NYCRR Part 1240.*

AAMA

American Architectural Manufacturers Association
1827 Walden Office Square
Suite 550
Schaumburg, IL 60173-4268

AAMA/WDMA/CSA 101/I.S.2/A C440—17: North American Fenestration Standard/Specifications for Windows, Doors and Unit Skylights
R402.4.3

ACCA

Air Conditioning Contractors of America
2800 Shirlington Road, Suite 300
Arlington, VA 22206

***Manual J—11: Residential Load Calculation Eighth Edition**
R403.7

***Manual S—14: Residential Equipment Selection**
R403.7

APSP

The Association of Pool & Spa Professionals
2111 Eisenhower Avenue, Suite 500
Alexandria, VA 22314

ANSI/APSP/ICC 14—2014: American National Standard for Portable Electric Spa Energy Efficiency
R403.11

ANSI/APSP/ICC 15a—2011: American National Standard for Residential Swimming Pool and Spa Energy Efficiency—includes Addenda A Approved January 9, 2013
R403.12

ASHRAE

ASHRAE
1791 Tullie Circle NE
Atlanta, GA 30329

***ASHRAE—2017: 2017 ASHRAE Fundamentals Handbook**
R402.1.5

***ASHRAE—2001: 2001 ASHRAE Fundamentals Handbook**
Table R405.5.2(1)

ASHRAE 193—2010(RA 2014): Method of Test for Determining the Airtightness of HVAC Equipment
R403.3.2.1

INTERNATIONAL CODE COUNCIL®
Copyright © 2019 ICC & NYSDOS. ALL RIGHTS RESERVED. Accessed by Lauren Gualdino (lgualdino@briarcliffmanor.org), (-) Order Number #100880972 on May 08, 2020 07:05 AM (PDT) pursuant to License Agreement with ICC & NYSDOS. No further reproduction, no

100880972

ASTM

ASTM International
100 Barr Harbor Drive, P.O. Box C700
West Conshohocken, PA 19428-2959

C1363—11: Standard Test Method for Thermal Performance of Building Materials and Envelope Assemblies by Means of a Hot Box Apparatus
R303.1.4.1

E283—04(2012): Test Method for Determining the Rate of Air Leakage Through Exterior Windows, Curtain Walls and Doors Under Specified Pressure Differences Across the Specimen
R402.4.4

***E779—10: Standard Test Method for Determining Air Leakage Rate by Fan Pressurization**
R402.4.1.2

***E1827—11: Standard Test Methods for Determining Airtightness of Building Using an Orifice Blower Door**
R402.4.1.2

BOMA

Building Owners and Managers Association (BOMA) International
1101 15th Street. NW
Suite 800
Washington, DC 20005

***ANSI/BOMA Z65.1—1996: Standard Method for Measuring Floor Area in Office Buildings**
R402.4.1.2, R402.4.1.3

CSA

CSA Group
8501 East Pleasant Valley Road
Cleveland, OH 44131-5516

AAMA/WDMA/CSA 101/I.S.2/A440—17: North American Fenestration Standard/Specification for Windows, Doors and Unit Skylights
R402.4.3

CSA B55.1—2015: Test Method for Measuring Efficiency and Pressure Loss of Drain Water Heat Recovery Units
R403.5.4

CSA B55.2—2015: Drain Water Heat Recovery Units
R403.5.4

DASMA

Door & Access Systems Manufacturers Association
1300 Sumner Avenue
Cleveland, OH 44115-2851

105—2016: Test Method for Thermal Transmittance and Air Infiltration of Garage Doors and Rolling Doors
R303.1.3

HVI

Home Ventilating Institute
1000 North Rand Road, Suite 214
Wauconda, IL 60084

916—09: Airflow Test Procedure
Table R403.6.1

INTERNATIONAL CODE COUNCIL®
Copyright © 2019 ICC & NYSDOS. ALL RIGHTS RESERVED. Accessed by Lauren Gualdino (lgualdino@briarcliffmanor.org), (-) Order Number #100880972 on May 08, 2020 07:05 AM (PDT) pursuant to License Agreement with ICC & NYSDOS. No further reproduction, no

100880972

ICC

International Code Council, Inc.
500 New Jersey Avenue NW
6th Floor
Washington, DC 20001

ANSI/APSP/ICC 14—2014: American National Standard for Portable Electric Spa Energy Efficiency
R403.11

ANSI/APSP/ICC 15a—2011: American National Standard for Residential Swimming Pool and Spa Energy Efficiency—includes Addenda A Approved January 9, 2013
R403.12

***ANSI/RESNET/ICC 301—2014: Standard for the Calculation and Labeling of the Energy Performance of Low-rise Residential Buildings using an Energy Rating Index First Published March 7, 2014—Republished January 2016, including Addenda D, E, G and K.**
R406.3

***ANSI/RESNET/ICC 380—2016: Standard for Testing Airtightness for Building Enclosures, Airtightness of Heating and Cooling Air Distribution Systems and Airflow of Mechanical Ventilation Systems—Republished January 2016, including Addendum A.**
R402.4.1.2, R403.3.3

***BCNYS—20: Building Code of New York State**
R201.3, R303.1.1, R303.2, R402.1.1, R501.4

***EBCNYS—20: Existing Building Code of New York State**
R501.4

***ECCCNYS—20: Energy Conservation Construction Code of New York State**
R102.1.1, R403.8

***ECCCNYS—2010: Energy Conservation Construction Code of New York State (2010 edition)**
R406.2

ICC 400—17: Standard on the Design and Construction of Log Structures
R402.1, Table R402.5.1.1

***IECC—15: 2015 International Energy Conservation Code, second printing: May 2015**
Table R406.4

***FCNYS—20: Fire Code of New York State**
R201.3, R501.4

***FGCNYS—20: Fuel Gas Code of New York State**
R201.3, R501.4

***MCNYS—20: Mechanical Code of New York State**
R201.3, R403.3.2, R403.3.6, R403.6, R501.4

***PCNYS—20: Plumbing Code of New York State**
R201.3, R501.4

***PMCNYS—20: Property Maintenance Code of New York State**
R501.4

***RCNYS—20: Residential Code of New York State**
R201.3, R303.1.1, R303.2, R402.1.1, R402.2.11, R403.3.2, R403.3.6, R403.6, R501.4

IEEE

Institute of Electrical and Electronic Engineers, Inc.
3 Park Avenue, 17th Floor
New York, NY 10016-5997

515.1—2012: IEEE Standard for the Testing, Design, Installation and Maintenance of Electrical Resistance Trace Heating for Commercial Applications
R403.5.1.2

NFPA

National Fire Protection Association
1 Batterymarch Park
Quincy, MA 02169-7471

***70—17: National Electrical Code**
R501.4

INTERNATIONAL CODE COUNCIL®
Copyright © 2019 ICC & NYSDOS. ALL RIGHTS RESERVED. Accessed by Lauren Gualdino (lgualdino@briarcliffmanor.org), (-) Order Number #100880972 on May 08, 2020 07:05 AM (PDT) pursuant to License Agreement with ICC & NYSDOS. No further reproduction, no

100880972

NFRC

National Fenestration Rating Council, Inc.
6305 Ivy Lane, Suite 140
Greenbelt, MD 20770

100—2017: Procedure for Determining Fenestration Products *U*-factors

R303.1.3

200—2017: Procedure for Determining Fenestration Product Solar Heat Gain Coefficients and Visible Transmittance at Normal Incidence

R303.1.3

400—2017: Procedure for Determining Fenestration Product Air Leakage

R402.4.3

RESNET

Residential Energy Services Network, Inc.
P.O. Box 4561
Oceanside, CA 92052-4561

***ANSI/RESNET/ICC 301—2014: Standard for the Calculation and Labeling of the Energy Performance of Low-rise Residential Buildings using an Energy Rating Index First Published March 7, 2014—Republished January 2016**

R406.3, R406.6.1, R406.6.5

***ANSI/RESNET/ICC 380—2016: Standard for Testing Airtightness for Building Enclosures, Airtightness of Heating and Cooling Air Distribution Systems, and Airflow of Mechanical Ventilation Systems—Republished January 2016**

R402.4.1.2

UL

UL LLC
333 Pfingsten Road
Northbrook, IL 60062

127—11: Standard for Factory Built Fireplaces—with Revisions through May 2015

R402.4.2

515—11: Electrical Resistance Heat Tracing for Commercial and Industrial Applications Including Revisions through July 2015

R403.5.1.2

US-FTC

United States-Federal Trade Commission
600 Pennsylvania Avenue NW
Washington, DC 20580

CFR Title 16 (2015): R-value Rule

R303.1.4

WDMA

Window and Door Manufacturers Association
2025 M Street NW, Suite 800
Washington, DC 20036-3309

AAMA/WDMA/CSA 101/I.S.2/A440—17: North American Fenestration Standard/Specification for Windows, Doors and Unit Skylights

R402.4.3

INTERNATIONAL CODE COUNCIL®
Copyright © 2019 ICC & NYSDOS. ALL RIGHTS RESERVED. Accessed by Lauren Gualdino (lgualdino@briarcliffmanor.org), (-) Order Number #100880972 on May 08, 2020 07:05 AM (PDT) pursuant to License Agreement with ICC & NYSDOS. No further reproduction, no

100880972

APPENDIX RA

SOLAR-READY PROVISIONS—DETACHED ONE- AND TWO-FAMILY DWELLINGS AND TOWNHOUSES

This appendix is informative and is not part of this code.

SECTION RA101 SCOPE

RA101.1 General. These provisions shall be applicable for new construction where solar-ready provisions are required.

SECTION RA102 GENERAL DEFINITION

SOLAR-READY ZONE. A section or sections of the roof or building overhang designated and reserved for the future installation of a solar photovoltaic or solar thermal system.

SECTION RA103 SOLAR-READY ZONE

RA103.1 General. New detached one- and two-family dwellings, and townhouses with not less than 600 square feet (55.74 m^2) of roof area oriented between 110 degrees and 270 degrees of true north shall comply with Sections RA103.2 through RA103.8.

Exceptions:

1. New residential buildings with a permanently installed on-site renewable energy system.
2. A building with a solar-ready zone that is shaded for more than 70 percent of daylight hours annually.

RA103.2 Construction document requirements for solar-ready zone. Construction documents shall indicate the solar-ready zone.

RA103.3 Solar-ready zone area. The total solar-ready zone area shall be not less than 300 square feet (27.87 m^2) exclusive of mandatory access or set back areas as required by the *International Fire Code*. New townhouses three stories or less in height above grade plane and with a total floor area less than or equal to 2,000 square feet (185.8 m^2) per dwelling shall have a solar-ready zone area of not less than 150 square feet (13.94 m^2). The solar-ready zone shall be composed of areas not less than 5 feet (1524 mm) in width and not less than 80 square feet (7.44 m^2) exclusive of access or set back areas as required by the *International Fire Code*.

RA103.4 Obstructions. Solar-ready zones shall be free from obstructions, including but not limited to vents, chimneys, and roof-mounted equipment.

RA103.5 Roof load documentation. The structural design loads for roof dead load and roof live load shall be clearly indicated on the construction documents.

RA103.6 Interconnection pathway. Construction documents shall indicate pathways for routing of conduit or plumbing from the solar-ready zone to the electrical service panel or service hot water system.

RA103.7 Electrical service reserved space. The main electrical service panel shall have a reserved space to allow installation of a dual pole circuit breaker for future solar electric installation and shall be *labeled* "For Future Solar Electric." The reserved space shall be positioned at the opposite (load) end from the input feeder location or main circuit location.

RA103.8 Construction documentation certificate. A permanent certificate, indicating the solar-ready zone and other requirements of this section, shall be posted near the electrical distribution panel, water heater or other conspicuous location by the builder or registered design professional.

INTERNATIONAL CODE COUNCIL®
Copyright © 2019 ICC & NYSDOS. ALL RIGHTS RESERVED. Accessed by Lauren Gualdino (lgualdino@briarcliffmanor.org), (-) Order Number #100880972 on May 08, 2020 07:05 AM (PDT) pursuant to License Agreement with ICC & NYSDOS. No further reproduction, no

100880972

INTERNATIONAL CODE COUNCIL®
Copyright © 2019 ICC & NYSDOS. ALL RIGHTS RESERVED. Accessed by Lauren Gualdino (lgualdino@briarcliffmanor.org), (-) Order Number #100880972 on May 08, 2020 07:05 AM (PDT) pursuant to License Agreement with ICC & NYSDOS. No further reproduction, no

100880972

INDEX

A

ACCESS HATCHES R402.2.4
ADDITION
Defined R202
Requirements R501.1.1, R502
ALTERATION
Defined R202
Requirements 503
ADMINISTRATION . . . . . Chapter 1
AIR BARRIER
Installation . . . . . R402.4.1.1, Table R402.4.1.1
Testing R402.4.1.2
AIR INFILTRATION
Requirements R402.4.1.2
AIR LEAKAGE R402.4, R403.3.3, R403.3.4
ALTERNATE MATERIALS R104
APPROVED
Defined R202
AUTOMATIC
Defined R202

B

BASEMENT WALL
Defined R202
Requirements . . . . . R303.2.1, Table R402.1.2, R402.2.9, Table R405.5.2(1)
BELOW-GRADE WALLS (see BASEMENT WALLS)
BUILDING
Defined R202
BUILDING OFFICIAL
Defined R202
BUILDING THERMAL ENVELOPE
Air tightness R402.4.1
Compliance documentation R105.2, R401.3
Defined R202
Insulation R303.1.1
Insulation and fenestration criteria R402.1.2
Performance method . . . . . Table R405.5.2(1)
Requirements R105.2, R402

C

CEILINGS R402.2.1, R402.2.1, R402.2.2
Specification for standard reference design . . . . . Table R405.5.2(1)
CERTIFICATE R401.3
CHANGE OF OCCUPANCY R505
CIRCULATON SYSTEMS R403.5.1
CLIMATE TYPES
Defined . . . . . Table R301.3(2)
CLIMATE ZONES
Defined R202
Established . . . . . R301, Table R301.1
By County . . . . . Table R301.1
International climate zone definitions Table R301.3(2)
COMMERCIAL BUILDING
Compliance R101.5
Defined R202
COMPLIANCE AND ENFORCEMENT R101.5
Compliance Report R405.4.2.2
Enforcement R101.1.1
CONDITIONED FLOOR AREA
Defined R202
CONDITIONED SPACE
Defined R202
CONSTRUCTION DOCUMENTS R105
Amended R105.4
Approval R105.3.1
Building Thermal Envelope Depiction R105.2.1
Examination R105.3
Information required R105.2
Phased Approval R105.3.3
Previous Approvals R105.3.2
CONTINUOUS AIR BARRIER
Defined R202
CONTROLS
Heat pump R403.1.2
Heating and cooling R403.1
Service water heating R403.5
CRAWL SPACE WALL
Defined R202
Requirements . . . . . R303.2.1, Table R402.1.2, Table R402.1.4, R402.1.4, R402.2.11, Table R405.5.2(1)

D

DEFAULT DISTRIBUTION SYSTEM EFFICIENCIES . . . . . Table R405.5.2(2)
DEFINITIONS . . . . . Chapter 2
DEGREE DAY COOLING . . . . . Table R301.3(2)
DEGREE DAY HEATING . . . . . Table R301.3(2)

INTERNATIONAL CODE COUNCIL®
Copyright © 2019 ICC & NYSDOS. ALL RIGHTS RESERVED. Accessed by Lauren Gualdino (lgualdino@briarcliffmanor.org), (-) Order Number #100880972 on May 08, 2020 07:05 AM (PDT) pursuant to License Agreement with ICC & NYSDOS. No further reproduction, no

100880972

DEMAND RECIRCULATION WATER SYSTEM
Defined R202
Requirements R403.5.2
DESIGN CONDITIONS . . . . . Chapter 3, R302
DOORS
Attics and crawl spaces R402.2.4
Default *U*-factors . . . . . Table R303.1.3(2)
Opaque R402.3.4
Performance requirements . . . . . Table R405.5.2(1)
SHGC values . . . . . Table R402.1.2
U-factors R402.1.4
DUCT
Defined R202
Insulation R105.2, R401.3, R403.3.1, R403.3.1.6, R403.3.6, R403.3.7, R403.3.8
Sealing R105.2, R403.3.2
Tightness verification
Postconstruction test R403.3.3
Rough-in test R403.3.3
Within conditioned space R403.3.7
DUCT SYSTEM
Defined R202
DWELLING UNIT
Defined R202
Multiple units R403.8
DYNAMIC GLAZING R402.3.2

E

EAVE BAFFLE
Installation R402.2.3
ELECTRICAL POWER AND LIGHTING R404
ENERGY ANALYSIS, ANNUAL
Defined R202
Documentation R405.4
Requirements R405.3
ENERGY COST
Defined R202
Energy rating index R202, R406.3
Energy rating index compliance alternative R406
ERI-based compliance R406.4
ENERGY RECOVERY VENTILATION SYSTEMS
Requirements . . . . . Table R405.5.2(1)
ENERGY SIMULATION TOOL
Defined R202
ENVELOPE, BUILDING THERMAL
Defined R202
ENVELOPE DESIGN PROCEDURES R402
EQUIPMENT EFFICIENCIES R105.2, R401.3
EQUIPMENT ROOM
For fuel burning appliance R402.4.4
EXISTING BUILDINGS . . . . . Chapter 5
EXTERIOR WALL
Defined R202
Thermal performance . . . . . R402, R402.1.2, Table R405.5.2(1)

F

FENESTRATION R303.1.3, R402.3, R402.3.2, R402.4.3
Default *U*-factors . . . . . Table R303.1.3(1)
Defined R202
Rating and labeling R303.1.3, R402.1.2
Replacement R402.3.5
Requirements . . . . . Table R402.1.2
FENESTRATION PRODUCT, SITE-BUILT
Defined R202
FIREPLACES R402.4.2
FLOORS
Above-grade . . . . . Table R405.5.2(1)
Insulation R402.2.6
Slab-on-grade insulation requirements . . . R402.2.10
FOUNDATIONS
Requirements . . . . . Table R402.4.1.1, Table R405.5.2(1)
FURNACE EFFICIENCY . . . . . Table R405.5.2(1)

G

GLAZED FENESTRATION R402.3.2, R402.3.3
GLAZING AREA . . . . . Table R405.5.2(1)

H

HEAT PUMP R403.1.2
HEATED SLAB
Defined R202
HEATING AND COOLING LOADS R302.1, R403.1.2
HIGH-EFFICACY LAMPS
Defined R202
HISTORIC BUILDING R202, R501.6
HOT WATER
Piping insulation R403.5.3
HOT WATER BOILER
Outdoor temperature setback R403.2
HVAC SYSTEMS
Tests
Postconstruction R403.3.4
Rough-in-test R403.3.4

INTERNATIONAL CODE COUNCIL®
Copyright © 2019 ICC & NYSDOS. ALL RIGHTS RESERVED. Accessed by Lauren Gualdino (lgualdino@briarcliffmanor.org), (-) Order Number #100880972 on May 08, 2020 07:05 AM (PDT) pursuant to License Agreement with ICC & NYSDOS. No further reproduction, no

100880972

I

IDENTIFICATION (MATERIALS, EQUIPMENTAND SYSTEM) R303.1
INDIRECTLY CONDITIONED SPACE (see CONDITIONED SPACE)
INFILTRATION, AIR LEAKAGE . . . . . .R402.4, Table R405.5.2(1)
Defined R202
INSPECTIONS. R106
INSULATION
Air-impermeable . . . . . .R202, Table R402.4.1.1
Basement walls R402.2.9
Ceilings with attic spaces R402.2.1
Ceilings without attic spaces R402.2.2
Crawl space walls. R402.2.11
Duct R403.3.1
Eave baffle R402.2.3
Floors R402.2.6, R402.2.8
Hot water piping R403.5.3
Identification R303.1, R303.1.2
Installation . . . . . R303.1.1, R303.1.1.1, R303.1.2, R303.2, Table R402.4.1.1
Masonry veneer R402.2.12
Mass walls R402.2.5
Mechanical system piping R403.4
Product rating R303.1.4
Protection of exposed foundation R303.2.1
Protection of piping insulation. R403.4.1
Requirements . . . . . .Table R402.1.2, R402.2
Slab-on-grade floors R402.2.10
Steel-frame ceilings, walls and floors . . . . . R402.2.6, Table R402.2.6
Sunroom R402.2.13
INSULATING SHEATHING
Defined R202
Requirements . . . . . Table R402.1.2, R402.1.2

L

LABELED
Defined R202
Requirements R303.1.3, R402.4.3
LIGHTING SYSTEMS R404
Recessed R402.4.5, R404
LISTED
Defined R202
LOG HOMES. . . . . R402.1, Table R402.4.1.1
LOW-ENERGY BUILDINGS R402.1
LOW-VOLTAGE LIGHTING
Defined R202
LUMINAIRE
Sealed. R402.4.5

M

MAINTENANCE INFORMATION R303.3
MASONRY VENEER
Insulation. R402.2.12
MASS
Wall. . . . . Table 402.1.2, R402.2.5
MATERIALS AND EQUIPMENT. R303
MECHANICAL SYSTEMS AND EQUIPMENT. R403, R405.1
MECHANICAL VENTILATION . . . . . R403.6, Table R403.6.1, Table R405.5.2(1)
MULTIPLE DWELLING UNITS R403.8

O

OCCUPANCY
Requirements R101.5, R102.1.1
OPAQUE DOOR R202, R402.3.4

P

PERFORMANCE ANALYSIS R405
PIPE INSULATION R403.4, R403.5.3
PLANS AND SPECIFICATIONS. R105
POOLS. R403.10
Covers. R403.10.3
Heaters R403.10.1
Time switches R403.10.2
PROPOSED DESIGN
Defined R202
Requirements . . . . . R405, Table R405.5.2(1)
PUMPS
Time switches R403.10.2, R403.5.1.1

R

***R*-VALUE**
Defined R202
Computation R402.1.3
Wood frame to cold formed steel frame ceiling, wall and floor insulation *R*-values . . . . . Table R402.2.6
READILY ACCESSIBLE
Defined R202
REFERENCED STANDARDS. . . . . R102.4, Chapter 6
REPAIR
Defined R202
Requirements R504

INTERNATIONAL CODE COUNCIL®
Copyright © 2019 ICC & NYSDOS. ALL RIGHTS RESERVED. Accessed by Lauren Gualdino (lgualdino@briarcliffmanor.org), (-) Order Number #100880972 on May 08, 2020 07:05 AM (PDT) pursuant to License Agreement with ICC & NYSDOS. No further reproduction, no

100880972

RESIDENTIAL BUILDING
Compliance R101.5
Defined R202
Energy rating index alternative R406
Simulated performance alternative R405
ROOF ASSEMBLY
Defined R202
Requirements . . . . . R303.1.1.1, R402.2.2, Table R405.5.2(1)

S

SCOPE R101.3
SERVICE HOT WATER
Requirements R403.5
SHEATHING, INSULATING (see INSULATING SHEATHING)
SHGC (see SOLAR HEAT GAIN COEFFICIENT)
SHUTOFF DAMPERS R403.6
SIMULATED PERFORMANCE ALTERNATIVE R405
Documentation. R405.4
Mandatory requirements R405.2
Performance-based compliance R405.3
Report R405.4.2
Software tools R405.4.1
SIZING
Equipment and system R405.6.1
SKYLIGHTS . . . . . R303.1.3, R402.1.2, R402.3, Table R405.5.2(1)
SNOW MELT SYSTEM CONTROLS R403.9
SOLAR HEAT GAIN COEFFICIENT (SHGC) . . . . . .R105.2, Table R303.1.3(3), R401.3, Table R402.1.2, R402.1.4, R402.3.2, R402.3.3, R402.3.5, R402.5
Defined R202
STANDARD REFERENCE DESIGN
Defined R202
Requirements . . . . . .R405, Table R405.5.2(1)
STEEL FRAMING. R402.2.6
SUNROOM . . R402.2.13, R402.3.5, Table R405.5.2(1)
Defined R202
Insulation R402.2.13
SWIMMING POOLS R403.10

T

THERMAL ISOLATION . . . . . R402.2.13, R402.3.5, Table R405.5.2(1)
Defined R202
THERMAL MASS (see MASS)
THERMAL RESISTANCE (see *R*-VALUE)
THERMAL TRANSMITTANCE (see *U*-FACTOR)
THERMOSTAT
Defined. R202
Controls R403.1
Programmable R403.1.1
TIME SWITCHES R403.10.2
TOTAL BUILDING PERFORMANCE
Residential R405
TOWNHOUSE (see RESIDENTIAL BUILDING)

U

***U*-FACTOR**
Alternative . . . . R402.1.4, Table R402.1.4, R402.1.5
Default door . . . . . Table R303.1.3(2)
Default glazed fenestration . . . . . Table R303.1.3(1)
Defined. R202, R402.3.1, R402.5
Skylights. . . . . Table R402.1.2, Table R402.1.4, R402.3.5
Sunroom. R402.3.5

V

VALIDITY R102.5
VAPOR RETARDER. R402.1.1
VENTILATION . . . . . .R401.2.1, R403.6, Table R403.6.1, Table R405.5.2(1)
Defined. R202
VISIBLE TRANSMITTANCE (VT)
Default glazed fenestration . . . . . Table R303.1.3(3)
Defined. R202

W

WALL
Above-grade, defined. R202
Standard reference design . . . . . Table R405.5.2(1)
Basement, defined R202
Installation R402.2.9
Standard reference design . . . . . Table R405.5.2(1)
Crawl space, defined R202
Installation R402.2.11
Standard reference design . . . . . Table R405.5.2(1)
Exterior, defined R202
Mass. R402.2.5
Steel-frame. . . . . .R402.2.6, Table R402.2.6
With partial structural sheathing. R402.2.7
WALLS (see EXTERIOR WALLS and BUILDING THERMAL ENVELOPE)

INTERNATIONAL CODE COUNCIL®
Copyright © 2019 ICC & NYSDOS. ALL RIGHTS RESERVED. Accessed by Lauren Gualdino (lgualdino@briarcliffmanor.org), (-) Order Number #100880972 on May 08, 2020 07:05 AM (PDT) pursuant to License Agreement with ICC & NYSDOS. No further reproduction, no

100880972

WALLS ADJACENT TO UNCONDITIONED SPACE (see BUILDING THERMAL ENVELOPE)

WATER HEATING. . . . . R401.3, R403.5, R405.1, Table R405.5.2(1)

WHOLE HOUSE MECHANICAL VENTILATION SYSTEM

Defined R202

System fan efficacy R403.6.1

WINDOW AREA (see FENESTRATION and GLAZING AREA)

INTERNATIONAL CODE COUNCIL®

Copyright © 2019 ICC & NYSDOS. ALL RIGHTS RESERVED. Accessed by Lauren Gualdino (lgualdino@briarcliffmanor.org), (-) Order Number #100880972 on May 08, 2020 07:05 AM (PDT) pursuant to License Agreement with ICC & NYSDOS. No further reproduction, no

100880972

INTERNATIONAL CODE COUNCIL®
Copyright © 2019 ICC & NYSDOS. ALL RIGHTS RESERVED. Accessed by Lauren Gualdino (lgualdino@briarcliffmanor.org), (-) Order Number #100880972 on May 08, 2020 07:05 AM (PDT) pursuant to License Agreement with ICC & NYSDOS. No further reproduction, no

100880972

INTERNATIONAL CODE COUNCIL®

People Helping People Build a Safer World®

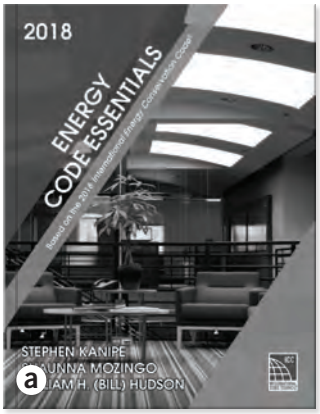

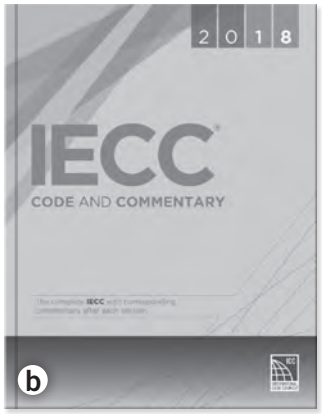

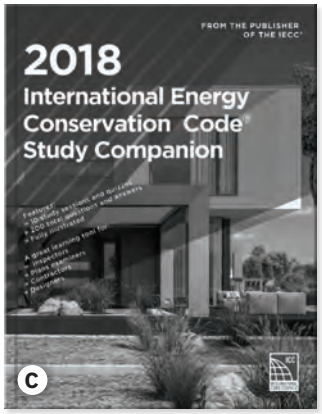



Helpful Tools for Learning and Applying your Energy Code

a. Energy Code Essentials: Based on the 2018 International Energy Conservation Code®

Explains those code provisions essential to understanding the application of the 2018 IECC® to the most commonly encountered practices. The information is presented in a user-friendly manner with an emphasis on technical accuracy and clear, easy-to-apply language.

Features:
- Full-color illustrations
- Examples and simplified tables to assist the reader in visualizing and better understanding the code requirements.
- A straightforward, easy-to-read approach

An ideal resource for new and veteran code users as well as other plumbing professionals such as contractors and designers.

SOFT COVER #4831S18
PDF DOWNLOAD #8951P010

b. 2018 IECC Code and Commentary

This valuable resource explains the intent of the code provisions to help code users learn how to apply them effectively.

Contains:
- The full text of 2018 IECC
- All tables and figures in the 2018 IECC
- Corresponding commentary at the end of each section

SOFT COVER #3810S18
PDF DOWNLOAD #878P18
SOFT + PDF COMBO #3810SP18
premiumACCESS 1-year, single user subscription #878A18

c. 2018 International Energy Conservation Code® Study Companion

The ideal way to master the code for everyday application or prepare for exams. The Study Companion is organized into study sessions that include learning objectives, key points for review, code text, hundreds of illustrations and commentary applicable to the specific topic. Addresses both residential and commercial provisions. Particular emphasis is placed on energy design data, climate zones, calculations, exterior thermal envelope, fenestration, lighting, controls, ducts, HVAC systems, and total building performance.

Features:
- 10 study sessions
- A quiz at the end of each study session
- 200 total study questions with answer key

A great resource for Certification exams: Commercial Energy Inspector, Commercial Energy Plans Examiner, Residential Energy Inspector/Plans Examiner, or Green Building—Residential Examiner.

SOFT COVER #4807S18
PDF DOWNLOAD #8950P833

d. 2018 IECC Flashcards

Classic study tools that provide code users, students and exam candidates with an effective, time-tested method for study and information retention. This set of easy-to-use FlashCards is prepared and reviewed by code experts to ensure accuracy and quality.

#1821S18

BUY THE STUDY COMPANION AND FLASHCARDS TOGETHER AND SAVE!
STUDY COMPANION/FLASH CARDS COMBO #4807BN18

19-18047

Order Your Code Tools Today! 1-800-786-4452 | www.iccsafe.org/books

This insert is not part of the official text of the New York State Uniform Fire Prevention and Building Code or New York State Energy Conservation Construction Code.

INTERNATIONAL CODE COUNCIL®
Copyright © 2019 ICC & NYSDOS. ALL RIGHTS RESERVED. Accessed by Lauren Gualdino (lgualdino@briarcliffmanor.org), (-) Order Number #100880972 on May 08, 2020 07:05 AM (PDT) pursuant to License Agreement with ICC & NYSDOS. No further reproduction, no

ICC EVALUATION SERVICE

In Cooperation with Innovation RESEARCH LABS

Specify and Approve with

CONFIDENCE



When facing new or unfamiliar materials, look for an ICC-ES Evaluation Report or Listing before approving for installation.

ICC-ES® **Evaluation Reports** are the most widely accepted and trusted technical reports for code compliance.

ICC-ES **Building Product Listings** and **PMG Listings** show product compliance with applicable standard(s) referenced in the building and plumbing codes as well as other applicable codes.

When you specify or approve products or materials with an ICC-ES report, building product listing or PMG listing, you avoid delays on projects and improve your bottom line.

ICC-ES is a subsidiary of ICC®, the publisher of the codes used throughout the U.S. and many global markets, so you can be confident in their code expertise.

www.icc-es.org | 800-423-6587

ANSI ACCREDITED ISO/IEC 17065 Product Certification Body #1000

SCC Accredited CB-P/S OCPS Accrédité CCN

EPA WaterSense LICENSED CERTIFYING BODY

Look for the Trusted Marks of Conformity

ICC ES · ICC ES LISTED · ICC ES PMG · ICC ES SAVE

ICC INTERNATIONAL CODE COUNCIL®

19-17591

This insert is not part of the official text of the New York State Uniform Fire Prevention and Building Code or New York State Energy Conservation Construction Code.

INTERNATIONAL CODE COUNCIL®

Copyright © 2019 ICC & NYSDOS. ALL RIGHTS RESERVED. Accessed by Lauren Gualdino (lgualdino@briarcliffmanor.org), (-) Order Number #100880972 on May 08, 2020 07:05 AM (PDT) pursuant to License Agreement with ICC & NYSDOS. No further reproduction, no

100880972



ICC INTERNATIONAL CODE COUNCIL®

People Helping People Build a Safer World®

Get FREE access to hundreds of ICC resources and view the largest collection of code titles

ICC's Digital Codes Library (codes.iccsafe.org) conveniently provides access to the latest code text while on the go, at home or in the office, in an easy-to-navigate format.



Available anywhere 24/7

Use on any mobile or digital device

View over 800+ ICC titles

19-17447

Learn how to use this powerful tool at *codes.iccsafe.org*

This insert is not part of the official text of the New York State Uniform Fire Prevention and Building Code or New York State Energy Conservation Construction Code.

INTERNATIONAL CODE COUNCIL®

Copyright © 2019 ICC & NYSDOS. ALL RIGHTS RESERVED. Accessed by Lauren Gualdino (lgualdino@briarcliffmanor.org), (-) Order Number #100880972 on May 08, 2020 07:05 AM (PDT) pursuant to License Agreement with ICC & NYSDOS. No further reproduction, no



The ICC Assessment Center (formerly known as ICC Certification & Testing) provides nationally recognized credentials that demonstrate a confirmed commitment to protect public health, safety, and welfare. Raise the professionalism of your department and further your career by pursuing an ICC Certification.

ICC Certifications offer:

- Nationwide recognition
- Increased earning potential
- Career advancement
- Superior knowledge
- Validation of your expertise
- Personal and professional satisfaction

Exams are developed and maintained to the highest standards, which includes continuous peer review by national committees of experienced, practicing professionals. ICC is continually evolving exam offerings, testing options, and technology to ensure that all building and fire safety officials have access to the tools and resources needed to advance in today's fast-paced and rapidly-changing world.

Enhancing Exam Options

Effective July 2018, the Assessment Center enhanced and streamlined exam options and now offers only computer based testing (CBT) at a test site and PRONTO. We no longer offer paper/pencil exams.

Proctored Remote Online Testing Option (PRONTO)

Taking your next ICC certification exam is more convenient, more comfortable and more efficient than ever before with PRONTO.

PRONTO provides a convenient testing experience that is accessible 24 hours a day, 7 days a week, 365 days a year. Required hardware/software is minimal – you will need a webcam and microphone, as well as a reasonably recent operating system.

pronto
ICC ONLINE EXAMS

Whether testing in your office or in the comfort of your home, your ICC exam will continue to maintain its credibility while offering more convenience, allowing you to focus on achieving your professional goals. The Assessment Center continues to add exams to the PRONTO exam catalog regularly.

18-15617

Checkout all the ICC Assessment Center has to offer at iccsafe.org/certification

This insert is not part of the official text of the New York State Uniform Fire Prevention and Building Code or New York State Energy Conservation Construction Code.

INTERNATIONAL CODE COUNCIL®

Copyright © 2019 ICC & NYSDOS. ALL RIGHTS RESERVED. Accessed by Lauren Gualdino (lgualdino@briarcliffmanor.org), (-) Order Number #100880972 on May 08, 2020 07:05 AM (PDT) pursuant to License Agreement with ICC & NYSDOS. No further reproduction, no

100880972

ANDREW M. CUOMO GOVERNOR
ROSSANA ROSADO SECRETARY OF STATE



2020 EXISTING BUILDING CODE of NEW YORK STATE

NEW YORK STATE OF OPPORTUNITY

Building Standards and Codes

ICC INTERNATIONAL CODE COUNCIL®

INTERNATIONAL CODE COUNCIL®

Copyright © 2019 ICC & NYSDOS. ALL RIGHTS RESERVED. Accessed by Lauren Gualdino (lgualdino@briarcliffmanor.org), (-) Order Number #100880972 on May 08, 2020 07:05 AM (PDT) pursuant to License Agreement with ICC & NYSDOS. No further reproduction, no

100880972

ANDREW M. CUOMO GOVERNOR
ROSSANA ROSADO SECRETARY OF STATE

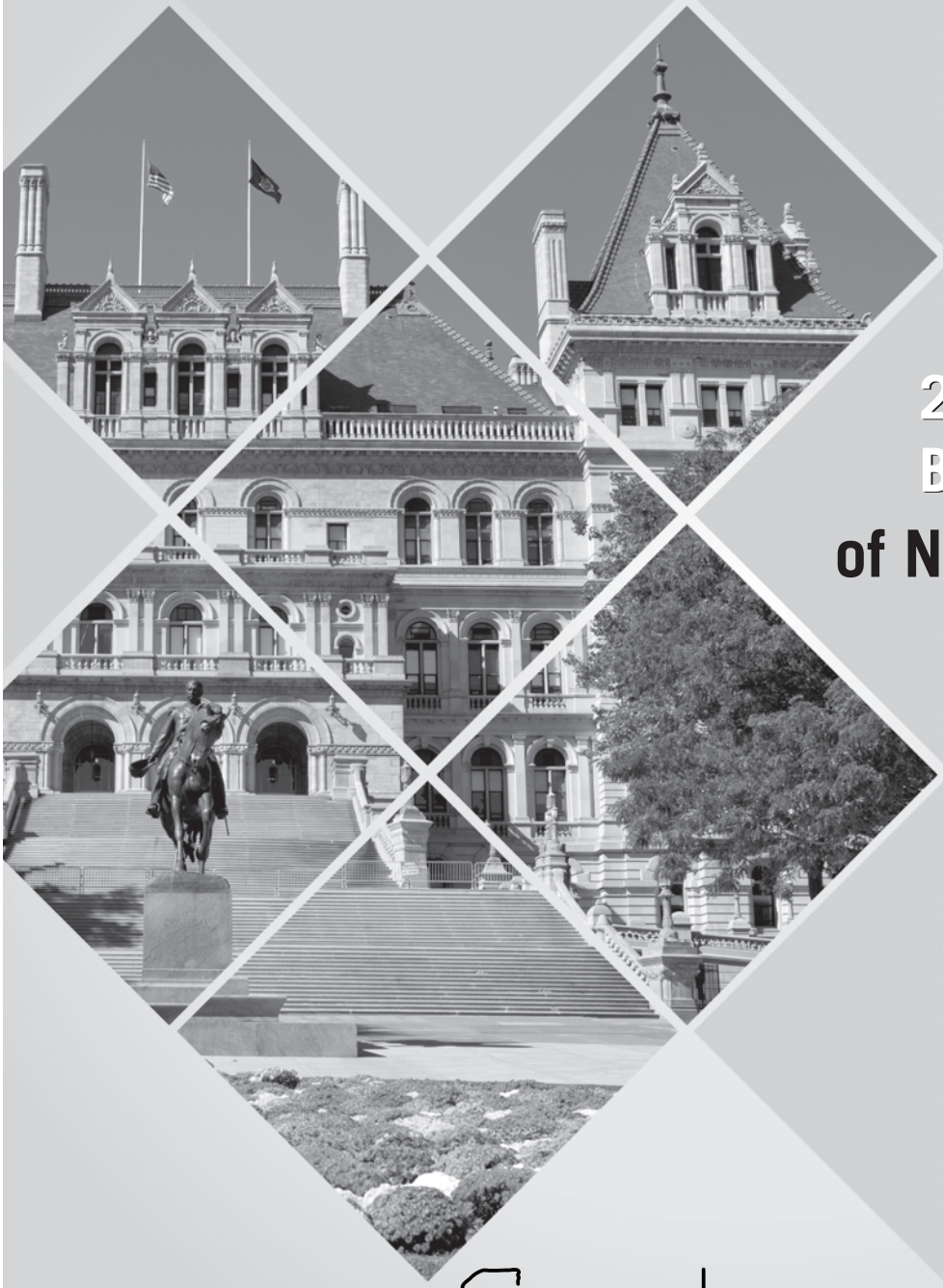

2020 EXISTING BUILDING CODE of NEW YORK STATE

NEW YORK STATE OF OPPORTUNITY.

Building Standards and Codes

ICC INTERNATIONAL CODE COUNCIL®

INTERNATIONAL CODE COUNCIL®

Copyright © 2019 ICC & NYSDOS. ALL RIGHTS RESERVED. Accessed by Lauren Gualdino (lgualdino@briarcliffmanor.org), (-) Order Number #100880972 on May 08, 2020 07:05 AM (PDT) pursuant to License Agreement with ICC & NYSDOS. No further reproduction, no

100880972

2020 Existing Building Code of New York State

Publication Date: November 2019

ISBN: 978-1-60983-943-7

COPYRIGHT © 2019
by
INTERNATIONAL CODE COUNCIL, INC.
and
NEW YORK STATE DEPARTMENT OF STATE

ALL RIGHTS RESERVED. This 2020 *Existing Building Code of New York State* is a copyrighted work owned by the International Code Council, Inc. ("ICC"). This work contains: (1) portions of the ICC International Codes® (I-Codes®); (2) material that is a derivative of the I-Codes; and (3) wholly original materials prepared by the New York State Department of State (NYSDOS) or by the New York State Fire Prevention and Building Code Council (the "Code Council"). The International Code Council, Inc., has copyright ownership of the I-Codes. The International Code Council and the New York State Department of State have joint copyright ownership of the material that is a derivative of the I-Codes. The New York State Department of State has copyright ownership of the wholly original materials prepared by the New York State Department of State and/or by the Code Council. As to the ICC International Codes, all rights, including the right of reproduction in whole or in part in any form, are reserved to the International Code Council. As to the material that is derivative of the I-Codes, all rights, including the right of reproduction in whole or in part in any form, are reserved to the International Code Council and the New York State Department of State, jointly. As to the wholly original materials prepared by the New York State Department of State or by the Code Council, all rights, including the right of reproduction in whole or in part in any form, are reserved to the New York State Department of State. Without advance written permission from the copyright owner, no part of this book may be reproduced, distributed or transmitted in any form or by any means, including, without limitation, electronic, optical or mechanical means (by way of example, and not limitation, photocopying or recording by or in an information storage retrieval system). For information on use rights and permissions, please contact: ICC Publications, 4051 Flossmoor Road, Country Club Hills, IL 60478. Phone 1-888-ICC-SAFE (422-7233).

Trademarks: "International Code Council," the "International Code Council" logo, "ICC," the "ICC" logo, "International Existing Building Code," "IEBC" and other names and trademarks appearing in this book are registered trademarks of the International Code Council, Inc., and/or its licensors (as applicable), and may not be used without permission.

T024580

PRINTED IN THE USA

INTERNATIONAL CODE COUNCIL®

Copyright © 2019 ICC & NYSDOS. ALL RIGHTS RESERVED. Accessed by Lauren Gualdino (lgualdino@briarcliffmanor.org), (-) Order Number #100880972 on May 08, 2020 07:05 AM (PDT) pursuant to License Agreement with ICC & NYSDOS. No further reproduction, no

100880972

ACKNOWLEDGMENTS

With gratitude, the Department of State acknowledges the contributions of the following individuals in the creation of the 2020 Codes of New York State:

STATE FIRE PREVENTION AND BUILDING CODE COUNCIL

Rossana Rosado	Chair – Secretary of State, New York State Department of State Designee - Matthew W. Tebo, Esq.
Francis J. Nerney, Jr.	State Fire Administrator, Office of Fire Prevention and Control Designee - Paul Martin
RuthAnne Visnauskas	Commissioner, Division of Housing and Community Renewal Designee - Michael Weber Designee - Joseph Palozzola
Roberta Reardon	Commissioner, New York State Department of Labor Designee - Vincent R. Rapacciuolo
Honorable Bill de Blasio	Mayor, City of New York Designee - Keith Wen, NYC Department of Buildings
Honorable Michael R. Sabatino, Jr.	Councilmember, City of Yonkers
Claudia K. Braymer, Esq.	County Board of Supervisors, Warren County
David A. Seeley	Supervisor, Town of Irondequoit
Timothy DeRuyscher, P.E. FSFPE	Professional Engineer Representative
Patrick Dolan	Trade Union Representative, Steamfitters Union, 638
Shawn Hamlin, R.A.	Registered Architect Representative, Hamlin Design Group
Robert Hughes	Code Enforcement Representative, Village of Pleasantville
Dominic Marinelli	Persons with Disabilities Representative, United Spinal Association
Joseph J. Toomey	Fire Service Representative, Albany Fire Department
William W. Tuyn	Builders Representative, Forbes Capretto Homes

DEPARTMENT OF STATE

Rossana Rosado	Secretary of State
Brendan Hughes	Executive Deputy Secretary of State
James W. Leary, Esq.	Assistant Executive Deputy Secretary of State
Mark P. Pattison	Deputy Secretary of State for Local Government
Matthew W. Tebo, Esq.	Deputy Secretary of State for Agency Transformation and External Affairs
John R. Addario, P.E.	Director of the Division of Building Standards and Codes
Brian Tollisen, P.E.	Deputy Director of the Division of Building Standards and Codes
Gerard A. Hathaway, R.A.	Assistant Director for Code Development
Kevin Duerr-Clark, P.E.	Assistant Director for Technical Support
Francis “Nick” McAndrew, P.E.	Assistant Director for Educational Services
Joseph Hill, R.A.	Assistant Director for Code Administration
Jeffrey M. Hinderliter, P.E.	Professional Engineer
Emma Gonzalez-Laders, R.A., LEED AP	Senior Architect
Daniel Carroll	Code Compliance Specialist I
Janet Miller	Program Aide
Joseph P. Ball, Esq.	Supervising Attorney
Panagiota K. Hyde, Esq.	Senior Attorney

IN MEMORIAM

John H. Flanagan	Code Enforcement Representative, Code Council Member (2003–2017)
Honorable Judith Kennedy	Mayor, City of Newburgh, Code Council Member (2013–2018)
Brendan Fitzgerald	Executive Deputy Secretary of State (2016–2018)

INTERNATIONAL CODE COUNCIL®
Copyright © 2019 ICC & NYSDOS. ALL RIGHTS RESERVED. Accessed by Lauren Gualdino (lgualdino@briarcliffmanor.org), (-) Order Number #100880972 on May 08, 2020 07:05 AM (PDT) pursuant to License Agreement with ICC & NYSDOS. No further reproduction, no

100880972

INTERNATIONAL CODE COUNCIL®

Copyright © 2019 ICC & NYSDOS. ALL RIGHTS RESERVED. Accessed by Lauren Gualdino (lgualdino@briarcliffmanor.org), (-) Order Number #100880972 on May 08, 2020 07:05 AM (PDT) pursuant to License Agreement with ICC & NYSDOS. No further reproduction, no

100880972

PREFACE

Introduction

The *Existing Building Code of New York State* (EBCNYS) establishes minimum requirements for existing buildings using prescriptive and performance-related provisions. It is founded on broad-based principles intended to encourage the use and reuse of existing buildings while requiring reasonable upgrades and improvements. This 2020 edition was developed as a derivative work of the 2018 edition of the *International Existing Building Code*® (IEBC®) published by the International Code Council® (ICC®).

Intention

This code is founded on principles intended to encourage the use and reuse of existing buildings that adequately protect public health, safety and welfare; provisions that do not unnecessarily increase construction costs; provisions that do not restrict the use of new materials, products or methods of construction; and provisions that do not give preferential treatment to particular types or classes of materials, products or methods of construction.

Letter Designations in Front of Section Numbers

The bracketed letter designations for the party responsible for portions of this code are as follows:

ICC Code Development Committee

[A] = Administrative Code Development Committee;

[BE] = IBC—Means of Egress Code Development Committee;

[BG] = IBC—General Code Development Committee;

[BS] = IBC—Structural Code Development Committee;

[E] = International Commercial Energy Conservation Code Development Committee or International Residential Energy Conservation Code Development Committee;

[F] = International Fire Code Development Committee;

[FG] = International Fuel Gas Code Development Committee;

[M] = International Mechanical Code Development Committee; and

[P] = International Plumbing Code Development Committee.

New York State Code Development

[NY] = New York Department of State

Marginal Markings

Solid vertical lines in the margins within the body of the code indicate a technical change from the requirements of the 2015 edition. Deletion indicators in the form of an arrow (➡) are provided in the margin where an entire section, paragraph, exception or table has been deleted or an item in a list of items or a table has been deleted.

INTERNATIONAL CODE COUNCIL®
Copyright © 2019 ICC & NYSDOS. ALL RIGHTS RESERVED. Accessed by Lauren Gualdino (lgualdino@briarcliffmanor.org), (-) Order Number #100880972 on May 08, 2020 07:05 AM (PDT) pursuant to License Agreement with ICC & NYSDOS. No further reproduction, no

100880972

A single asterisk [*] placed in the margin indicates that text or a table has been relocated within the code. A double asterisk [**] placed in the margin indicates that the text or table immediately following it has been relocated there from elsewhere in the code. The following table indicates such relocations in the 2020 edition of the *Existing Building Code of New York State*:

2020 LOCATION	2015 LOCATION
302.2	401.3
305	410
904.1.4	804.2.4
1201.5	1202.2
1206.1	1202.3

Chapter Reorganization

The 2020 edition of the EBCNYS had several chapters moved based on the need for more effective and consistent application of the provisions. The following table shows the chapter numbering changes:

Chapter, 2020	Chapter, 2015	Title
4	6	Repairs
5	4	Prescriptive Method
6	5	Classification of Work
13	14	Performance Method
14	13	Relocated or Moved Buildings

Italicized Terms

Selected words and terms defined in Chapter 2, Definitions, are italicized where they appear in code text and the Chapter 2 definition applies. Where such words and terms are not italicized, common-use definitions apply. The words and terms selected have code-specific definitions that the user should read carefully to facilitate better understanding of the code.

INTERNATIONAL CODE COUNCIL®
Copyright © 2019 ICC & NYSDOS. ALL RIGHTS RESERVED. Accessed by Lauren Gualdino (lgualdino@briarcliffmanor.org), (-) Order Number #100880972 on May 08, 2020 07:05 AM (PDT) pursuant to License Agreement with ICC & NYSDOS. No further reproduction, no

100880972

EFFECTIVE USE OF THE EXISTING BUILDING CODE OF NEW YORK STATE

The Existing Building Code of New York State intended to provide requirements for the repair and alternative approaches for alterations and additions to existing buildings. A large number of existing buildings and structures do not comply with the current building code requirements for new construction. Although many of these buildings are potentially salvageable, rehabilitation is often cost-prohibitive because compliance with all the requirements for new construction could require extensive changes that go well beyond the value of the building or the original scope of the alteration. At the same time, it is necessary to regulate construction in existing buildings that undergo additions, alterations, extensive repairs or change of occupancy. Such activity represents an opportunity to ensure that new construction complies with the current building codes and that existing conditions are maintained, at a minimum, to their current level of compliance or are improved as required to meet basic safety levels. To accomplish this objective, and to make the alteration process easier, this code allows for options for controlled departure from full compliance with the Uniform Code dealing with new construction, while maintaining basic levels for fire prevention, structural and life safety features of the rehabilitated building.

This code provides three main options for a designer in dealing with alterations of existing buildings. These are laid out in Section 301 of this code:

OPTION 1: Work for alteration, change of occupancy or addition of all existing buildings shall be done in accordance with the Prescriptive Compliance Method given in Chapter 4.

OPTION 2: Work for alteration, change of occupancy or addition of all existing buildings shall be done in accordance with the Work Area Compliance Method given in Chapters 6 through 12.

OPTION 3: Work for alteration, change of occupancy or addition of all existing buildings shall be done in accordance with the Performance Compliance Method given in Chapter 13.

Under limited circumstances, a building alteration can be made to comply with the laws under which the building was originally built, as long as there has been no substantial structural damage and there will be limited structural alteration.

Note that all repairs must comply with Chapter 4 and relocated buildings are addressed by Chapter 14.

Arrangement and Format of the 2020 EBCNYS

Before applying the requirements of the EBCNYS, it is beneficial to understand its arrangement and format. The EBCNYS, like other codes published by ICC, is arranged and organized to follow logical steps that generally occur during a plan review or inspection. The EBCNYS is divided as follows:

Chapters	Subjects
1–2	Administrative Requirements and Definitions
3	Provisions for all Compliance Methods
4	Repairs
5	Prescriptive Compliance Method for Existing Buildings
6–12	Work Area Compliance Method for Existing Buildings
13	Performance Compliance Method for Existing Buildings
14	Relocated Buildings
15	Construction Safeguards
16	Referenced Standards
Appendix A	Guidelines for Seismic Retrofit of Existing Buildings
Appendix B	Supplementary Accessibility Requirements for Existing Buildings
Appendix C	Guidelines for Wind Retrofit of Existing Buildings
Appendix D	Diaper Changing Stations
Resource A	Guidelines on Fire Ratings of Archaic Materials and Assemblies

INTERNATIONAL CODE COUNCIL®
Copyright © 2019 ICC & NYSDOS. ALL RIGHTS RESERVED. Accessed by Lauren Gualdino (lgualdino@briarcliffmanor.org), (-) Order Number #100880972 on May 08, 2020 07:05 AM (PDT) pursuant to License Agreement with ICC & NYSDOS. No further reproduction, no

100880972

The following is a chapter-by-chapter synopsis of the scope and intent of the provisions of the *Existing Building Code of New York State*:

Chapter 1 Scope and Administration. This chapter contains provisions for the application, enforcement and administration of subsequent requirements of the code. In addition to establishing the scope of the code, Chapter 1 identifies which buildings and structures come under its purview.

Chapter 2 Definitions. All defined terms in the code are provided in Chapter 2. While a defined term may only be used in one chapter or another, the meaning provided in Chapter 2 is applicable throughout the code.

Where understanding of a term's definition is especially key to or necessary for understanding of a particular code provision, the term is shown in italics wherever it appears in the code. This is true only for those terms that have a meaning that is unique to the code. In other words, the generally understood meaning of a term or phrase might not be sufficient or consistent with the meaning prescribed by the code; therefore, it is essential that the code-defined meaning be known.

Guidance regarding tense, gender and plurality of defined terms as well as guidance regarding terms not defined in this code is also provided.

Chapter 3 Provisions for All Compliance Methods. This chapter explains the three compliance options available in the code. In addition, this chapter also lays out the methods to be used for seismic design and evaluation throughout the EBCNYS. Finally this chapter clarifies that provisions in the other parts of the *Uniform Code* related to repairs, alterations, additions, relocation and changes in occupancy must also be addressed unless they conflict with the EBCNYS. In that case, the EBCNYS takes precedence.

Chapter 4 Repairs. Chapter 4 governs the repair of existing buildings. The provisions define conditions under which repairs may be made using materials and methods like those of the original construction or the extent to which repairs must comply with requirements for new buildings.

This chapter, like Chapter 14 related to relocated or moved buildings, is independent from the three methods presented by this code.

Chapter 5 Prescriptive Compliance Method. This chapter provides one of the three main options of compliance available in the EBCNYS for buildings and structures undergoing alteration, addition or change of occupancy.

Chapter 6 Classification of Work. This chapter provides an overview of the Work Area Method available as an option for rehabilitation of a building. The chapter defines the different classifications of alterations and provides general requirements for alterations, change of occupancy, additions and historic buildings. Detailed requirements for all of these are given in subsequent Chapters 7 through 12.

Chapter 7 Alterations—Level 1. This chapter provides the technical requirements for those existing buildings that undergo Level 1 alterations as described in Section 503, which includes replacement or covering of existing materials, elements, equipment or fixtures using new materials for the same purpose. This chapter, similar to other chapters of this code, covers all building-related subjects, such as structural, mechanical, plumbing, electrical and accessibility as well as the fire and life safety issues when the alterations are classified as Level 1. The purpose of this chapter is to provide detailed requirements and provisions to identify the required improvements in the existing building elements, building spaces and building structural system. This chapter is distinguished from Chapters 8 and 9 by only involving replacement of building components with new components. In contrast, Level 2 alterations involve more space reconfiguration and Level 3 alterations involve more extensive space reconfiguration, exceeding 50 percent of the building area.

Chapter 8 Alterations—Level 2. Like Chapter 7, the purpose of this chapter is to provide detailed requirements and provisions to identify the required improvements in the existing building elements, building spaces and building structural system when a building is being altered. This chapter is distinguished from Chapters 7 and 9 by involving space reconfiguration that could be up to

INTERNATIONAL CODE COUNCIL®
Copyright © 2019 ICC & NYSDOS. ALL RIGHTS RESERVED. Accessed by Lauren Gualdino (lgualdino@briarcliffmanor.org), (-) Order Number #100880972 on May 08, 2020 07:05 AM (PDT) pursuant to License Agreement with ICC & NYSDOS. No further reproduction, no

100880972

and including 50 percent of the area of the building. In contrast, Level 1 alterations (Chapter 7) do not involve space reconfiguration and Level 3 alterations (Chapter 9) involve extensive space reconfiguration that exceeds 50 percent of the building area. Depending on the nature of alteration work, its location within the building and whether it encompasses one or more tenants, improvements and upgrades could be required for the open floor penetrations, sprinkler system or the installation of additional means of egress such as stairs or fire escapes.

Chapter 9 Alterations—Level 3. This chapter provides the technical requirements for those existing buildings that undergo Level 3 alterations. The purpose of this chapter is to provide detailed requirements and provisions to identify the required improvements in the existing building elements, building spaces and building structural system. This chapter is distinguished from Chapters 7 and 8 by involving alterations that cover 50 percent of the aggregate area of the building. In contrast, Level 1 alterations do not involve space reconfiguration and Level 2 alterations involve extensive space reconfiguration that does not exceed 50 percent of the building area. Depending on the nature of alteration work, its location within the building and whether it encompasses one or more tenants, improvements and upgrades could be required for the open floor penetrations, sprinkler system or the installation of additional means of egress such as stairs or fire escapes. At times and under certain situations, this chapter also intends to improve the safety of certain building features beyond the work area and in other parts of the building where no alteration work might be taking place.

Chapter 10 Change of Occupancy. The purpose of this chapter is to provide regulations for the circumstances when an existing building is subject to a change of occupancy or a change of occupancy classification. A change of occupancy is not to be confused with a change of occupancy classification. The *Building Code of New York State* (BCNYS) defines different occupancy classifications in Chapter 3, and special occupancy requirements in Chapter 4. Within specific occupancy classifications there can be many different types of actual activities that can take place. For instance, a Group A-3 occupancy classification deals with a wide variation of different types of activities, including bowling alleys and courtrooms, indoor tennis courts and dance halls. When a facility changes use from, for example, a bowling alley to a dance hall, the occupancy classification remains A-3, but the different uses could lead to drastically different code requirements. Therefore, this chapter deals with the special circumstances that are associated with a change in the use of a building within the same occupancy classification as well as a change of occupancy classification.

Chapter 11 Additions. Chapter 11 provides the requirements for additions, which correlate to the code requirements for new construction. There are, however, some exceptions that are specifically stated within this chapter. An “Addition” is defined in Chapter 2 as “an extension or increase in the floor area, number of stories or height of a building or structure.” Chapter 11 contains the minimum requirements for an addition that is not separated from the existing building by a fire wall.

There are also requirements for storm shelters when additions are being made to Group E occupancies.

Chapter 12 Historic Buildings. This chapter provides some exceptions from code requirements when the building in question has historic value. The most important criterion for application of this chapter is that the building must be essentially accredited as being of historic significance by a state or local authority after careful review of the historical value of the building. Most, if not all, states have such authorities, as do many local jurisdictions. The agencies with such authority can be located at the state or local government level. Other considerations include the structural condition of the building (i.e., is the building structurally sound), its proposed use, its impact on life safety and how the intent of the code, if not the letter, will be achieved.

Chapter 13 Performance Compliance Methods. This chapter allows for existing buildings to be evaluated so as to show that alterations, while not meeting new construction requirements, will improve the current existing situation. Provisions are based on a numerical scoring system involving 19 various safety parameters and the degree of code compliance for each issue.

INTERNATIONAL CODE COUNCIL®
Copyright © 2019 ICC & NYSDOS. ALL RIGHTS RESERVED. Accessed by Lauren Gualdino (lgualdino@briarcliffmanor.org), (-) Order Number #100880972 on May 08, 2020 07:05 AM (PDT) pursuant to License Agreement with ICC & NYSDOS. No further reproduction, no

100880972

Chapter 14 Relocated or Moved Buildings. Chapter 14 is applicable to any building that is moved or relocated. This chapter, like the chapter on repairs, is independent from the three methods presented in this code.

Chapter 15 Construction Safeguards. The building construction process involves a number of known and unanticipated hazards. Chapter 15 establishes specific regulations in order to minimize the risk to the public and adjacent property. Some construction failures have resulted during the initial stages of grading, excavation and demolition. During these early stages, poorly designed and installed sheeting and shoring have resulted in ditch and embankment cave-ins. Also, inadequate underpinning of adjoining existing structures or careless removal of existing structures has produced construction failures.

There are also several fire safety and means of egress issues addressed by this chapter.

Chapter 16 Referenced Standards. The code contains numerous references to standards that are used to regulate materials and methods of construction. Chapter 16 contains a comprehensive list of all standards that are referenced in the code, including the appendices. The standards are part of the code to the extent of the reference to the standard. Compliance with the referenced standard is necessary for compliance with this code. By providing specifically adopted standards, the construction and installation requirements necessary for compliance with the code can be readily determined. The basis for code compliance is, therefore, established and available on an equal basis to the building official, contractor, designer and owner.

Chapter 16 is organized in a manner that makes it easy to locate specific standards. It lists all of the referenced standards, alphabetically, by acronym of the promulgating agency of the standard. Each agency's standards are then listed in either alphabetical or numeric order based upon the standard identification. The list also contains the title of the standard; the edition (date) of the standard referenced; any addenda; and the section or sections of this code that reference the standard.

Appendices. Appendices are provided in the EBCNYS to offer supplemental criteria to the provisions in the main chapters of the code. Appendices provide additional information for administration of the Department of Building Safety as well as standards not typically administered by all building departments. Appendices have the same force and effect as the first 16 chapters of the EBCNYS only when explicitly adopted.

Appendix A Guidelines for the Seismic Retrofit of Existing Buildings. Appendix A provides guidelines for upgrading the seismic resistance capacity of different types of existing buildings. It is organized into separate chapters which deal with buildings of different types, including unreinforced masonry buildings, reinforced concrete and reinforced masonry wall buildings, and light-frame wood buildings.

Appendix B Supplementary Accessibility Requirements for Existing Buildings and Facilities. Chapter 11 of the *Building Code of New York State* (BCNYS) contains provisions that set forth requirements for accessibility to buildings and their associated sites and facilities for people with physical disabilities. Section 305 addresses accessibility provisions and alternatives permitted in existing buildings. Appendix B was added to address accessibility in construction for items that are not typically enforceable through the traditional building code enforcement process.

Appendix C Guidelines for Wind Retrofit of Existing Buildings. This Appendix is intended to provide guidance for retrofitting existing structures to strengthen their resistance to wind forces. This appendix is similar in scope to Appendix A which addresses seismic retrofits for existing buildings except that the subject matter is related to wind retrofits. These retrofits are voluntary measures that serve to better protect the public and reduce damage from high wind events for existing buildings.

The purpose of the Appendix is to provide prescriptive alternatives for addressing retrofit of buildings in high-wind areas. Currently there are two chapters which deal with the retrofit of gable ends and the fastening of roof decks, Appendix Chapters C1 and C2, respectively.

Appendix D Diaper Changing Stations. In 2018, the New York State Legislature passed regulations requiring certain occupancies to install and maintain baby diaper changing stations that would be available to both men and women. This appendix establishes the standards for the installation of diaper changing stations in all newly constructed buildings that have one or more areas classified as Group A occupancies or Group M occupancies and in all existing buildings that have one

INTERNATIONAL CODE COUNCIL®
Copyright © 2019 ICC & NYSDOS. ALL RIGHTS RESERVED. Accessed by Lauren Gualdino (lgualdino@briarcliffmanor.org), (-) Order Number #100880972 on May 08, 2020 07:05 AM (PDT) pursuant to License Agreement with ICC & NYSDOS. No further reproduction, no

or more areas classified as Group A occupancies or Group M occupancies and undergo a substantial renovation.

Resource A Guidelines on Fire Ratings of Archaic Materials and Assemblies. In the process of repair and alteration of existing buildings, based on the nature and the extent of the work, the EBCNYS might require certain upgrades in the fire-resistance rating of building elements, at which time it becomes critical for the designers and the building officials to be able to determine the fire-resistance rating of the existing building elements as part of the overall evaluation for the assessment of the need for improvements. This resource document provides a guideline for such an evaluation for fire-resistance rating of archaic materials that is not typically found in the modern model building codes.

INTERNATIONAL CODE COUNCIL®
Copyright © 2019 ICC & NYSDOS. ALL RIGHTS RESERVED. Accessed by Lauren Gualdino (lgualdino@briarcliffmanor.org), (-) Order Number #100880972 on May 08, 2020 07:05 AM (PDT) pursuant to License Agreement with ICC & NYSDOS. No further reproduction, no

100880972

INTERNATIONAL CODE COUNCIL®

Copyright © 2019 ICC & NYSDOS. ALL RIGHTS RESERVED. Accessed by Lauren Gualdino (lgualdino@briarcliffmanor.org), (-) Order Number #100880972 on May 08, 2020 07:05 AM (PDT) pursuant to License Agreement with ICC & NYSDOS. No further reproduction, no

100880972

TABLE OF CONTENTS

CHAPTER 1 SCOPE AND ADMINISTRATION 1

Section

101 Title, Scope and Purpose 1
102 Applicability 2
103 Administration and Enforcement 3
104 Materials, Equipment and Methods of Construction 4
105 Building Permits, Construction Inspections, Stop Work Orders, Certificates of Occupancy, and Operating Permits 4
106 Submittal Documents 6
107 Service Utilities 7
108 Inspection of Solid Fuel-burning Heating Appliances, Chimneys and Flues 7

CHAPTER 2 DEFINITIONS 9

Section

201 General 9
202 General Definitions 9

CHAPTER 3 PROVISIONS FOR ALL COMPLIANCE METHODS 13

Section

301 Administration 13
302 General Provisions 13
303 Structural Design Loads and Evaluation and Design Procedures 13
304 In-Situ Load Tests 14
305 Accessibility for Existing Buildings 14
306 Energy Storage Systems 17

CHAPTER 4 REPAIRS 19

Section

401 General 19
402 Building Elements and Materials 19
403 Fire Protection 19
404 Means of Egress 19
405 Structural 19
406 Electrical 20
407 Mechanical 20
408 Plumbing 20

CHAPTER 5 PRESCRIPTIVE COMPLIANCE METHOD 21

Section

501 General 21
502 Additions 21
503 Alterations 22
504 Fire Escapes 24
505 Windows and Emergency Escape Openings 25
506 Change of Occupancy 26
507 Historic Buildings 27

CHAPTER 6 CLASSIFICATION OF WORK 29

Section

601 General 29
602 Alteration—Level 1 29
603 Alteration—Level 2 29
604 Alteration—Level 3 29
605 Change of Occupancy 29
606 Additions 29
607 Historic Buildings 29
608 Relocated Buildings 29

CHAPTER 7 ALTERATIONS—LEVEL 1 31

Section

701 General 31
702 Building Elements and Materials 31
703 Fire Protection 32
704 Means of Egress 32
705 Reroofing 32
706 Structural 33
707 Energy Conservation 33
708 Plumbing 33

CHAPTER 8 ALTERATIONS—LEVEL 2 35

Section

801 General 35
802 Building Elements and Materials 35
803 Fire Protection 37
804 Carbon Monoxide Detection 39
805 Means of Egress 39
806 Structural 44

INTERNATIONAL CODE COUNCIL®
Copyright © 2019 ICC & NYSDOS. ALL RIGHTS RESERVED. Accessed by Lauren Gualdino (lgualdino@briarcliffmanor.org), (-) Order Number #100880972 on May 08, 2020 07:05 AM (PDT) pursuant to License Agreement with ICC & NYSDOS. No further reproduction, no

100880972

807 Electrical 45
808 Mechanical 45
809 Plumbing 45
810 Energy Conservation 46

CHAPTER 9 ALTERATIONS—LEVEL 3 47
Section
901 General 47
902 Special Use and Occupancy 47
903 Building Elements and Materials 47
904 Fire Protection 47
905 Means of Egress 48
906 Structural 48
907 Energy Conservation 49

CHAPTER 10 CHANGE OF OCCUPANCY 51
Section
1001 General 51
1002 Special Use and Occupancy 51
1003 Building Elements and Materials 51
1004 Fire Protection 51
1005 Means of Egress 51
1006 Structural 51
1007 Electrical 52
1008 Mechanical 52
1009 Plumbing 52
1010 Other Requirements 53
1011 Change of Occupancy Classification 53

CHAPTER 11 ADDITIONS 57
Section
1101 General 57
1102 Heights and Areas 57
1103 Structural 57
1104 Smoke Alarms in Occupancy Groups R and I-1 58
1105 Carbon Monoxide Detection 58
1106 Storm Shelters 58
1107 Energy Conservation 58

CHAPTER 12 HISTORIC BUILDINGS 59
Section
1201 General 59
1202 Repairs 59
1203 Fire Safety 59
1204 Change of Occupancy 60
1205 Structural 61
1206 Relocated Buildings 61

CHAPTER 13 PERFORMANCE COMPLIANCE METHODS 63
Section
1301 General 63

CHAPTER 14 RELOCATED OR MOVED BUILDINGS 75
Section
1401 General 75
1402 Requirements 75

CHAPTER 15 CONSTRUCTION SAFEGUARDS 77
Section
1501 General 77
1502 Protection of Adjoining Property 78
1503 Temporary Use of Streets, Alleys and Public Property 78
1504 Fire Extinguishers 79
1505 Means of Egress 79
1506 Standpipes 79
1507 Automatic Sprinkler System 79
1508 Accessibility 79
1509 Water Supply for Fire Protection 79

CHAPTER 16 REFERENCED STANDARDS 81

APPENDIX A GUIDELINES FOR THE SEISMIC RETROFIT OF EXISTING BUILDINGS 85

CHAPTER A1 SEISMIC STRENGTHENING PROVISIONS FOR UNREINFORCED MASONRY BEARING WALL BUILDINGS 85
Section
A101 Purpose 85
A102 Scope 85
A103 Definitions 85
A104 Symbols and Notations 86
A105 General Requirements 86

INTERNATIONAL CODE COUNCIL®
Copyright © 2019 ICC & NYSDOS. ALL RIGHTS RESERVED. Accessed by Lauren Gualdino (lgualdino@briarcliffmanor.org), (-) Order Number #100880972 on May 08, 2020 07:05 AM (PDT) pursuant to License Agreement with ICC & NYSDOS. No further reproduction, no

100880972

A106 Materials Requirements 87
A107 Quality Control 89
A108 Design Strengths 89
A109 Analysis and Design Procedure 90
A110 General Procedure 90
A111 Special Procedure 90
A112 Analysis and Design 92
A113 Detailed Building System Design Requirements 93
A114 Walls of Unburned Clay, Adobe or Stone Masonry 94

CHAPTER A2 EARTHQUAKE HAZARD REDUCTION IN EXISTING REINFORCED CONCRETE AND REINFORCED MASONRY WALL BUILDINGS WITH FLEXIBLE DIAPHRAGMS 101

Section
A201 Purpose 101
A202 Scope 101
A203 Definitions 101
A204 Symbols and Notations 101
A205 General Requirements 101
A206 Analysis and Design 102
A207 Materials of Construction 103

CHAPTER A3 PRESCRIPTIVE PROVISIONS FOR SEISMIC STRENGTHENING OF CRIPPLE WALLS AND SILL PLATE ANCHORAGE OF LIGHT, WOOD-FRAME RESIDENTIAL BUILDINGS 105

Section
A301 General 105
A302 Definitions 105
A303 Structural Weaknesses 106
A304 Strengthening Requirements 106

CHAPTER A4 EARTHQUAKE RISK REDUCTION IN WOOD-FRAME RESIDENTIAL BUILDINGS WITH SOFT, WEAK OR OPEN FRONT WALLS 123

Section
A401 General 123
A402 Definitions 123
A403 Analysis and Design 123
A404 Prescriptive Measures for Weak Story 125
A405 Materials of Construction 125
A406 Information Required to be on the Plans 126
A407 Quality Control 126

CHAPTER A5 REFERENCED STANDARDS 127

APPENDIX B SUPPLEMENTARY ACCESSIBILITY REQUIREMENTS FOR EXISTING BUILDINGS AND FACILITIES 129

Section
B101 Qualified Historical Buildings and Facilities 129
B102 Fixed Transportation Facilities and Stations 129
B103 Dwelling Units and Sleeping Units 130
B104 Referenced Standards 130

APPENDIX C GUIDELINES FOR THE WIND RETROFIT OF EXISTING BUILDINGS 131

CHAPTER C1 GABLE END RETROFIT FOR HIGH-WIND AREAS 131

Section
C101 General 131
C102 Definitions 131
C103 Materials of Construction 131
C104 Retrofitting Gable End Walls to Enhance Wind Resistance 133

CHAPTER C2 ROOF DECK FASTENING FOR HIGH-WIND AREAS 153

Section
C201 General 153
C202 Roof Deck Attachment for Wood Roofs 153
C203 Referenced Standards 153

APPENDIX D DIAPER CHANGING STATIONS 155

D101 Introduction 155
D102 Purpose 155
D103 Definitions 155
D104 General Requirements 156
D105 Accessibility, Construction and Installation Requirements 157
D16 Signage 157
D107 Maintenance 157
D108 Historic Buildings 157

INTERNATIONAL CODE COUNCIL®
Copyright © 2019 ICC & NYSDOS. ALL RIGHTS RESERVED. Accessed by Lauren Gualdino (lgualdino@briarcliffmanor.org), (-) Order Number #100880972 on May 08, 2020 07:05 AM (PDT) pursuant to License Agreement with ICC & NYSDOS. No further reproduction, no

100880972

RESOURCE A GUIDELINES ON FIRE RATINGS OF ARCHAIC MATERIALS AND ASSEMBLIES 159

Section

1 Fire-related Performance of Archaic Materials and Assemblies. 160

2 Building Evaluation 161

3 Final Evaluation and Design Solution 164

4 Summary 171

Appendix 173

Resource A Table of Contents 173

Bibliography. 292

INDEX 299

INTERNATIONAL CODE COUNCIL®

Copyright © 2019 ICC & NYSDOS. ALL RIGHTS RESERVED. Accessed by Lauren Gualdino (lgualdino@briarcliffmanor.org), (-) Order Number #100880972 on May 08, 2020 07:05 AM (PDT) pursuant to License Agreement with ICC & NYSDOS. No further reproduction, no

100880972

[NY] CHAPTER 1
SCOPE AND ADMINISTRATION

[NY] SECTION 101
TITLE, SCOPE AND PURPOSE

[NY] 101.1 Title. This publication shall be known as the 2020 edition of the Existing Building Code of New York State, hereinafter referred to as "this code." This code is part of the New York State Uniform Fire Prevention and Building Code (the "Uniform Code").

[NY] 101.1.1 Amendments of New York State code books. In Chapter 1, the term "New York State code books" shall include the *Residential Code of New York State*, the *Building Code of New York State*, the *Plumbing Code of New York State*, the *Mechanical Code of New York State*, the *Fuel Gas Code of New York State,* the *Fire Code of New York State*, the *Property Maintenance Code of New York State*, the *Existing Building Code of New York State* (i.e., this publication), and the *Energy Conservation Construction Code of New York State*. Provisions in any one or more of the New York State code books may be amended from time to time by provisions in 19 NYCRR Parts 1220 to 1227 or 19 NYCRR Part 1240, as currently in effect and as hereafter amended from time to time. If this publication is now or hereafter so amended, references in this publication to "this code" shall be deemed to be references to this publication as so amended. If any other New York State code book is now or hereafter so amended, references in this code to such other New York State code book shall be deemed to be references to such New York State code book as so amended.

[NY] 101.2 Scope. The provisions of this code shall apply to the repair, alteration, *change of occupancy*, *addition* to and relocation of *existing buildings*.

Exceptions:

1. The provisions of the *Residential Code of New York State* shall apply to the construction, *alteration*, movement, enlargement, replacement, *repair*, *equipment*, use and occupancy, location, removal and demolition of the following *buildings* and structures, provided that such *buildings* or structures are not more than three stories above grade plane in height, and their accessory structures not more than three stories above grade plane in height:
   1.1. Detached one-family dwellings;
   1.2. Detached two-family dwellings in which each dwelling unit has a separate means of egress;
   1.3. Townhouses;
   1.4. Bed and breakfast dwellings;
   1.5. Live/work units that (1) are located in townhouses and (2) comply with the requirements of Section 419 of the *Building Code of New York State*; and
   1.6. Owner-occupied lodging houses that (1) have five or fewer guestrooms and (2) are provided with a residential fire sprinkler system complying with Section P2904 of the *Residential Code of New York State.*
2. *Agricultural buildings*, including barns, sheds, poultry houses and other buildings and equipment on the premises that are used directly and solely for agricultural purposes, shall not be subject to the construction-related provisions of this code.

[NY] 101.2.1 Facilities regulated by State departments and agencies. Where a building or premises under the custody, licensure, supervision or jurisdiction of a department or agency of the State of New York is regulated as a one- or two-family dwelling or multiple single-family dwelling (*townhouse*), in accordance with established laws or regulations of that department or agency, said *buildings* or premises, such as a community residence or hospice residence, and their *accessory structures* shall comply with the *Residential Code of New York State*.

[NY] 101.3 Intent. The intent of this code is to provide flexibility to permit the use of alternative approaches to achieve compliance with minimum requirements to safeguard the public health, safety and welfare insofar as they are affected by the *repair*, *alteration*, *change of occupancy*, *addition* and relocation of *existing buildings.*

[NY] 101.4 Applicability. This code shall apply to the *repair*, *alteration*, *change of occupancy*, *addition* and relocation of *existing buildings*, regardless of occupancy, subject to the criteria of Sections 101.4.1 and 101.4.2.

[NY] 101.4.1 Buildings not previously occupied. A building or portion of a building that has not been previously occupied or used for its intended purpose, in accordance with the laws in existence at the time of its completion, shall be permitted to comply with the provisions of the laws in existence at the time of its original permit unless such permit has expired. Subsequent permits shall comply with the *Building Code of New York State* or *Residential Code of New York State*, as applicable, for new construction. For the purposes of this section, the "date of adoption of this code" shall be deemed to be 90th day after the date on which the Notice of Adoption of the rule incorporating this code by reference in Part 1227 of the New York Codes, Rules, and Regulations shall have been published in the State Register.

[NY] 101.4.2 Buildings previously occupied. The legal occupancy of any building existing on the date of adoption of this code shall be permitted to continue without change, except as is specifically covered in this code, the *Fire Code of New York State*, or the *Property Maintenance Code of New York State*, or as is deemed necessary by the *building official* for the general safety and welfare of the occupants and the public.

INTERNATIONAL CODE COUNCIL®
Copyright © 2019 ICC & NYSDOS. ALL RIGHTS RESERVED. Accessed by Lauren Gualdino (lgualdino@briarcliffmanor.org), (-) Order Number #100880972 on May 08, 2020 07:05 AM (PDT) pursuant to License Agreement with ICC & NYSDOS. No further reproduction, no

100880972

[NY] 101.5 Safeguards during construction. Construction work covered in this code, including any related demolition, shall comply with the requirements of Chapter 15.

[NY] 101.6 Appendices. Provisions in the following appendices have been adopted and are part of this code:

Appendix A	Guidelines for the Seismic Retrofit of Existing Buildings
Appendix D	Diaper Changing Stations
Resource A	Guidelines on Fire Ratings of Archaic Materials and Assemblies

In addition, the following appendices are included for informational purposes:

Appendix B	Supplementary Accessibility Requirements for Existing Buildings and Facilities
Appendix C	Guidelines for the Wind Retrofit of Existing Buildings

[NY] SECTION 102 APPLICABILITY

[NY] 102.1 General. Where there is a conflict between a general requirement and a specific requirement, the specific requirement shall be applicable. Where, in any specific case, different sections of this code specify different materials, methods of construction or other requirements, the most restrictive shall govern.

[NY] 102.2 Other laws and regulations. This code is part of the New York State Uniform Fire Prevention and Building Code (the *Uniform Code*) promulgated pursuant to Article 18 of the New York State Executive Law. The provisions of this code shall not be deemed to nullify any federal, state or local law, ordinance, administrative code, rule or regulation relating to any matter as to which the *Uniform Code* does not provide.

However:

1. Pursuant to Section 383(1) of the Executive Law, and except as otherwise provided in paragraphs a, b, and c of Section 383(1) of the Executive Law, the provisions of the *Uniform Code* supersede any other provision of a general, special or local law, ordinance, administrative code, rule or regulation inconsistent or in conflict with the *Uniform Code;*
2. Pursuant to Section 379(3) of the Executive Law, no city, town, village, county or other municipality shall have the power to supersede, void, repeal, or make less restrictive any provision of the *Uniform Code*; and
3. The ability of any city, town, or village, or the County of Nassau, to enact or adopt, and to enforce, a local law or ordinance imposing higher or more restrictive standards for construction within the jurisdiction of such city, town, village, or county that are applicable generally to such city, town, village, or county in the *Uniform Code* is subject to the provisions and requirements of Section 379 of the Executive Law.

Nothing in this Section 102.2 shall be construed as:

1. Affecting the authority of the State Labor Department to enforce a safety or health standard issued under provisions of Sections 27 and 27-a of the Labor Law;
2. Relieving a person from complying with a stricter standard issued pursuant to the Occupational Safety and Health Act of 1970, as amended; or
3. Superseding, limiting, impairing or otherwise affecting any provision of the *Uniform Code*, as now in effect and as hereafter amended from time to time.

[NY] 102.2.1 Other New York Codes, Rules and Regulations (NYCRR). Additional New York Codes, Rules and Regulations exist that may affect new and *existing buildings*, *structures*, systems and equipment. Such regulations include, but are not limited to:

1. 19 NYCRR Part 300 (Universal Symbol of Access);
2. 19 NYCRR Part 1261 (Recordkeeping – Smoke Detectors in Multiple Dwellings);
3. 19 NYCRR Part 1264 (Identification of Buildings Utilizing Truss Type Construction); and
4. 19 NYCRR Part 1265 (Residential Structures with Truss Type Construction, Pre-Engineered Wood Construction and/or Timber Construction).

[NY] 102.2.2 Change in use or occupancy. No change shall be made in the use or occupancy of any *building* or *structure* unless such *building* or *structure* is made to comply with the requirements of the *Uniform Code* and *Energy Code*.

[NY] 102.3 Application of references. References to chapter or section numbers or to provisions not specifically identified by number shall be construed to refer to such chapter, section, or provision of this code.

[NY] 102.4 Referenced codes and standards. The codes and standards referenced in this code shall be considered to be part of the requirements of this code to the prescribed extent of each such reference and as further regulated in Sections 102.4.1 and 102.4.2.

[NY] 102.4.1 Conflicts. Where conflicts occur between provisions of this code and referenced codes and standards, the provisions of this code shall apply.

[NY] 102.4.2 Provisions in referenced codes and standards. Where the extent of the reference to a referenced code or standard includes subject matter that is within the scope of this code, the provisions of this code, as applicable, shall take precedence over the provisions in the referenced code or standard.

[NY] 102.5 Partial invalidity. In the event that any part or provision of this code is held by a court of competent jurisdiction to be illegal or void, this shall not have the effect of making void or illegal any of the other parts or provisions.

[NY] 102.6 Existing structures. The legal occupancy of any *structure* existing on the effective date of this code shall be permitted to continue without change, except as otherwise specifically provided in this code or any other applicable provision of the *Uniform Code*. For the purposes of this Section, the "effective date of this code" shall be deemed to be 90th

INTERNATIONAL CODE COUNCIL®
Copyright © 2019 ICC & NYSDOS. ALL RIGHTS RESERVED. Accessed by Lauren Gualdino (lgualdino@briarcliffmanor.org), (-) Order Number #100880972 on May 08, 2020 07:05 AM (PDT) pursuant to License Agreement with ICC & NYSDOS. No further reproduction, no

100880972

day after the date on which the Notice of Adoption of the rule incorporating this code by reference in Part 1227 of the New York Codes, Rules, and Regulations shall have been published in the State Register.

[NY] SECTION 103
ADMINISTRATION AND ENFORCEMENT

[NY] 103.1 Administration and enforcement. The *Uniform Code* shall be administered and enforced by the *authority having jurisdiction*. The identity of the *authority having jurisdiction* in a given situation is determined in accordance with Article 18 of the Executive Law and the regulations promulgated by the Secretary of State pursuant to Executive Law Section 381(1). In general, the *authority having jurisdiction* is the local government (city, town or village) in which the *building* or *structure* is located. In certain situations, the *authority having jurisdiction* may be the county in which the *building* or *structure* is located. In certain other cases, the State, the Secretary of State (acting through the Department of State) or some other State agency may be the *authority having jurisdiction*. The *authority having jurisdiction* responsible for administration and enforcement of the *Uniform Code* is also responsible for administration and enforcement of the *Energy Code*.

Administration and enforcement of the *Uniform Code* and *Energy Code* shall be in accordance with the following, as applicable:

1. Where a city, town, village or county is the *authority having jurisdiction*:
   - 1.1. Such city, town, village or county shall provide for administration and enforcement of the *Uniform Code* and *Energy Code* by local law, ordinance, other appropriate regulation, or combination thereof.
   - 1.2. The *Code Enforcement Program* established by such local law, ordinance or other appropriate regulation, or combination thereof, must include, at a minimum, the features described in *Part 1203* and must satisfy all other requirements of *Part 1203*.
   - 1.3. Such city, town, village or county shall administer and enforce the *Uniform Code* in accordance with the *Code Enforcement Program* established by such local law, ordinance or other appropriate regulation, or combination thereof.
2. Where the State is the *authority having jurisdiction* pursuant to 19 NYCRR Section 1201.2(d):
   - 2.1. The *Code Enforcement Program* shall be as established by *Part 1204*.
   - 2.2. The State, acting through one or more State agencies, shall administer and enforce the *Uniform Code* and *Energy Code* in accordance with *Part 1204*.
3. Where the Department of State is the *authority having jurisdiction*:
   - 3.1. The *Code Enforcement Program* shall be as established by *Part 1202*.
   - 3.2. The Department of State shall administer and enforce the *Uniform Code* and *Energy Code* in accordance with *Part 1202*.
4. Where any governmental unit or agency not included in paragraphs 1, 2, and 3 above is the *authority having jurisdiction*:
   - 4.1. Such governmental unit or agency shall provide for administration and enforcement of the *Uniform Code* and *Energy Code* by regulation.
   - 4.2. The *Code Enforcement Program* established by such regulation must include, at a minimum, the features described in *Part 1203* and must satisfy all other requirements of *Part 1203*.
   - 4.3. Such governmental unit or agency shall administer and enforce the *Uniform Code* and *Energy Code* in accordance with the *Code Enforcement Program* established by such regulation.

Every governmental unit or agency thereof charged with administration and enforcement of the *Uniform Code* shall exercise its powers in due and proper manner so as to extend to the public protection from the hazards of fire and inadequate building construction.

Any person or entity constructing or renovating a *building* or *structure*, changing the use or occupancy of a *building* or *structure*, or engaging in any other activity that is subject to the provisions of the *Code Enforcement Program* of the *authority having jurisdiction* responsible for administration and enforcement of the *Uniform Code* with respect to such *building* shall comply with all applicable provisions of such *Code Enforcement Program*.

In addition, persons and entities who construct, renovate, use and occupy *buildings* and *structures* shall comply with all applicable provisions of Section 105 of this code.

[NY] 103.2 Due process. Nothing in Chapter 1, or elsewhere in this code, or elsewhere in the *Uniform Code*, or in any regulation promulgated pursuant to Executive Law Section 381(1), shall be construed as authorizing any *authority having jurisdiction* to administer and enforce the *Uniform Code* in a manner that deprives any person or entity of due process of law. In particular, but not by way of limitation, nothing in Chapter 1, or elsewhere in this code, or elsewhere in the *Uniform Code*, or in any regulation promulgated pursuant to Executive Law Section 381(1), relating to posting, placarding and/or condemnation of *buildings* or *structures* that are unsafe, unfit for human occupancy or unlawful shall be construed as authorizing any *authority having jurisdiction* to post, placard or condemn any such *building* or *structure* and/or to remove any *owner* or occupant or cause any *owner* or occupant to be removed from any such *building* or *structure* without providing such notice and opportunity to be heard (and, if applicable, the right of appeal) as may be required under the applicable circumstances by applicable Constitutional provisions.

[NY] 103.2.1 Imminent danger. In cases of imminent danger, posting, placarding, and condemning a *building* or *structure* and removing *owners* and occupants or causing *owners* and occupants to be removed without first providing an opportunity to be heard shall be permitted to the

INTERNATIONAL CODE COUNCIL®
Copyright © 2019 ICC & NYSDOS. ALL RIGHTS RESERVED. Accessed by Lauren Gualdino (lgualdino@briarcliffmanor.org), (-) Order Number #100880972 on May 08, 2020 07:05 AM (PDT) pursuant to License Agreement with ICC & NYSDOS. No further reproduction, no

100880972

extent consistent with applicable Constitutional provisions, provided that the affected persons and entities are afforded the opportunity for a post-action hearing to the extent required by applicable Constitutional provisions.

[NY] 103.3 Application for variance or appeal. An application for a variance or modification of any provision or requirement of *Uniform Code* shall be in accordance with the provisions of *Part 1205*. An appeal of any order or determination, or the failure within a reasonable time to make an order or determination, of an administrative official charged to enforce or purporting to enforce the *Uniform Code* may be made in accordance with the provisions of *Part 1205*.

[NY] SECTION 104
MATERIALS, EQUIPMENT AND METHODS OF CONSTRUCTION

[NY]104.1 Approved materials and equipment. Materials, equipment, and devices *approved* by the *building official* shall be constructed and installed in accordance with such approval. Materials, equipment and devices tested by an *approved* testing laboratory shall be permitted to be constructed and installed in accordance with such approval.

[NY] 104.1.1 Used materials and equipment. Used materials, equipment, and devices shall not be reused unless they meet the requirements of this code for new materials.

[NY] 104.2 Waivers, variances, and modifications. Nothing in this code shall be construed as permitting any *building official* or any *authority having jurisdiction* to waive, vary, modify, or otherwise alter any provision or requirement of this code or any other provision or requirement of the *Uniform Code*. Provisions or requirements of the *Uniform Code* may be varied or modified only in accordance with procedures established by *Part 1205* or by such other regulations as may hereafter be promulgated by the Secretary of State pursuant to Section 381(1)(f) of the Executive Law.

[NY] 104.3 Alternative materials, equipment, appliances, designs, and methods of construction. The provisions of this code are not intended to prevent the installation of any materials, *equipment*, or *appliances* not specifically prescribed by this code, or to prohibit any designs or methods of construction not specifically prescribed by this code, provided that such alternative materials, *equipment*, *appliances*, designs, or methods of construction: (1) are not specifically prohibited by any provision of this code, by any other provision of the *Uniform Code*, or by the *Energy Code,* and (2) shall have been *approved*, in writing, by the *building official*. Alternative materials, *equipment*, *appliances*, designs, or methods of construction may be *approved* only when the *building official* shall have determined, in writing, that such alternative is:

1. Satisfactory and complies with the intent of the provisions and requirements of the *Uniform Code*; and
2. Not less than the equivalent of that prescribed in the *Uniform Code* in quality, strength, effectiveness, fire resistance, durability, and safety.

Nothing in this Section 104.3 shall be construed as permitting any *building official* or any *authority having jurisdiction* to waive, vary, modify or otherwise alter any provision or requirement of this code or any other provision or requirement of the *Uniform Code*. Provisions or requirements of the *Uniform Code* may be varied or modified only pursuant to procedures established in *Part 1205* or by such other regulations as may hereafter be promulgated by the Secretary of State pursuant to Section 381(1)(f) of the Executive Law.

[NY] 104.4 Workmanship. Repairs, maintenance work, alterations or installations which are caused directly or indirectly by the enforcement of the *Uniform Code* shall be executed and installed in a workmanlike manner and in accordance with the *Uniform Code* and the manufacturer's installation instructions.

[NY] SECTION 105
BUILDING PERMITS, CONSTRUCTION INSPECTIONS, STOP WORK ORDERS, CERTIFICATES OF OCCUPANCY, AND OPERATING PERMITS

[NY] 105.1 Purpose. The purpose of Section 105 is to include in the *Uniform Code* provisions requiring persons and entities who construct, renovate, use and occupy buildings and structures to apply for and obtain *building permits*, to facilitate construction inspections, to obey stop work orders, to obtain *certificates of occupancy*, and to obtain *operating permits*. The provisions in Section 105 are considered to be integral parts of the *Uniform Code's* standards for construction, maintenance, and fire protection equipment and systems.

[NY] 105.1.1 Definition. For the purpose of Section 105, the term "other applicable law" shall include the *authority having jurisdiction's Code Enforcement Program*; any local law, ordinance, or regulation establishing the *authority having jurisdiction's Code Enforcement Program*; and any other applicable statute, regulation, rule, local law, or ordinance.

[NY] 105.2 Building permits. No person or entity shall commence, perform, or continue any work that must conform with the *Uniform Code* and/or *Energy Code* unless:

1. Such person or entity has applied to the *authority having jurisdiction* for a *building permit*,
2. The *authority having jurisdiction* has issued a *building permit* authorizing such work,
3. Such *building permit* has not been revoked or suspended, and
4. Such *building permit* has not expired.

[NY] 105.2.1 Work exempt from building permit requirement. *A building permit* shall not be required for work in any category that is excluded from the *building permit* requirement by the *authority having jurisdiction's Code Enforcement Program*, provided that *Part 1203* allows an *authority having jurisdiction* to exclude such category of work from the *building permit* requirement. Exemptions from *building permit* requirements shall not be deemed to grant authorization for any work to be done

INTERNATIONAL CODE COUNCIL®
Copyright © 2019 ICC & NYSDOS. ALL RIGHTS RESERVED. Accessed by Lauren Gualdino (lgualdino@briarcliffmanor.org), (-) Order Number #100880972 on May 08, 2020 07:05 AM (PDT) pursuant to License Agreement with ICC & NYSDOS. No further reproduction, no

100880972

in any manner in violation of any provision of the *Uniform Code*, any provision of the *Energy Code*, or any provision of any other applicable law.

[NY] 105.2.2 Applications for building permits. A person or entity applying for a *building permit* shall submit an application to the *authority having jurisdiction.* An application for a *building permit* shall include:

1. *Construction documents* that satisfy the requirements of Section 106.2;
2. Any and all other submittal documents required by Section 106;
3. Any and all other information and documentation that may be required by the stricter of the *authority having jurisdiction's Code Enforcement Program* or a *Part 1203—Compliant Code Enforcement Program*; and
4. Such other information and documentation as the *authority having jurisdiction* may determine to be necessary to allow the *authority having jurisdiction* to determine whether the proposed work conforms with the *Uniform Code*, the *Energy Code*, and other applicable laws.

[NY] 105.2.3 Approval of construction documents. When the *authority having jurisdiction* issues a *building permit*, the *authority having jurisdiction* shall *approve* the *construction documents* in writing. Work shall be installed in accordance with the a*pproved construction documents* and the terms and conditions, if any, of the *building permit*.

[NY] 105.2.4 Validity of building permit. The issuance or granting of a *building permit* shall not be construed to be a *permit* for, or an approval of, any violation of any provisions of the *Uniform Code*, the *Energy Code*, or any other applicable law. *A building permit* purporting to give authority to violate or cancel any provision of this code, or any other provision of the *Uniform Code*, the *Energy Code* or any other applicable law shall not be valid. The issuance of a *building permit* based on *construction documents* and other data shall not prevent the *building official* from requiring the correction of errors in the *construction documents* and other data.

[NY] 105.2.5 Suspension or revocation of building permit. The *authority having jurisdiction* is authorized to suspend or revoke a *building permit* wherever the *building permit* is issued in error; or on the basis of incorrect, inaccurate or incomplete information; or in violation of any provision of this code, any other provision of the *Uniform Code*, the *Energy Code*, or any other applicable law. Any such suspension or revocation shall be in writing, signed by the *building official* or by his or her designated agent.

[NY] 105.2.6 Placement of building permit and approved construction documents. The *building permit,* or copy thereof, and at least one set of *approved construction documents* shall be kept on the site of the work until the completion of the project. The *approved construction documents* shall be open to inspection by any authorized representative of the *authority having jurisdiction.*

[NY] 105.3 Construction inspections. Any person or entity performing work for which a *building permit* has been issued shall keep work accessible and exposed until the work has been inspected and accepted by the *authority having jurisdiction*, or its authorized agent, at each element of the construction process that is applicable to the work and specified in the stricter of the *authority having jurisdiction's Code Enforcement Program* or a *Part 1203—Compliant Code Enforcement Program*.

[NY] 105.3.1 Inspection requests. It shall be the duty of the holder of the *building permit* or their duly authorized agent to notify the *building official* when work is ready for inspection. It shall be the duty of the *building permit* holder to provide access to and means for inspections of such work that are required by this code.

[NY] 105.4 Stop work orders. The *authority having jurisdiction* is authorized to issue a stop work order to halt work that is being performed without a required *building permit*; work that is being performed after a required *building permit* has been revoked or suspended or has expired*;* work that is being conducted in a dangerous or unsafe manner; or work that is contrary to provisions of the *Uniform Code*, the *Energy Code*, the *approved construction documents*, or the terms and conditions (if any) of the *building permit*. No person or entity shall commence, perform or continue any work if the *authority having jurisdiction* has issued a *stop work order* with respect to such work.

[NY] 105.5 Certificates of occupancy. Where the stricter of the *authority having jurisdiction's Code Enforcement Program* or a *Part 1203—Compliant Code Enforcement Program* requires a *certificate of occupancy* for permission to use or occupy a *building* or *structure*, or any portion thereof, no person or entity shall use or occupy such *building* or *structure*, or such portion thereof, unless:

1. The *authority having jurisdiction* has issued such *certificate of occupancy*.
2. Such *certificate of occupancy* has not been revoked or suspended.
3. In the case of a temporary *certificate of occupancy*, such temporary *certificate of occupancy* has not expired.

[NY] 105.5.1 Authorized uses and occupancies. Where a *certificate of occupancy* has been issued for a *building* or *structure*, or any portion thereof, no person or entity shall use or occupy such *building* or *structure*, or such portion thereof, for any use or occupancy other than that authorized by such *certificate of occupancy*.

[NY] 105.5.2 Change in use or occupancy. Without regard to whether a *certificate of occupancy* shall have been issued, no person or entity shall convert the use or occupancy of a *building* or *structure*, or any portion thereof, from one use or occupancy to another without first obtaining a *building permit* to perform the work, if any, required for such conversion; performing such work, if any; and obtaining a *certificate of occupancy* from the *authority having jurisdiction.*

[NY] 105.6 Operating permits. Where the stricter of the *authority having jurisdiction's Code Enforcement Program*

INTERNATIONAL CODE COUNCIL®
Copyright © 2019 ICC & NYSDOS. ALL RIGHTS RESERVED. Accessed by Lauren Gualdino (lgualdino@briarcliffmanor.org), (-) Order Number #100880972 on May 08, 2020 07:05 AM (PDT) pursuant to License Agreement with ICC & NYSDOS. No further reproduction, no

100880972

or a *Part 1203—Compliant Code Enforcement Program* requires an *operating permit* to conduct an activity or to use a category of *building*, no person or entity shall conduct such activity or use such category of *building* without obtaining an *operating permit* from the *authority having jurisdiction*. The procedures for applying for, issuing, revoking, and suspending *operating permits* shall be as set forth in the stricter of the *authority having jurisdiction's Code Enforcement Program* or a *Part 1203—Compliant Code Enforcement Program*.

[NY] 105.7 Violations. Any violation of any provision set forth in Sections 105.2 through 105.6 shall be a violation of the *Uniform Code*, and any person or entity violating any such provision shall be subject to the penalties prescribed in Executive Law Section 382(2). In addition, to the extent that any act or omission that violates any provision set forth in Sections 105.2 through 105.6 is also a violation of any other applicable law, any person or entity guilty of such act or omission shall also be subject to the penalties prescribed in or otherwise applicable to a violation of such other applicable law.

[NY] SECTION 106
SUBMITTAL DOCUMENTS

[NY] 106.1 General. Submittal documents consisting of construction documents, statements of *special inspections*, geotechnical reports, and other data shall be submitted with each application for a *building permit*.

[NY] 106.2 Construction documents. Construction documents shall be in accordance with Sections 106.2.1 through 106.2.9.

[NY] 106.2.1 Information on construction documents. Construction documents (1) shall define the scope of the proposed work; (2) shall be of sufficient clarity to indicate the location, nature and extent of the proposed work; (3) shall show in detail that the proposed work will conform to the provisions of the *Uniform Code*, the *Energy Code*, and other applicable codes, laws, ordinances, and regulations; (4) shall include all information required by any provision of this code (including but not limited to the information described in Sections 106.2.2 through 106.2.8) and all information required by any other applicable provision of the *Uniform Code*, and all information required by any applicable provision of the *Energy Code*; and (5) shall include any and all additional information and documentation that may be required by the stricter of the *Code Enforcement Program* of the *authority having jurisdiction* or *Part 1203—Compliant Code Enforcement Program*.

[NY] 106.2.1.1 Manufacturer's installation instructions. Manufacturer's installation instructions, as required by any applicable provision of the *Uniform Code* or by any applicable provision of the *Energy Code*, shall be available on the job site at the time of inspection.

[NY] 106.2.2 Fire protection system shop drawings. Shop drawings for the fire protection system(s) shall be submitted to indicate conformance to Chapter 9 of the *Building Code of New York State*, and any other applicable provision of the *Uniform Code*, and the construction documents. Such shop drawings shall be *approved* prior to the start of system installation. Shop drawings shall contain information as required by the installation standards referenced in Chapter 9 of the *Building Code of New York State* or in any other applicable provision of the *Uniform Code*.

[NY] 106.2.3 Means of egress. The construction documents shall show in sufficient detail the location, construction, size and character of all portions of the *means of egress,* including the path of the *exit discharge* to the *public way,* in compliance with the provisions the *Uniform Code*. In other than occupancies in Groups R-2, R-3, and I-1, the *construction documents* shall designate the number of occupants to be accommodated on every floor and in all rooms and spaces.

[NY] 106.2.4 Exterior wall envelope. *Construction documents* for all buildings shall describe the *exterior wall envelope* in sufficient detail to determine compliance with the *Uniform Code* and the *Energy Code*. The *construction documents* shall provide details of the *exterior wall envelope* as required, including flashing, intersections with dissimilar materials, corners, end details, control joints, intersections at roof, eaves or parapets, means of drainage, water-resistive membrane, and details around openings.

The construction documents shall include manufacturer's installation instructions that provide supporting documentation that the proposed penetration and opening details described in the construction documents maintain the weather resistance of the exterior wall envelope. The supporting documentation shall fully describe the exterior wall system that was tested, where applicable, as well as the test procedure used.

[NY] 106.2.5 Exterior balconies and elevated walking surfaces. Where balconies or other elevated walking surfaces are exposed to water from direct or blowing rain, snow or irrigation, and the structural framing is protected by an impervious moisture barrier, the *construction documents* shall include details for all elements of the impervious moisture barrier system. The *construction documents* shall include manufacturer's installation instructions.

[NY] 106.2.6 Site plan. The *construction documents* submitted with the application for *building permit* shall be accompanied by a site plan showing to scale the size and location of new construction and *existing structures* on the site, distances from lot lines, the established street grades, and proposed finished grades and, as applicable, *flood hazard areas*, *floodways*, and *design flood elevations*. The site plan shall be drawn in accordance with an accurate boundary line survey. In the case of demolition, the site plan shall show construction to be demolished and the location and size of *existing structures* and construction that are to remain on the site or plot. The *building official* is authorized to waive or modify the requirement for a site plan where the application for *building permit* is for an *alteration* or *repair* or where otherwise warranted.

[NY] 106.2.6.1 Design flood elevations. Where *design flood elevations* are not specified, they shall be established in accordance with Section 1612.3.1 of the *Building Code of New York State*.

INTERNATIONAL CODE COUNCIL®
Copyright © 2019 ICC & NYSDOS. ALL RIGHTS RESERVED. Accessed by Lauren Gualdino (lgualdino@briarcliffmanor.org), (-) Order Number #100880972 on May 08, 2020 07:05 AM (PDT) pursuant to License Agreement with ICC & NYSDOS. No further reproduction, no

100880972

[NY] 106.2.6.2 Flood hazard documentation. If located in a *flood hazard area*, documentation of the elevation of the lowest floor as required in Section 1612.4 of the *Building Code of New York State* shall be submitted to the *building official* prior to the final inspection.

[NY] 106.2.7 Structural information. The *construction documents* shall provide the information specified in Section 1603 of the *Building Code of New York State*.

[NY] 106.2.8 Relocatable buildings. *Construction documents* for relocatable buildings shall comply with Section 3112 of the *Building Code of New York State*.

[NY] 106.2.9 Design professional. Construction documents shall be prepared by a *registered design professional* where required by Article 145 or Article 147 of the New York State Education Law, by the stricter of *Code Enforcement Program* of the *authority having jurisdiction* or *Part 1203—Compliant Code Enforcement Program*, or by any other applicable statute, regulation, or local law or ordinance.

[NY] SECTION 107
SERVICE UTILITIES

[NY] 107.1 Connection of service utilities. Connections from a utility, source of energy, fuel or power to any *building* or system which is regulated by *Uniform Code* shall be made in accordance with the requirements of the *Uniform Code;* the regulations of the public utility providing such utility, source of energy, fuel or power; and the regulations of any governmental unit or agency having jurisdiction over such utility, source of energy, fuel or power.

[NY] 107.1.1 Temporary connection. Where *approved* by the *building official,* temporary connections from a utility, source of energy, fuel or power to a *building* or system may be made. Temporary connections shall be made in accordance with Section 107.1.

[NY] 107.2 Notice of disconnection of service utilities. The *owner* or the *owner's* authorized agent shall notify the *building official* of the disconnection of any utility service to the *building*, *structure*, or system regulated by this code.

[NY] SECTION 108
INSPECTION OF SOLID FUEL-BURNING HEATING APPLIANCES, CHIMNEYS AND FLUES

[NY] 108.1 General. This Section 108 is made part of the *Uniform Code* pursuant to Executive Law Section 378(5-c).

[NY] 108.2 Permit. Prior to the installation of any *solid* fuel-burning heating appliance, *chimney* or flue in any *dwelling* used as a residence, the *owner* thereof, or his agent, shall first secure a *permit* from the *authority having jurisdiction*.

[NY] 108.3 Installation and inspection. An appropriate and qualified inspector, as determined by the *authority having jurisdiction*, shall cause an inspection to be made of the *solid* fuel-burning heating appliance, *chimney* or flue at a time when such inspection will best determine conformity of such installation with the *Uniform Code*.

Exception: The *authority having jurisdiction* may waive such inspection for good cause shown.

[NY] 108.4 Certificate of approval. Upon approval of such installation, the *building official* or other appropriate official of the *authority having jurisdiction* shall issue a certificate evidencing compliance with the appropriate provisions of the *Uniform Code* (such certificate being hereinafter referred to as a "certificate of approval"). No *owner* of any *dwelling* used as a residence shall operate, or cause to be operated, any *solid* fuel-burning heating appliance until such installation, including *chimney* and flue, has been approved and a certificate of approval has been obtained from the *authority having jurisdiction*.

[NY] 108.4.1 Accidental fire. In the event of an accidental fire in a *solid* fuel-burning heating appliance, *chimney* or flue requiring the services of a fire department, the chief of the responding fire department may issue a temporary thirty-day certificate indicating substantial conformity with the *Uniform Code*.

The *authority having jurisdiction* shall cause an inspection to be made by an official inspector, as determined by the *Code Enforcement Program* of the *authority having jurisdiction*, and a new certificate to be issued indicating conformity of such *solid* fuel-burning heating appliance, *chimney* or flue with the *Uniform Code*.

[NY] 108.4.2 Liability. Pursuant to Executive Law Section 378(5-c)(f), the issuance of a certificate of approval shall not be deemed to give rise to any claim or cause of action for damages against the *authority having jurisdiction* or any official of the *authority having jurisdiction* for damages resulting from operation or use of such *solid* fuel-burning heating appliance, *chimney* or flue.

[NY] 108.5 Fee. The *authority having jurisdiction* may establish and collect a reasonable fee for such inspection from the *owner* of such property or such *owner's* agent.

[NY] 108.6 Violations. Pursuant to Executive Law Section 378(5-c)(h), any violation of this Section 108 shall be deemed a violation and shall be punishable by a fine not to exceed two hundred fifty dollars.

[NY] 108.7 Emergency repair. Where equipment replacements and *repairs* must be performed in an emergency situation and where a delay occasioned by the requirement of securing a *permit* could reasonably be expected to cause irreparable damage to the property or serious personal injury to the occupants or other person, the *owner* or his agent may commence such installation without first obtaining such *permit* provided application therefor is filed within three business days after such work is commenced.

INTERNATIONAL CODE COUNCIL®
Copyright © 2019 ICC & NYSDOS. ALL RIGHTS RESERVED. Accessed by Lauren Gualdino (lgualdino@briarcliffmanor.org), (-) Order Number #100880972 on May 08, 2020 07:05 AM (PDT) pursuant to License Agreement with ICC & NYSDOS. No further reproduction, no

100880972

INTERNATIONAL CODE COUNCIL®
Copyright © 2019 ICC & NYSDOS. ALL RIGHTS RESERVED. Accessed by Lauren Gualdino (lgualdino@briarcliffmanor.org), (-) Order Number #100880972 on May 08, 2020 07:05 AM (PDT) pursuant to License Agreement with ICC & NYSDOS. No further reproduction, no

100880972

CHAPTER 2
DEFINITIONS

SECTION 201
GENERAL

201.1 Scope. Unless otherwise expressly stated, the following words and terms shall, for the purposes of this code, have the meanings shown in this chapter.

201.2 Interchangeability. Words used in the present tense include the future; words stated in the masculine gender include the feminine and neuter; the singular number includes the plural and the plural, the singular.

201.3 Terms defined in other codes. Where terms are not defined in this code and are defined in the *Building Code of New York State, Energy Conservation Construction Code of New York State, Fuel Gas Code of New York State, Fire Code of New York State, Mechanical Code of New York State* or *Plumbing Code of New York State*, such terms shall have the meanings ascribed to them as in those codes.

201.4 Terms not defined. Where terms are not defined through the methods authorized by this chapter, such terms shall have ordinarily accepted meanings such as the context implies.

SECTION 202
GENERAL DEFINITIONS

[A] ADDITION. An extension or increase in floor area, number of stories, or height of a building or structure.

[NY] AGRICULTURAL BUILDING. A structure designed and constructed to house farm equipment, farm implements, poultry, livestock, hay, grain, or other horticultural products. This structure shall not be a place of human habitation or a place of employment where agricultural products are processed, treated or packaged, nor shall it be a place used by the public.

[A] ALTERATION. Any construction or renovation to an *existing structure* other than a *repair* or *addition*.

[A] APPROVED. Acceptable to the *building official*.

[NY] AUTHORITY HAVING JURISDICTION. The governmental unit or agency responsible for administration and enforcement of this code.

[A] BUILDING. Any structure utilized or intended for supporting or sheltering any occupancy.

[NY] BUILDING CODE OF NEW YORK STATE. The 2020 edition of the publication entitled "Building Code of New York State," published by the International Code Council, Inc. (publication date November 2019).

[NY] BUILDING OFFICIAL. The officer or other designated authority charged with the administration and enforcement of this code, or a duly authorized representative.

[A] CHANGE OF OCCUPANCY. A change in the use of a building or a portion of a building that results in any of the following:

1. A change of occupancy classification.
2. A change from one group to another group within an occupancy classification.
3. Any change in use within a group for which there is a change in application of the requirements of this code.

[NY] CODE ENFORCEMENT PROGRAM. The program under which an *authority having jurisdiction* administers and enforces this code, as such program is currently in effect and as such program may hereafter be amended from time to time.

[BS] DANGEROUS. Any building, structure or portion thereof that meets any of the conditions described below shall be deemed dangerous:

1. The building or structure has collapsed, has partially collapsed, has moved off its foundation, or lacks the necessary support of the ground.
2. There exists a significant risk of collapse, detachment or dislodgement of any portion, member, appurtenance or ornamentation of the building or structure under service loads.

[A] DEFERRED SUBMITTAL. Those portions of the design that are not submitted at the time of the application and that are to be submitted to the *building official* within a specified period.

[BS] DISPROPORTIONATE EARTHQUAKE DAMAGE. A condition of earthquake-related damage where both of the following occur:

1. The 0.3-second spectral acceleration at the building site as estimated by the United States Geological Survey for the earthquake in question is less than 40 percent of the mapped acceleration parameter SS.
2. The vertical elements of the lateral force-resisting system have suffered damage such that the lateral load-carrying capacity of any story in any horizontal direction has been reduced by more than 10 percent from its predamage condition.

[NY] ENERGY CODE. The New York State Energy Conservation Construction Code, adopted pursuant to Article 11 of the New York State Energy Law.

[NY] ENERGY CONSERVATION CONSTRUCTION CODE OF NEW YORK STATE. The 2020 edition of the publication entitled "Energy Conservation Construction Code of New York State," published by the International Code Council, Inc. (publication date November 2019).

[NY] ENERGY STORAGE SYSTEM. One or more devices, assembled together, capable of storing energy in order to supply electrical energy at a future time, not to include a stand-alone 12-volt car battery or an electric motor vehicle.

EQUIPMENT OR FIXTURE. Any plumbing, heating, electrical, ventilating, air conditioning, refrigerating, and fire protection equipment, and elevators, dumbwaiters, escalators, boilers, pressure vessels and other mechanical facilities or installations that are related to building services. Equipment or fixture shall not include manufacturing, production, or pro-

INTERNATIONAL CODE COUNCIL®
Copyright © 2019 ICC & NYSDOS. ALL RIGHTS RESERVED. Accessed by Lauren Gualdino (lgualdino@briarcliffmanor.org), (-) Order Number #100880972 on May 08, 2020 07:05 AM (PDT) pursuant to License Agreement with ICC & NYSDOS. No further reproduction, no

100880972

cess equipment, but shall include connections from building service to process equipment.

[NY] EXISTING BUILDING. A *building* that is legally occupied and/or for which a *certificate of occupancy* authorizing its use(s) has been issued, without regard to the date on which such legal occupancy began or the date on which such *certificate of occupancy* was issued.

[NY] EXISTING STRUCTURE. A *structure* that is legally occupied and/or for which a *certificate of occupancy* authorizing its use(s) has been issued, without regard to the date on which such legal occupancy began or the date on which such *certificate of occupancy* was issued.

[A] FACILITY. All or any portion of buildings, structures, site improvements, elements and pedestrian or vehicular routes located on a site.

[NY] FIRE CODE OF NEW YORK STATE. The 2020 edition of the publication entitled "Fire Code of New York State," published by the International Code Council, Inc. (publication date November 2019).

[BS] FLOOD HAZARD AREA. The greater of the following two areas:

1. The area within a flood plain subject to a 1-percent or greater chance of flooding in any year.
2. The area designated as a *flood hazard area* on a community's flood hazard map, or otherwise legally designated.

[NY] FUEL GAS CODE OF NEW YORK STATE. The 2020 edition of the publication entitled "Fuel Gas Code of New York State," published by the International Code Council, Inc. (publication date November 2019).

[NY] INTERNATIONAL SYMBOL OF ACCESSIBILITY. A sign or symbol that conforms to the accessibility symbol identified in the "Official Compilation of Codes Rules and Regulations of the State of New York," 19 NYCRR Part 300, "Universal Symbol of Access."

[A] HISTORIC BUILDINGS. Any building or structure that is one or more of the following:

1. Listed, or certified as eligible for listing, by the State Historic Preservation Officer or the Keeper of the National Register of Historic Places, in the National Register of Historic Places.
2. Designated as historic under an applicable state or local law.
3. Certified as a contributing resource within a National Register, state designated or locally designated historic district.

[NY] MECHANICAL CODE OF NEW YORK STATE. The 2020 edition of the publication entitled "Mechanical Code of New York State," published by the International Code Council, Inc. (publication date November 2019).

[B] NONCOMBUSTIBLE MATERIAL. A material that, under the conditions anticipated, will not ignite or burn when subjected to fire or heat. Materials that pass ASTM E136 are considered noncombustible materials.

[NY] PART 1202. The regulations set forth in 19 NYCRR Part 1202 ("Uniform Code: Administration and Enforcement in Certain Local Governments"), as currently in effect and as hereafter amended from time to time.

[NY] PART 1203. The regulations set forth in 19 NYCRR Part 1203 ("Uniform Code: Minimum Standards for Administration and Enforcement"), as currently in effect and as hereafter amended from time to time.

[NY] PART 1203—COMPLIANT CODE ENFORCEMENT PROGRAM. A code enforcement program that includes the features required by Part 1203 and satisfies the requirements of Part 1203.

[NY] PART 1204. The regulations set forth in 19 NYCRR Part 1204 ("Uniform Code: Administration and Enforcement by State Agencies"), as currently in effect and as hereafter amended from time to time.

[NY] PART 1205. The regulations set forth in 19 NYCRR Part 1205 ("Uniform Code: Variance Procedures"), as currently in effect and as hereafter amended from time to time.

[NY] PLUMBING CODE OF NEW YORK STATE. The 2020 edition of the publication entitled "Plumbing Code of New York State," published by the International Code Council, Inc. (publication date November 2019).

PRIMARY FUNCTION. A *primary function* is a major activity for which the facility is intended. Areas that contain a *primary function* include, but are not limited to, the customer services lobby of a bank, the dining area of a cafeteria, the meeting rooms in a conference center, as well as offices and other *work areas* in which the activities of the public accommodation or other private entity using the facility are carried out. Mechanical rooms, boiler rooms, supply storage rooms, employee lounges or locker rooms, janitorial closets, entrances, corridors and restrooms are not areas containing a *primary function*.

[NY] PROPERTY MAINTENANCE CODE OF NEW YORK STATE. The 2020 edition of the publication entitled "Property Maintenance Code of New York State," published by the International Code Council, Inc. (publication date November 2019).

[A] REGISTERED DESIGN PROFESSIONAL IN RESPONSIBLE CHARGE. A registered design professional engaged by the owner or the owner's authorized agent to review and coordinate certain aspects of the project, as determined by the *building official*, for compatibility with the design of the building or structure, including submittal documents prepared by others, *deferred submittal* documents and phased submittal documents.

REHABILITATION. Any work, as described by the categories of work defined herein, undertaken in an *existing building*.

RELOCATABLE BUILDING. A partially or completely assembled building constructed and designed to be reused multiple times and transported to different building sites.

[A] REPAIR. The reconstruction, replacement or renewal of any part of an *existing building* for the purpose of its maintenance or to correct damage.

INTERNATIONAL CODE COUNCIL®
Copyright © 2019 ICC & NYSDOS. ALL RIGHTS RESERVED. Accessed by Lauren Gualdino (lgualdino@briarcliffmanor.org), (-) Order Number #100880972 on May 08, 2020 07:05 AM (PDT) pursuant to License Agreement with ICC & NYSDOS. No further reproduction, no

100880972

[BS] REROOFING. The process of recovering or replacing an existing roof covering. See "Roof recover" and "Roof replacement."

[NY] RESIDENTIAL CODE OF NEW YORK STATE. The 2020 edition of the publication entitled "Residential Code of New York State," published by the International Code Council, Inc. (publication date November 2019).

[BS] RISK CATEGORY. A categorization of buildings and other structures for determination of flood, wind, snow, ice and earthquake loads based on the risk associated with unacceptable performance, as provided in Section 1604.5 of the *Building Code of New York State*.

[BS] ROOF COATING. A fluid-applied adhered coating used for roof maintenance, *roof repair*, or as a component of a roof covering system or roof assembly.

[BS] ROOF RECOVER. The process of installing an additional roof covering over a prepared existing roof covering without removing the existing roof covering.

[BS] ROOF REPAIR. Reconstruction or renewal of any part of an existing roof for the purpose of correcting damage or restoring the predamage condition.

[BS] ROOF REPLACEMENT. The process of removing the existing roof covering, repairing any damaged substrate and installing a new roof covering.

[BS] SEISMIC FORCES. The loads, forces and requirements prescribed herein, related to the response of the building to earthquake motions, to be used in the analysis and design of the structure and its components. Seismic forces are considered either full or reduced, as provided in Chapter 3.

[BS] SUBSTANTIAL DAMAGE. For the purpose of determining compliance with the flood provisions of this code, damage of any origin sustained by a structure whereby the cost of restoring the structure to its before-damaged condition would equal or exceed 50 percent of the market value of the structure before the damage occurred.

[BS] SUBSTANTIAL IMPROVEMENT. For the purpose of determining compliance with the flood provisions of this code, any *repair*, *alteration*, *addition*, or improvement of a building or structure, the cost of which equals or exceeds 50 percent of the market value of the structure, before the improvement or *repair* is started. If the structure has sustained *substantial damage*, any *repairs* are considered *substantial improvement* regardless of the actual *repair* work performed. The term does not, however, include either of the following:

1. Any project for improvement of a building required to correct existing health, sanitary, or safety code violations identified by the *building official* and that is the minimum necessary to ensure safe living conditions.
2. Any *alteration* of a historic structure, provided that the *alteration* will not preclude the structure's continued designation as a historic structure.

[BS] SUBSTANTIAL STRUCTURAL ALTERATION. An alteration in which the gravity load-carrying structural elements altered within a 5-year period support more than 30 percent of the total floor and roof area of the building or structure. The areas to be counted toward the 30 percent shall include mezzanines, penthouses, and in-filled courts and shafts tributary to the altered structural elements.

[BS] SUBSTANTIAL STRUCTURAL DAMAGE. A condition where any of the following apply:

1. The vertical elements of the lateral force-resisting system have suffered damage such that the lateral load-carrying capacity of any story in any horizontal direction has been reduced by more than 33 percent from its predamage condition.
2. The capacity of any vertical component carrying gravity load, or any group of such components, that has a tributary area more than 30 percent of the total area of the structure's floor(s) and roof(s) has been reduced more than 20 percent from its predamage condition, and the remaining capacity of such affected elements, with respect to all dead and live loads, is less than 75 percent of that required by the *Building Code of New York State* for new buildings of similar structure, purpose and location.
3. The capacity of any structural component carrying snow load, or any group of such components, that supports more than 30 percent of the roof area of similar construction has been reduced more than 20 percent from its predamage condition, and the remaining capacity with respect to dead, live and snow loads is less than 75 percent of that required by the *Building Code of New York State* for new buildings of similar structure, purpose and location.

TECHNICALLY INFEASIBLE. An *alteration* of a facility that has little likelihood of being accomplished because the existing structural conditions require the removal or *alteration* of a load-bearing member that is an essential part of the structural frame, or because other existing physical or site constraints prohibit modification or addition of elements, spaces or features which are in full and strict compliance with the minimum requirements for new construction and which are necessary to provide accessibility.

[NY] TOWNHOUSE. A single-family dwelling unit constructed in a group of three or more attached units in which each unit (1) extends from foundations to roof; (2) has open space on at least two sides; and (3) has a separate *means of egress.*

[NY] UNIFORM CODE. The New York State Uniform Fire Prevention and Building Code, adopted pursuant to Article 18 of the New York State Executive Law, as currently in effect and as hereafter amended from time to time.

UNSAFE. Buildings, structures or equipment that are unsanitary, or that are deficient due to inadequate means of egress facilities, inadequate light and ventilation, or that constitute a fire hazard, or in which the structure or individual structural members meet the definition of "*Dangerous*," or that are otherwise dangerous to human life or the public welfare, or that involve illegal or improper occupancy or inadequate mainte-

INTERNATIONAL CODE COUNCIL®
Copyright © 2019 ICC & NYSDOS. ALL RIGHTS RESERVED. Accessed by Lauren Gualdino (lgualdino@briarcliffmanor.org), (-) Order Number #100880972 on May 08, 2020 07:05 AM (PDT) pursuant to License Agreement with ICC & NYSDOS. No further reproduction, no

100880972

nance shall be deemed unsafe. A vacant structure that is not secured against entry shall be deemed unsafe.

WORK AREA. That portion or portions of a building consisting of all reconfigured spaces as indicated on the construction documents. Work area excludes other portions of the building where incidental work entailed by the intended work must be performed and portions of the building where work not initially intended by the owner is specifically required by this code.

INTERNATIONAL CODE COUNCIL®
Copyright © 2019 ICC & NYSDOS. ALL RIGHTS RESERVED. Accessed by Lauren Gualdino (lgualdino@briarcliffmanor.org), (-) Order Number #100880972 on May 08, 2020 07:05 AM (PDT) pursuant to License Agreement with ICC & NYSDOS. No further reproduction, no

100880972

CHAPTER 3
PROVISIONS FOR ALL COMPLIANCE METHODS

**

SECTION 301
ADMINISTRATION

301.1 General. The *repair*, *alteration*, *change of occupancy*, *addition* or relocation of all *existing buildings* shall comply with Section 301.2, 301.3, or 301.4.

301.2 Repairs. *Repairs* shall comply with the requirements of Chapter 4.

301.3 Alteration, addition or change of occupancy. The *alteration*, *addition* or *change of occupancy* of all *existing buildings* shall comply with one of the methods listed in Section 301.3.1, 301.3.2 or 301.3.3 as selected by the applicant. Sections 301.3.1 through 301.3.3 shall not be applied in combination with each other.

Exception: Subject to the approval of the *building official*, *alterations* complying with the laws in existence at the time the building or the affected portion of the building was built shall be considered in compliance with the provisions of this code. New structural members added as part of the *alteration* shall comply with the *Building Code of New York State*. This exception shall not apply to alterations that constitute substantial improvement in *flood hazard areas*, which shall comply with Section 503.2, 701.3 or 1301.3.3. This exception shall not apply to the structural provisions of Chapter 5 or to the structural provisions of Sections 706, 806 and 906.

301.3.1 Prescriptive compliance method. *Alterations*, *additions* and *changes of occupancy* complying with Chapter 5 of this code in buildings complying with the *Fire Code of New York State* shall be considered in compliance with the provisions of this code.

301.3.2 Work area compliance method. *Alterations*, *additions* and changes of occupancy complying with the applicable requirements of Chapters 6 through 12 of this code shall be considered in compliance with the provisions of this code.

301.3.3 Performance compliance method. *Alterations*, *additions* and changes of occupancy complying with Chapter 13 of this code shall be considered in compliance with the provisions of this code.

301.4 Relocated buildings. Relocated buildings shall comply with the requirements of Chapter 14.

301.5 Compliance with accessibility. Accessibility requirements for *existing buildings* shall comply with the 2009 edition of ICC A117.1.

SECTION 302
GENERAL PROVISIONS

302.1 Applicability. The provisions of Section 302 apply to all *alterations*, *repairs*, *additions*, relocations of structures and *changes of occupancy* regardless of compliance method.

302.2 Dangerous conditions. The *building official* shall have the authority to require the elimination of conditions deemed *dangerous*.

302.3 Additional codes. *Alterations, repairs, additions* and *changes of occupancy* to, or relocation of, *existing buildings* and structures shall comply with the provisions for *alterations, repairs, additions* and *changes of occupancy* or relocation, respectively, in this code and the *Energy Conservation Construction Code of New York State*, *Fire Code of New York State*, *Fuel Gas Code of New York State*, *Mechanical Code of New York State*, *Plumbing Code of New York State*, *Property Maintenance Code of New York State*, *Residential Code of New York State* and NFPA 70. Where provisions of the other codes conflict with provisions of this code, the provisions of this code shall take precedence.

302.4 Existing materials. Materials already in use in a building in compliance with requirements or approvals in effect at the time of their erection or installation shall be permitted to remain in use unless determined by the building official to be *unsafe*.

302.5 New and replacement materials. Except as otherwise required or permitted by this code, materials permitted by the applicable code for new construction shall be used. Like materials shall be permitted for *repairs* and *alterations*, provided that *unsafe* conditions are not created. Hazardous materials shall not be used where the code for new construction would not permit their use in buildings of similar occupancy, purpose and location.

[BS] 302.5.1 New structural members and connections. New structural members and connections shall comply with the detailing provisions of the *Building Code of New York State* for new buildings of similar structure, purpose and location.

Exception: Where alternative design criteria are specifically permitted.

302.6 Occupancy and use. Where determining the appropriate application of the referenced sections of this code, the occupancy and use of a building shall be determined in accordance with Chapter 3 of the *Building Code of New York State*.

SECTION 303
STRUCTURAL DESIGN LOADS AND EVALUATION AND DESIGN PROCEDURES

[BS] 303.1 Live loads. Where an *addition* or *alteration* does not result in increased design live load, existing gravity load-carrying structural elements shall be permitted to be evaluated and designed for live loads *approved* prior to the *addition* or *alteration*. If the *approved* live load is less than that required by Section 1607 of the *Building Code of New York State*, the area designated for the nonconforming live load shall be posted with placards of *approved* design indicating the *approved* live load. Where the *addition* or *alteration* results in increased design live load, the live load required by

INTERNATIONAL CODE COUNCIL®
Copyright © 2019 ICC & NYSDOS. ALL RIGHTS RESERVED. Accessed by Lauren Gualdino (lgualdino@briarcliffmanor.org), (-) Order Number #100880972 on May 08, 2020 07:05 AM (PDT) pursuant to License Agreement with ICC & NYSDOS. No further reproduction, no

100880972

Section 1607 of the *Building Code of New York State* shall be used.

[BS] 303.2 Snow loads on adjacent buildings. Where an *alteration* or *addition* changes the potential snow drift effects on an adjacent building, the *building official* is authorized to enforce Section 7.12 of ASCE 7.

[BS] 303.3 Seismic evaluation and design procedures. Where required, seismic evaluation or design shall be based on the procedures and criteria in this section, regardless of which compliance method is used.

[BS] 303.3.1 Compliance with full seismic forces. Where compliance requires the use of full seismic forces, the criteria shall be in accordance with one of the following:

1. One-hundred percent of the values in the *Building Code of New York State*. Where the existing seismic force-resisting system is a type that can be designated as "Ordinary," values of R, Ω_0 and C_d used for analysis in accordance with Chapter 16 of the *Building Code of New York State* shall be those specified for structural systems classified as "Ordinary" in accordance with Table 12.2-1 of ASCE 7, unless it can be demonstrated that the structural system will provide performance equivalent to that of a "Detailed," "Intermediate" or "Special" system.
2. ASCE 41, using a Tier 3 procedure and the two-level performance objective in Table 303.3.1 for the applicable *risk category*.

[BS] 303.3.2 Compliance with reduced seismic forces. Where seismic evaluation and design is permitted to use reduced seismic forces, the criteria used shall be in accordance with one of the following:

1. The *Building Code of New York State* using 75 percent of the prescribed forces. Values of R, Ω_0 and C_d used for analysis shall be as specified in Section 303.3.1 of this code.
2. Structures or portions of structures that comply with the requirements of the applicable chapter in Appendix A as specified in Items 2.1 through 2.4 and subject to the limitations of the respective Appendix A chapters shall be deemed to comply with this section.
   2.1. The seismic evaluation and design of unreinforced masonry bearing wall buildings in *Risk Category* I or II are permitted to be based on the procedures specified in Appendix Chapter A1.
   2.2. Seismic evaluation and design of the wall anchorage system in reinforced concrete and reinforced masonry wall buildings with flexible diaphragms in *Risk Category* I or II are permitted to be based on the procedures specified in Chapter A2.
   2.3. Seismic evaluation and design of cripple walls and sill plate anchorage in residential buildings of light-frame wood construction in *Risk Category* I or II are permitted to be based on the procedures specified in Chapter A3.
   2.4. Seismic evaluation and design of soft, weak, or open-front wall conditions in multiple-unit residential buildings of wood construction in *Risk Category* I or II are permitted to be based on the procedures specified in Chapter A4.
3. ASCE 41, using the performance objective in Table 303.3.2 for the applicable *risk category*.

SECTION 304
IN-SITU LOAD TESTS

[BS] 304.1 General. Where used, in-situ load tests shall be conducted in accordance with Section 1708 of the *Building Code of New York State*.

SECTION 305
ACCESSIBILITY FOR EXISTING BUILDINGS

305.1 Scope. The provisions of Sections 305.1 through 305.9 apply to maintenance, *change of occupancy*, *additions* and *alterations* to *existing buildings*, including those identified as *historic buildings*.

305.2 Maintenance of facilities. A *facility* that is constructed or altered to be *accessible* shall be maintained *accessible* during occupancy.

305.3 Extent of application. An *alteration* of an existing *facility* shall not impose a requirement for greater accessibility than that which would be required for new construction. *Alterations* shall not reduce or have the effect of reducing accessibility of a *facility* or portion of a *facility*.

305.4 Change of occupancy. *Existing buildings* that undergo a change of group or occupancy shall comply with this section.

Exception: Type B dwelling or sleeping units required by Section 1107 of the *Building Code of New York State* are

TABLE 303.3.1
PERFORMANCE OBJECTIVES FOR USE IN ASCE 41 FOR COMPLIANCE WITH FULL SEISMIC FORCES

RISK CATEGORY (Based on BCNYS Table 1604.5)	STRUCTURAL PERFORMANCE LEVEL FOR USE WITH BSE-1N EARTHQUAKE HAZARD LEVEL	STRUCTURAL PERFORMANCE LEVEL FOR USE WITH BSE-2N EARTHQUAKE HAZARD LEVEL
I	Life Safety (S-3)	Collapse Prevention (S-5)
II	Life Safety (S-3)	Collapse Prevention (S-5)
III	Damage Control (S-2)	Limited Safety (S-4)
IV	Immediate Occupancy (S-1)	Life Safety (S-3)

INTERNATIONAL CODE COUNCIL®
Copyright © 2019 ICC & NYSDOS. ALL RIGHTS RESERVED. Accessed by Lauren Gualdino (lgualdino@briarcliffmanor.org), (-) Order Number #100880972 on May 08, 2020 07:05 AM (PDT) pursuant to License Agreement with ICC & NYSDOS. No further reproduction, no

100880972

TABLE 303.3.2
PERFORMANCE OBJECTIVES FOR USE IN ASCE 41 FOR COMPLIANCE WITH REDUCED SEISMIC FORCES

RISK CATEGORY (Based on BCNYS Table 1604.5)	STRUCTURAL PERFORMANCE LEVEL FOR USE WITH BSE-1E EARTHQUAKE HAZARD LEVEL	STRUCTURAL PERFORMANCE LEVEL FOR USE WITH BSE-2E EARTHQUAKE HAZARD LEVEL
I	Life Safety (S-3). See Note a	Collapse Prevention (S-5)
II	Life Safety (S-3). See Note a	Collapse Prevention (S-5)
III	Damage Control (S-2). See Note a	Limited Safety (S-4). See Note b
IV	Immediate Occupancy (S-1)	Life Safety (S-3). See Note c

a. For Risk Categories I, II and III, the Tier 1 and Tier 2 procedures need not be considered for the BSE-1E earthquake hazard level.

b. For Risk Category III, the Tier 1 screening checklists shall be based on the Collapse Prevention, except that checklist statements using the Quick Check provisions shall be based on *MS*-factors that are the average of the values for Collapse Prevention and Life Safety.

c. For Risk Category IV, the Tier 1 screening checklists shall be based on Collapse Prevention, except that checklist statements using the Quick Check provisions shall be based on *MS*-factors for Life Safety.

not required to be provided in *existing buildings* and facilities undergoing a *change of occupancy* in conjunction with *alterations* where the *work area* is 50 percent or less of the aggregate area of the building.

305.4.1 Partial change of occupancy. Where a portion of the building is changed to a new occupancy classification, any *alterations* shall comply with Sections 305.6, 305.7 and 305.8.

305.4.2 Complete change of occupancy. Where an entire building undergoes a *change of occupancy*, it shall comply with Section 305.4.1 and shall have all of the following accessible features:

1. Not fewer than one accessible building entrance.
2. Not fewer than one accessible route from an accessible building entrance to *primary function* areas.
3. Signage complying with Section 1111 of the *Building Code of New York State*.
4. Accessible parking, where parking is being provided.
5. Not fewer than one accessible passenger loading zone, where loading zones are provided.
6. Not fewer than one accessible route connecting accessible parking and accessible passenger loading zones to an accessible entrance.

Where it is *technically infeasible* to comply with the new construction standards for any of these requirements for a change of group or occupancy, Items 1 through 6 shall conform to the requirements to the maximum extent technically feasible.

Exception: The accessible features listed in Items 1 through 6 are not required for an accessible route to Type B units.

305.5 Additions. Provisions for new construction shall apply to *additions*. An *addition* that affects the accessibility to, or contains an area of, a *primary function* shall comply with the requirements in Section 305.7.

305.6 Alterations. A *facility* that is altered shall comply with the applicable provisions in Chapter 11 of the *Building Code of New York State*, unless *technically infeasible*. Where compliance with this section is *technically infeasible*, the *alteration* shall provide access to the maximum extent technically feasible.

Exceptions:

1. The altered element or space is not required to be on an accessible route, unless required by Section 305.7.
2. Accessible means of egress required by Chapter 10 of the *Building Code of New York State* are not required to be provided in existing facilities.
3. The *alteration* to Type A individually owned dwelling units within a Group R-2 occupancy shall be permitted to meet the provision for a Type B dwelling unit.
4. Type B dwelling or sleeping units required by Section 1107 of the *Building Code of New York State* are not required to be provided in *existing buildings* and facilities undergoing *alterations* where the *work area* is 50 percent or less of the aggregate area of the building.

305.7 Alterations affecting an area containing a primary function. Where an *alteration* affects the accessibility to, or contains an area of *primary function*, the route to the *primary function* area shall be *accessible*. The accessible route to the *primary function* area shall include toilet facilities and drinking fountains serving the area of *primary function*.

Exceptions:

1. The costs of providing the *accessible* route are not required to exceed 20 percent of the costs of the *alterations* affecting the area of *primary function*.
2. This provision does not apply to *alterations* limited solely to windows, hardware, operating controls, electrical outlets and signs.
3. This provision does not apply to *alterations* limited solely to mechanical systems, electrical systems, installation or *alteration* of fire protection systems and abatement of hazardous materials.
4. This provision does not apply to *alterations* undertaken for the primary purpose of increasing the accessibility of a *facility*.
5. This provision does not apply to altered areas limited to Type B dwelling and sleeping units.

INTERNATIONAL CODE COUNCIL®
Copyright © 2019 ICC & NYSDOS. ALL RIGHTS RESERVED. Accessed by Lauren Gualdino (lgualdino@briarcliffmanor.org), (-) Order Number #100880972 on May 08, 2020 07:05 AM (PDT) pursuant to License Agreement with ICC & NYSDOS. No further reproduction, no

100880972

305.8 Scoping for alterations. The provisions of Sections 305.8.1 through 305.8.15 shall apply to *alterations* to *existing buildings* and *facilities*.

305.8.1 Entrances. Where an *alteration* includes alterations to an entrance that is not accessible, and the *facility* has an *accessible* entrance, the altered entrance is not required to be *accessible* unless required by Section 305.7. Signs complying with Section 1111 of the *Building Code of New York State* shall be provided.

305.8.2 Elevators. Altered elements of existing elevators shall comply with ASME A17.1 and ICC A117.1. Such elements shall also be altered in elevators programmed to respond to the same hall call control as the altered elevator.

305.8.3 Platform lifts. Platform (wheelchair) lifts complying with ICC A117.1 and installed in accordance with ASME A18.1 shall be permitted as a component of an accessible route.

305.8.4 Stairways and escalators in existing buildings. Where an escalator or stairway is added where none existed previously and major structural modifications are necessary for installation, an accessible route shall be provided between the levels served by the escalator or stairways in accordance with Section 1104.4 of the *Building Code of New York State.*

305.8.5 Ramps. Where slopes steeper than allowed by Section 1012.2 of the *Building Code of New York State* are necessitated by space limitations, the slope of ramps in or providing access to existing facilities shall comply with Table 305.8.5.

TABLE 305.8.5
RAMPS

SLOPE	MAXIMUM RISE
Steeper than 1:10 but not steeper than 1:8	3 inches
Steeper than 1:12 but not steeper than 1:10	6 inches

For SI: 1 inch = 25.4 mm.

305.8.6 Accessible dwelling or sleeping units. Where Group I-1, I-2, I-3, R-1, R-2 or R-4 dwelling or sleeping units are being altered or added, the requirements of Section 1107 of the *Building Code of New York State* for Accessible units apply only to the quantity of spaces being altered or added.

305.8.7 Type A dwelling or sleeping units. Where more than 20 Group R-2 dwelling or sleeping units are being altered or added, the requirements of Section 1107 of the *Building Code of New York State* for Type A units apply only to the quantity of the spaces being altered or added.

305.8.8 Type B dwelling or sleeping units. Where four or more Group I-1, I-2, R-1, R-2, R-3 or R-4 dwelling or sleeping units are being added, the requirements of Section 1107 of the *Building Code of New York State* for Type B units apply only to the quantity of the spaces being added. Where Group I-1, I-2, R-1, R-2, R-3 or R-4 dwelling or sleeping units are being altered and where the *work area* is greater than 50 percent of the aggregate area of the building, the requirements of Section 1107 of the *Building Code of New York State* for Type B units apply only to the quantity of the spaces being altered.

305.8.9 Jury boxes and witness stands. In *alterations*, accessible wheelchair spaces are not required to be located within the defined area of raised jury boxes or witness stands and shall be permitted to be located outside these spaces where the ramp or lift access restricts or projects into the required means of egress.

305.8.10 Toilet rooms. Where it is *technically infeasible* to alter existing toilet and bathing rooms to be *accessible*, an *accessible* family or assisted-use toilet or bathing room constructed in accordance with Section 1109.2.1 of the *Building Code of New York State* is permitted. The family or assisted-use toilet or bathing room shall be located on the same floor and in the same area as the existing toilet or bathing rooms. At the inaccessible toilet and bathing rooms, directional signs indicating the location of the nearest family or assisted-use toilet room or bathing room shall be provided. These directional signs shall include the International Symbol of Accessibility and sign characters shall meet the visual character requirements in accordance with ICC A117.1.

305.8.11 Additional toilet and bathing facilities. In assembly and mercantile occupancies, where additional toilet fixtures are added, not fewer than one accessible family or assisted-use toilet room shall be provided where required by Section 1109.2.1 of the *Building Code of New York State*. In recreational facilities, where additional bathing rooms are being added, not fewer than one family or assisted-use bathing room shall be provided where required by Section 1109.2.1 of the *Building Code of New York State*.

305.8.12 Dressing, fitting and locker rooms. Where it is *technically infeasible* to provide accessible dressing, fitting or locker rooms at the same location as similar types of rooms, one accessible room on the same level shall be provided. Where separate-sex facilities are provided, accessible rooms for each sex shall be provided. Separate-sex facilities are not required where only unisex rooms are provided.

305.8.13 Fuel dispensers. Operable parts of replacement fuel dispensers shall be permitted to be 54 inches (1370 mm) maximum, measuring from the surface of the vehicular way where fuel dispensers are installed on existing curbs.

305.8.14 Thresholds. The maximum height of thresholds at doorways shall be $^3/_4$ inch (19.1 mm). Such thresholds shall have beveled edges on each side.

305.8.15 Amusement rides. Where the structural or operational characteristics of an amusement ride are altered to the extent that the amusement ride's performance differs from that specified by the manufacturer or the original design, the amusement ride shall comply with requirements for new construction in Section 1110.4.8 of the *Building Code of New York State*.

305.9 Historic buildings. These provisions shall apply to *facilities* designated as historic structures that undergo *alterations* or a *change of occupancy*, unless *technically infeasi-*

INTERNATIONAL CODE COUNCIL®
Copyright © 2019 ICC & NYSDOS. ALL RIGHTS RESERVED. Accessed by Lauren Gualdino (lgualdino@briarcliffmanor.org), (-) Order Number #100880972 on May 08, 2020 07:05 AM (PDT) pursuant to License Agreement with ICC & NYSDOS. No further reproduction, no

100880972

ble. Where compliance with the requirements for accessible routes, entrances or toilet rooms would threaten or destroy the historic significance of the *facility*, as determined by the authority having jurisdiction, the alternative requirements of Sections 305.9.1 through 305.9.4 for that element shall be permitted.

Exception: Type B dwelling or sleeping units required by Section 1107 of the *Building Code of New York State* are not required to be provided in historic buildings.

305.9.1 Site arrival points. Not fewer than one accessible route from a site arrival point to an accessible entrance shall be provided.

305.9.2 Multiple-level buildings and facilities. An accessible route from an accessible entrance to public spaces on the level of the accessible entrance shall be provided.

305.9.3 Entrances. Not fewer than one main entrance shall be accessible.

Exception: If a public entrance cannot be made accessible, an accessible entrance that is unlocked while the building is occupied shall be provided; or, a locked accessible entrance with a notification system or remote monitoring shall be provided.

Signs complying with Section 1111 of the *Building Code of New York State* shall be provided at the public entrance and the accessible entrance.

305.9.4 Toilet and bathing facilities. Where toilet rooms are provided, not fewer than one accessible family or assisted-use toilet room complying with Section 1109.2.1 of the *Building Code of New York State* shall be provided.

[NY] 305.10 Off-street parking lots. Accessible parking complying with Sections 1102.1 and 1106 of the *Building Code of New York State* shall be provided within a six-month period of time when performing any of the following categories of work in an off-street parking lot:

1. Repave, reseal or repaint more than one half of the total number of parking spaces in an off-street parking lot, which contains designated accessible parking spaces;
2. Repave, reseal or repaint more than one half of the total number of designated accessible parking spaces in an off-street parking lot; or
3. Creates designated accessible parking spaces in an off-street parking lot.

[NY] 305.10.1 Signage. Accessible parking spaces shall be provided with signage displaying the International Symbol of Accessibility in accordance with Section 1111.1 of the *Building Code of New York State*. Each access aisle shall be provided with signage reading "NO PARKING ANYTIME." Signs shall be permanently installed in accordance with ICC A117.1 and shall not interfere with an accessible route from an access aisle.

SECTION 306
ENERGY STORAGE SYSTEMS

[NY] 306.1 Energy storage systems. The installation, operation, maintenance, repair, and retrofitting of *energy storage systems* shall be in accordance with Section 1208 of the *Fire Code of New York State*.

INTERNATIONAL CODE COUNCIL®
Copyright © 2019 ICC & NYSDOS. ALL RIGHTS RESERVED. Accessed by Lauren Gualdino (lgualdino@briarcliffmanor.org), (-) Order Number #100880972 on May 08, 2020 07:05 AM (PDT) pursuant to License Agreement with ICC & NYSDOS. No further reproduction, no

100880972

INTERNATIONAL CODE COUNCIL®
Copyright © 2019 ICC & NYSDOS. ALL RIGHTS RESERVED. Accessed by Lauren Gualdino (lgualdino@briarcliffmanor.org), (-) Order Number #100880972 on May 08, 2020 07:05 AM (PDT) pursuant to License Agreement with ICC & NYSDOS. No further reproduction, no

100880972

CHAPTER 4
REPAIRS

SECTION 401
GENERAL

401.1 Scope. *Repairs* shall comply with the requirements of this chapter. *Repairs* to *historic buildings* need only comply with Chapter 12.

401.2 Compliance. The work shall not make the building less complying than it was before the *repair* was undertaken.

[BS] 401.3 Flood hazard areas. In flood hazard areas, *repairs* that constitute *substantial improvement* shall require that the building comply with Section 1612 of the *Building Code of New York State*, or Section R322 of the *Residential Code of New York State*, as applicable.

SECTION 402
BUILDING ELEMENTS AND MATERIALS

402.1 Glazing in hazardous locations. Replacement glazing in hazardous locations shall comply with the safety glazing requirements of the *Building Code of New York State* or *Residential Code of New York State* as applicable.

Exception: Glass block walls, louvered windows and jalousies repaired with like materials.

SECTION 403
FIRE PROTECTION

403.1 General. *Repairs* shall be done in a manner that maintains the level of fire protection provided.

SECTION 404
MEANS OF EGRESS

404.1 General. *Repairs* shall be done in a manner that maintains the level of protection provided for the means of egress.

SECTION 405
STRUCTURAL

[BS] 405.1 General. Structural *repairs* shall be in compliance with this section and Section 401.2.

[BS] 405.2 Repairs to damaged buildings. *Repairs* to damaged buildings shall comply with this section.

[BS] 405.2.1 Repairs for less than substantial structural damage. Unless otherwise required by this section, for damage less than *substantial structural damage*, the damaged elements shall be permitted to be restored to their predamage condition.

[BS] 405.2.1.1 Snow damage. Structural components whose damage was caused by or related to snow load effects shall be repaired, replaced or altered to satisfy the requirements of Section 1608 of the *Building Code of New York State*.

[BS] 405.2.2 Disproportionate earthquake damage. A building assigned to Seismic Design Category D, E or F that has sustained *disproportionate earthquake damage* shall be subject to the requirements for buildings with *substantial structural damage* to vertical elements of the lateral force-resisting system.

[BS] 405.2.3 Substantial structural damage to vertical elements of the lateral force-resisting system. A building that has sustained *substantial structural damage* to the vertical elements of its lateral force-resisting system shall be evaluated in accordance with Section 405.2.3.1, and either repaired in accordance with Section 405.2.3.2 or repaired and retrofitted in accordance with Section 405.2.3.3, depending on the results of the evaluation.

Exceptions:

1. Buildings assigned to Seismic Design Category A, B or C whose *substantial structural damage* was not caused by earthquake need not be evaluated or retrofitted for load combinations that include earthquake effects.
2. One- and two-family dwellings need not be evaluated or retrofitted for load combinations that include earthquake effects.

[BS] 405.2.3.1 Evaluation. The building shall be evaluated by a registered design professional, and the evaluation findings shall be submitted to the *building official*. The evaluation shall establish whether the damaged building, if repaired to its predamage state, would comply with the provisions of the *Building Code of New York State* for load combinations that include wind or earthquake effects, except that the seismic forces shall be the reduced seismic forces.

[BS] 405.2.3.2 Extent of repair for compliant buildings. If the evaluation establishes that the building in its predamage condition complies with the provisions of Section 405.2.3.1, then the damaged elements shall be permitted to be restored to their predamage condition.

[BS] 405.2.3.3 Extent of repair for noncompliant buildings. If the evaluation does not establish that the building in its predamage condition complies with the provisions of Section 405.2.3.1, then the building shall be retrofitted to comply with the provisions of this section. The wind loads for the *repair* and *retrofit* shall be those required by the building code in effect at the time of original construction, unless the damage was caused by wind, in which case the wind loads shall be in accordance with the *Building Code of New York State*. The seismic loads for this *retrofit* design shall be those required by the building code in effect at the time of original construction, but not less than the reduced seismic forces.

INTERNATIONAL CODE COUNCIL®
Copyright © 2019 ICC & NYSDOS. ALL RIGHTS RESERVED. Accessed by Lauren Gualdino (lgualdino@briarcliffmanor.org), (-) Order Number #100880972 on May 08, 2020 07:05 AM (PDT) pursuant to License Agreement with ICC & NYSDOS. No further reproduction, no

100880972

[BS] 405.2.4 Substantial structural damage to gravity load-carrying components. Gravity load-carrying components that have sustained *substantial structural damage* shall be rehabilitated to comply with the applicable provisions for dead and live loads in the *Building Code of New York State*. Snow loads shall be considered if the *substantial structural damage* was caused by or related to snow load effects. Undamaged gravity load-carrying components that receive dead, live or snow loads from rehabilitated components shall also be rehabilitated if required to comply with the design loads of the *rehabilitation* design.

[BS] 405.2.4.1 Lateral force-resisting elements. Regardless of the level of damage to vertical elements of the lateral force-resisting system, if *substantial structural damage* to gravity load-carrying components was caused primarily by wind or seismic effects, then the building shall be evaluated in accordance with Section 405.2.3.1 and, if noncompliant, retrofitted in accordance with Section 405.2.3.3.

Exceptions:

1. Buildings assigned to Seismic Design Category A, B, or C whose *substantial structural damage* was not caused by earthquake need not be evaluated or retrofitted for load combinations that include earthquake effects.
2. One- and two-family dwellings need not be evaluated or retrofitted for load combinations that include earthquake effects.

[BS] 405.2.5 Flood hazard areas. In *flood hazard* areas, buildings that have sustained *substantial damage* shall be brought into compliance with Section 1612 of the *Building Code of New York State*, or Section R322 of the *Residential Code of New York State*, as applicable.

SECTION 406
ELECTRICAL

406.1 Material. Existing electrical wiring and equipment undergoing *repair* shall be allowed to be repaired or replaced with like material.

406.1.1 Receptacles. Replacement of electrical receptacles shall comply with the applicable requirements of Section 406.4(D) of NFPA 70.

406.1.2 Plug fuses. Plug fuses of the Edison-base type shall be used for replacements only where there is no evidence of over fusing or tampering per applicable requirements of Section 240.51(B) of NFPA 70.

406.1.3 Nongrounding-type receptacles. For replacement of nongrounding-type receptacles with grounding-type receptacles and for branch circuits that do not have an equipment grounding conductor in the branch circuitry, the grounding conductor of a grounding-type receptacle outlet shall be permitted to be grounded to any accessible point on the grounding electrode system or to any accessible point on the grounding electrode conductor in accordance with Section 250.130(C) of NFPA 70.

406.1.4 Group I-2 receptacles. Receptacles in patient bed locations of Group I-2 that are not "hospital grade" shall be replaced with "hospital grade" receptacles, as required by NFPA 99 and Article 517 of NFPA 70.

406.1.5 Grounding of appliances. Frames of electric ranges, wall-mounted ovens, counter-mounted cooking units, clothes dryers and outlet or junction boxes that are part of the existing branch circuit for these appliances shall be permitted to be grounded to the grounded circuit conductor in accordance with Section 250.140 of NFPA 70.

SECTION 407
MECHANICAL

407.1 General. Existing mechanical systems undergoing *repair* shall not make the building less complying than it was before the damaged occurred.

407.2 Mechanical draft systems for manually fired appliances and fireplaces. A mechanical draft system shall be permitted to be used with manually fired appliances and fireplaces where such a system complies with all of the following requirements:

1. The mechanical draft device shall be listed and installed in accordance with the manufacturer's installation instructions.
2. A device shall be installed that produces visible and audible warning upon failure of the mechanical draft device or loss of electrical power at any time that the mechanical draft device is turned on. This device shall be equipped with a battery backup if it receives power from the building wiring.
3. A smoke detector shall be installed in the room with the appliance or fireplace. This device shall be equipped with a battery backup if it receives power from the building wiring.

SECTION 408
PLUMBING

408.1 Materials. Plumbing materials and supplies shall not be used for *repairs* that are prohibited in the *Plumbing Code of New York State*.

[NY] 408.2 Water closet replacement. When any water closet is replaced, the replacement water closet shall comply with Section 604.4 of the *Plumbing Code of New York State*.

Exception: Blowout-design water closets [3.5 gallons (13 L) per flushing cycle].

INTERNATIONAL CODE COUNCIL®
Copyright © 2019 ICC & NYSDOS. ALL RIGHTS RESERVED. Accessed by Lauren Gualdino (lgualdino@briarcliffmanor.org), (-) Order Number #100880972 on May 08, 2020 07:05 AM (PDT) pursuant to License Agreement with ICC & NYSDOS. No further reproduction, no

100880972

CHAPTER 5
PRESCRIPTIVE COMPLIANCE METHOD

SECTION 501
GENERAL

501.1 Scope. The provisions of this chapter shall control the *alteration, addition* and *change of occupancy* of *existing buildings* and structures, including *historic buildings* and structures as referenced in Section 301.3.1.

Exception: Existing bleachers, grandstands and folding and telescopic seating shall comply with ICC 300.

501.1.1 Compliance with other methods. *Alterations*, *additions* and *changes of occupancy* to *existing buildings* and structures shall comply with the provisions of this chapter or with one of the methods provided in Section 301.3.

*

➡ **501.2 Fire-resistance ratings.** Where *approved* by the *building official*, in buildings where an automatic sprinkler system installed in accordance with Section 903.3.1.1 or 903.3.1.2 of the *Building Code of New York State* has been added, and the building is now sprinklered throughout, the required fire-resistance ratings of building elements and materials shall be permitted to meet the requirements of the current building code. The building is required to meet the other applicable requirements of the *Building Code of New York State*.

Plans, investigation and evaluation reports, and other data shall be submitted indicating which building elements and materials the applicant is requesting the *building official* to review and approve for determination of applying the current building code fire-resistance ratings. Any special construction features, including fire-resistance-rated assemblies and smoke-resistive assemblies, conditions of occupancy, means of egress conditions, fire code deficiencies, *approved* modifications or *approved* alternative materials, design and methods of construction, and equipment applying to the building that impact required fire-resistance ratings shall be identified in the evaluation reports submitted.

SECTION 502
ADDITIONS

502.1 General. *Additions* to any building or structure shall comply with the requirements of the *Building Code of New York State* for new construction. Alterations to the *existing building* or structure shall be made to ensure that the *existing building* or structure together with the *addition* are not less complying with the provisions of the *Building Code of New York State* than the *existing building* or structure was prior to the *addition*. An *existing building* together with its *additions* shall comply with the height and area provisions of Chapter 5 of the *Building Code of New York State*.

[BS] 502.2 Disproportionate earthquake damage. A building assigned to Seismic Design Category D, E or F that has sustained *disproportionate earthquake damage* shall be subject to the requirements for buildings with *substantial structural damage* to vertical elements of the lateral force-resisting system.

[BS] 502.3 Flood hazard areas. For buildings and structures in *flood hazard* areas established in Section 1612.3 of the *Building Code of New York State*, or Section R322 of the *Residential Code of New York State*, as applicable, any *addition* that constitutes *substantial improvement* of the *existing structure* shall comply with the flood design requirements for new construction, and all aspects of the *existing structure* shall be brought into compliance with the requirements for new construction for flood design.

For buildings and structures in *flood hazard areas* established in Section 1612.3 of the *Building Code of New York State*, or Section R322 of the *Residential Code of New York State*, as applicable, any *additions* that do not constitute *substantial improvement* of the *existing structure* are not required to comply with the flood design requirements for new construction.

[BS] 502.4 Existing structural elements carrying gravity load. Any existing gravity load-carrying structural element for which an *addition* and its related *alterations* cause an increase in design dead, live or snow load, including snow drift effects, of more than 5 percent shall be replaced or altered as needed to carry the gravity loads required by the *Building Code of New York State* for new structures. Any existing gravity load-carrying structural element whose vertical load-carrying capacity is decreased as part of the *addition* and its related *alterations* shall be considered to be an altered element subject to the requirements of Section 503.3. Any existing element that will form part of the lateral load path for any part of the *addition* shall be considered to be an existing lateral load-carrying structural element subject to the requirements of Section 502.5.

Exception: Buildings of Group R occupancy with not more than five dwelling or sleeping units used solely for residential purposes where the *existing building* and the *addition* together comply with the conventional light-frame construction methods of the *Building Code of New York State* or the provisions of the *Residential Code of New York State*.

[BS] 502.5 Existing structural elements carrying lateral load. Where the *addition* is structurally independent of the *existing structure*, existing lateral load-carrying structural elements shall be permitted to remain unaltered. Where the *addition* is not structurally independent of the *existing structure*, the *existing structure* and its *addition* acting together as a single structure shall be shown to meet the requirements of Sections 1609 and 1613 of the *Building Code of New York State* using full seismic forces.

Exceptions:

1. Any existing lateral load-carrying structural element whose demand-capacity ratio with the *addition* considered is not more than 10 percent greater than its demand-capacity ratio with the *addition* ignored shall be permitted to remain unaltered. For purposes of calculating demand-capacity ratios, the demand shall consider applicable load combinations with

INTERNATIONAL CODE COUNCIL®
Copyright © 2019 ICC & NYSDOS. ALL RIGHTS RESERVED. Accessed by Lauren Gualdino (lgualdino@briarcliffmanor.org), (-) Order Number #100880972 on May 08, 2020 07:05 AM (PDT) pursuant to License Agreement with ICC & NYSDOS. No further reproduction, no

100880972

design lateral loads or forces in accordance with Sections 1609 and 1613 of the *Building Code of New York State*. For purposes of this exception, comparisons of demand-capacity ratios and calculation of design lateral loads, forces and capacities shall account for the cumulative effects of *additions* and *alterations* since original construction.

2. Buildings of Group R occupancy with not more than five dwelling or sleeping units used solely for residential purposes where the *existing building* and the addition together comply with the conventional light-frame construction methods of the *Building Code of New York State* or the provisions of the *Residential Code of New York State*.

502.6 Smoke alarms in existing portions of a building. Where an *addition* is made to a building or structure of a Group R or I-1 occupancy, the *existing building* shall be provided with smoke alarms in accordance with Section 1103.8 of the *Fire Code of New York State*.

[NY] 502.7 Carbon monoxide alarms in existing portions of a building. Where an addition is made to a building, the addition shall be provided with carbon monoxide detection and notification that complies with the requirements for new construction in accordance with Section 915 of the *Fire Code of New York State*.

Exceptions:

1. Work involving the exterior surfaces of buildings, such as the replacement of roofing or siding, the addition or replacement of windows or doors, or the addition of porches or decks.
2. Installation, alteration or *repairs* of plumbing or mechanical systems, other than fuel-burning appliances.

[NY] 502.7.1 New fuel-burning appliance or motor vehicle related occupancy. When a new fuel-burning appliance is installed or located in an addition, or when a new motor vehicle related occupancy is added to an existing building, the existing portion of the building shall be provided with additional carbon monoxide detection and notification appliances as necessitated by the new fuel-burning appliance or motor vehicle related occupancy. The selection, design, and location of the additional detection and notification appliances shall be in accordance with Section 915 of the *Fire Code of New York State*.

Exception: Where carbon monoxide alarms are powered by a 10-year battery, interconnection shall not be required in the following:

1. Existing portions of a building that are provided with additional carbon monoxide detection and notification appliances as required by Section 502.7.1, unless otherwise required by the *Uniform Code*.
2. Buildings without commercial power.

502.8 Additions to Group E facilities. For *additions* to Group E occupancies, storm shelters shall be provided in accordance with Section 1106.1.

SECTION 503
ALTERATIONS

503.1 General. Except as provided by Section 302.4, 302.5 or this section, *alterations* to any building or structure shall comply with the requirements of the *Building Code of New York State* for new construction. *Alterations* shall be such that the *existing building* or structure is not less complying with the provisions of the *Building Code of New York State* than the *existing building* or structure was prior to the *alteration*.

Exceptions:

1. An existing stairway shall not be required to comply with the requirements of Section 1011 of the *Building Code of New York State* where the existing space and construction does not allow a reduction in pitch or slope.
2. Handrails otherwise required to comply with Section 1011.11 of the *Building Code of New York State* shall not be required to comply with the requirements of Section 1014.6 of the *Building Code of New York State* regarding full extension of the handrails where such extensions would be hazardous because of plan configuration.
3. Where provided in below-grade transportation stations, existing and new escalators shall be permitted to have a have a clear width of less than 32 inches (813 mm).

[BS] 503.2 Flood hazard areas. For buildings and structures in *flood hazard areas* established in Section 1612.3 of the *Building Code of New York State*, or Section R322 of the *Residential Code of New York State*, as applicable, any *alteration* that constitutes *substantial improvement* of the *existing structure* shall comply with the flood design requirements for new construction, and all aspects of the *existing structure* shall be brought into compliance with the requirements for new construction for flood design.

For buildings and structures in *flood hazard areas* established in Section 1612.3 of the *Building Code of New York State*, or Section R322 of the *Residential Code of New York State*, as applicable, any *alterations* that do not constitute *substantial improvement* of the *existing structure* are not required to comply with the flood design requirements for new construction.

[BS] 503.3 Existing structural elements carrying gravity load. Any existing gravity load-carrying structural element for which an *alteration* causes an increase in design dead, live or snow load, including snow drift effects, of more than 5 percent shall be replaced or altered as needed to carry the gravity loads required by the *Building Code of New York State* for new structures. Any existing gravity load-carrying structural element whose gravity load-carrying capacity is decreased as part of the *alteration* shall be shown to have the capacity to resist the applicable design dead, live and snow

INTERNATIONAL CODE COUNCIL®
Copyright © 2019 ICC & NYSDOS. ALL RIGHTS RESERVED. Accessed by Lauren Gualdino (lgualdino@briarcliffmanor.org), (-) Order Number #100880972 on May 08, 2020 07:05 AM (PDT) pursuant to License Agreement with ICC & NYSDOS. No further reproduction, no

100880972

loads including snow drift effects required by the *Building Code of New York State* for new structures.

Exceptions:

1. Buildings of Group R occupancy with not more than five dwelling or sleeping units used solely for residential purposes where the altered building complies with the conventional light-frame construction methods of the *Building Code of New York State* or the provisions of the *Residential Code of New York State*.
2. Buildings in which the increased dead load is due entirely to the addition of a second layer of roof covering weighing 3 pounds per square foot (0.1437 kN/m^2) or less over an existing single layer of roof covering.

[BS] 503.4 Existing structural elements carrying lateral load. Except as permitted by Section 503.13, where the *alteration* increases design lateral loads, results in a prohibited structural irregularity as defined in ASCE 7, or decreases the capacity of any existing lateral load-carrying structural element, the structure of the altered building or structure shall meet the requirements of Sections 1609 and 1613 of the *Building Code of New York State*. Reduced seismic forces shall be permitted.

Exception: Any existing lateral load-carrying structural element whose demand-capacity ratio with the *alteration* considered is not more than 10 percent greater than its demand-capacity ratio with the *alteration* ignored shall be permitted to remain unaltered. For purposes of calculating demand-capacity ratios, the demand shall consider applicable load combinations with design lateral loads or forces in accordance with Sections 1609 and 1613 of the *Building Code of New York State*. Reduced seismic forces shall be permitted. For purposes of this exception, comparisons of demand-capacity ratios and calculation of design lateral loads, forces and capacities shall account for the cumulative effects of *additions* and *alterations* since original construction.

[BS] 503.5 Seismic Design Category F. Where the *work area* exceeds 50 percent of the building area, and where the building is assigned to Seismic Design Category F, the structure of the altered building shall meet the requirements of Sections 1609 and 1613 of the *Building Code of New York State*. Reduced seismic forces shall be permitted.

[BS] 503.6 Bracing for unreinforced masonry parapets on reroofing. Where the intended *alteration* requires a permit for reroofing and involves removal of roofing materials from more than 25 percent of the roof area of a building assigned to Seismic Design Category D, E or F that has parapets constructed of unreinforced masonry, the work shall include installation of parapet bracing to resist out-of-plane seismic forces, unless an evaluation demonstrates compliance of such items. Reduced seismic forces shall be permitted.

[BS] 503.7 Anchorage for concrete and reinforced masonry walls. Where the *work area* exceeds 50 percent of the building area, the building is assigned to Seismic Design Category C, D, E or F and the building's structural system includes concrete or reinforced masonry walls with a flexible roof diaphragm, the *alteration* work shall include installation of wall anchors at the roof line, unless an evaluation demonstrates compliance of existing wall anchorage. Use of reduced seismic forces shall be permitted.

[BS] 503.8 Anchorage for unreinforced masonry walls in major alterations. Where the *work area* exceeds 50 percent of the building area, the building is assigned to Seismic Design Category C, D, E or F and the building's structural system includes unreinforced masonry bearing walls, the *alteration* work shall include installation of wall anchors at the floor and roof lines, unless an evaluation demonstrates compliance of existing wall anchorage. Reduced seismic forces shall be permitted.

[BS] 503.9 Bracing for unreinforced masonry parapets in major alterations. Where the *work area* exceeds 50 percent of the building area, and where the building is assigned to Seismic Design Category C, D, E or F, parapets constructed of unreinforced masonry shall have bracing installed as needed to resist out-of-plane seismic forces, unless an evaluation demonstrates compliance of such items. Reduced seismic forces shall be permitted.

[BS] 503.10 Anchorage of unreinforced masonry partitions in major alterations. Where the *work area* exceeds 50 percent of the building area, and where the building is assigned to Seismic Design Category C, D, E or F, unreinforced masonry partitions and nonstructural walls within the *work area* and adjacent to egress paths from the *work area* shall be anchored, removed or altered to resist out-of-plane seismic forces, unless an evaluation demonstrates compliance of such items. Use of reduced seismic forces shall be permitted.

[BS] 503.11 Substantial structural alteration. Where the *work area* exceeds 50 percent of the building area and where work involves a *substantial structural alteration*, the lateral load-resisting system of the altered building shall satisfy the requirements of Sections 1609 and 1613 of the *Building Code of New York State*. Reduced seismic forces shall be permitted.

Exceptions:

1. Buildings of Group R occupancy with not more than five dwelling or sleeping units used solely for residential purposes that are altered based on the conventional light-frame construction methods of the *Building Code of New York State* or in compliance with the provisions of the *Residential Code of New York State*.
2. Where the intended *alteration* involves only the lowest story of a building, only the lateral load-resisting components in and below that story need comply with this section.

[BS] 503.12 Roof diaphragms resisting wind loads in high-wind regions. Where the intended *alteration* requires a permit for reroofing and involves removal of roofing materials from more than 50 percent of the roof diaphragm of a building or section of a building located where the ultimate design wind speed is greater than 115 mph (51 m/s) in accordance with Figure 1609.3(1) of the *Building Code of New York State* or in a special wind region as defined in Section 1609 of the *Building Code of New York State*, roof diaphragms, connections of the roof diaphragm to roof framing members, and roof-to-wall connections shall be evaluated for the wind loads specified in Section 1609 of the *Building Code of New York State*, including wind uplift. If the diaphragms and connec-

INTERNATIONAL CODE COUNCIL®
Copyright © 2019 ICC & NYSDOS. ALL RIGHTS RESERVED. Accessed by Lauren Gualdino (lgualdino@briarcliffmanor.org), (-) Order Number #100880972 on May 08, 2020 07:05 AM (PDT) pursuant to License Agreement with ICC & NYSDOS. No further reproduction, no

100880972

tions in their current condition are not capable of resisting 75 percent of those wind loads, they shall be replaced or strengthened in accordance with the loads specified in Section 1609 of the *Building Code of New York State*.

[BS] 503.13 Voluntary lateral force-resisting system alterations. Structural *alterations* that are intended exclusively to improve the lateral force-resisting system and are not required by other sections of this code shall not be required to meet the requirements of Section 1609 or Section 1613 of the *Building Code of New York State*, provided that all of the following apply:

1. The capacity of existing structural systems to resist forces is not reduced.
2. New structural elements are detailed and connected to existing or new structural elements as required by the *Building Code of New York State* for new construction.
3. New or relocated nonstructural elements are detailed and connected to existing or new structural elements as required by the *Building Code of New York State* for new construction.
4. The *alterations* do not create a structural irregularity as defined in ASCE 7 or make an existing structural irregularity more severe.

503.14 Smoke alarms. Individual sleeping units and individual dwelling units in Group R and I-1 occupancies shall be provided with smoke alarms in accordance with Section 1103.8 of the *Fire Code of New York State*.

[NY] 503.15 Carbon monoxide detection and notification. Where a Level 2 or Level 3 alteration is made to an existing building, the work area shall be provided with carbon monoxide detection and notification appliances that comply with the requirements for new construction in accordance with Section 915 of the *Fire Code of New York State*.

Exceptions:

1. Work involving the exterior surfaces of buildings, such as the replacement of roofing or siding, or the addition or replacement of windows or doors.
2. Installation of or alteration to plumbing or mechanical systems, other than fuel-burning appliances.

[NY] 503.15.1 New or relocated fuel-burning appliance. When a new fuel-burning appliance is added to, installed in, or attached to an existing building, or when an existing fuel-burning appliance is relocated to a different room in an existing building, the building shall be provided with additional carbon monoxide detection and notification appliances to accommodate the new or relocated fuel-burning appliance. The selection, design, and location of the additional carbon monoxide detection and notification appliances shall be in accordance with Section 915 of the *Fire Code of New York State*.

Exception: Where carbon monoxide alarms are powered by a 10-year battery, interconnection shall not be required in the following:

1. Work areas where an alteration does not result in the removal or exposure of interior wall or ceiling finishes that reveal the structure, unless there is an attic, crawl space, basement, or similar space available that could provide access for power and interconnection without the removal of such interior finishes.
2. Existing portions of a building that are provided with additional carbon monoxide detection and notification as required by Section 503.15.1, unless otherwise required by the *Uniform Code*.
3. Buildings without commercial power.

503.16 Refuge areas. Where *alterations* affect the configuration of an area utilized as a refuge area, the capacity of the refuge area shall not be reduced below that required in Sections 503.16.1 through 503.16.3.

503.16.1 Smoke compartments. In Group I-2 and I-3 occupancies, the required capacity of the refuge areas for smoke compartments in accordance with Sections 407.5.1 and 408.6.2 of the *Building Code of New York State* shall be maintained.

503.16.2 Ambulatory care. In ambulatory care facilities required to be separated by Section 422.2 of the *Building Code of New York State*, the required capacity of the refuge areas for smoke compartments in accordance with Section 422.3.2 of the *Building Code of New York State* shall be maintained.

503.16.3 Horizontal exits. The required capacity of the refuge area for horizontal exits in accordance with Section 1026.4 of the *Building Code of New York State* shall be maintained.

SECTION 504
FIRE ESCAPES

[BE] 504.1 Where permitted. Fire escapes shall be permitted only as provided for in Sections 504.1.1 through 504.1.4.

[BE] 504.1.1 New buildings. Fire escapes shall not constitute any part of the required means of egress in new buildings.

[BE] 504.1.2 Existing fire escapes. Existing fire escapes shall continue to be accepted as a component in the means of egress in *existing buildings* only.

[BE] 504.1.3 New fire escapes. New fire escapes for *existing buildings* shall be permitted only where exterior stairways cannot be utilized because of lot lines limiting stairway size or because of sidewalks, alleys or roads at grade level. New fire escapes shall not incorporate ladders or access by windows.

[BE] 504.1.4 Limitations. Fire escapes shall comply with this section and shall not constitute more than 50 percent of the required number of exits nor more than 50 percent of the required exit capacity.

[BE] 504.2 Location. Where located on the front of the building and where projecting beyond the building line, the lowest landing shall be not less than 7 feet (2134 mm) or more than 12 feet (3658 mm) above grade, and shall be equipped with a counterbalanced stairway to the street. In alleyways and thoroughfares less than 30 feet (9144 mm)

INTERNATIONAL CODE COUNCIL®
Copyright © 2019 ICC & NYSDOS. ALL RIGHTS RESERVED. Accessed by Lauren Gualdino (lgualdino@briarcliffmanor.org), (-) Order Number #100880972 on May 08, 2020 07:05 AM (PDT) pursuant to License Agreement with ICC & NYSDOS. No further reproduction, no

100880972

wide, the clearance under the lowest landing shall be not less than 12 feet (3658 mm).

[BE] 504.3 Construction. The fire escape shall be designed to support a live load of 100 pounds per square foot (4788 Pa) and shall be constructed of steel or other *approved noncombustible materials*. Fire escapes constructed of wood not less than nominal 2 inches (51 mm) thick are permitted on buildings of Type V construction. Walkways and railings located over or supported by combustible roofs in buildings of Type III and IV construction are permitted to be of wood not less than nominal 2 inches (51 mm) thick.

[BE] 504.4 Dimensions. Stairways shall be not less than 22 inches (559 mm) wide with risers not more than, and treads not less than, 8 inches (203 mm) and landings at the foot of stairways not less than 40 inches (1016 mm) wide by 36 inches (914 mm) long, located not more than 8 inches (203 mm) below the door.

[BE] 504.5 Opening protectives. Doors and windows within 10 feet (3048 mm) of fire escape stairways shall be protected with $^3/_4$-hour opening protectives.

Exception: Opening protection shall not be required in buildings equipped throughout with an *approved* automatic sprinkler system.

SECTION 505
WINDOWS AND EMERGENCY ESCAPE OPENINGS

505.1 Replacement glass. The installation or replacement of glass shall be as required for new installations.

505.2 Replacement window opening control devices. In Group R-2 or R-3 buildings containing dwelling units, and one- and two-family dwellings and townhouses regulated by the *Residential Code of New York State*, window opening control devices complying with ASTM F2090 shall be installed where an existing window is replaced and where all of the following apply to the replacement window:

1. The window is operable.
2. The window replacement includes replacement of the sash and the frame.
3. One of the following applies:
   - 3.1. In Group R-2 or R-3 buildings containing dwelling units, the top of the sill of the window opening is at a height less than 36 inches (915 mm) above the finished floor.
   - 3.2. In one- and two-family dwellings and townhouses regulated by the *Residential Code of New York State*, the top of the sill of the window opening is at a height less than 24 inches (610 mm) above the finished floor.
4. The window will permit openings that will allow passage of a 4-inch-diameter (102 mm) sphere when the window is in its largest opened position.
5. The vertical distance from the top of the sill of the window opening to the finished grade or other surface below, on the exterior of the building, is greater than 72 inches (1829 mm).

The window opening control device, after operation to release the control device allowing the window to fully open, shall not reduce the minimum net clear opening area of the window unit to less than the area required by Section 1030.2 of the *Building Code of New York State*.

Exceptions:

1. Operable windows where the top of the sill of the window opening is located more than 75 feet (22 860 mm) above the finished grade or other surface below, on the exterior of the room, space or building, and that are provided with window fall prevention devices that comply with ASTM F2006.
2. Operable windows with openings that are provided with window fall prevention devices that comply with ASTM F2090.

505.3 Replacement window emergency escape and rescue openings. Where windows are required to provide *emergency escape* and *rescue openings* in Group R-2 and R-3 occupancies and one- and two-family dwellings and townhouses regulated by the *Residential Code of New York State,* replacement windows shall be exempt from the requirements of Sections 1030.2, 1030.3 and 1030.4 of the *Building Code of New York State* and Sections R310.2.1, R310.2.2 and R310.2.3 of the *Residential Code of New York State,* provided that the replacement window meets the following conditions:

1. The replacement window is the manufacturer's largest standard size window that will fit within the existing frame or existing rough opening. The replacement window shall be permitted to be of the same operating style as the existing window or a style that provides for an equal or greater window opening area than the existing window.
2. The replacement of the window is not part of a *change of occupancy*.

Window opening control devices complying with ASTM F2090 shall be permitted for use on windows required to provide emergency escape and rescue openings.

505.4 Emergency escape and rescue openings. Emergency escape and rescue openings shall be operational from the inside of the room without the use of keys or tools. Bars, grilles, grates or similar devices are permitted to be placed over emergency escape and rescue openings provided that the minimum net clear opening size complies with the code that was in effect at the time of construction and such devices shall be releasable or removable from the inside without the use of a key, tool or force greater than that which is required for normal operation of the escape and rescue opening. Where such bars, grilles, grates or similar devices are installed, they shall not reduce the net clear opening of the emergency escape and rescue openings. Smoke alarms shall be installed in accordance with Section 907.2.10 of the *Building Code of New York State* regardless of the valuation of the *alteration.*

INTERNATIONAL CODE COUNCIL®
Copyright © 2019 ICC & NYSDOS. ALL RIGHTS RESERVED. Accessed by Lauren Gualdino (lgualdino@briarcliffmanor.org), (-) Order Number #100880972 on May 08, 2020 07:05 AM (PDT) pursuant to License Agreement with ICC & NYSDOS. No further reproduction, no

100880972

SECTION 506
CHANGE OF OCCUPANCY

506.1 Compliance. A *change of occupancy* shall not be made in any building unless that building is made to comply with the requirements of the *Building Code of New York State* for the use or occupancy. Changes of occupancy in a building or portion thereof shall be such that the *existing building* is not less complying with the provisions of this code than the *existing building* or structure was prior to the change. Subject to the approval of the *building official*, changes of occupancy shall be permitted without complying with all of the requirements of this code for the new occupancy, provided that the new occupancy is less hazardous, based on life and fire risk, than the existing occupancy.

Exception: The building need not be made to comply with Chapter 16 of the *Building Code of New York State* unless required by Section 506.4.

506.1.1 Change in the character of use. A change of occupancy with no *change of occupancy* classification shall not be made to any structure that will subject the structure to any special provisions of the applicable New York State Building Codes, without approval of the *building official*. Compliance shall be only as necessary to meet the specific provisions and is not intended to require the entire building be brought into compliance.

506.2 Certificate of occupancy. A certificate of occupancy shall be issued where it has been determined that the requirements for the new occupancy classification have been met.

506.3 Stairways. An existing stairway shall not be required to comply with the requirements of Section 1011 of the *Building Code of New York State* where the existing space and construction does not allow a reduction in pitch or slope.

506.4 Structural. Any building undergoing a *change of occupancy* shall satisfy the requirements of this section.

506.4.1 Live loads. Structural elements carrying tributary live loads from an area with a *change of occupancy* shall satisfy the requirements of Section 1607 of the *Building Code of New York State*. Design live loads for areas of new occupancy shall be based on Section 1607 of the *Building Code of New York State*. Design live loads for other areas shall be permitted to use previously *approved* design live loads.

Exception: Structural elements whose demand-capacity ratio considering the *change of occupancy* is not more than 5 percent greater than the demand-capacity ratio based on previously *approved* live loads need not comply with this section.

506.4.2 Snow and wind loads. Where a change of occupancy results in a structure being assigned to a higher *risk category*, the structure shall satisfy the requirements of Sections 1608 and 1609 of the *Building Code of New York State* for the new *risk category*.

Exception: Where the area of the new occupancy is less than 10 percent of the building area, compliance with this section is not required. The cumulative effect of occupancy changes over time shall be considered.

506.4.3 Seismic loads (seismic force-resisting system). Where a *change of occupancy* results in a building being assigned to a higher *risk category*, the building shall satisfy the requirements of Section 1613 of the *Building Code of New York State* for the new *risk category* using full seismic forces.

Exceptions:

1. Where the area of the new occupancy is less than 10 percent of the building area and the new occupancy is not assigned to *Risk Category* IV, compliance with this section is not required. The cumulative effect of occupancy changes over time shall be considered.

2. Where a change of use results in a building being reclassified from *Risk Category* I or II to Risk Category III and the seismic coefficient, S_{DS}, is less than 0.33, compliance with this section is not required.

3. Unreinforced masonry bearing wall buildings assigned to *Risk Category* III and to Seismic Design Category A or B, shall be permitted to use Appendix Chapter A1 of this code.

506.4.4 Access to Risk Category IV. Any structure that provides operational access to an adjacent structure assigned to *Risk Category* IV as the result of a *change of occupancy* shall itself satisfy the requirements of Sections 1608, 1609 and 1613 of the *Building Code of New York State*. For compliance with Section 1613, *Building Code of New York State*-level seismic forces shall be used. Where operational access to the *Risk Category* IV structure is less than 10 feet (3048 mm) from either an interior lot line or from another structure, access protection from potential falling debris shall be provided.

[NY] 506.5 Carbon monoxide detection and notification. Where a building or portion thereof undergoes a change of occupancy classification or change of use within the same occupancy classification, carbon monoxide detection and notification shall be provided throughout the area where the change of occupancy occurs. The selection, design, and location of carbon monoxide detection and notification appliances shall be in accordance with Section 915 of the *Residential Code of New York State*.

Exception: Where carbon monoxide alarms are powered by a 10-year battery, interconnection shall not be required in the following:

1. Buildings or portions thereof that undergo a change of occupancy unless otherwise required by the *Uniform Code*.

2. Buildings without commercial power.

INTERNATIONAL CODE COUNCIL®
Copyright © 2019 ICC & NYSDOS. ALL RIGHTS RESERVED. Accessed by Lauren Gualdino (lgualdino@briarcliffmanor.org), (-) Order Number #100880972 on May 08, 2020 07:05 AM (PDT) pursuant to License Agreement with ICC & NYSDOS. No further reproduction, no

100880972

SECTION 507
HISTORIC BUILDINGS

507.1 Historic buildings. The provisions of this code that require improvements relative to a building's existing condition or, in the case of *repairs*, that require improvements relative to a building's predamage condition, shall not be mandatory for *historic buildings* unless specifically required by this section.

507.2 Life safety hazards. The provisions of this code shall apply to *historic buildings* judged by the *building official* to constitute a distinct life safety hazard.

507.3 Flood hazard areas. Within flood *hazard areas* established in accordance with Section 1612.3 of the *Building Code of New York State*, or Section R322 of the *Residential Code of New York State*, as applicable, where the work proposed constitutes *substantial improvement*, the building shall be brought into compliance with Section 1612 of the *Building Code of New York State*, or Section R322 of the *Residential Code of New York State*, as applicable.

Exception: *Historic buildings* meeting any of the following criteria need not be brought into compliance:

1. Listed or preliminarily determined to be eligible for listing in the National Register of Historic Places.
2. Determined by the Secretary of the U.S. Department of Interior as contributing to the historical significance of a registered historic district or a district preliminarily determined to qualify as an historic district.
3. Designated as historic under a state or local historic preservation program that is approved by the Department of Interior.

[BS] 507.4 Structural. Historic buildings shall comply with the applicable structural provisions in this chapter.

Exceptions:

1. The *building official* shall be authorized to accept existing floors and existing live loads and to approve operational controls that limit the live load on any floor.
2. Repair of *substantial structural damage* is not required to comply with Sections 405.2.3, and 405.2.4. *Substantial structural damage* shall be repaired in accordance with Section 405.2.1.

INTERNATIONAL CODE COUNCIL®
Copyright © 2019 ICC & NYSDOS. ALL RIGHTS RESERVED. Accessed by Lauren Gualdino (lgualdino@briarcliffmanor.org), (-) Order Number #100880972 on May 08, 2020 07:05 AM (PDT) pursuant to License Agreement with ICC & NYSDOS. No further reproduction, no

100880972

INTERNATIONAL CODE COUNCIL®
Copyright © 2019 ICC & NYSDOS. ALL RIGHTS RESERVED. Accessed by Lauren Gualdino (lgualdino@briarcliffmanor.org), (-) Order Number #100880972 on May 08, 2020 07:05 AM (PDT) pursuant to License Agreement with ICC & NYSDOS. No further reproduction, no

100880972

CHAPTER 6
CLASSIFICATION OF WORK

SECTION 601
GENERAL

601.1 Scope. The provisions of this chapter shall be used in conjunction with Chapters 7 through 12 and shall apply to the *alteration*, *addition* and *change of occupancy* of *existing structures*, including historic and moved structures, as referenced in Section 301.3.2. The work performed on an *existing building* shall be classified in accordance with this chapter.

601.1.1 Compliance with other alternatives. *Alterations*, *additions* and *changes of occupancy* to *existing structures* shall comply with the provisions of Chapters 7 through 12 or with one of the alternatives provided in Section 301.3.

601.2 Work area. The *work area*, as defined in Chapter 2, shall be identified on the construction documents.

➡

SECTION 602
ALTERATION—LEVEL 1

602.1 Scope. Level 1 alterations include the removal and replacement or the covering of existing materials, elements, equipment, or fixtures using new materials, elements, equipment, or fixtures that serve the same purpose.

602.2 Application. Level 1 *alterations* shall comply with the provisions of Chapter 7.

SECTION 603
ALTERATION—LEVEL 2

603.1 Scope. Level 2 *alterations* include the reconfiguration of space, the addition or elimination of any door or window, the reconfiguration or extension of any system, or the installation of any additional equipment.

603.2 Application. Level 2 *alterations* shall comply with the provisions of Chapter 7 for Level 1 *alterations* as well as the provisions of Chapter 8.

SECTION 604
ALTERATION—LEVEL 3

604.1 Scope. Level 3 *alterations* apply where the *work area* exceeds 50 percent of the building area.

604.2 Application. Level 3 *alterations* shall comply with the provisions of Chapters 7 and 8 for Level 1 and 2 *alterations*, respectively, as well as the provisions of Chapter 9.

SECTION 605
CHANGE OF OCCUPANCY

605.1 Scope. *Change of occupancy* provisions apply where the activity is classified as a *change of occupancy* as defined in Chapter 2.

605.2 Application. *Changes of occupancy* shall comply with the provisions of Chapter 10.

SECTION 606
ADDITIONS

606.1 Scope. Provisions for *additions* shall apply where work is classified as an *addition* as defined in Chapter 2.

606.2 Application. *Additions* to *existing buildings* shall comply with the provisions of Chapter 11.

SECTION 607
HISTORIC BUILDINGS

607.1 Scope. *Historic building* provisions shall apply to buildings classified as historic as defined in Chapter 2.

607.2 Application. Except as specifically provided for in Chapter 12, *historic buildings* shall comply with applicable provisions of this code for the type of work being performed.

SECTION 608
RELOCATED BUILDINGS

608.1 Scope. Relocated building provisions shall apply to relocated or moved buildings.

608.2 Application. Relocated buildings shall comply with the provisions of Chapter 14.

INTERNATIONAL CODE COUNCIL®
Copyright © 2019 ICC & NYSDOS. ALL RIGHTS RESERVED. Accessed by Lauren Gualdino (lgualdino@briarcliffmanor.org), (-) Order Number #100880972 on May 08, 2020 07:05 AM (PDT) pursuant to License Agreement with ICC & NYSDOS. No further reproduction, no

100880972

INTERNATIONAL CODE COUNCIL®
Copyright © 2019 ICC & NYSDOS. ALL RIGHTS RESERVED. Accessed by Lauren Gualdino (lgualdino@briarcliffmanor.org), (-) Order Number #100880972 on May 08, 2020 07:05 AM (PDT) pursuant to License Agreement with ICC & NYSDOS. No further reproduction, no

100880972

CHAPTER 7
ALTERATIONS—LEVEL 1

SECTION 701
GENERAL

701.1 Scope. Level 1 *alterations* as described in Section 602 shall comply with the requirements of this chapter. Level 1 *alterations* to *historic buildings* shall comply with this chapter, except as modified in Chapter 12.

701.2 Conformance. An *existing building* or portion thereof shall not be altered such that the building becomes less safe than its existing condition.

Exception: Where the current level of safety or sanitation is proposed to be reduced, the portion altered shall conform to the requirements of the *Building Code of New York State*.

[BS] 701.3 Flood hazard areas. In *flood hazard areas*, *alterations* that constitute *substantial improvement* shall require that the building comply with Section 1612 of the *Building Code of New York State*, or Section R322 of the *Residential Code of New York State*, as applicable.

701.4 Emergency escape and rescue openings. Emergency escape and rescue openings shall be operational from the inside of the room without the use of keys or tools. Bars, grilles, grates or similar devices placed over emergency escape and rescue openings shall comply with the minimum net clear opening size required by the code that was in effect at the time of construction. Such devices shall be releasable or removable from the inside without the use of a key, tool or force greater than that which is required for normal operation of the escape and rescue opening. Where such bars, grilles, grates or similar devices are installed, they shall not reduce the net clear opening of the emergency escape and rescue openings. Smoke alarms shall be installed in accordance with Section 907.2.10 of the *Building Code of New York State* regardless of the valuation of the *alteration*.

SECTION 702
BUILDING ELEMENTS AND MATERIALS

702.1 Interior finishes. Newly installed interior wall and ceiling finishes shall comply with Chapter 8 of the *Building Code of New York State*.

702.2 Interior floor finish. New interior floor finish, including new carpeting used as an interior floor finish material, shall comply with Section 804 of the *Building Code of New York State*.

702.3 Interior trim. Newly installed interior trim materials shall comply with Section 806 of the *Building Code of New York State*.

702.4 Window opening control devices on replacement windows. In Group R-2 or R-3 buildings containing dwelling units and one- and two-family dwellings and townhouses regulated by the *Residential Code of New York State*, window opening control devices complying with ASTM F2090 shall be installed where an existing window is replaced and where all of the following apply to the replacement window:

1. The window is operable.
2. The window replacement includes replacement of the sash and the frame.
3. One of the following applies:
   - 3.1. In Group R-2 or R-3 buildings containing dwelling units, the top of the sill of the window opening is at a height less than 36 inches (915 mm) above the finished floor.
   - 3.2. In one- and two-family dwellings and townhouses regulated by the *Residential Code of New York State*, the top sill of the window opening is at a height less than 24 inches (610 mm) above the finished floor.
4. The window will permit openings that will allow passage of a 4-inch-diameter (102 mm) sphere when the window is in its largest opened position.
5. The vertical distance from the top of the sill of the window opening to the finished grade or other surface below, on the exterior of the building, is greater than 72 inches (1829 mm).

The window opening control device, after operation to release the control device allowing the window to fully open, shall not reduce the minimum net clear opening area of the window unit to less than the area required by Section 1030.2 of the *Building Code of New York State*.

Exceptions:

1. Operable windows where the top of the sill of the window opening is located more than 75 feet (22 860 mm) above the finished grade or other surface below, on the exterior of the room, space or building, and that are provided with window fall prevention devices that comply with ASTM F2006.
2. Operable windows with openings that are provided with window fall prevention devices that comply with ASTM F2090.

702.5 Replacement window emergency escape and rescue openings. Where windows are required to provide emergency escape and rescue openings in Group R-2 and R-3 occupancies and one- and two-family dwellings and townhouses regulated by the *Residential Code of New York State*, replacement windows shall be exempt from the requirements of Sections 1030.2, 1030.3 and 1030.4 of the *Building Code of New York State* and Sections R310.2.1, R310.2.2 and R310.2.3 of the *Residential Code of New York State*, provided that the replacement window meets the following conditions:

1. The replacement window is the manufacturer's largest standard size window that will fit within the existing frame or existing rough opening.

INTERNATIONAL CODE COUNCIL®
Copyright © 2019 ICC & NYSDOS. ALL RIGHTS RESERVED. Accessed by Lauren Gualdino (lgualdino@briarcliffmanor.org), (-) Order Number #100880972 on May 08, 2020 07:05 AM (PDT) pursuant to License Agreement with ICC & NYSDOS. No further reproduction, no

100880972

2. The replacement window is not part of a *change of occupancy*.

Window opening control devices complying with ASTM F2090 shall be permitted for use on windows required to provide *emergency escape* and *rescue openings*.

702.6 Materials and methods. New work shall comply with the materials and methods requirements in the *Building Code of New York State*, *Energy Conservation Construction Code of New York State*, *Mechanical Code of New York State*, and *Plumbing Code of New York State*, as applicable, that specify material standards, detail of installation and connection, joints, penetrations, and continuity of any element, component, or system in the building.

[FG] 702.6.1 Fuel Gas Code of New York State. The following sections of the *Fuel Gas Code of New York State* shall constitute the fuel gas materials and methods requirements for Level 1 *alterations*.

1. Chapter 3, entitled "General Regulations," except Sections 303.7 and 306.
2. Chapter 4, entitled "Gas Piping Installations," except Sections 401.8 and 402.3.
   2.1. Sections 401.8 and 402.3 shall apply where the work being performed increases the load on the system such that the existing pipe does not meet the size required by code. Existing systems that are modified shall not require resizing as long as the load on the system is not increased and the system length is not increased even if the altered system does not meet code minimums.
3. Chapter 5, entitled "Chimneys and Vents."
4. Chapter 6, entitled "Specific Appliances."

SECTION 703
FIRE PROTECTION

703.1 General. *Alterations* shall be done in a manner that maintains the level of fire protection provided.

SECTION 704
MEANS OF EGRESS

704.1 General. *Alterations* shall be done in a manner that maintains the level of protection provided for the means of egress.

SECTION 705
REROOFING

[BS] 705.1 General. Materials and methods of application used for recovering or replacing an existing roof covering shall comply with the requirements of Chapter 15 of the *Building Code of New York State.*

Exceptions:

1. *Roof replacement* or roof recover of existing low-slope roof coverings shall not be required to meet the minimum design slope requirement of one-quarter unit vertical in 12 units horizontal (2-percent slope) in Section 1507 of the *Building Code of New York State* for roofs that provide positive roof drainage.
2. Recovering or replacing an existing roof covering shall not be required to meet the requirement for secondary (emergency overflow) drains or scuppers in Section 1502 of the *Building Code of New York State* for roofs that provide for positive roof drainage. For the purposes of this exception, existing secondary drainage or scupper systems required in accordance with this code shall not be removed unless they are replaced by secondary drains or scuppers designed and installed in accordance with Section 1502 of the *Building Code of New York State*.

[BS] 705.2 Structural and construction loads. Structural roof components shall be capable of supporting the roof-covering system and the material and equipment loads that will be encountered during installation of the system.

[BS] 705.3 Roof replacement. *Roof replacement* shall include the removal of all existing layers of roof coverings down to the roof deck.

Exception: Where the existing roof assembly includes an ice barrier membrane that is adhered to the roof deck, the existing ice barrier membrane shall be permitted to remain in place and covered with an additional layer of ice barrier membrane in accordance with Section 1507 of the *Building Code of New York State*.

[BS] 705.3.1 Roof recover. The installation of a new roof covering over an existing roof covering shall be permitted where any of the following conditions occur:

1. The new roof covering is installed in accordance with the roof covering manufacturer's *approved* instructions.
2. Complete and separate roofing systems, such as standing-seam metal roof panel systems, that are designed to transmit the roof loads directly to the building's structural system and that do not rely on existing roofs and roof coverings for support, are installed.
3. Metal panel, metal shingle and concrete and clay tile roof coverings are installed over existing wood shake roofs in accordance with Section 705.4.
4. A new protective *roof coating* is applied over an existing protective *roof coating*, a metal roof panel, metal roof shingles, mineral-surfaced roll roofing, a built-up roof, modified bitumen roofing, thermoset and thermoplastic single-ply roofing or a spray polyurethane foam roofing system.

[BS] 705.3.1.1 Exceptions. A roof recover shall not be permitted where any of the following conditions occur:

1. The existing roof or roof covering is water soaked or has deteriorated to the point that the existing roof or roof covering is not adequate as a base for additional roofing.

INTERNATIONAL CODE COUNCIL®
Copyright © 2019 ICC & NYSDOS. ALL RIGHTS RESERVED. Accessed by Lauren Gualdino (lgualdino@briarcliffmanor.org), (-) Order Number #100880972 on May 08, 2020 07:05 AM (PDT) pursuant to License Agreement with ICC & NYSDOS. No further reproduction, no

100880972

2. The existing roof covering is slate, clay, cement or asbestos-cement tile.
3. The existing roof has two or more applications of any type of roof covering.

[BS] 705.4 Roof recovering. Where the application of a new roof covering over wood shingle or shake roofs creates a combustible concealed space, the entire existing surface shall be covered with gypsum board, mineral fiber, glass fiber or other *approved* materials securely fastened in place.

[BS] 705.5 Reinstallation of materials. Existing slate, clay or cement tile shall be permitted for reinstallation, except that damaged, cracked or broken slate or tile shall not be reinstalled. Existing vent flashing, metal edgings, drain outlets, collars and metal counterflashings shall not be reinstalled where rusted, damaged or deteriorated. Aggregate surfacing materials shall not be reinstalled.

[BS] 705.6 Flashings. Flashings shall be reconstructed in accordance with *approved* manufacturer's installation instructions. Metal flashing to which bituminous materials are to be adhered shall be primed prior to installation.

SECTION 706
STRUCTURAL

[BS] 706.1 General. Where *alteration* work includes replacement of equipment that is supported by the building or where a reroofing permit is required, the provisions of this section shall apply.

[BS] 706.2 Addition or replacement of roofing or replacement of equipment. Any existing gravity load-carrying structural element for which an *alteration* causes an increase in design dead, live or snow load, including snow drift effects, of more than 5 percent shall be replaced or altered as needed to carry the gravity loads required by the *Building Code of New York State* for new structures.

Exceptions:

1. Buildings of Group R occupancy with not more than five dwelling or sleeping units used solely for residential purposes where the altered building complies with the conventional light-frame construction methods of the *Building Code of New York State* or the provisions of the *Residential Code of New York State*.
2. Buildings in which the increased dead load is due entirely to the addition of a second layer of roof covering weighing 3 pounds per square foot (0.1437 kN/m^2) or less over an existing single layer of roof covering.

[BS] 706.3 Additional requirements for reroof permits. The requirements of this section shall apply to *alteration* work requiring reroof permits.

[BS] 706.3.1 Bracing for unreinforced masonry bearing wall parapets. Where a permit is issued for reroofing for more than 25 percent of the roof area of a building assigned to Seismic Design Category D, E or F that has parapets constructed of unreinforced masonry, the work shall include installation of parapet bracing unless an evaluation demonstrates compliance of such items. Reduced seismic forces shall be permitted.

[BS] 706.3.2 Roof diaphragms resisting wind loads in high-wind regions. Where roofing materials are removed from more than 50 percent of the roof diaphragm or section of a building located where the ultimate design wind speed, V_{ult}, determined in accordance with Figure 1609.3(1) of the *Building Code of New York State,* is greater than 115 mph (51 m/s) or in a special wind region, as defined in Section 1609 of the *Building Code of New York State*, roof diaphragms, connections of the roof diaphragm to roof framing members, and roof-to-wall connections shall be evaluated for the wind loads specified in the *Building Code of New York State*, including wind uplift. If the diaphragms and connections in their current condition are not capable of resisting 75 percent of those wind loads, they shall be replaced or strengthened in accordance with the loads specified in the *Building Code of New York State.*

SECTION 707
ENERGY CONSERVATION

707.1 Minimum requirements. Level 1 *alterations* to *existing buildings* or structures do not require the entire building or structure to comply with the energy requirements of the *Energy Conservation Construction Code of New York State* or *Residential Code of New York State*. The *alterations* shall conform to the energy requirements of the *Energy Conservation Construction Code of New York State* or *Residential Code of New York State* as they relate to new construction only.

[NY] SECTION 708
PLUMBING

[NY] 708.1 Water closet replacement. When any water closet is replaced, the replacement water closet shall comply with Section 604.4 of the *Plumbing Code of New York State*.

INTERNATIONAL CODE COUNCIL®
Copyright © 2019 ICC & NYSDOS. ALL RIGHTS RESERVED. Accessed by Lauren Gualdino (lgualdino@briarcliffmanor.org), (-) Order Number #100880972 on May 08, 2020 07:05 AM (PDT) pursuant to License Agreement with ICC & NYSDOS. No further reproduction, no

100880972

INTERNATIONAL CODE COUNCIL®
Copyright © 2019 ICC & NYSDOS. ALL RIGHTS RESERVED. Accessed by Lauren Gualdino (lgualdino@briarcliffmanor.org), (-) Order Number #100880972 on May 08, 2020 07:05 AM (PDT) pursuant to License Agreement with ICC & NYSDOS. No further reproduction, no

100880972

CHAPTER 8
ALTERATIONS—LEVEL 2

SECTION 801
GENERAL

801.1 Scope. Level 2 *alterations* as described in Section 603 shall comply with the requirements of this chapter.

Exception: Buildings in which the reconfiguration is exclusively the result of compliance with the accessibility requirements of Section 305.7 shall be permitted to comply with Chapter 7.

801.2 Alteration Level 1 compliance. In addition to the requirements of this chapter, all work shall comply with the requirements of Chapter 7.

801.3 Compliance. New construction elements, components, systems, and spaces shall comply with the requirements of the *Building Code of New York State*.

Exceptions:

1. Where windows are added they are not required to comply with the light and ventilation requirements of the *Building Code of New York State*.
2. Newly installed electrical equipment shall comply with the requirements of Section 807.
3. The length of dead-end corridors in newly constructed spaces shall only be required to comply with the provisions of Section 805.6.
4. The minimum ceiling height of the newly created habitable and occupiable spaces and corridors shall be 7 feet (2134 mm).
5. Where provided in below-grade transportation stations, existing and new escalators shall be permitted to have a clear width of less than 32 inches (813 mm).
6. New structural members and connections shall be permitted to comply with alternative design criteria in accordance with Section 302.

SECTION 802
BUILDING ELEMENTS AND MATERIALS

802.1 Scope. The requirements of this section are limited to *work areas* in which Level 2 *alterations* are being performed and shall apply beyond the work area where specified.

802.2 Vertical openings. Existing vertical openings shall comply with the provisions of Sections 802.2.1, 802.2.2 and 802.2.3.

802.2.1 Existing vertical openings. Existing interior vertical openings connecting two or more floors shall be enclosed with *approved* assemblies having a fire-resistance rating of not less than 1 hour with *approved* opening protectives.

Exceptions:

1. Where vertical opening enclosure is not required by the *Building Code of New York State* or the *Fire Code of New York State*.
2. Interior vertical openings other than stairways may be blocked at the floor and ceiling of the *work area* by installation of not less than 2 inches (51 mm) of solid wood or equivalent construction.
3. The enclosure shall not be required where:
   - 3.1. Connecting the main floor and mezzanines; or
   - 3.2. All of the following conditions are met:
     - 3.2.1. The communicating area has a low-hazard occupancy or has a moderate-hazard occupancy that is protected throughout by an automatic sprinkler system.
     - 3.2.2. The lowest or next-to-the-lowest level is a street floor.
     - 3.2.3. The entire area is open and unobstructed in a manner such that it is reasonable to assume that a fire in any part of the interconnected spaces will be readily obvious to all of the occupants.
     - 3.2.4. Exit capacity is sufficient to provide egress simultaneously for all occupants of all levels by considering all areas to be a single floor area for the determination of required exit capacity.
     - 3.2.5. Each floor level, considered separately, has not less than one-half of its individual required exit capacity provided by an exit or exits leading directly out of that level without having to traverse another communicating floor level or be exposed to the smoke or fire spreading from another communicating floor level.
4. In Group A occupancies, a minimum 30-minute enclosure shall be provided to protect all vertical openings not exceeding three stories.
5. In Group B occupancies, a minimum 30-minute enclosure shall be provided to protect all vertical openings not exceeding three stories. This enclosure, or the enclosure specified in Section 802.2.1, shall not be required in the following locations:
   - 5.1. Buildings not exceeding 3,000 square feet (279 m^2) per floor.

INTERNATIONAL CODE COUNCIL®
Copyright © 2019 ICC & NYSDOS. ALL RIGHTS RESERVED. Accessed by Lauren Gualdino (lgualdino@briarcliffmanor.org), (-) Order Number #100880972 on May 08, 2020 07:05 AM (PDT) pursuant to License Agreement with ICC & NYSDOS. No further reproduction, no

100880972

5.2. Buildings protected throughout by an *approved* automatic fire sprinkler system.

6. In Group E occupancies, the enclosure shall not be required for vertical openings not exceeding three stories where the building is protected throughout by an *approved* automatic fire sprinkler system.

7. In Group F occupancies, the enclosure shall not be required in the following locations:

7.1. Vertical openings not exceeding three stories.

7.2. Special-purpose occupancies where necessary for manufacturing operations and direct access is provided to not fewer than one protected stairway.

7.3. Buildings protected throughout by an *approved* automatic sprinkler system.

8. In Group H occupancies, the enclosure shall not be required for vertical openings not exceeding three stories where necessary for manufacturing operations and every floor level has direct access to not fewer than two remote enclosed stairways or other *approved* exits.

9. In Group M occupancies, a minimum 30-minute enclosure shall be provided to protect all vertical openings not exceeding three stories. This enclosure, or the enclosure specified in Section 802.2.1, shall not be required in the following locations:

9.1. Openings connecting only two floor levels.

9.2. Occupancies protected throughout by an *approved* automatic sprinkler system.

10. In Group R-1 occupancies, the enclosure shall not be required for vertical openings not exceeding three stories in the following locations:

10.1. Buildings protected throughout by an *approved* automatic sprinkler system.

10.2. Buildings with less than 25 dwelling units or sleeping units where every sleeping room above the second floor is provided with direct access to a fire escape or other *approved* second exit by means of an *approved* exterior door or window having a sill height of not greater than 44 inches (1118 mm) and where both of the following conditions are met:

10.2.1. Any exit access corridor exceeding 8 feet (2438 mm) in length that serves two means of egress, one of which is an unprotected vertical opening, shall have not fewer than one of the means of egress separated from the vertical opening by a 1-hour fire barrier.

10.2.2. The building is protected throughout by an automatic fire alarm system, installed and supervised in accordance with the *Building Code of New York State*.

11. In Group R-2 occupancies, a minimum 30-minute enclosure shall be provided to protect all vertical openings not exceeding three stories. This enclosure, or the enclosure specified in Section 802.2.1, shall not be required in the following locations:

11.1. Vertical openings not exceeding two stories with not more than four dwelling units per floor.

11.2. Buildings protected throughout by an *approved* automatic sprinkler system.

11.3. Buildings with not more than four dwelling units per floor where every sleeping room above the second floor is provided with direct access to a fire escape or other *approved* second exit by means of an *approved* exterior door or window having a sill height of not greater than 44 inches (1118 mm) and the building is protected throughout by an automatic fire alarm system complying with Section 803.4.

12. One- and two-family dwellings.

13. Group S occupancies where connecting not more than two floor levels or where connecting not more than three floor levels and the structure is equipped throughout with an *approved* automatic sprinkler system.

14. Group S occupancies where vertical opening protection is not required for open parking garages and ramps.

802.2.2 Supplemental shaft and floor opening enclosure requirements. Where the *work area* on any floor exceeds 50 percent of that floor area, the enclosure requirements of Section 802.2 shall apply to vertical openings other than stairways throughout the floor.

Exception: Vertical openings located in tenant spaces that are entirely outside the *work area*.

802.2.3 Supplemental stairway enclosure requirements. Where the *work area* on any floor exceeds 50 percent of that floor area, stairways that are part of the means of egress serving the *work area* shall, at a minimum, be enclosed with smoke-tight construction on the highest *work area* floor and all floors below.

Exception: Where stairway enclosure is not required by the *Building Code of New York State* or the *Fire Code of New York State*.

INTERNATIONAL CODE COUNCIL®
Copyright © 2019 ICC & NYSDOS. ALL RIGHTS RESERVED. Accessed by Lauren Gualdino (lgualdino@briarcliffmanor.org), (-) Order Number #100880972 on May 08, 2020 07:05 AM (PDT) pursuant to License Agreement with ICC & NYSDOS. No further reproduction, no

100880972

802.3 Smoke compartments. In Group I-2 occupancies where the *work area* is on a story used for sleeping rooms for more than 30 patients, the story shall be divided into not less than two compartments by smoke barrier walls in accordance with Section 407.5 of the *Building Code of New York State* as required for new construction.

802.4 Interior finish. The interior finish of walls and ceilings in exits and corridors in any *work area* shall comply with the requirements of the *Building Code of New York State*.

Exception: Existing interior finish materials that do not comply with the interior finish requirements of the *Building Code of New York State* shall be permitted to be treated with an *approved* fire-retardant coating in accordance with the manufacturer's instructions to achieve the required rating.

802.4.1 Supplemental interior finish requirements. Where the *work area* on any floor exceeds 50 percent of the floor area, Section 802.4 shall apply to the interior finish in exits and corridors serving the *work area* throughout the floor.

Exception: Interior finish within tenant spaces that are entirely outside the *work area*.

802.5 Guards. The requirements of Sections 802.5.1 and 802.5.2 shall apply in all *work areas*.

802.5.1 Minimum requirement. Every portion of a floor, such as a balcony or a loading dock, that is more than 30 inches (762 mm) above the floor or grade below and is not provided with guards, or those in which the existing guards are judged to be in danger of collapsing, shall be provided with guards.

802.5.2 Design. Where there are no guards or where existing guards must be replaced, the guards shall be designed and installed in accordance with the *Building Code of New York State*.

802.6 Fire-resistance ratings. Where *approved* by the *building official*, buildings where an automatic sprinkler system installed in accordance with Section 903.3.1.1 or 903.3.1.2 of the *Building Code of New York State* has been added, and the building is now sprinklered throughout, the required fire-resistance ratings of building elements and materials shall be permitted to meet the requirements of the current building code. The building is required to meet the other applicable requirements of the *Building Code of New York State*.

Plans, investigation and evaluation reports, and other data shall be submitted indicating which building elements and materials the applicant is requesting the *building official* to review and approve for determination of applying the current building code fire-resistance ratings. Any special construction features, including fire-resistance-rated assemblies and smoke-resistive assemblies, conditions of occupancy, means-of-egress conditions, fire code deficiencies, *approved* modifications or *approved* alternative materials, design and methods of construction, and equipment applying to the building that impact required fire-resistance ratings shall be identified in the evaluation reports submitted.

SECTION 803
FIRE PROTECTION

803.1 Scope. The requirements of this section shall be limited to *work areas* in which Level 2 *alterations* are being performed, and where specified they shall apply throughout the floor on which the *work areas* are located or otherwise beyond the *work area*.

803.1.1 Corridor ratings. Where an *approved* automatic sprinkler system is installed throughout the story, the required fire-resistance rating for any corridor located on the story shall be permitted to be reduced in accordance with the *Building Code of New York State*. In order to be considered for a corridor rating reduction, such system shall provide coverage for the stairway landings serving the floor and the intermediate landings immediately below.

803.2 Automatic sprinkler systems. Automatic sprinkler systems shall be provided in accordance with the requirements of Sections 803.2.1 through 803.2.4. Installation requirements shall be in accordance with the *Building Code of New York State*.

803.2.1 High-rise buildings. In high-rise buildings, *work areas* that have exits or corridors shared by more than one tenant or that have exits or corridors serving an occupant load greater than 30 shall be provided with automatic sprinkler protection in the entire *work area* where the *work area* is located on a floor that has a sufficient sprinkler water supply system from an existing standpipe or a sprinkler riser serving that floor.

803.2.1.1 Supplemental automatic sprinkler system requirements. Where the *work area* on any floor exceeds 50 percent of that floor area, Section 803.2.1 shall apply to the entire floor on which the *work area* is located.

Exception: Occupied tenant spaces that are entirely outside the *work area*.

[NY] 803.2.2 Groups A, B, E, F-1, H, I, M, R-1, R-2, R-4, S-1 and S-2. In buildings with occupancies in Groups A, B, E, F-1, H, I, M, R-1, R-2, R-4, S-1 and S-2, *work areas* that have exits or corridors shared by more than one tenant or that have exits or corridors serving an occupant load greater than 30 shall be provided with automatic sprinkler protection where both of the following conditions occur:

1. The *work area* is required to be provided with automatic sprinkler protection in accordance with the *Building Code of New York State* as applicable to new construction.
2. The *work area* exceeds 50 percent of the floor area.

Exception: If the building does not have an existing water supply present at the floor of the proposed work area, with sufficient pressure and flow for the design of a fire sprinkler system, and without installation of a new fire pump, private service main, or fire sprinkler riser, the work areas shall be protected by an automatic smoke detection system throughout all occupiable

INTERNATIONAL CODE COUNCIL®
Copyright © 2019 ICC & NYSDOS. ALL RIGHTS RESERVED. Accessed by Lauren Gualdino (lgualdino@briarcliffmanor.org), (-) Order Number #100880972 on May 08, 2020 07:05 AM (PDT) pursuant to License Agreement with ICC & NYSDOS. No further reproduction, no

100880972

spaces other than sleeping units or individual dwelling units that activates the occupant notification system in accordance with Sections 907.4, 907.5 and 907.6 of the *Building Code of New York State*.

803.2.2.1 Mixed uses. In *work areas* containing mixed uses, one or more of which requires automatic sprinkler protection in accordance with Section 803.2.2, such protection shall not be required throughout the *work area* provided that the uses requiring such protection are separated from those not requiring protection by fire-resistance-rated construction having a minimum 2-hour rating for Group H and a minimum 1-hour rating for all other occupancy groups.

803.2.3 Windowless stories. Work located in a windowless story, as determined in accordance with the *Building Code of New York State*, shall be sprinklered where the *work area* is required to be sprinklered under the provisions of the *Building Code of New York State* for newly constructed buildings and the building has a sufficient municipal water supply without installation of a new fire pump.

803.2.4 Supervision. Fire sprinkler systems required by this section shall be supervised by one of the following methods:

1. *Approved* central station system in accordance with NFPA 72.
2. *Approved* proprietary system in accordance with NFPA 72.
3. *Approved* remote station system of the jurisdiction in accordance with NFPA 72.
4. Where *approved* by the *buidling official*, *approved* local alarm service that will cause the sounding of an alarm in accordance with NFPA 72.

Exception: Supervision is not required for the following:

1. Underground gate valve with roadway boxes.
2. Halogenated extinguishing systems.
3. Carbon dioxide extinguishing systems.
4. Dry- and wet-chemical extinguishing systems.
5. Automatic sprinkler systems installed in accordance with NFPA 13R where a common supply main is used to supply both domestic and automatic sprinkler systems and a separate shutoff valve for the automatic sprinkler system is not provided.

803.3 Standpipes. Where the *work area* includes exits or corridors shared by more than one tenant and is located more than 50 feet (15 240 mm) above or below the lowest level of fire department access, a standpipe system shall be provided. Standpipes shall have an *approved* fire department connection with hose connections at each floor level above or below the lowest level of fire department access. Standpipe systems shall be installed in accordance with the *Building Code of New York State*.

Exceptions:

1. A pump shall not be required provided that the standpipes are capable of accepting delivery by fire department apparatus of not less than 250 gallons per minute (gpm) at 65 pounds per square inch (psi) (946 L/m at 448KPa) to the topmost floor in buildings equipped throughout with an automatic sprinkler system or not less than 500 gpm at 65 psi (1893 L/m at 448KPa) to the topmost floor in all other buildings. Where the standpipe terminates below the topmost floor, the standpipe shall be designed to meet (gpm/psi) (L/m/KPa) requirements of this exception for possible future extension of the standpipe.
2. The interconnection of multiple standpipe risers shall not be required.

803.4 Fire alarm and detection. An *approved* fire alarm system shall be installed in accordance with Sections 803.4.1 through 803.4.3. Where automatic sprinkler protection is provided in accordance with Section 803.2 and is connected to the building fire alarm system, automatic heat detection shall not be required.

An *approved* automatic fire detection system shall be installed in accordance with the provisions of this code and NFPA 72. Devices, combinations of devices, appliances, and equipment shall be *approved*. The automatic fire detectors shall be smoke detectors, except that an *approved* alternative type of detector shall be installed in spaces such as boiler rooms, where products of combustion are present during normal operation in sufficient quantity to actuate a smoke detector.

803.4.1 Occupancy requirements. A fire alarm system shall be installed in accordance with Sections 803.4.1.1 through 803.4.1.6. Existing alarm-notification appliances shall be automatically activated throughout the building. Where the building is not equipped with a fire alarm system, alarm-notification appliances within the *work area* shall be provided and automatically activated.

Exceptions:

1. Occupancies with an existing, previously *approved* fire alarm system.
2. Where selective notification is permitted, alarm-notification appliances shall be automatically activated in the areas selected.

803.4.1.1 Group E. A fire alarm system shall be installed in *work areas* of Group E occupancies as required by the *Fire Code of New York State* for existing Group E occupancies.

803.4.1.2 Group I-1. A fire alarm system shall be installed in *work areas* of Group I-1 residential care/assisted living facilities as required by the *Fire Code of New York State* for existing Group I-1 occupancies.

803.4.1.3 Group I-2. A fire alarm system shall be installed throughout Group I-2 occupancies as required by the *Fire Code of New York State*.

803.4.1.4 Group I-3. A fire alarm system shall be installed in *work areas* of Group I-3 occupancies as required by the *Fire Code of New York State*.

803.4.1.5 Group R-1. A fire alarm system shall be installed in Group R-1 occupancies as required by the *Fire Code of New York State* for existing Group R-1 occupancies.

INTERNATIONAL CODE COUNCIL®
Copyright © 2019 ICC & NYSDOS. ALL RIGHTS RESERVED. Accessed by Lauren Gualdino (lgualdino@briarcliffmanor.org), (-) Order Number #100880972 on May 08, 2020 07:05 AM (PDT) pursuant to License Agreement with ICC & NYSDOS. No further reproduction, no

100880972

803.4.1.6 Group R-2. A fire alarm system shall be installed in *work areas* of Group R-2 apartment buildings as required by the *Fire Code of New York State* for existing Group R-2 occupancies.

➡ **803.4.2 Supplemental fire alarm system requirements.** Where the *work area* on any floor exceeds 50 percent of that floor area, Section 803.4.1 shall apply throughout the floor.

Exception: Alarm-initiating and notification appliances shall not be required to be installed in tenant spaces outside of the *work area*.

803.4.3 Smoke alarms. Individual sleeping units and individual dwelling units in any *work area* in Group R and I-1 occupancies shall be provided with smoke alarms in accordance with the *Fire Code of New York State*.

Exception: Interconnection of smoke alarms outside of the *work area* shall not be required.

SECTION 804
CARBON MONOXIDE DETECTION

[NY] 804.1 Carbon monoxide detection and notification. Carbon monoxide detection and notification shall be provided in accordance with Sections 503.15 through 503.15.1 for buildings that undergo an alteration.

Exceptions:

1. Work involving the exterior surfaces of buildings, such as the replacement of roofing or siding, the addition or replacement of windows or doors, or the addition of porches or decks.
2. Installation, alteration or *repairs* of plumbing or mechanical systems, other than fuel-burning appliances.

*

SECTION 805
MEANS OF EGRESS

805.1 Scope. The requirements of this section shall be limited to *work areas* that include exits or corridors shared by more than one tenant within the *work area* in which Level 2 *alterations* are being performed, and where specified they shall apply throughout the floor on which the *work areas* are located or otherwise beyond the *work area*.

805.2 General. The means of egress shall comply with the requirements of this section.

Exceptions:

1. Where the *work area* and the means of egress serving it complies with NFPA 101.
2. Means of egress complying with the requirements of the building code under which the building was constructed shall be considered to be compliant means of egress if, in the opinion of the *building official*, they do not constitute a distinct hazard to life.

805.3 Number of exits. The number of exits shall be in accordance with Sections 805.3.1 through 805.3.3.

805.3.1 Minimum number. Every story utilized for human occupancy on which there is a *work area* that includes exits or corridors shared by more than one tenant within the *work area* shall be provided with the minimum number of exits based on the occupancy and the occupant load in accordance with the *Building Code of New York State*. In addition, the exits shall comply with Sections 805.3.1.1 and 805.3.1.2.

[NY] 805.3.1.1 Single-exit buildings. Only one exit is required from buildings and stories of the following occupancies:

1. In Group A, E, F and U occupancies located on the level of exit discharge, in buildings not more than five stories, when the occupant load of the story is not greater than 50 and the exit access travel distance is not greater than 75 feet (22.86 m).
2. Group B, S2 or M occupancies located on the level of exit discharge in buildings not more than five stories, provided the required building features in Table 805.3.1.1 (1) shall be provided.
3. Group B, F2, and S2 occupancies in buildings not more than two stories that are not greater than 3,500 square feet per floor (326 m^2) when the exit access travel distance is not greater than 75 feet (22.86 m). The minimum fire-resistance rating of the exit enclosure and of the opening protection shall be one hour.
4. Open parking structures where vehicles are mechanically parked.
5. In group B, S2 or M occupancies in buildings from three stories to five stories, provided the required building features in Table 805.3.1.1(1) shall be provided.
6. In Group R-2 or R-3 buildings not more than five stories, provided the required building features in Table 805.3.1.1(2) shall be provided.
7. In H-4, H-5 and I occupancies and in rooming houses and child care centers located on the level of exit discharge, with a maximum occupant load of 10 and the exit access travel distance not greater than 75 feet (22.86 m).

805.3.1.2 Fire escapes required. For other than Group I-2, where more than one exit is required, an existing or newly constructed fire escape complying with Section 805.3.1.2.1 shall be accepted as providing one of the required means of egress.

805.3.1.2.1 Fire escape access and details. Fire escapes shall comply with all of the following requirements:

1. Occupants shall have unobstructed access to the fire escape without having to pass through a room subject to locking.
2. Access to a new fire escape shall be through a door, except that windows shall be permitted to provide access from single dwelling units or sleeping units in Group R-1, R-2 and I-1 occupancies or to provide access from spaces having a maximum occupant load of 10 in other occupancy classifications.

INTERNATIONAL CODE COUNCIL®
Copyright © 2019 ICC & NYSDOS. ALL RIGHTS RESERVED. Accessed by Lauren Gualdino (lgualdino@briarcliffmanor.org), (-) Order Number #100880972 on May 08, 2020 07:05 AM (PDT) pursuant to License Agreement with ICC & NYSDOS. No further reproduction, no

100880972

[NY] TABLE 805.3.1.1(1)
GROUP B, S2 OR M LOCATED ON THE LEVEL OF EXIT DISCHARGE SINGLE EXIT BUILDING

Required Building Features	MAXIMUM NUMBER OF STORIES ABOVE GRADE PLANE[a]				
	1 and 2		3		4 and 5
	No Sprinklers	Sprinklers	No Sprinklers	Sprinklers	Sprinklers
Permitted Occupancy	B, S2 or M	B, S2 or M	B, S2 or M	B, S2 or M	B, S2 or M
Content restriction limited to storage or retail display of hazardous materials within the building not exceeding 10% of the maximum allowable quantities in Table 307.1(1) of the *Building Code of New York State*	Yes	Yes	Yes	Yes	Yes
Maximum gross floor area per story (square feet)	3,500	3,500	3,500	3,500	3,500
Exit access travel distance (feet)	50	75	50	75	75
One emergency escape and rescue opening on each floor and accessible to each tenant[d]	Yes	No	Yes	Yes	Yes
Fire resistance rating of shafts and vertical exit enclosures (hours)	1	0.5	1	0.5	2
Fire resistance rating of corridors (hours)[b]	0.5	0	1	0.5	1
Fire protection rating of corridor openings (hours)	0.33	Self-Closing	0.75	0.33	0.75
Vertical exit and hoistway venting at 3.5% of the cross section and activated by a smoke detector, or smoke management by Section 909 of the *Building Code of New York State*	No Sprinklers	No	No Sprinklers	No	Yes
Corridor and exit interior finishes per Sections 803 and 804 of the *Building Code of New York State*	Yes	Yes	Yes	Yes	Yes
Horizontal assemblies between use groups (hours)[b]	0.5	0	0.5	0	1
Fire partitions between tenants (hours)[b]	0.5	0	0.5	0	1
Incidental use areas fire resistance rating enclosures (hours) in Table 509 of the *Building Code of New York State*	1	0.5	2	0.5	2
Fire dampers per Section 717 of the *Building Code of New York State* for duct and air transfer openings in horizontal assemblies and shaft enclosures which require a fire resistance rating	Yes	No	Yes	No	Yes
Electrical branch circuits meeting NFPA 70 requirements	Yes	Yes	Yes	Yes	Yes
Manual fire alarm system per Section 907 of the *Building Code of New York State*	Yes	Yes	Yes	Yes	Yes
Automatic heat detection system per Section 907 of the *Building Code of New York State* throughout building in spaces which would otherwise be provided with fire sprinklers per NFPA 13	Yes	No	Yes	No	Yes
Automatic smoke detection per Section 907 of the *Building Code of New York State* in shared exit access corridors	No	No	No	No	No
Electrically supervised quick response wet pipe sprinkler system throughout the building per Section 903.3[c] of the *Building Code of New York State*	No	Yes	No	Yes	Yes
Class I Manual — Wet Fire Standpipe System per Section 905 of the *Building Code of New York State*	No	No	No	No	Yes

a. Provided the building has not more than one level below the first story. Not applicable for Type V construction greater than 3 stories in height.

b. Zero (0) fire resistance rating means wall is required to resist the passage of smoke.

c. Dry pipe sprinkler protection with standard response sprinklers is only permitted in unheated spaces subject to freezing temperatures.

d. Where required, an emergency escape and rescue opening shall have the following characteristics: it shall have a minimum net clear opening of 4 square feet with a minimum dimension of 18 inches (457 mm) with bottom of opening no higher than 3 feet 6 inches (1067 mm) nor lower than 18 inches (457 mm) above finished floor in all above grade stories and no higher than 4 feet 6 inches (1372 mm) in a basement.

INTERNATIONAL CODE COUNCIL®
Copyright © 2019 ICC & NYSDOS. ALL RIGHTS RESERVED. Accessed by Lauren Gualdino (lgualdino@briarcliffmanor.org), (-) Order Number #100880972 on May 08, 2020 07:05 AM (PDT) pursuant to License Agreement with ICC & NYSDOS. No further reproduction, no

100880972

[NY] TABLE 805.3.1.1(2)
GROUP R-2 OR R-3 SINGLE EXIT BUILDING

Required Building Features	MAXIMUM NUMBER OF STORIES ABOVE GRADE PLANE[a]				
	1 and 2		3		4 and 5
	No Sprinklers	Sprinklers	No Sprinklers	Sprinklers	Sprinklers
Permitted Occupancy	R2 or R3	R2 or R3	R2 or R3	R2 or R3	R2 or R3
Content restriction limited to storage or retail display of hazardous materials within the building not exceeding 10% of the maximum allowable quantities in Table 307.1(1) of the *Building Code of New York State*	Yes	Yes	Yes	Yes	Yes
Maximum gross floor area per story (square feet)	4 Dwelling Units and 3,500	4 Dwelling Units and 3,500	4 Dwelling Units and 3,500	4 Dwelling Units and 3,500	4 Dwelling Units and 3,500
Exit access travel distance (feet)	50	75	50	75	75
One emergency escape and rescue opening on each floor and accessible to each tenant[d]	Yes	No	Yes	Yes	Yes
Fire resistance rating of shafts and vertical exit enclosures (hours)	1	0.5	1	0.5	2
Fire resistance rating of corridors (hours)[b]	0.5	0	1	0.5	1
Fire protection rating of corridor openings (hours)	0.33	Self-Closing	0.75	0.33	0.75
Vertical exit and hoistway venting at 3.5% of the cross section and activated by a smoke detector, or smoke management in accordance with Section 909 of the *Building Code of New York State*	No	No	No	No	Yes
Corridor and exit interior finishes per Sections 803 and 804 of the *Building Code of New York State*	Yes	Yes	Yes	Yes	Yes
Horizontal assemblies between use groups (hours)[b]	0.5	0	0.5	0	1
Fire partitions between tenants (hours)[b]	0.5	0	0.5	0	1
Incidental use areas fire-resistance-rating enclosures (hours) in Table 509 of the *Building Code of New York State*	1	0.5	2	0.5	2
Fire dampers per Section 717 of the *Building Code of New York State* for duct and air transfer openings in horizontal assemblies and shaft enclosures which require a fire resistance rating	Yes	No	Yes	No	Yes
Electrical branch circuits meeting NFPA 70 requirements	Yes	Yes	Yes	Yes	Yes
Manual fire alarm system per Section 907 of the *Building Code of New York State*	Yes	Yes	Yes	Yes	Yes
Automatic heat detection system per Section 907 of the *Building Code of New York State* throughout the building in spaces which would otherwise be provided with fire sprinklers per NFPA 13	Yes	No	Yes	No	No
Single or multiple-station smoke alarms within dwelling units per Section 907 of the *Building Code of New York State*	Yes	Yes	Yes	Yes	Yes
Automatic smoke detection per Section 907 of the *Building Code of New York State* in shared exit access corridors	Yes	No	Yes	No	No
Electrically supervised quick response wet pipe sprinkler system throughout the building per Section 903.3[c] of the *Building Code of New York State*	No[c]	Yes	Type V construction only[c]	Yes	Yes
Class I Manual — Wet Fire Standpipe System per Section 905 of the *Building Code of New York State*	No	No	No	No	Yes

a. Provided the building has not more than one level below the first story. Not applicable for Type V construction greater than 3 stories in height.

b. Zero (0) fire resistance rating means the wall is required to resist the passage of smoke.

c. Quick response sprinkler protection is required in all nonresidential occupancies located below Group R and for all 3 story, Type V buildings. Dry pipe sprinkler protection with standard response sprinklers is only permitted in unheated spaces subject to freezing temperatures.

d. Where required, an emergency escape and rescue opening shall have the following characteristics: it shall have a minimum net clear opening of 4 square feet with a minimum dimension of 18 inches (457 mm) with bottom of opening no higher than 3 feet 6 inches (1067 mm) nor lower than 18 inches (457 mm) above finished floor in all above grade stories and no higher than 4 feet 6 inches (1372 mm) in a basement.

INTERNATIONAL CODE COUNCIL®
Copyright © 2019 ICC & NYSDOS. ALL RIGHTS RESERVED. Accessed by Lauren Gualdino (lgualdino@briarcliffmanor.org), (-) Order Number #100880972 on May 08, 2020 07:05 AM (PDT) pursuant to License Agreement with ICC & NYSDOS. No further reproduction, no

100880972

2.1. The window shall have a minimum net clear opening of 5.7 square feet (0.53m^2) or 5 square feet (0.46 m^2) where located at grade.

2.2. The minimum net clear opening height shall be 24 inches (610 mm) and net clear opening width shall be 20 inches (508 mm).

2.3. The bottom of the clear opening shall not be greater than 44 inches (1118 mm) above the floor.

2.4. The operation of the window shall comply with the operational constraints of the *Building Code of New York State*.

3. Newly constructed fire escapes shall be permitted only where exterior stairways cannot be utilized because of lot lines limiting the stairway size or because of the sidewalks, alleys, or roads at grade level.

4. Openings within 10 feet (3048 mm) of fire escape stairways shall be protected by fire assemblies having minimum $^3/_4$-hour fire-resistance ratings.

   Exception: Opening protection shall not be required in buildings equipped throughout with an *approved* automatic sprinkler system.

5. In all buildings of Group E occupancy, up to and including the 12th grade, buildings of Group I occupancy, rooming houses and childcare centers, ladders of any type are prohibited on fire escapes used as a required means of egress.

805.3.1.2.2 Construction. The fire escape shall be designed to support a live load of 100 pounds per square foot (4788 Pa) and shall be constructed of steel or other *approved noncombustible materials*. Fire escapes constructed of wood not less than nominal 2 inches (51 mm) thick are permitted on buildings of Type V construction. Walkways and railings located over or supported by combustible roofs in buildings of Types III and IV construction are permitted to be of wood not less than nominal 2 inches (51 mm) thick.

805.3.1.2.3 Dimensions. Stairways shall be not less than 22 inches (559 mm) wide with risers not more than, and treads not less than, 8 inches (203 mm). Landings at the foot of stairways shall be not less than 40 inches (1016 mm) wide by 36 inches (914 mm) long and located not more than 8 inches (203 mm) below the door.

805.3.2 Mezzanines. Mezzanines in the *work area* and with an occupant load of more than 50 or in which the travel distance to an exit exceeds 75 feet (22 860 mm) shall have access to not fewer than two independent means of egress.

Exception: Two independent means of egress are not required where the travel distance to an exit does not exceed 100 feet (30 480 mm) and the building is protected throughout with an automatic sprinkler system.

805.3.3 Main entrance—Group A. Buildings of Group A with an occupant load of 300 or more shall be provided with a main entrance capable of serving as the main exit with an egress capacity of not less than one-half of the total occupant load. The remaining exits shall be capable of providing one-half of the total required exit capacity.

Exception: Where a main exit is not well defined or where multiple main exits are provided, exits shall be permitted to be distributed around the perimeter of the building provided that the total width of egress is not less than 100 percent of the required width.

805.4 Egress doorways. Egress doorways in any *work area* shall comply with Sections 805.4.1 through 805.4.5.

805.4.1 Two egress doorways required. Work areas shall be provided with two egress doorways in accordance with the requirements of Sections 805.4.1.1 and 805.4.1.2.

805.4.1.1 Occupant load and travel distance. In any *work area*, all rooms and spaces having an occupant load greater than 50 or in which the travel distance to an exit exceeds 75 feet (22860 mm) shall have not fewer than two egress doorways.

Exceptions:

1. Storage rooms having a maximum occupant load of 10.
2. Where the *work area* is served by a single exit in accordance with Section 805.3.1.1.

805.4.1.2 Group I-2. In buildings of Group I-2 occupancy, any patient sleeping room or suite of patient rooms greater than 1,000 square feet (93 m^2) within the *work area* shall have not fewer than two egress doorways.

805.4.2 Door swing. In the *work area* and in the egress path from any *work area* to the exit discharge, all egress doors serving an occupant load greater than 50 shall swing in the direction of exit travel.

805.4.2.1 Supplemental requirements for door swing. Where the *work area* exceeds 50 percent of the floor area, door swing shall comply with Section 805.4.2 throughout the floor.

Exception: Means of egress within or serving only a tenant space that is entirely outside the *work area*.

805.4.3 Door closing. In any *work area*, all doors opening onto an exit passageway at grade or an exit stairway shall be self-closing or automatic-closing by listed closing devices.

Exceptions:

1. Where exit enclosure is not required by the *Building Code of New York State*.

INTERNATIONAL CODE COUNCIL®
Copyright © 2019 ICC & NYSDOS. ALL RIGHTS RESERVED. Accessed by Lauren Gualdino (lgualdino@briarcliffmanor.org), (-) Order Number #100880972 on May 08, 2020 07:05 AM (PDT) pursuant to License Agreement with ICC & NYSDOS. No further reproduction, no

100880972

2. Means of egress within or serving only a tenant space that is entirely outside the *work area*.

805.4.3.1 Supplemental requirements for door closing. Where the *work area* exceeds 50 percent of the floor area, doors shall comply with Section 805.4.3 throughout the exit stairway from the *work area* to, and including, the level of exit discharge.

805.4.4 Panic hardware. In any *work area*, and in the egress path from any *work area* to the exit discharge, in buildings or portions thereof of Group A assembly occupancies with an occupant load greater than 100, all required exit doors equipped with latching devices shall be equipped with *approved* panic hardware.

805.4.4.1 Supplemental requirements for panic hardware. Where the *work area* exceeds 50 percent of the floor area, panic hardware shall comply with Section 805.4.4 throughout the floor.

Exception: Means of egress within a tenant space that is entirely outside the *work area*.

805.4.5 Emergency power source in Group I-3. Power-operated sliding doors or power-operated locks for swinging doors shall be operable by a manual release mechanism at the door. Emergency power shall be provided for the doors and locks in accordance with Section 2702 of the *Building Code of New York State*.

Exceptions:

1. Emergency power is not required in facilities with 10 or fewer locks complying with the exception to Section 408.4.1 of the *Building Code of New York State*.
2. Emergency power is not required where remote mechanical operating releases are provided.

805.5 Openings in corridor walls. Openings in corridor walls in any *work area* shall comply with Sections 805.5.1 through 805.5.4.

Exception: Openings in corridors where such corridors are not required to be rated in accordance with the *Building Code of New York State*.

805.5.1 Corridor doors. Corridor doors in the *work area* shall not be constructed of hollow core wood and shall not contain louvers. Dwelling unit or sleeping unit corridor doors in *work areas* in buildings of Groups R-1, R-2, and I-1 shall be not less than $1^3/_8$-inch (35 mm) solid core wood or *approved* equivalent and shall not have any glass panels, other than *approved* wired glass or other *approved* glazing material in metal frames. Dwelling unit or sleeping unit corridor doors in *work areas* in buildings of Groups R-1, R-2, and I-1 shall be equipped with *approved* door closers. Replacement doors shall be $1^3/_4$-inch (44 mm) solid bonded wood core or *approved* equivalent, unless the existing frame will accommodate only a $1^3/_8$-inch (35 mm) door.

Exceptions:

1. Corridor doors within a dwelling unit or sleeping unit.
2. Existing doors meeting the requirements of *Guidelines on Fire Ratings of Archaic Materials and Assemblies* (EBCNY Resource A) for a rating of 15 minutes or more shall be accepted as meeting the provisions of this requirement.
3. Existing doors in buildings protected throughout with an *approved* automatic sprinkler system shall be required only to resist smoke, be reasonably tight fitting, and shall not contain louvers.
4. In group homes with not more than 15 occupants and that are protected with an *approved* automatic detection system, closing devices are not required.
5. Door assemblies having a fire protection rating of not less than 20 minutes.

805.5.2 Transoms. In all buildings of Group I-1, I-2, R-1 and R-2 occupancies, all transoms in corridor walls in *work areas* shall be either glazed with $^1/_4$-inch (6.4 mm) wired glass set in metal frames or other glazing assemblies having a fire protection rating as required for the door and permanently secured in the closed position or sealed with materials consistent with the corridor construction.

805.5.3 Other corridor openings. In any *work area*, any other sash, grille, or opening in a corridor and any window in a corridor not opening to the outside air shall be sealed with materials consistent with the corridor construction.

805.5.3.1 Supplemental requirements for other corridor opening. Where the *work area* exceeds 50 percent of the floor area, Section 805.5.3 shall be applicable to all corridor windows, grills, sashes, and other openings on the floor.

Exception: Means of egress within or serving only a tenant space that is entirely outside the *work area*.

805.5.4 Supplemental requirements for corridor openings. Where the *work area* on any floor exceeds 50 percent of the floor area, the requirements of Sections 805.5.1 through 805.5.3 shall apply throughout the floor.

805.6 Dead-end corridors. Dead-end corridors in any *work area* shall not exceed 35 feet (10 670 mm).

Exceptions:

1. Where dead-end corridors of greater length are permitted by the *Building Code of New York State*.
2. In other than Group A and H occupancies, the maximum length of an existing dead-end corridor shall be 50 feet (15 240 mm) in buildings equipped throughout with an automatic fire alarm system installed in accordance with the *Building Code of New York State*.
3. In other than Group A and H occupancies, the maximum length of an existing dead-end corridor shall be 70 feet (21 356 mm) in buildings equipped throughout with an automatic sprinkler system installed in accordance with the *Building Code of New York State*.
4. In other than Group A and H occupancies, the maximum length of an existing, newly constructed, or extended dead-end corridor shall not exceed 50 feet (15 240 mm) on floors equipped with an automatic

INTERNATIONAL CODE COUNCIL®
Copyright © 2019 ICC & NYSDOS. ALL RIGHTS RESERVED. Accessed by Lauren Gualdino (lgualdino@briarcliffmanor.org), (-) Order Number #100880972 on May 08, 2020 07:05 AM (PDT) pursuant to License Agreement with ICC & NYSDOS. No further reproduction, no

100880972

sprinkler system installed in accordance with the *Building Code of New York State*.

805.7 Means-of-egress lighting. Means-of-egress lighting shall be in accordance with this section, as applicable.

805.7.1 Artificial lighting required. Means of egress in all work areas shall be provided with artificial lighting in accordance with the requirements of the *Building Code of New York State*.

805.7.2 Supplemental requirements for means-of-egress lighting. Where the *work area* on any floor exceeds 50 percent of that floor area, means of egress throughout the floor shall comply with Section 805.7.1.

Exception: Means of egress within or serving only a tenant space that is entirely outside the *work area*.

805.8 Exit signs. Exit signs shall be in accordance with this section, as applicable.

805.8.1 Work areas. Means of egress in all *work areas* shall be provided with exit signs in accordance with the requirements of the *Building Code of New York State*.

805.8.2 Supplemental requirements for exit signs. Where the *work area* on any floor exceeds 50 percent of that floor area, means of egress throughout the floor shall comply with Section 805.8.1.

Exception: Means of egress within a tenant space that is entirely outside the *work area*.

805.9 Handrails. The requirements of Sections 805.9.1 and 805.9.2 shall apply to handrails from the *work area* floor to, and including, the level of exit discharge.

805.9.1 Minimum requirement. Every required exit stairway that is part of the means of egress for any *work area* and that has three or more risers and is not provided with not fewer than one handrail, or in which the existing handrails are judged to be in danger of collapsing, shall be provided with handrails for the full length of the stairway on not fewer than one side. Exit stairways with a required egress width of more than 66 inches (1676 mm) shall have handrails on both sides.

805.9.2 Design. Handrails required in accordance with Section 805.9.1 shall be designed and installed in accordance with the provisions of the *Building Code of New York State*.

805.10 Refuge areas. Where *alterations* affect the configuration of an area utilized as a refuge area, the capacity of the refuge area shall not be reduced below that required in Sections 805.10.1 and 805.10.2.

805.10.1 Capacity. The required capacity of refuge areas shall be in accordance with Sections 805.10.1.1 through 805.10.1.3.

805.10.1.1 Group I-2. In Group I-2 occupancies, the required capacity of the refuge areas for smoke compartments in accordance with Section 407.5.1 of the *Building Code of New York State* shall be maintained.

805.10.1.2 Group I-3. In Group I-3 occupancies, the required capacity of the refuge areas for smoke compartments in accordance with Section 408.6.2 of the *Building Code of New York State* shall be maintained.

805.10.1.3 Ambulatory care. In ambulatory care facilities required to be separated by Section 422.2 of the *Building Code of New York State*, the required capacity of the refuge areas for smoke compartments in accordance with Section 422.3.2 of the *Building Code of New York State* shall be maintained.

805.10.2 Horizontal exits. The required capacity of the refuge area for horizontal exits in accordance with Section 1026.4 of the *Building Code of New York State* shall be maintained.

805.11 Guards. The requirements of Sections 805.11.1 and 805.11.2 shall apply to guards from the *work area* floor to, and including, the level of exit discharge but shall be confined to the egress path of any *work area*.

805.11.1 Minimum requirement. Every open portion of a stairway, landing, or balcony that is more than 30 inches (762 mm) above the floor or grade below and is not provided with guards, or those portions in which existing guards are judged to be in danger of collapsing, shall be provided with guards.

805.11.2 Design. Guards required in accordance with Section 805.11.1 shall be designed and installed in accordance with the *Building Code of New York State*.

SECTION 806
STRUCTURAL

[BS] 806.1 General. Structural elements and systems within buildings undergoing Level 2 *alterations* shall comply with this section.

[BS] 806.2 Existing structural elements carrying gravity loads. Any existing gravity load-carrying structural element for which an *alteration* causes an increase in design dead, live or snow load, including snow drift effects, of more than 5 percent shall be replaced or altered as needed to carry the gravity loads required by the *Building Code of New York State* for new structures. Any existing gravity load-carrying structural element whose gravity load-carrying capacity is decreased as part of the *alteration* shall be shown to have the capacity to resist the applicable design dead, live and snow loads, including snow drift effects, required by the *Building Code of New York State* for new structures.

Exceptions:

1. Buildings of Group R occupancy with not more than five dwelling or sleeping units used solely for residential purposes where the altered building complies with the conventional light-frame construction methods of the *Building Code of New York State* or the provisions of the *Residential Code of New York State*.
2. Buildings in which the increased dead load is attributable to the addition of a second layer of roof covering weighing 3 pounds per square foot (0.1437 kN/m^2) or less over an existing single layer of roof covering.

[BS] 806.3 Existing structural elements resisting lateral loads. Except as permitted by Section 806.4, where the *alteration* increases design lateral loads, or where the alteration results in prohibited structural irregularity as defined in

INTERNATIONAL CODE COUNCIL®
Copyright © 2019 ICC & NYSDOS. ALL RIGHTS RESERVED. Accessed by Lauren Gualdino (lgualdino@briarcliffmanor.org), (-) Order Number #100880972 on May 08, 2020 07:05 AM (PDT) pursuant to License Agreement with ICC & NYSDOS. No further reproduction, no

100880972

ASCE 7, or where the *alteration* decreases the capacity of any existing lateral load-carrying structural element, the structure of the altered building or structure shall meet the requirements of Sections 1609 and 1613 of the *Building Code of New York State*. Reduced seismic forces shall be permitted.

Exception: Any existing lateral load-carrying structural element whose demand-capacity ratio with the *alteration* considered is not more than 10 percent greater than its demand-capacity ratio with the *alteration* ignored shall be permitted to remain unaltered. For purposes of calculating demand-capacity ratios, the demand shall consider applicable load combinations with design lateral loads or forces in accordance with Sections 1609 and 1613 of the *Building Code of New York State*. Reduced seismic forces shall be permitted. For purposes of this exception, comparisons of demand-capacity ratios and calculation of design lateral loads, forces and capacities shall account for the cumulative effects of *additions* and *alterations* since original construction.

[BS] 806.4 Voluntary lateral force-resisting system alterations. Structural *alterations* that are intended exclusively to improve the lateral force-resisting system and are not required by other sections of this code shall not be required to meet the requirements of Section 1609 or Section 1613 of the *Building Code of New York State*, provided that the following conditions are met:

1. The capacity of existing structural systems to resist forces is not reduced.
2. New structural elements are detailed and connected to existing or new structural elements as required by the *Building Code of New York State* for new construction.
3. New or relocated nonstructural elements are detailed and connected to existing or new structural elements as required by the *Building Code of New York State* for new construction.
4. The *alterations* do not create a structural irregularity as defined in ASCE 7 or make an existing structural irregularity more severe.

SECTION 807
ELECTRICAL

807.1 New installations. Newly installed electrical equipment and wiring relating to work done in any *work area* shall comply with all applicable requirements of NFPA 70 except as provided for in Section 807.3.

807.2 Existing installations. Existing wiring in all *work areas* in Group A-1, A-2, A-5, H and I occupancies shall be upgraded to meet the materials and methods requirements of Chapter 7.

807.3 Residential occupancies. In Group R-2, R-3 and R-4 occupancies and buildings regulated by the *Residential Code of New York State*, the requirements of Sections 807.3.1 through 807.3.7 shall be applicable only to *work areas* located within a dwelling unit.

807.3.1 Enclosed areas. Enclosed areas, other than closets, kitchens, basements, garages, hallways, laundry areas, utility areas, storage areas and bathrooms shall have not fewer than two duplex receptacle outlets or one duplex receptacle outlet and one ceiling or wall-type lighting outlet.

807.3.2 Kitchens. Kitchen areas shall have not fewer than two duplex receptacle outlets.

807.3.3 Laundry areas. Laundry areas shall have not fewer than one duplex receptacle outlet located near the laundry equipment and installed on an independent circuit.

807.3.4 Ground fault circuit interruption. Newly installed receptacle outlets shall be provided with ground fault circuit interruption as required by NFPA 70.

807.3.5 Minimum lighting outlets. Not fewer than one lighting outlet shall be provided in every bathroom, hallway, stairway, attached garage, and detached garage with electric power, and to illuminate outdoor entrances and exits.

807.3.6 Utility rooms and basements. Not fewer than one lighting outlet shall be provided in utility rooms and basements where such spaces are used for storage or contain equipment requiring service.

807.3.7 Clearance for equipment. Clearance for electrical service equipment shall be provided in accordance with the NFPA 70.

SECTION 808
MECHANICAL

808.1 Reconfigured or converted spaces. Reconfigured spaces intended for occupancy and spaces converted to habitable or occupiable space in any *work area* shall be provided with natural or mechanical ventilation in accordance with the *Mechanical Code of New York State*.

Exception: Existing mechanical ventilation systems shall comply with the requirements of Section 808.2.

808.2 Altered existing systems. In mechanically ventilated spaces, existing mechanical ventilation systems that are altered, reconfigured, or extended shall provide not less than 5 cubic feet per minute (cfm) (0.0024 m^3/s) per person of outdoor air and not less than 15 cfm (0.0071 m^3/s) of ventilation air per person; or not less than the amount of ventilation air determined by the Indoor Air Quality Procedure of ASHRAE 62.1.

808.3 Local exhaust. Newly introduced devices, equipment, or operations that produce airborne particulate matter, odors, fumes, vapor, combustion products, gaseous contaminants, pathogenic and allergenic organisms, and microbial contaminants in such quantities as to affect adversely or impair health or cause discomfort to occupants shall be provided with local exhaust.

SECTION 809
PLUMBING

809.1 Minimum fixtures. Where the occupant load of the story is increased by more than 20 percent, plumbing fixtures for the story shall be provided in quantities specified in the *Plumbing Code of New York State* based on the increased occupant load.

INTERNATIONAL CODE COUNCIL®
Copyright © 2019 ICC & NYSDOS. ALL RIGHTS RESERVED. Accessed by Lauren Gualdino (lgualdino@briarcliffmanor.org), (-) Order Number #100880972 on May 08, 2020 07:05 AM (PDT) pursuant to License Agreement with ICC & NYSDOS. No further reproduction, no

100880972

SECTION 810
ENERGY CONSERVATION

810.1 Minimum requirements. Level 2 *alterations* to *existing buildings* or structures are permitted without requiring the entire building or structure to comply with the energy requirements of the *Energy Conservation Construction Code of New York State* or *Residential Code of New York State*. The *alterations* shall conform to the energy requirements of the *Energy Conservation Construction Code of New York State* or *Residential Code of New York State* as they relate to new construction only.

INTERNATIONAL CODE COUNCIL®
Copyright © 2019 ICC & NYSDOS. ALL RIGHTS RESERVED. Accessed by Lauren Gualdino (lgualdino@briarcliffmanor.org), (-) Order Number #100880972 on May 08, 2020 07:05 AM (PDT) pursuant to License Agreement with ICC & NYSDOS. No further reproduction, no

100880972

CHAPTER 9
ALTERATIONS—LEVEL 3

SECTION 901
GENERAL

901.1 Scope. Level 3 *alterations* as described in Section 604 shall comply with the requirements of this chapter.

901.2 Compliance. In addition to the provisions of this chapter, work shall comply with all of the requirements of Chapters 7 and 8. The requirements of Sections 802, 803, 804, and 805 shall apply within all *work areas* whether or not they include exits and corridors shared by more than one tenant and regardless of the occupant load.

Exception: Buildings in which the reconfiguration of space affecting exits or shared egress access is exclusively the result of compliance with the accessibility requirements of Section 305.7 shall not be required to comply with this chapter.

SECTION 902
SPECIAL USE AND OCCUPANCY

902.1 High-rise buildings. Any building having occupied floors more than 75 feet (22 860 mm) above the lowest level of fire department vehicle access shall comply with the requirements of Sections 902.1.1 and 902.1.2.

902.1.1 Recirculating air or exhaust systems. Where a floor is served by a recirculating air or exhaust system with a capacity greater than 15,000 cubic feet per minute (701 m^3/s), that system shall be equipped with *approved* smoke and heat detection devices installed in accordance with the *Mechanical Code of New York State*.

902.1.2 Elevators. Where there is an elevator or elevators for public use, not fewer than one elevator serving the *work area* shall comply with this section. Existing elevators with a travel distance of 25 feet (7620 mm) or more above or below the main floor or other level of a building and intended to serve the needs of emergency personnel for fire-fighting or rescue purposes shall be provided with emergency operation in accordance with ASME A17.3. New elevators shall be provided with Phase I emergency recall operation and Phase II emergency in-car operation in accordance with ASME A17.1/CSAB44.1.

902.2 Boiler and furnace equipment rooms. Boiler and furnace equipment rooms adjacent to or within Group I-1, I-2, I-4, R-1, R-2 and R-4 occupancies shall be enclosed by 1-hour fire-resistance-rated construction.

Exceptions:

1. Steam boiler equipment operating at pressures of 15 pounds per square inch gauge (psig) (103.4 kPa) or less is not required to be enclosed.
2. Hot water boilers operating at pressures of 170 psig (1171 kPa) or less are not required to be enclosed.
3. Furnace and boiler equipment with 400,000 British thermal units (Btu) (4.22 × 108 J) per hour input rating or less is not required to be enclosed.
4. Furnace rooms protected with an automatic sprinkler system are not required to be enclosed.

SECTION 903
BUILDING ELEMENTS AND MATERIALS

903.1 Existing shafts and vertical openings. Existing stairways that are part of the means of egress shall be enclosed in accordance with Section 802.2.1 from the highest *work area* floor to, and including, the level of exit discharge and all floors below.

903.2 Fire partitions in Group R-3. Fire separation in Group R-3 occupancies shall be in accordance with Section 903.2.1.

903.2.1 Separation required. Where the *work area* is in any attached dwelling unit in Group R-3 or any multiple single-family dwelling (townhouse), walls separating the dwelling units that are not continuous from the foundation to the underside of the roof sheathing shall be constructed to provide a continuous fire separation using construction materials consistent with the existing wall or complying with the requirements for new structures. Work shall be performed on the side of the dwelling unit wall that is part of the *work area*.

Exception: Where *alterations* or *repairs* do not result in the removal of wall or ceiling finishes exposing the structure, walls are not required to be continuous through concealed floor spaces.

903.3 Interior finish. Interior finish in exits serving the *work area* shall comply with Section 802.4 between the highest floor on which there is a *work area* to the floor of exit discharge.

SECTION 904
FIRE PROTECTION

904.1 Automatic sprinkler systems. An automatic sprinkler system shall be provided in a *work area* where required by Section 803.2 or this section.

904.1.1 High-rise buildings. An automatic sprinkler system shall be provided in *work areas* where the high-rise building has a sufficient municipal water supply for the design and installation of an automatic sprinkler system at the site.

904.1.2 Rubbish and linen chutes. Rubbish and linen chutes located in the *work area* shall be provided with automatic sprinkler system protection or an *approved* automatic fire-extinguishing system where protection of the rubbish and linen chute would be required under the provisions of the *Building Code of New York State* for new construction.

904.1.3 Upholstered furniture or mattresses. *Work areas* shall be provided with an automatic sprinkler system

INTERNATIONAL CODE COUNCIL®
Copyright © 2019 ICC & NYSDOS. ALL RIGHTS RESERVED. Accessed by Lauren Gualdino (lgualdino@briarcliffmanor.org), (-) Order Number #100880972 on May 08, 2020 07:05 AM (PDT) pursuant to License Agreement with ICC & NYSDOS. No further reproduction, no

100880972

in accordance with the *Building Code of New York State* where any of the following conditions exist:

1. A Group F-1 occupancy used for the manufacture of upholstered furniture or mattresses exceeds 2,500 square feet (232 m^2).
2. A Group M occupancy used for the display and sale of upholstered furniture or mattresses exceeds 5,000 square feet (464 m^2).
3. A Group S-1 occupancy used for the storage of upholstered furniture or mattresses exceeds 2,500 square feet (232 m^2).

904.1.4 Other required automatic sprinkler systems. In buildings and areas listed in Table 903.2.11.6 of the *Building Code of New York State*, *work areas* that have exits or corridors shared by more than one tenant or that have exits or corridors serving an occupant load greater than 30 shall be provided with an automatic sprinkler system under the following conditions:

1. The *work area* is required to be provided with an automatic sprinkler system in accordance with the *Building Code of New York State* applicable to new construction.
2. The building site has sufficient municipal water supply for design and installation of an automatic sprinkler system.

904.2 Fire alarm and detection systems. Fire alarm and detection shall be provided in accordance with Section 907 of the *Building Code of New York State* as required for new construction.

904.2.1 Manual fire alarm systems. Where required by the *Building Code of New York State,* a manual fire alarm system shall be provided throughout the *work area*. Alarm notification appliances shall be provided on such floors and shall be automatically activated as required by the *Building Code of New York State.*

Exceptions:

1. Alarm-initiating and notification appliances shall not be required to be installed in tenant spaces outside of the *work area*.
2. Visual alarm notification appliances are not required, except where an existing alarm system is upgraded or replaced or where a new fire alarm system is installed.

904.2.2 Automatic fire detection. Where required by the *Building Code of New York State* for new buildings, automatic fire detection systems shall be provided throughout the *work area*.

SECTION 905
MEANS OF EGRESS

905.1 General. The means of egress shall comply with the requirements of Section 805 except as specifically required in Sections 905.2 and 905.3.

905.2 Means-of-egress lighting. Means of egress from the highest *work area* floor to the floor of exit discharge shall be provided with artificial lighting within the exit enclosure in accordance with the requirements of the *Building Code of New York State*.

905.3 Exit signs. Means of egress from the highest *work area* floor to the floor of exit discharge shall be provided with exit signs in accordance with the requirements of the *Building Code of New York State*.

SECTION 906
STRUCTURAL

[BS] 906.1 General. Where buildings are undergoing Level 3 *alterations,* the provisions of this section shall apply.

[BS] 906.2 Existing structural elements resisting lateral loads. Where work involves a *substantial structural alteration*, the lateral load-resisting system of the altered building shall be shown to satisfy the requirements of Sections 1609 and 1613 of the *Building Code of New York State*. Reduced seismic forces shall be permitted.

Exceptions:

1. Buildings of Group R occupancy with not more than five dwelling or sleeping units used solely for residential purposes that are altered based on the conventional light-frame construction methods of the *Building Code of New York State* or in compliance with the provisions of the *Residential Code of New York State*.
2. Where the intended *alteration* involves only the lowest story of a building, only the lateral load-resisting components in and below that story need comply with this section.

[BS] 906.3 Seismic Design Category F. Where the building is assigned to Seismic Design Category F, the structure of the altered building shall meet the requirements of Sections 1609 and 1613 of the *Building Code of New York State*. Reduced seismic forces shall be permitted.

[BS] 906.4. Anchorage for concrete and masonry buildings. For any building assigned to Seismic Design Category D, E or F with a structural system that includes concrete or reinforced masonry walls with a flexible roof diaphragm, the *alteration* work shall include installation of wall anchors at the roof line of all subject buildings and at the floor lines of unreinforced masonry buildings unless an evaluation demonstrates compliance of existing wall anchorage. Reduced seismic forces shall be permitted.

[BS] 906.5 Anchorage for unreinforced masonry walls. For any building assigned to Seismic Design Category C, D, E or F with a structural system that includes unreinforced masonry bearing walls, the *alteration* work shall include installation of wall anchors at the roof line, unless an evaluation demonstrates compliance of existing wall anchorage. Reduced seismic forces shall be permitted.

[BS] 906.6 Bracing for unreinforced masonry parapets. Parapets constructed of unreinforced masonry in buildings

INTERNATIONAL CODE COUNCIL®
Copyright © 2019 ICC & NYSDOS. ALL RIGHTS RESERVED. Accessed by Lauren Gualdino (lgualdino@briarcliffmanor.org), (-) Order Number #100880972 on May 08, 2020 07:05 AM (PDT) pursuant to License Agreement with ICC & NYSDOS. No further reproduction, no

100880972

assigned to Seismic Design Category C, D, E or F shall have bracing installed as needed to resist the reduced *Building Code of New York State*-level seismic forces in accordance with Section 303.3, unless an evaluation demonstrates compliance of such items. Use of reduced seismic forces shall be permitted.

[BS] 906.7 Anchorage of unreinforced masonry partitions. Where the building is assigned to Seismic Design Category C, D, E or F, unreinforced masonry partitions and nonstructural walls within the *work area* and adjacent to egress paths from the *work area* shall be anchored, removed, or altered to resist out-of-plane seismic forces, unless an evaluation demonstrates compliance of such items. Use of reduced seismic forces shall be permitted.

SECTION 907
ENERGY CONSERVATION

907.1 Minimum requirements. Level 3 *alterations* to *existing buildings* or structures are permitted without requiring the entire building or structure to comply with the energy requirements of the *Energy Conservation Construction Code of New York State* or *Residential Code of New York State*. The *alterations* shall conform to the energy requirements of the *Energy Conservation Construction Code of New York State* or *Residential Code of New York State* as they relate to new construction only.

INTERNATIONAL CODE COUNCIL®
Copyright © 2019 ICC & NYSDOS. ALL RIGHTS RESERVED. Accessed by Lauren Gualdino (lgualdino@briarcliffmanor.org), (-) Order Number #100880972 on May 08, 2020 07:05 AM (PDT) pursuant to License Agreement with ICC & NYSDOS. No further reproduction, no

100880972

INTERNATIONAL CODE COUNCIL®
Copyright © 2019 ICC & NYSDOS. ALL RIGHTS RESERVED. Accessed by Lauren Gualdino (lgualdino@briarcliffmanor.org), (-) Order Number #100880972 on May 08, 2020 07:05 AM (PDT) pursuant to License Agreement with ICC & NYSDOS. No further reproduction, no

100880972

CHAPTER 10
CHANGE OF OCCUPANCY

SECTION 1001
GENERAL

1001.1 Scope. The provisions of this chapter shall apply where a *change of occupancy* occurs, as defined in Section 202.

1001.2 Certificate of occupancy. A *change of occupancy* or a *change of occupancy* within a space where there is a different fire protection system threshold requirement in Chapter 9 of the *Building Code of New York State* shall not be made to any structure without the approval of the *building official*. A certificate of occupancy shall be issued where it has been determined that the requirements for the *change of occupancy* have been met.

1001.2.1 Change of use. Any work undertaken in connection with a change in use that does not involve a change of occupancy classification or a change to another group within an occupancy classification shall conform to the applicable requirements for the work as classified in Chapter 6 and to the requirements of Sections 1002 through 1010.

Exception: As modified in Section 1204 for *historic buildings*.

1001.2.2 Change of occupancy classification or group. Where the occupancy classification of a building changes, the provisions of Sections 1002 through 1011 shall apply. This includes a change of occupancy classification and a change to another group within an occupancy classification.

1001.2.2.1 Partial change of occupancy. Where the occupancy classification or group of a portion of an *existing building* is changed, Section 1011 shall apply.

1001.3 Certificate of occupancy required. A certificate of occupancy shall be issued where a *change of occupancy* occurs that results in a different occupancy classification as determined by the *Building Code of New York State*.

SECTION 1002
SPECIAL USE AND OCCUPANCY

1002.1 Compliance with the building code. Where the character or use of an *existing building* or part of an *existing building* is changed to one of the following special use or occupancy categories as defined in the *Building Code of New York State*, the building shall comply with all of the applicable requirements of the *Building Code of New York State*:

1. Covered and open mall buildings.
2. Atriums.
3. Motor vehicle-related occupancies.
4. Aircraft-related occupancies.
5. Motion picture projection rooms.
6. Stages and platforms.
7. Special amusement buildings.
8. Incidental use areas.
9. Hazardous materials.
10. Ambulatory care facilities.
11. Group I-2 occupancies.

1002.2 Underground buildings. An underground building in which there is a change of use shall comply with the requirements of the *Building Code of New York State* applicable to underground structures.

SECTION 1003
BUILDING ELEMENTS AND MATERIALS

1003.1 General. Building elements and materials in portions of buildings undergoing a change of occupancy classification shall comply with Section 1011.

SECTION 1004
FIRE PROTECTION

1004.1 General. Fire protection requirements of Section 1011 shall apply where a building or portions thereof undergo a *change of occupancy* classification or where there is a change of occupancy within a space where there is a different fire protection system threshold requirement in Chapter 9 of the *Building Code of New York State*.

SECTION 1005
MEANS OF EGRESS

1005.1 General. Means of egress in portions of buildings undergoing a change of occupancy classification shall comply with Section 1011.

SECTION 1006
STRUCTURAL

[BS] 1006.1 Live loads. Structural elements carrying tributary live loads from an area with a *change of occupancy* shall satisfy the requirements of Section 1607 of the *Building Code of New York State*. Design live loads for areas of new occupancy shall be based on Section 1607 of the *Building Code of*

INTERNATIONAL CODE COUNCIL®
Copyright © 2019 ICC & NYSDOS. ALL RIGHTS RESERVED. Accessed by Lauren Gualdino (lgualdino@briarcliffmanor.org), (-) Order Number #100880972 on May 08, 2020 07:05 AM (PDT) pursuant to License Agreement with ICC & NYSDOS. No further reproduction, no

100880972

New York State. Design live loads for other areas shall be permitted to use previously *approved* design live loads.

Exception: Structural elements whose demand-capacity ratio considering the *change of occupancy* is not more than 5 percent greater than the demand-capacity ratio based on previously *approved* live loads.

[BS] 1006.2 Snow and wind loads. Where a *change of occupancy* results in a structure being assigned to a higher *risk category*, the structure shall satisfy the requirements of Sections 1608 and 1609 of the *Building Code of New York State* for the new risk category.

Exception: Where the area of the new occupancy is less than 10 percent of the building area. The cumulative effect of occupancy changes over time shall be considered.

[BS] 1006.3 Seismic loads. Where a *change of occupancy* results in a building being assigned to a higher *risk category*, the building shall satisfy the requirements of Section 1613 of the *Building Code of New York State* for the new *risk category* using full seismic forces.

Exceptions:

1. Where a change of use results in a building being reclassified from *Risk Category* I or II to *Risk Category* III and the seismic coefficient, S_{DS}, is less than 0.33.
2. Where the area of the new occupancy is less than 10 percent of the building area and the new occupancy is not assigned to *Risk Category* IV. The cumulative effect of occupancy changes over time shall be considered.
3. Unreinforced masonry bearing wall buildings assigned to *Risk Category* III and to Seismic Design Category A or B shall be permitted to use Appendix Chapter A1 of this code.

[BS] 1006.4 Access to Risk Category IV. Any structure that provides operational access to an adjacent structure assigned to *Risk Category* IV as the result of a change of occupancy shall itself satisfy the requirements of Sections 1608, 1609 and 1613 of the *Building Code of New York State*. For compliance with Section 1613, the full seismic forces shall be used. Where operational access to *Risk Category* IV is less than 10 feet (3048 mm) from either an interior lot line or from another structure, access protection from potential falling debris shall be provided.

SECTION 1007
ELECTRICAL

1007.1 Special occupancies. Where the occupancy of an *existing building* or part of an *existing building* is changed to one of the following special occupancies as described in NFPA 70, the electrical wiring and equipment of the building or portion thereof that contains the proposed occupancy shall comply with the applicable requirements of NFPA 70 whether or not a *change of occupancy* group is involved:

1. Hazardous locations.
2. Commercial garages, repair and storage.
3. Aircraft hangars.
4. Gasoline dispensing and service stations.
5. Bulk storage plants.
6. Spray application, dipping and coating processes.
7. Health care facilities.
8. Places of assembly.
9. Theaters, audience areas of motion picture and television studios, and similar locations.
10. Motion picture and television studios and similar locations.
11. Motion picture projectors.
12. Agricultural buildings.

1007.2 Unsafe conditions. Where the occupancy of an *existing building* or part of an *existing building* is changed, all *unsafe* conditions shall be corrected without requiring that all parts of the electrical system comply with NFPA 70.

1007.3 Service upgrade. Where the occupancy of an *existing building* or part of an *existing building* is changed, electrical service shall be upgraded to meet the requirements of NFPA 70 for the new occupancy.

1007.4 Number of electrical outlets. Where the occupancy of an *existing building* or part of an *existing building* is changed, the number of electrical outlets shall comply with NFPA 70 for the new occupancy.

SECTION 1008
MECHANICAL

1008.1 Mechanical requirements. Where the occupancy of an *existing building* or part of an *existing building* is changed such that the new occupancy is subject to different kitchen exhaust requirements or to increased mechanical ventilation requirements in accordance with the *Mechanical Code of New York State*, the new occupancy shall comply with the respective *Mechanical Code of New York State* provisions.

SECTION 1009
PLUMBING

1009.1 Increased demand. Where the occupancy of an *existing building* or part of an *existing building* is changed such that the new occupancy is subject to increased or different plumbing fixture requirements or to increased water supply requirements in accordance with the *Plumbing Code of New York State*, the new occupancy shall comply with the intent of the respective *Plumbing Code of New York State* provisions.

1009.2 Food-handling occupancies. If the new occupancy is a food-handling establishment, all existing sanitary waste lines above the food or drink preparation or storage areas shall be panned or otherwise protected to prevent leaking pipes or condensation on pipes from contaminating food or drink. New drainage lines shall not be installed above such areas and shall be protected in accordance with the *Plumbing Code of New York State.*

INTERNATIONAL CODE COUNCIL®
Copyright © 2019 ICC & NYSDOS. ALL RIGHTS RESERVED. Accessed by Lauren Gualdino (lgualdino@briarcliffmanor.org), (-) Order Number #100880972 on May 08, 2020 07:05 AM (PDT) pursuant to License Agreement with ICC & NYSDOS. No further reproduction, no

100880972

1009.3 Interceptor required. If the new occupancy will produce grease or oil-laden wastes, interceptors shall be provided as required in the *Plumbing Code of New York State*.

1009.4 Chemical wastes. If the new occupancy will produce chemical wastes, the following shall apply:

1. If the existing piping is not compatible with the chemical waste, the waste shall be neutralized prior to entering the drainage system, or the piping shall be changed to a compatible material.
2. Chemical waste shall not discharge to a public sewer system without the approval of the sewage authority.

1009.5 Group I-2. If the occupancy group is changed to Group I-2, the plumbing system shall comply with the applicable requirements of the *Plumbing Code of New York State*.

SECTION 1010
OTHER REQUIREMENTS

1010.1 Light and ventilation. Light and ventilation shall comply with the requirements of the *Building Code of New York State* for the new occupancy.

SECTION 1011
CHANGE OF OCCUPANCY CLASSIFICATION

1011.1 General. The provisions of this section shall apply to buildings or portions thereof undergoing a change of occupancy classification. This includes a change of occupancy classification within a group as well as a change of occupancy classification from one group to a different group or where there is a *change of occupancy* within a space where there is a different fire protection system threshold requirement in Chapter 9 of the *Building Code of New York State*. Such buildings shall also comply with Sections 1002 through 1010 of this code. The application of requirements for the *change of occupancy* shall be as set forth in Sections 1011.1.1 through 1011.1.3. A *change of occupancy*, as defined in Section 202, without a corresponding change of occupancy classification shall comply with Section 1001.2.

1011.1.1 Compliance with Chapter 9. The requirements of Chapter 9 shall be applicable throughout the building for the new occupancy classification based on the separation conditions set forth in Sections 1011.1.1.1 and 1011.1.1.2.

[NY] 1011.1.1.1 Change of occupancy classification without separation. Where a portion of an *existing building* is changed to a new occupancy classification or where there is a *change of occupancy* within a space where there is a different fire protection system threshold requirement in Chapter 9 of the *Building Code of New York State,* and that portion is not separated from the remainder of the building with fire barriers having a fire-resistance rating as required in the *Building Code of New York State* for the separate occupancy, the entire building shall comply with all of the requirements of Chapter 9 of this code applied throughout the building for the most restrictive occupancy classification in the building and with the requirements of this chapter.

1011.1.1.2 Change of occupancy classification with separation. Where a portion of an *existing building* is changed to a new occupancy classification or where there is a *change of occupancy* within a space where there is a different fire protection system threshold requirement in Chapter 9 of the *Building Code of New York State,* and that portion is separated from the remainder of the building with fire barriers having a fire-resistance rating as required in the *Building Code of New York State* for the separate occupancy, that portion shall comply with all of the requirements of Chapter 9 of this code for the new occupancy classification and with the requirements of this chapter.

1011.1.2 Fire protection and interior finish. The provisions of Sections 1011.2 and 1011.3 for fire protection and interior finish, respectively, shall apply to all buildings undergoing a change of occupancy classification.

1011.1.3 Change of occupancy classification based on hazard category. The relative degree of hazard between different occupancy classifications shall be determined in accordance with the categories specified in Tables 1011.4, 1011.5 and 1011.6. Such a determination shall be the basis for the application of Sections 1011.4 through 1011.7.

1011.2 Fire protection systems. Fire protection systems shall be provided in accordance with Sections 1011.2.1 and 1011.2.2.

1011.2.1 Fire sprinkler system. Where a change in occupancy classification occurs or where there is a *change of occupancy* within a space where there is a different fire protection system threshold requirement in Chapter 9 of the *Building Code of New York State* that requires an automatic fire sprinkler system to be provided based on the new occupancy in accordance with Chapter 9 of the *Building Code of New York State*, such system shall be provided throughout the area where the *change of occupancy* occurs.

1011.2.2 Fire alarm and detection system. Where a change in occupancy classification occurs or where there is a *change of occupancy* within a space where there is a different fire protection system threshold requirement in Chapter 9 of the *Building Code of New York State* that requires a fire alarm and detection system to be provided based on the new occupancy in accordance with Chapter 9 of the *Building Code of New York State*, such system shall be provided throughout the area where the *change of occupancy* occurs. Existing alarm notification appliances shall be automatically activated throughout the building. Where the building is not equipped with a fire alarm system, alarm notification appliances shall be provided throughout the area where the *change of occupancy* occurs in accordance with Section 907 of the *Building Code of New York State* as required for new construction.

1011.3 Interior finish. In areas of the building undergoing the change of occupancy classification, the interior finish of walls and ceilings shall comply with the requirements of the *Building Code of New York State* for the new occupancy classification.

INTERNATIONAL CODE COUNCIL®
Copyright © 2019 ICC & NYSDOS. ALL RIGHTS RESERVED. Accessed by Lauren Gualdino (lgualdino@briarcliffmanor.org), (-) Order Number #100880972 on May 08, 2020 07:05 AM (PDT) pursuant to License Agreement with ICC & NYSDOS. No further reproduction, no

100880972

1011.4 Means of egress, general. Hazard categories in regard to life safety and means of egress shall be in accordance with Table 1011.4.

TABLE 1011.4
MEANS OF EGRESS HAZARD CATEGORIES

RELATIVE HAZARD	OCCUPANCY CLASSIFICATIONS
1 (Highest Hazard)	H
2	I-2; I-3; I-4
3	A; E; I-1; M; R-1; R-2; R-4, Condition 2
4	B; F-1; R-3; R-4, Condition 1; S-1
5 (Lowest Hazard)	F-2; S-2; U

1011.4.1 Means of egress for change to a higher-hazard category. Where a change of occupancy classification is made to a higher-hazard category (lower number) as shown in Table 1011.4, the means of egress shall comply with the requirements of Chapter 10 of the *Building Code of New York State*.

Exceptions:

1. Stairways shall be enclosed in compliance with the applicable provisions of Section 903.1.
2. Existing stairways including handrails and guards complying with the requirements of Chapter 9 shall be permitted for continued use subject to approval of the *building official*.
3. Any stairway replacing an existing stairway within a space where the pitch or slope cannot be reduced because of existing construction shall not be required to comply with the maximum riser height and minimum tread depth requirements.
4. Existing corridor walls constructed on both sides of wood lath and plaster in good condition or $^1/_2$-inch-thick (12.7 mm) gypsum wallboard shall be permitted. Such walls shall either terminate at the underside of a ceiling of equivalent construction or extend to the underside of the floor or roof next above.
5. Existing corridor doorways, transoms and other corridor openings shall comply with the requirements in Sections 805.5.1, 805.5.2 and 805.5.3.
6. Existing dead-end corridors shall comply with the requirements in Section 805.6.
7. An existing operable window with clear opening area not less than 4 square feet (0.38 m^2) and minimum opening height and width of 22 inches (559 mm) and 20 inches (508 mm), respectively, shall be accepted as an emergency escape and rescue opening.

1011.4.2 Means of egress for change of use to an equal or lower-hazard category. Where a change of occupancy classification is made to an equal or lesser-hazard category (higher number) as shown in Table 1011.4, existing elements of the means of egress shall comply with the requirements of Section 905 for the new occupancy classification. Newly constructed or configured means of egress shall comply with the requirements of Chapter 10 of the *Building Code of New York State*.

Exception: Any stairway replacing an existing stairway within a space where the pitch or slope cannot be reduced because of existing construction shall not be required to comply with the maximum riser height and minimum tread depth requirements.

1011.4.3 Egress capacity. Egress capacity shall meet or exceed the occupant load as specified in the *Building Code of New York State* for the new occupancy.

1011.4.4 Handrails. Existing stairways shall comply with the handrail requirements of Section 805.9 in the area of the *change of occupancy* classification.

1011.4.5 Guards. Existing guards shall comply with the requirements in Section 805.11 in the area of the *change of occupancy* classification.

1011.5 Heights and areas. Hazard categories in regard to height and area shall be in accordance with Table 1011.5.

TABLE 1011.5
HEIGHTS AND AREAS HAZARD CATEGORIES

RELATIVE HAZARD	OCCUPANCY CLASSIFICATIONS
1 (Highest Hazard)	H
2	A-1; A-2; A-3; A-4; I; R-1; R-2; R-4, Condition 2
3	E; F-1; S-1; M
4 (Lowest Hazard)	B; F-2; S-2; A-5; R-3; R-4, Condition 1; U

1011.5.1 Height and area for change to a higher-hazard category. Where a change of occupancy classification is made to a higher-hazard category as shown in Table 1011.5, heights and areas of buildings and structures shall comply with the requirements of Chapter 5 of the *Building Code of New York State* for the new occupancy classification.

Exception: For high-rise buildings constructed in compliance with a previously issued permit, the type of construction reduction specified in Section 403.2.1 of the *Building Code of New York State* is permitted. This shall include the reduction for columns. The high-rise building is required to be equipped throughout with an automatic sprinkler system in accordance with Section 903.3.1.1 of the *Building Code of New York State.*

1011.5.1.1 Fire wall alternative. In other than Groups H, F-1 and S-1, fire barriers and horizontal assemblies constructed in accordance with Sections 707 and 711, respectively, of the *Building Code of New York State* shall be permitted to be used in lieu of fire walls to subdivide the building into separate buildings for the purpose of complying with the area limitations required for the new occupancy where all of the following conditions are met:

1. The buildings are protected throughout with an automatic sprinkler system in accordance with Section 903.3.1.1 of the *Fire Code of New York State*.

INTERNATIONAL CODE COUNCIL®
Copyright © 2019 ICC & NYSDOS. ALL RIGHTS RESERVED. Accessed by Lauren Gualdino (lgualdino@briarcliffmanor.org), (-) Order Number #100880972 on May 08, 2020 07:05 AM (PDT) pursuant to License Agreement with ICC & NYSDOS. No further reproduction, no

100880972

2. The maximum allowable area between fire barriers, horizontal assemblies, or any combination thereof shall not exceed the maximum allowable area determined in accordance with Chapter 5 of the *Building Code of New York State* without an increase allowed for an automatic sprinkler system in accordance with Section 506 of the *Building Code of New York State*.
3. The fire-resistance rating of the fire barriers and horizontal assemblies shall be not less than that specified for fire walls in Table 706.4 of the *Building Code of New York State*.

   Exception: Where horizontal assemblies are used to limit the maximum allowable area, the required fire-resistance rating of the horizontal assemblies shall be permitted to be reduced by 1 hour provided that the height and number of stories increases allowed for an automatic sprinkler system by Section 504 of the *Building Code of New York State* are not used for the buildings.

1011.5.2 Height and area for change to an equal or lesser-hazard category. Where a change of occupancy classification is made to an equal or lesser-hazard category as shown in Table 1011.5, the height and area of the *existing building* shall be deemed acceptable.

1011.5.3 Fire barriers. Where a change of occupancy classification is made to a higher-hazard category as shown in Table 1011.5, fire barriers in separated mixed use buildings shall comply with the fire-resistance requirements of the *Building Code of New York State*.

Exception: Where the fire barriers are required to have a 1-hour fire-resistance rating, existing wood lath and plaster in good condition or existing $^{1}/_{2}$-inch-thick (12.7 mm) gypsum wallboard shall be permitted.

1011.6 Exterior wall fire-resistance ratings. Hazard categories in regard to fire-resistance ratings of exterior walls shall be in accordance with Table 1011.6.

TABLE 1011.6
EXPOSURE OF EXTERIOR WALLS HAZARD CATEGORIES

RELATIVE HAZARD	OCCUPANCY CLASSIFICATION
1 (Highest Hazard)	H
2	F-1; M; S-1
3	A; B; E; I; R
4 (Lowest Hazard)	F-2; S-2; U

1011.6.1 Exterior wall rating for change of occupancy classification to a higher-hazard category. Where a change of occupancy classification is made to a higher-hazard category as shown in Table 1011.6, exterior walls shall have fire resistance and exterior opening protectives as required by the *Building Code of New York State.*

Exception: A 2-hour fire-resistance rating shall be allowed where the building does not exceed three stories in height and is classified as one of the following groups: A-2 and A-3 with an occupant load of less than 300, B, F, M or S.

1011.6.2 Exterior wall rating for change of occupancy classification to an equal or lesser-hazard category. Where a change of occupancy classification is made to an equal or lesser-hazard category as shown in Table 1011.6, existing exterior walls, including openings, shall be accepted.

1011.6.3 Opening protectives. Openings in exterior walls shall be protected as required by the *Building Code of New York State*. Where openings in the exterior walls are required to be protected because of their distance from the lot line, the sum of the area of such openings shall not exceed 50 percent of the total area of the wall in each story.

Exceptions:

1. Where the *Building Code of New York State* permits openings in excess of 50 percent.
2. Protected openings shall not be required in buildings of Group R occupancy that do not exceed three stories in height and that are located not less than 3 feet (914 mm) from the lot line.
3. Exterior opening protectives are not required where an automatic sprinkler system has been installed throughout.
4. Exterior opening protectives are not required where the *change of occupancy* group is to an equal or lower hazard classification in accordance with Table 1011.6.

1011.7 Enclosure of vertical shafts. Enclosure of vertical shafts shall be in accordance with Sections 1011.7.1 through 1011.7.4.

1011.7.1 Minimum requirements. Vertical shafts shall be designed to meet the *Building Code of New York State* requirements for atriums or the requirements of this section.

1011.7.2 Stairways. Where a change of occupancy classification is made to a higher-hazard category as shown in Table 1011.4, interior stairways shall be enclosed as required by the *Building Code of New York State*.

Exceptions:

1. In other than Group I occupancies, an enclosure shall not be required for openings serving only one adjacent floor and that are not connected with corridors or stairways serving other floors.
2. Unenclosed existing stairways need not be enclosed in a continuous vertical shaft if each story is separated from other stories by 1-hour fire-resistance-rated construction or *approved* wired glass set in steel frames and all exit corridors are sprinklered. The openings between the corridor and the occupant space shall have not fewer than one sprinkler head above the openings on the tenant side. The sprinkler system shall be permitted to be supplied from the domestic water-supply systems, provided that the system is

INTERNATIONAL CODE COUNCIL®
Copyright © 2019 ICC & NYSDOS. ALL RIGHTS RESERVED. Accessed by Lauren Gualdino (lgualdino@briarcliffmanor.org), (-) Order Number #100880972 on May 08, 2020 07:05 AM (PDT) pursuant to License Agreement with ICC & NYSDOS. No further reproduction, no

100880972

of adequate pressure, capacity, and sizing for the combined domestic and sprinkler requirements.

3. Existing penetrations of stairway enclosures shall be accepted if they are protected in accordance with the *Building Code of New York State*.

1011.7.3 Other vertical shafts. Interior vertical shafts other than stairways, including but not limited to elevator hoistways and service and utility shafts, shall be enclosed as required by the *Building Code of New York State* where there is a change of use to a higher-hazard category as specified in Table 1011.4.

Exceptions:

1. Existing 1-hour interior shaft enclosures shall be accepted where a higher rating is required.
2. Vertical openings, other than stairways, in buildings of other than Group I occupancy and connecting less than six stories shall not be required to be enclosed if the entire building is provided with an *approved* automatic sprinkler system.

1011.7.4 Openings. Openings into existing vertical shaft enclosures shall be protected by fire assemblies having a fire protection rating of not less than 1 hour and shall be maintained self-closing or shall be automatic-closing by actuation of a smoke detector. Other openings shall be fire protected in an *approved* manner. Existing fusible link-type automatic door-closing devices shall be permitted in all shafts except stairways if the fusible link rating does not exceed 135°F (57°C).

INTERNATIONAL CODE COUNCIL®
Copyright © 2019 ICC & NYSDOS. ALL RIGHTS RESERVED. Accessed by Lauren Gualdino (lgualdino@briarcliffmanor.org), (-) Order Number #100880972 on May 08, 2020 07:05 AM (PDT) pursuant to License Agreement with ICC & NYSDOS. No further reproduction, no

100880972

CHAPTER 11
ADDITIONS

SECTION 1101
GENERAL

1101.1 Scope. An *addition* to a building or structure shall comply with the *Uniform Code* as adopted for new construction without requiring the *existing building* or structure to comply with any requirements of those codes or of these provisions, except as required by this chapter. Where an *addition* impacts the *existing building* or structure, that portion shall comply with this code.

1101.2 Creation or extension of nonconformity. An *addition* shall not create or extend any nonconformity in the *existing building* to which the *addition* is being made with regard to accessibility, structural strength, fire safety, means of egress, or the capacity of mechanical, plumbing, or electrical systems.

1101.3 Other work. Any *repair* or *alteration* work within an *existing building* to which an *addition* is being made shall comply with the applicable requirements for the work as classified in Chapter 6.

SECTION 1102
HEIGHTS AND AREAS

1102.1 Height limitations. An *addition* shall not increase the height of an *existing building* beyond that permitted under the applicable provisions of Chapter 5 of the *Building Code of New York State* for new buildings.

1102.2 Area limitations. An *addition* shall not increase the area of an *existing building* beyond that permitted under the applicable provisions of Chapter 5 of the *Building Code of New York State* for new buildings unless fire separation as required by the *Building Code of New York State* is provided.

Exception: In-filling of floor openings and nonoccupiable appendages such as elevator and exit stairway shafts shall be permitted beyond that permitted by the *Building Code of New York State*.

1102.3 Fire protection systems. Existing fire areas increased by the *addition* shall comply with Chapter 9 of the *Building Code of New York State*.

SECTION 1103
STRUCTURAL

[BS] 1103.1 Additional gravity loads. Any existing gravity load-carrying structural element for which an *addition* and its related *alterations* cause an increase in design dead, live or snow load, including snow drift effects, of more than 5 percent shall be replaced or altered as needed to carry the gravity loads required by the *Building Code of New York State* for new structures. Any existing gravity load-carrying structural element whose gravity load-carrying capacity is decreased as part of the *addition* and its related *alterations* shall be considered to be an altered element subject to the requirements of Section 806.2. Any existing element that will form part of the lateral load path for any part of the *addition* shall be considered to be an existing lateral load-carrying structural element subject to the requirements of Section 1103.3.

Exception: Buildings of Group R occupancy with not more than five dwelling units or sleeping units used solely for residential purposes where the *existing building* and the *addition* together comply with the conventional light-frame construction methods of the *Building Code of New York State* or the provisions of the *Residential Code of New York State.*

[BS] 1103.2 Lateral force-resisting system. Where the *addition* is structurally independent of the *existing structure*, existing lateral load-carrying structural elements shall be permitted to remain unaltered. Where the *addition* is not structurally independent of the *existing structure*, the *existing structure* and its *addition* acting together as a single structure shall meet the requirements of Sections 1609 and 1613 of the *Building Code of New York State* using full seismic forces.

Exceptions:

1. Buildings of Group R occupancy with not more than five dwelling or sleeping units used solely for residential purposes where the *existing building* and the *addition* comply with the conventional light-frame construction methods of the *Building Code of New York State* or the provisions of the *Residential Code of New York State*.
2. Any existing lateral load-carrying structural element whose demand-capacity ratio with the *addition* considered is not more than 10 percent greater than its demand-capacity ratio with the *addition* ignored shall be permitted to remain unaltered. For purposes of calculating demand-capacity ratios, the demand shall consider applicable load combinations with design lateral loads or forces in accordance with Sections 1609 and 1613 of the *Building Code of New York State*. For purposes of this exception, comparisons of demand-capacity ratios and calculation of design lateral loads, forces and capacities shall account for the cumulative effects of *additions* and *alterations* since original construction.

[BS] 1103.3 Flood hazard areas. *Additions* and *foundations* in *flood hazard areas* shall comply with the following requirements:

1. For horizontal *additions* that are structurally interconnected to the *existing building*:
   1.1. If the *addition* and all other proposed work, when combined, constitute *substantial improvement*, the *existing building* and the *addition* shall comply with Section 1612 of the *Building Code of New York State*, or Section R322 of the *Residential Code of New York State*, as applicable.
   1.2. If the *addition* constitutes *substantial improvement*, the *existing building* and the *addition*

INTERNATIONAL CODE COUNCIL®
Copyright © 2019 ICC & NYSDOS. ALL RIGHTS RESERVED. Accessed by Lauren Gualdino (lgualdino@briarcliffmanor.org), (-) Order Number #100880972 on May 08, 2020 07:05 AM (PDT) pursuant to License Agreement with ICC & NYSDOS. No further reproduction, no

100880972

shall comply with Section 1612 of the *Building Code of New York State*, or Section R322 of the *Residential Code of New York State*, as applicable.

2. For horizontal *additions* that are not structurally interconnected to the *existing building*:
   2.1. The *addition* shall comply with Section 1612 of the *Building Code of New York State*, or Section R322 of the *Residential Code of New York State*, as applicable.
   2.2. If the *addition* and all other proposed work, when combined, constitute *substantial improvement*, the *existing building* and the *addition* shall comply with Section 1612 of the *Building Code of New York State*, or Section R322 of the *Residential Code of New York State*, as applicable.
3. For vertical *additions* and all other proposed work that, when combined, constitute *substantial improvement*, the *existing building* shall comply with Section 1612 of the *Building Code of New York State*, or Section R322 of the *Residential Code of New York State*, as applicable.
4. For a raised or extended foundation, if the foundation work and all other proposed work, when combined, constitute *substantial improvement*, the *existing building* shall comply with Section 1612 of the *Building Code of New York State,* or Section R322 of the *Residential Code of New York State*, as applicable.
5. For a new foundation or replacement foundation, the foundation shall comply with Section 1612 of the *Building Code of New York State* or Section R322 of the *Residential Code of New York State*, as applicable.

SECTION 1104
SMOKE ALARMS IN OCCUPANCY GROUPS R AND I-1

1104.1 Smoke alarms in existing portions of a building. Where an *addition* is made to a building or structure of a Group R or I-1 occupancy, the *existing building* shall be provided with smoke alarms as required by Section 1103.8 of the *Fire Code of New York State* or Section R314 of the *Residential Code of New York State* as applicable.

SECTION 1105
CARBON MONOXIDE DETECTION

[NY] 1105.1 Carbon monoxide detection and notification. Carbon monoxide detection and notification shall be provided in accordance with Sections 502.7 through 502.7.1 for buildings that undergo an addition.

SECTION 1106
STORM SHELTERS

1106.1 Addition to a Group E occupancy. Where an *addition* is added to an existing Group E occupancy located in an area where the shelter design wind speed for tornados is 250 mph in accordance with Figure 304.2(1) of ICC 500 and the occupant load in the *addition* is 50 or more, the *addition* shall have a storm shelter constructed in accordance with ICC 500.

Exceptions:

1. Group E day care facilities.
2. Group E occupancies accessory to places of religious worship.
3. *Additions* meeting the requirements for shelter design in ICC 500.

1106.1.1 Required occupant capacity. The required occupant capacity of the storm shelter shall include all buildings on the site, and shall be the greater of the following:

1. The total occupant load of the classrooms, vocational rooms and offices in the Group E occupancy.
2. The occupant load of any indoor assembly space that is associated with the Group E occupancy.

Exceptions:

1. Where an *addition* is being added on an existing Group E site, and where the *addition* is not of sufficient size to accommodate the required occupant capacity of the storm shelter for all of the buildings on-site, the storm shelter shall at a minimum accommodate the required capacity for the *addition.*
2. Where *approved* by the *building official*, the required occupant capacity of the shelter shall be permitted to be reduced by the occupant capacity of any existing storm shelters on the site.

1106.1.2 Location. Storm shelters shall be located within the buildings they serve, or shall be located where the maximum distance of travel from not fewer than one exterior door of each building to a door of the shelter serving that building does not exceed 1,000 feet (305 m).

SECTION 1107
ENERGY CONSERVATION

1107.1 Minimum requirements. *Additions* to *existing buildings* shall conform to the energy requirements of the *Energy Conservation Construction Code of New York State* or *Residential Code of New York State* as they relate to new construction.

INTERNATIONAL CODE COUNCIL®
Copyright © 2019 ICC & NYSDOS. ALL RIGHTS RESERVED. Accessed by Lauren Gualdino (lgualdino@briarcliffmanor.org), (-) Order Number #100880972 on May 08, 2020 07:05 AM (PDT) pursuant to License Agreement with ICC & NYSDOS. No further reproduction, no

100880972

CHAPTER 12
HISTORIC BUILDINGS

SECTION 1201
GENERAL

1201.1 Scope. This chapter is intended to provide means for the preservation of *historic buildings*. *Historic buildings* shall comply with the provisions of this chapter relating to their *repair*, *alteration*, relocation and *change of occupancy*.

[BS] 1201.2 Report. A *historic building* undergoing *alteration* or *change of occupancy* shall be investigated and evaluated. If it is intended that the building meet the requirements of this chapter, a written report shall be prepared and filed with the *building official* by a *registered design professional* where such a report is necessary in the opinion of the *building official*. Such report shall be in accordance with Chapter 1 and shall identify each required safety feature that is in compliance with this chapter and where compliance with other chapters of these provisions would be damaging to the contributing historic features. For buildings assigned to Seismic Design Category D, E or F, a structural evaluation describing, at a minimum, the vertical and horizontal elements of the lateral force-resisting system and any strengths or weaknesses therein shall be prepared. Additionally, the report shall describe each feature that is not in compliance with these provisions and shall demonstrate how the intent of these provisions is complied with in providing an equivalent level of safety.

1201.3 Special occupancy exceptions—museums. Where a building in Group R-3 is used for Group A, B or M purposes such as museum tours, exhibits, and other public assembly activities, or for museums less than 3,000 square feet (279 m^2), the *building official* may determine that the occupancy is Group B where life safety conditions can be demonstrated in accordance with Section 1201.2. Adequate means of egress in such buildings, which may include a means of maintaining doors in an open position to permit egress, a limit on building occupancy to an occupant load permitted by the means of egress capacity, a limit on occupancy of certain areas or floors, or supervision by a person knowledgeable in the emergency exiting procedures, shall be provided.

[NY] 1201.4 Flood hazard areas. In *flood hazard areas*, if all proposed work, including *repairs*, work required because of a *change of occupancy*, and *alterations*, constitutes *substantial improvement*, then the *existing building* shall comply with Section 1612 of the *Building Code of New York State*, or Section R322 of the *Residential Code of New York State*, as applicable.

Exception: If a *historic building* will continue to be a *historic building* after the proposed work is completed, then the proposed work is not considered a *substantial improvement*. For the purposes of this exception, a *historic building* is any of the following:

1. Listed or certified as eligible for listing by the State Historic Preservation Officer or the Keeper of the National Register of Historic Places, in the National Register of Historic Places.
2. Designated as historic under an applicable state or local law.
3. Certified as a contributing resource within a National Register, state designated or locally designated historic district.

1201.5 Unsafe conditions. Conditions determined by the *building official* to be *unsafe* shall be remedied. Work shall not be required beyond what is required to remedy the *unsafe* conditions. **

SECTION 1202
REPAIRS

1202.1 General. Repairs to any portion of a *historic building* or structure shall be permitted with original or like materials and original methods of construction, subject to the provisions of this chapter. Hazardous materials, such as asbestos and lead-based paint, shall not be used where the code for new construction would not permit their use in buildings of similar occupancy, purpose and location. *

1202.2 Replacement. Replacement of existing or missing features using original materials shall be permitted. Partial replacement for *repairs* that match the original in configuration, height, and size shall be permitted.

Replacement glazing in hazardous locations shall comply with the safety glazing requirements of Chapter 24 of the *Building Code of New York State.*

Exception: Glass block walls, louvered windows, and jalousies repaired with like materials. *

SECTION 1203
FIRE SAFETY

1203.1 Scope. *Historic buildings* undergoing *alterations*, *changes of occupancy*, or that are moved shall comply with Section 1203.

1203.2 General. Every *historic building* that does not conform to the construction requirements specified in this code for the occupancy or use and that constitutes a distinct fire hazard as defined herein shall be provided with an *approved* automatic fire-extinguishing system as determined appropriate by the *building official*. However, an automatic fire-extinguishing system shall not be used to substitute for, or act as an alternative to, the required number of exits from any *facility*.

1203.3 Means of egress. Existing door openings and corridor and stairway widths less than those specified elsewhere in this code may be *approved*, provided that, in the opinion of the *building official*, there is sufficient width and height for a person to pass through the opening or traverse the means of

INTERNATIONAL CODE COUNCIL®
Copyright © 2019 ICC & NYSDOS. ALL RIGHTS RESERVED. Accessed by Lauren Gualdino (lgualdino@briarcliffmanor.org), (-) Order Number #100880972 on May 08, 2020 07:05 AM (PDT) pursuant to License Agreement with ICC & NYSDOS. No further reproduction, no

100880972

egress. Where *approved* by the *building official*, the front or main exit doors need not swing in the direction of the path of exit travel, provided that other *approved* means of egress having sufficient capacity to serve the total occupant load are provided.

1203.4 Transoms. In fully sprinklered buildings of Group R-1, R-2 or R-3 occupancy, existing transoms in corridors and other fire-resistance-rated walls may be maintained if fixed in the closed position. A sprinkler shall be installed on each side of the transom.

1203.5 Interior finishes. The existing interior finishes shall be accepted where it is demonstrated that they are the historic finishes.

1203.6 Stairway enclosure. In buildings of three stories or less, exit enclosure construction shall limit the spread of smoke by the use of tight-fitting doors and solid elements. Such elements are not required to have a fire-resistance rating.

1203.7 One-hour fire-resistant assemblies. Where 1-hour fire-resistance-rated construction is required by these provisions, it need not be provided, regardless of construction or occupancy, where the existing wall and ceiling finish is wood or metal lath and plaster.

1203.8 Glazing in fire-resistance-rated systems. Historic glazing materials are permitted in interior walls required to have a 1-hour fire-resistance rating where the opening is provided with *approved* smoke seals and the area affected is provided with an automatic sprinkler system.

1203.9 Stairway railings. Grand stairways shall be accepted without complying with the handrail and guard requirements. Existing handrails and guards at all stairways shall be permitted to remain, provided they are not structurally *dangerous*.

1203.10 Guards. Guards shall comply with Sections 1203.10.1 and 1203.10.2.

1203.10.1 Height. Existing guards shall comply with the requirements of Section 404.

1203.10.2 Guard openings. The spacing between existing intermediate railings or openings in existing ornamental patterns shall be accepted. Missing elements or members of a guard may be replaced in a manner that will preserve the historic appearance of the building or structure.

1203.11 Exit signs. Where exit sign or egress path marking location would damage the historic character of the building, alternative exit signs are permitted with approval of the *building official*. Alternative signs shall identify the exits and egress path.

1203.12 Automatic fire-extinguishing systems. Every *historic building* that cannot be made to conform to the construction requirements specified in the *Building Code of New York State* for the occupancy or use and that constitutes a distinct fire hazard shall be deemed to be in compliance if provided with an *approved* automatic fire-extinguishing system.

Exception: Where the *building official* approves an alternative life-safety system.

SECTION 1204
CHANGE OF OCCUPANCY

1204.1 General. *Historic buildings* undergoing a *change of occupancy* shall comply with the applicable provisions of Chapter 10, except as specifically permitted in this chapter. Where Chapter 10 requires compliance with specific requirements of Chapter 7, Chapter 8 or Chapter 9 and where those requirements are subject to the exceptions in Section 1202, the same exceptions shall apply to this section.

1204.2 Building area. The allowable floor area for *historic buildings* undergoing a *change of occupancy* shall be permitted to exceed by 20 percent the allowable areas specified in Chapter 5 of the *Building Code of New York State*.

1204.3 Location on property. Historic structures undergoing a change of use to a higher-hazard category in accordance with Section 1011.6 may use alternative methods to comply with the fire-resistance and exterior opening protective requirements. Such alternatives shall comply with Section 1201.2.

1204.4 Occupancy separation. Required occupancy separations of 1 hour may be omitted where the building is provided with an *approved* automatic sprinkler system throughout.

1204.5 Roof covering. Regardless of occupancy or use group, roof-covering materials not less than Class C, where tested in accordance with ASTM E108 or UL 790, shall be permitted where a fire-retardant roof covering is required.

1204.6 Means of egress. Existing door openings and corridor and stairway widths less than those that would be acceptable for nonhistoric buildings under these provisions shall be *approved*, provided that, in the opinion of the *building official*, there is sufficient width and height for a person to pass through the opening or traverse the exit and that the capacity of the exit system is adequate for the occupant load, or where other operational controls to limit occupancy are *approved* by the *building official*.

1204.7 Door swing. Where *approved* by the *building official*, existing front doors need not swing in the direction of exit travel, provided that other *approved* exits having sufficient capacity to serve the total occupant load are provided.

1204.8 Transoms. In corridor walls required by these provisions to be fire-resistance rated, existing transoms may be maintained if fixed in the closed position, and fixed wired glass set in a steel frame or other *approved* glazing shall be installed on one side of the transom.

Exception: Transoms conforming to Section 1203.4 shall be accepted.

1204.9 Finishes. Where interior finish materials are required to have a flame spread index of Class C or better, when tested in accordance with ASTM E84 or UL 723, existing nonconforming materials shall be surfaced with *approved* fire-retardant paint or finish.

Exception: Existing nonconforming materials need not be surfaced with an *approved* fire-retardant paint or finish where the building is equipped throughout with an automatic sprinkler system installed in accordance with the *Building Code of New York State* and the

INTERNATIONAL CODE COUNCIL®
Copyright © 2019 ICC & NYSDOS. ALL RIGHTS RESERVED. Accessed by Lauren Gualdino (lgualdino@briarcliffmanor.org), (-) Order Number #100880972 on May 08, 2020 07:05 AM (PDT) pursuant to License Agreement with ICC & NYSDOS. No further reproduction, no

100880972

nonconforming materials can be substantiated as being historic in character.

1204.10 One-hour fire-resistant assemblies. Where 1-hour fire-resistance-rated construction is required by these provisions, it need not be provided, regardless of construction or occupancy, where the existing wall and ceiling finish is wood lath and plaster.

1204.11 Stairways and guards. Existing stairways shall comply with the requirements of these provisions. The *building official* shall grant alternatives for stairways and guards if alternative stairways are found to be acceptable or are judged to meet the intent of these provisions. Existing stairways shall comply with Section 1203.

Exception: For buildings less than 3,000 square feet (279 m^2), existing conditions are permitted to remain at all stairways and guards.

1204.12 Exit signs. The *building official* may accept alternative exit sign locations where the location of such signs would damage the historic character of the building or structure. Such signs shall identify the exits and exit path.

[BS] 1204.13 Exit stair live load. Existing historic stairways in buildings changed to a Group R-1 or R-2 occupancy shall be accepted where it can be shown that the stairway can support a 75-pounds-per-square-foot (366 kg/m^2) live load.

1204.14 Natural light. Where it is determined by the *building official* that compliance with the natural light requirements of Section 1010.1 will lead to loss of historic character or historic materials in the building, the existing level of natural lighting shall be considered to be acceptable.

SECTION 1205
STRUCTURAL

[BS] 1205.1 General. *Historic buildings* shall comply with the applicable structural provisions for the work as classified in Chapter 4 or 5.

Exceptions:

1. The *building official* shall be authorized to accept existing floors and existing live loads and to approve operational controls that limit the live load on any floor.
2. Repair of *substantial structural damage* is not required to comply with Sections 405.2.3 and 405.2.4. *Substantial structural damage* shall be repaired in accordance with Section 405.2.1.

[BS] 1205.2 Dangerous conditions. Conditions determined by the *building official* to be *dangerous* shall be remedied. Work shall not be required beyond what is required to remedy the *dangerous* condition.

SECTION 1206
RELOCATED BUILDINGS

1206.1 Relocated buildings. Foundations of relocated *historic buildings* and structures shall comply with the *Building Code of New York State*. Relocated *historic buildings* shall otherwise be considered a *historic building* for the purposes of this code. Relocated *historic buildings* and structures shall be sited so that exterior wall and opening requirements comply with the *Building Code of New York State* or with the compliance alternatives of this code. **

INTERNATIONAL CODE COUNCIL®
Copyright © 2019 ICC & NYSDOS. ALL RIGHTS RESERVED. Accessed by Lauren Gualdino (lgualdino@briarcliffmanor.org), (-) Order Number #100880972 on May 08, 2020 07:05 AM (PDT) pursuant to License Agreement with ICC & NYSDOS. No further reproduction, no

100880972

INTERNATIONAL CODE COUNCIL®
Copyright © 2019 ICC & NYSDOS. ALL RIGHTS RESERVED. Accessed by Lauren Gualdino (lgualdino@briarcliffmanor.org), (-) Order Number #100880972 on May 08, 2020 07:05 AM (PDT) pursuant to License Agreement with ICC & NYSDOS. No further reproduction, no

100880972

CHAPTER 13

PERFORMANCE COMPLIANCE METHODS

SECTION 1301 GENERAL

1301.1 Scope. The provisions of this chapter shall apply to the *alteration*, *addition* and *change of occupancy* of *existing structures*, including historic structures, as referenced in Section 301.3.3. The provisions of this chapter are intended to maintain or increase the current degree of public safety, health and general welfare in *existing buildings* while permitting, *alteration*, *addition* and *change of occupancy* without requiring full compliance with Chapters 6 through 12, except where compliance with other provisions of this code is specifically required in this chapter.

1301.1.1 Compliance with other methods. *Alterations*, *additions* and *changes of occupancy* to *existing structures* shall comply with the provisions of this chapter or with one of the methods provided in Section 301.3.

1301.2 Applicability. *Existing buildings* in which there is work involving *additions*, *alterations* or *changes of occupancy* shall be made to conform to the requirements of this chapter or the provisions of Chapters 6 through 12. The provisions of Sections 1301.2.1 through 1301.2.5 shall apply to existing occupancies that will continue to be, or are proposed to be, in Groups A, B, E, F, I-2, M, R and S. These provisions shall not apply to buildings with occupancies in Group H or I-1, I-3 or I-4.

1301.2.1 Change in occupancy. Where an *existing building* is changed to a new occupancy classification and this section is applicable, the provisions of this section for the new occupancy shall be used to determine compliance with this code.

1301.2.2 Partial change in occupancy. Where a portion of the building is changed to a new occupancy classification and that portion is separated from the remainder of the building with fire barrier or horizontal assemblies having a fire-resistance rating as required by Table 508.4 of the *Building Code of New York State* or Section R302 of the *Residential Code of New York State* for the separate occupancies, or with *approved* compliance alternatives, the portion changed shall be made to conform to the provisions of this section.

Where a portion of the building is changed to a new occupancy classification and that portion is not separated from the remainder of the building with fire barriers or horizontal assemblies having a fire-resistance rating as required by Table 508.4 of the *Building Code of New York State* or Section R302 of the *Residential Code of New York State* for the separate occupancies, or with *approved* compliance alternatives, the provisions of this section which apply to each occupancy shall apply to the entire building. Where there are conflicting provisions, those requirements which secure the greater public safety shall apply to the entire building or structure.

1301.2.3 Additions. *Additions* to *existing buildings* shall comply with the requirements of the *Building Code of New York State* or the *Residential Code of New York State* for new construction. The combined height and area of the *existing building* and the new *addition* shall not exceed the height and area allowed by Chapter 5 of the *Building Code of New York State*. Where a fire wall that complies with Section 706 of the *Building Code of New York State* is provided between the *addition* and the *existing building*, the *addition* shall be considered a separate building.

1301.2.3.1 Additions to Group E facilities. For additions to Group E occupancies, storm shelters shall be provided in accordance with Section 1106.1.

1301.2.4 Alterations. An *existing building* or portion thereof shall not be altered in such a manner that results in the building being less safe or sanitary than such building is currently.

Exception: Where the current level of safety or sanitation is proposed to be reduced, the portion altered shall conform to the requirements of the *Building Code of New York State*.

1301.2.5 Escalators. Where escalators are provided in below-grade transportation stations, existing and new escalators shall be permitted to have a clear width of less than 32 inches (813 mm).

[NY] 1301.2.6 Carbon monoxide detection and notification. Carbon monoxide detection and notification shall be provided in accordance with Chapter 5 of this code for existing buildings undergoing alterations, additions, or changes of occupancy.

1301.3 Acceptance. For *repairs, alterations, additions*, and *changes of occupancy* to *existing buildings* that are evaluated in accordance with this section, compliance with this section shall be accepted by the *building official*.

1301.3.1 Hazards. Where the *building official* determines that an *unsafe* condition exists as provided for in Section 103, such *unsafe* condition shall be abated in accordance with Section 103.

1301.3.2 Compliance with other codes. Buildings that are evaluated in accordance with this section shall comply with the *Fire Code of New York State* and *Property Maintenance Code of New York State*.

[BS] 1301.3.3 Compliance with flood hazard provisions. In *flood hazard areas*, buildings that are evaluated in accordance with this section shall comply with Section 1612 of the *Building Code of New York State*, or Section R322 of the *Residential Code of New York State*, as applicable if the work covered by this section constitutes *substantial improvement*.

1301.4 Investigation and evaluation. For proposed work covered by this chapter, the building owner shall cause the

INTERNATIONAL CODE COUNCIL®
Copyright © 2019 ICC & NYSDOS. ALL RIGHTS RESERVED. Accessed by Lauren Gualdino (lgualdino@briarcliffmanor.org), (-) Order Number #100880972 on May 08, 2020 07:05 AM (PDT) pursuant to License Agreement with ICC & NYSDOS. No further reproduction, no

100880972

existing building to be investigated and evaluated in accordance with the provisions of Sections 1301.4 through 1301.9.

[BS] 1301.4.1 Structural analysis. The owner shall have a structural analysis of the *existing building* made to determine adequacy of structural systems for the proposed *alteration*, *addition* or *change of occupancy*. The analysis shall demonstrate that the building with the work completed is capable of resisting the loads specified in Chapter 16 of the *Building Code of New York State*.

1301.4.2 Submittal. The results of the investigation and evaluation as required in Section 1301.4, along with proposed compliance alternatives, shall be submitted to the *building official*.

1301.4.3 Determination of compliance. The *building official* shall determine whether the *existing building*, with the proposed *addition*, *alteration*, or *change of occupancy*, complies with the provisions of this section in accordance with the evaluation process in Sections 1301.5 through 1301.9.

1301.5 Evaluation. The evaluation shall be composed of three categories: fire safety, means of egress, and general safety, as defined in Sections 1301.5.1 through 1301.5.3.

1301.5.1 Fire safety. Included within the fire safety category are the structural fire resistance, automatic fire detection, fire alarm, automatic sprinkler system and fire suppression system features of the *facility*.

1301.5.2 Means of egress. Included within the means of egress category are the configuration, characteristics, and support features for means of egress in the *facility*.

1301.5.3 General safety. Included within the general safety category are the fire safety parameters and the means of egress parameters.

1301.6 Evaluation process. The evaluation process specified herein shall be followed in its entirety to evaluate *existing buildings* in Groups A, B, E, F, M, R, S and U. For *existing buildings* in Group I-2, the evaluation process specified herein shall be followed and applied to each and every individual smoke compartment. Table 1301.7 shall be utilized for tabulating the results of the evaluation. References to other sections of this code or other codes indicate that compliance with those sections is required in order to gain credit in the evaluation herein outlined. In applying this section to a building with mixed occupancies, where the separation between the mixed occupancies does not qualify for any category indicated in Section 1301.6.16, the score for each occupancy shall be determined, and the lower score determined for each section of the evaluation process shall apply to the entire building, or to each smoke compartment for Group I-2 occupancies.

Where the separation between the mixed occupancies qualifies for any category indicated in Section 1301.6.16, the score for each occupancy shall apply to each portion, or smoke compartment of the building based on the occupancy of the space.

1301.6.1 Building height and number of stories. The value for building height and number of stories shall be the lesser value determined by the formula in Section 1301.6.1.1. Section 504 of the *Building Code of New York State* shall be used to determine the allowable height and number of stories of the building. Subtract the actual building height from the allowable height and divide by $12^1/_2$ feet (3810 mm). Enter the height value and its sign (positive or negative) in Table 1301.7 under Safety Parameter 1301.6.1, Building Height, for fire safety, means of egress, and general safety. The maximum score for a building shall be 10.

1301.6.1.1 Height formula. The following formulas shall be used in computing the building height value.

$$\text{Height value, feet} = \frac{(AH) - (EBH)}{12.5} \times CF \qquad \textbf{(Equation 13-1)}$$

$$\text{Height value, stories} = (AS - EBS) \times CF \qquad \textbf{(Equation 13-2)}$$

where:

AH = Allowable height in feet (mm) from Section 504 of the *Building Code of New York State*.

EBH = *Existing building* height in feet (mm).

AS = Allowable height in stories from Section 504 of the *Building Code of New York State*.

EBS = *Existing building* height in stories.

CF = 1 if *(AH) – (EBH)* is positive.

CF = Construction-type factor shown in Table 1301.6.6(2) if *(AH) – (EBH)* is negative.

Note: Where mixed occupancies are separated and individually evaluated as indicated in Section 1301.6, the values *AH, AS, EBH* and *EBS* shall be based on the height of the occupancy being evaluated.

1301.6.2 Building area. The value for building area shall be determined by the formula in Section 1301.6.2.2. Section 506 of the *Building Code of New York State* and the formula in Section 1301.6.2.1 shall be used to determine the allowable area of the building. Subtract the actual building area from the allowable area and divide by 1,200 square feet (112 m^2). Enter the area value and its sign (positive or negative) in Table 1301.7 under Safety Parameter 1301.6.2, Building Area, for fire safety, means of egress and general safety. In determining the area value, the maximum permitted positive value for area is 50 percent of the fire safety score as listed in Table 1301.8, Mandatory Safety Scores. Group I-2 occupancies shall be scored zero.

1301.6.2.1 Allowable area formula. The following formula shall be used in computing allowable area:

$$A_a = A_t + (NS \times I_f) \qquad \textbf{(Equation 13-3)}$$

where:

A_a = Allowable building area per story (square feet).

A_t = Tabular allowable area factor (NS, S1, S13R, or SM value, as applicable) in accordance with Table 506.2 of the *Building Code of New York State*.

INTERNATIONAL CODE COUNCIL®
Copyright © 2019 ICC & NYSDOS. ALL RIGHTS RESERVED. Accessed by Lauren Gualdino (lgualdino@briarcliffmanor.org), (-) Order Number #100880972 on May 08, 2020 07:05 AM (PDT) pursuant to License Agreement with ICC & NYSDOS. No further reproduction, no

100880972

NS = Tabular allowable area factor in accordance with Table 506.2 of the *Building Code of New York State* for a nonsprinklered building (regardless of whether the building is sprinklered).

I_f = Area factor increase due to frontage as calculated in accordance with Section 506.3 of the *Building Code of New York State*.

1301.6.2.2 Area formula. The following formula shall be used in computing the area value. Determine the area value for each occupancy floor area on a floor-by-floor basis. For each occupancy, choose the minimum area value of the set of values obtained for the particular occupancy.

$$\text{Area value}_i = \frac{\text{Allowable area}_i}{1200\,\text{square feet}}\left[1 - \left(\frac{\text{Actual area}_i}{\text{Allowable area}_i} + \ldots + \frac{\text{Actual area}_n}{\text{Allowable area}_n}\right)\right]$$

(Equation 13-4)

where:

i = Value for an individual separated occupancy on a floor.

n = Number of separated occupancies on a floor.

1301.6.3 Compartmentation. Evaluate the compartments created by fire barriers or horizontal assemblies which comply with Sections 1301.6.3.1 and 1301.6.3.2 and which are exclusive of the wall elements considered under Sections 1301.6.4 and 1301.6.5. Conforming compartments shall be figured as the net area and do not include shafts, chases, stairways, walls, or columns. Using Table 1301.6.3, determine the appropriate compartmentation value (CV) and enter that value into Table 1301.7 under Safety Parameter 1301.6.3, Compartmentation, for fire safety, means of egress, and general safety.

1301.6.3.1 Wall construction. A wall used to create separate compartments shall be a fire barrier conforming to Section 707 of the *Building Code of New York State* with a fire-resistance rating of not less than 2 hours. Where the building is not divided into more than one compartment, the compartment size shall be taken as the total floor area on all floors. Where there is more than one compartment within a story, each compartmented area on such story shall be provided with a horizontal exit conforming to Section 1026 of the *Building Code of New York State*. The fire door serving as the horizontal exit between compartments shall be so installed, fitted, and gasketed that such fire door will provide a substantial barrier to the passage of smoke.

1301.6.3.2 Floor/ceiling construction. A floor/ceiling assembly used to create compartments shall conform to Section 711 of the *Building Code of New York State* and shall have a fire-resistance rating of not less than 2 hours.

1301.6.4 Tenant and dwelling unit separations. Evaluate the fire-resistance rating of floors and walls separating tenants, including dwelling units, and not evaluated under Sections 1301.6.3 and 1301.6.5. Group I-2 occupancies shall evaluate the rating of the separations between patient sleeping rooms.

Under the categories and occupancies in Table 1301.6.4, determine the appropriate value and enter that value in Table 1301.7 under Safety Parameter 1301.6.4, Tenant and Dwelling Unit Separation, for fire safety, means of egress, and general safety.

TABLE 1301.6.4
SEPARATION VALUES

OCCUPANCY	CATEGORIES				
	a	b	c	d	e
A-1	0	0	0	0	1
A-2	-5	-3	0	1	3
R	-4	-2	0	2	4
A-3, A-4, B, E, F, M, S-1	-4	-3	0	2	4
I-2	0	1	2	3	4
S-2	-5	-2	0	2	4

1301.6.4.1 Categories. The categories for tenant and dwelling unit separations are:

1. Category a—No fire partitions; incomplete fire partitions; no doors; doors not self-closing or automatic-closing.
2. Category b—Fire partitions or floor assemblies with less than 1-hour fire-resistance ratings or not constructed in accordance with Section 708 or 711 of the *Building Code of New York State*, respectively.

[NY] TABLE 1301.6.3
COMPARTMENTATION VALUES[a]

OCCUPANCY	CATEGORIES				
	a Compartment size equal to or greater than 15,000 square feet	b Compartment size of 10,000 square feet	c Compartment size of 7,500 square feet	d Compartment size of 5,000 square feet	e Compartment size of 2,500 square feet or less
A-1, A-3	0	6	10	14	18
A-2	0	4	10	14	18
A-4, B, E, S-2	0	5	10	15	20
F, M, R, S-1	0	4	10	16	22

For SI: 1 square foot = 0.0929 m^2.

a. For compartment sizes between categories, values shall be obtained by linear interpolation.

INTERNATIONAL CODE COUNCIL®
Copyright © 2019 ICC & NYSDOS. ALL RIGHTS RESERVED. Accessed by Lauren Gualdino (lgualdino@briarcliffmanor.org), (-) Order Number #100880972 on May 08, 2020 07:05 AM (PDT) pursuant to License Agreement with ICC & NYSDOS. No further reproduction, no

100880972

3. Category c—Fire partitions with 1-hour or greater fire-resistance ratings constructed in accordance with Section 708 of the *Building Code of New York State* and floor assemblies with 1-hour but less than 2-hour fire-resistance ratings constructed in accordance with Section 711 of the *Building Code of New York State* or with only one tenant within the floor area.
4. Category d—Fire barriers with 1-hour but less than 2-hour fire-resistance ratings constructed in accordance with Section 707 of the *Building Code of New York State* and floor assemblies with 2-hour or greater fire-resistance ratings constructed in accordance with Section 711 of the *Building Code of New York State*.
5. Category e—Fire barriers and floor assemblies with 2-hour or greater fire-resistance ratings and constructed in accordance with Sections 707 and 711 of the *Building Code of New York State*, respectively.

1301.6.5 Corridor walls. Evaluate the fire-resistance rating and degree of completeness of walls which create corridors serving the floor and that are constructed in accordance with Section 1020 of the *Building Code of New York State*. This evaluation shall not include the wall elements considered under Sections 1301.6.3 and 1301.6.4. Under the categories and groups in Table 1301.6.5, determine the appropriate value and enter that value into Table 1301.7 under Safety Parameter 1301.6.5, Corridor Walls, for fire safety, means of egress, and general safety.

TABLE 1301.6.5
CORRIDOR WALL VALUES

OCCUPANCY	CATEGORIES			
	a	b	c[a]	d[a]
A-1	-10	-4	0	2
A-2	-30	-12	0	2
A-3, F, M, R, S-1	-7	-3	0	2
A-4, B, E, S-2	-5	-2	0	5
I-2	-10	0	1	2

a. Corridors not providing at least one-half the exit access travel distance for all occupants on a floor shall use Category b.

1301.6.5.1 Categories. The categories for corridor walls are:

1. Category a—No fire partitions; incomplete fire partitions; no doors; or doors not self-closing.
2. Category b—Less than 1-hour fire-resistance rating or not constructed in accordance with Section 708.4 of the *Building Code of New York State*.
3. Category c—1-hour to less than 2-hour fire-resistance rating, with doors conforming to Section 716 of the *Building Code of New York State* or without corridors as permitted by Section 1020 of the *Building Code of New York State*.
4. Category d—2-hour or greater fire-resistance rating, with doors conforming to Section 716 of the *Building Code of New York State*.

1301.6.6 Vertical openings. Evaluate the fire-resistance rating of interior exit stairways or ramps, hoistways, escalator openings, and other shaft enclosures within the building, and openings between two or more floors. Table 1301.6.6(1) contains the appropriate protection values. Multiply that value by the construction-type factor found in Table 1301.6.6(2). Enter the vertical opening value and its sign (positive or negative) in Table 1301.7 under Safety Parameter 1301.6.6, Vertical Openings, for fire safety, means of egress, and general safety. If the structure is a one-story building or if all the unenclosed vertical openings within the building conform to the requirements of Section 713 of the *Building Code of New York State*, enter a value of 2. The maximum positive value for this requirement (VO) shall be 2.

TABLE 1301.6.6(1)
VERTICAL OPENING PROTECTION VALUE

PROTECTION	VALUE
None (unprotected opening)	-2 times number of floors connected
Less than 1 hour	-1 times number of floors connected
1 to less than 2 hours	1
2 hours or more	2

TABLE 1301.6.6(2)
CONSTRUCTION-TYPE FACTOR

FACTOR	TYPE OF CONSTRUCTION								
	IA	IB	IIA	IIB	IIIA	IIIB	IV	VA	VB
	1.2	1.5	2.2	3.5	2.5	3.5	2.3	3.3	7

1301.6.6.1 Vertical opening formula. The following formula shall be used in computing vertical opening value.

$$VO = PV \times CF \qquad \textbf{(Equation 13-5)}$$

where:

VO = Vertical opening value. The calculated value shall not be greater than positive 2.0.

PV = Protection value from Table 1301.6.6.(1).

CF = Construction-type factor from Table 1301.6.6.(2).

1301.6.7 HVAC systems. Evaluate the ability of the HVAC system to resist the movement of smoke and fire beyond the point of origin. Under the categories in Section 1301.6.7.1, determine the appropriate value and enter that value into Table 1301.7 under Safety Parameter 1301.6.7, HVAC Systems, for fire safety, means of egress, and general safety. Facilities in Group I-2 occupancies meeting Category a, b or c shall be considered to fail the evaluation.

[NY] 1301.6.7.1 Categories. The categories for HVAC systems are:

1. Category a—Plenums not in accordance with Section 602 of the *Mechanical Code of New York State*. -10 points.
2. Category b—Air movement in egress elements not in accordance with Section 1020.5 of the *Building Code of New York State*. -5 points.

INTERNATIONAL CODE COUNCIL®
Copyright © 2019 ICC & NYSDOS. ALL RIGHTS RESERVED. Accessed by Lauren Gualdino (lgualdino@briarcliffmanor.org), (-) Order Number #100880972 on May 08, 2020 07:05 AM (PDT) pursuant to License Agreement with ICC & NYSDOS. No further reproduction, no

100880972

3. Category c—Both Categories a and b are applicable. -15 points.
4. Category d—Compliance of the HVAC system with Section 1020.5 of the *Building Code of New York State* and Section 602 of the *Mechanical Code of New York State*. 0 points.
5. Category e—Systems serving one story; or a central boiler/chiller system without ductwork connecting two or more stories; or where systems have no ductwork. +5 points.

1301.6.8 Automatic fire detection. Evaluate the smoke detection capability based on the location and operation of automatic fire detectors in accordance with Section 907 of the *Building Code of New York State* and the *Mechanical Code of New York State*. Under the categories and occupancies in Table 1301.6.8, determine the appropriate value and enter that value into Table 1301.7 under Safety Parameter 1301.6.8, Automatic Fire Detection, for fire safety, means of egress, and general safety. Facilities in Group I-2 occupancies meeting Category a, b or c shall be considered to fail the evaluation.

TABLE 1301.6.8
AUTOMATIC FIRE DETECTION VALUES

OCCUPANCY	CATEGORIES					
	a	b	c	d	e	f
A-1, A-3, F, M, R, S-1	-10	-5	0	2	6	NA
A-2	-25	-5	0	5	9	NA
A-4, B, E, S-2	-4	-2	0	4	8	NA
I-2	NP	NP	NP	4	5	2

NA = Not Applicable.
NP = Not Permitted.

1301.6.8.1 Categories. The categories for automatic fire detection are:

1. Category a—None.
2. Category b—Existing smoke detectors in HVAC systems and maintained in accordance with the *Fire Code of New York State*.
3. Category c—Smoke detectors in HVAC systems. The detectors are installed in accordance with the requirements for new buildings in the *Mechanical Code of New York State*.
4. Category d—Smoke detectors throughout all floor areas other than individual sleeping units, tenant spaces and dwelling units.
5. Category e—Smoke detectors installed throughout the floor area.
6. Category f—Smoke detectors in corridors only.

1301.6.9 Fire alarm systems. Evaluate the capability of the fire alarm system in accordance with Section 907 of the *Building Code of New York State*. Under the categories and occupancies in Table 1301.6.9, determine the appropriate value and enter that value into Table 1301.7 under Safety Parameter 1301.6.9, Fire Alarm System, for fire safety, means of egress, and general safety.

TABLE 1301.6.9
FIRE ALARM SYSTEM VALUES

OCCUPANCY	CATEGORIES			
	a	b[a]	c	d
A-1, A-2, A-3, A-4, B, E, R	-10	-5	0	5
F, M, S	0	5	10	15
I-2	-4	1	2	5

a. For buildings equipped throughout with an automatic sprinkler system, add 2 points for activation by a sprinkler water-flow device.

1301.6.9.1 Categories. The categories for fire alarm systems are:

1. Category a—None.
2. Category b—Fire alarm system with manual fire alarm boxes in accordance with Section 907.4 of the *Building Code of New York State* and alarm notification appliances in accordance with Section 907.5.2 of the *Building Code of New York State*.
3. Category c—Fire alarm system in accordance with Section 907 of the *Building Code of New York State*.
4. Category d—Category c plus a required emergency voice/alarm communications system and a fire command station that conforms to Section 911 of the *Building Code of New York State* and contains the emergency voice/alarm communications system controls, fire department communication system controls, and any other controls specified in Section 911 of the *Building Code of New York State* where those systems are provided.

1301.6.10 Smoke control. Evaluate the ability of a natural or mechanical venting, exhaust, or pressurization system to control the movement of smoke from a fire. Under the categories and occupancies in Table 1301.6.10, determine the appropriate value and enter that value into Table 1301.7 under Safety Parameter 1301.6.10, Smoke Control, for means of egress and general safety.

TABLE 1301.6.10
SMOKE CONTROL VALUES

OCCUPANCY	CATEGORIES					
	a	b	c	d	e	f
A-1, A-2, A-3	0	1	2	3	6	6
A-4, E	0	0	0	1	3	5
B, M, R	0	2[a]	3[a]	3[a]	3[a]	4[a]
F, S	0	2[a]	2[a]	3[a]	3[a]	3[a]
I-2	-4	0	0	0	3	0

a. This value shall be 0 if compliance with Category d or e in Section 1301.6.8.1 has not been obtained.

1301.6.10.1 Categories. The categories for smoke control are:

1. Category a—None.
2. Category b—The building is equipped throughout with an automatic sprinkler system. Openings are provided in exterior walls at the rate of 20

INTERNATIONAL CODE COUNCIL®
Copyright © 2019 ICC & NYSDOS. ALL RIGHTS RESERVED. Accessed by Lauren Gualdino (lgualdino@briarcliffmanor.org), (-) Order Number #100880972 on May 08, 2020 07:05 AM (PDT) pursuant to License Agreement with ICC & NYSDOS. No further reproduction, no

100880972

square feet (1.86 m^2) per 50 linear feet (15 240 mm) of exterior wall in each story and distributed around the building perimeter at intervals not exceeding 50 feet (15 240 mm). Such openings shall be readily openable from the inside without a key or separate tool and shall be provided with ready access thereto. In lieu of operable openings, clearly and permanently marked tempered glass panels shall be used.

3. Category c—One enclosed exit stairway, with ready access thereto, from each occupied floor of the building. The stairway has operable exterior windows, and the building has openings in accordance with Category b.

4. Category d—One smokeproof enclosure and the building has openings in accordance with Category b.

5. Category e—The building is equipped throughout with an automatic sprinkler system. Each floor area is provided with a mechanical air-handling system designed to accomplish smoke containment. Return and exhaust air shall be moved directly to the outside without recirculation to other floor areas of the building under fire conditions. The system shall exhaust not less than six air changes per hour from the floor area. Supply air by mechanical means to the floor area is not required. Containment of smoke shall be considered as confining smoke to the floor area involved without migration to other floor areas. Any other tested and *approved* design that will adequately accomplish smoke containment is permitted.

6. Category f—Each stairway shall be one of the following: a smokeproof enclosure in accordance with Section 1023.11 of the *Building Code of New York State*; pressurized in accordance with Section 909.20.5 of the *Building Code of New York State*; or shall have operable exterior windows.

1301.6.11 Means of egress capacity and number. Evaluate the means of egress capacity and the number of exits available to the building occupants. In applying this section, the means of egress are required to conform to the following sections of the *Building Code of New York State*: 1003.7, 1004, 1005, 1006, 1007, 1016.2, 1026.1, 1028.2, 1028.5, 1029.2, 1029.3, 1029.4 and 1030. The number of exits credited is the number that is available to each occupant of the area being evaluated. Existing fire escapes shall be accepted as a component in the means of egress when conforming to Section 504.

Under the categories and occupancies in Table 1301.6.11, determine the appropriate value and enter that value into Table 1301.7 under Safety Parameter 1301.6.11, Means of Egress Capacity, for means of egress and general safety.

TABLE 1301.6.11
MEANS OF EGRESS VALUES[a]

OCCUPANCY	CATEGORIES				
	a	b	c	d	e
A-1, A-2, A-3, A-4, E, I-2	-10	0	2	8	10
M	-3	0	1	2	4
B, F, S	-1	0	0	0	0
R	-3	0	0	0	0

a. The values indicated are for buildings six stories or less in height. For buildings over six stories above grade plane, add an additional -10 points.

1301.6.11.1 Categories. The categories for means-of-egress capacity and number of exits are:

1. Category a—Compliance with the minimum required means-of-egress capacity or number of exits is achieved through the use of a fire escape in accordance with Section 405.
2. Category b—Capacity of the means of egress complies with Section 1005 of the *Building Code of New York State*, and the number of exits complies with the minimum number required by Section 1006 of the *Building Code of New York State*.
3. Category c—Capacity of the means of egress is equal to or exceeds 125 percent of the required means-of-egress capacity, the means of egress complies with the minimum required width dimensions specified in the *Building Code of New York State*, and the number of exits complies with the minimum number required by Section 1006 of the *Building Code of New York State*.
4. Category d—The number of exits provided exceeds the number of exits required by Section 1006 of the *Building Code of New York State*. Exits shall be located a distance apart from each other equal to not less than that specified in Section 1007 of the *Building Code of New York State*.
5. Category e—The area being evaluated meets both Categories c and d.

1301.6.12 Dead ends. In spaces required to be served by more than one means of egress, evaluate the length of the exit access travel path in which the building occupants are confined to a single path of travel. Under the categories and occupancies in Table 1301.6.12, determine the appropriate value and enter that value into Table 1301.7 under Safety Parameter 1301.6.12, Dead Ends, for means of egress and general safety.

TABLE 1301.6.12
DEAD-END VALUES

OCCUPANCY	CATEGORIES[a]			
	a	b	c	d
A-1, A-3, A-4, B, F, M, R, S	-2	0	2	-4
A-2, E	-2	0	2	-4
I-2	-2	0	2	-6

a. For dead-end distances between categories, the dead-end value shall be obtained by linear interpolation.

INTERNATIONAL CODE COUNCIL®
Copyright © 2019 ICC & NYSDOS. ALL RIGHTS RESERVED. Accessed by Lauren Gualdino (lgualdino@briarcliffmanor.org), (-) Order Number #100880972 on May 08, 2020 07:05 AM (PDT) pursuant to License Agreement with ICC & NYSDOS. No further reproduction, no

100880972

1301.6.12.1 Categories. The categories for dead ends are:

1. Category a—Dead end of 35 feet (10 670 mm) in nonsprinklered buildings or 70 feet (21 340 mm) in sprinklered buildings.
2. Category b—Dead end of 20 feet (6096 mm); or 50 feet (15 240 mm) in Group B in accordance with Section 1020.4, Exception 2, of the *Building Code of New York State*.
3. Category c—No dead ends; or ratio of length to width (l/w) is less than 2.5:1.
4. Category d—Dead ends exceeding Category a.

1301.6.13 Maximum exit access travel distance to an exit. Evaluate the length of exit access travel to an *approved* exit. Determine the appropriate points in accordance with the following equation and enter that value into Table 1301.7 under Safety Parameter 1301.6.13, Maximum Exit Access Travel Distance for means of egress and general safety. The maximum allowable exit access travel distance shall be determined in accordance with Section 1017.1 of the *Building Code of New York State*.

$$\text{Points} = 20 \times \frac{\text{Maximum allowable travel distance} - \text{Maximum actual travel distance}}{\text{Maximum allowable travel distance}}$$

(Equation 13-6)

1301.6.14 Elevator control. Evaluate the passenger elevator equipment and controls that are available to the fire department to reach all occupied floors. Emergency recall and in-car operation of elevators shall be provided in accordance with the *Fire Code of New York State*. Under the categories and occupancies in Table 1301.6.14, determine the appropriate value and enter that value into Table 1301.7 under Safety Parameter 1301.6.14, Elevator Control, for fire safety, means of egress and general safety. The values shall be zero for a single-story building.

TABLE 1301.6.14
ELEVATOR CONTROL VALUES

ELEVATOR TRAVEL	CATEGORIES			
	a	b	c	d
Less than 25 feet of travel above or below the primary level of elevator access for emergency fire-fighting or rescue personnel	-2	0	0	+2
Travel of 25 feet or more above or below the primary level of elevator access for emergency fire-fighting or rescue personnel	-4	NP	0	+4

For SI: 1 foot = 304.8 mm.

NP = Not Permitted.

1301.6.14.1 Categories. The categories for elevator controls are:

1. Category a—No elevator.
2. Category b—Any elevator without Phase I emergency recall operation and Phase II emergency in-car operation.
3. Category c—All elevators with Phase I emergency recall operation and Phase II emergency in-car operation as required by the *Fire Code of New York State*.
4. Category d—All meet Category c; or Category b where permitted to be without Phase I emergency recall operation and Phase II emergency in-car operation; and at least one elevator that complies with new construction requirements serves all occupied floors.

1301.6.15 Means of egress emergency lighting. Evaluate the presence of and reliability of means of egress emergency lighting. Under the categories and occupancies in Table 1301.6.15, determine the appropriate value and enter that value into Table 1301.7 under Safety Parameter 1301.6.15, Means of Egress Emergency Lighting, for means of egress and general safety.

1301.6.15.1 Categories. The categories for means of egress emergency lighting are:

1. Category a—Means-of-egress lighting and exit signs not provided with emergency power in accordance with Section 2702 of the *Building Code of New York State*.
2. Category b—Means of egress lighting and exit signs provided with emergency power in accordance with Section 2702 of the *Building Code of New York State*.
3. Category c—Emergency power provided to means of egress lighting and exit signs, which provides protection in the event of power failure to the site or building.

TABLE 1301.6.15
MEANS OF EGRESS EMERGENCY LIGHTING VALUES

NUMBER OF EXITS REQUIRED BY SECTION 1006 OF THE *BUILDING CODE OF NEW YORK STATE*	CATEGORIES		
	a	b	c
Two or more exits	NP	0	4
Minimum of one exit	0	1	1

NP = Not Permitted.

1301.6.16 Mixed occupancies. Where a building has two or more occupancies that are not in the same occupancy classification, the separation between the mixed occupancies shall be evaluated in accordance with this section. Where there is no separation between the mixed occupancies or the separation between mixed occupancies does not qualify for any of the categories indicated in Section 1301.6.16.1, the building shall be evaluated as indicated in Section 1301.6, and the value for mixed occupancies shall be zero. Under the categories and occupancies in Table 1301.6.16, determine the appropriate value and enter that value into Table 1301.7 under Safety Parameter 1301.6.16, Mixed Occupancies, for fire

INTERNATIONAL CODE COUNCIL®
Copyright © 2019 ICC & NYSDOS. ALL RIGHTS RESERVED. Accessed by Lauren Gualdino (lgualdino@briarcliffmanor.org), (-) Order Number #100880972 on May 08, 2020 07:05 AM (PDT) pursuant to License Agreement with ICC & NYSDOS. No further reproduction, no

100880972

safety and general safety. For buildings without mixed occupancies, the value shall be zero. Facilities in Group I-2 occupancies meeting Category a shall be considered to fail the evaluation.

TABLE 1301.6.16
MIXED OCCUPANCY VALUES[a]

OCCUPANCY	CATEGORIES		
	a	b	c
A-1, A-2, R	-10	0	10
A-3, A-4, B, E, F, M, S	-5	0	5
I-2	NP	0	5

NP = Not Permitted.

a. For fire-resistance ratings between categories, the value shall be obtained by linear interpolation.

1301.6.16.1 Categories. The categories for mixed occupancies are:

1. Category a—Occupancies separated by minimum 1-hour fire barriers or minimum 1-hour horizontal assemblies, or both.
2. Category b—Separations between occupancies in accordance with Section 508.4 of the *Building Code of New York State*.
3. Category c—Separations between occupancies having a fire-resistance rating of not less than twice that required by Section 508.4 of the *Building Code of New York State*.

1301.6.17 Automatic sprinklers. Evaluate the ability to suppress a fire based on the installation of an automatic sprinkler system in accordance with Section 903.3.1.1 of the *Building Code of New York State*. "Required sprinklers" shall be based on the requirements of this code. Under the categories and occupancies in Table 1301.6.17, determine the appropriate value and enter that value into Table 1301.7 under Safety Parameter 1301.6.17, Automatic Sprinklers, for fire safety, means of egress divided by 2, and general safety. High-rise buildings defined in Chapter 2 of the *Building Code of New York State* that undergo a *change of occupancy* to Group R shall be equipped throughout with an automatic sprinkler system in accordance with Section 403 of the *Building Code of New York State* and Chapter 9 of the *Building Code of New York State*. Facilities in Group I-2 occupancies meeting Category a, b, c or f shall be considered to fail the evaluation.

TABLE 1301.6.17
SPRINKLER SYSTEM VALUES

OCCUPANCY	CATEGORIES					
	a[a]	b[a]	c	d	e	f
A-1, A-3, F, M, R, S-1	-6	-3	0	2	4	6
A-2	-4	-2	0	1	2	4
A-4, B, E, S-2	-12	-6	0	3	6	12
I-2	NP	NP	NP	8	10	NP

NP = Not Permitted.

a. These options cannot be taken if Category a in Section 1301.6.18 is used.

1301.6.17.1 Categories. The categories for automatic sprinkler system protection are:

1. Category a—Sprinklers are required throughout; sprinkler protection is not provided or the sprinkler system design is not adequate for the hazard protected in accordance with Section 903 of the *Building Code of New York State*.
2. Category b—Sprinklers are required in a portion of the building; sprinkler protection is not provided or the sprinkler system design is not adequate for the hazard protected in accordance with Section 903 of the *Building Code of New York State*.
3. Category c—Sprinklers are not required; none are provided.
4. Category d—Sprinklers are required in a portion of the building; sprinklers are provided in such portion; the system is one that complied with the code at the time of installation and is maintained and supervised in accordance with Section 903 of the *Building Code of New York State*.
5. Category e—Sprinklers are required throughout; sprinklers are provided throughout in accordance with Chapter 9 of the *Building Code of New York State*.
6. Category f—Sprinklers are not required throughout; sprinklers are provided throughout in accordance with Chapter 9 of the *Building Code of New York State*.

1301.6.18 Standpipes. Evaluate the ability to initiate attack on a fire by making a supply of water readily available through the installation of standpipes in accordance with Section 905 of the *Building Code of New York State*. "Required Standpipes" shall be based on the requirements of the *Building Code of New York State*. Under the categories and occupancies in Table 1301.6.18, determine the appropriate value and enter that value into Table 1301.7 under Safety Parameter 1301.6.18, Standpipes, for fire safety, means of egress, and general safety.

TABLE 1301.6.18
STANDPIPE SYSTEM VALUES

OCCUPANCY	CATEGORIES			
	a[a]	b	c	d
A-1, A-3, F, M, R, S-1	-6	0	4	6
A-2	-4	0	2	4
A-4, B, E, S-2	-12	0	6	12
I-2	-2	0	1	2

a. This option cannot be taken if Category a or Category b in Section 1301.6.17 is used.

1301.6.18.1 Standpipe categories. The categories for standpipe systems are:

1. Category a—Standpipes are required; standpipe is not provided or the standpipe system design is not in compliance with Section 905.3 of the *Building Code of New York State*.
2. Category b—Standpipes are not required; none are provided.
3. Category c—Standpipes are required; standpipes are provided in accordance with Section 905 of the *Building Code of New York State*.

INTERNATIONAL CODE COUNCIL®
Copyright © 2019 ICC & NYSDOS. ALL RIGHTS RESERVED. Accessed by Lauren Gualdino (lgualdino@briarcliffmanor.org), (-) Order Number #100880972 on May 08, 2020 07:05 AM (PDT) pursuant to License Agreement with ICC & NYSDOS. No further reproduction, no

100880972

4. Category d—Standpipes are not required; standpipes are provided in accordance with Section 905 of the *Building Code of New York State*.

1301.6.19 Incidental uses. Evaluate the protection of incidental uses in accordance with Section 509.4.2 of the *Building Code of New York State*. Do not include those where this code requires automatic sprinkler systems throughout the building including covered and open mall buildings, high-rise buildings, public garages and unlimited area buildings. Assign the lowest score from Table 1301.6.19 for the building or floor area being evaluated and enter that value into Table 1301.7 under Safety Parameter 1301.6.19, Incidental Uses, for fire safety, means of egress and general safety. If there are no specific occupancy areas in the building or floor area being evaluated, the value shall be zero.

1301.6.20 Smoke compartmentation. Evaluate the smoke compartments for compliance with Section 407.5 of the *Building Code of New York State*. Under the categories and occupancies in Table 1301.6.20, determine the appropriate smoke compartmentation value (SCV) and enter that value into Table 1301.7 under Safety Parameter 1301.6.20, Smoke Compartmentation, for fire safety, means of egress and general safety. Facilities in Group I-2 occupancies meeting Category b or c shall be considered to fail the evaluation.

TABLE 1301.6.20
SMOKE COMPARTMENTATION VALUES

OCCUPANCY	CATEGORIES[a]		
	a	b	c
A, B, E, F, M, R and S	0	0	0
I-2	0	NP	NP

For SI: 1 square foot = 0.093 m^2.

NP = Not Permitted.

a. For areas between categories, the smoke compartmentation value shall be obtained by linear interpolation.

1301.6.20.1 Categories. Categories for smoke compartment size are:

1. Category a—Smoke compartment size is equal to or less than 22,500 square feet (2092 m^2).
2. Category b—Smoke compartment size is greater than 22,500 square feet (2092 m^2).
3. Category c—Smoke compartments are not provided.

1301.6.21 Patient ability, concentration, smoke compartment location and ratio to attendant. In I-2 occupancies, the ability of patients, their concentration and ratio to attendants shall be evaluated and applied in accordance with this section. Evaluate each smoke compartment using the categories in Sections 1301.6.21.1, 1301.6.21.2 and 1301.6.21.3 and enter the value in Table 1301.7. To determine the safety factor, multiply the three values together; if the sum is 9 or greater, compliance has failed.

1301.6.21.1 Patient ability for self-preservation. Evaluate the ability of the patients for self-preservation in each smoke compartment in an emergency. Under the categories and occupancies in Table 1301.6.21.1, determine the appropriate value and enter that value in Table 1301.7 under Safety Parameter 1301.6.21.1, Patient Ability for Self-preservation, for means of egress and general safety.

TABLE 1301.6.21.1
PATIENT ABILITY VALUES

OCCUPANCY	CATEGORIES		
	a	b	c
I-2	1	2	3

1301.6.21.1.1 Categories. The categories for patient ability for self-preservation are:

1. Category a—(mobile) Patients are capable of self-preservation without assistance.
2. Category b—(not mobile) Patients rely on assistance for evacuation or relocation.

TABLE 1301.6.19
INCIDENTAL USE AREA VALUES

PROTECTION REQUIRED BY TABLE 509 OF THE *BUILDING CODE OF NEW YORK STATE*	PROTECTION PROVIDED						
	None	1 hour	AS	AS with CRS	1 hour and AS	2 hours	2 hours and AS
2 hours and AS	-4	-3	-2	-2	-1	-2	0
2 hours, or 1 hour and AS	-3	-2	-1	-1	0	0	0
1 hour and AS	-3	-2	-1	-1	0	-1	0
1 hour	-1	0	-1	-1	0	0	0
1 hour, or AS with CRS	-1	0	-1	-1	0	0	0
AS with CRS	-1	-1	-1	-1	0	-1	0
1 hour or AS	-1	0	0	0	0	0	0

AS = Automatic Sprinkler System;

CRS = Construction capable of resisting the passage of smoke (see BCNYS Section 509.4.2 of the *Building Code of New York State*).

Note: For Table 1301.7, see page 71.

INTERNATIONAL CODE COUNCIL®
Copyright © 2019 ICC & NYSDOS. ALL RIGHTS RESERVED. Accessed by Lauren Gualdino (lgualdino@briarcliffmanor.org), (-) Order Number #100880972 on May 08, 2020 07:05 AM (PDT) pursuant to License Agreement with ICC & NYSDOS. No further reproduction, no

100880972

3. Category c—(not movable) Patients cannot be evacuated or relocated.

1301.6.21.2 Patient concentration. Evaluate the concentration of patients in each smoke compartment under Section 1301.6.21.2. Under the categories and occupancies in Table 1301.6.21.2 determine the appropriate value and enter that value in Table 1301.7 under Safety Parameter 1301.6.21.2, Patient Concentration, for means of egress and general safety.

TABLE 1301.6.21.2
PATIENT CONCENTRATION VALUES

OCCUPANCY	CATEGORIES		
	a	b	c
I-2	1	2	3

1301.6.21.2.1 Categories: The categories for patient concentration are:

1. Category a—smoke compartment has 1 to 10 patients.
2. Category b—smoke compartment has more than 10 to 40 patients.
3. Category c—smoke compartment has more than 40 patients.

1301.6.21.3 Attendant-to-patient ratio. Evaluate the attendant-to-patient ratio for each compartment under Section 1301.6.21.3. Under the categories and occupancies in Table 1301.6.21.3 determine the appropriate value and enter that value in Table 1301.7 under Safety Parameter 1301.6.21.3, Attendant-to-patient Ratio, for means of egress and general safety.

1301.6.21.3.1 Categories. The categories for attendant-to-patient concentrations are:

1. Category a—attendant-to-patient concentration is 1:5.
2. Category b—attendant-to-patient concentration is 1:6 to 1:10.
3. Category c—attendant-to-patient concentration is greater than 1:10 or no patients.

TABLE 1301.6.21.3
ATTENDANT-TO-PATIENT RATIO VALUES

OCCUPANCY	CATEGORIES		
	a	b	c
I-2	1	2	3

1301.7 Building score. After determining the appropriate data from Section 1301.6, enter those data in Table 1301.7 and total the building score.

1301.8 Safety scores. The values in Table 1301.8 are the required mandatory safety scores for the evaluation process listed in Section 1301.6.

TABLE 1301.8
MANDATORY SAFETY SCORES[a]

OCCUPANCY	FIRE SAFETY (MFS)	MEANS OF EGRESS (MME)	GENERAL SAFETY (MGS)
A-1	20	31	31
A-2	21	32	32
A-3	22	33	33
A-4, E	29	40	40
B	30	40	40
F	24	34	34
I-2	19	34	34
M	23	40	40
R	21	38	38
S-1	19	29	29
S-2	29	39	39

a. MFS = Mandatory Fire Safety.
MME = Mandatory Means of Egress.
MGS = Mandatory General Safety.

1301.9 Evaluation of building safety. The mandatory safety score in Table 1301.8 shall be subtracted from the building score in Table 1301.7 for each category in accordance with the evaluation formulas in Table 1301.9. Where the final score for any category equals zero or more, the building is in compliance with the requirements of this section for that category. Where the final score for any category is less than zero, the building is not in compliance with the requirements of this section.

1301.9.1 Mixed occupancies. For mixed occupancies, the following provisions shall apply:

1. Where the separation between mixed occupancies does not qualify for any category indicated in Section 1301.6.16, the mandatory safety scores for the occupancy with the lowest general safety score in Table 1301.8 shall be utilized (see Section 1301.6).
2. Where the separation between mixed occupancies qualifies for any category indicated in Section 1301.6.16, the mandatory safety scores for each occupancy shall be placed against the evaluation scores for the appropriate occupancy.

TABLE 1301.9
EVALUATION FORMULAS[a]

FORMULA	T1301.7	T1301.8		SCORE	PASS	FAIL
FS – MFS ≥ 0	_____ (FS) –	_____ (MFS)	=	_____	_____	_____
ME – MME ≥ 0	_____ (ME) –	_____ (MME)	=	_____	_____	_____
GS – MGS ≥ 0	_____ (GS) –	_____ (MGS)	=	_____	_____	_____

a. FS = Fire Safety.
ME = Means of Egress.
GS = General Safety.
MFS = Mandatory Fire Safety.
MME = Mandatory Means of Egress.
MGS = Mandatory General Safety.

INTERNATIONAL CODE COUNCIL®
Copyright © 2019 ICC & NYSDOS. ALL RIGHTS RESERVED. Accessed by Lauren Gualdino (lgualdino@briarcliffmanor.org), (-) Order Number #100880972 on May 08, 2020 07:05 AM (PDT) pursuant to License Agreement with ICC & NYSDOS. No further reproduction, no

100880972

TABLE 1301.7
SUMMARY SHEET—BUILDING CODE

Existing occupancy: _____ Proposed occupancy: _____

Year building was constructed:_____ Number of stories: _____ Height in feet:_____

Type of construction: _____ Area per floor: _____

Percentage of open perimeter increase: _____%

Completely suppressed: Yes_____ No_____ Corridor wall rating:_____

Type:_____

Compartmentation: Yes_____ No_____ Required door closers: Yes_____ No_____

Fire-resistance rating of vertical opening enclosures:_____

Type of HVAC system:_____, serving number of floors: _____

Automatic fire detection: Yes_____ No_____ Type and location: _____

Fire alarm system: Yes_____ No_____ Type:_____

Smoke control: Yes_____ No_____ Type:_____

Adequate exit routes: Yes_____ No_____ Dead ends: _____ Yes _____ No _____

Maximum exit access travel distance: _____ Elevator controls: Yes _____ No _____

Means of egress emergency lighting: Yes _____ No_____ Mixed occupancies: Yes _____ No _____

Standpipes: Yes_____ No_____ Patient ability for self-preservation:_____

Incidental use: Yes_____ No_____ Patient concentration:_____

Smoke compartmentation less than 22,500 sq. feet (2092 m^2): Yes_____ No_____ Attendant-to-patient ratio: _____

SAFETY PARAMETERS	FIRE SAFETY (FS)	MEANS OF EGRESS (ME)	GENERAL SAFETY (GS)
1301.6.1 Building height 1301.6.2 Building area 1301.6.3 Compartmentation			
1301.6.4 Tenant and dwelling unit separations 1301.6.5 Corridor walls 1301.6.6 Vertical openings			
1301.6.7 HVAC systems 1301.6.8 Automatic fire detection 1301.6.9 Fire alarm system			
1301.6.10 Smoke control 1301.6.11 Means of egress 1301.6.12 Dead ends	* * * * * * * * * * * *		
1301.6.13 Maximum exit access travel distance 1301.6.14 Elevator control 1301.6.15 Means of egress emergency lighting	* * * * * * * *		
1301.6.16 Mixed occupancies 1301.6.17 Automatic sprinklers 1301.6.18 Standpipes 1301.6.19 Incidental use 1301.6.20 Smoke compartmentation 1301.6.21.1 Patient ability for self-preservation[a] 1301.6.21.2 Patient concentration[a] 1301.6.21.3 Attendant-to-patient ratio[a]	 * * * * * * * * * * * *	* * * * ÷ 2 =	
Building score—total value			

* * * *No applicable value to be inserted.

a. Only applicable to Group I-2 occupancies.

INTERNATIONAL CODE COUNCIL®
Copyright © 2019 ICC & NYSDOS. ALL RIGHTS RESERVED. Accessed by Lauren Gualdino (lgualdino@briarcliffmanor.org), (-) Order Number #100880972 on May 08, 2020 07:05 AM (PDT) pursuant to License Agreement with ICC & NYSDOS. No further reproduction, no

100880972

INTERNATIONAL CODE COUNCIL®
Copyright © 2019 ICC & NYSDOS. ALL RIGHTS RESERVED. Accessed by Lauren Gualdino (lgualdino@briarcliffmanor.org), (-) Order Number #100880972 on May 08, 2020 07:05 AM (PDT) pursuant to License Agreement with ICC & NYSDOS. No further reproduction, no

100880972

CHAPTER 14
RELOCATED OR MOVED BUILDINGS

SECTION 1401
GENERAL

1401.1 Scope. This chapter provides requirements for relocated or moved structures, including *relocatable buildings* as defined in Chapter 2.

1401.2 Conformance. The building shall be safe for human occupancy as determined by the *Fire Code of New York State* and the *Property Maintance Code of New York State*. Any *repair*, *alteration* or *change of occupancy* undertaken within the moved structure shall comply with the requirements of this code applicable to the work being performed. Any field-fabricated elements shall comply with the requirements of the *Building Code of New York State* or the *Residential Code of New York State* as applicable.

SECTION 1402
REQUIREMENTS

1402.1 Location on the lot. The building shall be located on the lot in accordance with the requirements of the *Building Code of New York State* or the *Residential Code of New York State* as applicable.

[BS] 1402.2 Foundation. The foundation system of relocated buildings shall comply with the *Building Code of New York State* or the *Residential Code of New York State* as applicable.

[BS] 1402.2.1 Connection to the foundation. The connection of the relocated building to the foundation shall comply with the *Building Code of New York State* or the *Residential Code of New York State* as applicable.

[BS] 1402.3 Wind loads. Buildings shall comply with *Building Code of New York State* or *Residential Code of New York State* wind provisions as applicable.

Exceptions:

1. Detached one- and two-family dwellings and Group U occupancies where wind loads at the new location are not higher than those at the previous location.
2. Structural elements whose stress is not increased by more than 10 percent.

[BS] 1402.4 Seismic loads. Buildings shall comply with *Building Code of New York State* or *Residential Code of New York State* seismic provisions at the new location as applicable.

Exceptions:

1. Structures in Seismic Design Categories A and B and detached one- and two-family dwellings in Seismic Design Categories A, B and C where the seismic loads at the new location are not higher than those at the previous location.
2. Structural elements whose stress is not increased by more than 10 percent.

[BS] 1402.5 Snow loads. Structures shall comply with *Building Code of New York State* or *Residential Code of New York State* snow loads as applicable where snow loads at the new location are higher than those at the previous location.

Exception: Structural elements whose stress is not increased by more than 5 percent.

[BS] 1402.6 Flood hazard areas. If relocated or moved into a *flood hazard area*, structures shall comply with Section 1612 of the *Building Code of New York State*, or Section R322 of the *Residential Code of New York State*, as applicable.

[BS] 1402.7 Required inspection and repairs. The *building official* shall be authorized to inspect, or to require *approved* professionals to inspect at the expense of the owner, the various structural parts of a relocated building to verify that structural components and connections have not sustained structural damage. Any *repairs* required by the *building official* as a result of such inspection shall be made prior to the final approval.

INTERNATIONAL CODE COUNCIL®
Copyright © 2019 ICC & NYSDOS. ALL RIGHTS RESERVED. Accessed by Lauren Gualdino (lgualdino@briarcliffmanor.org), (-) Order Number #100880972 on May 08, 2020 07:05 AM (PDT) pursuant to License Agreement with ICC & NYSDOS. No further reproduction, no

100880972

INTERNATIONAL CODE COUNCIL®
Copyright © 2019 ICC & NYSDOS. ALL RIGHTS RESERVED. Accessed by Lauren Gualdino (lgualdino@briarcliffmanor.org), (-) Order Number #100880972 on May 08, 2020 07:05 AM (PDT) pursuant to License Agreement with ICC & NYSDOS. No further reproduction, no

100880972

CHAPTER 15
CONSTRUCTION SAFEGUARDS

SECTION 1501
GENERAL

[BG] 1501.1 Scope. The provisions of this chapter shall govern safety during construction and the protection of adjacent public and private properties.

[BG] 1501.2 Storage and placement. Construction equipment and materials shall be stored and placed so as not to endanger the public, the workers or adjoining property for the duration of the construction project.

[BG] 1501.3 Alterations, repairs and additions. Required exits, existing structural elements, fire protection devices and sanitary safeguards shall be maintained at all times during *alterations*, *repairs* or *additions* to any building or structure.

Exceptions:

1. Where such required elements or devices are being altered or repaired, adequate substitute provisions shall be made.
2. Maintenance of such elements and devices is not required where the *existing building* is not occupied.

[BG] 1501.4 Manner of removal. Waste materials shall be removed in a manner that prevents injury or damage to persons, adjoining properties and public rights-of-way.

[BG] 1501.5 Fire safety during construction. Fire safety during construction shall comply with the applicable requirements of the *Building Code of New York State* and the applicable provisions of Chapter 33 of the *Fire Code of New York State.*

[BS] 1501.6 Protection of pedestrians. Pedestrians shall be protected during construction and demolition activities as required by Sections 1501.6.1 through 1501.6.7 and Table 1501.6. Signs shall be provided to direct pedestrian traffic.

[BS] 1501.6.1 Walkways. A walkway shall be provided for pedestrian travel in front of every construction and demolition site unless the applicable governing authority authorizes the sidewalk to be fenced or closed. A walkway shall be provided for pedestrian travel that leads from a building entrance or exit of an occupied structure to a public way. Walkways shall be of sufficient width to accommodate the pedestrian traffic, but shall be not less than 4 feet (1219 mm) in width. Walkways shall be provided with a durable walking surface and shall be accessible in accordance with Chapter 11 of the *Building Code of New York State.* Walkways shall be designed to support all imposed loads and the design live load shall be not less than 150 pounds per square foot (psf) (7.2 kN/m^2).

[BS] 1501.6.2 Directional barricades. Pedestrian traffic shall be protected by a directional barricade where the walkway extends into the street. The directional barricade shall be of sufficient size and construction to direct vehicular traffic away from the pedestrian path.

[BS] 1501.6.3 Construction railings. Construction railings shall be not less than 42 inches (1067 mm) in height and shall be sufficient to direct pedestrians around construction areas.

[BS] 1501.6.4 Barriers. Barriers shall be not less than 8 feet (2438 mm) in height and shall be placed on the side of the walkway nearest the construction. Barriers shall extend the entire length of the construction site. Openings in such barriers shall be protected by doors that are normally kept closed.

[BS] 1501.6.4.1 Barrier design. Barriers shall be designed to resist loads required in Chapter 16 of the *Building Code of New York State* unless constructed as follows:

1. Barriers shall be provided with 2-inch by 4-inch (51 mm by 102 mm) top and bottom plates.
2. The barrier material shall be boards not less than $^3/_4$ inch (19.1 mm) in thickness or wood structural use panels not less than $^1/_4$ inch (6.4 mm) in thickness.
3. Wood structural use panels shall be bonded with an adhesive identical to that for exterior wood structural use panels.

[BS] TABLE 1501.6
PROTECTION OF PEDESTRIANS

HEIGHT OF CONSTRUCTION	DISTANCE OF CONSTRUCTION TO LOT LINE	TYPE OF PROTECTION REQUIRED
8 feet or less	Less than 5 feet	Construction railings
	5 feet or more	None
More than 8 feet	Less than 5 feet	Barrier and covered walkway
	5 feet or more, but not more than one-fourth the height of construction	Barrier and covered walkway
	5 feet or more, but between one-fourth and one-half the height of construction	Barrier
	5 feet or more, but exceeding one-half the height of construction	None

For SI: 1 foot = 304.8 mm.

INTERNATIONAL CODE COUNCIL®
Copyright © 2019 ICC & NYSDOS. ALL RIGHTS RESERVED. Accessed by Lauren Gualdino (lgualdino@briarcliffmanor.org), (-) Order Number #100880972 on May 08, 2020 07:05 AM (PDT) pursuant to License Agreement with ICC & NYSDOS. No further reproduction, no

100880972

4. Wood structural use panels $^{1}/_{4}$ inch (6.4 mm) or $^{15}/_{16}$ inch (23.8 mm) in thickness shall have studs spaced not more than 2 feet (610 mm) on center.
5. Wood structural use panels $^{3}/_{8}$ inch (9.5 mm) or $^{1}/_{2}$ inch (12.7 mm) in thickness shall have studs spaced not more than 4 feet (1219 mm) on center, provided that a 2-inch by 4-inch (51 mm by 102 mm) stiffener is placed horizontally at mid-height where the stud spacing is greater than 2 feet (610 mm) on center.
6. Wood structural use panels $^{5}/_{8}$ inch (15.9 mm) or thicker shall not span over 8 feet (2438 mm).

[BS] 1501.6.5 Covered walkways. Covered walkways shall have a clear height of not less than 8 feet (2438 mm) as measured from the floor surface to the canopy overhead. Adequate lighting shall be provided at all times. Covered walkways shall be designed to support all imposed loads. The design live load shall be not less than 150 psf (7.2 kN/m^2) for the entire structure.

Exception: Roofs and supporting structures of covered walkways for new, light-frame construction not exceeding two stories above grade plane are permitted to be designed for a live load of 75 psf (3.6 kN/m^2) or the loads imposed on them, whichever is greater. In lieu of such designs, the roof and supporting structure of a covered walkway are permitted to be constructed as follows:

1. Footings shall be continuous 2-inch by 6-inch (51 mm by 152 mm) members.
2. Posts not less than 4 inches by 6 inches (102 mm by 152 mm) shall be provided on both sides of the roof and spaced not more than 12 feet (3658 mm) on center.
3. Stringers not less than 4 inches by 12 inches (102 mm by 305 mm) shall be placed on edge on the posts.
4. Joists resting on the stringers shall be not less than 2 inches by 8 inches (51 mm by 203 mm) and shall be spaced not more than 2 feet (610 mm) on center.
5. The deck shall be planks not less than 2 inches (51 mm) thick or wood structural panels with an exterior exposure durability classification not less than $^{23}/_{32}$ inch (18.3 mm) thick nailed to the joists.
6. Each post shall be knee-braced to joists and stringers by members not less than 2 inches by 4 inches (51 mm by 102 mm); 4 feet (1219 mm) in length.
7. A curb that is not less than 2 inches by 4 inches (51 mm by 102 mm) shall be set on edge along the outside edge of the deck.

[BS] 1501.6.6 Repair, maintenance and removal. Pedestrian protection required by Section 1501.6 shall be maintained in place and kept in good order for the entire length of time pedestrians are subject to being endangered. The owner or the owner's authorized agent, on completion of the construction activity, shall immediately remove walkways, debris and other obstructions and leave such public property in as good a condition as it was before such work was commenced.

[BS] 1501.6.7 Adjacent to excavations. Every excavation on a site located 5 feet (1524 mm) or less from the street lot line shall be enclosed with a barrier not less than 6 feet (1829 mm) in height. Where located more than 5 feet (1524 mm) from the street lot line, a barrier shall be erected where required by the *building official*. Barriers shall be of adequate strength to resist wind pressure as specified in Chapter 16 of the *Building Code of New York State*.

1501.7 Facilities required. Sanitary facilities shall be provided during construction or demolition activities in accordance with the *Plumbing Code of New York State*.

SECTION 1502
PROTECTION OF ADJOINING PROPERTY

[BS] 1502.1 Protection required. Adjoining public and private property shall be protected from damage during construction and demolition work. Protection must be provided for footings, foundations, party walls, chimneys, skylights and roofs. Provisions shall be made to control water runoff and erosion during construction or demolition activities. The person making or causing an excavation to be made shall provide written notice to the owners of adjoining buildings advising them that the excavation is to be made and that the adjoining buildings should be protected. Said notification shall be delivered not less than 10 days prior to the scheduled starting date of the excavation.

SECTION 1503
TEMPORARY USE OF STREETS, ALLEYS AND PUBLIC PROPERTY

[BG] 1503.1 Storage and handling of materials. The temporary use of streets or public property for the storage or handling of materials or equipment required for construction or demolition, and the protection provided to the public shall comply with the provisions of the applicable governing authority and this chapter.

[BG] 1503.2 Obstructions. Construction materials and equipment shall not be placed or stored so as to obstruct access to fire hydrants, standpipes, fire or police alarm boxes, catch basins or manholes, nor shall such material or equipment be located within 20 feet (6096 mm) of a street intersection, or placed so as to obstruct normal observations of traffic signals or to hinder the use of public transit loading platforms.

[BG] 1503.3 Utility fixtures. Building materials, fences, sheds or any obstruction of any kind shall not be placed so as to obstruct free approach to any fire hydrant, fire department connection, utility pole, manhole, fire alarm box, or catch basin, or so as to interfere with the passage of water in the gutter. Protection against damage shall be provided to such utility fixtures during the progress of the work, but sight of them shall not be obstructed.

INTERNATIONAL CODE COUNCIL®
Copyright © 2019 ICC & NYSDOS. ALL RIGHTS RESERVED. Accessed by Lauren Gualdino (lgualdino@briarcliffmanor.org), (-) Order Number #100880972 on May 08, 2020 07:05 AM (PDT) pursuant to License Agreement with ICC & NYSDOS. No further reproduction, no

100880972

SECTION 1504
FIRE EXTINGUISHERS

[F] 1504.1 Where required. Structures under construction, *alteration* or demolition shall be provided with not fewer than one *approved* portable fire extinguisher in accordance with Section 906 of the *Fire Code of New York State* and sized for not less than ordinary hazard as follows:

1. At each stairway on all floor levels where combustible materials have accumulated.
2. In every storage and construction shed.
3. Additional portable fire extinguishers shall be provided where special hazards exist, such as the storage and use of flammable and combustible liquids.

[F] 1504.2 Fire hazards. The provisions of this code and of the *Fire Code of New York State* shall be strictly observed to safeguard against all fire hazards attendant upon construction operations.

SECTION 1505
MEANS OF EGRESS

[BE] 1505.1 Stairways required. Where building construction exceeds 40 feet (12 192 mm) in height above the lowest level of fire department vehicle access, a temporary or permanent stairway shall be provided. As construction progresses, such stairway shall be extended to within one floor of the highest point of construction having secured decking or flooring.

[F] 1505.2 Maintenance of means of egress. Means of egress and required accessible means of egress shall be maintained at all times during construction, demolition, remodeling or *alterations* and *additions* to any building.

Exception: Existing means of egress need not be maintained where *approved* temporary means of egress and accessible means of egress systems and facilities are provided.

SECTION 1506
STANDPIPES

[F] 1506.1 Where required. In buildings required to have standpipes by Section 905.3.1 of the *Building Code of New York State*, not less than one standpipe shall be provided for use during construction. Such standpipes shall be installed prior to construction exceeding 40 feet (12 192 mm) in height above the lowest level of fire department vehicle access. Such standpipes shall be provided with fire department hose connections at locations adjacent to *stairways,* complying with Section 1505.1. As construction progresses, such standpipes shall be extended to within one floor of the highest point of construction having secured decking or flooring.

[F] 1506.2 Buildings being demolished. Where a building or portion of a building is being demolished and a standpipe is existing within such a building, such standpipe shall be maintained in an operable condition so as to be available for use by the fire department. Such standpipe shall be demolished with the building but shall not be demolished more than one floor below the floor being demolished.

[F] 1506.3 Detailed requirements. Standpipes shall be installed in accordance with the provisions of Chapter 9 of the *Building Code of New York State*.

Exception: Standpipes shall be either temporary or permanent in nature, and with or without a water supply, provided that such standpipes conform to the requirements of Section 905 of the *Building Code of New York State* as to capacity, outlets and materials.

SECTION 1507
AUTOMATIC SPRINKLER SYSTEM

[NY] 1507.1 Completion before occupancy. In buildings where an automatic sprinkler system is required by this code or the *Building Code of New York State*, it shall be unlawful to occupy any portions of a building or structure until the automatic sprinkler system installation has been tested and *approved.*

[F] 1507.2 Operation of valves. Operation of sprinkler control valves shall be permitted only by properly authorized personnel and shall be accompanied by notification of duly designated parties. When the sprinkler protection is being regularly turned off and on to facilitate connection of newly completed segments, the sprinkler control valves shall be checked at the end of each work period to ascertain that protection is in service.

SECTION 1508
ACCESSIBILITY

[BE] 1508.1 Construction sites. Structures, sites, and equipment directly associated with the actual process of construction, including but not limited to scaffolding, bridging, material hoists, material storage, or construction trailers are not required to be accessible.

SECTION 1509
WATER SUPPLY FOR FIRE PROTECTION

[F] 1509.1 When required. An *approved* water supply for fire protection, either temporary or permanent, shall be made available as soon as combustible material arrives on the site.

INTERNATIONAL CODE COUNCIL®
Copyright © 2019 ICC & NYSDOS. ALL RIGHTS RESERVED. Accessed by Lauren Gualdino (lgualdino@briarcliffmanor.org), (-) Order Number #100880972 on May 08, 2020 07:05 AM (PDT) pursuant to License Agreement with ICC & NYSDOS. No further reproduction, no

100880972

INTERNATIONAL CODE COUNCIL®
Copyright © 2019 ICC & NYSDOS. ALL RIGHTS RESERVED. Accessed by Lauren Gualdino (lgualdino@briarcliffmanor.org), (-) Order Number #100880972 on May 08, 2020 07:05 AM (PDT) pursuant to License Agreement with ICC & NYSDOS. No further reproduction, no

100880972

CHAPTER 16
REFERENCED STANDARDS

User note:

This chapter lists the standards that are referenced in various sections of this document. The standards are listed herein by the promulgating agency of the standard, the standard identification, the effective date and title, and the section or sections of this document that reference the standard. The application of the referenced standards shall be as specified in Section 102.4.

** Denotes standards that have been incorporated by reference into 19 NYCRR Part 1227.*

ASCE/SEI

American Society of Civil Engineers
Structural Engineering Institute
1801 Alexander Bell Drive
Reston, VA 20191-4400

7—16: Minimum Design Loads and Associated Criteria for Buildings and Other Structures
303.2, 303.3.1, 503.4, 503.12, 800.3, 806.4

41—17: Seismic Evaluation and Retrofit of Existing Buildings
303.3.1, Table 303.3.1, 303.3.2, Table 303.3.2

ASHRAE

ASHRAE
1791 Tullie Circle, NE
Atlanta, GA 30329

***62.1—2013: Ventilation for Acceptable Indoor Air Quality**
808.2

ASME

American Society of Mechanical Engineers
Two Park Avenue
New York, NY 10016

***ASME A17.1—2016/CSA B44—16: Safety Code for Elevators and Escalators**
305.8.2, 902.1.2

***A17.3—2015: Safety Code for Existing Elevators and Escalators**
902.1.2

***A18.1—2014: Safety Standard for Platform Lifts and Stairway Chair Lifts**
305.8.3

ASTM

ASTM International
100 Barr Harbor Drive, P.O. Box C700
West Conshohocken, PA 19428-2959

C94/C94M—15A: Specification for Ready-mixed Concrete
109.3.1

E84—2016: Standard Test Method for Surface Burning Characteristics of Building Materials
1204.9

E108—16: Standard Test Methods for Fire Tests of Roof Coverings
1204.5

E136—16: Test Method for Behavior of Materials in a Vertical Tube Furnace at 750°C
202

F2006—17: Standard Safety Specification for Window Fall Prevention Devices for Non Emergency Escape (Egress) and Rescue (Ingress) Windows
505.2, 702.4

F2090—17: Standard Specification for Window Fall Prevention Devices with Emergency (Egress) Release Mechanisms
505.2, 505.3, 702.4, 702.5

INTERNATIONAL CODE COUNCIL®
Copyright © 2019 ICC & NYSDOS. ALL RIGHTS RESERVED. Accessed by Lauren Gualdino (lgualdino@briarcliffmanor.org), (-) Order Number #100880972 on May 08, 2020 07:05 AM (PDT) pursuant to License Agreement with ICC & NYSDOS. No further reproduction, no

100880972

ICC

International Code Council, Inc.
500 New Jersey Avenue, NW
6th Floor
Washington, DC 20001

***BCNYS—20: Building Code of New York State**

101.4.1, 109.3.3, 109.3.6, 109.3.9, 110.2, 202, 301.3, 302.5.1, 302.6, 303.1, 303.3.1, 303.3.2, 304, 305.4, 305.4.2, 305.6, 305.8.1, 305.8.4, 305.8.5, 305.8.6, 305.8.7, 305.8.8, 305.8.10, 305.8.11, 305.8.15, 305.9, 305.9.3, 305.9.4, 401.2, 402.3, 405.2.1.1, 405.2.3.1, 405.2.3.3, 405.2.4, 405.2.5, 501.2, 502.1, 502.3, 502.4, 502.5, 503.1, 503.2, 503.3, 503.4, 503.5, 503.11, 503.12, 503.13, 503.16.1, 503.16.2, 503.16.3, 505.2, 505.3, 505.4, 506.1, 506.3, 506.4.1, 506.4.2, 506.4.3, 506.4.4, 507.3, 701.2, 701.3, 701.4, 702.1, 702.2, 702.3, 702.4, 702.5, 702.6, 705.1, 706.2, 801.3, 802.2.1, 802.2.3, 802.3, 802.4, 802.5.2, 802.6, 803.1.1, 803.2, 803.2.2, 803.2.3, 803.3, 805.3.1, 805.3.1.1, Table 805.3.1.1(1), 805.3.1.2.1, 805.4.3, 805.4.5, 805.5, 805.6, 805.7.1, 805.8.1, 805.9.2, 805.10.1.1, 805.10.1.2, 805.10.1.3, 805.10.2, 805.11.2, 806.2, 806.3, 806.4, 904.1.2, 904.1.3, 904.1.4, 904.2, 904.2.1, 904.2.2, 905.2, 905.3, 906.2, 906.3, 1001.2, 1001.3, 1002.1, 1002.2, 1004.1, 1006.1, 1006.2, 1006.3, 1006.4, 1010.1, 1011.1, 1011.1.1.1, 1011.1.1.2, 1011.2.1, 1011.2.2, 1011.3, 1011.4.1, 1011.4.2, 1011.4.3, 1011.5.1, 1011.5.1.1, 1011.5.3, 1011.6.1, 1011.6.3, 1011.7.1, 1011.7.2, 1011.7.3, 1102.1, 1102.2, 1102.3, 1103.1, 1103.2, 1103.3, 1201.4, 1202.2, 1203.12, 1204.2, 1204.9, 1206.1, 1301.2.2, 1301.2.3, 1301.2.4, 1301.3.3, 1301.4.1, 1301.6.1, 1301.6.1.1, 1301.6.2, 1301.6.2.1, 1301.6.3.1, 1301.6.3.2, 1301.6.4.1, 1301.6.5, 1301.6.5.1, 1301.6.6, 1301.6.7.1, 1301.6.8, 1301.6.9, 1301.6.9.1, 1301.6.10, 1301.6.10.1, 1301.6.11, 1301.6.11.1, 1301.6.12.1, 1301.6.13, 1301.6.15.1, 1301.6.16.1, 1301.6.17, 1301.6.17.1, 1301.6.18, 1301.6.18.1, 1301.6.19, Table 1301.6.19, 1301.6.20, 1401.2, 1402.1, 1402.2, 1402.2.1, 1402.3, 1402.4, 1402.5, 1402.6, 1501.5, 1501.6.1, 1501.6.4.1, 1501.6.7, 1506.3

***ICC A117.1—09: Accessible and Usable Buildings and Facilities**

301.5, 305.8.2, 305.8.3, 305.8.10

***ICC 300—17: ICC Standard on Bleachers, Folding and Telescopic Seating and Grandstands**

501.1

***ICC 500—14: Standard for the Design and Construction of Storm Shelters**

1106.1

***ECCCNYS—20: Energy Conservation Construction Code of New York State**

302.3, 702.6, 707.1, 810.1, 907.1, 1107.1

***FCNYS—20: Fire Code of New York State**

101.4.2, 301.3.1, 302.3, 502.6, 502.7, 503.14, 503.15, 802.2.1, 802.2.3, 803.4.1.1, 803.4.1.2, 803.4.1.3, 803.4.1.4, 803.4.1.5, 803.4.1.6, 803.4.1.7, 803.4.3, 804.1, 1011.5.1.1, 1104.1, 1105.1, 1301.3.2, 1301.6.8.1, 1301.6.14, 1304.6.14.1, 1401.2, 1501.5, 1504.1, 1504.2

***FGCNYS—20: Fuel Gas Code of New York State**

302.3, 702.6.1

***MCNYS—20: Mechanical Code of New York State**

302.3, 702.6, 808.1, 902.1.1, 1008.1, 1301.6.7.1, 1301.6.8, 1301.6.8.1

***PCNYS—20: Plumbing Code of New York State**

302.3, 408.1, 702.6, 809.1, 1009.1, 1009.2, 1009.3, 1009.5, 1501.7

***PMCNYS—20: Property Maintenance Code of New York State**

101.4.2, 302.3, 1301.3.2, 1401.2

***RCNYS—20: Residential Code of New York State**

101.2, 101.4.1, 302.3, 401.3, 402.3, 405.2.5, 502.3, 502.4, 502.5, 502.7, 503.2, 503.3, 503.11, 505.2, 505.3, 507.3, 701.3, 702.4, 702.5, 706.2, 707.1, 806.2, 807.3, 810.1, 906.2, 907.1, 1103.1, 1103.2, 1103.3, 1103.4, 1104.1, 1105.1, 1107.1, 1201.4, 1301.2.2, 1301.2.3, 1301.3.3, 1401.2, 1402.1, 1402.2, 1402.2.1, 1402.3, 1402.4, 1402.5, 1402.6

INTERNATIONAL CODE COUNCIL®
Copyright © 2019 ICC & NYSDOS. ALL RIGHTS RESERVED. Accessed by Lauren Gualdino (lgualdino@briarcliffmanor.org), (-) Order Number #100880972 on May 08, 2020 07:05 AM (PDT) pursuant to License Agreement with ICC & NYSDOS. No further reproduction, no

100880972

NFPA

National Fire Protection Agency
1 Batterymarch Park
Quincy, MA 02169-7471

***NFPA 13R—16: Standard for the Installation of Sprinkler Systems in Residential Occupancies up to and Including Four Stories in Height**
803.2.4

***NFPA 70—17: National Electrical Code**
302.3, 406.1.1, 406.1.2, 406.1.3, 406.1.4, 406.1.5, 807.1, 807.3.4, 807.3.7, 1007.1, 1007.2, 1007.3, 1007.4

***NFPA 72—16: National Fire Alarm and Signaling Code**
803.2.4, 803.4

***NFPA 99—18: Health Care Facilities Code**
406.1.4

***NFPA 101—18:** Life Safety Code
805.2

UL

UL LLC
333 Pfingsten Road
Northbrook, IL 60062

723—08: Standard for Test for Surface Burning Characteristics of Building Materials—with Revisions through August 2013
1204.9

790—04: Standard Test Methods for Fire Tests of Roof Coverings—with Revisions through July 2014
1204.5

INTERNATIONAL CODE COUNCIL®
Copyright © 2019 ICC & NYSDOS. ALL RIGHTS RESERVED. Accessed by Lauren Gualdino (lgualdino@briarcliffmanor.org), (-) Order Number #100880972 on May 08, 2020 07:05 AM (PDT) pursuant to License Agreement with ICC & NYSDOS. No further reproduction, no

100880972

INTERNATIONAL CODE COUNCIL®
Copyright © 2019 ICC & NYSDOS. ALL RIGHTS RESERVED. Accessed by Lauren Gualdino (lgualdino@briarcliffmanor.org), (-) Order Number #100880972 on May 08, 2020 07:05 AM (PDT) pursuant to License Agreement with ICC & NYSDOS. No further reproduction, no

100880972

Appendix A: Guidelines for the Seismic Retrofit of Existing Buildings

CHAPTER A1

SEISMIC STRENGTHENING PROVISIONS FOR UNREINFORCED MASONRY BEARING WALL BUILDINGS

SECTION A101 PURPOSE

[BS] A101.1 Purpose. The purpose of this chapter is to promote public safety and welfare by reducing the risk of death or injury from the effects of earthquakes on existing unreinforced masonry bearing wall buildings.

The provisions of this chapter are intended as minimum standards for structural seismic resistance, and are established primarily to reduce the risk of life loss or injury. Compliance with these provisions will not necessarily prevent loss of life or injury, or prevent earthquake damage to retrofitted buildings.

SECTION A102 SCOPE

[BS] A102.1 General. The provisions of this chapter shall apply to all *existing buildings* not more than six stories in height above the base of the structure and having not fewer than one unreinforced masonry bearing wall. The elements regulated by this chapter shall be determined in accordance with Table A102.1. Except as provided herein, other structural provisions of the building code shall apply. This chapter does not apply to the *alteration* of existing electrical, plumbing, mechanical or fire safety systems.

[BS] A102.2 Essential and hazardous facilities. The provisions of this chapter shall not apply to the strengthening of buildings in *Risk Category* III or IV. Such buildings shall be strengthened to meet the requirements of the *Building Code of New York State* for new buildings of the same *risk category* or other such criteria *approved* by the *building official*.

SECTION A103 DEFINITIONS

[BS] A103.1 Definitions. For the purpose of this chapter, the applicable definitions in the building code shall also apply.

[BS] BED JOINT. The horizontal layer of mortar on which a masonry unit is laid.

[BS] COLLAR JOINT. The vertical space between adjacent wythes. A collar joint may contain mortar or grout.

[BS] CROSSWALL. A new or existing wall that meets the requirements of Section A111.3. A crosswall is not a shear wall.

[BS] CROSSWALL SHEAR CAPACITY. The unit shear value times the length of the crosswall, $v_c L_c$.

[BS] DETAILED BUILDING SYSTEM ELEMENTS. The localized elements and the interconnections of these elements that define the design of the building.

[BS] DIAPHRAGM EDGE. The intersection of the horizontal diaphragm and a shear wall.

[BS] DIAPHRAGM SHEAR CAPACITY. The unit shear value times the depth of the diaphragm, $v_u D$.

[BS] FLEXIBLE DIAPHRAGM. A diaphragm of wood or untopped metal deck construction in which the horizontal deformation along its length is at least two times the average story drift.

HEAD JOINT. The vertical mortar joint placed between masonry units within the wythe.

[BS] NORMAL WALL. A wall perpendicular to the direction of seismic forces.

[BS] OPEN FRONT. An exterior building wall line on one side only without vertical elements of the seismic force-resisting system in one or more stories.

[BS] POINTING. The process of removal of deteriorated mortar from between masonry units and placement of new mortar. Also known as repointing or tuckpointing for purposes of this chapter.

[BS] REPOINTING. See "Pointing."

[BS] RIGID DIAPHRAGM. A diaphragm of concrete construction or concrete-filled metal deck construction.

[BS] TUCKPOINTING. See "Pointing."

[BS] UNREINFORCED MASONRY (URM). Includes burned clay, concrete or sand-lime brick; hollow clay or concrete block; plain concrete; and hollow clay tile. These materials shall comply with the requirements of Section A106 as applicable.

[BS] UNREINFORCED MASONRY BEARING WALL. A URM wall that provides the vertical support for the reaction of floor or roof-framing members for which the total superimposed vertical load exceeds 100 pounds per linear foot (1459 N/m) of wall length.

[BS] UNREINFORCED MASONRY WALL. A masonry wall that relies on the tensile strength of masonry units, mortar and grout in resisting design loads, and in which the area of reinforcement is less than the minimum amounts as defined for reinforced masonry walls.

[BS] YIELD STORY DRIFT. The lateral displacement of one level relative to the level above or below at which yield stress is first developed in a frame member.

INTERNATIONAL CODE COUNCIL®
Copyright © 2019 ICC & NYSDOS. ALL RIGHTS RESERVED. Accessed by Lauren Gualdino (lgualdino@briarcliffmanor.org), (-) Order Number #100880972 on May 08, 2020 07:05 AM (PDT) pursuant to License Agreement with ICC & NYSDOS. No further reproduction, no

100880972

SECTION A104
SYMBOLS AND NOTATIONS

[BS] A104.1 Symbols and notations. For the purpose of this chapter, the following notations supplement the applicable symbols and notations in the building code.

a_n = Diameter of core multiplied by its length or the area of the side of a square prism.

A = Cross-sectional area of unreinforced masonry pier or wall, square inches (10^{-6} m^2).

A_b = Total area of the bed joints above and below the test specimen for each in-place shear test, square inches (10^{-6} m^2).

A_n = Area of net mortared or grouted section of a wall or wall pier.

D = In-plane width dimension of pier, inches (10^{-3} m), or depth of diaphragm, feet (m).

DCR = Demand-capacity ratio specified in Section A111.4.2.

f'_m = Lower bound masonry compressive strength.

f_{sp} = Tensile-splitting strength of masonry.

F_{wx} = Force applied to a wall at level x, pounds (N).

H = Least clear height of opening on either side of a pier, inches (10^{-3} m).

h/t = Height-to-thickness ratio of URM wall. Height, h, is measured between wall anchorage levels and/or slab-on-grade.

L = Span of diaphragm between shear walls, or span between shear wall and open front, feet (m).

L_c = Length of crosswall, feet (m).

L_i = Effective diaphragm span for an open-front building specified in Section A111.8, feet (m).

P = Applied force as determined by standard test method of ASTM C496 or ASTM E519, pounds (N).

P_D = Superimposed dead load at the location under consideration, pounds (N). For determination of the rocking shear capacity, dead load at the top of the pier under consideration shall be used.

P_{D+L} = Stress resulting from the dead plus actual live load in place at the time of testing, pounds per square inch (kPa).

P_{test} = Splitting tensile test load determined by standard test method ASTM C496, pounds (N).

P_w = Weight of wall, pounds (N).

R = Response modification factor for Ordinary plain masonry shear walls in Bearing Wall System from Table 12.2-1 of ASCE 7, where $R = 1.5$.

S_{DS} = Design spectral acceleration at short period, in g units.

S_{D1} = Design spectral acceleration at 1-second period, in g units.

v_a = The shear strength of any URM pier, v_mA/1.5 pounds (N).

v_c = Unit shear strength for a crosswall sheathed with any of the materials given in Table A108.1(1) or A108.1(2), pounds per foot (N/m).

v_{mL} = Shear strength of unreinforced masonry, pounds per square inch (kPa).

V_{aa} = The shear strength of any URM pier or wall, pounds (N).

V_{ca} = Total shear capacity of crosswalls in the direction of analysis immediately above the diaphragm level being investigated, v_cL_c, pounds (N).

V_{cb} = Total shear capacity of crosswalls in the direction of analysis immediately below the diaphragm level being investigated, v_cL_c, pounds (N).

V_p = Shear force assigned to a pier on the basis of its relative shear rigidity, pounds (N).

V_r = Pier rocking shear capacity of any URM wall or wall pier, pounds (N).

v_{test} = Load at incipient cracking for each in-place shear test performed in accordance with Section A106.3.3.1, pounds (N).

v_{tl} = Lower bound mortar shear strength, pounds per square inch (kPa).

v_{to} = Mortar shear test values as specified in Section A106.3.3.5, pounds per square inch (kPa).

v_u = Unit shear capacity value for a diaphragm sheathed with any of the materials given in Table A108.1(1) or A108.1(2), pounds per foot (N/m).

V_{wx} = Total shear force resisted by a shear wall at the level under consideration, pounds (N).

W = Total seismic dead load as defined in the building code, pounds (N).

W_d = Total dead load tributary to a diaphragm level, pounds (N).

W_w = Total dead load of a URM wall above the level under consideration or above an open-front building, pounds (N).

W_{wx} = Dead load of a URM wall assigned to level x halfway above and below the level under consideration, pounds (N).

Σv_uD = Sum of diaphragm shear capacities of both ends of the diaphragm, pounds (N).

$\Sigma\Sigma v_uD$ = For diaphragms coupled with crosswalls, v_uD includes the sum of shear capacities of both ends of diaphragms coupled at and above the level under consideration, pounds (N).

ΣW_d = Total dead load of all the diaphragms at and above the level under consideration, pounds (N).

SECTION A105
GENERAL REQUIREMENTS

[BS] A105.1 General. The seismic force-resisting system specified in this chapter shall comply with the *Building Code of New York State* and referenced standards, except as modified herein.

INTERNATIONAL CODE COUNCIL®
Copyright © 2019 ICC & NYSDOS. ALL RIGHTS RESERVED. Accessed by Lauren Gualdino (lgualdino@briarcliffmanor.org), (-) Order Number #100880972 on May 08, 2020 07:05 AM (PDT) pursuant to License Agreement with ICC & NYSDOS. No further reproduction, no

100880972

[BS] A105.2 Alterations and repairs. *Alterations* and *repairs* required to meet the provisions of this chapter shall comply with applicable structural requirements of the building code unless specifically provided for in this chapter.

[BS] A105.3 Requirements for plans. The following construction information shall be included in the plans required by this chapter:

1. Dimensioned floor and roof plans showing existing walls and the size and spacing of floor and roof-framing members and sheathing materials. The plans shall indicate all existing URM walls, and new crosswalls and shear walls, and their materials of construction. The location of these walls and their openings shall be fully dimensioned and drawn to scale on the plans.
2. Dimensioned URM wall elevations showing openings, piers, wall classes as defined in Section A106.2.3.8, thickness, heights, wall shear test locations, cracks or damaged portions requiring *repairs*, the general condition of the mortar joints, and if and where pointing is required. Where the exterior face is veneer, the type of veneer, its thickness and its bonding and/or ties to the structural wall masonry shall be noted.
3. The type of interior wall and ceiling materials, and framing.
4. The extent and type of existing wall anchorage to floors and roof where used in the design.
5. The extent and type of parapet corrections that were previously performed, if any.
6. *Repair* details, if any, of cracked or damaged unreinforced masonry walls required to resist forces specified in this chapter.
7. All other plans, sections and details necessary to delineate required retrofit construction.
8. The design procedure used shall be stated on both the plans and the permit application.
9. Details of the anchor prequalification program required by Section A107.5.3, if used, including location and results of all tests.
10. Quality assurance requirements of special inspection for all new construction materials and for retrofit construction including: anchor tests, pointing or repointing of mortar joints, installation of adhesive or mechanical anchors, and other elements as deemed necessary to ensure compliance with this chapter.

[BS] A105.4 Structural observation, testing and inspection. Structural observation, in accordance with Section 1704.5 of the *Building Code of New York State*, shall be required for all structures in which seismic retrofit is being performed in accordance with this chapter. Structural observation shall include visual observation of work for compliance with the *approved* construction documents and confirmation of existing conditions assumed during design.

Structural testing and inspection for new and existing construction materials shall be in accordance with the building code, except as modified by this chapter.

Special inspection as described in Section A105.3, Item 10, shall be provided equivalent to Level 3 as prescribed in TMS 402, Table 3.1(2).

SECTION A106
MATERIALS REQUIREMENTS

[BS] A106.1 Condition of existing materials. Existing materials used as part of the required vertical load-carrying or seismic force-resisting system shall be evaluated by on-site investigation and: determined to be in good condition (free of degraded mortar, degraded masonry units or significant cracking); or shall be repaired, enhanced, retrofitted or removed and replaced with new materials. Mortar joint deterioration shall be patched by pointing or repointing of the eroded joint in accordance with Section A106.2.3.9. Existing significant cracks in solid unit unreinforced and solid grouted hollow unit masonry shall be repaired.

[BS] A106.2 Existing unreinforced masonry.

[BS] A106.2.1 General. Unreinforced masonry walls used to support vertical loads or seismic forces parallel and perpendicular to the wall plane shall be tested as specified in this section. Masonry that does not meet the minimum requirements established by this chapter shall be repaired, enhanced, removed and replaced with new materials, or alternatively, shall have its structural functions replaced with new materials and shall be anchored to supporting elements.

[BS] A106.2.2 Lay-up of walls. Unreinforced masonry walls shall be laid in a running bond pattern.

[BS] A106.2.2.1 Header in multiple-wythe solid brick. The facing and backing wythes of multiple-wythe walls shall be bonded so that not less than 10 percent of the exposed face area is composed of solid headers extending not less than 4 inches (102 mm) into the backing wythes. The clear distance between adjacent header courses shall not exceed 24 inches (610 mm) vertically or horizontally. Where backing consists of two or more wythes, the headers shall extend not less than 4 inches (102 mm) into the most distant wythe, or the backing wythes shall be bonded together with separate headers for which the area and spacing conform to the foregoing. Wythes of walls not meeting these requirements shall be considered to be veneer, and shall not be included in the effective thickness used in calculating the height-to-thickness ratio and the shear capacity strength of the wall.

Exception: Where SD1 is 0.3 g or less, veneer wythes anchored and made composite with backup masonry are permitted to be used for calculation of the effective thickness.

[BS] A106.2.2.2 Concrete masonry units and structural clay load-bearing tile. Grouted or ungrouted hollow concrete masonry units shall be tested in accordance with ASTM C140. Grouted or ungrouted structural clay load-bearing tile shall be tested in accordance with ASTM C34.

INTERNATIONAL CODE COUNCIL®
Copyright © 2019 ICC & NYSDOS. ALL RIGHTS RESERVED. Accessed by Lauren Gualdino (lgualdino@briarcliffmanor.org), (-) Order Number #100880972 on May 08, 2020 07:05 AM (PDT) pursuant to License Agreement with ICC & NYSDOS. No further reproduction, no

100880972

[BS] A106.2.2.3 Lay-up patterns. Lay-up patterns other than those specified in Section A106.2.2.1 are allowed if their performance can be justified.

[BS] A106.2.3 Testing of masonry.

[BS] A106.2.3.1 In-place mortar tests. Mortar shear test values, v_{to}, shall be obtained by one of the following:

1. ASTM C1531.
2. For masonry walls that have high shear strength mortar, or where in-place testing is not practical because of crushing or other failure mode of the masonry, alternative procedures for testing shall be used in accordance with Section A106.2.3.2.

[BS] A106.2.3.2 Alternative procedures for testing masonry. The tensile-splitting strength of existing masonry, f_{sp}, or the prism strength of existing masonry, f'_m, is permitted to be determined in accordance with ASTM C496 and calculated by the following equation:

$$f_{sp} = \frac{0.494P}{a_n} \qquad \textbf{(Equation A1-1)}$$

[BS] A106.2.3.3 Location of tests. The shear tests shall be taken at locations representative of the mortar conditions throughout the building. Test locations shall be determined at the building site by the *registered design professional* in charge. Results of all tests and their locations shall be recorded.

[BS] A106.2.3.4 Number of tests. The minimum number of tests per masonry class shall be determined as follows:

1. At each of both the first and top stories, not less than two tests per wall or line of wall elements providing a common line of resistance to seismic forces.
2. At each of all other stories, not less than one test per wall or line of wall elements providing a common line of resistance to seismic forces.
3. In any case, not less than one test per 1,500 square feet (139.4 m^2) of wall surface and not less than a total of eight tests.

[BS] A106.2.3.5 Minimum quality of mortar.

1. Mortar shear test values, v_{to}, in pounds per square inch (kPa), shall be obtained for each in-place shear test in accordance with the following equation:

   $$v_{to} = (V_{test}/A_b) - P_{D+L} \qquad \textbf{(Equation A1-2)}$$

   where:

   V_{test} = Load at first observed movement.

   A_b = Total area of the bed joints above and below the test specimen.

   P_{D+L} = Stress resulting from actual dead plus live loads in place at the time of testing.

2. Individual unreinforced masonry walls with more than 50 percent of mortar test values, v_{to}, less than 30 pounds per square inch (207 kPa) shall be pointed prior to and retested.
3. The lower bound mortar shear strength, v_{tL}, is defined as the mean minus one standard deviation of the mortar shear test values, v_{to}.
4. Unreinforced masonry with mortar shear strength, v_{tL}, less than 30 pounds per square inch (207 kPa) shall be pointed and retested or shall have its structural function replaced, and shall be anchored to supporting elements in accordance with Sections A106.2.1 and A113.8. When existing mortar in any wythe is pointed to increase its shear strength and is retested, the condition of the mortar in the adjacent bed joints of the inner wythe or wythes and the opposite outer wythe shall be examined for extent of deterioration. The shear strength of any wall class shall be not greater than that of the weakest wythe of that class.

[BS] A106.2.3.6 Minimum quality of masonry.

1. The minimum average value of tensile-splitting strength, f_{sp}, as calculated by Equation A1-1 shall be 50 pounds per square inch (344.7 kPa).
2. Individual unreinforced masonry walls with average tensile-splitting strength of less than 50 pounds per square inch (344.7 kPa) shall be pointed and retested.
3. The lower-bound mortar strength f_{spL} is defined as the mean minus one standard deviation P_{D+L} of the tensile-splitting test values f_{sp}.

[BS] A106.2.3.7 Collar joints. The collar joints shall be inspected at the test locations during each in-place shear test, and estimates of the percentage of surfaces of the adjacent wythe that are covered with mortar shall be reported along with the results of the in-place shear tests.

[BS] A106.2.3.8 Unreinforced masonry classes. Existing unreinforced masonry shall be categorized into one or more classes based on shear strength, quality of construction, state of *repair*, deterioration and weathering. A class shall be characterized by the masonry shear strength determined in accordance with Section A108.2. Classes are defined for whole walls, not for small areas of masonry within a wall. Discretion in the definition of classes of masonry is permitted to avoid unnecessary testing.

[BS] A106.2.3.9 Pointing. Deteriorated mortar joints in unreinforced masonry walls shall be pointed in accordance with the following requirements:

1. **Joint preparation.** Deteriorated mortar shall be cut out by means of a toothing chisel or nonimpact power tool until sound mortar is reached, to a depth not less than $^3/_4$ inch (19.1 mm) or twice the thickness of the joint, whichever is less, but not greater than 2 inches (50 mm). Care shall be taken not to damage the masonry edges. After cutting is

INTERNATIONAL CODE COUNCIL®
Copyright © 2019 ICC & NYSDOS. ALL RIGHTS RESERVED. Accessed by Lauren Gualdino (lgualdino@briarcliffmanor.org), (-) Order Number #100880972 on May 08, 2020 07:05 AM (PDT) pursuant to License Agreement with ICC & NYSDOS. No further reproduction, no

100880972

complete, all loose material shall be removed with a brush, or air or water stream.

2. **Mortar preparation.** The mortar mix shall be proportioned as required by the construction specifications and manufacturer's approved instructions.
3. **Packing.** The joint into which the mortar is to be packed shall be dampened but without free-standing water. The mortar shall be tightly packed into the joint in layers not exceeding $^1/_4$ inch (6.4 mm) deep until it is filled; then it shall be tooled to a smooth surface to match the original profile.

Nothing shall prevent pointing of any masonry wall joints before testing is performed in accordance with Section A106.2.3, except as required in Section A107.2.

SECTION A107
QUALITY CONTROL

[BS] A107.1 Pointing. Preparation and mortar pointing shall be performed with special inspection.

Exception: At the discretion of the *building official*, incidental pointing may be performed without special inspection.

[BS] A107.2 Masonry shear tests. In-place masonry shear tests shall comply with Section A106.2.3.1. Testing of masonry for determination of tensile-splitting strength shall comply with Section A106.2.3.2.

[BS] A107.3 Existing wall anchors. Existing wall anchors used as all or part of the required tension anchors shall be tested in pullout according to Section A107.5.1. Not fewer than four anchors tested per floor shall be tested in pullout, with not fewer than two tests at walls with joists framing into the wall and two tests at walls with joists parallel to the wall, but not less than 10 percent of the total number of existing tension anchors at each level.

[BS] A107.4 New wall anchors. New wall anchors embedded in URM walls shall be subject to special inspection prior to placement of the anchor and grout or adhesive in the drilled hole. Five percent of all anchors that do not extend through the wall shall be subject to a direct-tension test, and an additional 20 percent shall be tested using a calibrated torque wrench. Testing shall be performed in accordance with Section A107.5.

New wall anchors embedded in URM walls resisting tension forces or a combination of tension and shear forces shall be subject to special inspection, prior to placement of the anchor and grout or adhesive in the drilled hole. Five percent of all anchors resisting tension forces shall be subject to a direct-tension test, and an additional 20 percent shall be tested using a calibrated torque wrench. Testing shall be performed in accordance with Section A107.5.

Exception: New bolts that extend through the wall with steel plates on the far side of the wall need not be tested.

[BS] A107.5 Tests of anchors in unreinforced masonry walls. Tests of anchors in unreinforced masonry walls shall be in accordance with Sections A107.5.1 through A107.5.3. Results of all tests shall be reported to the authority having jurisdiction. The report shall include the test results of maximum load for each test; pass-fail results; corresponding anchor size and type; orientation of loading; details of the anchor installation, testing apparatus and embedment; wall thickness; and joist orientation and proximity to the tested anchor.

[BS] A107.5.1 Direct tension testing of existing anchors and new anchors. The test apparatus shall be supported by the masonry wall. The test procedure for prequalification of tension and shear anchors shall comply with ASTM E488. Existing wall anchors shall be given a preload of 300 pounds (1335 N) before establishing a datum for recording elongation. The tension test load reported shall be recorded at $^1/_8$ inch (3.2 mm) relative movement between the existing anchor and the adjacent masonry surface. New embedded tension anchors shall be subject to a direct tension load of not less than 2.5 times the design load but not less than 1,500 pounds (6672 N) for five minutes.

Exception: Where obstructions occur, the distance between the anchor and the test apparatus support shall be not less than one-half the wall thickness for existing anchors and 75 percent of the embedment length for new embedded anchors.

[BS] A107.5.2 Torque testing of new anchors. Anchors embedded in unreinforced masonry walls shall be tested using a torque-calibrated wrench to the following minimum torques:

$^1/_2$-inch-diameter (12.7 mm) bolts: 40 foot pounds (54.2 N-m).

$^5/_8$-inch-diameter (15.9 mm) bolts: 50 foot pounds (67.8 N-m).

$^3/_4$-inch-diameter (19.1 mm) bolts: 60 foot pounds (81.3 N-m).

[BS] A107.5.3 Prequalification test for bolts and other types of anchors. ASTM E488 or the test procedure in Section A107.5.1 is permitted to be used to determine tension or shear strength values for anchors greater than those permitted by Table A108.1(2). Anchors shall be installed in the same manner and using the same materials as will be used in the actual construction. Not fewer than five tests for each bolt size and type shall be performed for each class of masonry in which they are proposed to be used. The tension and shear strength values for such anchors shall be the lesser of the average ultimate load divided by 5.0 or the average load at which $^1/_8$ inch (3.2 mm) elongation occurs for each size and type of anchor and class of masonry.

SECTION A108
DESIGN STRENGTHS

[BS] A108.1 Strength values.

1. Strength values for existing materials are given in Table A108.1(1) and for new materials in Table A108.1(2).
2. The strength reduction factor, ϕ, shall be taken equal to 1.0.

INTERNATIONAL CODE COUNCIL®
Copyright © 2019 ICC & NYSDOS. ALL RIGHTS RESERVED. Accessed by Lauren Gualdino (lgualdino@briarcliffmanor.org), (-) Order Number #100880972 on May 08, 2020 07:05 AM (PDT) pursuant to License Agreement with ICC & NYSDOS. No further reproduction, no

100880972

3. The use of materials not specified herein shall be based on substantiating research data or engineering judgment, as *approved* by the *building official*.

[BS] A108.2 Masonry shear strength. The unreinforced masonry shear strength, v_{mL}, shall be determined for each masonry class from one of the following equations:

1. When testing is performed in accordance with Section A106.2.3.1, the unreinforced masonry shear strength, v_m, shall be determined by Equation A1-3.

$$v_{mL} = \frac{0.75\left(0.75 v_{tL} \frac{P_D}{A_n}\right)}{1.5} \quad \textbf{(Equation A1-3)}$$

The mortar shear strength values, v_{tL}, shall be determined in accordance with Section A106.2.3.5.

2. When alternate testing is performed in accordance with Section A106.2.3.2, unreinforced masonry shear, v_{mL}, shall be determined by Equation A1-4.

$$v_{mL} = \frac{0.75\left(f_{sp} + \frac{P_D}{A_n}\right)}{1.5} \quad \textbf{(Equation A1-4)}$$

[BS] A108.3 Masonry compression. Where any increase in wall dead plus live load compression stress occurs, the maximum compression stress in unreinforced masonry, Q_G/A_n, shall not exceed 300 pounds per square inch (2070 kPa).

[BS] A108.4 Masonry tension. Unreinforced masonry shall be assumed to have no tensile capacity.

[BS] A108.5 Wall tension anchors. The tension strength of wall anchors shall be the average of the tension test values for anchors having the same wall thickness and framing orientation.

[BS] A108.6 Foundations. For existing foundations, new total dead loads are permitted to be increased over the existing dead load by 25 percent. New total dead load plus live load plus seismic forces may be increased over the existing dead load plus live load by 50 percent. Higher values may be justified only in conjunction with a geotechnical investigation.

SECTION A109
ANALYSIS AND DESIGN PROCEDURE

[BS] A109.1 General. The elements of buildings hereby required to be analyzed are specified in Table A102.1.

[BS] A109.2 Selection of procedure. Buildings with rigid diaphragms shall be analyzed by the general procedure of Section A110. Buildings with flexible diaphragms shall be analyzed by the general procedure or, where applicable, are permitted to be analyzed by the special procedure of Section A111.

SECTION A110
GENERAL PROCEDURE

[BS] A110.1 Minimum design lateral forces. Buildings shall be analyzed to resist minimum lateral forces assumed to act nonconcurrently in the direction of each of the main axes of the structure in accordance with the following:

$$V = \frac{0.75 S_{DS} W}{R} \quad \textbf{(Equation A1-5)}$$

[BS] A110.2 Seismic forces on elements of structures. Parts and portions of a structure not covered in Section A110.3 shall be analyzed and designed per the current building code, using force levels defined in Section A110.1.

Exceptions:

1. Unreinforced masonry walls for which height-to-thickness ratios do not exceed ratios set forth in Table A110.2 need not be analyzed for out-of-plane loading. Unreinforced masonry walls that exceed the allowable *h/t* ratios of Table A110.2 shall be braced according to Section A113.5.
2. Parapets complying with Section A113.6 need not be analyzed for out-of-plane loading.
3. Where walls are to be anchored to flexible floor and roof diaphragms, the anchorage shall be in accordance with Section A113.1.

[BS] A110.3 In-plane loading of URM shear walls and frames. Vertical seismic force-resisting elements shall be analyzed in accordance with Section A112.

[BS] A110.4 Redundancy and overstrength factors. Any redundancy or overstrength factors contained in the building code may be taken as unity. The vertical component of seismic force (E_v) may be taken as zero.

SECTION A111
SPECIAL PROCEDURE

[BS] A111.1 Limits for the application of this procedure. The special procedures of this section shall be applied only to buildings having the following characteristics:

1. Flexible diaphragms at all levels above the base of the structure.
2. Vertical elements of the seismic force-resisting system consisting predominantly of masonry or a combination of masonry and concrete shear walls.
3. Except for single-story buildings with an open front on one side only, not fewer than two lines of vertical elements of the seismic force-resisting system parallel to each axis of the building (see Section A111.8 for open-front buildings).

[BS] A111.2 Seismic forces on elements of structures. With the exception of the provisions in Sections A111.4 through A111.7, elements of structures shall comply with Sections A110.2 through A110.4.

[BS] A111.3 Crosswalls. Crosswalls shall meet the requirements of this section.

[BS] A111.3.1 Crosswall definition. A crosswall is a wood-framed wall sheathed with any of the materials described in Table A108.1(1) or A108.1(2) or other system as defined in Section A111.3.5. Crosswalls shall be spaced not more than 40 feet (12 192 mm) on center measured perpendicular to the direction of consideration, and

INTERNATIONAL CODE COUNCIL®
Copyright © 2019 ICC & NYSDOS. ALL RIGHTS RESERVED. Accessed by Lauren Gualdino (lgualdino@briarcliffmanor.org), (-) Order Number #100880972 on May 08, 2020 07:05 AM (PDT) pursuant to License Agreement with ICC & NYSDOS. No further reproduction, no

100880972

shall be placed in each story of the building. Crosswalls shall extend the full story height between diaphragms.

Exceptions:

1. Crosswalls need not be provided at all levels where used in accordance with Section A111.4.2, Item 4.
2. Existing crosswalls need not be continuous below a wood diaphragm at or within 4 feet (1219 mm) of grade, provided that:
   2.1. Shear connections and anchorage requirements of Section A111.5 are satisfied at all edges of the diaphragm.
   2.2. Crosswalls with total shear capacity of $0.5S_{D1}\Sigma W_d$ interconnect the diaphragm to the foundation.
   2.3. The demand-capacity ratio of the diaphragm between the crosswalls that are continuous to their foundations does not exceed 2.5, calculated as follows:

$$DCR = \frac{(2.1S_{D1}W_d + V_{ca})}{2v_uD}$$

(Equation A1-6)

[BS] A111.3.2 Crosswall shear capacity. Within any 40 feet (12 192 mm) measured along the span of the diaphragm, the sum of the crosswall shear capacities shall be not less than 30 percent of the diaphragm shear capacity of the strongest diaphragm at or above the level under consideration.

[BS] A111.3.3 Existing crosswalls. Existing crosswalls shall have a maximum height-to-length ratio between openings of 1.5 to 1. Existing crosswall connections to diaphragms need not be investigated as long as the crosswall extends to the framing of the diaphragms above and below.

[BS] A111.3.4 New crosswalls. New crosswall connections to the diaphragm shall develop the crosswall shear capacity. New crosswalls shall have the capacity to resist an overturning moment equal to the crosswall shear capacity times the story height. Crosswall overturning moments need not be cumulative over more than two stories.

[BS] A111.3.5 Other crosswall systems. Other systems, such as moment-resisting frames, may be used as crosswalls provided that the yield story drift does not exceed 1 inch (25 mm) in any story.

[BS] A111.4 Wood diaphragms.

[BS] A111.4.1 Acceptable diaphragm span. A diaphragm is acceptable if the point (*L*,*DCR*) on Figure A111.4.1 falls within Region 1, 2 or 3.

[BS] A111.4.2 Demand-capacity ratios. Demand-capacity ratios shall be calculated for the diaphragm at any level according to the following formulas:

1. For a diaphragm without qualifying crosswalls at levels immediately above or below:

$$DCR = 2.1S_{D1}W_d/\Sigma v_uD \qquad \textbf{(Equation A1-7)}$$

2. For a diaphragm in a single-story building with qualifying crosswalls, or for a roof diaphragm coupled by crosswalls to the diaphragm directly below:

$$DCR = 2.1S_{D1}W_d/\Sigma v_uD + V_{cb} \qquad \textbf{(Equation A1-8)}$$

3. For diaphragms in a multiple-story building with qualifying crosswalls in all levels:

$$DCR = 2.1S_{D1}\Sigma W_d/(\Sigma\Sigma v_uD + V_{cb})$$

(Equation A1-9)

DCR shall be calculated at each level for the set of diaphragms at and above the level under consideration. In addition, the roof diaphragm shall meet the requirements of Equation A1-10.

4. For a roof diaphragm and the diaphragm directly below, if coupled by crosswalls:

$$DCR = 2.1S_{D1}\Sigma W_d/\Sigma\Sigma v_uD \qquad \textbf{(Equation A1-10)}$$

[BS] A111.4.3 Chords. An analysis for diaphragm flexure need not be made, and chords need not be provided.

[BS] A111.4.4 Collectors. An analysis of diaphragm collector forces shall be made for the transfer of diaphragm edge shears into vertical elements of the lateral force-resisting system. Collector forces may be resisted by new or existing elements.

[BS] A111.4.5 Diaphragm openings.

1. Diaphragm forces at corners of openings shall be investigated and shall be developed into the diaphragm by new or existing materials.
2. In addition to the demand-capacity ratios of Section A111.4.2, the demand-capacity ratio of the portion of the diaphragm adjacent to an opening shall be calculated using the opening dimension as the span.
3. Where an opening occurs in the end quarter of the diaphragm span, the calculation of v_uD for the demand-capacity ratio shall be based on the net depth of the diaphragm.

[BS] A111.5 Diaphragm shear transfer. Diaphragms shall be connected to shear walls and new vertical seismic force-resisting elements with connections capable of developing the diaphragm-loading tributary to the shear wall or new seismic force-resisting elements given by the lesser of the following formulas:

$$V = 1.2S_{D1}C_pW_d \qquad \textbf{(Equation A1-11)}$$

using the C_p values in Table A111.5, or

$$V = v_uD \qquad \textbf{(Equation A1-12)}$$

[BS] A111.6 Shear walls (In-plane loading).

[BS] A111.6.1 Wall story force. The wall story force distributed to a shear wall at any diaphragm level shall be the lesser value calculated as:

$$F_{wx} = 0.8S_{D1}(W_{wx} + W_d/2) \qquad \textbf{(Equation A1-13)}$$

but need not exceed

$$F_{wx} = 0.8S_{D1}W_{wx} + v_uD \qquad \textbf{(Equation A1-14)}$$

INTERNATIONAL CODE COUNCIL®
Copyright © 2019 ICC & NYSDOS. ALL RIGHTS RESERVED. Accessed by Lauren Gualdino (lgualdino@briarcliffmanor.org), (-) Order Number #100880972 on May 08, 2020 07:05 AM (PDT) pursuant to License Agreement with ICC & NYSDOS. No further reproduction, no

100880972

[BS] A111.6.2 Wall story shear. The wall story shear shall be the sum of the wall story forces at and above the level of consideration.

$$V_{wx} = \Sigma F_{wx} \quad \textbf{(Equation A1-15)}$$

[BS] A111.6.3 Shear wall analysis. Shear walls shall comply with Section A112.

[BS] A111.6.4 New seismic force-resisting elements. New seismic force-resisting elements such as moment frames, braced frames or shear walls shall be designed as required by the building code, except that the seismic forces shall be as specified in Section A111.6.1, and the story drift ratio shall be limited to 0.015, except as further limited by Section A112.4.2 for moment frames.

[BS] A111.7 Out-of-plane forces—unreinforced masonry walls.

[BS] A111.7.1 Allowable unreinforced masonry wall height-to-thickness ratios. The provisions of Section A110.2 are applicable, except the allowable height-to-thickness ratios given in Table A110.2 shall be determined from Figure A111.4.1 as follows:

1. In Region 1, height-to-thickness ratios for buildings with crosswalls may be used if qualifying crosswalls are present in all stories.
2. In Region 2, height-to-thickness ratios for buildings with crosswalls may be used whether or not qualifying crosswalls are present.
3. In Region 3, height-to-thickness ratios for "all other buildings" shall be used whether or not qualifying crosswalls are present.

[BS] A111.7.2 Walls with diaphragms in different regions. Where diaphragms above and below the wall under consideration have demand-capacity ratios in different regions of Figure A11.4.1, the lesser height-to-thickness ratio shall be used.

[BS] A111.8 Open-front design procedure. A single-story building with an open front on one side and crosswalls parallel to the open front may be designed by the following procedure:

1. Effective diaphragm span, L_i, for use in Figure A111.4.1 shall be determined in accordance with the following formula:

   $$L_i = 2[(W_w/W_d)L + L] \quad \textbf{(Equation A1-16)}$$

2. Diaphragm demand-capacity ratio shall be calculated as:

   $$DCR = 2.1S_{D1}(W_d + W_w)/[(v_u D) + V_{cb}] \quad \textbf{(Equation A1-17)}$$

SECTION A112
ANALYSIS AND DESIGN

[BS] A112.1 General. The following requirements are applicable to both the general procedure and the special procedure for analyzing vertical elements of the lateral force-resisting system.

[BS] A112.2 In-plane shear of unreinforced masonry walls.

[BS] A112.2.1 Flexural rigidity. Flexural components of deflection need not be considered in determining the rigidity of an unreinforced masonry wall.

[BS] A112.2.2 Shear walls with openings. Wall piers shall be analyzed according to the following procedure, which is diagrammed in Figure A112.2.2.

1. For any pier,
   1.1. The pier shear capacity shall be calculated as:

   $$v_a = v_m A_n \quad \textbf{(Equation A1-18)}$$

   where:

   A_n = area of net mortared or grouted section of a wall or wall pier.

   1.2. The pier rocking shear capacity shall be calculated as:

   $$V_r = 0.9P_D D/H \quad \textbf{(Equation A1-19)}$$

2. The wall piers at any level are acceptable if they comply with one of the following modes of behavior:
   2.1. Rocking controlled mode. Where the pier rocking shear capacity is less than the pier shear capacity, in other words, $V_r < v_a$, for each pier in a level, forces in the wall at that level, V_{wx}, shall be distributed to each pier in proportion to $P_D D/H$.

   For the wall at that level:

   $$0.7V_{wx} < \Sigma V_r \quad \textbf{(Equation A1-20)}$$

   2.2. Shear controlled mode. Where the pier shear capacity is less than the pier rocking capacity, in other words, $v_a < V_r$ in one or more pier(s) in a level, forces in the wall at the level, V_{wx}, shall be distributed to each pier in proportion to D/H.

   For each pier at that level:

   $$V_p < v_a \quad \textbf{(Equation A1-21)}$$

   and

   $$V_p < V_r \quad \textbf{(Equation A1-22)}$$

   If $V_p < v_a$ for each pier and $V_p > V_r$ for one or more piers, such piers shall be omitted from the analysis, and the procedure shall be repeated for the remaining piers, unless the wall is strengthened and reanalyzed.

3. Masonry pier tension stress. Unreinforced masonry wall piers need not be analyzed for tension stress.

[BS] A112.2.3 Shear walls without openings. Shear walls without openings shall be analyzed the same as for walls with openings, except that V_r shall be calculated as follows:

$$V_r = 0.9(P_D + 0.5P_w)D/H \quad \textbf{(Equation A1-23)}$$

[BS] A112.3 Plywood-sheathed shear walls. Plywood-sheathed shear walls may be used to resist lateral forces for URM buildings with flexible diaphragms analyzed according to provisions of Section A111. Plywood-sheathed shear walls

INTERNATIONAL CODE COUNCIL®
Copyright © 2019 ICC & NYSDOS. ALL RIGHTS RESERVED. Accessed by Lauren Gualdino (lgualdino@briarcliffmanor.org), (-) Order Number #100880972 on May 08, 2020 07:05 AM (PDT) pursuant to License Agreement with ICC & NYSDOS. No further reproduction, no

100880972

shall not be used to share lateral forces with other materials along the same line of resistance.

[BS] A112.4 Combinations of vertical elements.

[BS] A112.4.1 Seismic force distribution. Seismic forces shall be distributed among the vertical-resisting elements in proportion to their relative rigidities, except that moment-resisting frames shall comply with Section A112.4.2.

[BS] A112.4.2 Moment-resisting frames. Moment-resisting frames shall not be used with an unreinforced masonry wall in a single line of resistance unless the wall has piers that have adequate shear capacity to sustain rocking in accordance with Section A112.2.2. The frames shall be designed in accordance with the building code to resist 100 percent of the seismic forces tributary to that line of resistance, as determined from Section A111.2. The story drift ratio shall be limited to 0.0075.

SECTION A113
DETAILED BUILDING SYSTEM DESIGN REQUIREMENTS

[BS] A113.1 Wall anchorage.

[BS] A113.1.1 Anchor locations. Unreinforced masonry walls shall be anchored at the roof and floor levels as required in Section A110.2. Ceilings of plaster or similar materials, where not attached directly to roof or floor framing and where abutting masonry walls, shall either be anchored to the walls at a maximum spacing of 6 feet (1829 mm), or be removed.

[BS] A113.1.2 Anchor requirements. Anchors shall consist of bolts installed through the wall as specified in Table A108.1(2), or an *approved* equivalent at a maximum anchor spacing of 6 feet (1829 mm). Wall anchors shall be secured to the framing members parallel or perpendicular to the wall to develop the required forces.

[BS] A113.1.3 Minimum wall anchorage. Anchorage of masonry walls to each floor or roof shall resist a minimum force determined as $0.9S_{DS}$ times the tributary weight or 200 pounds per linear foot (2920 N/m), whichever is greater, acting normal to the wall at the level of the floor or roof. Existing wall anchors, if used, must be tested and meet the requirements of Section A107.5.1 or be upgraded.

[BS] A113.1.4 Anchors at corners. At the roof and floor levels, both shear and tension anchors shall be provided within 2 feet (610 mm) horizontally from the inside of the corners of the walls.

[BS] A113.2 Diaphragm shear transfer. Anchors transmitting shear forces shall have a maximum spacing of 6 feet (1829 mm) and shall have nuts installed over malleable iron or plate washers where bearing on wood, and heavy-cut washers where bearing on steel.

[BS] A113.3 Collectors. Collector elements shall be provided that are capable of transferring the seismic forces originating in other portions of the building to the element providing the resistance to those forces.

[BS] A113.4 Ties and continuity. Ties and continuity shall conform to the requirements of the building code.

[BS] A113.5 Wall bracing.

[BS] A113.5.1 General. Where a wall height-to-thickness ratio exceeds the specified limits, the wall may be laterally supported by vertical bracing members per Section A113.5.2 or by reducing the wall height by bracing per Section A113.5.3.

[BS] A113.5.2 Vertical bracing members. Vertical bracing members shall be attached to floor and roof construction for their design loads independently of required wall anchors. Horizontal spacing of vertical bracing members shall not exceed one-half of the unsupported height of the wall or 10 feet (3048 mm). Deflection of such bracing members at design loads shall not exceed one-tenth of the wall thickness.

[BS] A113.5.3 Intermediate wall bracing. The wall height may be reduced by bracing elements connected to the floor or roof. Horizontal spacing of the bracing elements and wall anchors shall be as required by design, but shall not exceed 6 feet (1829 mm) on center. Bracing elements shall be detailed to minimize the horizontal displacement of the wall by the vertical displacement of the floor or roof.

[BS] A113.6 Parapets. Parapets and exterior wall appendages not conforming to this chapter shall be removed, or stabilized or braced to ensure that the parapets and appendages remain in their original positions.

The maximum height of an unbraced unreinforced masonry parapet above the lower of either the level of tension anchors or the roof sheathing shall not exceed the height-to-thickness ratio shown in Table A113.6. If the required parapet height exceeds this maximum height, a bracing system designed for the forces determined in accordance with the building code shall support the top of the parapet. Parapet corrective work must be performed in conjunction with the installation of tension roof anchors.

The height of a URM parapet above any wall anchor shall be not less than 12 inches (305 mm).

Exception: If a reinforced concrete beam is provided at the top of the wall, the height above the wall anchor is permitted to be not less than 6 inches (152 mm).

[BS] A113.7 Veneer.

1. Veneer shall be anchored with *approved* anchor ties conforming to the required design capacity specified in the building code and shall be placed at a maximum spacing of 24 inches (610 mm) with a maximum supported area of 4 square feet (0.372 m^2).

   Exception: Existing anchor ties for attaching brick veneer to brick backing shall be acceptable, provided that the ties are in good condition and conform to the following minimum size and material requirements.

   Existing veneer anchor ties shall be considered adequate if they are of corrugated galvanized iron strips not less than 1 inch (25 mm) in width, 8 inches

INTERNATIONAL CODE COUNCIL®
Copyright © 2019 ICC & NYSDOS. ALL RIGHTS RESERVED. Accessed by Lauren Gualdino (lgualdino@briarcliffmanor.org), (-) Order Number #100880972 on May 08, 2020 07:05 AM (PDT) pursuant to License Agreement with ICC & NYSDOS. No further reproduction, no

100880972

(203 mm) in length and $^1/_{16}$ inch (1.6 mm) in thickness, or the equivalent.

2. The location and condition of existing veneer anchor ties shall be verified as follows:

   2.1. An *approved* testing laboratory shall verify the location and spacing of the ties and shall submit a report to the *building official* for approval as part of the structural analysis.

   2.2. The veneer in a selected area shall be removed to expose a representative sample of ties (not less than four) for inspection by the *building official*.

[BS] A113.8 Nonstructural masonry walls. Unreinforced masonry walls that do not carry design vertical or lateral loads and that are not required by the design to be part of the lateral force-resisting system shall be adequately anchored to new or existing supporting elements. The anchors and elements shall be designed for the out-of-plane forces specified in the building code. The height- or length-to-thickness ratio between such supporting elements for such walls shall not exceed nine.

[BS] A113.9 Truss and beam supports. Where trusses and beams other than rafters or joists are supported on masonry, independent secondary columns shall be installed to support vertical loads of the roof or floor members.

Exception: Secondary supports are not required where S_{D1} is less than 0.3 g.

[BS] A113.10 Adjacent buildings. Where elements of adjacent buildings do not have a separation of 5 inches (127 mm) or greater, the allowable height-to-thickness ratios for "all other buildings" per Table A110.2 shall be used in the direction of consideration.

SECTION A114
WALLS OF UNBURNED CLAY, ADOBE OR STONE MASONRY

[BS] A114.1 General. Walls of unburned clay, adobe or stone masonry construction shall conform to the following:

1. Walls of unburned clay, adobe or stone masonry shall not exceed a height- or length-to-thickness ratio specified in Table A114.1.
2. Adobe shall be allowed a maximum value of 9 pounds per square inch (62.1 kPa) for shear unless higher values are justified by test.
3. Mortar for repointing may be of the same soil composition and stabilization as the brick, in lieu of cement mortar.

[BS] TABLE A102.1
ELEMENTS REGULATED BY THIS CHAPTER

BUILDING ELEMENTS	S_{D1}			
	$\geq 0.067_g < 0.133_g$	$\geq 0.133_g < 0.20_g$	$\geq 0.20_g < 0.30_g$	$> 0.30_g$
Parapets	X	X	X	X
Walls, anchorage	X	X	X	X
Walls, *h/t* ratios		X	X	X
Walls, in-plane shear		X	X	X
Diaphragms[a]			X	X
Diaphragms, shear transfer[b]		X	X	X
Diaphragms, demand-capacity ratios[b]			X	X

a. Applies only to buildings designed according to the general procedures of Section A110.
b. Applies only to buildings designed according to the special procedures of Section A111.

INTERNATIONAL CODE COUNCIL®
Copyright © 2019 ICC & NYSDOS. ALL RIGHTS RESERVED. Accessed by Lauren Gualdino (lgualdino@briarcliffmanor.org), (-) Order Number #100880972 on May 08, 2020 07:05 AM (PDT) pursuant to License Agreement with ICC & NYSDOS. No further reproduction, no

100880972

[BS] TABLE A108.1(1)
STRENGTH VALUES FOR EXISTING MATERIALS

EXISTING MATERIALS OR CONFIGURATION OF MATERIALS[a]		STRENGTH VALUES x 14.594 for N/m
Horizontal diaphragms	Roofs with straight sheathing and roofing applied directly to the sheathing.	300 lbs. per ft. for seismic shear
	Roofs with diagonal sheathing and roofing applied directly to the sheathing.	750 lbs. per ft. for seismic shear
	Floors with straight tongue-and-groove sheathing.	300 lbs. per ft. for seismic shear
	Floors with straight sheathing and finished wood flooring with board edges offset or perpendicular.	1,500 lbs. per ft. for seismic shear
	Floors with diagonal sheathing and finished wood flooring.	1,800 lbs. per ft. for seismic shear
	Metal deck welded with minimal welding.[c]	1,800 lbs, per ft. for seismic shear
	Metal deck welded for seismic resistance.[d]	3,000 lbs. per ft. for seismic shear
Crosswalls[b]	Plaster on wood or metal lath.	600 lbs. per ft. for seismic shear
	Plaster on gypsum lath.	550 lbs. per ft. for seismic shear
	Gypsum wallboard, unblocked edges.	200 lbs. per ft. for seismic shear
	Gypsum wallboard, blocked edges.	400 lbs. per ft. for seismic shear
Existing footing, wood framing, structural steel, reinforcing steel	Plain concrete footings.	f'_c = 1,500 psi unless otherwise shown by tests
	Douglas fir wood.	Same as D.F. No. 1
	Reinforcing steel.	F_y = 40,000 psi maximum
	Structural steel.	F_y = 33,000 psi maximum

For SI: 1 inch = 25.4 mm, 1 square inch = 645.16 mm^2, 1 pound = 4.4 N, 1 pound per square inch = 6894.75 N/m^2, 1 pound per foot = 14.43 N/m.

a. Material must be sound and in good condition.

b. Shear values of these materials may be combined, except the total combined value should not exceed 900 pounds per foot.

c. Minimum 22-gage steel deck with welds to supports satisfying the standards of the Steel Deck Institute.

d. Minimum 22-gage steel deck with $^3/_4$-inch diameter plug welds at an average spacing not exceeding 8 inches and with sidelap welds appropriate for the deck span.

INTERNATIONAL CODE COUNCIL®
Copyright © 2019 ICC & NYSDOS. ALL RIGHTS RESERVED. Accessed by Lauren Gualdino (lgualdino@briarcliffmanor.org), (-) Order Number #100880972 on May 08, 2020 07:05 AM (PDT) pursuant to License Agreement with ICC & NYSDOS. No further reproduction, no

100880972

[BS] TABLE A108.1(2)
STRENGTH VALUES OF NEW MATERIALS USED IN CONJUNCTION WITH EXISTING CONSTRUCTION

NEW MATERIALS OR CONFIGURATION OF MATERIALS		STRENGTH VALUES
Horizontal diaphragms	Plywood sheathing applied directly over existing straight sheathing with ends of plywood sheets bearing on joists or rafters and edges of plywood located on center of individual sheathing boards.	675 lbs. per ft.
Crosswalls	Plywood sheathing applied directly over wood studs; no value should be given to plywood applied over existing plaster or wood sheathing.	1.2 times the value specified in the current building code.
	Drywall or plaster applied directly over wood studs.	The value specified in the current building code.
	Drywall or plaster applied to sheathing over existing wood studs.	50 percent of the value specified in the current building code.
Tension anchors[f]	Anchors extending entirely through unreinforced masonry wall secured with bearing plates on far side of a wall 30 square inches of area.[b, c]	5,400 lbs. per anchor for three-wythe minimum walls. 2,700 lbs. for two-wythe walls.
Shear bolts[e, f]	Anchors embedded not less than 8 inches into unreinforced masonry walls; anchors should be centered in $2^1/_2$-inch-diameter holes with dry-pack or nonshrink grout around the circumference of the anchor.	The value for plain masonry specified for solid masonry TMS 402; and no value larger than those given for $^3/_4$-inch bolts should be used.
Combined tension and shear anchors[f]	Through-anchors—anchors meeting the requirements for shear and for tension anchors.[b, c]	Tension—same as for tension anchors. Shear—same as for shear anchors.
	Embedded anchors—anchors extending to the exterior face of the wall with a $2^1/_2$-inch round plate under the head and drilled at an angle of $22^1/_2$ degrees to the horizontal; installed as specified for shear anchors.[a, b, c]	Tension—3,600 lbs. per anchor. Shear—same as for shear anchors.
Infilled walls	Reinforced masonry infilled openings in existing unreinforced masonry walls; provide keys or dowels to match reinforcing.	Same as values specified for unreinforced masonry walls.
Reinforced masonry[d]	Masonry piers and walls reinforced per the current building code.	The value specified in the current building code for strength design.
Reinforced concrete[d]	Concrete footings, walls and piers reinforced as specified in the current building code.	The value specified in the current building code for strength design.

For SI: 1 inch = 25.4 mm, 1 square inch = 645.16 mm^2, 1 pound = 4.4 N, 1 degree = 0.017 rad, 1 pound per foot = 14.43 N/m, 1 foot = 304.8 mm.

a. Embedded anchors to be tested as specified in Section A107.4.

b. Anchors shall be $^1/_2$ inch minimum in diameter.

c. Drilling for anchors shall be done with an electric rotary drill; impact tools should not be used for drilling holes or tightening anchors and shear bolt nuts.

d. Load factors or capacity reduction factors shall not be used.

e. Other bolt sizes, values and installation methods may be used, provided that a testing program is conducted in accordance with Section A107.5.3. The strength value shall be determined by multiplying the calculated allowable value, determined in accordance with Section A107.5.3, by 3.0, and the usable value shall be limited to not greater than 1.5 times the value given in the table. Bolt spacing shall not exceed 6 feet on center and shall be not less than 12 inches on center.

f. An alternative adhesive anchor bolt system is permitted to be used providing: its properties and installation conform to an ICC Evaluation Service Report; and the report states that the system's use is in unreinforced masonry as an acceptable alternative to Sections A107.4 and A113.1 or TMS 402, Section 2.1.4. The report's allowable values shall be multiplied by a factor of three to obtain strength values and the strength reduction factor, ϕ, shall be taken equal to 1.0.

INTERNATIONAL CODE COUNCIL®
Copyright © 2019 ICC & NYSDOS. ALL RIGHTS RESERVED. Accessed by Lauren Gualdino (lgualdino@briarcliffmanor.org), (-) Order Number #100880972 on May 08, 2020 07:05 AM (PDT) pursuant to License Agreement with ICC & NYSDOS. No further reproduction, no

100880972

[BS] TABLE A110.2
ALLOWABLE VALUE OF HEIGHT-TO-THICKNESS RATIO OF UNREINFORCED MASONRY WALLS

WALL TYPES	$0.13_g \le S_{D1} < 0.25_g$	$0.25_g \le S_{D1} < 0.4_g$	$S_{D1} \ge 0.4_g$ BUILDINGS WITH CROSSWALLS[a]	$S_{D1} \ge 0.4_g$ ALL OTHER BUILDINGS
Walls of one-story buildings	20	16	16[b,c]	13
First-story wall of multiple-story building	20	18	16	15
Walls in top story of multiple-story building	14	14	14[b,c]	9
All other walls	20	16	16	13

For SI: 1 pound per square inch = 6894.75 N/m^2

a. Applies to the special procedures of Section A111 only. See Section A111.7 for other restrictions.

b. This value of height-to-thickness ratio shall be used where mortar shear tests establish a tested mortar shear strength, v_t, of not less than 100 pounds per square inch. This value shall also be used where the tested mortar shear strength is not less than 60 pounds per square inch, and where a visual examination of the collar joint indicates not less than 50-percent mortar coverage.

c. Where a visual examination of the collar joint indicates not less than 50-percent mortar coverage, and the tested mortar shear strength, v_t, is greater than 30 pounds per square inch but less than 60 pounds per square inch, the allowable height-to-thickness ratio may be determined by linear interpolation between the larger and smaller ratios in direct proportion to the tested mortar shear strength.

[BS] TABLE A111.5
HORIZONTAL FORCE FACTOR, C_p

CONFIGURATION OF MATERIALS	C_p
Roofs with straight or diagonal sheathing and roofing applied directly to the sheathing, or floors with straight tongue-and-groove sheathing.	0.50
Diaphragms with double or multiple layers of boards with edges offset, and blocked plywood systems.	0.75
Diaphragms of metal deck without topping:	
Minimal welding or mechanical attachment.	0.6
Welded or mechanically attached for seismic resistance.	0.68

[BS] TABLE A113.6
MAXIMUM ALLOWABLE HEIGHT-TO-THICKNESS RATIO FOR PARAPETS

	S_{D1}		
	$0.13_g \le S_{D1} < 0.25g$	$0.25_g \le S_{D1} < 0.4g$	$S_{D1} \ge 0.4_g$
Maximum allowable height-to-thickness ratios	2.5	2.5	1.5

[BS] TABLE A114.1
MAXIMUM HEIGHT-TO-THICKNESS RATIO FOR ADOBE OR STONE WALLS

	S_{D1}		
	$0.13_g \le S_{D1} < 0.25_g$	$0.25_g \le S_{D1} < 0.4_g$	$S_{D1} \ge 0.4_g$
One-story buildings	12	10	8
Two-story buildings			
First story	14	11	9
Second story	12	10	8

INTERNATIONAL CODE COUNCIL®
Copyright © 2019 ICC & NYSDOS. ALL RIGHTS RESERVED. Accessed by Lauren Gualdino (lgualdino@briarcliffmanor.org), (-) Order Number #100880972 on May 08, 2020 07:05 AM (PDT) pursuant to License Agreement with ICC & NYSDOS. No further reproduction, no

100880972

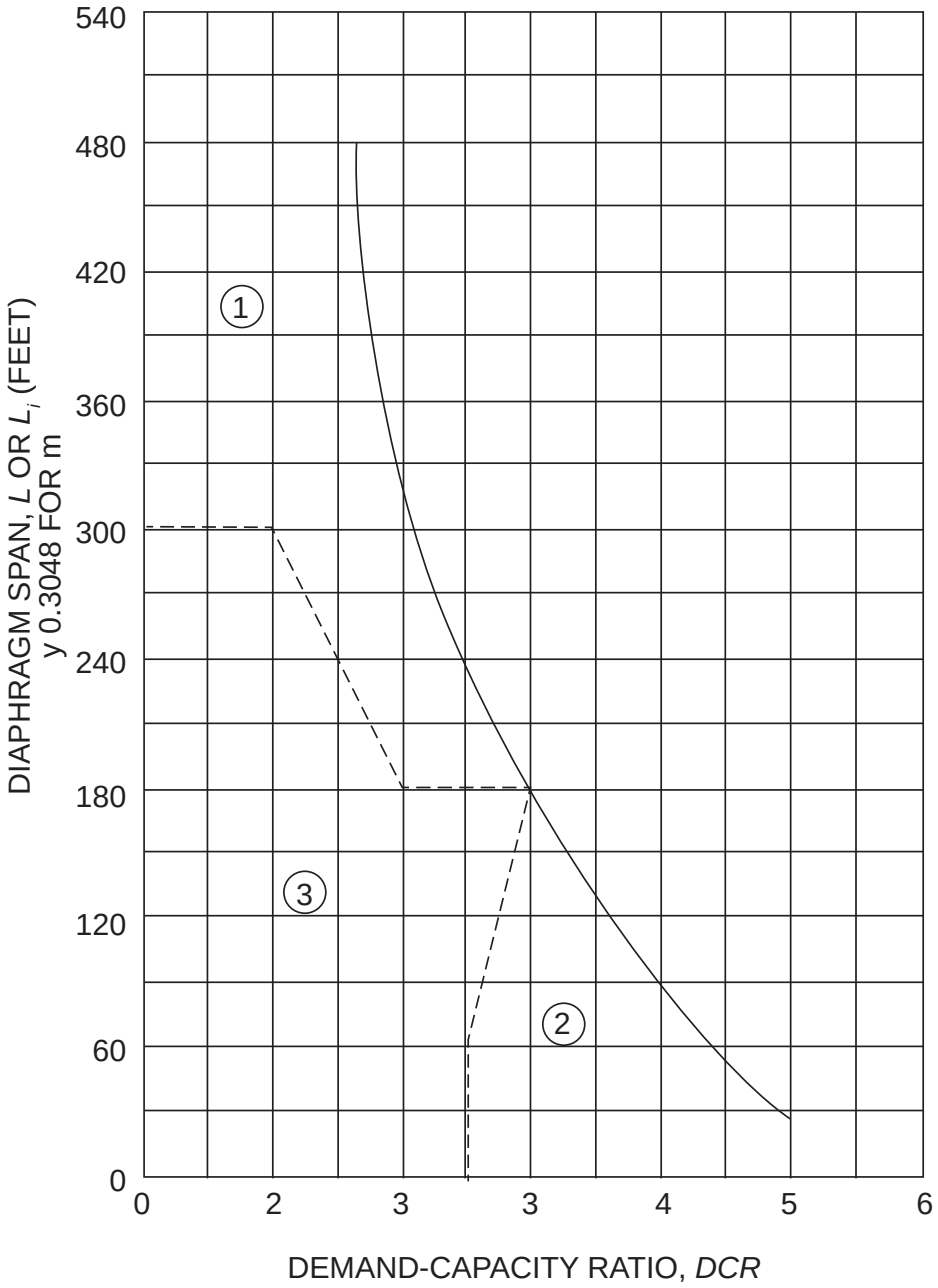

1. Region of demand-capacity ratios where crosswalls may be used to increase *h/t* ratios.
2. Region of demand-capacity ratios where *h/t* ratios of "buildings with crosswalls" may be used, whether or not crosswalls are present.
3. Region of demand-capacity ratios where *h/t* ratios of "all other buildings" shall be used, whether or not crosswalls are present.

For SI: 1 foot = 304.8 mm.

[BS] FIGURE A111.4.1
ACCEPTABLE DIAPHRAGM SPAN

INTERNATIONAL CODE COUNCIL®
Copyright © 2019 ICC & NYSDOS. ALL RIGHTS RESERVED. Accessed by Lauren Gualdino (lgualdino@briarcliffmanor.org), (-) Order Number #100880972 on May 08, 2020 07:05 AM (PDT) pursuant to License Agreement with ICC & NYSDOS. No further reproduction, no

100880972

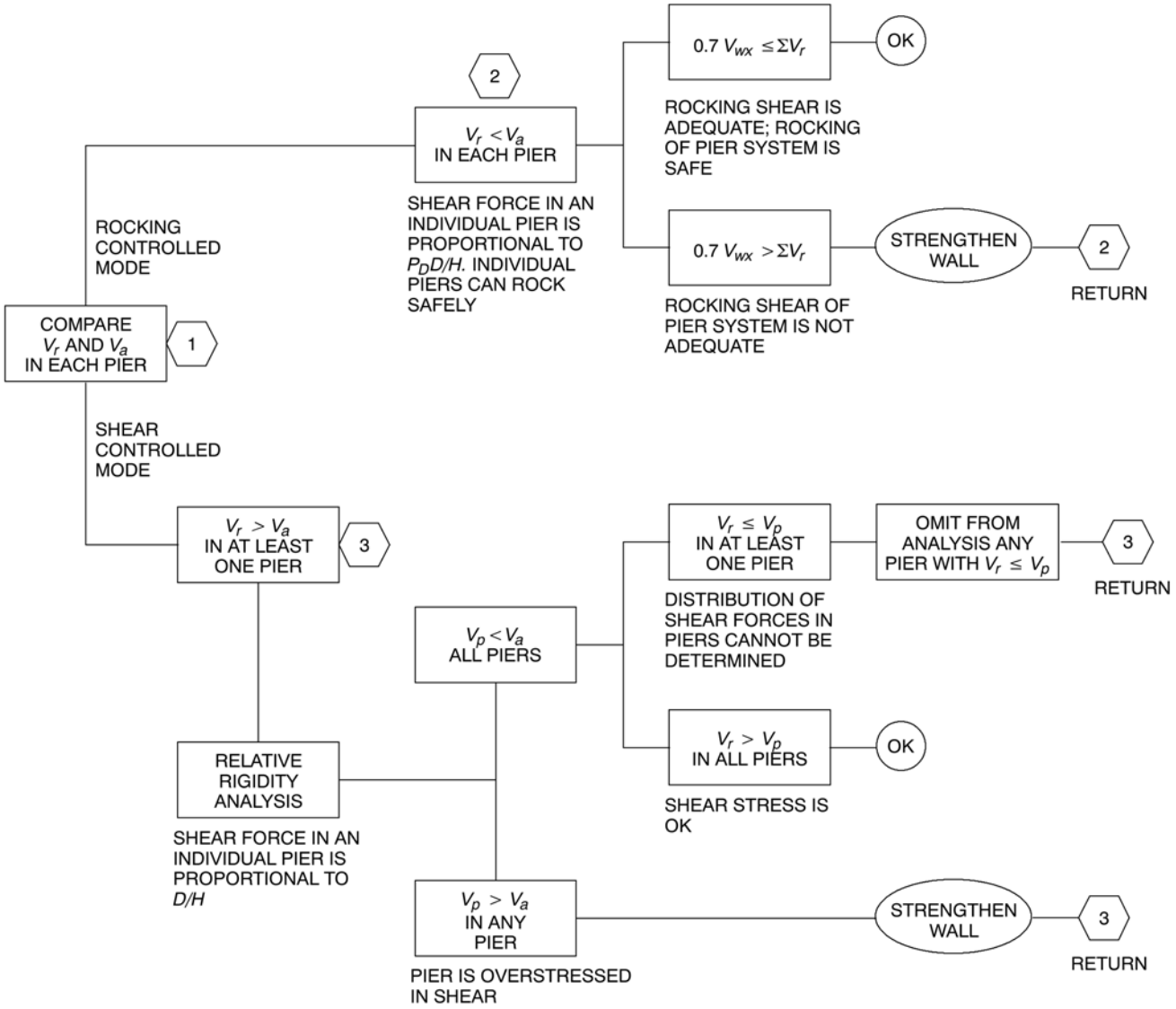

V_a = Allowable shear strength of a pier.
V_p = Shear force assigned to a pier on the basis of a relative shear rigidity analysis.
V_r = Rocking shear capacity of pier.
V_{wx} = Total shear force resisted by the wall.
ΣV_r = Rocking shear capacity of all piers in the wall.

[BS] FIGURE A112.2.2
ANALYSIS OF URM WALL IN-PLANE SHEAR FORCES

INTERNATIONAL CODE COUNCIL®
Copyright © 2019 ICC & NYSDOS. ALL RIGHTS RESERVED. Accessed by Lauren Gualdino (lgualdino@briarcliffmanor.org), (-) Order Number #100880972 on May 08, 2020 07:05 AM (PDT) pursuant to License Agreement with ICC & NYSDOS. No further reproduction, no

100880972

INTERNATIONAL CODE COUNCIL®

Copyright © 2019 ICC & NYSDOS. ALL RIGHTS RESERVED. Accessed by Lauren Gualdino (lgualdino@briarcliffmanor.org), (-) Order Number #100880972 on May 08, 2020 07:05 AM (PDT) pursuant to License Agreement with ICC & NYSDOS. No further reproduction, no

100880972

CHAPTER A2

EARTHQUAKE HAZARD REDUCTION IN EXISTING REINFORCED CONCRETE AND REINFORCED MASONRY WALL BUILDINGS WITH FLEXIBLE DIAPHRAGMS

SECTION A201 PURPOSE

[BS] A201.1 Purpose. The purpose of this chapter is to promote public safety and welfare by reducing the risk of death or injury as a result of the effects of earthquakes on reinforced concrete and reinforced masonry wall buildings with flexible diaphragms. Based on past earthquakes, these buildings have been categorized as being potentially hazardous and prone to significant damage, including possible collapse in a moderate to major earthquake. The provisions of this chapter are minimum standards for structural seismic resistance established primarily to reduce the risk of life loss or injury on both subject and adjacent properties. These provisions will not necessarily prevent loss of life or injury, or prevent earthquake damage to an *existing building* that complies with these standards.

SECTION A202 SCOPE

[NY] A202.1 Scope. The provisions of this chapter shall apply to wall anchorage systems that resist out-of-plane forces and to collectors in existing reinforced concrete or reinforced masonry buildings with flexible diaphragms. Wall anchorage systems that were designed and constructed in accordance with the 1997 *Uniform Building Code*, 1999 *BOCA National Building Code*, 1999 *Standard Building Code,* the 2000 and subsequent editions of the *International Building Code* and the *Building Code of New York State* shall be deemed to comply with these provisions.

SECTION A203 DEFINITIONS

[BS] A203.1 Definitions. For the purpose of this chapter, the applicable definitions listed in Chapters 16, 19, 21, 22 and 23 of the *Building Code of New York State* and the following shall apply:

[BS] FLEXIBLE DIAPHRAGMS. Roofs and floors including, but not limited to, those sheathed with plywood, wood decking (1-by or 2-by) or metal decks without concrete topping slabs.

SECTION A204 SYMBOLS AND NOTATIONS

[BS] A204.1 General. For the purpose of this chapter, the applicable symbols and notations in the *Building Code of New York State* shall apply.

SECTION A205 GENERAL REQUIREMENTS

[BS] A205.1 General. The seismic-resisting elements specified in this chapter shall comply with provisions of Section 1613 of the *Building Code of New York State*, except as modified herein.

[BS] A205.2 Alterations and repairs. *Alterations* and *repairs* required to meet the provisions of this chapter shall comply with applicable structural requirements of the building code unless specifically modified in this chapter.

[BS] A205.3 Requirements for plans. The plans shall accurately reflect the results of the engineering investigation and design and shall show all pertinent dimensions and sizes for plan review and construction. The following shall be provided:

1. Floor plans and roof plans shall show existing framing construction, diaphragm construction, proposed wall anchors, cross-ties and collectors. Existing nailing, anchors, cross-ties and collectors shall be shown on the plans if they are considered part of the lateral force-resisting systems.
2. At elevations where there are *alterations* or damage, details shall show roof and floor heights, dimensions of openings, location and extent of existing damage and proposed *repair*.
3. Typical wall panel details and sections with panel thickness, height, pilasters and location of anchors shall be provided.
4. Details shall include existing and new anchors and the method of developing anchor forces into the diaphragm framing, existing and new cross-ties, and existing and new or improved support of roof and floor girders at pilasters or walls.
5. The basis for design and the building code used for the design shall be stated on the plans.

[BS] A205.4 Structural observation, testing and inspection. Structural observation, in accordance with Section 1709 of the *Building Code of New York State*, shall be required for all structures in which seismic retrofit is being performed in accordance with this chapter. Structural observation shall include visual observation of work for conformance to the *approved* construction documents and confirmation of existing conditions assumed during design.

Structural testing and inspection for new construction materials shall be in accordance with the building code, except as modified by this chapter.

INTERNATIONAL CODE COUNCIL®
Copyright © 2019 ICC & NYSDOS. ALL RIGHTS RESERVED. Accessed by Lauren Gualdino (lgualdino@briarcliffmanor.org), (-) Order Number #100880972 on May 08, 2020 07:05 AM (PDT) pursuant to License Agreement with ICC & NYSDOS. No further reproduction, no

100880972

SECTION A206
ANALYSIS AND DESIGN

[BS] A206.1 Reinforced concrete and reinforced masonry wall anchorage. Concrete and masonry walls shall be anchored to all floors and roofs that provide lateral support for the wall. The anchorage shall provide a positive direct connection between the wall and floor or roof construction capable of resisting 75 percent of the horizontal forces specified in Section 1613 of the *Building Code of New York State.*

[BS] A206.2 Special requirements for wall anchorage systems. The steel elements of the wall anchorage system shall be designed in accordance with the *Building Code of New York State* without the use of the 1.33 short duration allowable stress increase where using allowable stress design.

Wall anchors shall be provided to resist out-of-plane forces, independent of existing shear anchors.

Expansion anchors are only allowed with special inspection and *approved* testing for seismic loading.

Attaching the edge of plywood sheathing to steel ledgers is not considered compliant with the positive anchoring requirements of this chapter. Attaching the edge of steel decks to steel ledgers is not considered as providing the positive anchorage of this chapter unless testing or analysis is performed to establish shear values for the attachment perpendicular to the edge of the deck. Where steel decking is used as a wall anchor system, the existing connections shall be subject to field verification and the new connections shall be subject to special inspection.

> **Exception:** Existing cast-in-place shear anchors are allowed to be used as wall anchors if the tie element can be readily attached to the anchors, and if the engineer or architect can establish tension values for the existing anchors through the use of *approved* as-built plans or testing and through analysis showing that the bolts are capable of resisting the total shear load (including dead load) while being acted on by the maximum tension force caused by an earthquake. Criteria for analysis and testing shall be determined by the building official.

[BS] A206.3 Development of anchor loads into the diaphragm. Development of anchor loads into roof and floor diaphragms shall comply with Section 1613 of the *Building Code of New York State* using horizontal forces that are 75 percent of those used for new construction.

In wood diaphragms, anchorage shall not be accomplished by use of toenails or nails subject to withdrawal. Wood ledgers, top plates or framing shall not be used in cross-grain bending or cross-grain tension. The continuous ties required in Section 1613 of the *Building Code of New York State* shall be in addition to the diaphragm sheathing.

Lengths of development of anchor loads in wood diaphragms shall be based on existing field nailing of the sheathing unless existing edge nailing is positively identified on the original construction plans or at the site.

> **Exception:** If continuously tied girders are present, the maximum spacing of the continuity ties is the greater of the girder spacing or 24 feet (7315 mm).

[BS] A206.4 Anchorage at pilasters. Anchorage at pilasters shall be designed for the tributary wall-anchoring load per Section A206.1, considering the wall as a two-way slab. The edges of the two-way slab shall be considered to be fixed where there is continuity at pilasters and shall be considered to be pinned at roof and floor. The pilasters or the walls immediately adjacent to the pilasters shall be anchored directly to the roof framing such that the existing vertical anchor bolts at the top of the pilasters are bypassed without permitting tension or shear failure at the top of the pilasters.

The minimum anchorage force at a floor or roof between the pilasters shall be that specified in Section A206.1.

> **Exception:** If existing vertical anchor bolts at the top of the pilasters are used for the anchorage, additional exterior confinement shall be provided as required to resist the total anchorage force.

[BS] A206.5 Symmetry. Symmetry of wall anchorage and continuity connectors about the minor axis of the framing member is required.

> **Exception:** Eccentricity shall be allowed where it can be shown that all components of forces are positively resisted. The resistance must be supported by calculations or tests.

[BS] A206.6 Combination of anchor types. New anchors used in combination on a single framing member shall be of compatible behavior and stiffness.

[BS] A206.7 Anchorage at interior walls. Existing interior reinforced concrete or reinforced masonry walls that extend to the floor above or to the roof diaphragm shall be anchored for out-of-plane forces per Sections A206.1 and A206.3. Walls extending through the roof diaphragm shall be anchored for out-of-plane forces on both sides, and continuity ties shall be spliced across or continuous through the interior wall to provide diaphragm continuity.

[BS] A206.8 Collectors. If collectors are not present at reentrant corners or interior shear walls, they shall be provided. Existing or new collectors shall be designed for the capacity required to develop into the diaphragm a force equal to the lesser of the rocking or shear capacity of the reentrant wall or the tributary shear based on 75 percent of the horizontal forces specified in Chapter 16 of the *Building Code of New York State*. The capacity of the collector need not exceed the capacity of the diaphragm to deliver loads to the collector. A connection shall be provided from the collector to the reentrant wall to transfer the full collector force (load). If a truss or beam other than a rafter or purlin is supported by the reentrant wall or by a column integral with the reentrant wall, then an independent secondary column is required to support the roof or floor members whenever rocking or shear capacity of the reentrant wall is less than the tributary shear.

[BS] A206.9 Mezzanines. Existing mezzanines relying on reinforced concrete or reinforced masonry walls for vertical or lateral support shall be anchored to the walls for the tributary mezzanine load. Walls depending on the mezzanine for

INTERNATIONAL CODE COUNCIL®
Copyright © 2019 ICC & NYSDOS. ALL RIGHTS RESERVED. Accessed by Lauren Gualdino (lgualdino@briarcliffmanor.org), (-) Order Number #100880972 on May 08, 2020 07:05 AM (PDT) pursuant to License Agreement with ICC & NYSDOS. No further reproduction, no

100880972

lateral support shall be anchored per Sections A206.1, A206.2 and A206.3.

Exception: Existing mezzanines that have independent lateral and vertical support need not be anchored to the walls.

SECTION A207
MATERIALS OF CONSTRUCTION

[BS] A207.1 Materials. Materials permitted by the building code, including their appropriate strength or allowable stresses, shall be used to meet the requirements of this chapter.

INTERNATIONAL CODE COUNCIL®
Copyright © 2019 ICC & NYSDOS. ALL RIGHTS RESERVED. Accessed by Lauren Gualdino (lgualdino@briarcliffmanor.org), (-) Order Number #100880972 on May 08, 2020 07:05 AM (PDT) pursuant to License Agreement with ICC & NYSDOS. No further reproduction, no

100880972

INTERNATIONAL CODE COUNCIL®
Copyright © 2019 ICC & NYSDOS. ALL RIGHTS RESERVED. Accessed by Lauren Gualdino (lgualdino@briarcliffmanor.org), (-) Order Number #100880972 on May 08, 2020 07:05 AM (PDT) pursuant to License Agreement with ICC & NYSDOS. No further reproduction, no

100880972

CHAPTER A3

PRESCRIPTIVE PROVISIONS FOR SEISMIC STRENGTHENING OF CRIPPLE WALLS AND SILL PLATE ANCHORAGE OF LIGHT, WOOD-FRAME RESIDENTIAL BUILDINGS

SECTION A301 GENERAL

[BS] A301.1 Purpose. The provisions of this chapter are intended to promote public safety and welfare by reducing the risk of earthquake-induced damage to existing wood-frame residential buildings. The requirements contained in this chapter are prescriptive minimum standards intended to improve the seismic performance of residential buildings; however, they will not necessarily prevent earthquake damage.

This chapter sets standards for strengthening that may be *approved* by the *building official* without requiring plans or calculations prepared by a registered design professional. The provisions of this chapter are not intended to prevent the use of any material or method of construction not prescribed herein. The *building official* may require that construction documents for strengthening using alternative materials or methods be prepared by a registered design professional.

[BS] A301.2 Scope. The provisions of this chapter apply to residential buildings of light-frame wood construction containing one or more of the structural weaknesses specified in Section A303.

Exception: The provisions of this chapter do not apply to the buildings, or elements thereof, listed as follows. These buildings or elements require analysis by a registered design professional in accordance with Section A301.3 to determine appropriate strengthening:

1. Group R-1.
2. Group R with more than four dwelling units.
3. Buildings with a lateral force-resisting system using poles or columns embedded in the ground.
4. Cripple walls that exceed 4 feet (1219 mm) in height.
5. Buildings exceeding three stories in height and any three-story building with cripple wall studs exceeding 14 inches (356 mm) in height.
6. Buildings where the *building official* determines that conditions exist that are beyond the scope of the prescriptive requirements of this chapter.
7. Buildings or portions thereof constructed on concrete slabs on grade.

[BS] A301.3 Alternative design procedures. The details and prescriptive provisions herein are not intended to be the only acceptable strengthening methods permitted. Alternative details and methods shall be permitted to be used where *approved* by the *building official*. Approval of alternatives shall be based on a demonstration that the method or material used is at least equivalent in terms of strength, deflection and capacity to that provided by the prescriptive methods and materials.

Where analysis by a registered design professional is required, such analysis shall be in accordance with all requirements of the building code, except that the seismic forces may be taken as 75 percent of those specified in the *Building Code of New York State*.

SECTION A302 DEFINITIONS

[BS] A302.1 Definitions. For the purpose of this chapter, in addition to the applicable definitions in the building code, certain additional terms are defined as follows:

[BS] ADHESIVE ANCHOR. An assembly consisting of a threaded rod, washer, nut, and chemical adhesive *approved* by the *building official* for installation in existing concrete or masonry.

[BS] CRIPPLE WALL. A wood-frame stud wall extending from the top of the foundation to the underside of the lowest floor framing.

[BS] EXPANSION ANCHOR. An *approved* post-installed anchor, inserted into a predrilled hole in existing concrete or masonry, that transfers loads to or from the concrete or masonry by direct bearing or friction or both.

[BS] PERIMETER FOUNDATION. A foundation system that is located under the exterior walls of a building.

[BS] SNUG TIGHT. As tight as an individual can torque a nut on a bolt by hand, using a wrench with a 10-inch-long (254 mm) handle, and the point at which the full surface of the plate washer is contacting the wood member and slightly indenting the wood surface.

[BS] WOOD STRUCTURAL PANEL. A panel manufactured from veneers, wood strands or wafers or a combination of veneer and wood strands or wafers bonded together with waterproof synthetic resins or other suitable bonding systems. Examples of wood structural panels are:

Composite panels. A wood structural panel that is comprised of wood veneer and reconstituted wood-based material and bonded together with waterproof adhesive.

Oriented strand board (OSB). A mat-formed wood structural panel comprised of thin rectangular wood strands arranged in cross-aligned layers with surface layers normally arranged in the long panel direction and bonded with waterproof adhesive.

Plywood. A wood structural panel comprised of plies of wood veneer arranged in cross-aligned layers. The plies

INTERNATIONAL CODE COUNCIL®
Copyright © 2019 ICC & NYSDOS. ALL RIGHTS RESERVED. Accessed by Lauren Gualdino (lgualdino@briarcliffmanor.org), (-) Order Number #100880972 on May 08, 2020 07:05 AM (PDT) pursuant to License Agreement with ICC & NYSDOS. No further reproduction, no

100880972

are bonded with waterproof adhesive that cures on application of heat and pressure.

SECTION A303
STRUCTURAL WEAKNESSES

[BS] A303.1 General. For the purposes of this chapter, any of the following conditions shall be deemed a structural weakness:

1. Sill plates or floor framing that are supported directly on the ground without a foundation system that conforms to the building code.
2. A perimeter foundation system that is constructed only of wood posts supported on isolated pad footings.
3. Perimeter foundation systems that are not continuous.

   Exceptions:

   1. Existing single-story exterior walls not exceeding 10 feet (3048 mm) in length, forming an extension of floor area beyond the line of an existing continuous perimeter foundation.
   2. Porches, storage rooms and similar spaces not containing fuel-burning appliances.
4. A perimeter foundation system that is constructed of unreinforced masonry or stone.
5. Sill plates that are not connected to the foundation or that are connected with less than what is required by the building code.

   Exception: Where *approved* by the *building official*, connections of a sill plate to the foundation made with other than sill bolts shall be accepted if the capacity of the connection is equivalent to that required by the building code.
6. Cripple walls that are not braced in accordance with the requirements of Section A304.4 and Table A304.3.1, or cripple walls not braced with diagonal sheathing or wood structural panels in accordance with the building code.

SECTION A304
STRENGTHENING REQUIREMENTS

[BS] A304.1 General.

[BS] A304.1.1 Scope. The structural weaknesses noted in Section A303 shall be strengthened in accordance with the requirements of this section. Strengthening work may include both new construction and *alteration* of existing construction. Except as provided herein, all strengthening work and materials shall comply with the applicable provisions of the *Building Code of New York State*.

[BS] A304.1.2 Condition of existing wood materials. Existing wood materials that will be a part of the strengthening work (such as sills, studs and sheathing) shall be in a sound condition and free from defects that substantially reduce the capacity of the member. Any wood material found to contain fungus infection shall be removed and replaced with new material. Any wood material found to be infested with insects or to have been infested with insects shall be strengthened or replaced with new materials to provide a net dimension of sound wood equal to or greater than its undamaged original dimension.

[BS] A304.1.3 Floor joists not parallel to foundations. Floor joists framed perpendicular or at an angle to perimeter foundations shall be restrained either by an existing nominal 2-inch-wide (51 mm) continuous rim joist or by a nominal 2-inch-wide (51 mm) full-depth block between alternate joists in one- and two-story buildings, and between each joist in three-story buildings. Existing blocking for multiple-story buildings must occur at each joist space above a braced cripple wall panel.

Existing connections at the top and bottom edges of an existing rim joist or blocking need not be verified in one-story buildings. In multiple-story buildings, the existing top edge connection need not be verified; however, the bottom edge connection to either the foundation sill plate or the top plate of a cripple wall shall be verified. The minimum existing bottom edge connection shall consist of 8d toenails spaced 6 inches (152 mm) apart for a continuous rim joist, or three 8d toenails per block. Where this minimum bottom edge-connection is not present or cannot be verified, a supplemental connection installed as shown in Figure A304.1.3 or A304.1.4(2) shall be provided.

Where an existing continuous rim joist or the minimum existing blocking does not occur, new $^{3}/_{4}$-inch (19.1 mm) or $^{23}/_{32}$-inch (18 mm) wood structural panel blocking installed tightly between floor joists and nailed as shown in Figure A304.1.4(3) shall be provided at the inside face of the cripple wall. In lieu of wood structural panel blocking, tight fitting, full-depth 2-inch (51 mm) blocking may be used. New blocking may be omitted where it will interfere with vents or plumbing that penetrates the wall.

[BS] A304.1.4 Floor joists parallel to foundations. Where existing floor joists are parallel to the perimeter foundations, the end joist shall be located over the foundation and, except for required ventilation openings, shall be continuous and in continuous contact with the foundation sill plate or the top plate of the cripple wall. Existing connections at the top and bottom edges of the end joist need not be verified in one-story buildings. In multiple-story buildings, the existing top edge connection of the end joist need not be verified; however, the bottom edge connection to either the foundation sill plate or the top plate of a cripple wall shall be verified. The minimum bottom edge connection shall be 8d toenails spaced 6 inches (152 mm) apart. If this minimum bottom edge connection is not present or cannot be verified, a supplemental connection installed as shown in Figure A304.1.4(1), A304.1.4(2) or A304.1.4(3) shall be provided.

[BS] A304.2 Foundations.

[BS] A304.2.1 New perimeter foundations. New perimeter foundations shall be provided for structures with the structural weaknesses noted in Items 1 and 2 of Section A303. Soil investigations or geotechnical studies are not required for this work unless the building is located in a special study zone as designated by the *building official* or other authority having jurisdiction.

INTERNATIONAL CODE COUNCIL®
Copyright © 2019 ICC & NYSDOS. ALL RIGHTS RESERVED. Accessed by Lauren Gualdino (lgualdino@briarcliffmanor.org), (-) Order Number #100880972 on May 08, 2020 07:05 AM (PDT) pursuant to License Agreement with ICC & NYSDOS. No further reproduction, no

100880972

[BS] A304.2.2 Evaluation of existing foundations. Partial perimeter foundations or unreinforced masonry foundations shall be evaluated by a registered design professional for the force levels specified in Section A301.3. Test reports or other substantiating data to determine existing foundation material strengths shall be submitted to the *building official*. Where approved by the *building official*, these existing foundation systems shall be strengthened in accordance with the recommendations included with the evaluation in lieu of being replaced.

Exception: In lieu of testing existing foundations to determine material strengths, and where *approved* by the *building official*, a new nonperimeter foundation system designed for the forces specified in Section A301.3 shall be used to resist lateral forces from perimeter walls. A registered design professional shall confirm the ability of the existing diaphragm to transfer seismic forces to the new nonperimeter foundations.

[BS] A304.2.3 Details for new perimeter foundations. All new perimeter foundations shall be continuous and constructed according to either Figure A304.2.3(1) or A304.2.3(2). New construction materials shall comply with the requirements of building code. Where *approved* by the *building official*, the existing clearance between existing floor joists or girders and existing grade below the floor need not comply with the building code.

Exception: Where designed by a registered design professional and *approved* by the *building official*, partial perimeter foundations shall be used in lieu of a continuous perimeter foundation.

[BS] A304.2.4 New concrete foundations. New concrete foundations shall have a minimum compressive strength of 2,500 pounds per square inch (17.24 MPa) at 28 days.

[BS] A304.2.5 New hollow-unit masonry foundations. New hollow-unit masonry foundations shall be solidly grouted. The grout shall have minimum compressive strength of 2,000 pounds per square inch (13.79 MPa). Mortar shall be Type M or S.

[BS] A304.2.6 New sill plates. Where new sill plates are used in conjunction with new foundations, they shall be minimum 2× nominal thickness and shall be preservative-treated wood or naturally durable wood permitted by the building code for similar applications, and shall be marked or branded by an *approved* agency. Fasteners in contact with preservative-treated wood shall be hot-dip galvanized or other material permitted by the building code for similar applications. Anchors, that attach a preservative-treated sill plate to the foundation, shall be permitted to be of mechanically deposited zinc-coated steel with coating weights in accordance with ASTM B695, Class 55 minimum. Metal framing anchors in contact with preservative-treated wood shall be galvanized in accordance with ASTM A653 with a G185 coating.

[BS] A304.3 Foundation sill plate anchorage.

[BS] A304.3.1 Existing perimeter foundations. Where the building has an existing continuous perimeter foundation, all perimeter wall sill plates shall be anchored to the foundation with adhesive anchors or expansion anchors in accordance with Table A304.3.1.

Anchors shall be installed in accordance with Figure A304.3.1(1), with the plate washer installed between the nut and the sill plate. The nut shall be tightened to a *snug-tight* condition after curing is complete for adhesive anchors and after expansion wedge engagement for expansion anchors. Anchors shall be installed in accordance with manufacturer's recommendations. Expansion anchors shall not be used where the installation causes surface cracking of the foundation wall at the locations of the anchor.

Where existing conditions prevent anchor installations through the top of the sill plate, this connection shall be made in accordance with Figure A304.3.1(2), A304.3.1(3) or A304.3.1(4). Alternative anchorage methods having a minimum shear capacity of 900 pounds (4003 N) per connection parallel to the wall shall be permitted. The spacing of these alternative connections shall comply with the maximum spacing requirements of Table A304.3.1 for $^1/_2$-inch (12.7 mm) bolts.

[BS] A304.3.2 Placement of anchors. Anchors shall be placed within 12 inches (305 mm), but not less than 9 inches (229 mm), from the ends of sill plates and shall be placed in the center of the stud space closest to the required spacing. New sill plates may be installed in pieces where necessary because of existing conditions. For lengths of sill plates 12 feet (3658 mm) or greater, anchors shall be spaced along the sill plate as specified in Table A304.3.1. For other lengths of sill plate, anchor placement shall be in accordance with Table A304.3.2.

Exception: Where physical obstructions such as fireplaces, plumbing or heating ducts interfere with the placement of an anchor, the anchor shall be placed as close to the obstruction as possible, but not less than 9 inches (229 mm) from the end of the plate. Center-to-center spacing of the anchors shall be reduced as necessary to provide the minimum total number of anchors required based on the full length of the wall. Center-to-center spacing shall be not less than 12 inches (305 mm).

[BS] A304.3.3 New perimeter foundations. Sill plates for new perimeter foundations shall be anchored in accordance with Table A304.3.1 and as shown in Figure A304.2.3(1) or A304.2.3(2).

[BS] A304.4 Cripple wall bracing.

[BS] A304.4.1 General. Exterior cripple walls not exceeding 4 feet (1219 mm) in height shall be permitted to be specified by the prescriptive bracing method in Section A304.4. Cripple walls over 4 feet (1219 mm) in height require analysis by a registered design professional in accordance with Section A301.3.

[BS] A304.4.1.1 Sheathing installation requirements. Wood structural panel sheathing shall be not less than $^{15}/_{32}$-inch (12 mm) thick and shall be installed in accordance with Figure A304.4.1(1) or A304.4.1(2). Individual pieces of wood structural panels shall be nailed with 8d common nails spaced 4 inches (102 mm)

INTERNATIONAL CODE COUNCIL®
Copyright © 2019 ICC & NYSDOS. ALL RIGHTS RESERVED. Accessed by Lauren Gualdino (lgualdino@briarcliffmanor.org), (-) Order Number #100880972 on May 08, 2020 07:05 AM (PDT) pursuant to License Agreement with ICC & NYSDOS. No further reproduction, no

100880972

on center at all edges and 12 inches (305 mm) on center at each intermediate support with not less than two nails for each stud. Nails shall be driven so that their heads are flush with the surface of the sheathing and shall penetrate the supporting member not less than $1^1/_2$ inches (38 mm). When a nail fractures the surface, it shall be left in place and not counted as part of the required nailing. A new 8d nail shall be located within 2 inches (51 mm) of the discounted nail and be hand-driven flush with the sheathing surface. Where the installation involves horizontal joints, those joints shall occur over nominal 2-inch by 4-inch (51 mm by 102 mm) blocking installed with the nominal 4-inch (102 mm) dimension against the face of the plywood.

Vertical joints at adjoining pieces of wood structural panels shall be centered on studs such that there is a minimum $^1/_8$ inch (3.2 mm) between the panels. Where required edge distances cannot be maintained because of the width of the existing stud, a new stud shall be added adjacent to the existing studs and connected in accordance with Figure A304.4.1(3).

[BS] A304.4.2 Distribution and amount of bracing. See Table A304.3.1 and Figure A304.4.2 for the distribution and amount of bracing required for each wall line. Each braced panel length must be not less than two times the height of the cripple stud. Where the minimum amount of bracing prescribed in Table A304.3.1 cannot be installed along any walls, the bracing must be designed in accordance with Section A301.3.

Exception: Where physical obstructions such as fireplaces, plumbing or heating ducts interfere with the placement of cripple wall bracing, the bracing shall then be placed as close to the obstruction as possible. The total amount of bracing required shall not be reduced because of obstructions.

[BS] A304.4.3 Stud space ventilation. Where bracing materials are installed on the interior face of studs forming an enclosed space between the new bracing and the existing exterior finish, each braced stud space must be ventilated. Adequate ventilation and access for future inspection shall be provided by drilling one 2-inch to 3-inch-diameter (51 mm to 76 mm) round hole through the sheathing, nearly centered between each stud at the top and bottom of the cripple wall. Such holes should be spaced not less than 1 inch (25 mm) clear from the sill or top plates. In stud spaces containing sill bolts, the hole shall be located on the centerline of the sill bolt but not closer than 1 inch (25 mm) clear from the nailing edge of the sheathing. Where existing blocking occurs within the stud space, additional ventilation holes shall be placed above and below the blocking, or the existing block shall be removed and a new nominal 2-inch by 4-inch (51 mm by 102 mm) block shall be installed with the nominal 4-inch (102 mm) dimension against the face of the plywood. For stud heights less than 18 inches (457 mm), only one ventilation hole need be provided.

[BS] A304.4.4 Existing underfloor ventilation. Existing underfloor ventilation shall not be reduced without providing equivalent new ventilation as close to the existing ventilation as possible. Braced panels may include underfloor ventilation openings where the height of the opening, measured from the top of the foundation wall to the top of the opening, does not exceed 25 percent of the height of the cripple stud wall; however, the length of the panel shall be increased a distance equal to the length of the opening or one stud space minimum. Where an opening exceeds 25 percent of the cripple wall height, braced panels shall not be located where the opening occurs. See Figure A304.4.1(3).

Exception: For homes with a post and pier foundation system where a new continuous perimeter foundation system is being installed, new ventilation shall be provided in accordance with the building code.

[BS] A304.5 Quality control. All work shall be subject to inspection by the *building official* including, but not limited to:

1. Placement and installation of new adhesive or expansion anchors installed in existing foundations. Special inspection is not required for adhesive anchors installed in existing foundations regulated by the prescriptive provisions of this chapter.
2. Installation and nailing of new cripple wall bracing.
3. Any work shall be subject to special inspection where required by the *building official* in accordance with the building code.

[BS] A304.5.1 Nails. All nails specified in this chapter shall be common wire nails of the following diameters and lengths:

1. 8d nails = 0.131 inch (3.3 mm) by $2^1/_2$ inches (64 mm).
2. 10d nails = 0.148 inch (3.8 mm) by 3 inches (76 mm).
3. 12d nails = 0.148 inch (3.8 mm) by $3^1/_4$ inches (83 mm).
4. 16d nails = 0.162 inch (4.1 mm) by $3^1/_2$ inches (89 mm).

Nails used to attach metal framing connectors directly to wood members shall be as specified by the connector manufacturer in an *approved* report.

INTERNATIONAL CODE COUNCIL®
Copyright © 2019 ICC & NYSDOS. ALL RIGHTS RESERVED. Accessed by Lauren Gualdino (lgualdino@briarcliffmanor.org), (-) Order Number #100880972 on May 08, 2020 07:05 AM (PDT) pursuant to License Agreement with ICC & NYSDOS. No further reproduction, no

100880972

[BS] TABLE A304.3.1
SILL PLATE ANCHORAGE AND CRIPPLE WALL BRACING

NUMBER OF STORIES ABOVE CRIPPLE WALLS	MINIMUM SILL PLATE CONNECTION AND MAXIMUM SPACING[a, b, c]	AMOUNT OF BRACING FOR EACH WALL LINE[d, e, f]	
		A Combination of Exterior Walls Finished with Portland Cement Plaster and Roofing Using Clay Tile or Concrete Tile Weighing More than 6 psf (287 N/m^2)	All Other Conditions
One story	$^1/_2$ inch spaced 6 feet, 0 inch center-to-center with washer plate	Each end and not less than 50 percent of the wall length	Each end and not less than 40 percent of the wall length
Two stories	$^1/_2$ inch spaced 4 feet, 0 inch center-to-center with washer plate; or $^5/_8$ inch spaced 6 feet, 0 inch center-to-center with washer plate	Each end and not less than 70 percent of the wall length	Each end and not less than 50 percent of the wall length
Three stories	$^5/_8$ inch spaced 4 feet, 0 inch center-to-center with washer plate	100 percent of the wall length[g]	Each end and not less than 80 percent of the wall length[g]

For SI: 1 inch = 25.4 mm, 1 foot = 304.8 mm, 1 pound per square foot = 47.88 N/m^2.

a. Sill plate anchors shall be adhesive anchors or expansion anchors in accordance with Section A304.3.1.

b. All washer plates shall be 3 inches by 3 inches by 0.229 inch minimum. The hole in the plate washer is permitted to be diagonally slotted with a width of up to $^3/_{16}$ inch larger than the bolt diameter and a slot length not to exceed $1^3/_4$ inches, provided that a standard cut washer is placed between the plate washer and the nut.

c. This table shall also be permitted for the spacing of the alternative connections specified in Section A304.3.1.

d. See Figure A304.4.2 for braced panel layout.

e. Braced panels at ends of walls shall be located as near to the end as possible.

f. All panels along a wall shall be nearly equal in length and shall be nearly equal in spacing along the length of the wall.

g. The minimum required underfloor ventilation openings are permitted in accordance with Section A304.4.4.

[BS] TABLE A304.3.2
SILL PLATE ANCHORAGE FOR VARIOUS LENGTHS OF SILL PLATE[a, b]

NUMBER OF STORIES	LENGTHS OF SILL PLATE		
	Less than 12 feet to 6 feet	Less than 6 feet to 30 inches	Less than 30 inches[c]
One story	Three connections	Two connections	One connection
Two stories	Four connections for $^1/_2$-inch anchors or bolts or three connections for $^5/_8$-inch anchors or bolts	Two connections	One connection
Three stories	Four connections	Two connections	One connection

For SI: 1 inch = 25.4 mm, 1 foot = 304.8 mm.

a. Connections shall be either adhesive anchors or expansion anchors.

b. See Section A304.3.2 for minimum end distances.

c. Connections shall be placed as near to the center of the length of plate as possible.

INTERNATIONAL CODE COUNCIL®
Copyright © 2019 ICC & NYSDOS. ALL RIGHTS RESERVED. Accessed by Lauren Gualdino (lgualdino@briarcliffmanor.org), (-) Order Number #100880972 on May 08, 2020 07:05 AM (PDT) pursuant to License Agreement with ICC & NYSDOS. No further reproduction, no

100880972

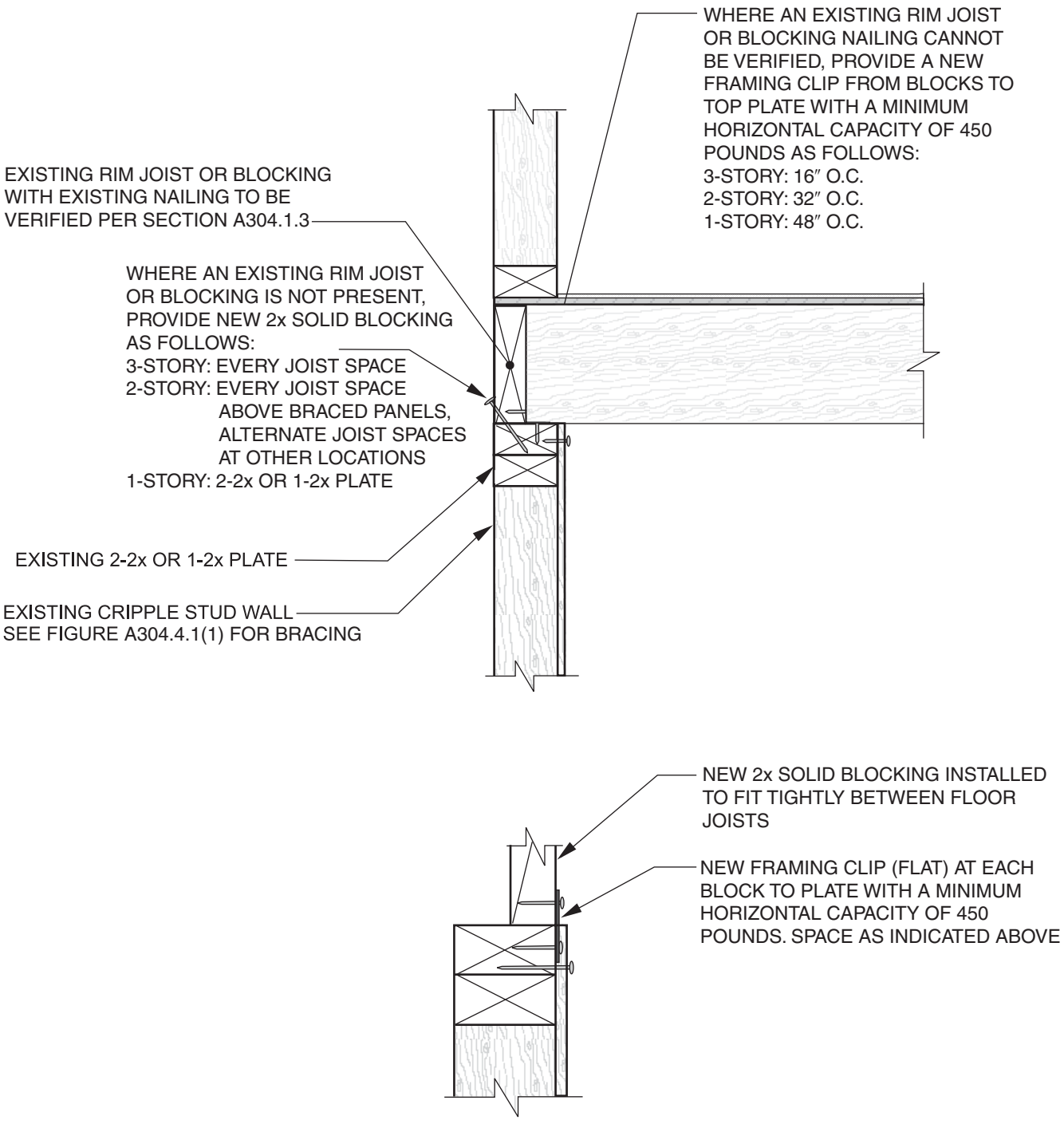

ALTERNATE CONNECTION FOR FLUSH CONNECTION

For SI: 1 inch = 25.4 mm, 1 pound = 4.4 N.

NOTE: See manufacturing instructions for nail sizes associated with metal framing clips.

[BS] FIGURE A304.1.3
TYPICAL FLOOR TO CRIPPLE WALL CONNECTION (FLOOR JOISTS NOT PARALLEL TO FOUNDATIONS)

INTERNATIONAL CODE COUNCIL®
Copyright © 2019 ICC & NYSDOS. ALL RIGHTS RESERVED. Accessed by Lauren Gualdino (lgualdino@briarcliffmanor.org), (-) Order Number #100880972 on May 08, 2020 07:05 AM (PDT) pursuant to License Agreement with ICC & NYSDOS. No further reproduction, no

100880972

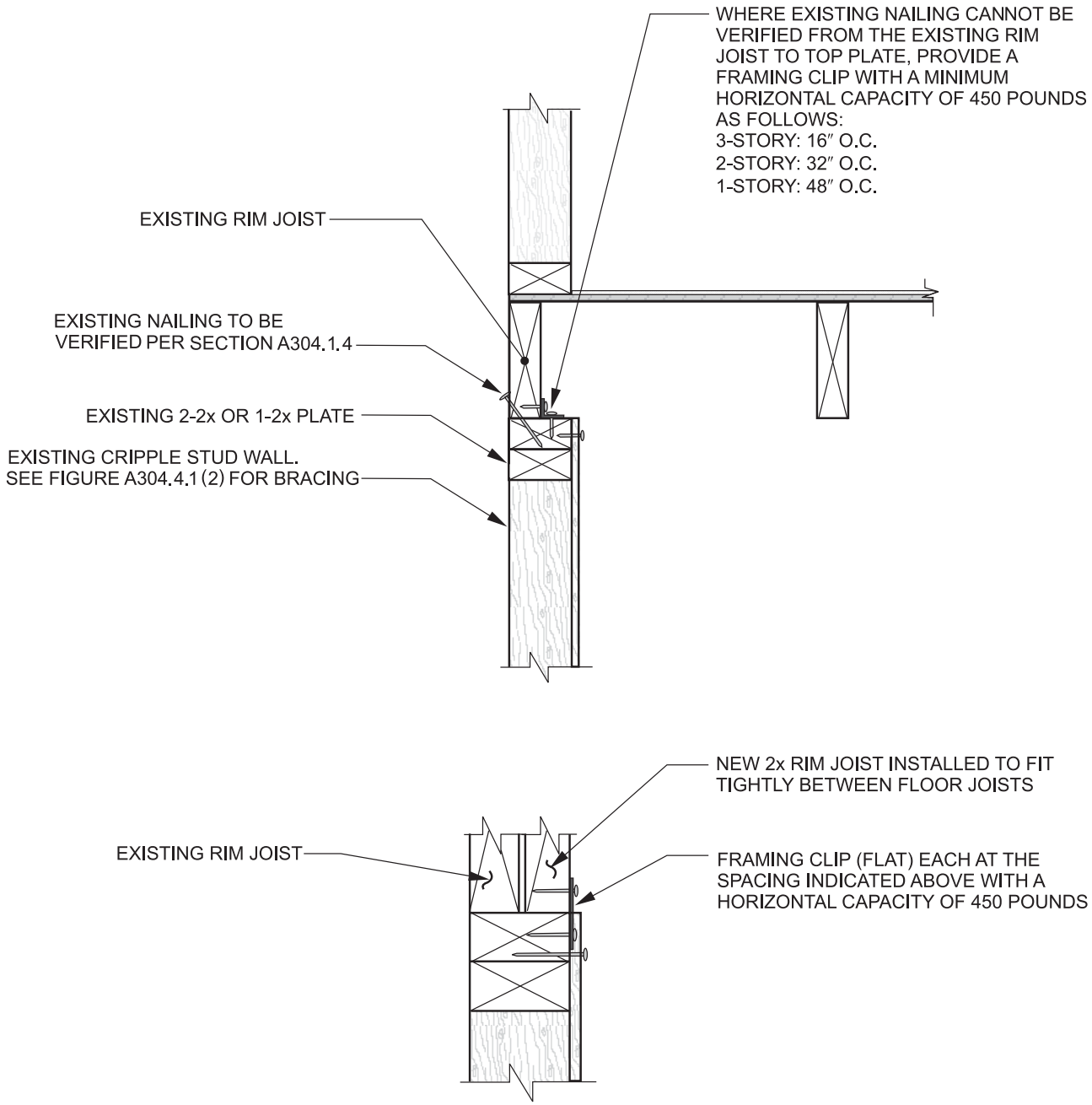

ALTERNATIVE CONNECTION FOR FLUSH CONNECTION

For SI: 1 inch = 25.4 mm, 1 pound = 4.4 N.

NOTE: See manufacturing instructions for nail sizes associated with metal framing clips.

[BS] FIGURE A304.1.4(1)
TYPICAL FLOOR TO CRIPPLE WALL CONNECTION (FLOOR JOISTS PARALLEL TO FOUNDATIONS)

INTERNATIONAL CODE COUNCIL®
Copyright © 2019 ICC & NYSDOS. ALL RIGHTS RESERVED. Accessed by Lauren Gualdino (lgualdino@briarcliffmanor.org), (-) Order Number #100880972 on May 08, 2020 07:05 AM (PDT) pursuant to License Agreement with ICC & NYSDOS. No further reproduction, no

100880972

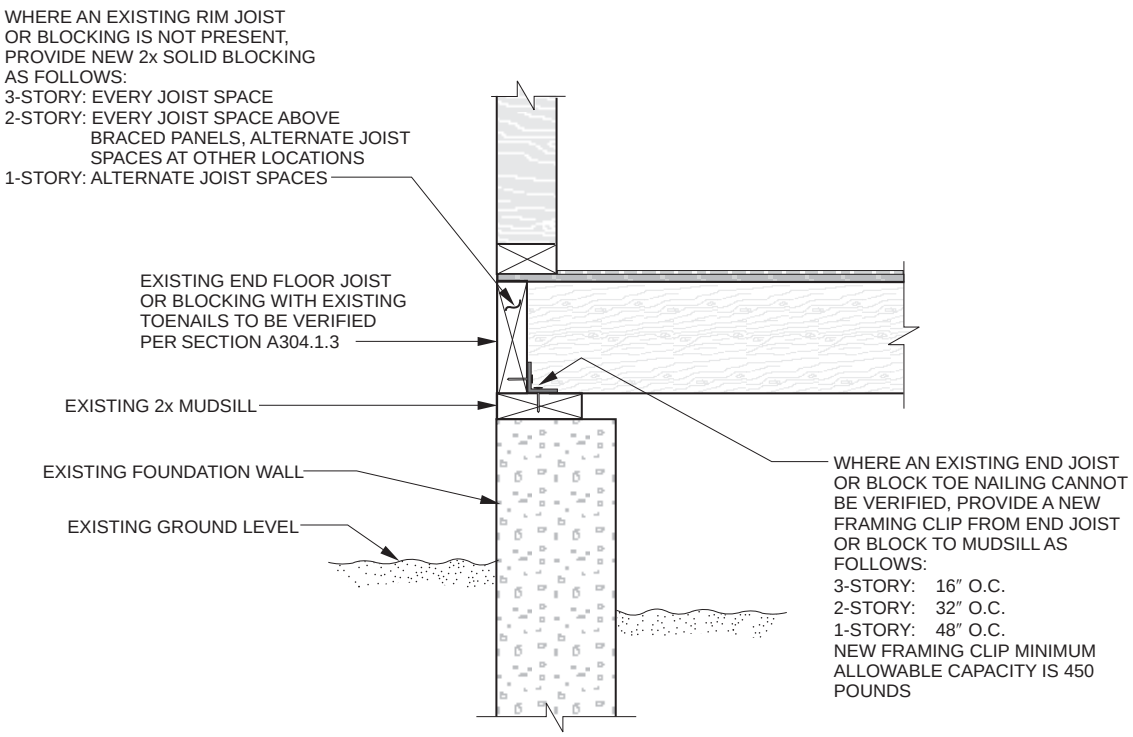

FLOOR JOISTS NOT PARALLEL TO FOUNDATIONS

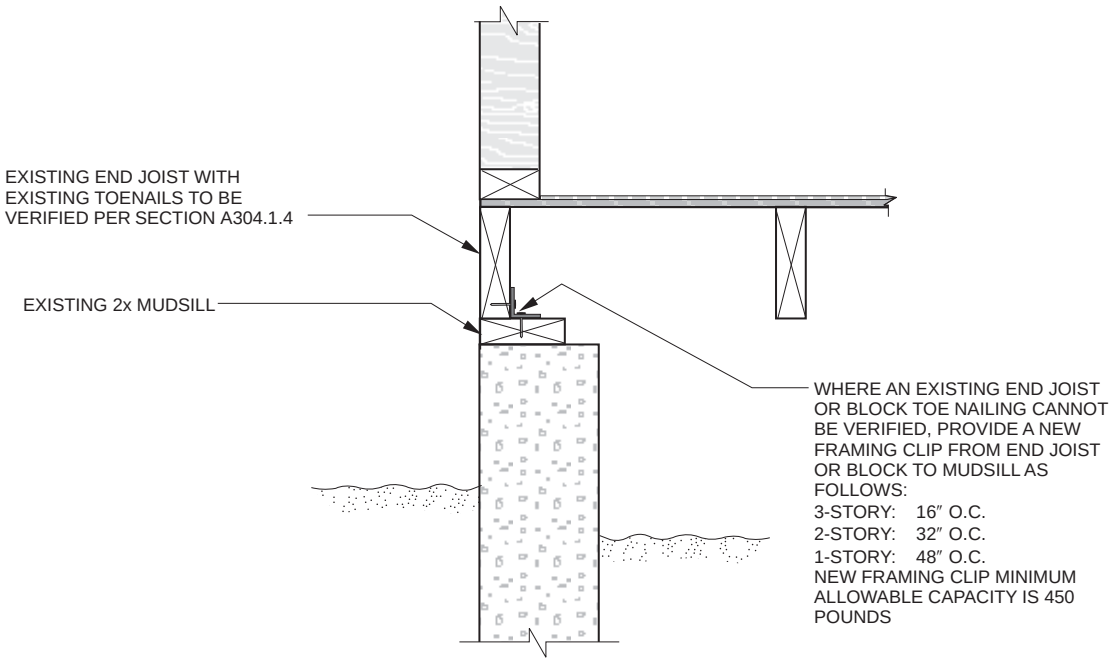

FLOOR JOISTS PARALLEL TO FOUNDATIONS

For SI: 1 inch = 25.4 mm.

NOTES:

1. See Section A304.3 for sill plate anchorage.
2. See manufacturing instructions for nail sizes associated with metal framing clips.

[BS] FIGURE A304.1.4(2)
TYPICAL FLOOR TO MUDSILL CONNECTIONS

INTERNATIONAL CODE COUNCIL®
Copyright © 2019 ICC & NYSDOS. ALL RIGHTS RESERVED. Accessed by Lauren Gualdino (lgualdino@briarcliffmanor.org), (-) Order Number #100880972 on May 08, 2020 07:05 AM (PDT) pursuant to License Agreement with ICC & NYSDOS. No further reproduction, no

100880972

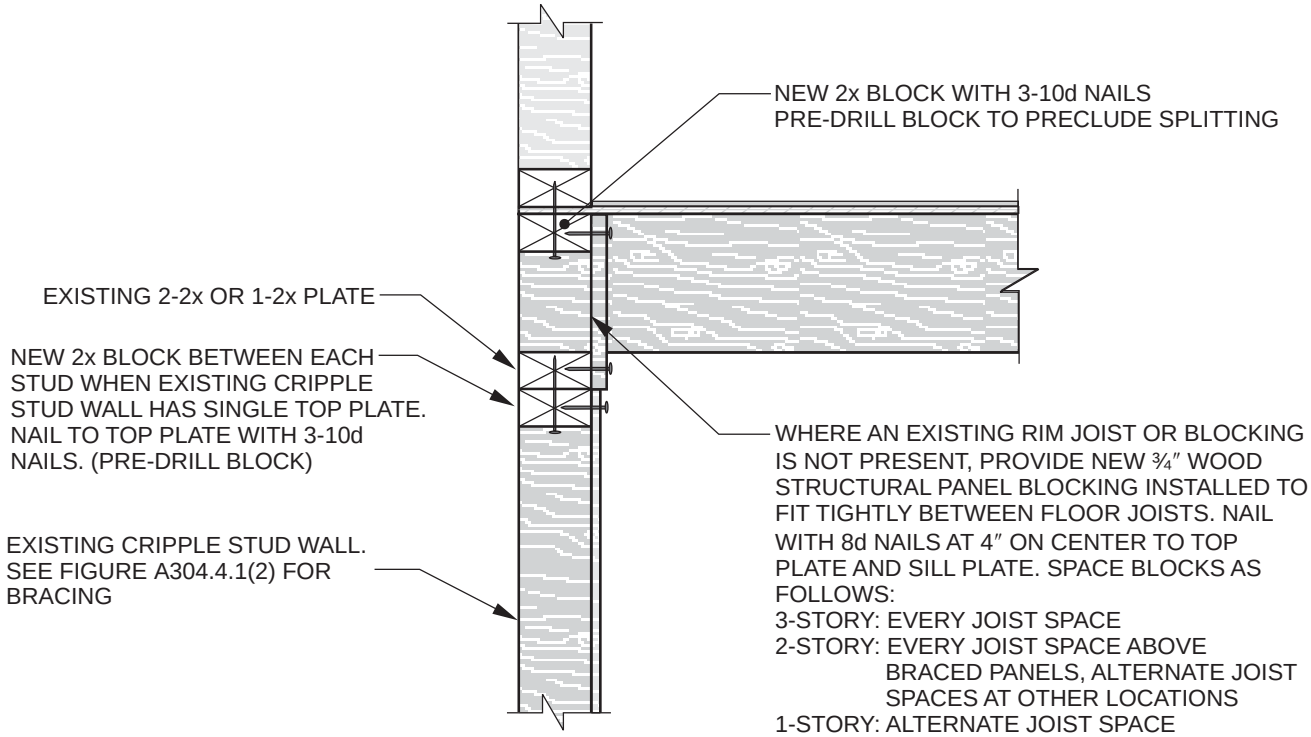

FLOOR JOISTS NOT PARALLEL TO FOUNDATION

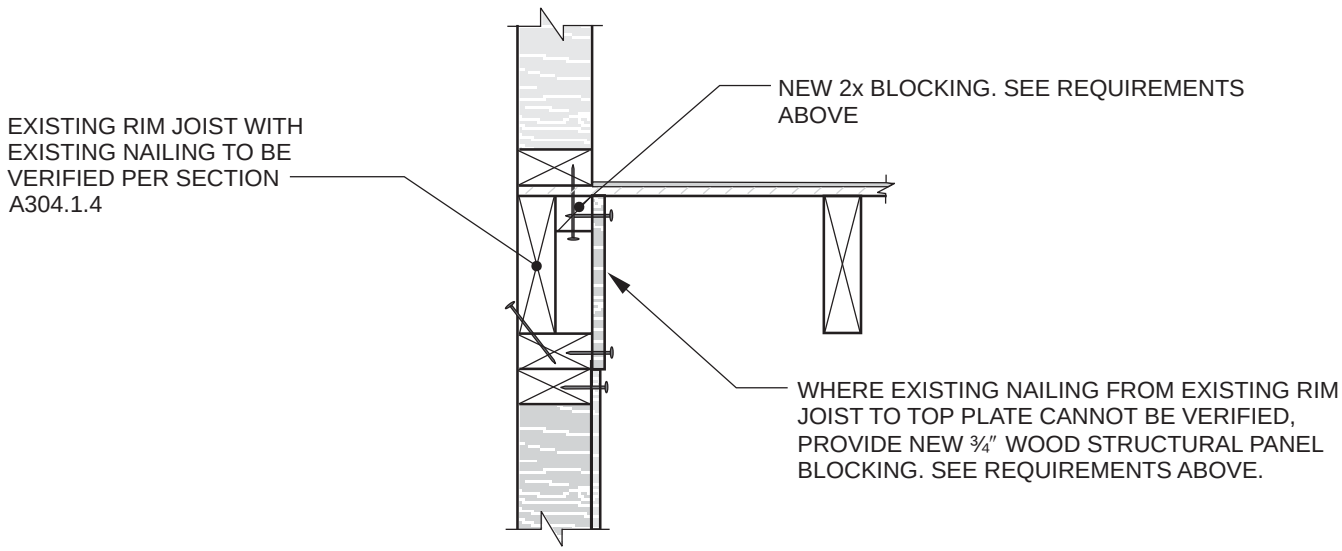

FLOOR JOISTS PARALLEL TO FOUNDATION

For SI: 1 inch = 25.4 mm, 1 pound = 4.4 N.

NOTE: See Section A304.4 for cripple wall bracing.

[BS] FIGURE A304.1.4(3)
ALTERNATIVE FLOOR FRAMING TO CRIPPLE WALL CONNECTION

INTERNATIONAL CODE COUNCIL®
Copyright © 2019 ICC & NYSDOS. ALL RIGHTS RESERVED. Accessed by Lauren Gualdino (lgualdino@briarcliffmanor.org), (-) Order Number #100880972 on May 08, 2020 07:05 AM (PDT) pursuant to License Agreement with ICC & NYSDOS. No further reproduction, no

APPENDIX A—GUIDELINES FOR THE SEISMIC RETROFIT OF EXISTING BUILDINGS

MINIMUM FOUNDATION DIMENSIONS					MINIMUM FOUNDATION REINFORCING	
NUMBER OF STORIES	W	F	D[a, b, c]	T	H	VERTICAL REINFORCING
						Single-pour wall and footing / Footing placed separate from wall
1	12 inches	6 inches	12 inches	6 inches	≤ 24 inches	#4 @ 48 inches on center / #4 @ 32 inches on center
2	15 inches	7 inches	18 inches	8 inches	≥ 36 inches	#4 @ 48 inches on center / #4 @ 32 inches on center
3	18 inches	8 inches	24 inches	10 inches	≥ 36 inches	#4 @ 48 inches on center / #4 @ 18 inches on center

For SI: 1 inch = 25.4 mm.

a. Where frost conditions occur, the minimum depth shall extend below the frost line.

b. The ground surface along the interior side of the foundation may be excavated to the elevation of the top of the footing.

c. Where the soil is designated as expansive, the foundation depth and reinforcement shall be approved by the *building official*.

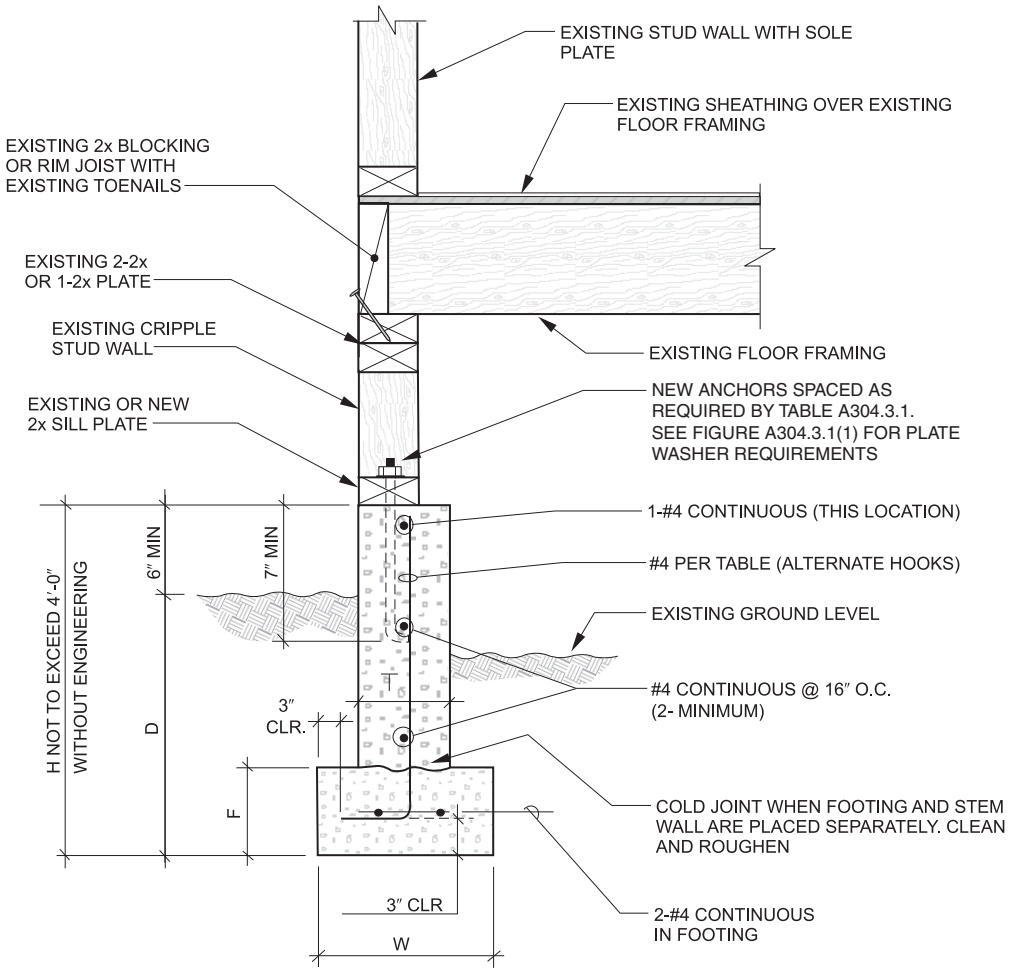

For SI: 1 inch = 25.4 mm, 1 foot = 304.8 mm.

[BS] FIGURE A304.2.3(1)
NEW REINFORCED CONCRETE FOUNDATION SYSTEM

INTERNATIONAL CODE COUNCIL®
Copyright © 2019 ICC & NYSDOS. ALL RIGHTS RESERVED. Accessed by Lauren Gualdino (lgualdino@briarcliffmanor.org), (-) Order Number #100880972 on May 08, 2020 07:05 AM (PDT) pursuant to License Agreement with ICC & NYSDOS. No further reproduction, no

100880972

MINIMUM FOUNDATION DIMENSIONS					MINIMUM FOUNDATION REINFORCING		
NUMBER OF STORIES	W	F	D[a, b, c]	T	H	VERTICAL REINFORCING	HORIZONTAL REINFORCING
1	12 inches	6 inches	12 inches	6 inches	≤ 24 inches	#4 @ 24 inches on center	#4 continuous at top of stem wall
2	15 inches	7 inches	18 inches	8 inches	≥ 24 inches	#4 @ 24 inches on center	#4 @16 inches on center
3	18 inches	8 inches	24 inches	10 inches	≥ 36 inches	#4 @ 24 inches on center	#4 @16 inches on center

For SI: 1 inch = 25.4 mm.

a. Where frost conditions occur, the minimum depth shall extend below the frost line.

b. The ground surface along the interior side of the foundation may be excavated to the elevation of the top of the footing.

c. Where the soil is designated as expansive, the foundation depth and reinforcement shall be approved by the *building official*.

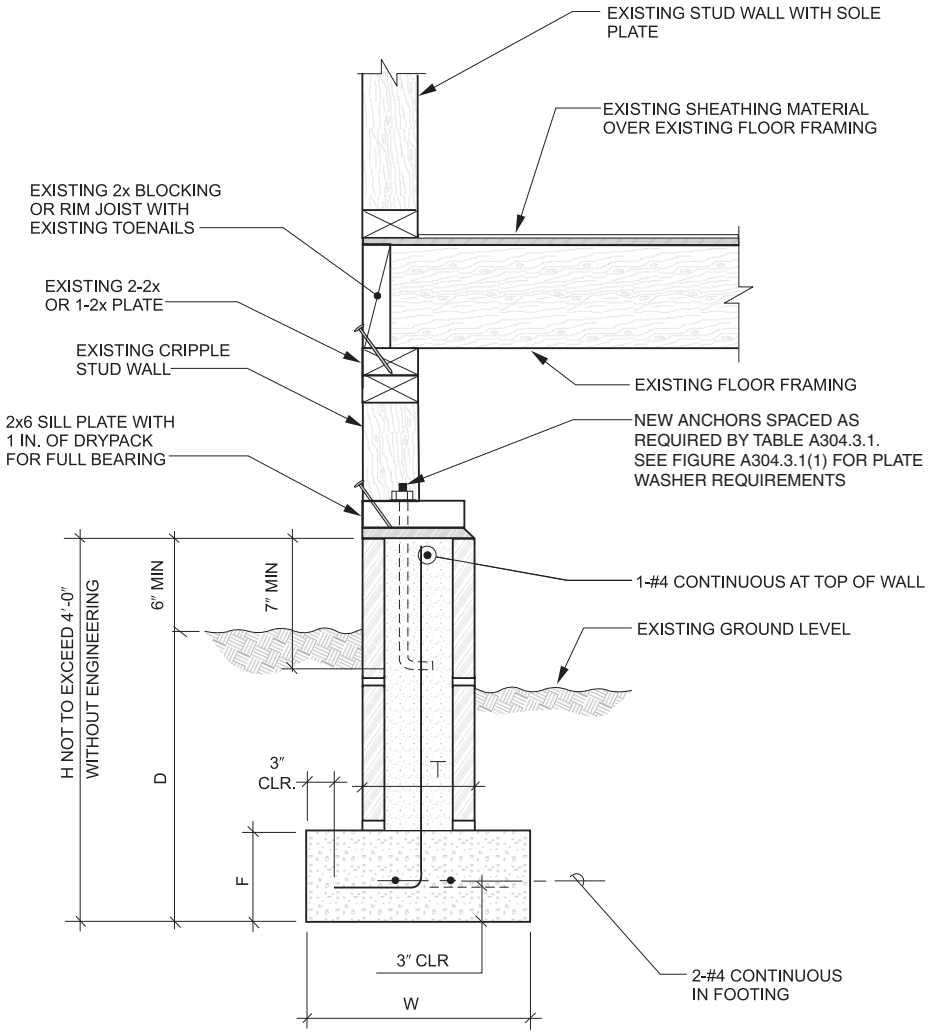

For SI: 1 inch = 25.4 mm, 1 foot = 304.8 mm.

[BS] FIGURE A304.2.3(2)
NEW MASONRY CONCRETE FOUNDATION

INTERNATIONAL CODE COUNCIL®
Copyright © 2019 ICC & NYSDOS. ALL RIGHTS RESERVED. Accessed by Lauren Gualdino (lgualdino@briarcliffmanor.org), (-) Order Number #100880972 on May 08, 2020 07:05 AM (PDT) pursuant to License Agreement with ICC & NYSDOS. No further reproduction, no

100880972

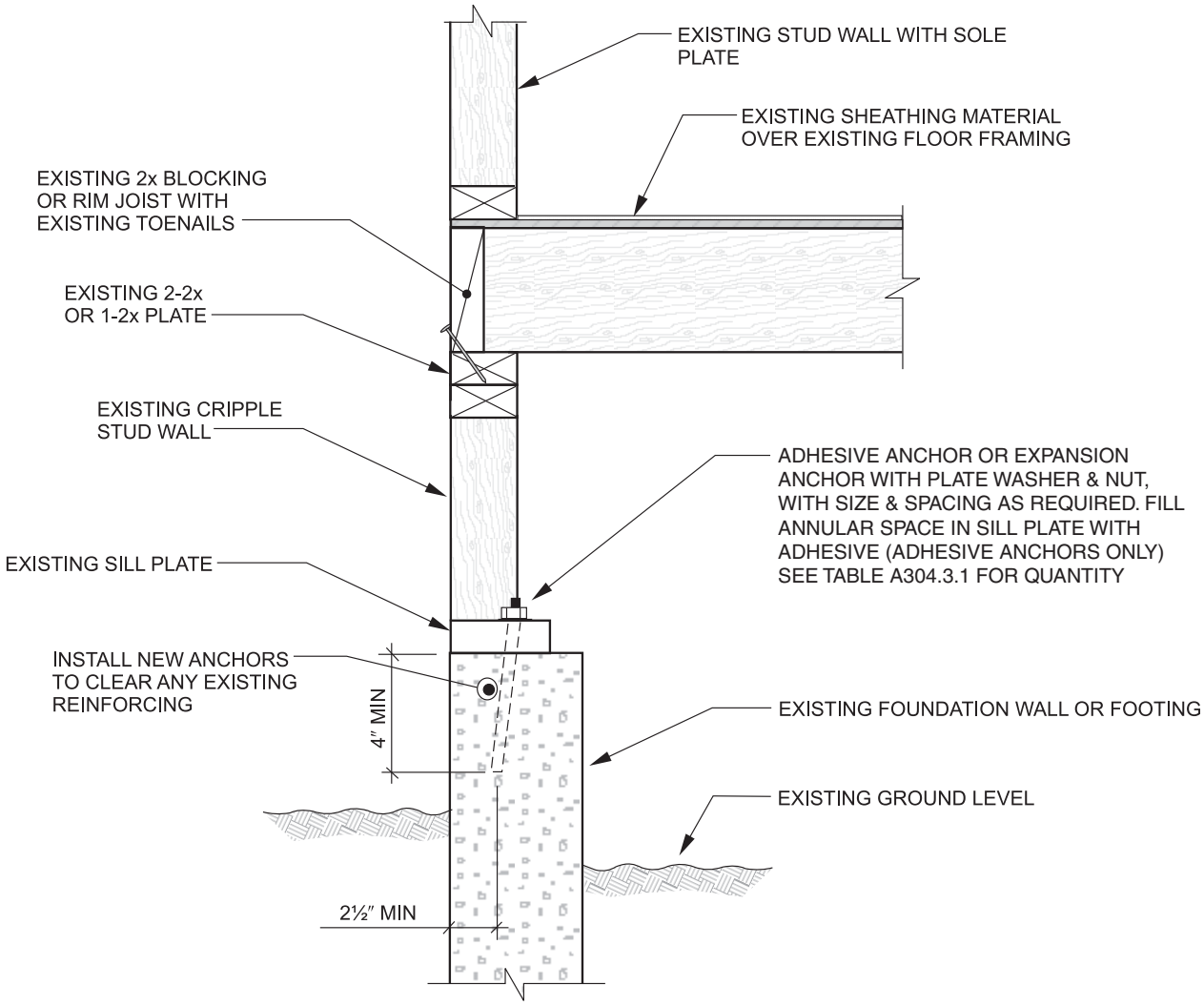

For SI: 1 inch = 25.4 mm.

a. Plate washers shall comply with the following:

$^{1}/_{2}$-inch anchor or bolt—3 inches × 3 inches × 0.229 inch minimum.

$^{5}/_{8}$-inch anchor or bolt—3 inches × 3 inches × 0.229 inch minimum.

A diagonal slot in the plate washer is permitted in accordance with Table A304.3.1, Note b.

b. See Figure A304.4.1(1) or A304.4.1(2) for cripple wall bracing.

[BS] FIGURE A304.3.1(1)
SILL PLATE BOLTING TO EXISTING FOUNDATION[a, b]

INTERNATIONAL CODE COUNCIL®
Copyright © 2019 ICC & NYSDOS. ALL RIGHTS RESERVED. Accessed by Lauren Gualdino (lgualdino@briarcliffmanor.org), (-) Order Number #100880972 on May 08, 2020 07:05 AM (PDT) pursuant to License Agreement with ICC & NYSDOS. No further reproduction, no

100880972

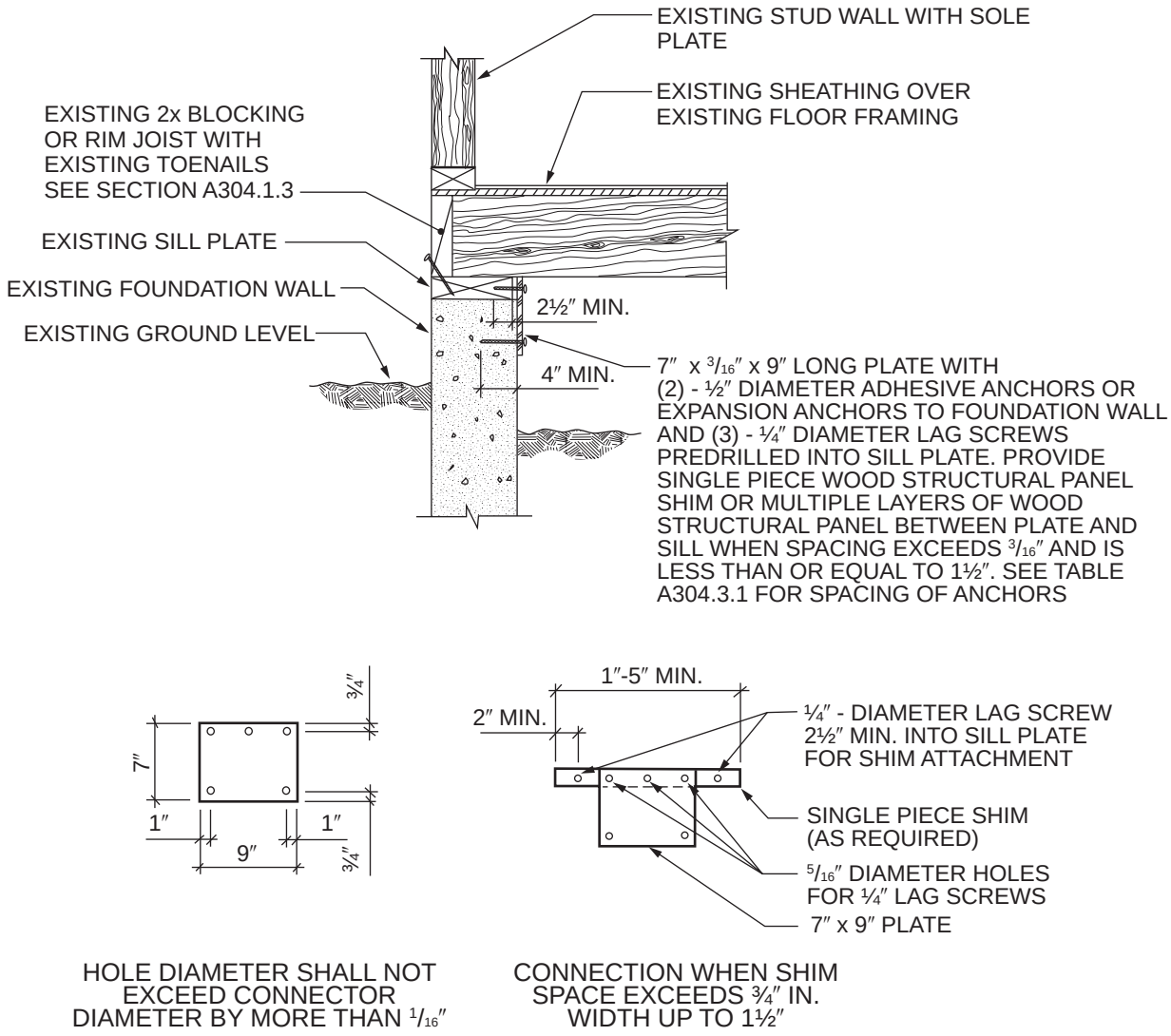

For SI: 1 inch = 25.4 mm, 1 foot = 304.8 mm.

a. If shim space exceeds $1^1/_2$ inches, alternative details will be required.

b. Where required, single piece shim shall be naturally durable wood or preservative-treated wood. If preservative-treated wood is used, it shall be isolated from the foundation system with a moisture barrier.

[BS] FIGURE A304.3.1(2)
ALTERNATIVE SILL PLATE ANCHORING IN EXISTING FOUNDATION—
WITHOUT CRIPPLE WALLS AND FLOOR FRAMING NOT PARALLEL TO FOUNDATIONS[a, b]

INTERNATIONAL CODE COUNCIL®
Copyright © 2019 ICC & NYSDOS. ALL RIGHTS RESERVED. Accessed by Lauren Gualdino (lgualdino@briarcliffmanor.org), (-) Order Number #100880972 on May 08, 2020 07:05 AM (PDT) pursuant to License Agreement with ICC & NYSDOS. No further reproduction, no

100880972

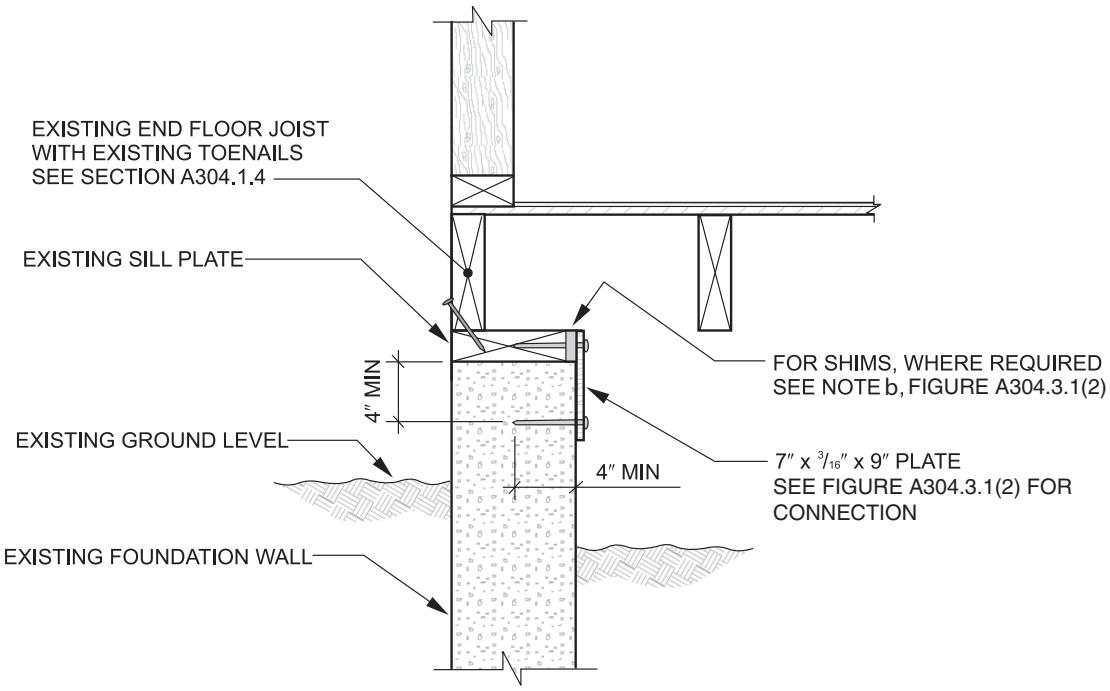

For SI: 1 inch = 25.4 mm.

[BS] FIGURE A304.3.1(3)
ALTERNATIVE SILL PLATE ANCHOR TO EXISTING FOUNDATION WITHOUT CRIPPLE WALL AND FLOOR FRAMING PARALLEL TO FOUNDATIONS

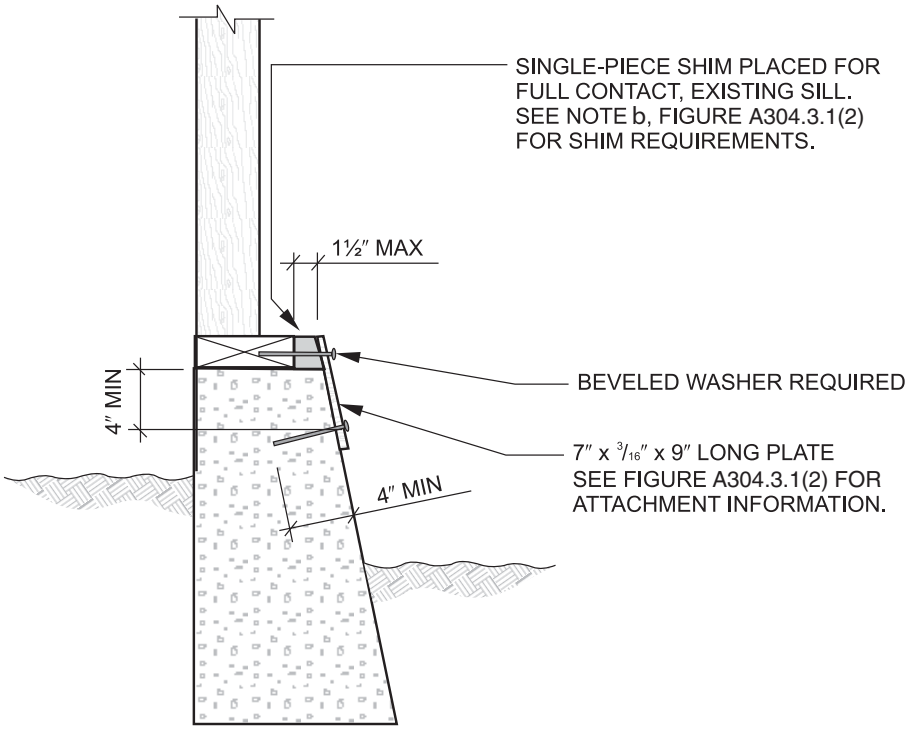

For SI: 1 inch = 25.4 mm.

[BS] FIGURE A304.3.1(4)
SILL PLATE ANCHORING TO EXISTING FOUNDATION—ALTERNATIVE CONNECTION FOR BATTERED FOOTING

INTERNATIONAL CODE COUNCIL®
Copyright © 2019 ICC & NYSDOS. ALL RIGHTS RESERVED. Accessed by Lauren Gualdino (lgualdino@briarcliffmanor.org), (-) Order Number #100880972 on May 08, 2020 07:05 AM (PDT) pursuant to License Agreement with ICC & NYSDOS. No further reproduction, no

100880972

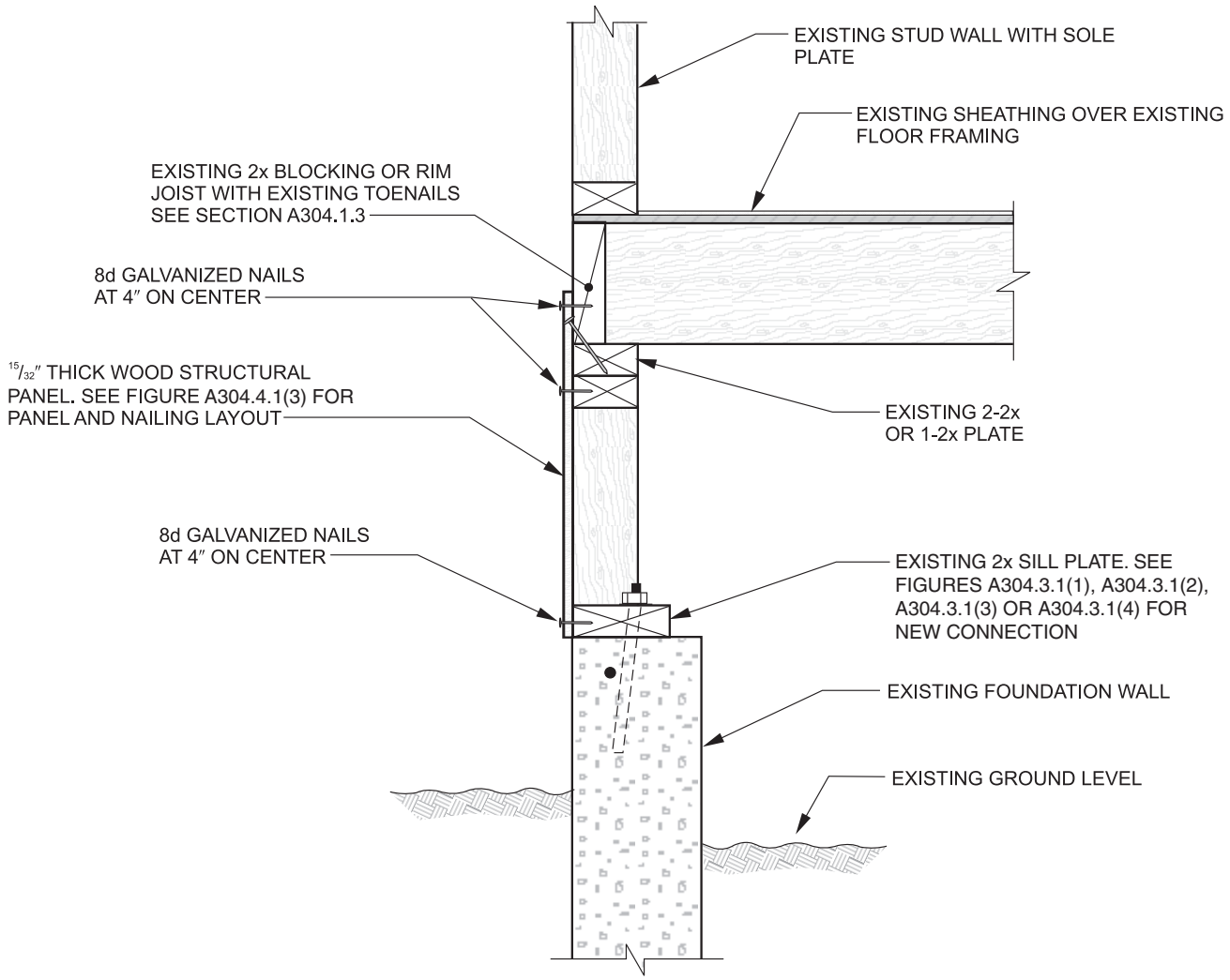

For SI: 1 inch = 25.4 mm.

NOTE: See Figure A304.3.1(1) for sill plate anchoring.

[BS] FIGURE A304.4.1(1)
CRIPPLE WALL BRACING WITH NEW WOOD STRUCTURAL PANEL ON EXTERIOR FACE OF CRIPPLE STUDS

INTERNATIONAL CODE COUNCIL®
Copyright © 2019 ICC & NYSDOS. ALL RIGHTS RESERVED. Accessed by Lauren Gualdino (lgualdino@briarcliffmanor.org), (-) Order Number #100880972 on May 08, 2020 07:05 AM (PDT) pursuant to License Agreement with ICC & NYSDOS. No further reproduction, no

100880972

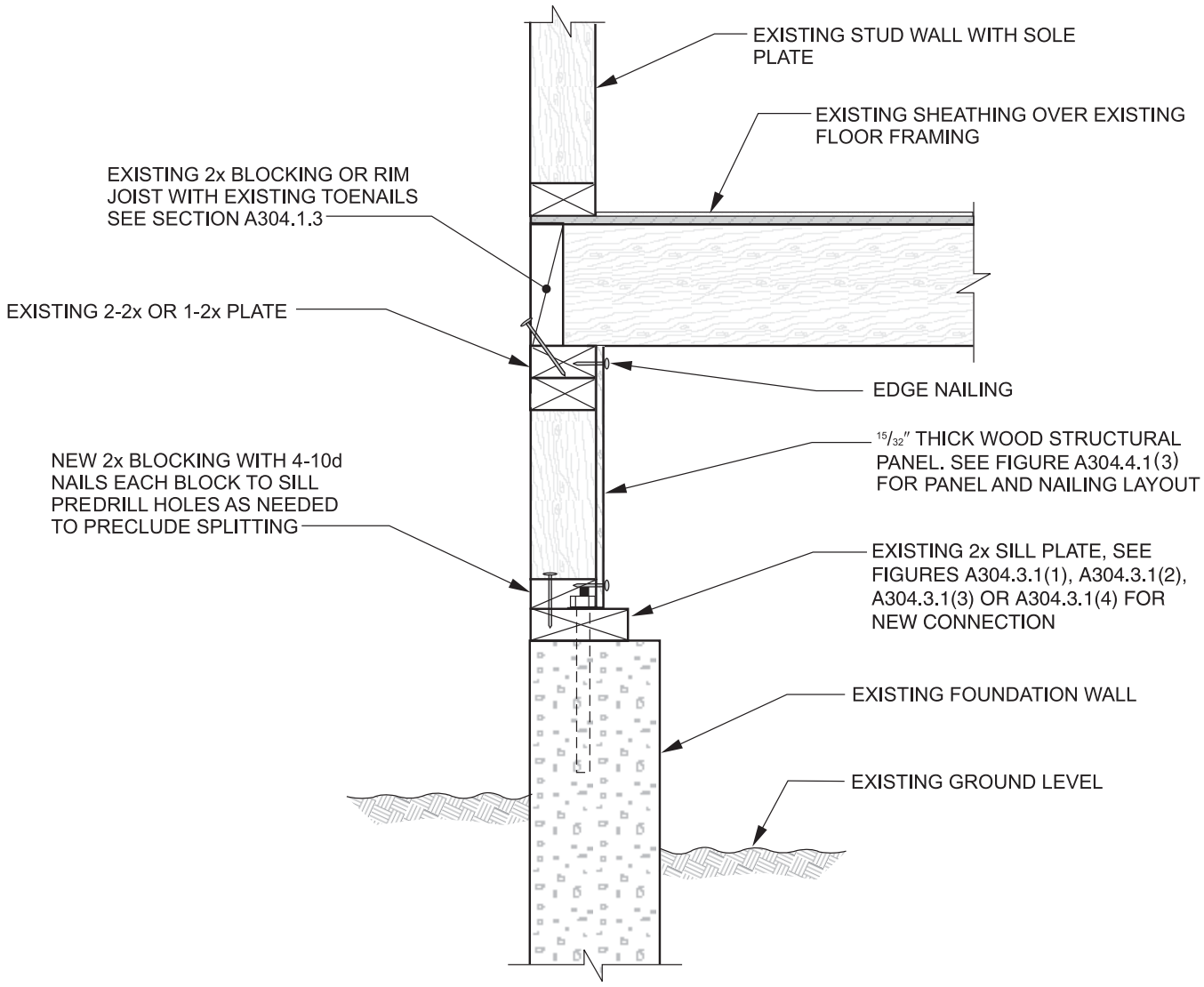

For SI: 1 inch = 25.4 mm.

[BS] FIGURE A304.4.1(2)
CRIPPLE WALL BRACING WITH WOOD STRUCTURAL PANEL ON INTERIOR FACE OF CRIPPLE STUDS

INTERNATIONAL CODE COUNCIL®
Copyright © 2019 ICC & NYSDOS. ALL RIGHTS RESERVED. Accessed by Lauren Gualdino (lgualdino@briarcliffmanor.org), (-) Order Number #100880972 on May 08, 2020 07:05 AM (PDT) pursuant to License Agreement with ICC & NYSDOS. No further reproduction, no

100880972

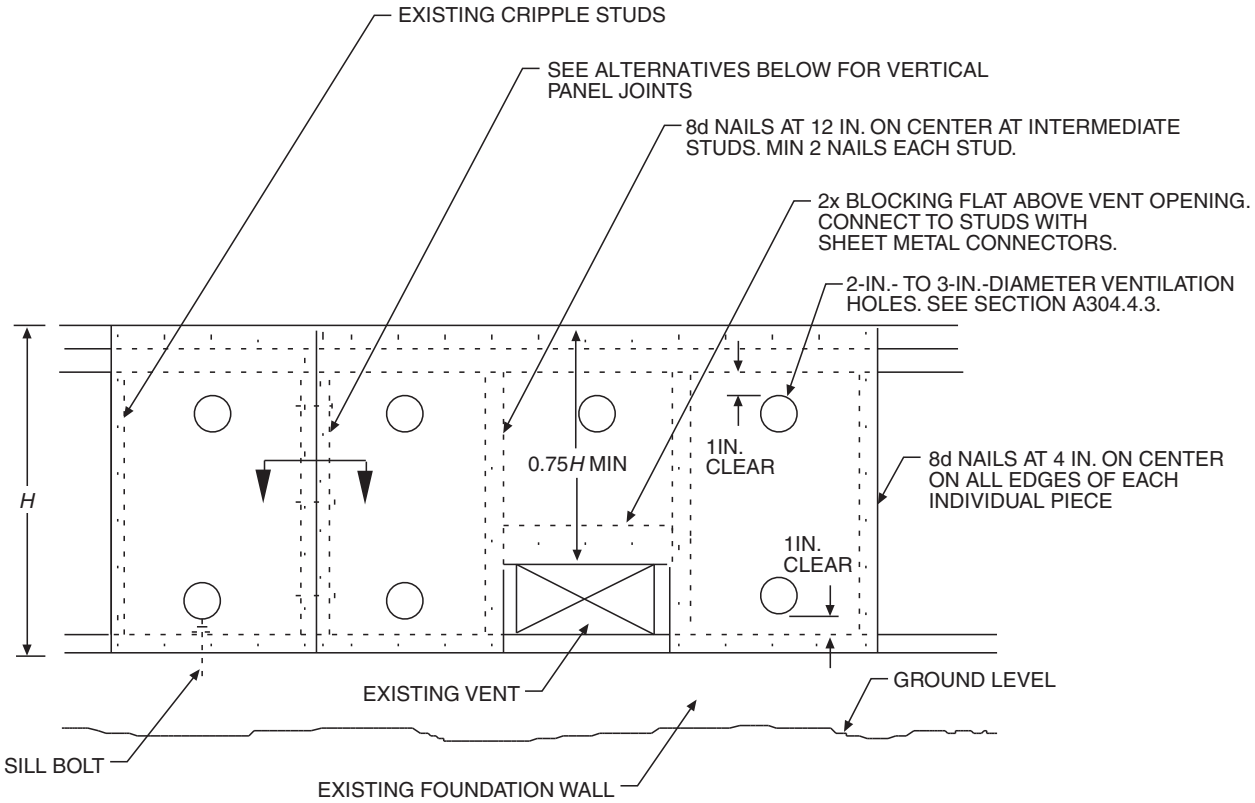

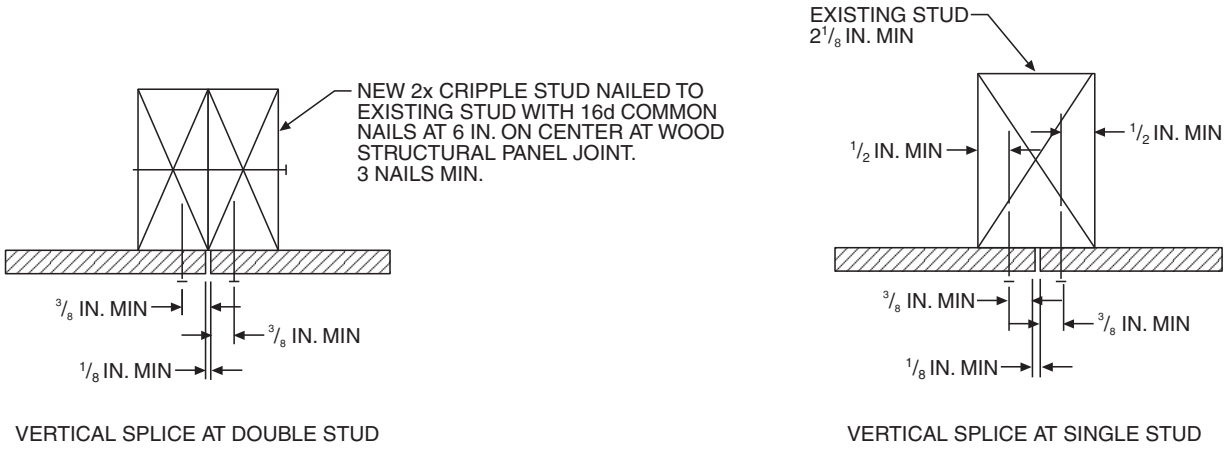

For SI: 1 inch = 25.4 mm.

[BS] FIGURE A304.4.1(3)
PARTIAL CRIPPLE STUD WALL ELEVATION

INTERNATIONAL CODE COUNCIL®
Copyright © 2019 ICC & NYSDOS. ALL RIGHTS RESERVED. Accessed by Lauren Gualdino (lgualdino@briarcliffmanor.org), (-) Order Number #100880972 on May 08, 2020 07:05 AM (PDT) pursuant to License Agreement with ICC & NYSDOS. No further reproduction, no

100880972

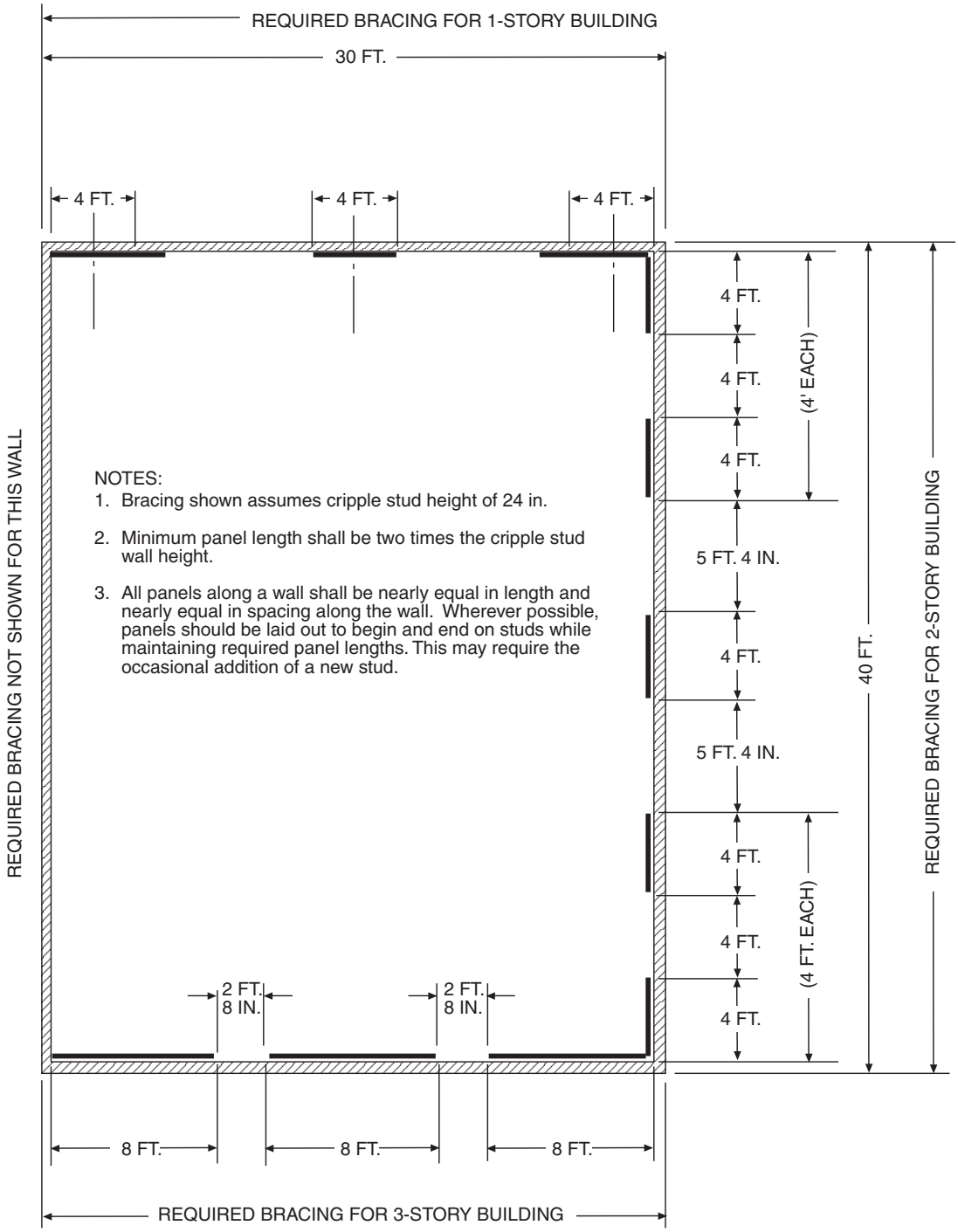

Bracing determination:
1-story building—each end and not less than 40% of wall length.[a]
Transverse wall—30 ft. × 0.40 = 12 ft. minimum panel length = 4 ft. 0 in.
2-story building—each end and not less than 50% of wall length.[a]
Longitudinal wall—40 ft. × 0.50 = 20 ft. 0 in. minimum of bracing.
3-story building—each end and not less than 80% of wall length.[a]
Transverse wall —30 ft. × 0.80 = 24 ft. 0 in. minimum of bracing.
[a]See Table A304.3.1 for buildings with both plaster walls and roofing exceeding 6 psf.

For SI: 1 inch = 25.4 mm, 1 foot = 304.8 mm, 1 pound per square foot = 42.88 N/m^2.

[BS] FIGURE A304.4.2
FLOOR PLAN-CRIPPLE WALL BRACING LAYOUT

INTERNATIONAL CODE COUNCIL®
Copyright © 2019 ICC & NYSDOS. ALL RIGHTS RESERVED. Accessed by Lauren Gualdino (lgualdino@briarcliffmanor.org), (-) Order Number #100880972 on May 08, 2020 07:05 AM (PDT) pursuant to License Agreement with ICC & NYSDOS. No further reproduction, no

100880972

CHAPTER A4

EARTHQUAKE RISK REDUCTION IN WOOD-FRAME RESIDENTIAL BUILDINGS WITH SOFT, WEAK OR OPEN FRONT WALLS

SECTION A401 GENERAL

[BS] A401.1 Purpose. The purpose of this chapter is to promote public welfare and safety by reducing the risk of death or injury as a result of the effects of earthquakes on existing wood-frame, multiple-unit residential buildings. The ground motions of past earthquakes have caused the loss of human life, personal injury and property damage in these types of buildings. This chapter creates minimum standards to strengthen the more vulnerable portions of these structures. Where fully followed, these minimum standards will improve the performance of these buildings but will not necessarily prevent all earthquake-related damage.

[BS] A401.2 Scope. The provisions of this chapter shall apply to all existing Occupancy Group R-1 and R-2 buildings of wood construction or portions thereof where the structure has a soft, weak, or open-front wall line, and there exists one or more stories above**.**

SECTION A402 DEFINITIONS

[BS] A402.1 Definitions. Notwithstanding the applicable definitions, symbols and notations in the building code, the following definitions shall apply for the purposes of this chapter:

[BS] ASPECT RATIO. The span-width ratio for horizontal diaphragms and the height-length ratio for shear walls.

[BS] GROUND FLOOR. Any floor whose elevation is immediately accessible from an adjacent grade by vehicles or pedestrians. The ground floor portion of the structure does not include any floor that is completely below adjacent grades.

[BS] NONCONFORMING STRUCTURAL MATERIALS. Wall bracing materials other than wood structural panels or diagonal sheathing.

[BS] OPEN-FRONT WALL LINE. An exterior wall line, without vertical elements of the lateral force-resisting system, that requires tributary seismic forces to be resisted by diaphragm rotation or excessive cantilever beyond parallel lines of shear walls. Diaphragms that cantilever more than 25 percent of the distance between lines of lateral force-resisting elements from which the diaphragm cantilevers shall be considered to be excessive. Exterior exit balconies of 6 feet (1829 mm) or less in width shall not be considered excessive cantilevers.

[BS] RETROFIT. An improvement of the lateral force-resisting system by *alteration* of existing structural elements or *addition* of new structural elements.

[BS] SOFT WALL LINE. A wall line whose lateral stiffness is less than that required by story drift limitations or deformation compatibility requirements of this chapter. In lieu of analysis, a soft wall line may be defined as a wall line in a story where the story stiffness is less than 70 percent of the story above for the direction under consideration.

[BS] STORY. A story as defined by the building code, including any basement or underfloor space of a building with cripple walls exceeding 4 feet (1219 mm) in height.

[BS] STORY STRENGTH. The total strength of all seismic-resisting elements sharing the same story shear in the direction under consideration.

[BS] WALL LINE. Any length of wall along a principal axis of the building used to provide resistance to lateral loads. Parallel wall lines separated by less than 4 feet (1219 mm) shall be considered to be one wall line for the distribution of loads.

[BS] WEAK WALL LINE. A wall line in a story where the story strength is less than 80 percent of the story above in the direction under consideration.

SECTION A403 ANALYSIS AND DESIGN

[BS] A403.1 General. Modifications required by the provisions in this chapter shall be designed in accordance with the *Building Code of New York State* provisions for new construction, except as modified by this chapter.

Exception: Buildings for which the prescriptive measures provided in Section A404 apply and are used.

Alteration of the existing lateral force-resisting system or vertical load-carrying system shall not reduce the strength or stiffness of the *existing structure*, unless the altered structure would remain in conformance to the building code and this chapter.

[BS] A403.2 Scope of analysis. This chapter requires the *alteration*, *repair*, replacement or *addition* of structural elements and their connections to meet the strength and stiffness requirements herein. The lateral load-path analysis shall include the resisting elements and connections from the wood diaphragm immediately above any soft, weak or open-front wall lines to the foundation soil interface or to the uppermost story of a podium structure comprised of steel, masonry, or concrete structural systems that supports the upper, wood-framed structure. Stories above the uppermost story with a soft, weak, or open-front wall line shall be considered in the analysis but need not be modified. The lateral load-path analysis for added structural elements shall include evaluation of the allowable soil-bearing and lateral pressures in accordance with the building code. Where any portion of a building

INTERNATIONAL CODE COUNCIL®
Copyright © 2019 ICC & NYSDOS. ALL RIGHTS RESERVED. Accessed by Lauren Gualdino (lgualdino@briarcliffmanor.org), (-) Order Number #100880972 on May 08, 2020 07:05 AM (PDT) pursuant to License Agreement with ICC & NYSDOS. No further reproduction, no

100880972

within the scope of this chapter is constructed on or into a slope steeper than one unit vertical in three units horizontal (33-percent slope), the lateral force-resisting system at and below the base level diaphragm shall be analyzed for the effects of concentrated lateral forces at the base caused by this hillside condition.

Exception: Where an open-front, weak or soft wall line exists because of parking at the ground floor of a two-story building and the parking area is less than 20 percent of the ground floor area, then only the wall lines in the open, weak or soft directions of the enclosed parking area need comply with the provisions of this chapter.

[BS] A403.3 Design base shear and design parameters. The design base shear in a given direction shall be permitted to be 75 percent of the value required for similar new construction in accordance with the building code. The value of R used in the design of the strengthening of any story shall not exceed the lowest value of R used in the same direction at any story above. The system overstrength factor, Ω_0, and the deflection amplification factor, C_d, shall be not less than the largest respective value corresponding to the R factor being used in the direction under consideration.

Exceptions:

1. For structures assigned to Seismic Design Category B, values of R, Ω_0 and C_d shall be permitted to be based on the seismic force-resisting system being used to achieve the required strengthening.
2. For structures assigned to Seismic Design Category C or D, values of R, Ω_0 and C_d shall be permitted to be based on the seismic force-resisting system being used to achieve the required strengthening, provided that when the strengthening is complete, the strengthened structure will not have an extreme weak story irregularity defined as Type 5b in ASCE 7, Table 12.3-2.
3. For structures assigned to Seismic Design Category E, values of R, Ω_0 and C_d shall be permitted to be based on the seismic force-resisting system being used to achieve the required strengthening, provided that when the strengthening is complete, the strengthened structure will not have an extreme soft story, a weak story, or an extreme weak story irregularity defined, respectively, as Types 1b, 5a and 5b in ASCE 7, Table 12.3-2.

[BS] A403.4 Story drift limitations. The calculated story drift for each retrofitted story shall not exceed the allowable deformation compatible with all vertical load-resisting elements and 0.025 times the story height. The calculated story drift shall not be reduced by the effects of horizontal diaphragm stiffness but shall be increased where these effects produce rotation. Drift calculations shall be in accordance with the building code.

[BS] A403.4.1 Pole structures. The effects of rotation and soil stiffness shall be included in the calculated story drift where lateral loads are resisted by vertical elements whose required depth of embedment is determined by pole formulas. The coefficient of subgrade reaction used in deflection calculations shall be based on a geotechnical investigation conducted in accordance with the building code.

[BS] A403.5 Deformation compatibility and P Δ effects. The requirements of the building code shall apply, except as modified herein. Structural framing elements and their connections not required by design to be part of the lateral force-resisting system shall be designed and detailed to be adequate to maintain support of expected gravity loads when subjected to the expected deformations caused by seismic forces. Increased demand caused by P Δ effects and story sidesway stability shall be considered in retrofit stories that rely on the strength and stiffness of cantilever columns for lateral resistance.

[BS] A403.6 Ties and continuity. All parts of the structure included in the scope of Section A403.2 shall be interconnected as required by the building code.

[BS] A403.7 Collector elements. Collector elements shall be provided that can transfer the seismic forces originating in other portions of the building to the elements within the scope of Section A403.2 that provide resistance to those forces.

[BS] A403.8 Horizontal diaphragms. The strength of an existing horizontal diaphragm sheathed with wood structural panels or diagonal sheathing need not be investigated unless the diaphragm is required to transfer lateral forces from vertical elements of the seismic force-resisting system above the diaphragm to elements below the diaphragm because of an offset in placement of the elements.

Rotational effects shall be accounted for where asymmetric wall stiffness increases shear demands.

[BS] A403.9 Wood-framed shear walls. Wood-framed shear walls shall have strength and stiffness sufficient to resist the seismic loads and shall conform to the requirements of this section.

[BS] A403.9.1 Gypsum or cement plaster products. Gypsum or cement plaster products shall not be used to provide lateral resistance in a soft or weak story or in a story with an open-front wall line, whether or not new elements are added to mitigate the soft, weak or open-front condition.

[BS] A403.9.2 Wood structural panels.

[BS] A403.9.2.1 Drift limit. Wood structural panel shear walls shall meet the story drift limitation of Section A403.4. Conformance to the story drift limitation shall be determined by *approved* testing or calculation. Individual shear panels shall be permitted to exceed the maximum aspect ratio, provided that the allowable story drift and allowable shear capacities are not exceeded.

[BS] A403.9.2.2 Openings. Shear walls are permitted to be designed for continuity around openings in accordance with the building code. Blocking and steel strapping shall be provided at corners of the openings to transfer forces from discontinuous boundary elements into adjoining panel elements. Alternatively, perforated shear wall provisions of the building code are permitted to be used.

INTERNATIONAL CODE COUNCIL®
Copyright © 2019 ICC & NYSDOS. ALL RIGHTS RESERVED. Accessed by Lauren Gualdino (lgualdino@briarcliffmanor.org), (-) Order Number #100880972 on May 08, 2020 07:05 AM (PDT) pursuant to License Agreement with ICC & NYSDOS. No further reproduction, no

100880972

[BS] A403.9.3 Hold-down connectors.

[BS] A403.9.3.1 Expansion anchors in tension. Expansion anchors that provide tension strength by friction resistance shall not be used to connect hold-down devices to existing concrete or masonry elements.

[BS] A403.9.3.2 Required depth of embedment. The required depth of embedment or edge distance for the anchor used in the hold-down connector shall be provided in the concrete or masonry below any plain concrete slab unless satisfactory evidence is submitted to the *building official* that shows that the concrete slab and footings are of monolithic construction.

SECTION A404
PRESCRIPTIVE MEASURES FOR WEAK STORY

[BS] A404.1 Limitation. These prescriptive measures shall apply only to two-story buildings and only where deemed appropriate by the *building official*. These prescriptive measures rely on rotation of the second floor diaphragm to distribute the seismic load between the side and rear walls of the ground floor open area. In the absence of an existing floor diaphragm of wood structural panel or diagonal sheathing, a new wood structural panel diaphragm of minimum thickness of $^3/_4$ inch (19.1 mm) and with 10d common nails at 6 inches (152 mm) on center shall be applied.

[BS] A404.1.1 Additional conditions. To qualify for these prescriptive measures, the following additional conditions need to be satisfied by the retrofitted structure:

1. Diaphragm aspect ratio *L/W* is less than 0.67, where *W* is the diaphragm dimension parallel to the soft, weak or open-front wall line and *L* is the distance in the orthogonal direction between that wall line and the rear wall of the ground floor open area.
2. Minimum length of side shear walls = 20 feet (6096 mm).
3. Minimum length of rear shear wall = three-fourths of the total rear wall length.
4. Plan or vertical irregularities shall not be other than a soft, weak or open-front wall line.
5. Roofing weight less than or equal to 5 pounds per square foot (240 N/m^2).
6. Aspect ratio of the full second floor diaphragm meets the requirements of the building code for new construction.

[BS] A404.2 Minimum required retrofit.

[BS] A404.2.1 Anchor size and spacing. The anchor size and spacing shall be not less than $^3/_4$ inch (19.1 mm) in diameter at 32 inches (813 mm) on center. Where existing anchors are inadequate, supplemental or alternative *approved* connectors (such as new steel plates bolted to the side of the foundation and nailed to the sill) shall be used.

[BS] A404.2.2 Connection to floor above. Shear wall top plates shall be connected to blocking or rim joist at upper floor with not less than 18-gage galvanized steel angle clips $4^1/_2$ inches (114 mm) long with 12-8d nails spaced not farther than 16 inches (406 mm) on center, or by equivalent shear transfer methods.

[BS] A404.2.3 Shear wall sheathing. The shear wall sheathing shall be not less than $^{15}/_{32}$-inch (11.9 mm), 5-Ply Structural I with 10d nails at 4 inches (102 mm) on center at edges and 12 inches (305 mm) on center at field; blocked all edges with 3 by 4 board or larger. Where existing sill plates are less than 3-by thick, place flat 2-by on top of sill between studs, with flat 18-gage galvanized steel clips $4^1/_2$ inches (114 mm) long with 12-8d nails or $^3/_8$-inch-diameter (9.5 mm) lags through blocking for shear transfer to sill plate. Stagger nailing from wall sheathing between existing sill and new blocking. Anchor new blocking to foundation as specified in this section.

[BS] A404.2.4 Shear wall hold-downs. Shear walls shall be provided with hold-down anchors at each end. Two hold-down anchors are required at intersecting corners. Hold-downs shall be *approved* connectors with a minimum $^5/_8$-inch-diameter (15.9 mm) threaded rod or other *approved* anchor with a minimum allowable load of 4,000 pounds (17.8 kN). Anchor embedment in concrete shall be not less than 5 inches (127 mm). Tie-rod systems shall be not less than $^5/_8$ inch (15.9 mm) in diameter unless using high-strength cable. High-strength cable elongation shall not exceed $^5/_8$ inch (15.9 mm) under a 4,000 pound (17.8 kN) axial load.

SECTION A405
MATERIALS OF CONSTRUCTION

[BS] A405.1 New materials. New materials shall meet the requirements of the *Building Code of New York State*, except where allowed by this chapter.

[BS] A405.2 Allowable foundation and lateral pressures. The use of default values from the building code for continuous and isolated concrete spread footings shall be permitted. For soil that supports embedded vertical elements, Section A403.4.1 shall apply.

[BS] A405.3 Existing materials. The physical condition, strengths, and stiffnesses of existing building materials shall be taken into account in any analysis required by this chapter. The verification of existing materials conditions and their conformance to these requirements shall be made by physical observation, material testing or record drawings as determined by the registered design professional subject to the approval of the *building official*.

[BS] A405.3.1 Wood-structural-panel shear walls.

[BS] A405.3.1.1 Existing nails. Where the required calculations rely on design values for common nails or surfaced dry lumber, their use in construction shall be verified by exposure.

[BS] A405.3.1.2 Existing plywood. Where verification of the existing plywood is by use of record drawings alone, plywood shall be assumed to be of three plies.

[BS] A405.3.2 Existing wood framing. Wood framing is permitted to use the design stresses specified in the building code under which the building was constructed or other stress criteria *approved* by the *building official*.

INTERNATIONAL CODE COUNCIL®
Copyright © 2019 ICC & NYSDOS. ALL RIGHTS RESERVED. Accessed by Lauren Gualdino (lgualdino@briarcliffmanor.org), (-) Order Number #100880972 on May 08, 2020 07:05 AM (PDT) pursuant to License Agreement with ICC & NYSDOS. No further reproduction, no

100880972

[BS] A405.3.3 Existing structural steel. All existing structural steel shall be permitted to be assumed to comply with ASTM A36. Existing pipe or tube columns shall be assumed to be of minimum wall thickness unless verified by testing or exposure.

[BS] A405.3.4 Existing concrete. All existing concrete footings shall be permitted to be assumed to be plain concrete with a compressive strength of 2,000 pounds per square inch (13.8 MPa). Existing concrete compressive strength taken greater than 2,000 pounds per square inch (13.8 MPa) shall be verified by testing, record drawings or department records.

[BS] A405.3.5 Existing sill plate anchorage. The analysis of existing cast-in-place anchors shall be permitted to assume proper anchor embedment for purposes of evaluating shear resistance to lateral loads.

SECTION A406
INFORMATION REQUIRED TO BE ON THE PLANS

[BS] A406.1 General. The plans shall show all information necessary for plan review and for construction and shall accurately reflect the results of the engineering investigation and design. The plans shall contain a note that states that this retrofit was designed in compliance with the criteria of this chapter.

[BS] A406.2 Existing construction. The plans shall show existing diaphragm and shear wall sheathing and framing materials; fastener type and spacing; diaphragm and shear wall connections; continuity ties; collector elements; and the portion of the existing materials that needs verification during construction.

[BS] A406.3 New construction.

[BS] A406.3.1 Foundation plan elements. The foundation plan shall include the size, type, location and spacing of all anchor bolts with the required depth of embedment, edge and end distance; the location and size of all shear walls and all columns for braced frames or moment frames; referenced details for the connection of shear walls, braced frames or moment-resisting frames to their footing; and referenced sections for any grade beams and footings.

[BS] A406.3.2 Framing plan elements. The framing plan shall include the length, location and material of shear walls; the location and material of frames; references on details for the column-to-beam connectors, beam-to-wall connections and shear transfers at floor and roof diaphragms; and the required nailing and length for wall top plate splices.

[BS] A406.3.3 Shear wall schedule, notes and details. Shear walls shall have a referenced schedule on the plans that includes the correct shear wall capacity in pounds per foot (N/m); the required fastener type, length, gage and head size; and a complete specification for the sheathing material and its thickness. The schedule shall also show the required location of 3-inch (76 mm) nominal or two 2-inch (51 mm) nominal edge members; the spacing of shear transfer elements such as framing anchors or added sill plate nails; the required hold-down with its bolt, screw or nail sizes; and the dimensions, lumber grade and species of the attached framing member.

Notes shall show required edge distance for fasteners on structural wood panels and framing members; required flush nailing at the plywood surface; limits of mechanical penetrations; and the sill plate material assumed in the design. The limits of mechanical penetrations shall be detailed showing the maximum notching and drilled hole sizes.

[BS] A406.3.4 General notes. General notes shall show the requirements for material testing, special inspection and structural observation.

SECTION A407
QUALITY CONTROL

[BS] A407.1 Structural observation, testing and inspection. Structural observation, in accordance with Section 1709 of the *Building Code of New York State*, shall be required for all structures in which seismic retrofit is being performed in accordance with this chapter. Structural observation shall include visual observation of work for conformance to the *approved* construction documents and confirmation of existing conditions assumed during design.

Structural testing and inspection for new construction materials shall be in accordance with the building code, except as modified by this chapter.

INTERNATIONAL CODE COUNCIL®
Copyright © 2019 ICC & NYSDOS. ALL RIGHTS RESERVED. Accessed by Lauren Gualdino (lgualdino@briarcliffmanor.org), (-) Order Number #100880972 on May 08, 2020 07:05 AM (PDT) pursuant to License Agreement with ICC & NYSDOS. No further reproduction, no

100880972

CHAPTER A5
REFERENCED STANDARDS

** Denotes standards that are incorporated by reference into NYCRR Part 1227.*

ASCE/SEI

American Society of Civil Engineers
Structural Engineering Institute
1801 Alexander Bell Drive
Reston, VA 20191-4400

7—16: Minimum Design Loads for Buildings and Other Structures with Supplement No. 1
A104, A403.3

ASTM

ASTM International
100 Barr Harbor Drive, P.O. Box C700
West Conshohocken, PA 19428-2959

A36/A36M—14: Specification for Carbon Structural Steel
A405.3.3

A653/A653M—15: Standard Specification for Steel Sheet, Zinc Coated (Galvanized) or Zinc-Iron Alloy-Coated (Galvannealed) by Hot-Dip Process
A304.2.6

B695—04(2009): Standard Specification for Coating of Zinc Mechanically Deposited on Iron And Steel
A304.2.6

C34—13: Specification for Structural Clay Load-Bearing Wall Tile
A106.2.2.2

C140/C140M—15: Standard Test Methods for Sampling and Testing Concrete Masonry Units and Related Units
A106.2.2.2

C496—96/C496M—11: Standard Test Method for Splitting Tensile Strength of Cylindrical Concrete Specimens
A104, A106.2.3.2

C1531—15: Standard Test Methods for In Situ Measurement of Masonry Mortar Joint Shear Strength Index
A106.2.3.1

E488/E488M—15: Standard Test Methods for Strength of Anchors in Concrete and Masonry Elements
A107.5.3

E519/E519M—2010: Standard Test Method for Diagonal Tension (Shear) in Masonry Assemblages
A104, A106.3.3.2

ICC

International Code Council
500 New Jersey Avenue, NW
6th Floor
Washington, DC 20001

***BCNYS—20: Building Code of New York State**
A102.2, A108.2, A202.1, A203, A206.3, A206.9, A403.1, A405.1, A407.1

BNBC—99: **BOCA National Building Code®**
A202

IBC—00: International Building Code®
A202.1

IBC—03: International Building Code®
A202.1

IBC—06: International Building Code®
A202.1

INTERNATIONAL CODE COUNCIL®
Copyright © 2019 ICC & NYSDOS. ALL RIGHTS RESERVED. Accessed by Lauren Gualdino (lgualdino@briarcliffmanor.org), (-) Order Number #100880972 on May 08, 2020 07:05 AM (PDT) pursuant to License Agreement with ICC & NYSDOS. No further reproduction, no

100880972

ICC—continued

IBC—09: International Building Code®
A202.1

IBC—12: International Building Code®
A202.1

IBC—15: International Building Code®
A202.1

SBC—99: Standard Building Code®
A202

UBC—97: Uniform Building Code®
A202

INTERNATIONAL CODE COUNCIL®
Copyright © 2019 ICC & NYSDOS. ALL RIGHTS RESERVED. Accessed by Lauren Gualdino (lgualdino@briarcliffmanor.org), (-) Order Number #100880972 on May 08, 2020 07:05 AM (PDT) pursuant to License Agreement with ICC & NYSDOS. No further reproduction, no

100880972

APPENDIX B

SUPPLEMENTARY ACCESSIBILITY REQUIREMENTS FOR EXISTING BUILDINGS AND FACILITIES

This appendix is informative and is not part of this code.

SECTION B101 QUALIFIED HISTORICAL BUILDINGS AND FACILITIES

[BE] B101.1 General. Qualified *historic buildings* and facilities shall comply with Sections B101.2 through B101.5.

[BE] B101.2 Qualified historic buildings and facilities. These procedures shall apply to buildings and facilities designated as historic structures that undergo *alterations* or a *change of occupancy*.

[BE] B101.3 Qualified historic buildings and facilities subject to Section 106 of the National Historic Preservation Act. Where an *alteration* or *change of occupancy* is undertaken to a qualified *historic building* or facility that is subject to Section 106 of the National Historic Preservation Act, the federal agency with jurisdiction over the undertaking shall follow the Section 106 process. Where the state historic preservation officer or Advisory Council on Historic Preservation determines that compliance with the requirements for accessible routes, ramps, entrances, or toilet facilities would threaten or destroy the historic significance of the building or facility, the alternative requirements of Section 305.9 for that element are permitted.

[BE] B101.4 Qualified historic buildings and facilities not subject to Section 106 of the National Historic Preservation Act. Where an *alteration* or *change of occupancy* is undertaken to a qualified *historic building* or facility that is not subject to Section 106 of the National Historic Preservation Act, and the entity undertaking the *alterations* believes that compliance with the requirements for accessible routes, ramps, entrances, or toilet facilities would threaten or destroy the historic significance of the building or facility, the entity shall consult with the state historic preservation officer. Where the state historic preservation officer determines that compliance with the accessibility requirements for accessible routes, ramps, entrances, or toilet facilities would threaten or destroy the historical significance of the building or facility, the alternative requirements of Section 305.9 for that element are permitted.

[BE] B101.4.1 Consultation with interested persons. Interested persons shall be invited to participate in the consultation process, including state or local accessibility officials, individuals with disabilities, and organizations representing individuals with disabilities.

[BE] B101.4.2 Certified local government historic preservation programs. Where the state historic preservation officer has delegated the consultation responsibility for purposes of this section to a local government historic preservation program that has been certified in accordance with Section 101 of the National Historic Preservation Act of 1966 [(16 U.S.C. 470a(c)] and implementing regulations (36 CFR 61.5), the responsibility shall be permitted to be carried out by the appropriate local government body or official.

[BE] B101.5 Displays. In qualified *historic buildings* and facilities where alternative requirements of Section 1105 are permitted, displays and written information shall be located where they can be seen by a seated person. Exhibits and signs displayed horizontally shall be 44 inches (1120 mm) maximum above the floor.

SECTION B102 FIXED TRANSPORTATION FACILITIES AND STATIONS

[BE] B102.1 General. Existing fixed transportation facilities and stations shall comply with Section B102.2.

[BE] B102.2 Existing facilities—key stations. Rapid rail, light rail, commuter rail, intercity rail, high-speed rail and other fixed guideway systems, altered stations, and intercity rail and key stations, as defined under criteria established by the Department of Transportation in Subpart C of 49 CFR Part 37, shall comply with Sections B102.2.1 through B102.2.3.

[BE] B102.2.1 Accessible route. One accessible route, or more, from an accessible entrance to those areas necessary for use of the transportation system shall be provided. The accessible route shall include the features specified in Section E109.2 of the *International Building Code*, except that escalators shall comply with *International Building Code* Section 3004.2.2. Where technical unfeasibility in existing stations requires the accessible route to lead from the public way to a paid area of the transit system, an accessible fare collection machine complying with *International Building Code* Section E109.2.3 shall be provided along such accessible route.

[BE] B102.2.2 Platform and vehicle floor coordination. Station platforms shall be positioned to coordinate with vehicles in accordance with applicable provisions of 36 CFR Part 1192. Low-level platforms shall be 8 inches (250 mm) minimum above top of rail.

Exception: Where vehicles are boarded from sidewalks or street-level, low-level platforms shall be permitted to be less than 8 inches (250 mm).

[BE] B102.2.3 Direct connections. New direct connections to commercial, retail, or residential facilities shall, to the maximum extent feasible, have an accessible route

INTERNATIONAL CODE COUNCIL®
Copyright © 2019 ICC & NYSDOS. ALL RIGHTS RESERVED. Accessed by Lauren Gualdino (lgualdino@briarcliffmanor.org), (-) Order Number #100880972 on May 08, 2020 07:05 AM (PDT) pursuant to License Agreement with ICC & NYSDOS. No further reproduction, no

100880972

complying with Section 305.7 from the point of connection to boarding platforms and transportation system elements used by the public. Any elements provided to facilitate future direct connections shall be on an accessible route connecting boarding platforms and transportation system elements used by the public.

SECTION B103
DWELLING UNITS AND SLEEPING UNITS

[BE] B103.1 Communication features. Where dwelling units and sleeping units are altered or added, the requirements of Section E104.3 of the *International Building Code* shall apply only to the units being altered or added until the number of units with accessible communication features complies with the minimum number required for new construction.

SECTION B104
REFERENCED STANDARDS

Y3.H626 2P	National Historic Preservation J101.2, 43/933 Act of 1966 as amended J101.3, 3rd Edition Washington, DC: J101.3.2 US Government Printing Office, 1993	B101.3, B101.4, B101.4.2
IBC—18	*International Building Code*®. Washington, DC: International Code Council, 2017	B102.2.1, B103.1
36 CFR Part 1192	Americans with Disabilities Act Guidelines for Transportation Vehicles—Rapid Rail Vehicles and Systems	B102.2.2
49 CFR Part 37 Subpart C	Alteration of Transportation Facilities by Public Entities Department of Transportation 400 7th Street SW, Room 8102 Washington, DC 20590-0001	B102.2

INTERNATIONAL CODE COUNCIL®
Copyright © 2019 ICC & NYSDOS. ALL RIGHTS RESERVED. Accessed by Lauren Gualdino (lgualdino@briarcliffmanor.org), (-) Order Number #100880972 on May 08, 2020 07:05 AM (PDT) pursuant to License Agreement with ICC & NYSDOS. No further reproduction, no

100880972

APPENDIX C: Guidelines for the Wind Retrofit of Existing Buildings

This appendix is informative and is not part of this code.

CHAPTER C1

GABLE END RETROFIT FOR HIGH-WIND AREAS

SECTION C101 GENERAL

[BS] C101.1 Purpose. This chapter provides prescriptive methods for partial structural retrofit of an *existing building* to increase its resistance to out-of-plane wind loads. It is intended for voluntary use and for reference by mitigation programs. The provisions of this chapter do not necessarily satisfy requirements for new construction. Unless specifically cited, the provisions of this chapter do not necessarily satisfy requirements for structural improvements triggered by *addition, alteration, repair, change of occupancy*, building relocation or other circumstances.

[BS] C101.2 Eligible buildings and gable end walls. The provisions of this chapter are applicable only to buildings that meet the following eligibility requirements:

1. The building is not more than three stories tall, from adjacent grade to the bottom plate of each gable end wall being retrofitted with this chapter.
2. The building is classified as Occupancy Group R3 or is within the scope of the *International Residential Code*.
3. The structure includes one or more wood-framed gable end walls, either conventionally framed or metal-plate-connected.

In addition, the provisions of this chapter are applicable only to gable end walls that meet the following eligibility requirements:

4. Each gable end wall has or shall be provided with studs or vertical webs spaced 24 inches (610 mm) on center maximum.
5. Each gable end wall has a maximum height of 16 feet (4877 mm).

[BS] C101.3 Compliance. Eligible gable end walls in eligible buildings may be retrofitted in accordance with this chapter. Other modifications required for compliance with this chapter shall be designed and constructed in accordance with the *International Building Code* or *International Residential Code* provisions for new construction, except as specifically provided for by this chapter.

SECTION C102 DEFINITIONS

[BS] C102.1 Definitions. *The following words and terms shall, for the purposes of this chapter, have the meanings shown herein.*

[BS] ANCHOR BLOCK. A piece of lumber secured to horizontal braces and filling the gap between existing framing members for the purpose of restraining horizontal braces from movement perpendicular to the framing members.

[BS] COMPRESSION BLOCK. A piece of lumber used to restrain in the compression mode (force directed towards the interior of the attic) an existing or retrofit stud. It is attached to a horizontal brace and bears directly against the existing or retrofit stud.

[BS] CONVENTIONALLY FRAMED GABLE END. A gable end framed with studs whose faces are perpendicular to the gable end wall.

[BS] GABLE END FRAME. A factory or site-fabricated frame, installed as a complete assembly that incorporates vertical webs with their faces parallel to the plane of the frame.

[BS] HORIZONTAL BRACE. A piece of lumber used to restrain both compression and tension loads applied by a retrofit stud. It is typically installed horizontally on the top of attic floor framing members (truss bottom chords or ceiling joists) or on the bottom of pitched roof framing members (truss top chord or rafters).

[BS] HURRICANE TIES. Manufactured metal connectors designed to provide uplift and lateral restraint for roof framing members.

[BS] NAIL PLATE. A manufactured metal plate made of galvanized steel with factory-punched holes for fasteners. A nail plate may have the geometry of a strap.

[BS] RETROFIT. The voluntary process of strengthening or improving buildings or structures, or individual components of buildings or structures for the purpose of making existing conditions better serve the purpose for which they were originally intended or the purpose that current building codes intend.

[BS] RETROFIT STUD. A lumber member used to structurally supplement an existing gable end wall stud or gable end frame web.

[BS] STUD-TO-PLATE CONNECTOR. A manufactured metal connector designed to connect studs to plates.

SECTION C103 MATERIALS OF CONSTRUCTION

[BS] C103.1 Existing materials. Existing wood materials that will be part of the retrofitting work (such as trusses, rafters, ceiling joists, top plates and wall studs) shall be in sound condition and free from defects or damage that substantially reduces the load-carrying capacity of the member. Any wood materials found to be damaged or deteriorated shall be strengthened or replaced with new materials to provide a net dimension of sound wood equivalent to its undamaged original dimensions.

INTERNATIONAL CODE COUNCIL®
Copyright © 2019 ICC & NYSDOS. ALL RIGHTS RESERVED. Accessed by Lauren Gualdino (lgualdino@briarcliffmanor.org), (-) Order Number #100880972 on May 08, 2020 07:05 AM (PDT) pursuant to License Agreement with ICC & NYSDOS. No further reproduction, no

100880972

[BS] C103.2 New materials. All new materials shall comply with the standards for those materials as specified in the *International Building Code* or the *International Residential Code*.

[BS] C103.3 Material specifications for retrofits. Materials for retrofitting gable end walls shall comply with Table C103.3.

[BS] C103.4 Twists in straps. Straps shall be permitted to be twisted or bent where they transition between framing members or connection points. Straps shall be bent only once at a given location though it is permissible that they be bent or twisted at multiple locations along their length.

[BS] C103.5 Fasteners. Fasteners shall meet the requirements of Table C103.5, Sections C103.5.1 and C103.5.2, and shall be permitted to be screws or nails meeting the minimum length requirement shown in the figures and specified in the tables of this appendix. Fastener spacing shall meet the requirements of Section C103.5.3.

[BS] C103.5.1 Screws. Unless otherwise indicated in the appendix, screw sizes and lengths shall be in accordance with Table C103.5. Permissible screws include deck screws and wood screws. Screws shall have not less than 1 inch (25 mm) of thread. Fine threaded screws or drywall screws shall not be permitted. Select the largest possible diameter screw such that the shank adjacent to the head fits through the hole in the strap.

[BS] C103.5.2 Nails. Unless otherwise indicated in this appendix, nail sizes and lengths shall be in accordance with Table C103.5.

[BS] C103.5.3 General fastener spacing. Fastener spacing for shear connections of lumber-to-lumber shall meet the requirements shown in Figure C103.5.3 and the following conditions.

[BS] C103.5.3.1 General fastener spacing. Fastener spacing shall meet the following conditions except as provided for in Section C103.5.3.

The distance between fasteners and the edge of lumber that is less than $3^1/_2$ inches deep (89 mm) in the direction of the fastener length shall be not less than $^3/_4$ inch (19.1 mm).

1. The distance between fasteners and the edge of lumber that is more than 2 inches (51 mm) thick in the direction of the fastener length shall be not less than $^1/_2$ inch (12.7 mm).
2. The distance between a fastener and the end of lumber shall be not less than $2^1/_2$ inches (64 mm).
3. The distance between fasteners parallel to the grain (center-to-center) shall be not less than $2^1/_2$ inches (64 mm).
4. The distance between fasteners perpendicular to the grain (center-to-center) in lumber that is less than $3^1/_2$ inches (89 mm) deep in the direction of the fastener length shall be 1 inch (25 mm).
5. The distance between fasteners perpendicular to the grain (center-to-center) in lumber that is more than 2 inches (51 mm) thick in the direction of the fastener length shall be $^1/_2$ inch (12.7 mm).

[BS] C103.5.3.2 Wood-to-wood connections of two members each 2 inches or less in thickness. Wood-to-wood connections fastener spacing shall meet the following conditions.

1. The distance between fasteners parallel to grain (center-to-center) shall be not less than $2^1/_2$ inches (64 mm).

[BS] TABLE C103.3
MATERIAL SPECIFICATIONS FOR RETROFITS[a]

COMPONENT	MINIMUM SIZE OR THICKNESS	MINIMUM MATERIAL GRADE	MINIMUM CAPACITY
Anchor blocks, compression blocks, and horizontal braces	2 x 4 nominal lumber	#2 Spruce-Pine-Fir or better	NA
Nail plates	20 gage thickness 8d minimum nail holes	Galvanized sheet steel	NA
Retrofit studs	2 x 4 nominal lumber	#2 Spruce-Pine-Fir or better	NA
Gusset angle	14 gage thickness	Galvanized sheet steel	350 pounds uplift and lateral load
Stud-to-plate connector	20 gage thickness	Galvanized sheet steel	500 pounds uplift
Metal plate connectors, straps, and anchors	20 gage thickness	Galvanized sheet steel	NA

For SI: 1 foot = 304.8mm, 1 pound = 4.4 N.

NA = Not Applicable.

a. Metal plate connectors, nail plates, stud-to-plate connectors, straps and anchors shall be products approved for connecting wood-to-wood or wood-to-concrete as appropriate.

[BS] TABLE C103.5
NAIL AND SCREW REQUIREMENTS

FASTENER TYPE	MINIMUM SHANK DIAMETER	MINIMUM HEAD DIAMETER	MINIMUM FASTENER LENGTH
#8 screws	NA	0.28 inches	$1\text{-}^1/_4$ inches
8d common nails	0.131 inches	0.28 inches	$2\text{-}^1/_2$ inches
10d common nails	0.148 inches	0.28 inches	3 inches

For SI: 1 inch = 25.4 mm.

NA = Not Applicable.

INTERNATIONAL CODE COUNCIL®
Copyright © 2019 ICC & NYSDOS. ALL RIGHTS RESERVED. Accessed by Lauren Gualdino (lgualdino@briarcliffmanor.org), (-) Order Number #100880972 on May 08, 2020 07:05 AM (PDT) pursuant to License Agreement with ICC & NYSDOS. No further reproduction, no

100880972

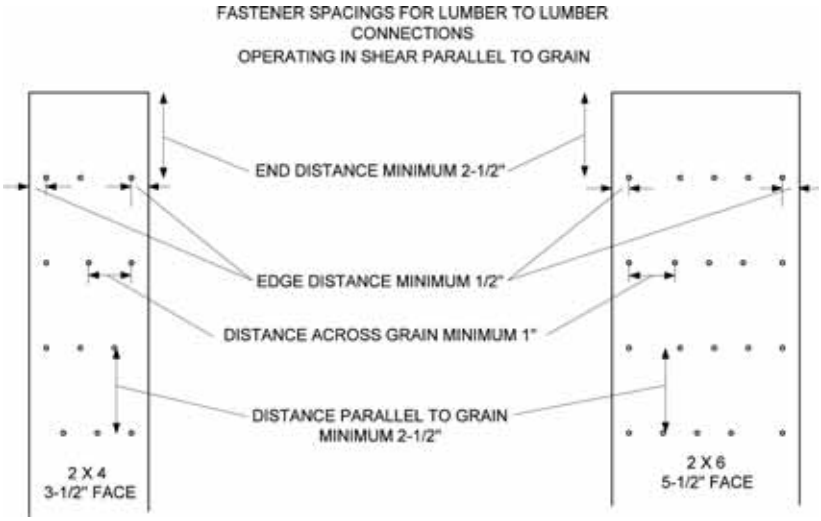

For SI: 1 inch = 25.4 mm.

[BS] FIGURE C103.5.3
FASTENER SPACINGS FOR LUMBER-TO-LUMBER CONNECTIONS OPERATING IN SHEAR PARALLEL TO GRAIN

2. The distance between fasteners across grain (center-to-center) shall be not less than 1 inch (25 mm).
3. For wood-to-wood connections of lumber at right angles, fasteners shall be spaced not less than $2^1/_2$ inches (64 mm) parallel to the grain and 1 inch (25 mm) perpendicular to the grain in any direction.

[BS] C103.5.3.3 Metal connectors for wood-to-wood connections. Metal connectors for wood-to-wood connections shall meet the following conditions.

1. Fastener spacing to edge or ends of lumber shall be as dictated by the prefabricated holes in the connectors and the connectors shall be installed in a configuration that is similar to that shown by the connector manufacturer.
2. Fasteners in $1^1/_4$-inch-wide (32 mm) metal straps that are installed on the narrow face of lumber shall be a minimum $^1/_4$ inch (6.4 mm) from either edge of the lumber. Consistent with Section C103.5.3.1, fasteners shall be permitted to be spaced according to the fastener holes fabricated into the strap.
3. Fasteners in metal nail plates shall be spaced not less than $^1/_2$ inch (12.7 mm) perpendicular to grain and not less than $1^1/_2$ inches (38 mm) parallel to grain.

SECTION C104
RETROFITTING GABLE END WALLS TO ENHANCE WIND RESISTANCE

[BS] C104.1 General. These prescriptive methods of retrofitting are intended to increase the resistance of existing gable end construction for out-of-plane wind loads resulting from high-wind events. The ceiling diaphragm shall be comprised of minimum $^1/_2$-inch-thick (12.7 mm) gypsum board, minimum nominal $^3/_8$-inch-thick (9.5 mm) wood structural panels, or plaster. An overview isometric drawing of one type of gable end retrofit to improve wind resistance is shown in Figure C104.1.

[BS] C104.2 Horizontal braces. Horizontal braces shall be installed perpendicular to the roof and ceiling framing members at the location of each existing gable end stud greater than 3 feet (91 cm) in length. Unless it is adjacent to an omitted horizontal brace location, horizontal braces shall be minimum 2-inch by 4-inch (38 mm by 89 mm) dimensional lumber as defined in Section C103.3. A single horizontal brace is required at the top and bottom of each gable end stud for Retrofit Configuration A, B, or C. Two horizontal braces are required at the top and bottom of each gable end stud for Retrofit Configuration D. Maximum heights of gable end wall studs and associated retrofit studs for each Retrofit Configuration shall not exceed the values listed in Table C104.2. Horizontal braces shall be oriented with their wide faces across the roof or ceiling framing members, be fastened to not fewer than three framing members, and extend not less than 6 feet (183 cm) measured perpendicularly from the gable end plus $2^1/_2$ inches (64 mm) beyond the last top chord or bottom chord member (rafter or ceiling joist) from the gable end as shown in Figures C104.2(1), C104.2(2), C104.2(3) and C104.2(4).

[BS] C104.2.1 Existing gable end studs. If the spacing of existing vertical gable end studs is greater than 24 inches (64 mm), a new stud and corresponding horizontal braces shall be installed such that the maximum spacing between existing and added studs shall be not greater than 24 inches (64 mm). Additional gable end wall studs shall not be required at locations where their length would be 3 feet (914 mm) or less. Each end of each required new stud shall be attached to the existing roofing framing members (truss top chord or rafter and truss bottom chord or ceiling joist) using not fewer than two 3-inch (76 mm) toenail fasteners (#8 wood screws or 10d nails) and a metal connector with minimum uplift capacity of 175 pounds (778 N),

INTERNATIONAL CODE COUNCIL®
Copyright © 2019 ICC & NYSDOS. ALL RIGHTS RESERVED. Accessed by Lauren Gualdino (lgualdino@briarcliffmanor.org), (-) Order Number #100880972 on May 08, 2020 07:05 AM (PDT) pursuant to License Agreement with ICC & NYSDOS. No further reproduction, no

100880972

or nail plates with not fewer than four $1^1/_4$-inch-long (32 mm) fasteners (No. 8 wood screws or 8d nails).

[BS] C104.2.2 Main method of installation. Each horizontal brace shall be fastened to each existing roof or ceiling member that it crosses using three 3-inch-long (76 mm) fasteners (No. 8 wood screws or 10d nails) as indicated in Figure C104.2(1) and Figure C104.2(3) for trusses and Figure C104.2(2) and Figure C104.2(4) for conventionally framed gable end walls. Alternative methods for providing horizontal bracing of the gable end studs as provided in Sections C104.2.3 through C104.2.9 shall be permitted.

[BS] C104.2.3 Omitted horizontal brace. Where conditions exist that prevent installation in accordance with Section C104.2.2, horizontal braces shall be permitted to be omitted for height limitations corresponding to Retrofit Configurations A and B as defined in Table C104.2 provided that installation is as indicated in Figure C104.2.3 and provided that all of the following conditions are met.

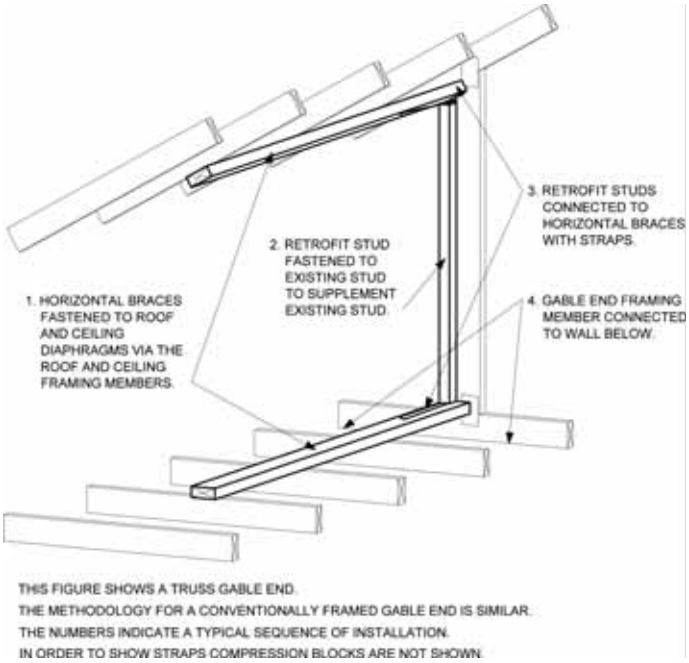

[BS] FIGURE C104.1
BASIC GABLE END RETROFIT METHODOLOGY

[BS] TABLE C104.2
STUD LENGTH LIMITATIONS BASED ON EXPOSURE AND DESIGN WIND SPEED

EXPOSURE CATEGORY	MAXIMUM 3-SEC GUST BASIC WIND SPEED[a]	MAXIMUM HEIGHT OF GABLE END RETROFIT STUD[b]			
C	140	8'-0"	11'-3"	14'-9"	16'-0"
C	150	7'-6"	10'-6"	13'-6"	16'-0"
C	165	7'-0"	10'-0"	12'-3"	16'-0"
C	180	7'-0"	10'-0"	12'-3"	16'-0"
C	190	6'-6"	8'-9"	11'-0"	16'-0"
B	140	8'-0"	12'-3"	16'-0"	NR[c]
B	150	8'-0"	11'-3"	14'-9"	16'-0"
B	165	8'-0"	11'-3"	14'-9"	16'-0"
B	180	7'-6"	10'-6"	13'-6"	16'-0"
B	190	7'-0"	10'-0"	12'-3"	16'-0"
	Retrofit Configuration	A	B	C	D

For SI: 1 inch = 25.4 mm, 1 foot = 304.8 mm.
NR = Not Required.
a. Interpolation between given wind speeds is not permitted.
b. Existing gable end studs less than or equal to 3 feet 0 inches in height shall not require retrofitting.
c. Configuration C is acceptable to 16 feet 0 inches maximum height.

INTERNATIONAL CODE COUNCIL®
Copyright © 2019 ICC & NYSDOS. ALL RIGHTS RESERVED. Accessed by Lauren Gualdino (lgualdino@briarcliffmanor.org), (-) Order Number #100880972 on May 08, 2020 07:05 AM (PDT) pursuant to License Agreement with ICC & NYSDOS. No further reproduction, no

100880972

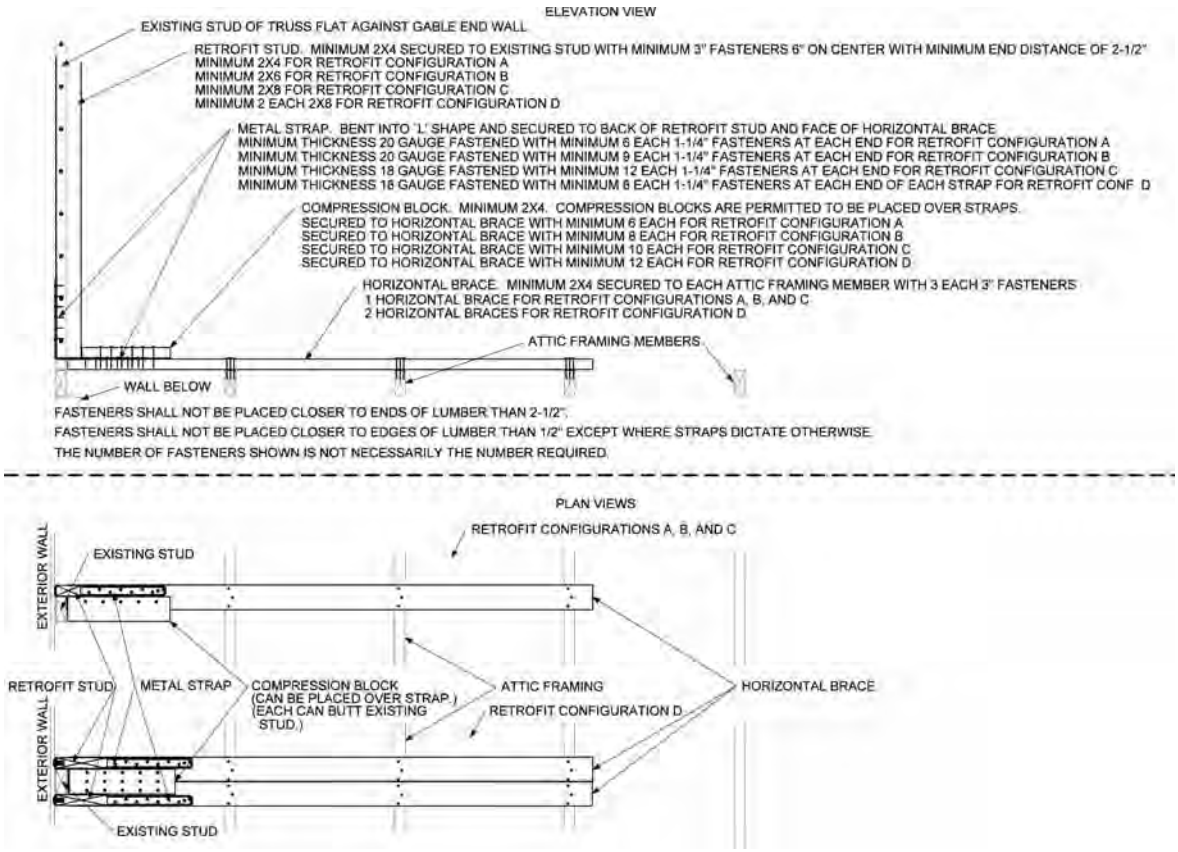

For SI: 1 inch = 25.4 mm.

[BS] FIGURE C104.2(1)
TRUSS FRAMED GABLE END

INTERNATIONAL CODE COUNCIL®
Copyright © 2019 ICC & NYSDOS. ALL RIGHTS RESERVED. Accessed by Lauren Gualdino (lgualdino@briarcliffmanor.org), (-) Order Number #100880972 on May 08, 2020 07:05 AM (PDT) pursuant to License Agreement with ICC & NYSDOS. No further reproduction, no

100880972

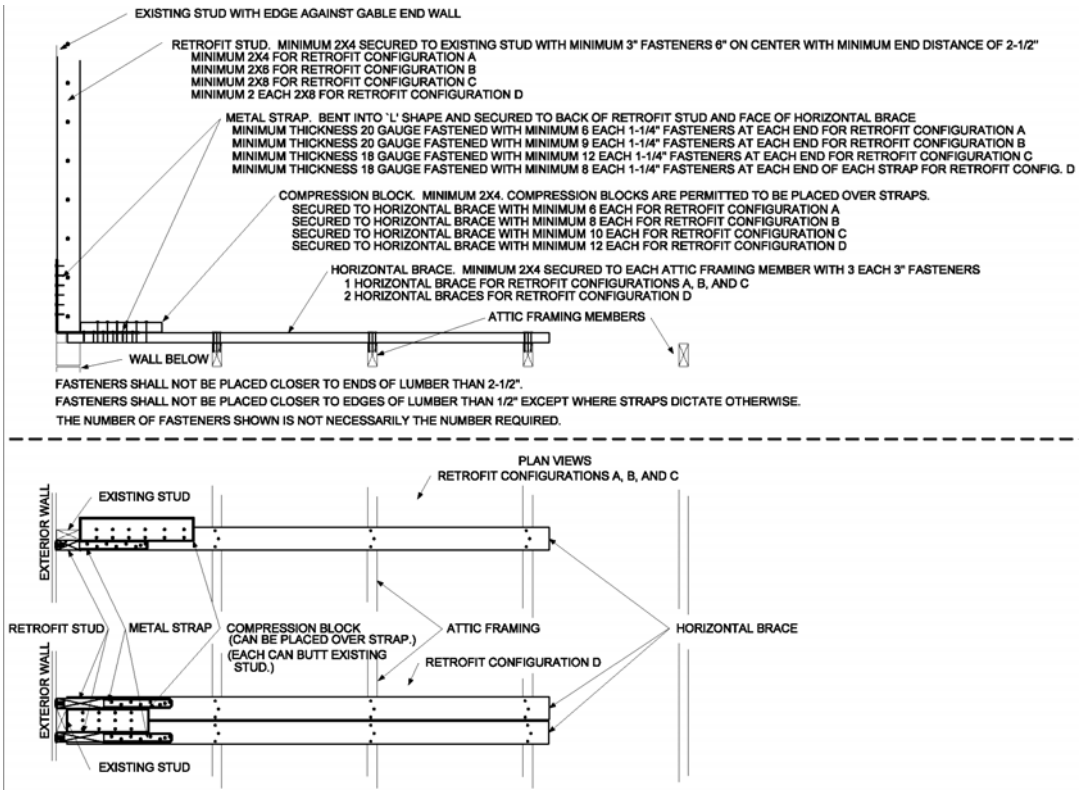

For SI: 1 inch = 25.4 mm.

[BS] FIGURE C104.2(2)
CONVENTIONALLY FRAMED GABLE END L-BENT STRAP

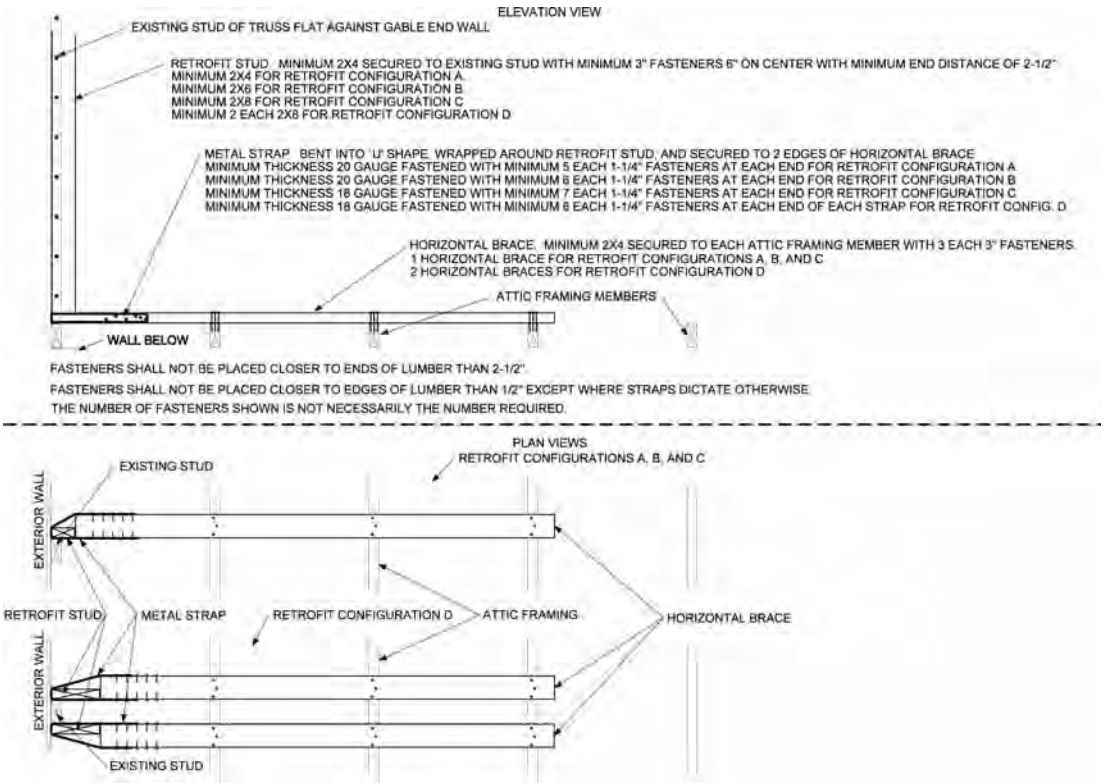

For SI: 1 inch = 25.4 mm.

[BS] FIGURE C104.2(3)
TRUSS FRAMED GABLE END U-BENT STRAP

INTERNATIONAL CODE COUNCIL®
Copyright © 2019 ICC & NYSDOS. ALL RIGHTS RESERVED. Accessed by Lauren Gualdino (lgualdino@briarcliffmanor.org), (-) Order Number #100880972 on May 08, 2020 07:05 AM (PDT) pursuant to License Agreement with ICC & NYSDOS. No further reproduction, no

100880972

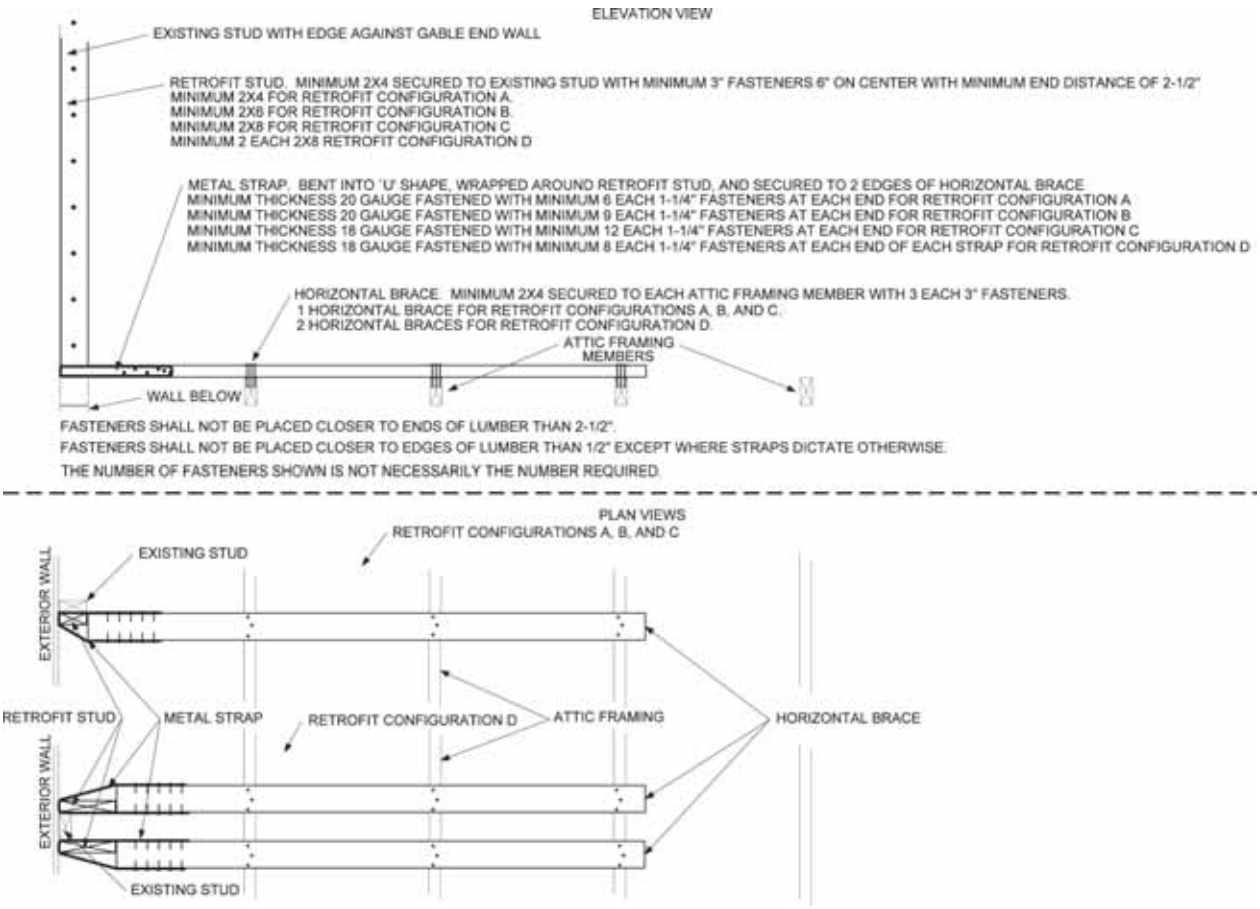

For SI: 1 inch = 25.4 mm.

[BS] FIGURE C104.2(4)
CONVENTIONALLY FRAMED GABLE END U-BENT STRAP

INTERNATIONAL CODE COUNCIL®
Copyright © 2019 ICC & NYSDOS. ALL RIGHTS RESERVED. Accessed by Lauren Gualdino (lgualdino@briarcliffmanor.org), (-) Order Number #100880972 on May 08, 2020 07:05 AM (PDT) pursuant to License Agreement with ICC & NYSDOS. No further reproduction, no

100880972

This method is not permitted for Retrofit Configurations C or D.

1. There shall be not fewer than two horizontal braces on each side of an omitted horizontal brace or not fewer than one horizontal brace if it is the end horizontal brace. Omitted horizontal braces must be separated by not fewer than two horizontal braces even if that location is composed of two retrofit studs and two horizontal braces.
2. Horizontal braces adjacent to the omitted horizontal brace shall be 2-inch by 6-inch (38 mm by 140 mm) lumber, shall butt against the existing studs, and shall be fastened to each existing roof or ceiling member crossed using three 3-inch-long (76 mm) fasteners (No. 8 wood screws or 10d nails). For Retrofit Configuration B, four fasteners shall be required on not fewer than one of the connections between the horizontal brace and the existing roof and ceiling framing members. Fasteners shall be spaced a not less than $^3/_4$ inch (19.1 mm) from the edges of the horizontal braces and not less than $1^3/_4$ inches (44 mm) from adjacent fasteners.

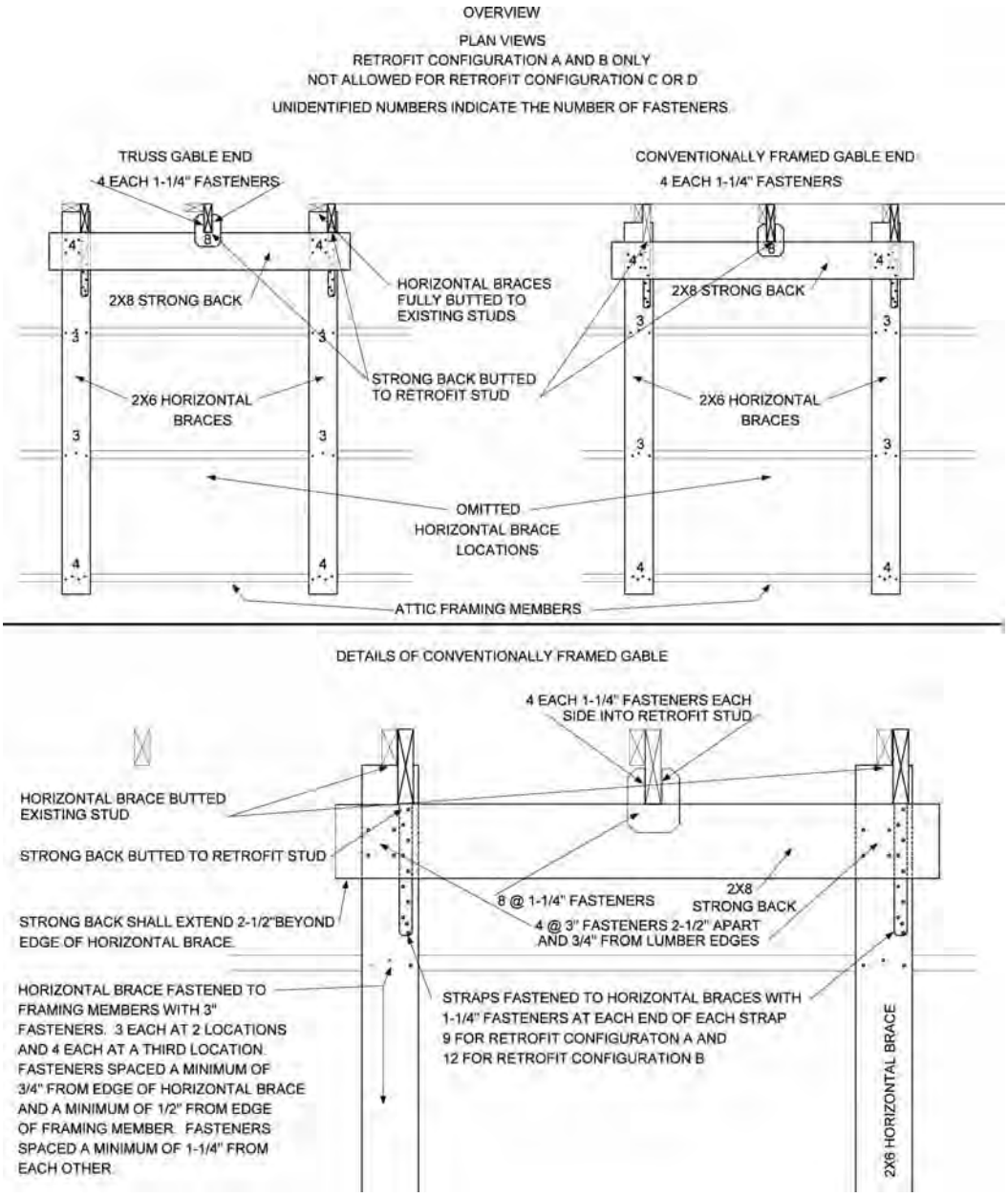

For SI: 1 inch = 25.4 mm.

[BS] FIGURE C104.2.3
OMITTED HORIZONTAL BRACE

INTERNATIONAL CODE COUNCIL®
Copyright © 2019 ICC & NYSDOS. ALL RIGHTS RESERVED. Accessed by Lauren Gualdino (lgualdino@briarcliffmanor.org), (-) Order Number #100880972 on May 08, 2020 07:05 AM (PDT) pursuant to License Agreement with ICC & NYSDOS. No further reproduction, no

100880972

3. Where the existing studs on each side of an omitted horizontal brace have their wide face perpendicular to the gable end wall, the retrofit studs at those locations and the retrofit stud at the omitted horizontal brace locations shall extend not less than $3^3/_4$ inches (95 mm) beyond the interior edge of the existing studs for both Retrofit Configurations A and B. The edges of the three retrofit studs facing towards the interior of the attic shall be aligned such that they are the same distance from the gable end wall.
4. Retrofit studs shall be fastened to existing studs in accordance with Section C104.3.
5. Retrofit studs adjacent to the omitted horizontal brace shall be fastened to the horizontal brace using straps in accordance with Table C104.4.1 consistent with the size of the retrofit stud. The method applicable to Table C104.4.2 is not permitted.
6. A strong back made of minimum of 2-inch by 8-inch (38 mm by 184 mm) nominal lumber shall be placed parallel to the gable end and shall be located on and span between horizontal braces on the two sides of the omitted horizontal brace and shall extend beyond each horizontal brace by not less than $2^1/_2$ inches (64 mm). The strong back shall be butted to the three retrofit studs. The strong back shall be attached to each of the horizontal braces on which it rests with five 3-inch-long (76 mm) fasteners (#8 screws or 8d nails). The fasteners shall have a minimum $^3/_4$-inch (19.1 mm) edge distance and a minimum $2^1/_2$-inch (64 mm) spacing between fasteners. Additional compression blocks shall not be required at locations where a strong back butts against a retrofit stud.
7. The retrofit stud at the location of the omitted horizontal braces shall be fastened to the strong back using a connector with minimum uplift capacity of 800 pounds (3559 N) and installed such that this capacity is oriented in the direction perpendicular to the gable end wall.
8. The use of shortened horizontal braces using the alternative method of Section C104.2.5 is not permitted for horizontal braces adjacent to the omitted horizontal braces.
9. Horizontal braces shall be permitted to be interrupted in accordance with Section C104.2.8.

[BS] C104.2.4 Omitted horizontal brace and retrofit stud. Where conditions exist that prevent installation in accordance with Section C104.2.2 or C104.2.3, then retrofit studs and horizontal braces shall be permitted to be omitted from those locations by installation of ladder assemblies for Retrofit Configurations A and B as defined in Table C104.2 provided that all of the following conditions are met. This method is not permitted for Retrofit Configurations C or D.

1. Not more than two ladder assemblies are permitted on a single gable end.
2. There shall be not fewer than two retrofit studs and horizontal brace assemblies on either side of the locations where the retrofit studs and horizontal bracing members are omitted (two ladder braces shall not bear on a single retrofit stud).
3. Where the existing studs on each side of an omitted horizontal brace have their wide face parallel to the gable end wall the retrofit studs at those locations and the retrofit stud at the omitted horizontal brace locations shall be 2-inch by 6-inch (38 mm by 180 mm) nominal lumber for Retrofit Configuration A and 2-inch by 8-inch (38 mm by 184 mm) lumber for Retrofit Configuration B.
4. Horizontal braces adjacent to the omitted horizontal brace shall be 2-inch by 6-inch (38 mm by 180 mm) nominal lumber and be fastened to each existing roof or ceiling member crossed using three 3-inch-long (76 mm) fasteners (#8 wood screws or 10d nails) as indicated in Figures C104.2(1) and C104.2(3) for gable end frames and Figures C104.2(2) and C104.2(4) for conventionally framed gable end walls. For Retrofit Configuration B, four fasteners shall be required on one of the connections between the horizontal brace and the existing roof and ceiling framing members.
5. Ladder rungs shall be provided across the location of the omitted retrofit studs as indicated in Figure C104.2.4(1) for gable end frames and Figure C104.2.4(2) for conventionally framed gable end walls.
6. Ladder rungs shall be minimum 2-inch by 4-inch (38 mm by 89 mm) lumber oriented with their wide face horizontal and spaced not greater than 16 inches (406 mm) on center vertically.
7. Where ladder rungs cross wall framing members they shall be connected to the wall framing members with a metal connector with a minimum capacity of 175 pounds (778 N) in the direction perpendicular to the gable end wall.
8. Notching of the ladder rungs shall not be permitted unless the net depth of the framing member is not less than $3^1/_2$ inches (89 mm).

[BS] C104.2.5 Short horizontal brace. Where conditions exist that prevent installation in accordance with Section C104.2.2, C104.2.3 or C104.2.4, the horizontal braces shall be permitted to be shortened provided that installation is as indicated in Figure C104.2.5 and all of the following conditions are met.

1. The horizontal brace shall be installed across not fewer than two framing spaces, extend not less than 4 feet (1220 mm) from the gable end wall plus $2^1/_2$ inches (64 mm) beyond the farthest roof or ceiling framing member from the gable end, and be fastened to each existing framing member with three 3-inch-long (76 mm) fasteners (#8 wood screws or 10d nails).

INTERNATIONAL CODE COUNCIL®
Copyright © 2019 ICC & NYSDOS. ALL RIGHTS RESERVED. Accessed by Lauren Gualdino (lgualdino@briarcliffmanor.org), (-) Order Number #100880972 on May 08, 2020 07:05 AM (PDT) pursuant to License Agreement with ICC & NYSDOS. No further reproduction, no

100880972

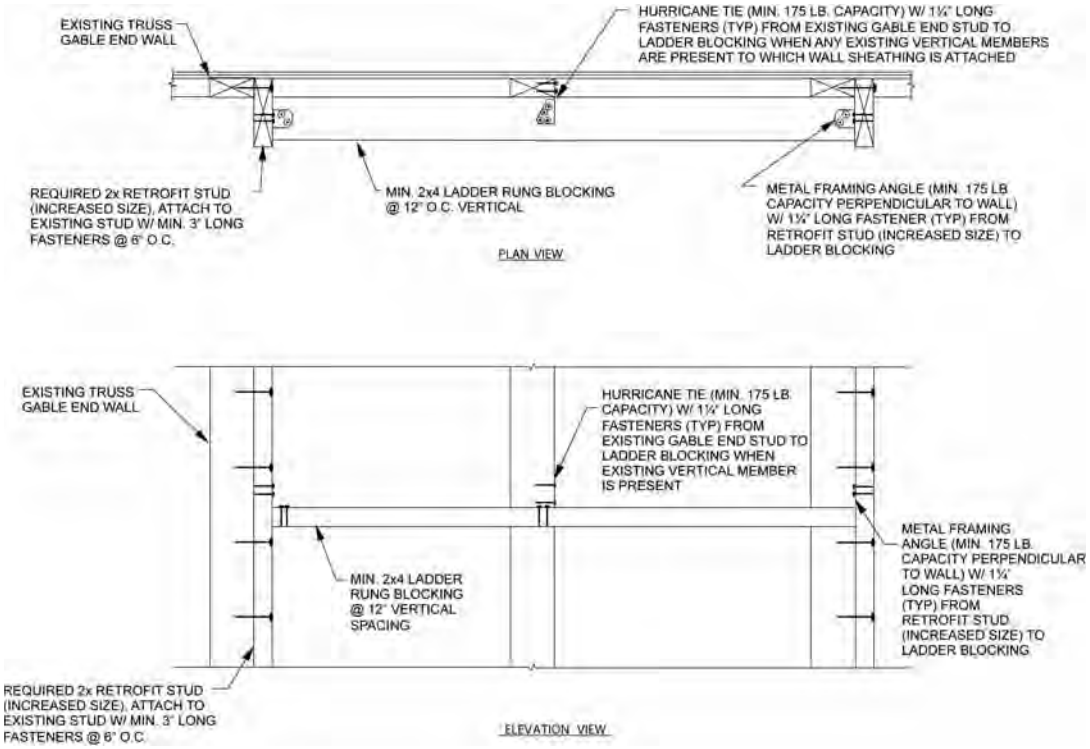

For SI: 1 inch = 25.4 mm, 1 pound = 4.4 N.

[BS] FIGURE C104.2.4(1)
LADDER BRACING FOR OMITTED RETROFIT STUD (GABLE END FRAME)

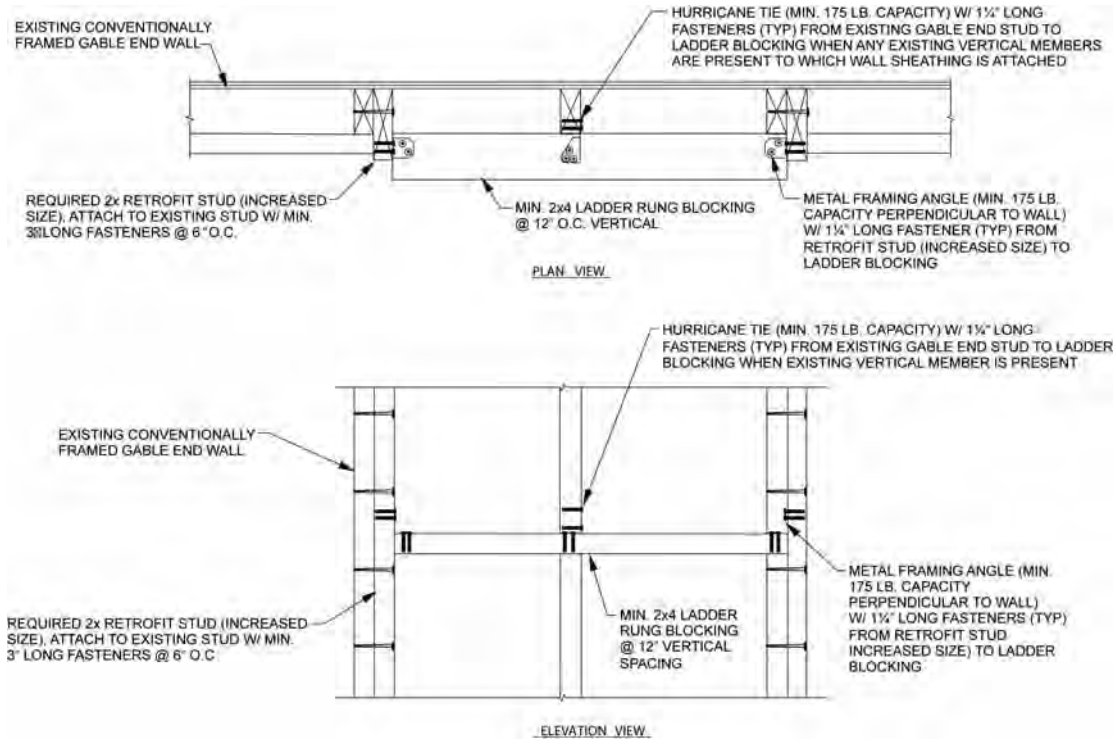

For SI: 1 inch = 25.4 mm, 1 pound = 4.4 N.

[BS]FIGURE C104.2.4(2)
LADDER BRACING FOR OMITTED RETROFIT STUD (CONVENTIONALLY FRAMED GABLE END)

INTERNATIONAL CODE COUNCIL®
Copyright © 2019 ICC & NYSDOS. ALL RIGHTS RESERVED. Accessed by Lauren Gualdino (lgualdino@briarcliffmanor.org), (-) Order Number #100880972 on May 08, 2020 07:05 AM (PDT) pursuant to License Agreement with ICC & NYSDOS. No further reproduction, no

100880972

2. An anchor block shall be fastened to the side of the horizontal brace in the second framing space from the gable end wall as shown in Figure C104.2.5. The anchor block lumber shall have a minimum edge thickness of $1^1/_2$ inches (38 mm) and the depth shall be at a minimum the depth of the existing roof or ceiling framing member. Six 3-inch-long (76 mm) fasteners (#8 wood screws or 10d nails) shall be used to fasten the anchor block to the side of the horizontal brace.
3. The anchor block shall extend into the space between the roof or ceiling framing members not less than one-half the depth of the existing-framing members at the location where the anchor block is installed. The anchor block shall be installed tightly between the existing framing members such that the gap at either end shall not exceed $^1/_8$ inch (3.2 mm).
4. The use of omitted horizontal braces using the method of Section C104.2.3 adjacent to a short horizontal brace as defined in this section is not permitted.

[BS] C104.2.6 Installation of horizontal braces onto webs of trusses. Where existing conditions preclude installation of horizontal braces on truss top or bottom chords they shall be permitted to be installed on truss webs provided that all of the following conditions are met.

1. Horizontal braces shall be installed as close to the top or bottom chords as practical without altering the truss or any of its components and not more than three times the depth of the truss member to which it would ordinarily be attached.
2. A racking block, comprised of an anchor block meeting the definition of "Anchor block" in Section C102 or comprised of minimum $^{15}/_{32}$-inch (12 mm) plywood or $^7/_{16}$-inch (11.1 mm) oriented strand board (OSB), shall be fastened to the horizontal brace in the second framing space from the gable end wall. The racking block shall extend toward the roof or ceiling diaphragm so that the edge of the racking block closest to the diaphragm is within one-half the depth of the existing framing member from the diaphragm surface. The racking block shall be attached to horizontal braces using six fasteners (No. 8 wood screws or 10d nails) of sufficient length to provide $1^1/_2$ inches (38 mm) of penetration into the horizontal brace.
3. Racking blocks shall be permitted to be fastened to any face or edge of horizontal braces between each web or truss vertical posts to which a horizontal brace is attached. Racking blocks shall be permitted to be on alternate sides of horizontal braces. Racking blocks shall be installed tightly between the lumber of truss members or truss plates such that the gap at either end shall be not greater than $^1/_8$ inch (3.2 mm).

[BS] C104.2.7 Alternative method of installation of horizontal braces at truss ridges. Where conditions exist that limit or restrict installation of horizontal braces near the peak of the roof, ridge ties shall be added to provide support for the required horizontal brace. The top of additional ridge tie members shall be installed not greater than 16 inches (406 mm) below the existing ridge line or 4 inches (102 mm) below impediments. A minimum 2-inch by 4-inch (38 mm by 89 mm) nominal member shall be used for each ridge tie, and fastening shall consist of two 3-inch-long (76 mm) wood screws, four 3-inch-long (76 mm) 10d nails or two $3^1/_2$-inch-long (89 mm) 16d nails driven through and clinched at each top chord or web member intersected by the ridge tie as illustrated in Figure C104.2.7.

[BS] C104.2.8 Interrupted horizontal braces. Where conditions exist that prevent the installation of a continuous horizontal brace then horizontal braces shall be permitted to be interrupted using the methods shown in Figures C104.2.8(1), C104.2.8(2), and C104.2.8(3). For interruptions that occur in the attic framing space closest to the gable end, nine 3-inch (76 mm) fasteners shall be used to connect each section of the interrupted horizontal braces. For interruptions that occur in the second attic space from the gable end, six 3-inch (76 mm) fasteners shall be used to connect each section of the interrupted horizontal braces. For interruptions that occur in the attic framing space farthest from the gable end, three 3-inch (76 mm) fasteners shall be used to connect each section of the interrupted horizontal braces. Horizontal braces shall be continued far enough to allow connections to three existing roof framing members as shown in Figure C104.2.8(1), C104.2.8(2) or C104.2.8(3). Fasteners shall be spaced in accordance with Section C103.5.3. Horizontal braces shall be the same width and depth as required for an uninterrupted member.

[BS] C104.2.9 Piggyback gable end frames. Piggyback gable end frames (gable end frames built in two sections one above the other) shall be permitted to be retrofitted if either of the following cases is true:

1. The existing studs in both the upper gable end frames and the lower gable end frames to which wall sheathing, panel siding, or other wall covering are attached are sufficiently in line that retrofit studs can be installed and connections made between the two with retrofit stud(s).
2. Existing studs in the upper frame are not sufficiently in line with the studs in the frame below and the existing studs in the upper frame are 3 feet (91 cm) or shorter.

For Condition 1 both the lower stud and the upper stud shall be retrofitted using the methods of Section C104.2. For Condition 2 the retrofit stud shall be connected to the lower studs using the methods of Section C104.2 and be continuous from the bottom horizontal brace to the top horizontal brace. Connection is not required between the retrofit stud and the upper stud. In both conditions the bottom chord of the piggyback truss section shall be fastened to each retrofit stud using a connector with minimum axial capacity of 175 pounds (778 N).

[BS] C104.3 Retrofit studs. Retrofit studs shall be installed in accordance with Section C104.3.1 using one of the five methods of Sections C104.3.2, C104.3.3, C104.3.4, C104.3.5 or C104.3.6. Figure C104.3 shows these methods of installa-

INTERNATIONAL CODE COUNCIL®
Copyright © 2019 ICC & NYSDOS. ALL RIGHTS RESERVED. Accessed by Lauren Gualdino (lgualdino@briarcliffmanor.org), (-) Order Number #100880972 on May 08, 2020 07:05 AM (PDT) pursuant to License Agreement with ICC & NYSDOS. No further reproduction, no

100880972

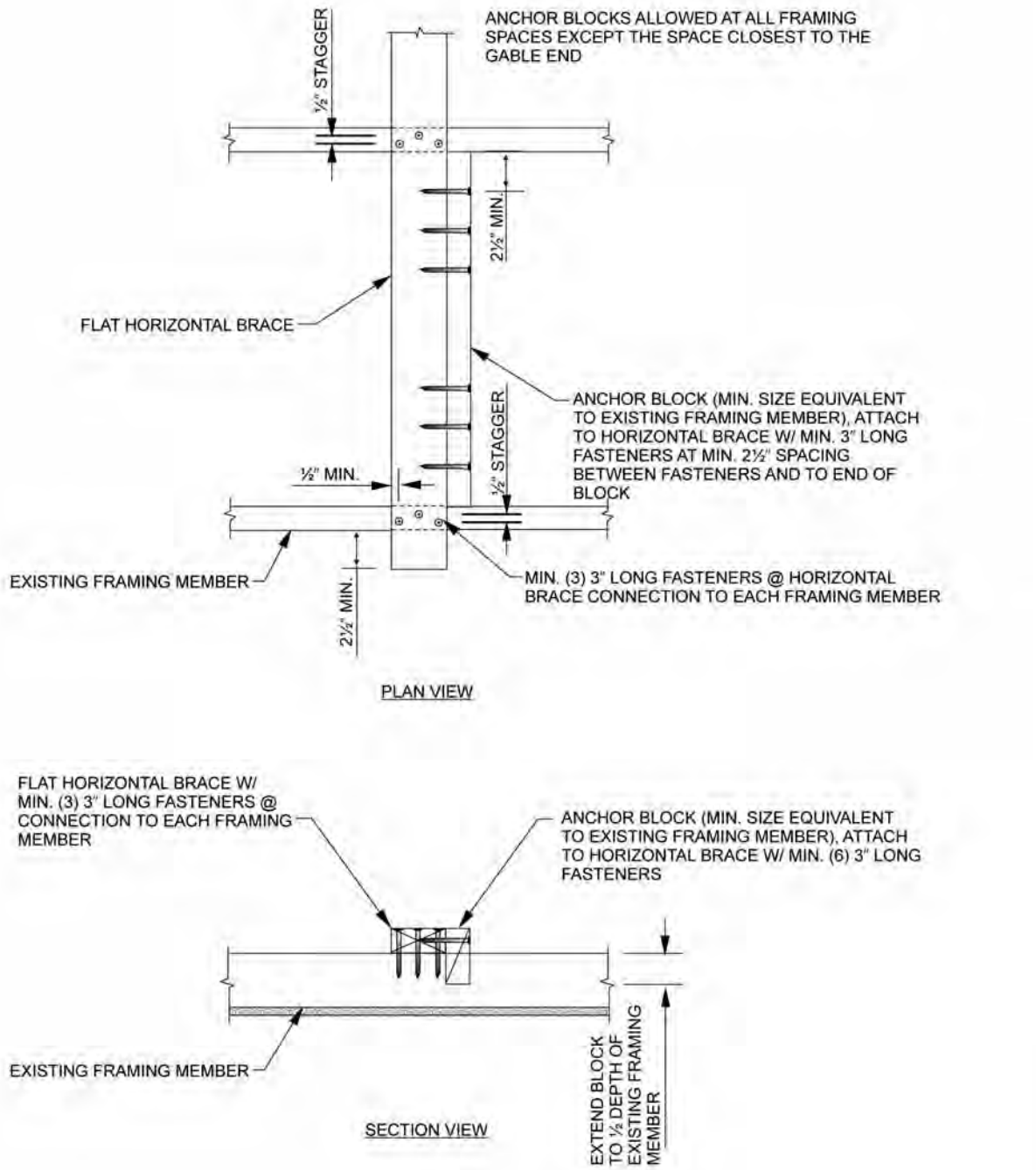

For SI: 1 inch = 25.4 mm.

[BS] FIGURE C104.2.5
ANCHOR BLOCK INSTALLATION

INTERNATIONAL CODE COUNCIL®
Copyright © 2019 ICC & NYSDOS. ALL RIGHTS RESERVED. Accessed by Lauren Gualdino (lgualdino@briarcliffmanor.org), (-) Order Number #100880972 on May 08, 2020 07:05 AM (PDT) pursuant to License Agreement with ICC & NYSDOS. No further reproduction, no

100880972

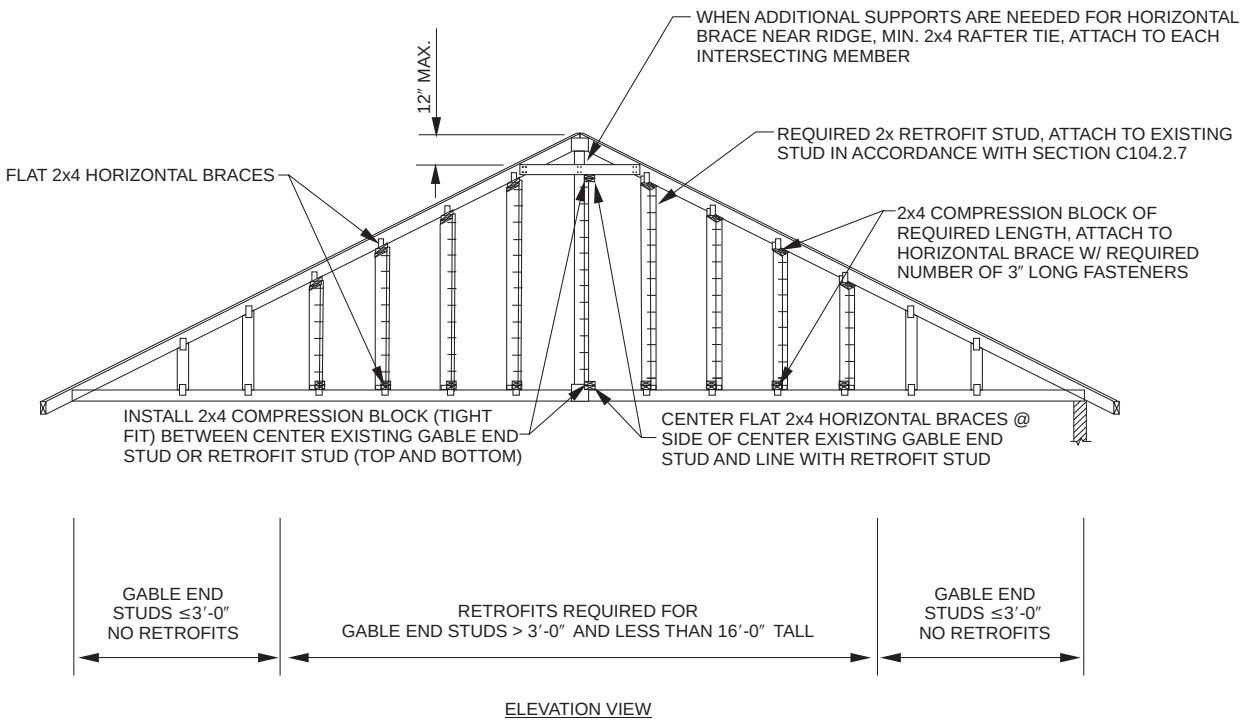

For SI: 1 inch = 25.4 mm, 1 foot = 304.8 mm.

[BS] FIGURE C104.2.7
DETAIL OF RETROFIT TIE INSTALLATION

tion. For the Retrofit Configuration obtained from Table C104.2, the size of retrofit studs shall be as indicated in Table C104.4.1 or Table C104.4.2. Retrofit studs shall extend from the top of the lower horizontal brace to the bottom of the upper horizontal brace except that a maximum gap of $^1/_8$ inch (3.2 mm) is permitted at the bottom and $^1/_2$ inch (12.7 mm) at the top. Where wall sheathing, panel siding, or other wall covering is fastened to a conventionally framed gable end, retrofit studs shall be applied in accordance with Section C104.2.1.

[BS] C104.3.1 Fastening. Where nail plates are not used, retrofit studs shall be attached to existing studs using 3-inch (76 mm) fasteners at not greater than 6 inches (152 mm) on center but not closer than $2^1/_2$ inches (64 mm) on center with fasteners not closer to ends of members than $2^1/_2$ inches (64 mm).

[BS] C104.3.2 Method #1: Face-to-edge or face-to-face method. Retrofit studs shall be installed immediately adjacent to existing gable end wall studs as indicated in Figure C104.3(a). The retrofit studs shall overlap the edge or side of the existing stud by not less than $1^1/_4$ inches (32 mm). Fasteners shall be installed as specified in Section C104.3.1.

[BS] C104.3.3 Method #2: Face-to-face offset method. Retrofit studs shall be installed against the face of existing studs as indicated in Figure C104.3(b) such that the faces overlap not less than $1^1/_2$ inches (38 mm) and the edge distance to fasteners is not less than $^3/_4$ inch (19.1 mm). Fasteners shall be installed as specified in Section C104.3.1.

[BS] C104.3.4 Method #3: Butted retrofit stud method. Provided that all of the following fastening conditions are met, retrofit studs shall be permitted to be butted by their edge to existing studs with the addition of nail plates as indicated in Figure C104.3(c) and Figure C104.3.4.

1. The narrow edge of retrofit studs shall be installed against the narrow or the wide face of existing studs.
2. Not fewer than two nail plates shall be used.
3. Fasteners used to secure nail plates to studs shall be a minimum $1^1/_4$ inches (32 mm) long (#8 wood screws or 8d nails).
4. Fasteners placed in nail plates shall have a minimum end distance of $2^1/_2$ inches (64 mm) for both studs and a maximum end distance of 6 inches (152 mm) from the ends of the shorter stud.
5. Fasteners shall have a minimum $^1/_2$-inch (12.7 mm) edge distance. Fasteners shall be placed not greater than $1^1/_2$ inches (38 mm) from the abutting vertical edges of existing studs and retrofit studs.
6. There shall be at least three fasteners through nail plates into all existing and retrofit studs to which the nail plate is attached.
7. Nail plates with three fasteners onto a single existing or retrofit stud shall be spaced not greater than 15 inches (38 cm) on center.

INTERNATIONAL CODE COUNCIL®
Copyright © 2019 ICC & NYSDOS. ALL RIGHTS RESERVED. Accessed by Lauren Gualdino (lgualdino@briarcliffmanor.org), (-) Order Number #100880972 on May 08, 2020 07:05 AM (PDT) pursuant to License Agreement with ICC & NYSDOS. No further reproduction, no

100880972

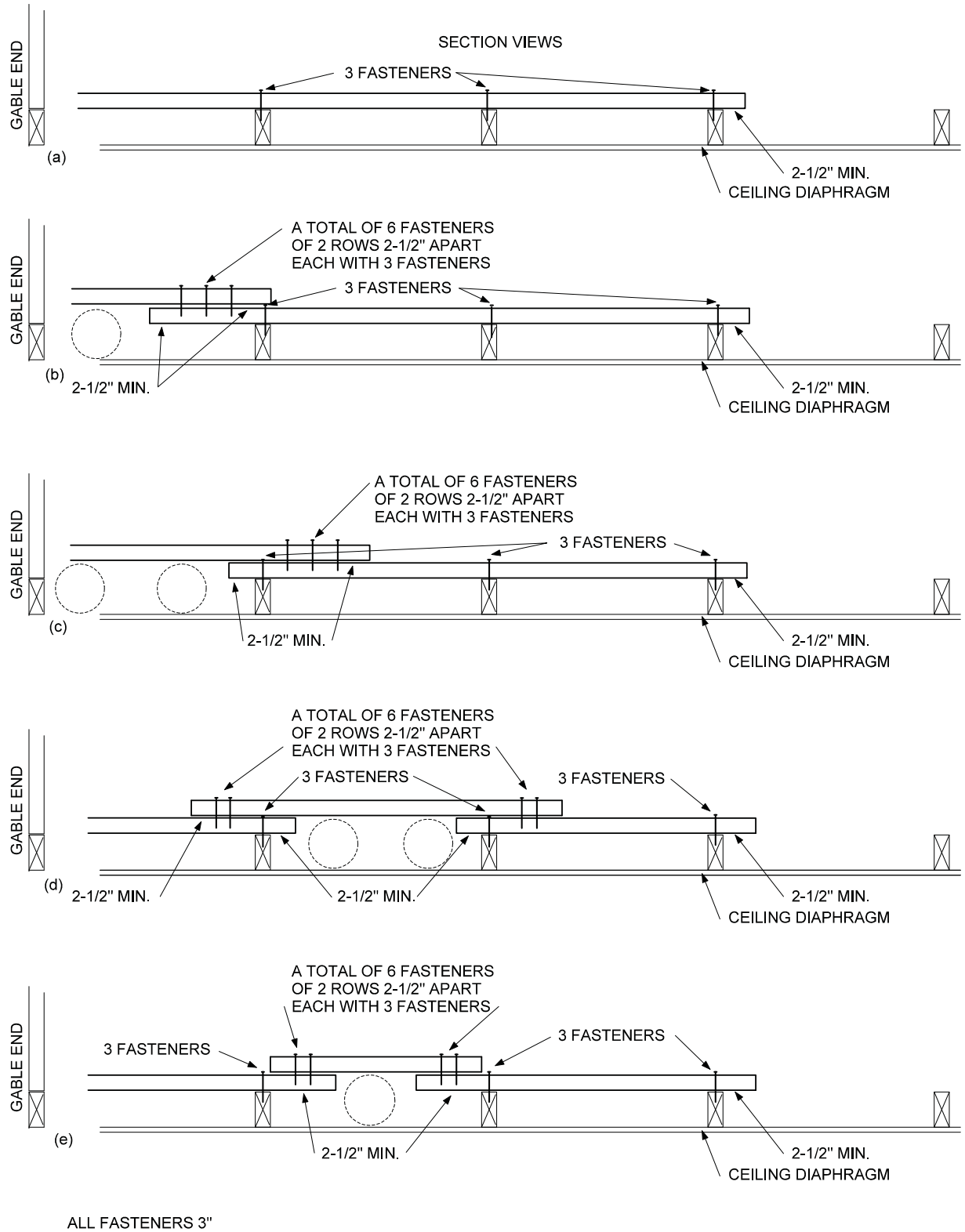

For SI: 1 inch = 25.4 mm.

[BS] FIGURE C104.2.8(1)
SPLICED HORIZONTAL BRACES

INTERNATIONAL CODE COUNCIL®
Copyright © 2019 ICC & NYSDOS. ALL RIGHTS RESERVED. Accessed by Lauren Gualdino (lgualdino@briarcliffmanor.org), (-) Order Number #100880972 on May 08, 2020 07:05 AM (PDT) pursuant to License Agreement with ICC & NYSDOS. No further reproduction, no

100880972

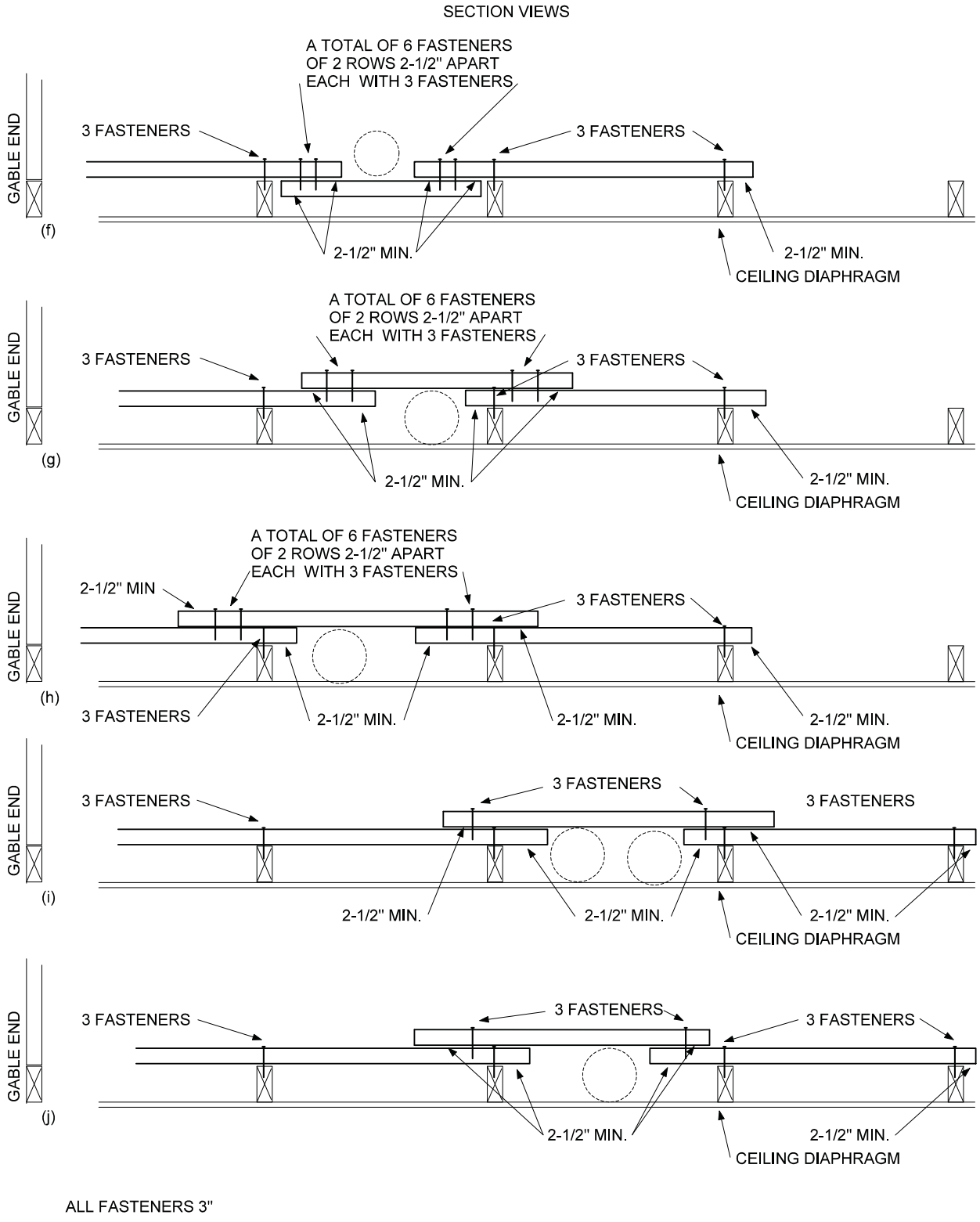

For SI: 1 inch = 25.4 mm.

[BS] FIGURE C104.2.8(2)
SPLICED HORIZONTAL BRACES

INTERNATIONAL CODE COUNCIL®
Copyright © 2019 ICC & NYSDOS. ALL RIGHTS RESERVED. Accessed by Lauren Gualdino (lgualdino@briarcliffmanor.org), (-) Order Number #100880972 on May 08, 2020 07:05 AM (PDT) pursuant to License Agreement with ICC & NYSDOS. No further reproduction, no

100880972

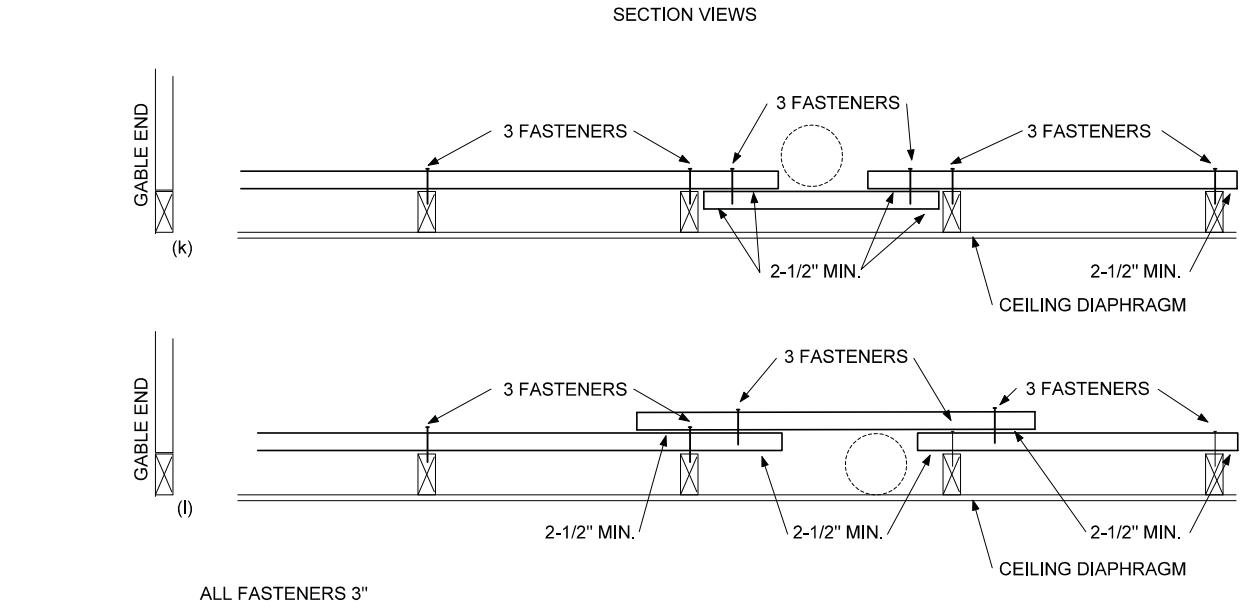

For SI: 1 inch = 25.4 mm.

[BS] FIGURE C104.2.8(3)
SPLICED HORIZONTAL BRACES

8. Nail plates with more than three fasteners onto a single existing or retrofit stud shall be spaced not greater than 20 inches (51 cm) on center.
9. Fasteners used to secure nail plates shall be spaced vertically not less than $1^1/_2$ inches (38 mm) on center. Staggered fasteners used to secure nail plates shall be spaced horizontally not less than $^1/_2$ inch (12.7 mm).

[BS] C104.3.5 Method #4: Offset retrofit stud method. Retrofit studs may be offset from existing studs by use of nail plates as shown in Figure C104.3(d) such that the vertical corner of a retrofit stud shall align with the vertical corner of an existing stud as indicated in Figure C104.3(d) and Figure C104.3.4, and the fastening conditions of Section C104.3.4 are met.

[BS] C104.3.6 Method #5: Nailer with retrofit stud method. Retrofit studs and existing studs shall be permitted to be connected using noncontinuous 2-inch by 4-inch (38 mm by 89 mm) nailers as indicated in Figure C104.3(e) provided that the following conditions are met.

1. Both the existing stud and the retrofit stud shall be butted to nailers and both shall be fastened to the nailer with 3-inch-long (76 mm) fasteners (#8 wood screws or 8d nails). Fasteners connecting each stud to the nailer shall be a spaced 6 inches (152 mm) o.c.
2. Fasteners into nailers from any direction shall be offset vertically by not less than $2^1/_2$ inches (64 mm).
3. Fasteners into nailers shall be not less than $2^1/_2$ inches (64 mm) but not more than 6 inches (152 mm) from the end of the shorter of the existing stud and retrofit stud to which they are fastened.

[BS] C104.3.7 Reduced depth of retrofit studs. Retrofit studs may be reduced in depth by notching, tapering, or other methods at any number of locations along their length provided that all of the following conditions are met:

1. Retrofit studs to be reduced in depth shall be sized such that the remaining minimum depth of member at the location of the notch (including cross-cut kerfs) shall be not less than that required by Table C104.4.1 or C104.4.2.
2. Reduced in-depth retrofit stud shall not be spliced within 12 inches (30 cm) of the location of notches. Splice members shall not be notched.
3. The vertical extent of notches shall not exceed 12 inches (30 cm) as measured at the depth of location of reduced depth.
4. A reduced in-depth retrofit stud member shall be fastened to the side of the existing gable end wall studs in accordance with Section C104.3.1. Two additional 3-inch (76 mm) fasteners (#8 wood screws or 10d nails) shall be installed on each side of notches in addition to those required by Section C104.3.1.

[BS] C104.3.8 Retrofit stud splices. Retrofit studs greater than 8 feet (244 cm) in height may be field spliced in accordance with Figure C104.3.8.

[BS] C104.4 Connection between horizontal braces and retrofit studs. Connections between horizontal braces and retrofit studs shall comply with Section C104.4.1 or C104.4.2. Each retrofit stud shall be connected to the top and bottom horizontal brace members with a minimum 20-gage $1^1/_4$-inch-wide (32 mm) flat or coil metal strap with prepunched holes for fasteners. Straps shall be fastened with $1^1/_4$-inch-long (32 mm) fasteners (#8 wood screws or 8d nails) with the number of fasteners as indicated in Tables C104.4.1 and C104.4.2.

INTERNATIONAL CODE COUNCIL®
Copyright © 2019 ICC & NYSDOS. ALL RIGHTS RESERVED. Accessed by Lauren Gualdino (lgualdino@briarcliffmanor.org), (-) Order Number #100880972 on May 08, 2020 07:05 AM (PDT) pursuant to License Agreement with ICC & NYSDOS. No further reproduction, no

100880972

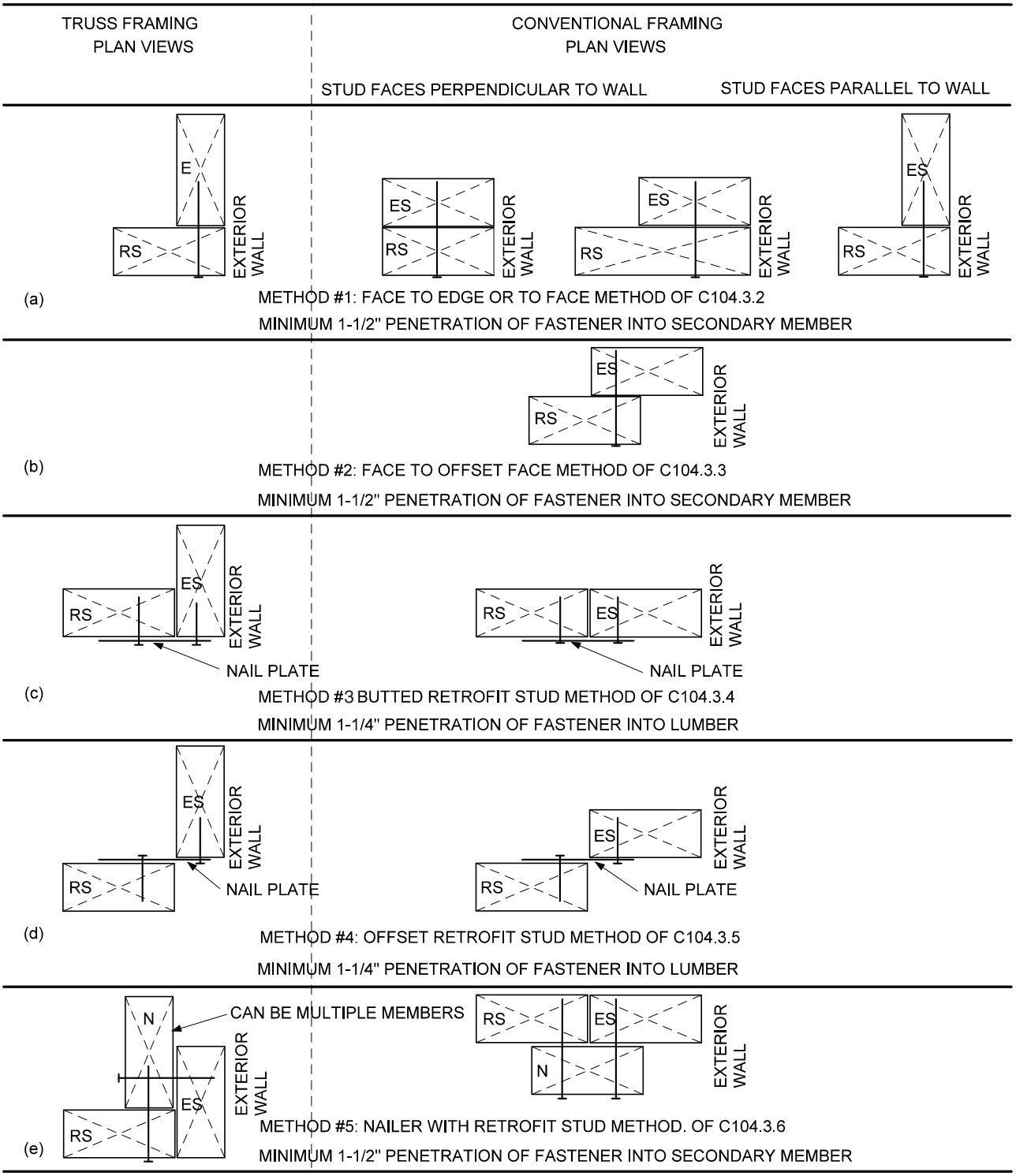

For SI: 1 inch = 25.4 mm.

[BS] FIGURE C104.3
METHOD OF INSTALLING RETROFIT STUDS

INTERNATIONAL CODE COUNCIL®
Copyright © 2019 ICC & NYSDOS. ALL RIGHTS RESERVED. Accessed by Lauren Gualdino (lgualdino@briarcliffmanor.org), (-) Order Number #100880972 on May 08, 2020 07:05 AM (PDT) pursuant to License Agreement with ICC & NYSDOS. No further reproduction, no

100880972

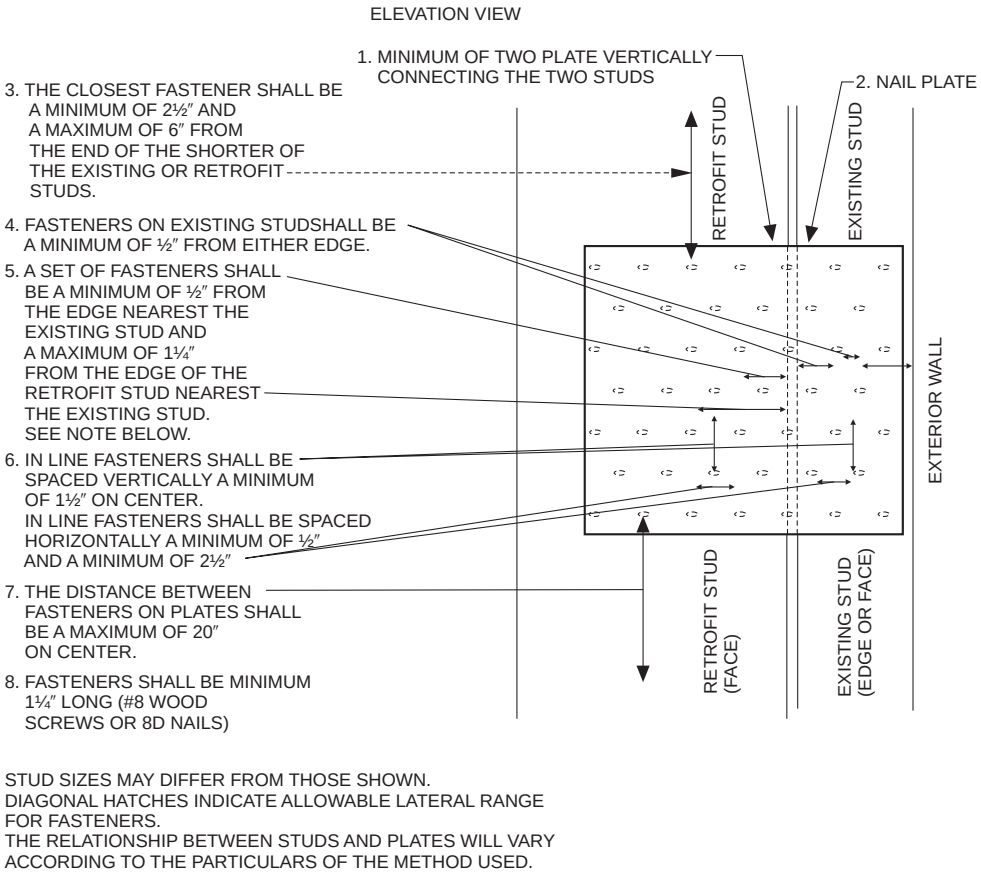

For SI: 1 inch = 25.4 mm.

[BS]FIGURE C104.3.4
NAIL PLATE FASTENING

Fasteners shall be not closer to the end of lumber than $2^1/_2$ inches (64 mm).

[BS] C104.4.1 L-bent strap method. Retrofit studs shall be connected to horizontal braces or to strong backs in accordance with Figure C104.2(1), C104.2(2) or C104.2.3, and shall comply with the following conditions.

1. A strap shall be applied to the edges of a retrofit stud nearest the gable end wall and to the face of horizontal braces using at each end of the strap the number of fasteners specified in Table C104.4.1. Straps shall be long enough so that each strap extends sufficient distance onto the vertical face of the retrofit stud that the fastener closest to the ends of the studs is not less than $2^1/_2$ inches (64 mm) from the end of the stud. Straps shall be permitted to be twisted to accommodate the transition between the tops of retrofit studs and horizontal bracings following roof pitches.
2. Compression blocks shall be installed on the horizontal braces directly against either the existing vertical gable end wall stud or the retrofit stud. Figure C104.2(1) (trusses) and Figure C104.2(2) (conventionally framed) show the installation of the compression block against the existing vertical gable end wall stud with the strap from the retrofit stud running beside the compression block. Compression blocks shall be permitted to be placed over straps. Compression blocks shall be fastened to the horizontal braces with not fewer than the minimum number of 3-inch-long (76 mm) fasteners (#8 wood screws or 10d nails) specified in Table C104.4.1. End and edge distances for fasteners shall be in accordance with Section C103.5.3.

[BS] C104.4.2 U-bent strap method. Retrofit studs shall be connected to horizontal braces in accordance with Figure C104.2(3) or C104.2(4), shall be limited to Retrofit Configurations A and B as defined in Table C104.2, and shall comply with the following conditions.

1. Straps of sufficient length to meet the requirements for the number of fasteners in accordance with Table C104.4.2 and meet the end distance requirements of Section C103.5.3 shall be shaped around retrofit studs and fastened to the edges of horizontal braces. Straps shall wrap the back edge of the retrofit stud snugly with a maximum gap of $^1/_4$ inch (6.4 mm). Rounded bends of straps shall be permitted. One fastener shall be installed that connects each strap to the side of the associated retrofit stud.
2. The horizontal brace shall butt snugly against the retrofit stud with a maximum gap of $^1/_4$ inch (6.4 mm).

INTERNATIONAL CODE COUNCIL®
Copyright © 2019 ICC & NYSDOS. ALL RIGHTS RESERVED. Accessed by Lauren Gualdino (lgualdino@briarcliffmanor.org), (-) Order Number #100880972 on May 08, 2020 07:05 AM (PDT) pursuant to License Agreement with ICC & NYSDOS. No further reproduction, no

100880972

3. Straps shall be permitted to be twisted to accommodate the transition between the tops of retrofit studs and horizontal braces that follow the roof pitch.

[BS] C104.5 Connection of gable end wall to wall below. The bottom chords or bottom members of wood-framed gable end walls shall be attached to the wall below using one of the methods prescribed in Sections C104.5.1 or C104.5.2. The particular method chosen shall correspond to the framing system and type of wall construction encountered.

[BS] C104.5.1 Gable end frame. The bottom chords of the gable end frame shall be attached to the wall below using gusset angles. Not fewer than two fasteners shall be installed into the bottom chord. The gusset angles shall be installed throughout the portion of the gable end where the gable end wall height is greater than 3 feet (91 cm) at the spacing specified in Table C104.5.1. Connection to the wall below shall be by one of the following methods:

1. For a wood-frame wall below, not fewer than two fasteners shall be installed. The fasteners shall be of the same diameter and style specified by the gusset angle manufacturer and sufficient length to extend through the double top plate of the wall below.

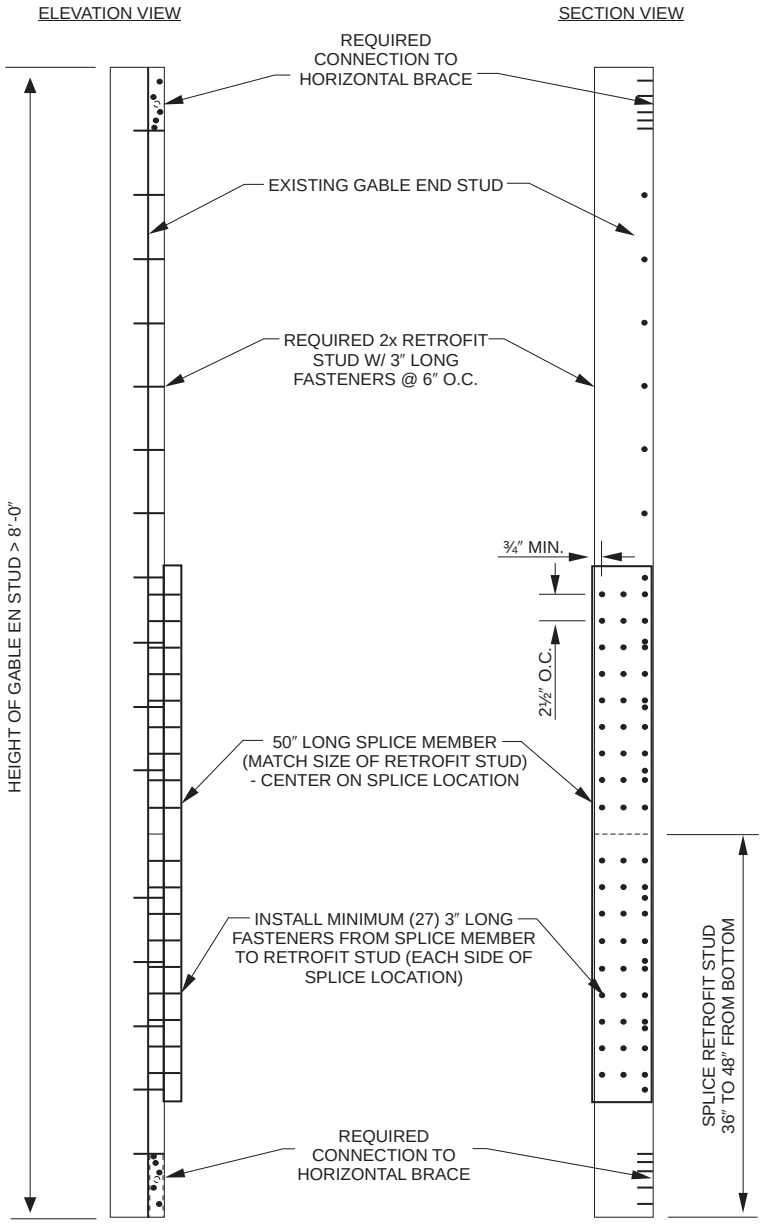

For SI: 1 inch = 25.4 mm, 1 foot = 304.8 mm.

[BS] FIGURE C104.3.8
RETROFIT STUD SPLICES

INTERNATIONAL CODE COUNCIL®
Copyright © 2019 ICC & NYSDOS. ALL RIGHTS RESERVED. Accessed by Lauren Gualdino (lgualdino@briarcliffmanor.org), (-) Order Number #100880972 on May 08, 2020 07:05 AM (PDT) pursuant to License Agreement with ICC & NYSDOS. No further reproduction, no

100880972

2. For a concrete or masonry wall below without a sill plate, the type and number of fasteners into the wall shall be consistent with the gusset angle manufacturer's specifications for fasteners installed in concrete or masonry.
3. For a concrete or masonry wall below with a 2x sill plate, the fasteners into the wall below shall be of the diameter and style specified by the gusset angle manufacturer for concrete or masonry connections; but, long enough to pass through the wood sill plate and provide the required embedment into the concrete or masonry below. Alternatively, the gusset angle can be anchored to the sill plate using four each $1^1/_2$-inch-long (38 mm) fasteners of the same type as specified by the gusset angle manufacturer for wood connections, provided that the sill plate is anchored to the wall on each side of the gusset angle by a $^1/_4$-inch-diameter (6.4 mm) masonry screw with $2^3/_4$ inches (70 mm) of embedment into the concrete or masonry wall. A $^1/_4$-inch (6.4 mm) washer shall be placed under the heads of the masonry screws.

[BS] C104.5.2 Conventionally framed gable end wall. Each stud in a conventionally framed gable end wall, throughout the length of the gable end wall where the wall height is greater than 3 feet (914 mm), shall be attached to the bottom or sill plate using a stud to plate connector with minimum uplift capacity of 175 pounds (778 N). The bottom or sill plate shall then be connected to the wall below using one of the following methods:

1. For a wood frame wall below, the sill or bottom plate shall be connected to the top plate of the wall below using $^1/_4$-inch-diameter (6.4 mm) lag bolt fasteners of sufficient length to penetrate the bottom plate of the upper gable end wall and extend through the bottom top plate of the wall below. A washer sized for the diameter of the lag bolt shall be placed under the head of each lag bolt. The fasteners shall be installed at the spacing indicated in Table C104.5.2.
2. For a concrete or masonry wall below, the sill or bottom plate shall be connected to the concrete or masonry wall below using $^1/_4$-inch-diameter (6.4 mm) concrete or masonry screws of sufficient length to provide $2^3/_4$ inches (70 mm) of embedment into the top of the concrete or masonry wall. A washer sized for the diameter of the lag bolt shall be placed under the head of each lag bolt. The fasteners shall be installed at the spacing indicated in Table C104.5.2.

[BS] TABLE C104.4.1
ELEMENT SIZING AND SPACING FOR L-BENT RETROFIT METHOD

RETROFIT ELEMENTS	RETROFIT CONFIGURATION			
	A	B	C	D
Minimum size and number of Horizontal Braces	2 x 4	2 x 4	2 x 4	2 each 2 x 4
Minimum size and number of Retrofit Studs	2 x 4	2 x 6	2 x 8	2 each 2 x 8
Minimum number of fasteners connecting each end of straps to Retrofit Studs or to Horizontal Braces #8 screws or 10d nails $1^1/_4$" long	6	9	12	8 on each strap
Minimum number of fasteners to connect Compression Blocks to Horizontal Braces #8 screws or 10d nails 3" long	6	8	10	12

For SI: 1 inch = 25.4 mm, 1 foot = 304.8 mm.

[BS] TABLE C104.4.2
ELEMENT SIZING AND SPACING FOR U-BENT RETROFIT METHOD

RETROFIT ELEMENTS	RETROFIT CONFIGURATION			
	A	B	C	D
Minimum size and number of Horizontal Braces	2 x 4	2 x 4	2 x 4	2 each 2 x 4
Minimum size and number of Retrofit Studs	2 x 4	2 x 6	2 x 8	2 each 2 x 8
Minimum number of fasteners connecting Straps to each edge of Horizontal Braces #8 screws or 10d nails $1^1/_4$" long	6	7	7	6 on each side of strap

For SI: 1 inch = 25.4 mm, 1 foot = 304.8 mm.

INTERNATIONAL CODE COUNCIL®
Copyright © 2019 ICC & NYSDOS. ALL RIGHTS RESERVED. Accessed by Lauren Gualdino (lgualdino@briarcliffmanor.org), (-) Order Number #100880972 on May 08, 2020 07:05 AM (PDT) pursuant to License Agreement with ICC & NYSDOS. No further reproduction, no

100880972

[BS] TABLE C104.5.1
SPACING OF GUSSET ANGLES

EXPOSURE CATEGORY	BASIC WIND SPEED (mph)	SPACING OF GUSSET ANGLES (inches)
C	140	38
C	150	32
C	165	28
C	180	24
C	190	20
B	140	48
B	150	40
B	165	36
B	180	30
B	190	26

For SI: 1 inch = 25.4 mm, 1 mile per hour = 0.447 m/s.

[BS] TABLE C104.5.2
SPACING OF LAG OR MASONRY SCREWS USED TO CONNECT SILL PLATE OF GABLE END WALL TO TOP OF THE WALL BELOW

EXPOSURE CATEGORY	BASIC WIND SPEED (mph)	SPACING OF LAG OR MASONRY SCREWS (inches)
C	140	19
C	150	16
C	165	14
C	180	14
C	190	10
B	140	24
B	150	20
B	165	18
B	180	15
B	190	13

For SI: 1 inch = 25.4 mm, 1 mile per hour = 0.447 m/s.

INTERNATIONAL CODE COUNCIL®
Copyright © 2019 ICC & NYSDOS. ALL RIGHTS RESERVED. Accessed by Lauren Gualdino (lgualdino@briarcliffmanor.org), (-) Order Number #100880972 on May 08, 2020 07:05 AM (PDT) pursuant to License Agreement with ICC & NYSDOS. No further reproduction, no

100880972

INTERNATIONAL CODE COUNCIL®
Copyright © 2019 ICC & NYSDOS. ALL RIGHTS RESERVED. Accessed by Lauren Gualdino (lgualdino@briarcliffmanor.org), (-) Order Number #100880972 on May 08, 2020 07:05 AM (PDT) pursuant to License Agreement with ICC & NYSDOS. No further reproduction, no

100880972

CHAPTER C2
ROOF DECK FASTENING FOR HIGH-WIND AREAS

SECTION C201
GENERAL

[BS] C201.1 Purpose. This chapter provides prescriptive methods for partial structural retrofit of an *existing building* to increase its resistance to wind loads. It is intended for voluntary use where the ultimate design wind speed, V_{ult}, determined in accordance with Figure 1609.3(1) of the *International Building Code* exceeds 130 mph (58 m/s) and for reference by mitigation programs. The provisions of this chapter do not necessarily satisfy requirements for new construction. Unless specifically cited, the provisions of this chapter do not necessarily satisfy requirements for structural improvements triggered by *addition, alteration, repair, change of occupancy*, building relocation or other circumstances.

[BS] C201.2 Eligible conditions. The provisions of this chapter are applicable only to buildings that meet either of the following eligibility requirements:

1. Buildings assigned to *Risk Category* I or II in accordance with *International Building Code* Table 1604.5.
2. Buildings within the scope of the *International Residential Code*.

SECTION C202
ROOF DECK ATTACHMENT FOR WOOD ROOFS

[BS] C202.1 Roof decking attachment for one- and two-family dwellings. For one- and two-family dwellings, fastening shall be in accordance with Section C202.1.1 or C202.1.2 as appropriate for the existing construction. The diameter of 8d nails shall be not less than 0.131 inch (3 mm) and the length shall be not less than $2^1/_4$ inches (57 mm) to qualify for the provisions of this section for existing nails regardless of head shape or head diameter.

[BS] C202.1.1 Sawn lumber or wood plank roofs. Roof decking consisting of sawn lumber or wood planks up to 12 inches (30 cm) wide and secured with not fewer than two nails (minimum size 8d) to each roof framing member it crosses shall be deemed to be sufficiently connected. Sawn lumber or wood plank decking secured with smaller fasteners than 8d nails or with fewer than two nails (minimum size 8d) to each framing member it crosses shall be deemed sufficiently connected if fasteners are added such that two clipped head, round head or ring shank nails (minimum size 8d) are in place on each framing member the nail crosses.

[BS] C202.1.2 Wood structural panel roofs. For roof decking consisting of wood structural panels, fasteners and spacings required in Table C202.1.2 shall be deemed to comply with the requirements of Section 707.3 of the *International Existing Building Code*.

Supplemental fasteners as required by Table C202.1.2 shall be 8d ring shank nails with round heads and the following minimum dimensions:

1. 0.113-inch-nominal (3 mm) shank diameter.
2. Ring diameter not less than 0.012 inch (0.3 mm) greater than shank diameter.
3. 16 to 20 rings per inch.
4. A minimum 0.280-inch (7 mm) full round head diameter.
5. Ring shank to extend not less than $1^1/_2$ inches (38 mm) from the tip of the nail.
6. Minimum $2^1/_4$-inch (57 mm) nail length.

SECTION C203
REFERENCED STANDARDS

IBC—18	*International Building Code*®	C101.3, C103.2, C201.1, C201.2
IEBC—18	*International Existing Building Code*®	C202.1.2
IRC—18	*International Residential Code*®	C101.2, C101.3, C103.2, C201.2

INTERNATIONAL CODE COUNCIL®
Copyright © 2019 ICC & NYSDOS. ALL RIGHTS RESERVED. Accessed by Lauren Gualdino (lgualdino@briarcliffmanor.org), (-) Order Number #100880972 on May 08, 2020 07:05 AM (PDT) pursuant to License Agreement with ICC & NYSDOS. No further reproduction, no

[BS] TABLE C202.1.2
SUPPLEMENT FASTENERS AT PANEL EDGES AND INTERMEDIATE FRAMING

EXISTING FASTENERS	EXISTING FASTENER SPACING (EDGE OR INTERMEDIATE SUPPORTS)	MAXIMUM SUPPLEMENTAL FASTENER SPACING FOR 130 MPH < V_{ult} ≤ 140 MPH	MAXIMUM SUPPLEMENTAL FASTENER SPACING FOR INTERIOR ZONE[c] LOCATIONS FOR MPH V_{ult} > 140 MPH AND EDGE ZONES NOT COVERED BY THE COLUMN TO THE RIGHT	EDGE ZONE[d] FOR V_{ult} > 160 MPH AND EXPOSURE C, OR V_{ult} > 180 MPH AND EXPOSURE B
Staples or 6d	Any	6″ o.c.[b]	6″ o.c.[b]	4″ o.c.[b] at panel edges and 4″ o.c.[b] at intermediate supports
8d clipped head or round head smooth shank	6″ o.c. or less	None necessary	None necessary along edges of panels but 6″ o.c.[b] at intermediate supports of panel	4″ o.c.[a] at panel edges and 4″ o.c.[a] at intermediate supports
8d clipped head or round head ring shank	6″ o.c. or less	None necessary	None necessary	4″ o.c.[a] at panel edges and 4″ o.c.[a] at intermediate supports
8d clipped head or round head smooth shank	Greater than 6″ o.c.	6″ o.c.[a]	6″ o.c.[a] along panel edges and 6″ o.c.[b] at intermediate supports of panel	4″ o.c.[a] at panel edges and 4″ o.c.[a] at intermediate supports
8d clipped head or round head ring shank	Greater than 6″ o.c.	6″ o.c.[a]	6″ o.c.[a]	4″ o.c.[a] at panel edges and 4″ o.c.[a] at intermediate supports

For SI: 1 inch = 25.4 mm; 1 foot = 304.8 mm; 1 mile per hour = 0.447 m/s.

a. Maximum spacing determined based on existing fasteners and supplemental fasteners.

b. Maximum spacing determined based on supplemental fasteners only.

c. Interior zone = sheathing that is not located within 4 feet of the perimeter edge of the roof or within 4 feet of each side of a ridge.

d. Edge zone = sheathing that is located within 4 feet of the perimeter edge of the roof and within 4 feet of each side of a ridge.

INTERNATIONAL CODE COUNCIL®
Copyright © 2019 ICC & NYSDOS. ALL RIGHTS RESERVED. Accessed by Lauren Gualdino (lgualdino@briarcliffmanor.org), (-) Order Number #100880972 on May 08, 2020 07:05 AM (PDT) pursuant to License Agreement with ICC & NYSDOS. No further reproduction, no

100880972

[NY] APPENDIX D
DIAPER CHANGING STATIONS

[NY] SECTION D101 INTRODUCTION

[NY] D101.1 Scope. This appendix establishes standards for the installation of *diaper changing stations* in all newly constructed buildings that have one or more areas classified as *Assembly Group A occupancies* or *Mercantile Group M occupancies* and in all existing buildings that have one or more areas classified as *Assembly Group A occupancies* or *Mercantile Group M occupancies* and undergo a *substantial renovation*.

[NY] SECTION D102 PURPOSE

[NY] D102.1 Purpose. This appendix implements the provisions of subdivisions 16 and 17 of Section 378 of the Executive Law, as added by Chapter 58 of the Laws of 2018.

[NY] SECTION D103 DEFINITIONS

[NY] D103.1 Definitions. In this appendix, the following terms shall have the following meanings:

[NY] 2009 ICC A117.1. The 2009 edition of the publication entitled ICC A117.1, *Accessible and Usable Buildings and Facilities* (publication date 2010) published by the International Code Council, Inc.

[NY] Building Code of New York State. The 2020 edition of the publication entitled "Building Code of New York State," published by the International Code Council, Inc. (publication date November 2019).

[NY] Existing Building Code of New York State. The 2020 edition of the publication entitled "Existing Building Code of New York State," published by the International Code Council, Inc. (publication date November 2019).

[NY] Approved. Acceptable to the *building official* or *authority having jurisdiction*.

[NY] Assembly Group A occupancy. An Assembly Group A occupancy as described in Section 303 of the *Building Code of New York State*.

[NY] Diaper changing station. A diaper changing station, deck, table, or similar amenity that is in intended for use by the public for the purpose of changing diapers on children weighing not more than 50 pounds.

[NY] Existing building. A building constructed before January 1, 2019. For the purposes of this appendix, where a substantially complete application for a permit for the original construction of a building has been submitted to the *authority having jurisdiction* before January 1, 2019, such building shall be deemed to have been constructed before January 1, 2019 and, accordingly, shall be deemed to be an existing building.

[NY] Historic Building. Any building or structure that is one or more of the following:

1. Listed, or certified as eligible for listing, by the State Historic Preservation Officer or the Keeper of the National Register of Historic Places, in the National Register of Historic Places.
2. Designated as historic under an applicable state or local law.
3. Certified as a contributing resource within a National Register, state designated or locally designated historic district.

[NY] Level 2 or Level 3 alteration. An "alteration" (as defined in the *Existing Building Code of New York State*) that is either a Level 2 alteration (as described in Section 603 of the *Existing Building Code of New York State*) or a Level 3 alteration (as described in Section 604 of the *Existing Building Code of New York State*).

[NY] Mercantile Group M occupancy. A *Mercantile Group M* occupancy as described in Section 309 of the *Building Code of New York State*.

[NY] Newly constructed building. A building constructed on or after January 1, 2019. For the purposes of this appendix, where a substantially complete application for a permit for the original construction of a building has been submitted to the *authority having jurisdiction* on or after January 1, 2019, such building shall be deemed to have been constructed on or after January 1, 2019 and, accordingly, shall be deemed to be a newly constructed building.

[NY] Public family or assisted-use toilet room. A family or assisted-use toilet room as described in Section 1109.2.1 of the *Building Code of New York State* that is intended for use by customers and patrons of and visitors to an area classified as an *Assembly Group A occupancy* or *Mercantile Group M occupancy*.

[NY] Public toilet room. A room containing public toilet facilities intended for use by customers and patrons of and visitors to an area classified as an *Assembly Group A occupancy* or *Mercantile Group M occupancy*. The term "public toilet room" includes public family or assisted-use toilet room, a public toilet room available for use by both sexes (hereinafter referred to as a "unisex public toilet room"), a public toilet room available for use only by males (hereinafter referred to as a "male public toilet room"), and a public toilet room available for use only by females (hereinafter referred to as a "female public toilet room"). A room that meets the definition of "public toilet room" in this subdivision will continue to be deemed to be a public toilet room for the purposes of this appendix even if such room contains both employee toilet facilities and public toilet facilities.

[NY] Substantial renovation. The term "Substantial renovation" means one or more of the categories of work described in Section D104.2 of this appendix.

INTERNATIONAL CODE COUNCIL®
Copyright © 2019 ICC & NYSDOS. ALL RIGHTS RESERVED. Accessed by Lauren Gualdino (lgualdino@briarcliffmanor.org), (-) Order Number #100880972 on May 08, 2020 07:05 AM (PDT) pursuant to License Agreement with ICC & NYSDOS. No further reproduction, no

100880972

[NY] SECTION D104
GENERAL REQUIREMENTS

[NY] D104.1 Newly constructed buildings. In all *newly constructed buildings* that have one or more areas classified as an *Assembly Group A occupancy* or *Mercantile Group M occupancy*, at least one safe, sanitary, and convenient diaper changing station available for use by both male and female occupants (or at least one such *diaper changing station* available for use by male occupants and at least one such *diaper changing station* available for use by female occupants) shall be provided on each floor level containing a *public toilet room*.

[NY] D104.2 Existing buildings. Except as otherwise provided in Sections 104.3 and 104.4 of this appendix, in an *existing building* that undergoes work in any one or more of the categories described in this subdivision and has, upon completion of such work, one or more areas classified as an *Assembly Group A occupancy* or *Mercantile Group M occupancy*, safe, sanitary, and convenient diaper changing stations shall be provided as follows:

1. In the case of the construction or installation of a new *public family or assisted-use toilet room* or a new unisex public toilet room, at least one such diaper changing station shall be provided in the newly constructed or installed *public family or assisted-use toilet room* or unisex public toilet room.

2. In the case of the construction or installation of a new male *public toilet room* and a new female *public toilet room* on the same floor level, at least one such *diaper changing station* shall be provided in the newly constructed or installed male *public toilet room* and at least one such *diaper changing station* shall be provided in the newly constructed or installed female *public toilet room*.

3. In the case of a *Level 2 alteration* of an existing *public family or assisted-use toilet room*, an existing unisex *public toilet room*, or an existing male *public toilet room* and an existing female *public toilet room* that are both on the same floor level, at least one such *diaper changing station* shall be provided in each public toilet room undergoing the *Level 2 alteration*.

4. In the case of a *Level 3 alteration* of an *existing building* where the work area includes an existing *public family or assisted-use toilet room*, an existing unisex *public toilet room*, or an existing male *public toilet room* and an existing female *public toilet room* that are both on the same floor level, at least one such *diaper changing station* shall be provided in each *public toilet room* included in the work area of the *Level 3 alteration*.

5. In the case of work that does not fall in any category described in Items 1, 2, 3, or 4 of this subdivision; is a *Level 2 or Level 3 alteration* of an *existing building*; and has a work area that includes at least 50 percent of the area of an *Assembly Group A occupancy* or *Mercantile Group M occupancy*, safe, sanitary, and convenient diaper changing stations shall be provided as follows:

   5.1. Where such *Assembly Group A occupancy* or *Mercantile Group M occupancy* is served by an existing *public family or assisted-use toilet room* and a *diaper changing station* can be provided in such existing *public family or assisted-use toilet room* without having to reconfigure the space therein or increase the floor area thereof, at least one such *diaper changing station* shall be provided in such existing *public family or assisted-use toilet room.*

   5.2. Where such *Assembly Group A occupancy* or *Mercantile Group M occupancy* is served by an existing unisex *public toilet room* and a *diaper changing station* can be provided in such existing unisex *public toilet room* without having to reconfigure the space therein or increase the floor area thereof, at least one such *diaper changing station* shall be provided in such existing unisex *public toilet room*.

   5.3. Where such *Assembly Group A occupancy* or *Mercantile Group M occupancy* is served by an existing male *public toilet room* and an existing female *public toilet room* that are both on the same floor level and a *diaper changing station* can be provided in both of such existing *public toilet rooms* without having to reconfigure the space in or increase the floor area of either of such existing *public toilet rooms*, at least one such *diaper changing station* shall be provided in such existing male *public toilet room* and at least one such *diaper changing station* shall be provided in such existing female *public toilet room*.

[NY] D104.3 Exception. Notwithstanding any provision of Section D104.2 to the contrary, if an *existing building* undergoes work in any category described in Section D104.2, not more than one *diaper changing station* available for use by both male and female occupants (or one *diaper changing station* available for use by male occupants and one *diaper changing station* available for use by female occupants) shall be required on any floor level.

[NY] D104.4 Transitional provision. Notwithstanding any provision of Section D104.2 to the contrary, if an *existing building* undergoes work in any category described in Section D104.2 and a substantially complete application for a permit for such work has been submitted to the *authority having jurisdiction* before January 1, 2019, the requirements of Section D104.2 shall not apply to such work.

INTERNATIONAL CODE COUNCIL®
Copyright © 2019 ICC & NYSDOS. ALL RIGHTS RESERVED. Accessed by Lauren Gualdino (lgualdino@briarcliffmanor.org), (-) Order Number #100880972 on May 08, 2020 07:05 AM (PDT) pursuant to License Agreement with ICC & NYSDOS. No further reproduction, no

100880972

[NY] SECTION D105
ACCESSIBILITY, CONSTRUCTION, AND INSTALLATION REQUIREMENTS

[NY] D105.1 Accessibility. All *diaper changing stations* shall comply, at a minimum, with the accessibility requirements of Section 603.5 (Diaper Changing Tables) of the 2009 edition of *ICC A117.1*.

[NY] D105.2 Design. All *diaper changing stations* shall be designed for use with children weighing up to 50 pounds (22.7 kg) and shall include a child restraint system.

[NY] D105.3 Listing and labeling. Commercially manufactured wall-mounted or recessed *diaper changing stations* listed and labeled as complying with ASTM F2285 – 04(2016)e1 (Standard Consumer Safety Performance Specification for Diaper Changing Tables for Commercial Use), shall be approved, and shall be installed in accordance with the manufacturer's installation instructions, the requirements of this appendix, and any and all other applicable requirements of the *Uniform Code*.

[NY] D105.4 Installation. Commercially manufactured countertop *diaper changing stations* shall be approved and shall be installed in accordance with the manufacturer's installation instructions, the requirements of this appendix, and any and all other applicable requirements of the *Uniform Code*.

[NY] D105.5 Construction. Non-commercially manufactured *diaper changing stations* shall be approved and shall be constructed and installed in accordance with the requirements of this appendix and any and all other applicable requirements of the *Uniform Code*.

[NY] SECTION D106
SIGNAGE

[NY] D106.1 Signage. In each building that has one or more areas classified as an *Assembly Group A occupancy* or *Mercantile Group M occupancy* and in which at least one *diaper changing station* is installed on or after January 1, 2019 (whether voluntarily, or pursuant to this appendix, or pursuant to any other applicable law), each public toilet room that does not have a *diaper changing station* shall be provided with a sign indicating the location of the nearest *diaper changing station* that is available for use by the gender using such *public toilet room*. Where a *diaper changing station* is not available for use by a gender in a building, no such sign shall be required in or adjacent to each *public toilet room* by the gender using such *public toilet room*. Such signs shall be readily visible, shall be posted in a conspicuous place in or adjacent to the public toilet room, and shall comply with Section 703.2 (Visual Characters) of the 2009 edition of *ICC A117.1*. No such sign shall be required in or adjacent to a *public toilet room* in which any *diaper changing station* is located.

[NY] SECTION D107
MAINTENANCE

[NY] D107.1 Maintenance. *Diaper changing stations* installed in any building (whether voluntarily, or pursuant to this Appendix, or pursuant to any other applicable law) shall be maintained in a safe, sanitary, and working condition.

[NY] SECTION D108
HISTORIC BUILDINGS

[NY] D108.1 Historic building. *Historic buildings* are exempt from the requirements of this Appendix except the requirements of Sections D106 and D107.

INTERNATIONAL CODE COUNCIL®
Copyright © 2019 ICC & NYSDOS. ALL RIGHTS RESERVED. Accessed by Lauren Gualdino (lgualdino@briarcliffmanor.org), (-) Order Number #100880972 on May 08, 2020 07:05 AM (PDT) pursuant to License Agreement with ICC & NYSDOS. No further reproduction, no

100880972

INTERNATIONAL CODE COUNCIL®
Copyright © 2019 ICC & NYSDOS. ALL RIGHTS RESERVED. Accessed by Lauren Gualdino (lgualdino@briarcliffmanor.org), (-) Order Number #100880972 on May 08, 2020 07:05 AM (PDT) pursuant to License Agreement with ICC & NYSDOS. No further reproduction, no

100880972

RESOURCE A

GUIDELINES ON FIRE RATINGS OF ARCHAIC MATERIALS AND ASSEMBLIES

Introduction

The *Existing Building Code of New York State* (EBCNYS) is a comprehensive code with the goal of addressing all aspects of work taking place in existing buildings and providing user-friendly methods and tools for regulation and improvement of such buildings. This resource document is included within the cover of the EBCNYS with that goal in mind and as a step towards accomplishing that goal.

In the process of *repair* and *alteration* of existing buildings, based on the nature and the extent of the work, the EBCNYS might require certain upgrades in the fire-resistance rating of building elements, at which time it becomes critical for the designers and the *building officials* to be able to determine the fire-resistance rating of the *existing building* elements as part of the overall evaluation for the assessment of the need for improvements. This resource document provides a guideline for such an evaluation for fire-resistance ratings of archaic materials that are not typically found in the modern model building codes.

Resource A is only a guideline and is not intended to be a document for specific adoption as it is not written in the format or language of ICC's *International Codes* and is not subject to the code development process.

PURPOSE

The *Guideline on Fire Ratings of Archaic Materials and Assemblies* focuses upon the fire-related performance of archaic construction. "Archaic" encompasses construction typical of an earlier time, generally prior to 1950. "Fire-related performance" includes fire resistance, flame spread, smoke production and degree of combustibility.

The purpose of this guideline is to update the information which was available at the time of original construction, for use by architects, engineers and *building officials* when evaluating the fire safety of a rehabilitation project. In addition, information relevant to the evaluation of general classes of materials and types of construction is presented for those cases when documentation of the fire performance of a particular archaic material or assembly cannot be found.

It has been assumed that the building materials and their fastening, joining and incorporation into the building structure are sound mechanically. Therefore, some determination must be made that the original manufacture, the original construction practice, and the rigors of aging and use have not weakened the building. This assessment can often be difficult because process and quality control was not good in many industries, and variations among locally available raw materials and manufacturing techniques often resulted in a product which varied widely in its strength and durability. The properties of iron and steel, for example, varied widely, depending on the mill and the process used.

There is nothing inherently inferior about archaic materials or construction techniques. The pressures that promote fundamental change are most often economic or technological matters not necessarily related to concerns for safety. The high cost of labor made wood lath and plaster uneconomical. The high cost of land and the congestion of the cities provided the impetus for high-rise construction. Improved technology made it possible. The difficulty with archaic materials is not a question of suitability, but familiarity.

Code requirements for the fire performance of key building elements (e.g., walls, floor/ceiling assemblies, doors, shaft enclosures) are stated in performance terms: hours of fire resistance. It matters not whether these elements were built in 1908 or 1980, only that they provide the required degree of fire resistance. The level of performance will be defined by the local community, primarily through the enactment of a building or rehabilitation code. This guideline is only a tool to help evaluate the various building elements, regardless of what the level of performance is required to be.

The problem with archaic materials is simply that documentation of their fire performance is not readily available. The application of engineering judgment is more difficult because building officials may not be familiar with the materials or construction method involved. As a result, either a full-scale fire test is required or the archaic construction in question removed and replaced. Both alternatives are time consuming and wasteful.

This guideline and the accompanying appendix are designed to help fill this information void. By providing the necessary documentation, there will be a firm basis for the continued acceptance of archaic materials and assemblies.

INTERNATIONAL CODE COUNCIL®
Copyright © 2019 ICC & NYSDOS. ALL RIGHTS RESERVED. Accessed by Lauren Gualdino (lgualdino@briarcliffmanor.org), (-) Order Number #100880972 on May 08, 2020 07:05 AM (PDT) pursuant to License Agreement with ICC & NYSDOS. No further reproduction, no

100880972

1
FIRE-RELATED PERFORMANCE OF ARCHAIC MATERIALS AND ASSEMBLIES

1.1
FIRE PERFORMANCE MEASURES

This guideline does not specify the level of performance required for the various building components. These requirements are controlled by the building occupancy and use and are set forth in the local building or rehabilitation code.

The fire resistance of a given building element is established by subjecting a sample of the assembly to a "standard" fire test which follows a "standard" time-temperature curve. This test method has changed little since the 1920s. The test results tabulated in the Appendix have been adjusted to reflect current test methods.

The current model building codes cite other fire-related properties not always tested for in earlier years: flame spread, smoke production, and degree of combustibility. However, they can generally be assumed to fall within well defined values because the principal combustible component of archaic materials is cellulose. Smoke production is more important today because of the increased use of plastics. However, the early flame spread tests, developed in the early 1940s, also included a test for smoke production.

"Plastics," one of the most important classes of contemporary materials, were not found in the review of archaic materials. If plastics are to be used in a rehabilitated building, they should be evaluated by contemporary standards. Information and documentation of their fire-related properties and performance is widely available.

Flame spread, smoke production and degree of combustibility are discussed in detail below. Test results for eight common species of lumber, published in an Underwriter's Laboratories' report (104), are noted in the following table:

TUNNEL TEST RESULTS FOR EIGHT SPECIES OF LUMBER

SPECIES OF LUMBER	FLAME SPREAD	FUEL CONTRIBUTED	SMOKE DEVELOPED
Western White Pine	75	50-60	50
Northern White Pine	120-215	120-140	60-65
Ponderosa Pine	80-215	120-135	100-110
Yellow Pine	180-190	130-145	275-305
Red Gum	140-155	125-175	40-60
Yellow Birch	105-110	100-105	45-65
Douglas Fir	65-100	50-80	10-100

Flame Spread

The flame spread of interior finishes is most often measured by the ASTM E84 "tunnel test." This test measures how far and how fast the flames spread across the surface of the test sample. The resulting flame spread rating (FSR) is expressed as a number on a continuous scale where cement-asbestos board is 0 and red oak is 100. (Materials with a flame spread greater than red oak have an FSR greater than 100.) The scale is divided into distinct groups or classes. The most commonly used flame spread classifications are: Class I or A*, with a 0-25 FSR; Class II or B, with a 26-75 FSR; and Class III or C, with a 76-200 FSR. The *NFPA Life Safety Code* also has a Class D (201-500 FSR) and Class E (over 500 FSR) interior finish.

These classifications are typically used in modern building codes to restrict the rate of fire spread. Only the first three classifications are normally permitted, though not all classes of materials can be used in all places throughout a building. For example, the interior finish of building materials used in exits or in corridors leading to exits is more strictly regulated than materials used within private dwelling units.

In general, inorganic archaic materials (e.g., bricks or tile) can be expected to be in Class I. Materials of whole wood are mostly Class II. Whole wood is defined as wood used in the same form as sawn from the tree. This is in contrast to the contemporary reconstituted wood products such as plywood, fiberboard, hardboard, or particle board. If the organic archaic material is not whole wood, the flame spread classification could be well over 200 and thus would be particularly unsuited for use in exits and other critical locations in a building. Some plywoods and various wood fiberboards have flame spreads over 200. Although they can be treated with fire retardants to reduce their flame spread, it would be advisable to assume that all such products have a flame spread over 200 unless there is information to the contrary.

Smoke Production

The evaluation of smoke density is part of the ASTM E84 tunnel test. For the eight species of lumber shown in the table above, the highest levels are 275-305 for Yellow Pine, but most of the others are less smoky than red oak which has an index of 100. The advent of plastics caused substantial increases in the smoke density values measured by the tunnel test. The ensuing limitation of the smoke production for wall and ceiling materials by the model building codes has been a reaction to the introduction of plastic materials. In general, cellulosic materials fall in the 50-300 range of smoke density which is below the general limitation of 450 adopted by many codes.

Degree of Combustibility

The model building codes tend to define "noncombustibility" on the basis of having passed ASTM E136 or if the material is totally inorganic. The acceptance of gypsum wallboard as noncombustible is based on limiting paper thickness to not over $^1/_8$ inch and a 0-50 flame spread rating by ASTM E84. At times there were provisions to define a Class I or A material (0-25 FSR) as noncombustible, but this is not currently recognized by most model building codes.

If there is any doubt whether or not an archaic material is noncombustible, it would be appropriate to send out samples for evaluation. If an archaic material is determined to be noncombustible according to ASTM E136, it can be expected that it will not contribute fuel to the fire.

* Some codes are Roman numerals, others use letters.

INTERNATIONAL CODE COUNCIL®
Copyright © 2019 ICC & NYSDOS. ALL RIGHTS RESERVED. Accessed by Lauren Gualdino (lgualdino@briarcliffmanor.org), (-) Order Number #100880972 on May 08, 2020 07:05 AM (PDT) pursuant to License Agreement with ICC & NYSDOS. No further reproduction, no

100880972

1.2
COMBUSTIBLE CONSTRUCTION TYPES

One of the earliest forms of timber construction used exterior load-bearing masonry walls with columns and/or wooden walls supporting wooden beams and floors in the interior of the building. This form of construction, often called "mill" or "heavy timber" construction, has approximately 1 hour fire resistance. The exterior walls will generally contain the fire within the building.

With the development of dimensional lumber, there was a switch from heavy timber to "balloon frame" construction. The balloon frame uses load-bearing exterior wooden walls which have long timbers often extending from foundation to roof. When longer lumber became scarce, another form of construction, "platform" framing, replaced the balloon framing. The difference between the two systems is significant because platform framing is automatically fire-blocked at every floor while balloon framing commonly has concealed spaces that extend unblocked from basement to attic. The architect, engineer, and *building official* must be alert to the details of construction and the ease with which fire can spread in concealed spaces.

2
BUILDING EVALUATION

A given rehabilitation project will most likely go through several stages. The preliminary evaluation process involves the designer in surveying the prospective building. The fire resistance of *existing building* materials and construction systems is identified; potential problems are noted for closer study. The final evaluation phase includes: developing design solutions to upgrade the fire resistance of building elements, if necessary; preparing working drawings and specifications; and the securing of the necessary code approvals.

2.1
PRELIMINARY EVALUATION

A preliminary evaluation should begin with a building survey to determine the existing materials, the general arrangement of the structure and the use of the occupied spaces, and the details of construction. The designer needs to know "what is there" before a decision can be reached about what to keep and what to remove during the rehabilitation process. This preliminary evaluation should be as detailed as necessary to make initial plans. The fire-related properties need to be determined from the applicable building or rehabilitation code, and the materials and assemblies existing in the building then need to be evaluated for these properties. Two work sheets are shown below to facilitate the preliminary evaluation.

Two possible sources of information helpful in the preliminary evaluation are the original building plans and the building code in effect at the time of original construction. Plans may be on file with the local building department or in the offices of the original designers (e.g., architect, engineer) or their successors. If plans are available, the investigator should verify that the building was actually constructed as called for in the plans, as well as incorporate any later alterations or changes to the building. Earlier editions of the local building code should be on file with the building official. The code in effect at the time of construction will contain fire performance criteria. While this is no guarantee that the required performance was actually provided, it does give the investigator some guidance as to the level of performance which may be expected. Under some code administration and enforcement systems, the code in effect at the time of construction also defines the level of performance that must be provided at the time of rehabilitation.

Figure 1 illustrates one method for organizing preliminary field notes. Space is provided for the materials, dimensions, and condition of the principal building elements. Each floor of the structure should be visited and the appropriate information obtained. In practice, there will often be identical materials and construction on every floor, but the exception may be of vital importance. A schematic diagram should be prepared of each floor showing the layout of exits and hallways and indicating where each element described in the field notes fits into the structure as a whole. The exact arrangement of interior walls within apartments is of secondary importance from a fire safety point of view and need not be shown on the drawings unless these walls are required by code to have a fire resistance rating.

The location of stairways and elevators should be clearly marked on the drawings. All exterior means of escape (e.g., fire escapes) should be identified.[1]

The following notes explain the entries in Figure 1.

Exterior Bearing Walls: Many old buildings utilize heavily constructed walls to support the floor/ceiling assemblies at the exterior of the building. There may be columns and/or interior bearing walls within the structure, but the exterior walls are an important factor in assessing the fire safety of a building.

The field investigator should note how the floor/ceiling assemblies are supported at the exterior of the building. If columns are incorporated in the exterior walls, the walls may be considered nonbearing.

Interior Bearing Walls: It may be difficult to determine whether or not an interior wall is load bearing, but the field investigator should attempt to make this determination. At a later stage of the rehabilitation process, this question will need to be determined exactly. Therefore, the field notes should be as accurate as possible.

Exterior Nonbearing Walls: The fire resistance of the exterior walls is important for two reasons. These walls (both bearing and nonbearing) are depended upon to: a) contain a fire within the building of origin; or b) keep an exterior fire *outside* the building. It is therefore important to indicate on the drawings where any openings are located as well as the materials and construction of all doors or shutters. The drawings

1. Problems providing adequate exiting are discussed at length in the *Egress Guideline for Residential Rehabilitation*.

INTERNATIONAL CODE COUNCIL®
Copyright © 2019 ICC & NYSDOS. ALL RIGHTS RESERVED. Accessed by Lauren Gualdino (lgualdino@briarcliffmanor.org), (-) Order Number #100880972 on May 08, 2020 07:05 AM (PDT) pursuant to License Agreement with ICC & NYSDOS. No further reproduction, no

100880972

should indicate the presence of wired glass, its thickness and framing, and identify the materials used for windows and door frames. The protection of openings adjacent to exterior means of escape (e.g., exterior stairways, fire escapes) is particularly important. The ground floor drawing should locate the building on the property and indicate the precise distances to adjacent buildings.

Interior Nonbearing Walls (Partitions): A partition is a "wall that extends from floor to ceiling and subdivides space within any story of a building." (48) Figure 1 has two categories (A & B) for Interior Nonbearing Walls (Partitions) which can be used for different walls, such as hallway walls as compared to inter-apartment walls. Under some circumstances there may be only one type of wall construction; in others, three or more types of wall construction may occur.

The field investigator should be alert for differences in function as well as in materials and construction details. In general, the details within apartments are not as important as the major exit paths and exit stairways. The preliminary field investigation should attempt to determine the thickness of all walls. A term introduced below called "thickness design" will depend on an accurate ($\pm$ $^1/_4$ inch) determination. Even though this initial field survey is called "preliminary," the data generated should be as accurate and complete as possible.

The field investigator should note the exact location from which observations are recorded. For instance, if a hole is found through a wall enclosing an exit stairway which allows a cataloguing of the construction details, the field investigation notes should reflect the location of the "find." At the preliminary stage it is not necessary to core every wall; the interior details of construction can usually be determined at some location.

Structural Frame: There may or may not be a complete skeletal frame, but usually there are columns, beams, trusses, or other like elements. The dimensions and spacing of the structural elements should be measured and indicated on the drawings. For instance, if there are 10-inch square columns located on a 30-foot square grid throughout the building, this should be noted. The structural material and cover or protective materials should be identified wherever possible. The thickness of the cover materials should be determined to an accuracy of $\pm$ $^1/_4$ inch. As discussed above, the preliminary field survey usually relies on accidental openings in the cover materials rather than a systematic coring technique.

Floor/Ceiling Structural Systems: The span between supports should be measured. If possible, a sketch of the cross-section of the system should be made. If there is no location where accidental damage has opened the floor/ceiling construction to visual inspection, it is necessary to make such an opening. An evaluation of the fire resistance of a floor/ceiling assembly requires detailed knowledge of the materials and their arrangement. Special attention should be paid to the cover on structural steel elements and the condition of suspended ceilings and similar membranes.

Roofs: The preliminary field survey of the roof system is initially concerned with watertightness. However, once it is apparent that the roof is sound for ordinary use and can be retained in the rehabilitated building, it becomes necessary to evaluate the fire performance. The field investigator must measure the thickness and identify the types of materials which have been used. Be aware that there may be several layers of roof materials.

FIGURE 1
PRELIMINARY EVALUATION FIELD NOTES

BUILDING ELEMENT		MATERIALS	THICKNESS	CONDITION	NOTES
Exterior Bearing Walls					
Interior Bearing Walls					
Exterior Nonbearing Walls					
Interior Nonbearing Walls or Partitions:	A				
	B				
Structural Frame: Columns					
Beams					
Other					
Floor/Ceiling Structural System Spanning					
Roofs					
Doors (including frame and hardware): a) Enclosed vertical exitway					
b) Enclosed horizontal exitway					
c) Other					

INTERNATIONAL CODE COUNCIL®
Copyright © 2019 ICC & NYSDOS. ALL RIGHTS RESERVED. Accessed by Lauren Gualdino (lgualdino@briarcliffmanor.org), (-) Order Number #100880972 on May 08, 2020 07:05 AM (PDT) pursuant to License Agreement with ICC & NYSDOS. No further reproduction, no

100880972

Doors: Doors to stairways and hallways represent some of the most important fire elements to be considered within a building. The uses of the spaces separated largely controls the level of fire performance necessary. Walls and doors enclosing stairways or elevator shafts would normally require a higher level of performance than between the bedroom and bath. The various uses are differentiated in Figure 1.

Careful measurements of the thickness of door panels must be made, and the type of core material within each door must be determined. It should be noted whether doors have self-closing devices; the general operation of the doors should be checked. The latch should engage and the door should fit tightly in the frame. The hinges should be in good condition. If glass is used in the doors, it should be identified as either plain glass or wired glass mounted in either a wood or steel frame.

Materials: The field investigator should be able to identify ordinary building materials. In situations where an unfamiliar material is found, a sample should be obtained. This sample should measure at least 10 cubic inches so that an ASTM E136 fire test can be conducted to determine if it is combustible.

Thickness: The thickness of all materials should be measured accurately since, under certain circumstances, the level of fire resistance is very sensitive to the material thickness.

Condition: The method of attaching the various layers and facings to one another or to the supporting structural element should be noted under the appropriate building element. The "secureness" of the attachment and the general condition of the layers and facings should be noted here.

Notes: The "Notes" column can be used for many purposes, but it might be a good idea to make specific references to other field notes or drawings.

After the building survey is completed, the data collected must be analyzed. A suggested work sheet for organizing this information is given below as Figure 2.

The required fire resistance and flame spread for each building element are normally established by the local building or rehabilitation code. The fire performance of the existing materials and assemblies should then be estimated, using one of the techniques described below. If the fire performance of the *existing building* element(s) is equal to or greater than that required, the materials and assemblies may remain. If the fire performance is less than required, then corrective measures must be taken.

The most common methods of upgrading the level of protection are to either remove and replace the *existing building* element(s) or to *repair* and upgrade the existing materials and assemblies. Other fire protection measures, such as automatic sprinklers or detection and alarm systems, also could be con-

FIGURE 2
PRELIMINARY EVALUATION WORKSHEET

BUILDING ELEMENT		REQUIRED FIRE RESISTANCE	REQUIRED FLAME SPREAD	ESTIMATED FIRE RESISTANCE	ESTIMATED FLAME SPREAD	METHOD OF UPGRADING	ESTIMATED UPGRADED PROTECTION	NOTES
Exterior Bearing Walls								
Interior Bearing Walls								
Exterior Nonbearing Walls								
Interior Nonbearing Walls or Partitions:	A							
	B							
Structural Frame: Columns								
Beams								
Other								
Floor/Ceiling Structural System Spanning								
Roofs								
Doors (including frame and hardware): a) Enclosed vertical exitway								
b) Enclosed horizontal exitway								
c) Others								

INTERNATIONAL CODE COUNCIL®
Copyright © 2019 ICC & NYSDOS. ALL RIGHTS RESERVED. Accessed by Lauren Gualdino (lgualdino@briarcliffmanor.org), (-) Order Number #100880972 on May 08, 2020 07:05 AM (PDT) pursuant to License Agreement with ICC & NYSDOS. No further reproduction, no

100880972

sidered, though they are beyond the scope of this guideline. If the upgraded protection is still less than that required or deemed to be acceptable, additional corrective measures must be taken. This process must continue until an acceptable level of performance is obtained.

2.2 FIRE RESISTANCE OF EXISTING BUILDING ELEMENTS

The fire resistance of the *existing building* elements can be estimated from the tables and histograms contained in the Appendix. The Appendix is organized first by type of building element: walls, columns, floor/ceiling assemblies, beams, and doors. Within each building element, the tables are organized by type of construction (e.g., masonry, metal, wood frame), and then further divided by minimum dimensions or thickness of the building element.

A histogram precedes every table that has 10 or more entries. The X-axis measures fire resistance in hours; the Y-axis shows the number of entries in that table having a given level of fire resistance. The histograms also contain the location of each entry within that table for easy cross-referencing.

The histograms, because they are keyed to the tables, can speed the preliminary investigation. For example, Table 1.3.2, *Wood Frame Walls 4" to Less Than 6" Thick*, contains 96 entries. Rather than study each table entry, the histogram shows that every wall assembly listed in that table has a fire resistance of less than 2 hours. If the building code required the wall to have 2 hours fire resistance, the designer, with a minimum of effort, is made aware of a problem that requires closer study.

Suppose the code had only required a wall of 1 hour fire resistance. The histogram shows far fewer complying elements (19) than noncomplying ones (77). If the existing assembly is not one of the 19 complying entries, there is a strong possibility the existing assembly is deficient. The histograms can also be used in the converse situation. If the existing assembly is not one of the smaller number of entries with a lower than required fire resistance, there is a strong possibility the existing assembly will be acceptable.

At some point, the *existing building* component or assembly must be located within the tables. Otherwise, the fire resistance must be determined through one of the other techniques presented in the guideline. Locating the building component in the Appendix Tables not only guarantees the accuracy of the fire resistance rating, but also provides a source of documentation for the building official.

2.3 EFFECTS OF PENETRATIONS IN FIRE RESISTANT ASSEMBLIES

There are often many features in existing walls or floor/ceiling assemblies which were not included in the original certification or fire testing. The most common examples are pipes and utility wires passed through holes poked through an assembly. During the life of the building, many penetrations are added, and by the time a building is ready for rehabilitation it is not sufficient to just consider the fire resistance of the assembly as originally constructed. It is necessary to consider all penetrations and their relative impact upon fire performance. For instance, the fire resistance of the corridor wall may be less important than the effect of plain glass doors or transoms. In fact, doors are the most important single class of penetrations.

A fully developed fire generates substantial quantities of heat and excess gaseous fuel capable of penetrating any holes which might be present in the walls or ceiling of the fire compartment. In general, this leads to a severe degradation of the fire resistance of those building elements and to a greater potential for fire spread. This is particularly applicable to penetrations located high in a compartment where the positive pressure of the fire can force the unburned gases through the penetration.

Penetrations in a floor/ceiling assembly will generally completely negate the barrier qualities of the assembly and will lead to rapid spread of fire to the space above. It will not be a problem, however, if the penetrations are filled with noncombustible materials strongly fastened to the structure. The upper half of walls are similar to the floor/ceiling assembly in that a positive pressure can reasonably be expected in the top of the room, and this will push hot and/or burning gases through the penetration unless it is completely sealed.

Building codes require doors installed in fire resistive walls to resist the passage of fire for a specified period of time. If the door to a fully involved room is not closed, a large plume of fire will typically escape through the doorway, preventing anyone from using the space outside the door while allowing the fire to spread. This is why door closers are so important. Glass in doors and transoms can be expected to rapidly shatter unless constructed of listed or approved wire glass in a steel frame. As with other building elements, penetrations or nonrated portions of doors and transoms must be upgraded or otherwise protected.

Table 5.1 in Section V of the Appendix contains 41 entries of doors mounted in sound tight-fitting frames. Part 3.4 below outlines one procedure for evaluating and possibly upgrading existing doors.

3 FINAL EVALUATION AND DESIGN SOLUTION

The final evaluation begins after the rehabilitation project has reached the final design stage and the choice is made to keep certain archaic materials and assemblies in the rehabilitated building. The final evaluation process is essentially a more refined and detailed version of the preliminary evaluation. The specific fire resistance and flame spread requirements are determined for the project. This may involve local building and fire officials reviewing the preliminary evaluation as depicted in Figures 1 and 2 and the field drawings and notes. When necessary, provisions must be made to upgrade *existing building* elements to provide the required level of fire performance.

INTERNATIONAL CODE COUNCIL®
Copyright © 2019 ICC & NYSDOS. ALL RIGHTS RESERVED. Accessed by Lauren Gualdino (lgualdino@briarcliffmanor.org), (-) Order Number #100880972 on May 08, 2020 07:05 AM (PDT) pursuant to License Agreement with ICC & NYSDOS. No further reproduction, no

100880972

There are several approaches to design solutions that can make possible the continued use of archaic materials and assemblies in the rehabilitated structure. The simplest case occurs when the materials and assembly in question are found within the Appendix Tables and the fire performance properties satisfy code requirements. Other approaches must be used, though, if the assembly cannot be found within the Appendix or the fire performance needs to be upgraded. These approaches have been grouped into two classes: experimental and theoretical.

3.1 THE EXPERIMENTAL APPROACH

If a material or assembly found in a building is not listed in the Appendix Tables, there are several other ways to evaluate fire performance. One approach is to conduct the appropriate fire test(s) and thereby determine the fire-related properties directly. There are a number of laboratories in the United States which routinely conduct the various fire tests. A current list can be obtained by writing the Center for Fire Research, National Bureau of Standards, Washington, D.C. 20234.

The contract with any of these testing laboratories should require their observation of specimen preparation as well as the testing of the specimen. A complete description of where and how the specimen was obtained from the building, the transportation of the specimen, and its preparation for testing should be noted in detail so that the building official can be satisfied that the fire test is representative of the actual use.

The test report should describe the fire test procedure and the response of the material or assembly. The laboratory usually submits a cover letter with the report to describe the provisions of the fire test that were satisfied by the material or assembly under investigation. A building official will generally require this cover letter, but will also read the report to confirm that the material or assembly complies with the code requirements. Local *building officials* should be involved in all phases of the testing process.

The experimental approach can be costly and time consuming because specimens must be taken from the building and transported to the testing laboratory. When a load bearing assembly has continuous reinforcement, the test specimen must be removed from the building, transported, and tested in one piece. However, when the fire performance cannot be determined by other means, there may be no alternative to a full-scale test.

A "nonstandard" small-scale test can be used in special cases. Sample sizes need only be 10-25 square feet (0.93-2.3 m^2), while full-scale tests require test samples of either 100 or 180 square feet (9.3 or 17 m^2) in size. This small-scale test is best suited for testing nonload-bearing assemblies against thermal transmission only.

3.2 THE THEORETICAL APPROACH

There will be instances when materials and assemblies in a building undergoing rehabilitation cannot be found in the Appendix Tables. Even where test results are available for more or less similar construction, the proper classification may not be immediately apparent. Variations in dimensions, loading conditions, materials, or workmanship may markedly affect the performance of the individual building elements, and the extent of such a possible effect cannot be evaluated from the tables.

Theoretical methods being developed offer an alternative to the full-scale fire tests discussed above. For example, Section 4302(b) of the 1979 edition of the *Uniform Building Code* specifically allows an engineering design for fire resistance in lieu of conducting full-scale tests. These techniques draw upon computer simulation and mathematical modeling, thermodynamics, heat-flow analysis, and materials science to predict the fire performance of building materials and assemblies.

One theoretical method, known as the "Ten Rules of Fire Endurance Ratings," was published by T. Z. Harmathy in the May, 1965 edition of *Fire Technology*. (35) Harmathy's Rules provide a foundation for extending the data within the Appendix Tables to analyze or upgrade current as well as archaic building materials or assemblies.

HARMATHY'S TEN RULES

Rule 1: The "thermal"[1] *fire endurance of a construction consisting of a number of parallel layers is greater than the sum of the "thermal" fire endurances characteristic of the individual layers when exposed separately to fire.*

The minimum performance of an untested assembly can be estimated if the fire endurance of the individual components is known. Though the exact rating of the assembly cannot be stated, the endurance of the assembly is greater than the sum of the endurance of the components.

When a building assembly or component is found to be deficient, the fire endurance can be upgraded by providing a protective membrane. This membrane could be a new layer of brick, plaster, or drywall. The fire endurance of this membrane is called the "finish rating." Appendix Tables 1.5.1 and 1.5.2 contain the finish ratings for the most commonly employed materials. (See also the notes to Rule 2).

The test criteria for the finish rating is the same as for the thermal fire endurance of the total assembly: average temperature increases of 250°F (121°C) above ambient or 325°F (163°C) above ambient at any one place with the membrane being exposed to the fire. The temperature is measured at the interface of the assembly and the protective membrane.

Rule 2: The fire endurance of a construction does not decrease with the addition of further layers.

1. The "thermal" fire endurance is the time at which the average temperature on the unexposed side of a construction exceeds its initial value by 250° when the other side is exposed to the "standard" fire specified by ASTM Test Method E-19.

INTERNATIONAL CODE COUNCIL®
Copyright © 2019 ICC & NYSDOS. ALL RIGHTS RESERVED. Accessed by Lauren Gualdino (lgualdino@briarcliffmanor.org), (-) Order Number #100880972 on May 08, 2020 07:05 AM (PDT) pursuant to License Agreement with ICC & NYSDOS. No further reproduction, no

100880972

Harmathy notes that this rule is a consequence of the previous rule. Its validity follows from the fact that the additional layers increase both the resistance to heat flow and the heat capacity of the construction. This, in turn, reduces the rate of temperature rise at the unexposed surface.

This rule is not just restricted to "thermal" performance but affects the other fire test criteria: direct flame passage, cotton waste ignition, and load bearing performance. This means that certain restrictions must be imposed on the materials to be added and on the loading conditions. One restriction is that a new layer, if applied to the exposed surface, must not produce additional thermal stresses in the construction, i.e., its thermal expansion characteristics must be similar to those of the adjacent layer. Each new layer must also be capable of contributing enough additional strength to the assembly to sustain the added dead load. If this requirement is not fulfilled, the allowable live load must be reduced by an amount equal to the weight of the new layer. Because of these limitations, this rule should not be applied without careful consideration.

Particular care must be taken if the material added is a good thermal insulator. Properly located, the added insulation could improve the "thermal" performance of the assembly. Improperly located, the insulation could block necessary thermal transmission through the assembly, thereby subjecting the structural elements to greater temperatures for longer periods of time, and could cause premature structural failure of the supporting members.

Rule 3: The fire endurance of constructions containing continuous air gaps or cavities is greater than the fire endurance of similar constructions of the same weight, but containing no air gaps or cavities.

By providing for voids in a construction, additional resistances are produced in the path of heat flow. Numerical heat flow analyses indicate that a 10 to 15 percent increase in fire endurance can be achieved by creating an air gap at the midplane of a brick wall. Since the gross volume is also increased by the presence of voids, the air gaps and cavities have a beneficial effect on stability as well. However, constructions containing combustible materials within an air gap may be regarded as exceptions to this rule because of the possible development of burning in the gap.

There are numerous examples of this rule in the tables. For instance:

Table 1.1.4; Item W-8-M-82: Cored concrete masonry, nominal 8 inch thick wall with one unit in wall thickness and with 62 percent minimum of solid material in each unit, load bearing (80 PSI). Fire endurance: $2^{1}/_{2}$ hours.

Table 1.1.5; Item W-10-M-11: Cored concrete masonry, nominal 10 inch thick wall with two units in wall thickness and a 2-inch (51 mm) air space, load bearing (80 PSI). The units are essentially the same as item W-8-M-82. Fire endurance: $3^{1}/_{2}$ hours.

These walls show 1 hour greater fire endurance by the addition of the 2-inch (51 mm) air space.

Rule 4: The farther an air gap or cavity is located from the exposed surface, the more beneficial is its effect on the fire endurance.

Radiation dominates the heat transfer across an air gap or cavity, and it is markedly higher where the temperature is higher.

The air gap or cavity is thus a poor insulator if it is located in a region which attains high temperatures during fire exposure.

Some of the clay tile designs take advantage of these factors. The double cell design, for instance, ensures that there is a cavity near the unexposed face. Some floor/ceiling assemblies have air gaps or cavities near the top surface and these enhance their thermal performance.

Rule 5: The fire endurance of a construction cannot be increased by increasing the thickness of a completely enclosed air layer.

Harmathy notes that there is evidence that if the thickness of the air layer is larger than about $^{1}/_{2}$ inch (12.7 mm), the heat transfer through the air layer depends only on the temperature of the bounding surfaces, and is practically independent of the distance between them. This rule is not applicable if the air layer is not completely enclosed, i.e., if there is a possibility of fresh air entering the gap at an appreciable rate.

Rule 6: Layers of materials of low thermal conductivity are better utilized on that side of the construction on which fire is more likely to happen.

As in Rule 4, the reason lies in the heat transfer process, though the conductivity of the solid is much less dependent on the ambient temperature of the materials. The low thermal conductor creates a substantial temperature differential to be established across its thickness under transient heat flow conditions. This rule may not be applicable to materials undergoing physico-chemical changes accompanied by significant heat absorption or heat evolution.

Rule 7: The fire endurance of asymmetrical constructions depends on the direction of heat flow.

This rule is a consequence of Rules 4 and 6, as well as other factors. This rule is useful in determining the relative protection of corridors and walls enclosing an exit stairway from the surrounding spaces. In addition, there are often situations where a fire is more likely, or potentially more severe, from one side or the other.

Rule 8: The presence of moisture, if it does not result in explosive spalling, increases the fire endurance.

The flow of heat into an assembly is greatly hindered by the release and evaporation of the moisture found within cementitious materials such as gypsum, Portland cement, or magnesium oxychloride. Harmathy has shown that the gain in fire endurance may be as high as 8 percent for each percent (by volume) of moisture in the construction. It is the moisture chemically bound within the construction material at the time of manufacture or processing that leads to increased fire endurance. There is no direct relationship between the relative humidity of the air in the pores of the material and the increase in fire endurance.

INTERNATIONAL CODE COUNCIL®
Copyright © 2019 ICC & NYSDOS. ALL RIGHTS RESERVED. Accessed by Lauren Gualdino (lgualdino@briarcliffmanor.org), (-) Order Number #100880972 on May 08, 2020 07:05 AM (PDT) pursuant to License Agreement with ICC & NYSDOS. No further reproduction, no

100880972

Under certain conditions there may be explosive spalling of low permeability cementitious materials such as dense concrete. In general, one can assume that extremely old concrete has developed enough minor cracking that this factor should not be significant.

Rule 9: Load-supporting elements, such as beams, girders and joists, yield higher fire endurances when subjected to fire endurance tests as parts of floor, roof, or ceiling assemblies than they would when tested separately.

One of the fire endurance test criteria is the ability of a load-supporting element to carry its design load. The element will be deemed to have failed when the load can no longer be supported.

Failure usually results for two reasons. Some materials, particularly steel and other metals, lose much of their structural strength at elevated temperatures. Physical deflection of the supporting element, due to decreased strength or thermal expansion, causes a redistribution of the load forces and stresses throughout the element. Structural failure often results because the supporting element is not designed to carry the redistributed load.

Roof, floor, and ceiling assemblies have primary (e.g., beams) and secondary (e.g., floor joists) structural members. Since the primary load-supporting elements span the largest distances, their deflection becomes significant at a stage when the strength of the secondary members (including the roof or floor surface) is hardly affected by the heat. As the secondary members follow the deflection of the primary load-supporting element, an increasingly larger portion of the load is transferred to the secondary members.

When load-supporting elements are tested separately, the imposed load is constant and equal to the design load throughout the test. By definition, no distribution of the load is possible because the element is being tested by itself. Without any other structural members to which the load could be transferred, the individual elements cannot yield a higher fire endurance than they do when tested as parts of a floor, roof or ceiling assembly.

Rule 10: The load-supporting elements (beams, girders, joists, etc.) of a floor, roof, or ceiling assembly can be replaced by such other load-supporting elements which, when tested separately, yielded fire endurances not less than that of the assembly.

This rule depends on Rule 9 for its validity. A beam or girder, if capable of yielding a certain performance when tested separately, will yield an equally good or better performance when it forms a part of a floor, roof, or ceiling assembly. It must be emphasized that the supporting element of one assembly must not be replaced by the supporting element of another assembly if the performance of this latter element is not known from a separate (beam) test. Because of the load-reducing effect of the secondary elements that results from a test performed on an assembly, the performance of the supporting element alone cannot be evaluated by simple arithmetic. This rule also indicates the advantage of performing separate fire tests on primary load-supporting elements.

ILLUSTRATION OF HARMATHY'S RULES

Harmathy provided one schematic figure which illustrated his Rules.[1] It should be useful as a quick reference to assist in applying his Rules.

EXAMPLE APPLICATION OF HARMATHY'S RULES

The following examples, based in whole or in part upon those presented in Harmathy's paper (35), show how the Rules can be applied to practical cases.

Example 1

Problem

A contractor would like to keep a partition which consists of a $3^3/_4$ inch (95 mm) thick layer of red clay brick, a $1^1/_4$ inch (32 mm) thick layer of plywood, and a $^3/_8$ inch (9.5 mm) thick layer of gypsum wallboard, at a location where 2-hour fire endurance is required. Is this assembly capable of providing a 2-hour protection?

Solution

(1) This partition does not appear in the Appendix Tables.

(2) Bricks of this thickness yield fire endurances of approximately 75 minutes (Table 1.1.2, Item W-4-M-2).

(3) The $1^1/_4$ inch (32 mm) thick plywood has a finish rating of 30 minutes.

(4) The $^3/_8$ inch (9.5 mm) gypsum wallboard has a finish rating of 10 minutes.

(5) Using the recommended values from the tables and applying Rule 1, the fire endurance (FI) of the assembly is larger than the sum of the individual layers, or

$$FI > 75 + 30 + 10 = 115 \text{ minutes}$$

Discussion

This example illustrates how the Appendix Tables can be utilized to determine the fire resistance of assemblies not explicitly listed.

Example 2

Problem

(1) A number of buildings to be rehabilitated have the same type of roof slab which is supported with different structural elements.

(2) The designer and contractor would like to determine whether or not this roof slab is capable of yielding a 2-hour fire endurance. According to a rigorous interpretation of ASTM E119, however, only the roof assembly, including the roof slab as well as the cover and the supporting elements, can be subjected to a fire test. Therefore, a fire endurance classification cannot be issued for the slabs separately.

1. Reproduced from the May 1065 *Fire Technology* (Vol. 1, No. 2). Copyright National Fire Protection Association, Boston. Reproduced by permission.

INTERNATIONAL CODE COUNCIL®
Copyright © 2019 ICC & NYSDOS. ALL RIGHTS RESERVED. Accessed by Lauren Gualdino (lgualdino@briarcliffmanor.org), (-) Order Number #100880972 on May 08, 2020 07:05 AM (PDT) pursuant to License Agreement with ICC & NYSDOS. No further reproduction, no

100880972

(3) The designer and contractor believe this slab will yield a 2-hour fire endurance even without the cover, and any beam of at least 2-hour fire endurance will provide satisfactory support. Is it possible to obtain a classification for the slab separately?

Solution

(1) The answer to the question is yes.

(2) According to Rule 10 it is not contrary to common sense to test and classify roofs and supporting elements separately. Furthermore, according to Rule 2, if the roof slabs actually yield a 2-hour fire endurance, the endurance of an assembly, including the slabs, cannot be less than 2 hours.

(3) The recommended procedure would be to review the tables to see if the slab appears as part of any tested roof or floor/ceiling assembly. The supporting system can be regarded as separate from the slab specimen, and the fire endurance of the assembly listed in the table is at least the fire endurance of the slab. There would have to be an adjustment for the weight of the roof cover in the allowable load if the test specimen did not contain a cover.

(4) The supporting structure or element would have to have at least a 2-hour fire endurance when tested separately.

Discussion

If the tables did not include tests on assemblies which contained the slab, one procedure would be to assemble the roof slabs on any convenient supporting system (not regarded as part of the specimen) and to subject them to a load which, besides the usually required superimposed load, includes some allowances for the weight of the cover.

Example 3

Problem

A steel-joisted floor and ceiling assembly is known to have yielded a fire endurance of 1 hour and 35 minutes. At a certain location, a 2-hour endurance is required. What is the most economical way of increasing the fire endurance by at least 25 minutes?

Solution

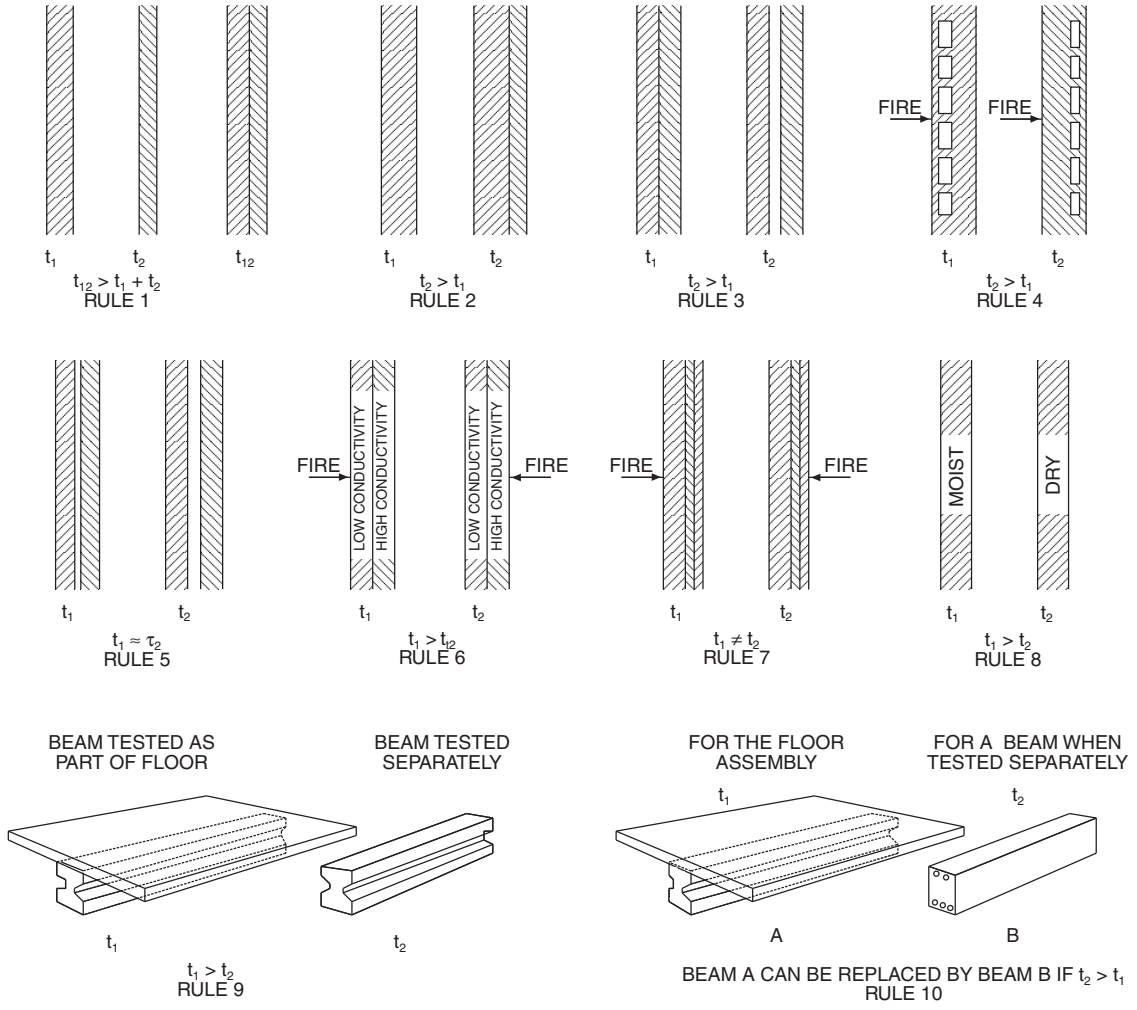

Diagrammatic illustration of ten rules.
t = fire endurance

INTERNATIONAL CODE COUNCIL®
Copyright © 2019 ICC & NYSDOS. ALL RIGHTS RESERVED. Accessed by Lauren Gualdino (lgualdino@briarcliffmanor.org), (-) Order Number #100880972 on May 08, 2020 07:05 AM (PDT) pursuant to License Agreement with ICC & NYSDOS. No further reproduction, no

100880972

(1) The most effective technique would be to increase the ceiling plaster thickness. Existing coats of paint would have to be removed and the surface properly prepared before the new plaster could be applied. Other materials (e.g., gypsum wallboard) could also be considered.

(2) There may be other techniques based on other principles, but an examination of the drawings would be necessary.

Discussion

(1) The additional plaster has at least three effects:

a) The layer of plaster is increased and thus there is a gain of fire endurance (Rule 1).

b) There is a gain due to shifting the air gap farther from the exposed surface (Rule 4).

c) There is more moisture in the path of heat flow to the structural elements (Rules 7 and 8).

(2) The increase in fire endurance would be at least as large as that of the finish rating for the added thickness of plaster. The combined effects in (1) above would further increase this by a factor of 2 or more, depending upon the geometry of the assembly.

Example 4

Problem

The fire endurance of item W-10-M-l in Table 1.1.5 is 4 hours. This wall consists of two $3^{3}/_{4}$ inch (95 mm) thick layers of structural tiles separated by a 2-inch (51 mm) air gap and $^{3}/_{4}$ inch (19 mm) Portland cement plaster or stucco on both sides. If the actual wall in the building is identical to item W-10-M-1 except that it has a 4-inch (102 mm) air gap, can the fire endurance be estimated at 5 hours?

Solution

The answer to the question is no for the reasons contained in Rule 5.

Example 5

Problem

In order to increase the insulating value of its precast roof slabs, a company has decided to use two layers of different concretes. The lower layer of the slabs, where the strength of the concrete is immaterial (all the tensile load is carried by the steel reinforcement), would be made with a concrete of low strength but good insulating value. The upper layer, where the concrete is supposed to carry the compressive load, would remain the original high strength, high thermal conductivity concrete. How will the fire endurance of the slabs be affected by the change?

Solution

The effect on the thermal fire endurance is beneficial:

(1) The total resistance to heat flow of the new slabs has been increased due to the replacement of a layer of high thermal conductivity by one of low conductivity.

(2) The layer of low conductivity is on the side more likely to be exposed to fire, where it is more effectively utilized according to Rule 6. The layer of low thermal conductivity also provides better protection for the steel reinforcement, thereby extending the time before reaching the temperature at which the creep of steel becomes significant.

3.3 "THICKNESS DESIGN" STRATEGY

The "thickness design" strategy is based upon Harmathy's Rules 1 and 2. This design approach can be used when the construction materials have been identified and measured, but the specific assembly cannot be located within the tables. The tables should be surveyed again for thinner walls of like material and construction detail that have yielded the desired or greater fire endurance. If such an assembly can be found, then the thicker walls in the building have more than enough fire resistance. The thickness of the walls thus becomes the principal concern.

This approach can also be used for floor/ceiling assemblies, except that the thickness of the cover[1] and the slab become the central concern. The fire resistance of the untested assembly will be at least the fire resistance of an assembly listed in the table having a similar design but with less cover and/or thinner slabs. For other structural elements (e.g., beams and columns), the element listed in the table must also be of a similar design but with less cover thickness.

3.4 EVALUATION OF DOORS

A separate section on doors has been included because the process for evaluation presented below differs from those suggested previously for other building elements. The impact of unprotected openings or penetrations in fire resistant assemblies has been detailed in Part 2.3 above. It is sufficient to note here that openings left unprotected will likely lead to failure of the barrier under actual fire conditions.

For other types of building elements (e.g., beams, columns), the Appendix Tables can be used to establish a minimum level of fire performance. The benefit to rehabilitation is that the need for a full-scale fire test is then eliminated. For doors, however, this cannot be done. The data contained in Appendix Table 5.1, Resistance of Doors to Fire Exposure, can only provide guidance as to whether a successful fire test is even feasible.

For example, a door required to have 1 hour fire resistance is noted in the tables as providing only 5 minutes. The likeli-

1. Cover: the protective layer or membrane of material which slows the flow of heat to the structural elements.

INTERNATIONAL CODE COUNCIL®
Copyright © 2019 ICC & NYSDOS. ALL RIGHTS RESERVED. Accessed by Lauren Gualdino (lgualdino@briarcliffmanor.org), (-) Order Number #100880972 on May 08, 2020 07:05 AM (PDT) pursuant to License Agreement with ICC & NYSDOS. No further reproduction, no

100880972

hood of achieving the required 1 hour, even if the door is upgraded, is remote. The ultimate need for replacement of the doors is reasonably clear, and the expense and time needed for testing can be saved. However, if the performance documented in the table is near or in excess of what is being required, then a fire test should be conducted. The test documentation can then be used as evidence of compliance with the required level of performance.

The table entries cannot be used as the sole proof of performance of the door in question because there are too many unknown variables which could measurably affect fire performance. The wood may have dried over the years; coats of flammable varnish could have been added. Minor deviations in the internal construction of a door can result in significant differences in performance. Methods of securing inserts in panel doors can vary. The major non-destructive method of analysis, an x-ray, often cannot provide the necessary detail. It is for these, and similar reasons, that a fire test is still felt to be necessary.

It is often possible to upgrade the fire performance of an existing door. Sometimes, "as is" and modified doors are evaluated in a single series of tests when failure of the unmodified door is expected. Because doors upgraded after an initial failure must be tested again, there is a potential savings of time and money.

The most common problems encountered are plain glass, panel inserts of insufficient thickness, and improper fit of a door in its frame. The latter problem can be significant because a fire can develop a substantial positive pressure, and the fire will work its way through otherwise innocent-looking gaps between door and frame.

One approach to solving these problems is as follows. The plain glass is replaced with approved or listed wire glass in a steel frame. The panel inserts can be upgraded by adding an additional layer of material. Gypsum wallboard is often used for this purpose. Intumescent paint applied to the edges of the door and frame will expand when exposed to fire, forming an effective seal around the edges. This seal, coupled with the generally even thermal expansion of a wood door in a wood frame, can prevent the passage of flames and other fire gases. Figure 3 below illustrates these solutions.

Because the interior construction of a door cannot be determined by a visual inspection, there is no absolute guarantee that the remaining doors are identical to the one(s) removed from the building and tested. But the same is true for doors constructed today, and reason and judgment must be applied. Doors that appear identical upon visual inspection can be weighed. If the weights are reasonably close, the doors can be assumed to be identical and therefore provide the same level of fire performance. Another approach is to fire test

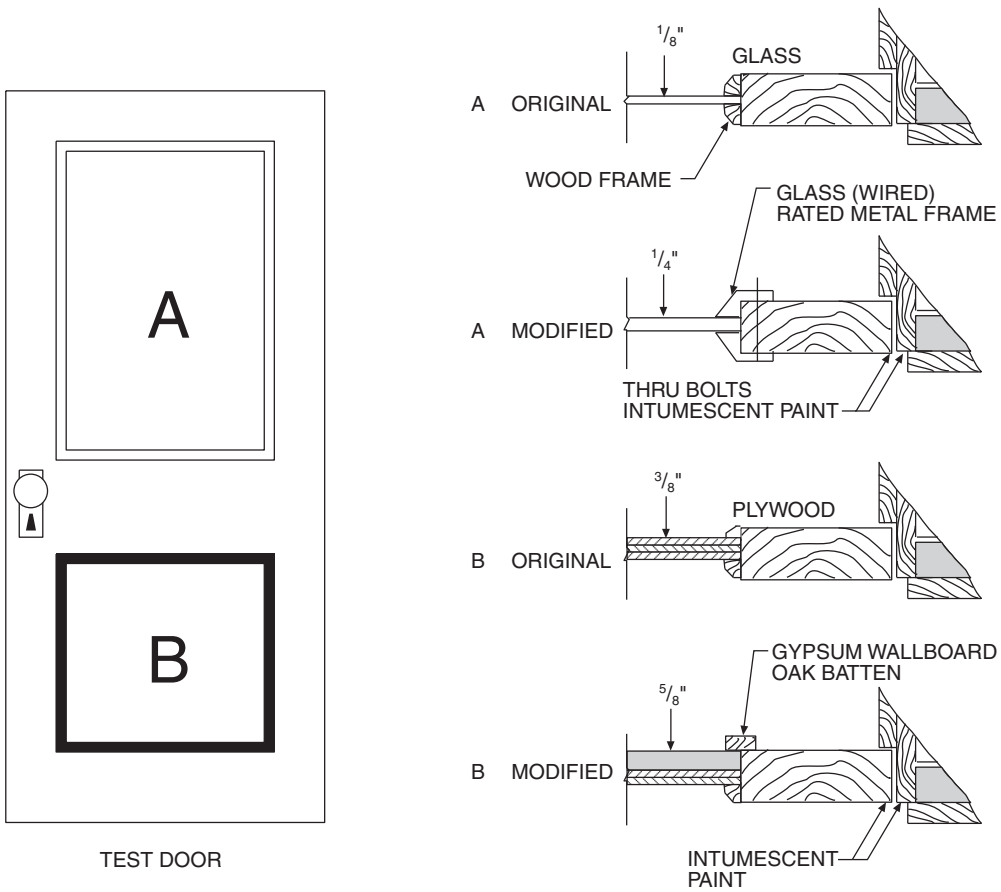

FIGURE 3
MODIFICATION DETAILS

INTERNATIONAL CODE COUNCIL®
Copyright © 2019 ICC & NYSDOS. ALL RIGHTS RESERVED. Accessed by Lauren Gualdino (lgualdino@briarcliffmanor.org), (-) Order Number #100880972 on May 08, 2020 07:05 AM (PDT) pursuant to License Agreement with ICC & NYSDOS. No further reproduction, no

100880972

more than one door or to dismantle doors selected at random to see if they had been constructed in the same manner. Original building plans showing door details or other records showing that doors were purchased at one time or obtained from a single supplier can also be evidence of similar construction.

More often though, it is what is visible to the eye that is most significant. The investigator should carefully check the condition and fit of the door and frame, and for frames out of plumb or separating from the wall. Door closers, latches, and hinges must be examined to see that they function properly and are tightly secured. If these are in order and the door and frame have passed a full-scale test, there can be a reasonable basis for allowing the existing doors to remain.

4
SUMMARY

This section summarizes the various approaches and design solutions discussed in the preceding sections of the guideline. The term "structural system" includes: frames, beams, columns, and other structural elements. "Cover" is a protective layer(s) of materials or membrane which slows the flow of heat to the structural elements. It cannot be stressed too strongly that the fire endurance of actual building elements can be greatly reduced or totally negated by removing part of the cover to allow pipes, ducts, or conduits to pass through the element. This must be repaired in the rehabilitation process.

The following approaches shall be considered equivalent.

4.1 The fire resistance of a building element can be established from the Appendix Tables. This is subject to the following limitations:

The building element in the rehabilitated building shall be constructed of the same materials with the same nominal dimensions as stated in the tables.

All penetrations in the building element or its cover for services such as electricity, plumbing, and HVAC shall be packed with noncombustible cementitious materials and so fixed that the packing material will not fall out when it loses its water of hydration.

The effects of age and wear and tear shall be repaired so that the building element is sound and the original thickness of all components, particularly covers and floor slabs, is maintained.

This approach essentially follows the approach taken by model building codes. The assembly must appear in a table either published in or accepted by the code for a given fire resistance rating to be recognized and accepted.

4.2 The fire resistance of a building element which does not explicitly appear in the Appendix Tables can be established if one or more elements of same design but different dimensions have been listed in the tables. For walls, the existing element must be thicker than the one listed. For floor/ceiling assemblies, the assembly listed in the table must have the same or less cover and the same or thinner slab constructed of the same material as the actual floor/ceiling assembly. For other structural elements, the element listed in the table must be of a similar design but with less cover thickness. The fire resistance in all instances shall be the fire resistance recommended in the table. This is subject to the following limitations:

The actual element in the rehabilitated building shall be constructed of the same materials as listed in the table. Only the following dimensions may vary from those specified: for walls, the overall thickness must exceed that specified in the table; for floor/ceiling assemblies, the thickness of the cover and the slab must be greater than, or equal to, that specified in the table; for other structural elements, the thickness of the cover must be greater than that specified in the table.

All penetrations in the building element or its cover for services such as electricity, plumbing, or HVAC shall be packed with noncombustible cementitious materials and so fixed that the packing material will not fall out when it loses its water of hydration.

The effects of age and wear and tear shall be repaired so that the building element is sound and the original thickness of all components, particularly covers and floor slabs, is maintained.

This approach is an application of the "thickness design" concept presented in Part 3.3 of the guideline. There should be many instances when a thicker building element was utilized than the one listed in the Appendix Tables. This guideline recognizes the inherent superiority of a thicker design. Note: "thickness design" for floor/ceiling assemblies and structural elements refers to cover and slab thickness rather than total thickness.

The "thickness design" concept is essentially a special case of Harmathy's Rules (specifically Rules 1 and 2). It should be recognized that the only source of data is the Appendix Tables. If other data are used, it must be in connection with the approach below.

4.3 The fire resistance of building elements can be established by applying Harmathy's Ten Rules of Fire Resistance Ratings as set forth in Part 3.2 of the guideline. This is subject to the following limitations:

The data from the tables can be utilized subject to the limitations in 4.2 above.

Test reports from recognized journals or published papers can be used to support data utilized in applying Harmathy's Rules.

Calculations utilizing recognized and well established computational techniques can be used in applying Harmathy's Rules. These include, but are not limited to, analysis of heat flow, mechanical properties, deflections, and load bearing capacity.

INTERNATIONAL CODE COUNCIL®
Copyright © 2019 ICC & NYSDOS. ALL RIGHTS RESERVED. Accessed by Lauren Gualdino (lgualdino@briarcliffmanor.org), (-) Order Number #100880972 on May 08, 2020 07:05 AM (PDT) pursuant to License Agreement with ICC & NYSDOS. No further reproduction, no

100880972

INTERNATIONAL CODE COUNCIL®
Copyright © 2019 ICC & NYSDOS. ALL RIGHTS RESERVED. Accessed by Lauren Gualdino (lgualdino@briarcliffmanor.org), (-) Order Number #100880972 on May 08, 2020 07:05 AM (PDT) pursuant to License Agreement with ICC & NYSDOS. No further reproduction, no

100880972

APPENDIX

INTRODUCTION

The fire-resistance tables that follow are a part of Resource A and provide a tabular form of assigning fire-resistance ratings to various archaic building elements and assemblies.

These tables for archaic materials and assemblies do for archaic materials what Tables 721.1(1-3) of the *Building Code of New York State* do for more modern building elements and assemblies. The fire-resistance tables of Resource A should be used as described in the "Purpose and Procedure" that follows the table of contents for these tables.

RESOURCE A TABLE OF CONTENTS

Purpose and Procedure			**175**
Section I—Walls			
1.1.1	Masonry	0 in. - 4 in. thick	176
1.1.2	Masonry	4 in. - 6 in. thick	179
1.1.3	Masonry	6 in. - 8 in. thick	186
1.1.4	Masonry	8 in. - 10 in. thick	191
1.1.5	Masonry	10 in. - 12 in. thick	199
1.1.6	Masonry	12 in. - 14 in. thick	203
1.1.7	Masonry	14 in. or more thick	209
1.2.1	Metal Frame	0 in. - 4 in. thick	212
1.2.2	Metal Frame	4 in. - 6 in. thick	216
1.2.3	Metal Frame	6 in. - 8 in. thick	218
1.2.4	Metal Frame	8 in. - 10 in. thick	219
1.3.1	Wood Frame	0 in. - 4 in. thick	220
1.3.2	Wood Frame	4 in. - 6 in. thick	221
1.3.3	Wood Frame	6 in. - 8 in. thick	229
1.4.1	Miscellaneous Materials	0 in. - 4 in. thick	229
1.4.2	Miscellaneous Materials	4 in. - 6 in. thick	230
1.5.1	Finish Ratings—Inorganic Materials	Thickness	231
1.5.2	Finish Ratings—Organic Materials	Thickness	232
Section II—Columns			
2.1.1	Reinforced Concrete	Min. Dim. 0 in. - 6 in.	233
2.1.2	Reinforced Concrete	Min. Dim. 10 in. - 12 in.	234
2.1.3	Reinforced Concrete	Min. Dim. 12 in. - 14 in.	237
2.1.4	Reinforced Concrete	Min. Dim. 14 in. - 16 in.	238
2.1.5	Reinforced Concrete	Min. Dim. 16 in. - 18 in.	239
2.1.6	Reinforced Concrete	Min. Dim. 18 in. - 20 in.	241
2.1.7	Reinforced Concrete	Min. Dim. 20 in. - 22 in.	242
2.1.8	Hexagonal Reinforced Concrete	Diameter—12 in. - 14 in.	243

INTERNATIONAL CODE COUNCIL®
Copyright © 2019 ICC & NYSDOS. ALL RIGHTS RESERVED. Accessed by Lauren Gualdino (lgualdino@briarcliffmanor.org), (-) Order Number #100880972 on May 08, 2020 07:05 AM (PDT) pursuant to License Agreement with ICC & NYSDOS. No further reproduction, no

100880972

2.1.9	Hexagonal Reinforced Concrete	Diameter—14 in. - 16 in.	244
2.1.10	Hexagonal Reinforced Concrete	Diameter—16 in. - 18 in.	244
2.1.11	Hexagonal Reinforced Concrete	Diameter—20 in. - 22 in.	244
2.2	Round Cast Iron Columns	Minimum Dimension	245
2.3	Steel—Gypsum Encasements	Minimum Area of Solid Material	246
2.4	Timber	Minimum Dimension	247
2.5.1.1	Steel/Concrete Encasements	Minimum Dimension less than 6 in.	247
2.5.1.2	Steel/Concrete Encasements	Minimum Dimension 6 in. - 8 in.	248
2.5.1.3	Steel/Concrete Encasements	Minimum Dimension 8 in. - 10 in.	249
2.5.1.4	Steel/Concrete Encasements	Minimum Dimension 10 in. - 12 in.	251
2.5.1.5	Steel/Concrete Encasements	Minimum Dimension 12 in. - 14 in.	255
2.5.1.6	Steel/Concrete Encasements	Minimum Dimension 14 in. - 16 in.	257
2.5.1.7	Steel/Concrete Encasements	Minimum Dimension 16 in. - 18 in.	259
2.5.2.1	Steel/Brick and Block Encasements	Minimum Dimension 10 in. - 12 in.	259
2.5.2.2	Steel/Brick and Block Encasements	Minimum Dimension 12 in. - 14 in.	260
2.5.2.3	Steel/Brick and Block Encasements	Minimum Dimension 14 in. - 16 in.	260
2.5.3.1	Steel/Plaster Encasements	Minimum Dimension 6 in. - 8 in.	261
2.5.3.2	Steel/Plaster Encasements	Minimum Dimension 8 in. - 10 in.	261
2.5.4.1	Steel/Miscellaneous Encasements	Minimum Dimension 6 in. - 8 in.	261
2.5.4.2	Steel/Miscellaneous Encasements	Minimum Dimension 8 in. - 10 in.	262
2.5.4.3	Steel/Miscellaneous Encasements	Minimum Dimension 10 in. - 12 in.	262
2.5.4.4	Steel/Miscellaneous Encasements	Minimum Dimension 12 in. - 14 in.	262
Section III—Floor/Ceiling Assemblies			
3.1	Reinforced Concrete	Assembly thickness	263
3.2	Steel Structural Elements	Membrane thickness	269
3.3	Wood Joist	Membrane thickness	275
3.4	Hollow Clay Tile with Reinforced Concrete	Membrane thickness	279
Section IV—Beams			
4.1.1	Reinforced Concrete	Depth—10 in. - 12 in.	282
4.1.2	Reinforced Concrete	Depth—12 in. - 14 in.	285
4.1.3	Reinforced Concrete	Depth—14 in. - 16 in.	287
4.2.1	Reinforced Concrete/Unprotected	Depth—10 in. - 12 in.	288
4.2.2	Steel/Concrete Protection	Depth—10 in. - 12 in.	288
Section V—Doors			
5.1	Resistance of Doors to Fire Exposure	Thickness	289

INTERNATIONAL CODE COUNCIL®
Copyright © 2019 ICC & NYSDOS. ALL RIGHTS RESERVED. Accessed by Lauren Gualdino (lgualdino@briarcliffmanor.org), (-) Order Number #100880972 on May 08, 2020 07:05 AM (PDT) pursuant to License Agreement with ICC & NYSDOS. No further reproduction, no

100880972

PURPOSE AND PROCEDURE

The tables and histograms which follow are to be used only within the analytical framework detailed in the main body of this guideline.

Histograms precede any table with 10 or more entries. The use and interpretation of these histograms is explained in Part 2 of the guideline. The tables are in a format similar to that found in the model building codes. The following example, taken from an entry in Table 1.1.2, best explains the table format.

1. Item Code: The item code consists of a four place series in the general form w-x-y-z in which each member of the series denotes the following:

   w = Type of building element (e.g., W=Walls; F=Floors, etc.)

   x = The building element thickness rounded down to the nearest 1-inch increment (e.g., $4^{5}/_{8}$ inches is rounded off to 4 inches)

   y = The general type of material from which the building element is constructed (e.g., M=Masonry; W=Wood, etc.)

   z = The item number of the particular building element in a given table

   The item code shown in the example W-4-M-50 denotes the following:

   W = Wall, as the building element

   4 = Wall thickness in the range of 4 inches (102 mm) to less than 5 inches (127 mm)

   M = Masonry construction

   50 = The 50th entry in Table 1.1.2

2. The specific name or heading of this column identifies the dimensions which, if varied, has the greatest impact on fire resistance. The critical dimension for walls, the example here, is thickness. It is different for other building elements (e.g., depth for beams; membrane thickness for some floor/ceiling assemblies). The table entry is the named dimension of the building element measured at the time of actual testing to within $\pm^{1}/_{8}$ inch (3.2 mm) tolerance. The thickness tabulated includes facings where facings are a part of the wall construction.
3. Construction Details: The construction details provide a brief description of the manner in which the building element was constructed.
4. Performance: This heading is subdivided into two columns. The column labeled "Load" will either list the load that the building element was subjected to during the fire test or it will contain a note number which will list the load and any other significant details. If the building element was not subjected to a load during the test, this column will contain "n/a," which means "not applicable."

   The second column under performance is labeled "Time" and denotes the actual fire endurance time observed in the fire test.
5. Reference Number: This heading is subdivided into three columns: Pre-BMS-92; BMS-92; and Post-BMS-92. The table entry under this column is the number in the Bibliography of the original source reference for the test data.
6. Notes: Notes are provided at the end of each table to allow a more detailed explanation of certain aspects of the test. In certain tables the notes given to this column have also been listed under the "Construction Details" and/or "Load" columns.
7. Rec Hours: This column lists the recommended fire endurance rating, in hours, of a building element. In some cases, the recommended fire endurance will be less than that listed under the "Time" column. In no case is the "Rec Hours" greater than given in the "Time" column.

ITEM CODE	THICKNESS	CONSTRUCTION DETAILS	PERFORMANCE		REFERENCE NUMBER			NOTES	REC. HOURS
			LOAD	TIME	PRE-BMS-92	BMS-92	POST-BMS-92		
W-4-M-50	$4^{5}/_{8}$″	Core: structural clay tile, See notes 12, 16, 21; Facings on unexposed side only, see note 18	N/A	25 min.		1		3, 4, 24	$^{1}/_{3}$

INTERNATIONAL CODE COUNCIL®
Copyright © 2019 ICC & NYSDOS. ALL RIGHTS RESERVED. Accessed by Lauren Gualdino (lgualdino@briarcliffmanor.org), (-) Order Number #100880972 on May 08, 2020 07:05 AM (PDT) pursuant to License Agreement with ICC & NYSDOS. No further reproduction, no

100880972

SECTION I - WALLS

FIGURE 1.1.1
MASONRY WALLS
0″ TO LESS THAN 4″ THICK

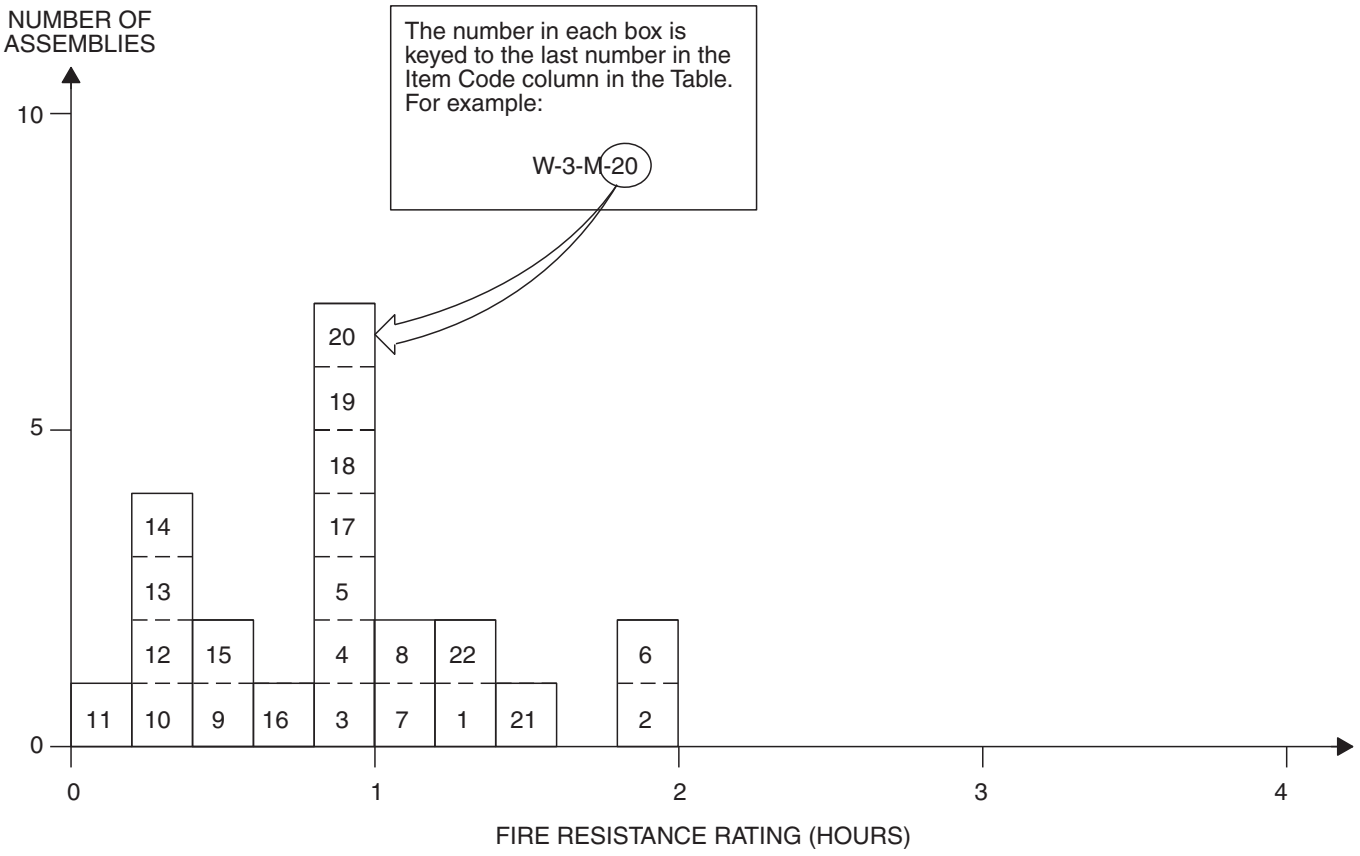

TABLE 1.1.1
MASONRY WALLS
0″ TO LESS THAN 4″ THICK

ITEM CODE	THICKNESS	CONSTRUCTION DETAILS	PERFORMANCE		REFERENCE NUMBER			NOTES	REC. HOURS
			LOAD	TIME	PRE-BMS-92	BMS-92	POST-BMS-92		
W-2-M-1	$2^1/_4$″	Solid partition; $^3/_4$″ gypsum plank- 10′ ×1′6″ ; $^3/_4$″ plus gypsum plaster each side.	N/A	1 hr. 22 min.			7	1	$1^1/_4$
W-3-M-2	3″	Concrete block (18″ × 9″ × 3″) of fuel ash, Portland cement and plasticizer; cement/sand mortar.	N/A	2 hrs.			7	2, 3	2
W-2-M-3	2″	Solid gypsum block wall; No facings	N/A	1 hr.		1		4	1
W-3-M-4	3″	Solid gypsum blocks, laid in 1:3 sanded gypsum mortar.	N/A	1 hr.		1		4	1
W-3-M-5	3″	Magnesium oxysulfate wood fiber blocks; 2″ thick, laid in Portland cement-lime mortar; Facings: $^1/_2$″ of 1:3 sanded gypsum plaster on both sides.	N/A	1 hr.		1		4	1
W-3-M-6	3″	Magnesium oxysulfate bound wood fiber blocks; 3″ thick; laid in Portland cement-lime mortar; Facings: $^1/_2$″ of 1:3 sanded gypsum plaster on both sides.	N/A	2 hrs.		1		4	2

(continued)

INTERNATIONAL CODE COUNCIL®
Copyright © 2019 ICC & NYSDOS. ALL RIGHTS RESERVED. Accessed by Lauren Gualdino (lgualdino@briarcliffmanor.org), (-) Order Number #100880972 on May 08, 2020 07:05 AM (PDT) pursuant to License Agreement with ICC & NYSDOS. No further reproduction, no

100880972

TABLE 1.1.1—continued
MASONRY WALLS
0″ TO LESS THAN 4″ THICK

ITEM CODE	THICKNESS	CONSTRUCTION DETAILS	PERFORMANCE		REFERENCE NUMBER			NOTES	REC. HOURS
			LOAD	TIME	PRE-BMS-92	BMS-92	POST-BMS-92		
W-3-M-7	3″	Clay tile; Ohio fire clay; single cell thick; Face plaster: $^5/_8$″ (both sides) 1:3 sanded gypsum; Design “E,” Construction “A.”	N/A	1 hr. 6 min.	0		2	5, 6, 7, 11, 12, 39	1
W-3-M-8	3″	Clay tile; Illinois surface clay; single cell thick; Face plaster: $^5/_8$″ (both sides) 1:3 sanded gypsum; Design “A,” Construction “E.”	N/A	1 hr. 1 min			2	5, 8, 9, 11, 12, 39	1
W-3-M-9	3″	Clay tile; Illinois surface clay; single cell thick; No face plaster; Design “A,” Construction “C.”	N/A	25 min.			2	5, 10, 11, 12, 39	$^1/_3$
W-3-M-10	$3^7/_8$″	8″ × $4^7/_8$″ glass blocks; weight 4 lbs. each; Portland cement-lime mortar; horizontal mortar joints reinforced with metal lath.	N/A	15 min.		1		4	$^1/_4$
W-3-M-11	3″	Core: structural clay tile; see Notes 14, 18, 13; No facings.	N/A	10 min.		1		5, 11, 26	$^1/_6$
W-3-M-12	3″	Core: structural clay tile; see Notes 14, 19, 23; No facings.	N/A	20 min.		1		5, 11, 26	$^1/_3$
W-3-M-13	$3^5/_8$″	Core: structural clay tile; see Notes 14, 18, 23; Facings: unexposed side; see Note 20.	N/A	20 min.		1		5, 11, 26	$^1/_3$
W-3-M-14	$3^5/_8$″	Core: structural clay tile; see Notes 14, 19, 23; Facings: unexposed side only; see Note 20.	N/A	20 min.		1		5, 11, 26	$^1/_3$
W-3-M-15	$3^5/_8$″	Core: clay structural tile; see Notes 14, 18, 23; Facings: side exposed to fire; see Note 20.	N/A	30 min.		1		5, 11, 26	$^1/_2$
W-3-M-16	$3^5/_8$″	Core: clay structural tile; see Notes 14, 19, 23; Facings: side exposed to fire; see Note 20.	N/A	45 min.		1		5, 11, 26	$^3/_4$
W-2-M-17	2″	2″ thick solid gypsum blocks; see Note 27.	N/A	1 hr.		1		27	1
W-3-M-18	3″	Core: 3″ thick gypsum blocks 70% solid; see Note 2; No facings.	N/A	1 hr.		1		27	1
W-3-M-19	3″	Core: hollow concrete units; see Notes 29, 35, 36, 38; No facings.	N/A	1 hr.		1		27	1
W-3-M-20	3″	Core: hollow concrete units; see Notes 28, 35, 36, 37, 38; No facings.	N/A	1 hr.		1			1
W-3-M-21	$3^1/_2$″	Core: hollow concrete units; see Notes 28, 35, 36, 37, 38; Facings: one side; see Note 37.	N/A	$1^1/_2$ hrs.		1			$1^1/_2$
W-3-M-22	$3^1/_2$″	Core: hollow concrete units; see Notes 29, 35, 36, 38; Facings: one side, see Note 37.	N/A	$1^1/_4$ hrs.		1			$1^1/_4$

For SI: 1 inch = 25.4 mm, 1 pound per square inch = 0.00689 MPa, °C = [(°F) - 32]/1.8.

Notes:

1. Failure mode—flame thru.
2. Passed 2-hour fire test (Grade “C” fire res. - British).
3. Passed hose stream test.
4. Tested at NBS under ASA Spec. No. A2-1934. As nonload bearing partitions.
5. Tested at NBS under ASA Spec. No. 42-1934 (ASTM C19-33) except that hose stream testing where carried was run on test specimens exposed for full test duration, not for a reduced period as is contemporarily done.
6. Failure by thermal criteria—maximum temperature rise 325°F.
7. Hose stream failure.
8. Hose stream—pass.
9. Specimen removed prior to any failure occurring.
10. Failure mode—collapse.
11. For clay tile walls, unless the source or density of the clay can be positively identified or determined, it is suggested that the lowest hourly rating for the fire endurance of a clay tile partition of that thickness be followed. Identified sources of clay showing longer fire endurance can lead to longer time recommendations.

(continued)

INTERNATIONAL CODE COUNCIL®
Copyright © 2019 ICC & NYSDOS. ALL RIGHTS RESERVED. Accessed by Lauren Gualdino (lgualdino@briarcliffmanor.org), (-) Order Number #100880972 on May 08, 2020 07:05 AM (PDT) pursuant to License Agreement with ICC & NYSDOS. No further reproduction, no

100880972

TABLE 1.1.1—continued
MASONRY WALLS
0″ TO LESS THAN 4″ THICK

12. See appendix for construction and design details for clay tile walls.
13. Load: 80 psi for gross wall area.
14. One cell in wall thickness.
15. Two cells in wall thickness.
16. Double shells plus one cell in wall thickness.
17. One cell in wall thickness, cells filled with broken tile, crushed stone, slag cinders or sand mixed with mortar.
18. Dense hard-burned clay or shale tile.
19. Medium-burned clay tile.
20. Not less than $^{5}/_{8}$ inch thickness of 1:3 sanded gypsum plaster.
21. Units of not less than 30 percent solid material.
22. Units of not less than 40 percent solid material.
23. Units of not less than 50 percent solid material.
24. Units of not less than 45 percent solid material.
25. Units of not less than 60 percent solid material.
26. All tiles laid in Portland cement-lime mortar.
27. Blocks laid in 1:3 sanded gypsum mortar voids in blocks not to exceed 30 percent.
28. Units of expanded slag or pumice aggregate.
29. Units of crushed limestone, blast furnace, slag, cinders and expanded clay or shale.
30. Units of calcareous sand and gravel. Coarse aggregate, 60 percent or more calcite and dolomite.
31. Units of siliceous sand and gravel. Ninety percent or more quartz, chert or flint.
32. Unit at least 49 percent solid.
33. Unit at least 62 percent solid.
34. Unit at least 65 percent solid.
35. Unit at least 73 percent solid.
36. Ratings based on one unit and one cell in wall thickness.
37. Minimum of $^{1}/_{2}$ inch—1:3 sanded gypsum plaster.
38. Nonload bearing.
39. See Clay Tile Partition Design Construction drawings, below.

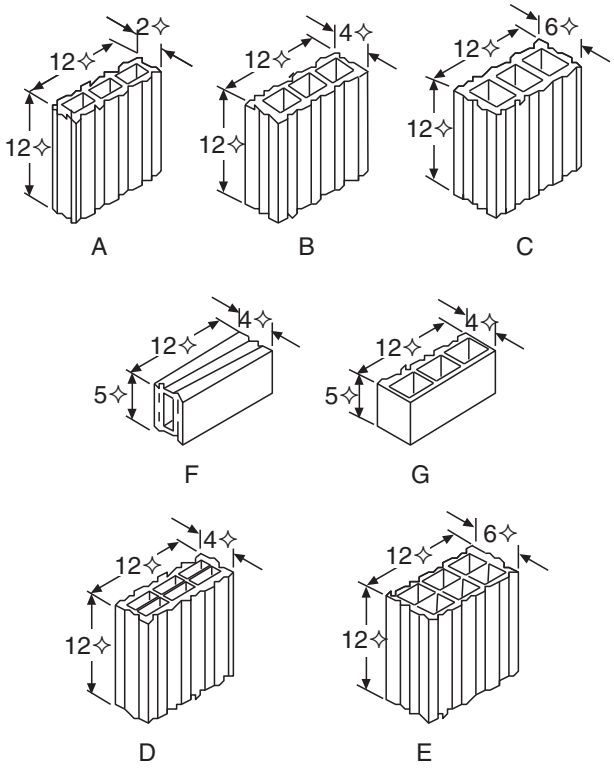

DESIGNS OF TILES USED IN FIRE-TEST PARTITIONS

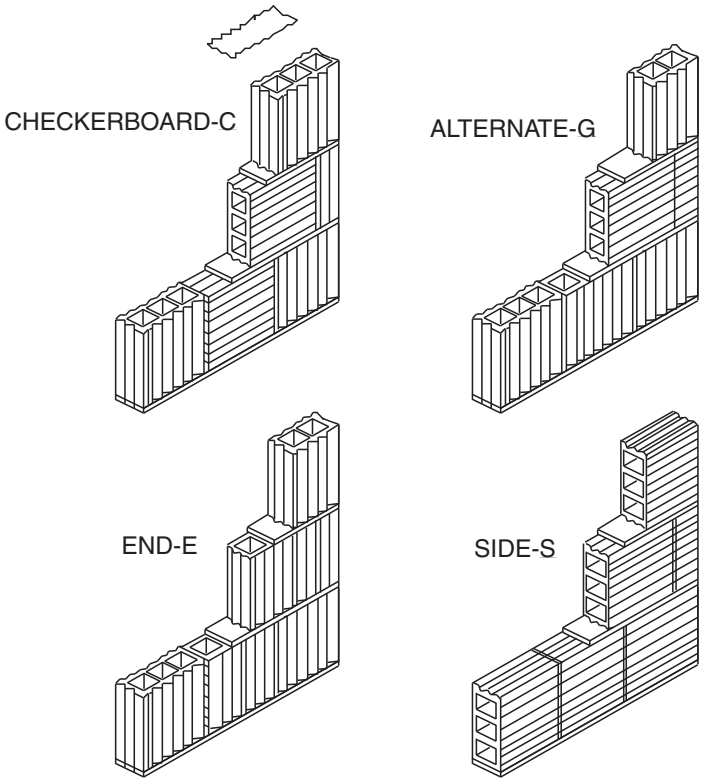

THE FOUR TYPES OF CONSTRUCTION USED IN FIRE-TEST PARTITIONS

INTERNATIONAL CODE COUNCIL®
Copyright © 2019 ICC & NYSDOS. ALL RIGHTS RESERVED. Accessed by Lauren Gualdino (lgualdino@briarcliffmanor.org), (-) Order Number #100880972 on May 08, 2020 07:05 AM (PDT) pursuant to License Agreement with ICC & NYSDOS. No further reproduction, no

100880972

FIGURE 1.1.2
MASONRY WALLS
4″ TO LESS THAN 6″ THICK

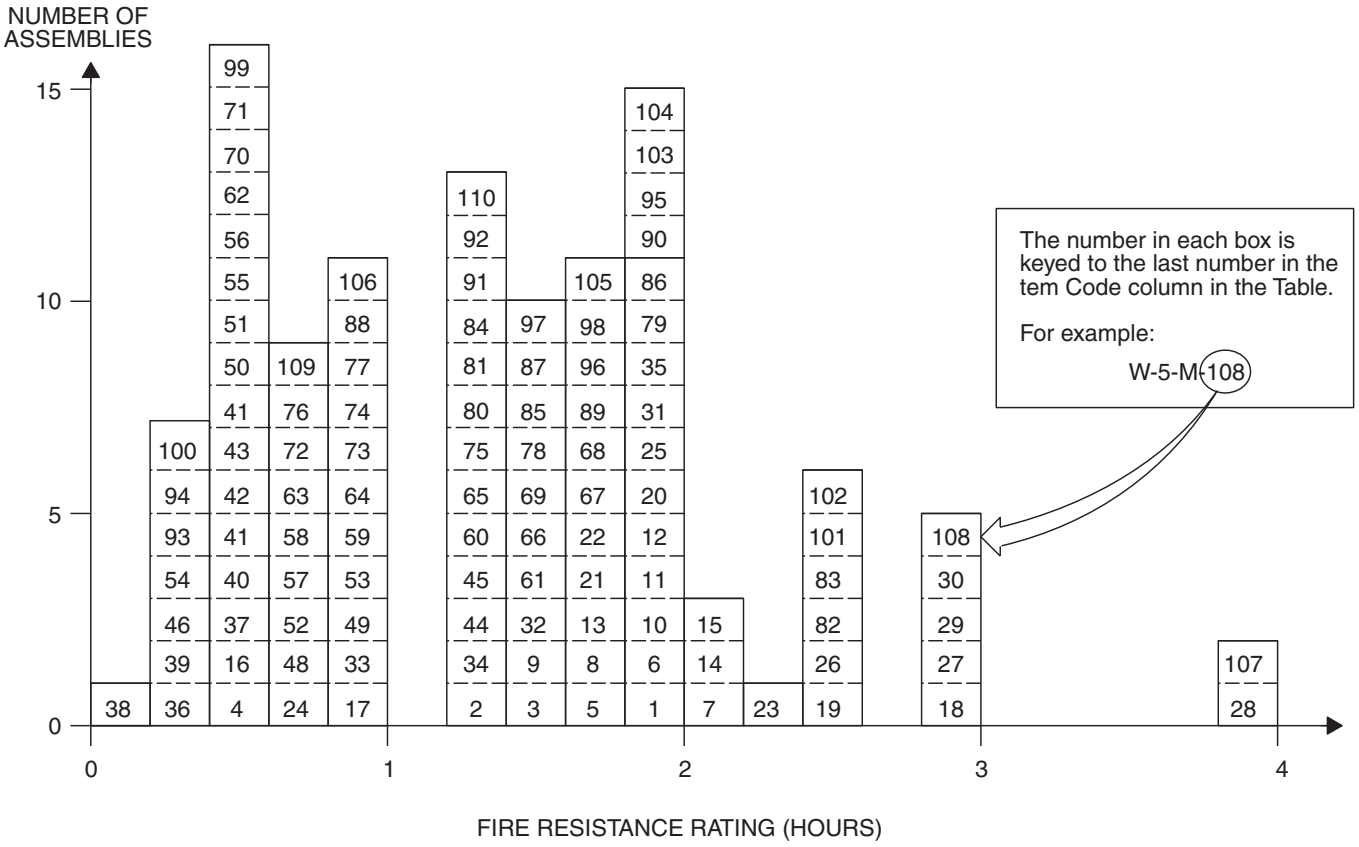

TABLE 1.1.2
MASONRY WALLS
4″ TO LESS THAN 6″ THICK

ITEM CODE	THICKNESS	CONSTRUCTION DETAILS	PERFORMANCE		REFERENCE NUMBER			NOTES	REC. HOURS
			LOAD	TIME	PRE-BMS-92	BMS-92	POST-BMS-92		
W-4-M-1	4″	Solid 3″ thick, gypsum blocks laid in 1:3 sanded gypsum mortar; Facings: $^1/_2$″ of 1:3 sanded gypsum plaster (both sides).	N/A	2 hrs.		1		1	2
W-4-M-2	4″	Solid clay or shale brick.	N/A	1 hr. 15 min		1		1, 2	$1^1/_4$
W-4-M-3	4″	Concrete; No facings.	N/A	1 hr. 30 min.		1		1	$1^1/_2$
W-4-M-4	4″	Clay tile; Illinois surface clay; single cell thick; No face plaster; Design “B,” Construction “C.”	N/A	25 min.			2	3-7, 36	$^1/_3$
W-4-M-5	4″	Solid sand-lime brick.	N/A	1 hr. 45 min.		1		1	$1^3/_4$
W-4-M-6	4″	Solid wall; 3″ thick block; $^1/_2$″ plaster each side; $17^3/_4$″ × $8^3/_4$″ × 4″ “Breeze Blocks”; Portland cement/sand mortar.	N/A	1 hr. 52 min.			7	2	$1^3/_4$
W-4-M-7	4″	Concrete (4020 psi); Reinforcement: vertical $^3/_8$″; horizontal $^1/_4$″; 6″ × 6″ grid.	N/A	2 hrs. 10 min.			7	2	2
W-4-M-8	4″	Concrete wall (4340 psi crush); reinforcement $^1/_4$″ diameter rebar on 8″ centers (vertical and horizontal).	N/A	1 hr. 40 min.			7	2	$1^2/_3$

(continued)

INTERNATIONAL CODE COUNCIL®
Copyright © 2019 ICC & NYSDOS. ALL RIGHTS RESERVED. Accessed by Lauren Gualdino (lgualdino@briarcliffmanor.org), (-) Order Number #100880972 on May 08, 2020 07:05 AM (PDT) pursuant to License Agreement with ICC & NYSDOS. No further reproduction, no

100880972

TABLE 1.1.2—continued
MASONRY WALLS
4″ TO LESS THAN 6″ THICK

ITEM CODE	THICKNESS	CONSTRUCTION DETAILS	PERFORMANCE		REFERENCE NUMBER			NOTES	REC. HOURS
			LOAD	TIME	PRE-BMS-92	BMS-92	POST-BMS-92		
W-4-M-9	$4^{3}/_{16}$″	$4^{3}/_{16}$″ × $2^{5}/_{8}$″ cellular fletton brick (1873 psi) with $^{1}/_{2}$″ sand mortar; bricks are U-shaped yielding hollow cover (approx. 2″ × 4″) in final cross-section configuration.	N/A	1 hr. 25 min.			7	2	$1^{1}/_{3}$
W-4-M-10	$4^{1}/_{4}$″	$4^{1}/_{4}$″ × $2^{1}/_{2}$″ fletton (1831 psi) brick in $^{1}/_{2}$″ sand mortar.	N/A	1 hr. 53 min			7	2	$1^{3}/_{4}$
W-4-M-11	$4^{1}/_{4}$″	$4^{1}/_{4}$″ × $2^{1}/_{2}$″ London stock (683 psi) brick; $^{1}/_{2}$″ grout.	N/A	1 hr. 52 min.			7	2	$1^{3}/_{4}$
W-4-M-12	$4^{1}/_{2}$″	$4^{1}/_{4}$″ × $2^{1}/_{2}$″ Leicester red, wire-cut brick (4465 psi) in $^{1}/_{2}$″ sand mortar.	N/A	1 hr. 56 min.			7	6	$1^{3}/_{4}$
W-4-M-13	$4^{1}/_{4}$″	$4^{1}/_{4}$″ × $2^{1}/_{2}$″ stairfoot brick (7527 psi) $^{1}/_{2}$″ sand mortar.	N/A	1 hr. 37 min.			7	2	$1^{1}/_{2}$
W-4-M-14	$4^{1}/_{4}$″	$4^{1}/_{4}$″ × $2^{1}/_{2}$″ sand-lime brick (2603 psi) $^{1}/_{2}$″ sand mortar.	N/A	2 hrs. 6 min.			7	2	2
W-4-M-15	$4^{1}/_{4}$″	$4^{1}/_{4}$″ × $2^{1}/_{2}$″ concrete brick (2527 psi) $^{1}/_{2}$″ sand mortar.	N/A	2 hrs. 10 min.			7	2	2
W-4-M-16	$4^{1}/_{2}$″	4″ thick clay tile; Ohio fire clay; single cell thick; No plaster exposed face; $^{1}/_{2}$″ 1:2 gypsum back face; Design “F,” Construction “S.”	N/A	31 min.			2	3-6, 36	$^{1}/_{2}$
W-4-M-17	$4^{1}/_{2}$″	4″ thick clay tile; Ohio fire clay; single cell thick; Plaster exposed face; $^{1}/_{2}$″ 1:2 sanded gypsum; Back Face: none; Construction “S,” Design “F.”	80 psi	50 min.			2	3-5, 8, 36	$^{3}/_{4}$
W-4-M-18	$4^{1}/_{2}$″	Core: solid sand-lime brick; $^{1}/_{2}$″ sanded gypsum plaster facings on both sides.	80 psi	3 hrs.		1		1, 11	3
W-4-M-19	$4^{1}/_{2}$″	Core: solid sand-lime brick; $^{1}/_{2}$″ sanded gypsum plaster facings on both sides.	80 psi	2 hrs. 30 min.		1		1, 11	$2^{1}/_{2}$
W-4-M-20	$4^{1}/_{2}$″	Core: concrete brick $^{1}/_{2}$″ of 1:3 sanded gypsum plaster facings on both sides.	80 psi	2 hrs.		1		1, 11	2
W-4-M-21	$4^{1}/_{2}$″	Core: solid clay or shale brick; $^{1}/_{2}$″ thick, 1:3 sanded gypsum plaster facings on fire sides.	80 psi	1 hr. 45 min.		1		1, 2, 11	$1^{3}/_{4}$
W-4-M-22	$4^{3}/_{4}$″	4″ thick clay tile; Ohio fire clay; single cell thick; cells filled with cement and broken tile concrete; Plaster on exposed face; none on unexposed face; $^{3}/_{4}$″ 1:3 sanded gypsum; Design “G,” Construction “E.”	N/A	1 hr. 48 min.			2	2, 3-5, 9, 36	$1^{3}/_{4}$
W-4-M-23	$4^{3}/_{4}$″	4″ thick clay tile; Ohio fire clay; single cell thick; cells filled with cement and broken tile concrete; No plaster exposed faced; $^{3}/_{4}$″ neat gypsum plaster on unexposed face; Design “G,” Construction “E.”	N/A	2 hrs. 14 min.			2	2, 3-5, 9, 36	2
W-5-M-24	5″	3″ × 13″ air space; 1″ thick metal reinforced concrete facings on both sides; faces connected with wood splines.	2,250 lbs./ ft.	45 min.		1		1	$^{3}/_{4}$
W-5-M-25	5″	Core: 3″ thick void filled with “nondulated” mineral wool weighing 10 lbs./ft.^{3}; 1″ thick metal reinforced concrete facings on both sides.	2,250 lbs./ ft.	2 hrs.		1		1	2
W-5-M-26	5″	Core: solid clay or shale brick; $^{1}/_{2}$″ thick, 1:3 sanded gypsum plaster facings on both sides.	40 psi	2 hrs. 30 min.		1		1, 2, 11	$2^{1}/_{2}$
W-5-M-27	5″	Core: solid 4″ thick gypsum blocks, laid in 1:3 sanded gypsum mortar; $^{1}/_{2}$″ of 1:3 sanded gypsum plaster facings on both sides.	N/A	3 hrs.		1		1	3

(continued)

INTERNATIONAL CODE COUNCIL®
Copyright © 2019 ICC & NYSDOS. ALL RIGHTS RESERVED. Accessed by Lauren Gualdino (lgualdino@briarcliffmanor.org), (-) Order Number #100880972 on May 08, 2020 07:05 AM (PDT) pursuant to License Agreement with ICC & NYSDOS. No further reproduction, no

100880972

TABLE 1.1.2—continued
MASONRY WALLS
4″ TO LESS THAN 6″ THICK

ITEM CODE	THICKNESS	CONSTRUCTION DETAILS	PERFORMANCE		REFERENCE NUMBER			NOTES	REC. HOURS
			LOAD	TIME	PRE-BMS-92	BMS-92	POST-BMS-92		
W-5-M-28	5″	Core: 4″ thick hollow gypsum blocks with 30% voids; blocks laid in 1:3 sanded gypsum mortar; No facings.	N/A	4 hrs.		1		1	4
W-5-M-29	5″	Core: concrete brick; $^1/_2$″ of 1:3 sanded gypsum plaster facings on both sides.	160 psi	3 hrs.		1		1	3
W-5-M-30	$5^1/_4$″	4″ thick clay tile; Illinois surface clay; double cell thick; Plaster: $^5/_8$″ sanded gypsum 1:3 both faces; Design “D,” Construction “S.”	N/A	2 hrs. 53 min.			2	2-5, 9, 36	$2^3/_4$
W-5-M-31	$5^1/_4$″	4″ thick clay tile; New Jersey fire clay; double cell thick; Plaster: $^5/_8$″ sanded gypsum 1:3 both faces; Design “D,” Construction “S.”	N/A	1 hr. 52 min.			2	2-5, 9, 36	$1^3/_4$
W-5-M-32	$5^1/_4$″	4″ thick clay tile; New Jersey fire clay; single cell thick; Plaster: $^5/_8$″ sanded gypsum 1:3 both faces; Design “D,” Construction “S.”	N/A	1 hr. 34 min.	2		2	2-5, 9, 36	$1^1/_2$
W-5-M-33	$5^1/_4$″	4″ thick clay tile; New Jersey fire clay; single cell thick; Face plaster: $^5/_8$″ both sides; 1:3 sanded gypsum; Design “B,” Construction “S.”	N/A	50 min.			2	3-5, 8, 36	$^3/_4$
W-5-M-34	$5^1/_4$″	4″ thick clay tile; Ohio fire clay; single cell thick; Face plaster: $^5/_8$″ both sides; 1:3 sanded gypsum; Design “B,” Construction “A.”	N/A	1 hr. 19 min.			2	2-5, 9, 36	$1^1/_4$
W-5-M-35	$5^1/_4$″	4″ thick clay tile; Illinois surface clay; single cell thick; Face plaster: $^5/_8$″ both sides; 1:3 sanded gypsum; Design “B,” Construction “S.”	N/A	1 hr. 59 min.			2	2-5, 10 36	$1^3/_4$
W-5-M-36	4″	Core: structural clay tile; see Notes 12, 16, 21; No facings.	N/A	15 min.		1		3, 4, 24	$^1/_4$
W-4-M-37	4″	Core: structural clay tile; see Notes 12, 17, 21; No facings.	N/A	25 min.		1		3, 4, 24	$^1/_3$
W-4-M-38	4″	Core: structural clay tile; see Notes 12, 16, 20; No facings.	N/A	10 min.		1		3, 4, 24	$^1/_6$
W-4-M-39	4″	Core: structural clay tile; see Notes 12, 17, 20; No facings.	N/A	20 min.		1		3, 4, 24	$^1/_3$
W-4-M-40	4″	Core: structural clay tile; see Notes 13, 16, 23; No facings.	N/A	30 min.		1		3, 4, 24	$^1/_2$
W-4-M-41	4″	Core: structural clay tile; see Notes 13, 17, 23; No facings.	N/A	35 min.		1		3, 4, 24	$^1/_2$
W-4-M-42	4″	Core: structural clay tile; see Notes 13, 16, 21; No facings.	N/A	25 min.		1		3, 4, 24	$^1/_3$
W-4-M-43	4″	Core: structural clay tile; see Notes 13, 17, 21; No facings.	N/A	30 min.		1		3, 4, 24	$^1/_2$
W-4-M-44	4″	Core: structural clay tile; see Notes 15, 16, 20; No facings	N/A	1 hr. 15 min.		1		3, 4, 24	$1^1/_4$
W-4-M-45	4″	Core: structural clay tile; see Notes 15, 17, 20; No facings.	N/A	1 hr. 15 min.		1		3, 4, 24	$1^1/_4$
W-4-M-46	4″	Core: structural clay tile; see Notes 14, 16, 22; No facings.	N/A	20 min.		1		3, 4, 24	$^1/_3$
W-4-M-47	4″	Core: structural clay tile; see Notes 14, 17, 22; No facings.	N/A	25 min.		1		3, 4, 24	$^1/_3$
W-4-M-48	$4^1/_4$″	Core: structural clay tile; see Notes 12, 16, 21; Facings: both sides; see Note 18.	N/A	45 min.		1		3, 4, 24	$^3/_4$

(continued)

INTERNATIONAL CODE COUNCIL®
Copyright © 2019 ICC & NYSDOS. ALL RIGHTS RESERVED. Accessed by Lauren Gualdino (lgualdino@briarcliffmanor.org), (-) Order Number #100880972 on May 08, 2020 07:05 AM (PDT) pursuant to License Agreement with ICC & NYSDOS. No further reproduction, no

100880972

TABLE 1.1.2—continued
MASONRY WALLS
4″ TO LESS THAN 6″ THICK

ITEM CODE	THICKNESS	CONSTRUCTION DETAILS	PERFORMANCE		REFERENCE NUMBER			NOTES	REC. HOURS
			LOAD	TIME	PRE-BMS-92	BMS-92	POST-BMS-92		
W-4-M-49	4 1/4″	Core: structural clay tile; see Notes 12, 17, 21; Facings: both sides; see Note 18.	N/A	1 hr.		1		3, 4, 24	1
W-4-M-50	4 5/8″	Core: structural clay tile; see Notes 12, 16, 21; Facings: unexposed side only; see Note 18.	N/A	25 min.		1		3, 4, 24	1/3
W-4-M-51	4 5/8″	Core: structural clay tile; see Notes 12, 17, 21; Facings: unexposed side only; see Note 18.	N/A	30 min.		1		3, 4, 24	1/2
W-4-M-52	4 5/8″	Core: structural clay tile; see Notes 12, 16, 21; Facings: unexposed side only; see Note 18.	N/A	45 min.		1		3, 4, 24	3/4
W-4-M-53	4 5/8″	Core: structural clay tile; see Notes 12, 17, 21; Facings: fire side only; see Note 18.	N/A	1 hr.		1		3, 4, 24	1
W-4-M-54	4 5/8″	Core: structural clay tile; see Notes 12, 16, 20; Facings: unexposed side; see Note 18.	N/A	20 min.		1		3, 4, 24	1/3
W-4-M-55	4 5/8″	Core: structural clay tile; see Notes 12, 17, 20; Facings: exposed side; see Note 18.	N/A	25 min.		1		3, 4, 24	1/3
W-4-M-56	4 5/8″	Core: structural clay tile; see Notes 12, 16, 20; Facings: fire side only; see Note 18.	N/A	30 min.		1		3, 4, 24	1/2
W-4-M-57	4 5/8″	Core: structural clay tile; see Notes 12, 17, 20; Facings: fire side only; see Note 18.	N/A	45 min.		1		3, 4, 24	3/4
W-4-M-58	4 5/8″	Core: structural clay tile; see Notes 13, 16, 23; Facings: unexposed side only; see Note 18.	N/A	40 min.		1		3, 4, 24	2/3
W-4-M-59	4 5/8″	Core: structural clay tile; see Notes 13, 17, 23; Facings: unexposed side only; see Note 18.	N/A	1 hr.		1		3, 4, 24	1
W-4-M-60	4 5/8″	Core: structural clay tile; see Notes 13, 16, 23; Facings: fire side only; see Note 18.	N/A	1 hr. 15 min.		1		3, 4, 24	1 1/4
W-4-M-61	4 5/8″	Core: structural clay tile; see Notes 13, 17, 23; Facings: fire side only; see Note 18.	N/A	1 hr. 30 min.		1		3, 4, 24	1 1/2
W-4-M-62	4 5/8″	Core: structural clay tile; see Notes 13, 16, 21; Facings: unexposed side only; see Note 18.	N/A	35 min.		1		3, 4, 24	1/2
W-4-M-63	4 5/8″	Core: structural clay tile; see Notes 13, 17, 21; Facings: unexposed face only; see Note 18.	N/A	45 min.		1		3, 4, 24	3/4
W-4-M-64	4 5/8″	Core: structural clay tile; see Notes 13, 16, 23; Facings: exposed face only; see Note 18.	N/A	1 hr.		1		3, 4, 24	1
W-4-M-65	4 5/8″	Core: structural clay tile; see Notes 13, 17, 21; Facings: exposed side only; see Note 18.	N/A	1 hr. 15 min.		1		3, 4, 24	1 1/4
W-4-M-66	4 5/8″	Core: structural clay tile; see Notes 15, 17, 20; Facings: unexposed side only; see Note 18	N/A	1 hr. 30 min.		1		3, 4, 24	1 1/2
W-4-M-67	4 5/8″	Core: structural clay tile; see Notes 15, 16, 20; Facings: exposed side only; see Note 18.	N/A	1 hr. 45 min.		1		3, 4, 24	1 3/4
W-4-M-68	4 5/8″	Core: structural clay tile; see Notes 15, 17, 20; Facings: exposed side only; see Note 18.	N/A	1 hr. 45 min.		1		3, 4, 24	1 3/4
W-4-M-69	4 5/8″	Core: structural clay tile; see Notes 15, 16, 20; Facings: unexposed side only; see Note 18.	N/A	1 hr. 30 min.		1		3, 4, 24	1 3/4
W-4-M-70	4 5/8″	Core: structural clay tile; see Notes 14, 16, 22; Facings: unexposed side only; see Note 18.	N/A	30 min.		1		3, 4, 24	1/2

(continued)

INTERNATIONAL CODE COUNCIL®
Copyright © 2019 ICC & NYSDOS. ALL RIGHTS RESERVED. Accessed by Lauren Gualdino (lgualdino@briarcliffmanor.org), (-) Order Number #100880972 on May 08, 2020 07:05 AM (PDT) pursuant to License Agreement with ICC & NYSDOS. No further reproduction, no

100880972

TABLE 1.1.2—continued
MASONRY WALLS
4″ TO LESS THAN 6″ THICK

ITEM CODE	THICKNESS	CONSTRUCTION DETAILS	PERFORMANCE		REFERENCE NUMBER			NOTES	REC. HOURS
			LOAD	TIME	PRE-BMS-92	BMS-92	POST-BMS-92		
W-4-M-71	4 5/8″	Core: structural clay tile; see Notes 14, 17, 22; Facings: exposed side only; see Note 18.	N/A	35 min.		1		3, 4, 24	1/2
W-4-M-72	4 5/8″	Core: structural clay tile; see Notes 14, 16, 22; Facings: fire side of wall only; see Note 18.	N/A	45 min.		1		3, 4, 24	3/4
W-4-M-73	4 5/8″	Core: structural clay tile; see Notes 14, 17, 22; Facings: fire side of wall only; see Note 18.	N/A	1 hr.		1		3, 4, 24	1
W-4-M-74	5 1/4″	Core: structural clay tile; see Notes 12, 16, 21; Facings: both sides; see Note 18.	N/A	1 hr.		1		3, 4, 24	1
W-5-M-75	5 1/4″	Core: structural clay tile; see Notes 12, 17, 21; Facings: both sides; see Note 18	N/A	1 hr. 15 min.		1		3, 4, 24	1 1/4
W-5-M-76	5 1/4″	Core: structural clay tile; see Notes 12, 16, 20; Facings: both sides; see Note 18.	N/A	45 min.		1		3, 4, 24	3/4
W-5-M-77	5 1/4″	Core: structural clay tile; see Notes 12, 17, 20; Facings: both sides; see Note 18.	N/A	1 hr.		1		3, 4, 24	1
W-5-M-78	5 1/4″	Core: structural clay tile; see Notes 13, 16, 23; Facings: both sides of wall; see Note 18.	N/A	1 hr. 30 min.		1		3, 4, 24	1 1/2
W-5-M-79	5 1/4″	Core: structural clay tile; see Notes 13, 17, 23; Facings: both sides of wall; see Note 18.	N/A	2 hrs.		1		3, 4, 24	2
W-5-M-80	5 1/4″	Core: structural clay tile; see Notes 13, 16, 21; Facings: both sides of wall; see Note 18.	N/A	1 hr. 15 min.		1		3, 4, 24	1 1/4
W-5-M-81	5 1/4″	Core: structural clay tile; see Notes 13, 16, 21; Facings: both sides of wall; see Note 18.	N/A	1 hr. 30 min.		1		3, 4, 24	1 1/2
W-5-M-82	5 1/4″	Core: structural clay tile; see Notes 15, 16, 20; Facings: both sides; see Note 18.	N/A	2 hrs. 30 min.		1		3, 4, 24	2 1/2
W-5-M-83	5 1/4″	Core: structural clay tile; see Notes 15, 17, 20; Facings: both sides; see Note 18.	N/A	2 hrs. 30 min.		1		3, 4, 24	2 1/2
W-5-M-84	5 1/4″	Core: structural clay tile; see Notes 14, 16, 22; Facings: both sides of wall; see Note 18.	N/A	1 hr. 15 min.		1		3, 4, 24	1 1/4
W-5-M-85	5 1/4″	Core: structural clay tile; see Notes 14, 17, 22; Facings: both sides of wall; see Note 18.	N/A	1 hr. 30 min.		1		3, 4, 24	1 1/2
W-4-M-86	4″	Core: 3″ thick gypsum blocks 70% solid; see Note 26; Facings: both sides; see Note 25.	N/A	2 hrs.		1			2
W-4-M-87	4″	Core: hollow concrete units; see Notes 27, 34, 35; No facings.	N/A	1 hr. 30 min.		1			1 1/2
W-4-M-88	4″	Core: hollow concrete units; see Notes 28, 33, 35; No facings.	N/A	1 hr.		1			1
W-4-M-89	4″	Core: hollow concrete units; see Notes 28, 34, 35; Facings: both sides; see Note 25.	N/A	1 hr. 45 min.		1			1 3/4
W-4-M-90	4″	Core: hollow concrete units; see Notes 27, 34, 35; Facings: both sides; see Note 25.	N/A	2 hrs.		1			2
W-4-M-91	4″	Core: hollow concrete units; see Notes 27, 32, 35; No facings.	N/A	1 hr. 15 min.		1			1 1/4
W-4-M-92	4″	Core: hollow concrete units; see Notes 28, 34, 35; No facings.	N/A	1 hr. 15 min.		1			1 1/4
W-4-M-93	4″	Core: hollow concrete units; see Notes 29, 32, 35; No facings.	N/A	20 min.		1			1/3

(continued)

INTERNATIONAL CODE COUNCIL®
Copyright © 2019 ICC & NYSDOS. ALL RIGHTS RESERVED. Accessed by Lauren Gualdino (lgualdino@briarcliffmanor.org), (-) Order Number #100880972 on May 08, 2020 07:05 AM (PDT) pursuant to License Agreement with ICC & NYSDOS. No further reproduction, no

100880972

TABLE 1.1.2—continued
MASONRY WALLS
4″ TO LESS THAN 6″ THICK

ITEM CODE	THICKNESS	CONSTRUCTION DETAILS	PERFORMANCE		REFERENCE NUMBER			NOTES	REC. HOURS
			LOAD	TIME	PRE-BMS-92	BMS-92	POST-BMS-92		
W-4-M-94	4″	Core: hollow concrete units; see Notes 30, 34, 35; No facings.	N/A	15 min.		1			1/4
W-4-M-95	4 1/2″	Core: hollow concrete units; see Notes 27, 34, 35; Facings: one side only; see Note 25.	N/A	2 hrs.		1			2
W-4-M-96	4 1/2″	Core: hollow concrete units; see Notes 27, 32, 35; Facings: one side only; see Note 25.	N/A	1 hr. 45 min.		1			1 3/4
W-4-M-97	4 1/2″	Core: hollow concrete units; see Notes 28, 33, 35; Facings: one side; see Note 25.	N/A	1 hr. 30 min.		1			1 1/2
W-4-M-98	4 1/2″	Core: hollow concrete units; see Notes 28, 34, 35; Facings: one side only; see Note 25.	N/A	1 hr. 45 min.		1			1 3/4
W-4-M-99	4 1/2″	Core: hollow concrete units; see Notes 29, 32, 35; Facings: one side; see Note 25.	N/A	30 min.		1			1/2
W-4-M-100	4 1/2″	Core: hollow concrete units; see Notes 30, 34, 35; Facings: one side; see Note 25.	N/A	20 min.		1			1/3
W-5-M-101	5″	Core: hollow concrete units; see Notes 27, 34, 35; Facings: both sides; see Note 25.	N/A	2 hrs. 30 min.		1			2 1/2
W-5-M-102	5″	Core: hollow concrete units; see Notes 27, 32, 35; Facings: both sides; see Note 25.	N/A	2 hrs. 30 min.		1			2 1/2
W-5-M-103	5″	Core: hollow concrete units; see Notes 28, 33, 35; Facings: both sides; see Note 25.	N/A	2 hrs.		1			2
W-5-M-104	5″	Core: hollow concrete units; see Notes 28, 31, 35; Facings: both sides; see Note 25.	N/A	2 hrs.		1			2
W-5-M-105	5″	Core: hollow concrete units; see Notes 29, 32, 35; Facings: both sides; see Note 25.	N/A	1 hr. 45 min.		1			1 3/4
W-5-M-106	5″	Core: hollow concrete units; see Notes 30, 34, 35; Facings: both sides; see Note 25.	N/A	1 hr.		1			1
W-5-M-107	5″	Core: 5″ thick solid gypsum blocks; see Note 26; No facings.	N/A	4 hrs.		1			4
W-5-M-108	5″	Core: 4″ thick hollow gypsum blocks; see Note 26; Facings: both sides; see Note 25.	N/A	3 hrs.		1			3
W-5-M-109	4″	Concrete with 4″ × 4″ No. 6 welded wire mesh at wall center.	100 psi	45 min.			43	2	3/4
W-4-M-110	4″	Concrete with 4″ × 4″ No. 6 welded wire mesh at wall center.	N/A	1 hr. 15 min.			43	2	1 1/4

For SI: 1 inch = 25.4 mm, 1 pound per square inch = 0.00689 MPa.

Notes:

1. Tested as NBS under ASA Spec. No. A 2-1934.
2. Failure mode—maximum temperature rise.
3. Treated at NBS under ASA Spec. No. 42-1934 (ASTM C19-53) except that hose stream testing where carried out was run on test specimens exposed for full test duration, not for or reduced period as is contemporarily done.
4. For clay tile walls, unless the source the clay can be positively identified, it is suggested that the most pessimistic hour rating for the fire endurance of a clay tile partition of that thickness to be followed. Identified sources of clay showing longer fire endurance can lead to longer time recommendations.
5. See appendix for construction and design details for clay tile walls.
6. Failure mode—flame thru or crack formation showing flames.
7. Hole formed at 25 minutes; partition collapsed at 42 minutes or removal from furnace.
8. Failure mode—collapse.
9. Hose stream pass.
10. Hose stream hole formed in specimen.
11. Load: 80 psi for gross wall cross sectional area.
12. One cell in wall thickness.
13. Two cells in wall thickness.

(continued)

INTERNATIONAL CODE COUNCIL®
Copyright © 2019 ICC & NYSDOS. ALL RIGHTS RESERVED. Accessed by Lauren Gualdino (lgualdino@briarcliffmanor.org), (-) Order Number #100880972 on May 08, 2020 07:05 AM (PDT) pursuant to License Agreement with ICC & NYSDOS. No further reproduction, no

100880972

TABLE 1.1.2—continued
MASONRY WALLS
4″ TO LESS THAN 6″ THICK

14. Double cells plus one cell in wall thickness.
15. One cell in wall thickness, cells filled with broken tile, crushed stone, slag, cinders or sand mixed with mortar.
16. Dense hard-burned clay or shale tile.
17. Medium-burned clay tile.
18. Not less than $^{5}/_{8}$ inch thickness of 1:3 sanded gypsum plaster.
19. Units of not less than 30 percent solid material.
20. Units of not less than 40 percent solid material.
21. Units of not less than 50 percent solid material.
22. Units of not less than 45 percent solid material.
23. Units of not less than 60 percent solid material.
24. All tiles laid in Portland cement-lime mortar.
25. Minimum $^{1}/_{2}$ inch—1:3 sanded gypsum plaster.
26. Laid in 1:3 sanded gypsum mortar. Voids in hollow units not to exceed 30 percent.
27. Units of expanded slag or pumice aggregate.
28. Units of crushed limestone, blast furnace slag, cinders and expanded clay or shale.
29. Units of calcareous sand and gravel. Coarse aggregate, 60 percent or more calcite and dolomite.
30. Units of siliceous sand and gravel. Ninety percent or more quartz, chert or flint.
31. Unit at least 49 percent solid.
32. Unit at least 62 percent solid.
33. Unit at least 65 percent solid.
34. Unit at least 73 percent solid.
35. Ratings based on one unit and one cell in wall thickness.
36. See Clay Tile Partition Design Construction drawings, below.

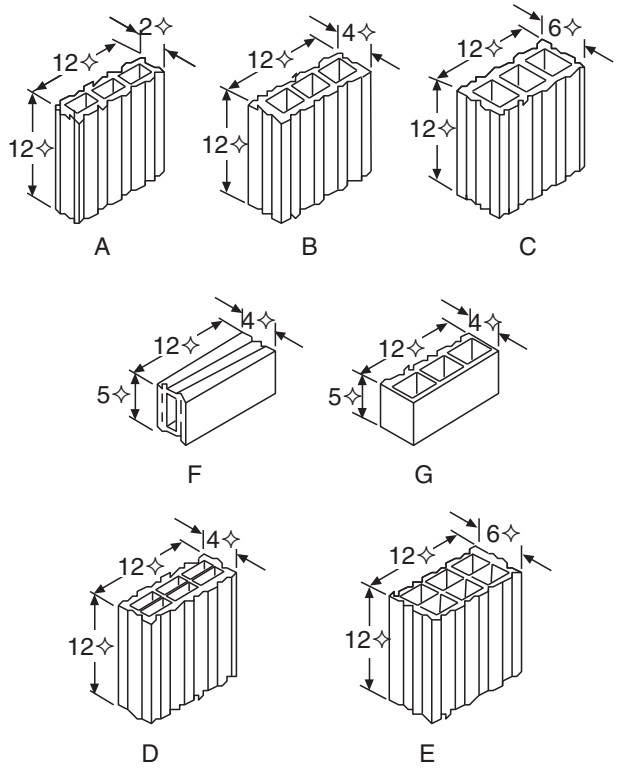

DESIGNS OF TILES USED IN FIRE-TEST PARTITIONS

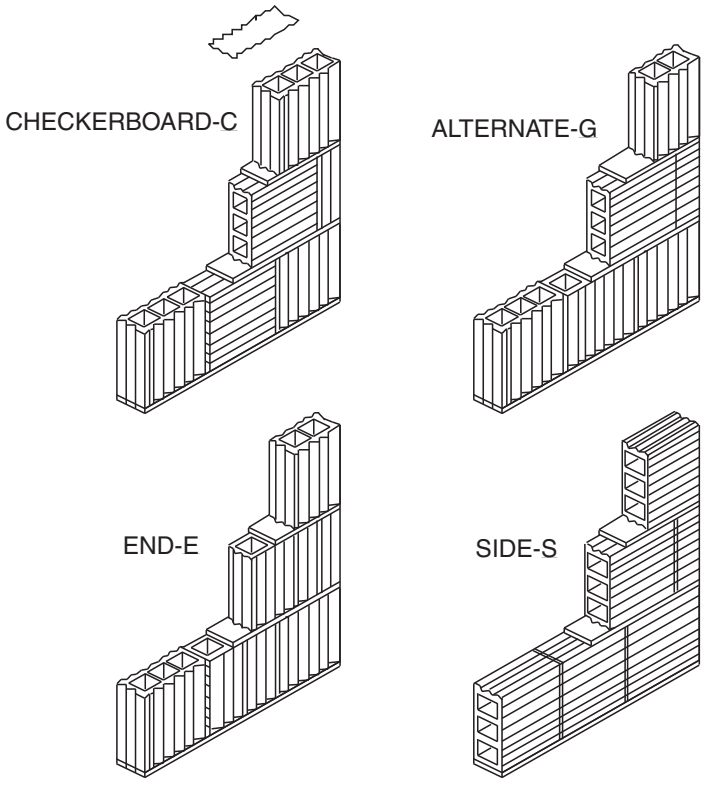

THE FOUR TYPES OF CONSTRUCTION USED IN FIRE-TEST PARTITIONS

INTERNATIONAL CODE COUNCIL®
Copyright © 2019 ICC & NYSDOS. ALL RIGHTS RESERVED. Accessed by Lauren Gualdino (lgualdino@briarcliffmanor.org), (-) Order Number #100880972 on May 08, 2020 07:05 AM (PDT) pursuant to License Agreement with ICC & NYSDOS. No further reproduction, no

100880972

FIGURE 1.1.3
MASONRY WALLS
6″ TO LESS THAN 8″ THICK

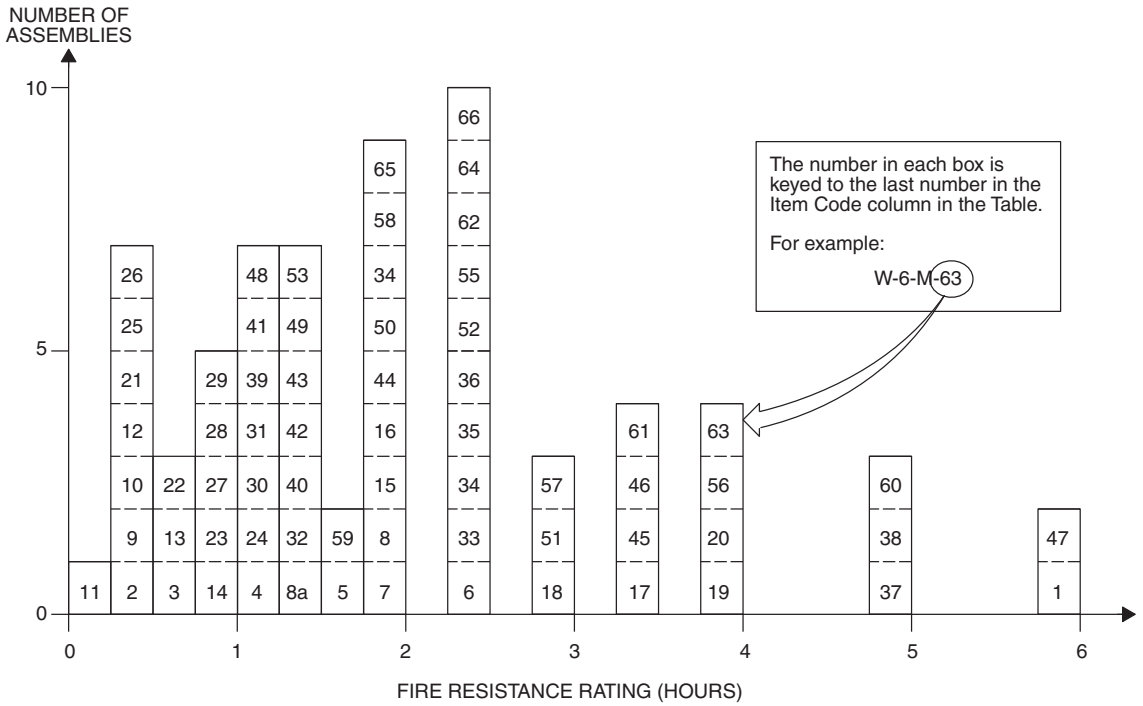

TABLE 1.1.3
MASONRY WALLS
6″ TO LESS THAN 8″ THICK

ITEM CODE	THICKNESS	CONSTRUCTION DETAILS	PERFORMANCE		REFERENCE NUMBER			NOTES	REC. HOURS
			LOAD	TIME	PRE-BMS-92	BMS-92	POST-BMS-92		
W-6-M-1	6″	Core: 5″ thick, solid gypsum blocks laid in 1:3 sanded gypsum mortar; $^1/_2$″ of 1:3 sanded gypsum plaster facings on both sides.	N/A	6 hrs.		1			6
W-6-M-2	6″	6″ clay tile; Ohio fire clay; single cell thick; No plaster; Design “C,” Construction “A.”	N/A	17 min.			2	1, 3, 4, 6, 55	$^1/_4$
W-6-M-3	6″	6″ clay tile; Illinois surface clay; double cell thick; No plaster; Design “E,” Construction “C.”	N/A	45 min.			2	1-4, 7, 55	$^3/_4$
W-6-M-4	6″	6″ clay tile; New Jersey fire clay; double cell thick; No plaster; Design “E,” Construction “S.”	N/A	1 hr. 1 min.			2	1-4, 8, 55	1
W-7-M-5	$7^1/_4$″	6″ clay tile; Illinois surface clay; double cell thick; Plaster: $^5/_8$″—1:3 sanded gypsum both faces; Design “E,” Construction “A.”	N/A	1 hr. 41 min.			2	1-4, 55	$1^2/_3$
W-7-M-6	$7^1/_4$″	6″ clay tile; New Jersey fire clay; double cell thick; Plaster: $^5/_8$″—1:3 sanded gypsum both faces; Design “E,” Construction “S.”	N/A	2 hrs. 23 min.			2	1-4, 9, 55	$2^1/_3$
W-7-M-7	$7^1/_4$″	6″ clay tile; Ohio fire clay; single cell thick; Plaster: $^5/_8$″ sanded gypsum; 1:3 both faces; Design “C,” Construction “A.”	N/A	1 hr. 54 min.			2	1-4, 9, 55	$2^3/_4$
W-7-M-8	$7^1/_4$″	6″ clay tile; Illinois surface clay; single cell thick; Plaster: $^5/_8$″ sanded gypsum 1:3 both faces; Design “C,” Construction “S.”	N/A	2 hrs.			2	1, 3, 4, 9, 10, 55	2
W-7-M-8a	$7^1/_4$″	6″ clay tile; Illinois surface clay; single cell thick; Plaster: $^5/_8$″ sanded gypsum 1:3 both faces; Design “C,” Construction “E.”	N/A	1 hr. 23 min			2	1-4, 9, 10, 55	$1^3/_4$

(continued)

INTERNATIONAL CODE COUNCIL®
Copyright © 2019 ICC & NYSDOS. ALL RIGHTS RESERVED. Accessed by Lauren Gualdino (lgualdino@briarcliffmanor.org), (-) Order Number #100880972 on May 08, 2020 07:05 AM (PDT) pursuant to License Agreement with ICC & NYSDOS. No further reproduction, no

100880972

TABLE 1.1.3—continued
MASONRY WALLS
6″ TO LESS THAN 8″ THICK

ITEM CODE	THICKNESS	CONSTRUCTION DETAILS	PERFORMANCE		REFERENCE NUMBER			NOTES	REC. HOURS
			LOAD	TIME	PRE-BMS-92	BMS-92	POST-BMS-92		
W-6-M-9	6″	Core: structural clay tile; see Notes 12, 16, 20; No facings.	N/A	20 min.		1		3, 5, 24	1/3
W-6-M-10	6″	Core: structural clay tile; see Notes 12, 17, 20; No facings.	N/A	25 min.		1		3, 5, 24	1/3
W-6-M-11	6″	Core: structural clay tile; see Notes 12, 16, 19; No facings.	N/A	15 min.		1		3, 5, 24	1/4
W-6-M-12	6″	Core: structural clay tile; see Notes 12, 17, 19; No facings.	N/A	20 min.		1		3, 5, 24	1/3
W-6-M-13	6″	Core: structural clay tile; see Notes 13, 16, 22; No facings.	N/A	45 min.		1		3, 5, 24	3/4
W-6-M-14	6″	Core: structural clay tile; see Notes 13, 17, 22; No facings.	N/A	1 hr.		1		3, 5, 24	1
W-6-M-15	6″	Core: structural clay tile; see Notes 15, 17, 19; No facings.	N/A	2 hrs.		1		3, 5, 24	2
W-6-M-16	6″	Core: structural clay tile; see Notes 15, 16, 19; No facings.	N/A	2 hrs.		1		3, 5, 24	2
W-6-M-17	6″	Cored concrete masonry; see Notes 12, 34, 36, 38, 41; No facings.	80 psi	3 hrs. 30 min.		1		5, 25	3 1/2
W-6-M-18	6″	Cored concrete masonry; see Notes 12, 33, 36, 38, 41; No facings.	80 psi	3 hrs.		1		5, 25	3
W-6-M-19	6 1/2″	Cored concrete masonry; see Notes 12, 34, 36, 38, 41; Facings: side 1; see Note 35.	80 psi	4 hrs.		1		5, 25	4
W-6-M-20	6 1/2″	Cored concrete masonry; see Notes 12, 33, 36, 38, 41; Facings: side 1; see Note 35.	80 psi	4 hrs.		1		5, 25	4
W-6-M-21	6 5/8″	Core: structural clay tile; see Notes 12, 16, 20; Facings: unexposed face only; see Note 18.	N/A	30 min.		1		3, 5, 24	1/2
W-6-M-22	6 5/8″	Core: structural clay tile; see Notes 12, 17, 20; Facings: unexposed face only; see Note 18.	N/A	40 min.		1		3, 5, 24	2/3
W-6-M-23	6 5/8″	Core: structural clay tile; see Notes 12, 16, 20; Facings: exposed face only; see Note 18.	N/A	1 hr.		1		3, 5, 24	1
W-6-M-24	6 5/8″	Core: structural clay tile; see Notes 12, 17, 20; Facings: exposed face only; see Note 18.	N/A	1 hr. 5 min.		1		3, 5, 24	1
W-6-M-25	6 5/8″	Core: structural clay tile; see Notes 12, 16, 19; Facings: unexposed side only; see Note 18.	N/A	25 min.		1		3, 5, 24	1/3
W-6-M-26	6 5/8″	Core: structural clay tile; see Notes 12, 7, 19; Facings: unexposed face only; see Note 18.	N/A	30 min.		1		3, 5, 24	1/2
W-6-M-27	6 5/8″	Core: structural clay tile; see Notes 12, 16, 19; Facings: exposed side only; see Note 18.	N/A	1 hr.		1		3, 5, 24	1
W-6-M-28	6 5/8″	Core: structural clay tile; see Notes 12, 17, 19; Facings: fire side only; see Note 18.	N/A	1 hr.		1		3, 5, 24	1
W-6-M-29	6 5/8″	Core: structural clay tile; see Notes 13, 16, 22; Facings: unexposed side only; see Note 18.	N/A	1 hr.		1		3, 5, 24	1
W-6-M-30	6 5/8″	Core: structural clay tile; see Notes 13, 17, 22; Facings: unexposed side only; see Note 18.	N/A	1 hr. 15 min.		1		3, 5, 24	1 1/4
W-6-M-31	6 5/8″	Core: structural clay tile; see Notes 13, 16, 22; Facings: fire side only; see Note 18.	N/A	1 hr. 15 min.		1		3, 5, 24	1 1/4
W-6-M-32	6 5/8″	Core: structural clay tile; see Notes 13, 17, 22; Facings: fire side only; see Note 18.	N/A	1 hr. 30 min.		1		3, 5, 24	1 1/2

(continued)

INTERNATIONAL CODE COUNCIL®
Copyright © 2019 ICC & NYSDOS. ALL RIGHTS RESERVED. Accessed by Lauren Gualdino (lgualdino@briarcliffmanor.org), (-) Order Number #100880972 on May 08, 2020 07:05 AM (PDT) pursuant to License Agreement with ICC & NYSDOS. No further reproduction, no

100880972

TABLE 1.1.3—continued
MASONRY WALLS
6″ TO LESS THAN 8″ THICK

ITEM CODE	THICKNESS	CONSTRUCTION DETAILS	PERFORMANCE		REFERENCE NUMBER			NOTES	REC. HOURS
			LOAD	TIME	PRE-BMS-92	BMS-92	POST-BMS-92		
W-6-M-33	$6^{5}/_{8}$″	Core: structural clay tile; see Notes 15, 16, 19; Facings: unexposed side only; see Note 18.	N/A	2 hrs. 30 min.		1		3, 5, 24	$2^{1}/_{2}$
W-6-M-34	$6^{5}/_{8}$″	Core: structural clay tile; see Notes 15, 17, 19; Facings: unexposed side only; see Note 18.	N/A	2 hrs. 30 min.		1		3, 5, 24	$2^{1}/_{2}$
W-6-M-35	$6^{5}/_{8}$″	Core: structural clay tile; see Notes 15, 16, 19; Facings: fire side only; see Note 18.	N/A	2 hrs. 30 min.		1		3, 5, 24	$2^{1}/_{2}$
W-6-M-36	$6^{5}/_{8}$″	Core: structural clay tile; see Notes 15, 17, 19; Facings: fire side only; see Note 18.	N/A	2 hrs. 30 min.		1		3, 5, 24	$2^{1}/_{2}$
W-6-M-37	7″	Cored concrete masonry; see Notes 12, 34, 36, 38, 41; see Note 35 for facings on both sides.	80 psi	5 hrs.		1		5, 25	5
W-6-M-38	7″	Cored concrete masonry; see Notes 12, 33, 36, 38, 41; see Note 35 for facings.	80 psi	5 hrs.		1		5, 25	5
W-6-M-39	$7^{1}/_{4}$″	Core: structural clay tile; see Notes 12, 16, 20; Facings: both sides; see Note 18.	N/A	1 hr. 15 min.		1		3, 5, 24	$1^{1}/_{4}$
W-6-M-40	$7^{1}/_{4}$″	Core: structural clay tile; see Notes 12, 17, 20; Facings: both sides; see Note 18.	N/A	1 hr. 30 min.		1		3, 5, 24	$1^{1}/_{2}$
W-6-M-41	$7^{1}/_{4}$″	Core: structural clay tile; see Notes 12, 16, 19; Facings: both sides; see Note 18.	N/A	1 hr. 15 min.		1		3, 5, 24	$1^{1}/_{4}$
W-6-M-42	$7^{1}/_{4}$″	Core: structural clay tile; see Notes 12, 17, 19; Facings: both sides; see Note 18.	N/A	1 hr. 30 min.		1		3, 5, 24	$1^{1}/_{2}$
W-7-M-43	$7^{1}/_{4}$″	Core: structural clay tile; see Notes 13, 16, 22; Facings: both sides of wall; see Note 18.	N/A	1 hr. 30 min.		1		3, 5, 24	$1^{1}/_{2}$
W-7-M-44	$7^{1}/_{4}$″	Core: structural clay tile; see Notes 13, 17, 22; Facings: both sides of wall; see Note 18.	N/A	2 hrs.		1		3, 5, 24	$1^{1}/_{2}$
W-7-M-45	$7^{1}/_{4}$″	Core: structural clay tile; see Notes 15, 16, 19; Facings: both sides; see Note 18.	N/A	3 hrs. 30 min.		1		3, 5, 24	$3^{1}/_{2}$
W-7-M-46	$7^{1}/_{4}$″	Core: structural clay tile; see Notes 15, 17, 19; Facings: both sides; see Note 18.	N/A	3 hrs. 30 min.		1		3, 5, 24	$3^{1}/_{2}$
W-6-M-47	6″	Core: 5″ thick solid gypsum blocks; see Note 45; Facings: both sides; see Note 45.	N/A	6 hrs.		1			6
W-6-M-48	6″	Core: hollow concrete units; see Notes 47, 50, 54; No facings.	N/A	1 hr. 15 min.		1			$1^{1}/_{4}$
W-6-M-49	6″	Core: hollow concrete units; see Notes 46, 50, 54; No facings.	N/A	1 hr. 30 min.		1			$1^{1}/_{2}$
W-6-M-50	6″	Core: hollow concrete units; see Notes 46, 41, 54; No facings.	N/A	2 hrs.		1			2
W-6-M-51	6″	Core: hollow concrete units; see Notes 46, 53, 54; No facings.	N/A	3 hrs.		1			3
W-6-M-52	6″	Core: hollow concrete units; see Notes 47, 53, 54; No facings.	N/A	2 hrs. 30 min.		1			$2^{1}/_{2}$
W-6-M-53	6″	Core: hollow concrete units; see Notes 47, 51, 54; No facings.	N/A	1 hr. 30 min.		1			$1^{1}/_{2}$
W-6-M-54	$6^{1}/_{2}$″	Core: hollow concrete units; see Notes 46, 50, 54; Facings: one side only; see Note 35.	N/A	2 hrs.		1			2
W-6-M-55	$6^{1}/_{2}$″	Core: hollow concrete units; see Notes 4, 51, 54; Facings: one side; see Note 35.	N/A	2 hrs. 30 min.		1			$2^{1}/_{2}$
W-6-M-56	$6^{1}/_{2}$″	Core: hollow concrete units; see Notes 46, 53, 54; Facings: one side; see Note 35.	N/A	4 hrs.		1			4

(continued)

INTERNATIONAL CODE COUNCIL®
Copyright © 2019 ICC & NYSDOS. ALL RIGHTS RESERVED. Accessed by Lauren Gualdino (lgualdino@briarcliffmanor.org), (-) Order Number #100880972 on May 08, 2020 07:05 AM (PDT) pursuant to License Agreement with ICC & NYSDOS. No further reproduction, no

100880972

TABLE 1.1.3—continued
MASONRY WALLS
6″ TO LESS THAN 8″ THICK

ITEM CODE	THICKNESS	CONSTRUCTION DETAILS	PERFORMANCE		REFERENCE NUMBER			NOTES	REC. HOURS
			LOAD	TIME	PRE-BMS-92	BMS-92	POST-BMS-92		
W-6-M-57	$6^1/_2$″	Core: hollow concrete units; see Notes 47, 53, 54; Facings: one side; see Note 35.	N/A	3 hrs.		1			3
W-6-M-58	$6^1/_2$″	Core: hollow concrete units; see Notes 47, 51, 54; Facings: one side; see Note 35.	N/A	2 hrs.		1			2
W-6-M-59	$6^1/_2$″	Core: hollow concrete units; see Notes 47, 50, 54; Facings: one side; see Note 35.	N/A	1 hr. 45 min.		1			$1^3/_4$
W-7-M-60	7″	Core: hollow concrete units; see Notes 46, 53, 54; Facings: both sides; see Note 35.	N/A	5 hrs.		1			5
W-7-M-61	7″	Core: hollow concrete units; see Notes 46, 51, 54; Facings: both sides; see Note 35.	N/A	3 hrs. 30 min.		1			$3^1/_2$
W-7-M-62	7″	Core: hollow concrete units; see Notes 46, 50, 54; Facings: both sides; see Note 35.	N/A	2 hrs. 30 min.		1			$2^1/_2$
W-7-M-63	7″	Core: hollow concrete units; see Notes 47, 53, 54; Facings: both sides; see Note 35.	N/A	4 hrs.		1			4
W-7-M-64	7″	Core: hollow concrete units; see Notes 47, 51, 54; Facings: both sides; see Note 35.	N/A	2 hrs. 30 min.		1			$2^1/_2$
W-7-M-65	7″	Core: hollow concrete units; see Notes 47, 50, 54; Facings: both sides; see Note 35.	N/A	2 hrs.		1			2
W-6-M-66	6″	Concrete wall with 4″ × 4″ No. 6 wire fabric (welded) near wall center for reinforcement.	N/A	2 hrs. 30 min.			43	2	$2^1/_2$

For SI: 1 inch = 25.4 mm, 1 pound per square inch = 0.00689 MPa.

Notes:

1. Tested at NBS under ASA Spec. No. 43-1934 (ASTM C19-53) except that hose stream testing where carried out was run on test specimens exposed for full test duration, not for a reduced period as is contemporarily done.
2. Failure by thermal criteria—maximum temperature rise.
3. For clay tile walls, unless the source or density of the clay can be positively identified or determined, it is suggested that the lowest hourly rating for the fire endurance of a clay tile partition of that thickness be followed. Identified sources of clay showing longer fire endurance can lead to longer time recommendations.
4. See Note 55 for construction and design details for clay tile walls.
5. Tested at NBS under ASA Spec. No. A2-1934.
6. Failure mode—collapse.
7. Collapsed on removal from furnace at 1 hour 9 minutes.
8. Hose stream—failed.
9. Hose stream—passed.
10. No end point met in test.
11. Wall collapsed at 1 hour 28 minutes.
12. One cell in wall thickness.
13. Two cells in wall thickness.
14. Double shells plus one cell in wall thickness.
15. One cell in wall thickness, cells filled with broken tile, crushed stone, slag, cinders or sand mixed with mortar.
16. Dense hard-burned clay or shale tile.
17. Medium-burned clay tile.
18. Not less than $^5/_8$ inch thickness of 1:3 sanded gypsum plaster.
19. Units of not less than 30 percent solid material.
20. Units of not less than 40 percent solid material.
21. Units of not less than 50 percent solid material.
22. Units of not less than 45 percent solid material.
23. Units of not less than 60 percent solid material.
24. All tiles laid in Portland cement-lime mortar.
25. Load: 80 psi for gross cross sectional area of wall.
26. Three cells in wall thickness.
27. Minimum percent of solid material in concrete units = 52.
28. Minimum percent of solid material in concrete units = 54.
29. Minimum percent of solid material in concrete units = 55.
30. Minimum percent of solid material in concrete units = 57.

(continued)

INTERNATIONAL CODE COUNCIL®
Copyright © 2019 ICC & NYSDOS. ALL RIGHTS RESERVED. Accessed by Lauren Gualdino (lgualdino@briarcliffmanor.org), (-) Order Number #100880972 on May 08, 2020 07:05 AM (PDT) pursuant to License Agreement with ICC & NYSDOS. No further reproduction, no

100880972

TABLE 1.1.3—continued
MASONRY WALLS
6″ TO LESS THAN 8″ THICK

31. Minimum percent of solid material in concrete units = 62.
32. Minimum percent of solid material in concrete units = 65.
33. Minimum percent of solid material in concrete units = 70.
34. Minimum percent of solid material in concrete units = 76.
35. Not less than $^1/_2$ inch of 1:3 sanded gypsum plaster.
36. Noncombustible or no members framed into wall.
37. Combustible members framed into wall.
38. One unit in wall thickness.
39. Two units in wall thickness.
40. Three units in wall thickness.
41. Concrete units made with expanded slag or pumice aggregates.
42. Concrete units made with expanded burned clay or shale, crushed limestone, air cooled slag or cinders.
43. Concrete units made with calcareous sand and gravel. Coarse aggregate, 60 percent or more calcite and dolomite.
44. Concrete units made with siliceous sand and gravel. Ninety percent or more quartz, chert or flint.
45. Laid in 1:3 sanded gypsum mortar.
46. Units of expanded slag or pumice aggregate.
47. Units of crushed limestone, blast furnace, slag, cinder and expanded clay or shale.
48. Units of calcareous sand and gravel. Coarse aggregate, 60 percent or more calcite and dolomite.
49. Units of siliceous sand and gravel. Ninety percent or more quartz, chert or flint.
50. Unit minimum 49 percent solid.
51. Unit minimum 62 percent solid.
52. Unit minimum 65 percent solid.
53. Unit minimum 73 percent solid.
54. Ratings based on one unit and one cell in wall section.
55. See Clay Tile Partition Design Construction drawings, below.

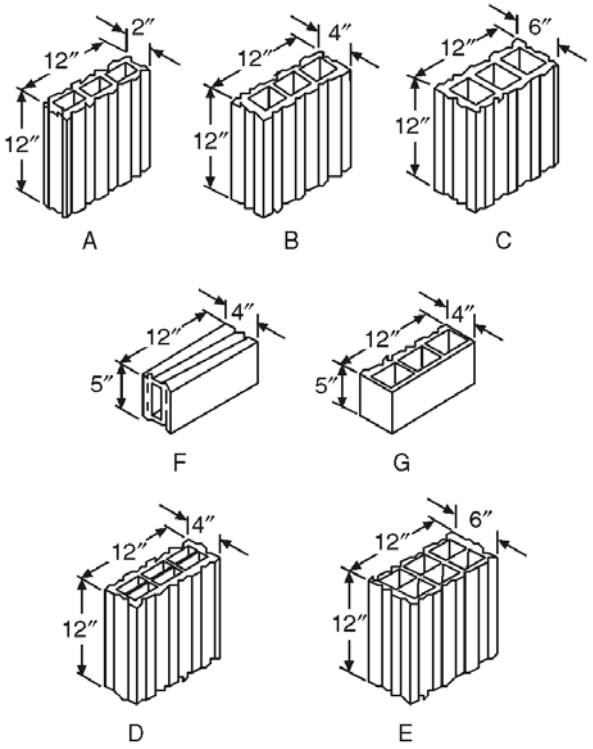

DESIGNS OF TILES USED IN FIRE-TEST PARTITIONS

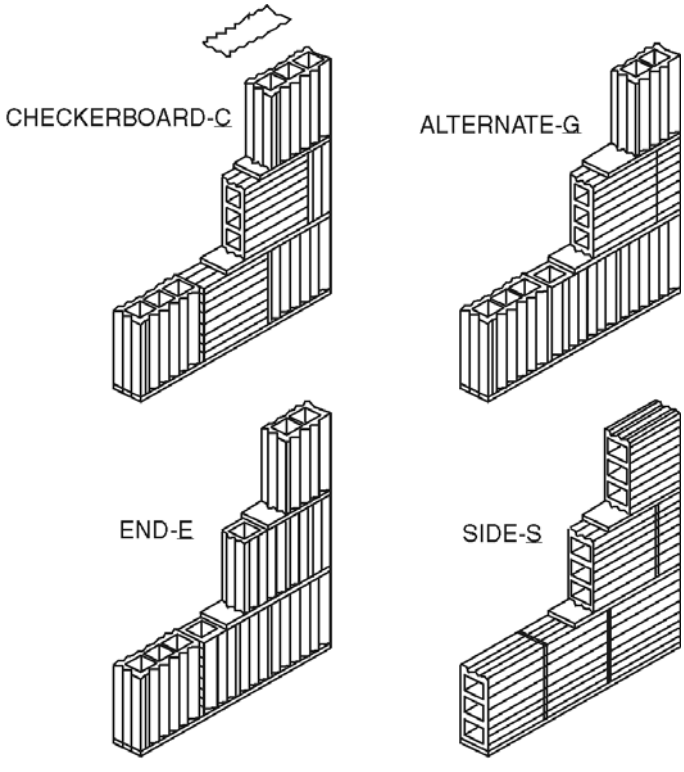

THE FOUR TYPES OF CONSTRUCTION USED IN FIRE-TEST PARTITIONS

INTERNATIONAL CODE COUNCIL®
Copyright © 2019 ICC & NYSDOS. ALL RIGHTS RESERVED. Accessed by Lauren Gualdino (lgualdino@briarcliffmanor.org), (-) Order Number #100880972 on May 08, 2020 07:05 AM (PDT) pursuant to License Agreement with ICC & NYSDOS. No further reproduction, no

100880972

FIGURE 1.1.4
MASONRY WALLS
8″ TO LESS THAN 10″ THICK

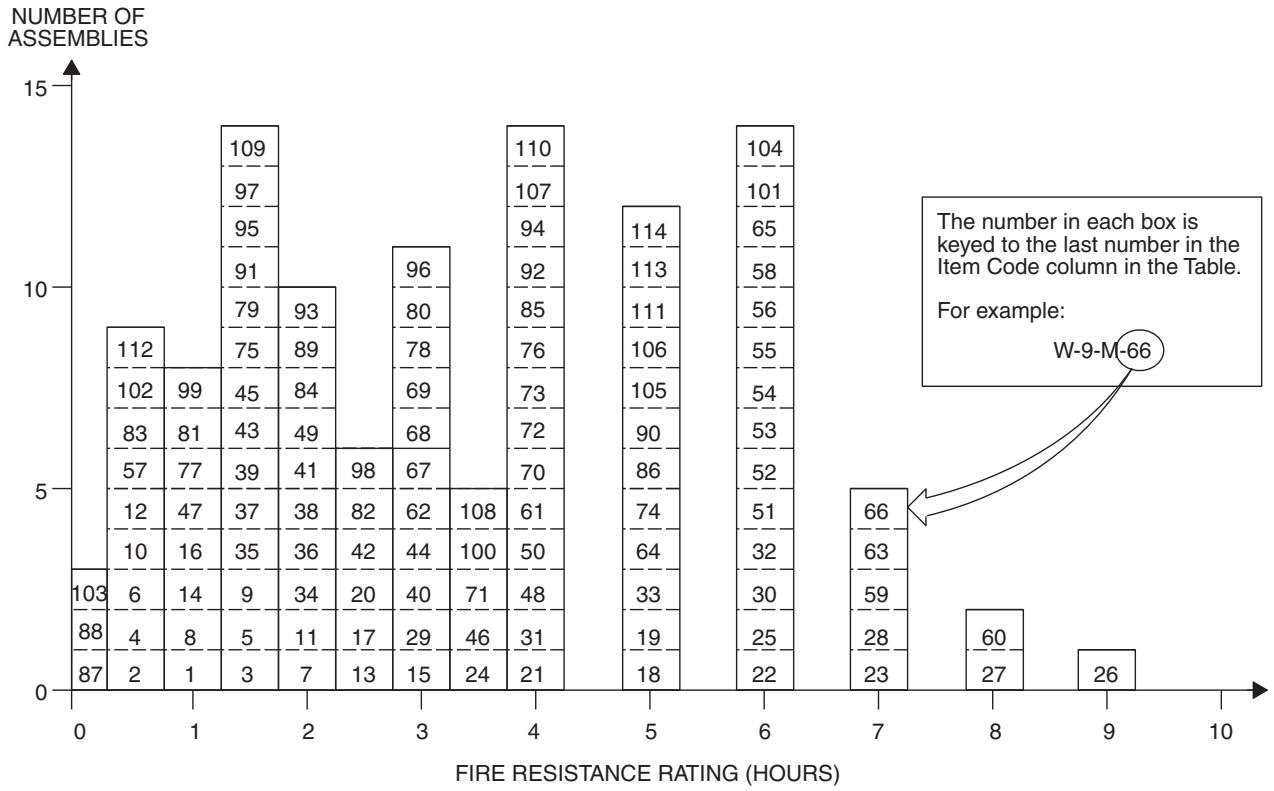

TABLE 1.1.4
MASONRY WALLS
8″ TO LESS THAN 10″ THICK

ITEM CODE	THICKNESS	CONSTRUCTION DETAILS	PERFORMANCE		REFERENCE NUMBER			NOTES	REC. HOURS
			LOAD	TIME	PRE-BMS-92	BMS-92	POST-BMS-92		
W-8-M-1	8″	Core: clay or shale structural tile; Units in wall thickness: 1; Cells in wall thickness: 2; Minimum % solids in units: 40.	80 psi	1 hr. 15 min.		1		1, 20	$1^1/_4$
W-8-M-2	8″	Core: clay or shale structural tile; Units in wall thickness: 1; Cells in wall thickness: 2; Minimum % solids in units: 40; No facings; Result for wall with combustible members framed into interior.	80 psi	45 min.		1		1, 20	$^3/_4$
W-8-M-3	8″	Core: clay or shale structural tile; Units in wall thickness: 1; Cells in wall thickness: 2; Minimum % solids in units: 43.	80 psi	1 hr. 30 min.		1		1, 20	$1^1/_2$
W-8-M-4	8″	Core: clay or shale structural tile; Units in wall thickness: 1; Cells in wall thickness: 2; Minimum % solids in units: 43; No facings; Combustible members framed into wall.	80 psi	45 min.		1		1, 20	$^3/_4$
W-8-M-5	8″	Core: clay or shale structural tile; No facings.	See Notes	1 hr. 30 min.		1		1, 2, 5, 10, 18, 20, 21	$1^1/_2$
W-8-M-6	8″	Core: clay or shale structural tile; No facings.	See Notes	45 min.		1		1, 2, 5, 10,19, 20, 21	$^3/_4$

(continued)

INTERNATIONAL CODE COUNCIL®
Copyright © 2019 ICC & NYSDOS. ALL RIGHTS RESERVED. Accessed by Lauren Gualdino (lgualdino@briarcliffmanor.org), (-) Order Number #100880972 on May 08, 2020 07:05 AM (PDT) pursuant to License Agreement with ICC & NYSDOS. No further reproduction, no

100880972

TABLE 1.1.4—continued
MASONRY WALLS
8″ TO LESS THAN 10″ THICK

ITEM CODE	THICKNESS	CONSTRUCTION DETAILS	PERFORMANCE		REFERENCE NUMBER			NOTES	REC. HOURS
			LOAD	TIME	PRE-BMS-92	BMS-92	POST-BMS-92		
W-8-M-7	8″	Core: clay or shale structural tile; No facings	See Notes	2 hrs.		1		1, 2, 5, 13, 18, 20, 21	2
W-8-M-8	8″	Core: clay or shale structural tile; No facings.	See Notes	1 hr. 45 min.		1		1, 2, 5, 13, 19, 20, 21	1 1/4
W-8-M-9	8″	Core: clay or shale structural tile; No facings.	See Notes	1 hr. 15 min.		1		1, 2, 6, 9, 18, 20, 21	1 3/4
W-8-M-10	8″	Core: clay or shale structural tile; No facings.	See Notes	45 min.		1		1, 2, 6, 9, 19, 20, 21	3/4
W-8-M-11	8″	Core: clay or shale structural tile; No facings.	See Notes	2 hrs.		1		1, 2, 6, 10, 18, 20, 21	2
W-8-M-12	8″	Core: clay or shale structural tile; No facings.	See Notes	45 min.		1		1, 2, 6, 10, 19, 20, 21	3/4
W-8-M-13	8″	Core: clay or shale structural tile; No facings.	See Notes	2 hrs. 30 min.		1		1, 3, 6, 12, 18, 20, 21	2 1/2
W-8-M-14	8″	Core: clay or shale structural tile; No facings.	See Notes	1 hr.		1		1, 2, 6, 12, 19, 20, 21	1
W-8-M-15	8″	Core: clay or shale structural tile; No facings.	See Notes	3 hrs.		1		1, 2, 6, 16, 18, 20, 21	3
W-8-M-16	8″	Core: clay or shale structural tile; No facings.	See Notes	1 hr. 15 min.		1		1, 2, 6, 16, 19, 20, 21	1 1/4
W-8-M-17	8″	Cored clay or shale brick; Units in wall thickness: 1; Cells in wall thickness: 1; Minimum % solids: 70; No facings.	See Notes	2 hrs. 30 min.		1		1, 44	2 1/2
W-8-M-18	8″	Cored clay or shale brick; Units in wall thickness: 2; Cells in wall thickness: 2; Minimum % solids: 87; No facings.	See Notes	5 hrs.		1		1, 45	5
W-8-M-19	8″	Core: solid clay or shale brick; No facings.	See Notes	5 hrs.		1		1, 22, 45	5
W-8-M-20	8″	Core: hollow rolok of clay or shale.	See Notes	2 hrs. 30 min.		1		1, 22, 45	2 1/2
W-8-M-21	8″	Core: hollow rolok bak of clay or shale; No facings.	See Notes	4 hrs.		1		1, 45	4
W-8-M-22	8″	Core: concrete brick; No facings.	See Notes	6 hrs.		1		1, 45	6
W-8-M-23	8″	Core: sand-lime brick; No facings.	See Notes	7 hrs.		1		1, 45	7
W-8-M-24	8″	Core: 4″, 40% solid clay or shale structural tile; 1 side 4″ brick facing.	See Notes	3 hrs. 30 min.		1		1, 20	3 1/2
W-8-M-25	8″	Concrete wall (3220 psi); Reinforcing vertical rods 1″ from each face and 1″ diameter; horizontal rods 5/8″ diameter.	22,200 lbs./ft.	6 hrs.			7		6
W-8-M-26	8″	Core: sand-line brick; 1/2″ of 1:3 sanded gypsum plaster facings on one side.	See Notes	9 hrs.		1		1, 45	9
W-8-M-27	8 1/2″	Core: sand-line brick; 1/2″ of 1:3 sanded gypsum plaster facings on one side.	See Notes	8 hrs.		1		1, 45	8
W-8-M-28	8 1/2″	Core: concrete; 1/2″ of 1:3 sanded gypsum plaster facings on one side.	See Notes	7 hrs.		1		1, 45	7

(continued)

INTERNATIONAL CODE COUNCIL®
Copyright © 2019 ICC & NYSDOS. ALL RIGHTS RESERVED. Accessed by Lauren Gualdino (lgualdino@briarcliffmanor.org), (-) Order Number #100880972 on May 08, 2020 07:05 AM (PDT) pursuant to License Agreement with ICC & NYSDOS. No further reproduction, no

100880972

TABLE 1.1.4—continued
MASONRY WALLS
8″ TO LESS THAN 10″ THICK

ITEM CODE	THICKNESS	CONSTRUCTION DETAILS	PERFORMANCE		REFERENCE NUMBER			NOTES	REC. HOURS
			LOAD	TIME	PRE-BMS-92	BMS-92	POST-BMS-92		
W-8-M-29	8 1/2″	Core: hollow rolok of clay or shale; 1/2″ of 1:3 sanded gypsum plaster facings on one side.	See Notes	3 hrs.		1		1, 45	3
W-8-M-30	8 1/2″	Core: solid clay or shale brick 1/2″ thick, 1:3 sanded gypsum plaster facings on one side.	See Notes	6 hrs.		1		1, 22, 45,	6
W-8-M-31	8 1/2″	Core: cored clay or shale brick; Units in wall thickness: 1; Cells in wall thickness: 1; Minimum % solids: 70; 1/2″ of 1:3 sanded gypsum plaster facings on both sides.	See Notes	4 hrs.		1		1, 44	4
W-8-M-32	8 1/2″	Core: cored clay or shale brick; Units in wall thickness: 2; Cells in wall thickness: 2; Minimum % solids: 87; 1/2″ of 1:3 sanded gypsum plaster facings on one side.	See Notes	6 hrs.		1		1, 45	6
W-8-M-33	8 1/2″	Core: hollow rolok bak of clay or shale; 1/2″ of 1:3 sanded gypsum plaster facings on one side.	See Notes	5 hrs.		1		1, 45	5
W-8-M-34	8 5/8″	Core: clay or shale structural tile; Units in wall thickness: 1; Cells in wall thickness: 2; Minimum % solids in units: 40; 5/8″ of 1:3 sanded gypsum plaster facings on one side.	See Notes	2 hrs.		1		1, 20 21	2
W-8-M-35	8 5/8″	Core: clay or shale structural tile; Units in wall thickness: 1; Cells in wall thickness: 2; Minimum % solids in units: 40; Exposed face: 5/8″ of 1:3 sanded gypsum plaster.	See Notes	1 hr. 30 min.		1		1, 20, 21	1 1/2
W-8-M-36	8 5/8″	Core: clay or shale structural tile; Units in wall thickness: 1; Cells in wall thickness: 2; Minimum % solids in units: 43; 5/8″ of 1:3 sanded gypsum plaster facings on one side.	See Notes	2 hrs.				1, 20,21	2
W-8-M-37	8 5/8″	Core: clay or shale structural tile; Units in wall thickness: 1; Cells in wall thickness: 2; Minimum % solids in units: 43; 5/8″ of 1:3 sanded gypsum plaster of the exposed face only.	See Notes	1 hr. 30 min.		1		1, 20, 21	1 1/2
W-8-M-38	8 5/8″	Core: clay or shale structural tile; Facings: side 1; see Note 17.	See Notes	2 hrs.		1		1, 2, 5, 10, 18, 20, 21	2
W-8-M-39	8 5/8″	Core: clay or shale structural tile; Facings: exposed side only; see Note 17.	See Notes	1 hr. 30 min.		1		1, 2, 5, 10, 19, 20, 21	1 1/2
W-8-M-40	8 5/8″	Core: clay or shale structural tile; Facings: exposed side only; see Note 17.	See Notes	3 hrs.		1		1, 2, 5, 13, 18, 20, 21	3
W-8-M-41	8 5/8″	Core: clay or shale structural tile; Facings: exposed side only; see Note 17.	See Notes	2 hrs.		1		1, 2, 5, 13, 19, 20, 21	2
W-8-M-42	8 5/8″	Core: clay or shale structural tile; Facings: side 1; see Note 17.	See Notes	2 hrs. 30 min.		1		1, 2, 9, 18, 20, 21	2 1/2
W-8-M-43	8 5/8″	Core: clay or shale structural tile; Facings: exposed side only; see Note 17.	See Notes	1 hr. 30 min.		1		1, 2, 6, 9, 19, 20, 21	1 1/2

(continued)

INTERNATIONAL CODE COUNCIL®
Copyright © 2019 ICC & NYSDOS. ALL RIGHTS RESERVED. Accessed by Lauren Gualdino (lgualdino@briarcliffmanor.org), (-) Order Number #100880972 on May 08, 2020 07:05 AM (PDT) pursuant to License Agreement with ICC & NYSDOS. No further reproduction, no

100880972

TABLE 1.1.4—continued
MASONRY WALLS
8″ TO LESS THAN 10″ THICK

ITEM CODE	THICKNESS	CONSTRUCTION DETAILS	PERFORMANCE		REFERENCE NUMBER			NOTES	REC. HOURS
			LOAD	TIME	PRE-BMS-92	BMS-92	POST-BMS-92		
W-8-M-44	$8^{5}/_{8}$″	Core: clay or shale structural tile; Facings: side 1, see Note 17; side 2, none.	See Notes	3 hrs.		1		1, 2, 10, 18, 20, 21	3
W-8-M-45	$8^{5}/_{8}$″	Core: clay or shale structural tile; Facings: fire side only; see Note 17.	See Notes	1 hr. 30 min.		1		1, 2, 6, 10, 19, 20, 21	$1^{1}/_{2}$
W-8-M-46	$8^{5}/_{8}$″	Core: clay or shale structural tile; Facings: side 1, see Note 17; side 2, none.	See Notes	3 hrs. 30 min.		1		1, 2, 6, 12, 18, 20, 21	$3^{1}/_{2}$
W-8-M-47	$8^{5}/_{8}$″	Core: clay or shale structural tile; Facings: exposed side only; see Note 17.	See Notes	1 hr. 45 min.		1		1, 2, 6, 12, 19, 20, 21	$1^{3}/_{4}$
W-8-M-48	$8^{5}/_{8}$″	Core: clay or shale structural tile; Facings: side 1, see Note 17; side 2, none.	See Notes	4 hrs.		1		1, 2, 6, 16, 18, 20, 21	4
W-8-M-49	$8^{5}/_{8}$″	Core: clay or shale structural tile; Facings: fire side only; see Note 17.	See Notes	2 hrs.		1		1, 2, 6, 16, 19, 20, 21	2
W-8-M-50	$8^{5}/_{8}$″	Core: 4″, 40% solid clay or shale clay structural tile; 4″ brick plus $^{5}/_{8}$″ of 1:3 sanded gypsum plaster facings on one side.	See Notes	4 hrs.		1		1, 20	4
W-8-M-51	$8^{3}/_{4}$″	$8^{3}/_{4}$″ × $2^{1}/_{2}$″ and 4″ × $2^{1}/_{2}$″ cellular fletton (1873 psi) single and triple cell hollow brick set in $^{1}/_{2}$″ sand mortar in alternate courses.	3.6 tons/ft.	6 hrs.			7	23, 29	6
W-8-M-52	$8^{3}/_{4}$″	$8^{3}/_{4}$″ thick cement brick (2527 psi) with P.C. and sand mortar.	3.6 tons/ft.	6 hrs.			7	23, 24	6
W-8-M-53	$8^{3}/_{4}$″	$8^{3}/_{4}$″ × $2^{1}/_{2}$″ fletton brick (1831 psi) in $^{1}/_{2}$″ sand mortar.	3.6 tons/ft.	6 hrs.			7	23, 24	6
W-8-M-54	$8^{3}/_{4}$″	$8^{3}/_{4}$″ × $2^{1}/_{2}$″ London stock brick (683 psi) in $^{1}/_{2}$″ P.C. - sand mortar.	7.2 tons/ft.	6 hrs.			7	23, 24	6
W-9-M-55	9″	9″ × $2^{1}/_{2}$″ Leicester red wire-cut brick (4465 psi) in $^{1}/_{2}$″ P.C. - sand mortar.	6.0 tons/ft.	6 hrs.			7	23, 24	6
W-9-M-56	9″	9″ × 3″ sand-lime brick (2603 psi) in $^{1}/_{2}$″ P.C. - sand mortar.	3.6 tons/ft.	6 hrs.			7	23, 24	6
W-9-M-57	9″	2 layers $2^{7}/_{8}$″ fletton brick (1910 psi) with $3^{1}/_{4}$″ air space; Cement and sand mortar.	1.5 tons/ft.	32 min.			7	23, 25	$^{1}/_{3}$
W-9-M-58	9″	9″ × 3″ stairfoot brick (7527 psi) in $^{1}/_{2}$″ sand-cement mortar.	7.2 tons/ft.	6 hrs.			7	23, 24	6
W-9-M-59	9″	Core: solid clay or shale brick; $^{1}/_{2}$″ thick; 1:3 sanded gypsum plaster facings on both sides.	See Notes	7 hrs.		1		1, 22, 45	7
W-9-M-60	9″	Core: concrete brick; $^{1}/_{2}$″ of 1:3 sanded gypsum plaster facings on both sides.	See Notes	8 hrs.		1		1, 45	8
W-9-M-61	9″	Core: hollow rolok of clay or shale; $^{1}/_{2}$″ of 1:3 sanded gypsum plaster facings on both sides.	See Notes	4 hrs.		1		1, 45	4
W-9-M-62	9″	Cored clay or shale brick; Units in wall thickness: 1; Cells in wall thickness: 1; Minimum % solids: 70; $^{1}/_{2}$″ of 1:3 sanded gypsum plaster facings on one side.	See Notes	3 hrs.		1		1, 44	3

(continued)

INTERNATIONAL CODE COUNCIL®
Copyright © 2019 ICC & NYSDOS. ALL RIGHTS RESERVED. Accessed by Lauren Gualdino (lgualdino@briarcliffmanor.org), (-) Order Number #100880972 on May 08, 2020 07:05 AM (PDT) pursuant to License Agreement with ICC & NYSDOS. No further reproduction, no

100880972

TABLE 1.1.4—continued
MASONRY WALLS
8″ TO LESS THAN 10″ THICK

ITEM CODE	THICKNESS	CONSTRUCTION DETAILS	PERFORMANCE		REFERENCE NUMBER			NOTES	REC. HOURS
			LOAD	TIME	PRE-BMS-92	BMS-92	POST-BMS-92		
W-9-M-63	9″	Cored clay or shale brick; Units in wall thickness: 2; Cells in wall thickness: 2; Minimum % solids: 87; 1/2″ of 1:3 sanded gypsum plaster facings on both sides.	See Notes	7 hrs.		1		1, 45	7
W-9-M-64	9-10″	Core: cavity wall of clay or shale brick; No facings.	See Notes	5 hrs.		1		1, 45	5
W-9-M-65	9-10″	Core: cavity construction of clay or shale brick; 1/2″ of 1:3 sanded gypsum plaster facings on one side.	See Notes	6 hrs.		1		1, 45	6
W-9-M-66	9-10″	Core: cavity construction of clay or shale brick; 1/2″ of 1:3 sanded gypsum plaster facings on both sides.	See Notes	7 hrs.		1		1, 45	7
W-9-M-67	9 1/4″	Core: clay or shale structural tile; Units in wall thickness: 1; Cells in wall thickness: 2; Minimum % solids in units: 40; 5/8″ of 1:3 sanded gypsum plaster facings on both sides.	See Notes	3 hrs.		1		1, 20, 21	3
W-9-M-68	9 1/4″	Core: clay or shale structural tile; Units in wall thickness: 1; Cells in wall thickness: 2; Minimum % solids in units: 43; 5/8″ of 1:3 sanded gypsum plaster facings on both sides.	See Notes	3 hrs.		1		1, 20, 21	3
W-9-M-69	9 1/4″	Core: clay or shale structural tile; Facings: sides 1 and 2; see Note 17.	See Notes	3 hrs.		1		1, 2, 5, 10, 18, 20, 21	3
W-9-M-70	9 1/4″	Core: clay or shale structural tile; Facings: sides 1 and 2; see Note 17.	See Notes	4 hrs.		1		1, 2, 5, 13, 18, 20, 21	4
W-9-M-71	9 1/4″	Core: clay or shale structural tile; Facings: sides 1 and 2; see Note 17.	See Notes	3 hrs. 30 min.		1		1, 2, 6, 9, 18, 20, 21	3 1/2
W-9-M-72	9 1/4″	Core: clay or shale structural tile; Facings: sides 1 and 2; see Note 17.	See Notes	4 hrs.		1		1, 2, 6, 10, 18, 20, 21	4
W-9-M-73	9 1/4″	Core: clay or shale structural tile; Facings: sides 1 and 2; see Note 17.	See Notes	4 hrs.		1		1, 2, 6, 12, 18, 20, 21	4
W-9-M-74	9 1/4″	Core: clay or shale structural tile; Facings: sides 1 and 2; see Note 17.	See Notes	5 hrs.		1		1, 2, 6 16, 18, 20, 21	5
W-9-M-75	8″	Cored concrete masonry; see Notes 2, 19, 26, 34, 40; No facings.	80 psi	1 hr. 30 min.		1		1, 20	1 1/2
W-8-M-76	8″	Cored concrete masonry; see Notes 2, 18, 26, 34, 40; No facings	80 psi	4 hrs.		1		1, 20	4
W-8-M-77	8″	Cored concrete masonry; see Notes 2, 19, 26, 31, 40; No facings.	80 psi	1 hr. 15 min.		1		1, 20	1 1/4
W-8-M-78	8″	Cored concrete masonry; see Notes 2, 18, 26, 31, 40; No facings.	80 psi	3 hrs.		1		1, 20	3
W-8-M-79	8″	Cored concrete masonry; see Notes 2, 19, 26, 36, 42; No facings.	80 psi	1 hr. 30 min.		1		1, 20	1 1/2

(continued)

INTERNATIONAL CODE COUNCIL®
Copyright © 2019 ICC & NYSDOS. ALL RIGHTS RESERVED. Accessed by Lauren Gualdino (lgualdino@briarcliffmanor.org), (-) Order Number #100880972 on May 08, 2020 07:05 AM (PDT) pursuant to License Agreement with ICC & NYSDOS. No further reproduction, no

100880972

TABLE 1.1.4—continued
MASONRY WALLS
8″ TO LESS THAN 10″ THICK

ITEM CODE	THICKNESS	CONSTRUCTION DETAILS	PERFORMANCE		REFERENCE NUMBER			NOTES	REC. HOURS
			LOAD	TIME	PRE-BMS-92	BMS-92	POST-BMS-92		
W-8-M-80	8″	Cored concrete masonry; see Notes 2, 18, 26, 36, 41; No facings.	80 psi	3 hrs.		1		1, 20	3
W-8-M-81	8″	Cored concrete masonry; see Notes 2, 19, 26, 34, 41; No facings.	80 psi	1 hr.		1		1, 20	1
W-8-M-82	8″	Cored concrete masonry; see Notes 2, 18, 26, 34, 41; No facings.	80 psi	2 hrs. 30 min.		1		1, 20	2 1/2
W-8-M-83	8″	Cored concrete masonry; see Notes 2, 19, 26, 29, 41; No facings.	80 psi	45 min.		1		1, 20	3/4
W-8-M-84	8″	Cored concrete masonry; see Notes 2, 18, 26, 29, 41; No facings.	80 psi	2 hrs.		1		1, 20	2
W-8-M-85	8 1/2″	Cored concrete masonry; see Notes 3, 18, 26, 34, 41; Facings: 2 1/4″ brick.	80 psi	4 hrs.		1		1, 20	4
W-8-M-86	8″	Cored concrete masonry; see Notes 3, 18, 26, 34, 41; Facings: 3 3/4″ brick face.	80 psi	5 hrs.		1		1, 20	5
W-8-M-87	8″	Cored concrete masonry; see Notes 2, 19, 26, 30, 43; No facings.	80 psi	12 min.		1		1, 20	1/5
W-8-M-88	8″	Cored concrete masonry; see Notes 2, 18, 26, 30, 43; No facings.	80 psi	12 min.		1		1, 20	1/5
W-8-M-89	8 1/2″	Cored concrete masonry; see Notes 2, 19, 26, 34, 40; Facings: fire side only; see Note 38.	80 psi	2 hrs.		1		1, 20	2
W-8-M-90	8 1/2″	Cored concrete masonry; see Notes 2, 18, 26, 34, 40; Facings: side 1; see Note 38.	80 psi	5 hrs.		1		1, 20	5
W-8-M-91	8 1/2″	Cored concrete masonry; see Notes 2, 19, 26, 31, 40; Facings: fire side only; see Note 38.	80 psi	1 hr. 45 min.		1		1, 20	1 3/4
W-8-M-92	8 1/2″	Cored concrete masonry; see Notes 2, 18, 26, 31, 40; Facings: one side; see Note 38.	80 psi	4 hrs.		1		1, 20	4
W-8-M-93	8 1/2″	Cored concrete masonry; see Notes 2, 19, 26, 36, 41; Facings: fire side only; see Note 38.	80 psi	2 hrs.		1		1, 20	2
W-8-M-94	8 1/2″	Cored concrete masonry; see Notes 2, 18, 26, 36, 41; Facings: fire side only; see Note 38.	80 psi	4 hrs.		1		1, 20	4
W-8-M-95	8 1/2″	Cored concrete masonry; see Notes 2, 19, 26, 34, 41; Facings: fire side only; see Note 38.	80 psi	1 hr. 30 min.		1		1, 20	1 1/2
W-8-M-96	8 1/2″	Cored concrete masonry; see Notes 2, 18, 26, 34, 41; Facings: one side; see Note 38.	80 psi	3 hrs.				1, 20	3
W-8-M-97	8 1/2″	Cored concrete masonry; see Notes 2, 19, 26, 29, 41; Facings: fire side only; see Note 38.	80 psi	1 hr. 30 min.		1		1, 20	1 1/2
W-8-M-98	8 1/2″	Cored concrete masonry; see Notes 2, 18, 26, 29, 41; Facings: one side; see Note 38.	80 psi	2 hrs. 30 min.		1		1, 20	2 1/2
W-8-M-99	8 1/2″	Cored concrete masonry; see Notes 3, 19, 23, 27, 41; No facings.	80 psi	1 hr. 15 min.		1		1, 20	1 1/4

(continued)

INTERNATIONAL CODE COUNCIL®
Copyright © 2019 ICC & NYSDOS. ALL RIGHTS RESERVED. Accessed by Lauren Gualdino (lgualdino@briarcliffmanor.org), (-) Order Number #100880972 on May 08, 2020 07:05 AM (PDT) pursuant to License Agreement with ICC & NYSDOS. No further reproduction, no

100880972

TABLE 1.1.4—continued
MASONRY WALLS
8″ TO LESS THAN 10″ THICK

ITEM CODE	THICKNESS	CONSTRUCTION DETAILS	PERFORMANCE		REFERENCE NUMBER			NOTES	REC. HOURS
			LOAD	TIME	PRE-BMS-92	BMS-92	POST-BMS-92		
W-8-M-100	$8^1/_2$″	Cored concrete masonry; see Notes 3, 18, 23, 27, 41; No facings.	80 psi	3 hrs. 30 min.		1		1, 20	$3^1/_2$
W-8-M-101	$8^1/_2$″	Cored concrete masonry; see Notes 3, 18, 26, 34, 41; Facings: $3^3/_4$″ brick face; one side only; see Note 38.	80 psi	6 hrs.		1		1, 20	6
W-8-M-102	$8^1/_2$″	Cored concrete masonry; see Notes 2, 19, 26, 30, 43; Facings: fire side only; see Note 38.	80 psi	30 min.		1		1, 20	$^1/_2$
W-8-M-103	$8^1/_2$″	Cored concrete masonry; see Notes 2, 18, 26, 30, 43; Facings: one side only; see Note 38.	80 psi	12 min.		1		1, 20	$^1/_5$
W-8-M-104	9″	Cored concrete masonry; see Notes 2, 18, 26, 34, 40; Facings: both sides; see Note 38.	80 psi	6 hrs.		1		1, 20	6
W-8-M-105	9″	Cored concrete masonry; see Notes 2, 18, 26, 31, 40; Facings: both sides; see Note 38.	80 psi	5 hrs.		1		1, 20	5
W-8-M-106	9″	Cored concrete masonry; see Notes 2, 18, 26, 36, 41; Facings: both sides of wall; see Note 38.	80 psi	5 hrs.		1		1, 20	5
W-8-M-107	9″	Cored concrete masonry; see Notes 2, 18, 26, 34, 41; Facings: both sides; see Note 38.	80 psi	4 hrs.		1		1, 20	4
W-8-M-108	9″	Cored concrete masonry; see Notes 2, 18, 26, 29, 41; Facings: both sides; see Note 38.	80 psi	3 hrs. 30 min.		1		1, 20	$3^1/_2$
W-8-M-109	9″	Cored concrete masonry; see Notes 3, 19, 23, 27, 40; Facings: fire side only; see Note 38.	80 psi	1 hr. 45 min.		1		1, 20	$1^3/_4$
W-8-M-110	9″	Cored concrete masonry; see Notes 3, 18, 23, 27, 41; Facings: one side only; see Note 38.	80 psi	4 hrs.		1		1, 20	4
W-8-M-111	9″	Cored concrete masonry; see Notes 3, 18, 26, 34, 41; $2^1/_4$″ brick face on one side only; see Note 38.	80 psi	5 hrs.		1		1, 20	5
W-8-M-112	9″	Cored concrete masonry; see Notes 2, 18, 26, 30, 43; Facings: both sides; see Note 38.	80 psi	30 min.		1		1, 20	$^1/_2$
W-9-M-113	$9^1/_2$″	Cored concrete masonry; see Notes 3, 18, 23, 27, 41; Facings: both sides; see Note 38.	80 psi	5 hrs.		1		1, 20	5
W-8-M-114	8″		200 psi	5 hrs.			43	22	5

For SI: 1 inch = 25.4 mm, 1 pound per square inch = 0.00689 MPa.

Notes:

1. Tested at NBS under ASA Spec. No. 43-1934 (ASTM C19-53).
2. One unit in wall thickness.
3. Two units in wall thickness.
4. Two or three units in wall thickness.
5. Two cells in wall thickness.
6. Three or four cells in wall thickness.
7. Four or five cells in wall thickness.
8. Five or six cells in wall thickness.
9. Minimum percent of solid materials in units = 40%.
10. Minimum percent of solid materials in units = 43%.
11. Minimum percent of solid materials in units = 46%.
12. Minimum percent of solid materials in units = 48%.
13. Minimum percent of solid materials in units = 49%.
14. Minimum percent of solid materials in units = 45%.
15. Minimum percent of solid materials in units = 51%.
16. Minimum percent of solid materials in units = 53%.
17. Not less than $^5/_8$ inch thickness of 1:3 sanded gypsum plaster.
18. Noncombustible or no members framed into wall.

(continued)

INTERNATIONAL CODE COUNCIL®
Copyright © 2019 ICC & NYSDOS. ALL RIGHTS RESERVED. Accessed by Lauren Gualdino (lgualdino@briarcliffmanor.org), (-) Order Number #100880972 on May 08, 2020 07:05 AM (PDT) pursuant to License Agreement with ICC & NYSDOS. No further reproduction, no

100880972

TABLE 1.1.4—continued
MASONRY WALLS
8″ TO LESS THAN 10″ THICK

19. Combustible members framed into wall.
20. Load: 80 psi for gross cross-sectional area of wall.
21. Portland cement-lime mortar.
22. Failure mode thermal.
23. British test.
24. Passed all criteria.
25. Failed by sudden collapse with no preceding signs of impending failure.
26. One cell in wall thickness.
27. Two cells in wall thickness.
28. Three cells in wall thickness.
29. Minimum percent of solid material in concrete units = 52.
30. Minimum percent of solid material in concrete units = 54.
31. Minimum percent of solid material in concrete units = 55.
32. Minimum percent of solid material in concrete units = 57.
33. Minimum percent of solid material in concrete units = 60.
34. Minimum percent of solid material in concrete units = 62.
35. Minimum percent of solid material in concrete units = 65.
36. Minimum percent of solid material in concrete units = 70.
37. Minimum percent of solid material in concrete units = 76.
38. Not less than $^{1}/_{2}$ inch of 1:3 sanded gypsum plaster.
39. Three units in wall thickness.
40. Concrete units made with expanded slag or pumice aggregates.
41. Concrete units made with expanded burned clay or shale, crushed limestone, air cooled slag or cinders.
42. Concrete units made with calcareous sand and gravel. Coarse aggregate, 60 percent or more calcite and dolomite.
43. Concrete units made with siliceous sand and gravel. Ninety percent or more quartz, chert and dolomite.
44. Load: 120 psi for gross cross-sectional area of wall.
45. Load: 160 psi for gross cross-sectional area of wall.

INTERNATIONAL CODE COUNCIL®
Copyright © 2019 ICC & NYSDOS. ALL RIGHTS RESERVED. Accessed by Lauren Gualdino (lgualdino@briarcliffmanor.org), (-) Order Number #100880972 on May 08, 2020 07:05 AM (PDT) pursuant to License Agreement with ICC & NYSDOS. No further reproduction, no

100880972

FIGURE 1.1.5
MASONRY WALLS
10″ TO LESS THAN 12″ THICK

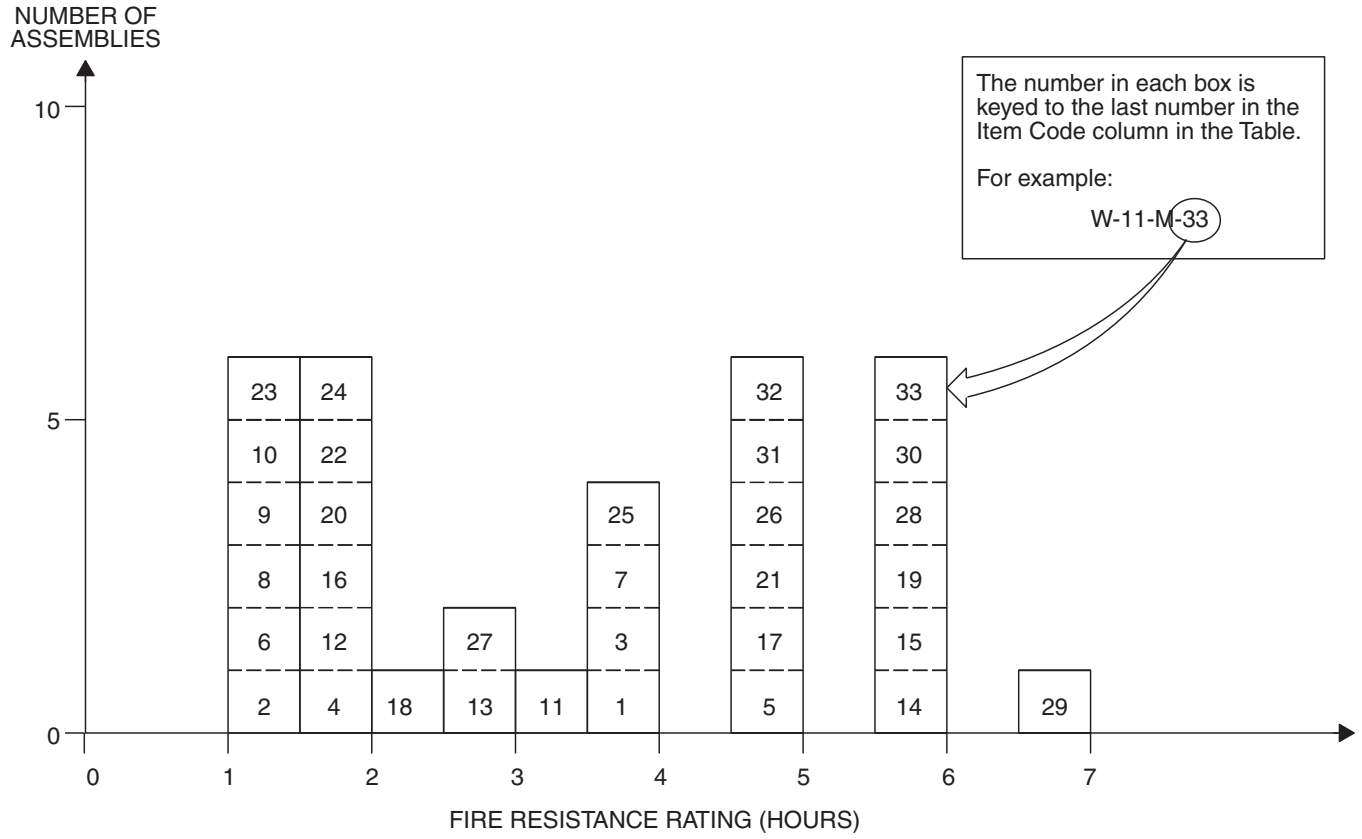

TABLE 1.1.5
MASONRY WALLS
10″ TO LESS THAN 12″ THICK

ITEM CODE	THICKNESS	CONSTRUCTION DETAILS	PERFORMANCE		REFERENCE NUMBER			NOTES	REC. HOURS
			LOAD	TIME	PRE-BMS-92	BMS-92	POST-BMS-92		
W-10-M-1	10″	Core: two $3^{3}/_{4}$″, 40% solid clay or shale structural tiles with 2″ air space between; Facings: $^{3}/_{4}$″ Portland cement plaster on stucco on both sides.	80 psi	4 hrs.		1		1, 20	4
W-10-M-2	10″	Core: cored concrete masonry, 2″ air cavity; see Notes 3, 19, 27, 34, 40; No facings.	80 psi	1 hr. 30 min.		1		1, 20	$1^{1}/_{2}$
W-10-M-3	10″	Cored concrete masonry; see Notes 3, 18, 27, 34, 40; No facings.	80 psi	4 hrs.		1		1, 20	4
W-10-M-4	10″	Cored concrete masonry; see Notes 2, 19, 26, 34, 40; No facings.	80 psi	2 hrs.		1		1, 20	2
W-10-M-5	10″	Cored concrete masonry; see Notes 2, 18, 26, 33, 40; No facings.	80 psi	5 hrs.		1		1, 20	5
W-10-M-6	10″	Cored concrete masonry; see Notes 2, 19, 26, 33, 41; No facings.	80 psi	1 hr. 30 min.		1		1, 20	$1^{1}/_{2}$
W-10-M-7	10″	Cored concrete masonry; see Notes 2, 18, 26, 33, 41; No facings.	80 psi	4 hrs.		1		1, 20	4
W-10-M-8	10″	Cored concrete masonry (cavity type 2″ air space); see Notes 3, 19, 27, 34, 42; No facings.	80 psi	1 hr. 15 min.		1		1, 20	$1^{1}/_{4}$

(continued)

INTERNATIONAL CODE COUNCIL®
Copyright © 2019 ICC & NYSDOS. ALL RIGHTS RESERVED. Accessed by Lauren Gualdino (lgualdino@briarcliffmanor.org), (-) Order Number #100880972 on May 08, 2020 07:05 AM (PDT) pursuant to License Agreement with ICC & NYSDOS. No further reproduction, no

100880972

TABLE 1.1.5—continued
MASONRY WALLS
10″ TO LESS THAN 12″ THICK

ITEM CODE	THICKNESS	CONSTRUCTION DETAILS	PERFORMANCE		REFERENCE NUMBER			NOTES	REC. HOURS
			LOAD	TIME	PRE-BMS-92	BMS-92	POST-BMS-92		
W-10-M-9	10″	Cored concrete masonry (cavity type 2″ air space); see Notes 3, 18, 27, 34, 42; No facings.	80 psi	1 hr. 15 min.		1		1, 20	1 1/4
W-10-M-10	10″	Cored concrete masonry (cavity type 2″ air space); see Notes 3, 19, 27, 34, 41; No facings.	80 psi	1 hr. 15 min.		1		1, 20	1 1/4
W-10-M-11	10″	Cored concrete masonry (cavity type 2″ air space); see Notes 3, 18, 27, 34, 41; No facings.	80 psi	3 hrs. 30 min.		1		1, 20	3 1/2
W-10-M-12	10″	9″ thick concrete block (11 3/4″ × 9″ × 4 1/4″) with two 2″ thick voids included; 3/8″ P.C. plaster 1/8″ neat gypsum.	N/A	1 hr. 53 min.			7	23, 44	1 3/4
W-10-M-13	10″	Holly clay tile block wall - 8 1/2″ block with two 3″ voids in each 8 1/2″ section; 3/4″ gypsum plaster - each face.	N/A	2 hrs. 42 min.			7	23, 25	2 1/2
W-10-M-14	10″	Two layers 4 1/4″ brick with 1 1/2″ air space; No ties sand cement mortar. (Fletton brick - 1910 psi).	N/A	6 hrs.			7	23, 24	6
W-10-M-15	10″	Two layers 4 1/4″ thick Fletton brick (1910 psi); 1 1/2″ air space; Ties: 18″ o.c. vertical; 3′ o.c. horizontal.	N/A	6 hrs.			7	23, 24	6
W-10-M-16	10 1/2″	Cored concrete masonry; 2″ air cavity; see Notes 3, 19, 27, 34, 40; Facings: fire side only; see Note 38.	80 psi	2 hrs.		1		1, 20	2
W-10-M-17	10 1/2″	Cored concrete masonry; see Notes 3, 18, 27, 34, 40; Facings: side 1 only; see Note 38.	80 psi	5 hrs.		1		1, 20	5
W-10-M-18	10 1/2″	Cored concrete masonry; see Notes 2, 19, 26, 33, 40; Facings: fire side only; see Note 38.	80 psi	2 hrs. 30 min.		1		1, 20	2 1/2
W-10-M-19	10 1/2″	Cored concrete masonry; see Notes 2, 18, 26, 33, 40; Facings: one side; see Note 38.	80 psi	6 hrs.		1		1, 20	6
W-10-M-20	10 1/2″	Cored concrete masonry; see Notes 2, 19, 26, 33, 41; Facings: fire side of wall only; see Note 38.	80 psi	2 hrs.		1		1, 20	2
W-10-M-21	10 1/2″	Cored concrete masonry; see Notes 2, 18, 26, 33, 41; Facings: one side only; see Note 38.	80 psi	5 hrs.		1		1, 20	5
W-10-M-22	10 1/2″	Cored concrete masonry (cavity type 2″ air space); see Notes 3,19, 27, 34, 42; Facings: fire side only; see Note 38.	80 psi	1 hr. 45 min.		1		1, 20	1 3/4
W-10-M-23	10 1/2″	Cored concrete masonry (cavity type 2″ air space); see Notes 3, 18, 27, 34, 42; Facings: one side only; see Note 38.	80 psi	1 hr. 15 min.		1		1, 20	1 1/4
W-10-M-24	10 1/2″	Cored concrete masonry (cavity type 2″ air space); see Notes 3, 19, 27, 34, 41; Facings: fire side only; see Note 38.	80 psi	2 hrs.		1		1, 20	2
W-10-M-25	10 1/2″	Cored concrete masonry (cavity type 2″ air space); see Notes 3, 18, 27, 34, 41; Facings: one side only; see Note 38.	80 psi	4 hrs.		1		1, 20	4
W-10-M-26	10 5/8″	Core: 8″, 40% solid tile plus 2″ furring tile; 5/8″ sanded gypsum plaster between tile types; Facings: both sides 3/4″ Portland cement plaster or stucco.	80 psi	5 hrs.		1		1, 20	5

(continued)

INTERNATIONAL CODE COUNCIL®
Copyright © 2019 ICC & NYSDOS. ALL RIGHTS RESERVED. Accessed by Lauren Gualdino (lgualdino@briarcliffmanor.org), (-) Order Number #100880972 on May 08, 2020 07:05 AM (PDT) pursuant to License Agreement with ICC & NYSDOS. No further reproduction, no

100880972

TABLE 1.1.5—continued
MASONRY WALLS
10″ TO LESS THAN 12″ THICK

ITEM CODE	THICKNESS	CONSTRUCTION DETAILS	PERFORMANCE		REFERENCE NUMBER			NOTES	REC. HOURS
			LOAD	TIME	PRE-BMS-92	BMS-92	POST-BMS-92		
W-10-M-27	$10^{5}/_{8}$″	Core: 8″, 40% solid tile plus 2″ furring tile; $^{5}/_{8}$″ sanded gypsum plaster between tile types; Facings: one side $^{3}/_{4}$″ Portland cement plaster or stucco.	80 psi	3 hrs. 30 min.		1		1, 20	$3^{1}/_{2}$
W-11-M-28	11″	Cored concrete masonry; see Notes 3, 18, 27, 34, 40; Facings: both sides; see Note 38.	80 psi	6 hrs.		1		1, 20	6
W-11-M-29	11″	Cored concrete masonry; see Notes 2, 18, 26, 33, 40; Facings: both sides; see Note 38.	80 psi	7 hrs.		1		1, 20	7
W-11-M-30	11″	Cored concrete masonry; see Notes 2, 18, 26, 33, 41; Facings: both sides of wall; see Note 38.	80 psi	6 hrs.		1		1, 20	6
W-11-M-31	11″	Cored concrete masonry (cavity type 2″ air space); see Notes 3, 18, 27, 34, 42; Facings: both sides; see Note 38.	80 psi	5 hrs.		1		1, 20	5
W-11-M-32	11″	Cored concrete masonry (cavity type 2″ air space); see Notes 3, 18, 27, 34, 41; Facings: both sides; see Note 38.	80 psi	5 hrs.		1		1, 20	5
W-11-M-33	11″	Two layers brick ($4^{1}/_{2}$″ Fletton, 2,428 psi) 2″ air space; galvanized ties; 18″ o.c. - horizontal; 3′ o.c. - vertical.	3 tons/ft.	6 hrs.			7	23, 24	6

For SI: 1 inch = 25.4 mm, 1 pound per square inch = 0.00689 MPa.

Notes:

1. Tested at NBS - ASA Spec. No. A2-1934.
2. One unit in wall thickness.
3. Two units in wall thickness.
4. Two or three units in wall thickness.
5. Two cells in wall thickness.
6. Three or four cells in wall thickness.
7. Four or five cells in wall thickness.
8. Five or six cells in wall thickness.
9. Minimum percent of solid materials in units = 40%.
10. Minimum percent of solid materials in units = 43%.
11. Minimum percent of solid materials in units = 46%.
12. Minimum percent of solid materials in units = 48%.
13. Minimum percent of solid materials in units = 49%.
14. Minimum percent of solid materials in units = 45%.
15. Minimum percent of solid materials in units = 51%.
16. Minimum percent of solid materials in units = 53%.
17. Not less than $^{5}/_{8}$ inch thickness of 1:3 sanded gypsum plaster.
18. Noncombustible or no members framed into wall.
19. Combustible members framed into wall.
20. Load: 80 psi for gross cross sectional area of wall.
21. Portland cement-lime mortar.
22. Failure mode—thermal.
23. British test.
24. Passed all criteria.
25. Failed by sudden collapse with no preceding signs of impending failure.
26. One cell in wall thickness.
27. Two cells in wall thickness.
28. Three cells in wall thickness.
29. Minimum percent of solid material in concrete units = 52%.
30. Minimum percent of solid material in concrete units = 54%.
31. Minimum percent of solid material in concrete units = 55%.
32. Minimum percent of solid material in concrete units = 57%.
33. Minimum percent of solid material in concrete units = 60%.
34. Minimum percent of solid material in concrete units = 62%.
35. Minimum percent of solid material in concrete units = 65%.

(continued)

INTERNATIONAL CODE COUNCIL®
Copyright © 2019 ICC & NYSDOS. ALL RIGHTS RESERVED. Accessed by Lauren Gualdino (lgualdino@briarcliffmanor.org), (-) Order Number #100880972 on May 08, 2020 07:05 AM (PDT) pursuant to License Agreement with ICC & NYSDOS. No further reproduction, no

100880972

TABLE 1.1.5—continued
MASONRY WALLS
10″ TO LESS THAN 12″ THICK

36. Minimum percent of solid material in concrete units = 70%.
37. Minimum percent of solid material in concrete units = 76%.
38. Not less than $^{1}/_{2}$ inch of 1:3 sanded gypsum plaster.
39. Three units in wall thickness.
40. Concrete units made with expanded slag or pumice aggregates.
41. Concrete units made with expanded burned clay or shale, crushed limestone, air cooled slag or cinders.
42. Concrete units made with calcareous sand and gravel. Coarse aggregate, 60 percent or more calcite and dolomite.

INTERNATIONAL CODE COUNCIL®
Copyright © 2019 ICC & NYSDOS. ALL RIGHTS RESERVED. Accessed by Lauren Gualdino (lgualdino@briarcliffmanor.org), (-) Order Number #100880972 on May 08, 2020 07:05 AM (PDT) pursuant to License Agreement with ICC & NYSDOS. No further reproduction, no

100880972

FIGURE 1.1.6
MASONRY WALLS
12″ TO LESS THAN 14″ THICK

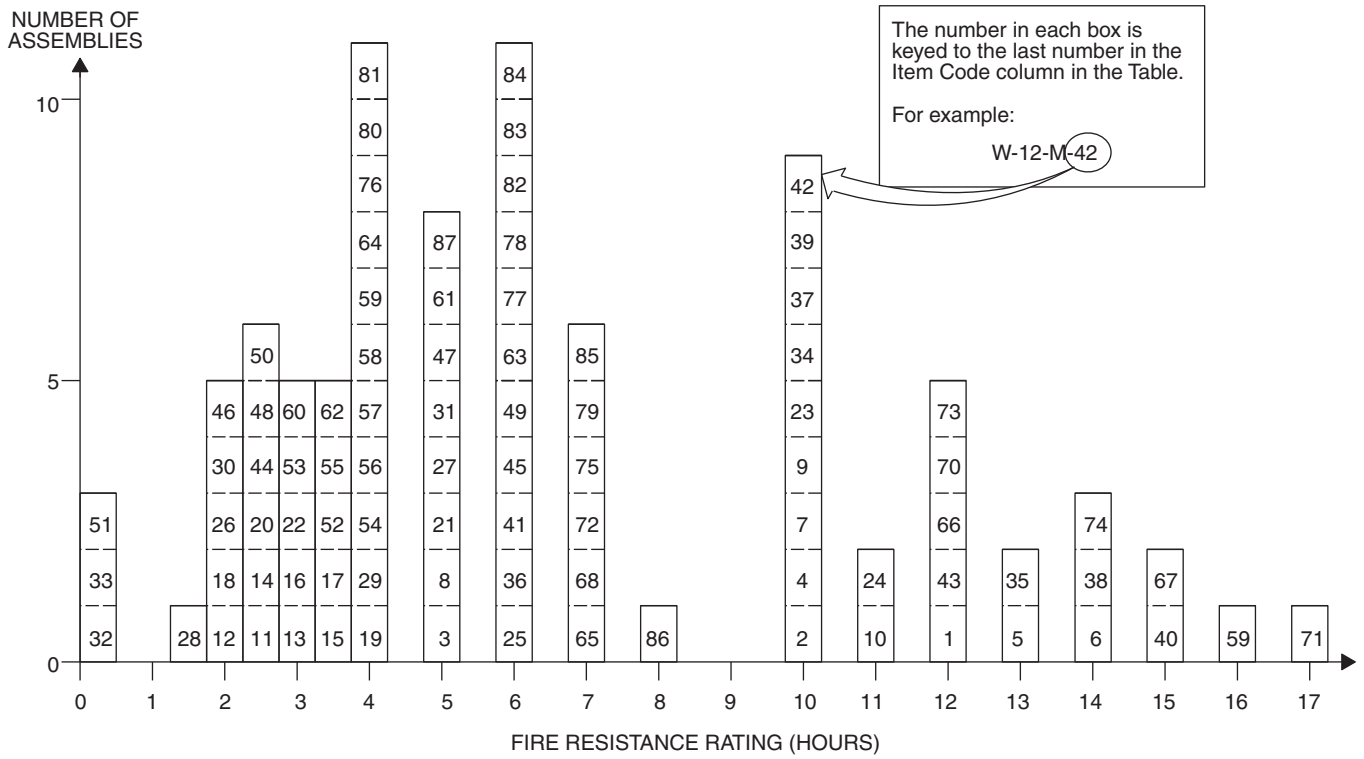

TABLE 1.1.6
MASONRY WALLS
12″ TO LESS THAN 14″ THICK

ITEM CODE	THICKNESS	CONSTRUCTION DETAILS	PERFORMANCE		REFERENCE NUMBER			NOTES	REC. HOURS
			LOAD	TIME	PRE-BMS-92	BMS-92	POST-BMS-92		
W-12-M-1	12″	Core: solid clay or shale brick; No facings.	N/A	12 hrs.		1		1	12
W-12-M-2	12″	Core: solid clay or shale brick; No facings.	160 psi	10 hrs.		1		1, 44	10
W-12-M-3	12″	Core: hollow rolok of clay or shale; No facings.	160 psi	5 hrs.		1		1, 44	5
W-12-M-4	12″	Core: hollow rolok bak of clay or shale; No facings.	160 psi	10 hrs.		1		1, 44	10
W-12-M-5	12″	Core: concrete brick; No facings.	160 psi	13 hrs.		1		1, 44	13
W-12-M-6	12″	Core: sand-lime brick; No facings.	N/A	14 hrs.		1		1	14
W-12-M-7	12″	Core: sand-lime brick; No facings.	160 psi	10 hrs.		1		1, 44	10
W-12-M-8	12″	Cored clay or shale brick; Units in wall thickness: 1; Cells in wall thickness: 2; Minimum % solids: 70; No facings.	120 psi	5 hrs.		1		1, 45	5
W-12-M-9	12″	Cored clay or shale brick; Units in wall thickness: 3; Cells in wall thickness: 3; Minimum % solids: 87; No facings.	160 psi	10 hrs.		1		1, 44	10
W-12-M-10	12″	Cored clay or shale brick; Units in wall thickness: 3; Cells in wall thickness: 3; Minimum % solids: 87; No facings.	N/A	11 hrs.		1		1	11

(continued)

INTERNATIONAL CODE COUNCIL®
Copyright © 2019 ICC & NYSDOS. ALL RIGHTS RESERVED. Accessed by Lauren Gualdino (lgualdino@briarcliffmanor.org), (-) Order Number #100880972 on May 08, 2020 07:05 AM (PDT) pursuant to License Agreement with ICC & NYSDOS. No further reproduction, no

100880972

TABLE 1.1.6—continued
MASONRY WALLS
12″ TO LESS THAN 14″ THICK

ITEM CODE	THICKNESS	CONSTRUCTION DETAILS	PERFORMANCE		REFERENCE NUMBER			NOTES	REC. HOURS
			LOAD	TIME	PRE-BMS-92	BMS-92	POST-BMS-92		
W-12-M-11	12″	Core: clay or shale structural tile; see Notes 2, 6, 9, 18; No facings.	80 psi	2 hrs.		1		1, 20	$2^1/_2$
W-12-M-12	12″	Core: clay or shale structural tile; see Notes 2, 4, 9, 19; No facings.	80 psi	2 hrs.		1		1, 20	2
W-12-M-13	12″	Core: clay or shale structural tile; see Notes 2, 6, 14, 19; No facings.	80 psi	3 hrs.		1		1, 20	3
W-12-M-14	12″	Core: clay or shale structural tile; see Notes 2, 6, 14, 18; No facings.	80 psi	2 hrs. 30 min.		1		1, 20	$2^1/_2$
W-12-M-15	12″	Core: clay or shale structural tile; see Notes 2, 4, 13, 18; No facings.	80 psi	3 hrs. 30 min.		1		1, 20	$3^1/_2$
W-12-M-16	12″	Core: clay or shale structural tile; see Notes 2, 4, 13, 19; No facings.	80 psi	3 hrs.		1		1, 20	3
W-12-M-17	12″	Core: clay or shale structural tile; see Notes 3, 6, 9, 18; No facings.	80 psi	3 hrs. 30 min.		1		1, 20	$3^1/_2$
W-12-M-18	12″	Core: clay or shale structural tile; see Notes 3, 6, 9, 19; No facings.	80 psi	2 hrs.		1		1, 20	2
W-12-M-19	12″	Core: clay or shale structural tile; see Notes 3, 6, 14, 18; No facings.	80 psi	4 hrs.		1		1, 20	4
W-12-M-20	12″	Core: clay or shale structural tile; see Notes 3, 6, 14, 19; No facings.	80 psi	2 hrs. 30 min.		1		1, 20	$2^1/_2$
W-12-M-21	12″	Core: clay or shale structural tile; see Notes 3, 6, 16, 18; No facings.	80 psi	5 hrs.		1		1, 20	5
W-12-M-22	12″	Core: clay or shale structural tile; see Notes 3, 6, 16, 19; No facings.	80 psi	3 hrs.		1		1, 20	3
W-12-M-23	12″	Core: 8″, 70% solid clay or shale structural tile; 4″ brick facings on one side.	80 psi	10 hrs.		1		1, 20	10
W-12-M-24	12″	Core: 8″, 70% solid clay or shale structural tile; 4″ brick facings on one side.	N/A	11 hrs.		1		1	11
W-12-M-25	12″	Core: 8″, 40% solid clay or shale structural tile; 4″ brick facings on one side.	80 psi	6 hrs.		1		1, 20	6
W-12-M-26	12″	Cored concrete masonry; see Notes 1, 9, 15, 16, 20; No facings.	80 psi	2 hrs.		1		1, 20	2
W-12-M-27	12″	Cored concrete masonry; see Notes 2, 18, 26, 34, 41; No facings.	80 psi	5 hrs.		1		1, 20	5
W-12-M-28	12″	Cored concrete masonry; see Notes 2, 19, 26, 31, 41; No facings.	80 psi	1 hr. 30 min.		1		1, 20	$1^1/_2$
W-12-M-29	12″	Cored concrete masonry; see Notes 2, 18, 26, 31, 41; No facings.	80 psi	4 hrs.		1		1, 20	4
W-12-M-30	12″	Cored concrete masonry; see Notes 3, 19, 27, 31, 43; No facings.	80 psi	2 hrs.		1		1, 20	2
W-12-M-31	12″	Cored concrete masonry; see Notes 3, 18, 27, 31, 43; No facings.	80 psi	5 hrs.		1		1, 20	5
W-12-M-32	12″	Cored concrete masonry; see Notes 2, 19, 26, 32, 43; No facings.	80 psi	25 min.		1		1, 20	$^1/_3$
W-12-M-33	12″	Cored concrete masonry; see Notes 2, 18, 26, 32, 43; No facings.	80 psi	25 min.		1		1, 20	$^1/_3$

(continued)

INTERNATIONAL CODE COUNCIL®
Copyright © 2019 ICC & NYSDOS. ALL RIGHTS RESERVED. Accessed by Lauren Gualdino (lgualdino@briarcliffmanor.org), (-) Order Number #100880972 on May 08, 2020 07:05 AM (PDT) pursuant to License Agreement with ICC & NYSDOS. No further reproduction, no

100880972

TABLE 1.1.6—continued
MASONRY WALLS
12″ TO LESS THAN 14″ THICK

ITEM CODE	THICKNESS	CONSTRUCTION DETAILS	PERFORMANCE		REFERENCE NUMBER			NOTES	REC. HOURS
			LOAD	TIME	PRE-BMS-92	BMS-92	POST-BMS-92		
W-12-M-34	12 1/2″	Core: solid clay or shale brick; 1/2″ of 1:3 sanded gypsum plaster facings on one side.	160 psi	10 hrs.		1		1, 44	10
W-12-M-35	12 1/2″	Core: solid clay or shale brick; 1/2″ of 1:3 sanded gypsum plaster facings on one side.	N/A	13 hrs.		1		1	13
W-12-M-36	12 1/2″	Core: hollow rolok of clay or shale; 1/2″ of 1:3 sanded gypsum plaster facings on one side.	160 psi	6 hrs.		1		1, 44	6
W-12-M-37	12 1/2″	Core: hollow rolok bak of clay or shale; 1/2″ of 1:3 sanded gypsum plaster facings on one side.	160 psi	10 hrs.		1		1, 44	10
W-12-M-38	12 1/2″	Core: concrete; 1/2″ of 1:3 sanded gypsum plaster facings on one side.	160 psi	14 hrs.		1		1, 44	14
W-12-M-39	12 1/2″	Core: sand-lime brick; 1/2″ of 1:3 sanded gypsum plaster facings on one side.	160 psi	10 hrs.		1		1, 44	10
W-12-M-40	12 1/2″	Core: sand-lime brick; 1/2″ of 1:3 sanded gypsum plaster facings on one side.	N/A	15 hrs.		1		1	15
W-12-M-41	12 1/2″	Cored clay or shale brick; Units in wall thickness: 1; Cells in wall thickness: 2; Minimum % solids: 70; 1/2″ of 1:3 sanded gypsum plaster facings on one side.	120 psi	6 hrs.		1		1, 45	6
W-12-M-42	12 1/2″	Cored clay or shale brick; Units in wall thickness: 3; Cells in wall thickness: 3; Minimum % solids: 87; 1/2″ of 1:3 sanded gypsum plaster facings on one side.	160 psi	10 hrs.		1		1, 44	10
W-12-M-43	12 1/2″	Cored clay or shale brick; Units in wall thickness: 3; Cells in wall thickness: 3; Minimum % solids: 87; 1/2″ of 1:3 sanded gypsum plaster facings on one side.	N/A	12 hrs.		1		1	12
W-12-M-44	12 1/2″	Cored concrete masonry; see Notes 2, 19, 26, 34, 41; Facings: fire side only; see Note 38.	80 psi	2 hrs. 30 min.		1		1, 20	2 1/2
W-12-M-45	12 1/2″	Cored concrete masonry; see Notes 2, 18, 26, 34, 39, 41; Facings: one side only; see Note 38.	80 psi	6 hrs.		1		1, 20	6
W-12-M-46	12 1/2″	Cored concrete masonry; see Notes 2, 19, 26, 31, 41; Facings: fire side only; see Note 38.	80 psi	2 hrs.		1		1, 20	2
W-12-M-47	12 1/2″	Cored concrete masonry; see Notes 2, 18, 26, 31, 41; Facings: one side of wall only; see Note 38.	80 psi	5 hrs.		1		1, 20	5
W-12-M-48	12 1/2″	Cored concrete masonry; see Notes 3, 19, 27, 31, 43; Facings: fire side only; see Note 38.	80 psi	2 hrs. 30 min.		1		1, 20	2 1/2
W-12-M-49	12 1/2″	Cored concrete masonry; see Notes 3, 18, 27, 31, 43; Facings: one side only; see Note 38.	80 psi	6 hrs.		1		1, 20	6
W-12-M-50	12 1/2″	Cored concrete masonry; see Notes 2, 19, 26, 32, 43; Facings: fire side only; see Note 38.	80 psi	2 hrs. 30 min.		1		1, 20	2 1/2

(continued)

INTERNATIONAL CODE COUNCIL®
Copyright © 2019 ICC & NYSDOS. ALL RIGHTS RESERVED. Accessed by Lauren Gualdino (lgualdino@briarcliffmanor.org), (-) Order Number #100880972 on May 08, 2020 07:05 AM (PDT) pursuant to License Agreement with ICC & NYSDOS. No further reproduction, no

100880972

TABLE 1.1.6—continued
MASONRY WALLS
12″ TO LESS THAN 14″ THICK

ITEM CODE	THICKNESS	CONSTRUCTION DETAILS	PERFORMANCE		REFERENCE NUMBER			NOTES	REC. HOURS
			LOAD	TIME	PRE-BMS-92	BMS-92	POST-BMS-92		
W-12-M-51	12 1/2″	Cored concrete masonry; see Notes 2, 18, 26, 32, 43; Facings: one side only; see Note 38.	80 psi	25 min.		1		1, 20	1/3
W-12-M-52	12 5/8″	Clay or shale structural tile; see Notes 2, 6, 9, 18; Facings: side 1, see Note 17; side 2, none.	80 psi	3 hrs. 30 min.		1		1, 20	3 1/2
W-12-M-53	12 5/8″	Clay or shale structural tile; see Notes 2, 6, 9, 19; Facings: fire side only; see Note 17.	80 psi	3 hrs.		1		1, 20	3
W-12-M-54	12 5/8″	Clay or shale structural tile; see Notes 2, 6, 14, 19; Facings: side 1, see Note 17; side 2, none.	80 psi	4 hrs.		1		1, 20	4
W-12-M-55	12 5/8″	Clay or shale structural tile; see Notes 2, 6, 14, 18; Facings: exposed side only; see Note 17.	80 psi	3 hrs. 30 min.		1		1, 20	3 1/2
W-12-M-56	12 5/8″	Clay or shale structural tile; see Notes 2, 4, 13, 18; Facings: side 1, see Note 17; side 2, none.	80 psi	4 hrs.		1		1, 20	4
W-12-M-57	12 5/8″	Clay or shale structural tile; see Notes 1, 4, 13, 19; Facings: fire side only; see Note 17.	80 psi	4 hrs.		1		1, 20	4
W-12-M-58	12 5/8″	Clay or shale structural tile; see Notes 3, 6, 9, 18; Facings: side 1, see Note 17; side 2, none.	80 psi	4 hrs.		1		1, 20	4
W-12-M-59	12 5/8″	Clay or shale structural tile; see Notes 3, 6, 9, 19; Facings: fire side only; see Note 17.	80 psi	3 hrs.		1		1, 20	3
W-12-M-60	12 5/8″	Clay or shale structural tile; see Notes 3, 6, 14, 18; Facings: side 1, see Note 17; side 2, none.	80 psi	5 hrs.		1		1, 20	5
W-12-M-61	12 5/8″	Clay or shale structural tile; see Notes 3, 6, 14, 19; Facings: fire side only; see Note 17.	80 psi	3 hrs. 30 min.		1		1, 20	3 1/2
W-12-M-62	12 5/8″	Clay or shale structural tile; see Notes 3, 6, 16, 18; Facings: side 1, see Note 17; side 2, none.	80 psi	6 hrs.		1		1, 20	6
W-12-M-63	12 5/8″	Clay or shale structural tile; see Notes 3, 6, 16, 19; Facings: fire side only; see Note 17.	80 psi	4 hrs.		1		1, 20	4
W-12-M-64	12 5/8″	Core: 8″, 40% solid clay or shale structural tile; Facings: 4″ brick plus 5/8″ of 1:3 sanded gypsum plaster on one side.	80 psi	7 hrs.		1		1, 20	7
W-13-M-65	13″	Core: solid clay or shale brick; 1/2″ of 1:3 sanded gypsum plaster facings on both sides.	160 psi	12 hrs.		1		1, 44	12
W-13-M-66	13″	Core: solid clay or shale brick; 1/2″ of 1:3 sanded gypsum plaster facings on both sides.	N/A	15 hrs.		1		1, 20	15
W-13-M-67	13″	Core: solid clay or shale brick; 1/2″ of 1:3 sanded gypsum plaster facings on both sides.	N/A	15 hrs.		1		1	15
W-13-M-68	13″	Core: hollow rolok of clay or shale; 1/2″ of 1:3 sanded gypsum plaster facings on both sides.	80 psi	7 hrs.		1		1, 20	7
W-13-M-69	13″	Core: concrete brick; 1/2″ of 1:3 sanded gypsum plaster facings on both sides.	160 psi	16 hrs.		1		1, 44	16

(continued)

INTERNATIONAL CODE COUNCIL®
Copyright © 2019 ICC & NYSDOS. ALL RIGHTS RESERVED. Accessed by Lauren Gualdino (lgualdino@briarcliffmanor.org), (-) Order Number #100880972 on May 08, 2020 07:05 AM (PDT) pursuant to License Agreement with ICC & NYSDOS. No further reproduction, no

100880972

TABLE 1.1.6—continued
MASONRY WALLS
12″ TO LESS THAN 14″ THICK

ITEM CODE	THICKNESS	CONSTRUCTION DETAILS	PERFORMANCE		REFERENCE NUMBER			NOTES	REC. HOURS
			LOAD	TIME	PRE-BMS-92	BMS-92	POST-BMS-92		
W-13-M-70	13″	Core: sand-lime brick; $^1/_2$″ of 1:3 sanded gypsum plaster facings on both sides.	160 psi	12 hrs.		1		1, 44	12
W-13-M-71	13″	Core: sand-lime brick; $^1/_2$″ of 1:3 sanded gypsum plaster facings on both sides.	N/A	17 hrs.		1		1	17
W-13-M-72	13″	Cored clay or shale brick; Units in wall thickness: 1; Cells in wall thickness: 2; Minimum % solids: 70; $^1/_2$″ of 1:3 sanded gypsum plaster facings on both sides.	120 psi	7 hrs.		1		1, 45	7
W-13-M-73	13″	Cored clay or shale brick; Units in wall thickness: 3; Cells in wall thickness: 3; Minimum % solids: 87; $^1/_2$″ of 1:3 sanded gypsum plaster facings on both sides.	160 psi	12 hrs.		1		1, 44	12
W-13-M-74	13″	Cored clay or shale brick; Units in wall thickness: 3; Cells in wall thickness: 2; Minimum % solids: 87; $^1/_2$″ of 1:3 sanded gypsum plaster facings on both sides.	N/A	14 hrs.		1		1	14
W-13-M-75	13″	Cored concrete masonry; see Notes 18, 23, 28, 39, 41; No facings.	80 psi	7 hrs.		1		1, 20	7
W-13-M-76	13″	Cored concrete masonry; see Notes 19, 23, 28, 39, 41; No facings.	80 psi	4 hrs.		1		1, 20	4
W-13-M-77	13″	Cored concrete masonry; see Notes 3, 18, 27, 31, 43; Facings: both sides; see Note 38.	80 psi	6 hrs.		1		1, 20	6
W-13-M-78	13″	Cored concrete masonry; see Notes 2, 18, 26, 31, 41; Facings: both sides; see Note 38.	80 psi	6 hrs.		1		1, 20	6
W-13-M-79	13″	Cored concrete masonry; see Notes 2, 18, 26, 34, 41; Facings: both sides of wall; see Note 38.	80 psi	7 hrs.		1		1, 20	7
W-13-M-80	13$^1/_4$″	Core: clay or shale structural tile; see Notes 2, 6, 9, 18; Facings: both sides; see Note 17.	80 psi	4 hrs.		1		1, 20	4
W-13-M-82	13$^1/_4$″	Core: clay or shale structural tile; see Notes 2, 4, 13, 18; Facings: both sides; see Note 17.	80 psi	6 hrs.		1		1, 20	6
W-13-M-83	13$^1/_4$″	Core: clay or shale structural tile; see Notes 3, 6, 9, 18; Facings: both sides; see Note 17.	80 psi	6 hrs.		1		1, 20	6
W-13-M-84	13$^1/_4$″	Core: clay or shale structural tile; see Notes 3, 6, 14, 18; Facings: both sides; see Note 17.	80 psi	6 hrs.		1		1, 20	6
W-13-M-85	13$^1/_4$″	Core: clay or shale structural tile; see Notes 3, 6, 16, 18; Facings: both sides; see Note 17.	80 psi	7 hrs.		1		1, 20	7

(continued)

INTERNATIONAL CODE COUNCIL®
Copyright © 2019 ICC & NYSDOS. ALL RIGHTS RESERVED. Accessed by Lauren Gualdino (lgualdino@briarcliffmanor.org), (-) Order Number #100880972 on May 08, 2020 07:05 AM (PDT) pursuant to License Agreement with ICC & NYSDOS. No further reproduction, no

100880972

TABLE 1.1.6—continued
MASONRY WALLS
12″ TO LESS THAN 14″ THICK

ITEM CODE	THICKNESS	CONSTRUCTION DETAILS	PERFORMANCE		REFERENCE NUMBER			NOTES	REC. HOURS
			LOAD	TIME	PRE-BMS-92	BMS-92	POST-BMS-92		
W-13-M-86	$13^1/_2$″	Cored concrete masonry; see Notes 18, 23, 28, 39, 41; Facings: one side only; see Note 38.	80 psi	8 hrs.		1		1, 20	8
W-13-M-87	$13^1/_2$″	Cored concrete masonry; see Notes 19, 23, 28, 39, 41; Facings: fire side only; see Note 38.	80 psi	5 hrs.		1		1, 20	5

For SI: 1 inch = 25.4 mm, 1 pound per square inch = 0.00689 MPa.

Notes:

1. Tested at NBS - ASA Spec. No. A2-1934.
2. One unit in wall thickness.
3. Two units in wall thickness.
4. Two or three units in wall thickness.
5. Two cells in wall thickness.
6. Three or four cells in wall thickness.
7. Four or five cells in wall thickness.
8. Five or six cells in wall thickness.
9. Minimum percent of solid materials in units = 40%.
10. Minimum percent of solid materials in units = 43%.
11. Minimum percent of solid materials in units = 46%.
12. Minimum percent of solid materials in units = 48%.
13. Minimum percent of solid materials in units = 49%.
14. Minimum percent of solid materials in units = 45%.
15. Minimum percent of solid materials in units = 51%.
16. Minimum percent of solid materials in units = 53%.
17. Not less than $^5/_8$ inch thickness of 1:3 sanded gypsum plaster.
18. Noncombustible or no members framed into wall.
19. Combustible members framed into wall.
20. Load: 80 psi for gross area.
21. Portland cement-lime mortar.
22. Failure mode-thermal.
23. British test.
24. Passed all criteria.
25. Failed by sudden collapse with no preceding signs of impending failure.
26. One cell in wall thickness.
27. Two cells in wall thickness.
28. Three cells in wall thickness.
29. Minimum percent of solid material in concrete units = 52%.
30. Minimum percent of solid material in concrete units = 54%.
31. Minimum percent of solid material in concrete units = 55%.
32. Minimum percent of solid material in concrete units = 57%.
33. Minimum percent of solid material in concrete units = 60%.
34. Minimum percent of solid material in concrete units = 62%.
35. Minimum percent of solid material in concrete units = 65%.
36. Minimum percent of solid material in concrete units = 70%.
37. Minimum percent of solid material in concrete units = 76%.
38. Not less than $^1/_2$ inch of 1:3 sanded gypsum plaster.
39. Three units in wall thickness.
40. Concrete units made with expanded slag or pumice aggregates.
41. Concrete units made with expanded burned clay or shale, crushed limestone, air cooled slag or cinders.
42. Concrete units made with calcareous sand and gravel. Coarse aggregate, 60 percent or more calcite and dolomite.
43. Concrete units made with siliceous sand and gravel. Ninety percent or more quartz, chert or flint.
44. Load: 160 psi of gross wall cross sectional area.
45. Load: 120 psi of gross wall cross sectional area.

INTERNATIONAL CODE COUNCIL®
Copyright © 2019 ICC & NYSDOS. ALL RIGHTS RESERVED. Accessed by Lauren Gualdino (lgualdino@briarcliffmanor.org), (-) Order Number #100880972 on May 08, 2020 07:05 AM (PDT) pursuant to License Agreement with ICC & NYSDOS. No further reproduction, no

100880972

FIGURE 1.1.7
MASONRY WALLS
14″ OR MORE THICK

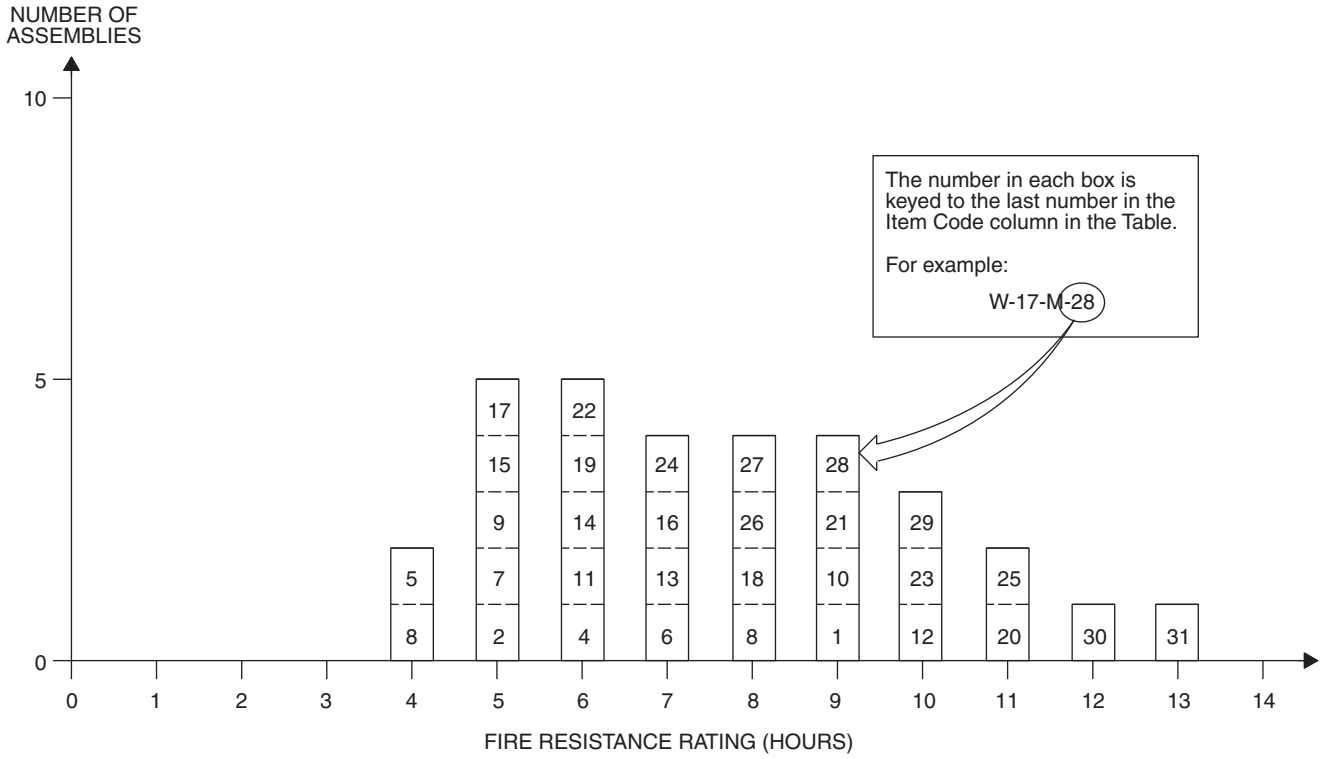

TABLE 1.1.7
MASONRY WALLS
14″ OR MORE THICK

ITEM CODE	THICKNESS	CONSTRUCTION DETAILS	PERFORMANCE		REFERENCE NUMBER			NOTES	REC. HOURS
			LOAD	TIME	PRE-BMS-92	BMS-92	POST-BMS-92		
W-14-M-1	14″	Core: cored masonry; see Notes 18, 28, 33, 39, 41; Facings: both sides; see Note 38.	80 psi	9 hrs.		1		1, 20	9
W-16-M-2	16″	Core: clay or shale structural tile; see Notes 4, 7, 9, 19; No facings.	80 psi	5 hrs.		1		1, 20	5
W-16-M-3	16″	Core: clay or shale structural tile; see Notes 4, 7, 9, 19; No facings.	80 psi	4 hrs.		1		1, 20	4
W-16-M-4	16″	Core: clay or shale structural tile; see Notes 4, 7, 10, 18; No facings.	80 psi	6 hrs.		1		1, 20	6
W-16-M-5	16″	Core: clay or shale structural tile; see Notes 4, 7, 10, 19; No facings.	80 psi	4 hrs.		1		1, 20	4
W-16-M-6	16″	Core: clay or shale structural tile; see Notes 4, 7, 11, 18; No facings.	80 psi	7 hrs.		1		1, 20	7
W-16-M-7	16″	Core: clay or shale structural tile; see Notes 4, 7, 11, 19; No facings.	80 psi	5 hrs.		1		1, 20	5
W-16-M-8	16″	Core: clay or shale structural tile; see Notes 4, 8, 13, 18; No facings.	80 psi	8 hrs.		1		1, 20	8
W-16-M-9	16″	Core: clay or shale structural tile; see Notes 4, 8, 13, 19; No facings.	80 psi	5 hrs.		1		1, 20	5

(continued)

INTERNATIONAL CODE COUNCIL®
Copyright © 2019 ICC & NYSDOS. ALL RIGHTS RESERVED. Accessed by Lauren Gualdino (lgualdino@briarcliffmanor.org), (-) Order Number #100880972 on May 08, 2020 07:05 AM (PDT) pursuant to License Agreement with ICC & NYSDOS. No further reproduction, no

100880972

TABLE 1.1.7—continued
MASONRY WALLS
14″ OR MORE THICK

ITEM CODE	THICKNESS	CONSTRUCTION DETAILS	PERFORMANCE		REFERENCE NUMBER			NOTES	REC. HOURS
			LOAD	TIME	PRE-BMS-92	BMS-92	POST-BMS-92		
W-16-M-10	16″	Core: clay or shale structural tile; see Notes 4, 8, 15, 18; No facings.	80 psi	9 hrs.		1		1, 20	9
W-16-M-11	16″	Core: clay or shale structural tile; see Notes 3, 7, 14, 18; No facings.	80 psi	6 hrs.		1		1, 20	6
W-16-M-12	16″	Core: clay or shale structural tile; see Notes 4, 8, 16, 18; No facings.	80 psi	10 hrs.		1		1, 20	10
W-16-M-13	16″	Core: clay or shale structural tile; see Notes 4, 6, 16, 19; No facings.	80 psi	7 hrs.		1		1, 20	7
W-16-M-14	$16^{5}/_{8}$″	Core: clay or shale structural tile; see Notes 4, 7, 9, 18; Facings: side 1, see Note 17; side 2, none.	80 psi	6 hrs.		1		1, 20	6
W-16-M-15	$16^{5}/_{8}$″	Core: clay or shale structural tile; see Notes 4, 7, 9, 19; Facings: fire side only; see Note 17.	80 psi	5 hrs.		1		1, 20	5
W-16-M-16	$16^{5}/_{8}$″	Core: clay or shale structural tile; see Notes 4, 7, 10, 18; Facings: side 1, see Note 17; side 2, none.	80 psi	7 hrs.		1		1, 20	7
W-16-M-17	$16^{5}/_{8}$″	Core: clay or shale structural tile; see Notes 4, 7, 10, 19; Facings: fire side only; see Note 17.	80 psi	5 hrs.		1		1, 20	5
W-16-M-18	$16^{5}/_{8}$″	Core: clay or shale structural tile; see Notes 4, 7, 11, 18; Facings: side 1, see Note 17; side 2, none.	80 psi	5 hrs.		1		1, 20	5
W-16-M-19	$16^{5}/_{8}$″	Core: clay or shale structural tile; see Notes 4, 7, 11, 19; Facings: fire side only; see Note 17.	80 psi	6 hrs.		1		1, 20	6
W-16-M-20	$16^{5}/_{8}$″	Core: clay or shale structural tile; see Notes 4, 8, 13, 18; Facings: sides 1 and 2; see Note 17.	80 psi	11 hrs.		1		1, 20	11
W-16-M-21	$16^{5}/_{8}$″	Core: clay or shale structural tile; see Notes 4, 8, 13 18; Facings: side 1, see Note 17; side 2, none.	80 psi	9 hrs.		1		1, 20	9
W-16-M-22	$16^{5}/_{8}$″	Core: clay or shale structural tile; see Notes 4, 8, 13, 19; Facings: fire side only; see Note 17.	80 psi	6 hrs.		1		1, 20	6
W-16-M-23	$16^{5}/_{8}$″	Core: clay or shale structural tile; see Notes 4, 8, 15, 18; Facings: side 1, see Note 17; side 2, none.	80 psi	10 hrs.		1		1, 20	10
W-16-M-24	$16^{5}/_{8}$″	Core: clay or shale structural tile; see Notes 4, 8, 15, 19; Facings: fire side only; see Note 17.	80 psi	7 hrs.		1		1, 20	7
W-16-M-25	$16^{5}/_{8}$″	Core: clay or shale structural tile; see Notes 4, 6, 16, 18; Facings: side 1, see Note 17; side 2, none.	80 psi	11 hrs.		1		1, 20	11
W-16-M-26	$16^{5}/_{8}$″	Core: clay or shale structural tile; see Notes 4, 6, 16, 19; Facings: fire side only; see Note 17.	80 psi	8 hrs.		1		1, 20	8

(continued)

INTERNATIONAL CODE COUNCIL®
Copyright © 2019 ICC & NYSDOS. ALL RIGHTS RESERVED. Accessed by Lauren Gualdino (lgualdino@briarcliffmanor.org), (-) Order Number #100880972 on May 08, 2020 07:05 AM (PDT) pursuant to License Agreement with ICC & NYSDOS. No further reproduction, no

100880972

TABLE 1.1.7—continued
MASONRY WALLS
14″ OR MORE THICK

ITEM CODE	THICKNESS	CONSTRUCTION DETAILS	PERFORMANCE		REFERENCE NUMBER			NOTES	REC. HOURS
			LOAD	TIME	PRE-BMS-92	BMS-92	POST-BMS-92		
W-17-M-27	17 1/4″	Core: clay or shale structural tile; see Notes 4, 7, 9, 18; Facings: sides 1 and 2; see Note 17.	80 psi	8 hrs.		1		1, 20	8
W-17-M-28	17 1/4″	Core: clay or shale structural tile; see Notes 4, 7, 10, 18; Facings: sides 1 and 2; see Note 17.	80 psi	9 hrs.		1		1, 20	9
W-17-M-29	17 1/4″	Core: clay or shale structural tile; see Notes 4, 7, 11, 18; Facings: sides 1 and 2; see Note 17.	80 psi	10 hrs.		1		1, 20	10
W-17-M-30	17 1/4″	Core: clay or shale structural tile; see Notes 4, 8, 15, 18; Facings: sides 1 and 2; see Note 17.	80 psi	12 hrs.		1		1, 20	12
W-17-M-31	17 1/4″	Core: clay or shale structural tile; see Notes 4, 6, 16, 18; Facings: sides 1 and 2; see Note 17.	80 psi	13 hrs.		1		1, 20	13

For SI: 1 inch = 25.4 mm, 1 pound per square inch = 0.00689 MPa.

Notes:

1. Tested at NBS - ASA Spec. No. A2-1934.
2. One unit in wall thickness.
3. Two units in wall thickness.
4. Two or three units in wall thickness.
5. Two cells in wall thickness.
6. Three or four cells in wall thickness.
7. Four or five cells in wall thickness.
8. Five or six cells in wall thickness.
9. Minimum percent of solid materials in units = 40%.
10. Minimum percent of solid materials in units = 43%.
11. Minimum percent of solid materials in units = 46%.
12. Minimum percent of solid materials in units = 48%.
13. Minimum percent of solid materials in units = 49%.
14. Minimum percent of solid materials in units = 45%.
15. Minimum percent of solid materials in units = 51%.
16. Minimum percent of solid materials in units = 53%.
17. Not less than 5/8 inch thickness of 1:3 sanded gypsum plaster.
18. Noncombustible or no members framed into wall.
19. Combustible members framed into wall.
20. Load: 80 psi for gross area.
21. Portland cement-lime mortar.
22. Failure mode—thermal.
23. British test.
24. Passed all criteria.
25. Failed by sudden collapse with no preceding signs of impending failure.
26. One cell in wall thickness.
27. Two cells in wall thickness.
28. Three cells in wall thickness.
29. Minimum percent of solid material in concrete units = 52%.
30. Minimum percent of solid material in concrete units = 54%.
31. Minimum percent of solid material in concrete units = 55%.
32. Minimum percent of solid material in concrete units = 57%.
33. Minimum percent of solid material in concrete units = 60%.
34. Minimum percent of solid material in concrete units = 62%.
35. Minimum percent of solid material in concrete units = 65%.
36. Minimum percent of solid material in concrete units = 70%.
37. Minimum percent of solid material in concrete units = 76%.
38. Not less than 1/2 inch of 1:3 sanded gypsum plaster.
39. Three units in wall thickness.
40. Concrete units made with expanded slag or pumice aggregates.
41. Concrete units made with expanded burned clay or shale, crushed limestone, air cooled slag or cinders.
42. Concrete units made with calcareous sand and gravel. Coarse aggregate, 60 percent or more calcite and dolomite.
43. Concrete units made with siliceous sand and gravel. Ninety percent or more quartz, chert or flint.

INTERNATIONAL CODE COUNCIL®
Copyright © 2019 ICC & NYSDOS. ALL RIGHTS RESERVED. Accessed by Lauren Gualdino (lgualdino@briarcliffmanor.org), (-) Order Number #100880972 on May 08, 2020 07:05 AM (PDT) pursuant to License Agreement with ICC & NYSDOS. No further reproduction, no

100880972

FIGURE 1.2.1
METAL FRAME WALLS
0″ TO LESS THAN 4″ THICK

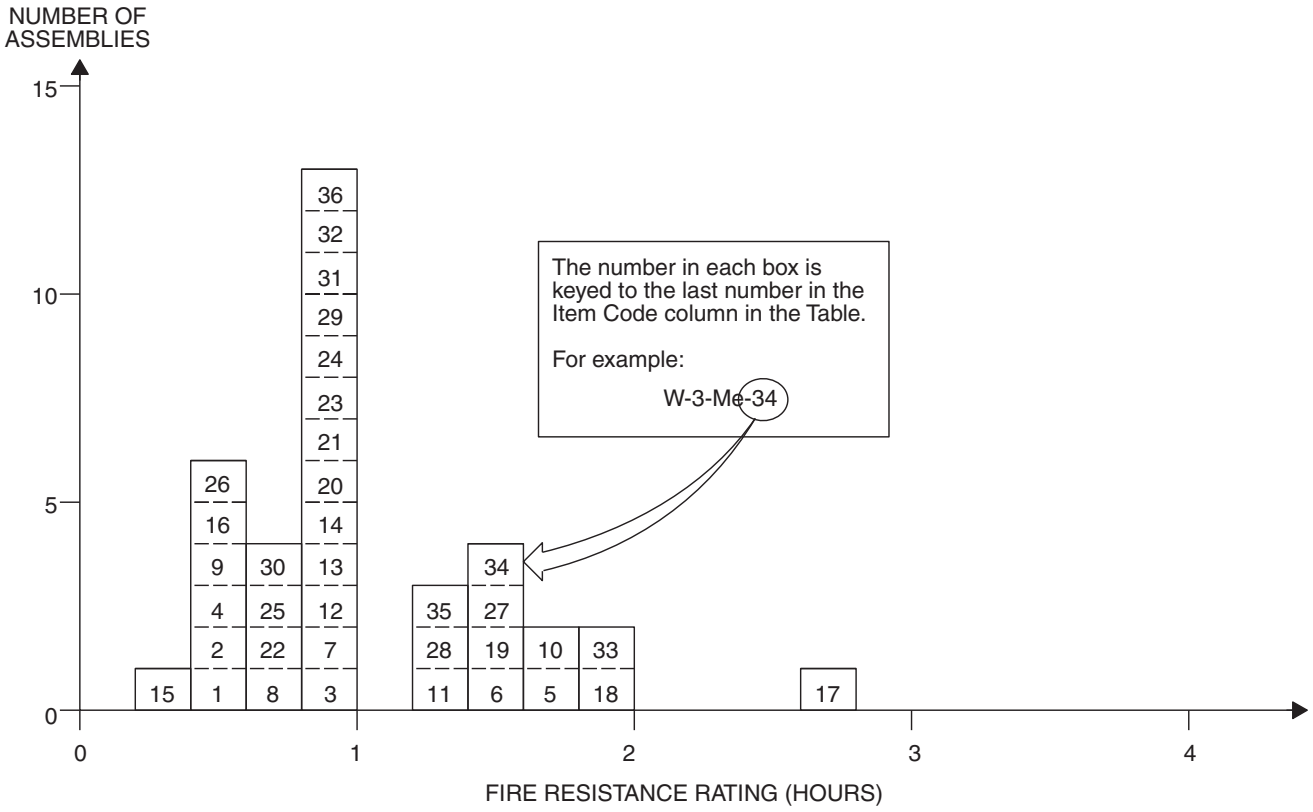

TABLE 1.2.1
METAL FRAME WALLS
0″ TO LESS THAN 4″ THICK

ITEM CODE	THICKNESS	CONSTRUCTION DETAILS	PERFORMANCE		REFERENCE NUMBER			NOTES	REC. HOURS
			LOAD	TIME	PRE-BMS-92	BMS-92	POST-BMS-92		
W-3-Me-1	3″	Core: steel channels having three rows of 4″ × $^1/_8$″ staggered slots in web; core filled with heat expanded vermiculite weighing 1.5 lbs./ft.^{2} of wall area; Facings: sides 1 and 2, 18 gage steel, spot welded to core.	N/A	25 min.		1			$^1/_3$
W-3-Me-2	3″	Core: steel channels having three rows of 4″ × $^1/_8$″ staggered slots in web; core filled with heat expanded vermiculite weighing 2 lbs./ft.^{2} of wall area; Facings: sides 1 and 2, 18 gage steel, spot welded to core.	N/A	30 min.		1			$^1/_2$
W-3-Me-3	2$^1/_2$″	Solid partition: $^3/_8$″ tension rods (vertical) 3′ o.c. with metal lath; Scratch coat: cement/sand/lime plaster; Float coats: cement/sand/lime plaster; Finish coats: neat gypsum plaster.	N/A	1 hr.			7	1	1
W-2-Me-4	2″	Solid wall: steel channel per Note 1; 2″ thickness of 1:2; 1:3 Portland cement on metal lath.	N/A	30 min.		1			$^1/_2$

(continued)

INTERNATIONAL CODE COUNCIL®
Copyright © 2019 ICC & NYSDOS. ALL RIGHTS RESERVED. Accessed by Lauren Gualdino (lgualdino@briarcliffmanor.org), (-) Order Number #100880972 on May 08, 2020 07:05 AM (PDT) pursuant to License Agreement with ICC & NYSDOS. No further reproduction, no

100880972

TABLE 1.2.1—continued
METAL FRAME WALLS
0″ TO LESS THAN 4″ THICK

ITEM CODE	THICKNESS	CONSTRUCTION DETAILS	PERFORMANCE		REFERENCE NUMBER			NOTES	REC. HOURS
			LOAD	TIME	PRE-BMS-92	BMS-92	POST-BMS-92		
W-2-Me-5	2″	Solid wall: steel channel per Note 1; 2″ thickness of neat gypsum plaster on metal lath.	N/A	1 hr. 45 min.		1			1 3/4
W-2-Me-6	2″	Solid wall: steel channel per Note 1; 2″ thickness of 1:1 1/2; 1:1 1/2 gypsum plaster on metal lath.	N/A	1 hr. 30 min.		1			1 1/2
W-2-Me-7	2″	Solid wall: steel channel per Note 2; 2″ thickness of 1:1; 1:1 gypsum plaster on metal lath.	N/A	1 hr.		1			1
W-2-Me-8	2″	Solid wall: steel channel per Note 1; 2″ thickness of 1:2; 1:2 gypsum plaster on metal lath.	N/A	45 min.		1			3/4
W-2-Me-9	2 1/4″	Solid wall: steel channel per Note 2; 2 1/4″ thickness of 1:2; 1:3 Portland cement on metal lath.	N/A	30 min.		1			1/2
W-2-Me-10	2 1/4″	Solid wall: steel channel per Note 2; 2 1/4″ thickness of neat gypsum plaster on metal lath.	N/A	2 hrs.		1			2
W-2-Me-11	2 1/4″	Solid wall: steel channel per Note 2; 2 1/4 ″thickness of 1:1/2; 1:1/2 gypsum plaster on metal lath.	N/A	1 hr. 45 min.		1			1 3/4
W-2-Me-12	2 1/4″	Solid wall: steel channel per Note 2; 2 1/4″ thickness of 1:1; 1:1 gypsum plaster on metal lath.	N/A	1 hr. 15 min.		1			1 1/4
W-2-Me-13	2 1/4″	Solid wall: steel channel per Note 2; 2 1/4″ thickness of 1:2; 1:2 gypsum plaster on metal lath.	N/A	1 hr.		1			1
W-2-Me-14	2 1/2″	Solid wall: steel channel per Note 1; 2 1/2″ thickness of 4.5:1:7; 4.5:1:7 Portland cement, sawdust and sand sprayed on wire mesh; see Note 3.	N/A	1 hr.		1			1
W-2-Me-15	2 1/2″	Solid wall: steel channel per Note 2; 2 1/2″ thickness of 1:4; 1:4 Portland cement sprayed on wire mesh; see Note 3.	N/A	20 min.		1			1/3
W-2-Me-16	2 1/2″	Solid wall: steel channel per Note 2; 2 1/2″ thickness of 1:2; 1:3 Portland cement on metal lath.	N/A	30 min.		1			1/2
W-2-Me-17	2 1/2″	Solid wall: steel channel per Note 2; 2 1/2″ thickness of neat gypsum plaster on metal lath.	N/A	2 hrs. 30 min.		1			2 1/2
W-2-Me-18	2 1/2″	Solid wall: steel channel per Note 2; 2 1/2″ thickness of 1:1/2; 1:1/2 gypsum plaster on metal lath.	N/A	2 hrs.		1			2
W-2-Me-19	2 1/2″	Solid wall: steel channel per Note 2; 2 1/2″ thickness of 1:1; 1:1 gypsum plaster on metal lath.	N/A	1 hr. 30 min.		1			1 1/2

(continued)

INTERNATIONAL CODE COUNCIL®
Copyright © 2019 ICC & NYSDOS. ALL RIGHTS RESERVED. Accessed by Lauren Gualdino (lgualdino@briarcliffmanor.org), (-) Order Number #100880972 on May 08, 2020 07:05 AM (PDT) pursuant to License Agreement with ICC & NYSDOS. No further reproduction, no

100880972

TABLE 1.2.1—continued
METAL FRAME WALLS
0″ TO LESS THAN 4″ THICK

ITEM CODE	THICKNESS	CONSTRUCTION DETAILS	PERFORMANCE		REFERENCE NUMBER			NOTES	REC. HOURS
			LOAD	TIME	PRE-BMS-92	BMS-92	POST-BMS-92		
W-2-Me-20	2 1/2″	Solid wall: steel channel per Note 2; 2 1/2″ thickness of 1:2; 1:2 gypsum plaster on metal lath.	N/A	1 hr.		1			1
W-2-Me-21	2 1/2″	Solid wall: steel channel per Note 2; 2 1/2″ thickness of 1:2; 1:3 gypsum plaster on metal lath.	N/A	1 hr.		1			1
W-3-Me-22	3″	Core: steel channel per Note 2; 1:2; 1:2 gypsum plaster on 3/4″ soft asbestos lath; plaster thickness 2″.	N/A	45 min.		1			3/4
W-3-Me-23	3 1/2″	Solid wall: steel channel per Note 2; 2 1/2″ thickness of 1:2; 1:2 gypsum plaster on 3/4″ asbestos lath.	N/A	1 hr.		1			1
W-3-Me-24	3 1/2″	Solid wall: steel channel per Note 2; lath over and 1:2 1/2; 1:2 1/2 gypsum plaster on 1″ magnesium oxysulfate wood fiberboard; plaster thickness 2 1/2″.	N/A	1 hr.		1			1
W-3-Me-25	3 1/2″	Core: steel studs; see Note 4; Facings: 3/4″ thickness of 1:1/30:2; 1:1/30: 3 Portland cement and asbestos fiber plaster.	N/A	45 min.		1			3/4
W-3-Me-26	3 1/2″	Core: steel studs; see Note 4; Facings: both sides 3/4″ thickness of 1:2; 1:3 Portland cement.	N/A	30 min.		1			1/2
W-3-Me-27	3 1/2″	Core: steel studs; see Note 4; Facings: both sides 3/4″ thickness of neat gypsum plaster.	N/A	1 hr. 30 min.		1			1 1/2
W-3-Me-28	3 1/2″	Core: steel studs; see Note 4; Facings: both sides 3/4″ thickness of 1:1/2; 1:1/2 gypsum plaster.	N/A	1 hr. 15 min.		1			1 1/4
W-3-Me-29	3 1/2″	Core: steel studs; see Note 4; Facings: both sides 3/4″ thickness of 1:2; 1:2 gypsum plaster.	N/A	1 hr.		1			1
W-3-Me-30	3 1/2″	Core: steel studs; see Note 4; Facings: both sides 3/4″ thickness of 1:2; 1:3 gypsum plaster.	N/A	45 min.		1			3/4
W-3-Me-31	3 3/4″	Core: steel studs; see Note 4; Facings: both sides 7/8″ thickness of 1:1/30: 2; 1:1/30: 3 Portland cement and asbestos fiber plaster.	N/A	1 hr.		1			1
W-3-Me-32	3 3/4″	Core: steel studs; see Note 4; Facings: both sides 7/8″ thickness of 1:2; 1:3 Portland cement.	N/A	45 min.		1			3/4
W-3-Me-33	3 3/4″	Core: steel studs; see Note 4; Facings: both sides 7/8″ thickness of neat gypsum plaster.	N/A	2 hrs.		1			2
W-3-Me-34	3 3/4″	Core: steel studs; see Note 4; Facings: both sides 7/8″ thickness of 1:1/2; 1:1/2 gypsum plaster.	N/A	1 hr. 30 min.		1			1 1/2

(continued)

INTERNATIONAL CODE COUNCIL®
Copyright © 2019 ICC & NYSDOS. ALL RIGHTS RESERVED. Accessed by Lauren Gualdino (lgualdino@briarcliffmanor.org), (-) Order Number #100880972 on May 08, 2020 07:05 AM (PDT) pursuant to License Agreement with ICC & NYSDOS. No further reproduction, no

100880972

TABLE 1.2.1—continued
METAL FRAME WALLS
0″ TO LESS THAN 4″ THICK

ITEM CODE	THICKNESS	CONSTRUCTION DETAILS	PERFORMANCE		REFERENCE NUMBER			NOTES	REC. HOURS
			LOAD	TIME	PRE-BMS-92	BMS-92	POST-BMS-92		
W-3-Me-35	$3^3/_4$″	Core: steel studs; see Note 4; Facings: both sides $^7/_8$″ thickness of 1:2; 1:2 gypsum plaster.	N/A	1 hr. 15 min.		1			$1^1/_4$
W-3-Me-36	$3^3/_4$″	Core: steel; see Note 4; Facings: $^7/_8$″ thickness of 1:2; 1:3 gypsum plaster on both sides.	N/A	1 hr.		1			1

For SI: 1 inch = 25.4 mm.

Notes:

1. Failure mode—local temperature rise—back face.
2. Three-fourths inch or 1 inch channel framing—hot-rolled or strip-steel channels.
3. Reinforcement is 4-inch square mesh of No. 6 wire welded at intersections (no channels).
4. Ratings are for any usual type of nonload-bearing metal framing providing 2 inches (or more) air space.

General Note:

The construction details of the wall assemblies are as complete as the source documentation will permit. Data on the method of attachment of facings and the gauge of steel studs was provided when known. The cross-sectional area of the steel stud can be computed, thereby permitting a reasoned estimate of actual loading conditions. For load-bearing assemblies, the maximum allowable stress for the steel studs has been provided in the table "Notes." More often, it is the thermal properties of the facing materials, rather than the specific gauge of the steel, that will determine the degree of fire resistance. This is particularly true for nonbearing wall assemblies.

INTERNATIONAL CODE COUNCIL®
Copyright © 2019 ICC & NYSDOS. ALL RIGHTS RESERVED. Accessed by Lauren Gualdino (lgualdino@briarcliffmanor.org), (-) Order Number #100880972 on May 08, 2020 07:05 AM (PDT) pursuant to License Agreement with ICC & NYSDOS. No further reproduction, no

100880972

FIGURE 1.2.2
METAL FRAME WALLS
4″ TO LESS THAN 6″ THICK

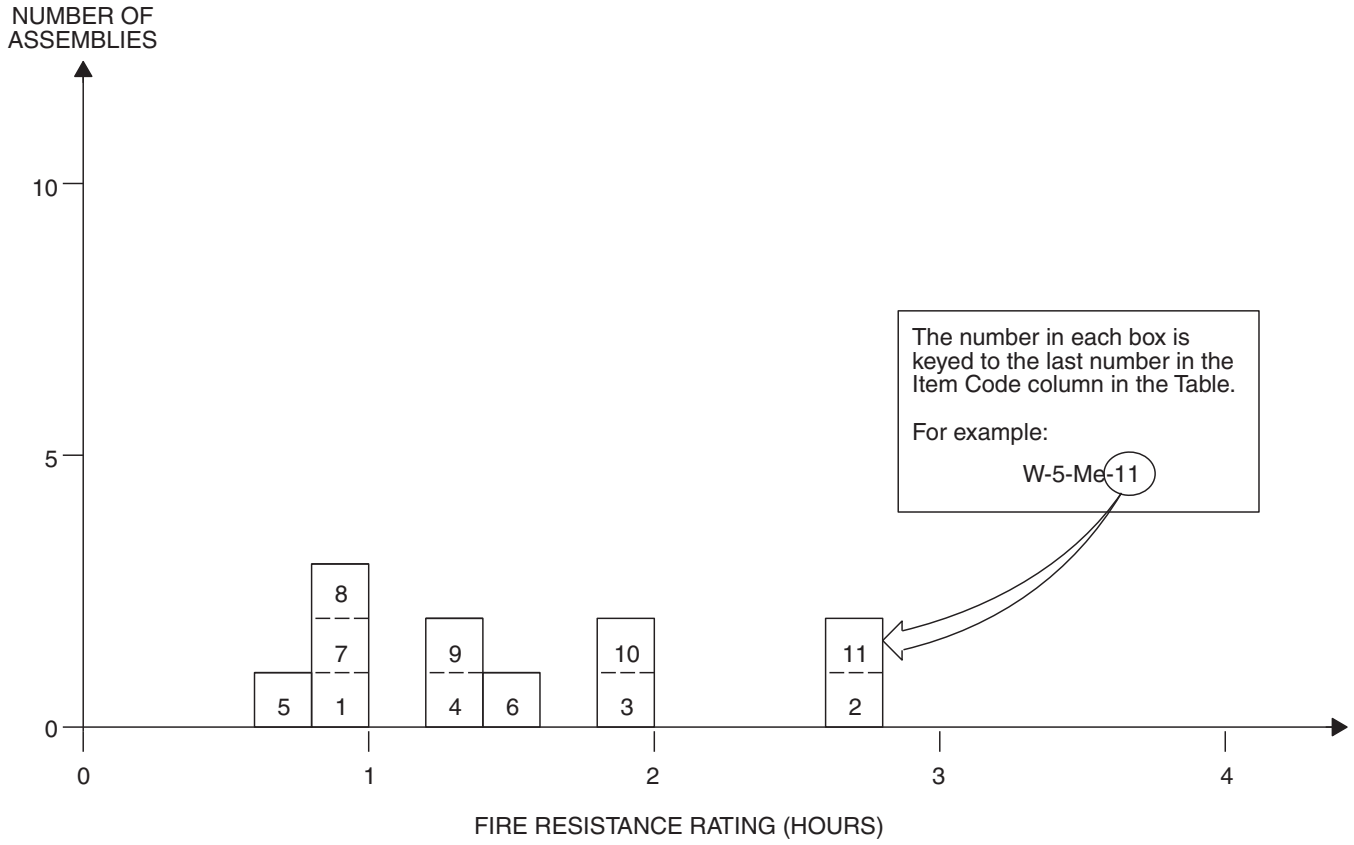

TABLE 1.2.2
METAL FRAME WALLS
4″ TO LESS THAN 6″ THICK

ITEM CODE	THICKNESS	CONSTRUCTION DETAILS	PERFORMANCE		REFERENCE NUMBER			NOTES	REC. HOURS
			LOAD	TIME	PRE-BMS-92	BMS-92	POST-BMS-92		
W-5-Me-1	$5^1/_2$″	3″ cavity with 16 ga. channel studs ($3^1/_2$″ o.c.) of $^1/_2$″ × $^1/_2$″ channel and 3″ spacer; Metal lath on ribs with plaster (three coats) $^3/_4$″ over face of lath; Plaster (each side): scratch coat, cement/lime/sand with hair; float coat, cement/lime/sand; finish coat, neat gypsum.	N/A	1 hr. 11 min.			7	1	1
W-4-Me-2	4″	Core: steel studs; see Note 2; Facings: both sides 1″ thickness of neat gypsum plaster.	N/A	2 hrs. 30 min.		1			$2^1/_2$
W-4-Me-3	4″	Core: steel studs; see Note 2; Facings: both sides 1″ thickness of 1:$^1/_2$; 1:$^1/_2$ gypsum plaster.	N/A	2 hrs.		1			2
W-4-Me-4	4″	Core: steel; see Note 2; Facings: both sides 1″ thickness of 1:2; 1:3 gypsum plaster.	N/A	1 hr. 15 min.		1			$1^1/_4$
W-4-Me-5	$4^1/_2$″	Core: lightweight steel studs 3″ in depth; Facings: both sides $^3/_4$″ thick sanded gypsum plaster, 1:2 scratch coat, 1:3 brown coat applied on metal lath.	See Note 4	45 min.		1		5	$^3/_4$

(continued)

INTERNATIONAL CODE COUNCIL®
Copyright © 2019 ICC & NYSDOS. ALL RIGHTS RESERVED. Accessed by Lauren Gualdino (lgualdino@briarcliffmanor.org), (-) Order Number #100880972 on May 08, 2020 07:05 AM (PDT) pursuant to License Agreement with ICC & NYSDOS. No further reproduction, no

100880972

TABLE 1.2.2—continued
METAL FRAME WALLS
4″ TO LESS THAN 6″ THICK

ITEM CODE	THICKNESS	CONSTRUCTION DETAILS	PERFORMANCE		REFERENCE NUMBER			NOTES	REC. HOURS
			LOAD	TIME	PRE-BMS-92	BMS-92	POST-BMS-92		
W-4-Me-6	$4^1/_2$″	Core: lightweight steel studs 3″ in depth; Facings: both sides $^3/_4$″ thick neat gypsum plaster on metal lath.	See Note 4	1 hr. 30 min.		1		5	$1^1/_2$
W-4-Me-7	$4^1/_2$″	Core: lightweight steel studs 3″ in depth; Facings: both sides $^3/_4$″ thick sanded gypsum plaster, 1:2 scratch and brown coats applied on metal lath.	See Note 4	1 hr.		1		5	1
W-4-Me-8	$4^3/_4$″	Core: lightweight steel studs 3″ in depth; Facings: both sides $^7/_8$″ thick sanded gypsum plaster, 1:2 scratch coat, 1:3 brown coat, applied on metal lath.	See Note 4	1 hr.		1		5	1
W-4-Me-9	$4^3/_4$″	Core: lightweight steel studs 3″ in depth; Facings: both sides $^7/_8$″ thick sanded gypsum plaster, 1:2 scratch and 1:3 brown coats applied on metal lath.	See Note 4	1 hr. 15 min.		1		5	$1^1/_4$
W-5-Me-10	5″	Core: lightweight steel studs 3″ in depth; Facings: both sides 1″ thick neat gypsum plaster on metal lath.	See Note 4	2 hrs.		1		5	2
W-5-Me-11	5″	Core: lightweight steel studs 3″ in depth; Facings: both sides 1″ thick neat gypsum plaster on metal lath.	See Note 4	2 hrs. 30 min.		1		5, 6	$2^1/_2$

For SI: 1 inch = 25.4 mm, 1 pound per square inch = 0.00689 MPa.

Notes:

1. Failure mode—local back face temperature rise.
2. Ratings are for any usual type of nonbearing metal framing providing a minimum 2 inches air space.
3. Facing materials secured to lightweight steel studs not less than 3 inches deep.
4. Rating based on loading to develop a maximum stress of 7270 psi for net area of each stud.
5. Spacing of steel studs must be sufficient to develop adequate rigidity in the metal-lath or gypsum-plaster base.
6. As per Note 4 but load/stud not to exceed 5120 psi.

General Note:

The construction details of the wall assemblies are as complete as the source documentation will permit. Data on the method of attachment of facings and the gauge of steel studs was provided when known. The cross sectional area of the steel stud can be computed, thereby permitting a reasoned estimate of actual loading conditions. For load-bearing assemblies, the maximum allowable stress for the steel studs has been provided in the table "Notes." More often, it is the thermal properties of the facing materials, rather than the specific gauge of the steel, that will determine the degree of fire resistance. This is particularly true for nonbearing wall assemblies.

INTERNATIONAL CODE COUNCIL®
Copyright © 2019 ICC & NYSDOS. ALL RIGHTS RESERVED. Accessed by Lauren Gualdino (lgualdino@briarcliffmanor.org), (-) Order Number #100880972 on May 08, 2020 07:05 AM (PDT) pursuant to License Agreement with ICC & NYSDOS. No further reproduction, no

100880972

TABLE 1.2.3
METAL FRAME WALLS
6″ TO LESS THAN 8″ THICK

ITEM CODE	THICKNESS	CONSTRUCTION DETAILS	PERFORMANCE		REFERENCE NUMBER			NOTES	REC HOURS
			LOAD	TIME	PRE-BMS-92	BMS-92	POST-BMS-92		
W-6-Me-1	$6^{5}/_{8}$″	On one side of 1″ magnesium oxysulfate wood fiberboard sheathing attached to steel studs (see Notes 1 and 2), 1″ air space, $3^{3}/_{4}$″ brick secured with metal ties to steel frame every fifth course; Inside facing of $^{7}/_{8}$″ 1:2 sanded gypsum plaster on metal lath secured directly to studs; Plaster side exposed to fire.	See Note 2	1 hr. 45 min.		1		1	$1^{3}/_{4}$
W-6-Me-2	$6^{5}/_{8}$″	On one side of 1″ magnesium oxysulfate wood fiberboard sheathing attached to steel studs (see Notes 1 and 2), 1″ air space, $3^{3}/_{4}$″ brick secured with metal ties to steel frame every fifth course; Inside facing of $^{7}/_{8}$″ 1:2 sanded gypsum plaster on metal lath secured directly to studs; Brick face exposed to fire.	See Note 2	4 hrs.		1		1	4
W-6-Me-3	$6^{5}/_{8}$″	On one side of 1″ magnesium oxysulfate wood fiberboard sheathing attached to steel studs (see Notes 1 and 2), 1″ air space, $3^{3}/_{4}$″ brick secured with metal ties to steel frame every fifth course; Inside facing of $^{7}/_{8}$″ vermiculite plaster on metal lath secured directly to studs; Plaster side exposed to fire.	See Note 2	2 hrs.		1		1	2

For SI: 1 inch = 25.4 mm, 1 pound per square inch = 0.00689 MPa.

Notes:

1. Lightweight steel studs (minimum 3 inches deep) used. Stud spacing dependent on loading, but in each case, spacing is to be such that adequate rigidity is provided to the metal lath plaster base.
2. Load is such that stress developed in studs is not greater than 5120 psi calculated from net stud area.

General Note:

The construction details of the wall assemblies are as complete as the source documentation will permit. Data on the method of attachment of facings and the gauge of steel studs was provided when known. The cross sectional area of the steel stud can be computed, thereby permitting a reasoned estimate of actual loading conditions. For load-bearing assemblies, the maximum allowable stress for the steel studs has been provided in the table "Notes." More often, it is the thermal properties of the facing materials, rather than the specific gauge of the steel, that will determine the degree of fire resistance. This is particularly true for nonbearing wall assemblies.

INTERNATIONAL CODE COUNCIL®
Copyright © 2019 ICC & NYSDOS. ALL RIGHTS RESERVED. Accessed by Lauren Gualdino (lgualdino@briarcliffmanor.org), (-) Order Number #100880972 on May 08, 2020 07:05 AM (PDT) pursuant to License Agreement with ICC & NYSDOS. No further reproduction, no

100880972

TABLE 1.2.4
METAL FRAME WALLS
8″ TO LESS THAN 10″ THICK

ITEM CODE	THICKNESS	CONSTRUCTION DETAILS	PERFORMANCE		REFERENCE NUMBER			NOTES	REC. HOURS
			LOAD	TIME	PRE-BMS-92	BMS-92	POST-BMS-92		
W-9-Me-1	$9^{1}/_{16}$″	On one side of $^{1}/_{2}$″ wood fiberboard sheathing next to studs, $^{3}/_{4}$″ air space formed with $^{3}/_{4}$″ × $1^{5}/_{8}$″ wood strips placed over the fiberboard and secured to the studs, paper backed wire lath nailed to strips $3^{3}/_{4}$″ brick veneer held in place by filling a $^{3}/_{4}$″ space between the brick and paper backed lath with mortar; Inside facing of $^{3}/_{4}$″ neat gypsum plaster on metal lath attached to $^{5}/_{16}$″ plywood strips secured to edges of steel studs; Rated as combustible because of the sheathing; See Notes 1 and 2; Plaster exposed.	See Note 2	1 hr. 45 min.		1		1	$1^{3}/_{4}$
W-9-Me-2	$9^{1}/_{16}$″	Same as above with brick exposed.	See Note 2	4 hrs.		1		1	4
W-8-Me-3	$8^{1}/_{2}$″	On one side of paper backed wire lath attached to studs and $3^{3}/_{4}$″ brick veneer held in place by filling a 1″ space between the brick and lath with mortar; Inside facing of 1″ paper-enclosed mineral wool blanket weighing 0.6 lb./ft.^{2} attached to studs, metal lath or paper backed wire lath laid over the blanket and attached to the studs, $^{3}/_{4}$″ sanded gypsum plaster 1:2 for the scratch coat and 1:3 for the brown coat; See Notes 1 and 2; Plaster face exposed.	See Note 2	4 hrs.		1		1	4
W-8-Me-4	$8^{1}/_{2}$″	Same as above with brick exposed.	See Note 2	5 hrs.		1		1	5

For SI: 1 inch = 25.4 mm, 1 pound per square inch = 0.00689 MPa.

Notes:

1. Lightweight steel studs ≥ 3 inches in depth. Stud spacing dependent on loading, but in any case, the spacing is to be such that adequate rigidity is provided to the metal-lath plaster base.
2. Load is such that stress developed in studs is ≤ 5120 psi calculated from the net area of the stud.

General Note:

The construction details of the wall assemblies are as complete as the source documentation will permit. Data on the method of attachment of facings and the gauge of steel studs was provided when known. The cross sectional area of the steel stud can be computed, thereby permitting a reasoned estimate of actual loading conditions. For load-bearing assemblies, the maximum allowable stress for the steel studs has been provided in the table "Notes." More often, it is the thermal properties of the facing materials, rather than the specific gauge of the steel, that will determine the degree of fire resistance. This is particularly true for nonbearing wall assemblies.

INTERNATIONAL CODE COUNCIL®
Copyright © 2019 ICC & NYSDOS. ALL RIGHTS RESERVED. Accessed by Lauren Gualdino (lgualdino@briarcliffmanor.org), (-) Order Number #100880972 on May 08, 2020 07:05 AM (PDT) pursuant to License Agreement with ICC & NYSDOS. No further reproduction, no

100880972

TABLE 1.3.1
WOOD FRAME WALLS
0″ TO LESS THAN 4″ THICK

ITEM CODE	THICKNESS	CONSTRUCTION DETAILS	PERFORMANCE		REFERENCE NUMBER			NOTES	REC. HOURS
			LOAD	TIME	PRE-BMS-92	BMS-92	POST-BMS-92		
W-3-W-1	$3\frac{3}{4}$″	Solid wall: $2\frac{1}{4}$″ wood-wool slab core; $\frac{3}{4}$″ gypsum plaster each side.	N/A	2 hrs.			7	1, 6	2
W-3-W-2	$3\frac{7}{8}$″	2 × 4 stud wall; $\frac{3}{16}$″ thick cement asbestos board on both sides of wall.	360 psi net area	10 min.		1		2-5	$\frac{1}{6}$
W-3-W-3	$3\frac{7}{8}$″	Same as W-3-W-2 but stud cavities filled with 1 lb./ft.^{2} mineral wool batts.	360 psi net area	40 min.		1		2-5	$\frac{2}{3}$

For SI: 1 inch = 25.4 mm, 1 pound per square inch = 0.00689 MPa.

Notes:

1. Achieved “Grade C” fire resistance (British).
2. Nominal 2 × 4 wood studs of No. 1 common or better lumber set edgewise, 2 × 4 plates at top and bottom and blocking at mid height of wall.
3. All horizontal joints in facing material backed by 2 × 4 blocking in wall.
4. Load: 360 psi of net stud cross sectional area.
5. Facings secured with 6d casing nails. Nail holes predrilled and 0.02 inch to 0.03 inch smaller than nail diameter.
6. The wood-wool core is a pressed excelsior slab which possesses insulating properties similar to cellulosic insulation.

INTERNATIONAL CODE COUNCIL®
Copyright © 2019 ICC & NYSDOS. ALL RIGHTS RESERVED. Accessed by Lauren Gualdino (lgualdino@briarcliffmanor.org), (-) Order Number #100880972 on May 08, 2020 07:05 AM (PDT) pursuant to License Agreement with ICC & NYSDOS. No further reproduction, no

100880972

FIGURE 1.3.2
WOOD FRAME WALLS
4″ TO LESS THAN 6″ THICK

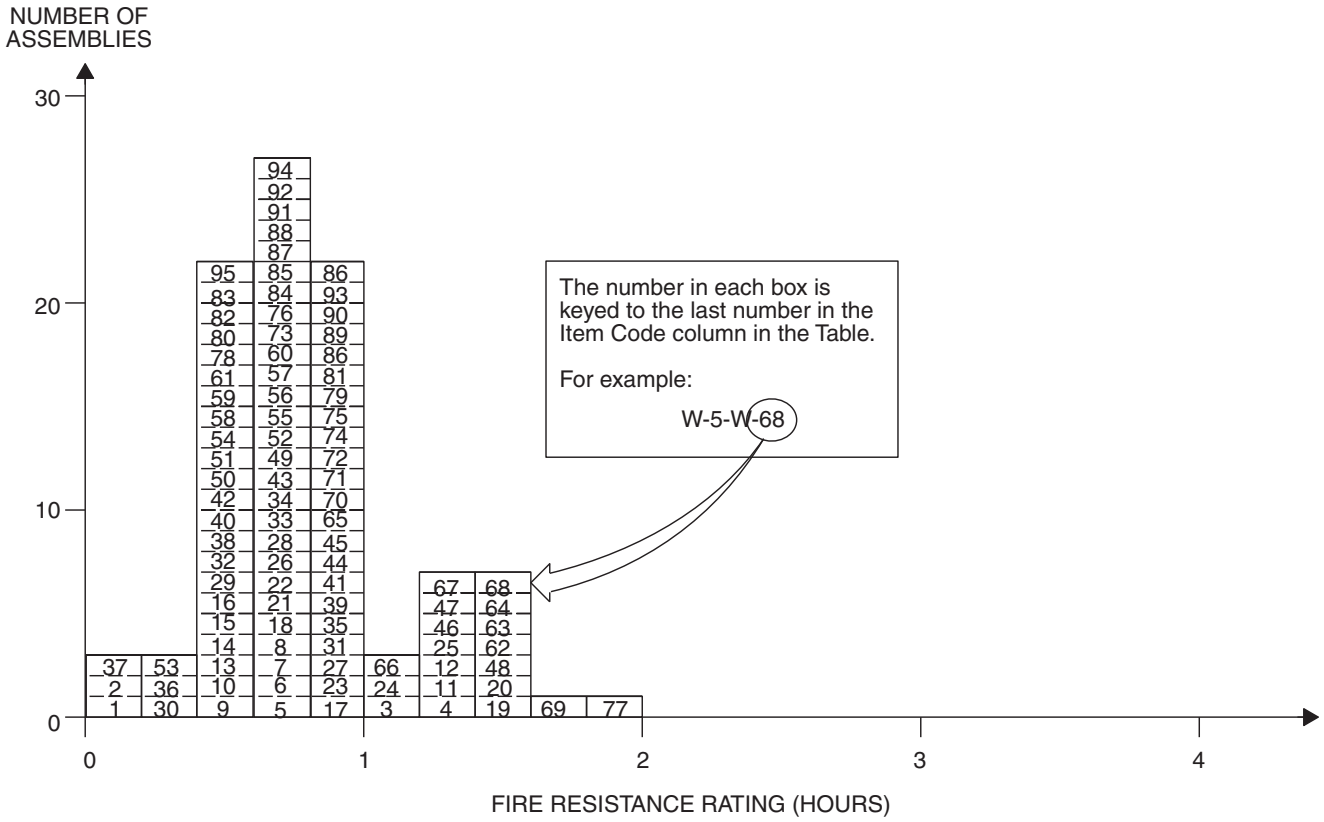

TABLE 1.3.2
WOOD FRAME WALLS
4″ TO LESS THAN 6″ THICK

ITEM CODE	THICKNESS	CONSTRUCTION DETAILS	PERFORMANCE		REFERENCE NUMBER			NOTES	REC. HOURS
			LOAD	TIME	PRE-BMS-92	BMS-92	POST-BMS-92		
W-4-W-1	4″	2″ × 4″ stud wall; $^{3}/_{16}$″ CAB; no insulation; Design A.	35 min.	10 min.			4	1-10	$^{1}/_{6}$
W-4-W-2	$4^{1}/_{8}$″	2″ × 4″ stud wall; $^{3}/_{16}$″ CAB; no insulation; Design A.	38 min.	9 min.			4	1-10	$^{1}/_{6}$
W-4-W-3	$4^{3}/_{4}$″	2″ × 4″ stud wall; $^{3}/_{16}$″ CAB and $^{3}/_{8}$″ gypsum board face (both sides); Design B.	62 min.	64 min.			4	1-10	1
W-5-W-4	5″	2″ × 4″ stud wall; $^{3}/_{16}$″ CAB and $^{1}/_{2}$″ gypsum board (both sides); Design B.	79 min.	Greater than 90 min.			4	1-10	1
W-4-W-5	$4^{3}/_{4}$″	2″ × 4″ stud wall; $^{3}/_{16}$″ CAB and $^{3}/_{8}$″ gypsum board (both sides); Design B.	45 min.	45 min.			4	1-12	—
W-5-W-6	5″	2″ × 4″ stud wall; $^{3}/_{16}$″ CAB and $^{1}/_{2}$″ gypsum board face (both sides); Design B.	45 min.	45 min.			4	1-10, 12, 13	—
W-4-W-7	4″	2″ × 4″ stud wall; $^{3}/_{16}$″ CAB face; $3^{1}/_{2}$″ mineral wool insulation; Design C.	40 min.	42 min.			4	1-10	$^{2}/_{3}$
W-4-W-8	4″	2″ × 4″ stud wall; $^{3}/_{16}$″ CAB face; $3^{1}/_{2}$″ mineral wool insulation; Design C.	46 min.	46 min.			4	1-10, 43	$^{2}/_{3}$
W-4-W-9	4″	2″ × 4″ stud wall; $^{3}/_{16}$″ CAB face; $3^{1}/_{2}$″ mineral wool insulation; Design C.	30 min.	30 min.			4	1-10, 12, 14	—

(continued)

INTERNATIONAL CODE COUNCIL®
Copyright © 2019 ICC & NYSDOS. ALL RIGHTS RESERVED. Accessed by Lauren Gualdino (lgualdino@briarcliffmanor.org), (-) Order Number #100880972 on May 08, 2020 07:05 AM (PDT) pursuant to License Agreement with ICC & NYSDOS. No further reproduction, no

100880972

TABLE 1.3.2—continued
WOOD FRAME WALLS
4″ TO LESS THAN 6″ THICK

ITEM CODE	THICKNESS	CONSTRUCTION DETAILS	PERFORMANCE		REFERENCE NUMBER			NOTES	REC. HOURS
			LOAD	TIME	PRE-BMS-92	BMS-92	POST-BMS-92		
W-4-W-10	$4^{1}/_{8}$″	2″ × 4″ stud wall; $^{3}/_{16}$″ CAB face; $3^{1}/_{2}$″ mineral wool insulation; Design C.	—	30 min.			4	1-8, 12, 14	—
W-4-W-11	$4^{3}/_{4}$″	2″ × 4″ stud wall; $^{3}/_{16}$″ CAB face; $^{3}/_{8}$″ gypsum strips over studs; $5^{1}/_{2}$″ mineral wool insulation; Design D.	79 min.	79 min.			4	1-10	1
W-4-W-12	$4^{3}/_{4}$″	2″ × 4″ stud wall; $^{3}/_{16}$″ CAB face; $^{3}/_{8}$″ gypsum strips at stud edges; $7^{1}/_{2}$″ mineral wool insulation; Design D.	82 min.	82 min.			4	1-10	1
W-4-W-13	$4^{3}/_{4}$″	2″ × 4″ stud wall; $^{3}/_{16}$″ CAB face; $^{3}/_{8}$″ gypsum board strips over studs; $5^{1}/_{2}$″ mineral wool insulation; Design D.	30 min.	30 min.			4	1-12	—
W-4-W-14	$4^{3}/_{4}$″	2″ × 4″ stud wall; $^{3}/_{16}$″ CAB face; $^{3}/_{8}$″ gypsum board strips over studs; 7″ mineral wool insulation; Design D.	30 min.	30 min.			4	1-12	—
W-5-W-15	$5^{1}/_{2}$″	2″ × 4″ stud wall; Exposed face: CAB shingles over 1″ × 6″; Unexposed face: $^{1}/_{8}$″ CAB sheet; $^{7}/_{16}$″ fiberboard (wood); Design E.	34 min.	—			4	1-10	$^{1}/_{2}$
W-5-W-16	$5^{1}/_{2}$″	2″ × 4″ stud wall; Exposed face: $^{1}/_{8}$″ CAB sheet; $^{7}/_{16}$″ fiberboard; Unexposed face: CAB shingles over 1″ × 6″; Design E.	32 min.	33 min.			4	1-10	$^{1}/_{2}$
W-5-W-17	$5^{1}/_{2}$″	2″ × 4″ stud wall; Exposed face: CAB shingles over 1″ × 6″; Unexposed face: $^{1}/_{8}$″ CAB sheet; gypsum at stud edges; $3^{1}/_{2}$″ mineral wood insulation; Design F.	51 min.	—			4	1-10	$^{3}/_{4}$
W-5-W-18	$5^{1}/_{2}$″	2″ × 4″ stud wall; Exposed face: $^{1}/_{8}$″ CAB sheet; gypsum board at stud edges; Unexposed face: CAB shingles over 1″ × 6″; $3^{1}/_{2}$″ mineral wool insulation; Design F.	42 min.	—			4	1-10	$^{2}/_{3}$
W-5-W-19	$5^{5}/_{8}$″	2″ × 4″ stud wall; Exposed face: CAB shingles over 1″ × 6″; Unexposed face: $^{1}/_{8}$″ CAB sheet; gypsum board at stud edges; $5^{1}/_{2}$″ mineral wool insulation; Design G.	74 min.	85 min.			4	1-10	1
W-5-W-20	$5^{5}/_{8}$″	2″ × 4″ stud wall; Exposed face: $^{1}/_{8}$″ CAB sheet; gypsum board at $^{3}/_{16}$″ stud edges; $^{7}/_{16}$″ fiberboard; Unexposed face: CAB shingles over 1″ × 6″; $5^{1}/_{2}$″ mineral wool insulation; Design G.	79 min.	85 min.			4	1-10	$1^{1}/_{4}$
W-5-W-21	$5^{5}/_{8}$″	2″ × 4″ stud wall; Exposed face: CAB shingles 1″ × 6″ sheathing; Unexposed face: CAB sheet; gypsum board at stud edges; $5^{1}/_{2}$″ mineral wool insulation; Design G.	38 min.	38 min.			4	1-10, 12, 14	—
W-5-W-22	$5^{5}/_{8}$″	2″ × 4″ stud wall; Exposed face: CAB sheet; gypsum board at stud edges; Unexposed face: CAB shingles 1″ × 6″ sheathing; $5^{1}/_{2}$″ mineral wool insulation; Design G.	38 min.	38 min.			4	1-12	—
W-6-W-23	6″	2″ × 4″ stud wall; 16″ o.c.; $^{1}/_{2}$″ gypsum board each side; $^{1}/_{2}$″ gypsum plaster each side.	N/A	60 min.			7	15	1

(continued)

INTERNATIONAL CODE COUNCIL®
Copyright © 2019 ICC & NYSDOS. ALL RIGHTS RESERVED. Accessed by Lauren Gualdino (lgualdino@briarcliffmanor.org), (-) Order Number #100880972 on May 08, 2020 07:05 AM (PDT) pursuant to License Agreement with ICC & NYSDOS. No further reproduction, no

100880972

TABLE 1.3.2—continued
WOOD FRAME WALLS
4″ TO LESS THAN 6″ THICK.

ITEM CODE	THICKNESS	CONSTRUCTION DETAILS	PERFORMANCE		REFERENCE NUMBER			NOTES	REC. HOURS
			LOAD	TIME	PRE-BMS-92	BMS-92	POST-BMS-92		
W-6-W-24	6″	2″ × 4″ stud wall; 16″ o.c.; 1/2″ gypsum board each side; 1/2″ gypsum plaster each side.	N/A	68 min.			7	16	1
W-6-W-25	6 7/8″	2″ × 4″ stud wall; 18″ o.c.; 3/4″ gypsum plank each side; 3/16″ gypsum plaster each side.	N/A	80 min.			7	15	1 1/3
W-5-W-26	5 1/8″	2″ × 4″ stud wall; 16″ o.c.; 3/8″ gypsum board each side; 3/16″ gypsum plaster each side.	N/A	37 min.			7	15	1/2
W-5-W-27	5 3/4″	2″ × 4″ stud wall; 16″ o.c.; 3/8″ gypsum lath each side; 1/2″ gypsum plaster each side.	N/A	52 min.			7	15	3/4
W-5-W-28	5″	2″ × 4″ stud wall; 16″ o.c.; 1/2″ gypsum board each side.	N/A	37 min.			7	16	1/2
W-5-W-29	5″	2″ × 4″ stud wall; 1/2″ fiberboard both sides 14% M.C. with F.R. paint at 35 gm./ft.^{2}.	N/A	28 min.			7	15	1/3
W-4-W-30	4 3/4″	2″ × 4″ stud wall; Fire side: 1/2″ (wood) fiberboard; Back side: 1/4″ CAB; 16″ o.c.	N/A	17 min.			7	15, 16	1/4
W-5-W-31	5 1/8″	2″ × 4″ stud wall; 16″ o.c.; 1/2″ fiberboard insulation with 1/32″ asbestos (both sides of each board).	N/A	50 min.			7	16	3/4
W-4-W-32	4 1/4″	2″ × 4″ stud wall; 3/8″ thick gypsum wallboard on both faces; insulated cavities.	See Note 23	25 min.		1		17, 18, 23	1/3
W-4-W-33	4 1/2″	2″ × 4″ stud wall; 1/2″ thick gypsum wallboard on both faces.	See Note 17	40 min.		1		17, 23	1/3
W-4-W-34	4 1/2″	2″ × 4″ stud wall; 1/2″ thick gypsum wallboard on both faces; insulated cavities.	See Note 17	45 min.		1		17, 18, 23	3/4
W-4-W-35	4 1/2″	2″ × 4″ stud wall; 1/2″ thick gypsum wallboard on both faces; insulated cavities.	N/A	1 hr.		1		17, 18, 24	1
W-4-W-36	4 1/2″	2″ × 4″ stud wall; 1/2″ thick, 1.1 lbs./ft.^{2} wood fiberboard sheathing on both faces.	See Note 23	15 min.		1		17, 23	1/4
W-4-W-37	4 1/2″	2″ × 4″ stud wall; 1/2″ thick, 0.7 lb./ft.^{2} wood fiberboard sheathing on both faces.	See Note 23	10 min.		1		17, 23	1/6
W-4-W-38	4 1/2″	2″ × 4″ stud wall; 1/2″ thick, flameproofed 1.6 lbs./ft.^{2} wood fiberboard sheathing on both faces.	See Note 23	30 min.		1		17, 23	1/2
W-4-W-39	4 1/2″	2″ × 4″ stud wall; 1/2″ thick gypsum wallboard on both faces; insulated cavities.	See Note 23	1 hr.		1		17, 18, 23	1
W-4-W-40	4 1/2″	2″ × 4″ stud wall; 1/2″ thick, 1:2; 1:3 gypsum plaster on wood lath on both faces.	See Note 23	30 min.		1		17, 21, 23	1/2
W-4-W-41	4 1/2″	2″ × 4″ stud wall; 1/2″, 1:2; 1:3 gypsum plaster on wood lath on both faces; insulated cavities.	See Note 23	1 hr.		1		17, 18, 21, 24	1

(continued)

INTERNATIONAL CODE COUNCIL®
Copyright © 2019 ICC & NYSDOS. ALL RIGHTS RESERVED. Accessed by Lauren Gualdino (lgualdino@briarcliffmanor.org), (-) Order Number #100880972 on May 08, 2020 07:05 AM (PDT) pursuant to License Agreement with ICC & NYSDOS. No further reproduction, no

100880972

TABLE 1.3.2—continued
WOOD FRAME WALLS
4″ TO LESS THAN 6″ THICK

ITEM CODE	THICKNESS	CONSTRUCTION DETAILS	PERFORMANCE		REFERENCE NUMBER			NOTES	REC. HOURS
			LOAD	TIME	PRE-BMS-92	BMS-92	POST-BMS-92		
W-4-W-42	4 1/2″	2″ × 4″ stud wall; 1/2″, 1:5; 1:7.5 lime plaster on wood lath on both wall faces.	See Note 23	30 min.		1		17, 21, 23	1/2
W-4-W-43	4 1/2″	2″ × 4″ stud wall; 1/2″ thick 1:5; 1:7.5 lime plaster on wood lath on both faces; insulated cavities.	See Note 23	45 min.		1		17, 18, 21, 23	3/4
W-4-W-44	4 5/8″	2″ × 4″ stud wall; 3/16″ thick cement-asbestos over 3/8″ thick gypsum board on both faces.	See Note 23	1 hr.		1		23, 25, 26, 27	1
W-4-W-45	4 5/8″	2″ × 4″ stud wall; studs faced with 4″ wide strips of 3/8″ thick gypsum board; 3/16″ thick gypsum cement-asbestos board on both faces; insulated cavities.	See Note 23	1 hr.		1		23, 25, 27, 28	1
W-4-W-46	4 5/8″	Same as W-4-W-45 but nonload bearing.	N/A	1 hr. 15 min.		1		24, 28	1 1/4
W-4-W-47	4 7/8″	2″ × 4″ stud wall; 3/16″ thick cement-asbestos board over 1/2″ thick gypsum sheathing on both faces.	See Note 23	1 hr. 15 min.		1		23, 25, 26, 27	1 1/4
W-4-W-48	4 7/8″	Same as W-4-W-47 but nonload bearing.	N/A	1 hr. 30 min.		1		24, 27	1 1/2
W-5-W-49	5″	2″ × 4″ stud wall; Exterior face: 3/4″ wood sheathing; asbestos felt 14 lbs./100 ft.^{2} and 5/32″ cement-asbestos shingles; Interior face: 4″ wide strips of 3/8″ gypsum board over studs; wall faced with 3/16″ thick cement-asbestos board.	See Note 23	40 min.		1		18, 23, 25, 26, 29	2/3
W-5-W-50	5″	2″ × 4″ stud wall; Exterior face: as per W-5-W-49; Interior face: 9/16″ composite board consisting of 7/16″ thick wood fiberboard faced with 1/8″ thick cement-asbestos board; Exterior side exposed to fire.	See Note 23	30 min.		1		23, 25, 26, 30	1/2
W-5-W-51	5″	Same as W-5-W-50 but interior side exposed to fire.	See Note 23	30 min.		1		23, 25, 26	1/2
W-5-W-52	5″	Same as W-5-W-49 but exterior side exposed to fire.	See Note 23	45 min.		1		18, 23, 25, 26	3/4
W-5-W-53	5″	2″ × 4″ stud wall; 3/4″ thick T&G wood boards on both sides.	See Note 23	20 min.		1		17, 23	1/3
W-5-W-54	5″	Same as W-5-W-53 but with insulated cavities.	See Note 23	35 min.		1		17, 18, 23	1/2
W-5-W-55	5″	2″ × 4″ stud wall; 3/4″ thick T&G wood boards on both sides with 30 lbs./100 ft.^{2} asbestos; paper, between studs and boards.	See Note 23	45 min.		1		17, 23	3/4
W-5-W-56	5″	2″ × 4″ stud wall; 1/2″ thick, 1:2; 1:3 gypsum plaster on metal lath on both sides of wall.	See Note 23	45 min.		1		17, 21, 34	3/4

(continued)

INTERNATIONAL CODE COUNCIL®
Copyright © 2019 ICC & NYSDOS. ALL RIGHTS RESERVED. Accessed by Lauren Gualdino (lgualdino@briarcliffmanor.org), (-) Order Number #100880972 on May 08, 2020 07:05 AM (PDT) pursuant to License Agreement with ICC & NYSDOS. No further reproduction, no

100880972

TABLE 1.3.2—continued
WOOD FRAME WALLS
4″ TO LESS THAN 6″ THICK

ITEM CODE	THICKNESS	CONSTRUCTION DETAILS	PERFORMANCE		REFERENCE NUMBER			NOTES	REC. HOURS
			LOAD	TIME	PRE-BMS-92	BMS-92	POST-BMS-92		
W-5-W-57	5″	2″ × 4″ stud wall; 3/4″ thick 2:1:8; 2:1:12 lime and Keene's cement plaster over metal lath on both sides of wall.	See Note 23	45 min.		1		17, 21, 23	1/2
W-5-W-58	5″	2″ × 4″ stud wall; 3/4″ thick 2:1:8; 2:1:10 lime Portland cement plaster over metal lath on both sides of wall.	See Note 23	30 min.		1		17, 21, 23	1/2
W-5-W-59	5″	2″ × 4″ stud wall; 3/4″ thick 1:5; 1:7.5 lime plaster on metal lath on both sides of wall.	See Note 23	30 min.		1		17, 21, 23	1/2
W-5-W-60	5″	2″ × 4″ stud wall; 3/4″ thick 1:1/30:2; 1:1/30: 3 Portland cement, asbestos fiber plaster on metal lath on both sides of wall.	See Note 23	45 min.		1		17, 21, 23	3/4
W-5-W-61	5″	2″ × 4″ stud wall; 3/4″ thick 1:2; 1:3 Portland cement plaster on metal lath on both sides of wall.	See Note 23	30 min.		1		17, 21, 23	1/2
W-5-W-62	5″	2″ × 4″ stud wall; 3/4″ thick neat gypsum plaster on metal lath on both sides of wall.	N/A	1 hr. 30 min.		1		17, 22, 24	1 1/2
W-5-W-63	5″	2″ × 4″ stud wall; 3/4″ thick neat gypsum plaster on metal lath on both sides of wall.	See Note 23	1 hr. 30 min.		1		17, 21, 23	1 1/2
W-5-W-64	5″	2″ × 4″ stud wall; 3/4″ thick 1:2; 1:2 gypsum plaster on metal lath on both sides of wall; insulated cavities.	See Note 23	1 hr. 30 min.		1		17, 18, 21, 23	1 1/2
W-5-W-65	5″	2″ × 4″ stud wall; same as W-5-W-64 but cavities not insulated.	See Note 23	1 hr.		1		17, 21, 23	1
W-5-W-66	5″	2″ × 4″ stud wall; 3/4″ thick 1:2; 1:3 gypsum plaster on metal lath on both sides of wall; insulated cavities.	See Note 23	1 hr. 15 min.		1		17, 18, 21, 23	1 1/4
W-5-W-67	5 1/16″	Same as W-5-W-49 except cavity insulation of 1.75 lbs./ft.^{2} mineral wool bats; rating applies when either wall side exposed to fire.	See Note 23	1 hr. 15 min.		1		23, 26, 25	1 1/4
W-5-W-68	5 1/4″	2″ × 4″ stud wall, 7/8″ thick 1:2; 1:3 gypsum plaster on metal lath on both sides of wall; insulated cavities.	See Note 23	1 hr. 30 min.		1		17, 18, 21, 23	1 1/2
W-5-W-69	5 1/4″	2″ × 4″ stud wall; 7/8″ thick neat gypsum plaster applied on metal lath on both sides of wall.	N/A	1 hr. 45 min.		1		17, 22, 24	1 3/4
W-5-W-70	5 1/4″	2″ × 4″ stud wall; 1/2″ thick neat gypsum plaster on 3/8″ plain gypsum lath on both sides of wall.	See Note 23	1 hr.		1		17, 22, 23	1
W-5-W-71	5 1/4″	2″ × 4″ stud wall; 1/2″ thick of 1:2; 1:2 gypsum plaster on 3/8″ thick plain gypsum lath with 1 3/4″ × 1 3/4″ metal lath pads nailed 8″ o.c. vertically and 16″ o.c. horizontally on both sides of wall.	See Note 23	1 hr.		1		17, 21, 23	1
W-5-W-72	5 1/4″	2″ × 4″ stud wall; 1/2″ thick of 1:2; 1:2 gypsum plaster on 3/8″ perforated gypsum lath, one 3/4″ diameter hole or larger per 16″ square of lath surface, on both sides of wall.	See Note 23	1 hr.		1		17, 21, 23	1

(continued)

INTERNATIONAL CODE COUNCIL®
Copyright © 2019 ICC & NYSDOS. ALL RIGHTS RESERVED. Accessed by Lauren Gualdino (lgualdino@briarcliffmanor.org), (-) Order Number #100880972 on May 08, 2020 07:05 AM (PDT) pursuant to License Agreement with ICC & NYSDOS. No further reproduction, no

100880972

TABLE 1.3.2—continued
WOOD FRAME WALLS
4″ TO LESS THAN 6″ THICK

ITEM CODE	THICKNESS	CONSTRUCTION DETAILS	PERFORMANCE		REFERENCE NUMBER			NOTES	REC. HOURS
			LOAD	TIME	PRE-BMS-92	BMS-92	POST-BMS-92		
W-5-W-73	5 1/4″	2″ × 4″ stud wall; 1/2″ thick of 1:2; 1:2 gypsum plaster on 3/8″ gypsum lath (plain, indented or perforated) on both sides of wall.	See Note 23	45 min.		1		17, 21, 23	3/4
W-5-W-74	5 1/4″	2″ × 4″ stud wall; 7/8″ thick of 1:2; 1:3 gypsum plaster over metal lath on both sides of wall.	See Note 23	1 hr.		1		17, 21, 23	1
W-5-W-75	5 1/4″	2″ × 4″ stud wall; 7/8″ thick of 1:1/30:2; 1:1/30:3 Portland cement, asbestos plaster applied over metal lath on both sides of wall.	See Note 23	1 hr.		1		17, 21, 23	1
W-5-W-76	5 1/4″	2″ × 4″ stud wall; 7/8″ thick of 1:2; 1:3 Portland cement plaster over metal lath on both sides of wall.	See Note 23	45 min.		1		17, 21, 23	3/4
W-5-W-77	5 1/2″	2″ × 4″ stud wall; 1″ thick neat gypsum plaster over metal lath on both sides of wall; nonload bearing.	N/A	2 hrs.		1		17, 22, 24	2
W-5-W-78	5 1/2″	2″ × 4″ stud wall; 1/2″ thick of 1:2; 1:2 gypsum plaster on 1/2″ thick, 0.7 lb./ft.^{2} wood fiberboard on both sides of wall.	See Note 23	35 min.		1		17, 21, 23	1/2
W-4-W-79	4 3/4″	2″ × 4″ wood stud wall; 1/2″ thick of 1:2; 1:2 gypsum plaster over wood lath on both sides of wall; mineral wool insulation.	N/A	1 hr.			43	21, 31, 35, 38	1
W-4-W-80	4 3/4″	Same as W-4-W-79 but uninsulated.	N/A	35 min.			43	21, 31, 35	1/2
W-4-W-81	4 3/4″	2″ × 4″ wood stud wall; 1/2″ thick of 3:1:8; 3:1:12 lime, Keene's cement, sand plaster over wood lath on both sides of wall; mineral wool insulation.	N/A	1 hr.			43	21, 31, 35, 40	1
W-4-W-82	4 3/4″	2″ × 4″ wood stud wall; 1/2″ thick of 1:6 1/4; 1:6 1/4 lime Keene's cement plaster over wood lath on both sides of wall; mineral wool insulation.	N/A	30 min.			43	21, 31, 35, 40	1/2
W-4-W-83	4 3/4″	2″ × 4″ wood stud wall; 1/2″ thick of 1:5; 1:7.5 lime plaster over wood lath on both sides of wall.	N/A	30 min.			43	21, 31, 35	1/2
W-5-W-84	5 1/8″	2″ × 4″ wood stud wall; 11/16″ thick of 1:5; 1:7.5 lime plaster over wood lath on both sides of wall; mineral wool insulation.	N/A	45 min.			43	21, 31, 35, 39	3/4
W-5-W-85	5 1/4″	2″ × 4″ wood stud wall; 3/4 ″thick of 1:5; 1:7 lime plaster over wood lath on both sides of wall; mineral wool insulation.	N/A	40 min.			43	21, 31, 35, 40	2/3
W-5-W-86	5 1/4″	2″ × 4″ wood stud wall; 1/2″ thick of 2:1:12 lime, Keene's cement and sand scratch coat; 1/2″ thick 2:1:18 lime, Keene's cement and sand brown coat over wood lath on both sides of wall; mineral wool insulation.	N/A	1 hr.			43	21, 31, 35, 40	1
W-5-W-87	5 1/4″	2″ × 4″ wood stud wall; 1/2″ thick of 1:2; 1:2 gypsum plaster over 3/8″ plaster board on both sides of wall.	N/A	45 min.			43	21, 31	3/4

(continued)

INTERNATIONAL CODE COUNCIL®
Copyright © 2019 ICC & NYSDOS. ALL RIGHTS RESERVED. Accessed by Lauren Gualdino (lgualdino@briarcliffmanor.org), (-) Order Number #100880972 on May 08, 2020 07:05 AM (PDT) pursuant to License Agreement with ICC & NYSDOS. No further reproduction, no

100880972

TABLE 1.3.2—continued
WOOD FRAME WALLS
4″ TO LESS THAN 6″ THICK

ITEM CODE	THICKNESS	CONSTRUCTION DETAILS	PERFORMANCE		REFERENCE NUMBER			NOTES	REC. HOURS
			LOAD	TIME	PRE-BMS-92	BMS-92	POST-BMS-92		
W-5-W-88	$5^1/_4$″	2″ × 4″ wood stud wall; $^1/_2$″ thick of 1:2; 1:2 gypsum plaster over $^3/_8$″ gypsum lath on both sides of wall.	N/A	45 min.			43	21, 31	$^3/_4$
W-5-W-89	$5^1/_4$″	2″ × 4″ wood stud wall; $^1/_2$″ thick of 1:2; 1:2 gypsum plaster over $^3/_8$″ gypsum lath on both sides of wall.	N/A	1 hr.			43	21, 31, 33	1
W-5-W-90	$5^1/_4$″	2″ × 4 ″ wood stud wall; $^1/_2$″ thick neat plaster over $^3/_8$″ thick gypsum lath on both sides of wall.	N/A	1 hr.			43	21, 22, 31	1
W-5-W-91	$5^1/_4$″	2″ × 4″ wood stud wall; $^1/_2$″ thick of 1:2; 1:2 gypsum plaster over $^3/_8$″ thick indented gypsum lath on both sides of wall.	N/A	45 min.			43	21, 31	$^3/_4$
W-5-W-92	$5^1/_4$″	2″ × 4″ wood stud wall; $^1/_2$″ thick of 1:2; 1:2 gypsum plaster over $^3/_8$″ thick perforated gypsum lath on both sides of wall.	N/A	45 min.			43	21, 31, 34	$^3/_4$
W-5-W-93	$5^1/_4$″	2″ × 4″ wood stud wall; $^1/_2$″ thick of 1:2; 1:2 gypsum plaster over $^3/_8$″ perforated gypsum lath on both sides of wall.	N/A	1 hr.			43	21, 31	1
W-5-W-94	$5^1/_4$″	2″ × 4″ wood stud wall; $^1/_2$″ thick of 1:2; 1:2 gypsum plaster over $^3/_8$″ thick perforated gypsum lath on both sides of wall.	N/A	45 min.			43	21, 31, 34	$^3/_4$
W-5-W-95	$5^1/_2$″	2″ × 4″ wood stud wall; $^1/_2$″ thick of 1:2; 1:2 gypsum plaster over $^1/_2$″ thick wood fiberboard plaster base on both sides of wall.	N/A	35 min.			43	21, 31, 36	$^1/_2$
W-5-W-96	$5^3/_4$″	2″ × 4″ wood stud wall; $^1/_2$″ thick of 1:2; 1:2 gypsum plaster over $^7/_8$″ thick flameproofed wood fiberboard on both sides of wall.	N/A	1 hr.			43	21, 31, 37	1

For SI: 1 inch = 25.4 mm, 1 foot = 305 mm, 1 pound = 0.004448 kN, 1 pound per square inch = 0.00689 MPa, 1 pound per square foot = 47.9 N/m^2.

Notes:

1. All specimens 8 feet or 8 feet 8 inches by 10 feet 4 inches, i.e. one-half of furnace size. See Note 42 for design cross section.
2. Specimens tested in tandem (two per exposure).
3. Test per ASA No. A2-1934 except where unloaded. Also, panels were of "half" size of furnace opening. Time value signifies a thermal failure time.
4. Two-inch by 4-inch studs: 16 inches on center.; where 10 feet 4 inches, blocking at 2-foot 4-inch height.
5. Facing 4 feet by 8 feet, cement-asbestos board sheets, $^3/_{16}$ inch thick.
6. Sheathing (diagonal): 25/22 inch by $5^1/_2$ inch, 1 inch by 6 inches pine.
7. Facing shingles: 24 inches by 12 inches by $^5/_{32}$ inch where used.
8. Asbestos felt: asphalt sat between sheathing and shingles.
9. Load: 30,500 pounds or 360 psi/stud where load was tested.
10. Walls were tested beyond achievement of first test end point. A load-bearing time in excess of performance time indicates that although thermal criteria were exceeded, load-bearing ability continued.
11. Wall was rated for one hour combustible use in original source.
12. Hose steam test specimen. See table entry of similar design above for recommended rating.
13. Rated one and one-fourth hour load bearing. Rated one and one-half hour nonload bearing.
14. Failed hose stream.
15. Test terminated due to flame penetration.
16. Test terminated—local back face temperature rise.
17. Nominal 2-inch by 4-inch wood studs of No. 1 common or better lumber set edgewise. Two-inch by four-inch plates at top and bottom and blocking at mid height of wall.
18. Cavity insulation consists of rock wool bats 1.0 lb./ft.^{2} of filled cavity area.
19. Cavity insulation consists of glass wool bats 0.6 lb./ft.^{2} of filled cavity area.
20. Cavity insulation consists of blown-in rock wool 2.0 lbs./ft.^{2} of filled cavity area
21. Mix proportions for plastered walls as follows: first ratio indicates scratch coat mix, weight of dry plaster: dry sand; second ratio indicates brown coat mix.
22. "Neat" plaster is taken to mean unsanded wood-fiber gypsum plaster.
23. Load: 360 psi of net stud cross sectional area.
24. Rated as nonload bearing.

(continued)

INTERNATIONAL CODE COUNCIL®
Copyright © 2019 ICC & NYSDOS. ALL RIGHTS RESERVED. Accessed by Lauren Gualdino (lgualdino@briarcliffmanor.org), (-) Order Number #100880972 on May 08, 2020 07:05 AM (PDT) pursuant to License Agreement with ICC & NYSDOS. No further reproduction, no

100880972

TABLE 1.3.2—continued
WOOD FRAME WALLS
4″ TO LESS THAN 6″ THICK

25. Nominal 2-inch by 4-inch studs per Note 17, spaced at 16 inches on center.
26. Horizontal joints in facing material supported by 2-inch by 4-inch blocking within wall.
27. Facings secured with 6d casing nails. Nail holes predrilled and were 0.02 to 0.03 inch smaller than nail diameter.
28. Cavity insulation consists of mineral wool bats weighing 2 lbs./ft.^{2} of filled cavity area.
29. Interior wall face exposed to fire.
30. Exterior wall faced exposed to fire.
31. Nominal 2-inch by 4-inch studs of yellow pine or Douglas-fir spaced 16 inches on center in a single row.
32. Studs as in Note 31 except double row, with studs in rows staggered.
33. Six roofing nails with metal-lath pads around heats to each 16-inch by 48-inch lath.
34. Areas of holes less than $2^3/_4$ percent of area of lath.
35. Wood laths were nailed with either 3d or 4d nails, one nail to each bearing, and the end joining broken every seventh course.
36. One-half-inch thick fiberboard plaster base nailed with 3d or 4d common wire nails spaced 4 to 6 inches on center.
37. Seven-eighths-inch thick fiberboard plaster base nailed with 5d common wire nails spaced 4 to 6 inches on center.
38. Mineral wood bats 1.05 to 1.25 lbs./ft.^{2} with waterproofed-paper backing.
39. Blown-in mineral wool insulation, 2.2 lbs./ft.^{2}.
40. Mineral wool bats, 1.4 lbs./ft.^{2} with waterproofed-paper backing.
41. Mineral wood bats, 0.9 lb./ft.^{2}.
42. See wall design diagram, below.

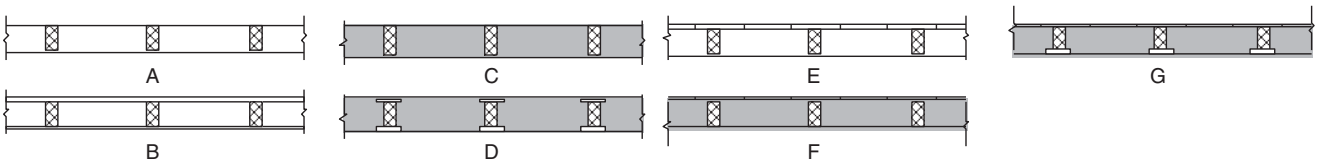

43. Duplicate specimen of W-4-W-7, tested simultaneously with W-4-W-7 in 18-foot test furnace.

INTERNATIONAL CODE COUNCIL®
Copyright © 2019 ICC & NYSDOS. ALL RIGHTS RESERVED. Accessed by Lauren Gualdino (lgualdino@briarcliffmanor.org), (-) Order Number #100880972 on May 08, 2020 07:05 AM (PDT) pursuant to License Agreement with ICC & NYSDOS. No further reproduction, no

100880972

TABLE 1.3.3
WOOD FRAME WALLS
6″ TO LESS THAN 8″ THICK

ITEM CODE	THICKNESS	CONSTRUCTION DETAILS	PERFORMANCE		REFERENCE NUMBER			NOTES	REC. HOURS
			LOAD	TIME	PRE-BMS-92	BMS-92	POST-BMS-92		
W-6-W-1	$6^1/_4$″	2 × 4 stud wall; $^1/_2$″ thick, 1:2; 1:2 gypsum plaster on $^7/_8$″ flameproofed wood fiberboard weighing 2.8 lbs./ft.^{2} on both sides of wall.	See Note 3	1 hr.		1		1-3	1
W-6-W-2	$6^1/_2$″	2 × 4 stud wall; $^1/_2$″ thick, 1:3; 1:3 gypsum plaster on 1″ thick magnesium oxysulfate wood fiberboard on both sides of wall.	See Note 3	45 min.		1		1-3	$^3/_4$
W-7-W-3	$7^1/_4$″	Double row of 2 × 4 studs, $^1/_2$″ thick of 1:2; 1:2 gypsum plaster applied over $^3/_8$″ thick perforated gypsum lath on both sides of wall; mineral wool insulation.	N/A	1 hr.			43	2, 4, 5	1
W-7-W-4	$7^1/_2$″	Double row of 2 × 4 studs, $^5/_8$″ thick of 1:2; 1:2 gypsum plaster applied over $^3/_8$″ thick perforated gypsum lath over laid with 2″ × 2″, 16 gage wire fabric, on both sides of wall.	N/A	1 hr. 15 min.			43	2, 4	$1^1/_4$

For SI: 1 inch = 25.4 mm, 1 pound = 0.004448 kN, 1 pound per square inch = 0.00689 MPa, 1 pound per square foot = 47.9 N/m^2.

Notes:

1. Nominal 2-inch by 4-inch wood studs of No. 1 common or better lumber set edgewise. Two-inch by 4-inch plates at top and bottom and blocking at mid height of wall.
2. Mix proportions for plastered walls as follows: first ratio indicates scratch coat mix, weight of dry plaster: dry sand; second ratio indicates brown coat mix.
3. Load: 360 psi of net stud cross sectional area.
4. Nominal 2-inch by 4-inch studs of yellow pine of Douglas-fir spaced 16 inches in a double row, with studs in rows staggered.
5. Mineral wool bats, 0.19 lb./ft.^{2}

TABLE 1.4.1
MISCELLANEOUS MATERIALS WALLS
0″ TO LESS THAN 4″ THICK

ITEM CODE	THICKNESS	CONSTRUCTION DETAILS	PERFORMANCE		REFERENCE NUMBER			NOTES	REC. HOURS
			LOAD	TIME	PRE-BMS-92	BMS-92	POST-BMS-92		
W-3-Mi-1	$3^7/_8$″	Glass brick wall: (bricks $5^3/_4$″ × $5^3/_4$″ × $3^7/_8$″) $^1/_4$″ mortar bed, cement/lime/sand; mounted in brick (9″) wall with mastic and $^1/_2$″ asbestos rope.	N/A	1 hr.			7	1, 2	1
W-3-Mi-2	3″	Core: 2″ magnesium oxysulfate wood-fiber blocks; laid in Portland cement-lime mortar; Facings: on both sides; see Note 3.	N/A	1 hr.		1		3	1
W-3-Mi-3	$3^7/_8$″	Core: 8″ × $4^7/_8$″ glass blocks $3^7/_8$″ thick weighing 4 lbs. each; laid in Portland cement-lime mortar; horizontal mortar joints reinforced with metal lath.	N/A	15 min.		1			$^1/_4$

For SI: 1 inch = 25.4 mm, 1 pound = 0.004448 kN.

Notes:

1. No failure reached at 1 hour.
2. These glass blocks are assumed to be solid based on other test data available for similar but hollow units which show significantly reduced fire endurance.
3. Minimum of $^1/_2$ inch of 1:3 sanded gypsum plaster required to develop this rating.

INTERNATIONAL CODE COUNCIL®
Copyright © 2019 ICC & NYSDOS. ALL RIGHTS RESERVED. Accessed by Lauren Gualdino (lgualdino@briarcliffmanor.org), (-) Order Number #100880972 on May 08, 2020 07:05 AM (PDT) pursuant to License Agreement with ICC & NYSDOS. No further reproduction, no

100880972

TABLE 1.4.2
MISCELLANEOUS MATERIALS WALLS
4″ TO LESS THAN 6″ THICK

ITEM CODE	THICKNESS	CONSTRUCTION DETAILS	PERFORMANCE		REFERENCE NUMBER			NOTES	REC. HOURS
			LOAD	TIME	PRE-BMS-92	BMS-92	POST-BMS-92		
W-4-Mi-1	4″	Core: 3″ magnesium oxysulfate wood-fiber blocks; laid in Portland cement mortar; Facings: both sides; see Note 1.	N/A	2 hrs.		1			2

For SI: 1 inch = 25.4 mm.

Notes:

1. One-half inch sanded gypsum plaster. Voids in hollow blocks to be not more than 30 percent.

INTERNATIONAL CODE COUNCIL®
Copyright © 2019 ICC & NYSDOS. ALL RIGHTS RESERVED. Accessed by Lauren Gualdino (lgualdino@briarcliffmanor.org), (-) Order Number #100880972 on May 08, 2020 07:05 AM (PDT) pursuant to License Agreement with ICC & NYSDOS. No further reproduction, no

100880972

FIGURE 1.5.1
FINISH RATINGS—INORGANIC MATERIALS

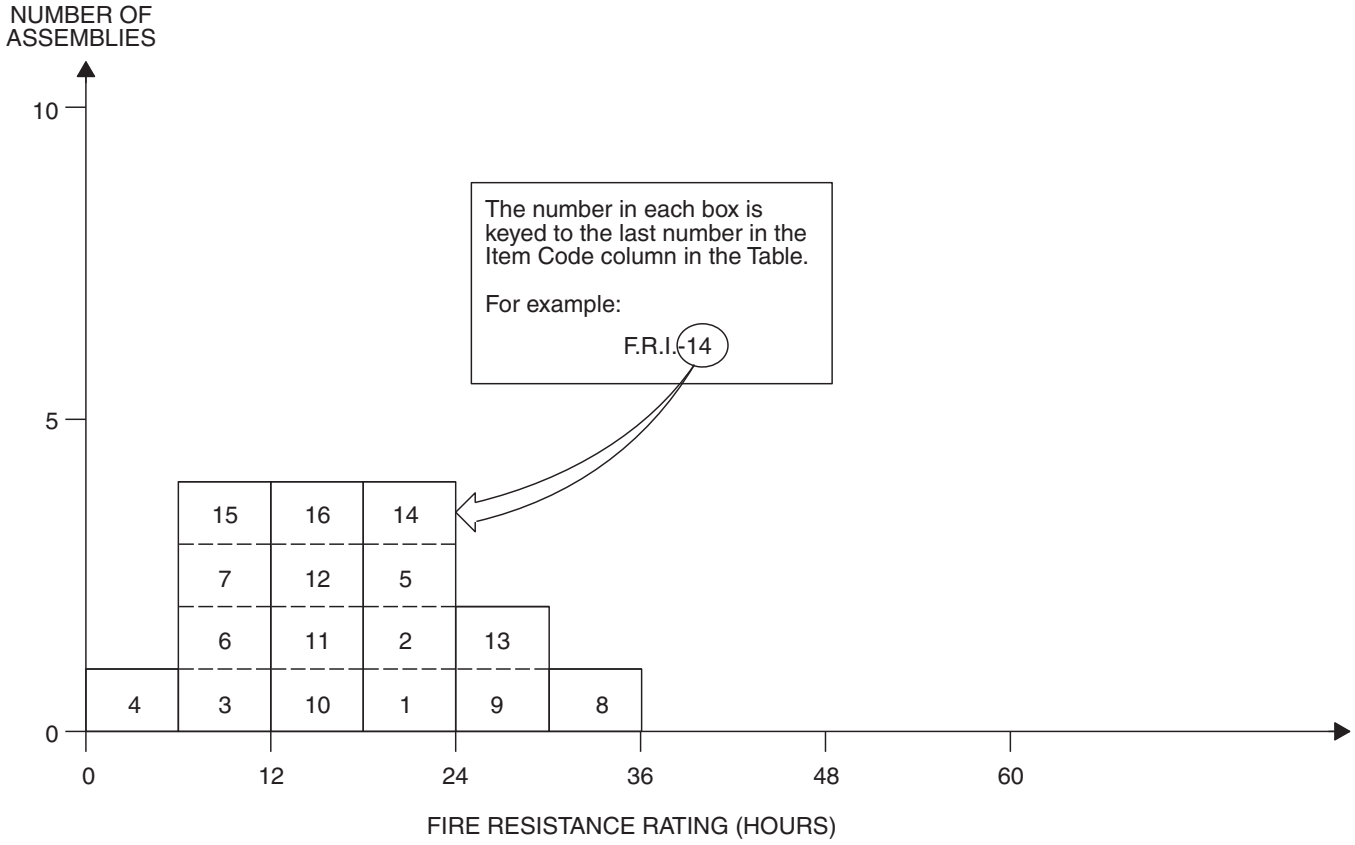

TABLE 1.5.1
FINISH RATINGS—INORGANIC MATERIALS

ITEM CODE	THICKNESS	CONSTRUCTION DETAILS	PERFORMANCE	REFERENCE NUMBER			NOTES	REC. F.R. (MIN.)
			FINISH RATING	PRE-BMS-92	BMS-92	POST-BMS-92		
F.R.-I-1	$^{9}/_{16}$″	$^{3}/_{8}$″ gypsum wallboard faced with $^{3}/_{16}$″ cement-asbestos board.	20 minutes		1		1, 2	15
F.R.-I-2	$^{11}/_{16}$″	$^{1}/_{2}$″ gypsum sheathing faced with $^{3}/_{16}$″ cement-asbestos board.	20 minutes		1		1, 2	20
F.R.-I-3	$^{3}/_{16}$″	$^{3}/_{16}$″ cement-asbestos board over uninsulated cavity.	10 minutes		1		1, 2	5
F.R.-I-4	$^{3}/_{16}$″	$^{3}/_{16}$″ cement-asbestos board over insulated cavities.	5 minutes		1		1, 2	5
F.R.-I-5	$^{3}/_{4}$″	$^{3}/_{4}$″ thick 1:2; 1:3 gypsum plaster over paper backed metal lath.	20 minutes		1		1, 2, 3	20
F.R.-I-6	$^{3}/_{4}$″	$^{3}/_{4}$″ thick Portland cement plaster on metal lath.	10 minutes		1		1, 2	10
F.R.-I-7	$^{3}/_{4}$″	$^{3}/_{4}$″ thick 1:5; 1:7.5 lime plaster on metal lath.	10 minutes		1		1, 2	10
F.R.-I-8	1″	1″ thick neat gypsum plaster on metal lath.	35 minutes		1		1, 2, 4	35
F.R.-I-9	$^{3}/_{4}$″	$^{3}/_{4}$″ thick neat gypsum plaster on metal lath.	30 minutes		1		1, 2, 4	30

(continued)

INTERNATIONAL CODE COUNCIL®
Copyright © 2019 ICC & NYSDOS. ALL RIGHTS RESERVED. Accessed by Lauren Gualdino (lgualdino@briarcliffmanor.org), (-) Order Number #100880972 on May 08, 2020 07:05 AM (PDT) pursuant to License Agreement with ICC & NYSDOS. No further reproduction, no

100880972

TABLE 1.5.1—continued
FINISH RATINGS—INORGANIC MATERIALS

ITEM CODE	THICKNESS	CONSTRUCTION DETAILS	PERFORMANCE	REFERENCE NUMBER			NOTES	REC. F.R. (MIN.)
			FINISH RATING	PRE-BMS-92	BMS-92	POST-BMS-92		
F.R.-I-10	3/4″	3/4″ thick 1:2; 1:2 gypsum plaster on metal lath.	15 minutes		1		1, 2, 3	15
F.R.-I-11	1/2″	Same as F.R.-1-7, except 1/2″ thick on wood lath.	15 minutes		1		1, 2, 3	15
F.R.-I-12	1/2″	1/2″ thick 1:2; 1:3 gypsum plaster on wood lath.	15 minutes		1		1, 2, 3	15
F.R.-I-13	7/8″	1/2″ thick 1:2; 1:2 gypsum plaster on 3/8″ perforated gypsum lath.	30 minutes		1		1, 2, 3	30
F.R.-I-14	7/8″	1/2″ thick 1:2; 1:2 gypsum plaster on 3/8″ thick plain or indented gypsum plaster.	20 minutes		1		1, 2, 3	20
F.R.-I-15	3/8″	3/8″ gypsum wallboard.	10 minutes		1		1, 2	10
F.R.-I-16	1/2″	1/2″ gypsum wallboard.	15 minutes		1		1, 2	15

For SI: 1 inch = 25.4 mm, °C = [(°F) - 32]/1.8.

Notes:

1. The finish rating is the time required to obtain an average temperature rise of 250°F, or a single point rise of 325°F, at the interface between the material being rated and the substrate being protected.
2. Tested in accordance with the Standard Specifications for Fire Tests of Building Construction and Materials, ASA No. A2-1932.
3. Mix proportions for plasters as follows: first ratio, dry weight of plaster: dry weight of sand for scratch coat; second ratio, plaster: sand for brown coat.
4. Neat plaster means unsanded wood-fiber gypsum plaster.

General Note:

The finish rating of modern building materials can be found in the current literature.

TABLE 1.5.2
FINISH RATINGS—ORGANIC MATERIALS

ITEM CODE	THICKNESS	CONSTRUCTION DETAILS	PERFORMANCE	REFERENCE NUMBER			NOTES	REC. F.R. (MIN.)
			FINISH RATING	PRE-BMS-92	BMS-92	POST-BMS-92		
F.R.-O-1	9/16″	7/16″ wood fiberboard faced with 1/8″ cement-asbestos board.	15 minutes		1		1, 2	15
F.R.-O-2	29/32″	3/4″ wood sheathing, asbestos felt weighing 14 lbs./100 ft.^{2} and 5/32″ cement-asbestos shingles.	20 minutes		1		1, 2	20
F.R.-O-3	1 1/2″	1″ thick magnesium oxysulfate wood fiberboard faced with 1:3; 1:3 gypsum plaster, 1/2″ thick.	20 minutes		1		1, 2, 3	20
F.R.-O-4	1/2″	1/2″ thick wood fiberboard.	5 minutes		1		1, 2	5
F.R.-O-5	1/2″	1/2″ thick flameproofed wood fiberboard.	10 minutes		1		1, 2	10
F.R.-O-6	1″	1/2″ thick wood fiberboard faced with 1/2″ thick 1:2; 1:2 gypsum plaster.	15 minutes		1		1, 2, 3	30
F.R.-O-7	1 3/8″	7/8″ thick flameproofed wood fiberboard faced with 1/2″ thick 1:2; 1:2 gypsum plaster.	30 minutes		1		1, 2, 3	30
F.R.-O-8	1 1/4″	1 1/4″ thick plywood.	30 minutes			35		30

For SI: 1 inch = 25.4 mm, 1 pound = 0.004448 kN, 1 pound per square foot = 47.9 N/m^2, °C = [(°F) - 32]/1.8.

Notes:

1. The finish rating is the time required to obtain an average temperature rise of 250°F, or a single point rise of 325°F, at the interface between the material being rated and he substrate being protected.
2. Tested in accordance with the Standard Specifications for Fire Tests of Building Construction and Materials, ASA No. A2-1932.
3. Plaster ratios as follows: first ratio is for scratch coat, weight of dry plaster: weight of dry sand; second ratio is for the brown coat.

General Note:

The finish rating of thinner materials, particularly thinner woods, have not been listed because the possible effects of shrinkage, warpage and aging cannot be predicted.

INTERNATIONAL CODE COUNCIL®
Copyright © 2019 ICC & NYSDOS. ALL RIGHTS RESERVED. Accessed by Lauren Gualdino (lgualdino@briarcliffmanor.org), (-) Order Number #100880972 on May 08, 2020 07:05 AM (PDT) pursuant to License Agreement with ICC & NYSDOS. No further reproduction, no

100880972

SECTION II
COLUMNS

TABLE 2.1.1
REINFORCED CONCRETE COLUMNS
MINIMUM DIMENSION 0″ TO LESS THAN 6″

ITEM CODE	MINIMUM DIMENSION	CONSTRUCTION DETAILS	PERFORMANCE		REFERENCE NUMBER			NOTES	REC. HOURS
			LOAD	TIME	PRE-BMS-92	BMS-92	POST-BMS-92		
C-6-RC-1	6″	6″ × 6″ square columns; gravel aggregate concrete (4030 psi); Reinforcement: vertical, four $^{7}/_{8}$″ rebars; horizontal, $^{5}/_{16}$″ ties at 6″ pitch; Cover: 1″.	34.7 tons	62 min.			7	1, 2	1
C-6-RC-2	6″	6″ × 6″ square columns; gravel aggregate concrete (4200 psi); Reinforcement: vertical, four $^{1}/_{2}$″ rebars; horizontal, $^{5}/_{16}$″ ties at 6″ pitch; Cover: 1″.	21 tons	69 min.			7	1, 2	1

Notes:
1. Collapse.
2. British Test

INTERNATIONAL CODE COUNCIL®
Copyright © 2019 ICC & NYSDOS. ALL RIGHTS RESERVED. Accessed by Lauren Gualdino (lgualdino@briarcliffmanor.org), (-) Order Number #100880972 on May 08, 2020 07:05 AM (PDT) pursuant to License Agreement with ICC & NYSDOS. No further reproduction, no

100880972

FIGURE 2.1.2
REINFORCED CONCRETE COLUMNS
MINIMUM DIMENSION 10″ TO LESS THAN 12″

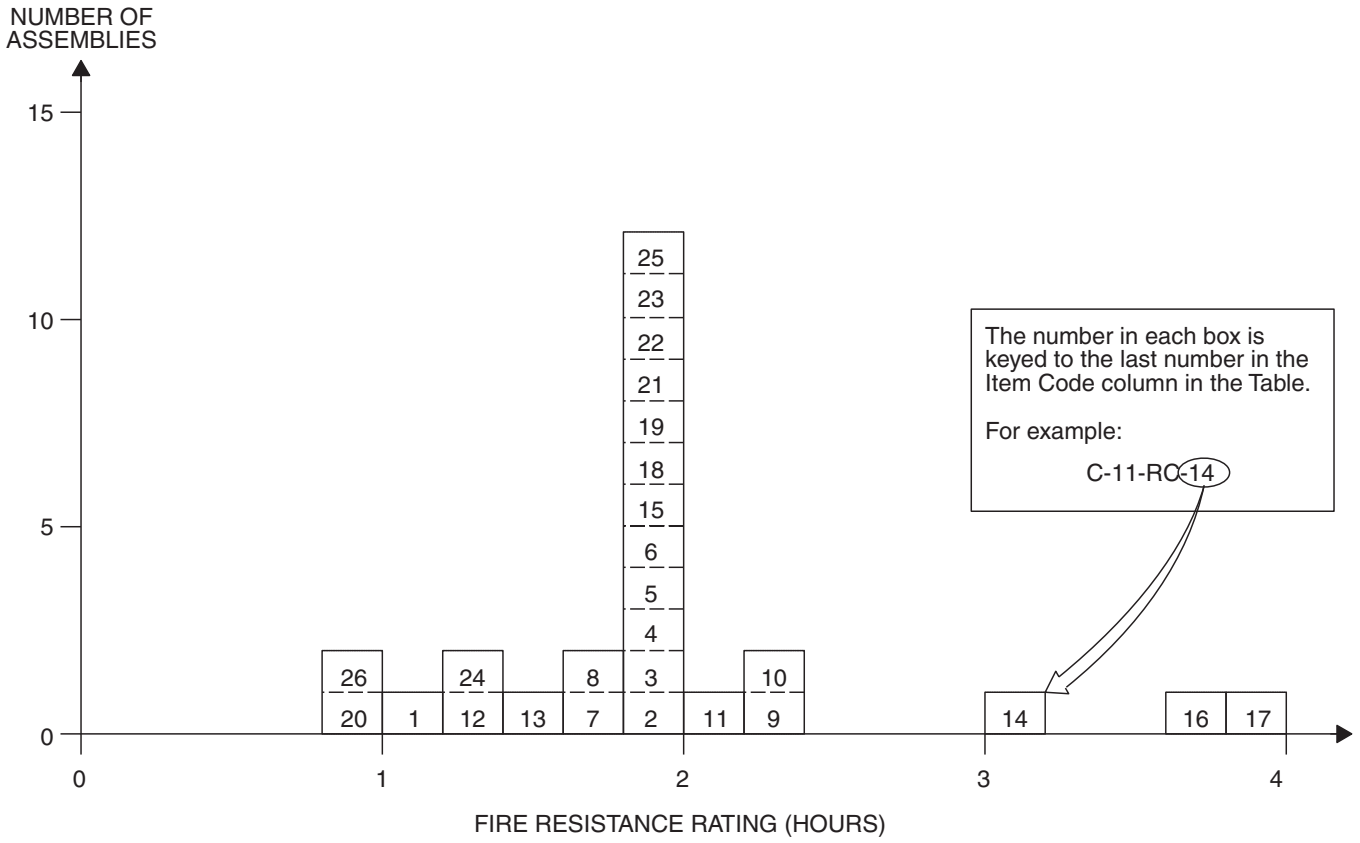

TABLE 2.1.2
REINFORCED CONCRETE COLUMNS
MINIMUM DIMENSION 10″ TO LESS THAN 12″

ITEM CODE	MINIMUM DIMENSION	CONSTRUCTION DETAILS	PERFORMANCE		REFERENCE NUMBER			NOTES	REC. HOURS
			LOAD	TIME	PRE-BMS-92	BMS-92	POST- BMS-92		
C-10-RC-1	10″	10″ square columns; aggregate concrete (4260 psi); Reinforcement: vertical, four $1^1/_4$″ rebars; horizontal, $^3/_8$″ ties at 6″ pitch; Cover: $1^1/_4$″.	92.2 tons	1 hr. 2 min.			7	1	1
C-10-RC-2	10″	10″ square columns; aggregate concrete (2325 psi); Reinforcement: vertical, four $^1/_2$″ rebars; horizontal, $^5/_{16}$″ ties at 6″ pitch; Cover: 1″.	46.7 tons	1 hr. 52 min.			7	1	$1^3/_4$
C-10-RC-3	10″	10″ square columns; aggregate concrete (5370 psi); Reinforcement: vertical, four $^1/_2$″ rebars; horizontal, $^5/_{16}$″ ties at 6″ pitch; Cover: 1″.	46.5 tons	2 hrs.			7	2, 3, 11	2
C-10-RC-4	10″	10″ square columns; aggregate concrete (5206 psi); Reinforcement: vertical, four $^1/_2$″ rebars; horizontal, $^5/_{16}$″ ties at 6″ pitch; Cover: 1″.	46.5 tons	2 hrs.			7	2, 7	2
C-10-RC-5	10″	10″ square columns; aggregate concrete (5674 psi); Reinforcement: vertical, four $^1/_2$″ rebars; horizontal, $^5/_{16}$″ ties at 6″ pitch; Cover: 1″.	46.7 tons	2 hrs.			7	1	2

(continued)

INTERNATIONAL CODE COUNCIL®
Copyright © 2019 ICC & NYSDOS. ALL RIGHTS RESERVED. Accessed by Lauren Gualdino (lgualdino@briarcliffmanor.org), (-) Order Number #100880972 on May 08, 2020 07:05 AM (PDT) pursuant to License Agreement with ICC & NYSDOS. No further reproduction, no

100880972

TABLE 2.1.2—continued
REINFORCED CONCRETE COLUMNS
MINIMUM DIMENSION 10″ TO LESS THAN 12″

ITEM CODE	MINIMUM DIMENSION	CONSTRUCTION DETAILS	PERFORMANCE		REFERENCE NUMBER			NOTES	REC. HOURS
			LOAD	TIME	PRE-BMS-92	BMS-92	POST- BMS-92		
C-10-RC-6	10″	10″ square columns; aggregate concrete (5150 psi); Reinforcement: vertical, four $1^1/_2$″ rebars; horizontal, $^5/_{16}$″ ties at 6″ pitch; Cover: 1″.	66 tons	1 hr. 43 min.			7	1	$1^3/_4$
C-10-RC-7	10″	10″ square columns; aggregate concrete (5580 psi); Reinforcement: vertical, four $^1/_2$″ rebars; horizontal, $^5/_{16}$″ ties at 6″ pitch; Cover: $1^1/_8$″.	62.5 tons	1 hr. 38 min.			7	1	$1^1/_2$
C-10-RC-8	10″	10″ square columns; aggregate concrete (4080 psi); Reinforcement: vertical, four $1^1/_8$″ rebars; horizontal, $^5/_{16}$″ ties at 6″ pitch; Cover: $1^1/_8$″.	72.8 tons	1 hr. 48 min.			7	1	$1^3/_4$
C-10-RC-9	10″	10″ square columns; aggregate concrete (2510 psi); Reinforcement: vertical, four $^1/_2$″ rebars; horizontal, $^5/_{16}$″ ties at 6″ pitch; Cover: 1″.	51 tons	2 hrs. 16 min.			7	1	$2^1/_4$
C-10-RC-10	10″	10″ square columns; aggregate concrete (2170 psi); Reinforcement: vertical, four $^1/_2$″ rebars; horizontal, $^5/_{16}$″ ties at 6″ pitch; Cover: 1″.	45 tons	2 hrs. 14 min.			7	12	$2^1/_4$
C-10-RC-11	10″	10″ square columns; gravel aggregate concrete (4015 psi); Reinforcement: vertical, four $^1/_2$″ rebars; horizontal, $^5/_{16}$″ ties at 6″ pitch; Cover: $1^1/_8$″.	46.5 tons	2 hrs. 6 min.			7	1	2
C-11-RC-12	11″	11″ square columns; gravel aggregate concrete (4150 psi); Reinforcement: vertical, four $1^1/_4$″ rebars; horizontal, $^3/_8$″ ties at $7^1/_2$″ pitch; Cover: $1^1/_2$″.	61 tons	1 hr. 23 min.			7	1	$1^1/_4$
C-11-RC-13	11″	11″ square columns; gravel aggregate concrete (4380 psi); Reinforcement: vertical, four $1^1/_4$″ rebars; horizontal, $^3/_8$″ ties at $7^1/_2$″ pitch; Cover: $1^1/_2$″.	61 tons	1 hr. 26 min.			7	1	$1^1/_4$
C-11-RC-14	11″	11″ square columns; gravel aggregate concrete (4140 psi); Reinforcement: vertical, four $1^1/_4$″ rebars; horizontal, $^3/_8$″ ties at $7^1/_2$″ pitch; steel mesh around reinforcement; Cover: $1^1/_2$″.	61 tons	3 hrs. 9 min.			7	1	3
C-11-RC-15	11″	11″ square columns; slag aggregate concrete (3690 psi); Reinforcement: vertical, four $1^1/_4$″ rebars; horizontal, $^3/_8$″ ties at $7^1/_2$″ pitch; Cover: $1^1/_2$″.	91 tons	2 hrs.			7	2, 3, 4, 5	2
C-11-RC-16	11″	11″ square columns; limestone aggregate concrete (5230 psi); Reinforcement: vertical, four $1^1/_4$″ rebars; horizontal, $^3/_8$″ ties at $7^1/_2$″ pitch; Cover: $1^1/_2$″.	91.5 tons	3 hrs. 41 min.			7	1	$3^1/_2$
C-11-RC-17	11″	11″ square columns; limestone aggregate concrete (5530 psi); Reinforcement: vertical, four $1^1/_4$″ rebars; horizontal, $^3/_8$″ ties at $7^1/_2$″ pitch; Cover: $1^1/_2$″.	91.5 tons	3 hrs. 47 min.			7	1	$3^1/_2$

(continued)

INTERNATIONAL CODE COUNCIL®
Copyright © 2019 ICC & NYSDOS. ALL RIGHTS RESERVED. Accessed by Lauren Gualdino (lgualdino@briarcliffmanor.org), (-) Order Number #100880972 on May 08, 2020 07:05 AM (PDT) pursuant to License Agreement with ICC & NYSDOS. No further reproduction, no

100880972

TABLE 2.1.2—continued
REINFORCED CONCRETE COLUMNS
MINIMUM DIMENSION 10″ TO LESS THAN 12″

ITEM CODE	MINIMUM DIMENSION	CONSTRUCTION DETAILS	PERFORMANCE		REFERENCE NUMBER			NOTES	REC. HOURS
			LOAD	TIME	PRE-BMS-92	BMS-92	POST- BMS-92		
C-11-RC-18	11″	11″ square columns; limestone aggregate concrete (5280 psi); Reinforcement: vertical, four $1^1/_4$″ rebars; horizontal, $^3/_8$″ ties at $7^1/_2$″ pitch; Cover: $1^1/_2$″.	91.5 tons	2 hrs.			7	2, 3, 4, 6	2
C-11-RC-19	11″	11″ square columns; limestone aggregate concrete (4180 psi); Reinforcement: vertical, four $^5/_8$″ rebars; horizontal, $^3/_8$″ ties at 7″ pitch; Cover: $1^1/_2$″.	71.4 tons	2 hrs.			7	2, 7	2
C-11-RC-20	11″	11″ square columns; gravel concrete (4530 psi); Reinforcement: vertical, four $^5/_8$″ rebars; horizontal, $^3/_8$″ ties at 7″ pitch; Cover: $1^1/_2$″ with $^1/_2$″ plaster.	58.8 tons	2 hrs.			7	2, 3, 9	$1^1/_4$
C-11-RC-21	11″	11″ square columns; gravel concrete (3520 psi); Reinforcement: vertical, four $^5/_8$″ rebars; horizontal, $^3/_8$″ ties at 7″ pitch; Cover: $1^1/_2$″.	Vari-able	1 hr. 24 min.			7	1, 8	2
C-11-RC-22	11″	11″ square columns; aggregate concrete (3710 psi); Reinforcement: vertical, four $^5/_8$″ rebars; horizontal, $^3/_8$″ ties at 7″ pitch; Cover: $1^1/_2$″.	58.8 tons	2 hrs.			7	2, 3, 10	2
C-11-RC-23	11″	11″ square columns; aggregate concrete (3190 psi); Reinforcement: vertical, four $^5/_8$″ rebars; horizontal, $^3/_8$″ ties at 7″ pitch; Cover: $1^1/_2$″.	58.8 tons	2 hrs.			7	2, 3, 10	2
C-11-RC-24	11″	11″ square columns; aggregate concrete (4860 psi); Reinforcement: vertical, four $^5/_8$″ rebars; horizontal, $^3/_8$″ ties at 7″ pitch; Cover: $1^1/_2$″.	86.1 tons	1 hr. 20 min.			7	1	$1^1/_3$
C-11-RC-25	11″	11″ square columns; aggregate concrete (4850 psi); Reinforcement: vertical, four $^5/_8$″ rebars; horizontal, $^3/_8$″ ties at 7″ pitch; Cover: $1^1/_2$″.	58.8 tons	1 hr. 59 min.			7	1	$1^3/_4$
C-11-RC-26	11″	11″ square columns; aggregate concrete (3834 psi); Reinforcement: vertical, four $^5/_8$″ rebars; horizontal, $^5/_{16}$″ ties at $4^1/_2$″ pitch; Cover: $1^1/_2$″.	71.4 tons	53 min.			7	1	$^3/_4$

For SI: 1 inch = 25.4 mm, 1 pound per square inch = 0.00689 MPa, 1 ton = 8.896 kN.

Notes:

1. Failure mode—collapse.
2. Passed 2 hour fire exposure.
3. Passed hose stream test.
4. Reloaded effectively after 48 hours but collapsed at load in excess of original test load.
5. Failing load was 150 tons.
6. Failing load was 112 tons.
7. Failed during hose stream test.
8. Range of load 58.8 tons (initial) to 92 tons (92 minutes) to 60 tons (80 minutes).
9. Collapsed at 44 tons in reload after 96 hours.
10. Withstood reload after 72 hours.
11. Collapsed on reload after 48 hours.

INTERNATIONAL CODE COUNCIL®
Copyright © 2019 ICC & NYSDOS. ALL RIGHTS RESERVED. Accessed by Lauren Gualdino (lgualdino@briarcliffmanor.org), (-) Order Number #100880972 on May 08, 2020 07:05 AM (PDT) pursuant to License Agreement with ICC & NYSDOS. No further reproduction, no

100880972

TABLE 2.1.3
REINFORCED CONCRETE COLUMNS
MINIMUM DIMENSION 12″ TO LESS THAN 14″

ITEM CODE	MINIMUM DIMENSION	CONSTRUCTION DETAILS	PERFORMANCE		REFERENCE NUMBER			NOTES	REC. HOURS
			LOAD	TIME	PRE-BMS-92	BMS-92	POST-BMS-92		
C-12-RC-1	12″	12″ square columns; gravel aggregate concrete (2647 psi); Reinforcement: vertical, four $^5/_8$″ rebars; horizontal, $^5/_{16}$″ ties at $4^1/_2$″ pitch; Cover: 2″.	78.2 tons	38 min.		1	7	1	$^1/_2$
C-12-RC-2	12″	Reinforced columns with $1^1/_2$″ concrete outside of reinforced steel; Gross diameter or side of column: 12″ ; Group I, Column A.	—	6 hrs.		1		2, 3	6
C-12-RC-3	12″	Description as per C-12-RC-2; Group I, Column B.	—	4 hrs.		1		2, 3	4
C-12-RC-4	12″	Description as per C-12-RC-2; Group II, Column A.	—	4 hrs.		1		2, 3	4
C-12-RC-5	12″	Description as per C-12-RC-2; Group II, Column B.	—	2 hrs. 30 min.		1		2, 3	$2^1/_2$
C-12-RC-6	12″	Description as per C-12-RC-2; Group III, Column A.	—	3 hrs.		1		2, 3	3
C-12-RC-7	12″	Description as per C-12-RC-2; Group III, Column B.	—	2 hrs.		1		2, 3	2
C-12-RC-8	12″	Description as per C-12-RC-2; Group IV, Column A.	—	2 hrs.		1		2, 3	2
C-12-RC-9	12″	Description as per C-12-RC-2; Group IV, Column B.	—	1 hr. 30 min.		1		2, 3	$1^1/_2$

For SI: 1 inch = 25.4 mm, 1 pound per square inch = 0.00689 MPa, 1 pound per square yard = 5.3 N/m^2.

Notes:

1. Failure mode—unspecified structural.
2. Group I: includes concrete having calcareous aggregate containing a combined total of not more than 10 percent of quartz, chert and flint for the coarse aggregate.

   Group II: includes concrete having trap-rock aggregate applied without metal ties and also concrete having cinder, sandstone or granite aggregate, if held in place with wire mesh or expanded metal having not larger than 4-inch mesh, weighing not less than 1.7 lbs./$yd.^2$, placed not more than 1 inch from the surface of the concrete.

   Group III: includes concrete having cinder, sandstone or granite aggregate tied with No. 5 gage steel wire, wound spirally over the column section on a pitch of 8 inches, or equivalent ties, and concrete having siliceous aggregates containing a combined total of 60 percent or more of quartz, chert and flint, if held in place with wire mesh or expanded metal having not larger than 4-inch mesh, weighing not less than 1.7 lbs./$yd.^2$, placed not more than 1 inch from the surface of the concrete.

   Group IV: includes concrete having siliceous aggregates containing a combined total of 60 percent or more of quartz, chert and flint, and tied with No. 5 gage steel wire wound spirally over the column section on a pitch of 8 inches, or equivalent ties.
3. Groupings of aggregates and ties are the same as for structural steel columns protected solidly with concrete, the ties to be placed over the vertical reinforcing bars and the mesh where required, to be placed within 1 inch from the surface of the column.

   Column A: working loads are assumed as carried by the area of the column inside of the lines circumscribing the reinforcing steel.

   Column B: working loads are assumed as carried by the gross area of the column.

INTERNATIONAL CODE COUNCIL®
Copyright © 2019 ICC & NYSDOS. ALL RIGHTS RESERVED. Accessed by Lauren Gualdino (lgualdino@briarcliffmanor.org), (-) Order Number #100880972 on May 08, 2020 07:05 AM (PDT) pursuant to License Agreement with ICC & NYSDOS. No further reproduction, no

100880972

TABLE 2.1.4
REINFORCED CONCRETE COLUMNS
MINIMUM DIMENSION 14″ TO LESS THAN 16″

ITEM CODE	MINIMUM DIMENSION	CONSTRUCTION DETAILS	PERFORMANCE		REFERENCE NUMBER			NOTES	REC. HOURS
			LOAD	TIME	PRE- BMS-92	BMS-92	POST- BMS-92		
C-14-RC-1	14″	14″ square columns; gravel aggregate concrete (4295 psi); Reinforcement: vertical four $^3/_4$″ rebars; horizontal: $^1/_4$″ ties at 9″ pitch; Cover: $1^1/_2$″	86 tons	1 hr. 22 min.			7	1	$1^1/_4$
C-14-RC-2	14″	Reinforced concrete columns with $1^1/_2$″ concrete outside reinforcing steel; Gross diameter or side of column: 12″ ; Group I, Column A.	—	7 hrs.		1		2, 3	7
C-14-RC-3	14″	Description as per C-14-RC-2; Group II, Column B.	—	5 hrs.		1		2, 3	5
C-14-RC-4	14″	Description as per C-14-RC-2; Group III, Column A.	—	5 hrs.		1		2, 3	5
C-14-RC-5	14″	Description as per C-14-RC-2; Group IV, Column B.	—	3 hrs. 30 min.		1		2, 3	$3^1/_2$
C-14-RC-6	14″	Description as per C-14-RC-2; Group III, Column A.	—	4 hrs.		1		2, 3	4
C-14-RC-7	14″	Description as per C-14-RC-2; Group III, Column B.	—	2 hrs. 30 min.		1		2, 3	$2^1/_2$
C-14-RC-8	14″	Description as per C-14-RC-2; Group IV, Column A.	—	2 hrs. 30 min.		1		2, 3	$2^1/_2$
C-14-RC-9	14″	Description as per C-14-RC-2; Group IV, Column B.	—	1 hr. 30 min.		1		2, 3	$1^1/_2$

For SI: 1 inch = 25.4 mm, 1 pound per square inch = 0.00689 MPa, 1 pound per square yard = 5.3 N/m^2.

Notes:

1. Failure mode—main rebars buckled between links at various points.
2. Group I: includes concrete having calcareous aggregate containing a combined total of not more than 10 percent of quartz, chert and flint for the coarse aggregate.

   Group II: includes concrete having trap-rock aggregate applied without metal ties and also concrete having cinder, sandstone or granite aggregate, if held in place with wire mesh or expanded metal having not larger than 4-inch mesh, weighing not less than 1.7 lbs./$yd.^2$, placed not more than 1 inch from the surface of the concrete.

   Group III: includes concrete having cinder, sandstone or granite aggregate tied with No. 5 gage steel wire, wound spirally over the column section on a pitch of 8 inches, or equivalent ties, and concrete having siliceous aggregates containing a combined total of 60 percent or more of quartz, chert and flint, if held in place with wire mesh or expanded metal having not larger than 4-inch mesh, weighing not less than 1.7 lbs./$yd.^2$, placed not more than 1 inch from the surface of the concrete.

   Group IV: includes concrete having siliceous aggregates containing a combined total of 60 percent or more of quartz, chert and flint, and tied with No. 5 gage steel wire wound spirally over the column section on a pitch of 8 inches, or equivalent ties.
3. Groupings of aggregates and ties are the same as for structural steel columns protected solidly with concrete, the ties to be placed over the vertical reinforcing bars and the mesh where required, to be placed within 1 inch from the surface of the column.

   Column A: working loads are assumed as carried by the area of the column inside of the lines circumscribing the reinforcing steel.

   Column B: working loads are assumed as carried by the gross area of the column.

INTERNATIONAL CODE COUNCIL®
Copyright © 2019 ICC & NYSDOS. ALL RIGHTS RESERVED. Accessed by Lauren Gualdino (lgualdino@briarcliffmanor.org), (-) Order Number #100880972 on May 08, 2020 07:05 AM (PDT) pursuant to License Agreement with ICC & NYSDOS. No further reproduction, no

100880972

FIGURE 2.1.5
REINFORCED CONCRETE COLUMNS
MINIMUM DIMENSION 16″ TO LESS THAN 18″

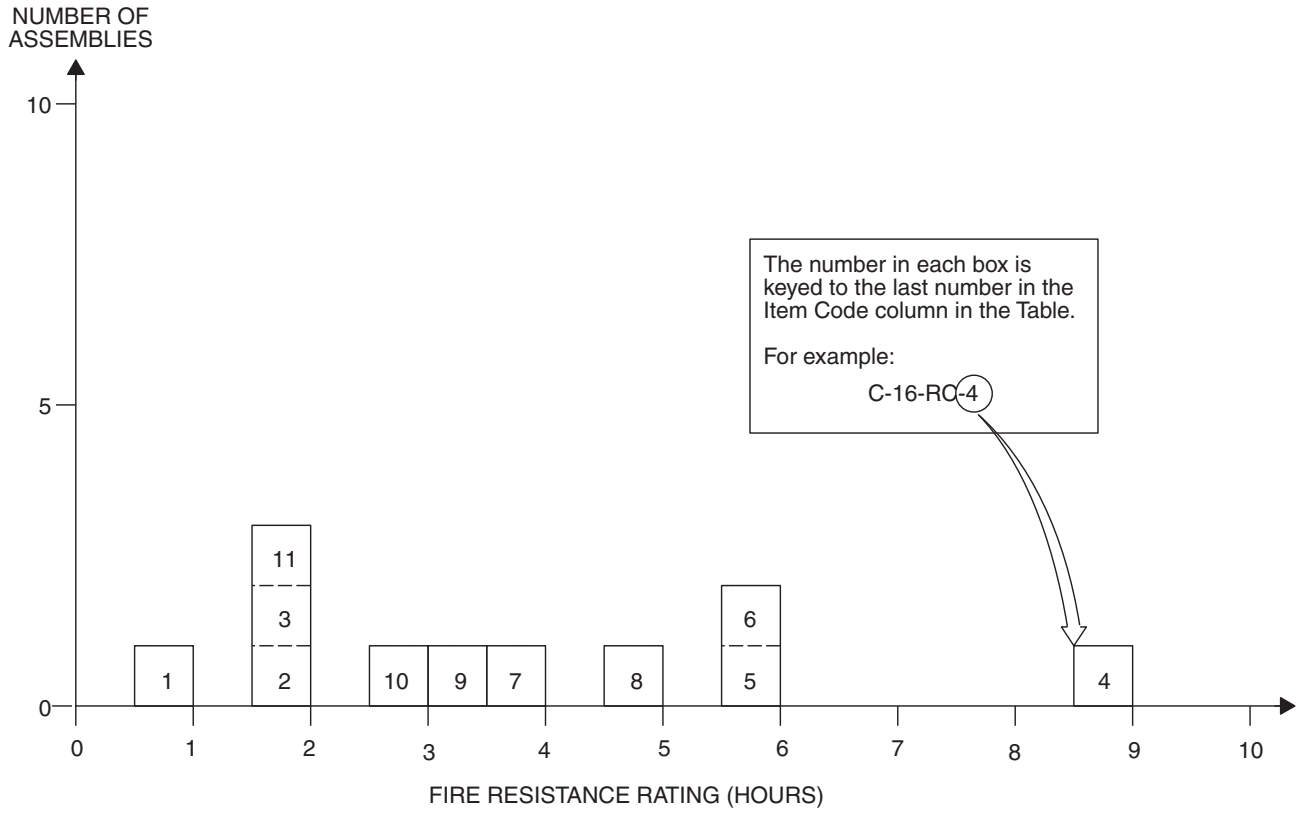

TABLE 2.1.5
REINFORCED CONCRETE COLUMNS
MINIMUM DIMENSION 16″ TO LESS THAN 18″

ITEM CODE	MINIMUM DIMENSION	CONSTRUCTION DETAILS	PERFORMANCE		REFERENCE NUMBER			NOTES	REC. HOURS
			LOAD	TIME	PRE-BMS-92	BMS-92	POST-BMS-92		
C-16-RC-1	16″	16″ square columns; gravel aggregate concrete (4550 psi); Reinforcement: vertical, eight $1^3/_8$″ rebars; horizontal, $^5/_{16}$″ ties at 6″ pitch $1^3/_8$″ below column surface and $^5/_{16}$″ ties at 6″ pitch linking center rebars of each face forming a smaller square in column cross section.	237 tons	1 hr			7	1, 2, 3	1
C-16-RC-2	16″	16″ square columns; gravel aggregate concrete (3360 psi); Reinforcement: vertical, eight $1^3/_8$″ rebars; horizontal, $^5/_{16}$″ ties at 6″ pitch; Cover: $1^3/_8$″.	210 tons	2 hrs.			7	2, 4, 5, 6	2
C-16-RC-3	16″	16″ square columns; gravel aggregate concrete (3980 psi); Reinforcement: vertical, four $^7/_8$″ rebars; horizontal, $^3/_8$″ ties at 6″ pitch; Cover: 1″.	123.5 tons	2 hrs.			7	2, 4, 7	2
C-16-RC-4	16″	Reinforced concrete columns with $1^1/_2$″ concrete outside reinforcing steel; Gross diameter or side of column: 16″ ; Group I, Column A.	—	9 hrs.		1		8, 9	9
C-16-RC-5	16″	Description as per C-16-RC-4; Group I, Column B.	—	6 hrs.		1		8, 9	6
C-16-RC-6	16″	Description as per C-16-RC-4; Group II, Column A.	—	6 hrs.		1		8, 9	6

(continued)

INTERNATIONAL CODE COUNCIL®
Copyright © 2019 ICC & NYSDOS. ALL RIGHTS RESERVED. Accessed by Lauren Gualdino (lgualdino@briarcliffmanor.org), (-) Order Number #100880972 on May 08, 2020 07:05 AM (PDT) pursuant to License Agreement with ICC & NYSDOS. No further reproduction, no

100880972

TABLE 2.1.5—continued
REINFORCED CONCRETE COLUMNS
MINIMUM DIMENSION 16″ TO LESS THAN 18″

ITEM CODE	MINIMUM DIMENSION	CONSTRUCTION DETAILS	PERFORMANCE		REFERENCE NUMBER			NOTES	REC. HOURS
			LOAD	TIME	PRE-BMS-92	BMS-92	POST-BMS-92		
C-16-RC-7	16″	Description as per C-16-RC-4; Group II, Column B.	—	4 hrs.		1		8, 9	4
C-16-RC-8	16″	Description as per C-16-RC-4; Group III, Column A.	—	5 hrs.		1		8, 9	5
C-16-RC-9	16″	Description as per C-16-RC-4; Group III, Column B.	—	3 hrs. 30 min.		1		8, 9	$3^1/_2$
C-16-RC-10	16″	Description as per C-16-RC-4; Group IV, Column A.	—	3 hrs.		1		8, 9	3
C-16-RC-11	16″	Description as per C-16-RC-4; Group IV, Column B.	—	2 hrs.		1		8, 9	2

For SI: 1 inch = 25.4 mm, 1 pound per square inch = 0.00689 MPa, 1 pound per square yard = 5.3 N/m^2.

Notes:

1. Column passed 1-hour fire test.
2. Column passed hose stream test.
3. No reload specified.
4. Column passed 2-hour fire test.
5. Column reloaded successfully after 24 hours.
6. Reinforcing details same as C-16-RC-1.
7. Column passed reload after 72 hours.
8. Group I: includes concrete having calcareous aggregate containing a combined total of not more than 10 percent of quartz, chert and flint for the coarse aggregate.
   Group II: includes concrete having trap-rock aggregate applied without metal ties and also concrete having cinder, sandstone or granite aggregate, if held in place with wire mesh or expanded metal having not larger than 4-inch mesh, weighing not less than 1.7 lbs./$yd.^2$, placed not more than 1 inch from the surface of the concrete.
   Group III: includes concrete having cinder, sandstone or granite aggregate tied with No. 5 gage steel wire, wound spirally over the column section on a pitch of 8 inches, or equivalent ties, and concrete having siliceous aggregates containing a combined total of 60 percent or more of quartz, chert and flint, if held in place with wire mesh or expanded metal having not larger than 4-inch mesh, weighing not less than 1.7 lbs./$yd.^2$, placed not more than 1 inch from the surface of the concrete.
   Group IV: includes concrete having siliceous aggregates containing a combined total of 60 percent or more of quartz, chert and flint, and tied with No. 5 gage steel wire wound spirally over the column section on a pitch of 8 inches, or equivalent ties.
9. Groupings of aggregates and ties are the same as for structural steel columns protected solidly with concrete, the ties to be placed over the vertical reinforcing bars and the mesh where required, to be placed within 1 inch from the surface of the column.
   Column A: working loads are assumed as carried by the area of the column inside of the lines circumscribing the reinforcing steel.
   Column B: working loads are assumed as carried by the gross area of the column.

INTERNATIONAL CODE COUNCIL®
Copyright © 2019 ICC & NYSDOS. ALL RIGHTS RESERVED. Accessed by Lauren Gualdino (lgualdino@briarcliffmanor.org), (-) Order Number #100880972 on May 08, 2020 07:05 AM (PDT) pursuant to License Agreement with ICC & NYSDOS. No further reproduction, no

100880972

TABLE 2.1.6
REINFORCED CONCRETE COLUMNS
MINIMUM DIMENSION 18″ TO LESS THAN 20″

ITEM CODE	MINIMUM DIMENSION	CONSTRUCTION DETAILS	PERFORMANCE		REFERENCE NUMBER			NOTES	REC. HOURS
			LOAD	TIME	PRE- BMS-92	BMS-92	POST- BMS-92		
C-18-RC-1	18″	Reinforced concrete columns with $1^1/_2$″ concrete outside reinforced steel; Gross diameter or side of column: 18″ ; Group I, Column A.	—	11 hrs.		1		1, 2	11
C-18-RC-2	18″	Description as per C-18-RC-1; Group I, Column B.	—	8 hrs.		1		1, 2	8
C-18-RC-3	18″	Description as per C-18-RC-1; Group II, Column A.	—	7 hrs.		1		1, 2	7
C-18-RC-4	18″	Description as per C-18-RC-1; Group II, Column B.	—	5 hrs.		1		1, 2	5
C-18-RC-5	18″	Description as per C-18-RC-1; Group III, Column A.	—	6 hrs.		1		1, 2	6
C-18-RC-6	18″	Description as per C-18-RC-1; Group III, Column B.	—	4 hrs.		1		1, 2	4
C-18-RC-7	18″	Description as per C-18-RC-1; Group IV, Column A.	—	3 hrs. 30 min.		1		1, 2	$3^1/_2$
C-18-RC-8	18″	Description as per C-18-RC-1; Group IV, Column B.	—	2 hrs. 30 min.		1		1, 2	$2^1/_2$

For SI: 1 inch = 25.4 mm, 1 pound per square yard = 5.3 N/m^2.

Notes:

1. Group I: includes concrete having calcareous aggregate containing a combined total of not more than 10 percent of quartz, chert and flint for the coarse aggregate.

   Group II: includes concrete having trap-rock aggregate applied without metal ties and also concrete having cinder, sandstone or granite aggregate, if held in place with wire mesh or expanded metal having not larger than 4-inch mesh, weighing not less than 1.7 lbs./$yd.^2$, placed not more than 1 inch from the surface of the concrete.

   Group III: includes concrete having cinder, sandstone or granite aggregate tied with No. 5 gage steel wire, wound spirally over the column section on a pitch of 8 inches, or equivalent ties, and concrete having siliceous aggregates containing a combined total of 60 percent or more of quartz, chert and flint, if held in place with wire mesh or expanded metal having not larger than 4-inch mesh, weighing not less than 1.7 lbs./$yd.^2$, placed not more than 1 inch from the surface of the concrete.

   Group IV: includes concrete having siliceous aggregates containing a combined total of 60 percent or more of quartz, chert and flint and, tied with No. 5 gage steel wire wound spirally over the column section on a pitch of 8 inches, or equivalent ties.
2. Groupings of aggregates and ties are the same as for structural steel columns protected solidly with concrete, the ties to be placed over the vertical reinforcing bars and the mesh where required, to be placed within 1 inch from the surface of the column.

   Column A: working loads are assumed as carried by the area of the column inside of the lines circumscribing the reinforcing steel.

   Column B: working loads are assumed as carried by the gross area of the column.

INTERNATIONAL CODE COUNCIL®
Copyright © 2019 ICC & NYSDOS. ALL RIGHTS RESERVED. Accessed by Lauren Gualdino (lgualdino@briarcliffmanor.org), (-) Order Number #100880972 on May 08, 2020 07:05 AM (PDT) pursuant to License Agreement with ICC & NYSDOS. No further reproduction, no

100880972

FIGURE 2.1.7
REINFORCED CONCRETE COLUMNS
MINIMUM DIMENSION 20″ TO LESS THAN 22″

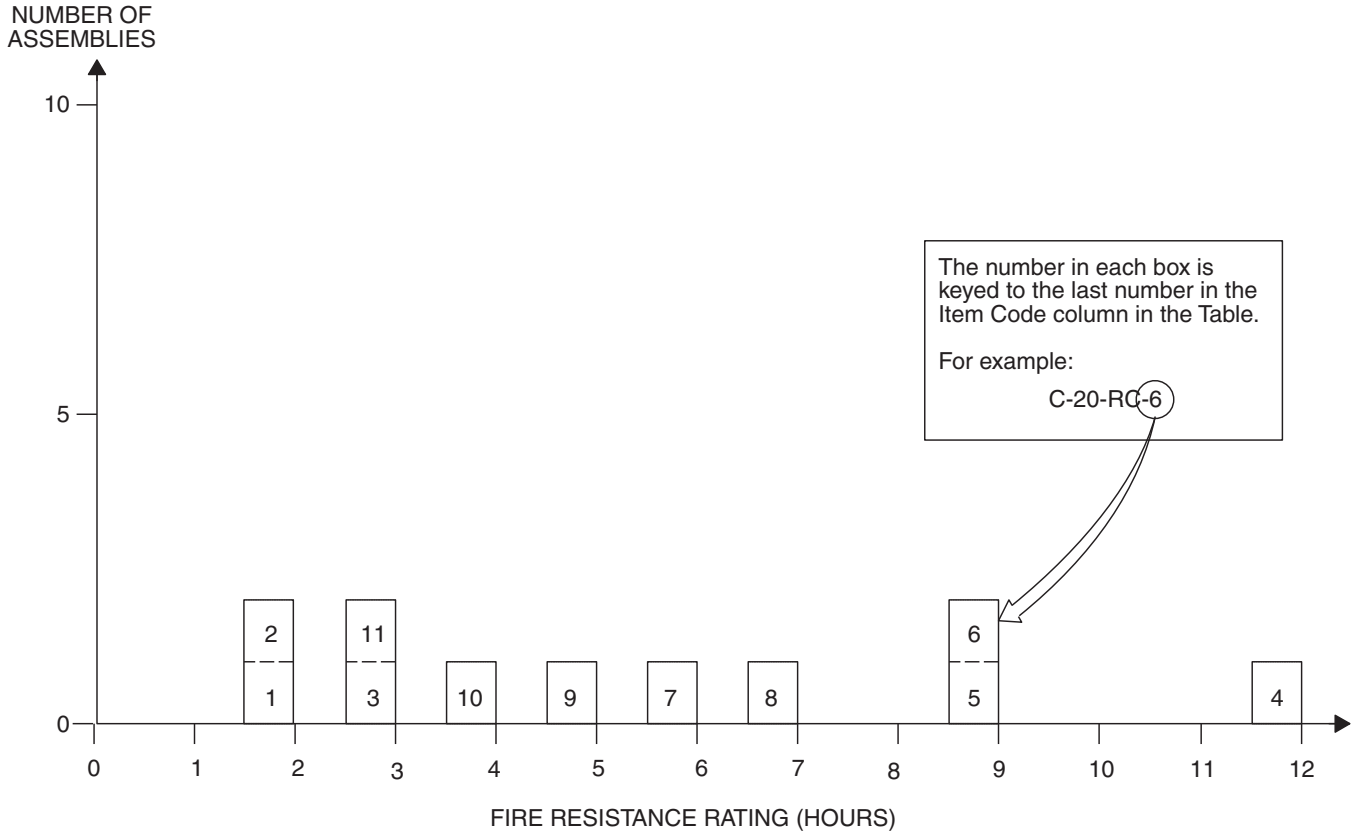

TABLE 2.1.7
REINFORCED CONCRETE COLUMNS
MINIMUM DIMENSION 20″ TO LESS THAN 22″

ITEM CODE	MINIMUM DIMENSION	CONSTRUCTION DETAILS	PERFORMANCE		REFERENCE NUMBER			NOTES	REC. HOURS
			LOAD	TIME	PRE-BMS-92	BMS-92	POST-BMS-92		
C-20-RC-1	20″	20″ square columns; gravel aggregate concrete (6690 psi); Reinforcement: vertical, four $1^3/_4$″ rebars; horizontal, $^3/_8$″ wire at 6″ pitch; Cover $1^3/_4$″.	367 tons	2 hrs.			7	1, 2, 3	2
C-20-RC-2	20″	20″ square columns; gravel aggregate concrete (4330 psi); Reinforcement: vertical, four $1^3/_4$″ rebars; horizontal, $^3/_8$″ ties at 6″ pitch; Cover $1^3/_4$″.	327 tons	2 hrs.			7	1, 2, 4	2
C-20-RC-3	$20^1/_4$″	20″ square columns; gravel aggregate concrete (4230 psi); Reinforcement: vertical, four $1^1/_8$″ rebars; horizontal, $^3/_8$″ wire at 5″ pitch; Cover $1^1/_8$″.	199 tons	2 hrs. 56 min.			7	5	$2^3/_4$
C-20-RC-4	20″	Reinforced concrete columns with $1^1/_2$″ concrete outside of reinforcing steel; Gross diameter or side of column: 20″ ; Group I, Column A.	—	12 hrs.		1		6, 7	12
C-20-RC-5	20″	Description as per C-20-RC-4; Group I, Column B.	—	9 hrs.		1		6, 7	9

(continued)

INTERNATIONAL CODE COUNCIL®
Copyright © 2019 ICC & NYSDOS. ALL RIGHTS RESERVED. Accessed by Lauren Gualdino (lgualdino@briarcliffmanor.org), (-) Order Number #100880972 on May 08, 2020 07:05 AM (PDT) pursuant to License Agreement with ICC & NYSDOS. No further reproduction, no

100880972

TABLE 2.1.7—continued
REINFORCED CONCRETE COLUMNS
MINIMUM DIMENSION 20″ TO LESS THAN 22″

ITEM CODE	MINIMUM DIMENSION	CONSTRUCTION DETAILS	PERFORMANCE		REFERENCE NUMBER			NOTES	REC. HOURS
			LOAD	TIME	PRE-BMS-92	BMS-92	POST-BMS-92		
C-20-RC-6	20″	Description as per C-20-RC-4; Group II, Column A.	—	9 hrs.		1		6, 7	9
C-20-RC-7	20″	Description as per C-20-RC-4; Group II, Column B.	—	6 hrs.		1		6, 7	6
C-20-RC-8	20″	Description as per C-20-RC-4; Group III, Column A.	—	7 hrs.		1		6, 7	7
C-20-RC-9	20″	Description as per C-20-RC-4; Group III, Column B.	—	5 hrs.		1		6, 7	5
C-20-RC-10	20″	Description as per C-20-RC-4; Group IV, Column A.	—	4 hrs.		1		6, 7	4
C-20-RC-11	20″	Description as per C-20-RC-4; Group IV, Column B.	—	3 hrs.		1		6, 7	3

For SI: 1 inch = 25.4 mm, 1 pound per square yard = 5.3 N/m^2, 1 ton = 8.896 kN.

Notes:

1. Passed 2-hour fire test.
2. Passed hose stream test.
3. Failed during reload at 300 tons.
4. Passed reload after 72 hours.
5. Failure mode—collapse.
6. Group I: includes concrete having calcareous aggregate containing a combined total of not more than 10 percent of quartz, chert and flint for the coarse aggregate.

   Group II: includes concrete having trap-rock aggregate applied without metal ties and also concrete having cinder, sandstone or granite aggregate, if held in place with wire mesh or expanded metal having not larger than 4-inch mesh, weighing not less than 1.7 lbs./yd.^{2}, placed not more than 1 inch from the surface of the concrete.

   Group III: includes concrete having cinder, sandstone or granite aggregate tied with No. 5 gage steel wire, wound spirally over the column section on a pitch of 8 inches, or equivalent ties, and concrete having siliceous aggregates containing a combined total of 60 percent or more of quartz, chert and flint, if held in place with wire mesh or expanded metal having not larger than 4-inch mesh, weighing not less than 1.7 lbs./yd.^{2}, placed not more than 1 inch from the surface of the concrete.

   Group IV: includes concrete having siliceous aggregates containing a combined total of 60 percent or more of quartz, chert and flint, and tied with No. 5 gage steel wire wound spirally over the column section on a pitch of 8 inches, or equivalent ties.
7. Groupings of aggregates and ties are the same as for structural steel columns protected solidly with concrete, the ties to be placed over the vertical reinforcing bars and the mesh where required, to be placed within 1 inch from the surface of the column.

   Column A: working loads are assumed as carried by the area of the column inside of the lines circumscribing the reinforcing steel.

   Column B: working loads are assumed as carried by the gross area of the column.

TABLE 2.1.8
HEXAGONAL REINFORCED CONCRETE COLUMNS
MINIMUM DIMENSION 12″ TO LESS THAN 14″

ITEM CODE	MINIMUM DIMENSION	CONSTRUCTION DETAILS	PERFORMANCE		REFERENCE NUMBER			NOTES	REC. HOURS
			LOAD	TIME	PRE-BMS-92	BMS-92	POST-BMS-92		
C-12-HRC-1	12″	12″ hexagonal columns; gravel aggregate concrete (4420 psi); Reinforcement: vertical, eight $^1/_2$″ rebars; horizontal, $^5/_{16}$″ helical winding at 1$^1/_2$″ pitch; Cover: $^1/_2$″.	88 tons	58 min.			7	1	$^3/_4$
C-12-HRC-2	12″	12″ hexagonal columns; gravel aggregate concrete (3460 psi); Reinforcement: vertical, eight $^1/_2$″ rebars; horizontal, $^5/_{16}$″ helical winding at 1$^1/_2$″ pitch; Cover: $^1/_2$″.	78.7 tons	1 hr.			7	2	1

For SI: 1 inch = 25.4 mm, 1 pound per square inch = 0.00689 MPa, 1 ton = 8.896 kN.

Notes:

1. Failure mode—collapse.
2. Test stopped at 1 hour.

INTERNATIONAL CODE COUNCIL®
Copyright © 2019 ICC & NYSDOS. ALL RIGHTS RESERVED. Accessed by Lauren Gualdino (lgualdino@briarcliffmanor.org), (-) Order Number #100880972 on May 08, 2020 07:05 AM (PDT) pursuant to License Agreement with ICC & NYSDOS. No further reproduction, no

100880972

TABLE 2.1.9
HEXAGONAL REINFORCED CONCRETE COLUMNS
MINIMUM DIMENSION 14″ TO LESS THAN 16″

ITEM CODE	MINIMUM DIMENSION	CONSTRUCTION DETAILS	PERFORMANCE		REFERENCE NUMBER			NOTES	REC. HOURS
			LOAD	TIME	PRE-BMS-92	BMS-92	POST-BMS-92		
C-14-HRC-1	14″	14″ hexagonal columns; gravel aggregate concrete (4970 psi); Reinforcement: vertical, eight $^1/_2$″ rebars; horizontal, $^5/_{16}$″ helical winding on 2″ pitch; Cover: $^1/_2$″.	90 tons	2 hrs.			7	1, 2, 3	2

For SI: 1 inch = 25.4 mm, 1 pound per square inch = 0.00689 MPa, 1 ton = 8.896 kN.

Notes:

1. Withstood 2-hour fire test.
2. Withstood hose stream test.
3. Withstood reload after 48 hours.

TABLE 2.1.10
HEXAGONAL REINFORCED CONCRETE COLUMNS
DIAMETER—16″ TO LESS THAN 18″

ITEM CODE	MINIMUM DIMENSION	CONSTRUCTION DETAILS	PERFORMANCE		REFERENCE NUMBER			NOTES	REC. HOURS
			LOAD	TIME	PRE- BMS-92	BMS-92	POST-BMS-92		
C-16-HRC-1	16″	16″ hexagonal columns; gravel concrete (6320 psi); Reinforcement: vertical, eight $^5/_8$″ rebars; horizontal, $^5/_{16}$″ helical winding on $^3/_4$″ pitch; Cover: $^1/_2$″.	140 tons	1 hr. 55 min.			7	1	$1^3/_4$
C-16-HRC-2	16″	16″ hexagonal columns; gravel aggregate concrete (5580 psi); Reinforcement: vertical, eight $^5/_8$″ rebars; horizontal, $^5/_{16}$″ helical winding on $1^3/_4$″ pitch; Cover: $^1/_2$″	124 tons	2 hrs.			7	2	2

For SI: 1 inch = 25.4 mm, 1 pound per square inch = 0.00689 MPa, 1 ton = 8.896 kN.

Notes:

1. Failure mode—collapse.
2. Failed on furnace removal.

TABLE 2.1.11
HEXAGONAL REINFORCED CONCRETE COLUMNS
DIAMETER—20″ TO LESS THAN 22″

ITEM CODE	MINIMUM DIMENSION	CONSTRUCTION DETAILS	PERFORMANCE		REFERENCE NUMBER			NOTES	REC. HOURS
			LOAD	TIME	PRE- BMS-92	BMS-92	POST-BMS-92		
C-20-HRC-1	20″	20″ hexagonal columns; gravel concrete (6080 psi); Reinforcement: vertical, $^3/_4$″ rebars; horizontal, $^5/_6$″ helical winding on $1^3/_4$″ pitch; Cover: $^1/_2$″.	211 tons	2 hrs.			7	1	2
C-20-HRC-2	20″	20″ hexagonal columns; gravel concrete (5080 psi); Reinforcement: vertical, $^3/_4$″ rebars; horizontal, $^5/_{16}$″ wire on $1^3/_4$″ pitch; Cover: $^1/_2$″.	184 tons	2 hrs. 15 min.			7	2, 3, 4	$2^1/_4$

For SI: 1 inch = 25.4 mm, 1 pound per square inch = 0.00689 MPa, 1 ton = 8.896 kN.

Notes:

1. Column collapsed on furnace removal.
2. Passed $2^1/_4$-hour fire test.
3. Passed hose stream test.
4. Withstood reload after 48 hours.

INTERNATIONAL CODE COUNCIL®
Copyright © 2019 ICC & NYSDOS. ALL RIGHTS RESERVED. Accessed by Lauren Gualdino (lgualdino@briarcliffmanor.org), (-) Order Number #100880972 on May 08, 2020 07:05 AM (PDT) pursuant to License Agreement with ICC & NYSDOS. No further reproduction, no

100880972

TABLE 2.2
ROUND CAST IRON COLUMNS

ITEM CODE	MINIMUM DIMENSION	CONSTRUCTION DETAILS	PERFORMANCE		REFERENCE NUMBER			NOTES	REC. HOURS
			LOAD	TIME	PRE-BMS-92	BMS-92	POST-BMS-92		
C-7-CI-1	7″ O.D.	Column: 0.6″ minimum metal thickness; unprotected.	—	30 min.		1			1/2
C-7-CI-2	7″ O.D.	Column: 0.6″ minimum metal thickness concrete filled, outside unprotected.	—	45 min.		1			3/4
C-11-CI-3	11″ O.D.	Column: 0.6″ minimum metal thickness; Protection: 1 1/2″ Portland cement plaster on high ribbed metal lath, 1/2″ broken air space.	—	3 hrs.		1			3
C-11-CI-4	11″ O.D.	Column: 0.6″ minimum metal thickness; Protection: 2″ concrete other than siliceous aggregate.	—	2 hrs. 30 min.		1			2 1/2
C-12-CI-5	12.5″ O.D.	Column: 7″ O.D. 0.6″ minimum metal thickness; Protection: 2″ porous hollow tile, 3/4″ mortar between tile and column, outside wire ties.	—	3 hrs.		1			3
C-7-CI-6	7.6″ O.D.	Column: 7″ I.D., 3/10″ minimum metal thickness, concrete filled unprotected.	—	30 min.		1			1/2
C-8-CI-7	8.6″ O.D.	Column: 8″ I.D., 3/10″ minimum metal thickness; concrete filled reinforced with four 3 1/2″ × 3/8″ angles, in fill; unprotected outside.	—	1 hr.		1			1

For SI: 1 inch = 25.4 mm.

INTERNATIONAL CODE COUNCIL®
Copyright © 2019 ICC & NYSDOS. ALL RIGHTS RESERVED. Accessed by Lauren Gualdino (lgualdino@briarcliffmanor.org), (-) Order Number #100880972 on May 08, 2020 07:05 AM (PDT) pursuant to License Agreement with ICC & NYSDOS. No further reproduction, no

100880972

FIGURE 2.3
STEEL COLUMNS-GYPSUM ENCASEMENTS

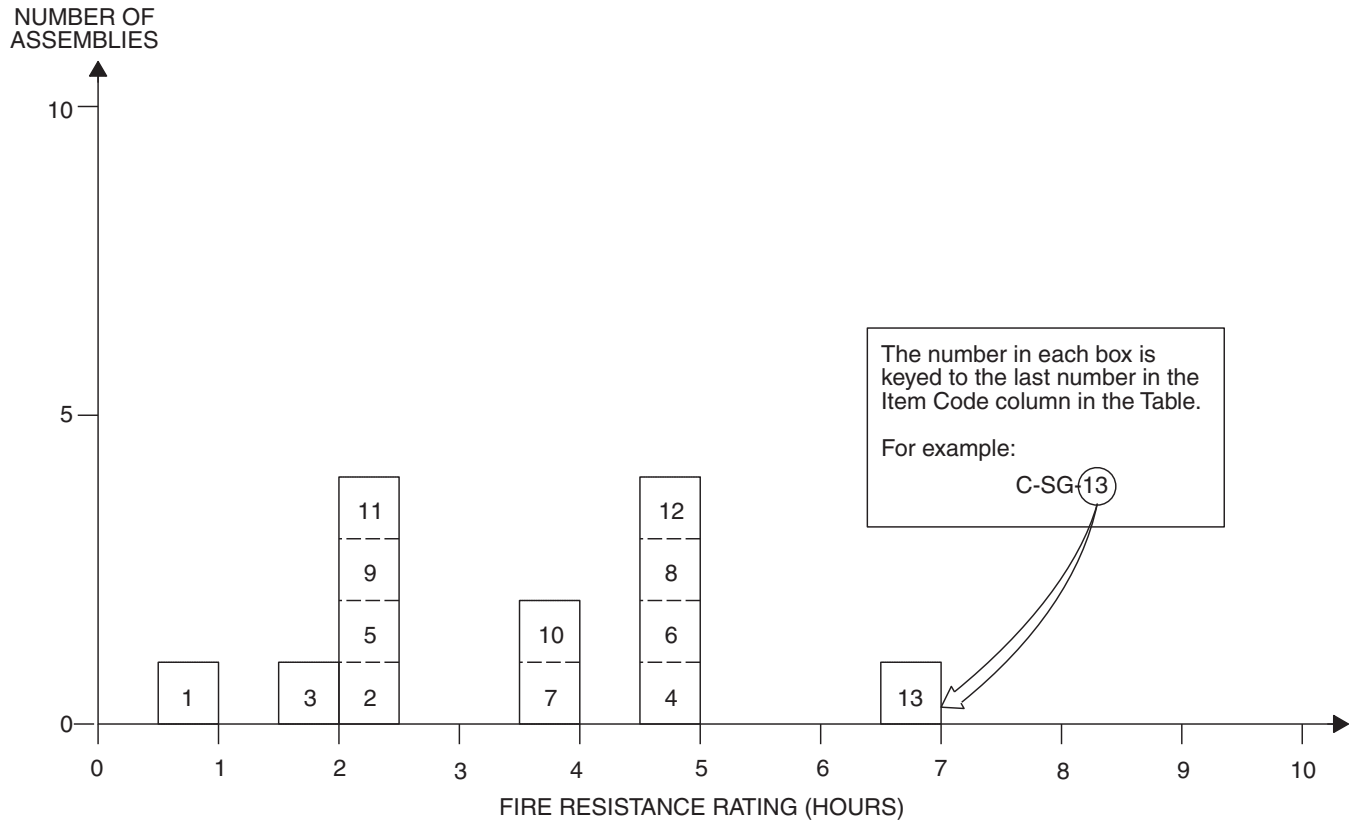

TABLE 2.3
STEEL COLUMNS—GYPSUM ENCASEMENTS

ITEM CODE	MINIMUM AREA OF SOLID MATERIAL	CONSTRUCTION DETAILS	PERFORMANCE		REFERENCE NUMBER			NOTES	REC. HOURS
			LOAD	TIME	PRE-BMS-92	BMS-92	POST-BMS-92		
C-SG-1	—	Steel protected with $^3/_4$″ 1:3 sanded gypsum or 1″ 1:2$^1/_2$ Portland cement plaster on wire or lath; one layer.	—	1 hr.		1			1
C-SG-2	—	Same as C-SG-1; two layers.	—	2 hrs. 30 min.		1			2$^1/_2$
C-SG-3	130 in.^{2}	2″ solid blocks with wire mesh in horizontal joints; 1″ mortar on flange; reentrant space filled with block and mortar.	—	2 hrs.		1			2
C-SG-4	150 in.^{2}	Same as C-130-SG-3 with $^1/_2$″ sanded gypsum plaster.	—	5 hrs.		1			5
C-SG-5	130 in.^{2}	2″ solid blocks with wire mesh in horizontal joints; 1″ mortar on flange; reentrant space filled with gypsum concrete.	—	2 hrs. 30 min.		1			2$^1/_2$
C-SG-6	150 in.^{2}	Same as C-130-SG-5 with $^1/_2$″ sanded gypsum plaster.	—	5 hrs.		1			5
C-SG-7	300 in.^{2}	4″ solid blocks with wire mesh in horizontal joints; 1″ mortar on flange; reentrant space filled with block and mortar.	—	4 hrs.		1			4

(continued)

INTERNATIONAL CODE COUNCIL®
Copyright © 2019 ICC & NYSDOS. ALL RIGHTS RESERVED. Accessed by Lauren Gualdino (lgualdino@briarcliffmanor.org), (-) Order Number #100880972 on May 08, 2020 07:05 AM (PDT) pursuant to License Agreement with ICC & NYSDOS. No further reproduction, no

100880972

TABLE 2.3—continued
STEEL COLUMNS—GYPSUM ENCASEMENTS

ITEM CODE	MINIMUM AREA OF SOLID MATERIAL	CONSTRUCTION DETAILS	PERFORMANCE		REFERENCE NUMBER			NOTES	REC. HOURS
			LOAD	TIME	PRE-BMS-92	BMS-92	POST-BMS-92		
C-SG-8	300 in.^{2}	Same as C-300-SG-7 with reentrant space filled with gypsum concrete.	—	5 hrs.		1			5
C-SG-9	85 in.^{2}	2″ solid blocks with cramps at horizontal joints; mortar on flange only at horizontal joints; reentrant space not filled.	—	2 hrs. 30 min.		1			$2^1/_2$
C-SG-10	105 in.^{2}	Same as C-85-SG-9 with $^1/_2$″ sanded gypsum plaster.	—	4 hrs.		1			4
C-SG-11	95 in.^{2}	3″ hollow blocks with cramps at horizontal joints; mortar on flange only at horizontal joints; reentrant space not filled.	—	2 hrs. 30 min.		1			$2^1/_2$
C-SG-12	120 in.^{2}	Same as C-95-SG-11 with $^1/_2$″ sanded gypsum plaster.	—	5 hrs.		1			5
C-SG-13	130 in.^{2}	2″ neat fibered gypsum reentrant space filled poured solid and reinforced with 4″ × 4″ wire mesh $^1/_2$″ sanded gypsum plaster.	—	7 hrs.		1			7

For SI: 1 inch = 25.4 mm, 1 square inch = 645 mm^2.

TABLE 2.4
TIMBER COLUMNS MINIMUM DIMENSION

ITEM CODE	MINIMUM DIMENSION	CONSTRUCTION DETAILS	PERFORMANCE		REFERENCE NUMBER			NOTES	REC. HOURS
			LOAD	TIME	PRE-BMS-92	BMS-92	POST-BMS-92		
C-11-TC-1	11″	With unprotected steel plate cap.	—	30 min.		1		1, 2	$^1/_2$
C-11-TC-2	11″	With unprotected cast iron cap and pintle.	—	45 min.		1		1, 2	$^3/_4$
C-11-TC-3	11″	With concrete or protected steel or cast iron cap.	—	1 hr. 15 min.		1		1, 2	$1^1/_4$
C-11-TC-4	11″	With $^3/_8$″ gypsum wallboard over column and over cast iron or steel cap.	—	1 hr. 15 min.		1		1, 2	$1^1/_4$
C-11-TC-5	11″	With 1″ Portland cement plaster on wire lath over column and over cast iron or steel cap; $^3/_4$″ air space.	—	2 hrs.		1		1, 2	2

For SI: 1 inch = 25.4 mm, 1 square inch = 645 mm^2.

Notes:

1. Minimum area: 120 square inches.
2. Type of wood: long leaf pine or Douglas fir.

TABLE 2.5.1.1
STEEL COLUMNS—CONCRETE ENCASEMENTS
MINIMUM DIMENSION LESS THAN 6″

ITEM CODE	MINIMUM DIMENSION	CONSTRUCTION DETAILS	PERFORMANCE		REFERENCE NUMBER			NOTES	REC. HOURS
			LOAD	TIME	PRE-BMS-92	BMS-92	POST-BMS-92		
C-5-SC-1	5″	5″ × 6″ outer dimensions; 4″ × 3″ × 10 lbs. “H” beam; Protection: gravel concrete (4900 psi) 6″ × 4″ - 13 SWG mesh.	12 tons	1 hr. 29 min.			7	1	$1^1/_4$

For SI: 1 inch = 25.4 mm, 1 pound per square inch = 0.00689 MPa, 1 ton = 8.896 kN.

Notes:

1. Failure mode—collapse.

INTERNATIONAL CODE COUNCIL®
Copyright © 2019 ICC & NYSDOS. ALL RIGHTS RESERVED. Accessed by Lauren Gualdino (lgualdino@briarcliffmanor.org), (-) Order Number #100880972 on May 08, 2020 07:05 AM (PDT) pursuant to License Agreement with ICC & NYSDOS. No further reproduction, no

100880972

TABLE 2.5.1.2
STEEL COLUMNS—CONCRETE ENCASEMENTS
6″ TO LESS THAN 8″ THICK

ITEM CODE	MINIMUM DIMENSION	CONSTRUCTION DETAILS	PERFORMANCE		REFERENCE NUMBER			NOTES	REC. HOURS
			LOAD	TIME	PRE-BMS-92	BMS-92	POST-BMS-92		
C-7-SC-1	7″	7″ × 8″ column; 4″ × 3″ × 10 lbs. “H” beam; Protection: brick filled concrete (6220 psi); 6″ × 4″ mesh - 13 SWG; 1″ below column surface.	12 tons	2 hrs. 46 min.			7	1	$2^3/_4$
C-7-SC-2	7″	7″ × 8″ column; 4″ × 3″ × 10 lbs. “H” beam; Protection: gravel concrete (5140 psi); 6″ × 4″ 13 SWG mesh 1″ below surface.	12 tons	3 hrs. 1 min.			7	1	3
C-7-SC-3	7″	7″ × 8″ column; 4″ × 3″ × 10 lbs. “H” beam; Protection: concrete (4540 psi); 6″ × 4″ - 13 SWG mesh; 1″ below column surface.	12 tons	3 hrs. 9 min.			7	1	3
C-7-SC-4	7″	7″ × 8″ column; 4″ × 3″ × 10 lbs. “H” beam; Protection: gravel concrete (5520 psi); 4″ × 4″ mesh; 16 SWG.	12 tons	2 hrs. 50 min.			7	1	$2^3/_4$

For SI: 1 inch = 25.4 mm, 1 pound per square inch = 0.00689 MPa, 1 ton = 8.896 kN.

Notes:

1. Failure mode—collapse.

INTERNATIONAL CODE COUNCIL®
Copyright © 2019 ICC & NYSDOS. ALL RIGHTS RESERVED. Accessed by Lauren Gualdino (lgualdino@briarcliffmanor.org), (-) Order Number #100880972 on May 08, 2020 07:05 AM (PDT) pursuant to License Agreement with ICC & NYSDOS. No further reproduction, no

100880972

FIGURE 2.5.1.3
STEEL COLUMNS—CONCRETE ENCASEMENTS
MINIMUM DIMENSION 8″ TO LESS THAN 10″

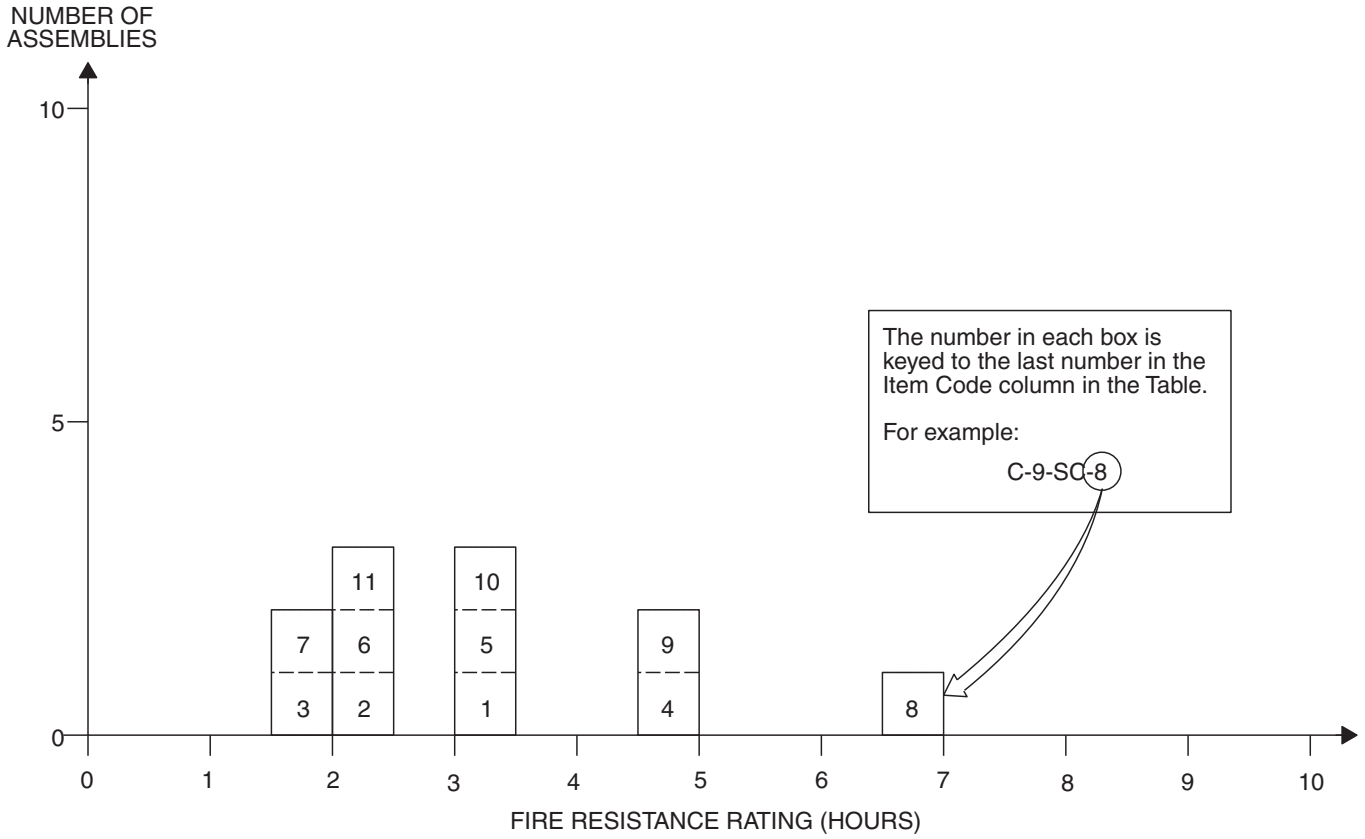

TABLE 2.5.1.3
STEEL COLUMNS—CONCRETE ENCASEMENTS
MINIMUM DIMENSION 8″ TO LESS THAN 10″

ITEM CODE	MINIMUM DIMENSION	CONSTRUCTION DETAILS	PERFORMANCE		REFERENCE NUMBER			NOTES	REC. HOURS
			LOAD	TIME	PRE-BMS-92	BMS-92	POST-BMS-92		
C-8-SC-1	$8^1/_2$″	$8^1/_2$″ × 10″ column; 6″ × $4^1/_2$″ × 20 lbs. “H” beam; Protection: gravel concrete (5140 psi); 6″ × 4″ - 13 SWG mesh.	39 tons	3 hrs. 8 min.			7	1	3
C-8-SC-2	8″	8″ × 10″ column; 8″ × 6″ × 35 lbs. “I” beam; Protection: gravel concrete (4240 psi); 6″ × 4″ - 13 SWG mesh; $^1/_2$″ cover.	90 tons	2 hrs. 1 min.			7	1	2
C-8-SC-3	8″	8″ × 10″ concrete encased column; 8″ × 6″ × 35 lbs. “H” beam; protection: aggregate concrete (3750 psi); 4″ mesh - 16 SWG reinforcing $^1/_2$″ below column surface.	90 tons	1 hr. 58 min.			7	1	$1^3/_4$
C-8-SC-4	8″	6″ × 6″ steel column; 2″ outside protection; Group I.	—	5 hrs.		1		2	5
C-8-SC-5	8″	6″ × 6″ steel column; 2″ outside protection; Group II.	—	3 hrs. 30 min.		1		2	$3^1/_2$
C-8-SC-6	8″	6″ × 6″ steel column; 2″ outside protection; Group III.	—	2 hrs. 30 min.		1		2	$2^1/_2$

(continued)

INTERNATIONAL CODE COUNCIL®
Copyright © 2019 ICC & NYSDOS. ALL RIGHTS RESERVED. Accessed by Lauren Gualdino (lgualdino@briarcliffmanor.org), (-) Order Number #100880972 on May 08, 2020 07:05 AM (PDT) pursuant to License Agreement with ICC & NYSDOS. No further reproduction, no

100880972

TABLE 2.5.1.3—continued
STEEL COLUMNS—CONCRETE ENCASEMENTS
MINIMUM DIMENSION 8″ TO LESS THAN 10″

ITEM CODE	MINIMUM DIMENSION	CONSTRUCTION DETAILS	PERFORMANCE		REFERENCE NUMBER			NOTES	REC. HOURS
			LOAD	TIME	PRE-BMS-92	BMS-92	POST-BMS-92		
C-8-SC-7	8″	6″ × 6″ steel column; 2″ outside protection; Group IV.	—	1 hr. 45 min.		1		2	$1^{3}/_{4}$
C-9-SC-8	9″	6″ × 6″ steel column; 3″ outside protection; Group I.	—	7 hrs.		1		2	7
C-9-SC-9	9″	6″ × 6″ steel column; 3″ outside protection; Group II.	—	5 hrs.		1		2	5
C-9-SC-10	9″	6″ × 6″ steel column; 3″ outside protection; Group III.	—	3 hrs. 30 min.		1		2	$3^{1}/_{2}$
C-9-SC-11	9″	6″ × 6″ steel column; 3″ outside protection; Group IV.	—	2 hrs. 30 min.		1		2	$2^{1}/_{2}$

For SI: 1 inch = 25.4 mm, 1 pound = 0.004448 kN, 1 pound per square inch = 0.00689 MPa, 1 pound per square yard = 5.3 N/m^2, 1 ton = 8.896 kN.

Notes:

1. Failure mode—collapse.
2. Group I: includes concrete having calcareous aggregate containing a combined total of not more than 10 percent of quartz, chert and flint for the coarse aggregate.

   Group II: includes concrete having trap-rock aggregate applied without metal ties and also concrete having cinder, sandstone or granite aggregate, if held in place with wire mesh or expanded metal having not larger than 4-inch mesh, weighing not less than 1.7 lbs./$yd.^2$, placed not more than 1 inch from the surface of the concrete.

   Group III: includes concrete having cinder, sandstone or granite aggregate tied with No. 5 gage steel wire, wound spirally over the column section on a pitch of 8 inches, or equivalent ties, and concrete having siliceous aggregates containing a combined total of 60 percent or more of quartz, chert and flint, if held in place with wire mesh or expanded metal having not larger than 4-inch mesh, weighing not less than 1.7 lbs./$yd.^2$, placed not more than 1 inch from the surface of the concrete.

   Group IV: includes concrete having siliceous aggregates containing a combined total of 60 percent or more of quartz, chert and flint, and tied with No. 5 gage steel wire wound spirally over the column section on a pitch of 8 inches, or equivalent ties.

INTERNATIONAL CODE COUNCIL®
Copyright © 2019 ICC & NYSDOS. ALL RIGHTS RESERVED. Accessed by Lauren Gualdino (lgualdino@briarcliffmanor.org), (-) Order Number #100880972 on May 08, 2020 07:05 AM (PDT) pursuant to License Agreement with ICC & NYSDOS. No further reproduction, no

100880972

FIGURE 2.5.1.4
STEEL COLUMNS—CONCRETE ENCASEMENTS
MINIMUM DIMENSION 10″ TO LESS THAN 12″

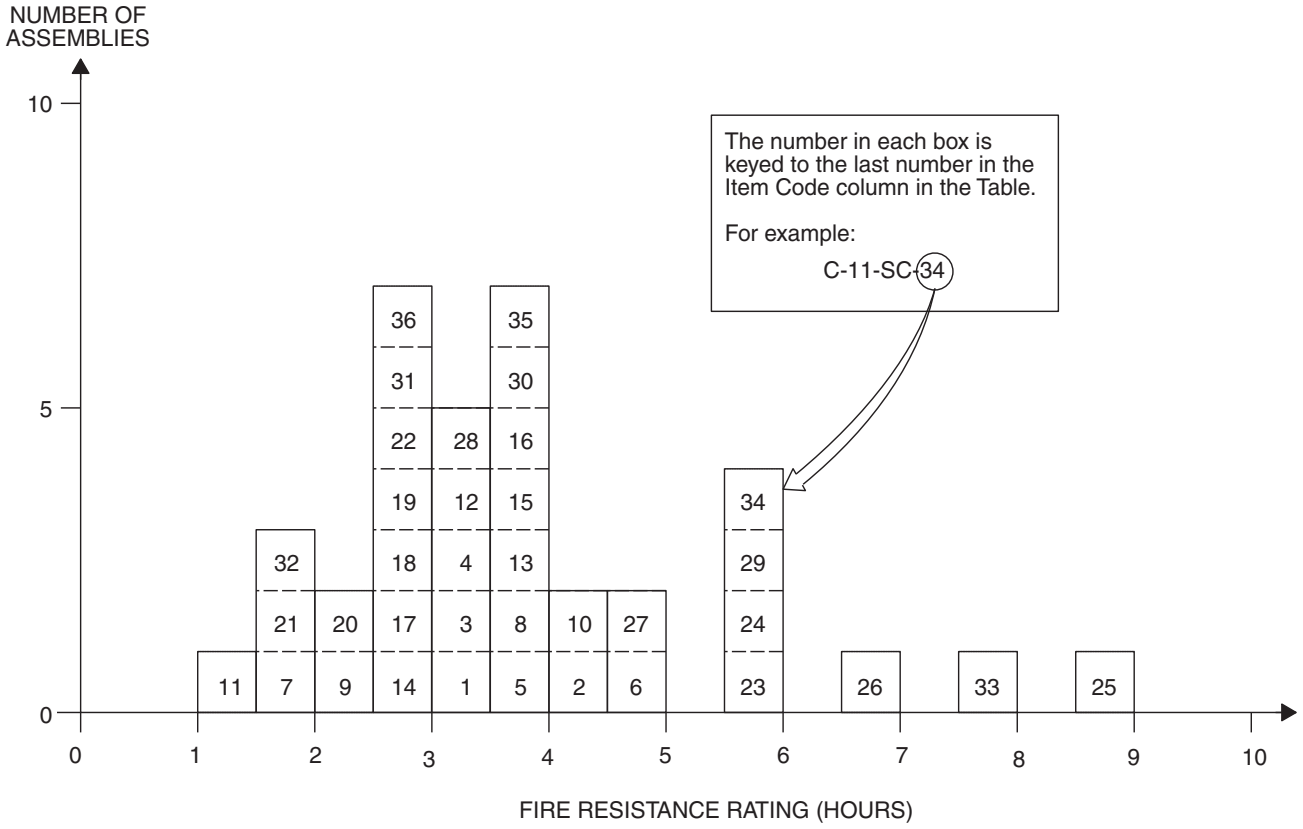

TABLE 2.5.1.4
STEEL COLUMNS—CONCRETE ENCASEMENTS
MINIMUM DIMENSION 10″ TO LESS THAN 12″

ITEM CODE	MINIMUM DIMENSION	CONSTRUCTION DETAILS	PERFORMANCE		REFERENCE NUMBER			NOTES	REC. HOURS
			LOAD	TIME	PRE-BMS-92	BMS-92	POST-BMS-92		
C-10-SC-1	10″	10″ × 12″ concrete encased steel column; 8″ × 6″ × 35 lbs. “H” beam; Protection: gravel aggregate concrete (3640 psi); Mesh 6″ × 4″ 13 SWG, 1″ below column surface.	90 tons	3 hrs. 7 min.			7	1,2	3
C-10-SC-2	10″	10″ × 16″ column; 8″ × 6″ × 35 lbs. “H” beam; Protection: clay brick concrete (3630 psi); 6″ × 4″ mesh; 13 SWG, 1″ below column surface.	90 tons	4 hrs. 6 min.			7	2	4
C-10-SC-3	10″	10″ × 12″ column; 8″ × 6″ × 35 lbs. “H” beam; Protection: crushed stone and sand concrete (3930 psi); 6″ × 4″ - 13 SWG mesh; 1″ below column surface.	90 tons	3 hrs. 17 min.			7	2	$3^1/_4$
C-10-SC-4	10″	10″ × 12″ column; 8″ × 6″ × 35 lbs. “H” beam; Protection: crushed basalt and sand concrete (4350 psi); 6″ × 4″ - 13 SWG mesh; 1″ below column surface.	90 tons	3 hrs. 22 min.			7	2	$3^1/_3$
C-10-SC-5	10″	10″ × 12″ column; 8″ × 6″ × 35 lbs. “H” beam; Protection: gravel aggregate concrete (5570 psi); 6″ × 4″ mesh; 13 SWG.	90 tons	3 hrs. 39 min.			7	2	$3^1/_2$
C-10-SC-6	10″	10″ × 16″ column; 8″ × 6″ × 35 lbs. “I” beam; Protection: gravel concrete (4950 psi); mesh; 6″ × 4″ 13 SWG 1″ below column surface.	90 tons	4 hrs. 32 min.			7	2	$4^1/_2$

(continued)

INTERNATIONAL CODE COUNCIL®
Copyright © 2019 ICC & NYSDOS. ALL RIGHTS RESERVED. Accessed by Lauren Gualdino (lgualdino@briarcliffmanor.org), (-) Order Number #100880972 on May 08, 2020 07:05 AM (PDT) pursuant to License Agreement with ICC & NYSDOS. No further reproduction, no

100880972

TABLE 2.5.1.4—continued
STEEL COLUMNS—CONCRETE ENCASEMENTS
MINIMUM DIMENSION 10″ TO LESS THAN 12″

ITEM CODE	MINIMUM DIMENSION	CONSTRUCTION DETAILS	PERFORMANCE		REFERENCE NUMBER			NOTES	REC. HOURS
			LOAD	TIME	PRE-BMS-92	BMS-92	POST-BMS-92		
C-10-SC-7	10″	10″ × 12″ concrete encased steel column; 8″ × 6″ × 35 lbs. “H” beam; Protection: aggregate concrete (1370 psi); 6″ × 4″ mesh; 13 SWG reinforcing 1″ below column surface.	90 tons	2 hrs.			7	3, 4	2
C-10-SC-8	10″	10″ × 12″ concrete encased steel column; 8″ × 6″ × 35 lbs. “H” column; Protection: aggregate concrete (4000 psi); 13 SWG iron wire loosely around column at 6″ pitch about 2″ beneath column surface.	86 tons	3 hrs. 36 min.			7	2	$3^1/_2$
C-10-SC-9	10″	10″ × 12″ concrete encased steel column; 8″ × 6″ × 35 lbs. “H” beam; Protection: aggregate concrete (3290 psi); 2″ cover minimum.	86 tons	2 hrs. 8 min.			7	2	2
C-10-SC-10	10″	10″ × 14″ concrete encased steel column; 8″ × 6″ × 35 lbs. “H” column; Protection: crushed brick filled concrete (5310 psi); 6″ × 4″ mesh; 13 SWG reinforcement 1″ below column surface.	90 tons	4 hrs. 28 min.			7	2	$4^1/_3$
C-10-SC-11	10″	10″ × 14″ concrete encased column; 8″ × 6″ × 35 lbs. “H” beam; Protection: aggregate concrete (342 psi); 6″ × 4″ mesh; 13 SWG reinforcement 1″ below surface.	90 tons	1 hr. 2 min.			7	2	1
C-10-SC-12	10″	10″ × 12″ concrete encased steel column; 8″ × 6″ × 35 lbs. “H” beam; Protection: aggregate concrete (4480 psi); four $^3/_8$″ vertical bars at “H” beam edges with $^3/_{16}$″ spacers at beam surface at 3′ pitch and $^3/_{16}$″ binders at 10″ pitch; 2″ concrete cover.	90 tons	3 hrs. 2 min.			7	2	3
C-10-SC-13	10″	10″ × 12″ concrete encased steel column; 8″ × 6″ × 35 lbs. “H” beam; Protection: aggregate concrete (5070 psi); 6″ × 4″ mesh; 13 SWG reinforcing at 6″ beam sides wrapped and held by wire ties across (open) 8″ beam face; reinforcements wrapped in 6″ × 4″ mesh; 13 SWG throughout; $^1/_2$″ cover to column surface.	90 tons	3 hrs. 59 min.			7	2	$3^3/_4$
C-10-SC-14	10″	10″ × 12″ concrete encased steel column; 8″ × 6″ × 35 lbs. “H” beam; Protection: aggregate concrete (4410 psi); 6″ × 4″ mesh; 13 SWG reinforcement $1^1/_4$″ below column surface; $^1/_2$″ limestone cement plaster with $^3/_8$″ gypsum plaster finish.	90 tons	2 hrs. 50 min.			7	2	$2^3/_4$
C-10-SC-15	10″	10″ × 12″ concrete encased steel column; 8″ × 6″ × 35 lbs. “H” beam; Protection: crushed clay brick filled concrete (4260 psi); 6″ × 4″ mesh; 13 SWG reinforcing 1″ below column surface.	90 tons	3 hrs. 54 min.			7	2	$3^3/_4$
C-10-SC-16	10″	10″ × 12″ concrete encased steel column; 8″ × 6″ × 35 lbs. “H” beam; Protection: limestone aggregate concrete (4350 psi); 6″ × 4″ mesh; 13 SWG reinforcing 1″ below column surface.	90 tons	3 hrs. 54 min.			7	2	$3^3/_4$

(continued)

INTERNATIONAL CODE COUNCIL®
Copyright © 2019 ICC & NYSDOS. ALL RIGHTS RESERVED. Accessed by Lauren Gualdino (lgualdino@briarcliffmanor.org), (-) Order Number #100880972 on May 08, 2020 07:05 AM (PDT) pursuant to License Agreement with ICC & NYSDOS. No further reproduction, no

100880972

TABLE 2.5.1.4—continued
STEEL COLUMNS—CONCRETE ENCASEMENTS
MINIMUM DIMENSION 10″ TO LESS THAN 12″

ITEM CODE	MINIMUM DIMENSION	CONSTRUCTION DETAILS	PERFORMANCE		REFERENCE NUMBER			NOTES	REC. HOURS
			LOAD	TIME	PRE-BMS-92	BMS-92	POST-BMS-92		
C-10-SC-17	10″	10″ × 12″ concrete encased steel column; 8″ × 6″ × 35 lbs. “H” beam; Protection: limestone aggregate concrete (5300 psi); 6″ × 4″; 13 SWG wire mesh 1″ below column surface.	90 tons	3 hrs.			7	4, 5	3
C-10-SC-18	10″	10″ × 12″ concrete encased steel column; 8″ × 6″ × 35 lbs. “H” beam; Protection: limestone aggregate concrete (4800 psi) with 6″ × 4″; 13 SWG mesh reinforcement 1″ below surface.	90 tons	3 hrs.			7	4, 5	3
C-10-SC-19	10″	10″ × 14″ concrete encased steel column; 12″ × 8″ × 65 lbs. “H” beam; Protection: aggregate concrete (3900 psi); 4″ mesh; 16 SWG reinforcing $^1/_2$″ below column surface.	118 tons	2 hrs. 42 min.			7	2	2
C-10-SC-20	10″	10″ × 14″ concrete encased steel column; 12″ × 8″ × 65 lbs. “H” beam; Protection: aggregate concrete (4930 psi); 4″ mesh; 16 SWG reinforcing $^1/_2$″ below column surface.	177 tons	2 hrs. 8 min.			7	2	2
C-10-SC-21	$10^3/_8$″	$10^3/_8$″ × $12^3/_8$″ concrete encased steel column; 8″ × 6″ × 35 lbs. “H” beam; Protection: aggregate concrete (835 psi) with 6″ × 4″ mesh; 13 SWG reinforcing $1^3/_{16}$″ below column surface; $^3/_{16}$″ gypsum plaster finish.	90 tons	2 hrs.			7	3, 4	2
C-11-SC-22	11″	11″ × 13″ concrete encased steel column; 8″ × 6″ × 35 lbs. “H” beam; Protection: ″open texture″ brick filled concrete (890 psi) with 6″ × 4″ mesh; 13 SWG reinforcing $1^1/_2$″ below column surface; $^3/_8$″ lime cement plaster; $^1/_8$″ gypsum plaster finish.	90 tons	3 hrs.			7	6, 7	3
C-11-SC-23	11″	11″ × 12″ column; 4″ × 3″ × 10 lbs. “H” beam; gravel concrete (4550 psi); 6″ × 4″ - 13 SWG mesh reinforcing; 1″ below column surface.	12 tons	6 hrs.			7	7, 8	6
C-11-SC-24	11″	11″ × 12″ column; 4″ × 3″ × 10 lbs. “H” beam; Protection: gravel aggregate concrete (3830 psi); with 4″ × 4″ mesh; 16 SWG, 1″ below column surface.	16 tons	5 hrs. 32 min.			7	2	$5^1/_2$
C-10-SC-25	10″	6″ × 6″ steel column with 4″ outside protection; Group I.	—	9 hrs.		1		9	9
C-10-SC-26	10″	Description as per C-SC-25; Group II.	—	7 hrs.		1		9	7
C-10-SC-27	10″	Description as per C-10-SC-25; Group III.	—	5 hrs.		1		9	5
C-10-SC-28	10″	Description as per C-10-SC-25; Group IV.	—	3 hrs. 30 min.		1		9	$3^1/_2$
C-10-SC-29	10″	8″ × 8″ steel column with 2″ outside protection; Group I.	—	6 hrs.		1		9	6
C-10-SC-30	10″	Description as per C-10-SC-29; Group II.	—	4 hrs.		1		9	4
C-10-SC-31	10″	Description as per C-10-SC-29; Group III.	—	3 hrs.		1		9	3
C-10-SC-32	10″	Description as per C-10-SC-29; Group IV.	—	2 hrs.		1		9	2

(continued)

INTERNATIONAL CODE COUNCIL®
Copyright © 2019 ICC & NYSDOS. ALL RIGHTS RESERVED. Accessed by Lauren Gualdino (lgualdino@briarcliffmanor.org), (-) Order Number #100880972 on May 08, 2020 07:05 AM (PDT) pursuant to License Agreement with ICC & NYSDOS. No further reproduction, no

100880972

TABLE 2.5.1.4—continued
STEEL COLUMNS—CONCRETE ENCASEMENTS
MINIMUM DIMENSION 10″ TO LESS THAN 12″

ITEM CODE	MINIMUM DIMENSION	CONSTRUCTION DETAILS	PERFORMANCE		REFERENCE NUMBER			NOTES	REC. HOURS
			LOAD	TIME	PRE-BMS-92	BMS-92	POST-BMS-92		
C-11-SC-33	11″	8″ × 8″ steel column with 3″ outside protection; Group I.	—	8 hrs.		1		9	8
C-11-SC-34	11″	Description as per C-10-SC-33; Group II.	—	6 hrs.		1		9	6
C-11-SC-35	11″	Description as per C-10-SC-33; Group III.	—	4 hrs.		1		9	4
C-11-SC-36	11″	Description as per C-10-SC-33; Group IV.	—	3 hrs.		1		9	3

For SI: 1 inch = 25.4 mm, 1 pound = 0.004448 kN, 1 pound per square inch = 0.00689 MPa, 1 pound per square yard = 5.3 N/m^2, 1 ton = 8.896 kN.

Notes:

1. Tested under total restraint load to prevent expansion—minimum load 90 tons.
2. Failure mode—collapse.
3. Passed 2-hour fire test (Grade “C,” British).
4. Passed hose stream test.
5. Column tested and passed 3-hour grade fire resistance (British).
6. Column passed 3-hour fire test.
7. Column collapsed during hose stream testing.
8. Column passed 6-hour fire test.
9. Group I: includes concrete having calcareous aggregate containing a combined total of not more than 10 percent of quartz, chert and flint for the coarse aggregate.

   Group II: includes concrete having trap-rock aggregate applied without metal ties and also concrete having cinder, sandstone or granite aggregate, if held in place with wire mesh or expanded metal having not larger than 4-inch mesh, weighing not less than 1.7 lbs./$yd.^2$, placed not more than 1 inch from the surface of the concrete.

   Group III: includes concrete having cinder, sandstone or granite aggregate tied with No. 5 gage steel wire, wound spirally over the column section on a pitch of 8 inches, or equivalent ties, and concrete having siliceous aggregates containing a combined total of 60 percent or more of quartz, chert and flint, if held in place with wire mesh or expanded metal having not larger than 4-inch mesh, weighing not less than 1.7 lbs./$yd.^2$, placed not more than 1 inch from the surface of the concrete.

   Group IV: includes concrete having siliceous aggregates containing a combined total of 60 percent or more of quartz, chert and flint, and tied with No. 5 gage steel wire wound spirally over the column section on a pitch of 8 inches, or equivalent ties.

INTERNATIONAL CODE COUNCIL®
Copyright © 2019 ICC & NYSDOS. ALL RIGHTS RESERVED. Accessed by Lauren Gualdino (lgualdino@briarcliffmanor.org), (-) Order Number #100880972 on May 08, 2020 07:05 AM (PDT) pursuant to License Agreement with ICC & NYSDOS. No further reproduction, no

100880972

FIGURE 2.5.1.5
STEEL COLUMNS—CONCRETE ENCASEMENTS
MINIMUM DIMENSION 12″ TO LESS THAN 14″

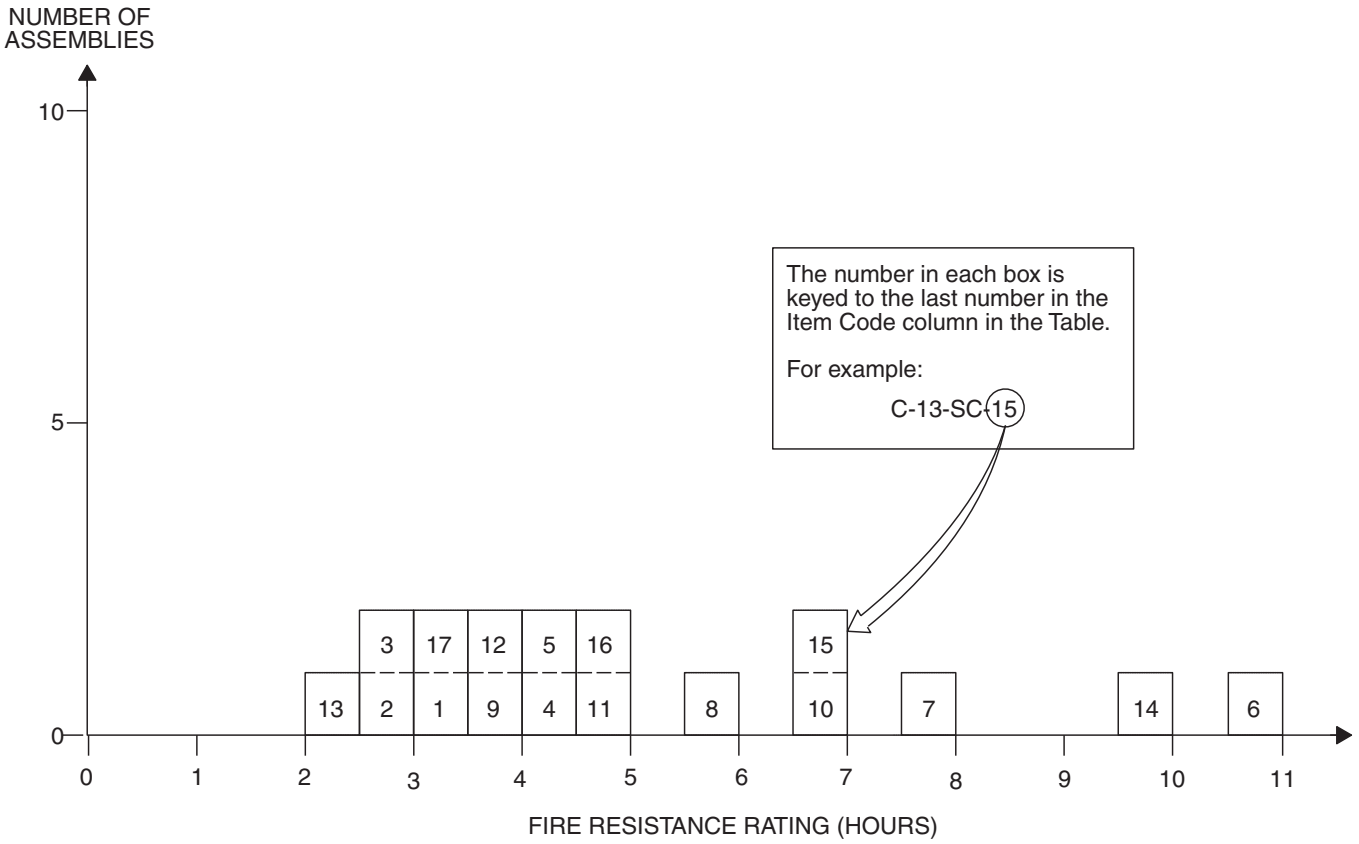

TABLE 2.5.1.5
STEEL COLUMNS—CONCRETE ENCASEMENTS
MINIMUM DIMENSION 12″ TO LESS THAN 14″

ITEM CODE	MINIMUM DIMENSION	CONSTRUCTION DETAILS	PERFORMANCE		REFERENCE NUMBER			NOTES	REC. HOURS
			LOAD	TIME	PRE-BMS-92	BMS-92	POST-BMS-92		
C-12-SC-1	12″	12″ × 14″ concrete encased steel column; 8″ × 6″ × 35 lbs. “H” beam; Protection: aggregate concrete (4150 psi) with 4″ mesh; 16 SWG reinforcing 1″ below column surface.	120 tons	3 hrs. 24 min.			7	1	$3^{1}/_{3}$
C-12-SC-2	12″	12″ × 16″ concrete encased column; 8″ × 6″ × 35 lbs. “H” beam; Protection: aggregate concrete (4300 psi) with 4″ mesh; 16 SWG reinforcing 1″ below column surface.	90 tons	2 hrs. 52 min.			7	1	$2^{3}/_{4}$
C-12-SC-3	12″	12″ × 16″ concrete encased steel column; 12″ × 8″ × 65 lbs. “H” column; Protection: gravel aggregate concrete (3550 psi) with 4″ mesh; 16 SWG reinforcement 1″ below column surface.	177 tons	2 hrs. 31 min.			7	1	$2^{1}/_{2}$
C-12-SC-4	12″	12″ × 16″ concrete encased column; 12″ × 8″ × 65 lbs. “H” beam; Protection: aggregate concrete (3450 psi) with 4″ mesh; 16 SWG reinforcement 1″ below column surface.	118 tons	4 hrs. 4 min.			7	1	4

(continued)

INTERNATIONAL CODE COUNCIL®
Copyright © 2019 ICC & NYSDOS. ALL RIGHTS RESERVED. Accessed by Lauren Gualdino (lgualdino@briarcliffmanor.org), (-) Order Number #100880972 on May 08, 2020 07:05 AM (PDT) pursuant to License Agreement with ICC & NYSDOS. No further reproduction, no

100880972

TABLE 2.5.1.5—continued
STEEL COLUMNS—CONCRETE ENCASEMENTS
MINIMUM DIMENSION 12″ TO LESS THAN 14″

ITEM CODE	MINIMUM DIMENSION	CONSTRUCTION DETAILS	PERFORMANCE		REFERENCE NUMBER			NOTES	REC. HOURS
			LOAD	TIME	PRE-BMS-92	BMS-92	POST-BMS-92		
C-12-SC-5	$12^1/_2$″	$12^1/_2$″ × 14″ column; 6″ × $4^1/_2$″ × 20 lbs. "H" beam; Protection: gravel aggregate concrete (3750 psi) with 4″ × 4″ mesh; 16 SWG reinforcing 1″ below column surface.	52 tons	4 hrs. 29 min.			7	1	$4^1/_3$
C-12-SC-6	12″	8″ × 8″ steel column; 2″ outside protection; Group I.	—	11 hrs.			1	2	11
C-12-SC-7	12″	Description as per C-12-SC-6; Group II.	—	8 hrs.		1		2	8
C-12-SC-8	12″	Description as per C-12-SC-6; Group III.	—	6 hrs.		1		2	6
C-12-SC-9	12″	Description as per C-12-SC-6; Group IV.	—	4 hrs.		1		2	4
C-12-SC-10	12″	10″ × 10″ steel column; 2″ outside protection; Group I.	—	7 hrs.		1		2	7
C-12-SC-11	12″	Description as per C-12-SC-10; Group II.	—	5 hrs.		1		2	5
C-12-SC-12	12″	Description as per C-12-SC-10; Group III.	—	4 hrs.		1		2	4
C-12-SC-13	12″	Description as per C-12-SC-10; Group IV.	—	2 hrs. 30 min.		1		2	$2^1/_2$
C-13-SC-14	13″	10″ × 10″ steel column; 3″ outside protection; Group I.	—	10 hrs.		1		2	10
C-13-SC-15	13″	Description as per C-12-SC-14; Group II.	—	7 hrs.		1		2	7
C-13-SC-16	13″	Description as per C-12-SC-14; Group III.	—	5 hrs.		1		2	5
C-13-SC-17	13″	Description as per C-12-SC-14; Group IV.	—	3 hrs. 30 min.		1		2	$3^1/_2$

For SI: 1 inch = 25.4 mm, 1 pound = 0.004448 kN, 1 pound per square inch = 0.00689 MPa, 1 pound per square yard = 5.3 N/m^2, 1 ton = 8.896 kN.

Notes:

1. Failure mode—collapse.
2. Group I: includes concrete having calcareous aggregate containing a combined total of not more than 10 percent of quartz, chert and flint for the coarse aggregate.

   Group II: includes concrete having trap-rock aggregate applied without metal ties and also concrete having cinder, sandstone or granite aggregate, if held in place with wire mesh or expanded metal having not larger than 4-inch mesh, weighing not less than 1.7 lbs./yd.^{2}, placed not more than 1 inch from the surface of the concrete.

   Group III: includes concrete having cinder, sandstone or granite aggregate tied with No. 5 gage steel wire, wound spirally over the column section on a pitch of 8 inches, or equivalent ties, and concrete having siliceous aggregates containing a combined total of 60 percent or more of quartz, chert and flint, if held in place with wire mesh or expanded metal having not larger than 4-inch mesh, weighing not less than 1.7 lbs./yd.^{2}, placed not more than 1 inch from the surface of the concrete.

   Group IV: includes concrete having siliceous aggregates containing a combined total of 60 percent or more of quartz, chert and flint, and tied with No. 5 gage steel wire wound spirally over the column section on a pitch of 8 inches, or equivalent ties.

INTERNATIONAL CODE COUNCIL®
Copyright © 2019 ICC & NYSDOS. ALL RIGHTS RESERVED. Accessed by Lauren Gualdino (lgualdino@briarcliffmanor.org), (-) Order Number #100880972 on May 08, 2020 07:05 AM (PDT) pursuant to License Agreement with ICC & NYSDOS. No further reproduction, no

100880972

FIGURE 2.5.1.6
STEEL COLUMNS—CONCRETE ENCASEMENTS
MINIMUM DIMENSION 14″ TO LESS THAN 16″

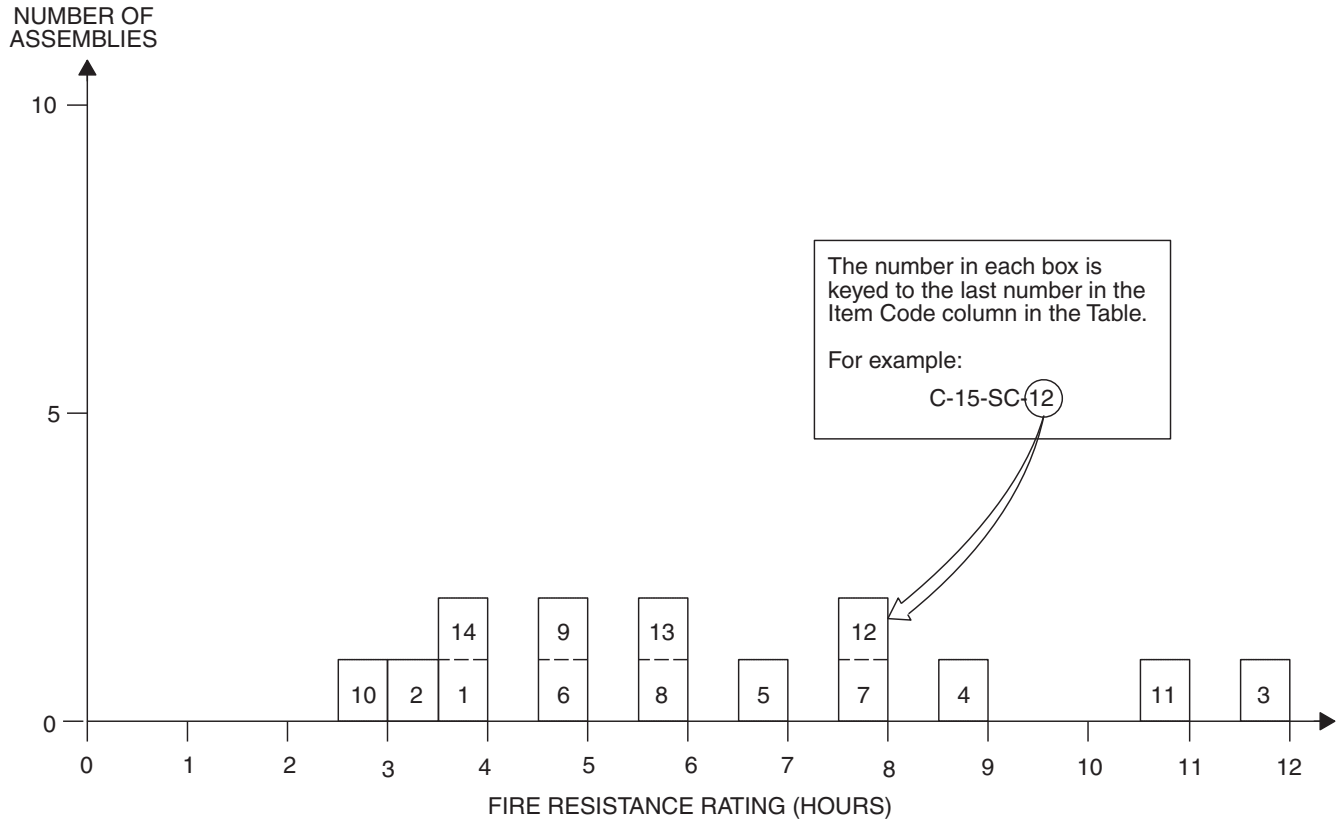

TABLE 2.5.1.6
STEEL COLUMNS—CONCRETE ENCASEMENTS
MINIMUM DIMENSION 14″ TO LESS THAN 16″

ITEM CODE	MINIMUM DIMENSION	CONSTRUCTION DETAILS	PERFORMANCE		REFERENCE NUMBER			NOTES	REC. HOURS
			LOAD	TIME	PRE-BMS-92	BMS-92	POST-BMS-92		
C-14-SC-1	14″	24″ × 16″ concrete encased steel column; 8″ × 6″ × 35 lbs. “H” column; Protection: aggregate concrete (4240 psi); 4″ mesh - 16 SWG reinforcing 1″ below column surface.	90 tons	3 hrs. 40 min.			7	1	3
C-14-SC-2	14″	14″ × 18″ concrete encased steel column; 12″ × 8″ × 65 lbs. “H” beam; Protection: gravel aggregate concrete (4000 psi) with 4″ - 16 SWG wire mesh reinforcement 1″ below column surface.	177 tons	3 hrs. 20 min.			7	1	3
C-14-SC-3	14″	10″ × 10″ steel column; 4″ outside protection; Group I.	—	12 hrs.		1		2	12
C-14-SC-4	14″	Description as per C-14-SC-3; Group II.	—	9 hrs.		1		2	9
C-14-SC-1	14″	24″ × 16″ concrete encased steel column; 8″ × 6″ × 35 lbs. “H” column; Protection: aggregate concrete (4240 psi); 4″ mesh - 16 SWG reinforcing 1″ below column surface.	90 tons	3 hrs. 40 min.			7	1	3

(continued)

INTERNATIONAL CODE COUNCIL®
Copyright © 2019 ICC & NYSDOS. ALL RIGHTS RESERVED. Accessed by Lauren Gualdino (lgualdino@briarcliffmanor.org), (-) Order Number #100880972 on May 08, 2020 07:05 AM (PDT) pursuant to License Agreement with ICC & NYSDOS. No further reproduction, no

100880972

TABLE 2.5.1.6—continued
STEEL COLUMNS—CONCRETE ENCASEMENTS
MINIMUM DIMENSION 14″ TO LESS THAN 16″

ITEM CODE	MINIMUM DIMENSION	CONSTRUCTION DETAILS	PERFORMANCE		REFERENCE NUMBER			NOTES	REC. HOURS
			LOAD	TIME	PRE-BMS-92	BMS-92	POST-BMS-92		
C-14-SC-2	14″	14″ × 18″ concrete encased steel column; 12″ × 8″ × 65 lbs. “H” beam; Protection: gravel aggregate concrete (4000 psi) with 4″-16 SWG wire mesh reinforcement 1″ below column surface.	177 tons	3 hrs. 20 min.			7	1	3
C-14-SC-3	14″	10″ × 10″ steel column; 4″ outside protection; Group I.	—	12 hrs.		1		2	12
C-14-SC-4	14″	Description as per C-14-SC-3; Group II.	—	9 hrs.		1		2	9
C-14-SC-5	14″	Description as per C-14-SC-3; Group III.	—	7 hrs.		1		2	7
C-14-SC-6	14″	Description as per C-14-SC-3; Group IV.	—	5 hrs.		1		2	5
C-14-SC-7	14″	12″ × 12″ steel column; 2″ outside protection; Group I.	—	8 hrs.		1		2	8
C-14-SC-8	14″	Description as per C-14-SC-7; Group II.	—	6 hrs.		1		2	6
C-14-SC-9	14″	Description as per C-14-SC-7; Group III.	—	5 hrs.		1		2	5
C-14-SC-10	14″	Description as per C-14-SC-7; Group IV	—	3 hrs.		1		2	3
C-15-SC-11	15″	12″ × 12″ steel column; 3″ outside protection; Group I.	—	11 hrs.		1		2	11
C-15-SC-12	15″	Description as per C-15-SC-11; Group II.	—	8 hrs.		1		2	8
C-15-SC-13	15″	Description as per C-15-SC-11; Group III.	—	6 hrs.		1		2	6
C-15-SC-14	15″	Description as per C-15-SC-11; Group IV.	—	4 hrs.		1		2	4

For SI: 1 inch = 25.4 mm, 1 pound = 0.004448 kN, 1 pound per square inch = 0.00689 MPa, 1 pound per square yard = 5.3 N/m^2, 1 ton = 8.896 kN.

Notes:

1. Collapse.
2. Group I: includes concrete having calcareous aggregate containing a combined total of not more than 10 percent of quartz, chert and flint for the coarse aggregate.

   Group II: includes concrete having trap-rock aggregate applied without metal ties and also concrete having cinder, sandstone or granite aggregate, if held in place with wire mesh or expanded metal having not larger than 4-inch mesh, weighing not less than 1.7 lbs./yd.^{2}, placed not more than 1 inch from the surface of the concrete.

   Group III: includes concrete having cinder, sandstone or granite aggregate tied with No. 5 gage steel wire, wound spirally over the column section on a pitch of 8 inches, or equivalent ties, and concrete having siliceous aggregates containing a combined total of 60 percent or more of quartz, chert and flint, if held in place with wire mesh or expanded metal having not larger than 4-inch mesh, weighing not less than 1.7 lbs./yd.^{2}, placed not more than 1 inch from the surface of the concrete.

   Group IV: includes concrete having siliceous aggregates containing a combined total of 60 percent or more of quartz, chert and flint, and tied with No. 5 gage steel wire wound spirally over the column section on a pitch of 8 inches, or equivalent ties.

INTERNATIONAL CODE COUNCIL®
Copyright © 2019 ICC & NYSDOS. ALL RIGHTS RESERVED. Accessed by Lauren Gualdino (lgualdino@briarcliffmanor.org), (-) Order Number #100880972 on May 08, 2020 07:05 AM (PDT) pursuant to License Agreement with ICC & NYSDOS. No further reproduction, no

100880972

TABLE 2.5.1.7
STEEL COLUMNS—CONCRETE ENCASEMENTS
MINIMUM DIMENSION 16″ TO LESS THAN 18″

ITEM CODE	MINIMUM DIMENSION	CONSTRUCTION DETAILS	PERFORMANCE		REFERENCE NUMBER			NOTES	REC. HOURS
			LOAD	TIME	PRE-BMS-92	BMS-92	POST-BMS-92		
C-16-SC-13	16″	12″ × 12″ steel column; 4″ outside protection; Group I.	—	14 hrs.		1		1	14
C-16-SC-2	16″	Description as per C-16-SC-1; Group II.	—	10 hrs.		1		1	10
C-16-SC-3	16″	Description as per C-16-SC-1; Group III.	—	8 hrs.		1		1	8
C-16-SC-4	16″	Description as per C-16-SC-1; Group IV.	—	5 hrs.		1		1	5

For SI: 1 inch = 25.4 mm.

Notes:

1. Group I: includes concrete having calcareous aggregate containing a combined total of not more than 10 percent of quartz, chert and flint for the coarse aggregate.

   Group II: includes concrete having trap-rock aggregate applied without metal ties and also concrete having cinder, sandstone or granite aggregate, if held in place with wire mesh or expanded metal having not larger than 4-inch mesh, weighing not less than 1.7 lbs./yd.^{2}, placed not more than 1 inch from the surface of the concrete.

   Group III: includes concrete having cinder, sandstone or granite aggregate tied with No. 5 gage steel wire, wound spirally over the column section on a pitch of 8 inches, or equivalent ties, and concrete having siliceous aggregates containing a combined total of 60 percent or more of quartz, chert and flint, if held in place with wire mesh or expanded metal having not larger than 4-inch mesh, weighing not less than 1.7 lbs./yd.^{2}, placed not more than 1 inch from the surface of the concrete.

   Group IV: includes concrete having siliceous aggregates containing a combined total of 60 percent or more of quartz, chert and flint, and tied with No. 5 gage steel wire wound spirally over the column section on a pitch of 8 inches, or equivalent ties.

TABLE 2.5.2.1
STEEL COLUMNS—BRICK AND BLOCK ENCASEMENTS
MINIMUM DIMENSION 10″ TO LESS THAN 12″

ITEM CODE	MINIMUM DIMENSION	CONSTRUCTION DETAILS	PERFORMANCE		REFERENCE NUMBER			NOTES	REC. HOURS
			LOAD	TIME	PRE-BMS-92	BMS-92	POST-BMS-92		
C-10-SB-1	$10^1/_2$″	$10^1/_2$″ × 13″ brick encased steel columns; 8″ × 6″ × 35 lbs. “H” beam; Protection. Fill of broken brick and mortar; 2″ brick on edge; joints broken in alternate courses; cement-sand grout; 13 SWG wire reinforcement in every third horizontal joint.	90 tons	3 hrs. 6 min.			7	1	3
C-10-SB-2	$10^1/_2$″	$10^1/_2$″ × 13″ brick encased steel columns; 8″ × 6″ × 35 lbs. “H” beam; Protection: 2″ brick; joints broken in alternate courses; cement-sand grout; 13 SWG iron wire reinforcement in alternate horizontal joints.	90 tons	2 hrs.			7	2, 3, 4	2
C-10-SB-3	10″	10″ × 12″ block encased columns; 8″ × 6″ × 35 lbs. “H” beam; Protection: 2″ foamed slag concrete blocks; 13 SWG wire at each horizontal joint; mortar at each joint.	90 tons	2 hrs.			7	5	2
C-10-SB-4	$10^1/_2$″	$10^1/_2$″ × 12″ block encased steel columns; 8″ × 6″ × 35 lbs. “H” beam; Protection: gravel aggregate concrete fill (unconsolidated) 2″ thick hollow clay tiles with mortar at edges.	86 tons	56 min.			7	1	$^3/_4$
C-10-SB-5	$10^1/_2$″	$10^1/_2$″ × 12″ block encased steel columns; 8″ × 6″ × 35 lbs. “H” beam; Protection: 2″ hollow clay tiles with mortar at edges.	86 tons	22 min.			7	1	$^1/_4$

For SI: 1 inch = 25.4 mm, 1 pound = 0.004448 kN, 1 ton = 8.896 kN.

Notes:

1. Failure mode—collapse.
2. Passed 2-hour fire test (Grade “C” - British).
3. Passed hose stream test.
4. Passed reload test.
5. Passed 2-hour fire exposure but collapsed immediately following hose stream test.

INTERNATIONAL CODE COUNCIL®
Copyright © 2019 ICC & NYSDOS. ALL RIGHTS RESERVED. Accessed by Lauren Gualdino (lgualdino@briarcliffmanor.org), (-) Order Number #100880972 on May 08, 2020 07:05 AM (PDT) pursuant to License Agreement with ICC & NYSDOS. No further reproduction, no

100880972

TABLE 2.5.2.2
STEEL COLUMNS—BRICK AND BLOCK ENCASEMENTS
MINIMUM DIMENSION 12″ TO LESS THAN 14″

ITEM CODE	MINIMUM DIMENSION	CONSTRUCTION DETAILS	PERFORMANCE		REFERENCE NUMBER			NOTES	REC. HOURS
			LOAD	TIME	PRE-BMS-92	BMS-92	POST-BMS-92		
C-12-SB-1	12″	12″ × 15″ brick encased steel columns; 8″ × 6″ × 35 lbs. “H” beam; Protection: $2^5/_8$″ thick brick; joints broken in alternate courses; cement-sand grout; fill of broken brick and mortar.	90 tons	1 hr. 49 min.			7	1	$1^3/_4$

For SI: 1 inch = 25.4 mm, 1 pound = 0.004448 kN, 1 ton = 8.896 kN.

Notes:

1. Failure mode—collapse.

TABLE 2.5.2.3
STEEL COLUMNS—BRICK AND BLOCK ENCASEMENTS
MINIMUM DIMENSION 14″ TO LESS THAN 16″

ITEM CODE	MINIMUM DIMENSION	CONSTRUCTION DETAILS	PERFORMANCE		REFERENCE NUMBER			NOTES	REC. HOURS
			LOAD	TIME	PRE-BMS-92	BMS-92	POST-BMS-92		
C-15-SB-1	15″	15″ × 17″ brick encased steel columns; 8″ × 6″ × 35 lbs. “H” beam; Protection: $4^1/_2$″ thick brick; joints broken in alternate courses; cement-sand grout; fill of broken brick and mortar.	45 tons	6 hrs.			7	1	6
C-15-SB-2	15″	15″ × 17″ brick encased steel columns; 8″ × 6″ × 35 lbs. “H” beam; Protection. Fill of broken brick and mortar; $4^1/_2$″ brick; joints broken in alternate courses; cement-sand grout.	86 tons	6 hrs.			7	2, 3, 4	6
C-15-SB-3	15″	15″ × 18″ brick encased steel columns; 8″ × 6″ × 35 lbs. “H” beam; Protection: $4^1/_2$″ brick work; joints alternating; cement-sand grout.	90 tons	4 hrs.			7	5, 6	4
C-15-SB-4	14″	14″ × 16″ block encased steel columns; 8″ × 6″ × 35 lbs. “H” beam; Protection: 4″ thick foam slag concrete blocks; 13 SWG wire reinforcement in each horizontal joint; mortar in joints.	90 tons	5 hrs. 52 min.			7	7	$4^3/_4$

For SI: 1 inch = 25.4 mm, 1 pound = 0.004448 kN, 1 ton = 8.896 kN.

Notes:

1. Only a nominal load was applied to specimen.
2. Passed 6-hour fire test (Grade “A” - British).
3. Passed (6 minute) hose stream test.
4. Reload not specified.
5. Passed 4-hour fire exposure.
6. Failed by collapse between first and second minute of hose stream exposure.
7. Mode of failure-collapse.

INTERNATIONAL CODE COUNCIL®
Copyright © 2019 ICC & NYSDOS. ALL RIGHTS RESERVED. Accessed by Lauren Gualdino (lgualdino@briarcliffmanor.org), (-) Order Number #100880972 on May 08, 2020 07:05 AM (PDT) pursuant to License Agreement with ICC & NYSDOS. No further reproduction, no

100880972

TABLE 2.5.3.1
STEEL COLUMNS—PLASTER ENCASEMENTS
MINIMUM DIMENSION 6″ TO LESS THAN 8″

ITEM CODE	MINIMUM DIMENSION	CONSTRUCTION DETAILS	PERFORMANCE		REFERENCE NUMBER			NOTES	REC. HOURS
			LOAD	TIME	PRE-BMS-92	BMS-92	POST-BMS-92		
C-7-SP-1	$7^1/_2$″	$7^1/_2$″ × $9^1/_2$″ plaster protected steel columns; 8″ × 6″ × 35 lbs. “H” beam; Protection: 24 SWG wire metal lath; $1^1/_4$″ lime plaster.	90 tons	57 min.			7	1	$^3/_4$
C-7-SP-2	$7^7/_8$″	$7^7/_8$″ × 10″ plaster protected steel columns; 8″ × 6″ × 35 lbs. “H” beam; Protection: $^3/_8$″ gypsum board wire wound with 16 SWG wire helically wound at 4″ pitch; $^1/_2$″ gypsum plaster.	90 tons	1 hr. 13 min.			7	1	1
C-7-SP-3	$7^1/_4$″	$7^1/_4$″ × $9^3/_8$″ plaster protected steel columns; 8″ × 6″ × 35 lbs. “H” beam; Protection: $^3/_8$″ gypsum board; wire helically wound 16 SWG at 4″ pitch; $^1/_4$″ gypsum plaster finish.	90 tons	1 hr. 14 min.			7	1	1

Notes:
1. Failure mode—collapse.

TABLE 2.5.3.2
STEEL COLUMNS—PLASTER ENCASEMENTS
MINIMUM DIMENSION 8″ TO LESS THAN 10″

ITEM CODE	MINIMUM DIMENSION	CONSTRUCTION DETAILS	PERFORMANCE		REFERENCE NUMBER			NOTES	REC. HOURS
			LOAD	TIME	PRE-BMS-92	BMS-92	POST-BMS-92		
C-8-SP-1	8″	8″ × 10″ plaster protected steel columns; 8″ × 6″ × 35 lbs. “H” beam; Protection: 24 SWG wire lath; 1″ gypsum plaster.	86 tons	1 hr. 23 min.			7	1	$1^1/_4$
C-8-SP-2	$8^1/_2$″	$8^1/_2$″ × $10^1/_2$″ plaster protected steel columns; 8″ × 6″ × 35 lbs. “H” beam; Protection: 24 SWG metal lath wrap; $1^1/_4$″ gypsum plaster.	90 tons	1 hr. 36 min.			7	1	$1^1/_2$
C-9-SP-3	9″	9″ × 11″ plaster protected steel columns; 8″ × 6″ × 35 lbs. “H” beam; Protection: 24 SWG metal lath wrap; $^1/_8$″ M.S. ties at 12″ pitch wire netting $1^1/_2$″ × 22 SWG between first and second plaster coats; $1^1/_2$″ gypsum plaster.	90 tons	1 hr. 33 min.			7	1	$1^1/_2$
C-8-SP-4	$8^3/_4$″	$8^3/_4$″ × $10^3/_4$″ plaster protected steel columns; 8″ × 6″ × 35 lbs. “H” beam; Protection: $^3/_4$″ gypsum board; wire wound spirally (#16 SWG) at $1^1/_2$″ pitch; $^1/_2$″ gypsum plaster.	90 tons	2 hrs.			7	2, 3, 4	2

For SI: 1 inch = 25.4 mm, 1 pound = 0.004448 kN, 1 ton = 8.896 kN.

Notes:
1. Failure mode—collapse.
2. Passed 2 hour fire exposure test (Grade “C” - British).
3. Passed hose stream test.

TABLE 2.5.4.1
STEEL COLUMNS—MISCELLANEOUS ENCASEMENTS
MINIMUM DIMENSION 6″ TO LESS THAN 8″

ITEM CODE	MINIMUM DIMENSION	CONSTRUCTION DETAILS	PERFORMANCE		REFERENCE NUMBER			NOTES	REC. HOURS
			LOAD	TIME	PRE-BMS-92	BMS-92	POST-BMS-92		
C-7-SM-1	$7^5/_8$″	$7^5/_8$″ × $9^1/_2$″ (asbestos plaster) protected steel columns; 8″ × 6″ × 35 lbs. “H” beam; Protection: 20 gage $^1/_2$″ metal lath; $^9/_{16}$″ asbestos plaster (minimum).	90 tons	1 hr. 52 min.			7	1	$1^3/_4$

For SI: 1 inch = 25.4 mm, 1 pound = 0.004448 kN, 1 ton = 8.896 kN.

Notes:
1. Failure mode—collapse.

INTERNATIONAL CODE COUNCIL®
Copyright © 2019 ICC & NYSDOS. ALL RIGHTS RESERVED. Accessed by Lauren Gualdino (lgualdino@briarcliffmanor.org), (-) Order Number #100880972 on May 08, 2020 07:05 AM (PDT) pursuant to License Agreement with ICC & NYSDOS. No further reproduction, no

100880972

TABLE 2.5.4.2
STEEL COLUMNS—MISCELLANEOUS ENCASEMENTS
MINIMUM DIMENSION 8″ TO LESS THAN 10″

ITEM CODE	MINIMUM DIMENSION	CONSTRUCTION DETAILS	PERFORMANCE		REFERENCE NUMBER			NOTES	REC. HOURS
			LOAD	TIME	PRE-BMS-92	BMS-92	POST-BMS-92		
C-9-SM-1	$9^5/_8$″	$9^5/_8$″ × $11^3/_8$″ asbestos slab and cement plaster protected columns; 8″ × 6″ × 35 lbs. “H” beam; Protection: 1″ asbestos slab; wire wound; $^5/_8$″ plaster.	90 tons	2 hrs.			7	1, 2	2

For SI: 1 inch = 25.4 mm, 1 pound = 0.004448 kN, 1 ton = 8.896 kN.

Notes:

1. Passed 2 hour fire exposure test.
2. Collapsed during hose stream test.

TABLE 2.5.4.3
STEEL COLUMNS—MISCELLANEOUS ENCASEMENTS
MINIMUM DIMENSION 10″ TO LESS THAN 12″

ITEM CODE	MINIMUM DIMENSION	CONSTRUCTION DETAILS	PERFORMANCE		REFERENCE NUMBER			NOTES	REC. HOURS
			LOAD	TIME	PRE-BMS-92	BMS-92	POST-BMS-92		
C-11-SM-1	$11^1/_2$″	$11^1/_2$″ × $13^1/_2$″ wood wool and plaster protected steel columns; 8″ × 6″ × 35 lbs. “H” beam; Protection: wood-wool-cement paste as fill and to 2″ cover over beam; $^3/_4$″ gypsum plaster finish.	90 tons	2 hrs.			7	1, 2, 3	2
C-10-SM-1	10″	10″ × 12″ asbestos protected steel columns; 8″ × 6″ × 35 lbs. “H” beam; Protection: sprayed on asbestos paste to 2″ cover over column.	90 tons	4 hrs.			7	2, 3, 4	4

For SI: 1 inch = 25.4 mm, 1 pound = 0.004448 kN, 1 ton = 8.896 kN.

Notes:

1. Passed 2 hour fire exposure (Grade “C” - British).
2. Passed hose stream test.
3. Passed reload test.
4. Passed 4 hour fire exposure test.

TABLE 2.5.4.4
STEEL COLUMNS—MISCELLANEOUS ENCASEMENTS
MINIMUM DIMENSION 12″ TO LESS THAN 14″

ITEM CODE	MINIMUM DIMENSION	CONSTRUCTION DETAILS	PERFORMANCE		REFERENCE NUMBER			NOTES	REC. HOURS
			LOAD	TIME	PRE-BMS-92	BMS-92	POST-BMS-92		
C-12-SM-1	12″	12″ × $14^1/_4$″ cement and asbestos protected columns; 8″ × 6″ × 35 lbs. “H” beam; Protection: fill of asbestos packing pieces 1″ thick 1′3″ o.c.; cover of 2″ molded asbestos inner layer; 1″ molded asbestos outer layer; held in position by 16 SWG nichrome wire ties; wash of refractory cement on outer surface.	86 tons	4 hrs. 43 min.			7	1, 2, 3	$4^2/_3$

For SI: 1 inch = 25.4 mm, 1 pound = 0.004448 kN, 1 ton = 8.896 kN.

Notes:

1. Passed 4 hour fire exposure (Grade “B” - British).
2. Passed hose stream test.
3. Passed reload test.

INTERNATIONAL CODE COUNCIL®
Copyright © 2019 ICC & NYSDOS. ALL RIGHTS RESERVED. Accessed by Lauren Gualdino (lgualdino@briarcliffmanor.org), (-) Order Number #100880972 on May 08, 2020 07:05 AM (PDT) pursuant to License Agreement with ICC & NYSDOS. No further reproduction, no

100880972

SECTION III
FLOOR/CEILING ASSEMBLIES

FIGURE 3.1
FLOOR/CEILING ASSEMBLIES—REINFORCED CONCRETE

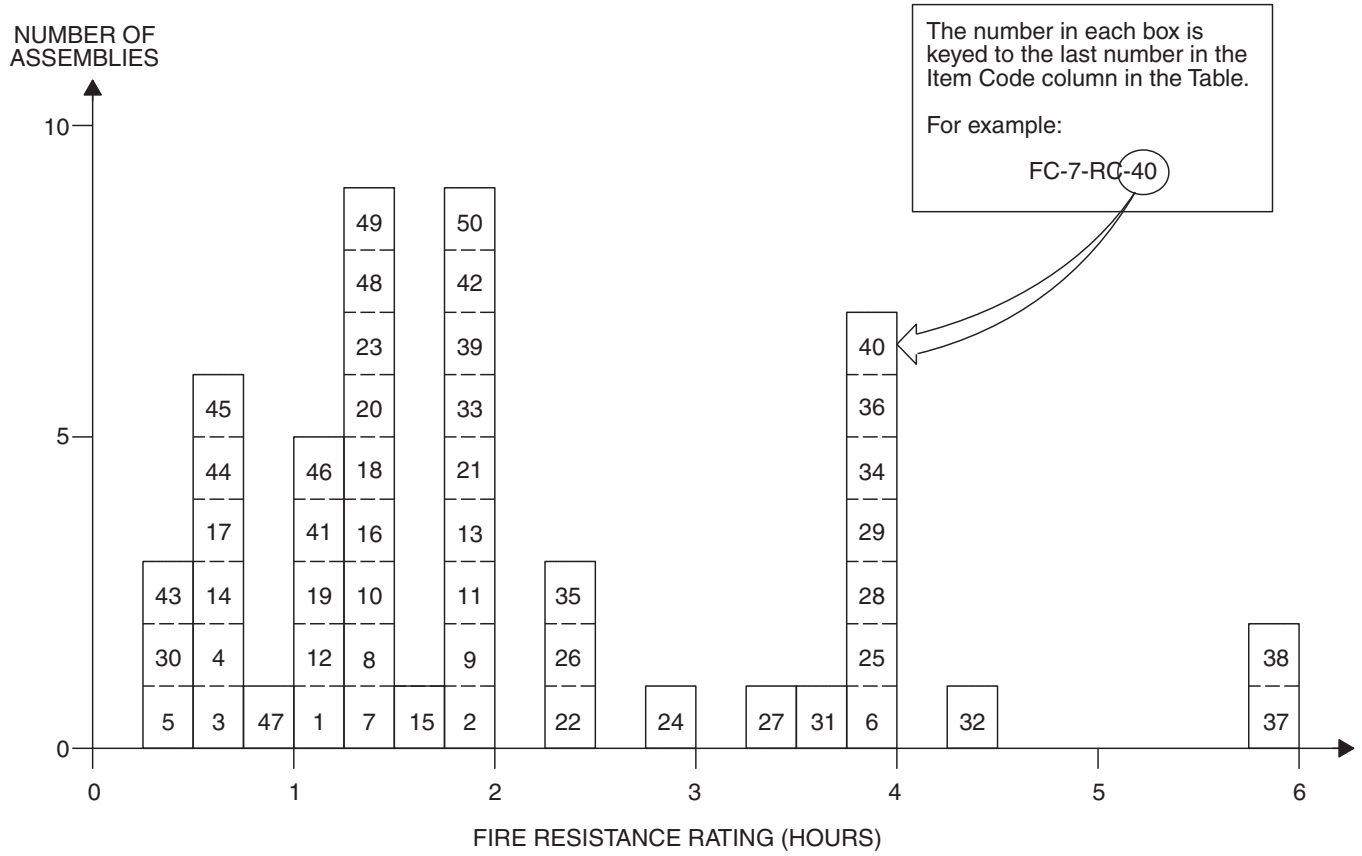

TABLE 3.1
FLOOR/CEILING ASSEMBLIES—REINFORCED CONCRETE

ITEM CODE	ASSEMBLY THICKNESS	CONSTRUCTION DETAILS	PERFORMANCE		REFERENCE NUMBER			NOTES	REC. HOURS
			LOAD	TIME	PRE-BMS-92	BMS-92	POST-BMS-92		
F/C-3-RC-1	$3^3/_4$″	$3^3/_4$ ″thick floor; $3^1/_4$″ (5475 psi) concrete deck; $^1/_2$″ plaster under deck; $^3/_8$″ main reinforcement bars at $5^1/_2$″ pitch with $^7/_8$″ concrete cover; $^3/_8$″ main reinforcement bars at $4^1/_2$″ pitch perpendicular with $^1/_2$″ concrete cover; 13′1″ span restrained.	195 psf	24 min.			7	1, 2	$^1/_3$
F/C-3-RC-2	$3^1/_4$″	$3^1/_4$″ deep (3540 psi) concrete deck; $^3/_8$″ main reinforcement bars at $5^1/_2$″ pitch with $^7/_8$″ cover; $^3/_8$″ main reinforcement bars at $4^1/_2$″ pitch perpendicular with $^1/_2$″ cover; 13′1″ span restrained.	195 psf	2 hrs.			7	1, 3, 4	2

(continued)

INTERNATIONAL CODE COUNCIL®
Copyright © 2019 ICC & NYSDOS. ALL RIGHTS RESERVED. Accessed by Lauren Gualdino (lgualdino@briarcliffmanor.org), (-) Order Number #100880972 on May 08, 2020 07:05 AM (PDT) pursuant to License Agreement with ICC & NYSDOS. No further reproduction, no

100880972

TABLE 3.1—continued
FLOOR/CEILING ASSEMBLIES—REINFORCED CONCRETE

ITEM CODE	ASSEMBLY THICKNESS	CONSTRUCTION DETAILS	PERFORMANCE		REFERENCE NUMBER			NOTES	REC. HOURS
			LOAD	TIME	PRE-BMS-92	BMS-92	POST-BMS-92		
F/C-3-RC-3	3 1/4″	3 1/4″ deep (4175 psi) concrete deck; 3/8″ main reinforcement bars at 5 1/2″ pitch with 7/8″ cover; 3/8″ main reinforcement bars at 4 1/2″ pitch perpendicular with 1/2″ cover; 13′1″ span restrained.	195 psf	31 min.			7	1, 5	1/2
F/C-3-RC-4	3 1/4″	3 1/4″ deep (4355 psi) concrete deck; 3/8″ main reinforcement bars at 5 1/2″ pitch with 7/8″ cover; 3/8″ main reinforcement bars at 4 1/2″ pitch perpendicular with 1/2″ cover; 13′1″ span restrained.	195 psf	41 min.			7	1, 5, 6	1/2
F/C-3-RC-5	3 1/4″	3 1/4″ thick (3800 psi) concrete deck; 3/8″ main reinforcement bars at 5 1/2″ pitch with 7/8″ cover; 3/8″ main reinforcement bars at 4 1/2″ pitch perpendicular with 1/2″ cover; 13′1″ span restrained.	195 psf	1 hr. 5 min.			7	1, 5	1
F/C-4-RC-6	4 1/4″	4 1/4″ thick; 3 1/4″ (4000 psi) concrete deck; 1″ sprayed asbestos lower surface; 3/8″ main reinforcement bars at 5 7/8″ pitch with 7/8″ concrete cover; 3/8″ main reinforcement bars at 4 1/2″ pitch perpendicular with 1/2″ concrete cover; 13′1″ span restrained.	195 psf	4 hrs.			7	1, 7	4
F/C-4-RC-7	4″	4″ (5025 psi) concrete deck; 1/4″ reinforcement bars at 7 1/2″ pitch with 3/4″ cover; 3/8″ main reinforcement bars at 3 3/4″ pitch perpendicular with 1/2″ cover; 13′1″ span restrained.	140 psf	1 hr. 16 min.			7	1, 2	1 1/4
F/C-4-RC-8	4″	4″ thick (4905 psi) deck; 1/4″ reinforcement bars at 7 1/2″ pitch with 7/8″ cover; 3/8″ main reinforcement bars at 3 3/4″ pitch perpendicular with 1/2″ cover; 13′1″ span restrained.	100 psf	1 hr. 23 min.			7	1, 2	1 1/3
F/C-4-RC-9	4″	4″ deep (4370 psi);1/4″ reinforcement bars at 6″ pitch with 3/4″ cover; 1/4″ main reinforcement bars at 4″ pitch perpendicular with 1/2″ cover; 13′1″ span restrained.	150 psf	2 hrs.			7	1, 3	2
F/C-4-RC-10	4″	4″ thick (5140 psi) deck; 1/4″ reinforcement bars at 7 1/2″ pitch with 7/8″ cover; 3/8″ main reinforcement bars at 3 3/4″ pitch perpendicular with 1/2″ cover; 13′1″ span restrained.	140 psf	1 hr. 16 min.			7	1, 5	1 1/4
F/C-4-RC-11	4″	4″ thick (4000 psi) concrete deck; 3″ × 1 1/2″ × 4 lbs. R.S.J.; 2′6″ C.R.S.; flush with top surface; 4″ × 6″ x 13 SWG mesh reinforcement 1″ from bottom of slab; 6′6″ span restrained.	150 psf	2 hrs.			7	1, 3	2

(continued)

INTERNATIONAL CODE COUNCIL®
Copyright © 2019 ICC & NYSDOS. ALL RIGHTS RESERVED. Accessed by Lauren Gualdino (lgualdino@briarcliffmanor.org), (-) Order Number #100880972 on May 08, 2020 07:05 AM (PDT) pursuant to License Agreement with ICC & NYSDOS. No further reproduction, no

100880972

TABLE 3.1—continued
FLOOR/CEILING ASSEMBLIES—REINFORCED CONCRETE

ITEM CODE	ASSEMBLY THICKNESS	CONSTRUCTION DETAILS	PERFORMANCE		REFERENCE NUMBER			NOTES	REC. HOURS
			LOAD	TIME	PRE-BMS-92	BMS-92	POST-BMS-92		
F/C-4-RC-12	4″	4″ deep (2380 psi) concrete deck; 3″ × 1 1/2″ × 4 lbs. R.S.J.; 2′6″ C.R.S.; flush with top surface; 4″ × 6″ x 13 SWG mesh reinforcement 1″ from bottom surface; 6′6″ span restrained.	150 psf	1 hr. 3 min.			7	1, 2	1
F/C-4-RC-13	4 1/2″	4 1/2″ thick (5200 psi) deck; 1/4″ reinforcement bars at 7 1/4″ pitch with 7/8″ cover; 3/8″ main reinforcement bars at 3 3/4″ pitch perpendicular with 1/2″ cover; 13′1″ span restrained.	140 psf	2 hrs.			7	1, 3	2
F/C-4-RC-14	4 1/2″	4 1/2″ deep (2525 psi) concrete deck; 1/4″ reinforcement bars at 7 1/2″ pitch with 7/8″ cover; 3/8″ main reinforcement bars at 3 3/8″ pitch perpendicular with 1/2″ cover; 13′1″ span restrained.	150 psf	42 min.			7	1, 5	2/3
F/C-4-RC-15	4 1/2″	4 1/2″ deep (4830 psi) concrete deck; 1 1/2″ × No. 15 gauge wire mesh; 3/8″ reinforcement bars at 15″ pitch with 1″ cover; 1/2″ main reinforcement bars at 6″ pitch perpendicular with 1/2″ cover; 12′ span simply supported.	75 psf	1 hr. 32 min.			7	1, 8	1 1/2
F/C-4-RC-16	4 1/2″	4 1/2″ deep (4595 psi) concrete deck; 1/4″ reinforcement bars at 7 1/2″ pitch with 7/8″ cover; 3/8″ main reinforcement bars at 3 1/2″ pitch perpendicular with 1/2″ cover; 12′ span simply supported.	75 psf	1 hr. 20 min.			7	1, 8	1 1/3
F/C-4-RC-17	4 1/2″	4 1/2″ deep (3625 psi) concrete deck; 1/4″ reinforcement bars at 7 1/2″ pitch with 7/8″ cover; 3/8″ main reinforcement bars at 3 1/2″ pitch perpendicular with 1/2″ cover; 12′ span simply supported.	75 psf	35 min.			7	1, 8	1/2
F/C-4-RC-18	4 1/2″	4 1/2″ deep (4410 psi) concrete deck; 1/4″ reinforcement bars at 7 1/2″ pitch with 7/8″ cover; 3/8″ main reinforcement bars at 3 1/2″ pitch perpendicular with 1/2″ cover; 12′ span simply supported.	85 psf	1 hr. 27 min.			7	1, 8	1 1/3
F/C-4-RC-19	4 1/2″	4 1/2″ deep (4850 psi) deck; 3/8″ reinforcement bars at 15″ pitch with 1″ cover; 1/2″ main reinforcement bars at 6″ pitch perpendicular with 1/2″ cover; 12′ span simply supported.	75 psf	2 hrs. 15 min.			7	1, 9	1 1/4
F/C-4-RC-20	4 1/2″	4 1/2″ deep (3610 psi) deck; 1/4″ reinforcement bars at 7 1/2″ pitch with 7/8″ cover; 3/8″ main reinforcement bars at 3 1/2″ pitch perpendicular with 1/2″ cover; 12′ span simply supported.	75 psf	1 hr. 22 min.			7	1, 8	1 1/3

(continued)

INTERNATIONAL CODE COUNCIL®
Copyright © 2019 ICC & NYSDOS. ALL RIGHTS RESERVED. Accessed by Lauren Gualdino (lgualdino@briarcliffmanor.org), (-) Order Number #100880972 on May 08, 2020 07:05 AM (PDT) pursuant to License Agreement with ICC & NYSDOS. No further reproduction, no

100880972

TABLE 3.1—continued
FLOOR/CEILING ASSEMBLIES—REINFORCED CONCRETE

ITEM CODE	ASSEMBLY THICKNESS	CONSTRUCTION DETAILS	PERFORMANCE		REFERENCE NUMBER			NOTES	REC. HOURS
			LOAD	TIME	PRE-BMS-92	BMS-92	POST-BMS-92		
F/C-5-RC-21	5″	5″ deep; 4 1/2″ (5830 psi) concrete deck; 1/2″ plaster finish bottom of slab; 1/4″ reinforcement bars at 7 1/2″ pitch with 7/8″ cover; 3/8″ main reinforcement bars at 3 1/2″ pitch perpendicular with 1/2″ cover; 12′ span simply supported.	69 psf	2 hrs.			7	1, 3	2
F/C-5-RC-22	5″	4 1/2″ (5290 psi) concrete deck; 1/2″ plaster finish bottom of slab; 1/4″ reinforcement bars at 7 1/2″ pitch with 7/8″ cover; 3/8″ main reinforcement bars at 3 1/2″ pitch perpendicular with 1/2″ cover; 12′ span simply supported.	No load	2 hrs. 28 min.			7	1, 10, 11	2 1/4
F/C-5-RC-23	5″	5″ (3020 psi) concrete deck; 3″ × 1 1/2″ × 4 lbs. R.S.J.; 2′ C.R.S. with 1″ cover on bottom and top flanges; 8′ span restrained.	172 psf	1 hr. 24 min.			7	1, 2, 12	1 1/2
F/C-5-RC-24	5 1/2″	5″ (5180 psi) concrete deck; 1/2″ retarded plaster underneath slab; 1/4″ reinforcement bars at 7 1/2″ pitch with 1 3/8″ cover; 3/8″ main reinforcement bars at 3 1/2″ pitch perpendicular with 1″ cover; 12′ span simply supported.	60 psf	2 hrs. 48 min.			7	1, 10	2 3/4
F/C-6-RC-25	6″	6″ deep (4800 psi) concrete deck; 1/4″ reinforcement bars at 7 1/2″ pitch with 7/8″ cover; 3/8″ main reinforcement bars at 3 1/2″ pitch perpendicular with 7/8″ cover; 13′1″ span restrained.	195 psf	4 hrs.			7	1, 7	4
F/C-6-RC-26	6″	6″ (4650 psi) concrete deck; 1/4″ reinforcement bars at 7 1/2″ pitch with 7/8″ cover; 3/8″ main reinforcement bars at 3 1/2″ pitch perpendicular with 1/2″ cover; 13′1″ span restrained.	195 psf	2 hrs. 23 min.			7	1, 2	2 1/4
F/C-6-RC-27	6″	6″ deep (6050 psi) concrete deck; 1/4″ reinforcement bars at 7 1/2″ pitch 7/8″ cover; 3/8″ reinforcement bars at 3 1/2″ pitch perpendicular with 1/2″ cover; 13′1″ span restrained.	195 psf	3 hrs. 30 min.			7	1, 10	3 1/2
F/C-6-RC-28	6″	6″ deep (5180 psi) concrete deck; 1/4″ reinforcement bars at 8″ pitch 3/4″ cover; 1/4″ reinforcement bars at 5 1/2″ pitch perpendicular with 1/2″ cover; 13′1″ span restrained.	150 psf	4 hrs.			7	1, 7	4
F/C-6-RC-29	6″	6″ thick (4180 psi) concrete deck; 4″ × 3″ × 10 lbs. R.S.J.; 2′ 6″ C.R.S. with 1″ cover on both top and bottom flanges; 13′1″ span restrained.	160 psf	3 hrs. 48 min.			7	1, 10	3 3/4
F/C-6-RC-30	6″	6″ thick (3720 psi) concrete deck; 4″ × 3″ × 10 lbs. R.S.J.; 2′ 6″ C.R.S. with 1″ cover on both top and bottom flanges; 12′ span simply supported.	115 psf	29 min.			7	1, 5, 13	1/4

(continued)

INTERNATIONAL CODE COUNCIL®
Copyright © 2019 ICC & NYSDOS. ALL RIGHTS RESERVED. Accessed by Lauren Gualdino (lgualdino@briarcliffmanor.org), (-) Order Number #100880972 on May 08, 2020 07:05 AM (PDT) pursuant to License Agreement with ICC & NYSDOS. No further reproduction, no

100880972

TABLE 3.1—continued
FLOOR/CEILING ASSEMBLIES—REINFORCED CONCRETE

ITEM CODE	ASSEMBLY THICKNESS	CONSTRUCTION DETAILS	PERFORMANCE		REFERENCE NUMBER			NOTES	REC. HOURS
			LOAD	TIME	PRE-BMS-92	BMS-92	POST-BMS-92		
F/C-6-RC-31	6″	6″ deep (3450 psi) concrete deck; 4″ × $1^3/_4$″ × 5 lbs. R.S.J.; 2′ 6″ C.R.S. with 1″ cover on both top and bottom flanges; 12′ span simply supported.	25 psf	3 hrs. 35 min.			7	1, 2	$3^1/_2$
F/C-6-RC-32	6″	6″ deep (4460 psi) concrete deck; 4″ × $1^3/_4$″ × 5 lbs. R.S.J.; 2′ C.R.S.; with 1″ cover on both top and bottom flanges; 12′ span simply supported.	60 psf	4 hrs. 30 min.			7	1, 10	$4^1/_2$
F/C-6-RC-33	6″	6″ deep (4360 psi) concrete deck; 4″ × $1^3/_4$″ × 5 lbs. R.S.J.; 2′ C.R.S.; with 1″ cover on both top and bottom flanges; 13′1″ span restrained.	60 psf	2 hrs.			7	1, 3	2
F/C-6-RC-34	$6^1/_4$″	$6^1/_4$″ thick; $4^3/_4$″ (5120 psi) concrete core; 1″ T&G board flooring; $^1/_2$″ plaster undercoat; 4″ × 3″ × 10 lbs. R.S.J.; 3′ C.R.S. flush with top surface concrete; 12′ span simply supported; 2″ × 1′3″ clinker concrete insert.	100 psf	4 hrs.			7	1, 7	4
F/C-6-RC-35	$6^1/_4$″	$4^3/_4$″ (3600 psi) concrete core; 1″ T&G board flooring; $^1/_2$″ plaster undercoat; 4″ × 3″ × 10 lbs. R.S.J.; 3′ C.R.S.; flush with top surface concrete; 12′ span simply supported; 2″ × 1′3″ clinker concrete insert.	100 psf	2 hrs. 30 min.			7	1, 5	$2^1/_2$
F/C-6-RC-36	$6^1/_4$″	$4^3/_4$″ (2800 psi) concrete core; 1″ T&G board flooring; $^1/_2$″ plaster undercoat; 4″ × 3″ × 10 lbs. R.S.J.; 3′ C.R.S.; flush with top surface concrete; 12″ span simply supported; 2″ × 1′3″ clinker concrete insert.	80 psf	4 hrs.			7	1, 7	4
F/C-7-RC-37	7″	(3640 psi) concrete deck; $^1/_4$″ reinforcement bars at 6″ pitch with $1^1/_2$″ cover; $^1/_4$″ reinforcement bars at 5″ pitch perpendicular with $1^1/_2$″ cover; 13′1″ span restrained.	169 psf	6 hrs.			7	1, 14	6
F/C-7-RC-38	7″	(4060 psi) concrete deck; 4″ × 3″ × 10 lbs. R.S.J.; 2′ 6″ C.R.S. with $1^1/_2$″ cover on both top and bottom flanges; 4″ × 6″ × 13 SWG mesh reinforcement $1^1/_2$″ from bottom of slab; 13′1″ span restrained.	175 psf	6 hrs.			7	1, 14	6
F/C-7-RC-39	$7^1/_4$″	$5^3/_4$″ (4010 psi) concrete core; 1″ T&G board flooring; $^1/_2$″ plaster undercoat; 4″ × 3″ × 10 lbs. R.S.J.; 2′ 6″ C.R.S.; 1″ down from top surface of concrete; 12′ simply supported span; 2″ × 1′ 3″ clinker concrete insert.	95 psf	2 hrs.			7	1, 3	2
F/C-7-RC-40	$7^1/_4$″	$5^3/_4$″ (3220 psi) concrete core; 1″ T&G flooring; $^1/_2$″ plaster undercoat; 4″ × 3″ × 10 lbs. R.S.J.; 2′6″ C.R.S.; 1″ down from top surface of concrete; 12′ simply supported span; 2″ × 1′3″ clinker concrete insert.	95 psf	4 hrs.			7	1, 7	4

(continued)

INTERNATIONAL CODE COUNCIL®
Copyright © 2019 ICC & NYSDOS. ALL RIGHTS RESERVED. Accessed by Lauren Gualdino (lgualdino@briarcliffmanor.org), (-) Order Number #100880972 on May 08, 2020 07:05 AM (PDT) pursuant to License Agreement with ICC & NYSDOS. No further reproduction, no

100880972

TABLE 3.1—continued
FLOOR/CEILING ASSEMBLIES—REINFORCED CONCRETE

ITEM CODE	ASSEMBLY THICKNESS	CONSTRUCTION DETAILS	PERFORMANCE		REFERENCE NUMBER			NOTES	REC. HOURS
			LOAD	TIME	PRE-BMS-92	BMS-92	POST-BMS-92		
F/C-7-RC-41	10″ (2 1/4″ Slab)	Ribbed floor, see Note 15 for details; slab 2 1/2″ deep (3020 psi); 1/4″ reinforcement bars at 6″ pitch with 3/4″ cover; beams 7 1/2″ deep × 5″ wide; 24″ C.R.S.; 5/8″ reinforcement bars two rows 1/2″ vertically apart with 1″ cover; 13′1″ span restricted.	195 psf	1 hr. 4 min.			7	1, 2, 15	1
F/C-5-RC-42	5 1/2″	Composite ribbed concrete slab assembly; see Note 17 for details.	See Note 16	2 hrs.			43	16, 17	2
F/C-3-RC-43	3″	2500 psi concrete; 5/8″ cover; fully restrained at test.	See Note 16	30 min.			43	16	1/2
F/C-3-RC-44	3″	2000 psi concrete; 5/8″ cover; free or partial restraint at test.	See Note 16	45 min.			43	16	3/4
F/C-4-RC-45	4″	2500 psi concrete; 5/8″ cover; fully restrained at test.	See Note 16	40 min.			43	16	2/3
F/C-4-RC-46	4″	2000 psi concrete; 3/4″ cover; free or partial restraint at test.	See Note 16	1 hr. 15 min.			43	16	1 1/4
F/C-5-RC-47	5″	2500 psi concrete; 3/4″ cover; fully restrained at test.	See Note 16	1 hr.			43	16	1
F/C-5-RC-48	5″	2000 psi concrete; 3/4″ cover; free or partial restraint at test.	See Note 16	1 hr. 30 min.			43	16	1 1/2
F/C-6-RC-49	6″	2500 psi concrete; 1″ cover; fully restrained at test.	See Note 16	1 hr. 30 min.			43	16	1 1/2
F/C-6-RC-50	6″	2000 psi concrete; 1″ cover; free or partial restraint at test.	See Note 16	2 hrs.			43	16	2

For SI: 1 inch = 25.4 mm, 1 foot = 305 mm, 1 pound per square inch = 0.00689 MPa, 1 pound per square foot = 47.9 N/m^2.

Notes :

1. British test.
2. Failure mode—local back face temperature rise.
3. Tested for Grade “C” (2 hour) fire resistance
4. Collapse imminent following hose stream.
5. Failure mode—flame thru.
6. Void formed with explosive force and report.
7. Achieved Grade “B” (4 hour) fire resistance (British).
8. Failure mode—collapse.
9. Test was run to 2 hours, but specimen was partially supported by the furnace at 1 1/4 hours.
10. Failure mode—average back face temperature.
11. Recommended endurance for nonload bearing performance only.
12. Floor maintained load bearing ability to 2 hours at which point test was terminated.
13. Test was run to 3 hours at which time failure mode 2 (above) was reached in spite of crack formation at 29 minutes.
14. Tested for Grade “A” (6 hour) fire resistance.
15. 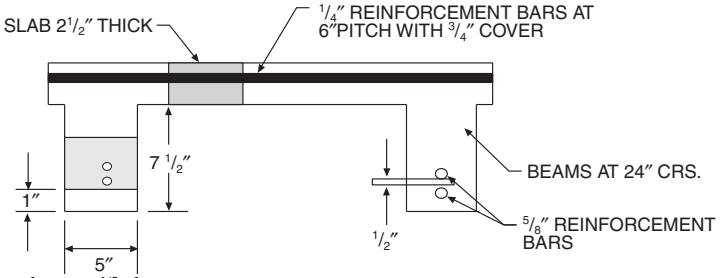

16. Load unspecified.
17. Total assembly thickness 5 1/2 inches. Three-inch thick blocks of molded excelsior bonded with Portland cement used as inserts with 2 1/2-inch cover (concrete) above blocks and 3/4-inch gypsum plaster below. Nine-inch wide ribs containing reinforcing steel of unspecified size interrupted 20-inch wide segments of slab composite (i.e., plaster, excelsior blocks, concrete cover).

INTERNATIONAL CODE COUNCIL®
Copyright © 2019 ICC & NYSDOS. ALL RIGHTS RESERVED. Accessed by Lauren Gualdino (lgualdino@briarcliffmanor.org), (-) Order Number #100880972 on May 08, 2020 07:05 AM (PDT) pursuant to License Agreement with ICC & NYSDOS. No further reproduction, no

100880972

FIGURE 3.2
FLOOR/CEILING ASSEMBLIES—STEEL STRUCTURAL ELEMENTS

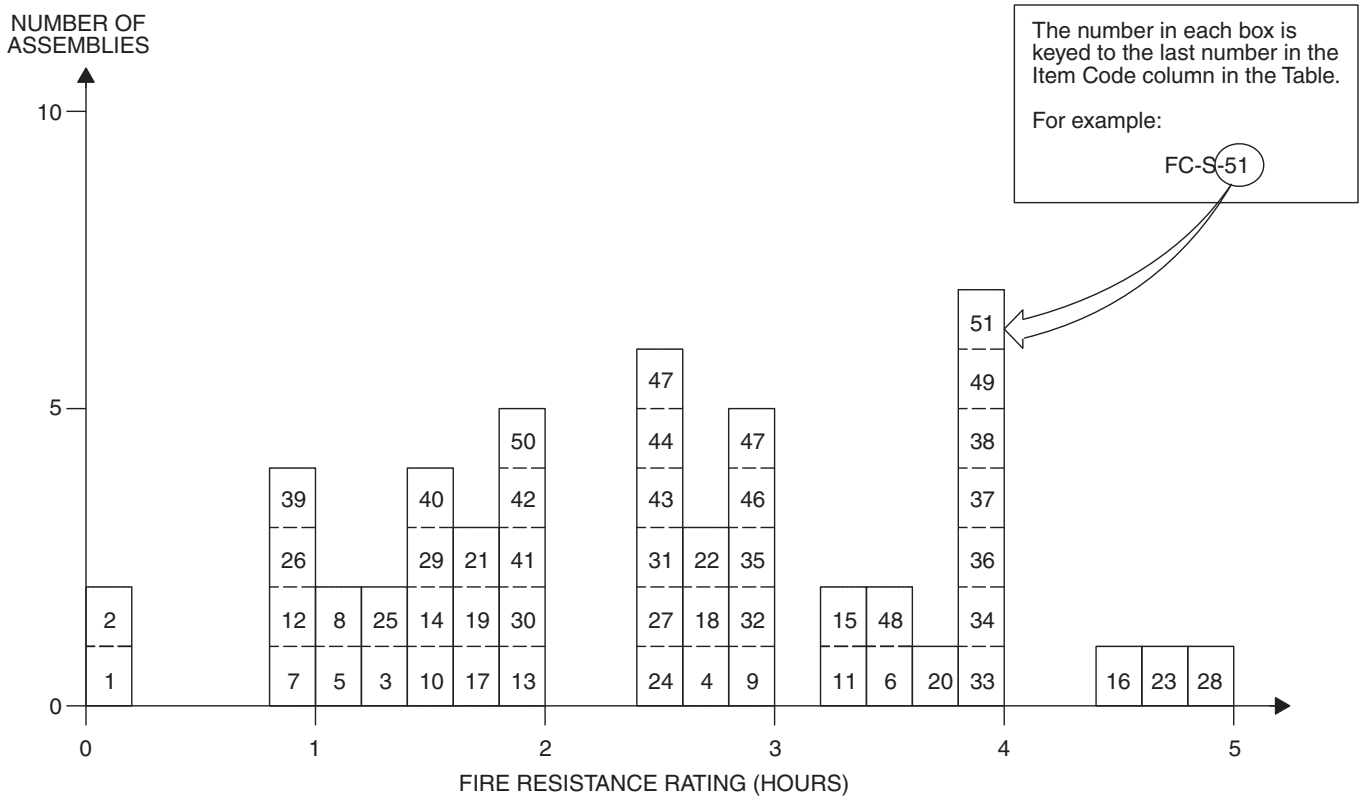

TABLE 3.2
FLOOR/CEILING ASSEMBLIES—STEEL STRUCTURAL ELEMENTS

ITEM CODE	MEMBRANE THICKNESS	CONSTRUCTION DETAILS	PERFORMANCE		REFERENCE NUMBER			NOTES	REC. HOURS
			LOAD	TIME	PRE-BMS-92	BMS-92	POST-BMS-92		
F/C-S-1	0″	10′ × 13′6″ ; S.J. 103 - 24″ o.c.; Deck: 2″ concrete; Membrane: none.	145 psf	7 min.			3	1, 2, 3, 8	0
F/C-S-2	0″	10′ × 13′6″ ; S.J. 103 - 24″ o.c.; Deck: 2″ concrete; Membrane: none	145 psf	7 min.			3	1, 2, 3, 8	0
F/C-S-3	$^1/_2$″	10′ × 13′ 6″ ; S.J. 103 - 24″ o.c.; Deck: 2″ concrete 1:2:4; Membrane: furring 12″ o.c.; Clips A, B, G; No extra reinforcement; $^1/_2$″ plaster - 1.5:2.5.	145 psf	1 hr. 15 min.			3	2, 3, 8	$1^1/_4$
F/C-S-4	$^1/_2$″	10′ × 13′ 6″ ; S.J. 103 - 24″ o.c.; Deck: 2″ concrete 1:2:4; Membrane: furring 16″ o.c.; Clips D, E, F, G; Diagonal wire reinforcement; $^1/_2$″ plaster - 1.5:2.5.	145 psf	2 hrs. 46 min.			3	3, 8	$2^3/_4$
F/C-S-5	$^1/_2$″	10′ × 13′6″ ; S.J. 103 - 24″ o.c.; Deck: 2″ concrete 1:2:4; Membrane: furring 16″ o.c.; Clips A, B, G; No extra reinforcement; $^1/_2$″ plaster - 1.5:2.5.	145 psf	1 hr. 4 min.			3	2, 3, 8	1
F/C-S-6	$^1/_2$″	10′ × 13′6″; S.J. 103 - 24″ o.c.; Deck: 2″ concrete 1:2:4; Membrane: furring 16″ o.c.; Clips D, E, F, G; Hexagonal mesh reinforcement; $^1/_2$″ plaster.	145 psf	3 hrs. 28 min.			3	2, 3, 8	$2^1/_3$

(continued)

INTERNATIONAL CODE COUNCIL®
Copyright © 2019 ICC & NYSDOS. ALL RIGHTS RESERVED. Accessed by Lauren Gualdino (lgualdino@briarcliffmanor.org), (-) Order Number #100880972 on May 08, 2020 07:05 AM (PDT) pursuant to License Agreement with ICC & NYSDOS. No further reproduction, no

100880972

TABLE 3.2—continued
FLOOR/CEILING ASSEMBLIES—STEEL STRUCTURAL ELEMENTS

ITEM CODE	MEMBRANE THICKNESS	CONSTRUCTION DETAILS	PERFORMANCE		REFERENCE NUMBER			NOTES	REC. HOURS
			LOAD	TIME	PRE-BMS-92	BMS-92	POST-BMS-92		
F/C-S-7	1/2″	10′ × 13′6″ ; S.J. 103 - 24″ o.c.; Deck: 4 lbs. rib lath; 6″ × 6″ - 10 × 10 ga. reinforcement; 2″ deck gravel concrete; Membrane: furring 16″ o.c.; Clips C, E; Reinforcement: none; 1/2″ plaster - 1.5:2.5 mill mix.	N/A	55 min.			3	5, 8	3/4
F/C-S-8	1/2″	Spec. 9′ × 4′4″; S.J. 103 bar joists - 18″ o.c.; Deck: 4 lbs. rib lath base; 6″ × 6″ - 10 × 10 ga. reinforcement; 2″ deck 1:2:4 gravel concrete; Membrane: furring, 3/4″ C.R.S., 16″ o.c.; Clips C, E; Reinforcement: none; 1/2″ plaster - 1.5:2.5 mill mix.	300 psf	1 hr. 10 min.			3	2, 3, 8	1
F/C-S-9	5/8″	10′ × 13′6″; S.J. 103 - 24″ o.c.; Deck: 2″ concrete 1:2:4; Membrane: furring 12″ o.c.; Clips A, B, G; Extra “A” clips reinforcement; 5/8″ plaster - 1.5:2; 1.5:3.	145 psf	3 hrs.			3	6, 8	3
F/C-S-10	5/8″	18′ × 13′6″ ; Joists, S.J. 103 - 24″ o.c.; Deck: 4 lbs. rib lath; 6″ × 6″ - 10 × 10 ga. reinforcement; 2″ deck 1:2:3.5 gravel concrete; Membrane: furring, spacing 16″ o.c.; Clips C, E; Reinforcement: none; 5/8″ plaster - 1.5:2.5 mill mix.	145 psf	1 hr. 25 min.			3	2, 3, 8	1 1/3
F/C-S-11	5/8″	10′ × 13′6″; S.J. 103 - 24″ o.c.; Deck: 2″ concrete 1:2:4; Membrane: furring 12″ o.c.; Clips D, E, F, G; Diagonal wire reinforcement; 5/8″ plaster - 1.5:2; 0.5:3.	145 psf	3 hrs. 15 min.			3	2, 4, 8	3 1/4
F/C-S-12	5/8″	10′ × 13′6″; Joists, S.J. 103 - 24″ o.c.; Deck: 3.4 lbs. rib lath; 6″ × 6″ - 10 × 10 ga. reinforcement; 2″ deck 1:2:4 gravel concrete; Membrane: furring 16″ o.c.; Clips D, E, F, G; Reinforcement: none; 5/8″ plaster - 1.5:2.5.	145 psf	1 hr.			3	7, 8	1
F/C-S-13	3/4″	Spec. 9′ × 4′4″; S.J. 103 - 18″ o.c.; Deck: 4 lbs. rib lath; 6″ × 6″ - 10 × 10 ga. reinforcement; 2″ deck 1:2:4 gravel concrete; Membrane: furring, 3/4″ C.R.S., 16″ o.c.; Clips C, E; Reinforcement: none; 3/4″ plaster - 1.5:2.5 mill mix.	300 psf	1 hr. 56 min.			3	3, 8	1 3/4
F/C-S-14	7/8″	Floor finish: 1″ concrete; plate cont. weld; 4″ - 7.7 lbs. “I” beams; Ceiling: 1/4″ rods 12″ o.c.; 7/8″ gypsum sand plaster.	105 psf	1 hr. 35 min.			6	2, 4, 9, 10	1 1/2
F/C-S-15	1″	Floor finish: 1 1/2″ L.W. concrete; 1/2″ limestone cement; plate cont. weld; 5″ - 10 lbs. “I” beams; Ceiling: 1/4″ rods 12″ o.c. tack welded to beams metal lath; 1″ P. C. plaster.	165 psf	3 hrs. 20 min.			6	4, 9, 11	3 1/3
F/C-S-16	1″	10′ × 13′6″ ; S.J. 103 - 24″ o.c.; Deck: 2″ concrete 1:2:4; Membrane: furring 12″ o.c.; Clips D, E, F, G; Hexagonal mesh reinforcement; 1″ thick plaster - 1.5:2; 1.5:3.	145 psf	4 hrs. 26 min.			3	2, 4, 8	4 1/3
F/C-S-17	1″	10′ × 13′6″ ; Joists - S.J. 103 - 24″ o.c.; Deck: 3.4 lbs. rib lath; 6″ × 6″ - 10 × 10 ga. reinforcement; 2″ deck 1:2:4 gravel concrete; Membrane: furring 16″ o.c.; Clips D, E, F, G; 1″ plaster.	145 psf	1 hr. 42 min.			3	2, 4, 8	1 2/3

(continued)

INTERNATIONAL CODE COUNCIL®
Copyright © 2019 ICC & NYSDOS. ALL RIGHTS RESERVED. Accessed by Lauren Gualdino (lgualdino@briarcliffmanor.org), (-) Order Number #100880972 on May 08, 2020 07:05 AM (PDT) pursuant to License Agreement with ICC & NYSDOS. No further reproduction, no

100880972

TABLE 3.2—continued
FLOOR/CEILING ASSEMBLIES—STEEL STRUCTURAL ELEMENTS

ITEM CODE	MEMBRANE THICKNESS	CONSTRUCTION DETAILS	PERFORMANCE		REFERENCE NUMBER			NOTES	REC. HOURS
			LOAD	TIME	PRE-BMS-92	BMS-92	POST-BMS-92		
F/C-S-18	1 1/8″	10′ × 13′6″ ; S. J. 103 - 24″ o.c.; Deck: 2″ concrete 1:2:4; Membrane: furring 12″ o.c.; Clips C, E, F, G; Diagonal wire reinforcement; 1 1/8″ plaster.	145 psf	2 hrs. 44 min.			3	2, 4, 8	2 2/3
F/C-S-19	1 1/8″	10′ × 13′6″ ; Joists - S.J. 103 - 24″ o.c.; Deck: 1 1/2″ gypsum concrete over; 1/2″ gypsum board; Membrane: furring 12″ o.c.; Clips D, E, F, G; 1 1/8″ plaster - 1.5:2; 1.5:3.	145 psf	1 hr. 40 min.			3	2, 3, 8	1 2/3
F/C-S-20	1 1/8″	2 1/2″ cinder concrete; 1/2″ topping; plate 6″ welds 12″ o.c.; 5″ - 18.9 lbs. “H” center; 5″ - 10 lbs. “I” ends; 1″ channels 18″ o.c.; 1 1/8″ gypsum sand plaster.	150 psf	3 hrs. 43 min.			6	2, 4, 9, 11	3 2/3
F/C-S-21	1 1/4″	10′ × 13′6″ ; Joists - S.J. 103 - 24″ o.c.; Deck: 1 1/2″ gypsum concrete over; 1/2″ gypsum board base; Membrane: furring 12″ o.c.; Clips D, E, F, G; 1 1/4″ plaster - 1.5:2; 1.5:3.	145 psf	1 hr. 48 min.			3	2, 3, 8	1 2/3
F/C-S-22	1 1/4″	Floor finish: 1 1/2″ limestone concrete; 1/2″ sand cement topping; plate to beams 3 1/2″; 12″ o.c. welded; 5″ - 10 lbs. “I” beams; 1″ channels 18″ o.c.; 1 1/4″ wood fiber gypsum sand plaster on metal lath.	292 psf	2 hrs. 45 min.			6	2, 4, 9, 10	2 3/4
F/C-S-23	1 1/2″	2 1/2″ L.W. (gas exp.) concrete; Deck: 1/2″ topping; plate 6 1/4″ welds 12″ o.c.; Beams: 5″ - 18.9 lbs. “H” center; 5″ - 10 lbs. “I” ends; Membrane: 1″ channels 18″ o.c.; 1 1/2″ gypsum sand plaster.	150 psf	4 hrs. 42 min.			6	2, 4, 9	4 2/3
F/C-S-24	1 1/2″	Floor finish: 1 1/2″ limestone concrete; 1/2″ cement topping; plate 3 1/2″ - 12″ o.c. welded; 5″ - 10 lbs. “I” beams; Ceiling: 1″ channels 18″ o.c.; 1 1/2″ gypsum plaster.	292 psf	2 hrs. 34 min.			6	2, 4, 9, 10	2 1/2
F/C-S-25	1 1/2″	Floor finish: 1 1/2″ gravel concrete on exp. metal; plate cont. weld; 4″ - 7.7 lbs. “I” beams; Ceiling: 1/4″ rods 12″ o.c. welded to beams; 1 1/2″ fiber gypsum sand plaster.	70 psf	1 hr. 24 min.			6	2, 4, 9, 10	1 1/3
F/C-S-26	2 1/2″	Floor finish: bare plate; 6 1/4″ welding - 12″ o.c.; 5″ - 18.9 lbs. “H” girders (inner); 5″ - 10 lbs “I” girders (two outer); 1″ channels 18″ o.c.; 2″ reinforced gypsum tile; 1/2″ gypsum sand plaster.	122 psf	1 hr.			6	7, 9, 11	1
F/C-S-27	2 1/2″	Floor finish: 2″ gravel concrete; plate to beams 3 1/2″ - 12″ o.c. welded; 4″ - 7.7 lbs. “I” beams; 2″ gypsum ceiling tiles; 1/2″ 1:3 gypsum sand plaster.	105 psf	2 hrs. 31 min.			6	2, 4, 9, 10	2 1/2
F/C-S-28	2 1/2″	Floor finish: 1 1/2″ gravel concrete; 1/2″ gypsum asphalt; plate continuous weld; 4″ - 7.7 lbs. “I” beams; 12″ - 31.8 lbs. “I” beams - girder at 5′ from one end; 1″ channels 18″ o.c.; 2″ reinforcement gypsum tile; 1/2″ 1:3 gypsum sand plaster.	200 psf	4 hrs. 55 min.			6	2, 4, 9, 11	4 2/3

(continued)

INTERNATIONAL CODE COUNCIL®
Copyright © 2019 ICC & NYSDOS. ALL RIGHTS RESERVED. Accessed by Lauren Gualdino (lgualdino@briarcliffmanor.org), (-) Order Number #100880972 on May 08, 2020 07:05 AM (PDT) pursuant to License Agreement with ICC & NYSDOS. No further reproduction, no

100880972

TABLE 3.2—continued
FLOOR/CEILING ASSEMBLIES—STEEL STRUCTURAL ELEMENTS

ITEM CODE	MEMBRANE THICKNESS	CONSTRUCTION DETAILS	PERFORMANCE		REFERENCE NUMBER			NOTES	REC. HOURS
			LOAD	TIME	PRE-BMS-92	BMS-92	POST-BMS-92		
F/C-S-29	3/4″	Floor: 2″ reinforced concrete or 2″ precast reinforced gypsum tile; Ceiling: 3/4″ Portland cement-sand plaster 1:2 for scratch coat and 1:3 for brown coat with 15 lbs. hydrated lime and 3 lbs. of short asbestos fiber bag per cement or 3/4″ sanded gypsum plaster 1:2 for scratch coat and 1:3 for brown coat.	See Note 12	1 hr. 30 min.		1		12, 13, 14	1 1/2
F/C-S-30	3/4″	Floor: 2 1/4″ reinforced concrete or 2″ reinforced gypsum tile; the latter with 1/4″ mortar finish; Ceiling: 3/4″ sanded gypsum plaster; 1:2 for scratch coat and 1:3 for brown coat.	See Note 12	2 hrs.		1		12, 13, 14	2
F/C-S-31	3/4″	Floor: 2 1/2″ reinforced concrete or 2″ reinforced gypsum tile; the latter with 1/4″ mortar finish; Ceiling: 1″ neat gypsum plaster or 3/4″ gypsum-vermiculite plaster, ratio of gypsum to fine vermiculite 2:1 to 3:1.	See Note 12	2 hrs. 30 min.		1		12, 13, 14	2 1/2
F/C-S-32	3/4″	Floor: 2 1/2″ reinforced concrete or 2″ reinforced gypsum tile; the latter with 1/2″ mortar finish; Ceiling: 1″ neat gypsum plaster or 3/4″ gypsum-vermiculite plaster, ratio of gypsum to fine vermiculite 2:1 to 3:1.	See Note 12	3 hrs.		1		12, 13, 14	3
F/C-S-33	1″	Floor: 2 1/2″ reinforced concrete or 2″ reinforced gypsum slabs; the latter with 1/2″ mortar finish; Ceiling: 1″ gypsum-vermiculite plaster applied on metal lath and ratio 2:1 to 3:1 gypsum to vermiculite by weight.	See Note 12	4 hrs.		1		12, 13, 14	4
F/C-S-34	2 1/2″	Floor: 2″ reinforced concrete or 2″ precast reinforced Portland cement concrete or gypsum slabs; precast slabs to be finished with 1/4″ mortar top coat; Ceiling: 2″ precast reinforced gypsum tile, anchored into beams with metal ties or clips and covered with 1/2″ 1:3 sanded gypsum plaster.	See Note 12	4 hrs.		1		12, 13, 14	4
F/C-S-35	1″	Floor: 1:3:6 Portland cement, sand and gravel concrete applied directly to the top of steel units and 1 1/2″ thick at top of cells, plus 1/2″ 1:2 1/2″ cement-sand finish, total thickness at top of cells, 2″ ; Ceiling: 1″ neat gypsum plaster, back of lath 2″ or more from underside of cellular steel.	See Note 15	3 hrs.		1		15, 16, 17, 18	3
F/C-S-36	1″	Floor: same as F/C-S-35; Ceiling: 1″ gypsum-vermiculite plaster (ratio of gypsum to vermiculite 2:1 to 3:1), the back of lath 2″ or more from under-side of cellular steel.	See Note 15	4 hrs.		1		15, 16, 17, 18	4
F/C-S-37	1″	Floor: same as F/C-S-35; Ceiling: 1″ neat gypsum plaster; back of lath 9″ or more from underside of cellular steel.	See Note 15	4 hrs.		1		15, 16, 17, 18	4
F/C-S-38	1″	Floor: same as F/C-S-35; Ceiling: 1″ gypsum-vermiculite plaster (ratio of gypsum to vermiculite 2:1 to 3:1), the back of lath being 9″ or more from underside of cellular steel.	See Note 15	5 hrs.		1		15, 16, 17,18	5

(continued)

INTERNATIONAL CODE COUNCIL®
Copyright © 2019 ICC & NYSDOS. ALL RIGHTS RESERVED. Accessed by Lauren Gualdino (lgualdino@briarcliffmanor.org), (-) Order Number #100880972 on May 08, 2020 07:05 AM (PDT) pursuant to License Agreement with ICC & NYSDOS. No further reproduction, no

100880972

TABLE 3.2—continued
FLOOR/CEILING ASSEMBLIES—STEEL STRUCTURAL ELEMENTS

ITEM CODE	MEMBRANE THICKNESS	CONSTRUCTION DETAILS	PERFORMANCE		REFERENCE NUMBER			NOTES	REC. HOURS
			LOAD	TIME	PRE-BMS-92	BMS-92	POST-BMS-92		
F/C-S-39	3/4″	Floor: asbestos paper 14 lbs./100 ft.^{2} cemented to steel deck with waterproof linoleum cement, wood screeds and 7/8″ wood floor; Ceiling: 3/4″ sanded gypsum plaster 1:2 for scratch coat and 1:3 for brown coat.	See Note 19	1 hr.		1		19, 20, 21, 22	1
F/C-S-40	3/4″	Floor: 1 1/2″, 1:2:4 Portland cement concrete; Ceiling: 3/4″ sanded gypsum plaster 1:2 for scratch coat and 1:3 for brown coat.	See Note 19	1 hr. 30 min.		1		19, 20, 21, 22	1 1/2
F/C-S-41	3/4″	Floor: 2″, 1:2:4 Portland cement concrete; Ceiling: 3/4″ sanded gypsum plaster, 1:2 for scratch coat and 1:3 for brown coat.	See Note 19	2 hrs.		1		19, 20, 21, 22	2
F/C-S-42	1″	Floor: 2″, 1:2:4 Portland cement concrete; Ceiling: 1″ Portland cement-sand plaster with 10 lbs. of hydrated lime for @ bag of cement 1:2 for scratch coat and 1:2 1/2″ for brown coat.	See Note 19	2 hrs.		1		19, 20, 21, 22	2
F/C-S-43	1 1/2″	Floor: 2″, 1:2:4 Portland cement concrete; Ceiling: 1 1/2″, 1:2 sanded gypsum plaster on ribbed metal lath.	See Note 19	2 hrs. 30 min.		1		19, 20, 21, 22	2 1/2
F/C-S-44	1 1/8″	Floor: 2″, 1:2:4 Portland cement concrete; Ceiling: 1 1/8″, 1:1 sanded gypsum plaster.	See Note 19	2 hrs. 30 min.		1		19, 20, 21, 22	2 1/2
F/C-S-45	1″	Floor: 2 1/2″, 1:2:4 Portland cement concrete; Ceiling: 1″, 1:2 sanded gypsum plaster.	See Note 19	2 hrs. 30 min.		1		19, 20, 21, 22	2 1/2
F/C-S-46	3/4″	Floor: 2 1/2″, 1:2:4 Portland cement concrete; Ceiling: 1″ neat gypsum plaster or 3/4″ gypsum-vermiculite plaster, ratio of gypsum to vermiculite 2:1 to 3:1.	See Note 19	3 hrs.		1		19, 20, 21, 22	3
F/C-S-47	1 1/8″	Floor: 2 1/2″, 1:2:4 Portland cement, sand and cinder concrete plus 1/2″, 1:2 1/2″ cement-sand finish; total thickness 3″; Ceiling: 1 1/8″, 1:1 sanded gypsum plaster.	See Note 19	3 hrs.		1		19, 20, 21, 22	3
F/C-S-48	1 1/8″	Floor: 2 1/2″, gas expanded Portland cement-sand concrete plus 1/2″, 1:2.5 cement-sand finish; total thickness 3″; Ceiling: 1 1/8″ , 1:1 sanded gypsum plaster.	See Note 19	3 hrs. 30 min.		1		19, 20, 21, 22	3 1/2
F/C-S-49	1″	Floor: 2 1/2″, 1:2:4 Portland cement concrete; Ceiling: 1″ gypsum- vermiculite plaster; ratio of gypsum to vermiculite 2:1 to 3:1.	See Note 19	4 hrs.		1		19, 20, 21, 22	4
F/C-S-50	2 1/2″	Floor: 2″, 1:2:4 Portland cement concrete; Ceiling: 2″ interlocking gypsum tile supported on upper face of lower flanges of beams, 1/2″ 1:3 sanded gypsum plaster.	See Note 19	2 hrs.		1		19, 20, 21, 22	2
F/C-S-51	2 1/2″	Floor: 2″, 1:2:4 Portland cement concrete; Ceiling: 2″ precast metal reinforced gypsum tile, 1/2″ 1:3 sanded gypsum plaster (tile clipped to channels which are clipped to lower flanges of beams).	See Note 19	4 hrs.		1		19, 20, 21, 22	4

For SI: 1 inch = 25.4 mm, 1 foot = 305 mm, 1 pound per square inch = 0.00689 MPa, 1 pound per square foot = 47.9 N/m^2.

Notes:

1. No protective membrane over structural steel.
2. Performance time indicates first endpoint reached only several tests were continued to points where other failures occurred.
3. Load failure.

(continued)

INTERNATIONAL CODE COUNCIL®
Copyright © 2019 ICC & NYSDOS. ALL RIGHTS RESERVED. Accessed by Lauren Gualdino (lgualdino@briarcliffmanor.org), (-) Order Number #100880972 on May 08, 2020 07:05 AM (PDT) pursuant to License Agreement with ICC & NYSDOS. No further reproduction, no

100880972

TABLE 3.2—continued
FLOOR/CEILING ASSEMBLIES—STEEL STRUCTURAL ELEMENTS

4. Thermal failure.
5. This is an estimated time to load bearing failure. The same joist and deck specimen was used for a later test with different membrane protection.
6. Test stopped at 3 hours to reuse specimen; no endpoint reached.
7. Test stopped at 1 hour to reuse specimen; no endpoint reached.
8. All plaster used = gypsum.
9. Specimen size - 18 feet by $13^{1}/_{2}$ inches. Floor deck - base material - $^{1}/_{4}$-inch by 18-foot steel plate welded to "I" beams.
10. "I" beams - 24 inches o.c.
11. "I" beams - 48 inches o.c.
12. Apply to open web joists, pressed steel joists or rolled steel beams, which are not stressed beyond 18,000 lbs./in.^{2} in flexure for open-web pressed or light rolled joists, and 20,000 lbs./in.^{2} for American standard or heavier rolled beams.
13. Ratio of weight of Portland cement to fine and coarse aggregates combined for floor slabs shall not be less than $1{:}6^{1}/_{2}$.
14. Plaster for ceiling shall be applied on metal lath which shall be tied to supports to give the equivalent of single No. 18 gage steel wires 5 inches o.c.
15. Load: maximum fiber stress in steel not to exceed 16,000 psi.
16. Prefabricated units 2 feet wide with length equal to the span, composed of two pieces of No. 18 gage formed steel welded together to give four longitudinal cells.
17. Depth not less than 3 inches and distance between cells no less than 2 inches.
18. Ceiling: metal lath tied to furring channels secured to runner channels hung from cellular steel.
19. Load: rolled steel supporting beams and steel plate base shall not be stressed beyond 20,000 psi in flexure. Formed steel (with wide upper flange) construction shall not be stressed beyond 16,000 psi.
20. Some type of expanded metal or woven wire shall be embedded to prevent cracking in concrete flooring.
21. Ceiling plaster shall be metal lath wired to rods or channels which are clipped or welded to steel construction. Lath shall be no smaller than 18 gage steel wire and not more than 7 inches o.c.
22. The securing rods or channels shall be at least as effective as single $^{3}/_{16}$-inch rods with 1-inch of their length bent over the lower flanges of beams with the rods or channels tied to this clip with 14 gage iron wire.

INTERNATIONAL CODE COUNCIL®
Copyright © 2019 ICC & NYSDOS. ALL RIGHTS RESERVED. Accessed by Lauren Gualdino (lgualdino@briarcliffmanor.org), (-) Order Number #100880972 on May 08, 2020 07:05 AM (PDT) pursuant to License Agreement with ICC & NYSDOS. No further reproduction, no

100880972

FIGURE 3.3
FLOOR/CEILING ASSEMBLIES—WOOD JOIST

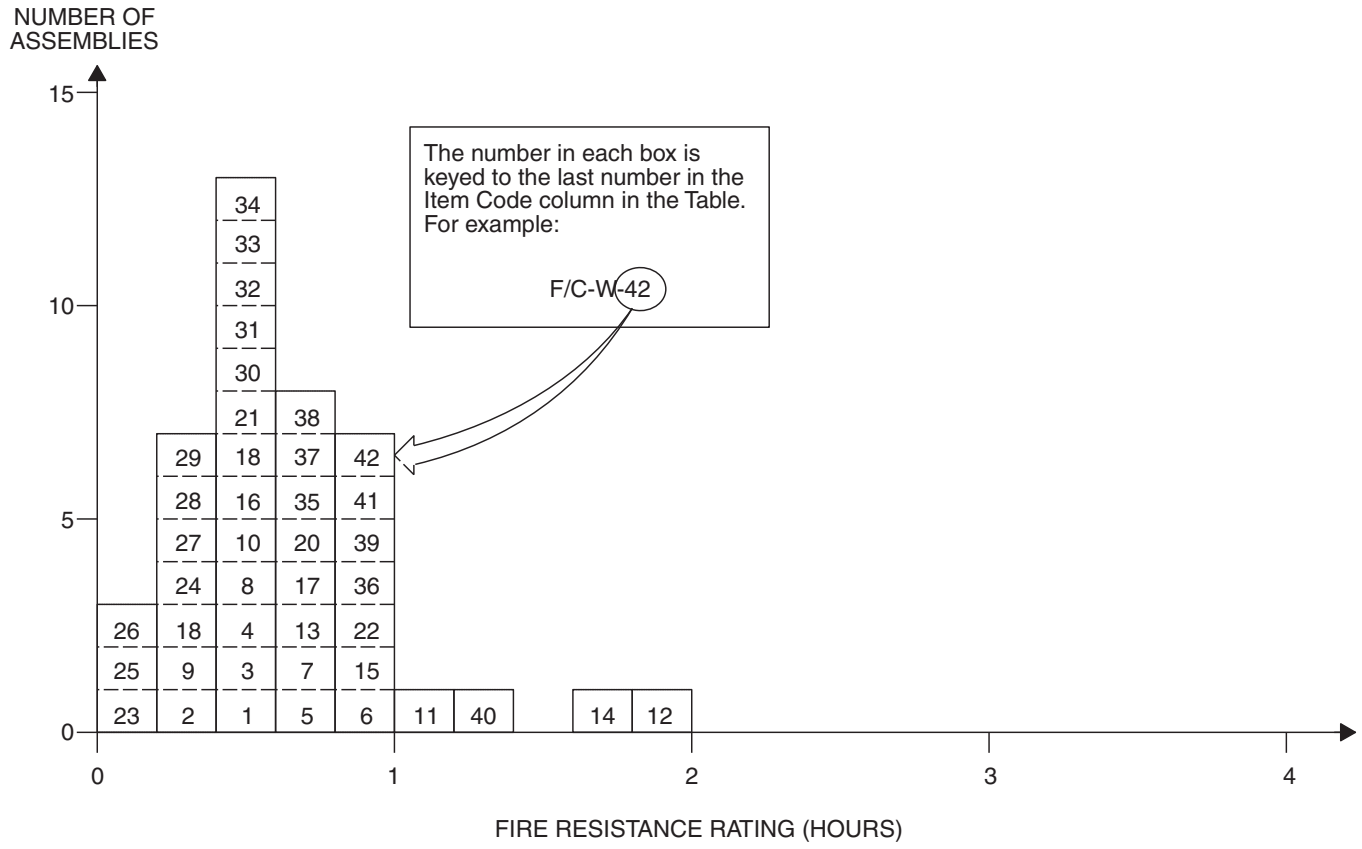

TABLE 3.3
FLOOR/CEILING ASSEMBLIES—WOOD JOIST

ITEM CODE	MEMBRANE THICKNESS	CONSTRUCTION DETAILS	PERFORMANCE		REFERENCE NUMBER			NOTES	REC. HOURS
			LOAD	TIME	PRE-BMS-92	BMS-92	POST-BMS-92		
F/C-W-1	$^3/_8$″	12′ clear span - 2″ × 9″ wood joists; 18″ o.c.; Deck: 1″ T&G; Filler: 3″ of ashes on $^1/_2$″ boards nailed to joist sides 2″ from bottom; 2″ air space; Membrane: $^3/_8$″ gypsum board.	60 psf	36 min.			7	1, 2	$^1/_2$
F/C-W-2	$^1/_2$″	12′ clear span - 2″ × 7″ joists; 15″ o.c.; Deck: 1″ nominal lumber; Membrane: $^1/_2$″ fiber board.	60 psf	22 min.			7	1, 2, 3	$^1/_4$
F/C-W-3	$^1/_2$″	12′ clear span - 2″ × 7″ wood joists; 16″ o.c.; 2″ × $1^1/_2$″ bridging at center; Deck: 1″ T&G; Membrane: $^1/_2$″ fiber board; 2 coats “distemper” paint.	30 psf	28 min.			7	1, 3, 15	$^1/_3$
F/C-W-4	$^3/_{16}$″	12′ clear span - 2″ × 7″ wood joists; 16″ o.c.; 2″ × $1^1/_2$″ bridging at center span; Deck: 1″ nominal lumber; Membrane: $^1/_2$″ fiber board under $^3/_{16}$″ gypsum plaster.	30 psf	32 min.			7	1, 2	$^1/_2$
F/C-W-5	$^5/_8$″	As per previous F/C-W-4 except membrane is $^5/_8$″ lime plaster.	70 psf	48 min.			7	1, 2	$^3/_4$
F/C-W-6	$^5/_8$″	As per previous F/C-W-5 except membrane is $^5/_8$″ gypsum plaster on 22 gage $^3/_8$″ metal lath.	70 psf	49 min.			7	1, 2	$^3/_4$

(continued)

INTERNATIONAL CODE COUNCIL®
Copyright © 2019 ICC & NYSDOS. ALL RIGHTS RESERVED. Accessed by Lauren Gualdino (lgualdino@briarcliffmanor.org), (-) Order Number #100880972 on May 08, 2020 07:05 AM (PDT) pursuant to License Agreement with ICC & NYSDOS. No further reproduction, no

100880972

TABLE 3.3—continued
FLOOR/CEILING ASSEMBLIES—WOOD JOIST

ITEM CODE	MEMBRANE THICKNESS	CONSTRUCTION DETAILS	PERFORMANCE		REFERENCE NUMBER			NOTES	REC. HOURS
			LOAD	TIME	PRE-BMS-92	BMS-92	POST-BMS-92		
F/C-W-7	1/2″	As per previous F/C-W-6 except membrane is 1/2″ fiber board under 1/2″ gypsum plaster.	60 psf	43 min.			7	1, 2, 3	2/3
F/C-W-8	1/2″	As per previous F/C-W-7 except membrane is 1/2″ gypsum board.	60 psf	33 min.			7	1, 2, 3	1/2
F/C-W-9	9/16″	12′ clear span - 2″ × 7″ wood joists; 15″ o.c.; 2″ × 1 1/2″ bridging at center; Deck: 1″ nominal lumber; Membrane: 3/8″ gypsum board; 3/16″ gypsum plaster.	60 psf	24 min.			7	1, 2, 3	1/3
F/C-W-10	5/8″	As per F/C-W-9 except membrane is 5/8″ gypsum plaster on wood lath.	60 psf	27 min.			7	1, 2, 3	1/3
F/C-W-11	7/8″	12′ clear span - 2″ × 9″ wood joists; 15″ o.c.; 2″ × 1 1/2″ bridging at center span; Deck: 1″ T&G; Membrane: original ceiling joists have 3/8″ plaster on wood lath; 4″ metal hangers attached below joists creating 15″ chases filled with mineral wool and closed with 7/8″ plaster (gypsum) on 3/8″ S.W.M. metal lath to form new ceiling surface.	75 psf	1 hr. 10 min.			7	1, 2	1
F/C-W-12	7/8″	12′ clear span - 2″ × 9″ wood joists; 15″ o.c.; 2″ × 1 1/2″ bridging at center; Deck: 1″ T&G; Membrane: 3″ mineral wood below joists; 3″ hangers to channel below joists; 7/8″ gypsum plaster on metal lath attached to channels.	75 psf	2 hrs.			7	1, 4	2
F/C-W-13	7/8″	12′ clear span - 2″ × 9″ wood joists; 16″ o.c.; 2″ × 1 1/2″ bridging at center span; Deck: 1″ T&G on 1″ bottoms on 3/4″ glass wool strips on 3/4″ gypsum board nailed to joists; Membrane: 3/4″ glass wool strips on joists; 3/8″ perforated gypsum lath; 1/2″ gypsum plaster.	60 psf	41 min.			7	1, 3	2/3
F/C-W-14	7/8″	12′ clear span - 2″ × 9″ wood joists; 15″ o.c.; Deck: 1″ T&G; Membrane: 3″ foam concrete in cavity on 1/2″ boards nailed to joists; wood lath nailed to 1″ × 1 1/4″ straps 14 o.c. across joists; 7/8″ gypsum plaster.	60 psf	1 hr. 40 min.			7	1, 5	1 2/3
F/C-W-15	7/8″	12′ clear span - 2″ × 9″ wood joists; 18″ o.c.; Deck: 1″ T&G; Membrane: 2″ foam concrete on 1/2″ boards nailed to joist sides 2″ from joist bottom; 2″ air space; 1″ × 1 1/4″ wood straps 14″ o.c. across joists; 7/8″ lime plaster on wood lath.	60 psf	53 min.			7	1, 2	3/4
F/C-W-16	7/8″	12′ clear span - 2″ × 9″ wood joists; Deck: 1″ T&G; Membrane: 3″ ashes on 1/2″ boards nailed to joist sides 2″ from joist bottom; 2″ air space; 1″ × 1 1/4″ wood straps 14″ o.c. ; 7/8″ gypsum plaster on wood lath.	60 psf	28 min.			7	1, 2	1/3
F/C-W-17	7/8″	As per previous F/C-W-16 but with lime plaster mix.	60 psf	41 min.			7	1, 2	2/3
F/C-W-18	7/8″	12′ clear span - 2″ × 9″ wood joists; 18″ o.c.; 2″ × 1 1/2″ bridging at center; Deck: 1″ T&G; Membrane: 7/8″ gypsum plaster on wood lath.	60 psf	36 min.			7	1, 2	1/2
F/C-W-19	7/8″	As per previous F/C-W-18 except with lime plaster membrane and deck is 1″ nominal boards (plain edge).	60 psf	19 min.			7	1, 2	1/4

(continued)

INTERNATIONAL CODE COUNCIL®
Copyright © 2019 ICC & NYSDOS. ALL RIGHTS RESERVED. Accessed by Lauren Gualdino (lgualdino@briarcliffmanor.org), (-) Order Number #100880972 on May 08, 2020 07:05 AM (PDT) pursuant to License Agreement with ICC & NYSDOS. No further reproduction, no

100880972

TABLE 3.3—continued
FLOOR/CEILING ASSEMBLIES—WOOD JOIST

ITEM CODE	MEMBRANE THICKNESS	CONSTRUCTION DETAILS	PERFORMANCE		REFERENCE NUMBER			NOTES	REC. HOURS
			LOAD	TIME	PRE-BMS-92	BMS-92	POST-BMS-92		
F/C-W-20	7/8″	As per F/C-W-19, except deck is 1″ T&G boards.	60 psf	43 min.			7	1, 2	2/3
F/C-W-21	1″	12′ clear span - 2″ × 9″ wood joists; 16″ o.c.; 2″ × 1 1/2″ bridging at center; Deck: 1″ T&G; Membrane: 3/8″ gypsum base board; 5/8″ gypsum plaster.	70 psf	29 min.			7	1, 2	1/3
F/C-W-22	1 1/8″	12′ clear span - 2″ × 9″ wood joists; 16″ o.c.; 2″ × 2″ wood bridging at center; Deck: 1″ T&G; Membrane: hangers, channel with 3/8″ gypsum baseboard affixed under 3/4″ gypsum plaster.	60 psf	1 hr.			7	1, 2, 3	1
F/C-W-23	3/8″	Deck: 1″ nominal lumber; Joists: 2″ × 7″; 15″ o.c.; Membrane: 3/8″ plasterboard with plaster skim coat.	60 psf	11 1/2 min.			12	2, 6	1/6
F/C-W-24	1/2″	Deck: 1″ T&G lumber; Joists: 2″ × 9″; 16″ o.c.; Membrane: 1/2″ plasterboard.	60 psf	18 min.			12	2, 7	1/4
F/C-W-25	1/2″	Deck: 1″ T&G lumber; Joists: 2″ × 7″; 16″ o.c.; Membrane: 1/2″ fiber insulation board.	30 psf	8 min.			12	2, 8	2/15
F/C-W-26	1/2″	Deck: 1″ nominal lumber; Joists: 2″ × 7″; 15″ o.c.; Membrane: 1/2″ fiber insulation board.	60 psf	8 min.			12	2, 9	2/15
F/C-W-27	5/8″	Deck: 1″ nominal lumber; Joists: 2″ × 7″; 15″ o.c.; Membrane: 5/8″ gypsum plaster on wood lath.	60 psf	17 min.			12	2, 10	1/4
F/C-W-28	5/8″	Deck: 1″ T&G lumber; Joists: 2″ × 9″; 16″ o.c.; Membrane: 1/2″ fiber insulation board; 1/2″ plaster.	60 psf	20 min.			12	2, 11	1/3
F/C-W-29	No Membrane	Exposed wood joists.	See Note 13	15 min.		1		1, 12, 13, 14	1/4
F/C-W-30	3/8″	Gypsum wallboard: 3/8″ or 1/2″ with 1 1/2″ No. 15 gage nails with 3/16″ heads spaced 6″ centers with asbestos paper applied with paperhangers' paste and finished with casein paint.	See Note 13	25 min.		1		1, 12, 13, 14	1/2
F/C-W-31	1/2″	Gypsum wallboard: 1/2″ with 1 3/4″ No. 12 gage nails with 1/2″ heads, 6″ o.c., and finished with casein paint.	See Note 13	25 min.		1		1, 12, 13, 14	1/2
F/C-W-32	1/2″	Gypsum wallboard: 1/2″ with 1 1/2″ No. 12 gage nails with 1/2″ heads, 18″ o.c., with asbestos paper applied with paperhangers' paste and secured with 1 1/2″ No. 15 gage nails with 3/16″ heads and finished with casein paint; combined nail spacing 6″ o.c.	See Note 13	30 min.		1		1, 12, 13, 14	1/2
F/C-W-33	3/8″	Gypsum wallboard: two layers 3/8″ secured with 1 1/2″ No. 15 gage nails with 3/8″ heads, 6″ o.c.	See Note 13	30 min.		1		1, 12, 13, 14	1/2
F/C-W-34	1/2″	Perforated gypsum lath: 3/8″, plastered with 1 1/8″ No. 13 gage nails with 5/16″ heads, 4″ o.c.; 1/2″ sanded gypsum plaster.	See Note 13	30 min.		1		1, 12, 13, 14	1/2
F/C-W-35	1/2″	Same as F/C-W-34, except with 1 1/8″ No. 13 gage nails with 3/8″ heads, 4″ o.c.	See Note 13	45 min.		1		1, 12, 13, 14	3/4

(continued)

INTERNATIONAL CODE COUNCIL®
Copyright © 2019 ICC & NYSDOS. ALL RIGHTS RESERVED. Accessed by Lauren Gualdino (lgualdino@briarcliffmanor.org), (-) Order Number #100880972 on May 08, 2020 07:05 AM (PDT) pursuant to License Agreement with ICC & NYSDOS. No further reproduction, no

100880972

TABLE 3.3—continued
FLOOR/CEILING ASSEMBLIES—WOOD JOIST

ITEM CODE	MEMBRANE THICKNESS	CONSTRUCTION DETAILS	PERFORMANCE		REFERENCE NUMBER			NOTES	REC. HOURS
			LOAD	TIME	PRE-BMS-92	BMS-92	POST-BMS-92		
F/C-W-36	1/2″	Perforated gypsum lath: 3/8″ , nailed with 1 1/8″ No. 13 gage nails with 3/8″ heads, 4″ o.c.; joints covered with 3″ strips of metal lath with 1 3/4″ No. 12 nails with 1/2″ heads, 5″ o.c.; 1/2″ sanded gypsum plaster.	See Note 13	1 hr.		1		1, 12, 13, 14	1
F/C-W-37	1/2″	Gypsum lath: 3/8″ and lower layer of 3/8″ perforated gypsum lath nailed with 1 3/4″ No. 13 nails with 5/16″ heads, 4″ o.c.; 1/2″ sanded gypsum plaster or 1/2″ Portland cement plaster.	See Note 13	45 min.		1		1, 12, 13, 14	3/4
F/C-W-38	3/4″	Metal lath: nailed with 1 1/4″ No. 11 nails with 3/8″ heads or 6d common driven 1″ and bent over, 6″ o.c.; 3/4″ sanded gypsum plaster.	See Note 13	45 min.		1		1, 12, 13, 14	3/4
F/C-W-39	3/4″	Same as F/C-W-38, except nailed with 1 1/2″ No. 11 barbed roof nails with 7/16″ heads, 6″ o.c.	See Note 13	1 hr.		1		1, 12, 13, 14	1
F/C-W-40	3/4″	Same as F/C-W-38, except with lath nailed to joists with additional supports for lath 27″ o.c.; attached to alternate joists and consisting of two nails driven 1 1/4″, 2″ above bottom on opposite sides of the joists, one loop of No. 18 wire slipped over each nail; the ends twisted together below lath.	See Note 13	1 hr. 15 min.		1		1, 12, 13, 14	1 1/4
F/C-W-41	3/4″	Metal lath: nailed with 1 1/2″ No. 11 barbed roof nails with 7/16″ heads, 6 o.c., with 3/4″ Portland cement plaster for scratch coat and 1:3 for brown coat, 3 lbs. of asbestos fiber and 15 lbs. of hydrated lime/94 lbs. bag of cement.	See Note 13	1 hr.		1		1, 12, 13, 14	1
F/C-W-42	3/4″	Metal lath: nailed with 8d, No. 11 1/2 gage barbed box nails, 2 1/2″ driven, 1 1/4″ on slant and bent over, 6″ o.c.; 3/4″ sanded gypsum plaster, 1:2 for scratch coat and 1:3 for below coat.	See Note 13	1 hr.		1		1, 12, 13, 14	1

For SI: 1 inch = 25.4 mm, 1 foot = 305 mm, 1 pound per square inch = 0.00689 MPa, 1 pound per square foot = 47.9 N/m^2.

Notes:

1. Thickness indicates thickness of first membrane protection on ceiling surface.
2. Failure mode—flame thru.
3. Failure mode—collapse.
4. No endpoint reached at termination of test.
5. Failure imminent—test terminated.
6. Joist failure—11.5 minutes; flame thru—13 minutes; collapse—24 minutes.
7. Joist failure—17 minutes; flame thru—18 minutes; collapse—33 minutes.
8. Joist failure—18 minutes; flame thru—8 minutes; collapse—30 minutes.
9. Joist failure—12 minutes; flame thru—8 minutes; collapse—22 minutes.
10. Joist failure—11 minutes; flame thru—17 minutes; collapse—27 minutes.
11. Joist failure—17 minutes; flame thru—20 minutes; collapse—43 minutes.
12. Joists: 2-inch by 10-inch southern pine or Douglas fir; No. 1 common or better. Subfloor: 3/4-inch wood sheathing diaphragm of asbestos paper, and finish of tongue-and-groove wood flooring.
13. Loadings: not more than 1,000 psi maximum fiber stress in joists.
14. Perforations in gypsum lath are to be not less than 3/4-inch diameter with one perforation for not more than 16/in.^{2} diameter.
15. “Distemper” is a British term for a water-based paint such as white wash or calcimine.

INTERNATIONAL CODE COUNCIL®
Copyright © 2019 ICC & NYSDOS. ALL RIGHTS RESERVED. Accessed by Lauren Gualdino (lgualdino@briarcliffmanor.org), (-) Order Number #100880972 on May 08, 2020 07:05 AM (PDT) pursuant to License Agreement with ICC & NYSDOS. No further reproduction, no

100880972

FIGURE 3.4
FLOOR/CEILING ASSEMBLIES—HOLLOW CLAY TILE WITH REINFORCED CONCRETE

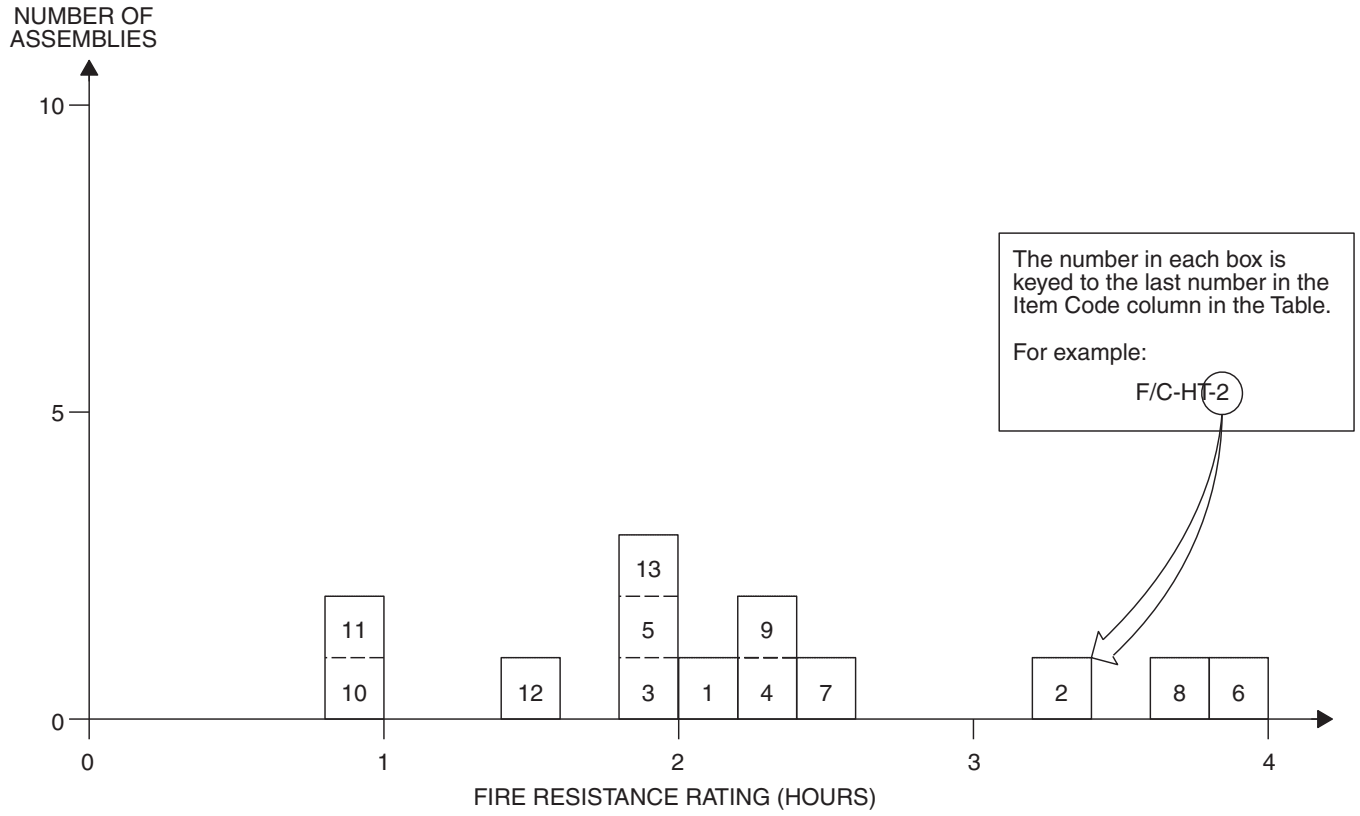

TABLE 3.4
FLOOR/CEILING ASSEMBLIES—HOLLOW CLAY TILE WITH REINFORCED CONCRETE

ITEM CODE	ASSEMBLY THICKNESS	CONSTRUCTION DETAILS	PERFORMANCE		REFERENCE NUMBER			NOTES	REC. HOURS
			LOAD	TIME	PRE-BMS-92	BMS-92	POST-BMS-92		
F/C-HT-1	6″	Cover: $1^1/_2$″ concrete (6080 psi); three cell hollow clay tiles, 12″ × 12″ × 4″; $3^1/_4$″ concrete between tiles including two $^1/_2$″ rebars with $^3/_4$″ concrete cover; $^1/_2$″ plaster cover, lower.	75 psf	2 hrs. 7 min.			7	1, 2, 3	2
F/C-HT-2	6″	Cover: $1^1/_2$″ concrete (5840 psi); three cell hollow clay tiles, 12″ × 12″ × 4″; $3^1/_4$″ concrete between tiles including two $^1/_2$″ rebars each with $^1/_2$″ concrete cover and $^5/_8$″ filler tiles between hollow tiles; $^1/_2$″ plaster cover, lower.	61 psf	3 hrs. 23 min.			7	3, 4, 6	$3^1/_3$
F/C-HT-3	6″	Cover: $1^1/_2$″ concrete (6280 psi); three cell hollow clay tiles, 12″ × 12″ × 4″; $3^1/_4$″ concrete between tiles including two $^1/_2$″ rebars with $^1/_2$″ cover; $^1/_2$″ plaster cover, lower.	122 psf	2 hrs.			7	1, 3, 5, 8	2
F/C-HT-4	6″	Cover: $1^1/_2$″ concrete (6280 psi); three cell hollow clay tiles, 12″ × 12″ × 4″; $3^1/_4$″ concrete between tiles including two $^1/_2$″ rebars with $^3/_4$″ cover; $^1/_2$″ plaster cover, lower.	115 psf	2 hrs. 23 min.			7	1, 3, 7	$2^1/_3$
F/C-HT-5	6″	Cover: $1^1/_2$″ concrete (6470 psi); three cell hollow clay tiles, 12″ × 12″ × 4″; $3^1/_4$″ concrete between tiles including two $^1/_2$″ rebars with $^1/_2$″ cover; $^1/_2$″ plaster cover, lower.	122 psf	2 hrs.			7	1, 3, 5, 8	2

(continued)

INTERNATIONAL CODE COUNCIL®
Copyright © 2019 ICC & NYSDOS. ALL RIGHTS RESERVED. Accessed by Lauren Gualdino (lgualdino@briarcliffmanor.org), (-) Order Number #100880972 on May 08, 2020 07:05 AM (PDT) pursuant to License Agreement with ICC & NYSDOS. No further reproduction, no

100880972

TABLE 3.4—continued
FLOOR/CEILING ASSEMBLIES—HOLLOW CLAY TILE WITH REINFORCED CONCRETE

ITEM CODE	ASSEMBLY THICKNESS	CONSTRUCTION DETAILS	PERFORMANCE		REFERENCE NUMBER			NOTES	REC. HOURS
			LOAD	TIME	PRE-BMS-92	BMS-92	POST-BMS-92		
F/C-HT-6	8″	Floor cover: $1^1/_2$″ gravel cement (4300 psi); three cell, 12″ × 12″ × 6″ ; $3^1/_2$″ space between tiles including two $^1/_2$″ rebars with 1″ cover from concrete bottom; $^1/_2$″ plaster cover, lower.	165 psf	4 hrs.			7	1, 3, 9, 10	4
F/C-HT-7	9″ (nom.)	Deck: $^7/_8$″ T&G on 2″ × $1^1/_2$″ bottoms (18″ o.c.) $1^1/_2$″ concrete cover (4600 psi); three cell hollow clay tiles, 12″ × 12″ × 4″; 3″ concrete between tiles including one $^3/_4$″ rebar $^3/_4$″ from tile bottom; $^3/_4$″ plaster cover.	95 psf	2 hrs. 26 min.			7	4, 11, 12, 13	$2^1/_3$
F/C-HT-8	9″ (nom.)	Deck: $^7/_8$″ T&G on 2″ × $1^1/_2$″ bottoms (18″ o.c.) $1^1/_2$″ concrete cover (3850 psi); three cell hollow clay tiles, 12″ × 12″ × 4″; 3″ concrete between tiles including one $^3/_4$″ rebar $^3/_4$″ from tile bottoms; $^1/_2$″ plaster cover.	95 psf	3 hrs. 28 min.			7	4, 11, 12, 13	
F/C-HT-9	9″ (nom.)	Deck: $^7/_8$″ T&G on 2″ × $1^1/_2$″ bottoms (18″ o.c.) $1^1/_2$″ concrete cover (4200 psi); three cell hollow clay tiles, 12″ × 12″ × 4″; 3″ concrete between tiles including one $^3/_4$″ rebar $^3/_4$″ from tile bottoms; $^1/_2$″ plaster cover.	95 psf	2 hrs. 14 min.			7	3, 5, 8, 11	
F/C-HT-10	$5^1/_2$″	Fire clay tile (4″ thick); $1^1/_2$″ concrete cover; for general details, see Note 15.	See Note 14	1 hr.			43	15	1
F/C-HT-11	8″	Fire clay tile (6″ thick); 2″ cover.	See Note 14	1 hr.			43	15	1
F/C-HT-12	$5^1/_2$″	Fire clay tile (4″ thick); $1^1/_2$″ cover; $^5/_8$″ gypsum plaster, lower.	See Note 14	1 hr. 30 min.			43	15	$1^1/_2$
F/C-HT-13	8″	Fire clay tile (6″ thick); 2″ cover; $^5/_8$″ gypsum plaster, lower.	See Note 14	2 hrs.			43	15	$1^1/_2$

For SI: 1 inch = 25.4 mm, 1 foot = 305 mm, 1 pound per square inch = 0.00689 MPa, 1 pound per square foot = 47.9 N/m^2.

Notes:

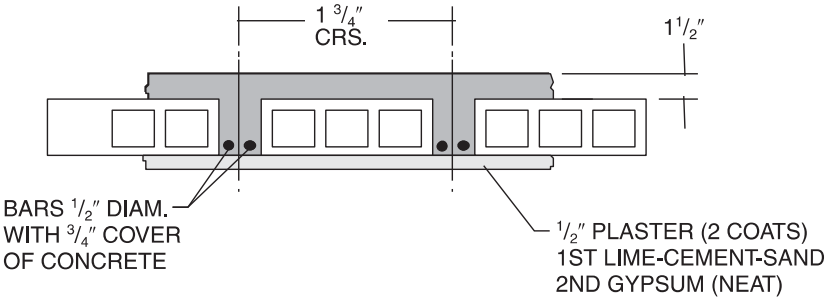

1. A generalized cross section of this floor type follows:
2. Failure mode - structural.
3. Plaster: base coat—lime-cement-sand; top coat—gypsum (neat).

(continued)

INTERNATIONAL CODE COUNCIL®
Copyright © 2019 ICC & NYSDOS. ALL RIGHTS RESERVED. Accessed by Lauren Gualdino (lgualdino@briarcliffmanor.org), (-) Order Number #100880972 on May 08, 2020 07:05 AM (PDT) pursuant to License Agreement with ICC & NYSDOS. No further reproduction, no

100880972

TABLE 3.4—continued
FLOOR/CEILING ASSEMBLIES-HOLLOW CLAY TILE WITH REINFORCED CONCRETE

4. Failure mode—collapse.
5. Test stopped before any endpoints were reached.
6. A generalized cross section of this floor type follows:

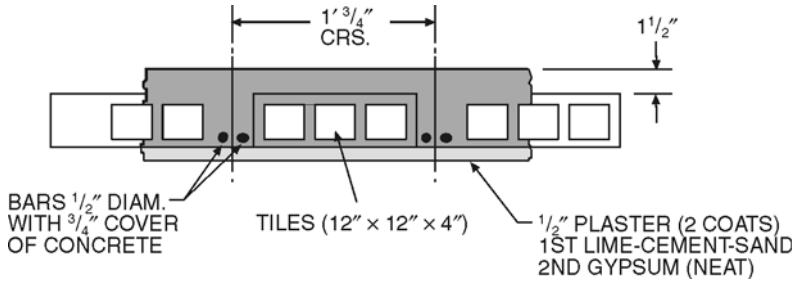

7. Failure mode—thermal—back face temperature rise.
8. Passed hose stream test.
9. Failed hose stream test.

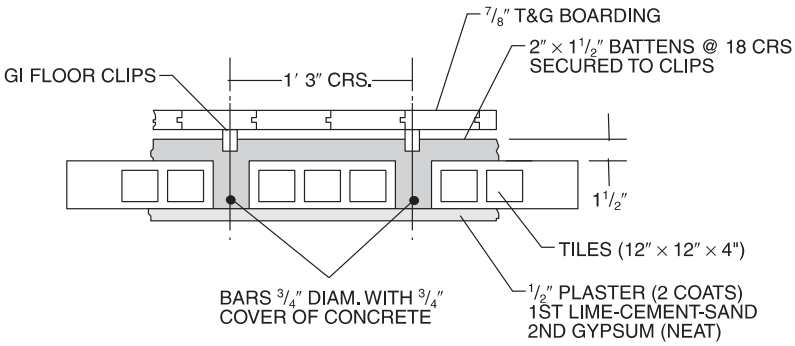

10. Test stopped at 4 hours before any endpoints were reached.
11. A generalized cross section of this floor type follows:
12. Plaster: base coat—retarded hemihydrate gypsum-sand; second coat—neat gypsum.
13. Concrete in Item 7 is P.C. based but with crushed brick aggregates while in Item 8 river sand and river gravels are used with the P.C.
14. Load - unspecified.
15. The 12-inch by 12-inch fire-clay tiles were laid end to end in rows spaced $2^1/_2$ inches or 4 inches apart. The reinforcing steel was placed between these rows and the concrete cast around them and over the tile to form the structural floor.

INTERNATIONAL CODE COUNCIL®
Copyright © 2019 ICC & NYSDOS. ALL RIGHTS RESERVED. Accessed by Lauren Gualdino (lgualdino@briarcliffmanor.org), (-) Order Number #100880972 on May 08, 2020 07:05 AM (PDT) pursuant to License Agreement with ICC & NYSDOS. No further reproduction, no

100880972

SECTION IV
BEAMS

TABLE 4.1.1
REINFORCED CONCRETE BEAMS
DEPTH 10″ TO LESS THAN 12″

ITEM CODE	DEPTH	CONSTRUCTION DETAILS	PERFORMANCE		REFERENCE NUMBER			NOTES	REC. HOURS
			LOAD	TIME	PRE-BMS-92	BMS-92	POST-BMS-92		
B-11-RC-1	11″	24″ wide × 11″ deep reinforced concrete “T” beam (3290 psi); Details: see Note 5 figure.	8.8 tons	4 hrs. 2 min.			7	1, 2, 14	4
B-10-RC-2	10″	24″ wide × 10″ deep reinforced concrete “T” beam (4370 psi); Details: see Note 6 figure.	8.8 tons	1 hr. 53 min.			7	1, 3	$1^{3}/_{4}$
B-10-RC-3	$10^{1}/_{2}$″	24″ wide × $10^{1}/_{2}$″ deep reinforced concrete “T” beam (4450 psi); Details: see Note 7 figure.	8.8 tons	2 hrs. 40 min.			7	1, 3	$2^{2}/_{3}$
B-11-RC-4	11″	24″ wide × 11″ deep reinforced concrete “T” beam (2400 psi); Details: see Note 8 figure.	8.8 tons	3 hrs. 32 min.			7	1, 3, 14	$3^{1}/_{2}$
B-11-RC-5	11″	24″ wide × 11″ deep reinforced concrete “T” beam (4250 psi); Details: see Note 9 figure.	8.8 tons	3 hrs. 3 min.			7	1, 3, 14	3
B-11-RC-6	11″	Concrete flange: 4″ deep × 2' wide (4895 psi) concrete; Concrete beam: 7″ deep × $6^{1}/_{2}$″ wide beam; “I” beam reinforcement; 10″ × $4^{1}/_{2}$″ × 25 lbs. R.S.J.; 1″ cover on flanges; Flange reinforcement: $^{3}/_{8}$″ diameter bars at 6″ pitch parallel to “T”; $^{1}/_{4}$″ diameter bars perpendicular to “T”; Beam reinforcement: 4″ × 6″ wire mesh No. 13 SWG; Span: 11' restrained; Details: see Note 10 figure.	10 tons	6 hrs.			7	1, 4	6
B-11-RC-7	11″	Concrete flange: 6″ deep × 1' $6^{1}/_{2}$″ wide (3525 psi) concrete; Concrete beam: 5″ deep × 8″ wide precast concrete blocks $8^{3}/_{4}$″ long; “I” beam reinforcement; 7″ × 4″ × 16 lbs. R.S.J.; 2″ cover on bottom; $1^{1}/_{2}$″ cover on top; Flange reinforcement: two rows $^{1}/_{2}$″ diameter rods parallel to “T”; Beam reinforcement: $^{1}/_{8}$″ wire mesh perpendicular to 1″ ; Span: 1′ 3″ simply supported; Details: see Note 11 figure.	3.9 tons	4 hrs.			7	1, 2	4
B-11-RC-8	11″	Concrete flange: 4″ deep × 2' wide (3525 psi) concrete; Concrete beam 7″ deep × $4^{1}/_{2}$″ wide; (scaled from drawing); “I” beam reinforcement; 10″ × $4^{1}/_{2}$″ × 25 lbs. R.S.J.; no concrete cover on bottom; Flange reinforcement: $^{3}/_{8}$″ diameter bars at 6 pitch parallel to “T”; $^{1}/_{4}$″ diameter bars perpendicular to “T”; Span: 11′ restricted.	10 tons	4 hrs.			7	1, 2, 12	4
B-11-RC-9	$11^{1}/_{2}$″	24″ wide × $11^{1}/_{2}$″ deep reinforced concrete “T” beam (4390 psi); Details: see Note 12 figure.	8.8 tons	3 hrs. 24 min.			7	1, 3	$3^{1}/_{3}$

For SI: 1 inch = 25.4 mm, 1 foot = 305 mm, 1 pound = 0.004448 kN, 1 pound per square inch = 0.00689 MPa, 1 ton = 8.896 kN.

Notes:

1. Load concentrated at mid span.
2. Achieved 4 hour performance (Class “B,” British).
3. Failure mode—collapse.
4. Achieved 6 hour performance (Class “A,” British).

(continued)

INTERNATIONAL CODE COUNCIL®
Copyright © 2019 ICC & NYSDOS. ALL RIGHTS RESERVED. Accessed by Lauren Gualdino (lgualdino@briarcliffmanor.org), (-) Order Number #100880972 on May 08, 2020 07:05 AM (PDT) pursuant to License Agreement with ICC & NYSDOS. No further reproduction, no

100880972

TABLE 4.1.1—continued
REINFORCED CONCRETE BEAMS
DEPTH 10″ TO LESS THAN 12″

5.

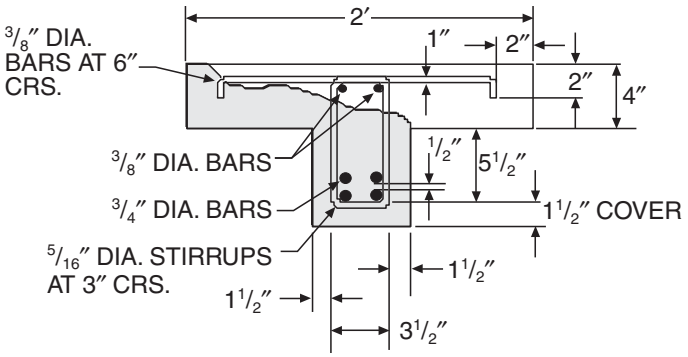

6.

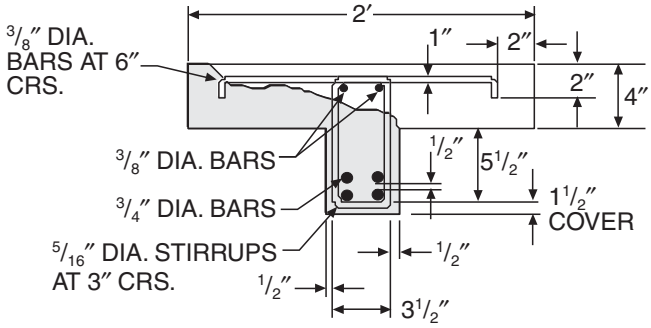

7.

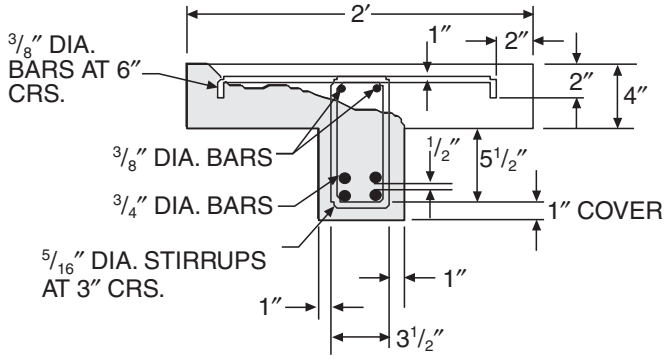

8.

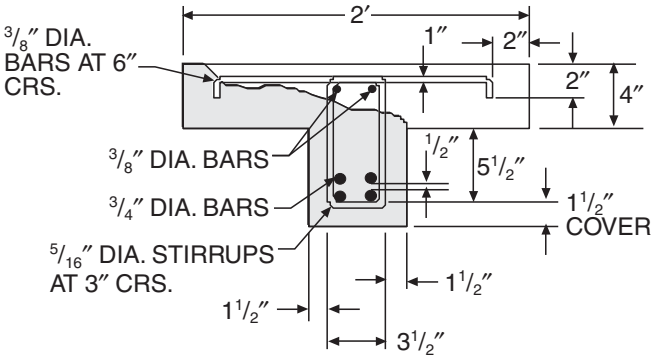

9.

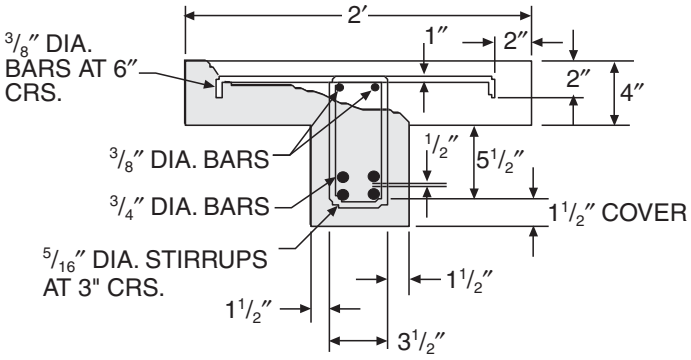

10.

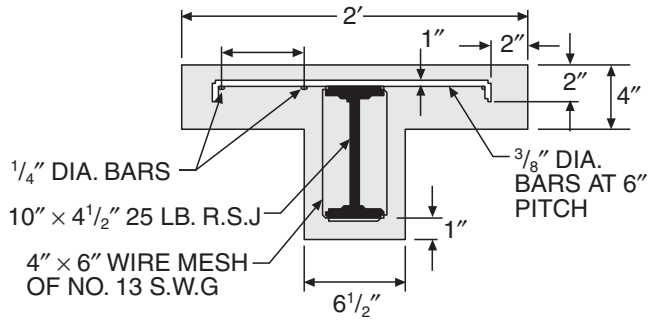

(continued)

INTERNATIONAL CODE COUNCIL®
Copyright © 2019 ICC & NYSDOS. ALL RIGHTS RESERVED. Accessed by Lauren Gualdino (lgualdino@briarcliffmanor.org), (-) Order Number #100880972 on May 08, 2020 07:05 AM (PDT) pursuant to License Agreement with ICC & NYSDOS. No further reproduction, no

100880972

TABLE 4.1.1—continued
REINFORCED CONCRETE BEAMS
DEPTH 10″ TO LESS THAN 12″

11.

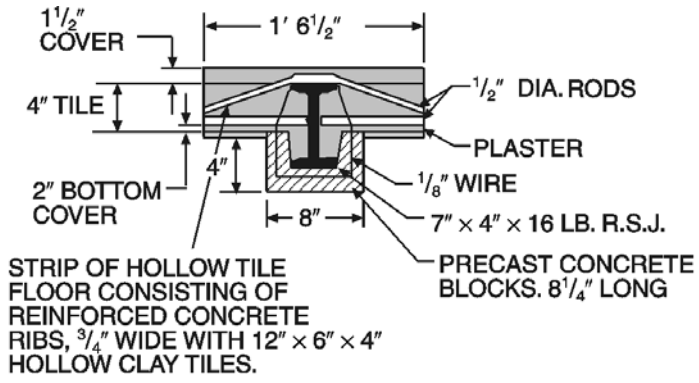

SPAN AND END CONDITIONS:-10′-3″ (CLEAR).
SIMPLY SUPPORTED.

12.

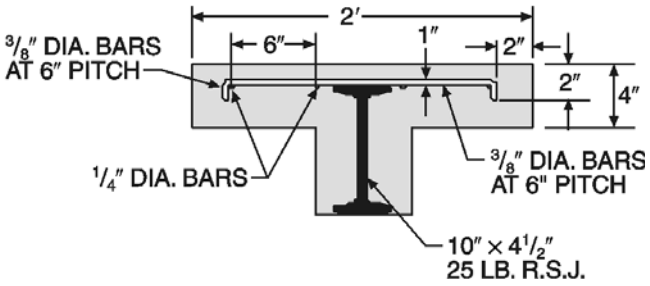

13.

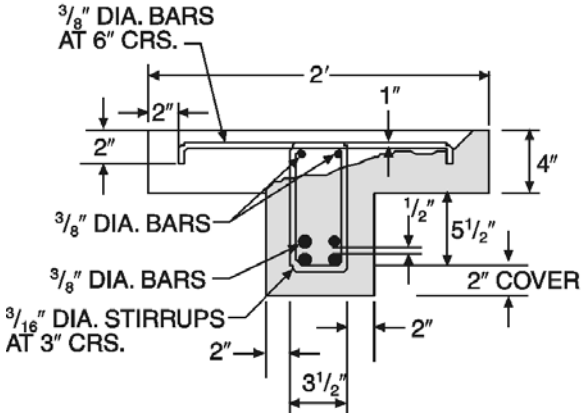

14. The different performances achieved by B-11-RC-1, B-11-RC-4 and B-11-RC-5 are attributable to differences in concrete aggregate compositions reported in the source document but unreported in this table. This demonstrates the significance of material composition in addition to other details.

INTERNATIONAL CODE COUNCIL®
Copyright © 2019 ICC & NYSDOS. ALL RIGHTS RESERVED. Accessed by Lauren Gualdino (lgualdino@briarcliffmanor.org), (-) Order Number #100880972 on May 08, 2020 07:05 AM (PDT) pursuant to License Agreement with ICC & NYSDOS. No further reproduction, no

100880972

TABLE 4.1.2
REINFORCED CONCRETE BEAMS
DEPTH 12″ TO LESS THAN 14″

ITEM CODE	DEPTH	CONSTRUCTION DETAILS	PERFORMANCE		REFERENCE NUMBER			NOTES	REC. HOURS
			LOAD	TIME	PRE-BMS-92	BMS-92	POST-BMS-92		
B-12-RC-1	12″	12″ × 8″ section; 4160 psi aggregate concrete; Reinforcement: 4-$^{7}/_{8}$″ rebars at corners; 1″ below each surface; $^{1}/_{4}$″ stirrups 10″ o.c.	5.5 tons	2 hrs.			7	1	2
B-12-RC-2	12″	Concrete flange: 4″ deep × 2' wide (3045 psi) concrete at 35 days; Concrete beam: 8″ deep; "I" beam reinforcement: 10″ × 4$^{1}/_{2}$″ × 25 lbs. R.S.J.; 1″ cover on flanges; Flange reinforcement: $^{3}/_{8}$″ diameter bars at 6″ pitch parallel to "T"; $^{1}/_{4}$″ diameter bars perpendicular to "T"; Beam reinforcement: 4″ × 6″ wire mesh No. 13 SWG; Span: 10′ 3″ simply supported.	10 tons	4 hrs.			7	2, 3, 5	4
B-13-RC-3	13″	Concrete flange: 4″ deep × 2' wide (3825 psi) concrete at 46 days; Concrete beam: 9″ deep × 8$^{1}/_{2}$″ wide; (scaled from drawing); "I" beam reinforcement: 10″ × 4$^{1}/_{2}$″ × 25 lbs. R.S.J.; 3″ cover on bottom flange; 1″ cover on top flange; Flange reinforcement: $^{3}/_{8}$″ diameter bars at 6″ pitch parallel to "T"; $^{1}/_{4}$″ diameter bars perpendicular to "T"; Beam reinforcement: 4″ × 6″ wire mesh No. 13 SWG; Span: 11′ restrained.	10 tons	6 hrs.			7	2, 3, 6, 8, 9	4
B-12-RC-4	12″	Concrete flange: 4″ deep × 2' wide (3720 psi) concrete at 42 days; Concrete beam: 8″ deep × 8$^{1}/_{2}$″ wide; (scaled from drawing); "I" beam reinforcement: 10″ × 4$^{1}/_{2}$″ × 25 lbs. R.S.J.; 2″ cover bottom flange; 1″ cover top flange; Flange reinforcement: $^{3}/_{8}$″ diameter bars at 6″ pitch parallel to "T"; $^{1}/_{4}$″ diameter bars perpendicular to "T"; Beam reinforcement: 4″ × 6″ wire mesh No. 13 SWG; Span: 11′ restrained.	10 tons	6 hrs.			7	1, 3, 4, 7, 8, 9	4

For SI: 1 inch = 25.4 mm, 1 foot = 305 mm, 1 pound = 0.004448 kN, 1 pound per square inch = 0.00689 MPa, 1 ton = 8.896 kN.

Notes:

1. Qualified for 2 hour use. (Grade "C," British) Test included hose stream and reload at 48 hours.
2. Load concentrated at mid span.
3. British test.
4. British test—qualified for 6 hour use (Grade "A").

(continued)

INTERNATIONAL CODE COUNCIL®
Copyright © 2019 ICC & NYSDOS. ALL RIGHTS RESERVED. Accessed by Lauren Gualdino (lgualdino@briarcliffmanor.org), (-) Order Number #100880972 on May 08, 2020 07:05 AM (PDT) pursuant to License Agreement with ICC & NYSDOS. No further reproduction, no

100880972

TABLE 4.1.2—continued
REINFORCED CONCRETE BEAMS
DEPTH 12″ TO LESS THAN 14″

5.

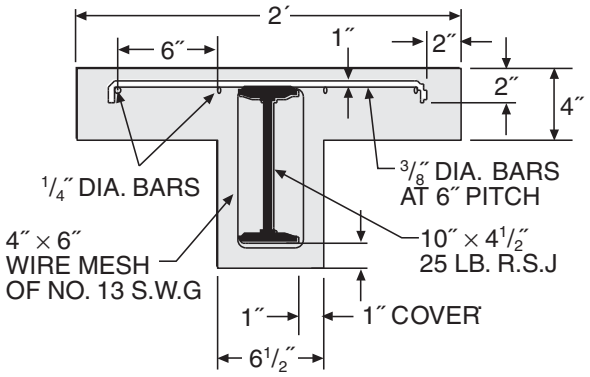

6.

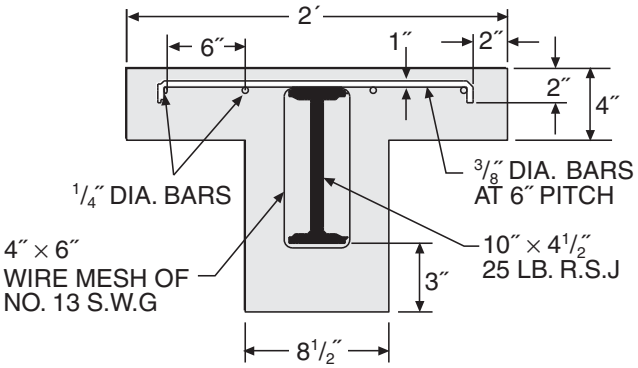

7.

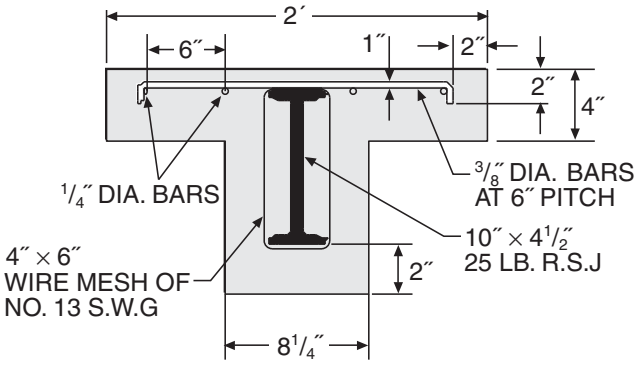

8. See Table 4.1.3, Note 5.

9. Hourly rating based upon B-12-RC-2 above.

INTERNATIONAL CODE COUNCIL®
Copyright © 2019 ICC & NYSDOS. ALL RIGHTS RESERVED. Accessed by Lauren Gualdino (lgualdino@briarcliffmanor.org), (-) Order Number #100880972 on May 08, 2020 07:05 AM (PDT) pursuant to License Agreement with ICC & NYSDOS. No further reproduction, no

100880972

TABLE 4.1.3
REINFORCED CONCRETE BEAMS
DEPTH 14″ TO LESS THAN 16″

ITEM CODE	DEPTH	CONSTRUCTION DETAILS	PERFORMANCE		REFERENCE NUMBER			NOTES	REC. HOURS
			LOAD	TIME	PRE-BMS-92	BMS-92	POST-BMS-92		
B-15-RC-1	15″	Concrete flange: 4″ deep × 2' wide (3290 psi) concrete; Concrete beam: 10″ deep × $8^1/_2$″ wide; "I" beam reinforcement: 10″ × $4^1/_2$″ × 25 lbs. R.S.J.; 4″ cover on bottom flange; 1″ cover on top flange; Flange reinforcement: $^3/_8$″ diameter bars at 6″ pitch parallel to "T"; $^1/_4$″ diameter bars perpendicular to "T"; Beam reinforcement: 4″ × 6″ wire mesh No. 13 SWG; Span: 11′ restrained.	10 tons	6 hrs.			7	1, 2, 3 5, 6	4
B-15-RC-2	15″	Concrete flange: 4″ deep × 2' wide (4820 psi) concrete; Concrete beam: 10″ deep × $8^1/_2$″ wide; "I" beam reinforcement: 10″ × $4^1/_2$″ × 25 lbs. R.S.J.; 1″ cover over wire mesh on bottom flange; 1″ cover on top flange; Flange reinforcement: $^3/_8$″ diameter bars at 6″ pitch parallel to "T"; $^1/_4$″ diameter bars perpendicular to "T"; Beam reinforcement: 4″ × 6″ wire mesh No. 13 SWG; Span: 11′ restrained.	10 tons	6 hrs.			7	1, 2, 4, 5, 6	4

For SI: 1 inch = 25.4 mm, 1 foot = 305 mm, 1 pound = 0.004448 kN, 1 pound per square inch = 0.00689 MPa, 1 ton = 8.896 kN.

Notes:

1. Load concentrated at mid span.
2. Achieved 6 hour fire rating (Grade "A," British).
3.

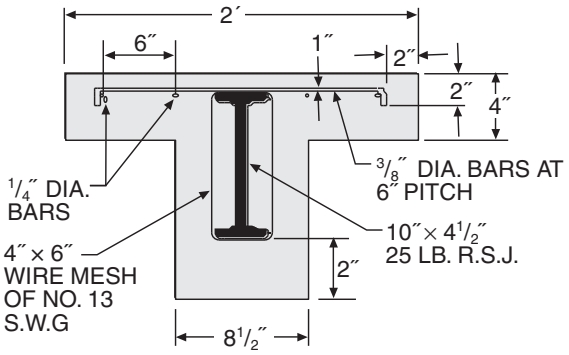

4.

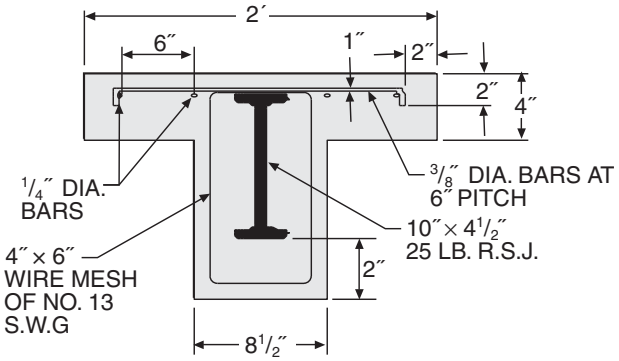

5. Section 43.147 of the 1979 edition of the *Uniform Building Code Standards* provides:

   "A restrained condition in fire tests, as used in this standard, is one in which expansion at the supports of a load-carrying element resulting from the effects of the fire is resisted by forces external to the element. An unrestrained condition is one in which the load-carrying element is free to expand and rotate at its support."

   "Restraint in buildings is defined as follows: Floor and roof assemblies and individual beams in buildings shall be considered restrained when the surrounding or supporting structure is capable of resisting the thermal expansion throughout the range of anticipated elevated temperatures. Construction not complying . . . is assumed to be free to rotate and expand and shall be considered as unrestrained."

   "Restraint may be provided by the lateral stiffness of supports for floor and roof assemblies and intermediate beams forming part of the assembly. In order to develop restraint, connections must adequately transfer thermal thrusts to such supports. The rigidity of adjoining panels or structures shall be considered in assessing the capability of a structure to resist therm expansion."

   Because it is difficult to determine whether an existing building's structural system is capable of providing the required restraint, the lower hourly ratings of a similar but unrestrained assembly have been recommended.
6. Hourly rating based upon Table 4.2.1, Item B-12-RC-2.

INTERNATIONAL CODE COUNCIL®
Copyright © 2019 ICC & NYSDOS. ALL RIGHTS RESERVED. Accessed by Lauren Gualdino (lgualdino@briarcliffmanor.org), (-) Order Number #100880972 on May 08, 2020 07:05 AM (PDT) pursuant to License Agreement with ICC & NYSDOS. No further reproduction, no

100880972

TABLE 4.2.1
REINFORCED CONCRETE BEAMS—UNPROTECTED DEPTH
10″ TO LESS THAN 12″

ITEM CODE	DEPTH	CONSTRUCTION DETAILS	PERFORMANCE		REFERENCE NUMBER			NOTES	REC. HOURS
			LOAD	TIME	PRE- BMS-92	BMS-92	POST-BMS-92		
B-SU-1	10″	10″ × $4^{1}/_{2}$″ × 25 lbs. “I” beam.	10 tons	39 min.			7	1	$^{1}/_{3}$

For SI: 1 inch = 25.4 mm, 1 pound = 0.004448 kN, 1 ton = 8.896 kN.

Notes:

1. Concentrated at mid span.

TABLE 4.2.2
STEEL BEAMS—CONCRETE PROTECTION DEPTH
10″ TO LESS THAN 12″

ITEM CODE	DEPTH	CONSTRUCTION DETAILS	PERFORMANCE		REFERENCE NUMBER			NOTES	REC. HOURS
			LOAD	TIME	PRE- BMS-92	BMS-92	POST- BMS-92		
B-SC-1	10″	10″ × 8″ rectangle; aggregate concrete (4170 psi) with 1″ top cover and 2″ bottom cover; No. 13 SWG iron wire loosely wrapped at approximately 6″ pitch about 7″ × 4″ × 16 lbs. “I” beam.	3.9 tons	3 hrs. 46 min.			7	1, 2, 3	$3^{3}/_{4}$
B-SC-1	10″	10″ × 8″ rectangle; aggregate concrete (3630 psi) with 1″ top cover and 2″ bottom cover; No. 13 SWG iron wire loosely wrapped at approximately 6″ pitch about 7″ × 4″ × 16 lbs. “I” beam.	5.5 tons	5 hrs. 26 min.			7	1, 4, 5, 6, 7	$3^{3}/_{4}$

For SI: 1 inch = 25.4 mm, 1 pound = 0.004448 kN, 1 pound per square inch = 0.00689 MPa, 1 ton = 8.896 kN.

Notes:

1. Load concentrated at mid span.
2. Specimen 10-foot 3-inch clear span simply supported.
3. Passed Grade “C” fire resistance (British) including hose stream and reload.
4. Specimen 11-foot clear span—restrained.
5. Passed Grade “B” fire resistance (British) including hose stream and reload.
6. See Table 4.1.3, Note 5.
7. Hourly rating based upon B-SC-1 above.

INTERNATIONAL CODE COUNCIL®
Copyright © 2019 ICC & NYSDOS. ALL RIGHTS RESERVED. Accessed by Lauren Gualdino (lgualdino@briarcliffmanor.org), (-) Order Number #100880972 on May 08, 2020 07:05 AM (PDT) pursuant to License Agreement with ICC & NYSDOS. No further reproduction, no

100880972

SECTION V
DOORS

FIGURE 5.1
RESISTANCE OF DOORS TO FIRE EXPOSURE

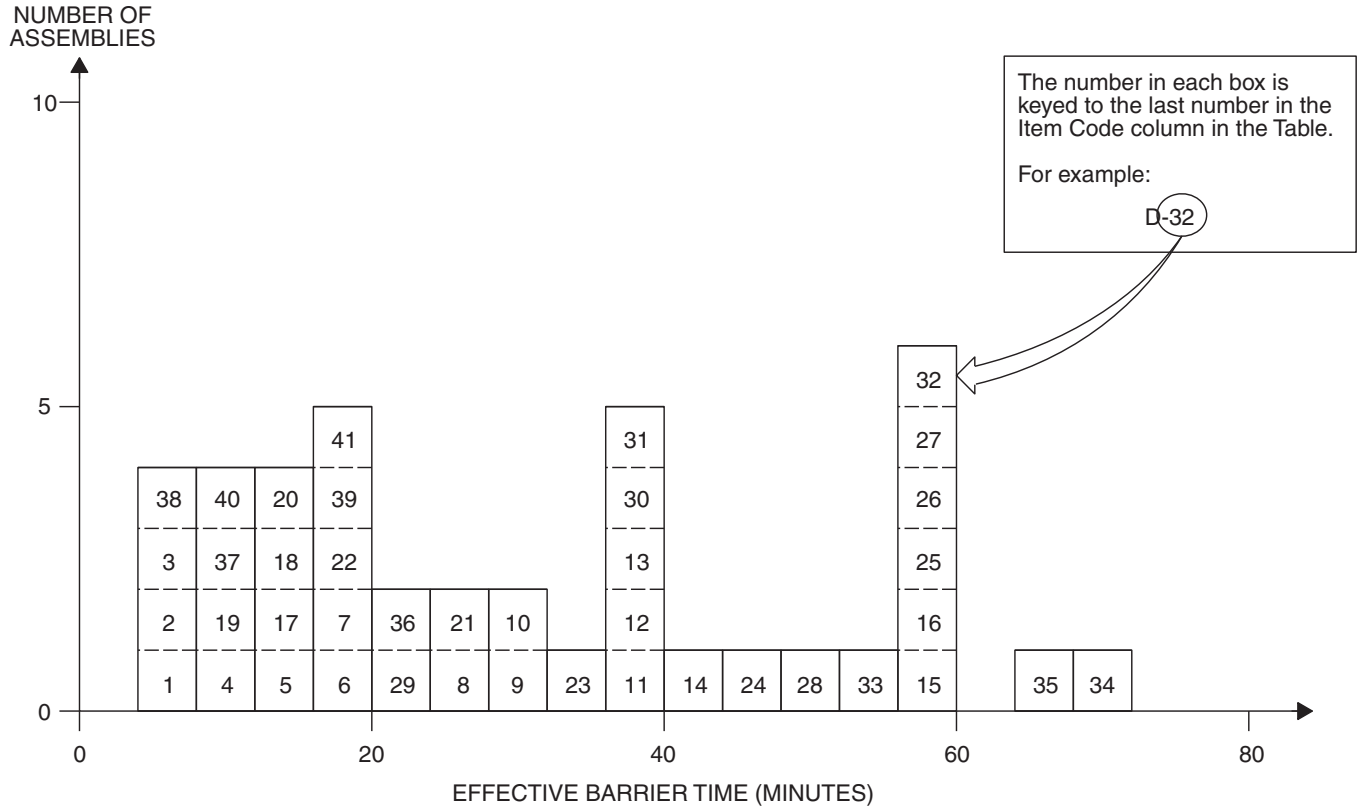

TABLE 5.1
RESISTANCE OF DOORS TO FIRE EXPOSURE

ITEM CODE	DOOR MINIMUM THICKNESS	CONSTRUCTION DETAILS	PERFORMANCE		REFERENCE NUMBER			NOTES	REC. (MIN.)
			EFFECTIVE BARRIER	EDGE FLAMING	PRE- BMS-92	BMS-92	POST- BMS-92		
D-1	$^3/_8$″	Panel door; pine perimeter ($1^3/_8$″); painted (enamel).	5 min. 10 sec.	N/A			90	1, 2	5
D-2	$^3/_8$″	As above, with two coats U.L. listed intumescent coating.	5 min. 30 sec.	5 min.			90	1, 2, 7	5
D-3	$^3/_8$″	As D-1, with standard primer and flat interior paint.	5 min. 55 sec.	N/A			90	1, 3, 4	5
D-4	$2^5/_8$″	As D-1, with panels covered each side with $^1/_2$″ plywood; edge grouted with sawdust filled plaster; door faced with $^1/_8$″ hardboard each side; paint see (5).	11 min. 15 sec.	3 min. 45 sec.			90	1, 2, 5, 7	10

(continued)

INTERNATIONAL CODE COUNCIL®
Copyright © 2019 ICC & NYSDOS. ALL RIGHTS RESERVED. Accessed by Lauren Gualdino (lgualdino@briarcliffmanor.org), (-) Order Number #100880972 on May 08, 2020 07:05 AM (PDT) pursuant to License Agreement with ICC & NYSDOS. No further reproduction, no

100880972

TABLE 5.1—continued
RESISTANCE OF DOORS TO FIRE EXPOSURE

ITEM CODE	DOOR MINIMUM THICKNESS	CONSTRUCTION DETAILS	PERFORMANCE		REFERENCE NUMBER			NOTES	REC. (MIN.)
			EFFECTIVE BARRIER	EDGE FLAMING	PRE- BMS-92	BMS-92	POST- BMS-92		
D-5	$^3/_8$″	As D-1, except surface protected with glass fiber reinforced intumescent fire retardant coating.	16 min.	N/A			90	1, 3, 4, 7	15
D-6	$1^5/_8$″	Door detail: As D-4, except with $^1/_8$″ cement asbestos board facings with aluminum foil; door edges protected by sheet metal.	17 min.	10 min. 15 sec.			90	1, 3, 4	15
D-7	$1^5/_8$″	Door detail with $^1/_8$″ hardboard cover each side as facings; glass fiber reinforced intumescent coating applied.	20 min.	N/A			90	1, 3, 4, 7	20
D-8	$1^5/_8$″	Door detail same as D-4; paint was glass reinforced epoxy intumescent.	26 min.	24 min. 45 sec.			90	1, 3, 4, 6, 7	25
D-9	$1^5/_8$″	Door detail same as D-4 with facings of $^1/_8$″ cement asbestos board.	29 min.	3 min. 15 sec.			90	1, 2	5
D-10	$1^5/_8$″	As per D-9.	31 min. 30 sec.	7 min. 20 sec.			90	1, 3, 4	6
D-11	$1^5/_8$″	As per D-7; painted with epoxy intumescent coating including glass fiber roving.	36 min. 25 sec.	N/A			90	1, 3, 4	35
D-12	$1^5/_8$″	As per D-4 with intumescent fire retardant paint.	37 min. 30 sec.	24 min. 40 sec.			90	1, 3, 4	30
D-13	$1^1/_2$″ (nom.)	As per D-4, except with 24 ga. galvanized sheet metal facings.	39 min.	39 min.			90	1, 3, 4	39
D-14	$1^5/_8$″	As per D-9.	41 min. 30 sec.	17 min. 20 sec.			90	1, 3, 4, 6	20
D-15	—	Class C steel fire door.	60 min.	58 min.			90	7, 8	60
D-16	—	Class B steel fire door.	60 min.	57 min.			90	7, 8	60
D-17	$1^3/_4$″	Solid core flush door; core staves laminated to facings but not each other; Birch plywood facings $^1/_2$″ rebate in door frame for door; $^3/_{32}$″ clearance between door and wood frame.	15 min.	13 min.			37	11	13

(continued)

INTERNATIONAL CODE COUNCIL®
Copyright © 2019 ICC & NYSDOS. ALL RIGHTS RESERVED. Accessed by Lauren Gualdino (lgualdino@briarcliffmanor.org), (-) Order Number #100880972 on May 08, 2020 07:05 AM (PDT) pursuant to License Agreement with ICC & NYSDOS. No further reproduction, no

100880972

TABLE 5.1—continued
RESISTANCE OF DOORS TO FIRE EXPOSURE

ITEM CODE	DOOR MINIMUM THICKNESS	CONSTRUCTION DETAILS	PERFORMANCE		REFERENCE NUMBER			NOTES	REC. (MIN.)
			EFFECTIVE BARRIER	EDGE FLAMING	PRE- BMS-92	BMS-92	POST- BMS-92		
D-18	$1^{3}/_{4}$″	As per D-17.	14 min.	13 min.			37	11	13
D-19	$1^{3}/_{4}$″	Door same as D-17, except with 16 ga. steel; $^{3}/_{32}$″ door frame clearance.	12 min.	—			37	9, 11	10
D-20	$1^{3}/_{4}$″	As per D-19.	16 min.	—			37	10, 11	10
D-21	$1^{3}/_{4}$″	Doors as per D-17; intumescent paint applied to top and side edges.	26 min.	—			37	11	25
D-22	$1^{3}/_{4}$″	Door as per D-17, except with $^{1}/_{2}$″ × $^{1}/_{8}$″ steel strip set into edges of door at top and side facing stops; matching strip on stop.	18 min.	6 min.			37	11	18
D-23	$1^{3}/_{4}$″	Solid oak door.	36 min.	22 min.			15	13	25
D-24	$1^{7}/_{8}$″	Solid oak door.	45 min.	35 min.			15	13	35
D-25	$1^{7}/_{8}$″	Solid teak door.	58 min.	34 min.			15	13	35
D-26	$1^{7}/_{8}$″	Solid (pitch) pine door.	57 min.	36 min.			15	13	35
D-27	$1^{7}/_{8}$″	Solid deal (pine) door.	57 min.	30 min.			15	13	30
D-28	$1^{7}/_{8}$″	Solid mahogany door.	49 min.	40 min.			15	13	45
D-29	$1^{7}/_{8}$″	Solid poplar door.	24 min.	3 min.			15	13, 14	5
D-30	$1^{7}/_{8}$″	Solid oak door.	40 min.	33 min.			15	13	35
D-31	$1^{7}/_{8}$″	Solid walnut door.	40 min.	15 min.			15	13	20
D-32	$2^{5}/_{8}$″	Solid Quebec pine.	60 min.	60 min.			15	13	60
D-33	$2^{5}/_{8}$″	Solid pine door.	55 min.	39 min.			15	13	40
D-34	$2^{5}/_{8}$″	Solid oak door.	69 min.	60 min.			15	13	60
D-35	$2^{5}/_{8}$″	Solid teak door.	65 min.	17 min.			15	13	60
D-36	$1^{1}/_{2}$″	Solid softwood door.	23 min.	8.5 min.			15	13	10
D-37	$^{3}/_{4}$″	Panel door.	8 min.	7.5 min.			15	13	5
D-38	$^{5}/_{16}$″	Panel door.	5 min.	5 min.			15	13	5
D-39	$^{3}/_{4}$″	Panel door, fire retardant treated.	$17^{1}/_{2}$ min.	3 min.			15	13	8
D-40	$^{3}/_{4}$″	Panel door, fire retardant treated.	$8^{1}/_{2}$ min.	$8^{1}/_{2}$ min.			15	13	8
D-41	$^{3}/_{4}$″	Panel door, fire retardant treated.	$16^{3}/_{4}$ min.	$11^{1}/_{2}$ min.			15	13	8

For SI: 1 inch = 25.4 mm, 1 foot = 305 mm.

Notes:

1. All door frames were of standard lumber construction.
2. Wood door stop protected by asbestos millboard.
3. Wood door stop protected by sheet metal.
4. Door frame protected with sheet metal and weather strip.
5. Surface painted with intumescent coating.
6. Door edge sheet metal protected.
7. Door edge intumescent paint protected.
8. Formal steel frame and door stop.
9. Door opened into furnace at 12 feet.
10. Similar door opened into furnace at 12 feet.
11. The doors reported in these tests represent the type contemporaries used as 20-minute solid-core wood doors. The test results demonstrate the necessity of having wall anchored metal frames, minimum cleaners possible between door, frame and stops. They also indicate the utility of long throw latches and the possible use of intumescent paints to seal doors to frames in event of a fire.
12. Minimum working clearance and good latch closure are absolute necessities for effective containment for all such working door assemblies.
13. Based on British tests.
14. Failure at door-frame interface.

INTERNATIONAL CODE COUNCIL®
Copyright © 2019 ICC & NYSDOS. ALL RIGHTS RESERVED. Accessed by Lauren Gualdino (lgualdino@briarcliffmanor.org), (-) Order Number #100880972 on May 08, 2020 07:05 AM (PDT) pursuant to License Agreement with ICC & NYSDOS. No further reproduction, no

100880972

BIBLIOGRAPHY

1. Central Housing Committee on Research, Design, and Construction; Subcommittee on Fire Resistance Classifications, "Fire-Resistance Classifications of Building Constructions," *Building Materials and Structures,* Report BMS 92, National Bureau of Standards, Washington, Oct. 1942. (Available from NTIS No. COM-73-10974)
2. Foster, H. D., Pinkston, E. R., and Ingberg, S. H., "Fire Resistance of Structural Clay Tile Partitions," *Building Materials and Structures, Report* BMS 113, National Bureau of Standards, Washington, Oct. 1948.
3. Ryan, J. V., and Bender, E.W., "Fire Endurance of Open-Web Steel-Joist Floors with Concrete Slabs and Gypsum Ceilings," *Building Materials and Structures,* Report BMS 141, National Bureau of Standards, Washington, Aug. 1954.
4. Mitchell, N. D., "Fire Tests of Wood-Framed Walls and Partitions with Asbestos-Cement Facings," *Building Materials and Structures,* Report BMS 123, National Bureau of Standards, Washington, May 1951.
5. Robinson, H. E., Cosgrove, L. A., and Powell, F. J., "Thermal Resistance of Airspace and Fibrous Insulations Bounded by Reflective Surfaces," *Building Materials and Structures,* Report BMS 151, National Bureau of Standards, Washington, Nov. 1957.
6. Shoub, H., and Ingberg, S. H., "Fire Resistance of Steel Deck Floor Assemblies," *Building Science Series,* 11, National Bureau of Standards, Washington, Dec. 1967.
7. Davey, N., and Ashton, L. A., "Investigations on Building Fires, Part V: Fire Tests of Structural Elements," *National Building Studies,* Research Paper, No. 12, Dept. of Scientific and Industrial Research (Building Research Station), London, 1953.
8. National Board of Fire Underwriters, *Fire Resistance Ratings of Beam, Girder, and Truss Protections, Ceiling Constructions, Column Protections, Floor and Ceiling Constructions, Roof Constructions, Walls and Partitions,* New York, April 1959.
9. Mitchell, N.D., Bender, E.D., and Ryan, J.V., "Fire Resistance of Shutters for Moving-Stairway Openings," *Building Materials and Structures,* Report BMS 129, National Bureau of Standards, Washington, March 1952.
10. National Board of Fire Underwriters, *National Building Code; an Ordinance Providing for Fire Limits, and Regulations Governing the Construction, Alteration, Equipment, or Removal of Buildings or Structures,* New York, 1949.
11. Department of Scientific and Industrial Research and of the Fire Offices' Committee, Joint Committee of the Building Research Board, "Fire Gradings of Buildings, Part I: General Principles and Structural Precautions," *Post-War Building Studies,* No. 20, Ministry of Works, London, 1946.
12. Lawson, D. I., Webster, C. T., and Ashton, L. A., "Fire Endurance of Timber Beams and Floors," *National Building Studies,* Bulletin, No. 13, Dept. of Scientific and Industrial Research and Fire Offices' Committee (Joint Fire Research Organization), London, 1951.
13. Parker, T. W., Nurse, R. W., and Bessey, G. E., "Investigations on Building Fires. Part I: The Estimation of the Maximum Temperature Attained in Building Fires from Examination of the Debris, and Part II: The Visible Change in Concrete or Mortar Exposed to High Temperatures," *National Building Studies,* Technical Paper, No. 4, Dept. of Scientific and Industrial Research (Building Research Station), London, 1950.
14. Bevan, R. C., and Webster, C. T., "Investigations on Building Fires, Part III: Radiation from Building Fires," *National Building Studies,* Technical Paper, No. 5, Dept. of Scientific and Industrial Research (Building Research Station), London, 1950.
15. Webster, D. J., and Ashton, L. A., "Investigations on Building Fires, Part IV: Fire Resistance of Timber Doors," *National Building Studies,* Technical Paper, No. 6, Dept. of Scientific and Industrial Research (Building Research Station), London, 1951.
16. Kidder, F. E., *Architects' and Builders' Handbook: Data for Architects, Structural Engineers, Contractors, and Draughtsmen,* comp. by a Staff of Specialists and H. Parker, editor-in-chief, 18th ed., enl., J. Wiley, New York, 1936.
17. Parker, H., Gay, C. M., and MacGuire, J. W., *Materials and Methods of Architectural Construction,* 3rd ed., J. Wiley, New York, 1958.
18. Diets, A. G. H., *Dwelling House Construction,* The MIT Press, Cambridge, 1971.
19. Crosby, E. U., and Fiske, H. A., *Handbook of Fire Protection,* 5th ed., The Insurance Field Company, Louisville, Ky., 1914.
20. Crosby, E. U., Fiske, H. A., and Forster, H.W., *Handbook of Fire Protection,* 8th ed., R. S. Moulton, general editor, National Fire Protection Association, Boston, 1936.
21. Kidder, F. E., *Building Construction and Superintendence,* rev. and enl., by T. Nolan, W. T. Comstock, New York, 1909-1913, 2 vols.
22. National Fire Protection Association, Committee on Fire-Resistive Construction, *The Baltimore Conflagration,* 2nd ed., Chicago, 1904.
23. Przetak, L., *Standard Details for Fire-Resistive Building Construction,* McGraw-Hill Book Co., New York, 1977.

INTERNATIONAL CODE COUNCIL®
Copyright © 2019 ICC & NYSDOS. ALL RIGHTS RESERVED. Accessed by Lauren Gualdino (lgualdino@briarcliffmanor.org), (-) Order Number #100880972 on May 08, 2020 07:05 AM (PDT) pursuant to License Agreement with ICC & NYSDOS. No further reproduction, no

100880972

24. Hird, D., and Fischl, C. F., "Fire Hazard of Internal Linings," *National Building Studies,* Special Report, No. 22, Dept. of Scientific and Industrial Research and Fire Offices' Committee (Joint Fire Research Organization), London, 1954.
25. Menzel, C. A., *Tests of the Fire-Resistance and Strength of Walls Concrete Masonry Units,* Portland Cement Association, Chicago, 1934.
26. Hamilton, S. B., "A Short History of the Structural Fire Protection of Buildings Particularly in England," *National Building Studies,* Special Report, No. 27, Dept. of Scientific and Industrial Research (Building Research Station), London, 1958.
27. Sachs, E. O., and Marsland, E., "The Fire Resistance of Doors and Shutters being Tabulated Results of Fire Tests Conducted by the Committee," *Journal of the British Fire Prevention Committee,* No. VII, London, 1912.
28. Egan, M. D., *Concepts in Building Firesafety,* J. Wiley, New York, 1978.
29. Sachs, E. O., and Marsland, E., "The Fire Resistance of Floors being Tabulated Results of Fire Tests Conducted by the Committee," *Journal of the British Fire Prevention Committee,* No. VI, London, 1911.
30. Sachs, E. O., and Marsland, E., "The Fire Resistance of Partitions being Tabulated Results of Fire Tests Conducted by the Committee," *Journal of the British Fire Prevention Committee,* No. IX, London, 1914.
31. Ryan, J. V., and Bender, E. W., "Fire Tests of Precast Cellular Concrete Floors and Roofs," *National Bureau of Standards Monograph,* 45, Washington, April 1962.
32. Kingberg, S. H., and Foster, H. D., "Fire Resistance of Hollow Load-Bearing Wall Tile," *National Bureau of Standards* Research Paper, No. 37, (Reprint from *NBS Journal of Research*, Vol. 2) Washington, 1929.
33. Hull, W. A., and Ingberg, S. H., "Fire Resistance of Concrete Columns," *Technologic Papers of the Bureau of Standards,* No. 272, Vol. 18, Washington, 1925, pp. 635-708.
34. National Board of Fire Underwriters, *Fire Resistance Ratings of Less than One Hour,* New York, Aug. 1956.
35. Harmathy, T. Z., "Ten Rules of Fire Endurance Rating," *Fire Technology,* Vol. 1, May 1965, pp. 93-102.
36. Son, B. C., "Fire Endurance Test on a Steel Tubular Column Protected with Gypsum Board," *National Bureau of Standards,* NBSIR, 73-165, Washington, 1973.
37. Galbreath, M., "Fire Tests of Wood Door Assemblies," *Fire Study,* No. 36, Div. of Building Research, National Research Council Canada, Ottawa, May 1975.
38. Morris, W. A., "An Investigation into the Fire Resistance of Timber Doors," *Fire Research Note,* No. 855, Fire Research Station, Boreham Wood, Jan. 1971.
39. Hall, G. S., "Fire Resistance Tests of Laminated Timber Beams," *Timber Association Research Report,* WR/RR/1, High Sycombe, July 1968.
40. Goalwin, D. S., "Fire Resistance of Concrete Floors," *Building Materials and Structures,* Report BMS 134, National Bureau of Standards, Washington, Dec. 1952.
41. Mitchell, N. D., and Ryan, J. V., "Fire Tests of Steel Columns Encased with Gypsum Lath and Plaster," *Building Materials and Structures,* Report BMS 135, National Bureau of Standards, Washington, April 1953.
42. Ingberg, S. H., "Fire Tests of Brick Walls," *Building Materials and Structures,* Report BMS 143, National Bureau of Standards, Washington, Nov. 1954.
43. National Bureau of Standards, "Fire Resistance and Sound-Insulation Ratings for Walls, Partitions, and Floors," *Technical Report on Building Materials,* 44, Washington, 1944.
44. Malhotra, H. L., "Fire Resistance of Brick and Block Walls," *Fire Note,* No. 6, Ministry of Technology and Fire Offices' Committee Joint Fire Research Organization, London, HMSO, 1966.
45. Mitchell, N. D., "Fire Tests of Steel Columns Protected with Siliceous Aggregate Concrete," *Building Materials and Structures,* Report BMS 124, National Bureau of Standards, Washington, May 1951.
46. Freitag, J. K., *Fire Prevention and Fire Protection as Applied to Building Construction; a Handbook of Theory and Practice,* 2nd ed., J. Wiley, New York, 1921.
47. Ingberg, S. H., and Mitchell, N. D., "Fire Tests of Wood and Metal-Framed Partition," *Building Materials and Structures,* Report BMS 71, National Bureau of Standards, Washington, 1941.
48. Central Housing Committee on Research, Design, and Construction, Subcommittee on Definitions, "A Glossary of Housing Terms," *Building Materials and Structures,* Report BMS 91, National Bureau of Standards, Washington, Sept. 1942.
49. Crosby, E. U., Fiske, H. A., and Forster, H.W., *Handbook of Fire Protection,* 7th ed., D. Van Nostrand Co., New York 1924.
50. Bird, E. L., and Docking, S. J., *Fire in Buildings,* A. & C. Black, London, 1949.
51. American Institute of Steel Construction, Fire Resistant Construction in Modern Steel-Framed Buildings, New York, 1959.
52. Central Dockyard Laboratory, "Fire Retardant Paint Tests—a Critical Review," CDL Technical Memorandum, No. P87/73, H. M. Naval Base, Portsmouth, Dec. 1973.

INTERNATIONAL CODE COUNCIL®
Copyright © 2019 ICC & NYSDOS. ALL RIGHTS RESERVED. Accessed by Lauren Gualdino (lgualdino@briarcliffmanor.org), (-) Order Number #100880972 on May 08, 2020 07:05 AM (PDT) pursuant to License Agreement with ICC & NYSDOS. No further reproduction, no

100880972

53. Malhotra, H. L., "Fire Resistance of Structural Concrete Beams," *Fire Research Note,* No. 741, Fire Research Station, Borehamwood, May 1969.

54. Abrams, M. S., and Gustaferro, A. H., "Fire Tests of Poke-Thru Assemblies," *Research and Development Bulletin,* 1481-1, Portland Cement Association, Skokie, 1971.

55. Bullen, M. L., "A Note on the Relationship between Scale Fire Experiments and Standard Test Results," *Building Research Establishment Note,* N51/75, Borehamwood, May 1975.

56. The America Fore Group of Insurance Companies, Research Department, *Some Characteristic Fires in Fire Resistive Buildings,* Selected from twenty years record in the files of the N.F.P.A. "Quarterly," New York, c. 1933.

57. Spiegelhalter, F., "Guide to Design of Cavity Barriers and Fire Stops," *Current Paper,* CP 7/77, Building Research Establishment, Borehamwood, Feb. 1977.

58. Wardle, T. M. "Notes on the Fire Resistance of Heavy Timber Construction," *Information Series,* No. 53, New Zealand Forest Service, Wellington, 1966.

59. Fisher, R. W., and Smart, P. M. T., "Results of Fire Resistance Tests on Elements of Building Construction," *Building Research Establishment Report,* G R6, London, HMSO, 1975.

60. Serex, E. R., "Fire Resistance of Alta Bates Gypsum Block Non-Load Bearing Wall," Report to Alta Bates Community Hospital, *Structural Research Laboratory Report,* ES-7000, University of Calif., Berkeley, 1969.

61. Thomas, F. G., and Webster, C. T., "Investigations on Building Fires, Part VI: The Fire Resistance of Reinforced Concrete Columns," *National Building Studies,* Research Paper, No. 18, Dept. of Scientific and Industrial Research (Building Research Station), London, HMSO, 1953.

62. Building Research Establishment, "Timber Fire Doors," *Digest,* 220, Borehamwood, Nov. 1978.

63. *Massachusetts State Building Code; Recommended Provisions,* Article 22: Repairs, Alterations, Additions, and Change of Use of Existing Buildings, Boston, Oct. 23, 1978.

64. Freitag, J. K., *Architectural Engineering; with Especial Reference to High Building Construction, Including Many Examples of Prominent Office Buildings,* 2nd ed., rewritten, J. Wiley, New York, 1906.

65. Architectural Record, *Sweet's Indexed Catalogue of Building Construction for the Year 1906,* New York, 1906.

66. Dept. of Commerce, Building Code Committee, "Recommended Minimum Requirements for Fire Resistance in Buildings," *Building and Housing,* No. 14, National Bureau of Standards, Washington, 1931.

67. British Standards Institution, "Fire Tests on Building Materials and Structures," *British Standards,* 476, Pt. 1, London, 1953.

68. Löberg-Holm, K., "Glass," *The Architectural Record,* Oct. 1930, pp. 345-357.

69. Structural Clay Products Institute, "Fire Resistance," *Technical Notes on Brick and Tile Construction,* 16 rev., Washington, 1964.

70. Ramsey, C. G., and Sleeper, H. R., *Architectural Graphic Standards for Architects, Engineers, Decorators, Builders, and Draftsmen,* 3rd ed., J. Wiley, New York, 1941.

71. Underwriters' Laboratories, *Fire Protection Equipment List,* Chicago, Jan. 1957.

72. Underwriters' Laboratories, *Fire Resistance Directory; with Hourly Ratings for Beams, Columns, Floors, Roofs, Walls, and Partitions,* Chicago, Jan. 1977.

73. Mitchell, N. D., "Fire Tests of Gunite Slabs and Partitions," *Building Materials and Structures,* Report BMS 131, National Bureau of Standards, Washington, May 1952.

74. Woolson, I. H., and Miller, R. P., "Fire Tests of Floors in the United States," *Proceedings International Association for Testing Materials,* VIth Congress, New York, 1912, Section C, pp. 36-41.

75. Underwriters' Laboratories, "An Investigation of the Effects of Fire Exposure upon Hollow Concrete Building Units, Conducted for American Concrete Institute, Concrete Products Association, Portland Cement Association, Joint Submittors," *Retardant Report,* No. 1555, Chicago, May 1924.

76. Dept. of Scientific & Industrial Research and of the Fire Offices' Committee, Joint Committee of the Building Research Board, "Fire Gradings of Buildings. Part IV: Chimneys and Flues," *Post-War Building Studies,* No. 29, London, HMSO, 1952.

77. National Research Council of Canada. Associate Committee on the National Building Code, *Fire Performance Ratings,* Suppl. No. 2 to the National Building Code of Canada, Ottawa, 1965.

78. Associated Factory Mutual Fire Insurance Companies, The National Board of Fire Underwriters, and the Bureau of Standards, *Fire Tests of Building Columns; an Experimental Investigation of the Resistance of Columns, Loaded and Exposed to Fire or to Fire and Water, with Record of Characteristic Effects,* Jointly Conducted at Underwriters. Laboratories, Chicago, 1917-19.

79. Malhotra, H. L., "Effect of Age on the Fire Resistance of Reinforced Concrete Columns," *Fire Research Memorandum,* No. 1, Fire Research Station, Borehamwood, April 1970.

80. Bond, H., ed., *Research on Fire; a Description of the Facilities, Personnel and Management of Agencies*

INTERNATIONAL CODE COUNCIL®
Copyright © 2019 ICC & NYSDOS. ALL RIGHTS RESERVED. Accessed by Lauren Gualdino (lgualdino@briarcliffmanor.org), (-) Order Number #100880972 on May 08, 2020 07:05 AM (PDT) pursuant to License Agreement with ICC & NYSDOS. No further reproduction, no

100880972

Engaged in Research on Fire, a Staff Report, National Fire Protection Association, Boston, 1957.

81. *California State Historical Building Code,* Draft, 1978.
82. Fisher, F. L., et al., "A Study of Potential Flashover Fires in Wheeler Hall and the Results from a Full Scale Fire Test of a Modified Wheeler Hall Door Assembly," *Fire Research Laboratory Report,* UCX 77-3; UCX-2480, University of Calif., Dept. of Civil Eng., Berkeley, 1977.
83. Freitag, J. K., *The Fireproofing of Steel Buildings,* 1st ed., J. Wiley, New York, 1906.
84. Gross, D., "Field Burnout Tests of Apartment Dwellings Units," *Building Science Series,* 10, National Bureau of Standards, Washington, 1967.
85. Dunlap, M. E., and Cartwright, F. P., "Standard Fire Tests for Combustible Building Materials," *Proceedings of the American Society for Testing Materials,* vol. 27, Philadelphia, 1927, pp. 534-546.
86. Menzel, C. A., "Tests of the Fire Resistance and Stability of Walls of Concrete Masonry Units," *Proceedings of the American Society for Testing Materials,* vol. 31, Philadelphia, 1931, pp. 607-660.
87. Steiner, A. J., "Method of Fire-Hazard Classification of Building Materials," *Bulletin of the American Society for Testing and Materials,* March 1943, Philadelphia, 1943, pp. 19-22.
88. Heselden, A. J. M., Smith, P. G., and Theobald, C. R., "Fires in a Large Compartment Containing Structural Steelwork; Detailed Measurements of Fire Behavior," *Fire Research Note,* No. 646, Fire Research Station, Borehamwood, Dec. 1966.
89. Ministry of Technology and Fire Offices' Committee Joint Fire Research Organization, "Fire and Structural Use of Timber in Buildings; Proceedings of the Symposium Held at the Fire Research Station, Borehamwood, Herts on 25th October, 1967," *Symposium*, No. 3, London, HMSO, 1970.
90. Shoub, H., and Gross, D., "Doors as Barriers to Fire and Smoke," *Building Science Series,* 3, National Bureau of Standards, Washington, 1966.
91. Ingberg, S. H., "The Fire Resistance of Gypsum Partitions," *Proceedings of the American Society for Testing and Materials,* vol. 25, Philadelphia, 1925, pp. 299-314.
92. Ingberg, S.H., "Influence of Mineral Composition of Aggregates on Fire Resistance of Concrete," *Proceedings of the American Society for Testing and Materials,* vol. 29, Philadelphia, 1929, pp. 824-829.
93. Ingberg, S. H., "The Fire Resistive Properties of Gypsum," *Proceedings of the American Society for Testing and Materials,* vol. 23, Philadelphia, 1923, pp. 254-256.
94. Gottschalk, F.W., "Some Factors in the Interpretation of Small-Scale Tests for Fire-Retardant Wood," *Bulletin of the American Society for Testing and Materials,* October 1945, pp. 40-43.
95. Ministry of Technology and Fire Offices' Committee Joint Fire Research Organization, "Behaviour of Structural Steel in Fire; Proceedings of the Symposium Held at the Fire Research Station Borehamwood, Herts on 24th January, 1967," *Symposium,* No. 2, London, HMSO, 1968.
96. Gustaferro, A. H., and Martin, L. D., *Design for Fire Resistance of Pre-cast Concrete,* prep. for the Prestressed Concrete Institute Fire Committee, 1st ed., Chicago, PCI, 1977.
97. "The Fire Endurance of Concrete; a Special Issue," *Concrete Construction,* vol. 18, no. 8, Aug. 1974, pp. 345-440.
98. The British Constructional Steelwork Association, "Modern Fire Protection for Structural Steelwork," *Publication,* No. FPl, London, 1961.
99. Underwriters' Laboratories, "Fire Hazard Classification of Building Materials," *Bulletin,* No. 32, Sept. 1944, Chicago, 1959.
100. Central Housing Committee on Research, Design, and Construction, Subcommittee on Building Codes, "Recommended Building Code Requirements for New Dwelling Construction with Special Reference to War Housing; Report," *Building Materials and Structures,* Report BMS 88, National Bureau of Standards, Washington, Sept. 1942.
101. De Coppet Bergh, D., *Safe Building Construction; a Treatise Giving in Simplest Forms Possible Practical and Theoretical Rules and Formulae Used in Construction of Buildings and General Instruction,* new ed., thoroughly rev. Macmillan Co., New York, 1908.
102. *Cyclopedia of Fire Prevention and Insurance; a General Reference Work on Fire and Fire Losses, Fireproof Construction, Building Inspection...,* prep. by architects, engineers, underwriters and practical insurance men. American School of Correspondence, Chicago, 1912.
103. Setchkin, N. P., and Ingberg, S. H., "Test Criterion for an Incombustible Material," *Proceedings of the American Society for Testing Materials,* vol. 45, Philadelphia, 1945, pp. 866-877.
104. Underwriters' Laboratories, "Report on Fire Hazard Classification of Various Species of Lumber," *Retardant,* 3365, Chicago, 1952.
105. Steingiser, S., "A Philosophy of Fire Testing," Journal of Fire & Flammability, vol. 3, July 1972, pp. 238-253.
106. Yuill, C. H., Bauerschlag, W. H., and Smith, H. M., "An Evaluation of the Comparative Performance of 2.4.1 Plywood and Two-Inch Lumber Roof Decking under Equivalent Fire Exposure," *Fire Protection Section, Final Report,* Project No. 717A-3-211, Southwest Research Institute, Dept. of Structural Research, San Antonio, Dec. 1962.

INTERNATIONAL CODE COUNCIL®
Copyright © 2019 ICC & NYSDOS. ALL RIGHTS RESERVED. Accessed by Lauren Gualdino (lgualdino@briarcliffmanor.org), (-) Order Number #100880972 on May 08, 2020 07:05 AM (PDT) pursuant to License Agreement with ICC & NYSDOS. No further reproduction, no

100880972

107. Ashton, L. A., and Smart, P.M. T., *Sponsored Fire-Resistance Tests on Structural Elements,* London, Dept. of Scientific and Industrial Research and Fire Offices. Committee, London, 1960.

108. Butcher, E. G., Chitty, T. B., and Ashton, L. A., "The Temperature Attained by Steel in Building Fires," *Fire Research Technical Paper,* No. 15, Ministry of Technology and Fire Offices. Committee, Joint Fire Research Organization, London, HMSO, 1966.

109. Dept. of the Environment and Fire Offices' Committee, Joint Fire Research Organization, "Fire-Resistance Requirements for Buildings—a New Approach; Proceedings of the Symposium Held at the Connaught Rooms, London, 28 September 1971," *Symposium,* No. 5, London, HMSO, 1973.

110. Langdon Thomas, G. J., "Roofs and Fire," *Fire Note,* No. 3, Dept. of Scientific and Industrial Research and Fire Offices' Committee, Joint Fire Research Organization, London, HMSO, 1963.

111. National Fire Protection Association and the National Board of Fire Underwriters, *Report on Fire the Edison Phonograph Works,* Thomas A. Edison, Inc., West Orange, N.J., December 9, 1914, Boston, 1915.

112. Thompson, J. P., *Fire Resistance of Reinforced Concrete Floors,* Portland Cement Association, Chicago, 1963.

113. Forest Products Laboratory, "Fire Resistance Tests of Plywood Covered Wall Panels," Information reviewed and reaffirmed, *Forest Service Report,* No. 1257, Madison, April 1961.

114. Forest Products Laboratory, "Charring Rate of Selected Woods—Transverse to Grain," Forest Service *Research Paper,* FLP 69, Madison, April 1967.

115. Bird, G. I., "Protection of Structural Steel Against Fire," *Fire Note,* No. 2, Dept. of Scientific and Industrial Research and Fire Offices' Committee, Joint Fire Research Organization, London, HMSO, 1961.

116. Robinson, W. C., *The Parker Building Fire,* Underwriters' Laboratories, Chicago, c. 1908.

117. Ferris, J. E., "Fire Hazards of Combustible Wallboards," *Commonwealth Experimental Building Station Special Report,* No. 18, Sydney, Oct. 1955.

118. Markwardt, L. J., Bruce, H. D., and Freas, A. D., "Brief Description of Some Fire-Test Methods Used for Wood and Wood Base Materials," *Forest Service Report,* No. 1976, Forest Products Laboratory, Madison, 1976.

119. Foster, H. D., Pinkston, E. R., and Ingberg, S. H., "Fire Resistance of Walls of Gravel-Aggregate Concrete Masonry Units," *Building Materials and Structures,* Report, BMS 120, National Bureau of Standards, Washington, March 1951.

120. Foster, H. D., Pinkston, E.R., and Ingberg, S. H., "Fire Resistance of Walls of Lightweight-Aggregate Concrete Masonry Units," *Building Materials and Structures,* Report BMS 117, National Bureau of Standards, Washington, May 1950.

121. Structural Clay Products Institute, "Structural Clay Tile Fireproofing," *Technical Notes on Brick & Tile Construction,* vol. 1, no. 11, San Francisco, Nov. 1950.

122. Structural Clay Products Institute, "Fire Resistance Ratings of Clay Masonry Walls—I," *Technical Notes on Brick & Tile Construction,* vol. 3, no. 12, San Francisco, Dec. 1952.

123. Structural Clay Products Institute, "Estimating the Fire Resistance of Clay Masonry Walls—II," *Technical Notes on Brick & Tile Construction*, vol. 4, no. 1, San Francisco, Jan. 1953.

124. Building Research Station, "Fire: Materials and Structures," *Digest,* No. 106, London, HMSO, 1958.

125. Mitchell, N. D., "Fire Hazard Tests with Masonry Chimneys," *NFPA Publication,* No. Q-43-7, Boston, Oct. 1949.

126. Clinton Wire Cloth Company, *Some Test Data on Fireproof Floor Construction Relating to Cinder Concrete, Terra Cotta and Gypsum,* Clinton, 1913.

127. Structural Engineers Association of Southern California, Fire Ratings Subcommittee, "Fire Ratings, a Report," part of *Annual Report,* Los Angeles, 1962, pp. 30-38.

128. Lawson, D. I., Fox, L. L., and Webster, C. T., "The Heating of Panels by Flue Pipes," *Fire Research, Special Report,* No. 1, Dept. of Scientific and Industrial Research and Fire Offices' Committee, London, HMSO, 1952.

129. Forest Products Laboratory, "Fire Resistance of Wood Construction," Excerpt from 'Wood Handbook—Basic Information on Wood as a Material of Construction with Data for its Use in Design and Specification,' *Dept. of Agriculture Handbook,* No. 72, Washington, 1955, pp. 337-350.

130. Goalwin, D. S., "Properties of Cavity Walls," *Building Materials and Structures,* Report BMS 136, National Bureau of Standards, Washington, May 1953.

131. Humphrey, R. L., "The Fire-Resistive Properties of Various Building Materials," *Geological Survey Bulletin,* 370, Washington, 1909.

132. National Lumber Manufacturers Association, "Comparative Fire Test on Wood and Steel Joists," *Technical Report,* No. 1, Washington, 1961.

133. National Lumber Manufacturers Association, "Comparative Fire Test of Timber and Steel Beams," *Technical Report,* No. 3, Washington, 1963.

134. Malhotra, H. L., and Morris, W. A., "Tests on Roof Construction Subjected to External Fire," *Fire Note,* No. 4, Dept. of Scientific and Industrial Research and Fire Offices' Committee, Joint Fire Research Organization, London, HMSO, 1963.

INTERNATIONAL CODE COUNCIL®
Copyright © 2019 ICC & NYSDOS. ALL RIGHTS RESERVED. Accessed by Lauren Gualdino (lgualdino@briarcliffmanor.org), (-) Order Number #100880972 on May 08, 2020 07:05 AM (PDT) pursuant to License Agreement with ICC & NYSDOS. No further reproduction, no

100880972

135. Brown, C. R., "Fire Tests of Treated and Untreated Wood Partitions," *Research Paper,* RP 1076, part of *Journal of Research of the National Bureau of Standards,* vol. 20, Washington, Feb. 1938, pp. 217-237.

136. Underwriters' Laboratories, "Report on Investigation of Fire Resistance of Wood Lath and Lime Plaster Interior Finish," *Publication,* SP. 1.230, Chicago, Nov. 1922.

137. Underwriters' Laboratories, "Report on Interior Building Construction Consisting of Metal Lath and Gypsum Plaster on Wood Supports," *Retardant,* No. 1355, Chicago, 1922.

138. Underwriters' Laboratories, "An Investigation of the Effects of Fire Exposure upon Hollow Concrete Building Units," *Retardant,* No. 1555, Chicago, May 1924.

139. Moran, T. H., "Comparative Fire Resistance Ratings of Douglas Fir Plywood," *Douglas Fir Plywood Association Laboratory Bulletin,* 57-A, Tacoma, 1957.

140. Gage Babcock & Association, "The Performance of Fire-Protective Materials under Varying Conditions of Fire Severity," Report 6924, Chicago, 1969.

141. International Conference of Building Officials, *Uniform Building Code* (1979 ed.), Whittier, CA, 1979.

142. Babrauskas, V., and Williamson, R. B., "The Historical Basis of Fire Resistance Testing, Part I and Part II," *Fire Technology,* vol. 14, no. 3 & 4, Aug. & Nov. 1978, pp. 184-194, 205, 304-316.

143. Underwriters' Laboratories, "Fire Tests of Building Construction and Materials," 8th ed., *Standard for Safety,* UL263, Chicago, 1971.

144. Hold, H. G., *Fire Protection in Buildings,* Crosby, Lockwood, London, 1913.

145. Kollbrunner, C. F., "Steel Buildings and Fire Protection in Europe," *Journal of the Structural Division,* ASCE, vol. 85, no. ST9, Proc. Paper 2264, Nov. 1959, pp. 125-149.

146. Smith, P., "Investigation and Repair of Damage to Concrete Caused by Formwork and Falsework Fire," *Journal of the American Concrete Institute,* vol. 60, Title no. 60-66, Nov. 1963, pp. 1535-1566.

147. "Repair of Fire Damage," 3 parts, *Concrete Construction,* March-May, 1972.

148. National Fire Protection Association, *National Fire Codes; a Compilation of NFPA Codes, Standards, Recommended Practices and Manuals,* 16 vols., Boston, 1978.

149. Ingberg, S. H. "Tests of Severity of Building Fires," *NFPA Quarterly,* vol. 22, no. 1, July 1928, pp. 43-61.

150. Underwriters' Laboratories, "Fire Exposure Tests of Ordinary Wood Doors," *Bulletin of Research,* no. 6, Dec. 1938, Chicago, 1942.

151. Parson, H., "The Tall Building under Test of Fire," *Red Book,* no. 17, British Fire Prevention Committee, London, 1899.

152. Sachs, E. O., "The British Fire Prevention Committee Testing Station," *Red Book,* no. 13, British Fire Prevention Committee, London, 1899.

153. Sachs, E. O., "Fire Tests with Unprotected Columns," *Red Book,* no. 11, British Fire Prevention Committee, London, 1899.

154. British Fire Prevention Committee, "Fire Tests with Floors a Floor by the Expended Metal Company," *Red Book,* no. 14, London, 1899.

155. *Engineering News,* vol. 56, Aug. 9, 1906, pp. 135-140.

156. *Engineering News,* vol. 36, Aug. 6, 1896, pp. 92-94.

157. Bauschinger, J., *Mittheilungen de Mech.-Tech. Lab. der K. Tech. Hochschule, Müchen,* vol. 12, 1885.

158. *Engineering News,* vol. 46, Dec. 26, 1901, pp. 482-486, 489-490.

159. *The American Architect and Building News,* vol. 31, March 28, 1891, pp. 195-201.

160. British Fire Prevention Committee, First International Fire Prevention Congress, *Official Congress Report,* London, 1903.

161. American Society for Testing Materials, *Standard Specifications for Fire Tests of Materials and Construction (C19-18),* Philadelphia, 1918.

162. International Organization for Standardization, *Fire Resistance Tests on Elements of Building Construction (R834),* London, 1968.

163. *Engineering Record,* vol. 35, Jan. 2, 1897, pp. 93-94; May 29, 1897, pp. 558-560; vol. 36, Sept. 18, 1897, pp. 337-340; Sept. 25, 1897, pp. 359-363; Oct. 2, 1897, pp. 382-387; Oct. 9, 1897, pp. 402-405.

164. Babrauskas, Vytenis, "Fire Endurance in Buildings," PhD Thesis. *Fire Research Group,* Report, No. UCB FRG 76-16, University of California, Berkeley, Nov. 1976.

165. The Institution of Structural Engineers and The Concrete Society, *Fire Resistance of Concrete Structures,* London, Aug. 1975.

INTERNATIONAL CODE COUNCIL®
Copyright © 2019 ICC & NYSDOS. ALL RIGHTS RESERVED. Accessed by Lauren Gualdino (lgualdino@briarcliffmanor.org), (-) Order Number #100880972 on May 08, 2020 07:05 AM (PDT) pursuant to License Agreement with ICC & NYSDOS. No further reproduction, no

100880972

INTERNATIONAL CODE COUNCIL®
Copyright © 2019 ICC & NYSDOS. ALL RIGHTS RESERVED. Accessed by Lauren Gualdino (lgualdino@briarcliffmanor.org), (-) Order Number #100880972 on May 08, 2020 07:05 AM (PDT) pursuant to License Agreement with ICC & NYSDOS. No further reproduction, no

100880972

INDEX

A

ACCESSIBILITY . . . . . .301.5, 305, 801.1, 901.2, 1101.2, 1508, Appendix B

ADDITIONS . . . . . .101.2, 101.3, 202, 301.3, 303.1, 305.5, 501.1, 502, 606, Chapter 11, 1301.1,1301.1.1,1301.2, 1301.2.3, 1301.3, 1301.4.1, 1301.4.3, 1505.2

ADMINISTRATION . . . . . Chapter 1

ALTERATIONS . . . . . 101.2, 101.3, 101.4, 202, 301.1, 301.3, 303, 305.1, 305.3, 305.4, 305.6, 305.7, 305.8, 305.9, 501.1, 501.1.1, 501.2.2, 502.4, 503, 504.1, 505.4, 508.1, 510.1, 510.1.4, 510.3, 510.4.1, 510.6, 510.7, 510.8, 510.8.1, 510.8.4, 510.8.10, 510.9, 601.1, 602, 603, 604, Chapter 7, Chapter 8, Chapter 9, 1001.2.1, 1007.3.1, 1012.8, 1012.8.1, 1101.3, 1201.1, 1201.2, 1201.4, 1203.1, 1204, 1301.1, 1301.1.1, 1301.2, 1301.2.4, 1301.3, 1301.4.1, 1301.4.3, 1501.3, 1504.1, 1505.2, A102.1, A105.2, A205.2, A403.2

- Level 1 . . . . . 202, 602, 603.2, 604.2, Chapter 7, 801.2
- Level 2 . . . . . .202, 603, 505.2, Chapter 8
- Level 3 . . . . . 202, 604, Chapter 9

ALTERNATIVE MATERIALS, DESIGN, AND METHODS OF CONSTRUCTION. 104.3

ARCHAIC MATERIALS AND ASSEMBLIES . . . . . .Resource A

ARCHITECT (see REGISTERED DESIGN PROFESSIONAL)

AREA (see BUILDING)

AUTOMATIC SPRINKLER SYSTEM . . . .501.2, 504.5, 802.2.1, 802.6, 803.1.1, 803.2, 803.3, 803.4, 805.3.1.2.1, 805.3.1.2.2, 805.3.2, 805.5.1, 805.6, 902.2, 904.1, 1011.5.1, 1011.5.1.1, 1011.6.3, 1011.7.3, 1203.8, 1204.4, 1204.9, 1301.5.1, Table 1301.6.9, 1301.6.10.1, 1301.6.17, Table 1301.6.17, 1301.6.17.1, 1301.6.19, Table 1301.6.19, 1507

B

BUILDING

- Area . . . . . 503.5, 503.7, 503.8, 503.9, 503.10, 1011.5, Table 1011.5, 1011.5.1.1, 1011.5.2, 1102, 1204.2, 1301.2.3, 1301.6.2
- Dangerous 105.4, 202, 302.2, 405.1, 1205.2
- Height . . . . . 202, 502.1, 804.2.2, 805.3.1.1, 1007.3.1, 1011.5, Table 1011.5, 1011.6.1, 1011.6.3 1102.1, 1301.2.3, 1301.6.1, Table 1307.1, A301.2
- Historic . . . . . 202, 305.1, 305.9, 401.1, 410.1, 410.9, 501.1, 507, 507.3, 507.4, 601.1, 607, 701.1, 1001.2.1, Chapter 12, 1301.1, B101.1, B101.2, B101.3, B101.4, B101.4.2, B101.5
- Relocatable 202, 1401.1
- Relocated . . . . . 301.4, 503.12, 608, 806.4, 1206, Chapter 14
- Relocation of 101.2, 101.3, 101.4, 301.1, 301.3
- Underground 1002.2
- Unsafe. 103.2, 105.4, 202

BUILDING OFFICIAL . . .Chapter 1, 202, 301.3, 302.2, 303.2, 405.2.3.1, 501.2, 506.1.1, 507.4, 802.6, 803.2.4,805.2, 1001.2, 1011.4.1, 1106.1.1, 1201.2, 1201.3, 1201.5, 1203.2, 1203.3, 1203.11, 1203.12, 1204.1, 1204.6, 1204.7, 1204.11, 1204.12, 1204.14, 1205.1, 1205.2, 1301.3, 1301.3.1, 1301.4.2, 1301.4.3, 1402.7, 1501.6.7, A301.1, A404.1

C

CARBON MONOXIDE. 502.7, 503.15, 804, 1105

CARPETING 702.2

CEILING. 702.1, 802.2.1, 802.4, 903.2.1, 1011.3, 1011.4.1, 1203.5, 1203.7, 1204.10, 1301.6.3.2, A105.3, A113.1

CERTIFICATE OF OCCUPANCY. 105.5, 105.5.1, 105.5.2, 506.2, 1001.2, 1001.3

CHANGE OF OCCUPANCY . . . . . 101.2, 101.3, 101.4, 202, 301.3, 305.1, 305.4, 305.4.2, 501.1, 506, 506.1, 506.1.1, 506.4, 506.6, 605, Chapter 10, 1201.1, 1201.2, 1201.4, 1204, 1301.1, 1301.4.1, 1301.4.3, 1301.6.17, 1401.2, B101.2, B101.3, B101.4, C101.1, C201.1,

COMPARTMENTATION . . . . . 803.3.1, 1301.6.3, Table 1301.6.3, Table 1301.7

COMPLIANCE METHODS . . . . . .Chapter 3, Chapter 13

- Additions . . . . . Chapter 11
- Alteration Level 1 . . . . . Chapter 7
- Alteration Level 2 . . . . . Chapter 8
- Alteration Level 3 . . . . . Chapter 9
- Change of occupancy . . . . . Chapter 10

INTERNATIONAL CODE COUNCIL®
Copyright © 2019 ICC & NYSDOS. ALL RIGHTS RESERVED. Accessed by Lauren Gualdino (lgualdino@briarcliffmanor.org), (-) Order Number #100880972 on May 08, 2020 07:05 AM (PDT) pursuant to License Agreement with ICC & NYSDOS. No further reproduction, no

100880972

Classification of work . . . . . .Chapter 6
Historic buildings . . . . . .Chapter 12
Performance compliance method . . . . . 301.3.3, Chapter 13
Prescriptive compliance method . .301.3.1, Chapter 5
Relocated buildings . . . . . .Chapter 14
Repairs . . . . . .Chapter 4
Work area compliance method 301.3.2

CONFLICT 102.1, 102.4.1, 302.3, A301.2

CONSTRUCTION DOCUMENTS . . . 106.2, 202, 501.2, A105.4, A205.4, A301.1

CONSTRUCTION SAFEGUARDS . . . 101.5, Chapter 15

CORRIDOR
Dead-end 801.3, 805.6, 1011.4.1
Doors 805.5.1, 1011.4.1
Exit access. 801.3, 803.2.1, 803.4, 803.4.1, 804.2.1, 804.2.2, 804.2.4, 804.3, 805.1, 805.3.1, 901.2, 1011.7.2, 1203.3, 1205.6
Openings 805.5, 1011.4.1, 1011.7.2, 1205.8
Rating . . . . . .804.1.1, 1301.6.5, Table 1301.6.5, 1301.6.5.1, Table 1301.7

D

DEFERRED SUBMITTAL. 202

DEFINITIONS 202

DEMOLITION 101.2, 101.5, 106.2.6, 1501.6, 1501.7, 1502.1, 1503.1, 1504.1, 1505.2

E

EGRESS (see MEANS OF EGRESS)

ELECTRICAL 202, 305.7, 406, 407, 410.7 801.3, 808, 1008, 1101.2, A102.1

ELEVATOR. . . . . .305.8.2, 902.1.2, 1011.7.3, 1102.2, 1301.6.14, Table 1301.6.14, Table 1301.7

EMERGENCY ESCAPE AND RESCUE OPENINGS . . . . . .505, 701.4, 702.4, Table 805.3.1.1(1), Table 805.3.1.1.(2)

EMERGENCY POWER 805.4.5, 1301.6.15.1

ENERGY. 702.4, 707, 811, 908

ENGINEER (see REGISTERED DESIGN PROFESSONAL)

EXISTING (see BUILDING)

EXIT . . . . . .802.2.1, 802.4, 803.2.1, 803.2.2, 805.3, Table 805.3.1.1(1), Table 805.3.1.1(2), 805.4.1.1, 805.4.2, 805.4.3, 805.4.4, 805.8, 805.9, 805.10, 903.1, 903.3, 904.1.4, 905.2, 905.3, Table 1011.4, 1011.4.1, 1011.7.2, 1102.2, 1203.3, 1203.6, 1203.11, 1205.6, 1205.7, 1205.12, 1205.13, 1301.6.3.1, 1301.6.6, 1301.6.10.1, 1301.6.11, 1301.6.11.1, 1301.6.12, 1301.6.13, 1301.6.15.1, Table 1301.6.15, Table 1301.7, A402

EXIT, HORIZONTAL. 503.16.3

F

FIRE ESCAPES . . . 405, 504.1.4, 805.3.1.2, 1301.6.11

FIRE PROTECTION 105.1, 106.2.2, 202, 410.7, 603, 703, 705.2, 804, 805.5.1, 805.5.2, 904, 1004, 1011.1.2, 1011.2, 1011.7.4,1102.3, 1501.3, 1509

FIRE RATINGS. . . . . 803.3.2, 803.6, 804.1.1, 805.3.1.1, 805.3.1.2.1, 805.5.1, 805.5.2, 1011.1.1.1, 1011.1.1.2, 1011.5.1, 1011.5.1.1, 1011.5.3, 1011.6, 1011.6.1, 1011.6.2, 1011.7.2, 1011.7.4, 1203.6, 1203.8, 1301.2.2, 1301.6.3.1, 1301.6.3.2, 1301.6.4, 1301.6.4.1, 1301.6.5, 1301.6.5.1, 1301.6.6, 1301.6.16.1, Table 1301.7, Resource A

FIRE SAFETY. . . . . .1101.2, 1203, 1301.5, 1301.6.1, 1301.6.2, 1301.6.3, 1301.6.4, 1301.6.5, 1301.6.6, 1301.6.7, 1301.6.8, 1301.6.9, 1301.6.14, 1301.6.16, 1301.6.17, 1301.6.18, Table 1301.7, Table 1301.8, Table 1301.9, A102.1

FIRE-RESISTANCE RATING. 802.2.1, 802.6, 803.1.1, 803.2.2.1, 1011.1.1.1, 1011.5.1.1, 1011.5.3, 1011.6, 1011.7.2, 1203.6, 1203.7, 1203.8, 1204.3, 1204.8, 1204.10

FLAME SPREAD . . . . . 1204.9, Resource A

FLOOD HAZARD AREA 106.2.6.2, 202, 301.3, 401.3, 405.2.5, 502.3, 503.2, 507.3, 606.2.4, 701.3, 1103.3, 1201.4, 1301.3.3, 1402.6

FUEL GAS 702.6.1

G

GLASS 406, 602.3, 805.5.1, 805.5.2, 1011.7.2, 1205.8, 1301.6.10.1

GRAVITY LOADS (see STRUCTURAL LOADS/FORCES)

GUARDS. 803.5, 805.10, 1012.4.1, 1012.4.5, 1203.9,1203.10

GUIDELINES FOR STRUCTURAL RETROFIT
Seismic. . . . . Appendix A
Wind . . . . . Appendix C

H

HANDRAILS 503.1, 805.9, 1011.4.1, 1011.4.4, 1203.9

HAZARD CATEGORIES . . . . . .1011.1.3, 1011.4, Table 1011.4, 1011.5, Table 1011.5, 1011.6, Table 1011.6

HEIGHT (see BUILDING)

HIGH-RISE BUILDING 803.2.1, 902.1, 904.1.1, 1011.5.1, 1301.6.17, 1301.6.19

INTERNATIONAL CODE COUNCIL®
Copyright © 2019 ICC & NYSDOS. ALL RIGHTS RESERVED. Accessed by Lauren Gualdino (lgualdino@briarcliffmanor.org), (-) Order Number #100880972 on May 08, 2020 07:05 AM (PDT) pursuant to License Agreement with ICC & NYSDOS. No further reproduction, no

100880972

I

INSPECTION 105.3, 1402.7, A105.4, A107.1, A107.4, A117.3, A205.4, A206.2, A304.4.3, A304.5, A406.3.4, A407.1, A503.3, A505.2
INTERIOR FINISHES 702.1, 702.2, 1011.1.2, 1011.3, 1203.5
INTERIOR TRIM 702.3

L

LIVE LOAD (see STRUCTURAL LOADS)
LOAD-BEARING ELEMENT 202, A106.2

M

MAINTENANCE . . . 104.4, 105.1, 305.2, 404.1,1505.2
MEANS OF EGRESS . . . . . 101.2, 106.2.3, 202, 305.6, 404, 504.1.1, 504.1.2, 803.2.3, 805, 903.1, 905, 1005, 1011.4, 1011.4.2, Table 1011.5, 1101.2, 1201.3, 1203.3, 1204.6, 1301.5, 1301.5.2, 1301.6, 1301.6.11, Table 1301.7, Table 1301.8, Table 1301.9, 1505
MECHANICAL 410.7, 608, 702.4, 705.2, 809, 902.1.1, 902.2.1, 1009, 1101.2, 1301.6.7.1, 1301.6.8, 1301.6.8.1, 1301.6.10, 1301.6.10.1, A102.1
MOVED BUILDINGS (see BUILDING, RELOCATED)

O

OCCUPANCY GROUP . . . . . Chapter 10
OPENINGS . . . . . 106.2.4, 505, 701.4, 702.5, 802.2, 805.3.1.2.1, 805.5, 903.1 1011.4.1, 1011.6.3, 1011.7, 1102.2, 1203.3, 1203.10.2, 1205.3, 1205.6, 1301.6.6, Table 1301.6.6(1), 1301.6.10.1, Table 1301.7, 1501.6.4

P

PERMITS 105, 706.3, 706.3.1, A105.3
PLUMBING 408, 809, 1009, 1101.2, 1501.7, A102.1, A304.1.3, A304.3.2, A304.4.2
PRIMARY FUNCTION 202, 305.4.2, 305.5, 305.7

R

RAMPS . . . . .305.8.5, Table 305.8.5, 305.8.9, 802.2.1, 1301.6.6, B101.3, B101.4
REFERENCED STANDARDS . . . . . Chapter 16
REFUGE AREAS 503.16
Capacity 805.10.1
Horizontal exits 805.10.2
REGISTERED DESIGN PROFESSIONAL 106.2.9, 202, 405.2.3.1, 1201.2, A106.2.3.3, A206.2, A301.1, A301.2, A301.3, A304.2.2, A304.2.3, A304.4.1, A405.3
REHABILITATION 202, 404.2.4
RELOCATABLE BUILDINGS (see BUILDINGS, RELOCATABLE)
RELOCATED BUILDINGS (see BUILDINGS, RELOCATED)
REPAIR . . . 101.2, 101.3, 101.4, 104.4, 106.2.6, 108.7, 202, 301.2, Chapter 4, 1202, 1301.1, 1301.1.1, 1301.2.4, 1301.3, 1401.2, 1401.7, 1501.3, 1501.6.6, A105.2, A105.3, A106.3.3.8, A205.2, A205.3, A403.2
RISK CATEGORY . . . . . 202, 303.3.1, Table 303.3.1, 303.3.2, Table 303.3.2, 506.4.2, 506.4.3, 506.4.4, 1006.2, 1006.3, 1006.4
ROOF
Diaphragms 706.3.2
Permit 706.3
Recover 202, 706
Repair 202, 706
Replacement 202, 706.2
Reroofing 202, 706.2

S

SAFEGUARDS DURING CONSTRUCTION (see CONSTRUCTION SAFEGUARDS)
SAFETY PARAMETERS . . . . . 1301.5.3, 1301.6, Table 1301.7
SEISMIC FORCES (see STRUCTURAL LOADS/FORCES)
SEISMIC LOADS (see STRUCTURAL LOADS/FORCES)
SEISMIC RETROFIT . . . . . .Appendix A
SHAFT ENCLOSURES 802.2.2, 1011.7, 1301.6.6
SMOKE ALARMS 803.4.3, 1104
SMOKE COMPARTMENTS 403.11, 803.3, 805.10, 1301.6
SMOKE CONTROL . . . . . 1301.6.10, Table 1301.7
SMOKE DETECTORS 803.4, 1011.7.4, 1301.6.8.1
SNOW LOAD (see STRUCTURAL LOADS/FORCES)
SPECIAL USE AND OCCUPANCY . . . 802, 902, 1002
SPRINKLER SYSTEM (see AUTOMATIC SPRINKLER SYSTEM)
STAIRWAY 305.8.4, 503.1, 504.2, 504.4, 504.5, 506.3, 802.2.1, 802.2.2, 802.2.3, 803.1.1, 805.3.1.1, 805.3.1.2.1, 805.4.3, 805.4.3.1, 805.9.1, 805.11.1, 807.3.5, 903.1, 1011.4.1, 1011.4.2, 1011.4.4, 1011.7.2, 1011.7.3, 1011.7.4, 1102.2,

INTERNATIONAL CODE COUNCIL®
Copyright © 2019 ICC & NYSDOS. ALL RIGHTS RESERVED. Accessed by Lauren Gualdino (lgualdino@briarcliffmanor.org), (-) Order Number #100880972 on May 08, 2020 07:05 AM (PDT) pursuant to License Agreement with ICC & NYSDOS. No further reproduction, no

100880972

1203.3, 1203.6, 1203.9, 1204.11, 1204.13, 1301.6.3, 1301.6.10.1, 1504.1, 1505.1, 1506.1

STANDPIPE SYSTEMS . . . . . 803.2.1, 803.3, 1301.6.18, Table 1301.6.18, 1301.6.18.1, Table 1301.7, 1506, 1503.2

STORM SHELTER 502.8, 1106, 1301.2.3.1

STRUCTURAL 405, 502.4, 503, 706, 807, 906, 1006, 1103, 1205, 1301.4.1, 1402

STRUCTURAL LOADS/FORCES

Gravity loads 503.3, 706.2, 807.4, 907.3, 1007.1, 1103.2, A206.6, A506.5.1

Building Code of New York State-level 506.4.4, 906.6, 1103.3.1, 1103.3.2

Live loads. 202, 303.1, 506.4.1, 805.3.1.2.2, 1205.13, 1206.1, 1501.6.1, 1501.6.5, A108.6, A403.7

Reduced . . . . . 303.3.2, Table 303.3.2, 405.2.3.1, 503.4, 503.5, 503.6, 503.7, 503.8, 503.9, 503.10, 503.11, 706.3.1, 806.3, 907.4.3, 1007.3.1,

Seismic loads. . . . . 202, 303.3, 405.2.3, 405.2.4.1, 502.2, 502.5, 503.4, 503.5, 503.6, 503.7, 503.8, 503.9, 503.10, 503.11, 506.4.3, 706.2.1, 706.3.1, 906.2, 906.3, 906.4, 906.5, 906.6, 906.7, 906.8, 1006.3, 1006.4, 1103.2.1, 1402.4, Appendix A

Snow loads 303.2, 405.2.1.1, 405.2.4, 502.4, 506.4.2, 706.2, 806.2, 1006.2, 1103.1, 1402.5

Wind loads 405.2.3, 405.2.4.1, 503.12, 506.4.2, 706.3.2, 1006.2, 1402.3, 1501.6.7

SUBSTANTIAL DAMAGE

Flood 202, 507.3, 1103.3

Structural 202, 405.2.2, 405.2.3, 405.2.4, 502.2, 507.4

SUBSTANTIAL IMPROVEMENT . . . 202, 401.3, 502.3, 503.2, 507.3, 701.3, 1103.3, 1103.5, 1201.4, 1301.3.3

SUBSTANTIAL STRUCTURAL ALTERATION 202, 503.11, 907.5.2

T

TECHNICALLY INFEASIBLE. 202, 305.4, 305.6, 305.8.10, 305.8.12, 305.9

TESTING. 104.1, 1301.6.10.1, 1507.1, A105.4, A205.4, A408.1, A503.3

U

UNSAFE 103.2, 105.4, 202, 302.4, 302.5, 1007.2, 1201.5, 1301.3.1

UTILITIES 107

V

VERTICAL OPENING PROTECTION . . . 803.2, 903.1, 1012.7, 1301.6.6, Table 1301.7

VIOLATIONS 105.7, 108.6

W

WIND LOAD (see STRUCTURAL LOADS/FORCES)

WINDOWS

Emergency escape and rescue openings 505.3, 505.4, 701.4, 702.5

Glass replacement 505.1

Glazing 402.1

Opening control devices. 505.2, 505.3, 702.4, 702.5

INTERNATIONAL CODE COUNCIL®

Copyright © 2019 ICC & NYSDOS. ALL RIGHTS RESERVED. Accessed by Lauren Gualdino (lgualdino@briarcliffmanor.org), (-) Order Number #100880972 on May 08, 2020 07:05 AM (PDT) pursuant to License Agreement with ICC & NYSDOS. No further reproduction, no

100880972

ICC INTERNATIONAL CODE COUNCIL®

People Helping People Build a Safer World®



Helpful tools for Your Existing Building Code

a. 2018 IEBC® Code and Commentary

This helpful tool contains the full text of 2018 IEBC, including tables and figures, followed by corresponding commentary at the end of each section to help code users understand the intent of the code provisions and learn how to apply them effectively.

SOFT COVER #3560S18
PDF DOWNLOAD #8756P18
SOFT + PDF COMBO #3560SP18

b. Existing Building Code Essentials: Based on the 2018 International Existing Building Code

Explains provisions essential to understanding the application of the 2018 IEBC to the most commonly encountered building practices. The information is presented in a user-friendly manner with an emphasis on technical accuracy and clear easy-to-apply language. Full-color illustrations and examples assist the reader in visualizing the code requirements. Topic organization follows the IEBC options of compliance such as Prescriptive, Work Area, and Performance compliance options. A focused, concise approach on alteration levels in the Work Area Compliance option.

SOFT COVER #4552S18
PDF DOWNLOAD #8951P011

c. 2018 International Code Interpretations

This publication is a compilation of interpretations applicable to the 2018 International Building, Energy Conservation, Existing Building, Fire, Fuel Gas, Mechanical, Plumbing, Residential, and Swimming Pool and Spa Codes. For convenience, the book is organized by code and code section, and includes applicable code text with each interpretation.

PDF DOWNLOAD #8950P863

d. 2018 International Existing Building Code Handbook

This practical guide shows, step by step, how to apply the provisions of the 2018 IEBC when carrying out repairs, alterations, additions, changes in occupancy, and detailed evaluations for buildings of all sizes. It compiles all the information needed to understand and apply the IEBC provisions to meet structural, fire, accessibility, and other code-related requirements. It begins with an overview of the IEBC, permits, construction documents, and other administrative requirements. It goes on to explain the three different compliance methods that can be followed under the IEBC. Throughout, diagrams, flowcharts, and illustrated examples clearly demonstrate the proper application of the code.

HARD COVER #4550S18

e. Complete Revision History to the 2018 I-Codes®: Successful Changes and Public Comments

This valuable collection greatly simplifies researching the history of a new, revised or deleted code section from 2015 to 2018. It collects all changes that occurred in the 2018 IBC®, IRC®, IEBC®, IECC®, IFC®, IMC® and IPC®. For each successful change, the book includes:

- the original proposal with proponent's reason
- committee action with any modification
- any public comments made
- final action documentation

The book compiles the proponent's original reason for the change, unabridged statements that substantiated code development committee actions and the complete documentation for any public comment that was considered prior to final action on the change.

PDF DOWNLOAD #8950P830

19-17846

Order Your Code Tools Today! 1-800-786-4452 | www.iccsafe.org/books

This insert is not part of the official text of the New York State Uniform Fire Prevention and Building Code or New York State Energy Conservation Construction Code.

INTERNATIONAL CODE COUNCIL®

Copyright © 2019 ICC & NYSDOS. ALL RIGHTS RESERVED. Accessed by Lauren Gualdino (lgualdino@briarcliffmanor.org), (-) Order Number #100880972 on May 08, 2020 07:05 AM (PDT) pursuant to License Agreement with ICC & NYSDOS. No further reproduction, no

100880972



ICC INTERNATIONAL CODE COUNCIL®

People Helping People Build a Safer World®

Get FREE access to hundreds of ICC resources and view the largest collection of code titles

ICC's Digital Codes Library (codes.iccsafe.org) conveniently provides access to the latest code text while on the go, at home or in the office, in an easy-to-navigate format.



Available anywhere 24/7

Use on any mobile or digital device

View over 800+ ICC titles

19-17447

Learn how to use this powerful tool at *codes.iccsafe.org*

This insert is not part of the official text of the New York State Uniform Fire Prevention and Building Code or New York State Energy Conservation Construction Code.

INTERNATIONAL CODE COUNCIL®

Copyright © 2019 ICC & NYSDOS. ALL RIGHTS RESERVED. Accessed by Lauren Gualdino (lgualdino@briarcliffmanor.org), (-) Order Number #100880972 on May 08, 2020 07:05 AM (PDT) pursuant to License Agreement with ICC & NYSDOS. No further reproduction, no

100880972

ICC Membership

An Essential Tool to advance your Building Safety Career!

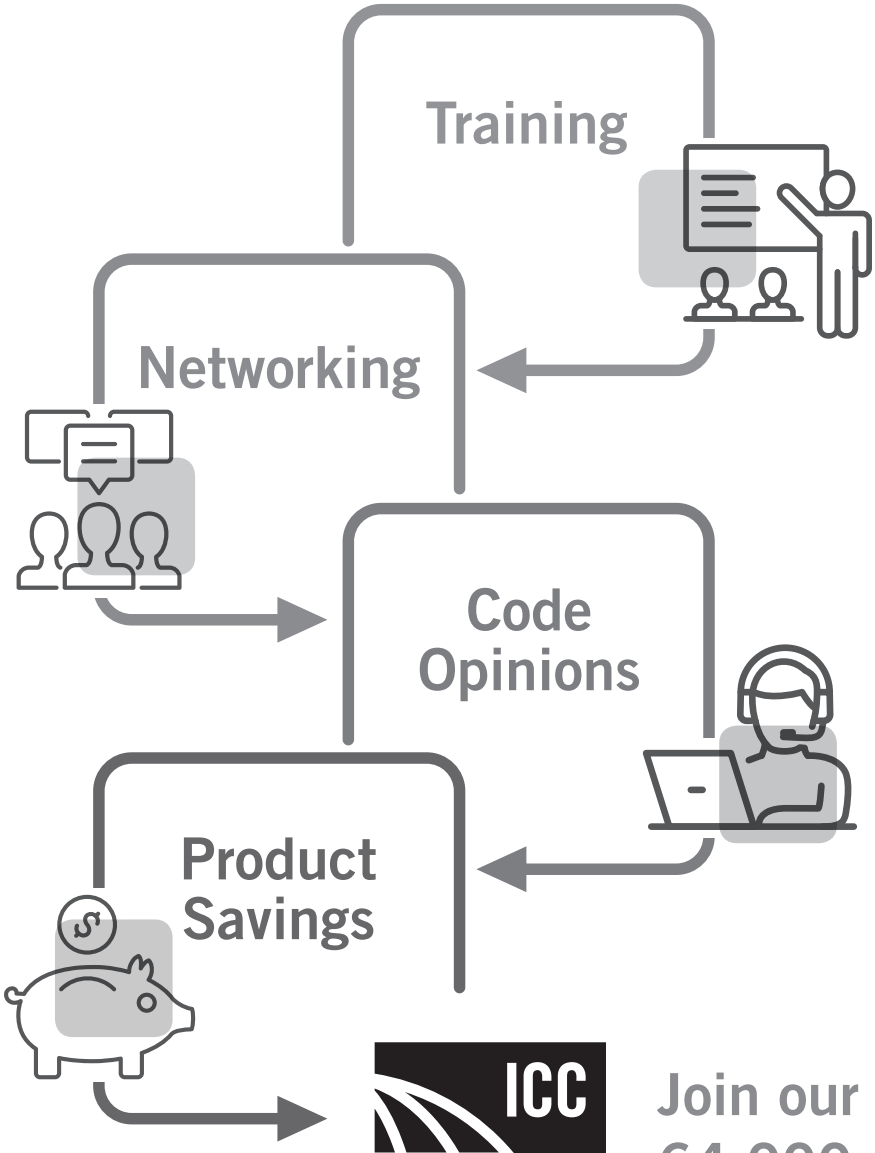

ICC
INTERNATIONAL CODE COUNCIL®

Join our 64,000+ members today!

Put the benefits of ICC Membership to work for you and your career!

Visit **www.iccsafe.org/memnow** or
call **1-888-ICC-SAFE (422-7233), ext. 33804** to learn more.

19-17662

This insert is not part of the official text of the New York State Uniform Fire Prevention and Building Code or New York State Energy Conservation Construction Code.

INTERNATIONAL CODE COUNCIL®

Copyright © 2019 ICC & NYSDOS. ALL RIGHTS RESERVED. Accessed by Lauren Gualdino (lgualdino@briarcliffmanor.org),(-) Order Number #100880972 on May 08, 2020 07:05 AM (PDT) pursuant to License Agreement with ICC & NYSDOS. No further reproduction, no



The ICC Assessment Center (formerly known as ICC Certification & Testing) provides nationally recognized credentials that demonstrate a confirmed commitment to protect public health, safety, and welfare. Raise the professionalism of your department and further your career by pursuing an ICC Certification.

ICC Certifications offer:

- Nationwide recognition
- Increased earning potential
- Career advancement
- Superior knowledge
- Validation of your expertise
- Personal and professional satisfaction

Exams are developed and maintained to the highest standards, which includes continuous peer review by national committees of experienced, practicing professionals. ICC is continually evolving exam offerings, testing options, and technology to ensure that all building and fire safety officials have access to the tools and resources needed to advance in today's fast-paced and rapidly-changing world.

Enhancing Exam Options

Effective July 2018, the Assessment Center enhanced and streamlined exam options and now offers only computer based testing (CBT) at a test site and PRONTO. We no longer offer paper/pencil exams.

Proctored Remote Online Testing Option (PRONTO)

Taking your next ICC certification exam is more convenient, more comfortable and more efficient than ever before with PRONTO.

PRONTO provides a convenient testing experience that is accessible 24 hours a day, 7 days a week, 365 days a year. Required hardware/software is minimal – you will need a webcam and microphone, as well as a reasonably recent operating system.

pronto
ICC ONLINE EXAMS

Whether testing in your office or in the comfort of your home, your ICC exam will continue to maintain its credibility while offering more convenience, allowing you to focus on achieving your professional goals. The Assessment Center continues to add exams to the PRONTO exam catalog regularly.

18-15617

Checkout all the ICC Assessment Center has to offer at iccsafe.org/certification

This insert is not part of the official text of the New York State Uniform Fire Prevention and Building Code or New York State Energy Conservation Construction Code.

INTERNATIONAL CODE COUNCIL®

Copyright © 2019 ICC & NYSDOS. ALL RIGHTS RESERVED. Accessed by Lauren Gualdino (lgualdino@briarcliffmanor.org), (-) Order Number #100880972 on May 08, 2020 07:05 AM (PDT) pursuant to License Agreement with ICC & NYSDOS. No further reproduction, no

100880972

ANDREW M. CUOMO GOVERNOR
ROSSANA ROSADO SECRETARY OF STATE



2020 PLUMBING CODE of NEW YORK STATE

NEW YORK STATE OF OPPORTUNITY.

Building Standards and Codes

ICC INTERNATIONAL CODE COUNCIL®

INTERNATIONAL CODE COUNCIL®

Copyright © 2019 ICC & NYSDOS. ALL RIGHTS RESERVED. Accessed by Lauren Gualdino (lgualdino@briarcliffmanor.org), (-) Order Number #100880972 on May 08, 2020 07:05 AM (PDT) pursuant to License Agreement with ICC & NYSDOS. No further reproduction, no

100880972

ANDREW M. CUOMO GOVERNOR
ROSSANA ROSADO SECRETARY OF STATE

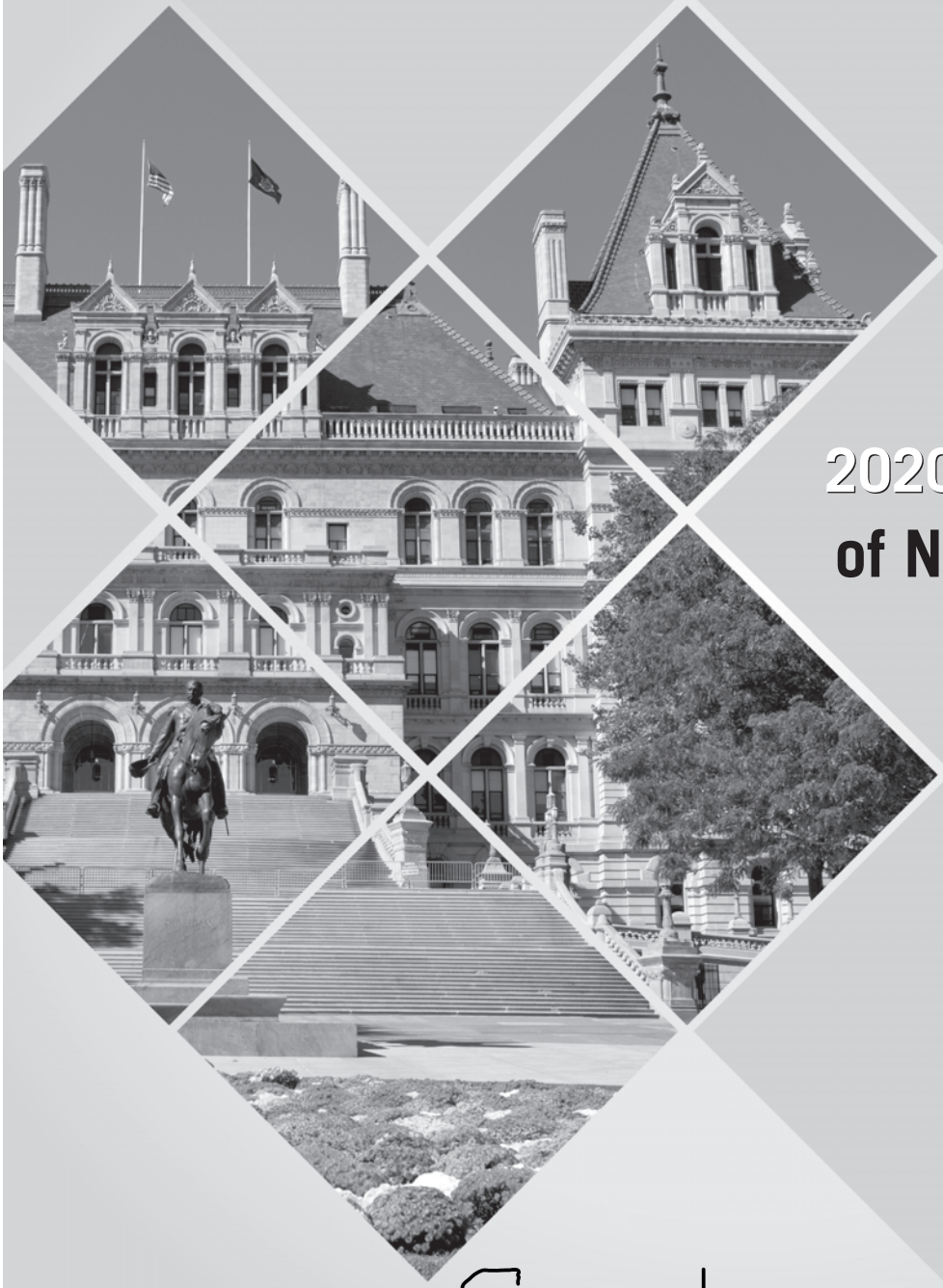

2020 PLUMBING CODE of NEW YORK STATE

NEW YORK STATE OF OPPORTUNITY.

Building Standards and Codes

ICC INTERNATIONAL CODE COUNCIL®

INTERNATIONAL CODE COUNCIL®

Copyright © 2019 ICC & NYSDOS. ALL RIGHTS RESERVED. Accessed by Lauren Gualdino (lgualdino@briarcliffmanor.org), (-) Order Number #100880972 on May 08, 2020 07:05 AM (PDT) pursuant to License Agreement with ICC & NYSDOS. No further reproduction, no

100880972

2020 Plumbing Code of New York State

Publication Date: November 2019

ISBN: 978-1-60983-917-8

COPYRIGHT © 2019
by
INTERNATIONAL CODE COUNCIL, INC.
and
NEW YORK STATE DEPARTMENT OF STATE

ALL RIGHTS RESERVED. This 2020 *Plumbing Code of New York State* is a copyrighted work owned by the International Code Council, Inc. ("ICC"). This work contains: (1) portions of the ICC International Codes® (I-Codes®); (2) material that is a derivative of the I-Codes; and (3) wholly original materials prepared by the New York State Department of State (NYSDOS) or by the New York State Fire Prevention and Building Code Council (the "Code Council"). The International Code Council, Inc., has copyright ownership of the I-Codes. The International Code Council and the New York State Department of State have joint copyright ownership of the material that is a derivative of the I-Codes. The New York State Department of State has copyright ownership of the wholly original materials prepared by the New York State Department of State and/or by the Code Council. As to the ICC International Codes, all rights, including the right of reproduction in whole or in part in any form, are reserved to the International Code Council. As to the material that is derivative of the I-Codes, all rights, including the right of reproduction in whole or in part in any form, are reserved to the International Code Council and the New York State Department of State, jointly. As to the wholly original materials prepared by the New York State Department of State or by the Code Council, all rights, including the right of reproduction in whole or in part in any form, are reserved to the New York State Department of State. Without advance written permission from the copyright owner, no part of this book may be reproduced, distributed or transmitted in any form or by any means, including, without limitation, electronic, optical or mechanical means (by way of example, and not limitation, photocopying or recording by or in an information storage retrieval system). For information on use rights and permissions, please contact: ICC Publications, 4051 Flossmoor Road, Country Club Hills, IL 60478. Phone 1-888-ICC-SAFE (422-7233).

Trademarks: "International Code Council," the "International Code Council" logo, "ICC," the "ICC" logo, "International Plumbing Code," "IPC" and other names and trademarks appearing in this book are registered trademarks of the International Code Council, Inc., and/or its licensors (as applicable), and may not be used without permission.

T024585

PRINTED IN THE USA

INTERNATIONAL CODE COUNCIL®

Copyright © 2019 ICC & NYSDOS. ALL RIGHTS RESERVED. Accessed by Lauren Gualdino (lgualdino@briarcliffmanor.org), (-) Order Number #100880972 on May 08, 2020 07:05 AM (PDT) pursuant to License Agreement with ICC & NYSDOS. No further reproduction, no

100880972

ACKNOWLEDGMENTS

With gratitude, the Department of State acknowledges the contributions of the following individuals in the creation of the 2020 Codes of New York State:

STATE FIRE PREVENTION AND BUILDING CODE COUNCIL

Rossana Rosado	Chair – Secretary of State, New York State Department of State Designee - Matthew W. Tebo, Esq.
Francis J. Nerney, Jr.	State Fire Administrator, Office of Fire Prevention and Control Designee - Paul Martin
RuthAnne Visnauskas	Commissioner, Division of Housing and Community Renewal Designee - Michael Weber Designee - Joseph Palozzola
Roberta Reardon	Commissioner, New York State Department of Labor Designee - Vincent R. Rapacciuolo
Honorable Bill de Blasio	Mayor, City of New York Designee - Keith Wen, NYC Department of Buildings
Honorable Michael R. Sabatino, Jr.	Councilmember, City of Yonkers
Claudia K. Braymer, Esq.	County Board of Supervisors, Warren County
David A. Seeley	Supervisor, Town of Irondequoit
Timothy DeRuyscher, P.E. FSFPE	Professional Engineer Representative
Patrick Dolan	Trade Union Representative, Steamfitters Union, 638
Shawn Hamlin, R.A.	Registered Architect Representative, Hamlin Design Group
Robert Hughes	Code Enforcement Representative, Village of Pleasantville
Dominic Marinelli	Persons with Disabilities Representative, United Spinal Association
Joseph J. Toomey	Fire Service Representative, Albany Fire Department
William W. Tuyn	Builders Representative, Forbes Capretto Homes

DEPARTMENT OF STATE

Rossana Rosado	Secretary of State
Brendan Hughes	Executive Deputy Secretary of State
James W. Leary, Esq.	Assistant Executive Deputy Secretary of State
Mark P. Pattison	Deputy Secretary of State for Local Government
Matthew W. Tebo, Esq.	Deputy Secretary of State for Agency Transformation and External Affairs
John R. Addario, P.E.	Director of the Division of Building Standards and Codes
Brian Tollisen, P.E.	Deputy Director of the Division of Building Standards and Codes
Gerard A. Hathaway, R.A.	Assistant Director for Code Development
Kevin Duerr-Clark, P.E.	Assistant Director for Technical Support
Francis “Nick” McAndrew, P.E.	Assistant Director for Educational Services
Joseph Hill, R.A.	Assistant Director for Code Administration
Jeffrey M. Hinderliter, P.E.	Professional Engineer
Emma Gonzalez-Laders, R.A., LEED AP	Senior Architect
Daniel Carroll	Code Compliance Specialist I
Janet Miller	Program Aide
Joseph P. Ball, Esq.	Supervising Attorney
Panagiota K. Hyde, Esq.	Senior Attorney

IN MEMORIAM

John H. Flanagan	Code Enforcement Representative, Code Council Member (2003–2017)
Honorable Judith Kennedy	Mayor, City of Newburgh, Code Council Member (2013–2018)
Brendan Fitzgerald	Executive Deputy Secretary of State (2016–2018)

INTERNATIONAL CODE COUNCIL®
Copyright © 2019 ICC & NYSDOS. ALL RIGHTS RESERVED. Accessed by Lauren Gualdino (lgualdino@briarcliffmanor.org), (-) Order Number #100880972 on May 08, 2020 07:05 AM (PDT) pursuant to License Agreement with ICC & NYSDOS. No further reproduction, no

100880972

INTERNATIONAL CODE COUNCIL®
Copyright © 2019 ICC & NYSDOS. ALL RIGHTS RESERVED. Accessed by Lauren Gualdino (lgualdino@briarcliffmanor.org), (-) Order Number #100880972 on May 08, 2020 07:05 AM (PDT) pursuant to License Agreement with ICC & NYSDOS. No further reproduction, no

100880972

PREFACE

Introduction

The *Plumbing Code of New York State* (PCNYS) establishes minimum requirements for plumbing systems using prescriptive and performance-related provisions. It is founded on broad-based principles that make possible the use of new materials and new plumbing designs. This 2020 edition was developed as a derivative work of the 2018 edition of the *International Plumbing Code*® (IPC®) published by the International Code Council® (ICC®).

INTENTION

This code is founded on principles intended to establish provisions consistent with the scope of a plumbing code that adequately protects public health, safety and welfare; provisions that do not unnecessarily increase construction costs; provisions that do not restrict the use of new materials, products or methods of construction; and provisions that do not give preferential treatment to particular types or classes of materials, products or methods of construction.

Letter Designations in Front of Section Numbers

The bracketed letter designations for the party responsible for portions of this code are as follows:

ICC Code Development Committee

[A] = Administrative Code Development Committee;

[BE] = IBC—Means of Egress Code Development Committee;

[BG] = IBC—General Code Development Committee;

[BS] = IBC—Structural Code Development Committee;

[E] = International Energy Conservation Code Development Committee;

[F] = International Fire Code Development Committee;

[M] = International Mechanical Code Development Committee; and

New York State Code Development

[NY] = New York Department of State

Marginal Markings

Solid vertical lines in the margins within the body of the code indicate a technical change from the requirements of the 2015 edition of the I-Code®. Deletion indicators in the form of an arrow (➡) are provided in the margin where an entire section, paragraph, exception or table has been deleted or an item in a list of items or a table has been deleted.

A single asterisk [*] placed in the margin indicates that text or a table has been relocated within the code. A double asterisk [**] placed in the margin indicates that the text or table immediately following it has been relocated there from elsewhere in the code. The following table indicates such relocations in the 2020 edition of the *Plumbing Code of New York State*.

2020 LOCATION	2015 LOCATION
802.2	804.1

INTERNATIONAL CODE COUNCIL®
Copyright © 2019 ICC & NYSDOS. ALL RIGHTS RESERVED. Accessed by Lauren Gualdino (lgualdino@briarcliffmanor.org), (-) Order Number #100880972 on May 08, 2020 07:05 AM (PDT) pursuant to License Agreement with ICC & NYSDOS. No further reproduction, no

100880972

Italicized Terms

Words and terms defined in Chapter 2, Definitions, are italicized where they appear in code text and the Chapter 2 definition applies. Where such words and terms are not italicized, common-use definitions apply. The words and terms selected have code-specific definitions that the user should read carefully to facilitate better understanding of the code.

INTERNATIONAL CODE COUNCIL®
Copyright © 2019 ICC & NYSDOS. ALL RIGHTS RESERVED. Accessed by Lauren Gualdino (lgualdino@briarcliffmanor.org), (-) Order Number #100880972 on May 08, 2020 07:05 AM (PDT) pursuant to License Agreement with ICC & NYSDOS. No further reproduction, no

100880972

EFFECTIVE USE OF THE PLUMBING CODE OF NEW YORK STATE

The *Plumbing Code of New York State* (PCNYS) is a code that regulates the design and installation of plumbing systems including the plumbing fixtures in all types of buildings except for detached one- and two-family dwellings and townhouses that are not more than three stories above grade in height. The regulations for plumbing systems in one- and two-family dwellings and townhouses are covered by Chapters 25 through 33 of the *Residential Code of New York State* (RCNYS). The PCNYS addresses general plumbing regulations, fixture requirements, water heater installations and systems for water distribution, sanitary drainage, special wastes, venting, storm drainage and medical gases. The PCNYS does not address fuel gas piping systems as those systems are covered by the *Fuel Gas Code of New York State* (FGCNYS). The PCNYS also does not regulate swimming pool piping systems, process piping systems, or utility-owned piping and systems. The purpose of the PCNYS is to the establish the minimum acceptable level of safety to protect life and property from the potential dangers associated with supplying potable water to plumbing fixtures and outlets and the conveyance of bacteria-laden waste water from fixtures.

The IPC is primarily a specification-oriented (prescriptive) code with some performance-oriented text. For example, Section 405.1 is a performance statement but Chapter 6 contains the prescriptive requirements that will cause Section 405.1 to be satisfied.

Where a building contains plumbing fixtures, those fixtures requiring water must be provided with an adequate supply of water for proper operation. The number of required plumbing fixtures for a building is specified by this code and is based upon the anticipated maximum number of occupants for the building and the type of building occupancy. This code provides prescriptive criteria for sizing piping systems connected to those fixtures. Through the use of code-approved materials and the installation requirements specified in this code, plumbing systems will perform their intended function over the life of the building. In summary, the PCNYS sets forth the minimum requirements for providing safe water to a building as well as a safe manner in which liquid-borne wastes are carried away from a building.

Arrangement and Format of the 2020 PCNYS

The format of the PCNYS allows each chapter to be devoted to a particular subject with the exception of Chapter 3 which contains general subject matters that are not extensive enough to warrant their own independent chapter.

Chapters	Subjects
1–2	Administration and Definitions
3	General Regulations
4	Fixtures, Faucets and Fixture Fittings
5	Water Heaters
6	Water Supply and Distribution
7	Sanitary Drainage
8	Indirect/Special Waste
9	Vents
10	Traps, Interceptors and Separators
11	Storm Drainage
12	Special Piping (Medical Gas)
13	Nonpotable Water Systems
14	Subsurface Landscape Irrigation Systems
15	Referenced Standards
Appendices A–E	Appendices

INTERNATIONAL CODE COUNCIL®
Copyright © 2019 ICC & NYSDOS. ALL RIGHTS RESERVED. Accessed by Lauren Gualdino (lgualdino@briarcliffmanor.org), (-) Order Number #100880972 on May 08, 2020 07:05 AM (PDT) pursuant to License Agreement with ICC & NYSDOS. No further reproduction, no

100880972

The following is a chapter-by-chapter synopsis of the scope and intent of the provisions of the *Plumbing Code of New York State*:

Chapter 1 Scope and Administration. This chapter contains provisions for the application, enforcement and administration of subsequent requirements of the code. In addition to establishing the scope of the code, Chapter 1 identifies which buildings and structures come under its purview.

Chapter 2 Definitions. Chapter 2 is the repository of the definitions of terms used in the body of the code. Codes are technical documents and every word, term and punctuation mark can impact the meaning of the code text and the intended results. The code often uses terms that have a unique meaning in the code and the code meaning can differ substantially from the ordinarily understood meaning of the term as used outside of the code.

The terms defined in Chapter 2 are deemed to be of prime importance in establishing the meaning and intent of the code text that uses the terms. The user of the code should be familiar with and consult this chapter because the definitions are essential to the correct interpretation of the code and because the user may not be aware that a term is defined.

Where understanding of a term's definition is especially key to or necessary for understanding of a particular code provision, the term is shown in *italics*. This is true only for those terms that have a meaning that is unique to the code. In other words, the generally understood meaning of a term or phrase might not be sufficient or consistent with the meaning prescribed by the code; therefore, it is essential that the code-defined meaning be known.

Guidance regarding tense, gender and plurality of defined terms as well as guidance regarding terms not defined in this code is provided.

Chapter 3 General Regulations. The content of Chapter 3 is often referred to as "miscellaneous," rather than general regulations. This is the only chapter in the code whose requirements do not interrelate. If a requirement cannot be located in another chapter, it should be located in this chapter. Chapter 3 contains safety requirements for the installation of plumbing and nonplumbing requirements for all types of fixtures. This chapter also has requirements for the identification of pipe, pipe fittings, traps, fixtures, materials and devices used in plumbing systems.

The safety requirements of this chapter provide protection for the building's structural members, as well as prevent undue stress and strain on pipes. The building's structural stability is protected by the regulations for cutting and notching of structural members. Additional protection for the building occupants includes requirements to maintain the plumbing in a safe and sanitary condition, as well as privacy for those occupants.

Chapter 4 Fixtures, Faucets and Fixture Fittings. This chapter regulates the minimum number of plumbing fixtures that must be provided for every type of building. This chapter also regulates the quality of fixtures and faucets by requiring those items to comply with nationally recognized standards. Because fixtures must be properly installed so that they are usable by the occupants of the building, this chapter contains the requirements for the installation of fixtures. Because the requirements for the number of plumbing fixtures affects the design of a building, Chapter 29 of the *Building Code of New York State* (BCNYS) includes, verbatim, many of the requirements listed in Chapter 4 of this code.

Chapter 5 Water Heaters. Chapter 5 regulates the design, approval and installation of water heaters and related safety devices. The intent is to minimize the hazards associated with the installation and operation of water heaters. Although this code does not regulate the size of a water heater, it does regulate all other aspects of the water heater installation such as temperature and pressure relief valves, safety drip pans, installation and connections. Where a water heater also supplies water for space heating, this chapter regulates the maximum water temperature supplied to the water distribution system.

Chapter 6 Water Supply and Distribution. This chapter regulates the supply of potable water from both public and individual sources to every fixture and outlet so that it remains potable and uncontaminated. Chapter 6 also regulates the design of the water distribution system, which will allow fixtures to function properly and also help prevent backflow conditions. The unique require-

INTERNATIONAL CODE COUNCIL®
Copyright © 2019 ICC & NYSDOS. ALL RIGHTS RESERVED. Accessed by Lauren Gualdino (lgualdino@briarcliffmanor.org), (-) Order Number #100880972 on May 08, 2020 07:05 AM (PDT) pursuant to License Agreement with ICC & NYSDOS. No further reproduction, no

100880972

ments of the water supply for health care facilities are addressed separately. It is critical that the potable water supply system remain free of actual or potential sanitary hazards by providing protection against backflow.

Chapter 7 Sanitary Drainage. The purpose of Chapter 7 is to regulate the materials, design and installation of sanitary drainage piping systems as well as the connections made to the system. The intent is to design and install sanitary drainage systems that will function reliably, that are neither undersized nor oversized and that are constructed from materials, fittings and connections as prescribed herein. This chapter addresses the proper use of fittings for directing the flow into and within the sanitary drain piping system. Materials and provisions necessary for servicing the drainage system are also included in this chapter.

Chapter 8 Indirect/Special Waste. This chapter regulates drainage installations that require an indirect connection to the sanitary drainage system. Fixtures and plumbing appliances, such as those associated with food preparation or handling, health care facilities and potable liquids, must be protected from contamination that can result from connection to the drainage system. An indirect connection prevents sewage from backing up into a fixture or appliance, thus providing protection against potential health hazards. The chapter also regulates special wastes containing hazardous chemicals. Special waste must be treated to prevent any damage to the sanitary drainage piping and to protect the sewage treatment processes.

Chapter 9 Vents. Chapter 9 covers the requirements for vents and venting. Knowing why venting is required makes it easier to understand the intent of this chapter. Venting protects every trap against the loss of its seal. Provisions set forth in this chapter are geared toward limiting the pressure differentials in the drainage system to a maximum of 1 inch of water column (249 Pa) above or below atmospheric pressure (i.e., positive or negative pressures).

Chapter 10 Traps, Interceptors and Separators. This chapter contains design requirements and installation limitations for traps. Prohibited types of traps are specifically identified. Where fixtures do not frequently replenish the water in traps, a method is provided to ensure that the water seal of the trap will be maintained. Requirements for the design and location of various types of interceptors and separators are provided. Specific venting requirements are given for separators and interceptors as those requirements are not addressed in Chapter 9.

Chapter 11 Storm Drainage. Chapter 11 regulates the removal of storm water typically associated with rainfall. The proper installation of a storm drainage system reduces the possibility of structural collapse of a flat roof, prevents the leakage of water through the roof, prevents damage to the footings and foundation of the building and prevents flooding of the lower levels of the building.

Chapter 12 Special Piping and Storage Systems. This chapter contains the requirements for the design, installation, storage, handling and use of nonflammable medical gas systems, including inhalation anesthetic and vacuum piping systems, bulk oxygen storage systems and oxygen-fuel gas systems used for welding and cutting operations. The intent of these requirements is to minimize the potential fire and explosion hazards associated with the gases used in these systems.

Chapter 13 Nonpotable Water Systems. This chapter regulates the design and installation of nonpotable water systems. The reduction of potable water use in buildings has led building designers in some jurisdictions to use nonpotable water for irrigation and flushing of water closets and urinals. This chapter provides the overall requirements for these systems.

Chapter 14 Subsurface Landscape Irrigation Systems. This chapter regulates the design and installation of subsurface landscape irrigation systems for the disposal of on-site nonpotable water such as graywater. The reduction of potable water use in buildings has led building designers in some jurisdictions to use on-site nonpotable water for irrigation. This chapter provides the overall requirements for these systems.

Chapter 15 Referenced Standards. Chapter 15 contains a comprehensive list of all standards that are referenced in the code. The standards are part of the code to the extent of the reference to the standard. Compliance with the referenced standard is necessary for compliance with this code. By providing specifically adopted standards, the construction and installation requirements neces-

INTERNATIONAL CODE COUNCIL®
Copyright © 2019 ICC & NYSDOS. ALL RIGHTS RESERVED. Accessed by Lauren Gualdino (lgualdino@briarcliffmanor.org), (-) Order Number #100880972 on May 08, 2020 07:05 AM (PDT) pursuant to License Agreement with ICC & NYSDOS. No further reproduction, no

100880972

sary for compliance with the code can be readily determined. The basis for code compliance is, therefore, established and available on an equal basis to the building official, contractor, designer and owner.

Chapter 15 is organized in a manner that makes it easy to locate specific standards. It lists all of the referenced standards, alphabetically, by acronym of the promulgating agency of the standard. Each agency's standards are then listed in either alphabetical or numeric order based upon the standard identification. The list also contains the title of the standard; the edition (date) of the standard referenced; any addenda; and the section or sections of this code that reference the standard.

Appendix A Reserved.

Appendix B Rates of Rainfall for Various Cities. This appendix is informative and not part of the code. Appendix B provides specific rainfall rates for major cities in the United States.

Appendix C Structural Safety. Appendix C is provided so that the user does not have to refer to another code book for limitations for cutting, notching and boring of sawn lumber and cold-formed steel framing.

Appendix D Degree Day and Design Temperatures. This appendix provides valuable temperature information for designers and installers of plumbing systems in areas where freezing temperatures might exist.

Appendix E Sizing of Water Piping System. This appendix is informative and not part of the code. Appendix E provides two recognized methods for sizing the water service and water distribution piping for any structure. The method under Section E103 provides friction loss diagrams which require the user to "plot" points and read values from the diagrams in order to perform the required calculations and necessary checks. This method is the most accurate of the two presented in this appendix. The method under Section E201 is known to be conservative; however, very few calculations are necessary in order to determine a pipe size that satisfies the flow requirements of any application.

INTERNATIONAL CODE COUNCIL®
Copyright © 2019 ICC & NYSDOS. ALL RIGHTS RESERVED. Accessed by Lauren Gualdino (lgualdino@briarcliffmanor.org), (-) Order Number #100880972 on May 08, 2020 07:05 AM (PDT) pursuant to License Agreement with ICC & NYSDOS. No further reproduction, no

100880972

TABLE OF CONTENTS

CHAPTER 1 SCOPE AND ADMINISTRATION 1

Section

101 Title, Scope and Purpose 1
102 Applicability 1
103 Administration and Enforcement 3
104 Materials, Equipment and Methods of Construction 4
105 Building Permits, Construction Inspections, Stop Work Orders and Certificates of Occupancy 4
106 Submittal Documents 6
107 Service Utilities 7

CHAPTER 2 DEFINITIONS 9

Section

201 General 9
202 General Definitions 9

CHAPTER 3 GENERAL REGULATIONS 17

Section

301 General 17
302 Exclusion of Materials Detrimental to the Sewer System 17
303 Materials 17
304 Rodentproofing 17
305 Protection of Pipes and Plumbing System Components 18
306 Trenching, Excavation and Backfill 18
307 Structural Safety 19
308 Piping Support 19
309 Flood Hazard Resistance 19
310 Washroom and Toilet Room Requirements 20
311 Toilet Facilities for Workers 20
312 Tests and Inspections 20
313 Equipment Efficiencies 22
314 Condensate Disposal 22
315 Penetrations 23
316 Alternative Engineered Design 23

CHAPTER 4 FIXTURES, FAUCETS AND FIXTURE FITTINGS 25

Section

401 General 25
402 Fixture Materials 25
403 Minimum Plumbing Facilities 25
404 Accessible Plumbing Facilities 29
405 Installation of Fixtures 29
406 Automatic Clothes Washers 30
407 Bathtubs 31
408 Bidets 31
409 Dishwashing Machines 31
410 Drinking Fountains 31
411 Emergency Showers and Eyewash Stations 31
412 Faucets and Fixture Fittings 32
413 Floor and Trench Drains 32
414 Floor Sinks 32
415 Flushing Devices for Water Closets and Urinals . . . 32
416 Food Waste Disposer Units 33
417 Garbage Can Washers 33
418 Laundry Trays 33
419 Lavatories 33
420 Manual Food and Beverage Dispensing Equipment 34
421 Showers 34
422 Sinks 35
423 Specialty Plumbing Fixtures 35
424 Urinals 35
425 Water Closets 35
426 Whirlpool Bathtubs 35

CHAPTER 5 WATER HEATERS 37

Section

501 General 37
502 Installation 37
503 Connections 37
504 Safety Devices 38
505 Insulation 39

CHAPTER 6 WATER SUPPLY AND DISTRIBUTION 41

Section

601 General 41
602 Water Required 41
603 Water Service 41
604 Design of Building Water Distribution System 42

INTERNATIONAL CODE COUNCIL®
Copyright © 2019 ICC & NYSDOS. ALL RIGHTS RESERVED. Accessed by Lauren Gualdino (lgualdino@briarcliffmanor.org), (-) Order Number #100880972 on May 08, 2020 07:05 AM (PDT) pursuant to License Agreement with ICC & NYSDOS. No further reproduction, no

100880972

605 Materials, Joints and Connections 43
606 Installation of the Building Water Distribution System 49
607 Hot Water Supply System 50
608 Protection of Potable Water Supply 51
609 Health Care Plumbing 56
610 Disinfection of Potable Water System 56
611 Drinking Water Treatment Units 57
612 Solar Systems 57
613 Temperature Control Devices and Valves 57

CHAPTER 7 SANITARY DRAINAGE 59

Section
701 General 59
702 Materials 59
703 Building Sewer 60
704 Drainage Piping Installation 61
705 Joints 61
706 Connections Between Drainage Piping and Fittings 64
707 Prohibited Joints and Connections 64
708 Cleanouts 65
709 Fixture Units 66
710 Drainage System Sizing 66
711 Offsets in Drainage Piping in Buildings of Five Stories or More 68
712 Sumps and Ejectors 68
713 Computerized Drainage Design 69
714 Backwater Valves 69
715 Vacuum Drainage Systems 70
716 Replacement of Underground Building Sewers and Building Drains by Pipe-Bursting Methods 70

CHAPTER 8 INDIRECT/SPECIAL WASTE 71

Section
801 General 71
802 Indirect Wastes 71
803 Special Wastes 72

CHAPTER 9 VENTS 73

Section
901 General 73
902 Materials 73
903 Vent Terminals 73
904 Outdoor Vent Extensions 73
905 Vent Connections and Grades 74
906 Vent Pipe Sizing 74
907 Vents for Stack Offsets 74
908 Relief Vents—Stacks of More Than 10 Branch Intervals 76
909 Fixture Vents 76
910 Individual Vent 76
911 Common Vent 76
912 Wet Venting 77
913 Waste Stack Vent 77
914 Circuit Venting 78
915 Combination Waste and Vent System 78
916 Island Fixture Venting 78
917 Single-Stack Vent System 79
918 Air Admittance Valves 80
919 Engineered Vent Systems 80
920 Computerized Vent Design 81

CHAPTER 10 TRAPS, INTERCEPTORS AND SEPARATORS 83

Section
1001 General 83
1002 Trap Requirements 83
1003 Interceptors and Separators 84
1004 Materials, Joints and Connections 86

CHAPTER 11 STORM DRAINAGE 87

Section
1101 General 87
1102 Materials 87
1103 Traps 88
1104 Conductors and Connections 88
1105 Roof Drains 88
1106 Size of Conductors, Leaders and Storm Drains 88
1107 Siphonic Roof Drainage Systems 90
1108 Secondary (Emergency) Roof Drains 90
1109 Combined Sanitary and Storm Public Sewer 91
1110 Controlled Flow Roof Drain Systems 91
1111 Subsoil Drains 91
1112 Building Subdrains 91
1113 Sumps and Pumping Systems 92

INTERNATIONAL CODE COUNCIL®
Copyright © 2019 ICC & NYSDOS. ALL RIGHTS RESERVED. Accessed by Lauren Gualdino (lgualdino@briarcliffmanor.org), (-) Order Number #100880972 on May 08, 2020 07:05 AM (PDT) pursuant to License Agreement with ICC & NYSDOS. No further reproduction, no

100880972

CHAPTER 12 SPECIAL PIPING AND STORAGE SYSTEMS 93

Section

1201 General 93

1202 Medical Gases 93

1203 Oxygen Systems 93

CHAPTER 13 NONPOTABLE WATER SYSTEMS 95

Section

1301 General 95

1302 On-site Nonpotable Water Reuse Systems 97

1303 Nonpotable Rainwater Collection and Distribution Systems 99

1304 Reclaimed Water Systems. 101

CHAPTER 14 SUBSURFACE LANDSCAPE IRRIGATION SYSTEMS 103

Section

1401 General 103

1402 System Design and Sizing. 103

1403 Installation. 104

CHAPTER 15 REFERENCED STANDARDS 107

APPENDIX A RESERVED. 123

APPENDIX B RATES OF RAINFALL FOR VARIOUS CITIES 125

APPENDIX C STRUCTURAL SAFETY 127

Section

C101 Cutting, Notching and Boring in Wood Members. 127

APPENDIX D DEGREE DAY AND DESIGN TEMPERATURES. 129

APPENDIX E SIZING OF WATER PIPING SYSTEM. 131

Section

E101 General 131

E102 Information Required 131

E103 Selection of Pipe Size 131

E201 Selection of Pipe Size 148

E202 Determination of Pipe Volumes 148

INDEX 153

INTERNATIONAL CODE COUNCIL®

Copyright © 2019 ICC & NYSDOS. ALL RIGHTS RESERVED. Accessed by Lauren Gualdino (lgualdino@briarcliffmanor.org), (-) Order Number #100880972 on May 08, 2020 07:05 AM (PDT) pursuant to License Agreement with ICC & NYSDOS. No further reproduction, no

100880972

INTERNATIONAL CODE COUNCIL®

Copyright © 2019 ICC & NYSDOS. ALL RIGHTS RESERVED. Accessed by Lauren Gualdino (lgualdino@briarcliffmanor.org), (-) Order Number #100880972 on May 08, 2020 07:05 AM (PDT) pursuant to License Agreement with ICC & NYSDOS. No further reproduction, no

100880972

[NY] CHAPTER 1

SCOPE AND ADMINISTRATION

[NY] SECTION 101
TITLE, SCOPE AND PURPOSE

[NY] 101.1 Title. This publication shall be known as the 2020 edition of the *Plumbing Code of New York State* (PCNYS) hereinafter referred to as "this code." This code is part of the New York State Uniform Fire Prevention and Building Code (the "*Uniform Code*").

[NY] 101.1.1 Amendments of New York State code books. In Chapter 1, the term "New York State code books" shall include the *Residential Code of New York State*, the *Building Code of New York State*, the *Plumbing Code of New York State* (i.e., this publication), the *Mechanical Code of New York State*, the *Fuel Gas Code of New York State,* the *Fire Code of New York State*, the *Property Maintenance Code of New York State*, the *Existing Building Code of New York State*, and the *Energy Conservation Construction Code of New York State*. Provisions in any one or more of the New York State code books may be amended from time to time by provisions in 19 NYCRR Parts 1220 to 1227 or 19 NYCRR Part 1240, as currently in effect and as hereafter amended from time to time. If this publication is now or hereafter so amended, references in this publication to "this code" shall be deemed to be references to this publication as so amended. If any other New York State code book is now or hereafter so amended, references in this code to such other New York State code book shall be deemed to be references to such New York State code book as so amended.

[NY] 101.2 Scope. The provisions of this code shall apply to the erection, installation, alteration, repairs, relocation, replacement, addition to, use or maintenance of plumbing systems within this jurisdiction. This code shall regulate nonflammable medical gas, inhalation anesthetic, vacuum piping, nonmedical oxygen systems and sanitary and condensate vacuum collection systems. The installation of fuel gas distribution piping and equipment, fuel-gas-fired water heaters and water heater venting systems shall be regulated by the *Fuel Gas Code of New York State*. Provisions in the appendices shall not apply unless specifically adopted.

Exceptions:

1. The provisions of the *Residential Code of New York State* shall apply to the construction, *alteration*, movement, enlargement, replacement, *repair*, *equipment*, use and occupancy, location, removal and demolition of the following *buildings* and structures, provided that such *building* or structure is not more than three stories above grade plane in height, and their accessory structures not more than three stories above grade plane in height:
   1.1. Detached one-family dwellings.
   1.2. Detached two-family dwellings in which each dwelling unit has a separate means of egress.
   1.3. Townhouses.
   1.4. Bed and breakfast dwellings.
   1.5. Live/work units that (1) are located in townhouses, and (2) comply with the requirements of Section 419 of the *Building Code of New York State*.
   1.6. Owner-occupied lodging houses that (1) have five or fewer guestrooms and (2) are provided with a residential fire sprinkler system complying with Section P2904 of the *Residential Code of New York State*.
2. *Agricultural buildings*, including barns, sheds, poultry houses and other buildings and equipment on the premises that are used directly and solely for agricultural purposes, shall not be subject to the construction-related provisions of this code.
3. *Plumbing systems* in existing buildings that are undergoing repairs, alterations, changes in occupancy or construction of additions shall be permitted to comply with the *Existing Building Code of New York State*.

[NY] 101.2.1 Facilities regulated by State Departments and Agencies. Where a building or premises under the custody, licensure, supervision or jurisdiction of a department or agency of the State of New York is regulated as a one- or two-family dwelling or multiple single-family dwelling (*townhouse*), in accordance with established laws or regulations of that department or agency, said *buildings* or premises, such as a community residence or hospice residence, and their *accessory structures* shall comply with the *Residential Code of New York State*.

[NY] 101.2.2 Appendices. The following appendices have been adopted and are made part of this code:

Appendix C Structural Safety

Appendix D Degree Day and Design Temperatures

In addition, the following appendices are included for informational purposes:

Appendix B Rates of Rainfall for Various Cities

Appendix E Sizing of Water Piping System

[NY] 101.3 Purpose. The purpose of this code is to provide minimum requirements to safeguard life and limb, health, property and public welfare by regulating and controlling the design, construction, installation, quality of materials, location, operation and maintenance or use of plumbing equipment and systems.

[NY] SECTION 102
APPLICABILITY

[NY] 102.1 General. Where there is a conflict between a general requirement and a specific requirement, the specific

INTERNATIONAL CODE COUNCIL®
Copyright © 2019 ICC & NYSDOS. ALL RIGHTS RESERVED. Accessed by Lauren Gualdino (lgualdino@briarcliffmanor.org), (-) Order Number #100880972 on May 08, 2020 07:05 AM (PDT) pursuant to License Agreement with ICC & NYSDOS. No further reproduction, no

100880972

requirement shall be applicable. Where, in any specific case, different sections of this code specify different materials, methods of construction or other requirements, the most restrictive shall govern.

[NY] 102.2 Other laws and regulations. This code is part of the New York State Uniform Fire Prevention and Building Code (the *Uniform Code*) promulgated pursuant to Article 18 of the New York State Executive Law. The provisions of this code shall not be deemed to nullify any federal, state or local law, ordinance, administrative code, rule or regulation relating to any matter as to which the *Uniform Code* does not provide.

However:

1. Pursuant to Section 383(1) of the Executive Law, and except as otherwise provided in paragraphs a, b, and c of Section 383(1) of the Executive Law, the provisions of the *Uniform Code* supersede any other provision of a general, special or local law, ordinance, administrative code, rule or regulation inconsistent or in conflict with the *Uniform Code*;
2. Pursuant to Section 379(3) of the Executive Law, no city, town, village, county or other municipality shall have the power to supersede, void, repeal, or make less restrictive any provision of the *Uniform Code*; and
3. The ability of any city, town, or village, or the County of Nassau, to enact or adopt, and to enforce, a local law or ordinance imposing higher or more restrictive standards for construction within the jurisdiction of such city, town, village, or county that are applicable generally to such city, town, village, or county in the *Uniform Code* is subject to the provisions and requirements of Section 379 of the Executive Law.

Nothing in this Section 102.2 shall be construed as any of the following:

1. Affecting the authority of the State Labor Department to enforce a safety or health standard issued under provisions of Sections 27 and 27-a of the Labor Law;
2. Relieving a person from complying with a stricter standard issued pursuant to the Occupational Safety and Health Act of 1970, as amended; or
3. Superseding, limiting, impairing or otherwise affecting any provision of the *Uniform Code*, as now in effect and as hereafter amended from time to time.

[NY] 102.2.1 Other New York Codes, Rules and Regulations (NYCRR). Additional New York Codes, Rules and Regulations exist that may affect new and *existing buildings*, *structures*, systems and equipment. Such regulations include, but are not limited to, the following:

1. 19 NYCRR Part 300 (Universal Symbol of Access),
2. 19 NYCRR Part 1261 (Recordkeeping – Smoke Detectors in Multiple Dwellings),
3. 19 NYCRR Part 1264 (Identification of Buildings Utilizing Truss Type Construction), and
4. 19 NYCRR Part 1265 (Residential Structures with Truss Type Construction, Pre-Engineered Wood Construction and/or Timber Construction).

[NY] 102.3 Existing installations. Plumbing systems lawfully in existence at the time of the adoption of this code shall be permitted to have their use and maintenance continued if the use, maintenance or repair is in accordance with the original design, and hazard to life, health or property is not created by such plumbing system.

[NY] 102.3.1 Existing buildings. Additions, alterations, renovations or repairs related to building or structural issues shall be regulated by the *Existing Building Code of New York State*.

[NY] 102.4 Maintenance. Plumbing systems, materials and appurtenances, both existing and new, and parts thereof, shall be maintained in proper operating condition in accordance with the original design in a safe and sanitary condition. Devices or safeguards required by this code shall be maintained in compliance with the edition of the code under which they were installed. The owner or the owner's authorized agent shall be responsible for maintenance of plumbing systems. To determine compliance with this provision, the *building official* shall have the authority to require any plumbing system to be reinspected.

[NY] 102.5 Additions, alterations or repairs. Additions, alterations, renovations or repairs to any plumbing system shall conform to that required for a new plumbing system without requiring the existing plumbing system to comply with all the requirements of this code. Additions, alterations or repairs shall not cause an existing system to become unsafe, insanitary or overloaded.

Minor additions, alterations, renovations and repairs to existing plumbing systems shall meet the provisions for new construction, unless such work is done in the same manner and arrangement as was in the existing system, is not hazardous and is *approved*.

[NY] 102.6 Change in occupancy. No change shall be made in the use or occupancy of any building or structure unless such building or structure is made to comply with the requirements of the *Uniform Code* and *Energy Code*.

[NY] 102.7 Moved buildings. Except as determined by Section 102.3, plumbing systems that are a part of buildings or structures moved into or within the jurisdiction shall comply with the provisions of this code for new installations.

[NY] 102.8 Referenced codes and standards. The codes and standards referenced in this code shall be considered to be part of the requirements of this code to the prescribed extent of each such reference and as further regulated in Sections 102.8.1 and 102.8.2.

[NY] 102.8.1 Conflicts. Where conflicts occur between provisions of this code and the referenced standards, the provisions of this code shall apply.

[NY] 102.8.2 Provisions in referenced codes and standards. Where the extent of the reference to a referenced code or standard includes subject matter that is within the scope of this code, the provisions of this code, as applica-

INTERNATIONAL CODE COUNCIL®
Copyright © 2019 ICC & NYSDOS. ALL RIGHTS RESERVED. Accessed by Lauren Gualdino (lgualdino@briarcliffmanor.org), (-) Order Number #100880972 on May 08, 2020 07:05 AM (PDT) pursuant to License Agreement with ICC & NYSDOS. No further reproduction, no

100880972

ble, shall take precedence over the provisions in the referenced code or standard.

[NY] 102.9 Requirements not covered by code. Any requirements necessary for the strength, stability or proper operation of an existing or proposed plumbing system, or for the public safety, health and general welfare, not specifically covered by this code shall be determined by the *building official*.

[NY] 102.10 Application of references. Reference to chapter section numbers, or to provisions not specifically identified by number, shall be construed to refer to such chapter, section or provision of this code.

[NY] 102.11 Partial invalidity. If a section, subsection, sentence, clause or phrase of this code is, for any reason, held by a court of competent jurisdiction to be unconstitutional, such decision shall not affect the validity of the remaining portions of this code.

[NY] SECTION 103
ADMINISTRATION AND ENFORCEMENT

[NY] 103.1 Administration and enforcement. The *Uniform Code* shall be administered and enforced by the *authority having jurisdiction*. The identity of the *authority having jurisdiction* in a given situation is determined in accordance with Article 18 of the Executive Law and the regulations promulgated by the Secretary of State pursuant to Executive Law Section 381(1). In general, the *authority having jurisdiction* is the local government (city, town or village) in which the *building* or *structure* is located. In certain situations, the *authority having jurisdiction* may be the county in which the *building* or *structure* is located. In certain other cases, the State, the Secretary of State (acting through the Department of State) or some other State agency may be the *authority having jurisdiction*. The *authority having jurisdiction* responsible for administration and enforcement of the *Uniform Code* is also responsible for administration and enforcement of the *Energy Code*.

Administration and enforcement of the *Uniform Code* and *Energy Code* shall be in accordance with the following, as applicable:

1. Where a city, town, village or county is the *authority having jurisdiction*:
   - 1.1. Such city, town, village or county shall provide for administration and enforcement of the *Uniform Code* and *Energy Code* by local law, ordinance, other appropriate regulation, or combination thereof.
   - 1.2. The *Code Enforcement Program* established by such local law, ordinance or other appropriate regulation, or combination thereof, must include, at a minimum, the features described in *Part 1203* and must satisfy all other requirements of *Part 1203*.
   - 1.3. Such city, town, village or county shall administer and enforce the *Uniform Code* in accordance with the *Code Enforcement Program* established by such local law, ordinance or other appropriate regulation, or combination thereof.
2. Where the State is the *authority having jurisdiction* pursuant to 19 NYCRR Section 1201.2(d):
   - 2.1. The *Code Enforcement Program* shall be as established by *Part 1204*.
   - 2.2. The State, acting through one or more State agencies, shall administer and enforce the *Uniform Code* and *Energy Code* in accordance with *Part 1204*.
3. Where the Department of State is the *authority having jurisdiction*:
   - 3.1. The *Code Enforcement Program* shall be as established by *Part 1202*.
   - 3.2. The Department of State shall administer and enforce the *Uniform Code* and *Energy Code* in accordance with *Part 1202*.
4. Where any governmental unit or agency not included in Items 1, 2, and 3 above is the *authority having jurisdiction*:
   - 4.1. Such governmental unit or agency shall provide for administration and enforcement of the *Uniform Code* and *Energy Code* by regulation.
   - 4.2. The *Code Enforcement Program* established by such regulation must include, at a minimum, the features described in *Part 1203* and must satisfy all other requirements of *Part 1203*.
   - 4.3. Such governmental unit or agency shall administer and enforce the *Uniform Code* and *Energy Code* in accordance with the *Code Enforcement Program* established by such regulation.

Every governmental unit or agency thereof charged with administration and enforcement of the *Uniform Code* shall exercise its powers in due and proper manner so as to extend to the public protection from the hazards of fire and inadequate building construction.

Any person or entity constructing or renovating a *building* or *structure*, changing the use or occupancy of a *building* or *structure*, or engaging in any other activity that is subject to the provisions of the *Code Enforcement Program* of the *authority having jurisdiction* responsible for administration and enforcement of the *Uniform Code* with respect to such *building* shall comply with all applicable provisions of such *Code Enforcement Program.*

In addition, persons and entities who construct, renovate, use and occupy *buildings* and *structures* shall comply with all applicable provisions of Section 105 of this code.

[NY] 103.2 Due process. Nothing in Chapter 1, or elsewhere in this code, or elsewhere in the *Uniform Code*, or in any regulation promulgated pursuant to Executive Law Section 381(1), shall be construed as authorizing any *authority having jurisdiction* to administer and enforce the *Uniform Code* in a manner that deprives any person or entity of due process of law. In particular, but not by way of limitation, nothing in Chapter 1, or elsewhere in this code or elsewhere in the *Uniform Code*, or in any regulation promulgated pursuant to Executive Law Section 381(1), relating to posting, placarding and/or condemnation of *buildings* or *structures* that are unsafe, unfit for human occupancy or unlawful shall be con-

INTERNATIONAL CODE COUNCIL®
Copyright © 2019 ICC & NYSDOS. ALL RIGHTS RESERVED. Accessed by Lauren Gualdino (lgualdino@briarcliffmanor.org), (-) Order Number #100880972 on May 08, 2020 07:05 AM (PDT) pursuant to License Agreement with ICC & NYSDOS. No further reproduction, no

100880972

strued as authorizing any *authority having jurisdiction* to post, placard or condemn any such *building* or *structure* and/or to remove any *owner* or occupant or cause any *owner* or occupant to be removed from any such *building* or *structure* without providing such notice and opportunity to be heard (and, if applicable, right of appeal) as may be required under the applicable circumstances by applicable Constitutional provisions.

[NY] 103.2.1 Imminent danger. In cases of imminent danger, posting, placarding, and condemning a *building* or *structure* and removing *owners* and occupants or causing *owners* and occupants to be removed without first providing an opportunity to be heard shall be permitted to the extent consistent with applicable Constitutional provisions, provided that the affected persons and entities are afforded the opportunity for a post-action hearing to the extent required by applicable Constitutional provisions.

[NY] 103.3 Application for variance or appeal. An application for a variance or modification of any provision or requirement of *Uniform Code* shall be in accordance with the provisions of *Part 1205*. An appeal of any order or determination, or the failure within a reasonable time to make an order or determination, of an administrative official charged to enforce or purporting to enforce the *Uniform Code* may be made in accordance with the provisions of *Part 1205*.

[NY] SECTION 104
MATERIALS, EQUIPMENT AND METHODS OF CONSTRUCTION

[NY] 104.1 Approved materials and equipment. Materials, equipment, and devices *approved* by the *building official* shall be constructed and installed in accordance with such approval. Materials, equipment and devices tested by an *approved* testing laboratory shall be permitted to be constructed and installed in accordance with such approval.

[NY] 104.1.1 Used materials and equipment. Used materials, equipment, and devices shall not be reused unless they meet the requirements of this code for new materials.

[NY] 104.2 Waivers, variances, and modifications. Nothing in this code shall be construed as permitting any *building official* or any *authority having jurisdiction* to waive, vary, modify, or otherwise alter any provision or requirement of this code or any other provision or requirement of the *Uniform Code*. Provisions or requirements of the *Uniform Code* may be varied or modified only in accordance with procedures established by *Part 1205* or by such other regulations as may hereafter be promulgated by the Secretary of State pursuant to Section 381(1)(f) of the Executive Law.

[NY] 104.3 Alternative materials, equipment, appliances, designs, and methods of construction. The provisions of this code are not intended to prevent the installation of any materials, *equipment*, or *appliances* not specifically prescribed by this code, or to prohibit any designs or methods of construction not specifically prescribed by this code, provided that such alternative materials, *equipment*, *appliances*, designs, or methods of construction (1) are not specifically prohibited by any provision of this code, by any other provision of the *Uniform Code*, or by the *Energy Code* and (2) shall have been *approved*, in writing, by the *building official*. Alternative materials, *equipment*, *appliances*, designs, or methods of construction may be *approved* only when the *building official* shall have determined, in writing, that such alternative is:

1. Satisfactory and complies with the intent of the provisions and requirements of the *Uniform Code*.
2. Not less than the equivalent of that prescribed in the *Uniform Code* in quality, strength, effectiveness, fire resistance, durability, and safety.

Nothing in this Section 104.3 shall be construed as permitting any *building official* or any *authority having jurisdiction* to waive, vary, modify or otherwise alter any provision or requirement of this code or any other provision or requirement of the *Uniform Code*. Provisions or requirements of the *Uniform Code* may be varied or modified only pursuant to procedures established in *Part 1205* or by such other regulations as may hereafter be promulgated by the Secretary of State pursuant to Section 381(1)(f) of the Executive Law.

[NY] 104.4 Workmanship. Repairs, maintenance work, alterations or installations which are caused directly or indirectly by the enforcement of the *Uniform Code* shall be executed and installed in a *workmanlike* manner and in accordance with the *Uniform Code* and the manufacturer's installation instructions.

[NY] SECTION 105
BUILDING PERMITS, CONSTRUCTION INSPECTIONS, STOP WORK ORDERS, AND CERTIFICATES OF OCCUPANCY

[NY] 105.1 Purpose. The purpose of Section 105 is to include the *Uniform Code* provisions requiring persons and entities who construct, renovate, use and occupy buildings and structures to apply for and obtain *building permits*, to facilitate construction inspections, to obey stop work orders, to obtain *certificates of occupancy*, and to obtain *operating permits*. The provisions in Section 105 are considered to be integral parts of the *Uniform Code's* standards for construction, maintenance, and fire protection equipment and systems.

[NY] 105.1.1 Definition. For the purpose of Section 105, the term "other applicable law" shall include the *authority having jurisdiction's Code Enforcement Program*; any local law, ordinance, or regulation establishing the *authority having jurisdiction's Code Enforcement Program*; and any other applicable statute, regulation, rule, local law, or ordinance.

[NY] 105.2 Building permits. No person or entity shall commence, perform, or continue any work that must conform with the *Uniform Code* and/or *Energy Code* unless:

1. Such person or entity has applied to the *authority having jurisdiction* for a *building permit*,
2. The *authority having jurisdiction* has issued a *building permit* authorizing such work,
3. Such *building permit* has not been revoked or suspended, and

INTERNATIONAL CODE COUNCIL®
Copyright © 2019 ICC & NYSDOS. ALL RIGHTS RESERVED. Accessed by Lauren Gualdino (lgualdino@briarcliffmanor.org), (-) Order Number #100880972 on May 08, 2020 07:05 AM (PDT) pursuant to License Agreement with ICC & NYSDOS. No further reproduction, no

100880972

4. Such *building permit* has not expired.

[NY] 105.2.1 Work exempt from building permit requirement. A *building permit* shall not be required for work in any category that is excluded from the *building permit* requirement by the *authority having jurisdiction's Code Enforcement Program*, provided that *Part 1203* allows an *authority having jurisdiction* to exclude such category of work from the *building permit* requirement. Exemptions from *building permit* requirements shall not be deemed to grant authorization for any work to be done in any manner in violation of any provision the *Uniform Code*, any provision of the *Energy Code*, or any provision of any other applicable law.

[NY] 105.2.2 Applications for building permits. A person or entity applying for a *building permit* shall submit an application to the *authority having jurisdiction.* An application for a *building permit* shall include:

1. *Construction documents* that satisfy the requirements of Section 106.2.
2. Any and all other submittal documents required by Section 106.
3. Any and all other information and documentation that may be required by the stricter of the *authority having jurisdiction's Code Enforcement Program* or a *Part 1203—Compliant Code Enforcement Program*.
4. Such other information and documentation as the *authority having jurisdiction* may determine to be necessary to allow the *authority having jurisdiction* to determine whether the proposed work conforms with the *Uniform Code*, the *Energy Code*, and other applicable laws.

[NY] 105.2.3 Approval of construction documents. When the *authority having jurisdiction* issues a *building permit*, the *authority having jurisdiction* shall *approve* the *construction documents* in writing. Work shall be installed in accordance with the *approved construction documents* and the terms and conditions, if any, of the *building permit*.

[NY] 105.2.4 Validity of building permit. The issuance or granting of a *building permit* shall not be construed to be a *permit* for, or an approval of, any violation of any provision of the *Uniform Code*, the *Energy Code*, or of any other applicable law. A *building permit* purporting to give authority to violate or cancel any provision of the *Uniform Code*, the *Energy Code*, or any other applicable law shall not be valid. The issuance of a *building permit* based on *construction documents* and other data shall not prevent the *building official* from requiring the correction of errors in the *construction documents* and other data.

[NY] 105.2.5 Suspension or revocation of building permit. The *authority having jurisdiction* is authorized to suspend or revoke a *building permit* wherever the *building permit* is issued in error; or on the basis of incorrect, inaccurate or incomplete information; or in violation of any provision of the *Uniform Code*, the *Energy Code*, or any other applicable law. Any such suspension or revocation shall be in writing, signed an authorized agent of the *authority having jurisdiction.*

[NY] 105.2.6 Placement of building permit and approved construction documents. The *building permit,* or a copy thereof, and at least one set of *approved construction documents* shall be kept on the site of the work until the completion of the project. The *approved construction documents* shall be open to inspection by any authorized representative of the *authority having jurisdiction*.

[NY] 105.3 Construction inspections. Any person or entity performing work for which a *building permit* has been issued shall keep work accessible and exposed until the work has been inspected and accepted by the *authority having jurisdiction*, or its authorized agent, at each element of the construction process that is applicable to the work and specified in the stricter of the *authority having jurisdiction's Code Enforcement Program* or a *Part 1203—Compliant Code Enforcement Program*.

[NY] 105.3.1 Inspection requests. It shall be the duty of the holder of the *building permit* or their duly authorized agent to notify the *building official* when work is ready for inspection. It shall be the duty of the *building permit* holder to provide access to and means for inspections of such work that are required by this code.

[NY] 105.4 Stop work orders. The *authority having jurisdiction* is authorized to issue a stop work order to halt work that is being performed without a required *building permit*; work that is being performed after a required *building permit* has been revoked or suspended or has expired*;* work that is being conducted in a dangerous or unsafe manner; or work that is contrary to provisions of the *Uniform Code*, the *Energy Code*, the *approved construction documents*, or the terms and conditions (if any) of the *building permit*. No person or entity shall commence, perform or continue any work if the *authority having jurisdiction* has issued a stop work order with respect to such work.

[NY] 105.5 Certificates of occupancy. Where the stricter of the *authority having jurisdiction's Code Enforcement Program* or a *Part 1203—Compliant Code Enforcement Program* requires a *certificate of occupancy* for permission to use or occupy a *building* or *structure*, or any portion thereof, no person or entity shall use or occupy such *building* or *structure*, or such portion thereof, unless:

1. The *authority having jurisdiction* has issued such *certificate of occupancy*.
2. Such *certificate of occupancy* has not been revoked or suspended.
3. In the case of a temporary *certificate of occupancy*, such temporary *certificate of occupancy* has not expired.

[NY] 105.5.1 Authorized uses and occupancies. Where a *certificate of occupancy* has been issued for a *building* or *structure*, or any portion thereof, no person or entity shall use or occupy such *building* or *structure*, or such portion thereof, for any use or occupancy other than that authorized by such *certificate of occupancy*.

INTERNATIONAL CODE COUNCIL®
Copyright © 2019 ICC & NYSDOS. ALL RIGHTS RESERVED. Accessed by Lauren Gualdino (lgualdino@briarcliffmanor.org), (-) Order Number #100880972 on May 08, 2020 07:05 AM (PDT) pursuant to License Agreement with ICC & NYSDOS. No further reproduction, no

100880972

[NY] 105.5.2 Change in use or occupancy. Without regard to whether a *certificate of occupancy* shall have been issued, no person or entity shall convert the use or occupancy of a *building* or *structure*, or any portion thereof, from one use or occupancy to another without first obtaining a *building permit* to perform the work, if any, required for such conversion; performing such work, if any; and obtaining a *certificate of occupancy* from the *authority having jurisdiction.*

[NY] 105.6 Operating permits. Where the stricter of the *authority having jurisdiction's Code Enforcement Program* or a *Part 1203—Compliant Code Enforcement Program* requires an *operating permit* to conduct an activity or to use a category of *building*, no person or entity shall conduct such activity or use such category of *building* without obtaining an *operating permit* from the *authority having jurisdiction*. The procedures for applying for, issuing, revoking, and suspending *operating permits* shall be as set forth in the stricter of the *authority having jurisdiction's Code Enforcement Program* or a *Part 1203—Compliant Code Enforcement Program*.

[NY] 105.7 Violations. Any violation of any provision set forth in Sections 105.2 through 105.6 shall be a violation of the *Uniform Code*, and any person or entity violating any such provision shall be subject to the penalties prescribed in Executive Law Section 382(2). In addition, to the extent that any act or omission that violates any provision set forth in Sections 105.2 through 105.6 is also a violation of any other applicable law, any person or entity guilty of such act or omission shall also be subject to the penalties prescribed in or otherwise applicable to a violation of such other applicable law.

[NY] SECTION 106
SUBMITTAL DOCUMENTS

[NY] 106.1 General. Submittal documents consisting of *construction documents*, statements of *special inspections*, geotechnical reports, and other data shall be submitted with each application for a *building permit*.

[NY] 106.2 Construction documents. *Construction documents* shall be in accordance with Sections 106.2.1 through 106.2.9.

[NY] 106.2.1 Information on construction documents. *Construction documents* (1) shall define the scope of the proposed work; (2) shall be of sufficient clarity to indicate the location, nature and extent of the proposed work; (3) shall show in detail that the proposed work will conform to the provisions of the *Uniform Code*, the *Energy Code*, and other applicable codes, laws, ordinances, and regulations; (4) shall include all information required by any provision of this code (including, but not limited to, the information described in Sections 106.2.2 through 106.2.8), all information required by any other applicable provision of the *Uniform Code*, and all information required by any applicable provision of the *Energy Code*; and (5) shall include any and all additional information and documentation that may be required by the stricter of the *Code Enforcement Program* of the *authority having jurisdiction* or a *Part 1203—Compliant Code Enforcement Program*.

[NY] 106.2.1.1 Manufacturer's installation instructions. Manufacturer's installation instructions, as required by any applicable provision of the *Uniform Code* or by any applicable provision of the *Energy Code*, shall be available on the job site at the time of inspection.

[NY] 106.2.2 Fire protection system shop drawings. Shop drawings for the *fire protection system(s)* shall be submitted to indicate conformance to Chapter 9 of the *Building Code of New York State*, any other applicable provision of the *Uniform Code*, and the *construction documents.* Such shop drawings shall be *approved* prior to the start of system installation. Shop drawings shall contain all information as required by the installation standards referenced in Chapter 9 of the *Building Code of New York State* or in any other applicable provision of the *Uniform Code*.

[NY] 106.2.3 Means of egress. The *construction documents* shall show in sufficient detail the location, construction, size and character of all portions of the *means of egress,* including the path of the *exit discharge* to the *public way* in compliance with the provisions of the *Uniform Code*. In other than occupancies in Groups R-2, R-3, and I-1, the *construction documents* shall designate the number of occupants to be accommodated on every floor, and in all rooms and spaces.

[NY] 106.2.4 Exterior wall envelope. *Construction documents* for all buildings shall describe the *exterior wall envelope* in sufficient detail to determine compliance with the *Uniform Code* and the *Energy Code*. The *construction documents* shall provide details of the *exterior wall envelope* as required, including flashing, intersections with dissimilar materials, corners, end details, control joints, intersections at roof, eaves or parapets, means of drainage, water-resistive membrane and details around openings.

The *construction documents* shall include manufacturer's installation instructions that provide supporting documentation that the proposed penetration and opening details described in the *construction documents* maintain the weather resistance of the *exterior wall envelope*. The supporting documentation shall fully describe the *exterior wall* system that was tested, where applicable, as well as the test procedure used.

[NY] 106.2.5 Exterior balconies and elevated walking surfaces. Where balconies or other elevated walking surfaces are exposed to water from direct or blowing rain, snow, or irrigation, and the structural framing is protected by an impervious moisture barrier, the *construction documents* shall include details for all elements of the impervious moisture barrier system. The *construction documents* shall include manufacturer's installation instructions.

[NY] 106.2.6 Site plan. The *construction documents* submitted with the application for a *building permit* shall be accompanied by a site plan showing to scale the size and location of new construction and existing *structures* on the site, distances from *lot lines*, the established street grades and the proposed finished grades and, as applicable, *flood*

INTERNATIONAL CODE COUNCIL®
Copyright © 2019 ICC & NYSDOS. ALL RIGHTS RESERVED. Accessed by Lauren Gualdino (lgualdino@briarcliffmanor.org), (-) Order Number #100880972 on May 08, 2020 07:05 AM (PDT) pursuant to License Agreement with ICC & NYSDOS. No further reproduction, no

100880972

hazard areas, *floodways*, and *design flood elevations*. The site plan shall be drawn in accordance with an accurate boundary line survey. In the case of demolition, the site plan shall show construction to be demolished and the location and size of existing structures and construction that are to remain on the site or plot. The *building official* is authorized to waive or modify the requirement for a site plan where the application for a *building permit* is for an *alteration* or *repair* or where otherwise warranted.

[NY] 106.2.6.1 Design flood elevations. Where *design flood elevations* are not specified, they shall be established in accordance with Section 1612.3.1 of the *Building Code of New York State.*

[**NY] 106.2.6.2 Flood hazard documentation.** If located in a *flood hazard area*, documentation of the elevation of the lowest floor as required in Section 1612.4 of the *Building Code of New York State* shall be submitted to the *building official* prior to the final inspection.

[NY] 106.2.7 Structural information. The *construction documents* shall provide the information specified in Section 1603 of the *Building Code of New York State*.

[NY] 106.2.8 Relocatable buildings. *Construction documents* for relocatable buildings shall comply with Section 3112 of the *Building Code of New York State*.

[NY] 106.2.9 Design professional. *Construction documents* shall be prepared by a registered *design professional* when required by Article 145 or Article 147 of the New York State Education Law, by the stricter of *Code Enforcement Program* of the *authority having jurisdiction* or a *Part 1203—Compliant Code Enforcement Program*, or by any other applicable statute, regulation, or local law or ordinance.

[NY] SECTION 107
SERVICE UTILITIES

[NY] 107.1 Connection of service utilities. Connections from a utility, source of energy, fuel or power to any *building* or system which is regulated by *Uniform Code* shall be made in accordance with the requirements of the *Uniform Code;* the regulations of the public utility providing such utility, source of energy, fuel or power; and the regulations of any governmental unit or agency having jurisdiction over such utility, source of energy, fuel or power.

[NY] 107.1.1 Temporary connection. Where *approved* by the *building official,* temporary connections from a utility, source of energy, fuel or power to a *building* or system may be made. Temporary connections shall be made in accordance with Section 107.1.

[NY] 107.2 Notice of disconnection of service utilities. The *owner* or the *owner's* authorized agent shall notify the *building official* of the disconnection of any utility service to the *building*, *structure*, or system regulated by the *Uniform Code*.

INTERNATIONAL CODE COUNCIL®
Copyright © 2019 ICC & NYSDOS. ALL RIGHTS RESERVED. Accessed by Lauren Gualdino (lgualdino@briarcliffmanor.org), (-) Order Number #100880972 on May 08, 2020 07:05 AM (PDT) pursuant to License Agreement with ICC & NYSDOS. No further reproduction, no

100880972

INTERNATIONAL CODE COUNCIL®
Copyright © 2019 ICC & NYSDOS. ALL RIGHTS RESERVED. Accessed by Lauren Gualdino (lgualdino@briarcliffmanor.org), (-) Order Number #100880972 on May 08, 2020 07:05 AM (PDT) pursuant to License Agreement with ICC & NYSDOS. No further reproduction, no

100880972

CHAPTER 2
DEFINITIONS

SECTION 201
GENERAL

201.1 Scope. Unless otherwise expressly stated, the following words and terms shall, for the purposes of this code, have the meanings shown in this chapter.

201.2 Interchangeability. Words stated in the present tense include the future; words stated in the masculine gender include the feminine and neuter; the singular number includes the plural and the plural the singular.

201.3 Terms defined in other codes. Where terms are not defined in this code and are defined in the *Building Code of New York State*, *Fire Code of New York State*, *Fuel Gas Code of New York State* or the *Mechanical Code of New York State*, such terms shall have the meanings ascribed to them as in those codes.

201.4 Terms not defined. Where terms are not defined through the methods authorized by this section, such terms shall have ordinarily accepted meanings such as the context implies.

SECTION 202
GENERAL DEFINITIONS

ACCEPTED ENGINEERING PRACTICE. That which conforms to accepted principles, tests or standards of nationally recognized technical or scientific authorities.

[M] ACCESS (TO). That which enables a fixture, appliance or equipment to be reached by ready *access* or by a means that first requires the removal or movement of a panel, door or similar obstruction (see "Ready *access*").

ACCESS COVER. A removable plate, usually secured by bolts or screws, to permit *access* to a pipe or pipe fitting for the purposes of inspection, repair or cleaning.

[BE] ACCESSIBLE. A site, building, facility or portion thereof that complies with Chapter 11 of the *Building Code of New York State*.

ADAPTER FITTING. An *approved* connecting device that suitably and properly joins or adjusts pipes and fittings that do not otherwise fit together.

AIR ADMITTANCE VALVE. One-way valve designed to allow air to enter the plumbing drainage system when negative pressures develop in the piping system. The device shall close by gravity and seal the vent terminal at zero differential pressure (no-flow conditions) and under positive internal pressures. The purpose of an air admittance valve is to provide a method of allowing air to enter the plumbing drainage system without the use of a vent extended to open air and to prevent *sewer* gases from escaping into a building.

AIR BREAK (Drainage System). A piping arrangement in which a drain from a fixture, appliance or device discharges indirectly into another fixture, receptacle or interceptor at a point below the *flood level rim* and above the trap seal.

AIR GAP (Drainage System). The unobstructed vertical distance through the free atmosphere between the outlet of the waste pipe and the *flood level rim* of the receptacle into which the waste pipe is discharging.

AIR GAP (Water Distribution System). The unobstructed vertical distance through the free atmosphere between the lowest opening from any pipe or faucet supplying water to a tank, plumbing fixture or other device and the *flood level rim* of the receptacle.

ALTERNATE ON-SITE NONPOTABLE WATER. Nonpotable water from other than public utilities, on-site surface sources and subsurface natural freshwater sources. Examples of such water are graywater, on-site reclaimed water, collected rainwater, captured condensate and rejected water from reverse osmosis systems.

ALTERNATIVE ENGINEERED DESIGN. A plumbing system that performs in accordance with the intent of Chapters 3 through 14 and provides an equivalent level of performance for the protection of public health, safety and welfare. The system design is not specifically regulated by Chapters 3 through 14.

ANCHORS. See "Supports."

ANTISIPHON. A term applied to valves or mechanical devices that eliminate siphonage.

[A] APPROVED. Acceptable to the *building official*.

[A] APPROVED AGENCY. An established and recognized agency that is regularly engaged in conducting tests or furnishing inspection services, or furnishing product certification where such agency has been *approved* by the *building official*.

AREA DRAIN. A receptacle designed to collect surface or storm water from an open area.

[NY] AUTHORITY HAVING JURISDICTION. The governmental unit or agency responsible for administration and enforcement of this code.

BACKFLOW. Pressure created by any means in the water distribution system, which by being in excess of the pressure in the water supply mains causes a potential backflow condition.

Backpressure, low head. A pressure less than or equal to 4.33 psi (29.88 kPa) or the pressure exerted by a 10-foot (3048 mm) column of water.

Backsiphonage. The backflow of potentially contaminated water into the potable water system as a result of the pressure in the potable water system falling below atmospheric pressure of the plumbing fixtures, pools, tanks or vats connected to the potable water distribution piping.

*

INTERNATIONAL CODE COUNCIL®
Copyright © 2019 ICC & NYSDOS. ALL RIGHTS RESERVED. Accessed by Lauren Gualdino (lgualdino@briarcliffmanor.org), (-) Order Number #100880972 on May 08, 2020 07:05 AM (PDT) pursuant to License Agreement with ICC & NYSDOS. No further reproduction, no

100880972

Water supply system. The flow of water or other liquids, mixtures or substances into the distribution pipes of a potable water supply from any source except the intended source.

BACKFLOW CONNECTION. Any arrangement whereby backflow is possible.

** **BACKFLOW, DRAINAGE.** A reversal of flow in the drainage system.

BACKFLOW PREVENTER. A backflow prevention assembly, a backflow prevention device or other means or method to prevent backflow into the potable water supply.

BACKWATER VALVE. A device or valve installed in the *building drain* or *sewer* pipe where a *sewer* is subject to backflow, and that prevents drainage or waste from backing up into a lower level or fixtures and causing a flooding condition.

[BS] BASE FLOOD ELEVATION. A reference point, determined in accordance with the building code, based on the depth or peak elevation of flooding, including wave height, which has a 1 percent (100-year flood) or greater chance of occurring in any given year.

BATHROOM GROUP. A group of fixtures consisting of a water closet, lavatory, bathtub or shower, including or excluding a bidet, an *emergency floor drain* or both. Such fixtures are located together on the same floor level.

BRANCH. Any part of the piping system except a riser, main or *stack*.

BRANCH INTERVAL. A vertical measurement of distance, 8 feet (2438 mm) or more in *developed length*, between the connections of horizontal *branches* to a drainage *stack*. Measurements are taken down the *stack* from the highest horizontal *branch* connection.

BRANCH VENT. A vent connecting one or more individual vents with a vent *stack* or *stack* vent.

[A] BUILDING. Any structure utilized or intended for supporting or sheltering any occupancy.

[NY] BUILDING CODE OF NEW YORK STATE. The 2020 edition of the publication entitled "Building Code of New York State," published by the International Code Council, Inc. (publication date November 2019).

BUILDING DRAIN. That part of the lowest piping of a drainage system that receives the discharge from soil, waste and other drainage pipes inside and that extends 30 inches (762 mm) in *developed length* of pipe beyond the exterior walls of the building and conveys the drainage to the *building sewer*.

Combined. A *building drain* that conveys both sewage and storm water or other drainage.

Sanitary. A *building drain* that conveys sewage only.

Storm. A *building drain* that conveys storm water or other drainage, but not sewage.

[NY] BUILDING OFFICIAL. The officer or other designated authority charged with the administration and enforcement of this code, or a duly authorized representative.

BUILDING SEWER. That part of the drainage system that extends from the end of the *building drain* and conveys the discharge to a *public sewer*, *private sewer*, individual sewage disposal system or other point of disposal.

Combined. A *building sewer* that conveys both sewage and storm water or other drainage.

Sanitary. A *building sewer* that conveys sewage only.

Storm. A *building sewer* that conveys storm water or other drainage, but not sewage.

BUILDING SUBDRAIN. That portion of a drainage system that does not drain by gravity into the *building sewer*.

BUILDING TRAP. A device, fitting or assembly of fittings installed in the *building drain* to prevent circulation of air between the drainage system of the building and the *building sewer*.

CIRCUIT VENT. A vent that connects to a horizontal drainage *branch* and vents two traps to not more than eight traps or trapped fixtures connected into a battery.

CIRCULATING HOT WATER SYSTEM. A specifically designed water distribution system where one or more pumps are operated in the service hot water piping to circulate heated water from the water-heating equipment to fixture supply and back to the water-heating equipment.

CISTERN. A small covered tank for storing water for a home or farm. Generally, this tank stores rainwater to be utilized for purposes other than in the potable water supply, and such tank is placed underground in most cases.

CLEANOUT. An access opening in the drainage system utilized for the removal of obstructions. Types of cleanouts include a removable plug or cap, and a removable fixture or fixture trap.

[A] CODE. These regulations, subsequent amendments thereto or any emergency rule or regulation that the administrative authority having jurisdiction has lawfully adopted.

[NY] CODE ENFORCEMENT PROGRAM. The program under which an *authority having jurisdiction* administers and enforces this code, as such program is currently in effect and as such program may hereafter be amended from time to time.

COLLECTION PIPE. Unpressurized pipe used within the collection system that drains on-site nonpotable water or rainwater to a storage tank by gravity.

COMBINATION FIXTURE. A fixture combining one sink and laundry tray or a two- or three-compartment sink or laundry tray in one unit.

COMBINATION WASTE AND VENT SYSTEM. A specially designed system of waste piping embodying the horizontal wet venting of one or more sinks, lavatories, drinking fountains or floor drains by means of a common waste and vent pipe adequately sized to provide free movement of air above the flow line of the drain.

COMBINED BUILDING DRAIN. See "*Building drain*, combined."

COMBINED BUILDING SEWER. See "*Building sewer*, combined."

INTERNATIONAL CODE COUNCIL®
Copyright © 2019 ICC & NYSDOS. ALL RIGHTS RESERVED. Accessed by Lauren Gualdino (lgualdino@briarcliffmanor.org), (-) Order Number #100880972 on May 08, 2020 07:05 AM (PDT) pursuant to License Agreement with ICC & NYSDOS. No further reproduction, no

100880972

COMMON VENT. A vent connecting at the junction of two *fixture drains* or to a fixture *branch* and serving as a vent for both fixtures.

CONCEALED FOULING SURFACE. Any surface of a plumbing fixture that is not readily visible and is not scoured or cleansed with each fixture operation.

CONDUCTOR. A pipe inside the building that conveys storm water from the roof to a storm or combined *building drain*.

[A] CONSTRUCTION DOCUMENT. All of the written, graphic and pictorial documents prepared or assembled for describing the design, location and physical characteristics of the elements of the project necessary for obtaining a building permit. The construction drawings shall be drawn to an appropriate scale.

CONTAMINATION. An impairment of the quality of the potable water that creates an actual hazard to the public health through poisoning or the spread of disease by sewage, industrial fluids or waste.

CRITICAL LEVEL (C-L). An elevation (height) reference point that determines the minimum height at which a backflow preventer or vacuum breaker is installed above the *flood level rim* of the fixture or receptor served by the device. The critical level is the elevation level below which there is a potential for backflow to occur. If the critical level marking is not indicated on the device, the bottom of the device shall constitute the critical level.

CROSS CONNECTION. Any physical connection or arrangement between two otherwise separate piping systems, one of which contains potable water and the other either water of unknown or questionable safety or steam, gas or chemical, whereby there exists the possibility for flow from one system to the other, with the direction of flow depending on the pressure differential between the two systems (see "Backflow").

DEMAND RECIRCULATION WATER SYSTEM. A water distribution system where one or more pumps prime the service hot water piping with heated water upon a demand for hot water.

DEPTH OF TRAP SEAL. The depth of liquid that would have to be removed from a full trap before air could pass through the trap.

[BS] DESIGN FLOOD ELEVATION. The elevation of the "design flood," including wave height, relative to the datum specified on the community's legally designated flood hazard map. In areas designated as Zone AO, the *design flood elevation* shall be the elevation of the highest existing grade of the building's perimeter plus the depth number (in feet) specified on the flood hazard map. In areas designated as Zone AO where a depth number is not specified on the map, the depth number shall be taken as being equal to 2 feet (610 mm).

DEVELOPED LENGTH. The length of a pipeline measured along the centerline of the pipe and fittings.

DISCHARGE PIPE. A pipe that conveys the discharge from plumbing fixtures or appliances.

DRAIN. Any pipe that carries wastewater or waterborne wastes in a building drainage system.

DRAINAGE FITTING. The type of fitting or fittings utilized in the drainage system. Drainage fittings are similar to cast-iron fittings, except that instead of having a bell and spigot, drainage fittings are recessed and tapped to eliminate ridges on the inside of the installed pipe.

DRAINAGE FIXTURE UNIT.

Drainage (dfu). A measure of the probable discharge into the drainage system by various types of plumbing fixtures. The drainage fixture-unit value for a particular fixture depends on its volume rate of drainage discharge, on the time duration of a single drainage operation and on the average time between successive operations.

DRAINAGE SYSTEM. Piping within a *public* or *private* premise that conveys sewage, rainwater or other liquid waste to a point of disposal. A drainage system does not include the mains of a *public sewer* system or a private or public sewage treatment or disposal plant.

Building gravity. A drainage system that drains by gravity into the *building sewer*.

Sanitary. A drainage system that carries sewage and excludes storm, surface and ground water.

Storm. A drainage system that carries rainwater, surface water, subsurface water and similar liquid waste.

DRINKING FOUNTAIN. A plumbing fixture that is connected to the potable water distribution system and the drainage system. The fixture allows the user to obtain a drink directly from a stream of flowing water without the use of any accessories.

EFFECTIVE OPENING. The minimum cross-sectional area at the point of water supply discharge, measured or expressed in terms of the diameter of a circle or, if the opening is not circular, the diameter of a circle of equivalent cross-sectional area. For faucets and similar fittings, the *effective opening* shall be measured at the smallest orifice in the fitting body or in the supply piping to the fitting.

EMERGENCY FLOOR DRAIN. A floor drain that does not receive the discharge of any drain or indirect waste pipe, and that protects against damage from accidental spills, fixture overflows and leakage.

[NY] ENERGY CODE. The New York State Energy Conservation Construction Code, adopted pursuant to Article 11 of the New York State Energy Law.

ESSENTIALLY NONTOXIC TRANSFER FLUID. Fluids having a Gosselin rating of 1, including propylene glycol; mineral oil; polydimethylsiloxane; hydrochlorofluorocarbon, chlorofluorocarbon and carbon refrigerants; and FDA approved boiler water additives for steam boilers.

ESSENTIALLY TOXIC TRANSFER FLUID. Soil, waste or graywater and fluids having a Gosselin rating of 2 or more, including ethylene glycol, hydrocarbon oils, ammonia refrigerants and hydrazine.

[NY] EXISTING BUILDING CODE OF NEW YORK STATE. The 2020 edition of the publication entitled "Existing Building Code of New York State," published by the International Code Council, Inc. (publication date November 2019).

INTERNATIONAL CODE COUNCIL®
Copyright © 2019 ICC & NYSDOS. ALL RIGHTS RESERVED. Accessed by Lauren Gualdino (lgualdino@briarcliffmanor.org), (-) Order Number #100880972 on May 08, 2020 07:05 AM (PDT) pursuant to License Agreement with ICC & NYSDOS. No further reproduction, no

100880972

EXISTING INSTALLATION. Any plumbing system regulated by this code that was legally installed prior to the effective date of this code, or for which a permit to install has been issued.

FAUCET. A valve end of a water pipe through which water is drawn from or held within the pipe.

FILL VALVE. A water supply valve, opened or closed by means of a float or similar device, utilized to supply water to a tank. An antisiphon fill valve contains an antisiphon device in the form of an *approved air gap* or vacuum breaker that is an integral part of the fill valve unit and that is positioned on the discharge side of the water supply control valve.

[NY] FIRE CODE OF NEW YORK STATE. The 2020 edition of the publication entitled "Fire Code of New York State," published by the International Code Council, Inc. (publication date November 2019).

FIXTURE. See "Plumbing fixture."

FIXTURE BRANCH. A drain serving two or more fixtures that discharges to another drain or to a *stack*.

FIXTURE DRAIN. The drain from the trap of a fixture to a junction with any other drain pipe.

FIXTURE FITTING.

Supply fitting. A fitting that controls the volume, direction of flow or both of water and is either attached to or accessed from a fixture or is used with an open or atmospheric discharge.

Waste fitting. A combination of components that conveys the sanitary waste from the outlet of a fixture to the connection to the sanitary drainage system.

FIXTURE SUPPLY. The water supply pipe connecting a fixture to a *branch* water supply pipe or directly to a main water supply pipe.

[BS] FLOOD HAZARD AREA. The greater of the following two areas:

1. The area within a flood plain subject to a 1-percent or greater chance of flooding in any given year.
2. The area designated as a *flood hazard area* on a community's flood hazard map or as otherwise legally designated.

FLOOD LEVEL RIM. The edge of the receptacle from which water overflows.

FLOW CONTROL (Vented). A device installed upstream from the interceptor having an orifice that controls the rate of flow through the interceptor and an air intake (vent) downstream from the orifice that allows air to be drawn into the flow stream.

FLOW PRESSURE. The pressure in the water supply pipe near the faucet or water outlet while the faucet or water outlet is wide open and flowing.

FLUSH TANK. A tank designed with a fill valve and flush valve to flush the contents of the bowl or usable portion of the fixture.

FLUSHOMETER TANK. A device integrated within an air accumulator vessel that is designed to discharge a predetermined quantity of water to fixtures for flushing purposes.

FLUSHOMETER VALVE. A valve attached to a pressurized water supply pipe and designed so that when activated, the valve opens the line for direct flow into the fixture at a rate and quantity to operate the fixture properly, and then gradually closes to reseal fixture traps and avoid water hammer.

[NY] FUEL GAS CODE OF NEW YORK STATE. The 2020 edition of the publication entitled "Fuel Gas Code of New York State," published by the International Code Council, Inc. (publication date November 2019).

FULL-OPEN VALVE. A water control or shutoff component in the water supply system piping that, where adjusted for maximum flow, the flow path through the component's closure member is not a restriction in the component's through-flow area.

GRAYWATER. Waste discharged from lavatories, bathtubs, showers, clothes washers and laundry trays.

GREASE INTERCEPTOR.

Fats, oils and greases (FOG) disposal system. A plumbing appurtenance that reduces nonpetroleum fats, oils and greases in effluent by separation or mass and volume reduction.

Gravity. Plumbing appurtenances of not less than 500 gallons (1893 L) capacity that are installed in the sanitary drainage system to intercept free-floating fats, oils and grease from wastewater discharge. Separation is accomplished by gravity during a retention time of not less than 30 minutes.

Hydromechanical. Plumbing appurtenances that are installed in the sanitary drainage system to intercept free-floating fats, oils and grease from wastewater discharge. Continuous separation is accomplished by air entrainment, buoyancy and interior baffling.

GREASE-LADEN WASTE. Effluent discharge that is produced from food processing, food preparation or other sources where grease, fats and oils enter automatic dishwater prerinse stations, sinks or other appurtenances.

GREASE REMOVAL DEVICE, AUTOMATIC (GRD). A plumbing appurtenance that is installed in the sanitary drainage system to intercept free-floating fats, oils and grease from wastewater discharge. Such a device operates on a time- or event-controlled basis and has the ability to remove free-floating fats, oils and grease automatically without intervention from the user except for maintenance.

GRIDDED WATER DISTRIBUTION SYSTEM. A water distribution system where every water distribution pipe is interconnected so as to provide two or more paths to each fixture supply pipe.

HANGERS. See "Supports."

HORIZONTAL BRANCH DRAIN. A drainage *branch* pipe extending laterally from a soil or waste *stack* or *building drain*, with or without vertical sections or *branches*, that receives the discharge from two or more *fixture drains* or *branches* and conducts the discharge to the soil or waste *stack* or to the *building drain*.

INTERNATIONAL CODE COUNCIL®
Copyright © 2019 ICC & NYSDOS. ALL RIGHTS RESERVED. Accessed by Lauren Gualdino (lgualdino@briarcliffmanor.org), (-) Order Number #100880972 on May 08, 2020 07:05 AM (PDT) pursuant to License Agreement with ICC & NYSDOS. No further reproduction, no

100880972

HORIZONTAL PIPE. Any pipe or fitting that makes an angle of less than 45 degrees (0.79 rad) with a horizontal plane.

HOT WATER. Water at a temperature greater than or equal to 110°F (43°C).

HOUSE TRAP. See "Building trap."

INDIRECT WASTE PIPE. A waste pipe that does not connect directly with the drainage system, but that discharges into the drainage system through an *air break* or *air gap* into a trap, fixture, receptor or interceptor.

INDIVIDUAL SEWAGE DISPOSAL SYSTEM. A system for disposal of domestic sewage by means of a septic tank, cesspool or mechanical treatment, designed for utilization apart from a public *sewer* to serve a single establishment or building.

INDIVIDUAL VENT. A pipe installed to vent a fixture trap and that connects with the vent system above the fixture served or terminates in the open air.

INDIVIDUAL WATER SUPPLY. A water supply that serves one or more families, and that is not an *approved* public water supply.

INTERCEPTOR. A device designed and installed to separate and retain for removal, by automatic or manual means, deleterious, hazardous or undesirable matter from normal wastes, while permitting normal sewage or wastes to discharge into the drainage system by gravity.

JOINT.

Expansion. A loop, return bend or return offset that provides for the expansion and contraction in a piping system and is utilized in tall buildings or where there is a rapid change of temperature, as in power plants, steam rooms and similar occupancies.

Flexible. Any joint between two pipes that permits one pipe to be deflected or moved without movement or deflection of the other pipe.

Mechanical. See "Mechanical joint."

Slip. A type of joint made by means of a washer or a special type of packing compound in which one pipe is slipped into the end of an adjacent pipe.

LEAD-FREE SOLDER AND FLUX. Containing not more than 0.2-percent lead.

LEADER. An exterior drainage pipe for conveying storm water from roof or gutter drains to an *approved* means of disposal.

MACERATING TOILET SYSTEM. An assembly consisting of a water closet and sump with a macerating pump that is designed to collect, grind and pump wastes from the water closet and up to two other fixtures connected to the sump.

MAIN. The principal pipe artery to which branches are connected.

MANIFOLD. See "Plumbing appurtenance."

[NY] MECHANICAL CODE OF NEW YORK STATE. The 2020 edition of the publication entitled "Mechanical Code of New York State," published by the International Code Council, Inc. (publication date November 2019).

[M] MECHANICAL JOINT. A connection between pipes, fittings, or pipes and fittings that is not screwed, caulked, threaded, soldered, solvent cemented, brazed, welded or heat fused. A joint in which compression is applied along the centerline of the pieces being joined. In some applications, the joint is part of a coupling, fitting or adapter.

MEDICAL GAS SYSTEM. The complete system to convey medical gases for direct patient application from central supply systems (bulk tanks, manifolds and medical air compressors), with pressure and operating controls, alarm warning systems, related components and piping networks extending to station outlet valves at patient use points.

MEDICAL VACUUM SYSTEM. A system consisting of central-vacuum-producing equipment with pressure and operating controls, shutoff valves, alarm-warning systems, gauges and a network of piping extending to and terminating with suitable station inlets at locations where patient suction may be required.

METER. A measuring device used to collect data and indicate water usage.

NONPOTABLE WATER. Water not safe for drinking, personal or culinary utilization.

NUISANCE. Public nuisance as known in common law or in equity jurisprudence; whatever is dangerous to human life or detrimental to health; whatever structure or premises is not sufficiently ventilated, sewered, drained, cleaned or lighted, with respect to its intended occupancy; and whatever renders the air, or human food, drink or water supply unwholesome.

[A] OCCUPANCY. The purpose for which a building or portion thereof is utilized or occupied.

OFFSET. A combination of *approved* bends that makes two changes in direction bringing one section of the pipe out of line but into a line parallel with the other section.

ON-SITE NONPOTABLE WATER REUSE SYSTEM. A water system for the collection, treatment, storage, distribution and reuse of nonpotable water generated on site, including but not limited to a graywater system. This definition does not include a rainwater harvesting system.

OPEN AIR. Outside the structure.

[NY] PART 1202. The regulations set forth in 19 NYCRR Part 1202 ("Uniform Code: Administration and Enforcement in Certain Local Governments"), as currently in effect and as hereafter amended from time to time.

[NY] PART 1203. The regulations set forth in 19 NYCRR Part 1203 ("Uniform Code: Minimum Standards for Administration and Enforcement"), as currently in effect and as hereafter amended from time to time.

[NY] PART 1203—COMPLIANT CODE ENFORCEMENT PROGRAM. A code enforcement program that includes the features required by Part 1203 and satisfies the requirements of Part 1203.

[NY] PART 1204. The regulations set forth in 19 NYCRR Part 1204 ("Uniform Code: Administration and Enforcement by State Agencies"), as currently in effect and as hereafter amended from time to time.

INTERNATIONAL CODE COUNCIL®
Copyright © 2019 ICC & NYSDOS. ALL RIGHTS RESERVED. Accessed by Lauren Gualdino (lgualdino@briarcliffmanor.org), (-) Order Number #100880972 on May 08, 2020 07:05 AM (PDT) pursuant to License Agreement with ICC & NYSDOS. No further reproduction, no

100880972

[NY] PART 1205. The regulations set forth in 19 NYCRR Part 1205 ("Uniform Code: Variance Procedures"), as currently in effect and as hereafter amended from time to time.

PLUMBING. The practice, materials and fixtures utilized in the installation, maintenance, extension and alteration of all piping, fixtures, plumbing appliances and plumbing appurtenances, within or adjacent to any structure, in connection with sanitary drainage or storm drainage facilities; venting systems; and public or private water supply systems.

PLUMBING APPLIANCE. Water or drain-connected devices intended to perform a special function. These devices have their operation or control dependent on one or more energized components, such as motors, controls or heating elements. Such devices are manually adjusted or controlled by the owner or operator or are operated automatically through one or more of the following actions: a time cycle, a temperature range, a pressure range, a measured volume or weight.

PLUMBING APPURTENANCE. A manufactured device, prefabricated assembly or on-the-job assembly of component parts that is an adjunct to the basic piping system and plumbing fixtures. An appurtenance does not demand additional water supply and does not add any discharge load to a fixture or to the drainage system.

PLUMBING FIXTURE. A receptacle or device that is connected to a water supply system or discharges to a drainage system or both. Such receptacles or devices require a supply of water; or discharge liquid waste or liquid-borne solid waste; or require a supply of water and discharge waste to a drainage system.

PLUMBING SYSTEM. A system that includes the water distribution pipes; plumbing fixtures and traps; water-treating or water-using equipment; soil, waste and vent pipes; and *building drains*; in addition to their respective connections, devices and appurtenances within a structure or premises; and the water service, *building sewer* and building storm *sewer* serving such structure or premises.

POLLUTION. An impairment of the quality of the potable water to a degree that does not create a hazard to public health but that does adversely and unreasonably affect the aesthetic qualities of such potable water for domestic use.

POTABLE WATER. Water free from impurities present in amounts sufficient to cause disease or harmful physiological effects and conforming to the bacteriological and chemical quality requirements of the Public Health Service Drinking Water Standards or the regulations of the public health authority having jurisdiction.

[M] PRESS-CONNECT JOINT. A permanent mechanical joint incorporating an elastomeric seal or an elastomeric seal and corrosion-resistant grip ring. The joint is made with a pressing tool and jaw or ring approved by the fitting manufacturer.

PRIVATE. In the classification of plumbing fixtures, "*private*" applies to fixtures in residences and apartments, and to fixtures in nonpublic toilet rooms of hotels and motels and similar installations in buildings where the plumbing fixtures are intended for utilization by a family or an individual.

PUBLIC OR PUBLIC UTILIZATION. In the classification of plumbing fixtures, "*public*" applies to fixtures in general toilet rooms of schools, gymnasiums, hotels, airports, bus and railroad stations, public buildings, bars, public comfort stations, office buildings, stadiums, stores, restaurants and other installations where a number of fixtures are installed so that their utilization is similarly unrestricted.

PUBLIC SWIMMING POOL. A pool, other than a residential pool, that is intended to be used for swimming or bathing and is operated by an owner, lessee, operator, licensee or concessionaire, regardless of whether a fee is charged for use.

PUBLIC WATER MAIN. A water supply pipe for public utilization controlled by public authority.

QUICK-CLOSING VALVE. A valve or faucet that closes automatically when released manually or that is controlled by a mechanical means for fast-action closing.

RAINWATER. Water from natural precipitation.

[M] READY ACCESS. That which enables a fixture, appliance or equipment to be directly reached without requiring the removal or movement of any panel, door or similar obstruction and without the use of a portable ladder, step stool or similar device.

RECLAIMED WATER. Nonpotable water that has been derived from the treatment of wastewater by a facility or system licensed or permitted to produce water meeting the jurisdiction's water requirements for its intended uses. Also known as "recycled water."

REDUCED PRESSURE PRINCIPLE BACKFLOW PREVENTION ASSEMBLY. A backflow prevention device consisting of two independently acting check valves, internally force-loaded to a normally closed position and separated by an intermediate chamber (or zone) in which there is an automatic relief means of venting to the atmosphere, internally loaded to a normally open position between two tightly closing shutoff valves and with a means for testing for tightness of the checks and opening of the relief means.

[NY] REGISTERED DESIGN PROFESSIONAL. An individual who is a licensed and registered architect (RA) in accordance with Article 147 of the New York State Education Law or a licensed and registered professional engineer (PE) in accordance with Article 145 of the New York State Education Law.

RELIEF VALVE.

Pressure relief valve. A pressure-actuated valve held closed by a spring or other means and designed to relieve pressure automatically at the pressure at which such valve is set.

Temperature and pressure relief (T&P) valve. A combination relief valve designed to function as both a temperature relief and a pressure relief valve.

Temperature relief valve. A temperature-actuated valve designed to discharge automatically at the temperature at which such valve is set.

INTERNATIONAL CODE COUNCIL®
Copyright © 2019 ICC & NYSDOS. ALL RIGHTS RESERVED. Accessed by Lauren Gualdino (lgualdino@briarcliffmanor.org), (-) Order Number #100880972 on May 08, 2020 07:05 AM (PDT) pursuant to License Agreement with ICC & NYSDOS. No further reproduction, no

100880972

RELIEF VENT. A vent whose primary function is to provide circulation of air between drainage and vent systems.

[NY] RESIDENTIAL CODE OF NEW YORK STATE. The 2020 edition of the publication entitled "Residential Code of New York State," published by the International Code Council, Inc. (publication date November 2019).

RIM. An unobstructed open edge of a fixture.

RISER. See "Water pipe, riser."

ROOF DRAIN. A drain installed to receive water collecting on the surface of a roof and to discharge such water into a leader or a conductor.

ROUGH-IN. Parts of the plumbing system that are installed prior to the installation of fixtures. This includes drainage, water supply, vent piping and the necessary fixture supports and any fixtures that are built into the structure.

SELF-CLOSING FAUCET. A faucet containing a valve that automatically closes upon deactivation of the opening means.

SEPARATOR. See "Interceptor."

SEWAGE. Any liquid waste containing animal or vegetable matter in suspension or solution, including liquids containing chemicals in solution.

SEWAGE EJECTOR. A device for lifting sewage by entraining the sewage in a high-velocity jet of steam, air or water.

SEWER.

Building sewer. See "Building sewer."

Public sewer. That part of the drainage system of pipes, installed and maintained by a city, township, county, public utility company or other public entity, and located on public property, in the street or in an approved dedicated easement of public or community use.

Sanitary sewer. A *sewer* that carries sewage and excludes storm, surface and ground water.

Storm sewer. A *sewer* that conveys rainwater, surface water, subsurface water and similar liquid wastes.

SLOPE. The fall (pitch) of a line of pipe in reference to a horizontal plane. In drainage, the slope is expressed as the fall in units vertical per units horizontal (percent) for a length of pipe.

SOIL PIPE. A pipe that conveys sewage containing fecal matter to the *building drain* or *building sewer*.

SPILLPROOF VACUUM BREAKER. An assembly consisting of one check valve force-loaded closed and an air-inlet vent valve force-loaded open to atmosphere, positioned downstream of the check valve, and located between and including two tightly closing shutoff valves and a test cock.

STACK. A general term for any vertical line of soil, waste, vent or inside conductor piping that extends through not fewer than one story with or without offsets.

STACK VENT. The extension of a soil or waste *stack* above the highest horizontal drain connected to the *stack*.

STORM WATER. Natural precipitation, including snowmelt, that has contacted a surface at or below grade.

STACK VENTING. A method of venting a fixture or fixtures through the soil or waste *stack*.

STORM DRAIN. See "Drainage system, storm."

[A] STRUCTURE. That which is built or constructed.

SUBSOIL DRAIN. A drain that collects subsurface water or seepage water and conveys such water to a place of disposal.

SUMP. A tank or pit that receives sewage or liquid waste, located below the normal grade of the gravity system and that must be emptied by mechanical means.

SUMP PUMP. An automatic water pump powered by an electric motor for the removal of drainage, except raw sewage, from a sump, pit or low point.

SUMP VENT. A vent from pneumatic sewage ejectors, or similar equipment, that terminates separately to the open air.

SUPPORTS. Devices for supporting and securing pipe, fixtures and equipment.

SWIMMING POOL. A permanent or temporary structure that is intended to be used for swimming, bathing or wading and that is designed and manufactured or built to be connected to a circulation system. A swimming pool can be open to the public regardless of whether a fee is charged for its use or can be accessory to a residential setting where the pool is available only to the household and guests of the household.

TEMPERED WATER. Water having a temperature range between 85°F (29°C) and 110°F (43°C).

THIRD-PARTY CERTIFICATION AGENCY. An *approved* agency operating a product or material certification system that incorporates initial product testing, assessment and surveillance of a manufacturer's quality control system.

THIRD-PARTY CERTIFIED. Certification obtained by the manufacturer indicating that the function and performance characteristics of a product or material have been determined by testing and ongoing surveillance by an *approved third-party certification agency*. Assertion of certification is in the form of identification in accordance with the requirements of the *third-party certification agency*.

TOILET FACILITY. A room or space that contains not less than one water closet and one lavatory.

TRAP. A fitting or device that provides a liquid seal to prevent the emission of *sewer* gases without materially affecting the flow of sewage or wastewater through the trap.

TRAP SEAL. The vertical distance between the weir and the top of the dip of the trap.

[NY] UNIFORM CODE. The New York State Uniform Fire Prevention and Building Code, adopted pursuant to Article 18 of the New York State Executive Law, as currently in effect and as hereafter amended from time to time.

UNSTABLE GROUND. Earth that does not provide a uniform bearing for the barrel of the *sewer* pipe between the joints at the bottom of the pipe trench.

VACUUM. Any pressure less than that exerted by the atmosphere.

INTERNATIONAL CODE COUNCIL®
Copyright © 2019 ICC & NYSDOS. ALL RIGHTS RESERVED. Accessed by Lauren Gualdino (lgualdino@briarcliffmanor.org), (-) Order Number #100880972 on May 08, 2020 07:05 AM (PDT) pursuant to License Agreement with ICC & NYSDOS. No further reproduction, no

100880972

VACUUM BREAKER. A type of backflow preventer installed on openings subject to normal atmospheric pressure that prevents backflow by admitting atmospheric pressure through ports to the discharge side of the device.

VENT PIPE. See "Vent system."

VENT STACK. A vertical vent pipe installed primarily for the purpose of providing circulation of air to and from any part of the drainage system.

VENT SYSTEM. A pipe or pipes installed to provide a flow of air to or from a drainage system, or to provide a circulation of air within such system to protect trap seals from siphonage and backpressure.

VERTICAL PIPE. Any pipe or fitting that makes an angle of 45 degrees (0.79 rad) or more with the horizontal.

WALL-HUNG WATER CLOSET. A wall-mounted water closet installed in such a way that the fixture does not touch the floor.

WASTE. The discharge from any fixture, appliance, area or appurtenance that does not contain fecal matter.

WASTE PIPE. A pipe that conveys only waste.

WASTE RECEPTOR. A floor sink, standpipe, hub drain or floor drain that receives the discharge of one or more indirect waste pipes.

WATER COOLER. A drinking fountain that incorporates a means of reducing the temperature of the water supplied to it from the potable water distribution system.

WATER DISPENSER. A plumbing fixture that is manually controlled by the user for the purpose of dispensing potable drinking water into a receptacle such as a cup, glass or bottle. Such fixture is connected to the potable water distribution system of the premises. This definition includes a freestanding apparatus for the same purpose that is not connected to the potable water distribution system and that is supplied with potable water from a container, bottle or reservoir.

WATER-HAMMER ARRESTOR. A device utilized to absorb the pressure surge (water hammer) that occurs when water flow is suddenly stopped in a water supply system.

[M] WATER HEATER. Any heating appliance or equipment that heats potable water and supplies such water to the potable hot water distribution system.

WATER MAIN. A water supply pipe or system of pipes, installed and maintained by a city, township, county, public utility company or other public entity, on public property, in the street or in an approved dedicated easement of public or community use.

WATER OUTLET. A discharge opening through which water is supplied to a fixture, into the atmosphere (except into an open tank that is part of the water supply system), to a boiler or heating system, or to any devices or equipment that require water to operate but are not part of the plumbing system.

WATER PIPE.

Riser. A water supply pipe that extends one full story or more to convey water to *branches* or to a group of fixtures.

Water distribution pipe. A pipe within the structure or on the premises that conveys water from the water service pipe, or from the meter when the meter is at the structure, to the points of utilization.

Water service pipe. The pipe from the water main or other source of potable water supply, or from the meter when the meter is at the public right of way, to the water distribution system of the building served.

WATER SUPPLY SYSTEM. The water service pipe, water distribution pipes, and the necessary connecting pipes, fittings, control valves and all appurtenances in or adjacent to the structure or premises.

WELL.

Bored. A well constructed by boring a hole in the ground with an auger and installing a casing.

Drilled. A well constructed by making a hole in the ground with a drilling machine of any type and installing a casing and screen.

Driven. A well constructed by driving a pipe in the ground. The drive pipe is usually fitted with a well point and screen.

Dug. A well constructed by excavating a large-diameter shaft and installing a casing.

WHIRLPOOL BATHTUB. A plumbing appliance consisting of a bathtub fixture that is equipped and fitted with a circulating piping system designed to accept, circulate and discharge bathtub water upon each use.

YOKE VENT. A pipe connecting upward from a soil or waste *stack* to a vent *stack* for the purpose of preventing pressure changes in the *stacks*.

INTERNATIONAL CODE COUNCIL®
Copyright © 2019 ICC & NYSDOS. ALL RIGHTS RESERVED. Accessed by Lauren Gualdino (lgualdino@briarcliffmanor.org), (-) Order Number #100880972 on May 08, 2020 07:05 AM (PDT) pursuant to License Agreement with ICC & NYSDOS. No further reproduction, no

100880972

CHAPTER 3
GENERAL REGULATIONS

SECTION 301
GENERAL

301.1 Scope. The provisions of this chapter shall govern the general regulations regarding the installation of plumbing not specific to other chapters.

301.2 System installation. Plumbing shall be installed with due regard to preservation of the strength of structural members and prevention of damage to walls and other surfaces through fixture usage.

301.3 Connections to drainage system. Plumbing fixtures, drains, appurtenances and appliances used to receive or discharge liquid waste or sewage shall be directly connected to the sanitary drainage system of the building or premises, in accordance with the requirements of this code. This section shall not be construed to prevent indirect waste systems required by Chapter 8.

Exception: Bathtubs, showers, lavatories, clothes washers and laundry trays shall not be required to discharge to the sanitary drainage system where such fixtures discharge to an *approved* system in accordance with Chapters 13 and 14.

301.4 Connections to water supply. Every plumbing fixture, device or appliance requiring or using water for its proper operation shall be directly or indirectly connected to the water supply system in accordance with the provisions of this code.

301.5 Pipe, tube and fitting sizes. Unless otherwise indicated, the pipe, tube and fitting sizes specified in this code are expressed in nominal or standard sizes as designated in the referenced material standards.

301.6 Prohibited locations. Plumbing systems shall not be located in an elevator shaft or in an elevator equipment room.

Exception: Floor drains, sumps and sump pumps shall be permitted at the base of the shaft, provided that they are indirectly connected to the plumbing system and comply with Section 1003.4.

301.7 Conflicts. In instances where conflicts occur between this code and the manufacturer's installation instructions, the more restrictive provisions shall apply.

SECTION 302
EXCLUSION OF MATERIALS DETRIMENTAL TO THE SEWER SYSTEM

302.1 Detrimental or dangerous materials. Ashes, cinders or rags; flammable, poisonous or explosive liquids or gases; oil, grease or any other insoluble material capable of obstructing, damaging or overloading the building drainage or *sewer* system, or capable of interfering with the normal operation of the sewage treatment processes, shall not be deposited, by any means, into such systems.

302.2 Industrial wastes. Waste products from manufacturing or industrial operations shall not be introduced into the public *sewer* until it has been determined by the *building official* or other authority having jurisdiction that the introduction thereof will not damage the public *sewer* system or interfere with the functioning of the sewage treatment plant.

SECTION 303
MATERIALS

303.1 Identification. Each length of pipe and each pipe fitting, trap, fixture, material and device utilized in a plumbing system shall bear the identification of the manufacturer and any markings required by the applicable referenced standards.

303.2 Installation of materials. Materials used shall be installed in strict accordance with the standards under which the materials are accepted and *approved*. In the absence of such installation procedures, the manufacturer's instructions shall be followed. Where the requirements of referenced standards or manufacturer's installation instructions do not conform to minimum provisions of this code, the provisions of this code shall apply.

303.3 Plastic pipe, fittings and components. Plastic pipe, fittings and components shall be third-party certified as conforming to NSF 14.

303.4 Third-party certification. Plumbing products and materials required by the code to be in compliance with a referenced standard shall be listed by a *third-party certification agency* as complying with the referenced standards. Products and materials shall be identified in accordance with Section 303.1.

303.5 Cast-iron soil pipe, fittings and components. Cast-iron soil pipes and fittings, and the couplings used to join these products together, shall be third-party listed and labeled. Third-party certifiers or inspectors shall comply with the minimum inspection requirements of Annex A or Annex A1 of the ASTM and CISPI product standards indicated in the code for such products.

SECTION 304
RODENTPROOFING

304.1 General. Plumbing systems shall be designed and installed in accordance with Sections 304.2 through 304.4 to prevent rodents from entering structures.

304.2 Strainer plates. Strainer plates on drain inlets shall be designed and installed so that all openings are not greater than $^1/_2$ inch (12.7 mm) in least dimension.

304.3 Meter boxes. Meter boxes shall be constructed in such a manner that rodents are prevented from entering a structure by way of the water service pipes connecting the meter box and the structure.

INTERNATIONAL CODE COUNCIL®
Copyright © 2019 ICC & NYSDOS. ALL RIGHTS RESERVED. Accessed by Lauren Gualdino (lgualdino@briarcliffmanor.org), (-) Order Number #100880972 on May 08, 2020 07:05 AM (PDT) pursuant to License Agreement with ICC & NYSDOS. No further reproduction, no

100880972

304.4 Openings for pipes. In or on structures where openings have been made in walls, floors or ceilings for the passage of pipes, the annular space between the pipe and the sides of the opening shall be sealed with caulking materials or closed with gasketing systems compatible with the piping materials and locations.

SECTION 305
PROTECTION OF PIPES AND PLUMBING SYSTEM COMPONENTS

305.1 Protection against contact. Metallic piping, except for cast iron, ductile iron and galvanized steel, shall not be placed in direct contact with steel framing members, concrete or cinder walls and floors or other masonry. Metallic piping shall not be placed in direct contact with corrosive soil. Where sheathing is used to prevent direct contact, the sheathing shall have a thickness of not less than 0.008 inch (8 mil) (0.203 mm) and the sheathing shall be made of plastic. Where sheathing protects piping that penetrates concrete or masonry walls or floors, the sheathing shall be installed in a manner that allows movement of the piping within the sheathing.

305.2 Stress and strain. Piping in a plumbing system shall be installed so as to prevent strains and stresses that exceed the structural strength of the pipe. Where necessary, provisions shall be made to protect piping from damage resulting from expansion, contraction and structural settlement.

305.3 Pipes through foundation walls. Any pipe that passes through a foundation wall shall be provided with a relieving arch, or a pipe sleeve pipe shall be built into the foundation wall. The sleeve shall be two pipe sizes greater than the pipe passing through the wall.

305.4 Freezing. Water, soil and waste pipes shall not be installed outside of a building, in attics or crawl spaces, concealed in outside walls, or in any other place subjected to freezing temperatures unless adequate provision is made to protect such pipes from freezing by insulation or heat or both. Exterior water supply system piping shall be installed not less than 6 inches (152 mm) below the frost line and not less than 12 inches (305 mm) below grade.

[NY] 305.4.1 Sewer depth. *Building sewers* that connect to private sewage disposal systems shall be installed not less than the depth below finished grade determined by the *authority having jurisdiction* at the point of septic tank connection. *Building sewers* shall be installed not less than the depth below grade determined by the *authority having jurisdiction*.

305.5 Waterproofing of openings. Joints at the roof and around vent pipes shall be made water tight by the use of lead, copper, galvanized steel, aluminum, plastic or other *approved* flashings or flashing material. Exterior wall openings shall be made water tight.

305.6 Protection against physical damage. In concealed locations where piping, other than cast-iron or galvanized steel, is installed through holes or notches in studs, joists, rafters or similar members less than $1^1/_4$ inches (32 mm) from the nearest edge of the member, the pipe shall be protected by steel shield plates. Such shield plates shall have a thickness of not less than 0.0575 inch (1.463 mm) (No. 16 gage). Such plates shall cover the area of the pipe where the member is notched or bored and shall extend not less than 2 inches (51 mm) above sole plates and below top plates.

305.7 Protection of components of plumbing system. Components of a plumbing system installed along alleyways, driveways, parking garages or other locations exposed to damage shall be recessed into the wall or otherwise protected in an *approved* manner.

SECTION 306
TRENCHING, EXCAVATION AND BACKFILL

306.1 Support of piping. Buried piping shall be supported throughout its entire length.

306.2 Trenching and bedding. Where trenches are excavated such that the bottom of the trench forms the bed for the pipe, solid and continuous load-bearing support shall be provided between joints. Bell holes, hub holes and coupling holes shall be provided at points where the pipe is joined. Such pipe shall not be supported on blocks to grade. In instances where the materials manufacturer's installation instructions are more restrictive than those prescribed by the code, the material shall be installed in accordance with the more restrictive requirement.

306.2.1 Overexcavation. Where trenches are excavated below the installation level of the pipe such that the bottom of the trench does not form the bed for the pipe, the trench shall be backfilled to the installation level of the bottom of the pipe with sand or fine gravel placed in layers not greater than 6 inches (152 mm) in depth and such backfill shall be compacted after each placement.

306.2.2 Rock removal. Where rock is encountered in trenching, the rock shall be removed to not less than 3 inches (76 mm) below the installation level of the bottom of the pipe, and the trench shall be backfilled to the installation level of the bottom of the pipe with sand tamped in place so as to provide uniform load-bearing support for the pipe between joints. The pipe, including the joints, shall not rest on rock at any point.

306.2.3 Soft load-bearing materials. If soft materials of poor load-bearing quality are found at the bottom of the trench, stabilization shall be achieved by overexcavating not less than two pipe diameters and backfilling to the installation level of the bottom of the pipe with fine gravel, crushed stone or a concrete foundation. The concrete foundation shall be bedded with sand tamped into place so as to provide uniform load-bearing support for the pipe between joints.

306.3 Backfilling. Backfill shall be free from discarded construction material and debris. Loose earth free from rocks, broken concrete and frozen chunks shall be placed in the trench in 6-inch (152 mm) layers and tamped in place until the crown of the pipe is covered by 12 inches (305 mm) of tamped earth. The backfill under and beside the pipe shall be compacted for pipe support. Backfill shall be brought up evenly on both sides of the pipe so that the pipe remains aligned. In instances where the manufacturer's instructions

INTERNATIONAL CODE COUNCIL®
Copyright © 2019 ICC & NYSDOS. ALL RIGHTS RESERVED. Accessed by Lauren Gualdino (lgualdino@briarcliffmanor.org), (-) Order Number #100880972 on May 08, 2020 07:05 AM (PDT) pursuant to License Agreement with ICC & NYSDOS. No further reproduction, no

100880972

for materials are more restrictive than those prescribed by the code, the material shall be installed in accordance with the more restrictive requirement.

306.4 Tunneling. Where pipe is to be installed by tunneling, jacking or a combination of both, the pipe shall be protected from damage during installation and from subsequent uneven loading. Where earth tunnels are used, adequate supporting structures shall be provided to prevent future settling or caving.

SECTION 307
STRUCTURAL SAFETY

307.1 General. In the process of installing or repairing any part of a plumbing and drainage installation, the finished floors, walls, ceilings, tile work or any other part of the building or premises that must be changed or replaced shall be left in a safe structural condition in accordance with the requirements of the *Building Code of New York State*.

307.2 Cutting, notching or bored holes. A framing member shall not be cut, notched or bored in excess of limitations specified in the *Building Code of New York State*.

307.3 Penetrations of floor/ceiling assemblies and fire-resistance-rated assemblies. Penetrations of floor/ceiling assemblies and assemblies required to have a fire-resistance rating shall be protected in accordance with the *Building Code of New York State*.

[BS] 307.4 Alterations to trusses. Truss members and components shall not be cut, drilled, notched, spliced or otherwise altered in any way without written concurrence and approval of a registered design professional. Alterations resulting in the addition of loads to any member (such as HVAC equipment and water heaters) shall not be permitted without verification that the truss is capable of supporting such additional loading.

307.5 Protection of footings. Trenching installed parallel to footings and walls shall not extend into the bearing plane of a footing or wall. The upper boundary of the bearing plane is a line that extends downward, at an angle of 45 degrees (0.79 rad) from horizontal, from the outside bottom edge of the footing or wall.

307.6 Piping materials exposed within plenums. Piping materials exposed within plenums shall comply with the provisions of the *Mechanical Code of New York State*.

SECTION 308
PIPING SUPPORT

308.1 General. Plumbing piping shall be supported in accordance with this section.

308.2 Piping seismic supports. Where earthquake loads are applicable in accordance with the building code, plumbing piping supports shall be designed and installed for the seismic forces in accordance with the *Building Code of New York State*.

308.3 Materials. Hangers, anchors and supports shall support the piping and the contents of the piping. Hangers and strapping material shall be of *approved* material that will not promote galvanic action.

308.4 Structural attachment. Hangers and anchors shall be attached to the building construction in an *approved* manner.

308.5 Interval of support. Pipe shall be supported in accordance with Table 308.5.

> **Exception:** The interval of support for piping systems designed to provide for expansion/contraction shall conform to the engineered design in accordance with Section 316.1.

308.6 Sway bracing. Where horizontal pipes 4 inches (102 mm) and larger convey drainage or waste, and where a pipe fitting in that piping changes the flow direction greater than 45 degrees (0.79 rad), rigid bracing or other rigid support arrangements shall be installed to resist movement of the upstream pipe in the direction of pipe flow. A change of flow direction into a vertical pipe shall not require the upstream pipe to be braced.

308.7 Anchorage. Anchorage shall be provided to restrain drainage piping from axial movement.

> **308.7.1 Location.** For pipe sizes greater than 4 inches (102 mm), restraints shall be provided for drain pipes at all changes in direction and at all changes in diameter greater than two pipe sizes. Braces, blocks, rodding and other suitable methods as specified by the coupling manufacturer shall be utilized.

308.8 Expansion joint fittings. Expansion joint fittings shall be used only where necessary to provide for expansion and contraction of the pipes. Expansion joint fittings shall be of the typical material suitable for use with the type of piping in which such fittings are installed.

308.9 Parallel water distribution systems. Piping bundles for manifold systems shall be supported in accordance with Table 308.5. Support at changes in direction shall be in accordance with the manufacturer's instructions. Where hot water piping is bundled with cold or hot water piping, each hot water pipe shall be insulated.

308.10 Thermal expansion tanks. A thermal expansion tank shall be supported in accordance with the manufacturer's instructions. Thermal expansion tanks shall not be supported by the piping that connects to such tanks.

SECTION 309
FLOOD HAZARD RESISTANCE

309.1 General. Plumbing systems and equipment in structures erected in *flood hazard areas* shall be constructed in accordance with the requirements of this section and the *Building Code of New York State*.

[BS] 309.2 Flood hazard. For structures located in *flood hazard areas*, the following systems and equipment shall be located and installed as required by Section 1612 of the *Building Code of New York State*.

1. Water service pipes.
2. Pump seals in individual water supply systems where the pump is located below the *design flood elevation*.

INTERNATIONAL CODE COUNCIL®
Copyright © 2019 ICC & NYSDOS. ALL RIGHTS RESERVED. Accessed by Lauren Gualdino (lgualdino@briarcliffmanor.org), (-) Order Number #100880972 on May 08, 2020 07:05 AM (PDT) pursuant to License Agreement with ICC & NYSDOS. No further reproduction, no

100880972

TABLE 308.5
HANGER SPACING

PIPING MATERIAL	MAXIMUM HORIZONTAL SPACING (feet)	MAXIMUM VERTICAL SPACING (feet)
Acrylonitrile butadiene styrene (ABS) pipe	4	10[b]
Aluminum tubing	10	15
Brass pipe	10	10
Cast-iron pipe	5[a]	15
Chlorinated polyvinyl chloride (CPVC) pipe and tubing, 1 inch and smaller	3	10[b]
Chlorinated polyvinyl chloride (CPVC) pipe and tubing, $1^1/_4$ inches and larger	4	10[b]
Copper or copper-alloy pipe	12	10
Copper or copper-alloy tubing, $1^1/_4$-inch diameter and smaller	6	10
Copper or copper-alloy tubing, $1^1/_2$-inch diameter and larger	10	10
Cross-linked polyethylene (PEX) pipe 1 inch and smaller	2.67 (32 inches)	10[b]
Cross-linked polyethylene (PEX) pipe $1^1/_4$ inch and larger	4	10[b]
Cross-linked polyethylene/ aluminum/cross-linked polyethylene (PEX-AL-PEX) pipe	2.67 (32 inches)	4
Lead pipe	Continuous	4
Polyethylene/aluminum/ polyethylene (PE-AL-PE) pipe	2.67 (32 inches)	4
Polyethylene of raised temperature (PE-RT) pipe 1 inch and smaller	2.67 (32 inches)	10[b]
Polyethylene of raised temperature (PE-RT) pipe $1^1/_4$ inch and larger	4	10[b]
Polypropylene (PP) pipe or tubing 1 inch and smaller	2.67 (32 inches)	10[b]
Polypropylene (PP) pipe or tubing, $1^1/_4$ inches and larger	4	10[b]
Polyvinyl chloride (PVC) pipe	4	10[b]
Stainless steel drainage systems	10	10[b]
Steel pipe	12	15

For SI: 1 inch = 25.4 mm, 1 foot = 304.8 mm.

a. The maximum horizontal spacing of cast-iron pipe hangers shall be increased to 10 feet where 10-foot lengths of pipe are installed.

b. For sizes 2 inches and smaller, a guide shall be installed midway between required vertical supports. Such guides shall prevent pipe movement in a direction perpendicular to the axis of the pipe.

3. Covers on potable water wells shall be sealed, except where the top of the casing well or pipe sleeve is elevated to not less than 1 foot (305 mm) above the *design flood elevation*.
4. Sanitary drainage piping.
5. Storm drainage piping.
6. Manhole covers shall be sealed, except where elevated to or above the *design flood elevation*.
7. Other plumbing fixtures, faucets, fixture fittings, piping systems and equipment.
8. Water heaters.
9. Vents and vent systems.

Exception: The systems listed in this section are permitted to be located below the elevation required by Section 1612 of the *Building Code of New York State* for utilities and attendant equipment, provided that the systems are designed and installed to prevent water from entering or accumulating within their components and the systems are constructed to resist hydrostatic and hydrodynamic loads and stresses, including the effects of buoyancy, during the occurrence of flooding up to such elevation.

[BS] 309.3 Coastal high-hazard areas and coastal A zones. Structures located in coastal high-hazard areas and coastal A zones shall meet the requirements of Section 309.2. The plumbing systems, pipes and fixtures shall not be mounted on or penetrate through walls intended to break away under flood loads.

SECTION 310
WASHROOM AND TOILET ROOM REQUIREMENTS

310.1 Light and ventilation. Washrooms and toilet rooms shall be illuminated and ventilated in accordance with the *Building Code of New York State* and *Mechanical Code of New York State*.

310.2 Location of fixtures and compartments. The location of plumbing fixtures and the requirements for compartments and partitions shall be in accordance with Section 405.3.

310.3 Interior finish. Interior finish surfaces of toilet rooms shall comply with the *Building Code of New York State*.

SECTION 311
TOILET FACILITIES FOR WORKERS

311.1 General. Toilet facilities shall be provided for construction workers and such facilities shall be maintained in a sanitary condition. Construction worker toilet facilities of the nonsewer type shall conform to PSAI Z4.3.

SECTION 312
TESTS AND INSPECTIONS

312.1 Required tests. The permit holder shall make the applicable tests prescribed in Sections 312.2 through 312.10 to determine compliance with the provisions of this code. The permit holder shall give reasonable advance notice to the *building official* when the plumbing work is ready for tests.

INTERNATIONAL CODE COUNCIL®
Copyright © 2019 ICC & NYSDOS. ALL RIGHTS RESERVED. Accessed by Lauren Gualdino (lgualdino@briarcliffmanor.org), (-) Order Number #100880972 on May 08, 2020 07:05 AM (PDT) pursuant to License Agreement with ICC & NYSDOS. No further reproduction, no

100880972

The equipment, material, power and labor necessary for the inspection and test shall be furnished by the permit holder and he or she shall be responsible for determining that the work will withstand the test pressure prescribed in the following tests. Plumbing system piping shall be tested with either water or, for piping systems other than plastic, by air. After the plumbing fixtures have been set and their traps filled with water, the entire drainage system shall be submitted to final tests. The *building official* shall require the removal of any cleanouts if necessary to ascertain whether the pressure has reached all parts of the system.

312.1.1 Test gauges. Gauges used for testing shall be as follows:

1. Tests requiring a pressure of 10 pounds per square inch (psi) (69 kPa) or less shall utilize a testing gauge having increments of 0.10 psi (0.69 kPa) or less.
2. Tests requiring a pressure of greater than 10 psi (69 kPa) but less than or equal to 100 psi (689 kPa) shall utilize a testing gauge having increments of 1 psi (6.9 kPa) or less.
3. Tests requiring a pressure of greater than 100 psi (689 kPa) shall utilize a testing gauge having increments of 2 psi (14 kPa) or less.

312.2 Drainage and vent water test. A water test shall be applied to the drainage system either in its entirety or in sections. If applied to the entire system, all openings in the piping shall be tightly closed, except the highest opening, and the system shall be filled with water to the point of overflow. If the system is tested in sections, each opening shall be tightly plugged except the highest openings of the section under test, and each section shall be filled with water, but sections shall not be tested with less than a 10-foot (3048 mm) head of water. In testing successive sections, not less than the upper 10 feet (3048 mm) of the next preceding section shall be tested so that no joint or pipe in the building, except the uppermost 10 feet (3048 mm) of the system, shall have been submitted to a test of less than a 10-foot (3048 mm) head of water. This pressure shall be held for not less than 15 minutes. The system shall then be tight at all points.

312.3 Drainage and vent air test. Plastic piping shall not be tested using air. An air test shall be made by forcing air into the system until there is a uniform gauge pressure of 5 psi (34.5 kPa) or sufficient to balance a 10-inch (254 mm) column of mercury. This pressure shall be held for a test period of not less than 15 minutes. Any adjustments to the test pressure required because of changes in ambient temperatures or the seating of gaskets shall be made prior to the beginning of the test period.

312.4 Drainage and vent final test. The final test of the completed drainage and vent systems shall be visual and in sufficient detail to determine compliance with the provisions of this code. Where a smoke test is utilized, it shall be made by filling all traps with water and then introducing into the entire system a pungent, thick smoke produced by one or more smoke machines. When the smoke appears at *stack* openings on the roof, the *stack* openings shall be closed and a pressure equivalent to a 1-inch water column (248.8 Pa) shall be held for a test period of not less than 15 minutes.

[NY] 312.5 Water supply system test. Upon completion of a section of or the entire water supply system, the system, or portion completed, shall be tested and proved tight under a water pressure not less than the working pressure of the system; or, for piping systems other than plastic, by an air test of not less than 50 psi (344 kPa). This pressure shall be held for not less than 15 minutes. The water utilized for tests shall be obtained from a potable source of supply. The required tests shall be performed in accordance with this section.

312.6 Gravity sewer test. Gravity *sewer* tests shall consist of plugging the end of the *building sewer* at the point of connection with the public sewer, filling the *building sewer* with water, testing with not less than a 10-foot (3048 mm) head of water and maintaining such pressure for 15 minutes.

312.7 Forced sewer test. Forced *sewer* tests shall consist of plugging the end of the *building sewer* at the point of connection with the public sewer and applying a pressure of 5 psi (34.5 kPa) greater than the pump rating, and maintaining such pressure for 15 minutes.

312.8 Storm drainage system test. *Storm drain* systems within a building shall be tested by water or air in accordance with Section 312.2 or 312.3.

312.9 Shower liner test. Where shower floors and receptors are made water tight by the application of materials required by Section 421.5.2, the completed liner installation shall be tested. The pipe from the shower drain shall be plugged water tight for the test. The floor and receptor area shall be filled with potable water to a depth of not less than 2 inches (51 mm) measured at the threshold. Where a threshold of 2 inches (51 mm) high or greater does not exist, a temporary threshold shall be constructed to retain the test water in the lined floor or receptor area to a level not less than 2 inches (51 mm) deep measured at the threshold. The water shall be retained for a test period of not less than 15 minutes, and there shall not be evidence of leakage.

312.10 Inspection and testing of backflow prevention assemblies. Inspection and testing shall comply with Sections 312.10.1 and 312.10.2.

312.10.1 Inspections. Annual inspections shall be made of all backflow prevention assemblies and *air gaps* to determine whether the assemblies are operable and air gaps exist.

312.10.2 Testing. Reduced pressure principle, double check, pressure vacuum breaker, reduced pressure detector fire protection, double check detector fire protection, and spill-resistant vacuum breaker backflow preventer assemblies and hose connection backflow preventers shall be tested at the time of installation, immediately after repairs or relocation and at least annually. The testing procedure shall be performed in accordance with one of the following standards: ASSE 5013, ASSE 5015, ASSE 5020, ASSE 5047, ASSE 5048, ASSE 5052, ASSE 5056, CSA B64.10 or CSA B64.10.1.

INTERNATIONAL CODE COUNCIL®
Copyright © 2019 ICC & NYSDOS. ALL RIGHTS RESERVED. Accessed by Lauren Gualdino (lgualdino@briarcliffmanor.org), (-) Order Number #100880972 on May 08, 2020 07:05 AM (PDT) pursuant to License Agreement with ICC & NYSDOS. No further reproduction, no

100880972

SECTION 313
EQUIPMENT EFFICIENCIES

313.1 General. Equipment efficiencies shall be in accordance with the *Energy Conservation Construction Code of New York State*.

SECTION 314
CONDENSATE DISPOSAL

[M] 314.1 Fuel-burning appliances. Liquid combustion byproducts of condensing appliances shall be collected and discharged to an *approved* plumbing fixture or disposal area in accordance with the manufacturer's instructions. Condensate piping shall be of *approved* corrosion-resistant material and shall not be smaller than the drain connection on the appliance. Such piping shall maintain a horizontal slope in the direction of discharge of not less than one-eighth unit vertical in 12 units horizontal (1-percent slope).

[M] 314.2 Evaporators and cooling coils. Condensate drain systems shall be provided for equipment and appliances containing evaporators or cooling coils. Condensate drain systems shall be designed, constructed and installed in accordance with Sections 314.2.1 through 314.2.5.

[M] 314.2.1 Condensate disposal. Condensate from all cooling coils and evaporators shall be conveyed from the drain pan outlet to an *approved* place of disposal. Such piping shall maintain a horizontal slope in the direction of discharge of not less than one-eighth unit vertical in 12 units horizontal (1-percent slope). Condensate shall not discharge into a street, alley or other areas so as to cause a nuisance.

[M] 314.2.2 Drain pipe materials and sizes. Components of the condensate disposal system shall be cast iron, galvanized steel, copper and copper alloy, cross-linked polyethylene, polyethylene, ABS, CPVC, PVC or polypropylene pipe or tubing. Components shall be selected for the pressure and temperature rating of the installation. Joints and connections shall be made in accordance with the applicable provisions of Chapter 7 relative to the material type. Condensate waste and drain line size shall be not less than $^3/_4$-inch (19.1 mm) internal diameter and shall not decrease in size from the drain pan connection to the place of condensate disposal. Where the drain pipes from more than one unit are manifolded together for condensate drainage, the pipe or tubing shall be sized in accordance with Table 314.2.2.

[M] TABLE 314.2.2
CONDENSATE DRAIN SIZING

EQUIPMENT CAPACITY	MINIMUM CONDENSATE PIPE DIAMETER (inch)
Up to 20 tons of refrigeration	$^3/_4$ inch
Over 20 tons to 40 tons of refrigeration	1 inch
Over 40 tons to 90 tons of refrigeration	$1^1/_4$ inch
Over 90 tons to 125 tons of refrigeration	$1^1/_2$ inch
Over 125 tons to 250 tons of refrigeration	2 inch

For SI: 1 inch = 25.4 mm, 1 ton of capacity = 3.517 kW.

[M] 314.2.3 Auxiliary and secondary drain systems. In addition to the requirements of Section 314.2.1, where damage to any building components could occur as a result of overflow from the equipment primary condensate removal system, one of the following auxiliary protection methods shall be provided for each cooling coil or fuel-fired appliance that produces condensate:

1. An auxiliary drain pan with a separate drain shall be provided under the coils on which condensation will occur. The auxiliary pan drain shall discharge to a conspicuous point of disposal to alert occupants in the event of a stoppage of the primary drain. The pan shall have a depth of not less than $1^1/_2$ inches (38 mm), shall be not less than 3 inches (76 mm) larger than the unit or the coil dimensions in width and length and shall be constructed of corrosion-resistant material. Galvanized sheet metal pans shall have a thickness of not less than 0.0236-inch (0.6010 mm) (No. 24 gage) galvanized sheet metal. Nonmetallic pans shall have a thickness of not less than 0.0625 inch (1.6 mm).
2. A separate overflow drain line shall be connected to the drain pan provided with the equipment. Such overflow drain shall discharge to a conspicuous point of disposal to alert occupants in the event of a stoppage of the primary drain. The overflow drain line shall connect to the drain pan at a higher level than the primary drain connection.
3. An auxiliary drain pan without a separate drain line shall be provided under the coils on which condensate will occur. Such pan shall be equipped with a water-level detection device conforming to UL 508 that will shut off the equipment served prior to overflow of the pan. The auxiliary drain pan shall be constructed in accordance with Item 1 of this section.
4. A water-level detection device conforming to UL 508 shall be provided that will shut off the equipment served in the event that the primary drain is blocked. The device shall be installed in the primary drain line, the overflow drain line or in the equipment-supplied drain pan, located at a point higher than the primary drain line connection and below the overflow rim of such pan.

   Exception: Fuel-fired appliances that automatically shut down operation in the event of a stoppage in the condensate drainage system.

[M] 314.2.3.1 Water-level monitoring devices. On down-flow units and all other coils that do not have a secondary drain or provisions to install a secondary or auxiliary drain pan, a water-level monitoring device shall be installed inside the primary drain pan. This device shall shut off the equipment served in the event that the primary drain becomes restricted. Devices installed in the drain line shall not be permitted.

[M] 314.2.3.2 Appliance, equipment and insulation in pans. Where appliances, equipment or insulation are

INTERNATIONAL CODE COUNCIL®
Copyright © 2019 ICC & NYSDOS. ALL RIGHTS RESERVED. Accessed by Lauren Gualdino (lgualdino@briarcliffmanor.org), (-) Order Number #100880972 on May 08, 2020 07:05 AM (PDT) pursuant to License Agreement with ICC & NYSDOS. No further reproduction, no

100880972

subject to water damage when auxiliary drain pans fill such portions of the appliances, equipment and insulation shall be installed above the *flood level rim* of the pan. Supports located inside of the pan to support the appliance or equipment shall be water resistant and *approved*.

[M] 314.2.4 Traps. Condensate drains shall be trapped as required by the equipment or appliance manufacturer.

[M] 314.2.4.1 Ductless mini-split system traps. Ductless mini-split equipment that produces condensation shall be provided with an in-line check valve located in the drain line or a trap.

[M] 314.2.5 Drain line maintenance. Condensate drain lines shall be configured to permit the clearing of blockages and performance of maintenance without requiring the drain line to be cut.

SECTION 315
PENETRATIONS

315.1 Sealing of annular spaces. The annular space between the outside of a pipe and the inside of a pipe sleeve or between the outside of a pipe and an opening in a building envelope wall, floor, or ceiling assembly penetrated by a pipe shall be sealed in an *approved* manner with caulking material, foam sealant or closed with a gasketing system. The caulking material, foam sealant or gasketing system shall be designed for the conditions at the penetration location and shall be compatible with the pipe, sleeve and building materials in contact with the sealing materials. Annular spaces created by pipes penetrating fire-resistance-rated assemblies or membranes of such assemblies shall be sealed or closed in accordance with Section 714 of the *Building Code of New York State*.

SECTION 316
ALTERNATIVE ENGINEERED DESIGN

316.1 Alternative engineered design. The design, documentation, inspection, testing and approval of an *alternative engineered design* plumbing system shall comply with Sections 316.1.1 through 316.1.6.

316.1.1 Design criteria. An *alternative engineered design* shall conform to the intent of the provisions of this code and shall provide an equivalent level of quality, strength, effectiveness, fire resistance, durability and safety. Material, equipment or components shall be designed and installed in accordance with the manufacturer's instructions.

316.1.2 Submittal. The registered design professional shall indicate on the permit application that the plumbing system is an *alternative engineered design*. The permit and permanent permit records shall indicate that an *alternative engineered design* was part of the *approved* installation.

316.1.3 Technical data. The registered design professional shall submit sufficient technical data to substantiate the proposed *alternative engineered design* and to prove that the performance meets the intent of this code.

316.1.4 Construction documents. The registered design professional shall submit to the *building official* two complete sets of signed and sealed construction documents for the *alternative engineering design.* The construction documents shall include floor plans and a riser diagram of the work. Where appropriate, the construction documents shall indicate the direction of flow, all pipe sizes, grade of horizontal piping, loading and location of fixtures and appliances.

316.1.5 Design approval. Where the *building official* determines that the *alternative engineered design* conforms to the intent of this code, the plumbing system shall be *approved*. If the *alternative engineered design* is not *approved*, the *building official* shall notify the registered design professional in writing, stating the reasons thereof.

[NY] 316.1.6 Inspection and testing. The *alternative engineered design* shall be tested and inspected in accordance with the requirements of Section 312.

INTERNATIONAL CODE COUNCIL®
Copyright © 2019 ICC & NYSDOS. ALL RIGHTS RESERVED. Accessed by Lauren Gualdino (lgualdino@briarcliffmanor.org), (-) Order Number #100880972 on May 08, 2020 07:05 AM (PDT) pursuant to License Agreement with ICC & NYSDOS. No further reproduction, no

100880972

INTERNATIONAL CODE COUNCIL®
Copyright © 2019 ICC & NYSDOS. ALL RIGHTS RESERVED. Accessed by Lauren Gualdino (lgualdino@briarcliffmanor.org), (-) Order Number #100880972 on May 08, 2020 07:05 AM (PDT) pursuant to License Agreement with ICC & NYSDOS. No further reproduction, no

100880972

CHAPTER 4

FIXTURES, FAUCETS AND FIXTURE FITTINGS

SECTION 401
GENERAL

401.1 Scope. This chapter shall govern the materials, design and installation of plumbing fixtures, faucets and fixture fittings in accordance with the type of *occupancy* and shall provide for the minimum number of fixtures for various types of occupancies.

401.2 Prohibited fixtures and connections. Water closets having a concealed trap seal or an unventilated space or having walls that are not thoroughly washed at each discharge in accordance with ASME A112.19.2/CSA B45.1 shall be prohibited. Any water closet that permits siphonage of the contents of the bowl back into the tank shall be prohibited. Trough urinals shall be prohibited.

401.3 Water conservation. The maximum water flow rates and flush volume for plumbing fixtures and fixture fittings shall comply with Section 604.4.

SECTION 402
FIXTURE MATERIALS

402.1 Quality of fixtures. Plumbing fixtures shall be constructed of *approved* materials, with smooth, impervious surfaces, free from defects and concealed fouling surfaces, and shall conform to standards cited in this code. Porcelain enameled surfaces on plumbing fixtures shall be acid resistant.

402.2 Materials for specialty fixtures. Materials for specialty fixtures not otherwise covered in this code shall be of stainless steel, soapstone, chemical stoneware or plastic, or shall be lined with lead, copper-base alloy, nickel-copper alloy, corrosion-resistant steel or other material especially suited to the application for which the fixture is intended.

402.3 Sheet copper. Sheet copper for general applications shall conform to ASTM B152 and shall not weigh less than 12 ounces per square foot (3.7 kg/m^2).

402.4 Sheet lead. Sheet lead for pans shall not weigh less than 4 pounds per square foot (19.5 kg/m^2) and shall be coated with an asphalt paint or other *approved* coating.

SECTION 403
MINIMUM PLUMBING FACILITIES

403.1 Minimum number of fixtures. Plumbing fixtures shall be provided in the minimum number as shown in Table 403.1, based on the actual use of the building or space. Uses not shown in Table 403.1 shall be considered individually by the *building official*. The number of occupants shall be determined by the *Building Code of New York State*.

[NY] TABLE 403.1
MINIMUM NUMBER OF REQUIRED PLUMBING FIXTURES[a]
(See Sections 403.1.1 and 403.2)

NO.	CLASSIFICATION	DESCRIPTION	WATER CLOSETS (URINALS: SEE SECTION 424.2)		LAVATORIES		BATHTUBS/ SHOWERS	DRINKING FOUNTAIN (SEE SECTION 410)	OTHER
			MALE	FEMALE	MALE	FEMALE			
1	Assembly	Theaters and other buildings for the performing arts and motion pictures[d]	1 per 125	1 per 65	1 per 200		—	1 per 500	1 service sink
		Nightclubs, bars, taverns, dance halls and buildings for similar purposes[d]	1 per 40	1 per 40	1 per 75		—	1 per 500	1 service sink
		Restaurants, banquet halls and food courts[d]	1 per 75	1 per 75	1 per 200		—	1 per 500	1 service sink
		Casino gaming areas	1 per 100 for the first 400 and 1 per 250 for the remainder exceeding 400	1 per 50 for the first 400 and 1 per 150 for the remainder exceeding 400	1 per 250 for the first 750 and 1 per 500 for the remainder exceeding 750		—	1 per 1,000	1 service sink
		Auditoriums without permanent seating, art galleries, exhibition halls, museums, lecture halls, libraries, arcades and gymnasiums[d]	1 per 125	1 per 65	1 per 200		—	1 per 500	1 service sink
		Passenger terminals and transportation facilities[d]	1 per 500	1 per 500	1 per 750		—	1 per 1,000	1 service sink
		Places of worship and other religious services[d]	1 per 150	1 per 75	1 per 200		—	1 per 1,000	1 service sink

(continued)

INTERNATIONAL CODE COUNCIL®
Copyright © 2019 ICC & NYSDOS. ALL RIGHTS RESERVED. Accessed by Lauren Gualdino (lgualdino@briarcliffmanor.org), (-) Order Number #100880972 on May 08, 2020 07:05 AM (PDT) pursuant to License Agreement with ICC & NYSDOS. No further reproduction, no

100880972

[NY] TABLE 403.1 —continued
MINIMUM NUMBER OF REQUIRED PLUMBING FIXTURES[a]
(See Sections 403.1.1 and 403.2)

NO.	CLASSIFICATION	DESCRIPTION	WATER CLOSETS (URINALS: SEE SECTION 424.2)		LAVATORIES		BATHTUBS/ SHOWERS	DRINKING FOUNTAIN (SEE SECTION 410)	OTHER
			MALE	FEMALE	MALE	FEMALE			
1 (cont.)	Assembly	Coliseums, arenas, skating rinks, pools and tennis courts for indoor sporting events and activities	1 per 75 for the first 1,500 and 1 per 120 for the remainder exceeding 1,500	1 per 40 for the first 1,520 and 1 per 60 for the remainder exceeding 1,520	1 per 200	1 per 150	—	1 per 1,000	1 service sink
		Stadiums, amusement parks, bleachers and grandstands for outdoor sporting events and activities[f]	1 per 75 for the first 1,500 and 1 per 120 for the remainder exceeding 1,500	1 per 40 for the first 1,520 and 1 per 60 for the remainder exceeding 1,520	1 per 200	1 per 150	—	1 per 1,000	1 service sink
2	Business	Buildings for the transaction of business, professional services, other services involving merchandise, office buildings, banks, ambulatory care, light industrial and similar uses	1 per 25 for the first 50 and 1 per 50 for the remainder exceeding 50		1 per 40 for the first 80 and 1 per 80 for the remainder exceeding 80		—	1 per 100	1 service sink[e]
3	Educational	Educational facilities	1 per 50		1 per 50		—	1 per 100	1 service sink
4	Factory and industrial	Structures in which occupants are engaged in work fabricating, assembly or processing of products or materials	1 per 100		1 per 100		—	1 per 400	1 service sink
5	Institutional	Custodial care facilities	1 per 10		1 per 10		1 per 8	1 per 100	1 service sink
		Medical care recipients in hospitals and nursing homes	1 per room[c]		1 per room[c]		1 per 15	1 per 100	1 service sink per floor
		Employees in hospitals and nursing homes[b]	1 per 25		1 per 35		—	1 per 100	—
		Visitors in hospitals and nursing homes	1 per 75		1 per 100		—	1 per 500	—
		Prisons[b]	1 per cell		1 per cell		1 per 15	1 per 100	1 service sink
		Reformatories detention centers, and correctional centers[b]	1 per 15		1 per 15		1 per 15	1 per 100	1 service sink
		Employees in reformatories, detention centers and correctional centers[b]	1 per 25		1 per 35		—	1 per 100	—
		Adult day care and child day care	1 per 15		1 per 15		1	1 per 100	1 service sink
6	Mercantile	Retail stores, service stations, shops, salesrooms, markets and shopping centers	1 per 500		1 per 750		—	1 per 1,000	1 service sink[e]
7	Residential	Hotels, motels, boarding houses (transient)	1 per sleeping unit		1 per sleeping unit		1 per sleeping unit	—	1 service sink
		Dormitories, fraternities, sororities and boarding houses (not transient)	1 per 10		1 per 10		1 per 8	1 per 100	1 service sink

(continued)

INTERNATIONAL CODE COUNCIL®
Copyright © 2019 ICC & NYSDOS. ALL RIGHTS RESERVED. Accessed by Lauren Gualdino (lgualdino@briarcliffmanor.org), (-) Order Number #100880972 on May 08, 2020 07:05 AM (PDT) pursuant to License Agreement with ICC & NYSDOS. No further reproduction, no

100880972

[NY] TABLE 403.1 —continued
MINIMUM NUMBER OF REQUIRED PLUMBING FIXTURES[a]
(See Sections 403.1.1 and 403.2)

NO.	CLASSIFICATION	DESCRIPTION	WATER CLOSETS (URINALS: SEE SECTION 424.2)		LAVATORIES		BATHTUBS/ SHOWERS	DRINKING FOUNTAIN (SEE SECTION 410)	OTHER
			MALE	FEMALE	MALE	FEMALE			
7 (cont.)	Residential	Apartment house	1 per dwelling unit		1 per dwelling unit		1 per dwelling unit	—	1 kitchen sink per dwelling unit; 1 automatic clothes washer connection per 20 dwelling units
		Congregate living facilities with 16 or fewer persons	1 per 10		1 per 10		1 per 8	1 per 100	1 service sink
		One- and two-family dwellings and lodging houses with five or fewer guestrooms	1 per dwelling unit		1 per dwelling unit		1 per dwelling unit	—	1 kitchen sink per dwelling unit; 1 automatic clothes washer connection per dwelling unit
8	Storage	Structures for the storage of goods, warehouses, storehouse and freight depots. Low and Moderate Hazard.	1 per 100		1 per 100		—	1 per 1,000	1 service sink

a. The fixtures shown are based on one fixture being the minimum required for the number of persons indicated or any fraction of the number of persons indicated. The number of occupants shall be determined by the *Building Code of New York State*.
b. Toilet facilities for employees shall be separate from facilities for inmates or care recipients.
c. A single-occupant toilet room with one water closet and one lavatory serving not more than two adjacent patient sleeping units shall be permitted provided that each patient sleeping unit has direct access to the toilet room and provision for privacy for the toilet room user is provided.
d. The occupant load for seasonal outdoor seating and entertainment areas shall be included when determining the minimum number of facilities required.
e. For business and mercantile classifications with an occupant load of 15 or fewer, service sinks shall not be required.
f. [NY] Reserved.

INTERNATIONAL CODE COUNCIL®
Copyright © 2019 ICC & NYSDOS. ALL RIGHTS RESERVED. Accessed by Lauren Gualdino (lgualdino@briarcliffmanor.org), (-) Order Number #100880972 on May 08, 2020 07:05 AM (PDT) pursuant to License Agreement with ICC & NYSDOS. No further reproduction, no

100880972

[NY] 403.1.1 Fixture calculations. To determine the occupant load of each sex, the total occupant load shall be divided in half. To determine the required number of fixtures for each sex, the fixture ratio or ratios for each fixture type shall be applied to the occupant load of that sex in accordance with Table 403.1. Fractional numbers resulting from applying the fixture ratios of Table 403.1 shall be rounded up to the next whole number.

The plumbing fixtures located in single-user toilet facilities and bathing rooms, including family or assisted-use toilet and bathing rooms, shall contribute toward the total number of required plumbing fixtures for a building or tenant space, and shall be deducted proportionately, from the required gender ratios of Table 403.1.

The total number of fixtures shall be permitted to be based on any combination of single-user, multi-user, and separate facilities.

For calculations involving multiple *occupancies*, such fractional numbers for each *occupancy* shall first be summed and then rounded up to the next whole number.

Exception: The total occupant load shall not be required to be divided in half where *approved* statistical data indicates a distribution of the sexes of other than 50 percent of each sex.

[NY] 403.1.2 Single-user toilet and bathing facilities. Single-user toilet and bathing rooms, and family or assisted-use toilet rooms and bathing rooms, shall be identified as being available for use by all persons regardless of their sex.

[NY] 403.1.3 Multi-user toilet and bathing facilities. Where multi-user facilities designed to serve all genders are provided, urinals shall be either located in stalls, or located in an area visually separated from the remainder of the facility. Privacy for water closets shall be installed in accordance with Section 405.3.4.

[NY] 403.1.4 Lavatory distribution. Where two or more toilet rooms are provided for each sex, the required number of lavatories shall be distributed proportionately to the required number of water closets.

[NY] 403.2 Separate facilities. Where plumbing fixtures are required, separate facilities shall be provided for each sex.

Exceptions:

1. Separate facilities shall not be required for dwelling units and sleeping units.
2. Separate facilities shall not be required in structures or tenant spaces with a total occupant load, including both employees and customers, of 15 or fewer.
3. Separate facilities shall not be required in mercantile occupancies in which the maximum occupant load is 100 or fewer.
4. Separate facilities shall not be required in business occupancies in which the maximum occupant load is 25 or fewer.
5. Single-user toilet and bathing rooms provided in accordance with Section 403.1.2 shall be designated as gender neutral.
6. Separate facilities shall not be required where multi-user facilities designed for use by both sexes are provided in accordance with Section 403.1.3.

403.2.1 Family or assisted-use toilet facilities serving as separate facilities. Where a building or tenant space requires a separate toilet facility for each sex and each toilet facility is required to have only one water closet, two family or assisted-use toilet facilities shall be permitted to serve as the required separate facilities. Family or assisted use toilet facilities shall not be required to be identified for exclusive use by either sex as required by Section 403.4.

403.3 Employee and public toilet facilities. For structures and tenant spaces intended for *public* utilization, customers, patrons and visitors shall be provided with *public* toilet facilities. Employees associated with structures and tenant spaces shall be provided with toilet facilities. The number of plumbing fixtures located within the required toilet facilities shall be provided in accordance with Section 403 for all users. Employee toilet facilities shall be either separate or combined employee and *public* toilet facilities.

Exception: *Public* toilet facilities shall not be required for:

1. Parking garages operated without parking attendants.
2. Structures and tenant spaces intended for quick transactions, including takeout, pickup and drop-off, having a public access area less than or equal to 300 square feet (28 m^2).

403.3.1 Access. The route to the *public* toilet facilities required by Section 403.3 shall not pass through kitchens, storage rooms or closets. Access to the required facilities shall be from within the building or from the exterior of the building. Routes shall comply with the accessibility requirements of the *Building Code of New York State*. The public shall have access to the required toilet facilities at all times that the building is occupied.

403.3.2 Prohibited toilet room location. Toilet rooms shall not open directly into a room used for the preparation of food for service to the public.

403.3.3 Location of toilet facilities in occupancies other than malls. In occupancies other than covered and open mall buildings, the required *public* and employee toilet facilities shall be located not more than one story above or below the space required to be provided with toilet facilities, and the path of travel to such facilities shall not exceed a distance of 500 feet (152 m).

Exception: The location and maximum distances of travel to required employee facilities in factory and industrial *occupancies* are permitted to exceed that required by this section, provided that the location and maximum distance of travel are *approved*.

403.3.4 Location of toilet facilities in malls. In covered and open mall buildings, the required *public* and employee toilet facilities shall be located not more than one story above or below the space required to be provided with toilet facilities, and the path of travel to such facilities shall not exceed a distance of 300 feet (91 m). In mall buildings, the required facilities shall be based on total square foot-

INTERNATIONAL CODE COUNCIL®
Copyright © 2019 ICC & NYSDOS. ALL RIGHTS RESERVED. Accessed by Lauren Gualdino (lgualdino@briarcliffmanor.org), (-) Order Number #100880972 on May 08, 2020 07:05 AM (PDT) pursuant to License Agreement with ICC & NYSDOS. No further reproduction, no

100880972

age within a covered mall building or within the perimeter line of an open mall building, and facilities shall be installed in each individual store or in a central toilet area located in accordance with this section. The maximum distance of travel to central toilet facilities in mall buildings shall be measured from the main entrance of any store or tenant space. In mall buildings, where employees' toilet facilities are not provided in the individual store, the maximum distance of travel shall be measured from the employees' work area of the store or tenant space.

403.3.5 Pay facilities. Where pay facilities are installed, such facilities shall be in excess of the required minimum facilities. Required facilities shall be free of charge.

403.3.6 Door locking. Where a toilet room is provided for the use of multiple occupants, the egress door for the room shall not be lockable from the inside of the room. This section does not apply to family or assisted-use toilet rooms.

[NY] 403.4 Signage. Required public facilities shall be provided with signs that designate the sex, as required by Section 403.2. Signs shall be readily visible and located near the entrance to each toilet facility. Signs for accessible toilet facilities shall comply with Section 1111 of the *Building Code of New York State.*

Exceptions:

1. Single-user facilities shall be designated as gender neutral.
2. Multi-user facilities designed to serve all genders shall not be designated by sex.

403.4.1 Directional signage. Directional signage indicating the route to the required *public* toilet facilities shall be posted in a lobby, corridor, aisle or similar space, such that the sign can be readily seen from the main entrance to the building or tenant space.

403.5 Drinking fountain location. Drinking fountains shall not be required to be located in individual tenant spaces provided that *public* drinking fountains are located within a distance of travel of 500 feet (152 m) of the most remote location in the tenant space and not more than one story above or below the tenant space. Where the tenant space is in a covered or open mall, such distance shall not exceed 300 feet (91 m). Drinking fountains shall be located on an accessible route.

SECTION 404
ACCESSIBLE PLUMBING FACILITIES

404.1 Where required. Accessible plumbing facilities and fixtures shall be provided in accordance with the *Building Code of New York State*.

404.2 Accessible fixture requirements. Accessible plumbing fixtures shall be installed with the clearances, heights, spacings and arrangements in accordance with ICC A117.1.

404.3 Exposed pipes and surfaces. Water supply and drain pipes under accessible lavatories and sinks shall be covered or otherwise configured to protect against contact. Pipe coverings shall comply with ASME A112.18.9.

SECTION 405
INSTALLATION OF FIXTURES

405.1 Water supply protection. The supply lines and fittings for every plumbing fixture shall be installed so as to prevent backflow.

405.2 Access for cleaning. Plumbing fixtures shall be installed so as to afford easy access for cleaning both the fixture and the area around the fixture.

405.3 Setting. Fixtures shall be set level and in proper alignment with reference to adjacent walls.

405.3.1 Water closets, urinals, lavatories and bidets. A water closet, urinal, lavatory or bidet shall not be set closer than 15 inches (381 mm) from its center to any side wall, partition, vanity or other obstruction. Where partitions or other obstructions do not separate adjacent fixtures, fixtures shall not be set closer than 30 inches (762 mm) center to center between adjacent fixtures. There shall be not less than a 21-inch (533 mm) clearance in front of a water closet, urinal, lavatory or bidet to any wall, fixture or door. Water closet compartments shall be not less than 30 inches (762 mm) in width and not less than 60 inches (1524 mm) in depth for floor-mounted water closets and not less than 30 inches (762 mm) in width and 56 inches (1422 mm) in depth for wall-hung water closets.

Exception: An accessible children's water closet shall be set not closer than 12 inches (305 mm) from its center to the required partition or to the wall on one side.

405.3.2 Public lavatories. In employee and *public* toilet rooms, the required lavatory shall be located in the same room as the required water closet.

405.3.3 Location of fixtures and piping. Piping, fixtures or equipment shall not be located in such a manner as to interfere with the normal operation of windows, doors or other means of egress openings.

405.3.4 Water closet compartment. Each water closet utilized by the *public* or employees shall occupy a separate compartment with walls or partitions and a door enclosing the fixtures to ensure privacy.

Exceptions:

1. Water closet compartments shall not be required in a single-occupant toilet room with a lockable door.
2. Toilet rooms located in child day care facilities and containing two or more water closets shall be permitted to have one water closet without an enclosing compartment.
3. This provision is not applicable to toilet areas located within Group I-3 housing areas.

405.3.5 Urinal partitions. Each urinal utilized by the *public* or employees shall occupy a separate area with walls or partitions to provide privacy. The horizontal dimension between walls or partitions at each urinal shall be not less than 30 inches (762 mm). The walls or partitions shall begin at a height not greater than 12 inches (305 mm) from and extend not less than 60 inches (1524 mm) above the finished floor surface. The walls or partitions shall extend from the wall surface at each side of the urinal not less

INTERNATIONAL CODE COUNCIL®
Copyright © 2019 ICC & NYSDOS. ALL RIGHTS RESERVED. Accessed by Lauren Gualdino (lgualdino@briarcliffmanor.org), (-) Order Number #100880972 on May 08, 2020 07:05 AM (PDT) pursuant to License Agreement with ICC & NYSDOS. No further reproduction, no

100880972

than 18 inches (457 mm) or to a point not less than 6 inches (152 mm) beyond the outermost front lip of the urinal measured from the finished backwall surface, whichever is greater.

Exceptions:

1. Urinal partitions shall not be required in a single-occupant or family/assisted-use toilet room with a lockable door.
2. Toilet rooms located in child day care facilities and containing two or more urinals shall be permitted to have one urinal without partitions.

405.4 Floor and wall drainage connections. Connections between the drain and floor outlet plumbing fixtures shall be made with a floor flange or a waste connector and sealing gasket. The waste connector and sealing gasket joint shall comply with the joint tightness test of ASME A112.4.3 and shall be installed in accordance with the manufacturer's instructions. The flange shall be attached to the drain and anchored to the structure. Connections between the drain and wall-hung water closets shall be made with an *approved* extension nipple or horn adaptor. The water closet shall be bolted to the hanger with corrosion-resistant bolts or screws. Joints shall be sealed with an *approved* elastomeric gasket, flange-to-fixture connection complying with ASME A112.4.3 or an *approved* setting compound.

405.4.1 Floor flanges. Floor flanges for water closets or similar fixtures shall be not less than 0.125 inch (3.2 mm) thick for copper alloy, 0.25 inch (6.4 mm) thick for plastic and 0.25 inch (6.4 mm) thick and not less than a 2-inch (51 mm) caulking depth for cast iron or galvanized malleable iron.

Floor flanges of hard lead shall weigh not less than 1 pound, 9 ounces (0.7 kg) and shall be composed of lead alloy with not less than 7.75-percent antimony by weight. Closet screws and bolts shall be of copper alloy. Flanges shall be secured to the building structure with corrosion-resistant screws or bolts.

405.4.2 Securing floor outlet fixtures. Floor outlet fixtures shall be secured to the floor or floor flanges by screws or bolts of corrosion-resistant material.

405.4.3 Securing wall-hung water closet bowls. Wall-hung water closet bowls shall be supported by a concealed metal carrier that is attached to the building structural members so that strain is not transmitted to the closet connector or any other part of the plumbing system. The carrier shall conform to ASME A112.6.2.

405.5 Plumbing fixtures with a pumped waste. Plumbing fixtures with a pumped waste shall comply with ASME A112.3.4/CSA B45.9. The plumbing fixture with a pumped waste shall be installed in accordance with the manufacturer's instructions.

405.6 Water-tight joints. Joints formed where fixtures come in contact with walls or floors shall be sealed.

405.7 Plumbing in mental health centers. In mental health centers, pipes or traps shall not be exposed, and fixtures shall be bolted through walls.

405.8 Design of overflows. Where any fixture is provided with an overflow, the waste shall be designed and installed so that standing water in the fixture will not rise in the overflow when the stopper is closed, and water will not remain in the overflow when the fixture is empty.

405.8.1 Connection of overflows. The overflow from any fixture shall discharge into the drainage system on the inlet or fixture side of the trap.

Exception: The overflow from a flush tank serving a water closet or urinal shall discharge into the fixture served.

405.9 Slip joint connections. Slip joints shall be made with an *approved* elastomeric gasket and shall only be installed on the trap outlet, trap inlet and within the trap seal. Fixtures with concealed slip-joint connections shall be provided with an *access* panel or utility space not less than 12 inches (305 mm) in its smallest dimension or other *approved* arrangement so as to provide *access* to the slip joint connections for inspection and repair.

405.10 Design and installation of plumbing fixtures. Integral fixture fitting mounting surfaces on manufactured plumbing fixtures or plumbing fixtures constructed on site shall meet the design requirements of ASME A112.19.2/CSA B45.1 or ASME A112.19.3/CSA B45.4.

SECTION 406
AUTOMATIC CLOTHES WASHERS

406.1 Water connection. The water supply to an automatic clothes washer shall be protected against backflow by an *air gap* that is integral with the machine or a backflow preventer shall be installed in accordance with Section 608. *Air gaps* shall comply with ASME A112.1.2 or A112.1.3.

406.2 Waste connection. The waste from an automatic clothes washer shall discharge through an *air break* into a standpipe in accordance with Section 802.3.3 or into a laundry sink. The trap and *fixture drain* for an automatic clothes washer standpipe shall be not less than 2 inches (51 mm) in diameter. The *fixture drain* for the standpipe serving an automatic clothes washer shall connect to a 3-inch (76 mm) or larger diameter fixture *branch* or *stack*. Automatic clothes washers that discharge by gravity shall be permitted to drain to a waste receptor or an *approved* trench drain.

INTERNATIONAL CODE COUNCIL®
Copyright © 2019 ICC & NYSDOS. ALL RIGHTS RESERVED. Accessed by Lauren Gualdino (lgualdino@briarcliffmanor.org), (-) Order Number #100880972 on May 08, 2020 07:05 AM (PDT) pursuant to License Agreement with ICC & NYSDOS. No further reproduction, no

100880972

SECTION 407
BATHTUBS

407.1 Approval. Bathtubs shall conform to ASME A112.19.1/CSA B45.2, ASME A112.19.2/CSA B45.1, ASME A112.19.3/CSA B45.4 or CSA B45.5/IAPMO Z124**.**

407.2 Bathtub waste outlets and overflows. Bathtubs shall be equipped with a waste outlet and an overflow outlet. The outlets shall be connected to waste tubing or piping not less than $1^1/_2$ inches (38 mm) in diameter. The waste outlet shall be equipped with a water-tight stopper.

407.3 Glazing. Windows and doors within a bathtub enclosure shall conform to the safety glazing requirements of the *Building Code of New York State*.

407.4 Bathtub enclosure. Doors in a bathtub enclosure shall conform to ASME A112.19.15.

SECTION 408
BIDETS

408.1 Approval. Bidets shall conform to ASME A112.19.2/CSA B45.1.

408.2 Water connection. The water supply to a bidet shall be protected against backflow by an *air gap* or backflow preventer in accordance with Section 608.13.1, 608.13.2, 608.13.3, 608.13.5, 608.13.6 or 608.13.8.

408.3 Bidet water temperature. The discharge water temperature from a bidet fitting shall be limited to not greater than 110°F (43°C) by a water-temperature-limiting device conforming to ASSE 1070/ASME A112.1070/CSA B125.70 or CSA B125.3.

SECTION 409
DISHWASHING MACHINES

409.1 Approval. Commercial dishwashing machines shall conform to ASSE 1004 and NSF 3. Residential dishwashers shall conform to NSF 184.

409.2 Water connection. The water supply to a dishwashing machine shall be protected against backflow by an *air gap* that is integral with the machine or a backflow preventer shall be installed in accordance with Section 608. *Air gaps* shall comply with ASME A112.1.2 or A112.1.3.

409.3 Waste connection. The waste connection of a commercial dishwashing machine shall comply with Section 802.1.6.

409.4 Residential dishwasher waste connection. The waste connection of a residential dishwasher shall connect directly to a wye branch fitting on the tailpiece of the kitchen sink, directly to the dishwasher connection of a food waste disposer, or through an air break to a standpipe. The waste line of a residential dishwasher shall rise and be securely fastened to the underside of the sink rim or counter top.

SECTION 410
DRINKING FOUNTAINS

410.1 Approval. Drinking fountains shall conform to ASME A112.19.1/CSA B45.2 or ASME A112.19.2/CSA B45.1 and *water coolers* shall conform to ASHRAE 18. Drinking fountains, *water coolers* and *water dispensers* shall conform to NSF 61, Section 9. Electrically operated, refrigerated drinking *water coolers* and *water dispensers* shall be listed and labeled in accordance with UL 399.

410.2 Small occupancies. Drinking fountains shall not be required for an occupant load of 15 or fewer.

[BE] 410.3 High and low drinking fountains. Where drinking fountains are required, not fewer than two drinking fountains shall be provided. One drinking fountain shall comply with the requirements for people who use a wheelchair and one drinking fountain shall comply with the requirements for standing persons.

Exceptions:

1. A single drinking fountain with two separate spouts that complies with the requirements for people who use a wheelchair and standing persons shall be permitted to be substituted for two separate drinking fountains.
2. Where drinking fountains are primarily for children's use, the drinking fountains for people using wheelchairs shall be permitted to comply with the children's provisions in ICC A117.1 and drinking fountains for standing children shall be permitted to provide the spout at 30 inches (762 mm) minimum above the floor.

410.4 Substitution. Where restaurants provide drinking water in a container free of charge, drinking fountains shall not be required in those restaurants. In other occupancies where drinking fountains are required, *water dispensers* shall be permitted to be substituted for not more than 50 percent of the required number of drinking fountains.

410.5 Prohibited location. Drinking fountains, *water coolers* and *water dispensers* shall not be installed in public restrooms.

SECTION 411
EMERGENCY SHOWERS AND EYEWASH STATIONS

411.1 Approval. Emergency showers and eyewash stations shall conform to ISEA Z358.1.

411.2 Waste connection. Waste connections shall not be required for emergency showers and eyewash stations.

411.3 Water supply. Where hot and cold water is supplied to an emergency shower or eyewash station, the temperature of the water supply shall only be controlled by a temperature actuated mixing valve complying with ASSE 1071.

INTERNATIONAL CODE COUNCIL®
Copyright © 2019 ICC & NYSDOS. ALL RIGHTS RESERVED. Accessed by Lauren Gualdino (lgualdino@briarcliffmanor.org), (-) Order Number #100880972 on May 08, 2020 07:05 AM (PDT) pursuant to License Agreement with ICC & NYSDOS. No further reproduction, no

100880972

SECTION 412
FAUCETS AND FIXTURE FITTINGS

412.1 Approval. Faucets and fixture fittings shall conform to ASME A112.18.1/CSA B125.1. Faucets and fixture fittings that supply drinking water for human ingestion shall conform to the requirements of NSF 61, Section 9. Flexible water connectors exposed to continuous pressure shall conform to the requirements of Section 605.6.

412.1.1 Faucets and supply fittings. Faucets and supply fittings shall conform to the water consumption requirements of Section 604.4.

412.1.2 Waste fittings. Waste fittings shall conform to ASME A112.18.2/CSA B125.2, ASTM F409 or to one of the standards listed in Tables 702.1 and 702.4 for aboveground drainage and vent pipe and fittings.

412.2 Hand showers. Hand-held showers shall conform to ASME A112.18.1/CSA B125.1. Hand-held showers shall provide backflow protection in accordance with ASME A112.18.1/CSA B125.1 or shall be protected against backflow by a device complying with ASME A112.18.3.

412.3 Individual shower valves. Individual shower and tub-shower combination valves shall be balanced-pressure, thermostatic or combination balanced-pressure/thermostatic valves that conform to the requirements of ASSE 1016/ ASME A112.1016/CSA B125.16 or ASME A112.18.1/CSA B125.1 and shall be installed at the point of use. Shower and tub-shower combination valves required by this section shall be equipped with a means to limit the maximum setting of the valve to 120°F (49°C), which shall be field adjusted in accordance with the manufacturer's instructions. In-line thermostatic valves shall not be utilized for compliance with this section.

412.4 Multiple (gang) showers. Multiple (gang) showers supplied with a single-tempered water supply pipe shall have the water supply for such showers controlled by an *approved* automatic temperature control mixing valve that conforms to ASSE 1069 or CSA B125.3, or each shower head shall be individually controlled by a balanced-pressure, thermostatic or combination balanced-pressure/thermostatic valve that conforms to ASSE 1016/ASME A112.1016/CSA B125.16 or ASME A112.18.1/CSA B125.1 and is installed at the point of use. Such valves shall be equipped with a means to limit the maximum setting of the valve to 120°F (49°C), which shall be field adjusted in accordance with the manufacturers' instructions.

412.5 Bathtub and whirlpool bathtub valves. The *hot water* supplied to bathtubs and whirlpool bathtubs shall be limited to not greater than 120°F (49°C) by a water-temperature limiting device that conforms to ASSE 1070/ASME A112.1070/CSA B125.70 or CSA B125.3, except where such protection is otherwise provided by a combination tub/ shower valve in accordance with Section 412.3.

412.6 Hose-connected outlets. Faucets and fixture fittings with hose-connected outlets shall conform to ASME A112.18.3 or ASME A112.18.1/CSA B125.1.

412.7 Temperature-actuated, flow-reduction devices for individual fixture fittings. Temperature-actuated, flow-reduction devices, where installed for individual fixture fittings, shall conform to ASSE 1062. A temperature-actuated, flow-reduction device shall be an *approved* method for limiting the water temperature to not greater than 120º F (49º C) at the outlet of a faucet or fixture fitting. Such devices shall not be used alone as a substitute for the balanced-pressure, thermostatic or combination shower valves required in Section 412.3 or as a substitute for bathtub or whirlpool tub water-temperature-limiting valves required in Section 412.5.

412.8 Transfer valves. Deck-mounted bath/shower transfer valves containing an integral atmospheric vacuum breaker shall conform to the requirements of ASME A112.18.1/CSA B125.1.

412.9 Water closet personal hygiene devices. Personal hygiene devices integral to water closets or water closet seats shall conform to the requirements of ASME A112.4.2/CSA B45.16.

412.10 Head shampoo sink faucets. Head shampoo sink faucets shall be supplied with hot water that is limited to not more than 120°F (49°C) by a water-temperature-limiting device that conforms to ASSE 1070/ASME A112.1070/CSA B125.70. Each faucet shall have integral check valves to prevent crossover flow between the hot and cold water supply connections.

SECTION 413
FLOOR AND TRENCH DRAINS

413.1 Approval. Floor drains shall conform to ASME A112.3.1, ASME A112.6.3 or CSA B79. Trench drains shall comply with ASME A112.6.3.

413.2 Floor drains. Floor drains shall have removable strainers. The floor drain shall be constructed so that the drain is capable of being cleaned. *Access* shall be provided to the drain inlet. Ready *access* shall be provided to floor drains.

Exception: Floor drains serving refrigerated display cases shall be provided with *access*.

413.3 Size of floor drains. Floor drains shall have a drain outlet not less than 2 inches (51 mm) in diameter.

413.4 Public laundries and central washing facilities. In public coin-operated laundries and in the central washing facilities of multiple-family dwellings, the rooms containing automatic clothes washers shall be provided with floor drains located to readily drain the entire floor area. Such drains shall have an outlet of not less than 3 inches (76 mm) in diameter.

SECTION 414
FLOOR SINKS

414.1 Approval. Sanitary floor sinks shall conform to the requirements of ASME A112.6.7.

SECTION 415
FLUSHING DEVICES FOR WATER CLOSETS AND URINALS

415.1 Flushing devices required. Each water closet, urinal, clinical sink and any plumbing fixture that depends on trap siphonage to discharge the fixture contents to the drainage

INTERNATIONAL CODE COUNCIL®
Copyright © 2019 ICC & NYSDOS. ALL RIGHTS RESERVED. Accessed by Lauren Gualdino (lgualdino@briarcliffmanor.org), (-) Order Number #100880972 on May 08, 2020 07:05 AM (PDT) pursuant to License Agreement with ICC & NYSDOS. No further reproduction, no

100880972

system shall be provided with a flushometer valve, flushometer tank or a flush tank designed and installed to supply water in quantity and rate of flow to flush the contents of the fixture, cleanse the fixture and refill the fixture trap.

415.1.1 Separate for each fixture. A flushing device shall not serve more than one fixture.

415.2 Flushometer valves and tanks. Flushometer valves and tanks shall comply with ASSE 1037/ASME A112.1037/CSA B125.37 or CSA B125.3. Vacuum breakers on flushometer valves shall conform to the performance requirements of ASSE 1001 or CSA B64.1.1. *Access* shall be provided to vacuum breakers. Flushometer valves shall be of the water conservation type and shall not be used where the water pressure is lower than the minimum required for normal operation. When operated, the valve shall automatically complete the cycle of operation, opening fully and closing positively under the water supply pressure. Each flushometer valve shall be provided with a means for regulating the flow through the valve. The trap seal to the fixture shall be automatically refilled after each flushing cycle.

415.3 Flush tanks. Flush tanks equipped for manual flushing shall be controlled by a device designed to refill the tank after each discharge and to shut off completely the water flow to the tank when the tank is filled to operational capacity. The trap seal to the fixture shall be automatically refilled after each flushing. The water supply to flush tanks equipped for automatic flushing shall be controlled with a timing device or sensor control devices.

415.3.1 Fill valves. Flush tanks shall be equipped with an antisiphon fill valve conforming to ASSE 1002/ASME A112.1002/CSA B125.12 or CSA B125.3. The fill valve backflow preventer shall be located not less than 1 inch (25 mm) above the full opening of the overflow pipe.

415.3.2 Overflows in flush tanks. Flush tanks shall be provided with overflows discharging to the water closet or urinal connected thereto and shall be sized to prevent flooding the tank at the maximum rate at which the tanks are supplied with water according to the manufacturer's design conditions. The opening of the overflow pipe shall be located above the *flood level rim* of the water closet or urinal or above a secondary overflow in the flush tank.

415.3.3 Sheet copper. Sheet copper utilized for flush tank linings shall conform to ASTM B152 and shall not weigh less than 10 ounces per square foot (0.03 kg/m^2).

415.3.4 Access required. All parts in a flush tank shall be provided with *access* for repair and replacement.

415.4 Flush pipes and fittings. Flush pipes and fittings shall be of nonferrous material and shall conform to ASME A112.19.5/CSA B45.15.

SECTION 416
FOOD WASTE DISPOSER UNITS

416.1 Approval. Domestic food waste disposers shall conform to ASSE 1008 and shall be listed and labeled in accordance with UL 430. Food waste disposers shall not increase the *drainage fixture unit* load on the sanitary drainage system.

416.2 Domestic food waste disposer waste outlets. Domestic food waste disposers shall be connected to a drain of not less than $1^1/_2$ inches (38 mm) in diameter.

416.3 Commercial food waste disposer waste outlets. Commercial food waste disposers shall be connected to a drain not less than $1^1/_2$ inches (38 mm) in diameter. Commercial food waste disposers shall be connected and trapped separately from any other fixtures or sink compartments.

416.4 Water supply required. Food waste disposers shall be provided with a supply of cold water. The water supply shall be protected against backflow by an *air gap* or backflow preventer in accordance with Section 608.

SECTION 417
GARBAGE CAN WASHERS

417.1 Water connection. The water supply to a garbage can washer shall be protected against backflow by an *air gap* or a backflow preventer in accordance with Section 608.13.1, 608.13.2, 608.13.3, 608.13.5, 608.13.6 or 608.13.8.

417.2 Waste connection. Garbage can washers shall be trapped separately. The receptacle receiving the waste from the washer shall have a removable basket or strainer to prevent the discharge of large particles into the drainage system.

SECTION 418
LAUNDRY TRAYS

418.1 Approval. Laundry trays shall conform to ASME A112.19.1/CSA B45.2, ASME A112.19.2/CSA B45.1, ASME A112.19.3/CSA B45.4 or CSA B45.5/IAPMO Z124.

418.2 Waste outlet. Each compartment of a laundry tray shall be provided with a waste outlet not less than $1^1/_2$ inches (38 mm) in diameter and a strainer or crossbar to restrict the clear opening of the waste outlet.

SECTION 419
LAVATORIES

419.1 Approval. Lavatories shall conform to ASME A112.19.1/CSA B45.2, ASME A112.19.2/CSA B45.1, ASME A112.19.3/CSA B45.4 or CSA B45.5/IAPMO Z124. Group wash-up equipment shall conform to the requirements of Section 402. Every 20 inches (508 mm) of rim space shall be considered as one lavatory.

419.2 Cultured marble lavatories. Cultured marble vanity tops with an integral lavatory shall conform to CSA B45.5/IAPMO Z124.

419.3 Lavatory waste outlets. Lavatories shall have waste outlets not less than $1^1/_4$ inches (32 mm) in diameter. A strainer, pop-up stopper, crossbar or other device shall be provided to restrict the clear opening of the waste outlet.

419.4 Moveable lavatory systems. Moveable lavatory systems shall comply with ASME A112.19.12.

419.5 Tempered water for public hand-washing facilities. *Tempered water* shall be delivered from lavatories and group wash fixtures located in public toilet facilities provided for

INTERNATIONAL CODE COUNCIL®
Copyright © 2019 ICC & NYSDOS. ALL RIGHTS RESERVED. Accessed by Lauren Gualdino (lgualdino@briarcliffmanor.org), (-) Order Number #100880972 on May 08, 2020 07:05 AM (PDT) pursuant to License Agreement with ICC & NYSDOS. No further reproduction, no

100880972

customers, patrons and visitors. *Tempered water* shall be delivered through an *approved* water-temperature limiting device that conforms to ASSE 1070/ASME A112.1070/CSA B125.70 or CSA B125.3.

SECTION 420
MANUAL FOOD AND BEVERAGE DISPENSING EQUIPMENT

420.1 Approval. Manual food and beverage dispensing equipment shall conform to the requirements of NSF 18.

SECTION 421
SHOWERS

421.1 Approval. Prefabricated showers and shower compartments shall conform to ASME A112.19.2/CSA B45.1 or CSA B45.5/IAPMO Z124. Shower valves for individual showers shall conform to the requirements of Section 412.3.

421.2 Water supply riser. Water supply risers from the shower valve to the shower head outlet, whether exposed or concealed, shall be attached to the structure. The attachment to the structure shall be made by the use of support devices designed for use with the specific piping material or by fittings anchored with screws.

421.3 Shower waste outlet. Waste outlets serving showers shall be not less than $1^1/_2$ inches (38 mm) in diameter and, for other than waste outlets in bathtubs, shall have removable strainers not less than 3 inches (76 mm) in diameter with strainer openings not less than $^1/_4$ inch (6.4 mm) in least dimension. Where each shower space is not provided with an individual waste outlet, the waste outlet shall be located, and the floor pitched so that waste from one shower does not flow over the floor area serving another shower. Waste outlets shall be fastened to the waste pipe in an *approved* manner.

421.4 Shower compartments. Shower compartments shall be not less than 900 square inches (0.58 m^2) in interior cross-sectional area. Shower compartments shall be not less than 30 inches (762 mm) in least dimension as measured from the finished interior dimension of the compartment, exclusive of fixture valves, showerheads, soap dishes and safety grab bars or rails. Except as required in Section 404, the minimum required area and dimension shall be measured from the finished interior dimension at a height equal to the top of the threshold and at a point tangent to its centerline and shall be continued to a height not less than 70 inches (1778 mm) above the shower drain outlet.

Exception: Shower compartments having not less than 25 inches (635 mm) in minimum dimension measured from the finished interior dimension of the compartment, provided that the shower compartment has not less than 1,300 square inches (0.838 m^2) of cross-sectional area.

421.4.1 Floor and wall area. Bathtub floors, shower floors, wall areas above built-in tubs that have installed shower heads and walls in shower compartments shall be constructed of smooth, corrosion-resistant and nonabsorbent waterproof materials. Wall materials shall extend to a height of not less than 6 feet (1829 mm) above the room floor level, and not less than 70 inches (1778 mm) above the drain of the tub or shower. Such walls shall form a water-tight joint with each other and with either the tub or shower floor.

421.4.2 Access. The shower compartment access and egress opening shall have a clear and unobstructed finished width of not less than 22 inches (559 mm). Shower compartments required to be designed in conformance to accessibility provisions shall comply with Section 404.1.

421.5 Shower floors or receptors. Floor surfaces shall be constructed of impervious, noncorrosive, nonabsorbent and waterproof materials.

421.5.1 Support. Floors or receptors under shower compartments shall be laid on, and supported by, a smooth and structurally sound base.

421.5.2 Shower lining. Floors under shower compartments, except where prefabricated receptors have been provided, shall be lined and made water tight utilizing material complying with Sections 421.5.2.1 through 421.5.2.6. Such liners shall turn up on all sides not less than 2 inches (51 mm) above the finished threshold level. Liners shall be recessed and fastened to an *approved* backing so as not to occupy the space required for wall covering, and shall not be nailed or perforated at any point less than 1 inch (25 mm) above the finished threshold. Liners shall be pitched one-fourth unit vertical in 12 units horizontal (2-percent slope) and shall be sloped toward the fixture drains and be securely fastened to the waste outlet at the seepage entrance, making a water-tight joint between the liner and the outlet. The completed liner shall be tested in accordance with Section 312.9.

Exceptions:

1. Floor surfaces under shower heads provided for rinsing laid directly on the ground are not required to comply with this section.
2. Where a sheet-applied, load-bearing, bonded, waterproof membrane is installed as the shower lining, the membrane shall not be required to be recessed.

421.5.2.1 PVC sheets. Plasticized polyvinyl chloride (PVC) sheets shall meet the requirements of ASTM D4551. Sheets shall be joined by solvent welding in accordance with the manufacturer's installation instructions.

421.5.2.2 Chlorinated polyethylene (CPE) sheets. Nonplasticized chlorinated polyethylene sheet shall meet the requirements of ASTM D4068. The liner shall be joined in accordance with the manufacturer's installation instructions.

421.5.2.3 Sheet lead. Sheet lead shall weigh not less than 4 pounds per square foot (19.5 kg/m^2) and shall be coated with an asphalt paint or other *approved* coating. The lead sheet shall be insulated from conducting substances other than the connecting drain by 15-pound (6.80 kg) asphalt felt or an equivalent. Sheet lead shall be joined by burning.

INTERNATIONAL CODE COUNCIL®
Copyright © 2019 ICC & NYSDOS. ALL RIGHTS RESERVED. Accessed by Lauren Gualdino (lgualdino@briarcliffmanor.org), (-) Order Number #100880972 on May 08, 2020 07:05 AM (PDT) pursuant to License Agreement with ICC & NYSDOS. No further reproduction, no

100880972

421.5.2.4 Sheet copper. Sheet copper shall conform to ASTM B152 and shall weigh not less than 12 ounces per square foot (3.7 kg/m^2). The copper sheet shall be insulated from conducting substances other than the connecting drain by 15-pound (6.80 kg) asphalt felt or an equivalent. Sheet copper shall be joined by brazing or soldering.

421.5.2.5 Sheet-applied, load-bearing, bonded, waterproof membranes. Sheet-applied, load-bearing, bonded, waterproof membranes shall meet requirements of TCNA A118.10 and shall be applied in accordance with the manufacturer's installation instructions.

421.5.2.6 Liquid-type, trowel-applied, load-bearing, bonded waterproof materials. Liquid-type, trowel-applied, load-bearing, bonded waterproof materials shall meet the requirements of TCNA A118.10 and shall be applied in accordance with the manufacturer's instructions.

421.6 Glazing. Windows and doors within a shower enclosure shall conform to the safety glazing requirements of the *Building Code of New York State*.

SECTION 422
SINKS

422.1 Approval. Sinks shall conform to ASME A112.19.1/CSA B45.2, ASME A112.19.2/CSA B45.1, ASME A112.19.3/CSA B45.4 or CSA B45.5/IAPMO Z124.

422.2 Sink waste outlets. Sinks shall be provided with waste outlets having a diameter not less than $1^1/_2$ inches (38 mm). A strainer or crossbar shall be provided to restrict the clear opening of the waste outlet.

422.3 Moveable sink systems. Moveable sink systems shall comply with ASME A112.19.12.

SECTION 423
SPECIALTY PLUMBING FIXTURES

423.1 Water connections. Baptisteries, ornamental and lily pools, aquariums, ornamental fountain basins, swimming pools, and similar constructions, where provided with water supplies, shall be protected against backflow in accordance with Section 608.

423.2 Approval. Specialties requiring water and waste connections shall be submitted for approval.

423.3 Footbaths and pedicure baths. The water supplied to specialty plumbing fixtures, such as pedicure chairs having an integral foot bathtub and footbaths, shall be limited to not greater than 120°F (49°C) by a water-temperature-limiting device that conforms to ASSE 1070/ASME A112.1070/CSA B125.70 or CSA B125.3.

SECTION 424
URINALS

424.1 Approval. Urinals shall conform to ASME A112.19.2/CSA B45.1, ASME A112.19.19 or CSA B45.5/IAPMO Z124. Urinals shall conform to the water consumption requirements of Section 604.4. Water-supplied urinals shall conform to the hydraulic performance requirements of ASME A112.19.2/CSA B45.1 or CSA B45.5/IAPMO Z124.

[NY] 424.2 Substitution for water closets. In each bathroom or toilet room, urinals shall not be substituted for more than 67 percent of the required water closets for males according to Table 403.1 in assembly and educational occupancies. Urinals shall not be substituted for more than 50 percent of the required water closets for males according to Table 403.1 in all other occupancies.

SECTION 425
WATER CLOSETS

425.1 Approval. Water closets shall conform to the water consumption requirements of Section 604.4 and shall conform to ASME A112.19.2/CSA B45.1, ASME A112.19.3/CSA B45.4 or CSA B45.5/IAPMO Z124. Water closets shall conform to the hydraulic performance requirements of ASME A112.19.2/CSA B45.1. Water closet tanks shall conform to ASME A112.19.2/CSA B45.1, ASME A112.19.3/CSA B45.4 or CSA B45.5/IAPMO Z124. Electro-hydraulic water closets shall comply with ASME A112.19.2/CSA B45.1. Water closets equipped with a dual flushing device shall comply with ASME A112.19.14.

425.2 Water closets for public or employee toilet facilities. Water closet bowls for *public* or employee toilet facilities shall be of the elongated type.

425.3 Water closet seats. Water closets shall be equipped with seats of smooth, nonabsorbent material. Seats of water closets provided for *public* or employee toilet facilities shall be of the hinged open-front type. Integral water closet seats shall be of the same material as the fixture. Water closet seats shall be sized for the water closet bowl type.

425.4 Water closet connections. A 4-inch by 3-inch (102 mm by 76 mm) closet bend shall be acceptable. Where a 3-inch (76 mm) bend is utilized on water closets, a 4-inch by 3-inch (102 mm by 76 mm) flange shall be installed to receive the fixture horn.

SECTION 426
WHIRLPOOL BATHTUBS

426.1 Approval. Whirlpool bathtubs shall comply with ASME A112.19.7/CSA B45.10 and shall be listed and labeled in accordance with UL 1795.

426.2 Installation. Whirlpool bathtubs shall be installed and tested in accordance with the manufacturer's instructions. The pump shall be located above the weir of the fixture trap.

426.3 Drain. The pump drain and circulation piping shall be sloped to drain the water in the volute and the circulation piping when the whirlpool bathtub is empty.

INTERNATIONAL CODE COUNCIL®
Copyright © 2019 ICC & NYSDOS. ALL RIGHTS RESERVED. Accessed by Lauren Gualdino (lgualdino@briarcliffmanor.org), (-) Order Number #100880972 on May 08, 2020 07:05 AM (PDT) pursuant to License Agreement with ICC & NYSDOS. No further reproduction, no

100880972

426.4 Suction fittings. Suction fittings for whirlpool bathtubs shall comply with ASME A112.19.7/CSA B45.10.

426.5 Access to pump. *Access* shall be provided to circulation pumps in accordance with the fixture or pump manufacturer's installation instructions. Where the manufacturer's instructions do not specify the location and minimum size of field-fabricated access openings, an opening not less than 12 inches by 12 inches (305 mm by 305 mm) shall be installed to provide *access* to the circulation pump. Where pumps are located more than 2 feet (609 mm) from the access opening, an opening not less than 18 inches by 18 inches (457 mm by 457 mm) shall be installed. A door or panel shall be permitted to close the opening. In all cases, the access opening shall be unobstructed and of the size necessary to permit the removal and replacement of the circulation pump.

426.6 Whirlpool enclosure. Doors within a whirlpool enclosure shall conform to ASME A112.19.15.

INTERNATIONAL CODE COUNCIL®
Copyright © 2019 ICC & NYSDOS. ALL RIGHTS RESERVED. Accessed by Lauren Gualdino (lgualdino@briarcliffmanor.org), (-) Order Number #100880972 on May 08, 2020 07:05 AM (PDT) pursuant to License Agreement with ICC & NYSDOS. No further reproduction, no

100880972

CHAPTER 5

WATER HEATERS

SECTION 501
GENERAL

501.1 Scope. The provisions of this chapter shall govern the materials, design and installation of water heaters and the related safety devices and appurtenances.

501.2 Water heater as space heater. Where a combination potable water heating and space heating system requires water for space heating at temperatures greater than 140°F (60°C), a master thermostatic mixing valve complying with ASSE 1017 shall be provided to limit the water supplied to the potable *hot water* distribution system to a temperature of 140°F (60°C) or less. The potability of the water shall be maintained throughout the system.

501.3 Drain valves. Drain valves for emptying shall be installed at the bottom of each tank-type water heater and hot water storage tank. The drain valve inlet shall be not less than $^{3}/_{4}$-inch (19 mm) nominal iron pipe size and the outlet shall be provided with male garden hose threads.

501.4 Location. Water heaters and storage tanks shall be located and connected so as to provide *access* for observation, maintenance, servicing and replacement.

501.5 Water heater labeling. Water heaters shall be third-party certified.

501.6 Water temperature control in piping from tankless heaters. The temperature of water from tankless water heaters shall be not greater than 140°F (60°C) where intended for domestic uses. This provision shall not supersede the requirement for protective shower valves in accordance with Section 412.3.

501.7 Pressure marking of storage tanks. Storage tanks and water heaters installed for domestic hot water shall have the maximum allowable working pressure clearly and indelibly stamped in the metal or marked on a plate welded thereto or otherwise permanently attached. Such markings shall be in a position with *access* on the outside of the tank so as to make inspection or reinspection readily possible.

501.8 Temperature controls. Hot water supply systems shall be equipped with automatic temperature controls capable of adjustments from the lowest to the highest acceptable temperature settings for the intended temperature operating range.

SECTION 502
INSTALLATION

502.1 General. Water heaters shall be installed in accordance with the manufacturer's instructions. Oil-fired water heaters shall conform to the requirements of this code and the *Mechanical Code of New York State*. Electric water heaters shall conform to the requirements of this code and provisions of NFPA 70. Gas-fired water heaters shall conform to the requirements of the *Fuel Gas Code of New York State*. Solar thermal water heating systems shall conform to the requirements of the *Mechanical Code of New York State* and ICC 900/SRCC 300.

502.1.1 Elevation and protection. Elevation of water heater ignition sources and mechanical damage protection requirements for water heaters shall be in accordance with the *Mechanical Code of New York State* and the *Fuel Gas Code of New York State*.

502.2 Rooms used as a plenum. Water heaters using solid, liquid or gas fuel shall not be installed in a room containing air-handling machinery where such room is used as a plenum.

502.3 Water heaters installed in attics. Attics containing a water heater shall be provided with an opening and unobstructed passageway large enough to allow removal of the water heater. The passageway shall be not less than 30 inches (762 mm) in height and 22 inches (559 mm) in width and not more than 20 feet (6096 mm) in length when measured along the centerline of the passageway from the opening to the water heater. The passageway shall have continuous solid flooring not less than 24 inches (610 mm) in width. A level service space not less than 30 inches (762 mm) in length and 30 inches (762 mm) in width shall be present at the front or service side of the water heater. The clear access opening dimensions shall be not less than 20 inches by 30 inches (508 mm by 762 mm) where such dimensions are large enough to allow removal of the water heater.

502.4 Seismic supports. Where earthquake loads are applicable in accordance with the *Building Code of New York State*, water heater supports shall be designed and installed for the seismic forces in accordance with the *Building Code of New York State*.

502.5 Clearances for maintenance and replacement. Appliances shall be provided with *access* for inspection, service, repair and replacement without disabling the function of a fire-resistance-rated assembly or removing permanent construction, other appliances or any other piping or ducts not connected to the appliance being inspected, serviced, repaired or replaced. A level working space not less than 30 inches in length and 30 inches in width (762 mm by 762 mm) shall be provided in front of the control side to service an appliance.

SECTION 503
CONNECTIONS

503.1 Cold water line valve. The cold water *branch* line from the main water supply line to each hot water storage tank or water heater shall be provided with a valve, located near the equipment and serving only the hot water storage tank or water heater. The valve shall not interfere or cause a disruption of the cold water supply to the remainder of the cold water system. The valve shall be provided with *access* on the same floor level as the water heater served.

INTERNATIONAL CODE COUNCIL®
Copyright © 2019 ICC & NYSDOS. ALL RIGHTS RESERVED. Accessed by Lauren Gualdino (lgualdino@briarcliffmanor.org), (-) Order Number #100880972 on May 08, 2020 07:05 AM (PDT) pursuant to License Agreement with ICC & NYSDOS. No further reproduction, no

100880972

503.2 Water circulation. The method of connecting a circulating water heater to the tank shall provide proper circulation of water through the water heater. The pipe or tubes required for the installation of appliances that will draw from the water heater or storage tank shall comply with the provisions of this code for material and installation.

SECTION 504
SAFETY DEVICES

504.1 Antisiphon devices. An *approved* means, such as a cold water "dip" tube with a hole at the top or a vacuum relief valve installed in the cold water supply line above the top of the heater or tank, shall be provided to prevent siphoning of any storage water heater or tank.

504.2 Vacuum relief valve. Bottom fed water heaters and bottom fed tanks connected to water heaters shall have a vacuum relief valve installed. The vacuum relief valve shall comply with ANSI Z21.22.

504.3 Shutdown. A means for disconnecting an electric hot water supply system from its energy supply shall be provided in accordance with NFPA 70. A separate valve shall be provided to shut off the energy fuel supply to all other types of hot water supply systems.

504.4 Relief valve. Storage water heaters operating above atmospheric pressure shall be provided with an *approved*, self-closing (levered) pressure relief valve and temperature relief valve or combination thereof. The relief valve shall conform to ANSI Z21.22. The relief valve shall not be used as a means of controlling thermal expansion.

504.4.1 Installation. Such valves shall be installed in the shell of the water heater tank. Temperature relief valves shall be so located in the tank as to be actuated by the water in the top 6 inches (152 mm) of the tank served. For installations with separate storage tanks, the *approved*, self-closing (levered) pressure relief valve and temperature relief valve or combination thereof conforming to ANSI Z21.22 valves shall be installed on both the storage water heater and storage tank. There shall not be a check valve or shutoff valve between a relief valve and the heater or tank served**.**

504.5 Relief valve approval. Temperature and pressure relief valves, or combinations thereof, and energy cutoff devices shall bear the label of an *approved* agency and shall have a temperature setting of not more than 210°F (99°C) and a pressure setting not exceeding the tank or water heater manufacturer's rated working pressure or 150 psi (1035 kPa), whichever is less. The relieving capacity of each pressure relief valve and each temperature relief valve shall equal or exceed the heat input to the water heater or storage tank.

504.6 Requirements for discharge piping. The discharge piping serving a pressure relief valve, temperature relief valve or combination thereof shall:

1. Not be directly connected to the drainage system.
2. Discharge through an *air gap* located in the same room as the water heater.
3. Not be smaller than the diameter of the outlet of the valve served and shall discharge full size to the *air gap*.
4 Serve a single relief device and shall not connect to piping serving any other relief device or equipment.
5. Discharge to the floor, to the pan serving the water heater or storage tank, to a waste receptor or to the outdoors.
6. Discharge in a manner that does not cause personal injury or structural damage.
7. Discharge to a termination point that is readily observable by the building occupants.
8. Not be trapped.
9. Be installed so as to flow by gravity.
10. Terminate not more than 6 inches (152 mm) above and not less than two times the discharge pipe diameter above the floor or *flood level rim* of the waste receptor.
11. Not have a threaded connection at the end of such piping.
12. Not have valves or tee fittings.
13. Be constructed of those materials listed in Section 605.4 or materials tested, rated and *approved* for such use in accordance with ASME A112.4.1.
14. Be one nominal size larger than the size of the relief valve outlet, where the relief valve discharge piping is installed with insert fittings. The outlet end of such tubing shall be fastened in place.

504.7 Required pan. Where a storage tank-type water heater or a hot water storage tank is installed in a location where water leakage from the tank will cause damage, the tank shall be installed in a pan constructed of one of the following:

1. Galvanized steel or aluminum of not less than 0.0236 inch (0.6010 mm) in thickness.
2. Plastic not less than 0.036 inch (0.9 mm) in thickness.
3. Other *approved* materials.

A plastic pan shall not be installed beneath a gas-fired water heater.

504.7.1 Pan size and drain. The pan shall be not less than $1^1/_2$ inches (38 mm) in depth and shall be of sufficient size and shape to receive all dripping or condensate from the tank or water heater. The pan shall be drained by an indirect waste pipe having a diameter of not less than $^3/_4$ inch (19 mm). Piping for safety pan drains shall be of those materials listed in Table 605.4.

504.7.2 Pan drain termination. The pan drain shall extend full size and terminate over a suitably located indirect waste receptor or floor drain or extend to the exterior of the building and terminate not less than 6 inches (152 mm) and not more than 24 inches (610 mm) above the adjacent ground surface. Where a pan drain was not previously installed, a pan drain shall not be required for a replacement water heater installation.

INTERNATIONAL CODE COUNCIL®
Copyright © 2019 ICC & NYSDOS. ALL RIGHTS RESERVED. Accessed by Lauren Gualdino (lgualdino@briarcliffmanor.org), (-) Order Number #100880972 on May 08, 2020 07:05 AM (PDT) pursuant to License Agreement with ICC & NYSDOS. No further reproduction, no

100880972

SECTION 505
INSULATION

[E] 505.1 Unfired vessel insulation. Unfired hot water storage tanks shall be insulated to R-12.5 (h • ft^2 • ºF)/Btu (R-2.2 m^2 • K/W).

INTERNATIONAL CODE COUNCIL®
Copyright © 2019 ICC & NYSDOS. ALL RIGHTS RESERVED. Accessed by Lauren Gualdino (lgualdino@briarcliffmanor.org), (-) Order Number #100880972 on May 08, 2020 07:05 AM (PDT) pursuant to License Agreement with ICC & NYSDOS. No further reproduction, no

100880972

INTERNATIONAL CODE COUNCIL®
Copyright © 2019 ICC & NYSDOS. ALL RIGHTS RESERVED. Accessed by Lauren Gualdino (lgualdino@briarcliffmanor.org), (-) Order Number #100880972 on May 08, 2020 07:05 AM (PDT) pursuant to License Agreement with ICC & NYSDOS. No further reproduction, no

100880972

CHAPTER 6
WATER SUPPLY AND DISTRIBUTION

SECTION 601
GENERAL

601.1 Scope. This chapter shall govern the materials, design and installation of water supply systems, both hot and cold, for utilization in connection with human occupancy and habitation and shall govern the installation of individual water supply systems.

601.2 Solar energy utilization. Solar energy systems used for heating potable water or using an independent medium for heating potable water shall comply with the applicable requirements of this code. The use of solar energy shall not compromise the requirements for cross connection or protection of the potable water supply system required by this code.

601.3 Existing piping used for grounding. Existing metallic water service piping used for electrical grounding shall not be replaced with nonmetallic pipe or tubing until other *approved* means of grounding is provided.

601.4 Tests. The potable water distribution system shall be tested in accordance with Section 312.5.

601.5 Rehabilitation of piping systems. Where pressure piping systems are rehabilitated using an epoxy lining system, such lining system shall comply with ASTM F2831.

SECTION 602
WATER REQUIRED

602.1 General. Structures equipped with plumbing fixtures and utilized for human occupancy or habitation shall be provided with a potable supply of water in the amounts and at the pressures specified in this chapter.

602.2 Potable water required. Only potable water shall be supplied to plumbing fixtures that provide water for drinking, bathing or culinary purposes, or for the processing of food, medical or pharmaceutical products. Unless otherwise provided in this code, potable water shall be supplied to all plumbing fixtures.

602.3 Individual water supply. Where a potable public water supply is not available, individual sources of potable water supply shall be utilized.

[NY] 602.3.1 Private water supplies. Private water supplies (private wells) shall be installed by a well driller registered with the New York State Department of Environmental Conservation and shall be in compliance with the provisions of Appendix 5-B (Standards for Water Wells) or 5-D (Special Requirements for Wells Serving Public Water Systems), as applicable, of the New York State Department of Health (10 NYCRR).

602.3.2 Minimum quantity. The combined capacity of the source and storage in an individual water supply system shall supply the fixtures with water at rates and pressures as required by this chapter.

[NY] 602.3.3 Water quality. Water from an individual water supply shall be approved as potable by the authority having jurisdiction prior to connection to the plumbing system, in accordance with the applicable New York State Department of Health regulations.

[NY] 602.3.4 Disinfection of system. Private wells are regulated by the Department of Health in accordance with Appendix 5-B (Standards for Water Wells) of Title 10 (Health) of the Official Compilation of Codes, Rules and Regulations of the State of New York (NYCRR).

602.3.5 Pumps. Pumps shall be rated for the transport of potable water. Pumps in an individual water supply system shall be constructed and installed so as to prevent contamination from entering a potable water supply through the pump units. Pumps shall be sealed to the well casing or covered with a water-tight seal. Pumps shall be designed to maintain a prime and installed such that ready *access* is provided to the pump parts of the entire assembly for repairs.

602.3.5.1 Pump enclosure. The pump room or enclosure around a well pump shall be drained and protected from freezing by heating or other *approved* means. Where pumps are installed in basements, such pumps shall be mounted on a block or shelf not less than 18 inches (457 mm) above the basement floor. Well pits shall be prohibited.

SECTION 603
WATER SERVICE

603.1 Size of water service pipe. The water service pipe shall be sized to supply water to the structure in the quantities and at the pressures required in this code. The water service pipe shall be not less than $^3/_4$ inch (19.1 mm) in diameter.

603.2 Separation of water service and building sewer. Where water service piping is located in the same trench with the *building sewer*, such *sewer* shall be constructed of materials listed in Table 702.2. Where the *building sewer* piping is not constructed of materials listed in Table 702.2, the water service pipe and the *building sewer* shall be horizontally separated by not less than 5 feet (1524 mm) of undisturbed or compacted earth. The required separation distance shall not apply where a water service pipe crosses a *sewer* pipe, provided that the water service is sleeved to a point not less than 5 feet (1524 mm) horizontally from the *sewer* pipe centerline on both sides of such crossing. The sleeve shall be of pipe materials listed in Table 605.3, 702.2 or 702.3. The required separation distance shall not apply where the bottom of the water service pipe, located within 5 feet (1524 mm) of the *sewer,* is not less than 12 inches (305 mm) above the highest point of the top of the *building sewer*.

603.2.1 Water service near sources of pollution. Potable water service pipes shall not be located in, under or above cesspools, septic tanks, septic tank drainage fields or seepage pits. Where soil or ground water causes contaminated

INTERNATIONAL CODE COUNCIL®
Copyright © 2019 ICC & NYSDOS. ALL RIGHTS RESERVED. Accessed by Lauren Gualdino (lgualdino@briarcliffmanor.org), (-) Order Number #100880972 on May 08, 2020 07:05 AM (PDT) pursuant to License Agreement with ICC & NYSDOS. No further reproduction, no

100880972

conditions for piping, analysis shall be required in accordance with Section 605.1.

SECTION 604
DESIGN OF BUILDING WATER DISTRIBUTION SYSTEM

604.1 General. The design of the water distribution system shall conform to *accepted engineering practice*. Methods utilized to determine pipe sizes shall be *approved*.

604.2 System interconnection. At the points of interconnection between the hot and cold water supply piping systems and the individual fixtures, appliances or devices, provisions shall be made to prevent flow between such piping systems.

604.3 Water distribution system design criteria. The water distribution system shall be designed, and pipe sizes shall be selected such that under conditions of peak demand, the capacities at the fixture supply pipe outlets shall be not less than shown in Table 604.3. The minimum flow rate and flow pressure provided to fixtures and appliances not listed in Table 604.3 shall be in accordance with the manufacturer's installation instructions.

604.4 Maximum flow and water consumption. The maximum water consumption flow rates and quantities for all plumbing fixtures and fixture fittings shall be in accordance with Table 604.4.

Exceptions:

1. Blowout design water closets having a water consumption not greater than $3^1/_2$ gallons (13 L) per flushing cycle.
2. Vegetable sprays.
3. Clinical sinks having a water consumption not greater than $4^1/_2$ gallons (17 L) per flushing cycle.
4. Service sinks.
5. Emergency showers.

[NY] TABLE 604.4
MAXIMUM FLOW RATES AND CONSUMPTION FOR PLUMBING FIXTURES AND FIXTURE FITTINGS

PLUMBING FIXTURE OR FIXTURE FITTING	MAXIMUM FLOW RATE OR QUANTITY[b]
Lavatory, private	1.5 gpm at 60 psi
Lavatory, public (metering)	0.25 gallon per metering cycle
Lavatory, public (other than metering)	0.5 gpm at 60 psi
Shower head[a]	2.0 gpm at 80 psi
Sink faucet	2.2 gpm at 60 psi
Urinal	0.5 gallon per flushing cycle
Water closet	1.28 gallons per flushing cycle[c]

For SI: 1 gallon = 3.785 L, 1 gallon per minute = 3.785 L/m, 1 pound per square inch = 6.895 kPa.

a. A hand-held shower spray is a shower head.

b. Consumption tolerances shall be determined from referenced standards.

c. [NY] The flush volume for a dual-flush water closet is defined as the composite, average flush volume of two reduced flushes and one full flush.

TABLE 604.3
WATER DISTRIBUTION SYSTEM DESIGN CRITERIA REQUIRED CAPACITY AT FIXTURE SUPPLY PIPE OUTLETS

FIXTURE SUPPLY OUTLET SERVING	FLOW RATE[a] (gpm)	FLOW PRESSURE (psi)
Bathtub, balanced-pressure, thermostatic or combination balanced-pressure/ thermostatic mixing valve	4	20
Bidet, thermostatic mixing valve	2	20
Combination fixture	4	8
Dishwasher, residential	2.75	8
Drinking fountain	0.75	8
Laundry tray	4	8
Lavatory, private	0.8	8
Lavatory, private, mixing valve	0.8	8
Lavatory, public	0.4	8
Shower	2.5	8
Shower, balanced-pressure, thermostatic or combination balanced-pressure/ thermostatic mixing valve	2.5[b]	20
Sillcock, hose bibb	5	8
Sink, residential	1.75	8
Sink, service	3	8
Urinal, valve	12	25
Water closet, blow out, flushometer valve	25	45
Water closet, flushometer tank	1.6	20
Water closet, siphonic, flushometer valve	25	35
Water closet, tank, close coupled	3	20
Water closet, tank, one piece	6	20

For SI: 1 pound per square inch = 6.895 kPa, 1 gallon per minute = 3.785 L/m.

a. For additional requirements for flow rates and quantities, see Section 604.4.

b. Where the shower mixing valve manufacturer indicates a lower flow rating for the mixing valve, the lower value shall be applied.

604.5 Size of fixture supply. The minimum size of a fixture supply pipe shall be as shown in Table 604.5. The fixture supply pipe shall terminate not more than 30 inches (762 mm) from the point of connection to the fixture. A reduced-size flexible water connector installed between the supply pipe and the fixture shall be of an *approved* type. The supply pipe shall extend to the floor or wall adjacent to the fixture. The minimum size of individual distribution lines utilized in gridded or parallel water distribution systems shall be as shown in Table 604.5.

604.6 Variable street pressures. Where street water main pressures fluctuate, the building water distribution system shall be designed for the minimum pressure available.

604.7 Inadequate water pressure. Wherever water pressure from the street main or other source of supply is insufficient to provide flow pressures at fixture outlets as required under Table 604.3, a water pressure booster system conforming to Section 606.5 shall be installed on the building water supply system.

INTERNATIONAL CODE COUNCIL®
Copyright © 2019 ICC & NYSDOS. ALL RIGHTS RESERVED. Accessed by Lauren Gualdino (lgualdino@briarcliffmanor.org), (-) Order Number #100880972 on May 08, 2020 07:05 AM (PDT) pursuant to License Agreement with ICC & NYSDOS. No further reproduction, no

100880972

604.8 Water pressure-reducing valve or regulator. Where water pressure within a building exceeds 80 psi (552 kPa) static, an *approved* water pressure-reducing valve conforming to ASSE 1003 or CSA B356 with strainer shall be installed to reduce the pressure in the building water distribution piping to not greater than 80 psi (552 kPa) static.

Exception: Service lines to sill cocks and outside hydrants, and main supply risers where pressure from the mains is reduced to 80 psi (552 kPa) or less at individual fixtures.

TABLE 604.5
MINIMUM SIZES OF FIXTURE WATER SUPPLY PIPES

FIXTURE	MINIMUM PIPE SIZE (inch)
Bathtubs[a] (60″ × 32″ and smaller)	1/2
Bathtubs[a] (larger than 60″ × 32″)	1/2
Bidet	3/8
Combination sink and tray	1/2
Dishwasher, domestic[a]	1/2
Drinking fountain	3/8
Hose bibbs	1/2
Kitchen sink[a]	1/2
Laundry, 1, 2 or 3 compartments[a]	1/2
Lavatory	3/8
Shower, single head[a]	1/2
Sinks, flushing rim	3/4
Sinks, service	1/2
Urinal, flush tank	1/2
Urinal, flushometer valve	3/4
Wall hydrant	1/2
Water closet, flush tank	3/8
Water closet, flushometer tank	3/8
Water closet, flushometer valve	1
Water closet, one piece[a]	1/2

For SI: 1 inch = 25.4 mm, 1 foot = 304.8 mm,
1 pound per square inch = 6.895 kPa.

a. Where the developed length of the distribution line is 50 feet or less, and the available pressure at the meter is 35 psi or greater, the minimum size of an individual distribution line supplied from a manifold and installed as part of a parallel water distribution system shall be one nominal tube size smaller than the sizes indicated.

604.8.1 Valve design. The pressure-reducing valve shall be designed to remain open to permit uninterrupted water flow in case of valve failure.

604.8.2 Repair and removal. Water pressure-reducing valves, regulators and strainers shall be so constructed and installed as to permit repair or removal of parts without breaking a pipeline or removing the valve and strainer from the pipeline.

604.9 Water hammer. The flow velocity of the water distribution system shall be controlled to reduce the possibility of water hammer. A water-hammer arrestor shall be installed where *quick-closing valves* are utilized. Water-hammer arrestors shall be installed in accordance with the manufacturer's instructions. Water-hammer arrestors shall conform to ASSE 1010.

604.10 Gridded and parallel water distribution system manifolds. Hot water and cold water manifolds installed with gridded or parallel connected individual distribution lines to each fixture or fixture fitting shall be designed in accordance with Sections 604.10.1 through 604.10.3.

604.10.1 Manifold sizing. Hot water and cold water manifolds shall be sized in accordance with Table 604.10.1. The total gallons per minute is the demand of all outlets supplied.

TABLE 604.10.1
MANIFOLD SIZING

NOMINAL SIZE INTERNAL DIAMETER (inches)	MAXIMUM DEMAND (gpm)	
	Velocity at 4 feet per second	Velocity at 8 feet per second
1/2	2	5
3/4	6	11
1	10	20
1 1/4	15	31
1 1/2	22	44

For SI: 1 inch = 25.4 mm, 1 gallon per minute = 3.785 L/m,
1 foot per second = 0.305 m/s.

604.10.2 Valves. Individual fixture shutoff valves installed at the manifold shall be identified as to the fixture being supplied.

604.10.3 Access. *Access* shall be provided to manifolds with integral factory- or field-installed valves.

604.11 Individual pressure balancing in-line valves for individual fixture fittings. Where individual pressure balancing in-line valves for individual fixture fittings are installed, such valves shall comply with ASSE 1066. Such valves shall be installed in a location with access. The valves shall not be utilized alone as a substitute for the balanced pressure, thermostatic or combination shower valves required in Section 412.3.

SECTION 605
MATERIALS, JOINTS AND CONNECTIONS

605.1 Soil and ground water. The installation of a water service or water distribution pipe shall be prohibited in soil and ground water contaminated with solvents, fuels, organic compounds or other detrimental materials causing permeation, corrosion, degradation or structural failure of the piping material. Where detrimental conditions are suspected, a chemical analysis of the soil and ground water conditions shall be required to ascertain the acceptability of the water service or water distribution piping material for the specific installation. Where detrimental conditions exist, *approved* alternative materials or routing shall be required.

605.2 Lead content of water supply pipe and fittings. Pipe and pipe fittings, including valves and faucets, utilized in the

INTERNATIONAL CODE COUNCIL®
Copyright © 2019 ICC & NYSDOS. ALL RIGHTS RESERVED. Accessed by Lauren Gualdino (lgualdino@briarcliffmanor.org), (-) Order Number #100880972 on May 08, 2020 07:05 AM (PDT) pursuant to License Agreement with ICC & NYSDOS. No further reproduction, no

100880972

water supply system shall have not more than 8-percent lead content.

605.2.1 Lead content of drinking water pipe and fittings. Pipe, pipe fittings, joints, valves, faucets and fixture fittings utilized to supply water for drinking or cooking purposes shall comply with NSF 372 and shall have a weighted average lead content of 0.25 percent or less.

605.3 Water service pipe. Water service pipe shall conform to NSF 61 and shall conform to one of the standards listed in Table 605.3. Water service pipe or tubing, installed underground and outside of the structure, shall have a working pressure rating of not less than 160 psi (1100 kPa) at 73.4ºF (23ºC). Where the water pressure exceeds 160 psi (1100 kPa), piping material shall have a working pressure rating not less than the highest available pressure. Water service piping materials not third-party certified for water distribution shall terminate at or before the full open valve located at the entrance to the structure. Ductile iron water service piping shall be cement mortar lined in accordance with AWWA C104/A21.4.

605.3.1 Dual check-valve-type backflow preventer. Dual check-valve backflow preventers installed on the water supply system shall comply with ASSE 1024 or CSA B64.6.

605.4 Water distribution pipe. Water distribution pipe and tubing shall conform to NSF 61 and shall conform to one of the standards listed in Table 605.4. Hot water distribution pipe and tubing shall have a pressure rating of not less than 100 psi (690 kPa) at 180ºF (82ºC).

605.5 Fittings. Pipe fittings shall be approved for installation with the piping material installed and shall comply with the applicable standards listed in Table 605.5. Pipe fittings utilized in water supply systems shall also comply with NSF 61. Ductile and gray iron pipe and pipe fittings utilized in water service piping systems shall be cement mortar lined in accordance with AWWA C104/A21.4.

605.5.1 Mechanically formed tee fittings. Mechanically extracted outlets shall have a height not less than three times the thickness of the branch tube wall.

605.5.1.1 Full flow assurance. Branch tubes shall not restrict the flow in the run tube. A dimple serving as a depth stop shall be formed in the branch tube to ensure that penetration into the collar is of the correct depth. For inspection purposes, a second dimple shall be placed $^1/_4$ inch (6.4 mm) above the first dimple. Dimples shall be aligned with the tube run.

605.5.1.2 Brazed joints. Mechanically formed tee fittings shall be brazed in accordance with Section 605.14.1.

605.6 Flexible water connectors. Flexible water connectors exposed to continuous pressure shall conform to ASME A112.18.6/CSA B125.6. *Access* shall be provided to all flexible water connectors.

605.7 Valves. Valves shall be compatible with the type of piping material installed in the system. Valves shall conform to one of the standards listed in Table 605.7 or shall be *approved*. Valves intended to supply drinking water shall meet the requirements of NSF 61.

TABLE 605.3
WATER SERVICE PIPE

MATERIAL	STANDARD
Acrylonitrile butadiene styrene (ABS) plastic pipe	ASTM D1527; ASTM D2282
Chlorinated polyvinyl chloride (CPVC) plastic pipe	ASTM D2846; ASTM F441; ASTM F442; CSA B137.6
Chlorinated polyvinyl chloride/aluminum/chlorinated polyvinyl chloride (CPVC/AL/CPVC)	ASTM F2855
Copper or copper-alloy pipe	ASTM B42; ASTM B302
Copper or copper-alloy tubing (Type K, WK, L, WL, M or WM)	ASTM B75; ASTM B88; ASTM B251; ASTM B447
Cross-linked polyethylene (PEX) plastic pipe and tubing	ASTM F876; AWWA C904; CSA B137.5
Cross-linked polyethylene/aluminum/cross-linked polyethylene (PEX-AL-PEX) pipe	ASTM F1281; ASTM F2262; CSA B137.10
Cross-linked polyethylene/aluminum/high-density polyethylene (PEX-AL-HDPE)	ASTM F1986
Ductile iron water pipe	AWWA C151/A21.51; AWWA C115/A21.15
Galvanized steel pipe	ASTM A53
Polyethylene (PE) plastic pipe	ASTM D2239; ASTM D3035; AWWA C901; CSA B137.1
Polyethylene (PE) plastic tubing	ASTM D2737; AWWA C901; CSA B137.1
Polyethylene/aluminum/polyethylene (PE-AL-PE) pipe	ASTM F1282; CSA B137.9
Polyethylene of raised temperature (PE-RT) plastic tubing	ASTM F2769; CSA B137.18
Polypropylene (PP) plastic pipe or tubing	ASTM F2389; CSA B137.11
Polyvinyl chloride (PVC) plastic pipe	ASTM D1785; ASTM D2241; ASTM D2672; CSA B137.3
Stainless steel pipe (Type 304/304L)	ASTM A312; ASTM A778
Stainless steel pipe (Type 316/316L)	ASTM A312; ASTM A778

INTERNATIONAL CODE COUNCIL®
Copyright © 2019 ICC & NYSDOS. ALL RIGHTS RESERVED. Accessed by Lauren Gualdino (lgualdino@briarcliffmanor.org), (-) Order Number #100880972 on May 08, 2020 07:05 AM (PDT) pursuant to License Agreement with ICC & NYSDOS. No further reproduction, no

100880972

TABLE 605.4
WATER DISTRIBUTION PIPE

MATERIAL	STANDARD
Chlorinated polyvinyl chloride (CPVC) plastic pipe and tubing	ASTM D2846; ASTM F441; ASTM F442; CSA B137.6
Chlorinated polyvinyl chloride/aluminum/chlorinated polyvinyl chloride (CPVC/AL/CPVC)	ASTM F2855
Copper or copper-alloy pipe	ASTM B42; ASTM B302; ASTM B43
Copper or copper-alloy tubing (Type K, WK, L, WL, M or WM)	ASTM B75; ASTM B88; ASTM B251; ASTM B447
Cross-linked polyethylene (PEX) plastic tubing	ASTM F876; CSA B137.5
Cross-linked polyethylene/aluminum/cross-linked polyethylene (PEX-AL-PEX) pipe	ASTM F1281; ASTM F2262; CSA B137.10
Cross-linked polyethylene/aluminum/high-density polyethylene (PEX-AL-HDPE)	ASTM F1986
Ductile iron pipe	AWWA C151/A21.51; AWWA C115/A21.15
Galvanized steel pipe	ASTM A53
Polyethylene/aluminum/polyethylene (PE-AL-PE) composite pipe	ASTM F1282
Polyethylene of raised temperature (PE-RT) plastic tubing	ASTM F2769; CSA B137.18
Polypropylene (PP) plastic pipe or tubing	ASTM F2389; CSA B137.11
Stainless steel pipe (Type 304/304L)	ASTM A312; ASTM A778
Stainless steel pipe (Type 316/316L)	ASTM A312; ASTM A778

605.8 Manufactured pipe nipples. Manufactured pipe nipples shall conform to one of the standards listed in Table 605.8.

TABLE 605.8
MANUFACTURED PIPE NIPPLES

MATERIAL	STANDARD
Copper, copper alloy, and chromium-plated	ASTM B687
Steel	ASTM A733

605.9 Prohibited joints and connections. The following types of joints and connections shall be prohibited:

1. Cement or concrete joints.
2. Joints made with fittings not *approved* for the specific installation.
3. Solvent-cement joints between different types of plastic pipe.
4. Saddle-type fittings.

605.10 ABS plastic. Joints between ABS plastic pipe and fittings shall comply with Sections 605.10.1 through 605.10.3.

605.10.1 Mechanical joints. Mechanical joints on water pipes shall be made with an elastomeric seal conforming to ASTM D3139. Mechanical joints shall only be installed in underground systems, unless otherwise *approved*. Joints shall be installed only in accordance with the manufacturer's instructions.

605.10.2 Solvent cementing. Joint surfaces shall be clean and free from moisture. Solvent cement that conforms to ASTM D2235 shall be applied to all joint surfaces. The joint shall be made while the cement is wet. Joints shall be made in accordance with ASTM D2235. Solvent-cement joints shall be permitted above or below ground.

605.10.3 Threaded joints. Threads shall conform to ASME B1.20.1. Where pipe is to be threaded, the pipe shall have a wall thickness of not less than Schedule 80. Pipe threads shall be made with dies specifically designed for plastic pipe. *Approved* thread lubricant or tape shall be applied on the male threads only.

605.11 Gray iron and ductile iron joints. Joints for gray and ductile iron pipe and fittings shall comply with AWWA C111/A21.11 and shall be installed in accordance with the manufacturer's instructions.

605.12 Copper pipe. Joints between copper or copper-alloy pipe and fittings shall comply with Sections 605.12.1 through 605.12.5.

605.12.1 Brazed joints. Joint surfaces shall be cleaned. An *approved* flux shall be applied where required. The joint shall be brazed with a filler metal conforming to AWS A5.8.

605.12.2 Mechanical joints. Mechanical joints shall be installed in accordance with the manufacturer's instructions.

605.12.3 Solder joints. Solder joints shall be made in accordance with ASTM B828. Cut tube ends shall be reamed to the full inside diameter of the tube end. Joint surfaces shall be cleaned. A flux conforming to ASTM B813 shall be applied. The joint shall be soldered with a solder conforming to ASTM B32. The joining of water supply piping shall be made with *lead-free solder and fluxes*. "Lead free" shall mean a chemical composition equal to or less than 0.2-percent lead.

605.12.4 Threaded joints. Threads shall conform to ASME B1.20.1. Pipe-joint compound or tape shall be applied on the male threads only.

INTERNATIONAL CODE COUNCIL®
Copyright © 2019 ICC & NYSDOS. ALL RIGHTS RESERVED. Accessed by Lauren Gualdino (lgualdino@briarcliffmanor.org), (-) Order Number #100880972 on May 08, 2020 07:05 AM (PDT) pursuant to License Agreement with ICC & NYSDOS. No further reproduction, no

100880972

TABLE 605.5
PIPE FITTINGS

MATERIAL	STANDARD
Acrylonitrile butadiene styrene (ABS) plastic	ASTM D2468
Cast iron	ASME B16.4
Chlorinated polyvinyl chloride (CPVC) plastic	ASSE 1061; ASTM D2846; ASTM F437; ASTM F438; ASTM F439; CSA B137.6
Copper or copper alloy	ASME B16.15; ASME B16.18; ASME B16.22; ASME B16.26; ASME B16.51; ASSE 1061; ASTM F1476; ASTM F1548
Cross-linked polyethylene/aluminum/high-density polyethylene (PEX-AL-HDPE)	ASTM F1986
Fittings for cross-linked polyethylene (PEX) plastic tubing	ASSE 1061, ASTM F877; ASTM F1807; ASTM F1960; ASTM F2080; ASTM F2098, ASTM F2159; ASTM F2434; ASTM F2735; CSA B137.5
Fittings for polyethylene of raised temperature (PE-RT) plastic tubing	ASSE 1061, ASTM D3261; ASTM F1807; ASTM F2098; ASTM F2159; ASTM F2735; ASTM F2769; CSA B137.18
Gray iron and ductile iron	ASTM F1476; ASTM F1548; AWWA C110/A21.10; AWWA C153/A21.53
Insert fittings for polyethylene/aluminum/polyethylene (PE-AL-PE) and cross-linked polyethylene/aluminum/cross-linked polyethylene (PEX-AL-PEX)	ASTM F1974; ASTM F1281; ASTM F1282; CSA B137.9; CSA B137.10
Malleable iron	ASME B16.3
Metal (brass) insert fittings for polyethylene/aluminum/polyethylene (PE-AL-PE) and cross-linked polyethylene/aluminum/cross-linked polyethylene (PEX-AL-PEX)	ASTM F1974
Polyethylene (PE) plastic pipe	ASTM D2609; ASTM D2683; ASTM D3261; ASTM F1055; CSA B137.1
Polypropylene (PP) plastic pipe or tubing	ASTM F2389; CSA B137.11
Polyvinyl chloride (PVC) plastic	ASTM D2464; ASTM D2466; ASTM D2467; CSA B137.2; CSA B137.3
Stainless steel (Type 304/304L)	ASTM A312; ASTM A778; ASTM F1476; ASTM F1548
Stainless steel (Type 316/316L)	ASTM A312; ASTM A778; ASTM F1476; ASTM F1548
Steel	ASME B16.9; ASME B16.11; ASME B16.28; ASTM F1476; ASTM F1548

TABLE 605.7
VALVES

MATERIAL	STANDARD
Chlorinated polyvinyl chloride (CPVC) plastic	ASME A112.4.14; ASME A112.18.1/CSA B125.1; ASTM F1970; CSA B125.3; IAPMO Z1157; MSS SP-122
Copper or copper alloy	ASME A112.4.14; ASME A112.18.1/CSA B125.1; ASME B16.34; CSA B125.3; MSS SP-67; MSS SP-80; MSS SP-110; IAPMO Z1157; MSS SP-139
Cross-linked polyethylene (PEX) plastic	ASME A112.4.14; ASME A112.18.1/CSA B125.1; CSA B125.3; NSF 359; IAPMO Z1157
Gray iron and ductile iron	AWWA C500; AWWA C504; AWWA C507; MSS SP-67; MSS SP-70; MSS SP-71; MSS SP-72; MSS SP-78; IAPMO Z1157
Polypropylene (PP) plastic	ASME A112.4.14; ASTM F2389; IAPMO Z1157
Polyvinyl chloride (PVC) plastic	ASME A112.4.14; ASTM F1970; IAPMO Z1157; MSS SP-122

INTERNATIONAL CODE COUNCIL®
Copyright © 2019 ICC & NYSDOS. ALL RIGHTS RESERVED. Accessed by Lauren Gualdino (lgualdino@briarcliffmanor.org), (-) Order Number #100880972 on May 08, 2020 07:05 AM (PDT) pursuant to License Agreement with ICC & NYSDOS. No further reproduction, no

100880972

605.12.5 Welded joints. Joint surfaces shall be cleaned. The joint shall be welded with an *approved* filler metal.

605.13 Copper tubing. Joints between copper or copper-alloy tubing and fittings shall comply with Sections 605.13.1 through 605.13.7.

605.13.1 Brazed joints. Joint surfaces shall be cleaned. An *approved* flux shall be applied where required. The joint shall be brazed with a filler metal conforming to AWS A5.8.

605.13.2 Flared joints. Flared joints for water pipe shall be made by a tool designed for that operation.

605.13.3 Grooved and shouldered mechanical joints. Grooved and shouldered mechanical joints shall comply with ASTM F1476, shall be made with an *approved* elastomeric seal and shall be installed in accordance with the manufacturer's instructions. Such joints shall be exposed or concealed.

605.13.4 Mechanical joints. Mechanical joints shall be installed in accordance with the manufacturer's instructions.

605.13.5 Press-connect joints. Press-connect joints shall conform to one of the standards indicated in Table 605.5, and shall be installed in accordance with the manufacturer's instructions. Cut tube ends shall be reamed to the full inside diameter of the tube end. Joint surfaces shall be cleaned. The tube shall be fully inserted into the press-connect fitting. Press-connect joints shall be pressed with a tool certified by the manufacturer.

605.13.6 Solder joints. Solder joints shall be made in accordance with the methods of ASTM B828. Cut tube ends shall be reamed to the full inside diameter of the tube end. Joint surfaces shall be cleaned. A flux conforming to ASTM B813 shall be applied. The joint shall be soldered with a solder conforming to ASTM B32. The joining of water supply piping shall be made with *lead-free solder and flux*. "Lead free" shall mean a chemical composition equal to or less than 0.2-percent lead.

605.13.7 Push-fit joints. Push-fit joints shall conform to ASSE 1061 and shall be installed in accordance with the manufacturer's instructions.

605.14 CPVC plastic. Joints between CPVC plastic pipe and fittings shall comply with Sections 605.14.1 through 605.14.4.

605.14.1 Mechanical joints. Mechanical joints shall be installed in accordance with the manufacturer's instructions.

605.14.2 Solvent cementing. Joint surfaces shall be clean and free from moisture. Joints shall be made in accordance with the pipe manufacturer's installation instructions. Where such instructions require that a primer be used, the primer shall be applied to the joint surfaces and a solvent cement orange in color and conforming to ASTM F493 shall be applied to the joint surfaces. Where such instructions allow for a one-step solvent cement, yellow in color and conforming to ASTM F493, to be used, the joint surfaces shall not require application of a primer before the solvent cement is applied. The joint shall be made while the cement is wet and in accordance with ASTM D2846 or ASTM F493. Solvent cemented joints shall be permitted above or below ground.

605.14.3 Threaded joints. Threads shall conform to ASME B1.20.1. Where pipe is to be threaded, the pipe shall have a wall thickness of not less than Schedule 80. Pipe threads shall be made with dies specifically designed for plastic pipe. The pressure rating of threaded pipe shall be reduced by 50 percent. Thread-by-socket molded fittings shall be permitted. *Approved* thread lubricant or tape shall be applied on the male threads only.

605.14.4 Push-fit joints. Push-fit joints shall conform to ASSE 1061 and shall be installed in accordance with the manufacturer's instructions.

605.15 Chlorinated polyvinyl chloride/aluminum/chlorinated polyvinyl chloride (CPVC/AL/CPVC) pipe and tubing. Joints between CPVC/AL/CPVC plastic pipe or CPVC fittings shall comply with Sections 605.15.1 and 605.15.2.

605.15.1 Mechanical joints. Mechanical joints shall be installed in accordance with the manufacturer's instructions.

605.15.2 Solvent cementing. Joint surfaces shall be clean and free from moisture, and an approved primer shall be applied. Solvent cement, orange in color and conforming to ASTM F493, shall be applied to joint surfaces. The joint shall be made while the cement is wet, and in accordance with ASTM D2846 or ASTM F493. Solvent cement joints shall be permitted above or below ground.

Exception: A primer is not required where all of the following conditions apply:

1. The solvent cement used is third-party certified as conforming to ASTM F493.
2. The solvent cement used is yellow in color.
3. The solvent cement is used only for joining $^{1}/_{2}$-inch (12.7 mm) through 2-inch-diameter (51 mm) CPVC/AL/CPVC pipe and CPVC fittings.
4. The CPVC fittings are manufactured in accordance with ASTM D2846.

605.16 PEX plastic. Joints between cross-linked polyethylene plastic tubing and fittings shall comply with Sections 605.16.1 through 605.16.3.

605.16.1 Flared joints. Flared pipe ends shall be made by a tool designed for that operation.

605.16.2 Mechanical joints. Mechanical joints shall be installed in accordance with the manufacturer's instructions. Fittings for cross-linked polyethylene (PEX) plastic tubing shall comply with the applicable standards listed in Table 605.5 and shall be installed in accordance with the manufacturer's instructions. PEX tubing shall be factory marked with the appropriate standards for the fittings that the PEX manufacturer specifies for use with the tubing.

605.16.3 Push-fit joints. Push-fit joints shall conform to ASSE 1061 and shall be installed in accordance with the manufacturer's instructions.

INTERNATIONAL CODE COUNCIL®
Copyright © 2019 ICC & NYSDOS. ALL RIGHTS RESERVED. Accessed by Lauren Gualdino (lgualdino@briarcliffmanor.org), (-) Order Number #100880972 on May 08, 2020 07:05 AM (PDT) pursuant to License Agreement with ICC & NYSDOS. No further reproduction, no

100880972

605.17 Steel. Joints between galvanized steel pipe and fittings shall comply with Sections 605.17.1 through 605.17.3.

605.17.1 Threaded joints. Threads shall conform to ASME B1.20.1. Pipe-joint compound or tape shall be applied on the male threads only.

605.17.2 Mechanical joints. Joints shall be made with an *approved* elastomeric seal. Mechanical joints shall be installed in accordance with the manufacturer's instructions.

605.17.3 Grooved and shouldered mechanical joints. Grooved and shouldered mechanical joints shall comply with ASTM F1476, shall be made with an *approved* elastomeric seal and shall be installed in accordance with the manufacturer's instructions. Such joints shall be exposed or concealed.

605.18 PE plastic. Joints between polyethylene plastic pipe or tubing and fittings shall comply with Sections 605.18.1 through 605.18.4.

605.18.1 Flared joints. Flared joints shall be permitted where so indicated by the pipe manufacturer. Flared joints shall be made by a tool designed for that operation.

605.18.2 Heat-fusion joints. Joint surfaces shall be clean and free from moisture. Joint surfaces shall be heated to melt temperature and joined. The joint shall be undisturbed until cool. Joints shall be made in accordance with ASTM D2657.

605.18.3 Mechanical joints. Mechanical joints shall be installed in accordance with the manufacturer's instructions.

605.18.4 Installation. Polyethylene pipe shall be cut square, with a cutter designed for plastic pipe. Except where joined by heat fusion, pipe ends shall be chamfered to remove sharp edges. Kinked pipe shall not be installed. The minimum pipe bending radius shall be not less than 30 pipe diameters, or the minimum coil radius, whichever is greater. Piping shall not be bent beyond straightening of the curvature of the coil. Bends shall be prohibited within 10 pipe diameters of any fitting or valve. Stiffener inserts installed with compression-type couplings and fittings shall not extend beyond the clamp or nut of the coupling or fitting.

605.19 Polypropylene (PP) plastic. Joints between PP plastic pipe and fittings shall comply with Section 605.19.1 or 605.19.2.

605.19.1 Heat-fusion joints. Heat-fusion joints for polypropylene pipe and tubing joints shall be installed with socket-type heat-fused polypropylene fittings, butt-fusion polypropylene fittings or electrofusion polypropylene fittings. Joint surfaces shall be clean and free from moisture. The joint shall be undisturbed until cool. Joints shall be made in accordance with ASTM F2389.

605.19.2 Mechanical and compression sleeve joints. Mechanical and compression sleeve joints shall be installed in accordance with the manufacturer's instructions.

605.20 Polyethylene/aluminum/polyethylene (PE-AL-PE) and cross-linked polyethylene/aluminum/cross-linked polyethylene (PEX-AL-PEX). Joints between PE-AL-PE or PEX-AL-PEX pipe and fittings shall comply with Section 605.20.1.

605.20.1 Mechanical joints. Mechanical joints shall be installed in accordance with the manufacturer's instructions. Fittings for PE-AL-PE and PEX-AL-PEX as described in ASTM F1974, ASTM F1281, ASTM F1282, CSA B137.9 and CSA B137.10 shall be installed in accordance with the manufacturer's instructions.

605.21 PVC plastic. Joints between PVC plastic pipe and fittings shall comply with Sections 605.21.1 through 605.21.3.

605.21.1 Mechanical joints. Mechanical joints on water pipe shall be made with an elastomeric seal conforming to ASTM D3139. Mechanical joints shall not be installed in above-ground systems unless otherwise *approved*. Joints shall be installed in accordance with the manufacturer's instructions.

605.21.2 Grooved and shouldered mechanical joints. Grooved and shouldered mechanical joints shall comply with ASTM F1476, shall be made with an *approved* elastomeric seal and shall be installed in accordance with the manufacturer's instructions. Such joints shall be exposed or concealed.

605.21.3 Solvent cementing. Joint surfaces shall be clean and free from moisture. A purple primer that conforms to ASTM F656 shall be applied. Solvent cement not purple in color and conforming to ASTM D2564 or CSA B137.3 shall be applied to all joint surfaces. The joint shall be made while the cement is wet and shall be in accordance with ASTM D2855. Solvent-cement joints shall be permitted above or below ground.

605.21.4 Threaded joints. Threads shall conform to ASME B1.20.1. Where pipe is to be threaded, the pipe shall have a wall thickness of not less than Schedule 80. Pipe threads shall be made with dies specifically designed for plastic pipe. The pressure rating of threaded pipe shall be reduced by 50 percent. Thread-by-socket molded fittings shall be permitted. Approved thread lubricant or tape shall be applied on the male threads only.

605.22 Stainless steel. Joints between stainless steel pipe and fittings shall comply with Sections 605.22.1 through 605.22.3.

605.22.1 Mechanical joints. Mechanical joints shall be installed in accordance with the manufacturer's instructions.

605.22.2 Welded joints. Joint surfaces shall be cleaned. The joint shall be welded autogenously or with an *approved* filler metal as referenced in ASTM A312.

605.22.3 Grooved and shouldered mechanical joints. Grooved and shouldered mechanical joints shall comply with ASTM F1476, shall be made with an *approved* elastomeric seal and shall be installed in accordance with the manufacturer's instructions. Such joints shall be exposed or concealed.

INTERNATIONAL CODE COUNCIL®
Copyright © 2019 ICC & NYSDOS. ALL RIGHTS RESERVED. Accessed by Lauren Gualdino (lgualdino@briarcliffmanor.org), (-) Order Number #100880972 on May 08, 2020 07:05 AM (PDT) pursuant to License Agreement with ICC & NYSDOS. No further reproduction, no

100880972

605.23 Joints between different materials. Joints between different piping materials shall be made with a mechanical joint of the compression or mechanical-sealing type, or shall be made in accordance with Section 605.23.1, 605.23.2 or 605.23.3. Connectors or adapters shall have an elastomeric seal conforming to ASTM F477. Joints shall be installed in accordance with the manufacturer's instructions.

605.23.1 Copper or copper-alloy tubing to galvanized steel pipe. Joints between copper pipe or tubing and galvanized steel pipe shall be made with a copper-alloy or dielectric fitting or a dielectric union conforming to ASSE 1079. The copper tubing shall be soldered to the fitting in an *approved* manner, and the fitting shall be screwed to the threaded pipe.

605.23.2 Plastic pipe or tubing to other piping material. Joints between different types of plastic pipe or between plastic pipe and other piping material shall be made with *approved* adapters or transition fittings.

605.23.3 Stainless steel. Joints between stainless steel and different piping materials shall be made with a mechanical joint of the compression or mechanical sealing type or a dielectric fitting or a dielectric union conforming to ASSE 1079.

605.24 PE-RT plastic. Joints between polyethylene of raised temperature plastic tubing and fittings shall be in accordance with Section 605.24.1.

605.24.1 Mechanical joints. Mechanical joints shall be installed in accordance with the manufacturer's instructions. Fittings for polyethylene of raised temperature plastic tubing shall comply with the applicable standards indicated in Table 605.5 and shall be installed in accordance with the manufacturer's instructions. Polyethylene of raised temperature plastic tubing shall be factory marked with the applicable standards for the fittings that the manufacturer of the tubing specifies for use with the tubing.

SECTION 606
INSTALLATION OF THE BUILDING WATER DISTRIBUTION SYSTEM

606.1 Location of full-open valves. *Full-open valves* shall be installed in the following locations:

1. On the building water service pipe from the public water supply near the curb.
2. On the water distribution supply pipe at the entrance into the structure.
3. On the discharge side of every water meter.
4. On the base of every water riser pipe in occupancies other than multiple-family residential *occupancies* that are two stories or less in height and in one- and two-family residential *occupancies.*
5. On the top of every water down-feed pipe in *occupancies* other than one- and two-family residential *occupancies.*
6. On the entrance to every water supply pipe to a dwelling unit, except where supplying a single fixture equipped with individual stops.
7. On the water supply pipe to a gravity or pressurized water tank.
8. On the water supply pipe to every water heater.

606.2 Location of shutoff valves. Shutoff valves shall be installed in the following locations:

1. On the fixture supply to each plumbing fixture other than bathtubs and showers in one- and two-family residential *occupancies*, and other than in individual sleeping units that are provided with unit shutoff valves in hotels, motels, boarding houses and similar *occupancies*.
2. On the water supply pipe to each sillcock.
3. On the water supply pipe to each appliance or mechanical equipment.

606.3 Access to valves. *Access* shall be provided to all *full-open valves* and shutoff valves.

606.4 Valve identification. Service and hose bibb valves shall be identified. Other valves installed in locations that are not adjacent to the fixture or appliance shall be identified, indicating the fixture or appliance served.

606.5 Water pressure booster systems. Water pressure booster systems shall be provided as required by Sections 606.5.1 through 606.5.10.

606.5.1 Water pressure booster systems required. Where the water pressure in the public water main or individual water supply system is insufficient to supply the minimum pressures and quantities specified in this code, the supply shall be supplemented by an elevated water tank, a hydropneumatic pressure booster system or a water pressure booster pump installed in accordance with Section 606.5.5.

606.5.2 Support. Water supply tanks shall be supported in accordance with the *Building Code of New York State*.

606.5.3 Covers. Water supply tanks shall be covered to keep out unauthorized persons, dirt and vermin. The covers of gravity tanks shall be vented with a return bend vent pipe with an area not less than the area of the down-feed riser pipe, and the vent shall be screened with a corrosion-resistant screen of not less than 16 by 20 mesh per inch (630 by 787 mesh per m).

606.5.4 Overflows for water supply tanks. A gravity or suction water supply tank shall be provided with an overflow with a diameter not less than that shown in Table 606.5.4. The overflow outlet shall discharge at a point not less than 6 inches (152 mm) above the roof or roof drain; floor or floor drain; or over an open water-supplied fixture. The overflow outlet shall be covered with a corrosion-resistant screen of not less than 16 by 20 mesh per inch (630 by 787 mesh per m) and by $^1/_4$-inch (6.4 mm) hardware cloth or shall terminate in a horizontal angle seat check valve. Drainage from overflow pipes shall be directed so as not to freeze on roof walks.

INTERNATIONAL CODE COUNCIL®
Copyright © 2019 ICC & NYSDOS. ALL RIGHTS RESERVED. Accessed by Lauren Gualdino (lgualdino@briarcliffmanor.org), (-) Order Number #100880972 on May 08, 2020 07:05 AM (PDT) pursuant to License Agreement with ICC & NYSDOS. No further reproduction, no

100880972

TABLE 606.5.4
SIZES FOR OVERFLOW PIPES FOR WATER SUPPLY TANKS

MAXIMUM CAPACITY OF WATER SUPPLY LINE TO TANK (gpm)	DIAMETER OF OVERFLOW PIPE (inches)
0 – 50	2
50 – 150	$2^1/_2$
150 – 200	3
200 – 400	4
400 – 700	5
700 – 1,000	6
Over 1,000	8

For SI: 1 inch = 25.4 mm, 1 gallon per minute = 3.785 L/m.

606.5.5 Low-pressure cutoff required on booster pumps. A low-pressure cutoff shall be installed on all booster pumps in a water pressure booster system to prevent creation of a vacuum or negative pressure on the suction side of the pump when a positive pressure of 10 psi (68.94 kPa) or less occurs on the suction side of the pump.

606.5.6 Potable water inlet control and location. Potable water inlets to gravity tanks shall be controlled by a fill valve or other automatic supply valve installed so as to prevent the tank from overflowing. The inlet shall be terminated so as to provide an *air gap* not less than 4 inches (102 mm) above the overflow.

606.5.7 Tank drain pipes. A drain pipe with a valve shall be provided at the lowest point of each tank to permit emptying of the tank. The tank drain pipe shall discharge as required for overflow pipes and shall not be smaller in size than specified in Table 606.5.7.

TABLE 606.5.7
SIZE OF DRAIN PIPES FOR WATER TANKS

TANK CAPACITY (gallons)	DRAIN PIPE (inches)
Up to 750	1
751 to 1,500	$1^1/_2$
1,501 to 3,000	2
3,001 to 5,000	$2^1/_2$
5,000 to 7,500	3
Over 7,500	4

For SI: 1 inch = 25.4 mm, 1 gallon = 3.785 L.

606.5.8 Prohibited location of potable supply tanks. Potable water gravity tanks or manholes of potable water pressure tanks shall not be located directly under any soil or waste piping or any source of contamination.

606.5.9 Pressure tanks, vacuum relief. Water pressure tanks shall be provided with a vacuum relief valve at the top of the tank that will operate up to a maximum water pressure of 200 psi (1380 kPa) and up to a maximum temperature of 200ºF (93ºC). The size of such vacuum relief valve shall be not less than $^1/_2$ inch (12.7 mm).

Exception: This section shall not apply to pressurized captive air diaphragm/bladder tanks.

606.5.10 Pressure relief for tanks. Every pressure tank in a hydropneumatic pressure booster system shall be protected with a pressure relief valve. The pressure relief valve shall be set at a maximum pressure equal to the rating of the tank. The relief valve shall be installed on the supply pipe to the tank or on the tank. The relief valve shall discharge by gravity to a safe place of disposal.

606.6 Water supply system test. Upon completion of a section of or the entire water supply system, the system, or portion completed, shall be tested in accordance with Section 312.

606.7 Labeling of water distribution pipes in bundles. Where water distribution piping is bundled at installation, each pipe in the bundle shall be identified using stenciling or commercially available pipe labels. The identification shall indicate the pipe contents and the direction of flow in the pipe. The interval of the identification markings on the pipe shall not exceed 25 feet (7620 mm). There shall be not less than one identification label on each pipe in each room, space or story.

SECTION 607
HOT WATER SUPPLY SYSTEM

607.1 Where required. In residential *occupancies*, *hot water* shall be supplied to plumbing fixtures and equipment utilized for bathing, washing, culinary purposes, cleansing, laundry or building maintenance. In nonresidential *occupancies*, *hot water* shall be supplied for culinary purposes, cleansing, laundry or building maintenance purposes. In nonresidential *occupancies*, *hot water* or *tempered water* shall be supplied for bathing and washing purposes.

607.1.1 Temperature limiting means. A thermostat control for a water heater shall not serve as the temperature limiting means for the purposes of complying with the requirements of this code for maximum allowable *hot* or *tempered water* delivery temperature at fixtures.

607.1.2 Tempered water temperature control. *Tempered water* shall be supplied through a water temperature limiting device that conforms to ASSE 1070/ASME A112.1070/CSA B125.70 and shall limit the *tempered water* to not greater than 110ºF (43ºC). This provision shall not supersede the requirement for protective shower valves in accordance with Section 412.3.

607.2 Hot or tempered water supply to fixtures. The *developed length* of *hot* or *tempered water* piping, from the source of hot water to the fixtures that require *hot* or *tempered water*, shall not exceed 50 feet (15 240 mm). Recirculating system piping and heat-traced piping shall be considered to be sources of *hot* or *tempered water*.

607.2.1 Circulation systems and heat trace systems for maintaining heated water temperature in distribution systems. For Group R2, R3 and R4 occupancies that are three stories or less in height above grade plane, the installation of heated water circulation and temperature maintenance systems shall be in accordance with Section R403.5.1 of the *Energy Conservation Construction Code of New York State*. For other than Group R2, R3 and R4 occupancies that are three stories or less in height above grade plane, the installation of heated water circulation

INTERNATIONAL CODE COUNCIL®
Copyright © 2019 ICC & NYSDOS. ALL RIGHTS RESERVED. Accessed by Lauren Gualdino (lgualdino@briarcliffmanor.org), (-) Order Number #100880972 on May 08, 2020 07:05 AM (PDT) pursuant to License Agreement with ICC & NYSDOS. No further reproduction, no

100880972

and heat trace systems shall be in accordance with Section C404.6 of the *Energy Conservation Construction Code of New York State*.

607.2.1.1 Pump controls for hot water storage systems. The controls on pumps that circulate water between a water heater and a storage tank for heated water shall limit operation of the pump from heating cycle startup to not greater than 5 minutes after the end of the cycle.

607.2.1.2 Demand recirculation controls for distribution systems. A water distribution system having one or more recirculation pumps that pump water from a heated water supply pipe back to the heated water source through a cold water supply pipe shall be a demand recirculation water system. Pumps shall have controls that comply with both of the following:

1. The control shall start the pump upon receiving a signal from the action of a user of a fixture or appliance, sensing the presence of a user of a fixture, or sensing the flow of hot or tempered water to a fixture fitting or appliance.
2. The control shall limit the temperature of the water entering the cold water piping to 104°F (40°C).

607.2.2 Piping for recirculation systems having master thermostatic valves. Where a thermostatic mixing valve is used in a system with a hot water recirculating pump, the *hot water* or *tempered water* return line shall be routed to the cold water inlet pipe of the water heater and the cold water inlet pipe or the hot water return connection of the thermostatic mixing valve.

607.3 Thermal expansion control. Where a storage water heater is supplied with cold water that passes through a check valve, pressure reducing valve or backflow preventer, a thermal expansion control device shall be connected to the water heater cold water supply pipe at a point that is downstream of all check valves, pressure reducing valves and backflow preventers. Thermal expansion tanks shall be sized in accordance with the tank manufacturer's instructions and shall be sized such that the pressure in the water distribution system shall not exceed that required by Section 604.8.

607.4 Flow of hot water to fixtures. Fixture fittings, faucets and diverters shall be installed and adjusted so that the flow of hot water from the fittings corresponds to the left-hand side of the fixture fitting.

Exception: Shower and tub/shower mixing valves conforming to ASSE 1016/ASME A112.1016/CSA B125.16 or ASME A112.18.1/CSA B125.1, where the flow of hot water corresponds to the markings on the device.

607.5 Insulation of piping. For other than Group R2, R3 and R4 occupancies that are three stories or less in height above grade plane, piping to the inlet of a water heater and piping conveying water heated by a water heater shall be insulated in accordance with Section C404.4 of the *Energy Conservation Construction Code of New York State*. For Group R2, R3 and R4 occupancies that are three stories or less in height above grade plane, piping to the inlet of a water heater and piping conveying water heated by a water heater shall be insulated in accordance with Section R403.5.3 of the *Energy Conservation Construction Code of New York State*.

SECTION 608
PROTECTION OF POTABLE WATER SUPPLY

608.1 General. A potable water supply system shall be designed, installed and maintained in such a manner so as to prevent contamination from nonpotable liquids, solids or gases being introduced into the potable water supply through cross connections or any other piping connections to the system. Backflow preventer applications shall conform to Table 608.1, except as specifically stated in Sections 608.2 through 608.17.10.

[NY] 608.1.1 Public water supply protection. On-site containment in accordance with Subpart 5-1.31 of the New York State Department of Health Sanitary Code (10 NYCRR) may be required by the provider of public water, depending on the degree of hazard, to protect public water systems through the use of appropriate backflow prevention device installations.

608.2 Plumbing fixtures. The supply lines and fittings for plumbing fixtures shall be installed so as to prevent backflow. Plumbing fixture fittings shall provide backflow protection in accordance with ASME A112.18.1/CSA B125.1.

608.3 Devices, appurtenances, appliances and apparatus. Devices, appurtenances, appliances and apparatus intended to serve some special function, such as sterilization, distillation, processing, cooling, or storage of ice or foods, and that connect to the water supply system, shall be provided with protection against backflow and contamination of the water supply system.

608.3.1 Special equipment, water supply protection. The water supply for hospital fixtures shall be protected against backflow with a reduced pressure principle backflow prevention assembly, an atmospheric or spill-resistant vacuum breaker assembly, or an *air gap*. Vacuum breakers for bedpan washer hoses shall not be located less than 5 feet (1524 mm) above the floor. Vacuum breakers for hose connections in health care or laboratory areas shall be not less than 6 feet (1829 mm) above the floor.

608.4 Potable water handling and treatment equipment. Water pumps, filters, softeners, tanks and other appliances and devices that handle or treat potable water to be supplied to the potable water distribution system shall be located to prevent contamination from entering the appliances and devices. Overflow, relief valve and waste discharge pipes from such appliances and devices shall terminate through an air gap.

608.5 Water service piping. Water service piping shall be protected in accordance with Sections 603.2 and 603.2.1.

608.6 Chemicals and other substances. Chemicals and other substances that produce either toxic conditions, taste, odor or discoloration in a potable water system shall not be introduced into, or utilized in, such systems.

INTERNATIONAL CODE COUNCIL®
Copyright © 2019 ICC & NYSDOS. ALL RIGHTS RESERVED. Accessed by Lauren Gualdino (lgualdino@briarcliffmanor.org), (-) Order Number #100880972 on May 08, 2020 07:05 AM (PDT) pursuant to License Agreement with ICC & NYSDOS. No further reproduction, no

100880972

TABLE 608.1
APPLICATION OF BACKFLOW PREVENTERS

DEVICE	DEGREE OF HAZARD[a]	APPLICATION[b]	APPLICABLE STANDARDS
Backflow prevention assemblies:			
Double check backflow prevention assembly and double check fire protection backflow prevention assembly	Low hazard	Backpressure or backsiphonage Sizes $^3/_8$″–16″	ASSE 1015, AWWA C510, CSA B64.5, CSA B64.5.1
Double check detector fire protection backflow prevention assemblies	Low hazard	Backpressure or backsiphonage Sizes 2″–16″	ASSE 1048
Pressure vacuum breaker assembly	High or low hazard	Backsiphonage only Sizes $^1/_2$″–2″	ASSE 1020, CSA B64.1.2
Reduced pressure principle backflow prevention assembly and reduced pressure principle fire protection backflow assembly	High or low hazard	Backpressure or backsiphonage Sizes $^3/_8$″–16″	ASSE 1013, AWWA C511, CSA B64.4, CSA B64.4.1
Reduced pressure detector fire protection backflow prevention assemblies	High or low hazard	Backsiphonage or backpressure (Fire sprinkler systems)	ASSE 1047
Spill-resistant vacuum breaker assembly	High or low hazard	Backsiphonage only Sizes $^1/_4$″–2″	ASSE 1056; CSA B64.1.3
Backflow preventer plumbing devices:			
Antisiphon-type fill valves for gravity water closet flush tanks	High hazard	Backsiphonage only	ASSE 1002/ASME A112.1002/ CSA B125.12, CSA B125.3
Backflow preventer for carbonated beverage machines	Low hazard	Backpressure or backsiphonage Sizes $^1/_4$″–$^3/_8$″	ASSE 1022
Backflow preventer with intermediate atmospheric vents	Low hazard	Backpressure or backsiphonage Sizes $^1/_4$″–$^3/_4$″	ASSE 1012, CSA B64.3
Dual-check-valve-type backflow preventer	Low hazard	Backpressure or backsiphonage Sizes $^1/_4$″–1″	ASSE 1024, CSA B64.6
Hose connection backflow preventer	High or low hazard	Low head backpressure, rated working pressure, backpressure or backsiphonage Sizes $^1/_2$″–1″	ASME A112.21.3, ASSE 1052, CSA B64.2.1.1
Hose connection vacuum breaker	High or low hazard	Low head backpressure or backsiphonage Sizes $^1/_2$″, $^3/_4$″, 1″	ASME A112.21.3, ASSE 1011, CSA B64.2, CSA B64.2.1
Laboratory faucet backflow preventer	High or low hazard	Low head backpressure and backsiphonage	ASSE 1035, CSA B64.7
Pipe-applied atmospheric-type vacuum breaker	High or low hazard	Backsiphonage only Sizes $^1/_4$″– 4″	ASSE 1001, CSA B64.1.1
Vacuum breaker wall hydrants, frost-resistant, automatic-draining type	High or low hazard	Low head backpressure or backsiphonage Sizes $^3/_4$″, 1″	ASME A112.21.3, ASSE 1019, CSA B64.2.2
Other means or methods:			
Air gap	High or low hazard	Backsiphonage or backpressure	ASME A112.1.2
Air gap fittings for use with plumbing fixtures, appliances and appurtenances	High or low hazard	Backsiphonage or backpressure	ASME A112.1.3
Barometric loop	High or low hazard	Backsiphonage only	(See Section 608.14.4)

INTERNATIONAL CODE COUNCIL®
Copyright © 2019 ICC & NYSDOS. ALL RIGHTS RESERVED. Accessed by Lauren Gualdino (lgualdino@briarcliffmanor.org), (-) Order Number #100880972 on May 08, 2020 07:05 AM (PDT) pursuant to License Agreement with ICC & NYSDOS. No further reproduction, no

100880972

608.7 Cross connection control. Cross connections shall be prohibited, except where *approved* backflow prevention assemblies, backflow prevention devices or other means or methods are installed to protect the potable water supply.

[NY] 608.7.1 Private water supplies. Cross connections between a private water supply and a potable public supply shall be prohibited, except where an appropriate cross-control connection device is installed in accordance with 10 NYCRR Subpart 5-1.31 of the New York State Department of Health Sanitary Code.

608.8 Valves and outlets prohibited below grade. Potable water outlets and combination stop-and-waste valves shall not be installed underground or below grade. A freezeproof yard hydrant that drains the riser into the ground shall be considered as having a stop-and-waste valve below grade.

Exception: Freezeproof yard hydrants that drain the riser into the ground shall be permitted to be installed, provided that the potable water supply to such hydrants is protected in accordance with Section 608.14.2 or 608.14.5, and the hydrants and the piping from the backflow preventer to the hydrant are identified in accordance with Section 608.9.

608.9 Identification of nonpotable water systems. Where nonpotable water systems are installed, the piping conveying the nonpotable water shall be identified either by color marking, metal tags or tape in accordance with Sections 608.9.1 through 608.9.2.3.

608.9.1 Signage required. Nonpotable water outlets, such as hose connections, open ended pipes and faucets, shall be identified with signage that reads as follows: "Nonpotable water is utilized for [application name]. CAUTION: NONPOTABLE WATER – DO NOT DRINK." The words shall be legibly and indelibly printed on a tag or sign constructed of corrosion-resistant waterproof material or shall be indelibly printed on the fixture. The letters of the words shall be not less than 0.5 inch (12.7 mm) in height and in colors in contrast to the background on which they are applied. In addition to the required wordage, the pictograph shown in Figure 608.9.1 shall appear on the required signage.

608.9.2 Distribution pipe labeling and marking. Nonpotable distribution piping shall be purple in color and shall be embossed, or integrally stamped or marked, with the words: "CAUTION: NONPOTABLE WATER – DO NOT DRINK" or the piping shall be installed with a purple identification tape or wrap. Pipe identification shall include the contents of the piping system and an arrow indicating the direction of flow. Hazardous piping systems shall also contain information addressing the nature of the hazard. Pipe identification shall be repeated at intervals not exceeding 25 feet (7620 mm) and at each point where the piping passes through a wall, floor or roof. Lettering shall be readily observable within the room or space where the piping is located.



FIGURE 608.9.1
PICTOGRAPH—DO NOT DRINK

608.9.2.1 Color. The color of the pipe identification shall be discernable and consistent throughout the building. The color purple shall be used to identify reclaimed, rain and graywater distribution systems.

608.9.2.2 Lettering size. The size of the background color field and lettering shall comply with Table 608.9.2.2.

TABLE 608.9.2.2
SIZE OF PIPE IDENTIFICATION

PIPE DIAMETER (inches)	LENGTH BACKGROUND COLOR FIELD (inches)	SIZE OF LETTERS (inches)
$^3/_4$ to $1^1/_4$	8	0.5
$1^1/_2$ to 2	8	0.75
$2^1/_2$ to 6	12	1.25
8 to 10	24	2.5
Over 10	32	3.5

For SI 1 inch = 25.4 mm.

608.9.2.3 Identification tape. Where used, identification tape shall be not less than 3 inches (76 mm) wide and have white or black lettering on a purple field stating "CAUTION: NONPOTABLE WATER – DO NOT DRINK." Identification tape shall be installed on top of nonpotable rainwater distribution pipes, fastened not less than every 10 feet (3048 mm) to each pipe length and run continuously the entire length of the pipe.

608.10 Reutilization prohibited. Water utilized for the heating or cooling of equipment or other processes shall not be returned to the potable water system. Such water shall be discharged into a drainage system through an *air gap* or shall be utilized for nonpotable purposes.

608.11 Reuse of piping. Piping that has been utilized for any purpose other than conveying potable water shall not be utilized for conveying potable water.

INTERNATIONAL CODE COUNCIL®
Copyright © 2019 ICC & NYSDOS. ALL RIGHTS RESERVED. Accessed by Lauren Gualdino (lgualdino@briarcliffmanor.org), (-) Order Number #100880972 on May 08, 2020 07:05 AM (PDT) pursuant to License Agreement with ICC & NYSDOS. No further reproduction, no

100880972

608.12 Potable water tanks. Where in contact with potable water intended for drinking water, water tanks, coatings for the inside of tanks and liners for water tanks shall conform to NSF 61. The interior surface of a potable water tank shall not be lined, painted or repaired with any material that changes the taste, odor, color or potability of the water supply when the tank is placed in, or returned to, service.

608.13 Pumps and other appliances. Water pumps, filters, softeners, tanks and other devices that handle or treat potable water shall be protected against contamination.

608.14 Backflow protection. Means of protection against backflow shall be provided in accordance with Sections 609.14.1 through 608.14.9.

608.14.1 Air gap. The minimum required *air gap* shall be measured vertically from the lowest end of a potable water outlet to the *flood level rim* of the fixture or receptacle into which such potable water outlet discharges. *Air gaps* shall comply with ASME A112.1.2 and *air gap* fittings shall comply with ASME A112.1.3. Products that are listed and labeled to ASME A112.1.2 or ASME A112.1.3 shall be considered to be in compliance with this section.

608.14.2 Reduced pressure principle backflow prevention assemblies. Reduced pressure principle backflow prevention assemblies shall conform to ASSE 1013, AWWA C511, CSA B64.4 or CSA B64.4.1. Reduced pressure detector assembly backflow preventers shall conform to ASSE 1047. These devices shall be permitted to be installed where subject to continuous pressure conditions. The relief opening shall discharge by *air gap* and shall be prevented from being submerged.

608.14.3 Backflow preventer with intermediate atmospheric vent. Backflow preventers with intermediate atmospheric vents shall conform to ASSE 1012 or CSA B64.3. These devices shall be permitted to be installed where subject to continuous pressure conditions. The relief opening shall discharge by *air gap* and shall be prevented from being submerged.

608.14.4 Barometric loop. Barometric loops shall precede the point of connection and shall extend vertically to a height of 35 feet (10 668 mm). A barometric loop shall only be utilized as an atmospheric-type or pressure-type vacuum breaker.

608.14.5 Pressure vacuum breaker assemblies. Pressure vacuum breaker assemblies shall comply with ASSE 1020 or CSA B64.1.2. Spill-resistant vacuum breaker assemblies shall comply with ASSE 1056 or CSA B64.1.3. These assemblies shall be installed with the critical level of the assembly located not less than 12 inches (305 mm) above all downstream piping and outlets. Pressure vacuum breaker assemblies shall not be installed in locations where spillage could cause damage to the structure.

608.14.6 Atmospheric-type vacuum breakers. Pipe-applied atmospheric-type vacuum breakers shall conform to ASSE 1001 or CSA B64.1.1. Hose-connection vacuum breakers shall conform to ASME A112.21.3, ASSE 1011, ASSE 1019, ASSE 1035, ASSE 1052, CSA B64.2, CSA B64.2.1, CSA B64.2.1.1, CSA B64.2.2 or CSA B64.7. These devices shall operate under normal atmospheric pressure when the critical level is installed at the required height.

608.14.7 Double check backflow prevention assemblies. Double check backflow prevention assemblies shall conform to ASSE 1015, CSA B64.5, CSA B64.5.1 or AWWA C510. Double check detector fire protection backflow prevention assemblies shall conform to ASSE 1048. These assemblies shall be capable of operating under continuous pressure conditions.

608.14.8 Chemical dispenser backflow devices. Backflow devices for chemical dispensers shall comply with ASSE 1055 or shall be equipped with an *air gap* fitting.

608.14.9 Dual check backflow preventer. Dual check backflow preventers shall conform to ASSE 1024 or CSA B64.6.

608.15 Location of backflow preventers. Access shall be provided to backflow preventers as specified by the manufacturer's instructions.

608.15.1 Outdoor enclosures for backflow prevention devices. Outdoor enclosures for backflow prevention devices shall comply with ASSE 1060.

608.15.2 Protection of backflow preventers. Backflow preventers shall not be located in areas subject to freezing except where they can be removed by means of unions or are protected from freezing by heat, insulation or both.

608.15.2.1 Relief port piping. The termination of the piping from the relief port or *air gap* fitting of a backflow preventer shall discharge to an *approved* indirect waste receptor or to the outdoors where it will not cause damage or create a nuisance.

608.16 Protection of potable water outlets. Potable water openings and outlets shall be protected against backflow in accordance with Section 608.16.1, 608.16.2, 608.16.3, 608.16.4, 608.16.4.1 or 608.16.4.2.

608.16.1 Protection by air gap. Openings and outlets shall be protected by an *air gap* between the opening and the fixture *flood level rim* as specified in Table 608.16.1. Openings and outlets equipped for hose connection shall be protected by means other than an *air gap*.

608.16.2 Protection by reduced pressure principle backflow prevention assembly. Openings and outlets shall be protected by a reduced pressure principle backflow prevention assembly or a reduced pressure principle fire protection backflow prevention assembly on potable water supplies.

608.16.3 Protection by a backflow preventer with intermediate atmospheric vent. Openings and outlets shall be protected by a backflow preventer with an intermediate atmospheric vent.

608.16.4 Protection by a vacuum breaker. Openings and outlets shall be protected by atmospheric-type or pressure-type vacuum breakers. The critical level of the vacuum breaker shall be set not less than 6 inches (152 mm) above the *flood level rim* of the fixture or device. Fill valves shall be set in accordance with Section 415.3.1. Vacuum breakers shall not be installed under exhaust hoods or similar locations that will contain toxic fumes or vapors. Pipe-applied vacuum breakers shall be installed not less than 6

INTERNATIONAL CODE COUNCIL®
Copyright © 2019 ICC & NYSDOS. ALL RIGHTS RESERVED. Accessed by Lauren Gualdino (lgualdino@briarcliffmanor.org), (-) Order Number #100880972 on May 08, 2020 07:05 AM (PDT) pursuant to License Agreement with ICC & NYSDOS. No further reproduction, no

100880972

TABLE 608.16.1
MINIMUM REQUIRED AIR GAPS

FIXTURE	MINIMUM AIR GAP	
	Away from a wall[a] (inches)	Close to a wall (inches)
Lavatories and other fixtures with effective openings not greater than $^1/_2$ inch in diameter	1	$1^1/_2$
Sinks, laundry trays, gooseneck back faucets and other fixtures with effective openings not greater than $^3/_4$ inch in diameter	$1^1/_2$	$2^1/_2$
Over-rim bath fillers and other fixtures with effective openings not greater than 1 inch in diameter	2	3
Drinking water fountains, single orifice not greater than $^7/_{16}$ inch in diameter or multiple orifices with a total area of 0.150 square inch (area of circle $^7/_{16}$ inch in diameter)	1	$1^1/_2$
Effective openings greater than 1 inch	Two times the diameter of the effective opening	Three times the diameter of the effective opening

For SI: 1 inch = 25.4 mm, 1 square inch = 645 mm^2.

a. Applicable where walls or obstructions are spaced from the nearest inside-edge of the spout opening a distance greater than three times the diameter of the

inches (152 mm) above the *flood level rim* of the fixture, receptor or device served.

608.16.4.1 Deck-mounted and integral vacuum breakers. *Approved* deck-mounted or equipment-mounted vacuum breakers and faucets with integral atmospheric vacuum breakers or spill-resistant vacuum breaker assemblies shall be installed in accordance with the manufacturer's instructions and the requirements for labeling with the critical level not less than 1 inch (25 mm) above the *flood level rim*.

608.16.4.2 Hose connections. Sillcocks, hose bibbs, wall hydrants and other openings with a hose connection shall be protected by an atmospheric-type or pressure-type vacuum breaker or a permanently attached hose connection vacuum breaker.

Exceptions:

1. This section shall not apply to water heater and boiler drain valves that are provided with hose connection threads and that are intended only for tank or vessel draining.
2. This section shall not apply to water supply valves intended for connection of clothes washing machines where backflow prevention is otherwise provided or is integral with the machine.

608.17 Connections to the potable water system. Connections to the potable water system shall conform to Sections 608.17.1 through 608.17.10.

608.17.1 Beverage dispensers. The water supply connection to beverage dispensers shall be protected against backflow in accordance with Sections 608.17.1.1 and 608.17.1.2.

608.17.1.1 Carbonated beverage dispensers. The water supply connection to each carbonated beverage dispenser shall be protected against backflow by a backflow preventer conforming to ASSE 1022 or by an *air gap*. The portion of the backflow preventer device downstream from the second check valve of the device and the piping downstream therefrom shall not be affected by carbon dioxide gas.

608.17.1.2 Coffee machines and noncarbonated drink dispensers. The water supply connection to each coffee machine and each noncarbonated beverage dispenser shall be protected against backflow by a backflow preventer conforming to ASSE 1022 or ASSE 1024, or protected by an *air gap*.

608.17.2 Connections to boilers. The potable supply to the boiler shall be equipped with a backflow preventer with an intermediate atmospheric vent complying with ASSE 1012 or CSA B64.3. Where conditioning chemicals are introduced into the system, the potable water connection shall be protected by an *air gap* or a reduced pressure principle backflow preventer, complying with ASSE 1013, CSA B64.4 or AWWA C511.

608.17.3 Heat exchangers. Heat exchangers utilizing an essentially toxic transfer fluid shall be separated from the potable water by double-wall construction. An *air gap* open to the atmosphere shall be provided between the two walls. Heat exchangers utilizing an essentially nontoxic transfer fluid shall be permitted to be of single-wall construction.

608.17.4 Connections to automatic fire sprinkler systems and standpipe systems. The potable water supply to automatic fire sprinkler and standpipe systems shall be protected against backflow by a double check backflow prevention assembly, a double check fire protection backflow prevention assembly or a reduced pressure principle fire protection backflow prevention assembly.

Exceptions:

1. Where systems are installed as a portion of the water distribution system in accordance with the requirements of this code and are not provided with a fire department connection, isolation of the water supply system shall not be required.
2. Isolation of the water distribution system is not required for deluge, preaction or dry pipe systems.

608.17.4.1 Additives or nonpotable source. Where systems under continuous pressure contain chemical additives or antifreeze, or where systems are connected

INTERNATIONAL CODE COUNCIL®
Copyright © 2019 ICC & NYSDOS. ALL RIGHTS RESERVED. Accessed by Lauren Gualdino (lgualdino@briarcliffmanor.org), (-) Order Number #100880972 on May 08, 2020 07:05 AM (PDT) pursuant to License Agreement with ICC & NYSDOS. No further reproduction, no

100880972

to a nonpotable secondary water supply, the potable water supply shall be protected against backflow by a reduced pressure principle backflow prevention assembly or a reduced pressure principle fire protection backflow prevention assembly. Where chemical additives or antifreeze are added to only a portion of an automatic fire sprinkler or standpipe system, the reduced pressure principle backflow prevention assembly or the reduced pressure principle fire protection backflow prevention assembly shall be permitted to be located so as to isolate that portion of the system. Where systems are not under continuous pressure, the potable water supply shall be protected against backflow by an air gap or an atmospheric vacuum breaker conforming to ASSE 1001 or CSA B64.1.1.

608.17.5 Connections to lawn irrigation systems. The potable water supply to lawn irrigation systems shall be protected against backflow by an atmospheric vacuum breaker, a pressure vacuum breaker assembly or a reduced pressure principle backflow prevention assembly. Valves shall not be installed downstream from an atmospheric vacuum breaker. Where chemicals are introduced into the system, the potable water supply shall be protected against backflow by a reduced pressure principle backflow prevention assembly.

608.17.6 Connections subject to backpressure. Where a potable water connection is made to a nonpotable line, fixture, tank, vat, pump or other equipment subject to high-hazard backpressure, the potable water connection shall be protected by a reduced pressure principle backflow prevention assembly.

608.17.7 Chemical dispensers. Where chemical dispensers connect to the potable water distribution system, the water supply system shall be protected against backflow in accordance with Section 608.14.1, 608.14.2, 608.14.5, 608.14.6 or 608.14.8.

608.17.8 Portable cleaning equipment. Where the portable cleaning equipment connects to the water distribution system, the water supply system shall be protected against backflow in accordance with Section 608.14.1, 608.14.2, 608.14.3, 608.14.7 or 608.14.8.

608.17.9 Dental pumping equipment. The water supply connection to each dental pumping equipment system, the water supply system shall be protected against backflow in accordance with Section 608.14.1, 608.14.2, 608.14.5, 608.14.6 or 608.14.8.

608.17.10 Humidifiers. The water supply connection to humidifiers that do not have internal backflow protection shall be protected against backflow by a backflow preventer conforming to ASSE 1012 or by an *air gap*.

[NY] 608.18 Protection of individual water supplies. An individual water supply shall be located and constructed so as to be safeguarded against contamination in accordance with Appendix 5-B (Standards for Water Wells) or Appendix 5-D (Special Requirements for Wells Serving Public Water Systems) of the New York State Department of Health (10 NYCRR).

SECTION 609
HEALTH CARE PLUMBING

609.1 Scope. This section shall govern those aspects of health care plumbing systems that differ from plumbing systems in other structures. Health care plumbing systems shall conform to the requirements of this section in addition to the other requirements of this code. The provisions of this section shall apply to the special devices and equipment installed and maintained in the following occupancies: Group I-1, Group I-2, Group B ambulatory care facilities, medical offices, research and testing laboratories, and Group F facilities manufacturing pharmaceutical drugs and medicines.

609.2 Water service. Hospitals shall have two water service pipes installed in such a manner so as to minimize the potential for an interruption of the supply of water in the event of a water main or water service pipe failure.

609.3 Hot water. *Hot water* shall be provided to supply all of the hospital fixture, kitchen and laundry requirements. Special fixtures and equipment shall have hot water supplied at a temperature specified by the manufacturer. The hot water system shall be installed in accordance with Section 607.

609.4 Vacuum breaker installation. Vacuum breakers shall be installed not less than 6 inches (152 mm) above the *flood level rim* of the fixture or device in accordance with Section 608. The *flood level rim* of hose connections shall be the maximum height at which any hose is utilized.

609.5 Prohibited water closet and clinical sink supply. Jet- or water-supplied orifices, except those supplied by the flush connections, shall not be located in or connected with a water closet bowl or clinical sink. This section shall not prohibit an *approved* bidet installation.

609.6 Clinical, hydrotherapeutic and radiological equipment. Clinical, hydrotherapeutic, radiological or any equipment that is supplied with water or that discharges to the waste system shall conform to the requirements of this section and Section 608.

609.7 Condensate drain trap seal. A water supply shall be provided for cleaning, flushing and resealing the condensate trap, and the trap shall discharge through an *air gap* in accordance with Section 608.

609.8 Valve leakage diverter. Each water sterilizer filled with water through directly connected piping shall be equipped with an *approved* leakage diverter or bleed line on the water supply control valve to indicate and conduct any leakage of unsterile water away from the sterile zone.

SECTION 610
DISINFECTION OF POTABLE WATER SYSTEM

[NY] 610.1 General. New or repaired potable water systems shall be purged of deleterious matter and disinfected prior to utilization. The method to be followed shall be in accordance with the applicable New York State Department of Health regulations.

INTERNATIONAL CODE COUNCIL®
Copyright © 2019 ICC & NYSDOS. ALL RIGHTS RESERVED. Accessed by Lauren Gualdino (lgualdino@briarcliffmanor.org), (-) Order Number #100880972 on May 08, 2020 07:05 AM (PDT) pursuant to License Agreement with ICC & NYSDOS. No further reproduction, no

100880972

SECTION 611
DRINKING WATER TREATMENT UNITS

611.1 Design. Point-of-use reverse osmosis drinking water treatment units shall comply with NSF 58 or CSA B483.1. Drinking water treatment units shall meet the requirements of NSF 42, NSF 44, NSF 53, NSF 62 or CSA B483.1.

611.2 Reverse osmosis systems. The discharge from a reverse osmosis drinking water treatment unit shall enter the drainage system through an *air gap* or an *air gap* device that meets the requirements of NSF 58 or CSA B483.1.

611.3 Connection tubing. The tubing to and from drinking water treatment units shall be of a size and material as recommended by the manufacturer. The tubing shall comply with NSF 14, NSF 42, NSF 44, NSF 53, NSF 58 or NSF 61.

SECTION 612
SOLAR SYSTEMS

612.1 Solar systems. The construction, installation, alterations and repair of systems, equipment and appliances intended to utilize solar energy for space heating or cooling, domestic hot water heating, swimming pool heating or process heating shall be in accordance with the *Mechanical Code of New York State*.

SECTION 613
TEMPERATURE CONTROL DEVICES AND VALVES

613.1 Temperature-actuated mixing valves. Temperature-actuated mixing valves, which are installed to reduce water temperatures to defined limits, shall comply with ASSE 1017. Such valves shall be installed at the hot water source.

INTERNATIONAL CODE COUNCIL®
Copyright © 2019 ICC & NYSDOS. ALL RIGHTS RESERVED. Accessed by Lauren Gualdino (lgualdino@briarcliffmanor.org), (-) Order Number #100880972 on May 08, 2020 07:05 AM (PDT) pursuant to License Agreement with ICC & NYSDOS. No further reproduction, no

100880972

INTERNATIONAL CODE COUNCIL®
Copyright © 2019 ICC & NYSDOS. ALL RIGHTS RESERVED. Accessed by Lauren Gualdino (lgualdino@briarcliffmanor.org), (-) Order Number #100880972 on May 08, 2020 07:05 AM (PDT) pursuant to License Agreement with ICC & NYSDOS. No further reproduction, no

100880972

CHAPTER 7

SANITARY DRAINAGE

SECTION 701
GENERAL

701.1 Scope. The provisions of this chapter shall govern the materials, design, construction and installation of sanitary drainage systems.

[NY] 701.2 Sewer required. Buildings in which plumbing fixtures are installed and premises having drainage piping shall be connected to a public sewer, where available, or an approved private sewage disposal system in conformance with the applicable requirements of:

1. Appendix 75-A (Wastewater Treatment Standards-Individual Household Systems) of the New York State Department of Health Sanitary Code (10 NYCRR).
2. New York State Department of Environmental Conservation, Design Standards for Intermediate Sized Wastewater Treatment Systems.
3. The New York City Department of Environmental Protection (Rules and Regulations for the Protection from Contamination, Degradation and Pollution of the New York City Water Supply and its Sources).
4. The Adirondack Park Agency.
5. Local county health departments.
6. Other applicable statutes, local laws, ordinances or regulations.

701.3 Separate sewer connection. A building having plumbing fixtures installed and intended for human habitation, occupancy or use on premises abutting on a street, alley or easement in which there is a public *sewer* shall have a separate connection with the *sewer*. Where located on the same lot, multiple buildings shall not be prohibited from connecting to a common *building sewer* that connects to the public *sewer*.

701.4 Sewage treatment. Sewage or other waste from a plumbing system that is deleterious to surface or subsurface waters shall not be discharged into the ground or into any waterway unless it has first been rendered innocuous through subjection to an *approved* form of treatment.

701.5 Damage to drainage system or public sewer. Waste detrimental to the public *sewer* system or to the functioning of the sewage-treatment plant shall be treated and disposed of in accordance with Section 1003 as directed by the *building official*.

701.6 Tests. The sanitary drainage system shall be tested in accordance with Section 312.

701.7 Engineered systems. Engineered sanitary drainage systems shall conform to the provisions of Sections 316 and 713.

SECTION 702
MATERIALS

702.1 Above-ground sanitary drainage and vent pipe. Above-ground soil, waste and vent pipe shall conform to one of the standards listed in Table 702.1.

TABLE 702.1
ABOVE-GROUND DRAINAGE AND VENT PIPE

MATERIAL	STANDARD
Acrylonitrile butadiene styrene (ABS) plastic pipe in IPS diameters, including Schedule 40, DR 22 (PS 200) and DR 24 (PS 140); with a solid, cellular core or composite wall	ASTM D2661; ASTM F628; ASTM F1488; CSA B181.1
Cast-iron pipe	ASTM A74; ASTM A888; CISPI 301
Copper or copper-alloy pipe	ASTM B42; ASTM B43; ASTM B302
Copper or copper-alloy tubing (Type K, L, M or DWV)	ASTM B75; ASTM B88; ASTM B251; ASTM B306
Galvanized steel pipe	ASTM A53
Glass pipe	ASTM C1053
Polyolefin pipe	ASTM F1412; CSA B181.3
Polyvinyl chloride (PVC) plastic pipe in IPS diameters, including Schedule 40, DR 22 (PS 200), and DR 24 (PS 140); with a solid, cellular core or composite wall	ASTM D2665; ASTM F891; ASTM F1488; CSA B181.2
Polyvinyl chloride (PVC) plastic pipe with a 3.25-inch O.D. and a solid, cellular core or composite wall	ASTM D2949, ASTM F1488
Polyvinylidene fluoride (PVDF) plastic pipe	ASTM F1673; CSA B181.3
Stainless steel drainage systems, Types 304 and 316L	ASME A112.3.1

702.2 Underground building sanitary drainage and vent pipe. Underground building sanitary drainage and vent pipe shall conform to one of the standards listed in Table 702.2.

702.3 Building sewer pipe. *Building sewer* pipe shall conform to one of the standards listed in Table 702.3.

702.4 Fittings. Pipe fittings shall be *approved* for installation with the piping material installed and shall comply with the applicable standards listed in Table 702.4.

702.5 Temperature rating. Where the wastewater temperature will be greater than 140°F (60°C), the sanitary drainage piping material shall be rated for the highest temperature of the wastewater.

INTERNATIONAL CODE COUNCIL®
Copyright © 2019 ICC & NYSDOS. ALL RIGHTS RESERVED. Accessed by Lauren Gualdino (lgualdino@briarcliffmanor.org), (-) Order Number #100880972 on May 08, 2020 07:05 AM (PDT) pursuant to License Agreement with ICC & NYSDOS. No further reproduction, no

100880972

TABLE 702.2
UNDERGROUND BUILDING DRAINAGE AND VENT PIPE

MATERIAL	STANDARD
Acrylonitrile butadiene styrene (ABS) plastic pipe in IPS diameters, including Schedule 40, DR 22 (PS 200) and DR 24 (PS 140); with a solid, cellular core or composite wall	ASTM D2661; ASTM F628; ASTM F1488; CSA B181.1
Cast-iron pipe	ASTM A74; ASTM A888; CISPI 301
Copper or copper-alloy tubing (Type K, L, M or DWV)	ASTM B75; ASTM B88; ASTM B251; ASTM B306
Polyethylene (PE) plastic pipe (SDR-PR)	ASTM F714
Polyolefin pipe	ASTM F1412; ASTM F714; CSA B181.3
Polyvinyl chloride (PVC) plastic pipe in IPS diameters, including Schedule 40, DR 22 (PS 200) and DR 24 (PS 140); with a solid, cellular core or composite wall	ASTM D2665; ASTM F891; ASTM F1488; CSA B181.2
Polyvinyl chloride (PVC) plastic pipe with a 3.25-inch O.D. and a solid, cellular core or composite wall	ASTM D2949, ASTM F1488
Polyvinylidene fluoride (PVDF) plastic pipe	ASTM F1673; CSA B181.3
Stainless steel drainage systems, Type 316L	ASME A112.3.1

For SI: 1 inch = 25.4 mm.

702.6 Chemical waste system. A chemical waste system shall be completely separated from the sanitary drainage system. The chemical waste shall be treated in accordance with Section 803.2 before discharging to the sanitary drainage system. Separate drainage systems for chemical wastes and vent pipes shall be of an *approved* material that is resistant to corrosion and degradation for the concentrations of chemicals involved.

702.7 Lead bends and traps. The wall thickness of lead bends and traps shall be not less than $^{1}/_{8}$ inch (3.2 mm).

SECTION 703
BUILDING SEWER

703.1 Building sewer pipe near the water service. The proximity of a *sewer* to a water service shall comply with Section 603.2.

703.2 Drainage pipe in filled ground. Where a *building sewer* or *building drain* is installed on filled or unstable ground, the drainage pipe shall conform to one of the standards for ABS plastic pipe, cast-iron pipe, copper or copper-alloy tubing, PVC plastic pipe or polypropylene plastic pipe indicated in Table 702.3.

TABLE 702.3
BUILDING SEWER PIPE

MATERIAL	STANDARD
Acrylonitrile butadiene styrene (ABS) plastic pipe in IPS diameters, including Schedule 40, DR 22 (PS 200) and DR 24 (PS 140); with a solid, cellular core or composite wall	ASTM D2661; ASTM F628; ASTM F1488; CSA B181.1
Acrylonitrile butadiene styrene (ABS) plastic pipe in sewer and drain diameters, including SDR 42 (PS 20), PS 35, SDR 35 (PS 45), PS 50, PS 100, PS 140, SDR 23.5 (PS 150) and PS 200; with a solid, cellular core or composite wall	ASTM F1488; ASTM D2751
Cast-iron pipe	ASTM A74; ASTM A888; CISPI 301
Concrete pipe	ASTM C14; ASTM C76; CSA A257.1M; CSA A257.2M
Copper or copper-alloy tubing (Type K or L)	ASTM B75; ASTM B88; ASTM B251
Polyethylene (PE) plastic pipe (SDR-PR)	ASTM F714
Polypropylene (PP) plastic pipe	ASTM F2736; ASTM F2764; CSA B182.13
Polyvinyl chloride (PVC) plastic pipe in IPS diameters, including Schedule 40, DR 22 (PS 200) and DR 24 (PS 140); with a solid, cellular core or composite wall	ASTM D2665; ASTM F891; ASTM F1488
Polyvinyl chloride (PVC) plastic pipe in sewer and drain diameters, including PS 25, SDR 41 (PS 28), PS 35, SDR 35 (PS 46), PS 50, PS 100, SDR 26 (PS 115), PS 140 and PS 200; with a solid, cellular core or composite wall	ASTM F891; ASTM F1488; ASTM D3034; CSA B182.2; CSA B182.4
Polyvinyl chloride (PVC) plastic pipe with a 3.25-inch O.D. and a solid, cellular core or composite wall	ASTM D2949, ASTM F1488
Polyvinylidene fluoride (PVDF) plastic pipe	ASTM F1673; CSA B181.3
Stainless steel drainage systems, Types 304 and 316L	ASME A112.3.1
Vitrified clay pipe	ASTM C4; ASTM C700

For SI: 1 inch = 25.4 mm.

INTERNATIONAL CODE COUNCIL®
Copyright © 2019 ICC & NYSDOS. ALL RIGHTS RESERVED. Accessed by Lauren Gualdino (lgualdino@briarcliffmanor.org), (-) Order Number #100880972 on May 08, 2020 07:05 AM (PDT) pursuant to License Agreement with ICC & NYSDOS. No further reproduction, no

100880972

TABLE 702.4
PIPE FITTINGS

MATERIAL	STANDARD
Acrylonitrile butadiene styrene (ABS) plastic pipe in IPS diameters	ASTM D2661; ASTM F628; CSA B181.1
Acrylonotrile butadiene styrene (ABS) plastic pipe in sewer and drain diameters	ASTM D2751
Cast iron	ASME B16.4; ASME B16.12; ASTM A74; ASTM A888; CISPI 301
Copper or copper alloy	ASME B16.15; ASME B16.18; ASME B16.22; ASME B16.23; ASME B16.26; ASME B16.29
Glass	ASTM C1053
Gray iron and ductile iron	AWWA C110/A21.10
Polyethylene	ASTM D2683
Polyolefin	ASTM F1412; CSA B181.3
Polyvinyl chloride (PVC) plastic in IPS diameters	ASTM D2665; ASTM F1866
Polyvinyl chloride (PVC) plastic pipe in sewer and drain diameters	ASTM D3034
Polyvinyl chloride (PVC) plastic pipe with a 3.25-inch O.D.	ASTM D2949
Polyvinylidene fluoride (PVDF) plastic pipe	ASTM F1673; CSA B181.3
Stainless steel drainage systems, Types 304 and 316L	ASME A112.3.1
Steel	ASME B16.9; ASME B16.11; ASME B16.28
Vitrified clay	ASTM C700

For SI: 1 inch = 25.4 mm.

703.3 Sanitary and storm sewers. Where separate systems of sanitary drainage and storm drainage are installed in the same property, the sanitary and storm building sewers or drains shall be permitted to be laid side by side in one trench.

703.4 Existing building sewers and building drains. Where the entire sanitary drainage system of an existing building is replaced, existing *building drains* under concrete slabs and existing building sewers that will serve the new system shall be internally examined to verify that the piping is sloping in the correct direction, is not broken, is not obstructed and is sized for the drainage load of the new plumbing drainage system to be installed.

703.5 Cleanouts on building sewers. Cleanouts on *building sewers* shall be located as indicated in Section 708.

703.6 Combined sanitary and storm public sewer. Where the public sewer is a combined system for both sanitary and storm water, the sanitary sewer shall be connected independently to the public sewer.

SECTION 704
DRAINAGE PIPING INSTALLATION

704.1 Slope of horizontal drainage piping. Horizontal drainage piping shall be installed in uniform alignment at uniform slopes. The slope of a horizontal drainage pipe shall be not less than that indicated in Table 704.1 except that where the drainage piping is upstream of a grease interceptor, the slope of the piping shall be not less than $^1/_4$ inch per foot (2-percent slope).

TABLE 704.1
SLOPE OF HORIZONTAL DRAINAGE PIPE

SIZE (inches)	MINIMUM SLOPE (inch per foot)
$2^1/_2$ or less	$^1/_4$ [a]
3 to 6	$^1/_8$ [a]
8 or larger	$^1/_{16}$ [a]

For SI: 1 inch = 25.4 mm, 1 inch per foot = 83.33 mm/m.

a. Slopes for piping draining to a grease interceptor shall comply with Section 704.1.

704.2 Reduction in pipe size in the direction of flow. The size of the drainage piping shall not be reduced in the direction of the flow. The following shall not be considered as a reduction in size in the direction of flow:

1. A 4-inch by 3-inch (102 mm by 76 mm) water closet flange.
2. A water closet bend fitting having a 4-inch (102 mm) inlet and a 3-inch (76 mm) outlet provided that the 4-inch leg of the fitting is upright and below, but not necessarily directly connected to, the water closet flange.
3. An offset closet flange.

704.3 Connections to offsets and bases of stacks. Horizontal *branches* shall connect to the bases of stacks at a point located not less than 10 times the diameter of the drainage *stack* downstream from the *stack*. Horizontal *branches* shall connect to horizontal *stack* offsets at a point located not less than 10 times the diameter of the drainage *stack* downstream from the upper *stack*.

704.4 Future fixtures. Drainage piping for future fixtures shall terminate with an *approved* cap or plug.

SECTION 705
JOINTS

705.1 General. This section contains provisions applicable to joints specific to sanitary drainage piping.

705.2 ABS plastic. Joints between ABS plastic pipe or fittings shall comply with Sections 705.2.1 through 705.2.3.

705.2.1 Mechanical joints. Mechanical joints on drainage pipes shall be made with an elastomeric seal conforming to ASTM C1173, ASTM D3212 or CSA B602. Mechanical joints shall be installed only in underground systems unless otherwise *approved*. Joints shall be installed in accordance with the manufacturer's instructions.

705.2.2 Solvent cementing. Joint surfaces shall be clean and free from moisture. Solvent cement that conforms to ASTM D2235 or CSA B181.1 shall be applied to all joint

INTERNATIONAL CODE COUNCIL®
Copyright © 2019 ICC & NYSDOS. ALL RIGHTS RESERVED. Accessed by Lauren Gualdino (lgualdino@briarcliffmanor.org), (-) Order Number #100880972 on May 08, 2020 07:05 AM (PDT) pursuant to License Agreement with ICC & NYSDOS. No further reproduction, no

100880972

surfaces. The joint shall be made while the cement is wet. Joints shall be made in accordance with ASTM D2235, ASTM D2661, ASTM F628 or CSA B181.1. Solvent-cement joints shall be permitted above or below ground.

705.2.3 Threaded joints. Threads shall conform to ASME B1.20.1. Schedule 80 or heavier pipe shall be permitted to be threaded with dies specifically designed for plastic pipe. *Approved* thread lubricant or tape shall be applied on the male threads only.

➡ **705.3 Cast iron.** Joints between cast-iron pipe or fittings shall comply with Sections 705.3.1 through 705.3.3.

705.3.1 Caulked joints. Joints for hub and spigot pipe shall be firmly packed with oakum or hemp. Molten lead shall be poured in one operation to a depth of not less than 1 inch (25 mm). The lead shall not recede more than $^1/_8$ inch (3.2 mm) below the rim of the hub and shall be caulked tight. Paint, varnish or other coatings shall not be permitted on the jointing material until after the joint has been tested and *approved*. Lead shall be run in one pouring and shall be caulked tight. Acid-resistant rope and acidproof cement shall be permitted.

705.3.2 Compression gasket joints. Compression gaskets for hub and spigot pipe and fittings shall conform to ASTM C564 and shall be tested to ASTM C1563. Gaskets shall be compressed when the pipe is fully inserted.

705.3.3 Mechanical joint coupling. Mechanical joint couplings for hubless pipe and fittings shall consist of an elastomeric sealing sleeve and a metallic shield that comply with CISPI 310, ASTM C1277 or ASTM C1540. The elastomeric sealing sleeve shall conform to ASTM C564 or CSA B602 and shall be provided with a center stop. Mechanical joint couplings shall be installed in accordance with the manufacturer's instructions.

705.4 Concrete joints. Joints between concrete pipe and fittings shall be made with an elastomeric seal conforming to ASTM C443, ASTM C1173, CSA A257.3M or CSA B602.

705.5 Copper pipe. Joints between copper or copper-alloy pipe or fittings shall comply with Sections 705.5.1 through 705.5.5.

705.5.1 Brazed joints. Joint surfaces shall be cleaned. An *approved* flux shall be applied where required. The joint shall be brazed with a filler metal conforming to AWS A5.8.

705.5.2 Mechanical joints. Mechanical joints shall be installed in accordance with the manufacturer's instructions.

705.5.3 Solder joints. Solder joints shall be made in accordance with the methods of ASTM B828. Cut tube ends shall be reamed to the full inside diameter of the tube end. Joint surfaces shall be cleaned. A flux conforming to ASTM B813 shall be applied. The joint shall be soldered with a solder conforming to ASTM B32.

705.5.4 Threaded joints. Threads shall conform to ASME B1.20.1. Pipe-joint compound or tape shall be applied on the male threads only.

705.5.5 Welded joints. Joint surfaces shall be cleaned. The joint shall be welded with an *approved* filler metal.

705.6 Copper tubing. Joints between copper or copper-alloy tubing or fittings shall comply with Sections 705.6.1 through 705.6.3.

705.6.1 Brazed joints. Joint surfaces shall be cleaned. An *approved* flux shall be applied where required. The joint shall be brazed with a filler metal conforming to AWS A5.8.

705.6.2 Mechanical joints. Mechanical joints shall be installed in accordance with the manufacturer's instructions.

705.6.3 Solder joints. Solder joints shall be made in accordance with the methods of ASTM B828. Cut tube ends shall be reamed to the full inside diameter of the tube end. Joint surfaces shall be cleaned. A flux conforming to ASTM B813 shall be applied. The joint shall be soldered with a solder conforming to ASTM B32.

705.7 Borosilicate glass joints. Glass-to-glass connections shall be made with a bolted compression-type, 300 series stainless steel coupling with contoured acid-resistant elastomeric compression ring and a fluorocarbon polymer inner seal ring; or with caulked joints in accordance with Section 705.7.1.

705.7.1 Caulked joints. Lead-caulked joints for hub and spigot soil pipe shall be firmly packed with oakum or hemp and filled with molten lead not less than 1 inch (25 mm) in depth and not to recede more than $^1/_8$ inch (3.2 mm) below the rim of the hub. Paint, varnish or other coatings shall not be permitted on the jointing material until after the joint has been tested and *approved*. Lead shall be run in one pouring and shall be caulked tight. Acid-resistant rope and acidproof cement shall be permitted.

705.8 Steel. Joints between galvanized steel pipe or fittings shall comply with Sections 705.8.1 and 705.8.2.

705.8.1 Threaded joints. Threads shall conform to ASME B1.20.1. Pipe-joint compound or tape shall be applied on the male threads only.

705.8.2 Mechanical joints. Joints shall be made with an *approved* elastomeric seal. Mechanical joints shall be installed in accordance with the manufacturer's instructions.

705.9 Lead. Joints between lead pipe or fittings shall comply with Sections 705.9.1 and 705.9.2.

705.9.1 Burned. Burned joints shall be uniformly fused together into one continuous piece. The thickness of the joint shall be not less than the thickness of the lead being joined. The filler metal shall be of the same material as the pipe.

705.9.2 Wiped. Joints shall be fully wiped, with an exposed surface on each side of the joint not less than $^3/_4$ inch (19.1 mm). The joint shall be not less than $^3/_8$ inch (9.5 mm) thick at the thickest point.

705.10 PVC plastic. Joints between PVC plastic pipe or fittings shall comply with Sections 705.10.1 through 705.10.3.

705.10.1 Mechanical joints. Mechanical joints on drainage pipe shall be made with an elastomeric seal conforming to ASTM C1173, ASTM D3212 or CSA B602. Mechanical joints shall not be installed in above-ground

INTERNATIONAL CODE COUNCIL®
Copyright © 2019 ICC & NYSDOS. ALL RIGHTS RESERVED. Accessed by Lauren Gualdino (lgualdino@briarcliffmanor.org), (-) Order Number #100880972 on May 08, 2020 07:05 AM (PDT) pursuant to License Agreement with ICC & NYSDOS. No further reproduction, no

100880972

systems, unless otherwise *approved*. Joints shall be installed in accordance with the manufacturer's instructions.

705.10.2 Solvent cementing. Joint surfaces shall be clean and free from moisture. A purple primer that conforms to ASTM F656 shall be applied. Solvent cement not purple in color and conforming to ASTM D2564, CSA B137.3, CSA B181.2 or CSA B182.1 shall be applied to all joint surfaces. The joint shall be made while the cement is wet and shall be in accordance with ASTM D2855. Solvent-cement joints shall be permitted above or below ground.

Exception: A primer is not required where both of the following conditions apply:

1. The solvent cement used is third-party certified as conforming to ASTM D2564.
2. The solvent cement is used only for joining PVC drain, waste and vent pipe and fittings in non-pressure applications in sizes up to and including 4 inches (102 mm) in diameter.

705.10.3 Threaded joints. Threads shall conform to ASME B1.20.1. Where pipe is to be threaded, the pipe shall have a wall thickness of not less than Schedule 80. Pipe threads shall be made with dies specifically designed for plastic pipe. *Approved* thread lubricant or tape shall be applied on the male threads only.

705.11 Vitrified clay. Joints between vitrified clay pipe or fittings shall be made with an elastomeric seal conforming to ASTM C425, ASTM C1173 or CSA B602.

705.12 Polyethylene plastic pipe. Joints between polyethylene plastic pipe and fittings shall be underground and shall comply with Section 705.12.1 or 705.12.2.

705.12.1 Heat-fusion joints. Joint surfaces shall be clean and free from moisture. Joint surfaces shall be cut, heated to melting temperature and joined using tools specifically designed for the operation. Joints shall be undisturbed until cool. Joints shall be made in accordance with ASTM D2657 and the manufacturer's instructions.

705.12.2 Mechanical joints. Mechanical joints in drainage piping shall be made with an elastomeric seal conforming to ASTM C1173, ASTM D3212 or CSA B602. Mechanical joints shall be installed in accordance with the manufacturer's instructions.

705.13 Polyolefin plastic. Joints between polyolefin plastic pipe and fittings shall comply with Sections 705.13.1 and 705.13.2.

705.13.1 Heat-fusion joints. Heat-fusion joints for polyolefin pipe and tubing joints shall be installed with socket-type heat-fused polyolefin fittings or electrofusion polyolefin fittings. Joint surfaces shall be clean and free from moisture. The joint shall be undisturbed until cool. Joints shall be made in accordance with ASTM F1412 or CSA B181.3.

705.13.2 Mechanical and compression sleeve joints. Mechanical and compression sleeve joints shall be installed in accordance with the manufacturer's instructions.

705.14 Polyvinylidene fluoride plastic. Joints between polyvinylidene plastic pipe and fittings shall comply with Sections 705.14.1 and 705.14.2.

705.14.1 Heat-fusion joints. Heat-fusion joints for polyvinylidene fluoride pipe and tubing joints shall be installed with socket-type heat-fused polyvinylidene fluoride fittings or electrofusion polyvinylidene fittings and couplings. Joint surfaces shall be clean and free from moisture. The joint shall be undisturbed until cool. Joints shall be made in accordance with ASTM F1673.

705.14.2 Mechanical and compression sleeve joints. Mechanical and compression sleeve joints shall be installed in accordance with the manufacturer's instructions.

705.15 Polypropylene plastic. The joint between polypropylene plastic pipe and fittings shall incorporate an elastomeric seal. The joint shall conform to ASTM D3212. Mechanical joints shall not be installed above ground.

705.16 Joints between different materials. Joints between different piping materials shall be made with a mechanical joint of the compression or mechanical-sealing type conforming to ASTM C1173, ASTM C1460 or ASTM C1461. Connectors and adapters shall be *approved* for the application and such joints shall have an elastomeric seal conforming to ASTM C425, ASTM C443, ASTM C564, ASTM C1440, ASTM F477, CSA A257.3M or CSA B602, or as required in Sections 705.16.1 through 705.16.7. Joints between glass pipe and other types of materials shall be made with adapters having a TFE seal. Joints shall be installed in accordance with the manufacturer's instructions.

705.16.1 Copper pipe or tubing to cast-iron hub pipe. Joints between copper pipe or tubing and cast-iron hub pipe shall be made with a copper or copper alloy ferrule or compression joint. The copper pipe or tubing shall be soldered to the ferrule in an *approved* manner, and the ferrule shall be joined to the cast-iron hub by a caulked joint or a mechanical compression joint.

705.16.2 Copper or copper-alloy pipe or tubing to galvanized steel pipe. Joints between copper or copper-alloy pipe or tubing and galvanized steel pipe shall be made with a copper-alloy fitting or dielectric fitting. The copper tubing shall be soldered to the fitting in an *approved* manner, and the fitting shall be screwed to the threaded pipe.

705.16.3 Cast-iron pipe to galvanized steel pipe. Joints between cast-iron and galvanized steel shall be made by either caulked or threaded joints or with an *approved* adapter fitting.

705.16.4 Plastic pipe or tubing to other piping material. Joints between different types of plastic pipe shall be made with an *approved* adapter fitting, or by a solvent cement joint only where a single joint is made between ABS and PVC pipes at the end of a building drainage pipe and the beginning of a *building sewer* pipe using a solvent cement complying with ASTM D3138. Joints between plastic pipe

INTERNATIONAL CODE COUNCIL®
Copyright © 2019 ICC & NYSDOS. ALL RIGHTS RESERVED. Accessed by Lauren Gualdino (lgualdino@briarcliffmanor.org), (-) Order Number #100880972 on May 08, 2020 07:05 AM (PDT) pursuant to License Agreement with ICC & NYSDOS. No further reproduction, no

100880972

and other piping material shall be made with an approved adapter fitting. Joints between plastic pipe and cast-iron hub pipe shall be made by a caulked joint or a mechanical compression joint.

705.16.5 Lead pipe to other piping material. Joints between lead pipe and other piping material shall be made by a wiped joint to a caulking ferrule, soldering nipple or bushing or shall be made with an *approved* adapter fitting.

705.16.6 Borosilicate glass to other materials. Joints between glass pipe and other types of materials shall be made with adapters having a TFE seal and shall be installed in accordance with the manufacturer's instructions.

705.16.7 Stainless steel drainage systems to other materials. Joints between stainless steel drainage systems and other piping materials shall be made with *approved* mechanical couplings.

705.17 Drainage slip joints. Slip joints shall comply with Section 405.9.

705.18 Caulking ferrules. Caulking ferrules shall be of copper alloy and shall be in accordance with Table 705.18.

TABLE 705.18
CAULKING FERRULE SPECIFICATIONS

PIPE SIZES (inches)	INSIDE DIAMETER (inches)	LENGTH (inches)	MINIMUM WEIGHT EACH
2	$2^1/_4$	$4^1/_2$	1 pound
3	$3^1/_4$	$4^1/_2$	1 pound 12 ounces
4	$4^1/_4$	$4^1/_2$	2 pounds 8 ounces

For SI: 1 inch = 25.4 mm, 1 ounce = 28.35 g, 1 pound = 0.454 kg.

705.19 Soldering bushings. Soldering bushings shall be of copper or copper alloy and shall be in accordance with Table 705.19.

TABLE 705.19
SOLDERING BUSHING SPECIFICATIONS

PIPE SIZES (inches)	MINIMUM WEIGHT EACH
$1^1/_4$	6 ounces
$1^1/_2$	8 ounces
2	14 ounces
$2^1/_2$	1 pound 6 ounces
3	2 pounds
4	3 pounds 8 ounces

For SI: 1 inch = 25.4 mm, 1 ounce = 28.35 g, 1 pound = 0.454 kg.

705.20 Stainless steel drainage systems. O-ring joints for stainless steel drainage systems shall be made with an *approved* elastomeric seal.

SECTION 706
CONNECTIONS BETWEEN DRAINAGE PIPING AND FITTINGS

706.1 Connections and changes in direction. Connections and changes in direction of the sanitary drainage system shall be made with *approved* drainage fittings. Connections between drainage piping and fixtures shall conform to Section 405.

706.2 Obstructions. The fittings shall not have ledges, shoulders or reductions capable of retarding or obstructing flow in the piping. Threaded drainage pipe fittings shall be of the recessed drainage type. This section shall not be applicable to tubular waste fittings used to convey vertical flow upstream of the trap seal liquid level of a fixture trap.

706.3 Installation of fittings. Fittings shall be installed to guide sewage and waste in the direction of flow. Change in direction shall be made by fittings installed in accordance with Table 706.3. Change in direction by combination fittings, side inlets or increasers shall be installed in accordance with Table 706.3 based on the pattern of flow created by the fitting. Double sanitary tee patterns shall not receive the discharge of back-to-back water closets and fixtures or appliances with pumping action discharge.

Exception: Back-to-back water closet connections to double sanitary tees shall be permitted where the horizontal *developed length* between the outlet of the water closet and the connection to the double sanitary tee pattern is 18 inches (457 mm) or greater.

706.4 Heel- or side-inlet quarter bends. Heel-inlet quarter bends shall be an acceptable means of connection, except where the quarter bend serves a water closet. A low-heel inlet shall not be used as a wet-vented connection. Side-inlet quarter bends shall be an acceptable means of connection for drainage, wet venting and *stack* venting arrangements.

SECTION 707
PROHIBITED JOINTS AND CONNECTIONS

707.1 Prohibited joints. The following types of joints and connections shall be prohibited:

1. Cement or concrete joints.
2. Mastic or hot-pour bituminous joints.
3. Joints made with fittings not *approved* for the specific installation.
4. Joints between different diameter pipes made with elastomeric rolling O-rings.
5. Solvent-cement joints between different types of plastic pipe except where provided for in Section 705.16.4.
6. Saddle-type fittings.

INTERNATIONAL CODE COUNCIL®
Copyright © 2019 ICC & NYSDOS. ALL RIGHTS RESERVED. Accessed by Lauren Gualdino (lgualdino@briarcliffmanor.org), (-) Order Number #100880972 on May 08, 2020 07:05 AM (PDT) pursuant to License Agreement with ICC & NYSDOS. No further reproduction, no

100880972

TABLE 706.3
FITTINGS FOR CHANGE IN DIRECTION

TYPE OF FITTING PATTERN	CHANGE IN DIRECTION		
	Horizontal to vertical	Vertical to horizontal	Horizontal to horizontal
Sixteenth bend	X	X	X
Eighth bend	X	X	X
Sixth bend	X	X	X
Quarter bend	X	X[a]	X[a]
Short sweep	X	X[a,b]	X[a]
Long sweep	X	X	X
Sanitary tee	X[c]	—	—
Wye	X	X	X
Combination wye and eighth bend	X	X	X

For SI: 1 inch = 25.4 mm.

a. The fittings shall only be permitted for a 2-inch or smaller fixture drain.

b. Three inches or larger.

c. For a limitation on double sanitary tees, see Section 706.3.

SECTION 708
CLEANOUTS

708.1 Cleanouts required. Cleanouts shall be provided for drainage piping in accordance with Sections 708.1.1 through 708.1.11.

708.1.1 Horizontal drains and building drains. Horizontal drainage pipes in buildings shall have cleanouts located at intervals of not more than 100 feet (30 480 mm). *Building drains* shall have cleanouts located at intervals of not more than 100 feet (30 480 mm) except where manholes are used instead of cleanouts, the manholes shall be located at intervals of not more than 400 feet (122 m). The interval length shall be measured from the cleanout or manhole opening, along the *developed length* of the piping to the next drainage fitting providing access for cleaning, the end of the horizontal drain or the end of the *building drain*.

Exception: Horizontal *fixture drain* piping serving a nonremovable trap shall not be required to have a cleanout for the section of piping between the trap and the vent connection for such trap.

708.1.2 Building sewers. *Building sewers* smaller than 8 inches (203 mm) shall have cleanouts located at intervals of not more than 100 feet (30 480 mm). *Building sewers* 8 inches (203 mm) and larger shall have a manhole located not more than 200 feet (60 960 mm) from the junction of the *building drain* and *building sewer* and at intervals of not more than 400 feet (122 m). The interval length shall be measured from the cleanout or manhole opening, along the *developed length* of the piping to the next drainage fitting providing access for cleaning, a manhole or the end of the *building sewer*.

708.1.3 Building drain and building sewer junction. The junction of the *building drain* and the *building sewer* shall be served by a cleanout that is located at the junction or within 10 feet (3048 mm) of the *developed length* of piping upstream of the junction. For the requirements of this section, the removal of the water closet shall not be required to provide cleanout access.

708.1.4 Changes of direction. Where a horizontal drainage pipe, a *building drain* or a *building sewer* has a change of horizontal direction greater than 45 degrees (0.79 rad), a cleanout shall be installed at the change of direction. Where more than one change of horizontal direction greater than 45 degrees (0.79 rad) occurs within 40 feet (12 192 mm) of *developed length* of piping, the cleanout installed for the first change of direction shall serve as the cleanout for all changes in direction within that 40 feet (12 192 mm) of *developed length* of piping.

708.1.5 Cleanout size. Cleanouts shall be the same size as the piping served by the cleanout, except that cleanouts for piping larger than 4 inches (102 mm) need not be larger than 4 inches (102 mm).

Exceptions:

1. A removable P-trap with slip or ground joint connections can serve as a cleanout for drain piping that is one size larger than the P-trap size.
2. Cleanouts located on *stacks* can be one size smaller than the *stack* size.
3. The size of cleanouts for cast-iron piping can be in accordance with the referenced standards for cast-iron fittings as indicated in Table 702.4.

708.1.6 Cleanout plugs. Cleanout plugs shall be of copper-alloy, plastic or other *approved* materials. Cleanout plugs for borosilicate glass piping systems shall be of borosilicate glass. Copper-alloy cleanout plugs shall conform to ASTM A74 and shall be limited for use only on metallic piping systems. Plastic cleanout plugs shall conform to the referenced standards for plastic pipe fittings, as indicated in Table 702.4. Cleanout plugs shall have a raised square head, a countersunk square head or a countersunk slot head. Where a cleanout plug will have a trim cover screw installed into the plug, the plug shall be manufactured with a blind end threaded hole for such purpose.

708.1.7 Manholes. Manholes and manhole covers shall be of an *approved* type. Manholes located inside of a building shall have gas-tight covers that require tools for removal.

708.1.8 Installation arrangement. The installation arrangement of a cleanout shall enable cleaning of drainage piping only in the direction of drainage flow.

Exceptions:

1. Test tees serving as cleanouts.
2. A two-way cleanout installation that is *approved* for meeting the requirements of Section 708.1.3.

708.1.9 Required clearance. Cleanouts for 6-inch (153 mm) and smaller piping shall be provided with a clearance of not less than 18 inches (457 mm) from, and perpendicular to, the face of the opening to any obstruction. Cleanouts for 8-inch (203 mm) and larger piping shall be provided with a clearance of not less than 36 inches (914 mm) from, and perpendicular to, the face of the opening to any obstruction.

708.1.10 Cleanout access. Required cleanouts shall not be installed in concealed locations. For the purposes of this

INTERNATIONAL CODE COUNCIL®
Copyright © 2019 ICC & NYSDOS. ALL RIGHTS RESERVED. Accessed by Lauren Gualdino (lgualdino@briarcliffmanor.org), (-) Order Number #100880972 on May 08, 2020 07:05 AM (PDT) pursuant to License Agreement with ICC & NYSDOS. No further reproduction, no

100880972

section, concealed locations include, but are not limited to, the inside of plenums, within walls, within floor/ceiling assemblies, below grade and in crawl spaces where the height from the crawl space floor to the nearest obstruction along the path from the crawl space opening to the cleanout location is less than 24 inches (610 mm). Cleanouts with openings at a finished wall shall have the face of the opening located within $1^1/_2$ inches (38 mm) of the finished wall surface. Cleanouts located below grade shall be extended to grade level so that the top of the cleanout plug is at or above grade. A cleanout installed in a floor or walkway that will not have a trim cover installed shall have a countersunk plug installed so the top surface of the plug is flush with the finished surface of the floor or walkway.

708.1.10.1 Cleanout plug trim covers. Trim covers and access doors for cleanout plugs shall be designed for such purposes and shall be *approved*. Trim cover fasteners that thread into cleanout plugs shall be corrosion resistant. Cleanout plugs shall not be covered with mortar, plaster or any other permanent material.

708.1.10.2 Floor cleanout assemblies. Where it is necessary to protect a cleanout plug from the loads of vehicular traffic, cleanout assemblies in accordance with ASME A112.36.2M shall be installed.

708.1.11 Prohibited use. The use of a threaded cleanout opening to add a fixture or to extend piping shall be prohibited except where another cleanout of equal size is installed with the required access and clearance.

SECTION 709
FIXTURE UNITS

709.1 Values for fixtures. *Drainage fixture unit* values as given in Table 709.1 designate the relative load weight of different kinds of fixtures that shall be employed in estimating the total load carried by a soil or waste pipe, and shall be used in connection with Tables 710.1(1) and 710.1(2) of sizes for soil, waste and vent pipes for which the permissible load is given in terms of fixture units.

709.2 Fixtures not listed in Table 709.1. Fixtures not listed in Table 709.1 shall have a *drainage fixture unit* load based on the outlet size of the fixture in accordance with Table 709.2. The minimum trap size for unlisted fixtures shall be the size of the drainage outlet but not less than $1^1/_4$ inches (32 mm).

TABLE 709.2
DRAINAGE FIXTURE UNITS FOR FIXTURE DRAINS OR TRAPS

FIXTURE DRAIN OR TRAP SIZE (inches)	DRAINAGE FIXTURE UNIT VALUE
$1^1/_4$	1
$1^1/_2$	2
2	3
$2^1/_2$	4
3	5
4	6

For SI: 1 inch = 25.4 mm.

709.3 Conversion of gpm flow to dfu values. Where discharges to a waste receptor or to a drainage system are only known in gallons per minute (liters per second) values, the *drainage fixture unit* values for those flows shall be computed on the basis that 1 gpm (0.06 L/s) of flow is equivalent to two *drainage fixture units*.

709.4 Values for indirect waste receptor. The *drainage fixture unit* load of an indirect waste receptor receiving the discharge of indirectly connected fixtures shall be the sum of the *drainage fixture unit* values of the fixtures that discharge to the receptor, but not less than the *drainage fixture unit* value given for the indirect waste receptor in Table 709.1 or 709.2.

709.4.1 Clear-water waste receptors. Where waste receptors such as floor drains, floor sinks and hub drains receive only clear-water waste from display cases, refrigerated display cases, ice bins, coolers and freezers, such receptors shall have a *drainage fixture unit* value of one-half.

SECTION 710
DRAINAGE SYSTEM SIZING

710.1 Maximum fixture unit load. The maximum number of *drainage fixture units* connected to a given size of *building sewer*, *building drain* or horizontal *branch* of the *building drain* shall be determined using Table 710.1(1). The maximum number of drainage fixture units connected to a given size of horizontal *branch* or vertical soil or waste *stack* shall be determined using Table 710.1(2).

TABLE 710.1(1)
BUILDING DRAINS AND SEWERS

DIAMETER OF PIPE (inches)	MAXIMUM NUMBER OF DRAINAGE FIXTURE UNITS CONNECTED TO ANY PORTION OF THE BUILDING DRAIN OR THE BUILDING SEWER, INCLUDING BRANCHES OF THE BUILDING DRAIN[a]			
	Slope per foot			
	$^1/_{16}$ inch	$^1/_8$ inch	$^1/_4$ inch	$^1/_2$ inch
$1^1/_4$	—	—	1	1
$1^1/_2$	—	—	3	3
2	—	—	21	26
$2^1/_2$	—	—	24	31
3	—	36	42	50
4	—	180	216	250
5	—	390	480	575
6	—	700	840	1,000
8	1,400	1,600	1,920	2,300
10	2,500	2,900	3,500	4,200
12	3,900	4,600	5,600	6,700
15	7,000	8,300	10,000	12,000

For SI: 1 inch = 25.4 mm, 1 inch per foot = 83.3 mm/m.

a. The minimum size of any building drain serving a water closet shall be 3 inches.

INTERNATIONAL CODE COUNCIL®
Copyright © 2019 ICC & NYSDOS. ALL RIGHTS RESERVED. Accessed by Lauren Gualdino (lgualdino@briarcliffmanor.org), (-) Order Number #100880972 on May 08, 2020 07:05 AM (PDT) pursuant to License Agreement with ICC & NYSDOS. No further reproduction, no

100880972

TABLE 709.1
DRAINAGE FIXTURE UNITS FOR FIXTURES AND GROUPS

FIXTURE TYPE	DRAINAGE FIXTURE UNIT VALUE AS LOAD FACTORS	MINIMUM SIZE OF TRAP (inches)
Automatic clothes washers, commercial[a,g]	3	2
Automatic clothes washers, residential[g]	2	2
Bathroom group as defined in Section 202 (1.6 gpf water closet)[f]	5	—
Bathroom group as defined in Section 202 (water closet flushing greater than 1.6 gpf)[f]	6	—
Bathtub[b] (with or without overhead shower or whirlpool attachments)	2	1 1/2
Bidet	1	1 1/4
Combination sink and tray	2	1 1/2
Dental lavatory	1	1 1/4
Dental unit or cuspidor	1	1 1/4
Dishwashing machine[c], domestic	2	1 1/2
Drinking fountain	1/2	1 1/4
Emergency floor drain	0	2
Floor drains[h]	2[h]	2
Floor sinks	Note h	2
Kitchen sink, domestic	2	1 1/2
Kitchen sink, domestic with food waste disposer, dishwasher or both	2	1 1/2
Laundry tray (1 or 2 compartments)	2	1 1/2
Lavatory	1	1 1/4
Shower (based on the total flow rate through showerheads and body sprays)		
Flow rate:		
5.7 gpm or less	2	1 1/2
Greater than 5.7 gpm to 12.3 gpm	3	2
Greater than 12.3 gpm to 25.8 gpm	5	3
Greater than 25.8 gpm to 55.6 gpm	6	4
Service sink	2	1 1/2
Sink	2	1 1/2
Urinal	4	Note d
Urinal, 1 gallon per flush or less	2[e]	Note d
Urinal, nonwater supplied	1/2	Note d
Wash sink (circular or multiple) each set of faucets	2	1 1/2
Water closet, flushometer tank, public or private	4[e]	Note d
Water closet, private (1.6 gpf)	3[e]	Note d
Water closet, private (flushing greater than 1.6 gpf)	4[e]	Note d
Water closet, public (1.6 gpf)	4[e]	Note d
Water closet, public (flushing greater than 1.6 gpf)	6[e]	Note d

For SI: 1 inch = 25.4 mm, 1 gallon = 3.785 L, gpf = gallon per flushing cycle, gpm = gallon per minute.

a. For traps larger than 3 inches, use Table 709.2.

b. A showerhead over a bathtub or whirlpool bathtub attachment does not increase the drainage fixture unit value.

c. See Sections 709.2 through 709.4.1 for methods of computing unit value of fixtures not listed in this table or for rating of devices with intermittent flows.

d. Trap size shall be consistent with the fixture outlet size.

e. For the purpose of computing loads on building drains and sewers, water closets and urinals shall not be rated at a lower drainage fixture unit unless the lower values are confirmed by testing.

f. For fixtures added to a bathroom group, add the dfu value of those additional fixtures to the bathroom group fixture count.

g. See Section 406.2 for sizing requirements for fixture drain, branch drain and drainage stack for an automatic clothes washer standpipe.

h. See Sections 709.4 and 709.4.1.

INTERNATIONAL CODE COUNCIL®
Copyright © 2019 ICC & NYSDOS. ALL RIGHTS RESERVED. Accessed by Lauren Gualdino (lgualdino@briarcliffmanor.org), (-) Order Number #100880972 on May 08, 2020 07:05 AM (PDT) pursuant to License Agreement with ICC & NYSDOS. No further reproduction, no

100880972

TABLE 710.1(2)
HORIZONTAL FIXTURE BRANCHES AND STACKS[a]

DIAMETER OF PIPE (inches)	MAXIMUM NUMBER OF DRAINAGE FIXTURE UNITS (dfu)			
	Total for horizontal branch	Stacks[b]		
		Total discharge into one branch interval	Total for stack of three branch Intervals or less	Total for stack greater than three branch intervals
$1^1/_2$	3	2	4	8
2	6	6	10	24
$2^1/_2$	12	9	20	42
3	20	20	48	72
4	160	90	240	500
5	360	200	540	1,100
6	620	350	960	1,900
8	1,400	600	2,200	3,600
10	2,500	1,000	3,800	5,600
12	3,900	1,500	6,000	8,400
15	7,000	Note c	Note c	Note c

For SI: 1 inch = 25.4 mm.

a. Does not include branches of the building drain. Refer to Table 710.1(1).

b. Stacks shall be sized based on the total accumulated connected load at each story or branch interval. As the total accumulated connected load decreases, stacks are permitted to be reduced in size. Stack diameters shall not be reduced to less than one-half of the diameter of the largest stack size required.

c. Sizing load based on design criteria.

710.1.1 Horizontal stack offsets. Horizontal *stack* offsets shall be sized as required for building drains in accordance with Table 710.1(1), except as required by Section 711.3.

710.1.2 Vertical stack offsets. Vertical *stack* offsets shall be sized as required for straight *stacks* in accordance with Table 710.1(2), except where required to be sized as a *building drain* in accordance with Section 711.1.1.

710.2 Future fixtures. Where provision is made for the future installation of fixtures, those provided for shall be considered in determining the required sizes of drain pipes.

SECTION 711
OFFSETS IN DRAINAGE PIPING IN BUILDINGS OF FIVE STORIES OR MORE

711.1 Horizontal branch connections above or below vertical stack offsets. If a horizontal *branch* connects to the *stack* within 2 feet (610 mm) above or below a vertical *stack* offset, and the offset is located more than four *branch intervals* below the top of the *stack*, the offset shall be vented in accordance with Section 907.

711.1.1 Omission of vents for vertical stack offsets. Vents for vertical offsets required by Section 711.1 shall not be required where the *stack* and its offset are sized as a *building drain* [see Table 710.1(1)].

711.2 Horizontal stack offsets. A *stack* with a horizontal offset located more than four *branch intervals* below the top of the *stack* shall be vented in accordance with Section 907 and sized as follows:

1. The portion of the *stack* above the offset shall be sized as for a vertical *stack* based on the total number of *drainage fixture units* above the offset.
2. The offset shall be sized in accordance with Section 710.1.1.
3. The portion of the *stack* below the offset shall be sized as for the offset or based on the total number of *drainage fixture units* on the entire *stack*, whichever is larger [see Table 710.1(2), Column 5].

711.2.1 Omission of vents for horizontal stack offsets. Vents for horizontal *stack* offsets required by Section 711.2 shall not be required where the *stack* and its offset are one pipe size larger than required for a building drain [see Table 710.1(1)] and the entire *stack* and offset are not less in cross-sectional area than that required for a straight stack plus the area of an offset vent as provided for in Section 907.

711.3 Offsets below lowest branch. Where a vertical offset occurs in a soil or waste *stack* below the lowest horizontal *branch*, a change in diameter of the *stack* because of the offset shall not be required. If a horizontal offset occurs in a soil or waste *stack* below the lowest horizontal *branch*, the required diameter of the offset and the *stack* below it shall be determined as for a *building drain* in accordance with Table 710.1(1).

SECTION 712
SUMPS AND EJECTORS

712.1 Building subdrains. *Building subdrains* that cannot be discharged to the *sewer* by gravity flow shall be discharged into a tightly covered and vented sump from which the liquid shall be lifted and discharged into the building gravity drainage system by automatic pumping equipment or other *approved* method. In other than existing structures, the sump shall not receive drainage from any piping within the building capable of being discharged by gravity to the *building sewer*.

712.2 Valves required. A check valve and a full open valve located on the discharge side of the check valve shall be installed in the pump or ejector discharge piping between the pump or ejector and the gravity drainage system. *Access* shall be provided to such valves. Such valves shall be located above the sump cover required by Section 712.1 or, where the discharge pipe from the ejector is below grade, the valves shall be accessibly located outside the sump below grade in an access pit with a removable *access* cover.

712.3 Sump design. The sump pump, pit and discharge piping shall conform to the requirements of Sections 712.3.1 through 712.3.5.

712.3.1 Sump pump. The sump pump capacity and head shall be appropriate to anticipated use requirements.

712.3.2 Sump pit. The sump pit shall be not less than 18 inches (457 mm) in diameter and not less than 24 inches (610 mm) in depth, unless otherwise *approved*. The pit shall be provided with *access* and shall be located such that all drainage flows into the pit by gravity. The sump pit shall be constructed of tile, concrete, steel, plastic or other approved materials. The pit bottom shall be solid and provide permanent support for the pump. The sump pit shall be fitted with a gastight removable cover that is installed not more than 2 inches (51 mm) below grade or floor

INTERNATIONAL CODE COUNCIL®
Copyright © 2019 ICC & NYSDOS. ALL RIGHTS RESERVED. Accessed by Lauren Gualdino (lgualdino@briarcliffmanor.org), (-) Order Number #100880972 on May 08, 2020 07:05 AM (PDT) pursuant to License Agreement with ICC & NYSDOS. No further reproduction, no

100880972

level. The cover shall be adequate to support anticipated loads in the area of use. The sump pit shall be vented in accordance with Chapter 9.

712.3.3 Discharge pipe and fittings. Discharge pipe and fittings serving sump pumps and ejectors shall be constructed of materials in accordance with Sections 712.3.3.1 and 712.3.3.2.

712.3.3.1 Materials. Pipe and fitting materials shall be constructed of copper or copper-alloy, CPVC, ductile iron, PE, or PVC.

712.3.3.2 Ratings. Pipe and fittings shall be rated for the maximum system operating pressure and temperature. Pipe fitting materials shall be compatible with the pipe material. Where pipe and fittings are buried in the earth, they shall be suitable for burial.

712.3.4 Maximum effluent level. The effluent level control shall be adjusted and maintained to at all times prevent the effluent in the sump from rising to within 2 inches (51 mm) of the invert of the gravity drain inlet into the sump.

712.3.5 Pump connection to the drainage system. Pumps connected to the drainage system shall connect to a *building sewer*, *building drain*, soil *stack*, waste *stack* or *horizontal branch drain*. Where the discharge line connects into horizontal drainage piping, the connection shall be made through a wye fitting into the top of the drainage piping and such wye fitting shall be located not less than 10 pipe diameters from the base of any soil *stack*, waste *stack* or *fixture drain*.

712.4 Sewage pumps and sewage ejectors. A sewage pump or sewage ejector shall automatically discharge the contents of the sump to the building drainage system.

712.4.1 Macerating toilet systems. Macerating toilet systems shall comply with ASME A112.3.4/CSA B45.9 and shall be installed in accordance with the manufacturer's instructions.

712.4.2 Capacity. A sewage pump or sewage ejector shall have the capacity and head for the application requirements. Pumps or ejectors that receive the discharge of water closets shall be capable of handling spherical solids with a diameter of up to and including 2 inches (51 mm). Other pumps or ejectors shall be capable of handling spherical solids with a diameter of up to and including $^1/_2$ inch (13 mm). The capacity of a pump or ejector based on the diameter of the discharge pipe shall be not less than that indicated in Table 712.4.2.

Exceptions:

1. Grinder pumps or grinder ejectors that receive the discharge of water closets shall have a discharge opening of not less than $1^1/_4$ inches (32 mm).
2. Macerating toilet assemblies that serve single water closets shall have a discharge opening of not less than $^3/_4$ inch (19.1 mm).

TABLE 712.4.2
MINIMUM CAPACITY OF SEWAGE PUMP OR SEWAGE EJECTOR

DIAMETER OF THE DISCHARGE PIPE (inches)	CAPACITY OF PUMP OR EJECTOR (gpm)
2	21
$2^1/_2$	30
3	46

For SI: 1 inch = 25.4 mm, 1 gallon per minute = 3.785 L/m.

SECTION 713
COMPUTERIZED DRAINAGE DESIGN

713.1 Design of drainage system. The sizing, design and layout of the drainage system shall be permitted to be designed by *approved* computer design methods.

713.2 Load on drainage system. The load shall be computed from the simultaneous or sequential discharge conditions from fixtures, appurtenances and appliances or the peak usage design condition.

713.2.1 Fixture discharge profiles. The discharge profiles for flow rates versus time from fixtures and appliances shall be in accordance with the manufacturer's specifications.

713.3 Selections of drainage pipe sizes. Pipe shall be sized to prevent full-bore flow.

713.3.1 Selecting pipe wall roughness. Pipe size calculations shall be conducted with the pipe wall roughness factor (ks), in accordance with the manufacturer's specifications and as modified for aging roughness factors with deposits and corrosion.

713.3.2 Slope of horizontal drainage piping. Horizontal drainage piping shall be designed and installed at slopes in accordance with Table 704.1.

SECTION 714
BACKWATER VALVES

714.1 Sewage backflow. Where plumbing fixtures are installed on a floor with a finished floor elevation below the elevation of the manhole cover of the next upstream manhole in the public *sewer,* such fixtures shall be protected by a backwater valve installed in the *building drain*, or horizontal *branch* serving such fixtures. Plumbing fixtures installed on a floor with a finished floor elevation above the elevation of the manhole cover of the next upstream manhole in the public *sewer* shall not discharge through a backwater valve.

Exception: In existing buildings, fixtures above the elevation of the manhole cover of the next upstream manhole in the public *sewer* shall not be prohibited from discharging through a backwater valve.

714.2 Material. Backwater valves shall comply with ASME A112.14.1, CSA B181.1 or CSA B181.2.

714.3 Location. Backwater valves shall be installed so that *access* is provided to the working parts.

INTERNATIONAL CODE COUNCIL®
Copyright © 2019 ICC & NYSDOS. ALL RIGHTS RESERVED. Accessed by Lauren Gualdino (lgualdino@briarcliffmanor.org), (-) Order Number #100880972 on May 08, 2020 07:05 AM (PDT) pursuant to License Agreement with ICC & NYSDOS. No further reproduction, no

100880972

SECTION 715
VACUUM DRAINAGE SYSTEMS

715.1 Scope. Vacuum drainage systems shall be in accordance with Sections 715.2 through 715.4.

715.2 System design. Vacuum drainage systems shall be designed in accordance with the vacuum drainage system manufacturer's instructions. The system layout, including piping layout, tank assemblies, vacuum pump assembly and other components necessary for proper function of the system shall be in accordance with the manufacturer's instructions. Plans, specifications and other data for such systems shall be submitted to the *building official* for review and approval prior to installation.

715.2.1 Fixtures. Gravity-type fixtures installed in vacuum drainage systems shall comply with Chapter 4.

715.2.2 Drainage fixture units. *Drainage fixture units* for gravity drainage systems that discharge into, or receive discharge from, vacuum drainage systems shall be based on the values in this chapter.

715.2.3 Water supply fixture units. Water supply fixture units shall be based on the values in Chapter 6 of this code, except that the water supply fixture unit for a vacuum-type water closet shall be 1.

715.2.4 Traps and cleanouts. Gravity drainage fixtures shall be provided with traps and cleanouts in accordance with this chapter and Chapter 10.

715.2.5 Materials. Vacuum drainage pipe, fitting and valve materials shall be in accordance with the vacuum drainage system manufacturer's instructions and the requirements of this chapter.

715.3 Testing and demonstrations. After completion of the entire system installation, the system shall be subjected to a vacuum test of 19 inches (483 mm) of mercury and shall be operated to function as required by the *building official* and the manufacturer of the vacuum drainage system. Recorded proof of all tests shall be submitted to the *building official*.

715.4 Written instructions. Written instructions for the operation, maintenance, safety and emergency procedures shall be provided to the building owner. The *building official* shall verify that the building owner is in receipt of such instructions.

SECTION 716
REPLACEMENT OF UNDERGROUND BUILDING SEWERS AND BUILDING DRAINS BY PIPE-BURSTING METHODS

716.1 General. This section shall govern the replacement of existing *building sewer* and *building drain* piping by pipe-bursting methods.

716.2 Applicability. The replacement of *building sewer* and *building drain* piping by pipe-bursting methods shall be limited to gravity drainage piping of sizes 6 inches (152 mm) and smaller. The replacement piping shall be of the same nominal size as the existing piping.

716.3 Pre-installation inspection. The existing piping sections to be replaced shall be inspected internally by a recorded video camera survey. The survey shall include notations of the position of cleanouts and the depth of connections to the existing piping.

716.4 Pipe. The replacement pipe shall be made of high-density polyethylene (HDPE) and shall have a standard dimension ratio (SDR) of 17. The pipe shall be in compliance with ASTM F714.

716.5 Pipe fittings. Pipe fittings to be connected to the replacement pipe shall be made of high-density polyethylene (HDPE) and shall be in compliance with ASTM D2683.

716.6 Cleanouts. Where the existing *building sewer* or *building drain* did not have cleanouts meeting the requirements of this code, cleanout fittings shall be installed as required by this code.

716.7 Post-installation inspection. The completed replacement piping section shall be inspected internally by a recorded video camera survey. The video survey shall be reviewed and *approved* by the *building official* prior to pressure testing of the replacement piping system.

716.8 Pressure testing. The replacement piping system as well as the connections to the replacement piping shall be tested in accordance with Section 312.

INTERNATIONAL CODE COUNCIL®
Copyright © 2019 ICC & NYSDOS. ALL RIGHTS RESERVED. Accessed by Lauren Gualdino (lgualdino@briarcliffmanor.org), (-) Order Number #100880972 on May 08, 2020 07:05 AM (PDT) pursuant to License Agreement with ICC & NYSDOS. No further reproduction, no

100880972

CHAPTER 8

INDIRECT/SPECIAL WASTE

SECTION 801
GENERAL

801.1 Scope. This chapter shall govern matters concerning indirect waste piping and special wastes. This chapter shall further control matters concerning food-handling establishments, sterilizers, humidifiers, clear-water waste, swimming pools, methods of providing *air breaks* or *air gaps*, and neutralizing devices for corrosive wastes.

801.2 Protection. Devices, appurtenances, appliances and apparatus intended to serve some special function, such as sterilization, humidification, distillation, processing, cooling, or storage of ice or foods, and that discharge to the drainage system, shall be provided with protection against backflow, flooding, fouling, contamination and stoppage of the drain.

SECTION 802
INDIRECT WASTES

802.1 Where required. Food-handling equipment, in other than dwelling units, clear-water waste, humidifiers, dishwashing machines and utensils, pots, pans and dishwashing sinks shall discharge through an indirect waste pipe as specified in Sections 802.1.1 through 802.1.7. Fixtures not required to be indirectly connected by this section and the exception to Section 301.6 shall be directly connected to the plumbing system in accordance with Chapter 7.

802.1.1 Food handling. Equipment and fixtures utilized for the storage, preparation and handling of food shall discharge through an indirect waste pipe by means of an *air gap*. Each well of a multiple-compartment sink shall discharge independently to a waste receptor.

802.1.2 Floor drains in food storage areas. Floor drains located within walk-in refrigerators or freezers in food service and food establishments shall be indirectly connected to the sanitary drainage system by means of an *air gap*. Where a floor drain is located within an area subject to freezing, the waste line serving the floor drain shall not be trapped and shall indirectly discharge into a waste receptor located outside of the area subject to freezing.

Exception: Where protected against backflow by a backwater valve, such floor drains shall be indirectly connected to the sanitary drainage system by means of an *air break* or an *air gap*.

802.1.3 Potable clear-water waste. Where devices and equipment, such as sterilizers and relief valves, discharge potable water to the building drainage system, the discharge shall be through an indirect waste pipe by means of an *air gap*.

802.1.4 Swimming pools. Where wastewater from swimming pools, backwash from filters and water from pool deck drains discharge to the building drainage system, the discharge shall be through an indirect waste pipe by means of an *air gap*.

802.1.5 Nonpotable clear-water waste. Where devices and equipment such as process tanks, filters, drips and boilers discharge nonpotable water to the building drainage system, the discharge shall be through an indirect waste pipe by means of an *air break* or an *air gap*.

802.1.6 Commercial dishwashing machines. The discharge from a commercial dishwashing machine shall be through an *air gap* or *air break* into a waste receptor in accordance with Section 802.3.

802.1.7 Food utensils, dishes, pots and pans sinks. Sinks, in other than dwelling units, used for the washing, rinsing or sanitizing of utensils, dishes, pots, pans or service ware used in the preparation, serving or eating of food shall discharge indirectly through an *air gap* or an *air break* to the drainage system.

802.2 Material, joints and connections. The materials, joints, connections and methods utilized for the construction and installation of indirect waste piping systems shall comply with the applicable provisions of Chapter 7.

802.3 Installation. Indirect waste piping shall discharge through an *air gap* or *air break* into a waste receptor. Waste receptors shall be trapped and vented and shall connect to the building drainage system. Indirect waste piping that exceeds 30 inches (762 mm) in *developed length* measured horizontally, or 54 inches (1372 mm) in total *developed length*, shall be trapped.

Exception: Where a waste receptor receives only clear-water waste and does not directly connect to a sanitary drainage system, the receptor shall not require a trap.

802.3.1 Air gap. The *air gap* between the indirect waste pipe and the *flood level rim* of the waste receptor shall be not less than twice the effective opening of the indirect waste pipe.

802.3.2 Air break. An *air break* shall be provided between the indirect waste pipe and the trap seal of the waste receptor.

802.4 Waste receptors. For other than hub drains that receive only clear-water waste and standpipes, a removable strainer or basket shall cover the outlet of waste receptors. Waste receptors shall not be installed in concealed spaces. Waste receptors shall not be installed in plenums, crawl spaces, attics, interstitial spaces above ceilings and below floors. Ready *access* shall be provided to waste receptors.

802.4.1 Size of receptors. A waste receptor shall be sized for the maximum discharge of all indirect waste pipes served by the receptor. Receptors shall be installed to prevent splashing or flooding.

802.4.2 Hub drains. A hub drain shall be in the form of a hub or a pipe extending not less than 1 inch (25 mm) above a water-impervious floor.

INTERNATIONAL CODE COUNCIL®
Copyright © 2019 ICC & NYSDOS. ALL RIGHTS RESERVED. Accessed by Lauren Gualdino (lgualdino@briarcliffmanor.org), (-) Order Number #100880972 on May 08, 2020 07:05 AM (PDT) pursuant to License Agreement with ICC & NYSDOS. No further reproduction, no

100880972

802.4.3 Standpipes. Standpipes shall be individually trapped. Standpipes shall extend not less than 18 inches (457 mm) but not greater than 42 inches (1066 mm) above the trap weir. *Access* shall be provided to standpipes and drains for rodding.

802.4.3.1 Connection of laundry tray to standpipe. As an alternative for a laundry tray fixture connecting directly to a drainage system, a laundry tray waste line without a fixture trap shall connect to a standpipe for an automatic clothes washer drain. The standpipe shall extend not less than 30 inches (732 mm) above the weir of the standpipe trap and shall extend above the *flood level rim* of the laundry tray. The outlet of the laundry tray shall not be greater than 30 inches (762 mm) horizontal distance from the side of the standpipe.

SECTION 803
SPECIAL WASTES

803.1 Neutralizing device required for corrosive wastes. Corrosive liquids, spent acids or other harmful chemicals that destroy or injure a drain, *sewer*, soil or waste pipe, or create noxious or toxic fumes or interfere with sewage treatment processes shall not be discharged into the plumbing system without being thoroughly diluted, neutralized or treated by passing through an *approved* dilution or neutralizing device. Such devices shall be automatically provided with a sufficient supply of diluting water or neutralizing medium so as to make the contents noninjurious before discharge into the drainage system. The nature of the corrosive or harmful waste and the method of its treatment or dilution shall be *approved* prior to installation.

803.2 System design. A chemical drainage and vent system shall be designed and installed in accordance with this code. Chemical drainage and vent systems shall be completely separated from the sanitary systems. Chemical waste shall not discharge to a sanitary drainage system until such waste has been treated in accordance with Section 803.1.

*

INTERNATIONAL CODE COUNCIL®
Copyright © 2019 ICC & NYSDOS. ALL RIGHTS RESERVED. Accessed by Lauren Gualdino (lgualdino@briarcliffmanor.org), (-) Order Number #100880972 on May 08, 2020 07:05 AM (PDT) pursuant to License Agreement with ICC & NYSDOS. No further reproduction, no

100880972

CHAPTER 9

VENTS

SECTION 901
GENERAL

901.1 Scope. The provisions of this chapter shall govern the materials, design, construction and installation of vent systems.

901.2 Trap seal protection. The plumbing system shall be provided with a system of vent piping that will permit the admission or emission of air so that the seal of any fixture trap shall not be subjected to a pressure differential of more than 1 inch of water column (249 Pa).

901.2.1 Venting required. Traps and trapped fixtures shall be vented in accordance with one of the venting methods specified in this chapter.

901.3 Chemical waste vent systems. The vent system for a chemical waste system shall be independent of the sanitary vent system and shall terminate separately through the roof to the outdoors or to an air admittance valve that complies with ASSE 1049. Air admittance valves for chemical waste systems shall be constructed of materials *approved* in accordance with Section 702.6 and shall be tested for chemical resistance in accordance with ASTM F1412.

901.4 Use limitations. The plumbing vent system shall not be utilized for purposes other than the venting of the plumbing system.

901.5 Tests. The vent system shall be tested in accordance with Section 312.

901.6 Engineered systems. Engineered venting systems shall conform to the provisions of Section 919.

SECTION 902
MATERIALS

902.1 Vents. The materials and methods utilized for the construction and installation of venting systems shall comply with the applicable provisions of Section 702.

902.2 Sheet copper. Sheet copper for vent pipe flashings shall conform to ASTM B152 and shall weigh not less than 8 ounces per square foot (2.5 kg/m^2).

902.3 Sheet lead. Sheet lead for vent pipe flashings shall weigh not less than 3 pounds per square foot (15 kg/m^2) for field-constructed flashings and not less than $2^1/_2$ pounds per square foot (12 kg/m^2) for prefabricated flashings.

SECTION 903
VENT TERMINALS

[NY] 903.1 Roof extension. Open vent pipes that extend through a roof shall be terminated not less than 18 inches (458 mm) above the roof. Where a roof is to be used for assembly or as a promenade, observation deck, sunbathing deck or similar purposes, open vent pipes shall terminate not less than 7 feet (2134 mm) above the roof.

903.2 Frost closure. Where the 97.5-percent value for outdoor design temperature is 0°F (-18°C) or less, vent extensions through a roof or wall shall be not less than 3 inches (76 mm) in diameter. Any increase in the size of the vent shall be made not less than 1 foot (305 mm) inside the thermal envelope of the building.

903.3 Flashings. The juncture of each vent pipe with the roof line shall be made water tight by an *approved* flashing.

903.4 Prohibited use. A vent terminal shall not be used for any purpose other than a vent terminal.

903.5 Location of vent terminal. An open vent terminal from a drainage system shall not be located directly beneath any door, openable window, or other air intake opening of the building or of an adjacent building, and any such vent terminal shall not be within 10 feet (3048 mm) horizontally of such an opening unless it is 3 feet (914 mm) or more above the top of such opening.

903.6 Extension through the wall. Vent terminals extending through the wall shall terminate at a point not less than 10 feet (3048 mm) from a lot line and not less than 10 feet (3048 mm) above average ground level. Vent terminals shall not terminate under the overhang of a structure with soffit vents. Side wall vent terminals shall be protected to prevent birds or rodents from entering or blocking the vent opening.

903.7 Extension outside a structure. In climates where the 97.5-percent value for outside design temperature is less than 0°F (-18°C), vent pipes installed on the exterior of the structure shall be protected against freezing by insulation, heat or both.

SECTION 904
OUTDOOR VENT EXTENSIONS

904.1 Required vent extension. The vent system serving each *building drain* shall have not less than one vent pipe that extends to the outdoors.

904.1.1 Installation. The required vent shall be a dry vent that connects to the *building drain* or an extension of a drain that connects to the *building drain*. Such vent shall not be an island fixture vent as allowed by Section 916.

904.1.2 Size. The required vent shall be sized in accordance with Section 906.2 based on the required size of the *building drain*.

904.2 Vent stack required. A vent *stack* shall be required for every drainage *stack* that has five *branch intervals* or more.

Exception: Drainage stacks installed in accordance with Section 913.

INTERNATIONAL CODE COUNCIL®
Copyright © 2019 ICC & NYSDOS. ALL RIGHTS RESERVED. Accessed by Lauren Gualdino (lgualdino@briarcliffmanor.org), (-) Order Number #100880972 on May 08, 2020 07:05 AM (PDT) pursuant to License Agreement with ICC & NYSDOS. No further reproduction, no

100880972

904.3 Vent termination. Vent *stacks* or *stack vents* shall terminate outdoors to the open air or to a stack-type air admittance valve in accordance with Section 918.

904.4 Vent connection at base. Vent *stacks* shall connect to the base of the drainage *stack*. The vent *stack* shall connect at or below the lowest horizontal *branch*. Where the vent *stack* connects to the *building drain*, the connection shall be located downstream of the drainage *stack* and within a distance of 10 times the diameter of the drainage *stack*.

904.5 Vent headers. *Stack vents* and vent stacks connected into a common vent header at the top of the *stacks* and extending to the open air at one point shall be sized in accordance with the requirements of Section 906.1. The number of fixture units shall be the sum of all fixture units on all *stacks* connected thereto, and the *developed length* shall be the longest vent length from the intersection at the base of the most distant *stack* to the vent terminal in the open air, as a direct extension of one *stack*.

SECTION 905
VENT CONNECTIONS AND GRADES

905.1 Connection. Individual, *branch* and circuit vents shall connect to a vent *stack*, *stack vent*, air admittance valve or extend to the open air.

905.2 Grade. Vent and *branch* vent pipes shall be so graded and connected as to drain back to the drainage pipe by gravity.

905.3 Vent connection to drainage system. Every dry vent connecting to a horizontal drain shall connect above the centerline of the horizontal drain pipe.

905.4 Vertical rise of vent. Every dry vent shall rise vertically to a point not less than 6 inches (152 mm) above the *flood level rim* of the highest trap or trapped fixture being vented.

Exception: Vents for interceptors located outdoors.

905.5 Height above fixtures. A connection between a vent pipe and a vent *stack* or *stack vent* shall be made at not less than 6 inches (152 mm) above the *flood level rim* of the highest fixture served by the vent. Horizontal vent pipes forming *branch* vents, relief vents or loop vents shall be located not less than 6 inches (152 mm) above the *flood level rim* of the highest fixture served.

905.6 Vent for future fixtures. Where the drainage piping has been roughed-in for future fixtures, a rough-in connection for a vent shall be installed. The vent size shall be not less than one-half the diameter of the rough-in drain to be served. The vent rough-in shall connect to the vent system or shall be vented by other means as provided for in this chapter. The connection shall be identified to indicate that it is a vent.

SECTION 906
VENT PIPE SIZING

906.1 Size of stack vents and vent stacks. The minimum required diameter of *stack vents* and vent *stacks* shall be determined from the *developed length* and the total of *drainage fixture units* connected thereto in accordance with Table 906.1, but in no case shall the diameter be less than one-half the diameter of the drain served or less than $1^1/_4$ inches (32 mm).

906.2 Vents other than stack vents or vent stacks. The diameter of individual vents, *branch* vents, circuit vents and relief vents shall be not less than one-half the required diameter of the drain served. The required size of the drain shall be determined in accordance with Table 710.1(2). Vent pipes shall be not less than $1^1/_4$ inches (32 mm) in diameter. Vents exceeding 40 feet (12 192 mm) in *developed length* shall be increased by one nominal pipe size for the entire *developed length* of the vent pipe. Relief vents for soil and waste *stacks* in buildings having more than 10 *branch intervals* shall be sized in accordance with Section 908.2.

906.3 Developed length. The *developed length* of individual, *branch*, circuit and relief vents shall be measured from the farthest point of vent connection to the drainage system to the point of connection to the vent *stack, stack vent* or termination outside of the building.

906.4 Multiple branch vents. Where multiple *branch* vents are connected to a common *branch* vent, the common *branch* vent shall be sized in accordance with this section based on the size of the common horizontal drainage *branch* that is or would be required to serve the total *drainage fixture unit* load being vented.

906.5 Sump vents. Sump vent sizes shall be determined in accordance with Sections 906.5.1 and 906.5.2.

906.5.1 Sewage pumps and sewage ejectors other than pneumatic. Drainage piping below *sewer* level shall be vented in the same manner as that of a gravity system. Building sump vent sizes for sumps with sewage pumps or sewage ejectors, other than pneumatic, shall be determined in accordance with Table 906.5.1.

906.5.2 Pneumatic sewage ejectors. The air pressure relief pipe from a pneumatic sewage ejector shall be connected to an independent vent *stack* terminating as required for vent extensions through the roof. The relief pipe shall be sized to relieve air pressure inside the ejector to atmospheric pressure but shall be not less than $1^1/_4$ inches (32 mm) in size.

SECTION 907
VENTS FOR STACK OFFSETS

907.1 Vent for horizontal offset of drainage stack. Horizontal offsets of drainage *stacks* shall be vented where five or more *branch intervals* are located above the offset. The offset shall be vented by venting the upper section of the drainage *stack* and the lower section of the drainage *stack*.

907.2 Upper section. The upper section of the drainage *stack* shall be vented as a separate *stack* with a vent *stack* connection installed in accordance with Section 904.4. The offset shall be considered to be the base of the *stack*.

INTERNATIONAL CODE COUNCIL®
Copyright © 2019 ICC & NYSDOS. ALL RIGHTS RESERVED. Accessed by Lauren Gualdino (lgualdino@briarcliffmanor.org), (-) Order Number #100880972 on May 08, 2020 07:05 AM (PDT) pursuant to License Agreement with ICC & NYSDOS. No further reproduction, no

100880972

TABLE 906.1
SIZE AND DEVELOPED LENGTH OF STACK VENTS AND VENT STACKS

DIAMETER OF SOIL OR WASTE STACK (inches)	TOTAL FIXTURE UNITS BEING VENTED (dfu)	MAXIMUM DEVELOPED LENGTH OF VENT (feet)[a] DIAMETER OF VENT (inches)										
		1 1/4	1 1/2	2	2 1/2	3	4	5	6	8	10	12
1 1/4	2	30	—									
1 1/2	8	50	150	—	—	—	—	—	—	—	—	—
1 1/2	10	30	100									
2	12	—	75	200	—							
2	20	30	50	150	—	—	—	—	—	—	—	—
2 1/2	42	26	30	100	300							
3	10		42	150	360	1,040						
3	21	—	32	110	270	810	—	—	—	—	—	—
3	53		27	94	230	680						
3	102		25	86	210	620	—					
4	43	—	—	35	85	250	980	—	—	—	—	—
4	140		—	27	65	200	750					
4	320			23	55	170	640	—				
4	540	—	—	21	50	150	580	—	—	—	—	—
5	190			—	28	82	320	990				
5	490				21	63	250	760				
5	940	—	—	—	18	53	210	670	—	—	—	—
5	1,400				16	49	190	590				
6	500					33	130	400	1,000			
6	1,100	—	—	—	—	26	100	310	780	—	—	—
6	2,000					22	84	260	660			
6	2,900					20	77	240	600	—		
8	1,800	—	—	—	—	—	31	95	240	940	—	—
8	3,400					—	24	73	190	729		
8	5,600						20	62	160	610	—	
8	7,600	—	—	—	—	—	18	56	140	560	—	—
10	4,000						—	31	78	310	960	
10	7,200							24	60	240	740	
10	11,000	—	—	—	—	—	—	20	51	200	630	—
10	15,000							18	46	180	571	
12	7,300								31	120	380	940
12	13,000	—	—	—	—	—	—	—	24	94	300	720
12	20,000								20	79	250	610
12	26,000								18	72	230	500
15	15,000	—	—	—	—	—	—	—	—	40	130	310
15	25,000								—	31	96	240
15	38,000									26	81	200
15	50,000	—	—	—	—	—	—	—	—	24	74	180

For SI: 1 inch = 25.4 mm, 1 foot = 304.8 mm.

a. The developed length shall be measured from the vent connection to the open air.

INTERNATIONAL CODE COUNCIL®
Copyright © 2019 ICC & NYSDOS. ALL RIGHTS RESERVED. Accessed by Lauren Gualdino (lgualdino@briarcliffmanor.org), (-) Order Number #100880972 on May 08, 2020 07:05 AM (PDT) pursuant to License Agreement with ICC & NYSDOS. No further reproduction, no

100880972

TABLE 906.5.1
SIZE AND LENGTH OF SUMP VENTS

DISCHARGE CAPACITY OF PUMP (gpm)	MAXIMUM DEVELOPED LENGTH OF VENT (feet)[a]					
	Diameter of vent (inches)					
	1 1/4	1 1/2	2	2 1/2	3	4
10	No limit[b]	No limit	No limit	No limit	No limit	No limit
20	270	No limit	No limit	No limit	No limit	No limit
40	72	160	No limit	No limit	No limit	No limit
60	31	75	270	No limit	No limit	No limit
80	16	41	150	380	No limit	No limit
100	10[c]	25	97	250	No limit	No limit
150	Not permitted	10[c]	44	110	370	No limit
200	Not permitted	Not permitted	20	60	210	No limit
250	Not permitted	Not permitted	10	36	132	No limit
300	Not permitted	Not permitted	10[c]	22	88	380
400	Not permitted	Not permitted	Not permitted	10[c]	44	210
500	Not permitted	Not permitted	Not permitted	Not permitted	24	130

For SI: 1 inch = 25.4 mm, 1 foot = 304.8 mm, 1 gallon per minute = 3.785 L/m.

a. Developed length plus an appropriate allowance for entrance losses and friction due to fittings, changes in direction and diameter. Suggested allowances shall be obtained from NBS Monograph 31 or other approved sources. An allowance of 50 percent of the developed length shall be assumed if a more precise value is not available.

b. Actual values greater than 500 feet.

c. Less than 10 feet.

907.3 Lower section. The lower section of the drainage *stack* shall be vented by a yoke vent connecting between the offset and the next lower horizontal *branch*. The yoke vent connection shall be permitted to be a vertical extension of the drainage *stack*. The size of the yoke vent and connection shall be not less than the size required for the vent *stack* of the drainage *stack*.

SECTION 908
RELIEF VENTS—STACKS OF MORE THAN 10 BRANCH INTERVALS

908.1 Where required. Soil and waste *stacks* in buildings having more than 10 *branch intervals* shall be provided with a relief vent at each tenth interval installed, beginning with the top floor.

908.2 Size and connection. The size of the relief vent shall be equal to the size of the vent *stack* to which it connects. The lower end of each relief vent shall connect to the soil or waste *stack* through a wye below the horizontal *branch* serving the floor, and the upper end shall connect to the vent *stack* through a wye not less than 3 feet (914 mm) above the floor.

SECTION 909
FIXTURE VENTS

909.1 Distance of trap from vent. Each fixture trap shall have a protecting vent located so that the slope and the *developed length* in the *fixture drain* from the trap weir to the vent fitting are within the requirements set forth in Table 909.1.

Exception: The *developed length* of the *fixture drain* from the trap weir to the vent fitting for self-siphoning fixtures, such as water closets, shall not be limited.

TABLE 909.1
MAXIMUM DISTANCE OF FIXTURE TRAP FROM VENT

SIZE OF TRAP (inches)	SLOPE (inch per foot)	DISTANCE FROM TRAP (feet)
1 1/4	1/4	5
1 1/2	1/4	6
2	1/4	8
3	1/8	12
4	1/8	16

For SI: 1 inch = 25.4 mm, 1 foot = 304.8 mm, 1 inch per foot = 83.3 mm/m.

909.2 Venting of fixture drains. The total fall in a *fixture drain* due to pipe slope shall not exceed the diameter of the *fixture drain*, nor shall the vent connection to a *fixture drain*, except for water closets, be below the weir of the trap.

909.3 Crown vent. A vent shall not be installed within two pipe diameters of the trap weir.

SECTION 910
INDIVIDUAL VENT

910.1 Individual vent permitted. Each trap and trapped fixture is permitted to be provided with an individual vent. The individual vent shall connect to the *fixture drain* of the trap or trapped fixture being vented.

SECTION 911
COMMON VENT

911.1 Individual vent as common vent. An individual vent is permitted to vent two traps or trapped fixtures as a common vent. The traps or trapped fixtures being common vented shall be located on the same floor level.

INTERNATIONAL CODE COUNCIL®
Copyright © 2019 ICC & NYSDOS. ALL RIGHTS RESERVED. Accessed by Lauren Gualdino (lgualdino@briarcliffmanor.org), (-) Order Number #100880972 on May 08, 2020 07:05 AM (PDT) pursuant to License Agreement with ICC & NYSDOS. No further reproduction, no

100880972

911.2 Connection at the same level. Where the *fixture drains* being common vented connect at the same level, the vent connection shall be at the interconnection of the *fixture drains* or downstream of the interconnection.

911.3 Connection at different levels. Where the *fixture drains* connect at different levels, the vent shall connect as a vertical extension of the vertical drain. The vertical drain pipe connecting the two *fixture drains* shall be considered to be the vent for the lower *fixture drain* and shall be sized in accordance with Table 911.3. The upper fixture shall not be a water closet.

TABLE 911.3
COMMON VENT SIZES

PIPE SIZE (inches)	MAXIMUM DISCHARGE FROM UPPER FIXTURE DRAIN (dfu)
$1^1/_2$	1
2	4
$2^1/_2$ to 3	6

For SI: 1 inch = 25.4 mm.

SECTION 912
WET VENTING

912.1 Horizontal wet vent permitted. Any combination of fixtures within two *bathroom groups* located on the same floor level is permitted to be vented by a horizontal wet vent. The wet vent shall be considered to be the vent for the fixtures and shall extend from the connection of the dry vent along the direction of the flow in the drain pipe to the most downstream *fixture drain* connection to the *horizontal branch drain*. Each wet-vented *fixture drain* shall connect independently to the horizontal wet vent. Only the fixtures within the *bathroom groups* shall connect to the wet-vented *horizontal branch drain*. Any additional fixtures shall discharge downstream of the horizontal wet vent.

912.1.1 Vertical wet vent permitted. Any combination of fixtures within two *bathroom groups* located on the same floor level is permitted to be vented by a vertical wet vent. The vertical wet vent shall be considered to be the vent for the fixtures and shall extend from the connection of the dry vent down to the lowest *fixture drain* connection. Each wet-vented fixture shall connect independently to the vertical wet vent. Water closet drains shall connect at the same elevation. Other *fixture drains* shall connect above or at the same elevation as the water closet *fixture drains*. The dry-vent connection to the vertical wet vent shall be an individual or common vent serving one or two fixtures.

912.2 Dry vent connection. The required dry-vent connection for wet-vented systems shall comply with Sections 912.2.1 and 912.2.2.

912.2.1 Horizontal wet vent. The dry-vent connection for a horizontal wet-vent system shall be an individual vent or a common vent for any *bathroom group* fixture, except an *emergency floor drain*. Where the dry-vent connects to a water closet *fixture drain*, the drain shall connect horizontally to the horizontal wet-vent system. Not more than one wet-vented *fixture drain* shall discharge upstream of the dry-vented *fixture drain* connection.

912.2.2 Vertical wet vent. The dry-vent connection for a vertical wet-vent system shall be an individual vent or common vent for the most upstream *fixture drain.*

912.3 Size. The dry vent serving the wet vent shall be sized based on the largest required diameter of pipe within the wet-vent system served by the dry vent. The wet vent shall be of a size not less than that specified in Table 912.3, based on the fixture unit discharge to the wet vent.

TABLE 912.3
WET VENT SIZE

WET VENT PIPE SIZE (inches)	DRAINAGE FIXTURE UNIT LOAD (dfu)
$1^1/_2$	1
2	4
$2^1/_2$	6
3	12

For SI: 1 inch = 25.4 mm.

SECTION 913
WASTE STACK VENT

913.1 Waste stack vent permitted. A waste *stack* shall be considered to be a vent for all of the fixtures discharging to the *stack* where installed in accordance with the requirements of this section.

913.2 Stack installation. The waste *stack* shall be vertical, and both horizontal and vertical offsets shall be prohibited between the lowest *fixture drain* connection and the highest *fixture drain* connection. *Fixture drains* shall connect separately to the waste *stack*. The *stack* shall not receive the discharge of water closets or urinals.

913.3 Stack vent. A *stack vent* shall be provided for the waste *stack*. The size of the *stack vent* shall be not less than the size of the waste *stack*. Offsets shall be permitted in the *stack vent*, shall be located not less than 6 inches (152 mm) above the flood level of the highest fixture and shall be in accordance with Section 905.2. The *stack vent* shall be permitted to connect with other *stack vents* and vent *stacks* in accordance with Section 904.5.

913.4 Waste stack size. The waste *stack* shall be sized based on the total discharge to the *stack* and the discharge within a *branch* interval in accordance with Table 913.4. The waste *stack* shall be the same size throughout its length.

TABLE 913.4
WASTE STACK VENT SIZE

STACK SIZE (inches)	MAXIMUM NUMBER OF DRAINAGE FIXTURE UNITS (dfu)	
	Total discharge into one branch interval	Total discharge for stack
$1^1/_2$	1	2
2	2	4
$2^1/_2$	No limit	8
3	No limit	24
4	No limit	50
5	No limit	75
6	No limit	100

For SI: 1 inch = 25.4 mm.

INTERNATIONAL CODE COUNCIL®
Copyright © 2019 ICC & NYSDOS. ALL RIGHTS RESERVED. Accessed by Lauren Gualdino (lgualdino@briarcliffmanor.org), (-) Order Number #100880972 on May 08, 2020 07:05 AM (PDT) pursuant to License Agreement with ICC & NYSDOS. No further reproduction, no

100880972

SECTION 914
CIRCUIT VENTING

914.1 Circuit vent permitted. Not more than eight fixtures connected to a horizontal *branch* drain shall be permitted to be circuit vented. Each *fixture drain* shall connect horizontally to the horizontal *branch* being circuit vented. The *horizontal branch drain* shall be classified as a vent from the most downstream *fixture drain* connection to the most upstream *fixture drain* connection to the horizontal *branch*.

914.1.1 Multiple circuit-vented branches. Circuit-vented horizontal *branch* drains are permitted to be connected together. Each group of not more than eight fixtures shall be considered to be a separate circuit vent and shall conform to the requirements of this section.

914.2 Vent connection. The circuit vent connection shall be located between the two most upstream *fixture drains*. The vent shall connect to the horizontal *branch* and shall be installed in accordance with Section 905. The circuit vent pipe shall not receive the discharge of any soil or waste.

914.3 Slope and size of horizontal branch. The slope of the vent section of the *horizontal branch drain* shall be not greater than one unit vertical in 12 units horizontal (8.3-percent slope). The entire length of the vent section of the *horizontal branch drain* shall be sized for the total drainage discharge to the *branch*.

914.3.1 Size of multiple circuit vent. Each separate circuit-vented horizontal *branch* that is interconnected shall be sized independently in accordance with Section 914.3. The downstream circuit-vented horizontal *branch* shall be sized for the total discharge into the *branch*, including the upstream *branches* and the fixtures within the *branch*.

914.4 Relief vent. A relief vent shall be provided for circuit-vented horizontal *branches* receiving the discharge of four or more water closets and connecting to a drainage *stack* that receives the discharge of soil or waste from upper horizontal *branches*.

914.4.1 Connection and installation. The relief vent shall connect to the horizontal *branch* drain between the *stack* and the most downstream *fixture drain* of the circuit vent. The relief vent shall be installed in accordance with Section 905.

914.4.2 Fixture drain or branch. The relief vent is permitted to be a *fixture drain* or fixture *branch* for fixtures located within the same *branch interval* as the circuit-vented horizontal *branch*. The maximum discharge to a relief vent shall be four fixture units.

914.5 Additional fixtures. Fixtures, other than the circuit-vented fixtures, are permitted to discharge to the *horizontal branch drain*. Such fixtures shall be located on the same floor as the circuit-vented fixtures and shall be either individually or common vented.

SECTION 915
COMBINATION WASTE AND VENT SYSTEM

915.1 Type of fixtures. A *combination waste and vent system* shall not serve fixtures other than floor drains, sinks, lavatories and drinking fountains. *Combination waste and vent systems* shall not receive the discharge from a food waste disposer or clinical sink.

915.2 Installation. The only vertical pipe of a *combination waste and vent system* shall be the connection between the *fixture drain* and the horizontal combination waste and vent pipe. The vertical distance shall not exceed 8 feet (2438 mm).

915.2.1 Slope. The slope of a horizontal combination waste and vent pipe shall not exceed one-half unit vertical in 12 units horizontal (4-percent slope) and shall be not less than that indicated in Table 704.1.

915.2.2 Size and length. The size of a combination waste and vent pipe shall be not less than that indicated in Table 915.2.2. The horizontal length of a *combination waste and vent system* shall be unlimited.

TABLE 915.2.2
SIZE OF COMBINATION WASTE AND VENT PIPE

DIAMETER PIPE (inches)	MAXIMUM NUMBER OF DRAINAGE FIXTURE UNITS (dfu)	
	Connecting to a horizontal branch or stack	Connecting to a building drain or building subdrain
2	3	4
$2^1/_2$	6	26
3	12	31
4	20	50
5	160	250
6	360	575

For SI: 1 inch = 25.4 mm.

915.2.3 Connection. The *combination waste and vent system* shall be provided with a dry vent connected at any point within the system or the system shall connect to a horizontal drain that serves vented fixtures located on the same floor. *Combination waste and vent systems* connecting to *building drains* receiving only the discharge from one or more *stacks* shall be provided with a dry vent. The vent connection to the combination waste and vent pipe shall extend vertically to a point not less than 6 inches (152 mm) above the *flood level rim* of the highest fixture being vented before offsetting horizontally.

915.2.4 Vent size. The vent shall be sized for the total *drainage fixture unit* load in accordance with Section 906.2.

915.2.5 Fixture branch or drain. The *fixture branch* or *fixture drain* shall connect to the combination waste and vent within a distance specified in Table 909.1. The combination waste and vent pipe shall be considered to be the vent for the fixture.

SECTION 916
ISLAND FIXTURE VENTING

916.1 Limitation. Island fixture venting shall not be permitted for fixtures other than sinks and lavatories. Residential kitchen sinks with a dishwasher waste connection, a food waste disposer, or both, in combination with the kitchen sink waste, shall be permitted to be vented in accordance with this section.

INTERNATIONAL CODE COUNCIL®
Copyright © 2019 ICC & NYSDOS. ALL RIGHTS RESERVED. Accessed by Lauren Gualdino (lgualdino@briarcliffmanor.org), (-) Order Number #100880972 on May 08, 2020 07:05 AM (PDT) pursuant to License Agreement with ICC & NYSDOS. No further reproduction, no

100880972

916.2 Vent connection. The island fixture vent shall connect to the *fixture drain* as required for an individual or common vent. The vent shall rise vertically to above the drainage outlet of the fixture being vented before offsetting horizontally or vertically downward. The vent or *branch vent* for multiple island fixture vents shall extend to a point not less than 6 inches (152 mm) above the highest island fixture being vented before connecting to the outside vent terminal.

916.3 Vent installation below the fixture flood level rim. The vent located below the *flood level rim* of the fixture being vented shall be installed as required for drainage piping in accordance with Chapter 7, except for sizing. The vent shall be sized in accordance with Section 906.2. The lowest point of the island fixture vent shall connect full size to the drainage system. The connection shall be to a vertical drain pipe or to the top half of a horizontal drain pipe. Cleanouts shall be provided in the island fixture vent to permit rodding of all vent piping located below the *flood level rim* of the fixtures. Rodding in both directions shall be permitted through a cleanout.

SECTION 917
SINGLE-STACK VENT SYSTEM

917.1 Single-stack vent system permitted. A drainage *stack* shall serve as a single-stack vent system where sized and installed in accordance with Sections 917.2 through 917.9. The drainage *stack* and *branch* piping shall be the vents for the drainage system. The drainage *stack* shall have a *stack vent*.

917.2 Stack size. Drainage *stacks* shall be sized in accordance with Table 917.2. *Stacks* shall be uniformly sized based on the total connected *drainage fixture unit* load. The *stack vent* shall be the same size as the drainage *stack*. A 3-inch (76 mm) *stack* shall serve not more than two water closets.

TABLE 917.2
SINGLE STACK SIZE

STACK SIZE (inches)	MAXIMUM CONNECTED DRAINAGE FIXTURE UNITS		
	Stacks less than 75 feet in height	Stacks 75 feet to less than 160 feet in height	Stacks 160 feet and greater in height
3	24	NP	NP
4	225	24	NP
5	480	225	24
6	1,015	480	225
8	2,320	1,015	480
10	4,500	2,320	1,015
12	8,100	4,500	2,320
15	13,600	8,100	4,500

For SI: 1 inch = 25.4 mm, 1 foot = 304.8 mm.

917.3 Branch size. Horizontal *branches* connecting to a single-stack vent system shall be sized in accordance with Table 710.1(2). Not more than one water closet shall discharge into a 3-inch (76 mm) horizontal *branch* at a point within a developed length of 18 inches (457 mm) measured horizontally from the *stack*.

Where a water closet is within 18 inches (457 mm) measured horizontally from the *stack* and not more than one fixture with a drain size of not more than $1^1/_2$ inches (38 mm) connects to a 3-inch (76 mm) horizontal *branch*, the *branch* drain connection to the *stack* shall be made with a sanitary tee.

917.4 Length of horizontal branches. The length of horizontal *branches* shall conform to the requirements of Sections 917.4.1 through 917.4.3.

917.4.1 Water closet connection. Water closet connections shall be not greater than 4 feet (1219 mm) in *developed length* measured horizontally from the *stack*.

Exception: Where the connection is made with a sanitary tee, the maximum *developed length* shall be 8 feet (2438 mm).

917.4.2 Fixture connections. Fixtures other than water closets shall be located not greater than 12 feet (3657 mm) in developed length, measured horizontally from the *stack*.

917.4.3 Vertical piping in branch. The length of vertical piping in a *fixture drain* connecting to a horizontal *branch* shall not be considered in computing the fixture's distance in *developed length* measured horizontally from the *stack*.

917.5 Minimum vertical piping size from fixture. The vertical portion of piping in a *fixture drain* to a horizontal *branch* shall be 2 inches (51 mm). The minimum size of the vertical portion of piping for a water-supplied urinal or standpipe shall be 3 inches (76 mm). The maximum vertical drop shall be 4 feet (1219 mm). *Fixture drains* that are not increased in size or have a vertical drop in excess of 4 feet (1219 mm), shall be individually vented.

917.6 Additional venting required. Additional venting shall be provided where more than one water closet discharges to a horizontal *branch* and where the distance from a fixture trap to the stack exceeds the limits in Section 917.4. Where additional venting is required, the fixture(s) shall be vented by individual vents, common vents, wet vents, circuit vents, or a combination waste and vent pipe. The dry vent extensions for the additional venting shall connect to a *branch vent*, vent *stack*, *stack vent*, air admittance valve, or shall terminate outdoors.

917.7 Stack offsets. Where *fixture drains* are not connected below a horizontal offset in a *stack*, a horizontal offset shall not be required to be vented. Where horizontal *branches* or *fixture drains* are connected below a horizontal offset in a *stack*, the offset shall be vented in accordance with Section 907. Fixture connections shall not be made to a *stack* within 2 feet (610 mm) above or below a horizontal offset.

917.8 Prohibited lower connections. *Stacks* greater than 2 *branch intervals* in height shall not receive the discharge of horizontal *branches* on the lower two floors. There shall not be connections to the *stack* between the lower two floors and a distance of not less than 10 pipe diameters downstream from the base of the single stack vented system.

917.9 Sizing building drains and sewers. The *building drain* and *building sewer* receiving the discharge of a single stack vent system shall be sized in accordance with Table 710.1(1).

INTERNATIONAL CODE COUNCIL®
Copyright © 2019 ICC & NYSDOS. ALL RIGHTS RESERVED. Accessed by Lauren Gualdino (lgualdino@briarcliffmanor.org), (-) Order Number #100880972 on May 08, 2020 07:05 AM (PDT) pursuant to License Agreement with ICC & NYSDOS. No further reproduction, no

100880972

SECTION 918
AIR ADMITTANCE VALVES

918.1 General. Vent systems utilizing air admittance valves shall comply with this section. Stack-type air admittance valves shall conform to ASSE 1050. Individual and branch-type air admittance valves shall conform to ASSE 1051.

918.2 Installation. The valves shall be installed in accordance with the requirements of this section and the manufacturer's instructions. Air admittance valves shall be installed after the DWV testing required by Section 312.2 or 312.3 has been performed.

918.3 Where permitted. Individual, *branch* and circuit vents shall be permitted to terminate with a connection to an individual or branch-type air admittance valve in accordance with Section 918.3.1. *Stack vents* and vent *stacks* shall be permitted to terminate to stack-type air admittance valves in accordance with Section 918.3.2.

918.3.1 Horizontal branches. Individual and branch-type air admittance valves shall vent only fixtures that are on the same floor level and connect to a *horizontal branch drain*. Where the horizontal *branch* is located more than four *branch intervals* from the top of the stack, the horizontal *branch* shall be provided with a relief vent that shall connect to a vent stack or stack vent or extend outdoors to the open air. The relief vent shall connect to the *horizontal branch drain* between the stack and the most downstream *fixture drain* connected to the *horizontal branch drain*. The relief vent shall be sized in accordance with Section 906.2 and installed in accordance with Section 905. The relief vent shall be permitted to serve as the vent for other fixtures.

918.3.2 Stack. Stack-type air admittance valves shall be prohibited from serving as the vent terminal for vent *stacks* or *stack vents* that serve drainage *stacks* having more than six *branch intervals*.

918.4 Location. Individual and branch-type air admittance valves shall be located not less than 4 inches (102 mm) above the *horizontal branch drain* or *fixture drain* being vented. Stack-type air admittance valves shall be located not less than 6 inches (152 mm) above the *flood level rim* of the highest fixture being vented. The air admittance valve shall be located within the maximum *developed length* permitted for the vent. The air admittance valve shall be installed not less than 6 inches (152 mm) above insulation materials.

918.5 Access and ventilation. *Access* shall be provided to all air admittance valves. Such valves shall be installed in a location that allows air to enter the valve.

918.6 Size. The air admittance valve shall be rated in accordance with the standard for the size of the vent to which the valve is connected.

918.7 Vent required. Within each plumbing system, not less than one *stack vent* or vent *stack* shall extend outdoors to the open air.

918.8 Prohibited installations. Air admittance valves shall not be installed in nonneutralized special waste systems as described in Chapter 8 except where such valves are in compliance with ASSE 1049, are constructed of materials *approved* in accordance with Section 702.5 and are tested for chemical resistance in accordance with ASTM F1412. Air admittance valves shall not be located in spaces utilized as supply or return air plenums. Air admittance valves shall not be used to vent sumps or tanks except where the vent system for the sump or tank has been designed by an engineer. Air admittance valves shall not be installed on outdoor vent terminals for the sole purpose of reducing clearances to gravity air intakes or mechanical air intakes.

SECTION 919
ENGINEERED VENT SYSTEMS

919.1 General. Engineered vent systems shall comply with this section and the design, submittal, approval, inspection and testing requirements of Section 316.

919.2 Individual branch fixture and individual fixture header vents. The maximum *developed length* of individual fixture vents to vent branches and vent headers shall be determined in accordance with Table 919.2 for the minimum pipe diameters at the indicated vent airflow rates.

The individual vent airflow rate shall be determined in accordance with the following:

$$Q_{h,b} = N_{n,b}\, Q_v \qquad \textbf{(Equation 9-1)}$$

For SI: $Q_{h,b} = N_{n,b}\, Q_v$ (0.4719 L/s)

where:

$N_{n,b}$= Number of fixtures per header (or vent *branch*) ÷ total number of fixtures connected to vent *stack*.

$Q_{h,b}$= Vent *branch* or vent header airflow rate (cfm).

Q_v = Total vent *stack* airflow rate (cfm).

$$Q_v\,(\text{gpm}) = 27.8\, r_s^{2/3}\,(1 - r_s)\, D^{8/3}$$

$$Q_v\,(\text{cfm}) = 0.134\, Q_v\,(\text{gpm})$$

where:

D = Drainage *stack* diameter (inches).

Q_w = Design discharge load (gpm).

r_s = Wastewater flow area to total area.

$$= \frac{Q_w}{27.8\, D^{8/3}}$$

Individual vent airflow rates are obtained by equally distributing $Q_{h,b}$ into one-half the total number of fixtures on the *branch* or header for more than two fixtures; for an odd number of total fixtures, decrease by one; for one fixture, apply the full value of $Q_{h,b}$.

Individual vent *developed length* shall be increased by 20 percent of the distance from the vent *stack* to the fixture vent connection on the vent *branch* or header.

INTERNATIONAL CODE COUNCIL®
Copyright © 2019 ICC & NYSDOS. ALL RIGHTS RESERVED. Accessed by Lauren Gualdino (lgualdino@briarcliffmanor.org), (-) Order Number #100880972 on May 08, 2020 07:05 AM (PDT) pursuant to License Agreement with ICC & NYSDOS. No further reproduction, no

100880972

SECTION 920
COMPUTERIZED VENT DESIGN

920.1 Design of vent system. The sizing, design and layout of the vent system shall be permitted to be determined by *approved* computer program design methods.

920.2 System capacity. The vent system shall be based on the air capacity requirements of the drainage system under a peak load condition.

TABLE 919.2
MINIMUM DIAMETER AND MAXIMUM LENGTH OF INDIVIDUAL BRANCH FIXTURE VENTS AND INDIVIDUAL FIXTURE HEADER VENTS FOR SMOOTH PIPES

DIAMETER OF VENT PIPE (inches)	INDIVIDUAL VENT AIRFLOW RATE (cubic feet per minute)																			
	Maximum developed length of vent (feet)																			
	1	2	3	4	5	6	7	8	9	10	11	12	13	14	15	16	17	18	19	20
1/2	95	25	13	8	5	4	3	2	1	1	1	1	1	1	1	1	1	1	1	1
3/4	100	88	47	30	20	15	10	9	7	6	5	4	3	3	3	2	2	2	2	1
1	—	—	100	94	65	48	37	29	24	20	17	14	12	11	9	8	7	7	6	6
1 1/4	—	—	—	—	—	—	—	100	87	73	62	53	46	40	36	32	29	26	23	21
1 1/2	—	—	—	—	—	—	—	—	—	—	—	100	96	84	75	65	60	54	49	45
2	—	—	—	—	—	—	—	—	—	—	—	—	—	—	—	—	—	—	—	100

For SI: 1 inch = 25.4 mm, 1 cubic foot per minute = 0.4719 L/s, 1 foot = 304.8 mm.

INTERNATIONAL CODE COUNCIL®
Copyright © 2019 ICC & NYSDOS. ALL RIGHTS RESERVED. Accessed by Lauren Gualdino (lgualdino@briarcliffmanor.org), (-) Order Number #100880972 on May 08, 2020 07:05 AM (PDT) pursuant to License Agreement with ICC & NYSDOS. No further reproduction, no

100880972

INTERNATIONAL CODE COUNCIL®
Copyright © 2019 ICC & NYSDOS. ALL RIGHTS RESERVED. Accessed by Lauren Gualdino (lgualdino@briarcliffmanor.org), (-) Order Number #100880972 on May 08, 2020 07:05 AM (PDT) pursuant to License Agreement with ICC & NYSDOS. No further reproduction, no

100880972

CHAPTER 10

TRAPS, INTERCEPTORS AND SEPARATORS

SECTION 1001
GENERAL

1001.1 Scope. This chapter shall govern the material and installation of traps, interceptors and separators.

SECTION 1002
TRAP REQUIREMENTS

1002.1 Fixture traps. Each plumbing fixture shall be separately trapped by a liquid-seal trap, except as otherwise permitted by this code. The vertical distance from the fixture outlet to the trap weir shall not exceed 24 inches (762 mm), and the horizontal distance shall not exceed 30 inches (762 mm) measured from the centerline of the fixture outlet to the centerline of the inlet of the trap. The height of a clothes washer standpipe above a trap shall conform to Section 802.3.3. A fixture shall not be double trapped.

Exceptions:

1. This section shall not apply to fixtures with integral traps.
2. A combination plumbing fixture is permitted to be installed on one trap, provided that one compartment is not more than 6 inches (152 mm) deeper than the other compartment and the waste outlets are not more than 30 inches (762 mm) apart.
3. A grease interceptor intended to serve as a fixture trap in accordance with the manufacturer's installation instructions shall be permitted to serve as the trap for a single fixture or a combination sink of not more than three compartments where the vertical distance from the fixture outlet to the inlet of the interceptor does not exceed 30 inches (762 mm) and the *developed length* of the waste pipe from the most upstream fixture outlet to the inlet of the interceptor does not exceed 60 inches (1524 mm).
4. Floor drains in multilevel parking structures that discharge to a building storm *sewer* shall not be required to be individually trapped. Where floor drains in multilevel parking structures are required to discharge to a combined *building sewer* system, the floor drains shall not be required to be individually trapped provided that they are connected to a main trap in accordance with Section 1103.1.

1002.2 Design of traps. Fixture traps shall be self-scouring. Fixture traps shall not have interior partitions, except where such traps are integral with the fixture or where such traps are constructed of an *approved* material that is resistant to corrosion and degradation. Slip joints shall be made with an *approved* elastomeric gasket and shall be installed only on the trap inlet, trap outlet and within the trap seal.

1002.3 Prohibited traps. The following types of traps are prohibited:

1. Traps that depend on moving parts to maintain the seal.
2. Bell traps.
3. Crown-vented traps.
4. Traps not integral with a fixture and that depend on interior partitions for the seal, except those traps constructed of an *approved* material that is resistant to corrosion and degradation.
5. "S" traps.
6. Drum traps.

   Exception: Drum traps used as solids interceptors and drum traps serving chemical waste systems shall not be prohibited.

1002.4 Trap seals. Each fixture trap shall have a liquid seal of not less than 2 inches (51 mm) and not more than 4 inches (102 mm), or deeper for special designs relating to accessible fixtures.

1002.4.1 Trap seal protection. Trap seals of *emergency floor drain* traps and trap seals subject to evaporation shall be protected by one of the methods in Sections 1002.4.1.1 through 1002.4.1.4.

1002.4.1.1 Potable water-supplied trap seal primer valve. A potable water-supplied trap seal primer valve shall supply water to the trap. Water-supplied trap seal primer valves shall conform to ASSE 1018. The discharge pipe from the trap seal primer valve shall connect to the trap above the trap seal on the inlet side of the trap.

1002.4.1.2 Reclaimed or graywater-supplied trap seal primer valve. A reclaimed, or graywater-supplied trap seal primer valve shall supply water to the trap. Water-supplied trap seal primer valves shall conform to ASSE 1018. The quality of reclaimed or graywater-supplied to trap seal primer valves shall be in accordance with the requirements of the manufacturer of the trap seal primer valve. The discharge pipe from the trap seal primer valve shall connect to the trap above the trap seal, on the inlet side of the trap.

1002.4.1.3 Wastewater-supplied trap primer device. A wastewater-supplied trap primer device shall supply water to the trap. Wastewater-supplied trap primer devices shall conform to ASSE 1044. The discharge pipe from the trap seal primer device shall connect to the trap above the trap seal on the inlet side of the trap.

1002.4.1.4 Barrier-type trap seal protection device. A barrier-type trap seal protection device shall protect the floor drain trap seal from evaporation. Barrier-type floor drain trap seal protection devices shall conform to

INTERNATIONAL CODE COUNCIL®
Copyright © 2019 ICC & NYSDOS. ALL RIGHTS RESERVED. Accessed by Lauren Gualdino (lgualdino@briarcliffmanor.org), (-) Order Number #100880972 on May 08, 2020 07:05 AM (PDT) pursuant to License Agreement with ICC & NYSDOS. No further reproduction, no

100880972

ASSE 1072. The devices shall be installed in accordance with the manufacturer's instructions.

1002.5 Size of fixture traps. Fixture trap size shall be sufficient to drain the fixture rapidly and not less than the size indicated in Table 709.1. A trap shall not be larger than the drainage pipe into which the trap discharges.

1002.6 Building traps. Building (house) traps shall be prohibited.

1002.7 Trap setting and protection. Traps shall be set level with respect to the trap seal and, where necessary, shall be protected from freezing.

1002.8 Recess for trap connection. A recess provided for connection of the underground trap, such as one serving a bathtub in slab-type construction, shall have sides and a bottom of corrosion-resistant, insect- and vermin proof construction.

1002.9 Acid-resisting traps. Where a vitrified clay or other brittleware, acid-resisting trap is installed underground, such trap shall be embedded in concrete extending 6 inches (152 mm) beyond the bottom and sides of the trap.

1002.10 Plumbing in mental health centers. In mental health centers, pipes and traps shall not be exposed.

SECTION 1003
INTERCEPTORS AND SEPARATORS

1003.1 Where required. Interceptors and separators shall be provided to prevent the discharge of oil, grease, sand and other substances harmful or hazardous to the public sewer, the private sewage system or the sewage treatment plant or processes.

1003.2 Approval. The size, type and location of each interceptor and of each separator shall be designed and installed in accordance with the manufacturer's instructions and the requirements of this section based on the anticipated conditions of use. Wastes that do not require treatment or separation shall not be discharged into any interceptor or separator.

1003.3 Grease interceptors. Grease interceptors shall comply with the requirements of Sections 1003.3.1 through 1003.3.8.

1003.3.1 Grease interceptors and automatic grease removal devices required. A grease interceptor or automatic grease removal device shall be required to receive the drainage from fixtures and equipment with grease-laden waste located in food preparation areas, such as in restaurants, hotel kitchens, hospitals, school kitchens, bars, factory cafeterias and clubs. Fixtures and equipment shall include pot sinks, prerinse sinks; soup kettles or similar devices; wok stations; floor drains or sinks into which kettles are drained; automatic hood wash units and dishwashers without prerinse sinks. Grease interceptors and automatic grease removal devices shall receive waste only from fixtures and equipment that allow fats, oils or grease to be discharged. Where lack of space or other constraints prevent the installation or replacement of a grease interceptor, one or more grease interceptors shall be permitted to be installed on or above the floor and upstream of an existing grease interceptor.

1003.3.2 Food waste disposers restriction. A food waste disposer shall not discharge to a grease interceptor.

1003.3.3 Additives to grease interceptors. Dispensing systems that dispense interceptor performance additives to grease interceptors shall not be installed except where such systems dispense microbes for the enhancement of aerobic bioremediation of grease and other organic material, or for inhibiting growth of pathogenic organisms by anaerobic methods. Such microbial dispensing systems shall be installed only where the grease interceptor manufacturer's instructions allow such systems and the systems conform to ASME A112.14.6. Systems that discharge emulsifiers, chemicals or enzymes to grease interceptors shall be prohibited.

1003.3.4 Grease interceptors and automatic grease removal devices not required. A grease interceptor or an automatic grease removal device shall not be required for individual dwelling units or any private living quarters.

1003.3.5 Hydromechanical grease interceptors, fats, oils and greases disposal systems and automatic grease removal devices. Hydromechanical grease interceptors; fats, oils, and greases disposal systems and automatic grease removal devices shall be sized in accordance with ASME A112.14.3, ASME A112.14.4, ASME A112.14.6, CSA B481.3 or PDI G101. Hydromechanical grease interceptors; fats, oils, and greases disposal systems and automatic grease removal devices shall be designed and tested in accordance with ASME A112.14.3, ASME A112.14.4, CSA B481.1, PDI G101 or PDI G102. Hydromechanical grease interceptors; fats, oils, and greases disposal systems and automatic grease removal devices shall be installed in accordance with the manufacturer's instructions. Where manufacturer's instructions are not provided, hydromechanical grease interceptors; fats, oils, and greases disposal systems and automatic grease removal devices shall be installed in compliance with ASME A112.14.3, ASME A112.14.4, ASME A112.14.6, CSA B481.3 or PDI G101.

1003.3.5.1 Grease interceptor capacity. Grease interceptors shall have the grease retention capacity indicated in Table 1003.3.5.1 for the flow-through rates indicated.

1003.3.5.2 Rate of flow controls. Grease interceptors shall be equipped with devices to control the rate of water flow so that the water flow does not exceed the rated flow. The flow-control device shall be vented and terminate not less than 6 inches (152 mm) above the flood rim level or be installed in accordance with the manufacturer's instructions.

1003.3.6 Automatic grease removal devices. Where automatic grease removal devices are installed, such devices shall be located downstream of each fixture or multiple fixtures in accordance with the manufacturer's instructions. The automatic grease removal device shall be sized to pretreat the measured or calculated flows for all connected fixtures or equipment. Ready *access* shall be provided for inspection and maintenance.

INTERNATIONAL CODE COUNCIL®
Copyright © 2019 ICC & NYSDOS. ALL RIGHTS RESERVED. Accessed by Lauren Gualdino (lgualdino@briarcliffmanor.org), (-) Order Number #100880972 on May 08, 2020 07:05 AM (PDT) pursuant to License Agreement with ICC & NYSDOS. No further reproduction, no

100880972

TABLE 1003.3.5.1
CAPACITY OF GREASE INTERCEPTORS[a]

TOTAL FLOW-THROUGH RATING (gpm)	GREASE RETENTION CAPACITY (pounds)
4	8
6	12
7	14
9	18
10	20
12	24
14	28
15	30
18	36
20	40
25	50
35	70
50	100
75	150
100	200

For SI: 1 gallon per minute = 3.785 L/m, 1 pound = 0.454 kg.

a. For total flow-through ratings greater than 100 (gpm), double the flow-through rating to determine the grease retention capacity (pounds).

1003.3.7 Gravity grease interceptors and gravity grease interceptors with fats, oils, and greases disposal systems. The required capacity of gravity grease interceptors and gravity grease interceptors with fats, oils, and greases disposal systems shall be determined by multiplying the peak drain flow into the interceptor in gallons per minute by a retention time of 30 minutes. Gravity grease interceptors shall be designed and tested in accordance with IAPMO/ANSI Z1001. Gravity grease interceptors with fats, oils, and greases disposal systems shall be designed and tested in accordance with ASME A112.14.6 and IAPMO/ANSI Z1001. Gravity grease interceptors and gravity grease interceptors with fats, oils, and greases disposal systems shall be installed in accordance with manufacturer's instructions. Where manufacturer's instructions are not provided, gravity grease interceptors and gravity grease interceptors with fats, oils, and greases disposal systems shall be installed in compliance with ASME A112.14.6 and IAPMO/ANSI Z1001.

1003.3.8 Direct connection. The discharge piping from a grease interceptor shall be directly connected to the sanitary drainage system.

1003.4 Oil separators required. At repair garages where floor or trench drains are provided, car washing facilities, factories where oily and flammable liquid wastes are produced and hydraulic elevator pits, oil separators shall be installed into which oil-bearing, grease-bearing or flammable wastes shall be discharged before emptying into the building drainage system or other point of disposal.

Exception: An oil separator is not required in hydraulic elevator pits where an approved alarm system is installed. Such alarm systems shall not terminate the operation of pumps utilized to maintain emergency operation of the elevator by fire fighters.

1003.4.1 Separation of liquids. A mixture of treated or untreated light and heavy liquids with various specific gravities shall be separated in an *approved* receptacle.

1003.4.2 Oil separator design. Oil separators shall be listed and labeled or designed in accordance with Sections 1003.4.2.1 and 1003.4.2.2.

1003.4.2.1 General design requirements. Oil separators shall have a depth of not less than 2 feet (610 mm) below the invert of the discharge drain. The outlet opening of the separator shall have not less than an 18-inch (457 mm) water seal.

1003.4.2.2 Garages and service stations. Where automobiles are serviced, greased, repaired or washed or where gasoline is dispensed, oil separators shall have a capacity of not less than 6 cubic feet (0.168 m^3) for the first 100 square feet (9.3 m^2) of area to be drained, plus 1 cubic foot (0.028 m^3) for each additional 100 square feet (9.3 m^2) of area to be drained into the separator. Parking garages in which servicing, repairing or washing is not conducted, and in which gasoline is not dispensed, shall not require a separator. Areas of commercial garages utilized only for storage of automobiles are not required to be drained through a separator.

1003.5 Sand interceptors in commercial establishments. Sand and similar interceptors for heavy solids shall be designed and located so as to be provided with ready *access* for cleaning and shall have a water seal of not less than 6 inches (152 mm).

1003.6 Clothes washer discharge interceptor. Clothes washers shall discharge through an interceptor that is provided with a wire basket or similar device, removable for cleaning, that prevents passage into the drainage system of solids $^1/_2$ inch (12.7 mm) or larger in size, string, rags, buttons or other materials detrimental to the public sewage system.

Exceptions:

1. Clothes washers in individual dwelling units shall not be required to discharge through an interceptor.
2. A single clothes washer designed for use in individual dwelling units and installed in a location other than an individual dwelling unit shall not be required to discharge through an interceptor.

1003.7 Bottling establishments. Bottling plants shall discharge process wastes into an interceptor that will provide for the separation of broken glass or other solids before discharging waste into the drainage system.

1003.8 Slaughterhouses. Slaughtering room and dressing room drains shall be equipped with *approved* separators. The separator shall prevent the discharge into the drainage system of feathers, entrails and other materials that cause clogging.

1003.9 Venting of interceptors and separators. Interceptors and separators shall be designed so as not to become air

INTERNATIONAL CODE COUNCIL®
Copyright © 2019 ICC & NYSDOS. ALL RIGHTS RESERVED. Accessed by Lauren Gualdino (lgualdino@briarcliffmanor.org), (-) Order Number #100880972 on May 08, 2020 07:05 AM (PDT) pursuant to License Agreement with ICC & NYSDOS. No further reproduction, no

100880972

bound. Interceptors and separators shall be vented in accordance with one of the methods in Chapter 9.

1003.10 Access and maintenance of interceptors and separators. *Access* shall be provided to each interceptor and separator for service and maintenance. Interceptors and separators shall be maintained by periodic removal of accumulated grease, scum, oil, or other floating substances and solids deposited in the interceptor or separator.

SECTION 1004
MATERIALS, JOINTS AND CONNECTIONS

1004.1 General. The materials and methods utilized for the construction and installation of traps, interceptors and separators shall comply with this chapter and the applicable provisions of Chapters 4 and 7. The fittings shall not have ledges, shoulders or reductions capable of retarding or obstructing flow of the piping.

INTERNATIONAL CODE COUNCIL®
Copyright © 2019 ICC & NYSDOS. ALL RIGHTS RESERVED. Accessed by Lauren Gualdino (lgualdino@briarcliffmanor.org), (-) Order Number #100880972 on May 08, 2020 07:05 AM (PDT) pursuant to License Agreement with ICC & NYSDOS. No further reproduction, no

100880972

CHAPTER 11
STORM DRAINAGE

SECTION 1101
GENERAL

1101.1 Scope. The provisions of this chapter shall govern the materials, design, construction and installation of storm drainage.

1101.2 Disposal. Rainwater from roofs and storm water from paved areas, yards, courts and courtyards shall drain to an *approved* place of disposal. For one- and two-family dwellings, and where *approved*, storm water is permitted to discharge onto flat areas, such as streets or lawns, provided that the storm water flows away from the building.

1101.3 Prohibited drainage. Storm water shall not be drained into *sewers* intended for sewage only.

1101.4 Tests. The conductors and the building *storm drain* shall be tested in accordance with Section 312.

1101.5 Change in size. The size of a drainage pipe shall not be reduced in the direction of flow.

1101.6 Fittings and connections. Connections and changes in direction of the storm drainage system shall be made with *approved* drainage-type fittings in accordance with Table 706.3. The fittings shall not obstruct or retard flow in the system.

[BS] 1101.7 Roof design. Roofs shall be designed for the maximum possible depth of water that will pond thereon as determined by the relative levels of roof deck and overflow weirs, scuppers, edges or serviceable drains in combination with the deflected structural elements. In determining the maximum possible depth of water, all primary roof drainage means shall be assumed to be blocked. The maximum possible depth of water on the roof shall include the height of the water required above the inlet of the secondary roof drainage means to achieve the required flow rate of the secondary drainage means to accommodate the design rainfall rate as required by Section 1106.

1101.8 Cleanouts required. Cleanouts shall be installed in the storm drainage system and shall comply with the provisions of this code for sanitary drainage pipe cleanouts.

Exception: Subsurface drainage system.

1101.9 Backwater valves. Storm drainage systems shall be provided with backwater valves as required for sanitary drainage systems in accordance with Section 714.

SECTION 1102
MATERIALS

1102.1 General. The materials and methods utilized for the construction and installation of storm drainage systems shall comply with this section and the applicable provisions of Chapter 7.

1102.2 Inside storm drainage conductors. Inside storm drainage conductors installed above ground shall conform to one of the standards listed in Table 702.1.

1102.3 Underground building storm drain pipe. Underground building *storm drain* pipe shall conform to one of the standards listed in Table 702.2.

1102.4 Building storm sewer pipe. Building storm *sewer* pipe shall conform to one of the standards listed in Table 1102.4.

TABLE 1102.4
BUILDING STORM SEWER PIPE

MATERIAL	STANDARD
Acrylonitrile butadiene styrene (ABS) plastic pipe in IPS diameters, including Schedule 40, DR 22 (PS 200) and DR 24 (PS 140); with a solid, cellular core or composite wall.	ASTM D2661; ASTM F628; ASTM F1488; CSA B181.1; CSA B182.1
Cast-iron pipe	ASTM A74; ASTM A888; CISPI 301
Concrete pipe	ASTM C14; ASTM C76; CSA A257.1M; CSA A257.2M
Copper or copper-alloy tubing (Type K, L, M or DWV)	ASTM B75; ASTM B88; ASTM B251; ASTM B306
Polyethylene (PE) plastic pipe	ASTM F667; ASTM F2306/F2306M; ASTM F2648/F2648M
Polypropylene (PP) pipe	ASTM F2881; CSA B182.13
Polyvinyl chloride (PVC) plastic pipe (Type DWV, SDR26, SDR35, SDR41, PS50 or PS100) in IPS diameters, including Schedule 40, DR 22 (PS 200) and DR 24 (PS 140); with a solid, cellular core or composite wall.	ASTM D2665; ASTM D3034; ASTM F891; ASTM F1488; CSA B182.4; CSA B181.2; CSA B182.2
Vitrified clay pipe	ASTM C4; ASTM C700
Stainless steel drainage systems, Type 316L	ASME A112.3.1

1102.5 Subsoil drain pipe. Subsoil drains shall be open-jointed, horizontally split or perforated pipe conforming to one of the standards listed in Table 1102.5.

1102.6 Roof Drains. Roof drains shall conform to ASME A112.6.4 or ASME A112.3.1.

INTERNATIONAL CODE COUNCIL®
Copyright © 2019 ICC & NYSDOS. ALL RIGHTS RESERVED. Accessed by Lauren Gualdino (lgualdino@briarcliffmanor.org), (-) Order Number #100880972 on May 08, 2020 07:05 AM (PDT) pursuant to License Agreement with ICC & NYSDOS. No further reproduction, no

100880972

TABLE 1102.5
SUBSOIL DRAIN PIPE

MATERIAL	STANDARD
Cast-iron pipe	ASTM A74; ASTM A888; CISPI 301
Polyethylene (PE) plastic pipe	ASTM F405; ASTM F667; CSA B182.1; CSA B182.6; CSA B182.8
Polyvinyl chloride (PVC) Plastic pipe (type sewer pipe, SDR35, PS25, PS50 or PS100)	ASTM D2729; ASTM D3034, ASTM F891; CSA B182.2; CSA B182.4
Stainless steel drainage systems, Type 316L	ASME A112.3.1
Vitrified clay pipe	ASTM C4; ASTM C700

1102.7 Fittings. Pipe fittings shall be *approved* for installation with the piping material installed, and shall conform to the respective pipe standards or one of the standards listed in Table 1102.7. The fittings shall not have ledges, shoulders or reductions capable of retarding or obstructing flow in the piping. Threaded drainage pipe fittings shall be of the recessed drainage type.

TABLE 1102.7
PIPE FITTINGS

MATERIAL	STANDARD
Acrylonitrile butadiene styrene (ABS) plastic	ASTM D2661; ASTM D3311; CSA B181.1
Cast-iron	ASME B16.4; ASME B16.12; ASTM A888; CISPI 301; ASTM A74
Coextruded composite ABS and drain DR-PS in PS35, PS50, PS100, PS140, PS200	ASTM D2751
Coextruded composite ABS DWV Schedule 40 IPS pipe (solid or cellular core)	ASTM D2661; ASTM D3311; ASTM F628
Coextruded composite PVC DWV Schedule 40 IPS-DR, PS140, PS200 (solid or cellular core)	ASTM D2665; ASTM D3311; ASTM F891
Coextruded composite PVC sewer and drain DR-PS in PS35, PS50, PS100, PS140, PS200	ASTM D3034
Copper or copper alloy	ASME B16.15; ASME B16.18; ASME B16.22; ASME B16.23; ASME B16.26; ASME B16.29
Gray iron and ductile iron	AWWA C110/A21.10
Malleable iron	ASME B16.3
Plastic, general	ASTM F409
Polyethylene (PE) plastic pipe	ASTM F2306/F2306M
Polyvinyl chloride (PVC) plastic	ASTM D2665; ASTM D3311; ASTM F1866
Steel	ASME B16.9; ASME B16.11; ASME B16.28
Stainless steel drainage systems, Type 316L	ASME A112.3.1

SECTION 1103 TRAPS

1103.1 Main trap. Leaders and *storm drains* connected to a combined sewer shall be trapped. Individual storm water traps shall be installed on the storm water drain *branch* serving each conductor, or a single trap shall be installed in the main *storm drain* just before its connection with the combined *building sewer* or the *public sewer*. Leaders and storm drains connected to a building storm sewer shall not be required to be trapped.

1103.2 Material. Storm water traps shall be of the same material as the piping system to which they are attached.

1103.3 Size. Traps for individual conductors shall be the same size as the horizontal drain to which they are connected.

1103.4 Cleanout. A cleanout shall be installed on the building side of the trap and shall be provided with *access*.

SECTION 1104 CONDUCTORS AND CONNECTIONS

1104.1 Prohibited use. Conductor pipes shall not be used as soil, waste or vent pipes, and soil, waste or vent pipes shall not be used as conductors.

1104.2 Floor drains. Floor drains shall not be connected to a *storm drain*.

SECTION 1105 ROOF DRAINS

1105.1 General. Roof drains shall be installed in accordance with the manufacturer's instructions. The inside opening for the roof drain shall not be obstructed by the roofing membrane material.

1105.2 Roof drain flow rate. The published roof drain flow rate, based on the head of water above the roof drain, shall be used to size the storm drainage system in accordance with Section 1106. The flow rate used for sizing the storm drainage piping shall be based on the maximum anticipated ponding at the roof drain.

SECTION 1106 SIZE OF CONDUCTORS, LEADERS AND STORM DRAINS

1106.1 General. The size of the vertical conductors and leaders, building *storm drains*, building storm *sewers* and any horizontal branches of such drains or *sewers* shall be based on the 100-year hourly rainfall rate indicated in Figure 1106.1 or on other rainfall rates determined from *approved* local weather data.

1106.2 Size of storm drain piping. Vertical and horizontal storm drain piping shall be sized based on the flow rate through the roof drain. The flow rate in storm drain piping shall not exceed that specified in Table 1106.2.

INTERNATIONAL CODE COUNCIL®
Copyright © 2019 ICC & NYSDOS. ALL RIGHTS RESERVED. Accessed by Lauren Gualdino (lgualdino@briarcliffmanor.org), (-) Order Number #100880972 on May 08, 2020 07:05 AM (PDT) pursuant to License Agreement with ICC & NYSDOS. No further reproduction, no

100880972



For SI: 1 inch = 25.4 mm.
Source: National Weather Service, National Oceanic and Atmospheric Administration, Washington D.C.

[NY] FIGURE 1106.1
100-YEAR, 1-HOUR RAINFALL (INCHES) EASTERN UNITED STATES

INTERNATIONAL CODE COUNCIL®
Copyright © 2019 ICC & NYSDOS. ALL RIGHTS RESERVED. Accessed by Lauren Gualdino (lgualdino@briarcliffmanor.org), (-) Order Number #100880972 on May 08, 2020 07:05 AM (PDT) pursuant to License Agreement with ICC & NYSDOS. No further reproduction, no

100880972

1106.3 Vertical leader sizing. Vertical leaders shall be sized based on the flow rate from horizontal gutters or the maximum flow rate through roof drains. The flow rate through vertical leaders shall not exceed that specified in Table 1106.3.

1106.4 Vertical walls. In sizing roof drains and storm drainage piping, one-half of the area of any vertical wall that diverts rainwater to the roof shall be added to the projected roof area for inclusion in calculating the required size of vertical conductors, leaders and horizontal storm drainage piping.

1106.5 Parapet wall scuppers. Where scuppers are used for primary roof drainage or for secondary (emergency overflow) roof drainage or both, the quantity, size, location and inlet elevation of the scuppers shall be chosen to prevent the depth of ponding water on the roof from exceeding the maximum water depth that the roof was designed for as determined by Section 1611.1 of the *Building Code of New York State*. Scupper openings shall be not less than 4 inches (102 mm) in height and have a width that is equal to or greater than the circumference of a roof drain sized for the same roof area. The flow through the primary system shall not be considered when locating and sizing secondary scuppers.

1106.6 Size of roof gutters. Horizontal gutters shall be sized based on the flow rate from the roof surface. The flow rate in horizontal gutters shall not exceed that specified in Table 1106.6.

SECTION 1107
SIPHONIC ROOF DRAINAGE SYSTEMS

1107.1 General. Siphonic roof drains and drainage systems shall be designed in accordance with ASME A112.6.9 and ASPE 45.

SECTION 1108
SECONDARY (EMERGENCY) ROOF DRAINS

1108.1 Secondary (emergency overflow) drains or scuppers. Where roof drains are required, secondary (emergency overflow) roof drains or scuppers shall be provided where the roof perimeter construction extends above the roof in such a manner that water will be entrapped if the primary drains allow buildup for any reason. Where primary and secondary roof drains are manufactured as a single assembly, the inlet and outlet for each drain shall be independent.

1108.2 Separate systems required. Secondary roof drain systems shall have the end point of discharge separate from the primary system. Discharge shall be above grade, in a location that would normally be observed by the building occupants or maintenance personnel.

1108.3 Sizing of secondary drains. Secondary (emergency) roof drain systems shall be sized in accordance with Section

TABLE 1106.3
VERTICAL LEADER SIZING

SIZE OF LEADER (inches)	CAPACITY (gpm)
2	30
2 × 2	30
$1^1/_2 \times 2^1/_2$	30
$2^1/_2$	54
$2^1/_2 \times 2^1/_2$	54
3	92
2 × 4	92
$2^1/_2 \times 3$	92
4	192
$3 \times 4^1/_4$	192
$3^1/_2 \times 4$	192
5	360
4 × 5	360
$4^1/_2 \times 4^1/_2$	360
6	563
5 × 6	563
$5^1/_2 \times 5^1/_2$	563
8	1208
6 × 8	1208

For SI: 1 inch = 25.4 mm, 1 gallon per minute = 3.785 L/m.

TABLE 1106.2
STORM DRAIN PIPE SIZING

PIPE SIZE (inches)	CAPACITY (gpm)				
	VERTICAL DRAIN	SLOPE OF HORIZONTAL DRAIN			
		$^1/_{16}$ inch per foot	$^1/_8$ inch per foot	$^1/_4$ inch per foot	$^1/_2$ inch per foot
2	34	15	22	31	44
3	87	39	55	79	111
4	180	81	115	163	231
5	311	117	165	234	331
6	538	243	344	487	689
8	1,117	505	714	1,010	1,429
10	2,050	927	1,311	1,855	2,623
12	3,272	1,480	2,093	2,960	4,187
15	5,543	2,508	3,546	5,016	7,093

For SI: 1 inch = 25.4 mm, 1 foot = 304.8 mm, 1 gallon per minute = 3.785 L/m.

INTERNATIONAL CODE COUNCIL®
Copyright © 2019 ICC & NYSDOS. ALL RIGHTS RESERVED. Accessed by Lauren Gualdino (lgualdino@briarcliffmanor.org), (-) Order Number #100880972 on May 08, 2020 07:05 AM (PDT) pursuant to License Agreement with ICC & NYSDOS. No further reproduction, no

100880972

1106 based on the rainfall rate for which the primary system is sized. Scuppers shall be sized to prevent the depth of ponding water from exceeding that for which the roof was designed as determined by Section 1101.7. Scuppers shall have an opening dimension of not less than 4 inches (102 mm) in height and have an opening width equal to the circumference of the roof drain required for the area served. The flow through the primary system shall not be considered when sizing the secondary roof drain system.

SECTION 1109
COMBINED SANITARY AND STORM PUBLIC SEWER

1109.1 General. Where the *public sewer* is a combined system for both sanitary and storm water, the *storm sewer* shall be connected independently to the *public sewer*.

SECTION 1110
CONTROLLED FLOW ROOF DRAIN SYSTEMS

1110.1 General. The roof of a structure shall be designed for the storage of water where the storm drainage system is engineered for controlled flow. The controlled flow roof drain system shall be an engineered system in accordance with this section and the design, submittal, approval, inspection and testing requirements of Section 316.1. The controlled flow system shall be designed based on the required rainfall rate in accordance with Section 1106.1.

1110.2 Control devices. The control devices shall be installed so that the rate of discharge of water per minute shall not exceed the values for continuous flow as indicated in Section 1110.1.

1110.3 Installation. Runoff control shall be by control devices. Control devices shall be protected by strainers.

1110.4 Minimum number of roof drains. Not less than two roof drains shall be installed in roof areas 10,000 square feet (929 m^2) or less and not less than four roof drains shall be installed in roofs over 10,000 square feet (929 m^2) in area.

SECTION 1111
SUBSOIL DRAINS

1111.1 Subsoil drains. Subsoil drains shall be open-jointed, horizontally split or perforated pipe conforming to one of the standards listed in Table 1102.5. Such drains shall be not less than 4 inches (102 mm) in diameter. Where the building is subject to backwater, the subsoil drain shall be protected by an accessibly located backwater valve. Subsoil drains shall discharge to a trapped area drain, sump, dry well or *approved* location above ground. The subsoil sump shall not be required to have either a gas-tight cover or a vent. The sump and pumping system shall comply with Section 1113.1.

SECTION 1112
BUILDING SUBDRAINS

1112.1 Building subdrains. *Building subdrains* located below the *public sewer* level shall discharge into a sump or

TABLE 1106.6
HORIZONTAL GUTTER SIZING

GUTTER DIMENSIONS[a] (inches)	SLOPE (inch per foot)	CAPACITY (gpm)
$1^1/_2 \times 2^1/_2$	$^1/_4$	26
$1^1/_2 \times 2^1/_2$	$^1/_2$	40
4	$^1/_8$	39
$2^1/_4 \times 3$	$^1/_4$	55
$2^1/_4 \times 3$	$^1/_2$	87
5	$^1/_8$	74
$4 \times 2^1/_2$	$^1/_4$	106
$3 \times 3^1/_2$	$^1/_2$	156
6	$^1/_8$	110
3×5	$^1/_4$	157
3×5	$^1/_2$	225
8	$^1/_{16}$	172
8	$^1/_8$	247
$4^1/_2 \times 6$	$^1/_4$	348
$4^1/_2 \times 6$	$^1/_2$	494
10	$^1/_{16}$	331
10	$^1/_8$	472
5×8	$^1/_4$	651
4×10	$^1/_2$	1055

For SI: 1 inch = 25.4 mm, 1 foot = 304.8 mm, 1 gallon per minute = 3.785 L/m, 1 inch per foot = 83.3 mm/m.

a. Dimensions are width by depth for rectangular shapes. Single dimensions are diameters of a semicircle.

INTERNATIONAL CODE COUNCIL®
Copyright © 2019 ICC & NYSDOS. ALL RIGHTS RESERVED. Accessed by Lauren Gualdino (lgualdino@briarcliffmanor.org), (-) Order Number #100880972 on May 08, 2020 07:05 AM (PDT) pursuant to License Agreement with ICC & NYSDOS. No further reproduction, no

100880972

receiving tank, the contents of which shall be automatically lifted and discharged into the drainage system as required for building sumps. The sump and pumping equipment shall comply with Section 1113.1.

SECTION 1113
SUMPS AND PUMPING SYSTEMS

1113.1 Pumping system. The sump pump, pit and discharge piping shall conform to Sections 1113.1.1 through 1113.1.4.

1113.1.1 Pump capacity and head. The sump pump shall be of a capacity and head appropriate to anticipated use requirements.

1113.1.2 Sump pit. The sump pit shall be not less than 18 inches (457 mm) in diameter and not less than 24 inches (610 mm) in depth, unless otherwise *approved*. The pit shall be provided with access and shall be located such that all drainage flows into the pit by gravity. The sump pit shall be constructed of tile, steel, plastic, cast iron, concrete or other *approved* material, with a removable cover adequate to support anticipated loads in the area of use. The pit floor shall be solid and provide permanent support for the pump.

1113.1.3 Electrical. Electrical service outlets, where required, shall meet the requirements of NFPA 70.

1113.1.4 Piping. Discharge piping shall meet the requirements of Section 1102.2, 1102.3 or 1102.4 and shall include a gate valve and a full flow check valve. Pipe and fittings shall be the same size as, or larger than, the pump discharge tapping.

Exception: In one- and two-family dwellings, only a check valve shall be required, located on the discharge piping from the pump or ejector.

INTERNATIONAL CODE COUNCIL®
Copyright © 2019 ICC & NYSDOS. ALL RIGHTS RESERVED. Accessed by Lauren Gualdino (lgualdino@briarcliffmanor.org), (-) Order Number #100880972 on May 08, 2020 07:05 AM (PDT) pursuant to License Agreement with ICC & NYSDOS. No further reproduction, no

100880972

CHAPTER 12

SPECIAL PIPING AND STORAGE SYSTEMS

SECTION 1201
GENERAL

1201.1 Scope. The provisions of this chapter shall govern the design and installation of piping and storage systems for nonflammable medical gas systems and nonmedical oxygen systems. All maintenance and operations of such systems shall be in accordance with the *Fire Code of New York State.*

SECTION 1202
MEDICAL GASES

[F] 1202.1 Nonflammable medical gases. Nonflammable medical gas systems, inhalation anesthetic systems and vacuum piping systems shall be designed and installed in accordance with NFPA 99.

Exceptions:

1. This section shall not apply to portable systems or cylinder storage.
2. Vacuum system exhaust terminations shall comply with the *Mechanical Code of New York State*.

SECTION 1203
OXYGEN SYSTEMS

[F] 1203.1 Design and installation. Nonmedical oxygen systems shall be designed and installed in accordance with NFPA 55 and NFPA 51.

INTERNATIONAL CODE COUNCIL®
Copyright © 2019 ICC & NYSDOS. ALL RIGHTS RESERVED. Accessed by Lauren Gualdino (lgualdino@briarcliffmanor.org), (-) Order Number #100880972 on May 08, 2020 07:05 AM (PDT) pursuant to License Agreement with ICC & NYSDOS. No further reproduction, no

100880972

INTERNATIONAL CODE COUNCIL®
Copyright © 2019 ICC & NYSDOS. ALL RIGHTS RESERVED. Accessed by Lauren Gualdino (lgualdino@briarcliffmanor.org), (-) Order Number #100880972 on May 08, 2020 07:05 AM (PDT) pursuant to License Agreement with ICC & NYSDOS. No further reproduction, no

100880972

CHAPTER 13

NONPOTABLE WATER SYSTEMS

SECTION 1301
GENERAL

1301.1 Scope. The provisions of Chapter 13 shall govern the materials, design, construction and installation of systems for the collection, storage, treatment and distribution of nonpotable water. The use and application of nonpotable water shall comply with laws, rules and ordinances applicable in the jurisdiction.

1301.2 Water quality. Nonpotable water for each end use application shall meet the minimum water quality requirements as established for the intended application by the laws, rules and ordinances applicable in the jurisdiction. Where nonpotable water from different sources is combined in a system, the system shall comply with the most stringent of the requirements of this code that are applicable to such sources.

1301.2.1 Residual disinfectants. Where chlorine is used for disinfection, the nonpotable water shall contain not more than 4 ppm (4mg/L) of chloramines or free chlorine when tested in accordance with ASTM D1253. Where ozone is used for disinfection, the nonpotable water shall not contain gas bubbles having elevated levels of ozone at the point of use.

Exception: Reclaimed water sources shall not be required to comply with these requirements.

1301.2.2 Filtration required. Nonpotable water utilized for water closet and urinal flushing applications shall be filtered by a 100-micron or finer filter.

Exception: Reclaimed water sources shall not be required to comply with these requirements.

1301.3 Signage required. Nonpotable water outlets such as hose connections, open ended pipes and faucets shall be identified at the point of use for each outlet with signage that reads as follows: "Nonpotable water is utilized for [application name]. CAUTION: NONPOTABLE WATER – DO NOT DRINK." The words shall be legibly and indelibly printed on a tag or sign constructed of corrosion-resistant waterproof material or shall be indelibly printed on the fixture. The letters of the words shall be not less than 0.5 inch (12.7 mm) in height and in colors in contrast to the background on which they are applied. In addition to the required wordage, the pictograph shown in Figure 1301.3 shall appear on the signage required by this section.

1301.4 Permits. Permits shall be required for the construction, installation, alteration and repair of nonpotable water systems. Construction documents, engineering calculations, diagrams and other such data pertaining to the nonpotable water system shall be submitted with each permit application.

1301.5 Potable water connections. Where a potable system is connected to a nonpotable water system, the potable water supply shall be protected against backflow in accordance with Section 608.

1301.6 Components and materials. Piping, plumbing components and materials used in collection and conveyance systems shall be of material approved by the manufacturer for the intended application.

1301.7 Insect and vermin control. The system shall be protected to prevent the entrance of insects and vermin into storage tanks and piping systems. Screen materials shall be compatible with contacting system components and shall not accelerate the corrosion of system components.

1301.8 Freeze protection. Where sustained freezing temperatures occur, provisions shall be made to keep storage tanks and the related piping from freezing.

1301.9 Nonpotable water storage tanks. Nonpotable water storage tanks shall comply with Sections 1301.9.1 through 1301.9.10.

1301.9.1 Location. Any storage tank or portion thereof that is above grade shall be protected from direct exposure to sunlight by one of the following methods:

1. Tank construction using opaque, UV-resistant materials such as heavily tinted plastic, fiberglass, lined metal, concrete, wood, or painted to prevent algae growth.
2. Specially constructed sun barriers.
3. Installation in garages, crawl spaces or sheds.

1301.9.2 Materials. Where collected on site, water shall be collected in an *approved* tank constructed of durable, nonabsorbent and corrosion-resistant materials. The storage tank shall be constructed of materials compatible with any disinfection systems used to treat water upstream of



FIGURE 1301.3
PICTOGRAPH—DO NOT DRINK

INTERNATIONAL CODE COUNCIL®
Copyright © 2019 ICC & NYSDOS. ALL RIGHTS RESERVED. Accessed by Lauren Gualdino (lgualdino@briarcliffmanor.org), (-) Order Number #100880972 on May 08, 2020 07:05 AM (PDT) pursuant to License Agreement with ICC & NYSDOS. No further reproduction, no

100880972

the tank and with any systems used to maintain water quality in the tank. Wooden storage tanks that are not equipped with a makeup water source shall be provided with a flexible liner.

1301.9.3 Foundation and supports. Storage tanks shall be supported on a firm base capable of withstanding the weight of the storage tank when filled to capacity. Storage tanks shall be supported in accordance with the *Building Code of New York State*.

1301.9.3.1 Ballast. Where the soil can become saturated, an underground storage tank shall be ballasted, or otherwise secured, to prevent the tank from floating out of the ground when empty. The combined weight of the tank and hold down ballast shall meet or exceed the buoyancy force of the tank. Where the installation requires a foundation, the foundation shall be flat and shall be designed to support the weight of the storage tank when full, consistent with the bearing capability of adjacent soil.

1301.9.3.2 Structural support. Where installed below grade, storage tank installations shall be designed to withstand earth and surface structural loads without damage and with minimal deformation when empty or filled with water.

1301.9.4 Makeup water. Where an uninterrupted supply is required for the intended application, potable or reclaimed water shall be provided as a source of makeup water for the storage tank. The makeup water supply shall be protected against backflow in accordance with Section 608. A *full-open valve* located on the makeup water supply line to the storage tank shall be provided. Inlets to the storage tank shall be controlled by fill valves or other automatic supply valves installed to prevent the tank from overflowing and to prevent the water level from dropping below a predetermined point. Where makeup water is provided, the water level shall not be permitted to drop below the source water inlet or the intake of any attached pump.

1301.9.5 Overflow. The storage tank shall be equipped with an overflow pipe having a diameter not less than that shown in Table 606.5.4. The overflow pipe shall be protected from insects or vermin and shall discharge in a manner consistent with storm water runoff requirements of the jurisdiction. The overflow pipe shall discharge at a sufficient distance from the tank to avoid damaging the tank foundation or the adjacent property. Drainage from overflow pipes shall be directed to prevent freezing on roof walkways. The overflow drain shall not be equipped with a shutoff valve. A cleanout shall be provided on each overflow pipe in accordance with Section 708.

1301.9.6 Access. Not less than one access opening shall be provided to allow inspection and cleaning of the tank interior. Access openings shall have an *approved* locking device or other *approved* method of securing access. Below-grade storage tanks, located outside of the building, shall be provided with a manhole either not less than 24 inches (610 mm) square or with an inside diameter not less than 24 inches (610 mm). Manholes shall extend not less than 4 inches (102 mm) above ground or shall be designed to prevent water infiltration. Finished grade shall be sloped away from the manhole to divert surface water. Manhole covers shall be secured to prevent unauthorized access. Service ports in manhole covers shall be not less than 8 inches (203 mm) in diameter and shall be not less than 4 inches (102 mm) above the finished grade level. The service port shall be secured to prevent unauthorized access.

Exception: Treated-water storage tanks that are less than 800 gallons (3028 L) in volume and installed below grade shall not be required to be equipped with a manhole provided that the tank has a service port of not less than 8 inches (203 mm) in diameter.

1301.9.7 Venting. Storage tanks shall be provided with a vent sized in accordance with Chapter 9 and based on the aggregate diameter of all tank influent pipes. The reservoir vent shall not be connected to sanitary drainage system vents. Vents shall be protected from contamination by means of an *approved* cap or U-bend installed with the opening directed downward. Vent outlets shall extend not less than 4 inches (102 mm) above grade or as necessary to prevent surface water from entering the storage tank. Vent openings shall be protected against the entrance of vermin and insects in accordance with the requirements of Section 1301.7.

1301.9.8 Draining of tanks. Tanks shall be provided with a means of emptying the contents for the purpose of service or cleaning. Tanks shall be drained by using a pump or by a drain located at the lowest point in the tank. The tank drain pipe shall discharge as required for overflow pipes and shall not be smaller in size than specified in Table 606.5.7. Not less than one cleanout shall be provided on each drain pipe in accordance with Section 708.

1301.9.9 Marking and signage. Each nonpotable water storage tank shall be labeled with its rated capacity. The contents of storage tanks shall be identified with the words "CAUTION: NONPOTABLE WATER – DO NOT DRINK." Where an opening is provided that could allow the entry of personnel, the opening shall be marked with the words, "DANGER – CONFINED SPACE." Markings shall be indelibly printed on the tank or on a tag or sign constructed of corrosion-resistant waterproof material that is mounted on the tank. The letters of the words shall be not less than 0.5 inch (12.7 mm) in height and shall be of a color in contrast with the background on which they are applied.

1301.9.10 Storage tank tests. Storage tanks shall be tested in accordance with the following:

Storage tanks shall be filled with water to the overflow line prior to and during inspection. Seams and joints shall be left exposed and the tank shall remain water tight without leakage for a period of 24 hours.

1. After 24 hours, supplemental water shall be introduced for a period of 15 minutes to verify proper drainage of the overflow system and that there are no leaks.

INTERNATIONAL CODE COUNCIL®
Copyright © 2019 ICC & NYSDOS. ALL RIGHTS RESERVED. Accessed by Lauren Gualdino (lgualdino@briarcliffmanor.org), (-) Order Number #100880972 on May 08, 2020 07:05 AM (PDT) pursuant to License Agreement with ICC & NYSDOS. No further reproduction, no

100880972

2. The tank drain shall be observed for proper operation.
3. The makeup water system shall be observed for proper operation and successful automatic shutoff of the system at the refill threshold shall be verified.

1301.10 System abandonment. If the owner of an on-site nonpotable water reuse system or rainwater collection and conveyance system elects to cease use of, or fails to properly maintain such system, the system shall be abandoned and shall comply with the following:

1. All system piping connecting to a utility-provided water system shall be removed or disabled.
2. The distribution piping system shall be replaced with an *approved* potable water supply piping system. Where an existing potable pipe system is already in place, the fixtures shall be connected to the existing system.
3. The storage tank shall be secured from accidental access by sealing or locking tank inlets and access points, or filling with sand or equivalent.

1301.11 Trenching requirements for nonpotable water piping. Nonpotable water collection and distribution piping and reclaimed water piping shall be separated from the *building sewer* and potable water piping underground by 5 feet (1524 mm) of undisturbed or compacted earth. Nonpotable water collection and distribution piping shall not be located in, under or above cesspools, septic tanks, septic tank drainage fields or seepage pits. Buried nonpotable water piping shall comply with the requirements of Section 306.

Exceptions:

1. The required separation distance shall not apply where the bottom of the nonpotable water pipe within 5 feet (1524 mm) of the *sewer* is not less than 12 inches (305 mm) above the top of the highest point of the *sewer* and the pipe materials conform to Table 702.3.
2. The required separation distance shall not apply where the bottom of the potable water service pipe within 5 feet (1524 mm) of the nonpotable water pipe is not less than 12 inches (305 mm) above the top of the highest point of the nonpotable water pipe and the pipe materials comply with the requirements of Table 605.4.
3. Nonpotable water pipe is permitted to be located in the same trench with a *building sewer*, provided that such *sewer* is constructed of materials that comply with the requirements of Table 702.2.
4. The required separation distance shall not apply where a nonpotable water pipe crosses a *sewer* pipe, provided that the pipe is sleeved to not less than 5 feet (1524 mm) horizontally from the *sewer* pipe centerline on both sides of such crossing, with pipe materials that comply with Table 702.2.
5. The required separation distance shall not apply where a potable water service pipe crosses a nonpotable water pipe, provided that the potable water service pipe is sleeved for a distance of not less than 5 feet (1524 mm) horizontally from the centerline of the nonpotable pipe on both sides of such crossing, with pipe materials that comply with Table 702.2.
6. Irrigation piping located outside of a building and downstream of the backflow preventer is not required to meet the trenching requirements where nonpotable water is used for outdoor applications.

1301.12 Outdoor outlet access. Sillcocks, hose bibbs, wall hydrants, yard hydrants and other outdoor outlets supplied by nonpotable water shall be located in a locked vault or shall be operable only by means of a removable key.

SECTION 1302
ON-SITE NONPOTABLE WATER REUSE SYSTEMS

1302.1 General. The provisions of ASTM E2635 and Section 1302 shall govern the construction, installation, alteration and repair of on-site nonpotable water reuse systems for the collection, storage, treatment and distribution of on-site sources of nonpotable water as permitted by the jurisdiction.

1302.2 Sources. On-site nonpotable water reuse systems shall collect waste discharge from only the following sources: bathtubs, showers, lavatories, clothes washers and laundry trays. Where *approved* and as appropriate for the intended application, water from other nonpotable sources shall be collected for reuse by on-site nonpotable water reuse systems,

1302.2.1 Prohibited sources. Wastewater containing urine or fecal matter shall not be diverted to on-site nonpotable water reuse systems and shall discharge to the sanitary drainage system of the building or premises in accordance with Chapter 7. Reverse osmosis system reject water, water softener discharge water, kitchen sink wastewater, dishwasher wastewater and wastewater discharged from wet-hood scrubbers shall not be collected for reuse in an on-site nonpotable water reuse system.

1302.3 Traps. Traps serving fixtures and devices discharging wastewater to on-site nonpotable water reuse systems shall comply with Section 1002.4.

1302.4 Collection pipe. On-site nonpotable water reuse systems shall utilize drainage piping *approved* for use in plumbing drainage systems to collect and convey untreated water for reuse. Vent piping *approved* for use in plumbing venting systems shall be utilized for vents in the graywater system. Collection and vent piping materials shall comply with Section 702.

1302.4.1 Installation. Collection piping conveying untreated water for reuse shall be installed in accordance with Section 704.

1302.4.2 Joints. Collection piping conveying untreated water for reuse shall utilize joints *approved* for use with the distribution piping and appropriate for the intended applications as specified in Section 705.

1302.4.3 Size. Collection piping conveying untreated water for reuse shall be sized in accordance with drainage sizing requirements specified in Section 710.

INTERNATIONAL CODE COUNCIL®
Copyright © 2019 ICC & NYSDOS. ALL RIGHTS RESERVED. Accessed by Lauren Gualdino (lgualdino@briarcliffmanor.org), (-) Order Number #100880972 on May 08, 2020 07:05 AM (PDT) pursuant to License Agreement with ICC & NYSDOS. No further reproduction, no

100880972

1302.4.4 Labeling and marking. Additional marking of collection piping conveying untreated water for reuse shall not be required beyond that required for sanitary drainage, waste and vent piping by Chapter 7.

1302.5 Filtration. Untreated water collected for reuse shall be filtered as required for the intended end use. Filters shall be provided with *access* for inspection and maintenance. Filters shall utilize a pressure gauge or other *approved* method to provide indication when a filter requires servicing or replacement. Filters shall be installed with shutoff valves immediately upstream and downstream to allow for isolation during maintenance.

1302.6 Disinfection and treatment. Where the intended application for nonpotable water collected on site for reuse requires disinfection or other treatment or both, it shall be disinfected as needed to ensure that the required water quality is delivered at the point of use. Nonpotable water collected on site containing untreated graywater shall be retained in collection reservoirs for not longer than 24 hours.

1302.6.1 Graywater used for fixture flushing. Graywater used for flushing water closets and urinals shall be disinfected and treated by an on-site water reuse treatment system complying with NSF 350.

1302.7 Storage tanks. Storage tanks utilized in on-site nonpotable water reuse systems shall comply with Sections 1301.9, 1302.7.1 and 1302.7.2.

1302.7.1 Location. Storage tanks shall be located with a minimum horizontal distance between various elements as indicated in Table 1302.7.1.

1302.7.2 Outlets. Outlets shall be located not less than 4 inches (102 mm) above the bottom of the storage tank and shall not skim water from the surface.

1302.8 Valves. Valves shall be supplied on on-site nonpotable water reuse systems in accordance with Sections 1302.8.1 and 1302.8.2.

1302.8.1 Bypass valve. One three-way diverter valve listed and labeled to NSF 50 or other *approved* device shall be installed on collection piping upstream of each storage tank, or drainfield, as applicable, to divert untreated on-site reuse sources to the sanitary *sewer* to allow servicing and inspection of the system. Bypass valves shall be installed downstream of fixture traps and vent connections. Bypass valves shall be marked to indicate the direction of flow, connection and storage tank or drainfield connection. Bypass valves shall be provided with *access* that allows for removal. Two shutoff valves shall not be installed to serve as a bypass valve.

1302.8.2 Backwater valve. One or more backwater valves shall be installed on each overflow and tank drain pipe. Backwater valves shall be in accordance with Section 714.

1302.9 Pumping and control system. Mechanical equipment including pumps, valves and filters shall be easily accessible and removable in order to perform repair, maintenance and cleaning. The minimum flow rate and flow pressure delivered by the pumping system shall be appropriate for the application and in accordance with Section 604.

1302.10 Water pressure-reducing valve or regulator. Where the water pressure supplied by the pumping system exceeds 80 psi (552 kPa) static, a pressure-reducing valve shall be installed to reduce the pressure in the nonpotable water distribution system piping to 80 psi (552 kPa) static or less. Pressure-reducing valves shall be specified and installed in accordance with Section 604.8.

1302.11 Distribution pipe. Distribution piping utilized in on-site nonpotable water reuse systems shall comply with Sections 1302.11.1 through 1302.11.3.

Exception: Irrigation piping located outside of the building and downstream of a backflow preventer.

1302.11.1 Materials, joints and connections. Distribution piping shall conform to the standards and requirements specified in Section 605.

1302.11.2 Design. On-site nonpotable water reuse distribution piping systems shall be designed and sized in accordance with Section 604 for the intended application.

1302.11.3 Marking. On-site nonpotable water distribution piping labeling and marking shall comply with Section 608.9.

1302.12 Tests and inspections. Tests and inspections shall be performed in accordance with Sections 1302.12.1 through 1302.12.6.

1302.12.1 Collection pipe and vent test. Drain, waste and vent piping used for on-site water reuse systems shall be tested in accordance with Section 312.

1302.12.2 Storage tank test. Storage tanks shall be tested in accordance with Section 1301.9.10.

TABLE 1302.7.1
LOCATION OF NONPOTABLE WATER REUSE STORAGE TANKS

ELEMENT	MINIMUM HORIZONTAL DISTANCE FROM STORAGE TANK (feet)
Critical root zone (CRZ) of protected trees	2
Lot line adjoining private lots	5
Seepage pits	5
Septic tanks	5
Water wells	50
Streams and lakes	50
Water service	5
Public water main	10

For SI: 1 foot = 304.8 mm.

INTERNATIONAL CODE COUNCIL®
Copyright © 2019 ICC & NYSDOS. ALL RIGHTS RESERVED. Accessed by Lauren Gualdino (lgualdino@briarcliffmanor.org), (-) Order Number #100880972 on May 08, 2020 07:05 AM (PDT) pursuant to License Agreement with ICC & NYSDOS. No further reproduction, no

100880972

1302.12.3 Water supply system test. The testing of makeup water supply piping and distribution piping shall be conducted in accordance with Section 312.5.

1302.12.4 Inspection and testing of backflow prevention assemblies. The testing of backflow preventers and backwater valves shall be conducted in accordance with Section 312.10.

1302.12.5 Inspection of vermin and insect protection. Inlets and vents to the system shall be inspected to verify that each is protected to prevent the entrance of insects and vermin into the storage tank and piping systems in accordance with Section 1301.7.

1302.12.6 Water quality test. The quality of the water for the intended application shall be verified at the point of use in accordance with the requirements of the jurisdiction.

1302.13 Operation and maintenance manuals. Operation and maintenance materials shall be supplied with nonpotable on-site water reuse systems in accordance with Sections 1302.13.1 through 1302.13.4.

1302.13.1 Manual. A detailed operations and maintenance manual shall be supplied in hardcopy form with all systems.

1302.13.2 Schematics. The manual shall include a detailed system schematic, and the locations and a list of all system components, including manufacturer and model number.

1302.13.3 Maintenance procedures. The manual shall provide a schedule and procedures for all system components requiring periodic maintenance. Consumable parts, including filters, shall be noted along with part numbers.

1302.13.4 Operations procedures. The manual shall include system startup and shutdown procedures. The manual shall include detailed operating procedures for the system.

SECTION 1303
NONPOTABLE RAINWATER COLLECTION AND DISTRIBUTION SYSTEMS

1303.1 General. The provisions of Section 1303 shall govern the construction, installation, alteration and repair of rainwater collection and conveyance systems for the collection, storage, treatment and distribution of rainwater for nonpotable applications, as permitted by the jurisdiction.

1303.1.1 Fire protection systems. The storage, treatment and distribution of nonpotable water to be used for fire protection systems shall be in accordance with the *Fire Code of New York State*.

1303.2 Collection surface. Rainwater shall be collected only from above-ground impervious roofing surfaces constructed from *approved* materials and where *approved*, vehicular parking or pedestrian walking surfaces.

1303.3 Debris excluders. Downspouts and leaders shall be connected to a debris excluder or equivalent device that is designed to remove leaves, sticks, pine needles and similar debris to prevent such from entering the storage tank.

1303.4 First-flush diverter. First-flush diverters shall operate automatically and shall not rely on manually operated valves or devices. Diverted rainwater shall not be drained to the roof surface, and shall be discharged in a manner consistent with the storm water runoff requirements of the jurisdiction. First-flush diverters shall be provided with *access* for maintenance and service.

1303.5 Roof gutters and downspouts. Gutters and downspouts shall be constructed of materials that are compatible with the collection surface and the rainwater quality for the desired end use. Joints shall be water tight.

1303.5.1 Slope. Roof gutters, leaders and rainwater collection piping shall slope continuously toward collection inlets. Gutters and downspouts shall have a slope of not less than $^1/_8$ inch per foot (10.4 mm/m) along their entire length and shall not permit the collection or pooling of water at any point.

Exception: Siphonic drainage systems installed in accordance with the manufacturer's instructions shall not be required to have a slope.

1303.5.2 Size. Gutters and downspouts shall be installed and sized in accordance with Section 1106.6 and local rainfall rates.

1303.5.3 Cleanouts. Cleanouts shall be provided in the water conveyance system to allow *access* to all filters, flushes, pipes and downspouts.

1303.6 Drainage. Water drained from the roof washer or debris excluder shall not be drained to the sanitary sewer. Such water shall be diverted from the storage tank and discharge in a location that will not cause erosion or damage to property in accordance with the *Building Code of New York State*. Roof washers and debris excluders shall be provided with an automatic means of self-draining between rain events, and shall not drain onto roof surfaces.

1303.7 Collection pipe. Rainwater collection and conveyance systems shall utilize drainage piping *approved* for use within plumbing drainage systems to collect and convey captured rainwater. Vent piping *approved* for use within plumbing venting systems shall be utilized for vents within the rainwater system. Collection and vent piping materials shall comply with Section 702.

1303.7.1 Installation. Collection piping conveying captured rainwater shall be installed in accordance with Section 704.

1303.7.2 Joints. Collection piping conveying captured rainwater shall utilize joints *approved* for use with the distribution piping and appropriate for the intended applications as specified in Section 705.

1303.7.3 Size. Collection piping conveying captured rainwater shall be sized in accordance with drainage sizing requirements specified in Section 710.

1303.7.4 Marking. Additional marking of collection piping conveying captured rainwater for reuse shall not be required beyond that required for sanitary drainage, waste and vent piping by Chapter 7.

1303.8 Filtration. Collected rainwater shall be filtered as required for the intended end use. Filters shall be provided

INTERNATIONAL CODE COUNCIL®
Copyright © 2019 ICC & NYSDOS. ALL RIGHTS RESERVED. Accessed by Lauren Gualdino (lgualdino@briarcliffmanor.org), (-) Order Number #100880972 on May 08, 2020 07:05 AM (PDT) pursuant to License Agreement with ICC & NYSDOS. No further reproduction, no

100880972

with *access* for inspection and maintenance. Filters shall utilize a pressure gauge or other *approved* method to provide indication when a filter requires servicing or replacement. Filters shall be installed with shutoff valves installed immediately upstream and downstream to allow for isolation during maintenance.

1303.9 Disinfection. Where the intended application for rainwater requires disinfection or other treatment or both, it shall be disinfected as needed to ensure that the required water quality is delivered at the point of use. Where chlorine is used for disinfection or treatment, water shall be tested for residual chlorine in accordance with ASTM D1253. The levels of residual chlorine shall not exceed that allowed for the intended use in accordance with the requirements of the jurisdiction.

1303.10 Storage tanks. Storage tanks utilized in nonpotable rainwater collection and conveyance systems shall comply with Sections 1301.9 and 1303.10.1 through 1303.10.3.

1303.10.1 Location. Storage tanks shall be located with a minimum horizontal distance between various elements as indicated in Table 1303.10.1.

1303.10.2 Inlets. Storage tank inlets shall be designed to introduce collected rainwater into the tank with minimum turbulence and shall be located and designed to avoid agitating the contents of the storage tank.

1303.10.3 Outlets. Outlets shall be located not less than 4 inches (102 mm) above the bottom of the storage tank and shall not skim water from the surface.

1303.11 Valves. Valves shall be supplied on rainwater collection and conveyance systems in accordance with Section 1303.11.1.

1303.11.1 Backwater valve. Backwater valves shall be installed on each overflow and tank drain pipe. Backwater valves shall be in accordance with Section 714.

1303.12 Pumping and control system. Mechanical equipment including pumps, valves and filters shall be provided with *access* that allows for removal in order to perform repair, maintenance and cleaning. The minimum flow rate and flow pressure delivered by the pumping system shall be appropriate for the application and in accordance with Section 604.

1303.13 Water pressure-reducing valve or regulator. Where the water pressure supplied by the pumping system exceeds 80 psi (552 kPa) static, a pressure-reducing valve shall be installed to reduce the pressure in the rainwater distribution system piping to 80 psi (552 kPa) static or less. Pressure-reducing valves shall be specified and installed in accordance with Section 604.8.

1303.14 Distribution pipe. Distribution piping utilized in rainwater collection and conveyance systems shall comply with Sections 1303.14.1 through 1303.14.3.

Exception: Irrigation piping located outside of the building and downstream of a backflow preventer.

1303.14.1 Materials, joints and connections. Distribution piping shall conform to the standards and requirements specified in Section 605 for nonpotable water.

1303.14.2 Design. Distribution piping systems shall be designed and sized in accordance with Section 604 for the intended application.

1303.14.3 Marking. Nonpotable rainwater distribution piping labeling and marking shall comply with Section 608.9.

1303.15 Tests and inspections. Tests and inspections shall be performed in accordance with Sections 1303.15.1 through 1303.15.9.

1303.15.1 Roof gutter inspection and test. Roof gutters shall be inspected to verify that the installation and slope is in accordance with Section 1303.5.1. Gutters shall be tested by pouring not less than 1 gallon (3.8 l) of water into the end of the gutter opposite the collection point. The gutter being tested shall not leak and shall not retain standing water.

1303.15.2 First-flush diverter test. First-flush diverters shall be tested by introducing water into the collection system upstream of the diverter. Proper diversion of the first amount of water shall be in accordance with the requirements of Section 1303.4.

1303.15.3 Collection pipe and vent test. Drain, waste and vent piping used for rainwater collection and conveyance systems shall be tested in accordance with Section 312.

1303.15.4 Storage tank test. Storage tanks shall be tested in accordance with Section 1301.9.10.

1303.15.5 Water supply system test. The testing of makeup water supply piping and distribution piping shall be conducted in accordance with Section 312.5.

1303.15.6 Inspection and testing of backflow prevention assemblies. The testing of backflow preventers and backwater valves shall be conducted in accordance with Section 312.10.

1303.15.7 Inspection of vermin and insect protection. Inlets and vents to the system shall be inspected to verify that each is protected to prevent the entrance of insects and

TABLE 1303.10.1
LOCATION OF RAINWATER STORAGE TANKS

ELEMENT	MINIMUM HORIZONTAL DISTANCE FROM STORAGE TANK (feet)
Critical root zone (CRZ) of protected trees	2
Lot line adjoining private lots	5
Seepage pits	5
Septic tanks	5

For SI: 1 foot = 304.8 mm.

INTERNATIONAL CODE COUNCIL®
Copyright © 2019 ICC & NYSDOS. ALL RIGHTS RESERVED. Accessed by Lauren Gualdino (lgualdino@briarcliffmanor.org), (-) Order Number #100880972 on May 08, 2020 07:05 AM (PDT) pursuant to License Agreement with ICC & NYSDOS. No further reproduction, no

100880972

vermin into the storage tank and piping systems in accordance with Section 1301.7.

1303.15.8 Water quality test. The quality of the water for the intended application shall be verified at the point of use in accordance with the requirements of the jurisdiction.

1303.15.9 Collected raw rainwater quality. ASTM E2727 shall be used to determine what, if any, site conditions impact the quality of collected raw rainwater and whether those site conditions require treatment of the raw water for the intended end use or make the water unsuitable for specific end uses.

1303.16 Operation and maintenance manuals. Operation and maintenance manuals shall be supplied with rainwater collection and conveyance systems in accordance with Sections 1303.16.1 through 1303.16.4.

1303.16.1 Manual. A detailed operations and maintenance manual shall be supplied in hardcopy form with all systems.

1303.16.2 Schematics. The manual shall include a detailed system schematic, and locations and a list of all system components, including manufacturer and model number.

1303.16.3 Maintenance procedures. The manual shall provide a maintenance schedule and procedures for all system components requiring periodic maintenance. Consumable parts, including filters, shall be noted along with part numbers.

1303.16.4 Operations procedures. The manual shall include system startup and shutdown procedures, as well as detailed operating procedures.

SECTION 1304
RECLAIMED WATER SYSTEMS

1304.1 General. The provisions of this section shall govern the construction, installation, alteration and repair of systems supplying nonpotable reclaimed water.

1304.2 Water pressure-reducing valve or regulator. Where the reclaimed water pressure supplied to the building exceeds 80 psi (552 kPa) static, a pressure-reducing valve shall be installed to reduce the pressure in the reclaimed water distribution system piping to 80 psi (552 kPa) static or less. Pressure-reducing valves shall be specified and installed in accordance with Section 604.8.

1304.3 Reclaimed water systems. The design of the reclaimed water systems shall conform to *accepted engineering practice*.

1304.3.1 Distribution pipe. Distribution piping shall comply with Sections 1304.3.1.1 through 1304.3.1.3.

Exception: Irrigation piping located outside of the building and downstream of a backflow preventer.

1304.3.1.1 Materials, joints and connections. Distribution piping conveying reclaimed water shall conform to standards and requirements specified in Section 605 for nonpotable water.

1304.3.1.2 Design. Distribution piping systems shall be designed and sized in accordance with Section 604 for the intended application.

1304.3.1.3 Labeling and marking. Nonpotable distribution piping labeling and marking shall comply with Section 608.9.

1304.4 Tests and inspections. Tests and inspections shall be performed in accordance with Sections 1304.4.1 and 1304.4.2.

1304.4.1 Water supply system test. The testing of makeup water supply piping and reclaimed water distribution piping shall be conducted in accordance with Section 312.5.

1304.4.2 Inspection and testing of backflow prevention assemblies. The testing of backflow preventers shall be conducted in accordance with Section 312.10.

INTERNATIONAL CODE COUNCIL®
Copyright © 2019 ICC & NYSDOS. ALL RIGHTS RESERVED. Accessed by Lauren Gualdino (lgualdino@briarcliffmanor.org), (-) Order Number #100880972 on May 08, 2020 07:05 AM (PDT) pursuant to License Agreement with ICC & NYSDOS. No further reproduction, no

INTERNATIONAL CODE COUNCIL®
Copyright © 2019 ICC & NYSDOS. ALL RIGHTS RESERVED. Accessed by Lauren Gualdino (lgualdino@briarcliffmanor.org), (-) Order Number #100880972 on May 08, 2020 07:05 AM (PDT) pursuant to License Agreement with ICC & NYSDOS. No further reproduction, no

100880972

CHAPTER 14

SUBSURFACE LANDSCAPE IRRIGATION SYSTEMS

SECTION 1401
GENERAL

1401.1 Scope. The provisions of this chapter shall govern the materials, design, construction and installation of subsurface landscape irrigation systems connected to nonpotable water from on-site water reuse systems.

1401.2 Materials. Above-ground drain, waste and vent piping for subsurface landscape irrigation systems shall conform to one of the standards listed in Table 702.1. Subsurface landscape irrigation, underground building drainage and vent pipe shall conform to one of the standards listed in Table 702.2.

1401.3 Tests. Drain, waste and vent piping for subsurface landscape irrigation systems shall be tested in accordance with Section 312.

[NY] 1401.4 Inspections. Subsurface landscape irrigation systems shall be inspected in accordance with Section 105.3.

1401.5 Disinfection. Disinfection shall not be required for on-site nonpotable water reuse for subsurface landscape irrigation systems.

1401.6 Coloring. On-site nonpotable water reuse for subsurface landscape irrigation systems shall not be required to be dyed.

SECTION 1402
SYSTEM DESIGN AND SIZING

1402.1 Sizing. The system shall be sized in accordance with the sum of the output of all water sources connected to the subsurface irrigation system. Where graywater collection piping is connected to subsurface landscape irrigation systems, graywater output shall be calculated according to the gallons-per-day-per-occupant number based on the type of fixtures connected. The graywater discharge shall be calculated by the following equation:

$$C = A \times B \qquad \textbf{(Equation 14-1)}$$

where:

A = Number of occupants:

Residential—Number of occupants shall be determined by the actual number of occupants, but not less than two occupants for one bedroom and one occupant for each additional bedroom.

Commercial—Number of occupants shall be determined by the *Building Code of New York State*.

B = Estimated flow demands for each occupant:

Residential—25 gallons per day (94.6 lpd) per occupant for showers, bathtubs and lavatories and 15 gallons per day (56.7 lpd) per occupant for clothes washers or laundry trays.

Commercial—Based on type of fixture or water use records minus the discharge of fixtures other than those discharging graywater.

C = Estimated graywater discharge based on the total number of occupants.

1402.2 Percolation tests. The permeability of the soil in the proposed absorption system shall be determined by percolation tests or permeability evaluation.

1402.2.1 Percolation tests and procedures. Not fewer than three percolation tests in each system area shall be conducted. The holes shall be spaced uniformly in relation to the bottom depth of the proposed absorption system. More percolation tests shall be made where necessary, depending on system design.

1402.2.1.1 Percolation test hole. The test hole shall be dug or bored. The test hole shall have vertical sides and a horizontal dimension of 4 inches to 8 inches (102 mm to 203 mm). The bottom and sides of the hole shall be scratched with a sharp-pointed instrument to expose the natural soil. Loose material shall be removed from the hole and the bottom shall be covered with 2 inches (51 mm) of gravel or coarse sand.

1402.2.1.2 Test procedure, sandy soils. The hole shall be filled with clear water to not less than 12 inches (305 mm) above the bottom of the hole for tests in sandy soils. The time for this amount of water to seep away shall be determined, and this procedure shall be repeated if the water from the second filling of the hole seeps away in 10 minutes or less. The test shall proceed as follows: Water shall be added to a point not more than 6 inches (152 mm) above the gravel or coarse sand. Thereupon, from a fixed reference point, water levels shall be measured at 10-minute intervals for a period of 1 hour. Where 6 inches (152 mm) of water seeps away in less than 10 minutes, a shorter interval between measurements shall be used, but in no case shall the water depth exceed 6 inches (152 mm). Where 6 inches (152 mm) of water seeps away in less than 2 minutes, the test shall be stopped and a rate of less than 3 minutes per inch (7.2 s/mm) shall be reported. The final water level drop shall be used to calculate the percolation rate. Soils not meeting the requirements of this section shall be tested in accordance with Section 1402.2.1.3.

1402.2.1.3 Test procedure, other soils. The hole shall be filled with clear water, and a minimum water depth of 12 inches (305 mm) shall be maintained above the bottom of the hole for a 4-hour period by refilling whenever necessary or by use of an automatic siphon. Water remaining in the hole after 4 hours shall not be removed. Thereafter, the soil shall be allowed to swell not less than 16 hours or more than 30 hours. Immediately after the soil swelling period, the measurements for determining the percolation rate shall be made as follows: any soil sloughed into the hole shall be removed and the water level shall be adjusted to 6

INTERNATIONAL CODE COUNCIL®
Copyright © 2019 ICC & NYSDOS. ALL RIGHTS RESERVED. Accessed by Lauren Gualdino (lgualdino@briarcliffmanor.org), (-) Order Number #100880972 on May 08, 2020 07:05 AM (PDT) pursuant to License Agreement with ICC & NYSDOS. No further reproduction, no

100880972

inches (152 mm) above the gravel or coarse sand. Thereupon, from a fixed reference point, the water level shall be measured at 30-minute intervals for a period of 4 hours, unless two successive water level drops do not vary by more than $^{1}/_{16}$ inch (1.59 mm). Not fewer than three water level drops shall be observed and recorded. The hole shall be filled with clear water to a point not more than 6 inches (152 mm) above the gravel or coarse sand whenever it becomes nearly empty. Adjustments of the water level shall not be made during the three measurement periods except to the limits of the last measured water level drop. Where the first 6 inches (152 mm) of water seeps away in less than 30 minutes, the time interval between measurements shall be 10 minutes and the test run for 1 hour. The water depth shall not exceed 5 inches (127 mm) at any time during the measurement period. The drop that occurs during the final measurement period shall be used in calculating the percolation rate.

1402.2.1.4 Mechanical test equipment. Mechanical percolation test equipment shall be of an *approved* type.

1402.2.2 Permeability evaluation. Soil shall be evaluated for estimated percolation based on structure and texture in accordance with accepted soil evaluation practices. Borings shall be made in accordance with Section 1402.2.1.1 for evaluating the soil.

1402.3 Subsurface landscape irrigation site location. The surface grade of all soil absorption systems shall be located at a point lower than the surface grade of any water well or reservoir on the same or adjoining lot. Where this is not possible, the site shall be located so surface water drainage from the site is not directed toward a well or reservoir. The soil absorption system shall be located with a minimum horizontal distance between various elements as indicated in Table 1402.3. Private sewage disposal systems in compacted areas, such as parking lots and driveways, are prohibited. Surface water shall be diverted away from any soil absorption site on the same or neighboring lots.

SECTION 1403
INSTALLATION

1403.1 Installation. Absorption systems shall be installed in accordance with Sections 1403.1.1 through 1403.1.5 to provide landscape irrigation without surfacing of water.

1403.1.1 Absorption area. The total absorption area required shall be computed from the estimated daily graywater discharge and the design-loading rate based on the percolation rate for the site. The required absorption area equals the estimated graywater discharge divided by the design-loading rate from Table 1403.1.1.

1403.1.2 Seepage trench excavations. Seepage trench excavations shall be not less than 1 foot (304 mm) in width and not greater than 5 feet (1524 mm) in width. Trench excavations shall be spaced not less than 2 feet (610 mm) apart. The soil absorption area of a seepage trench shall be computed by using the bottom of the trench area (width) multiplied by the length of pipe. Individual seepage trenches shall be not greater than 100 feet (30 480 mm) in *developed length*.

TABLE 1402.3
LOCATION OF SUBSURFACE IRRIGATION SYSTEM

ELEMENT	MINIMUM HORIZONTAL DISTANCE	
	Storage tank (feet)	Irrigation disposal field (feet)
Buildings	5	2
Lot line adjoining private property	5	5
Water wells	50	100
Streams and lakes	50	50
Seepage pits	5	5
Septic tanks	0	5
Water service	5	5
Public water main	10	10

For SI: 1 foot = 304.8 mm.

TABLE 1403.1.1
DESIGN LOADING RATE

PERCOLATION RATE (minutes per inch)	DESIGN LOADING FACTOR (gallons per square foot per day)
0 to less than 10	1.2
10 to less than 30	0.8
30 to less than 45	0.72
45 to 60	0.4

For SI: 1 minute per inch = min/25.4 mm, 1 gallon per square foot = 40.7 L/m^2.

INTERNATIONAL CODE COUNCIL®
Copyright © 2019 ICC & NYSDOS. ALL RIGHTS RESERVED. Accessed by Lauren Gualdino (lgualdino@briarcliffmanor.org), (-) Order Number #100880972 on May 08, 2020 07:05 AM (PDT) pursuant to License Agreement with ICC & NYSDOS. No further reproduction, no

100880972

1403.1.3 Seepage bed excavations. Seepage bed excavations shall be not less than 5 feet (1524 mm) in width and have more than one distribution pipe. The absorption area of a seepage bed shall be computed by using the bottom of the trench area. Distribution piping in a seepage bed shall be uniformly spaced not greater than 5 feet (1524 mm) and not less than 3 feet (914 mm) apart, and greater than 3 feet (914 mm) and not less than 1 foot (305 mm) from the sidewall or headwall.

1403.1.4 Excavation and construction. The bottom of a trench or bed excavation shall be level. Seepage trenches or beds shall not be excavated where the soil is so wet that such material rolled between the hands forms a soil wire. Smeared or compacted soil surfaces in the sidewalls or bottom of seepage trench or bed excavations shall be scarified to the depth of smearing or compaction and the loose material removed. Where rain falls on an open excavation, the soil shall be left until sufficiently dry so a soil wire will not form when soil from the excavation bottom is rolled between the hands. The bottom area shall then be scarified and loose material removed.

1403.1.5 Aggregate and backfill. Not less than 6 inches in depth of aggregate, ranging in size from $^1/_2$ to $2^1/_2$ inches (12.7 mm to 64 mm), shall be laid into the trench below the distribution piping elevation. The aggregate shall be evenly distributed not less than 2 inches (51 mm) in depth over the top of the distribution pipe. The aggregate shall be covered with *approved* synthetic materials or 9 inches (229 mm) of uncompacted marsh hay or straw. Building paper shall not be used to cover the aggregate. Not less than 9 inches (229 mm) of soil backfill shall be provided above the covering.

1403.2 Distribution piping. Distribution piping shall be not less than 3 inches (76 mm) in diameter. Materials shall comply with Table 1403.2. The top of the distribution pipe shall be not less than 8 inches (203 mm) below the original surface. The slope of the distribution pipes shall be not less than 2 inches (51 mm) and not greater than 4 inches (102 mm) per 100 feet (30 480 mm).

1403.2.1 Joints. Joints in distribution pipe shall be made in accordance with Section 705 of this code.

TABLE 1403.2
DISTRIBUTION PIPE

MATERIAL	STANDARD
Polyethylene (PE) plastic pipe	ASTM F405
Polyvinyl chloride (PVC) plastic pipe	ASTM D2729
Polyvinyl chloride (PVC) plastic pipe with a 3.5-inch O.D. and solid cellular core or composite wall	ASTM F1488

For SI: 1 inch=25.4 mm.

INTERNATIONAL CODE COUNCIL®
Copyright © 2019 ICC & NYSDOS. ALL RIGHTS RESERVED. Accessed by Lauren Gualdino (lgualdino@briarcliffmanor.org), (-) Order Number #100880972 on May 08, 2020 07:05 AM (PDT) pursuant to License Agreement with ICC & NYSDOS. No further reproduction, no

100880972

INTERNATIONAL CODE COUNCIL®
Copyright © 2019 ICC & NYSDOS. ALL RIGHTS RESERVED. Accessed by Lauren Gualdino (lgualdino@briarcliffmanor.org), (-) Order Number #100880972 on May 08, 2020 07:05 AM (PDT) pursuant to License Agreement with ICC & NYSDOS. No further reproduction, no

100880972

CHAPTER 15
REFERENCED STANDARDS

User note:

This chapter lists the standards that are referenced in various sections of this document. The standards are listed herein by the promulgating agency of the standard, the standard identification, the effective date and title, and the section or sections of this document that reference the standard. The application of the referenced standards shall be as specified in Section 102.9.

**Denotes standards that have been incorporated by reference into 19 NYCRR Part 1222.*

ANSI

American National Standards Institute
25 West 43rd Street, 4th Floor
New York, NY 10036

A118.10—99: Specifications for Load Bearing, Bonded, Waterproof Membranes for Thin Set Ceramic Tile and Dimension Stone Installation
421.5.2.5, 421.5.2.6

Z21.22—99 (R2003) Relief Valves for Hot Water Supply Systems with Addenda Z21.22a—2000 (R2003) and Z21.22b—2001 (R2003)
504.2, 504.4, 504.4.1

ASHRAE

ASHRAE
1791 Tullie Circle NE
Atlanta, GA 30329

ASHRAE 18—2008 (RA13): Method of Testing for Rating Drinking-Water Coolers with Self-contained Mechanical Refrigeration (ANSI/ASHRAE Approved)
410.1

ASME

American Society of Mechanical Engineers
Two Park Avenue
New York, NY 10016-5990

A112.1.2—2012: Air Gaps in Plumbing Systems (For Plumbing Fixtures and Water Connection Receptors)
406.1, 409.2, Table 608.1, 608.14.1

A112.1.3—2000 (R2015): Air Gap Fittings for Use with Plumbing Fixtures, Appliances and Appurtenances
406.1, 409.2, Table 608.1, 608.14.1, 1102.6

A112.3.1—2007 (R2012): Stainless Steel Drainage Systems for Sanitary, DWV, Storm and Vacuum Applications Above and Below Ground
413.1, Table 702.1, Table 702.2, Table 702.3, Table 702.4, Table 1102.4, Table 1102.5, 1102.6, Table 1102.7

ASME A112.3.4—2013/CSA B45.9—2013: Macerating Toilet Systems and Related Components
405.5, 712.4.1

A112.4.1—2009: Water Heater Relief Valve Drain Tubes
504.6

A112.4.2—2015/CSA B45.16—15: Water Closet Personal Hygiene Devices
412.9

A112.4.3—1999 (R2010): Plastic Fittings for Connecting Water Closets to the Sanitary Drainage System
405.4

INTERNATIONAL CODE COUNCIL®
Copyright © 2019 ICC & NYSDOS. ALL RIGHTS RESERVED. Accessed by Lauren Gualdino (lgualdino@briarcliffmanor.org), (-) Order Number #100880972 on May 08, 2020 07:05 AM (PDT) pursuant to License Agreement with ICC & NYSDOS. No further reproduction, no

100880972

ASME—continued

A112.4.14—2004 (R2016): Manually Operated, Quarter-turn Shutoff Valves for Use in Plumbing Systems
Table 605.7

A112.6.2—2000 (R2016): Framing-affixed Supports for Off-the-floor Water Closets with Concealed Tanks
405.4.3

A112.6.3—2001 (R2016): Floor and Trench Drains
413.1

A112.6.4—2003 (R2012): Roof, Deck, and Balcony Drains
1102.6

A112.6.7—2010 (R2015): Sanitary Floor Sinks
414.1

A112.6.9—2005 (R2015): Siphonic Roof Drains
1107.1

A112.14.1—2003 (R2012): Backwater Valves
714.2

A112.14.3—2016: Grease Interceptors
1003.3.5

A112.14.4—2001 (R2012): Grease Removal Devices
1003.3.5

A112.14.6—2010 (R2015): FOG (Fats, Oils and Greases) Disposal Systems
1003.3, 1003.3.5, 1003.3.7

A112.18.1—2017/CSA B125.1—2017: Plumbing Supply Fittings
412.1, 412.2, 412.3, 412.4, 412.6, 412.8, 605.7, 607.4, 608.2

A112.18.2—2015/CSA B125.2—15: Plumbing Waste Fittings
412.1.2

A112.18.3—2002 (R2012): Performance Requirements for Backflow Protection Devices and Systems in Plumbing Fixture Fittings
412.2, 412.6

A112.18.6—2017/CSA B125.6—17: Flexible Water Connectors
605.6

A112.18.9—2011: Protectors/Insulators for Exposed Waste and Supplies on Accessible Fixtures
404.3

A112.19.1—2013/CSA B45.2—2013: Enameled Cast Iron and Enameled Steel Plumbing Fixtures
407.1, 410.1, 418.1, 419.1, 422.1

A112.19.2—2013/CSA B45.1—13: Ceramic Plumbing Fixtures
401.2, 405.10, 407.1, 408.1, 410.1, 418.1, 419.1, 421.1, 422.1, 424.1, 425.1

A112.19.3—2008/CSA B45.4—08 (R2013): Stainless Steel Plumbing Fixtures
405.9, 407.1, 418.1, 419.1, 425.1

A112.19.5—2017/CSA B45.15—2017: Flush Valves and Spuds for Water-closets, Urinals, and Tanks
415.4

A112.19.7M—2017/CSA B45.10—17: Hydromassage Bathtub Systems
426.1, 426.4

A112.19.12—2014: Wall Mounted and Pedestal Mounted, Adjustable, Elevating, Tilting and Pivoting Lavatory, Sink and Shampoo Bowl Carrier Systems and Drain Waste Systems
418.3, 419.4

A112.19.14-2013: Six-liter Water Closets Equipped with a Dual Flushing Device
425.1

A112.19.15—2012: Bathtub/Whirlpool Bathtubs with Pressure Sealed Doors
407.4, 426.6

A112.19.19—2006 (R2011): Vitreous China Nonwater Urinals
424.1

A112.21.3-1985(R2007): Hydrants for Utility and Maintenance Use
Table 608.1, 608.14.6

A112.36.2M—1991(R2012): Cleanouts
708.1.10.2

INTERNATIONAL CODE COUNCIL®
Copyright © 2019 ICC & NYSDOS. ALL RIGHTS RESERVED. Accessed by Lauren Gualdino (lgualdino@briarcliffmanor.org), (-) Order Number #100880972 on May 08, 2020 07:05 AM (PDT) pursuant to License Agreement with ICC & NYSDOS. No further reproduction, no

100880972

ASME—continued

ASSE 1002—2015/ASME A112.1002—2015/CSA B125.12—15: Anti-Siphon Fill Valves
415.3.1, Table 608.1

ASSE 1016—2017/ASME A112.1016—2017/CSA B125.16—2017: Performance Requirements for Individual Thermostatic, Pressure Balancing and Combination Control Valves for Individual Fixture Fittings
412.3, 412.4, 607.4

ASSE 1037—2015/ASME A112.1037—2015/CSA B125.37—: Pressurized Flushing Devices for Plumbing Fixtures
415.2

ASSE 1070—2015/ASME A112.1070—2015/CSA B125.1070—15: Water Temperature Limiting Devices
408.3, 412.5, 412.10, 419.5, 423.3, 607.1.2

B1.20.1—2013: Pipe Threads, General Purpose (inch)
605.10.3, 605.12.4, 605.14.3, 605.17.1, 605.22.4, 705.2.3, 705.5.4, 705.8.1, 705.10.3, 705.19.1

B16.3—2016: Malleable Iron Threaded Fittings Classes 150 and 300
Table 1102.7

B16.4—2016: Gray Iron Threaded Fittings Classes 125 and 250
Table 605.5, Table 702.4, Table 1102.7

B16.9—2012: Factory-made Wrought Steel Buttwelding Fittings
Table 605.5, Table 702.4, Table 1102.7

B16.11—2016: Forged Fittings, Socket-welding and Threaded
Table 605.5, Table 702.4, Table 1102.7

B16.12—2009 (R2014): Cast-iron Threaded Drainage Fittings
Table 702.4, Table 1102.7

B16.15—2013: Cast Alloy Threaded Fittings: Class 125 and 250
Table 605.5, Table 702.4, Table 1102.7

B16.18—2012: Cast Copper Alloy Solder Joint Pressure Fittings
Table 605.5, Table 702.4, Table 1102.7

B16.22—2013: Wrought Copper and Copper Alloy Solder Joint Pressure Fittings
Table 605.5, Table 702.4, Table 1102.7

B16.23—2016: Cast Copper Alloy Solder Joint Drainage Fittings DWV
Table 702.4, Table 1102.7

B16.26—2016: Cast Copper Alloy Fittings for Flared Copper Tubes
Table 605.5, Table 702.4, Table 1102.7

B16.28—1994: Wrought Steel Buttwelding Short Radius Elbows and Returns
Table 605.5, Table 702.4, Table 1102.7

B16.29—2012: Wrought Copper and Wrought Copper Alloy Solder Joint Drainage Fittings (DWV)
Table 702.4, Table 1102.7

B16.34—2015: Valves Flanged, Threaded and Welding End
Table 605.7

B16.51—2013: Copper and Copper Alloy Press-connect Pressure Fittings
Table 605.5

ASPE

American Society of Plumbing Engineers
6400 Shafer Ct., Suite 350
Rosemont, IL 60018-4914

45—2013: Siphonic Roof Drainage Systems
1107.1

ASSE

ASSE International
18927 Hickory Creek Drive, Suite 220
Mokena, IL 60448

1001—2016: Performance Requirements for Atmospheric Type Vacuum Breakers
415.2, Table 608.1, 608.14.6, 608.17.4.1

INTERNATIONAL CODE COUNCIL®
Copyright © 2019 ICC & NYSDOS. ALL RIGHTS RESERVED. Accessed by Lauren Gualdino (lgualdino@briarcliffmanor.org), (-) Order Number #100880972 on May 08, 2020 07:05 AM (PDT) pursuant to License Agreement with ICC & NYSDOS. No further reproduction, no

100880972

ASSE—continued

ASSE 1002—2015/ASME A112.1002—2015/CSA B125.12—15: Antisiphon Fill Valves
415.3.1, Table 608.1

1003—09: Performance Requirements for Water Pressure Reducing Valves
604.8

1004—2016: Performance Requirements for Commercial Dishwashing Machines
409.1

1005—99: Performance Requirements for Water Heater Drain Valves
501.3

1008—06: Performance Requirements for Plumbing Aspects of Food Waste Disposer Units
413.1

1010—04: Performance Requirements for Water Hammer Arresters
604.9

1011—2016: Performance Requirements for Hose Connection Vacuum Breakers
Table 608.1, 608.14.6

1012—09: Performance Requirements for Backflow Preventers with Intermediate Atmospheric Vent
Table 608.1, 608.14.3, 608.17.2, 608.17.10

1013—2017: Performance Requirements for Reduced Pressure Principle Backflow Preventers and Reduced Pressure Principle Fire Protection Backflow Preventers
Table 608.1, 608.14.2, 608.17.2

1015—2017: Performance Requirements for Double Check Backflow Prevention Assemblies and Double Check Fire Protection Backflow Prevention Assemblies
Table 608.1, 608.14.7

ASSE 1016—2017/ASME A112.1016—2017/CSA B125.16—2017: Performance Requirements for Individual Thermostatic, Pressure Balancing and Combination Control Valves for Individual Fixture Fittings
412.3, 412.4, 607.4

1017—2010: Performance Requirements for Temperature Actuated Mixing Valves for Hot Water Distribution Systems
501.2, 613.1

1018—2017: Performance Requirements for Trap Seal Primer Valves; Potable Water Supplied
1002.4.1.2

1019—2016: Performance Requirements for Vacuum Breaker Wall Hydrants, Freeze Resistant, Automatic Draining Type
Table 608.1, 608.14.6

1020—04: Performance Requirements for Pressure Vacuum Breaker Assembly
Table 608.1, 608.14.5

1022—2016: Performance Requirements for Backflow Preventer for Beverage Dispensing Equipment
Table 608.1, 608.17.1.1, 608.17.1.2

1024—2016: Performance Requirements for Dual Check Valve Type Backflow Preventers, Anti-siphon-type, Residential Applications
605.3.1, Table 608.1, 608.14.9, 608.17.1.2

1035—08: Performance Requirements for Laboratory Faucet Backflow Preventers
Table 608.1, 608.14.6

ASSE 1037—2015/ASME A112.1037—2015/CSA B125.37—15: Pressurized Flushing Devices for Plumbing Fixtures
415.2

1044—2010: Performance Requirements for Trap Seal Primer Devices Drainage Types and Electronic Design Types
1002.4.1.3

1047—2017: Performance Requirements for Reduced Pressure Detector Fire Protection Backflow Prevention Assemblies
Table 608.1, 608.14.2

1048—2017: Performance Requirements for Double Check Detector Fire Protection Backflow Prevention Assemblies
Table 608.1, 608.14.7

1049—2009: Performance Requirements for Individual and Branch Type Air Admittance Valves for Chemical Waste Systems
901.3, 918.8

1050—2009: Performance Requirements for Stack Air Admittance Valves for Sanitary Drainage Systems
918.1

INTERNATIONAL CODE COUNCIL®
Copyright © 2019 ICC & NYSDOS. ALL RIGHTS RESERVED. Accessed by Lauren Gualdino (lgualdino@briarcliffmanor.org), (-) Order Number #100880972 on May 08, 2020 07:05 AM (PDT) pursuant to License Agreement with ICC & NYSDOS. No further reproduction, no

100880972

ASSE—continued

1051—2009: Performance Requirements for Individual and Branch Type Air Admittance Valves for Sanitary Drainage Systems-fixture and Branch Devices

918.1

1052—2016: Performance Requirements for Hose Connection Backflow Preventers

Table 608.1, 608.14.6

1055—2016: Performance Requirements for Chemical Dispensing Systems

608.14.8

1056—2013: Performance Requirements for Spill Resistant Vacuum Breaker

Table 608.1, 608.14.5

1060—2016: Performance Requirements for Outdoor Enclosures for Fluid Conveying Components

608.15.1

1061—2015: Performance Requirements for Push Fit Fittings

Table 605.5, 604.13.7, 605.14.4, 605.16.3

1062—2016: Performance Requirements for Temperature Actuated, Flow Reduction (TAFR) Valves to Individual Supply Fittings

424.7

1066—2016: Performance Requirements for Individual Pressure Balancing In-line Valves for Individual Fixture Fittings

604.11

1069—05: Performance Requirements for Automatic Temperature Control Mixing Valves

412.4

ASSE 1070—2015/ASME A112.1070—2015/CSA B125.70—15: Water-temperature Limiting Devices

408.3, 419.5, 423.3, 424.5, 607.1.2

1071—2012: Performance Requirements for Temperature Actuated Mixing Valves for Plumbed Emergency Equipment

411.3, 412.5, 412.10, 419.5, 423.3, 607.1.2

1072—07: Performance Requirements for Barrier Type Floor Drain Tap Seal Protection Devices

1002.4.14

1079—2005: Performance Requirements for Dielectric Pipe Unions

605.23.1, 605.23.3

5013—2015: Performance Requirements for Testing Reduced Pressure Principle Backflow Prevention Assembly (RPA) and Reduced Pressure Fire Protection Backflow Preventers (RFP)

312.10.2

5015—2015: Performance Requirements for Testing Double Check Valve Backflow Prevention Assemblies (DC) and Double Check Fire Protection Backflow Prevention Assemblies (DCF)

312.10.2

5020—2015: Performance Requirements for Testing Pressure Vacuum Breaker Assemblies (PVBA)

312.10.2

5047—2015: Performance Requirements for Testing Reduced Pressure Detector Fire Protection Backflow Prevention Assemblies (RPDA)

312.10.2

5048—2015: Performance Requirements for Testing Double Check Valve Detector Assembly (DCDA)

312.10.2

5052—98: Performance Requirements for Testing Hose Connection Backflow Preventers

312.10.2

5056—2015: Performance Requirements for Testing Spill Resistant Vacuum Breaker (SRVB)

312.10.2

INTERNATIONAL CODE COUNCIL®
Copyright © 2019 ICC & NYSDOS. ALL RIGHTS RESERVED. Accessed by Lauren Gualdino (lgualdino@briarcliffmanor.org), (-) Order Number #100880972 on May 08, 2020 07:05 AM (PDT) pursuant to License Agreement with ICC & NYSDOS. No further reproduction, no

100880972

ASTM

ASTM International
100 Barr Harbor Drive, P.O. Box C700
West Conshohocken, PA 19428-2959

A53/A53M—12: Specification for Pipe, Steel, Black and Hot-dipped, Zinc-coated Welded and Seamless
Table 605.3, Table 605.4, Table 702.1

A74—15: Specification for Cast-iron Soil Pipe and Fittings
Table 702.1, Table 702.2, Table 702.3, Table 702.4, 708.1.6, 708.7, Table 1102.4, Table 1102.5, Table 1102.7

A312/A312M—15a: Specification for Seamless, Welded, and Heavily Cold Worked Austenitic Stainless Steel Pipes
Table 605.3, Table 605.4, Table 605.5, 605.22.2

A733—15: Specification for Welded and Seamless Carbon Steel and Austenitic Stainless Steel Pipe Nipples
Table 605.8

A778/A778M—15: Specification for Welded Unannealed Austenitic Stainless Steel Tubular Products
Table 605.3, Table 605.4, Table 605.5

A888—15: Specification for Hubless Cast-iron Soil Pipe and Fittings for Sanitary and Storm Drain, Waste, and Vent Piping Application
Table 702.1, Table 702.2, Table 702.3, Table 702.4, 708.7, Table 1102.4, Table 1102.5, Table 1102.7

B32—08(2014): Specification for Solder Metal
605.12.3, 605.13.6, 705.5.3, 705.6.1, 705.17.3

B42—15a: Specification for Seamless Copper Pipe, Standard Sizes
Table 605.3, Table 605.4, Table 702.1

B43—15: Specification for Seamless Red Brass Pipe, Standard Sizes
Table 605.4, Table 702.1

B75/B75M—11: Specification for Seamless Copper Tube
Table 605.3, Table 605.4, Table 702.1, Table 702.2, Table 702.3, Table 1102.4

B88—14: Specification for Seamless Copper Water Tube
Table 605.3, Table 605.4, Table 702.1, Table 702.2, Table 702.3, Table 1102.4

B152/B152M—13: Specification for Copper Sheet, Strip Plate and Rolled Bar
402.3, 415.3.3, 422.5.2.4, 902.2

B251—10: Specification for General Requirements for Wrought Seamless Copper and Copper-alloy Tube
Table 605.3, Table 605.4, Table 702.1, Table 702.2, Table 702.3, Table 1102.4

B302—12: Specification for Threadless Copper Pipe, Standard Sizes
Table 605.3, Table 605.4, Table 702.1

B306—13: Specification for Copper Drainage Tube (DWV)
Table 702.1, Table 702.2, Table 1102.4

B447—12a: Specification for Welded Copper Tube
Table 605.3, Table 605.4

B687—99(2011): Specification for Brass, Copper and Chromium-plated Pipe Nipples
Table 605.8

B813—10: Specification for Liquid and Paste Fluxes for Soldering of Copper and Copper Alloy Tube
605.12.3, 605.13.6, 705.5.3, 705.6.1, 705.7.3

***B828—02(2010): Practice for Making Capillary Joints by Soldering of Copper and Copper Alloy Tube and Fittings**
605.12.3, 605.13.6, 705.5.3, 705.6.1, 705.17.3

C4—04(2014): Specification for Clay Drain Tile and Perforated Clay Drain Tile
Table 702.3, Table 1102.4, Table 1102.5

C14—15a: Specification for Nonreinforced Concrete Sewer, Storm Drain and Culvert Pipe
Table 702.3, Table 1102.4

C76—15a: Specification for Reinforced Concrete Culvert, Storm Drain and Sewer Pipe
Table 702.3, Table 1102.4

C425—04(2013): Specification for Compression Joints for Vitrified Clay Pipe and Fittings
705.11, 705.16

C443—12: Specification for Joints for Concrete Pipe and Manholes, Using Rubber Gaskets
705.4, 705.16

INTERNATIONAL CODE COUNCIL®
Copyright © 2019 ICC & NYSDOS. ALL RIGHTS RESERVED. Accessed by Lauren Gualdino (lgualdino@briarcliffmanor.org), (-) Order Number #100880972 on May 08, 2020 07:05 AM (PDT) pursuant to License Agreement with ICC & NYSDOS. No further reproduction, no

100880972

ASTM—continued

C564—14: Specification for Rubber Gaskets for Cast-iron Soil Pipe and Fittings
705.3.2, 705.3.3, 705.16

C700—13: Specification for Vitrified Clay Pipe, Extra Strength, Standard Strength, and Perforated
Table 702.3, Table 702.4, Table 1102.4, Table 1102.5

C1053—00(2010): Specification for Borosilicate Glass Pipe and Fittings for Drain, Waste, and Vent (DWV) Applications
Table 702.1, Table 702.4

C1173—10(2014): Specification for Flexible Transition Couplings for Underground Piping System
705.2.1, 705.5, 705.10.1, 705.11, 705.12.2, 705.16

C1277—15: Specification for Shielded Coupling Joining Hubless Cast-iron Soil Pipe and Fittings
705.3.3

C1440—08(2013): Specification for Thermoplastic Elastomeric (TPE) Gasket Materials for Drain, Waste, and Vent (DWV), Sewer, Sanitary and Storm Plumbing Systems
705.16

C1460—2012: Specification for Shielded Transition Couplings for Use with Dissimilar DWV Pipe and Fittings Above Ground
705.16

C1461—08(2013): Specification for Mechanical Couplings Using Thermoplastic Elastomeric (TPE) Gaskets for Joining Drain, Waste and Vent (DWV) Sewer, Sanitary and Storm Plumbing Systems for Above and Below Ground Use
705.19

C1540—15: Specification for Heavy Duty Shielded Couplings Joining Hubless Cast-iron Soil Pipe and Fittings
705.3.3

C1563—08(2013): Standard Test Method for Gaskets for Use in Connection with Hub and Spigot Cast Iron Soil Pipe and Fittings for Sanitary Drain, Waste, Vent and Storm Piping Applications
705.3.2

D1253—14: Standard Test Method For Residual Chlorine in Water
1301.2.1, 1303.9

D1527—99(2005): Specification for Acrylonitrile-Butadiene-Styrene (ABS) Plastic Pipe, Schedules 40 and 80
Table 605.3

D1785—15: Specification for Poly (Vinyl Chloride) (PVC) Plastic Pipe, Schedules 40, 80 and 120
Table 605.3

D2235—04(2011): Specification for Solvent Cement for Acrylonitrile-Butadiene-Styrene (ABS) Plastic Pipe and Fittings
605.10.2, 705.2.2, 705.7.2

D2239—12a: Specification for Polyethylene (PE) Plastic Pipe (SIDR-PR) Based on Controlled Inside Diameter
Table 605.3

D2241—15: Specification for Poly (Vinyl Chloride) (PVC) Pressure-rated Pipe (SDR-Series)
Table 605.3

D2282—99(2005): Specification for Acrylonitrile-Butadiene-Styrene (ABS) Plastic Pipe (SDR-PR)
Table 605.3

D2464—15: Specification for Threaded Poly (Vinyl Chloride) (PVC) Plastic Pipe Fittings, Schedule 80
Table 605.5, 605.21.3

D2466—15: Specification for Poly (Vinyl Chloride) (PVC) Plastic Pipe Fittings, Schedule 40
Table 605.5

D2467—15: Specification for Poly (Vinyl Chloride) (PVC) Plastic Pipe Fittings, Schedule 80
Table 605.5

D2468—96a: Specification for Acrylonitrile-Butadiene-Styrene (ABS) Plastic Pipe Fittings, Schedule 40
Table 605.5

D2564—12: Specification for Solvent Cements for Poly (Vinyl Chloride) (PVC) Plastic Piping Systems
605.21.3, 705.10.2, 705.14.2

D2609—15: Specification for Plastic Insert Fittings for Polyethylene (PE) Plastic Pipe
Table 605.5

***D2657—07: Practice for Heat Fusion-joining of Polyolefin Pipe and Fitting Waste, and Vent Pipe and Fittings**
605.18.2, 705.12.1

D2661—14: Specification for Acrylonitrile-Butadiene-Styrene (ABS) Schedule 40 Plastic Drain, Waste, and Vent Pipe and Fittings
Table 702.1, Table 702.2, Table 702.3, Table 702.4, 705.2.2, 705.7.2, Table 1102.4, Table 1102.7

INTERNATIONAL CODE COUNCIL®
Copyright © 2019 ICC & NYSDOS. ALL RIGHTS RESERVED. Accessed by Lauren Gualdino (lgualdino@briarcliffmanor.org), (-) Order Number #100880972 on May 08, 2020 07:05 AM (PDT) pursuant to License Agreement with ICC & NYSDOS. No further reproduction, no

100880972

ASTM—continued

D2665—14: Specification for Poly (Vinyl Chloride) (PVC) Plastic Drain, Waste, and Vent Pipe and Fittings
Table 702.1, Table 702.2, Table 702.3, Table 702.4, Table 1102.4, Table 1102.7

D2672—14: Specification for Joints for IPS PVC Pipe Using Solvent Cement
Table 605.3

D2683—14: Standard Specification for Socket-type Polyethylene Fittings for Outside Diameter-controlled Polyethylene Pipe and Tubing
Table 605.5, Table 702.4, 716.5

D2729—11: Specification for Poly (Vinyl Chloride) (PVC) Sewer Pipe and Fittings
Table 1102.5, Table 1403.2

D2737—2012a: Specification for Polyethylene (PE) Plastic Tubing
Table 605.3

D2751—05: Specification for Acrylonitrile-Butadiene-Styrene (ABS) Sewer Pipe and Fittings
Table 702.3, Table 702.4, Table 1102.7

D2846/D2846M—14: Specification for Chlorinated Poly (Vinyl Chloride) (CPVC) Plastic Hot- and Cold-Water Distribution Systems
Table 605.3, Table 605.4, Table 605.5, 605.14.2, 605.15.2

***D2855—96(2010): Standard Practice for Making Solvent-cemented Joints with Poly (Vinyl Chloride) (PVC) Pipe and Fittings**
605.21.3, 705.10.2

D2949—10: Specification for 3.25-in. Outside Diameter Poly (Vinyl Chloride) (PVC) Plastic Drain, Waste, and Vent Pipe and Fittings
Table 702.1, Table 702.2, Table 702.3, Table 702.4, Table 1102.7

D3034—14a: Specification for Type PSM Poly (Vinyl Chloride) (PVC) Sewer Pipe and Fittings
Table 702.3, Table 702.4, Table 1102.4, Table 1102.5, Table 1102.7

D3035—15: Standard Specification for Polyethylene (PE) Plastic Pipe (DR-PR) Based on Controlled Outside Diameter
Table 605.3

D3138—04(2011): Standard Specification for Solvent Cements for Transition Joints Between Acrylonitrile-Butadiene-Styrene (ABS) and Poly (Vinyl Chloride) (PVC) Non-pressure Piping Components
Table 705.16.4

D3139—98(2011): Specification for Joints for Plastic Pressure Pipes Using Flexible Elastomeric Seals
605.10.1, 605.22.1

D3212—07(2013): Specification for Joints for Drain and Sewer Plastic Pipes Using Flexible Elastomeric Seals
705.2.1, 705.10.1, 705.12.2, 705.15

D3261—12e1: Specification for Butt Heat Fusion Polyethylene (PE) Plastic Fittings for Polyethylene (PE) Plastic Pipe and Tubing
Table 605.5

D3311—11: Specification for Drain, Waste and Vent (DWV) Plastic Fittings Patterns
Table 1102.7

D4068—15: Specification for Chlorinated Polyethylene (CPE) Sheeting for Concealed Water-containment Membrane
422.5.2.2

D4551—12: Specification for Poly (Vinyl Chloride) (PVC) Plastic Flexible Concealed Water-containment Membrane
421.5.2.1

E2635—14: Standard Practice for Water Conservation Through In-Situ Water Reclamation
1302.1

E2727—10e1: Standard Practice for the Assessment of Rainwater Quality
1303.15.9

F405—05: Specification for Corrugated Polyethylene (PE) Pipe and Fittings
Table 1102.5, Table 1403.2

F409—12: Specification for Thermoplastic Accessible and Replaceable Plastic Tube and Tubular Fittings
412.1.2, Table 1102.7

F437—15: Specification for Threaded Chlorinated Poly (Vinyl Chloride) (CPVC) Plastic Pipe Fittings, Schedule 80
Table 605.5

F438—15: Specification for Socket-type Chlorinated Poly (Vinyl Chloride) (CPVC) Plastic Pipe Fittings, Schedule 40
Table 605.5

F439—13: Standard Specification for Chlorinated Poly (Vinyl Chloride) (CPVC) Plastic Pipe Fittings, Schedule 80
Table 605.5

INTERNATIONAL CODE COUNCIL®
Copyright © 2019 ICC & NYSDOS. ALL RIGHTS RESERVED. Accessed by Lauren Gualdino (lgualdino@briarcliffmanor.org), (-) Order Number #100880972 on May 08, 2020 07:05 AM (PDT) pursuant to License Agreement with ICC & NYSDOS. No further reproduction, no

100880972

ASTM—continued

F441/F441M—15: Specification for Chlorinated Poly (Vinyl Chloride) (CPVC) Plastic Pipe,Schedules 40 and 80
Table 605.3, Table 605.4

F442/F442M—13e1: Specification for Chlorinated Poly (Vinyl Chloride) (CPVC) Plastic Pipe (SDR-PR)
Table 605.3, Table 605.4

F477—14: Specification for Elastomeric Seals (Gaskets) for Joining Plastic Pipe
605.23,705.16

F493—14: Specification for Solvent Cements for Chlorinated Poly (Vinyl Chloride) (CPVC) Plastic Pipe and Fittings
605.14.2, 605.15.2

F628—12e1: Specification for Acrylonitrile-Butadiene-Styrene (ABS) Schedule 40 Plastic Drain, Waste, and Vent Pipe with a Cellular Core
Table 702.1, Table 702.2, Table 702.3, Table 702.4, 705.2.2, Table 1102.4, Table 1102.7

F656—15: Specification for Primers for Use in Solvent Cement Joints of Poly (Vinyl Chloride) (PVC) Plastic Pipe and Fittings
605.21.3, 705.10.2, 705.14.2

F667—12: Standard Specification for 3 through 24 in. Corrugated Polyethylene Pipe and Fittings
Table 1102.4, Table 1102.5

F714—2013: Specification for Polyethylene (PE) Plastic Pipe (SDR-PR) Based on Outside Diameter
Table 702.3, 717.4

F876—15a: Specification for Cross-linked Polyethylene (PEX) Tubing
Table 605.3, Table 605.4

F877—11a: Specification for Cross-linked Polyethylene (PEX) Hot- and Cold-water Distribution Systems
Table 605.5

F891—10: Specification for Coextruded Poly (Vinyl Chloride) (PVC) Plastic Pipe with a Cellular Core
Table 702.1 Table 702.2, Table 702.3, Table 1102.4, Table 1102.5, Table 1102.7

F1055—13: Standard Specification for Electrofusion Type Polyethylene Fittings for Outside Diameter Controlled Polyethylene and Cross-linked Polyethylene Pipe and Tubing
Table 605.5

F1281—11: Specification for Cross-linked Polyethylene/Aluminum/ Cross-linked Polyethylene (PEX-AL-PEX) Pressure Pipe
Table 605.3, Table 605.4, Table 605.5, 605.20.1

F1282—10: Specification for Polyethylene/Aluminum/Polyethylene (PE-AL-PE) Composite Pressure Pipe
Table 605.3, Table 605.4, Table 605.5, 605.20.1

F1412—09: Specification for Polyolefin Pipe and Fittings for Corrosive Waste Drainage
Table 702.1, Table 702.2, Table 702.4, 705.13.1, 901.3

F1476—07(2013): Standard Specification for Performance of Gasketed Mechanical Couplings for Use in Piping Applications
Table 605.5, 605.13.3, 605.17.3, 605.22.2, 605.22.3

F1488—14: Specification for Coextruded Composite Pipe
Table 702.1, Table 702.2, Table 702.3, Table 1102.4, Table 1403.2

F1548—01(2012): Standard Specification for the Performance of Fittings for Use with Gasketed Mechanical Couplings Used in Piping Applications
Table 605.5

F1673—10: Standard Specification for Polyvinylidene Fluoride (PVDF) Corrosive Waste Drainage Systems
Table 702.1, Table 702.2, Table 702.3, Table 702.4, 705.14.1

F1807—15: Specification for Metal Insert Fittings Utilizing a Copper Crimp Ring for SDR9 Cross-linked Polyethylene (PEX) Tubing and SDR9 Polyethylene of Raised Temperature (PE-RT) Tubing
Table 605.5

F1866—13: Specification for Poly (Vinyl Chloride) (PVC) Plastic Schedule 40 Drainage and DWV Fabricated Fittings
Table 702.4, Table 1102.7

F1960—15: Specification for Cold Expansion Fittings with PEX Reinforcing Rings for Use with Cross-linked Polyethylene (PEX) Tubing
Table 605.5

F1970—12e1: Special Engineered Fittings, Appurtenances or Valves for Use in Poly (Vinyl Chloride) (PVC) OR Chlorinated Poly (Vinyl Chloride) (CPVC) Systems
Table 605.7

INTERNATIONAL CODE COUNCIL®
Copyright © 2019 ICC & NYSDOS. ALL RIGHTS RESERVED. Accessed by Lauren Gualdino (lgualdino@briarcliffmanor.org), (-) Order Number #100880972 on May 08, 2020 07:05 AM (PDT) pursuant to License Agreement with ICC & NYSDOS. No further reproduction, no

100880972

ASTM—continued

F1974—09(2015): Specification for Metal Insert Fittings for Polyethylene/Aluminum/Polyethylene and Cross-linked Polyethylene/ Aluminum/Cross-linked Polyethylene Composite Pressure Pipe
Table 605.5, 605.20.1

F1986—01(2011): Specification for Multilayer Pipe, Type 2, Compression Fittings and Compression Joints for Hot and Cold Drinking Water Systems
Table 605.3, Table 605.4, Table 605.5

F2080—15: Specifications for Cold-expansion Fittings with Metal Compression-sleeves for Cross-linked Polyethylene (PEX) Pipe
Table 605.5

F2098—08: Standard Specification for Stainless Steel Clamps for Securing SDR9 Cross-linked Polyethylene (PEX) Tubing to Metal Insert and Plastic Fittings
Table 605.5

F2159—14: Specification for Plastic Insert Fittings Utilizing a Copper Crimp Ring for SDR9 Cross-linked Polyethylene (PEX) Tubing and SDR9 Polyethylene of Raised Temperature (PE-RT) Tubing
Table 605.5

F2262—09: Specification for Cross-linked Polyethylene/Aluminum/Cross-linked Polyethylene Tubing OD Controlled SDR9
Table 605.3, Table 605.4

F2306/F2306M—14e1: 12'' to 60'' Annular Corrugated Profile-wall Polyethylene (PE) Pipe and Fittings for Gravity Flow Storm Sewer and Subsurface Drainage Applications
Table 1102.4, Table 1102.7

F2389—15: Specification for Pressure-rated Polypropylene (PP) Piping Systems
Table 605.3, Table 605.4, Table 605.5, Table 605.7, 605.19.1

F2434—14: Standard Specification for Plastic Insert Fittings Utilizing a Copper Crimp Ring for SDR9 Cross-linked Polyethylene (PEX) Tubing and SDR9 Cross-linked Polyethylene/Aluminum/ Cross-linked Polyethylene (PEX AL-PEX) Tubing
Table 605.5

F2648/F2648M—13: Standard Specification for 2 to 60 inch [50 to 1500 mm] Annular Corrugated Profile Wall Polyethylene (PE) Pipe and Fittings for Land Drainage Applications
Table 1102.4

F2735—09: Standard Specification for Plastic Insert Fittings for SDR9 Cross-linked Polyethylene (PEX) and Polyethylene of Raised Temperature (PE-RT) Tubing
Table 605.5

F2736—13e1: Standard Specification for 6 to 30 in. [152 to 762 mm] Polypropylene (PP) Corrugated Single Wall Pipe and Double Wall Pipe
Table 702.3

F2764/F2764M—11ae2: Standard Specification for 30 to 60 in. [750 to 1500 mm] Polypropylene (PP) Triple Wall Pipe and Fittings for Non-pressure Sanitary Sewer Applications
Table 702.3

F2769—14: Polyethylene or Raised Temperature (PE-RT) Plastic Hot- and Cold-water Tubing and Distribution Systems
Table 605.3, Table 605.4, Table 605.5

F2831—12: Standard Practice for Internal Non Structural Epoxy Barrier Coating Material Used in Rehabilitation of Metallic Pressurized Piping Systems
601.5

F2855—12: Standard Specification for Chlorinated Poly (Vinyl Chloride)/Aluminum/Chlorinated Poly (Vinyl Chloride) (CPVC/AL/ CPVC) Composite Pressure Tubing
Table 605.3, Table 605.4

F2881—11: Standard Specification for 12 to 60 in. [300 to 1500 mm] Polypropylene (PP) Dual Wall Pipe and Fittings for Non-pressure Storm Sewer Applications
Table 1102.4

AWS

American Welding Society
8669 NW 36 Street, #130
Miami, FL 33166

A5.8M/A5.8—2011: Specifications for Filler Metals for Brazing and Braze Welding
605.12.1, 605.13.1, 705.5.1, 705.6.1

INTERNATIONAL CODE COUNCIL®
Copyright © 2019 ICC & NYSDOS. ALL RIGHTS RESERVED. Accessed by Lauren Gualdino (lgualdino@briarcliffmanor.org), (-) Order Number #100880972 on May 08, 2020 07:05 AM (PDT) pursuant to License Agreement with ICC & NYSDOS. No further reproduction, no

100880972

AWWA

American Water Works Association
6666 West Quincy Avenue
Denver, CO 80235

C104/A21.4—13: Cement-mortar Lining for Ductile-iron Pipe and Fittings
605.3, 605.5

C110/A21.10—12: Ductile-iron and Gray-iron Fittings
Table 605.5, Table 702.4, Table 1102.7

C111/A21.11—12: Rubber-gasket Joints for Ductile-iron Pressure Pipe and Fittings
605.11

C115/A21.15—11: Flanged Ductile-iron Pipe with Ductile-iron or Gray-iron Threaded Flanges
Table 605.3, Table 605.4

C151/A21.51—09: Ductile-iron Pipe, Centrifugally Cast for Water
Table 605.3, Table 605.4

C153—00/A21.53—11: Ductile-iron Compact Fittings for Water Service
Table 605.5

C500—09: Standard for Metal-seated Gate Valves for Water Supply Service
Table 605.7

C504—10: Standard for Rubber-Seated Butterfly Valves
Table 605.7

C507—15: Standard for Ball Valves, 6 In. Through 60 in. (150 mm through 1,500 mm).
Table 605.7

C510—07: Double Check Valve Backflow Prevention Assembly
Table 608.1, 608.14.7

C511—07: Reduced-pressure Principle Backflow Prevention Assembly
Table 608.1, 608.14.2, 608.17.2

C651—14: Disinfecting Water Mains
610.1

C652—11: Disinfection of Water-storage Facilities
610.1

C901—16: Polyethylene (PE) Pressure Pipe and Tubing $^{3}/_{4}$ inch (19 mm) Through 3 inch (76 mm) for Water Service
Table 605.3

C904—16: Cross-linked Polyethylene (PEX) Pressure Tubing $^{1}/_{2}$ inch (13 mm) Through 3 inch (76 mm) for Water Service
Table 605.3

CISPI

Cast Iron Soil Pipe Institute
2401 Fieldcrest Dr.
Mundelein, IL 60060

301—12: Specification for Hubless Cast-iron Soil Pipe and Fittings for Sanitary and Storm Drain, Waste and Vent Piping Applications
Table 702.1, Table 702.2, Table 702.3, Table 702.4, 708.7, Table 1102.4, Table 1102.5, Table 1102.7

310—12: Specification for Coupling for Use in Connection with Hubless Cast-iron Soil Pipe and Fittings for Sanitary and Storm Drain, Waste and Vent Piping Applications
705.3.3

CSA

CSA Group
8501 East Pleasant Valley Road
Cleveland, OH 44131-5516

A257.1M—14: Non-reinforced Circular Concrete Culvert, Storm Drain, Sewer Pipe and Fittings
Table 702.3, Table 1102.4

A257.2M—14: Reinforced Circular Concrete Culvert, Storm Drain, Sewer Pipe and Fittings
Table 702.3, Table 1102.4

A257.3M—14: Joints for Circular Concrete Sewer and Culvert Pipe, Manhole Sections and Fittings Using Rubber Gaskets
705.5, 705.16

INTERNATIONAL CODE COUNCIL®
Copyright © 2019 ICC & NYSDOS. ALL RIGHTS RESERVED. Accessed by Lauren Gualdino (lgualdino@briarcliffmanor.org), (-) Order Number #100880972 on May 08, 2020 07:05 AM (PDT) pursuant to License Agreement with ICC & NYSDOS. No further reproduction, no

100880972

CSA—continued

ASME A112.18.1—2017/CSA B125.1—17: Plumbing Supply Fittings
412.1, 412.2, 412.3, 412.4, 412.6, 412.8, Table 605.7, 607.4, 608.2

ASME A112.18.2—2015/CSA B125.2—2015: Plumbing Waste Fittings
412.1.2

ASME A112.19.1—2013/CSA B45.2—2013: Enameled Cast-iron and Enameled Steel Plumbing Fixtures
407.1, 410.1, 418.1, 419.1, 422.1

ASME A112.19.2—2013/B45.1—2013: Ceramic Plumbing Fixtures
401.2, 405.10, 407.1, 408.1, 410.1, 418.1, 419.1, 421.1, 422.1, 424.1, 425.1

ASME A112.19.3—2008/CSA B45.4—08 (R2013): Stainless-steel Plumbing Fixtures
405.9, 407.1, 418.1, 419.1, 425.1

ASME A112.19.5—2017/CSA B45.15—17: Flush Valves and Spuds for Water Closets, Urinals and Tanks
415.4

ASME A112.19.7—2017/CSA B45.10—17: Hydromassage Bathtub Systems
426.1, 426.4

CSA B45.5—17/IAPMO Z124—2017: Plastic Plumbing Fixtures
407.1, 418.1, 419.1, 419.2, 421.1, 424.1, 425.1

ASME A112.3.4—2013/CSA B45.9—13: Macerating Systems and Related Components
405.5, 712.4.1

ASSE 1002—2015/ASME A112.1002—2015/CSA B125.12—2015: Anti-Siphon Fill Valves
415.3.1, Table 608.1

ASSE 1016/ASME A112.1016/CSA B125.16—2017: Performance Requirements for Automatic Compensating Valves for Individual Showers and Tub/Shower Combinations
412.3, 412.4, 607.4

ASSE 1037—2015/ASME A112.1037—2015/CSA B125.37—15: Pressurized Flushing Devices for Plumbing Fixtures
415.2

ASSE 1070—2015/ASME A112.1070—2015/CSA B125.1070—2015: Water Temperature Limiting Devices
408.3, 412.5, 412.10, 419.5, 423.3, 607.1.2

B64.1.1—16: Vacuum Breakers, Atmospheric Type (AVB)
415.2, Table 608.1, 608.14.6, 608.17.4.1

B64.1.2—16: Pressure Vacuum Breakers, (PVB)
Table 608.1, 608.14.5

B64.1.3—16: Spill Resistant Pressure Vacuum Breakers (SRPVB)
Table 608.1, 608.14.5

B64.2—16: Vacuum Breakers, Hose Connection Type (HCVB)
Table 608.1, 608.14.6

B64.2.1—16: Vacuum Breakers, Hose Connection (HCVB) with Manual Draining Feature
Table 608.1, 608.14.6

B64.2.1.1—16: Hose Connection Dual Check Vacuum Breakers (HCDVB)
Table 608.1, 608.14.6

B64.2.2—16: Vacuum Breakers, Hose Connection Type (HCVB) with Automatic Draining Feature
Table 608.1, 608.14.6

B64.3—16: Backflow Preventers, Dual Check Valve Type with Atmospheric Port (DCAP)
Table 608.1, 608.14.3, 608.17.2

B64.4—16: Backflow Preventers, Reduced Pressure Principle Type (RP)
Table 608.1, 608.14.2, 608.17.2

B64.4.1—16: Reduced Pressure Principle for Fire Sprinklers (RPF)
Table 608.1, 608.14.2

B64.5—16: Double Check Backflow Preventers (DCVA)
Table 608.1, 608.14.7

B64.5.1—16: Double Check Valve Backflow Preventer for Fire Systems (DCVAF)
Table 608.1, 608.14.7

INTERNATIONAL CODE COUNCIL®
Copyright © 2019 ICC & NYSDOS. ALL RIGHTS RESERVED. Accessed by Lauren Gualdino (lgualdino@briarcliffmanor.org), (-) Order Number #100880972 on May 08, 2020 07:05 AM (PDT) pursuant to License Agreement with ICC & NYSDOS. No further reproduction, no

100880972

CSA—continued

B64.6—16: Dual Check Valve (DuC) Backflow Preventers
605.3.1, Table 608.1, 608.14.9

B64.7—16: Laboratory Faucet Vacuum Breakers (LFVB)
Table 608.1, 608.14.6

B64.10—16: Manual for the Selection and Installation of Backflow Prevention Devices
312.10.2

B64.10.1—11: Maintenance and Field Testing of Backflow Preventers
312.10.2

B79—08(R2013): Commercial and Residential Drains and Cleanouts
413.1

B125.3—2012: Plumbing Fittings
408.3,412.4, 412.5, 415.2, 415.3.1, 419.5, 423.3, Table 605.7, Table 608.1

B137.1—16: Polyethylene (PE) Pipe, Tubing and Fittings for Cold-water Pressure Services
Table 605.3, Table 605.5

B137.2—16: Polyvinylchloride, PVC, Injection-moulded Gasketed Fittings for Pressure Applications
Table 605.5

B137.3—16: Rigid Poly (Vinyl Chloride) (PVC) Pipe for Pressure Applications
Table 605.3, Table 605.5, 605.21.3, 705.10.2, 705.14.2

B137.5—16: Cross-linked Polyethylene (PEX) Tubing Systems for Pressure Applications
Table 605.3, Table 605.4, Table 605.5

B137.6—16: CPVC Pipe, Tubing and Fittings for Hot- and Cold-water Distribution Systems
Table 605.3, Table 605.4, Table 605.5

B137.9—16: Polyethylene Aluminum/Polyethylene (PE-AL-PE) Composite Pressure-pipe Systems
Table 605.3, Table 605.5, 605.20.1

B137.10—16: Cross-linked Polyethylene/Aluminum/Cross-linked Polyethylene (PEX-AL-PEX) Composite Pressure-pipe Systems
Table 605.3, Table 605.4, Table 605.5, 605.20.1

B137.11—16: Polypropylene (PP-R) Pipe and Fittings for Pressure Applications
Table 605.3, Table 605.4, Table 605.5

B137.18—13: Polyethylene of Raised Temperature Resistance (PE-RT) Tubing Systems for Pressure Applications
Table 605.3, Table 605.4, Table 605.5

B181.1—15: Acrylonitrile-Butadiene-Styrene ABS Drain, Waste and Vent Pipe and Pipe Fittings
Table 702.1, Table 702.2, Table 702.3, Table 702.4, 705.2.2, 714.2, Table 1102.4, Table 1102.7

B181.2—15: Polyvinylchloride PVC and Chlorinated Polyvinylchloride (CPVC) Drain, Waste, and Vent Pipe and Pipe Fittings
Table 702.1 Table 702.2, 705.10.2, 705.14.2, 714.2

B181.3—15: Polyolefin and Polyvinylidene Fluoride (PVDF) Laboratory Drainage Systems
Table 702.1, Table 702.2, Table 702.3, Table 702.4, 705.13.1

B182.1—11: Plastic Drain and Sewer Pipe and Pipe Fittings
705.10.2, 705.14.2, Table 1102.4, Table 1102.5

B182.2—11: PSM Type Polyvinylchloride PVC Sewer Pipe and Fittings
Table 702.3, Table 1102.4, Table 1102.5

B182.4—15: Profile Polyvinylchloride PVC Sewer Pipe and Fittings
Table 702.3, Table 1102.4, Table 1102.5

B182.6—15: Profile Polyethylene (PE) Sewer Pipe and Fittings for Leak-proof Sewer Applications
Table 1102.5

B182.8—15: Profile Polyethylene (PE) Storm Sewer and Drainage Pipe and Fittings
Table 1102.5

B182.13—11: Profile Polypropylene (PP) Sewer Pipe and Fittings for Leak-proof Sewer Applications
Table 702.3, Table 1102.4

B356—10: Water Pressure Reducing Valves for Domestic Water Systems
604.8

B481.1—12: Testing and Rating of Grease Interceptors Using Lard
1003.3.4

INTERNATIONAL CODE COUNCIL®
Copyright © 2019 ICC & NYSDOS. ALL RIGHTS RESERVED. Accessed by Lauren Gualdino (lgualdino@briarcliffmanor.org), (-) Order Number #100880972 on May 08, 2020 07:05 AM (PDT) pursuant to License Agreement with ICC & NYSDOS. No further reproduction, no

100880972

CSA—continued

B481.3—12: Sizing, Selection, Location and Installation of Grease Interceptors
1003.3.5

B483.1—07(R2012): Drinking Water Treatment Units
611.1, 611.2

B602—15: Mechanical Couplings for Drain, Waste and Vent Pipe and Sewer Pipe
705.2.1, 705.3.3, 705.5, 705.10.1, 705.11, 705.12.2, 705.16

IAPMO

IAPMO Group
4755 E. Philadelphia Street
Ontario, CA 91761 USA

Z1001—2014: Prefabricated Gravity Grease Interceptors
1003.3.7

CSA B45.5—17/IAPMO Z124—2017: Plastic Plumbing Fixtures
407.1, 418.1, 419.1, 419.2, 421.1, 424.1, 425.1

IAPMO/ANSI Z1157—2014: Ball Valves
Table 605.7

ICC

International Code Council, Inc.
500 New Jersey Ave, NW
6th Floor
Washington, DC 20001

***A117.1—2009: Accessible and Usable Buildings and Facilities**
404.2, 410.3

***BCNYS—20: Building Code of New York State**
201.3, 202, 307.1, 307.2, 307.3, 308.2, 309.1, 309.2, 310.1, 310.3, 315.1, 403.1, Table 403.1, 403.1.2, 403.3.1, 403.4, 404.1, 407.3, 421.6, 502.4, 606.5.2, 1106.5, 1301.9.3, 1303.6, 1402.1

***EBCNYS—20: Existing Building Code of New York State**
102.2.1

***ECCCNYS—20: Energy Conservation Construction Code of New York State**
313.1, 607.2.1, 607.5

***FCNYS—20: Fire Code of New York State**
201.3, 1201.1, 1301.1.1

***FGCNYS—20: Fuel Gas Code of New York State**
101.2, 201.3, 502.1, 502.1.1

ICC 900/SRCC 300—2015: Solar Thermal System Standard
502.1

IPSDC—18: International Private Sewage Disposal Code®
701.2

***MCNYS—20: Mechanical Code of New York State**
201.3, 307.6, 310.1, 502.1, 502.1.1, 612.1, 1202.1

***RCNYS—20: Residential Code of New York State**
101.2

ISEA

International Safety Equipment Association
1901 N. Moore Street, Suite 808
Arlington, VA 22209

ANSI/ISEA Z358.1—2014: Emergency Eyewash and Shower Equipment
411.1

INTERNATIONAL CODE COUNCIL®
Copyright © 2019 ICC & NYSDOS. ALL RIGHTS RESERVED. Accessed by Lauren Gualdino (lgualdino@briarcliffmanor.org), (-) Order Number #100880972 on May 08, 2020 07:05 AM (PDT) pursuant to License Agreement with ICC & NYSDOS. No further reproduction, no

100880972

MSS

Manufacturers Standardization Society of the Valve and Fittings Industry, Inc.
127 Park St. NE
Vienna, VA 22180-4602

SP-67—2011: Butterfly Valves
Table 605.7

SP-70—2013: Gray Iron Gate Valves, Flanged and Threaded Ends
Table 605.7

SP-71—2013: Gray Iron Swing Check Valves, Flanged and Threaded Ends
Table 605.7

SP-72—2010a: Ball Valves with Flanged or Butt-welding Ends for General Service
Table 605.7

SP-78—2013: Cast Iron Plug Valves, Flanged and Threaded Ends
Table 605.7

SP-80—2013: Bronze Gate, Globe, Angle and Check Valves
Table 605.7

SP-110—2010a: Ball Valves, Threaded, Socket Welding, Solder Joint, Grooved and Flared Ends
Table 605.7

SP-122—2012: Plastic Industrial Ball Valves
Table 605.7

SP-139—2014: Copper Alloy Gate, Globe, Angle and Check Valves for Low Pressure/Low Temperature Plumbing Applications
Table 605.7

NFPA

National Fire Protection Association
1 Batterymarch Park
Quincy, MA 02169-7471

***51—18: Design and Installation of Oxygen-fuel Gas Systems for Welding, Cutting and Allied Processes**
1203.1

***55—16: Compressed Gases and Cryogenic Fluids Code**
1203.1

***70—17: National Electric Code**
502.1, 504.3, 1113.1.3

***99—18: Health Care Facilities Code**
1202.1

NGWA

National Ground Water Association
601 Dempsey Road
Westerville, OH 43081

ANSI/NGWA 01—14: Water Well Construction Standard
602.3.1

NSF

NSF International
789 N. Dixboro Road
P.O. Box 130140
Ann Arbor, MI 48105

3—2012: Commercial Warewashing Equipment
409.1

14—2015: Plastic Piping System Components and Related Materials
303.3, 611.3

18—2012: Manual Food and Beverage Dispensing Equipment
426.1

42—2015: Drinking Water Treatment Units-Aesthetic Effects
611.1, 611.3

INTERNATIONAL CODE COUNCIL®
Copyright © 2019 ICC & NYSDOS. ALL RIGHTS RESERVED. Accessed by Lauren Gualdino (lgualdino@briarcliffmanor.org), (-) Order Number #100880972 on May 08, 2020 07:05 AM (PDT) pursuant to License Agreement with ICC & NYSDOS. No further reproduction, no

100880972

NSF—continued

44—2015: Residential Cation Exchange Water Softeners
611.1, 611.3

50—2015: Equipment for Swimming Pools, Spas, Hot Tubs and Other Recreational Facilities
1302.8.1

53—2015: Drinking Water Treatment Units—Health Effects
611.1, 611.3

58—2015: Reverse Osmosis Drinking Water Treatment Systems
611.1, 611.2, 611.3

61—2015: Drinking Water System Components—Health Effects
410.1, 412.1, 605.3, 605.4, 605.5, 605.7, 608.12, 611.3

62—2015: Drinking Water Distillation Systems
611.1

184—2014: Residential Dishwashers
409.1

350—2014: Onsite Residential and Commercial Water Reuse Treatment Systems
1302.6.1

359—2011: Valves for Cross-linked Polyethylene (PEX) Water Distribution Tubing Systems
Table 605.7

372—2011: Drinking Water Systems Components—Lead Content
605.2.1

PDI

Plumbing and Drainage Institute
800 Turnpike Street, Suite 300
North Andover, MA 01845

PDI G101 (2012): Testing and Rating Procedure for Grease Interceptors with Appendix of Sizing and Installation Data
1003.3.5

PDI G102 (2009): Testing and Certification for Grease Interceptors with Fog Sensing and Alarm Devices
1003.3.5

PSAI

Portable Sanitation Association International
2626 E. 82nd Street, Suite 175
Bloomington, MN 55425

PSAI/ANSI Z4.3—16: Minimum Requirements for Nonsewered Waste-disposal Systems
311.1

UL

UL LLC
333 Pfingsten Road
Northbrook, IL 60062-2096

399—2008: Drinking-Water Coolers—with revisions through October 2013
410.1

430—2009: Waste Disposers—with revisions through September 2015
416.1

508—99: Industrial Control Equipment—with revisions through October 2013
314.2.3

1795—2009: Hydromassage Bathtubs—with revisions through January 2015
426.1

INTERNATIONAL CODE COUNCIL®
Copyright © 2019 ICC & NYSDOS. ALL RIGHTS RESERVED. Accessed by Lauren Gualdino (lgualdino@briarcliffmanor.org), (-) Order Number #100880972 on May 08, 2020 07:05 AM (PDT) pursuant to License Agreement with ICC & NYSDOS. No further reproduction, no

[NY] APPENDIX A

RESERVED

INTERNATIONAL CODE COUNCIL®
Copyright © 2019 ICC & NYSDOS. ALL RIGHTS RESERVED. Accessed by Lauren Gualdino (lgualdino@briarcliffmanor.org), (-) Order Number #100880972 on May 08, 2020 07:05 AM (PDT) pursuant to License Agreement with ICC & NYSDOS. No further reproduction, no

INTERNATIONAL CODE COUNCIL®
Copyright © 2019 ICC & NYSDOS. ALL RIGHTS RESERVED. Accessed by Lauren Gualdino (lgualdino@briarcliffmanor.org), (-) Order Number #100880972 on May 08, 2020 07:05 AM (PDT) pursuant to License Agreement with ICC & NYSDOS. No further reproduction, no

100880972

APPENDIX B

RATES OF RAINFALL FOR VARIOUS CITIES

This appendix is informative and is not part of this code.

Rainfall rates, in inches per hour, are based on a storm of 1-hour duration and a 100-year return period. The rainfall rates shown in the appendix are derived from Figure 1106.1.

Alabama:
Birmingham 3.8
Huntsville 3.6
Mobile 4.6
Montgomery 4.2

Alaska:
Fairbanks 1.0
Juneau 0.6

Arizona:
Flagstaff 2.4
Nogales 3.1
Phoenix 2.5
Yuma 1.6

Arkansas:
Fort Smith 3.6
Little Rock 3.7
Texarkana 3.8

California:
Barstow 1.4
Crescent City 1.5
Fresno 1.1
Los Angeles 2.1
Needles 1.6
Placerville 1.5
San Fernando 2.3
San Francisco 1.5
Yreka 1.4

Colorado:
Craig 1.5
Denver 2.4
Durango 1.8
Grand Junction 1.7
Lamar 3.0
Pueblo 2.5

Connecticut:
Hartford 2.7
New Haven 2.8
Putnam 2.6

Delaware:
Georgetown 3.0
Wilmington 3.1

District of Columbia:
Washington 3.2

Florida:
Jacksonville 4.3
Key West 4.3
Miami 4.7
Pensacola 4.6
Tampa 4.5

Georgia:
Atlanta 3.7
Dalton 3.4
Macon 3.9
Savannah 4.3
Thomasville 4.3

Hawaii:
Hilo 6.2
Honolulu 3.0
Wailuku 3.0

Idaho:
Boise 0.9
Lewiston 1.1
Pocatello 1.2

Illinois:
Cairo 3.3
Chicago 3.0
Peoria 3.3
Rockford 3.2
Springfield 3.3

Indiana:
Evansville 3.2
Fort Wayne 2.9
Indianapolis 3.1

Iowa:
Davenport 3.3
Des Moines 3.4
Dubuque 3.3
Sioux City 3.6

Kansas:
Atwood 3.3
Dodge City 3.3
Topeka 3.7
Wichita 3.7

Kentucky:
Ashland 3.0
Lexington 3.1
Louisville 3.2
Middlesboro 3.2
Paducah 3.3

Louisiana:
Alexandria 4.2
Lake Providence 4.0
New Orleans 4.8
Shreveport 3.9

Maine:
Bangor 2.2
Houlton 2.1
Portland 2.4

Maryland:
Baltimore 3.2
Hagerstown 2.8
Oakland 2.7
Salisbury 3.1

Massachusetts:
Boston 2.5
Pittsfield 2.8
Worcester 2.7

Michigan:
Alpena 2.5
Detroit 2.7
Grand Rapids 2.6
Lansing 2.8
Marquette 2.4
Sault Ste. Marie 2.2

Minnesota:
Duluth 2.8
Grand Marais 2.3
Minneapolis 3.1
Moorhead 3.2
Worthington 3.5

Mississippi:
Biloxi 4.7
Columbus 3.9
Corinth 3.6
Natchez 4.4
Vicksburg 4.1

Missouri:
Columbia 3.2
Kansas City 3.6
Springfield 3.4
St. Louis 3.2

Montana:
Ekalaka 2.5
Havre 1.6
Helena 1.5
Kalispell 1.2
Missoula 1.3

Nebraska:
North Platte 3.3
Omaha 3.8
Scottsbluff 3.1
Valentine 3.2

Nevada:
Elko 1.0
Ely 1.1
Las Vegas 1.4
Reno 1.1

New Hampshire:
Berlin 2.5
Concord 2.5
Keene 2.4

New Jersey:
Atlantic City 2.9
Newark 3.1
Trenton 3.1

New Mexico:
Albuquerque 2.0
Hobbs 3.0
Raton 2.5
Roswell 2.6
Silver City 1.9

New York:
Albany 2.5
Binghamton 2.3
Buffalo 2.3
Kingston 2.7
New York 3.0
Rochester 2.2

North Carolina:
Asheville 4.1
Charlotte 3.7
Greensboro 3.4
Wilmington 4.2

INTERNATIONAL CODE COUNCIL®
Copyright © 2019 ICC & NYSDOS. ALL RIGHTS RESERVED. Accessed by Lauren Gualdino (lgualdino@briarcliffmanor.org), (-) Order Number #100880972 on May 08, 2020 07:05 AM (PDT) pursuant to License Agreement with ICC & NYSDOS. No further reproduction, no

100880972

North Dakota:
Bismarck 2.8
Devils Lake 2.9
Fargo 3.1
Williston. 2.6

Ohio:
Cincinnati. 2.9
Cleveland 2.6
Columbus. 2.8
Toledo 2.8

Oklahoma:
Altus. 3.7
Boise City 3.3
Durant 3.8
Oklahoma City. 3.8

Oregon:
Baker 0.9
Coos Bay 1.5
Eugene 1.3
Portland 1.2

Pennsylvania:
Erie. 2.6
Harrisburg 2.8
Philadelphia 3.1
Pittsburgh. 2.6
Scranton 2.7
Rhode Island:
Block Island 2.75
Providence 2.6

South Carolina:
Charleston 4.3
Columbia 4.0
Greenville. 4.1

South Dakota:
Buffalo 2.8
Huron 3.3
Pierre 3.1
Rapid City 2.9
Yankton 3.6

Tennessee:
Chattanooga 3.5
Knoxville 3.2
Memphis 3.7
Nashville 3.3

Texas:
Abilene. 3.6
Amarillo. 3.5
Brownsville 4.5
Dallas 4.0
Del Rio 4.0
El Paso. 2.3
Houston. 4.6
Lubbock 3.3
Odessa. 3.2
Pecos 3.0
San Antonio. 4.2

Utah:
Brigham City. 1.2
Roosevelt. 1.3
Salt Lake City 1.3
St. George 1.7

Vermont:
Barre 2.3
Bratteboro 2.7
Burlington 2.1
Rutland 2.5

Virginia:
Bristol 2.7
Charlottesville. 2.8
Lynchburg. 3.2
Norfolk 3.4
Richmond 3.3

Washington:
Omak. 1.1
Port Angeles 1.1
Seattle 1.4
Spokane. 1.0
Yakima 1.1

West Virginia:
Charleston 2.8
Morgantown 2.7

Wisconsin:
Ashland 2.5
Eau Claire 2.9
Green Bay 2.6
La Crosse. 3.1
Madison. 3.0
Milwaukee. 3.0

Wyoming:
Cheyenne. 2.2
Fort Bridger. 1.3
Lander 1.5
New Castle 2.5
Sheridan 1.7
Yellowstone Park 1.4

INTERNATIONAL CODE COUNCIL®
Copyright © 2019 ICC & NYSDOS. ALL RIGHTS RESERVED. Accessed by Lauren Gualdino (lgualdino@briarcliffmanor.org), (-) Order Number #100880972 on May 08, 2020 07:05 AM (PDT) pursuant to License Agreement with ICC & NYSDOS. No further reproduction, no

100880972

[NY] APPENDIX C

STRUCTURAL SAFETY

SECTION C101
CUTTING, NOTCHING AND BORING IN WOOD MEMBERS

[BS] C101.1 Joist notching. Notches on the ends of joists shall not exceed one-fourth the joist depth. Holes bored in joists shall not be within 2 inches (51 mm) of the top or bottom of the joist, and the diameter of any such hole shall not exceed one-third the depth of the joist. Notches in the top or bottom of joists shall not exceed one-sixth the depth and shall not be located in the middle third of the span.

[BS] C101.2 Stud cutting and notching. In exterior walls and bearing partitions, any wood stud is permitted to be cut or notched to a depth not exceeding 25 percent of its width. Cutting or notching of studs to a depth not greater than 40 percent of the width of the stud is permitted in nonbearing partitions supporting no loads other than the weight of the partition.

[BS] C101.3 Bored holes. The diameter of bored holes in wood studs shall not exceed 40 percent of the stud depth. The diameter of bored holes in wood studs shall not exceed 60 percent of the stud depth in nonbearing partitions. The diameter of bored holes in wood studs shall not exceed 60 percent of the stud depth in any wall where each stud is doubled, provided that not more than two such successive doubled studs are so bored. The edge of the bored hole shall not be closer than $^{5}/_{8}$ inch (15.9 mm) to the edge of the stud. Bored holes shall be not located at the same section of stud as a cut or notch.

[BS] C101.4 Cutting, notching and boring holes in structural steel framing. The cutting, notching and boring of holes in structural steel framing members shall be as prescribed by the registered design professional.

[BS] C101.5 Cutting, notching and boring holes in cold-formed steel framing. Flanges and lips of load-bearing cold-formed steel framing members shall not be cut or notched. Holes in webs of load-bearing cold-formed steel framing members shall be permitted along the centerline of the web of the framing member and shall not exceed the dimensional limitations, penetration spacing or minimum hole edge distance as prescribed by the registered design professional. Cutting, notching and boring holes of steel floor/roof decking shall be as prescribed by the registered design professional.

[BS] C101.6 Cutting, notching and boring holes in nonstructural cold-formed steel wall framing. Flanges and lips of nonstructural cold-formed steel wall studs shall not be cut or notched. Holes in webs of nonstructural cold-formed steel wall studs shall be permitted along the centerline of the web of the framing member, shall not exceed $1^{1}/_{2}$ inches (38 mm) in width or 4 inches (102 mm) in length, and the holes shall not be spaced less than 24 inches (610 mm) center to center from another hole or less than 10 inches (254 mm) from the bearing end.

INTERNATIONAL CODE COUNCIL®
Copyright © 2019 ICC & NYSDOS. ALL RIGHTS RESERVED. Accessed by Lauren Gualdino (lgualdino@briarcliffmanor.org), (-) Order Number #100880972 on May 08, 2020 07:05 AM (PDT) pursuant to License Agreement with ICC & NYSDOS. No further reproduction, no

INTERNATIONAL CODE COUNCIL®
Copyright © 2019 ICC & NYSDOS. ALL RIGHTS RESERVED. Accessed by Lauren Gualdino (lgualdino@briarcliffmanor.org), (-) Order Number #100880972 on May 08, 2020 07:05 AM (PDT) pursuant to License Agreement with ICC & NYSDOS. No further reproduction, no

100880972

[NY] APPENDIX D

DEGREE DAY AND DESIGN TEMPERATURES

[NY] TABLE D101
DEGREE DAY AND DESIGN TEMPERATURES[a] FOR CITIES IN NEW YORK STATE

STATE	STATION[b]	HEATING DEGREE DAYS (yearly total)	DESIGN TEMPERATURES			DEGREES NORTH LATITUDE[c]
			Winter	Summer		
			97 1/2%	Dry bulb 2 1/2%	Wet bulb 2 1/2%	
NY	Albany	6,875	-1	88	74	42°50′
	Albany[d]	6,201	1	88	74	42°50′
	Binghamton	7,286	1	83	72	42°10′
	Buffalo	7,062	6	85	73	43°00′
	NY (Central Park)[d]	4,871	15	89	75	40°50′
	NY (Kennedy)	5,219	15	87	75	40°40′
	NY(LaGuardia)	4,811	15	89	75	40°50′
	Rochester	6,748	5	88	73	43°10′
	Schenectady[d]	6,650	1	87	74	42°50′
	Syracuse	6,756	2	87	73	43°10′

a. All data were extracted from the 1985 ASHRAE Handbook, Fundamentals Volume.

b. Design data developed from airport temperature observations unless noted.

c. Latitude is given to the nearest 10 minutes.

d. Design data developed from office locations within an urban area, not from airport temperature observations.

INTERNATIONAL CODE COUNCIL®
Copyright © 2019 ICC & NYSDOS. ALL RIGHTS RESERVED. Accessed by Lauren Gualdino (lgualdino@briarcliffmanor.org), (-) Order Number #100880972 on May 08, 2020 07:05 AM (PDT) pursuant to License Agreement with ICC & NYSDOS. No further reproduction, no

100880972

INTERNATIONAL CODE COUNCIL®
Copyright © 2019 ICC & NYSDOS. ALL RIGHTS RESERVED. Accessed by Lauren Gualdino (lgualdino@briarcliffmanor.org), (-) Order Number #100880972 on May 08, 2020 07:05 AM (PDT) pursuant to License Agreement with ICC & NYSDOS. No further reproduction, no

100880972

APPENDIX E

SIZING OF WATER PIPING SYSTEM

This appendix is informative and is not part of this code.

SECTION E101
GENERAL

E101.1 Scope.

E101.1.1 This appendix outlines two procedures for sizing a water piping system (see Sections E103.3 and E201.1). The design procedures are based on the minimum static pressure available from the supply source, the head changes in the system caused by friction and elevation, and the rates of flow necessary for operation of various fixtures.

E101.1.2 Because of the variable conditions encountered in hydraulic design, it is impractical to specify definite and detailed rules for sizing of the water piping system. Accordingly, other sizing or design methods conforming to good engineering practice standards are acceptable alternatives to those presented herein.

SECTION E102
INFORMATION REQUIRED

E102.1 Preliminary. Obtain the necessary information regarding the minimum daily static service pressure in the area where the building is to be located. If the building supply is to be metered, obtain information regarding friction loss relative to the rate of flow for meters in the range of sizes likely to be used. Friction loss data can be obtained from most manufacturers of water meters.

E102.2 Demand load.

E102.2.1 Estimate the supply demand of the building main and the principal branches and risers of the system by totaling the corresponding demand from the applicable part of Table E103.3(3).

E102.2.2 Estimate continuous supply demands in gallons per minute (L/m) for items such as lawn sprinklers and air conditioners, and add the sum to the total demand for fixtures. The result is the estimated supply demand for the building supply.

SECTION E103
SELECTION OF PIPE SIZE

E103.1 General. Decide from Table 604.3 what is the desirable minimum residual pressure that should be maintained at the highest fixture in the supply system. If the highest group of fixtures contains flushometer valves, the pressure for the group should be not less than 15 pounds per square inch (psi) (103.4 kPa) flowing. For flush tank supplies, the available pressure should be not less than 8 psi (55.2 kPa) flowing, except blowout action fixtures must be not less than 25 psi (172.4 kPa) flowing.

E103.2 Pipe sizing.

E103.2.1 Pipe sizes can be selected according to the following procedure or by other design methods conforming to acceptable engineering practice and *approved* by the administrative authority. The sizes selected must not be less than the minimum required by this code.

E103.2.2 Water pipe sizing procedures are based on a system of pressure requirements and losses, the sum of which must not exceed the minimum pressure available at the supply source. These pressures are as follows:

1. Pressure required at fixture to produce required flow. See Sections 604.3 and 604.5.
2. Static pressure loss or gain (due to head) is computed at 0.433 psi per foot (9.8 kPa/m) of elevation change.

   Example: Assume that the highest fixture supply outlet is 20 feet (6096 mm) above or below the supply source. This produces a static pressure differential of 20 feet by 0.433 psi/foot (2096 mm by 9.8 kPa/m) and an 8.66 psi (59.8 kPa) loss.
3. Loss through water meter. The friction or pressure loss can be obtained from meter manufacturers.
4. Loss through taps in water main.
5. Losses through special devices such as filters, softeners, backflow prevention devices and pressure regulators. These values must be obtained from the manufacturers.
6. Loss through valves and fittings. Losses for these items are calculated by converting to equivalent length of piping and adding to the total pipe length.
7. Loss due to pipe friction can be calculated where the pipe size, the pipe length and the flow through the pipe are known. With these three items, the friction loss can be determined. For piping flow charts not included, use manufacturers' tables and velocity recommendations.

   Note: For the purposes of all examples, the following metric conversions are applicable:

   1 cubic foot per minute = 0.4719 L/s

   1 square foot = 0.0929 m^2

   1 degree = 0.0175 rad

   1 pound per square inch = 6.895 kPa

   1 inch = 25.4 mm

   1 foot = 304.8 mm

   1 gallon per minute = 3.785 L/m

E103.3 Segmented loss method. The size of water service mains, *branch* mains and risers by the segmented loss method must be determined according to water supply demand [gpm (L/m)], available water pressure [psi (kPa)] and friction loss

INTERNATIONAL CODE COUNCIL®
Copyright © 2019 ICC & NYSDOS. ALL RIGHTS RESERVED. Accessed by Lauren Gualdino (lgualdino@briarcliffmanor.org), (-) Order Number #100880972 on May 08, 2020 07:05 AM (PDT) pursuant to License Agreement with ICC & NYSDOS. No further reproduction, no

100880972

caused by the water meter and *developed length* of pipe [feet (m)], including equivalent length of fittings. This design procedure is based on the following parameters:

- Calculates the friction loss through each length of the pipe.
- Based on a system of pressure losses, the sum of which must not exceed the minimum pressure available at the street main or other source of supply.
- Pipe sizing based on estimated peak demand, total pressure losses caused by difference in elevation, equipment, *developed length* and pressure required at most remote fixture, loss through taps in water main, losses through fittings, filters, backflow prevention devices, valves and pipe friction.

Because of the variable conditions encountered in hydraulic design, it is impractical to specify definite and detailed rules for sizing of the water piping system. Current sizing methods do not address the differences in the probability of use and flow characteristics of fixtures between types of occupancies. Creating an exact model of predicting the demand for a building is impossible and final studies assessing the impact of water conservation on demand are not yet complete. The following steps are necessary for the segmented loss method.

1. **Preliminary.** Obtain the necessary information regarding the minimum daily static service pressure in the area where the building is to be located. If the building supply is to be metered, obtain information regarding friction loss relative to the rate of flow for meters in the range of sizes to be used. Friction loss data can be obtained from manufacturers of water meters. It is essential that enough pressure be available to overcome all system losses caused by friction and elevation so that plumbing fixtures operate properly. Section 604.6 requires the water distribution system to be designed for the minimum pressure available taking into consideration pressure fluctuations. The lowest pressure must be selected to guarantee a continuous, adequate supply of water. The lowest pressure in the public main usually occurs in the summer because of lawn sprinkling and supplying water for air-conditioning cooling towers. Future demands placed on the public main as a result of large growth or expansion should be considered. The available pressure will decrease as additional loads are placed on the public system.
2. **Demand load.** Estimate the supply demand of the building main and the principal branches and risers of the system by totaling the corresponding demand from the applicable part of Table E103.3(3). When estimating peak demand sizing methods typically use water supply fixture units (w.s.f.u.) [see Table E103.3(2)]. This numerical factor measures the load-producing effect of a single plumbing fixture of a given kind. The use of such fixture units can be applied to a single basic probability curve (or table), found in the various sizing methods [Table E103.3(3)]. The fixture units are then converted into gallons per minute (L/m) flow rate for estimating demand.

   2.1. Estimate continuous supply demand in gallons per minute (L/m) for items such as lawn sprinklers and air conditioners, and add the sum to the total demand for fixtures. The result is the estimated supply demand for the building supply. Fixture units cannot be applied to constant use fixtures such as hose bibbs, lawn sprinklers and air conditioners. These types of fixtures must be assigned the gallon per minute (L/m) value.
3. **Selection of pipe size.** This water pipe sizing procedure is based on a system of pressure requirements and losses, the sum of which must not exceed the minimum pressure available at the supply source. These pressures are as follows:

   3.1. Pressure required at the fixture to produce required flow. See Sections 604.3 and 604.5.

   3.2. Static pressure loss or gain (because of head) is computed at 0.433 psi per foot (9.8 kPa/m) of elevation change.

   3.3. Loss through a water meter. The friction or pressure loss can be obtained from the manufacturer.

   3.4. Loss through taps in water main [see Table E103.3(4)].

   3.5. Losses through special devices such as filters, softeners, backflow prevention devices and pressure regulators. These values must be obtained from the manufacturers.

   3.6. Loss through valves and fittings [see Tables E103.3(5) and E103.3(6)]. Losses for these items are calculated by converting to equivalent length of piping and adding to the total pipe length.

   3.7. Loss caused by pipe friction can be calculated where the pipe size, the pipe length and the flow through the pipe are known. With these three items, the friction loss can be determined using Figures E103.3(2) through E103.3(7). When using charts, use pipe inside diameters. For piping flow charts not included, use manufacturers' tables and velocity recommendations. Before attempting to size any water supply system, it is necessary to gather preliminary information that includes available pressure, piping material, select design velocity, elevation differences and *developed length* to most remote fixture. The water supply system is divided into sections at major changes in elevation or where *branches* lead to fixture groups. The peak demand must be determined in each part of the hot and cold water supply system that includes the corresponding water supply fixture unit and conversion to gallons per minute (L/m) flow rate to be expected through each section. Sizing methods require the determination of the "most hydraulically remote" fixture to compute the pressure loss caused by pipe and fittings. The hydrauli-

INTERNATIONAL CODE COUNCIL®
Copyright © 2019 ICC & NYSDOS. ALL RIGHTS RESERVED. Accessed by Lauren Gualdino (lgualdino@briarcliffmanor.org), (-) Order Number #100880972 on May 08, 2020 07:05 AM (PDT) pursuant to License Agreement with ICC & NYSDOS. No further reproduction, no

100880972

cally remote fixture represents the most downstream fixture along the circuit of piping requiring the most available pressure to operate properly. Consideration must be given to all pressure demands and losses, such as friction caused by pipe, fittings and equipment, elevation and the residual pressure required by Table 604.3. The two most common and frequent complaints about the water supply system operation are lack of adequate pressure and noise.

Problem: What size Type L copper water pipe, service and distribution will be required to serve a two-story factory building having on each floor, back-to-back, two toilet rooms each equipped with hot and cold water? The highest fixture is 21 feet (6401 mm) above the street main, which is tapped with a 2-inch (51 mm) corporation cock at which point the minimum pressure is 55 psi (379.2 kPa). In the building basement, a 2-inch (51 mm) meter with a maximum pressure drop of 11 psi (75.8 kPa) and 3-inch (76 mm) reduced pressure principle backflow preventer with a maximum pressure drop of 9 psi (621 kPa) are to be installed. The system is shown by Figure E103.3(1). To be determined are the pipe sizes for the service main and the cold and hot water distribution pipes.

Solution: A tabular arrangement such as shown in Table E103.3(1) should first be constructed. The steps to be followed are indicated by the tabular arrangement itself as they are in sequence, Columns 1 through 10 and Lines A through L.

Step 1

Columns 1 and 2: Divide the system into sections breaking at major changes in elevation or where *branches* lead to fixture groups. After point B [see Figure E103.3(1)], separate consideration will be given to the hot and cold water piping. Enter the sections to be considered in the service and cold water piping in Column 1 of the tabular arrangement. Column 1 of Table E103.3(1) provides a line-by-line recommended tabular arrangement for use in solving pipe sizing.

The objective in designing the water supply system is to ensure an adequate water supply and pressure to all fixtures and equipment. Column 2 provides the pounds per square inch (psi) to be considered separately from the minimum pressure available at the main. Losses to take into consideration are the following: the differences in elevation between the water supply source and the highest water supply outlet, meter pressure losses, the tap in main loss, special fixture devices such as water softeners and backflow prevention devices and the pressure required at the most remote fixture outlet. The difference in elevation can result in an increase or decrease in available pressure at the main. Where the water supply outlet is located above the source, this results in a loss in the available pressure and is subtracted from the pressure at the water source. Where the highest water supply outlet is located below the water supply source, there will be an increase in pressure that is added to the available pressure of the water source.

Column 3: According to Table E103.3(3), determine the gpm (L/m) of flow to be expected in each section of the system. These flows range from 28.6 to 108 gpm. Load values for fixtures must be determined as water supply fixture units and then converted to a gallon-per-minute (gpm) rating to determine peak demand. When calculating peak demands, the water supply fixture units are added and then converted to the gallon-per-minute rating. For continuous flow fixtures such as hose bibbs and lawn sprinkler systems, add the gallon-per-minute demand to the intermittent demand of fixtures. For example, a total of 120 water supply fixture units is converted to a demand of 48 gallons per minute. Two hose bibbs × 5 gpm demand = 10 gpm. Total gpm rating = 48.0 gpm + 10 gpm = 58.0 gpm demand.

Step 2

Line A: Enter the minimum pressure available at the main source of supply in Column 2. This is 55 psi (379.2 kPa). The local water authorities generally keep records of pressures at different times of day and year. The available pressure can be checked from nearby buildings or from fire department hydrant checks.

Line B: Determine from Table 604.3 the highest pressure required for the fixtures on the system, which is 15 psi (103.4 kPa), to operate a flushometer valve. The most remote fixture outlet is necessary to compute the pressure loss caused by pipe and fittings, and represents the most downstream fixture along the circuit of piping requiring the available pressure to operate properly as indicated by Table 604.3.

Line C: Determine the pressure loss for the meter size given or assumed. The total water flow from the main through the service as determined in Step 1 will serve to aid in the meter selected. There are three common types of water meters; the pressure losses are determined by the American Water Works Association Standards for displacement type, compound type and turbine type. The maximum pressure loss of such devices takes into consideration the meter size, safe operating capacity (gpm) and maximum rates for continuous operations (gpm). Typically, equipment imparts greater pressure losses than piping.

Line D: Select from Table E103.3(4) and enter the pressure loss for the tap size given or assumed. The loss of pressure through taps and tees in pounds per square inch (psi) is based on the total gallon-per-minute flow rate and size of the tap.

Line E: Determine the difference in elevation between the main and source of supply and the highest fixture on the system. Multiply this figure, expressed in feet, by 0.43 psi (2.9 kPa). Enter the resulting psi loss on Line E. The difference in elevation between the water supply source and the highest water supply outlet has a significant impact on the sizing of the water supply system. The difference in elevation usually results in a loss in the available pressure because the water supply outlet is generally located above the water supply source. The loss is caused by the pressure required to lift the water to the outlet. The pressure loss is subtracted from the pressure at the water source. Where the highest water supply outlet is located below the water

INTERNATIONAL CODE COUNCIL®
Copyright © 2019 ICC & NYSDOS. ALL RIGHTS RESERVED. Accessed by Lauren Gualdino (lgualdino@briarcliffmanor.org), (-) Order Number #100880972 on May 08, 2020 07:05 AM (PDT) pursuant to License Agreement with ICC & NYSDOS. No further reproduction, no

100880972

source, there will be an increase in pressure that is added to the available pressure of the water source.

Lines F, G and H: The pressure losses through filters, backflow prevention devices or other special fixtures must be obtained from the manufacturer or estimated and entered on these lines. Equipment such as backflow prevention devices, check valves, water softeners, instantaneous or tankless water heaters, filters and strainers can impart a much greater pressure loss than the piping. The pressure losses can range from 8 psi to 30 psi.

Step 3

Line I: The sum of the pressure requirements and losses that affect the overall system (Lines B through H) is entered on this line. Summarizing the steps, all of the system losses are subtracted from the minimum water pressure. The remainder is the pressure available for friction, defined as the energy available to push the water through the pipes to each fixture. This force can be used as an average pressure loss, as long as the pressure available for friction is not exceeded. Saving a certain amount for available water supply pressures as an area incurs growth, or because of aging of the pipe or equipment added to the system is recommended.

Step 4

Line J: Subtract Line I from Line A. This gives the pressure that remains available from overcoming friction losses in the system. This figure is a guide to the pipe size that is chosen for each section, incorporating the total friction losses to the most remote outlet (measured length is called *developed length*).

Exception: Where the main is above the highest fixture, the resulting psi must be considered a pressure gain (static head gain) and omitted from the sums of Lines B through H and added to Line J.

The maximum friction head loss that can be tolerated in the system during peak demand is the difference between the static pressure at the highest and most remote outlet at no-flow conditions and the minimum flow pressure required at that outlet. If the losses are within the required limits, then every run of pipe will be within the required friction head loss. Static pressure loss is the most remote outlet in feet × 0.433 = loss in psi caused by elevation differences.

Step 5

Column 4: Enter the length of each section from the main to the most remote outlet (at Point E). Divide the water supply system into sections breaking at major changes in elevation or where *branches* lead to fixture groups.

Step 6

E103.3.3. Selection of pipe size, Step 6 Column 5: When selecting a trial pipe size, the length from the water service or meter to the most remote fixture outlet must be measured to determine the *developed length*. However, in systems having a flushometer valve or temperature controlled shower at the topmost floors the *developed length* would be from the water meter to the most remote flushometer valve on the system. A rule of thumb is that size will become progressively smaller as the system extends farther from the main source of supply. The following formula is an acceptable method to determine trial pipe size:

Line J: (Pressure available to overcome pipe friction) × 100/equivalent length of run total *developed length* to most remote fixture × percentage factor of 1.5 (note: a percentage factor is used only as an estimate for friction losses imposed for fittings for initial trial pipe size) = psi (average pressure drops per 100 feet of pipe).

For trial pipe size, see Figure E 103.3(3) (Type L copper) based on 2.77 psi and a 108 gpm = $2^{1}/_{2}$ inches. To determine the equivalent length of run to the most remote outlet, the *developed length* is determined and added to the friction losses for fittings and valves. The *developed lengths* of the designated pipe sections are as follows:

A - B	54 ft
B - C	8 ft
C - D	13 ft
D - E	150 ft

Total developed length = 225 ft

The equivalent length of the friction loss in fittings and valves must be added to the *developed length* (most remote outlet). Where the size of fittings and valves is not known, the added friction loss should be approximated. A general rule that has been used is to add 50 percent of the *developed length* to allow for fittings and valves. For example, the equivalent length of run equals the *developed length* of run (225 ft × 1.5 = 338 ft). The total equivalent length of run for determining a trial pipe size is 338 feet.

Example: 9.36 (pressure available to overcome pipe friction) × 100/338 (equivalent length of run = 225 × 1.5) = 2.77 psi (average pressure drop per 100 feet of pipe).

Step 7

Column 6: Select from Table E103.3(6) the equivalent lengths for the trial pipe size of fittings and valves on each pipe section. Enter the sum for each section in Column 6. (The number of fittings to be used in this example must be an estimate.) The equivalent length of piping is the *developed length* plus the equivalent lengths of pipe corresponding to friction head losses for fittings and valves. Where the size of fittings and valves is not known, the added friction head losses must be approximated. An estimate for this example is found in Table E.1.

Step 8

Column 7: Add the figures from Column 4 and Column 6, and enter in Column 7. Express the sum in hundreds of feet.

Step 9

Column 8: Select from Figure E103.3(3) the friction loss per 100 feet (30 480 mm) of pipe for the gallon-per-minute flow in a section (Column 3) and trial pipe size (Col-

INTERNATIONAL CODE COUNCIL®
Copyright © 2019 ICC & NYSDOS. ALL RIGHTS RESERVED. Accessed by Lauren Gualdino (lgualdino@briarcliffmanor.org), (-) Order Number #100880972 on May 08, 2020 07:05 AM (PDT) pursuant to License Agreement with ICC & NYSDOS. No further reproduction, no

100880972

TABLE E.1

COLD WATER PIPE SECTION	FITTINGS/VALVES	PRESSURE LOSS EXPRESSED AS EQUIVALENT LENGTH OF TUBE (feet)	HOT WATER PIPE SECTION	FITTINGS/ VALVES	PRESSURE LOSS EXPRESSED AS EQUIVALENT OF TUBE (feet)
A-B	3-2 1/2″ Gate valves	3	A-B	3-2 1/2″ Gate valves	3
	1-2 1/2″ Side branch tee	12		1-2 1/2″ Side branch tee	12
B-C	1-2 1/2″ Straight run tee	0.5	B-C	1-2″ Straight run tee	7
				1-2″ 90-degree ell	0.5
C-F	1-2 1/2″ Side branch tee	12	C-F	1-1 1/2″ Side branch tee	7
C-D	1-2 1/2″ 90-degree ell	7	C-D	1- 1/2″ 90-degree ell	4
D-E	1-2 1/2″ Side branch tee	12	D-E	1-1 1/2″ Side branch tee	7

For SI: 1 foot = 304.8 mm, i inch = 25.4 mm.

umn 5). Maximum friction head loss per 100 feet is determined on the basis of total pressure available for friction head loss and the longest equivalent length of run. The selection is based on the gallon-per-minute demand, the uniform friction head loss and the maximum design velocity. Where the size indicated by hydraulic table indicates a velocity in excess of the selected velocity, a size must be selected that produces the required velocity.

Step 10

Column 9: Multiply the figures in Columns 7 and 8 for each section and enter in Column 9.

Total friction loss is determined by multiplying the friction loss per 100 feet (30 480 mm) for each pipe section in the total *developed length* by the pressure loss in fittings expressed as equivalent length in feet. Note: Section C-F should be considered in the total pipe friction losses only if greater loss occurs in Section C-F than in pipe section D-E. Section C-F is not considered in the total *developed length*. Total friction loss in equivalent length is determined in Table E.2.

Step 11

Line K: Enter the sum of the values in Column 9. The value is the total friction loss in equivalent length for each designated pipe section.

Step 12

Line L: Subtract Line J from Line K and enter in Column 10.

The result should always be a positive or plus figure. If it is not, repeat the operation using Columns 5, 6, 8 and 9 until a balance or near balance is obtained. If the difference between Lines J and K is a high positive number, it is an indication that the pipe sizes are too large and should be reduced, thus saving materials. In such a case, the operations using Columns 5, 6, 8 and 9 should again be repeated.

The total friction losses are determined and subtracted from the pressure available to overcome pipe friction for trial pipe size. This number is critical as it provides a guide to whether the pipe size selected is too large and the process should be repeated to obtain an economically designed system.

Answer: The final figures entered in Column 5 become the design pipe size for the respective sections. Repeating this operation a second time using the same sketch but considering the demand for hot water, it is possible to size the hot water distribution piping. This has been worked up as a part of the overall problem in the tabular arrangement used for sizing the service and water distribution piping. Note that consideration must be given to the pressure losses from the street main to the water heater (Section A-B) in determining the hot water pipe sizes.

TABLE E.2

PIPE SECTIONS	FRICTION LOSS EQUIVALENT LENGTH (feet)	
	Cold Water	Hot Water
A-B	0.69 × 3.2 = 2.21	0.69 × 3.2 = 2.21
B-C	0.085 × 3.1 = 0.26	0.16 × 1.4 = 0.22
C-D	0.20 × 1.9 = 0.38	0.17 × 3.2 = 0.54
D-E	1.62 × 1.9 = 3.08	1.57 × 3.2 = 5.02
Total pipe friction losses (Line K)	5.93	7.99

For SI: 1 foot = 304.8 mm, 1 gpm = 3.785 L/m.

INTERNATIONAL CODE COUNCIL®
Copyright © 2019 ICC & NYSDOS. ALL RIGHTS RESERVED. Accessed by Lauren Gualdino (lgualdino@briarcliffmanor.org), (-) Order Number #100880972 on May 08, 2020 07:05 AM (PDT) pursuant to License Agreement with ICC & NYSDOS. No further reproduction, no

100880972

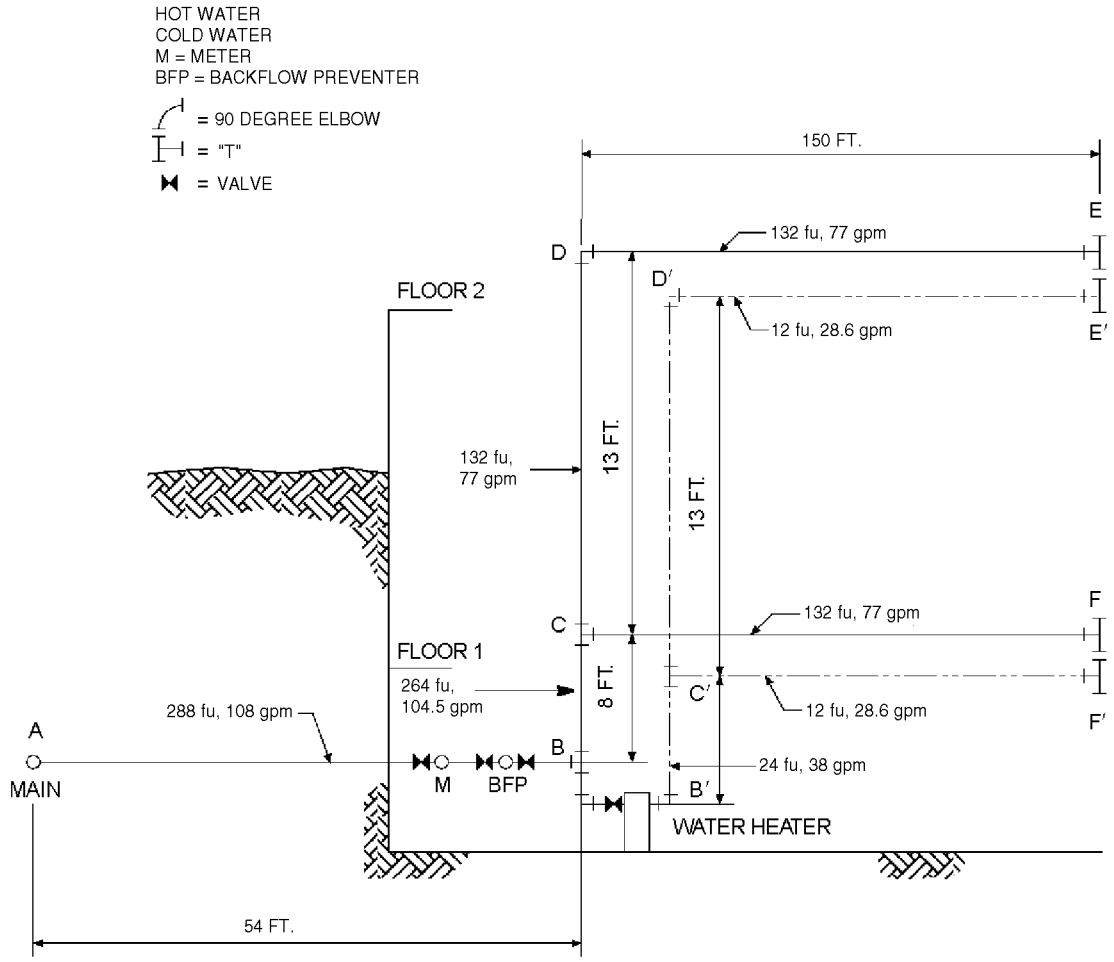

For SI: 1 foot = 304.8 mm, 1 gpm = 3.785 L/m.

FIGURE E103.3(1)
EXAMPLE-SIZING

INTERNATIONAL CODE COUNCIL®
Copyright © 2019 ICC & NYSDOS. ALL RIGHTS RESERVED. Accessed by Lauren Gualdino (lgualdino@briarcliffmanor.org), (-) Order Number #100880972 on May 08, 2020 07:05 AM (PDT) pursuant to License Agreement with ICC & NYSDOS. No further reproduction, no

100880972

TABLE E103.3(1)
RECOMMENDED TABULAR ARRANGEMENT FOR USE IN SOLVING PIPE SIZING PROBLEMS

COLUMN	1		2	3	4	5	6	7	8	9	10
Line	Description		Lb per square inch (psi)	Gal. per min through section	Length of section (feet)	Trial pipe size (inches)	Equivalent length of fittings and valves (feet)	Total equivalent length col. 4 and col. 6 (100 feet)	Friction loss per 100 feet of trial size pipe (psi)	Friction loss in equivalent length col. 8 x col. 7 (psi)	Excess pressure over friction losses (psi)
A	Service and cold water distribution piping[a]	Minimum pressure available at main	55.00								
B		Highest pressure required at a fixture (Table 604.3)	15.00								
C		Meter loss 2″ meter	11.00								
D		Tap in main loss 2″ tap [Table E103.3(4)]	1.61								
E		Static head loss 21 × 43 psi	9.03								
F		Special fixture loss backflow preventer	9.00								
G		Special fixture loss—Filter	0.00								
H		Special fixture loss—Other	0.00								
I		Total overall losses and requirements (Sum of Lines B through H)	45.64								
J		Pressure available to overcome pipe friction (Line A minus Lines B to H)	9.36								
	DESIGNATION Pipe section (from diagram) Cold water Distribution piping	FU	.264								
		AB	.288	108.0	54	$2^1/_2$	15.00	0.69	3.2	2.21	—
		BC	.264	104.5	8	$2^1/_2$	0.5	0.85	3.1	0.26	—
		CD	.132	77.0	13	$2^1/_2$	7.00	0.20	1.9	0.38	—
		CF[b]	.132	77.0	150	$2^1/_2$	12.00	1.62	1.9	3.08	—
		DE[b]	.132	77.0	150	$2^1/_2$	12.00	1.62	1.9	3.08	—
K	Total pipe friction losses (cold)			—	—	—	—	—	—	5.93	—
L	Difference (Line J minus Line K)			—	—	—	—	—	—	—	3.43
	Pipe section (from diagram) Diagram Hot water Distribution Piping	A′B′	.288	108.0	54	$2^1/_2$	12.00	0.69	3.3	2.21	—
		B′C′	.24	38.0	8	2	7.5	0.16	1.4	0.22	—
		C′D′	.12	28.6	13	$1^1/_2$	4.0	0.17	3.2	0.54	—
		C′F′[b]	.12	28.6	150	$1^1/_2$	7.00	1.57	3.2	5.02	—
		D′E′[b]	.12	28.6	150	$1^1/_2$	7.00	1.57	3.2	5.02	—
K	Total pipe friction losses (hot)			—	—	—	—	—	—	7.99	—
L	Difference (Line J minus Line K)			—	—	—	—	—	—	—	1.37

For SI: 1 inch = 25.4 mm, 1 foot = 304.8 mm, 1 psi = 6.895 kPa, 1 gpm = 3.785 L/m.

a. To be considered as pressure gain for fixtures below main (to consider separately, omit from “I” and add to “J”).

b. To consider separately, in K use C-F only if greater loss than above.

INTERNATIONAL CODE COUNCIL®
Copyright © 2019 ICC & NYSDOS. ALL RIGHTS RESERVED. Accessed by Lauren Gualdino (lgualdino@briarcliffmanor.org), (-) Order Number #100880972 on May 08, 2020 07:05 AM (PDT) pursuant to License Agreement with ICC & NYSDOS. No further reproduction, no

100880972

TABLE E103.3(2)
LOAD VALUES ASSIGNED TO FIXTURES[a]

FIXTURE	OCCUPANCY	TYPE OF SUPPLY CONTROL	LOAD VALUES, IN WATER SUPPLY FIXTURE UNITS (wsfu)		
			Cold	Hot	Total
Bathroom group	Private	Flush tank	2.7	1.5	3.6
Bathroom group	Private	Flushometer valve	6.0	3.0	8.0
Bathtub	Private	Faucet	1.0	1.0	1.4
Bathtub	Public	Faucet	3.0	3.0	4.0
Bidet	Private	Faucet	1.5	1.5	2.0
Combination fixture	Private	Faucet	2.25	2.25	3.0
Dishwashing machine	Private	Automatic	—	1.4	1.4
Drinking fountain	Offices, etc.	$^3/_8$″ valve	0.25	—	0.25
Kitchen sink	Private	Faucet	1.0	1.0	1.4
Kitchen sink	Hotel, restaurant	Faucet	3.0	3.0	4.0
Laundry trays (1 to 3)	Private	Faucet	1.0	1.0	1.4
Lavatory	Private	Faucet	0.5	0.5	0.7
Lavatory	Public	Faucet	1.5	1.5	2.0
Service sink	Offices, etc.	Faucet	2.25	2.25	3.0
Shower head	Public	Mixing valve	3.0	3.0	4.0
Shower head	Private	Mixing valve	1.0	1.0	1.4
Urinal	Public	1″ flushometer valve	10.0	—	10.0
Urinal	Public	$^3/_4$″ flushometer valve	5.0	—	5.0
Urinal	Public	Flush tank	3.0	—	3.0
Washing machine (8 lb)	Private	Automatic	1.0	1.0	1.4
Washing machine (8 lb)	Public	Automatic	2.25	2.25	3.0
Washing machine (15 lb)	Public	Automatic	3.0	3.0	4.0
Water closet	Private	Flushometer valve	6.0	—	6.0
Water closet	Private	Flush tank	2.2	—	2.2
Water closet	Public	Flushometer valve	10.0	—	10.0
Water closet	Public	Flush tank	5.0	—	5.0
Water closet	Public or private	Flushometer tank	2.0	—	2.0

For SI: 1 inch = 25.4 mm, 1 pound = 0.454 kg.

a. For fixtures not listed, loads should be assumed by comparing the fixture to one listed using water in similar quantities and at similar rates. The assigned loads for fixtures with both hot and cold water supplies are given for separate hot and cold water loads and for total load. The separate hot and cold water loads being three-fourths of the total load for the fixture in each case.

INTERNATIONAL CODE COUNCIL®
Copyright © 2019 ICC & NYSDOS. ALL RIGHTS RESERVED. Accessed by Lauren Gualdino (lgualdino@briarcliffmanor.org), (-) Order Number #100880972 on May 08, 2020 07:05 AM (PDT) pursuant to License Agreement with ICC & NYSDOS. No further reproduction, no

100880972

TABLE E103.3(3)
TABLE FOR ESTIMATING DEMAND

SUPPLY SYSTEMS PREDOMINANTLY FOR FLUSH TANKS			SUPPLY SYSTEMS PREDOMINANTLY FOR FLUSHOMETER VALVES		
Load	Demand		Load	Demand	
(Water supply fixture units)	(Gallons per minute)	(Cubic feet per minute)	(Water supply fixture units)	(Gallons per minute)	(Cubic feet per minute)
1	3.0	0.04104	—	—	—
2	5.0	0.0684	—	—	—
3	6.5	0.86892	—	—	—
4	8.0	1.06944	—	—	—
5	9.4	1.256592	5	15.0	2.0052
6	10.7	1.430376	6	17.4	2.326032
7	11.8	1.577424	7	19.8	2.646364
8	12.8	1.711104	8	22.2	2.967696
9	13.7	1.831416	9	24.6	3.288528
10	14.6	1.951728	10	27.0	3.60936
11	15.4	2.058672	11	27.8	3.716304
12	16.0	2.13888	12	28.6	3.823248
13	16.5	2.20572	13	29.4	3.930192
14	17.0	2.27256	14	30.2	4.037136
15	17.5	2.3394	15	31.0	4.14408
16	18.0	2.90624	16	31.8	4.241024
17	18.4	2.459712	17	32.6	4.357968
18	18.8	2.513184	18	33.4	4.464912
19	19.2	2.566656	19	34.2	4.571856
20	19.6	2.620128	20	35.0	4.6788
25	21.5	2.87412	25	38.0	5.07984
30	23.3	3.114744	30	42.0	5.61356
35	24.9	3.328632	35	44.0	5.88192
40	26.3	3.515784	40	46.0	6.14928
45	27.7	3.702936	45	48.0	6.41664
50	29.1	3.890088	50	50.0	6.684
60	32.0	4.27776	60	54.0	7.21872
70	35.0	4.6788	70	58.0	7.75344
80	38.0	5.07984	80	61.2	8.181216
90	41.0	5.48088	90	64.3	8.595624
100	43.5	5.81508	100	67.5	9.0234
120	48.0	6.41664	120	73.0	9.75864
140	52.5	7.0182	140	77.0	10.29336
160	57.0	7.61976	160	81.0	10.82808
180	61.0	8.15448	180	85.5	11.42964
200	65.0	8.6892	200	90.0	12.0312
225	70.0	9.3576	225	95.5	12.76644
250	75.0	10.026	250	101.0	13.50168

(continued)

INTERNATIONAL CODE COUNCIL®
Copyright © 2019 ICC & NYSDOS. ALL RIGHTS RESERVED. Accessed by Lauren Gualdino (lgualdino@briarcliffmanor.org), (-) Order Number #100880972 on May 08, 2020 07:05 AM (PDT) pursuant to License Agreement with ICC & NYSDOS. No further reproduction, no

100880972

TABLE E103.3(3)-continued
TABLE FOR ESTIMATING DEMAND

SUPPLY SYSTEMS PREDOMINANTLY FOR FLUSH TANKS			SUPPLY SYSTEMS PREDOMINANTLY FOR FLUSHOMETER VALVES		
Load	Demand		Load	Demand	
(Water supply fixture units)	(Gallons per minute)	(Cubic feet per minute)	(Water supply fixture units)	(Gallons per minute)	(Cubic feet per minute)
275	80.0	10.6944	275	104.5	13.96956
300	85.0	11.3628	300	108.0	14.43744
400	105.0	14.0364	400	127.0	16.97736
500	124.0	16.57632	500	143.0	19.11624
750	170.0	22.7256	750	177.0	23.66136
1,000	208.0	27.80544	1,000	208.0	27.80544
1,250	239.0	31.94952	1,250	239.0	31.94952
1,500	269.0	35.95992	1,500	269.0	35.95992
1,750	297.0	39.70296	1,750	297.0	39.70296
2,000	325.0	43.446	2,000	325.0	43.446
2,500	380.0	50.7984	2,500	380.0	50.7984
3,000	433.0	57.88344	3,000	433.0	57.88344
4,000	525.0	70.182	4,000	525.0	70.182
5,000	593.0	79.27224	5,000	593.0	79.27224

For SI: 1 inch = 25.4 mm, 1 gallon per minute = 3.785 L/m, 1 cubic foot per minute = 0.28 m^3 per minute.

TABLE E103.3(4)
LOSS OF PRESSURE THROUGH TAPS AND TEES IN POUNDS PER SQUARE INCH (psi)

GALLONS PER MINUTE	SIZE OF TAP OR TEE (inches)						
	$^5/_8$	$^3/_4$	1	$1^1/_4$	$1^1/_2$	2	3
10	1.35	0.64	0.18	0.08	—	—	—
20	5.38	2.54	0.77	0.31	0.14	—	—
30	12.10	5.72	1.62	0.69	0.33	0.10	—
40	—	10.20	3.07	1.23	0.58	0.18	—
50	—	15.90	4.49	1.92	0.91	0.28	—
60	—	—	6.46	2.76	1.31	0.40	—
70	—	—	8.79	3.76	1.78	0.55	0.10
80	—	—	11.50	4.90	2.32	0.72	0.13
90	—	—	14.50	6.21	2.94	0.91	0.16
100	—	—	17.94	7.67	3.63	1.12	0.21
120	—	—	25.80	11.00	5.23	1.61	0.30
140	—	—	35.20	15.00	7.12	2.20	0.41
150	—	—	—	17.20	8.16	2.52	0.47
160	—	—	—	19.60	9.30	2.92	0.54
180	—	—	—	24.80	11.80	3.62	0.68
200	—	—	—	30.70	14.50	4.48	0.84
225	—	—	—	38.80	18.40	5.60	1.06
250	—	—	—	47.90	22.70	7.00	1.31
275	—	—	—	—	27.40	7.70	1.59
300	—	—	—	—	32.60	10.10	1.88

For SI: 1 inch = 25.4 mm, 1 pound per square inch = 6.895 kpa, 1 gallon per minute = 3.785 L/m.

INTERNATIONAL CODE COUNCIL®
Copyright © 2019 ICC & NYSDOS. ALL RIGHTS RESERVED. Accessed by Lauren Gualdino (lgualdino@briarcliffmanor.org), (-) Order Number #100880972 on May 08, 2020 07:05 AM (PDT) pursuant to License Agreement with ICC & NYSDOS. No further reproduction, no

100880972

TABLE E103.3(5)
ALLOWANCE IN EQUIVALENT LENGTHS OF PIPE FOR FRICTION LOSS IN VALVES AND THREADED FITTINGS (feet)

FITTING OR VALVE	PIPE SIZE (inches)							
	1/2	3/4	1	1 1/4	1 1/2	2	2 1/2	3
45-degree elbow	1.2	1.5	1.8	2.4	3.0	4.0	5.0	6.0
90-degree elbow	2.0	2.5	3.0	4.0	5.0	7.0	8.0	10.0
Tee, run	0.6	0.8	0.9	1.2	1.5	2.0	2.5	3.0
Tee, branch	3.0	4.0	5.0	6.0	7.0	10.0	12.0	15.0
Gate valve	0.4	0.5	0.6	0.8	1.0	1.3	1.6	2.0
Balancing valve	0.8	1.1	1.5	1.9	2.2	3.0	3.7	4.5
Plug-type cock	0.8	1.1	1.5	1.9	2.2	3.0	3.7	4.5
Check valve, swing	5.6	8.4	11.2	14.0	16.8	22.4	28.0	33.6
Globe valve	15.0	20.0	25.0	35.0	45.0	55.0	65.0	80.0
Angle valve	8.0	12.0	15.0	18.0	22.0	28.0	34.0	40.0

For SI: 1 inch = 25.4 mm, 1 foot = 304.8 mm, 1 degree = 0.0175 rad.

TABLE E103.3(6)
PRESSURE LOSS IN FITTINGS AND VALVES EXPRESSED AS EQUIVALENT LENGTH OF TUBE[a] (feet)

NOMINAL OR STANDARD SIZE (inches)	FITTINGS				Coupling	VALVES			
	Standard Ell		90-Degree Tee			Ball	Gate	Butterfly	Check
	90 Degree	45 Degree	Side Branch	Straight Run					
3/8	0.5	—	1.5	—	—	—	—	—	1.5
1/2	1	0.5	2	—	—	—	—	—	2
5/8	1.5	0.5	2	—	—	—	—	—	2.5
3/4	2	0.5	3	—	—	—	—	—	3
1	2.5	1	4.5	—	—	0.5	—	—	4.5
1 1/4	3	1	5.5	0.5	0.5	0.5	—	—	5.5
1 1/2	4	1.5	7	0.5	0.5	0.5	—	—	6.5
2	5.5	2	9	0.5	0.5	0.5	0.5	7.5	9
2 1/2	7	2.5	12	0.5	0.5	—	1	10	11.5
3	9	3.5	15	1	1	—	1.5	15.5	14.5
3 1/2	9	3.5	14	1	1	—	2	—	12.5
4	12.5	5	21	1	1	—	2	16	18.5
5	16	6	27	1.5	1.5	—	3	11.5	23.5
6	19	7	34	2	2	—	3.5	13.5	26.5
8	29	11	50	3	3	—	5	12.5	39

For SI: 1 inch = 25.4 mm, 1 foot = 304.8 mm, 1 degree = 0.01745 rad.

a. Allowances are for streamlined soldered fittings and recessed threaded fittings. For threaded fittings, double the allowances shown in the table. The equivalent lengths presented above are based on a C factor of 150 in the Hazen-Williams friction loss formula. The lengths shown are rounded to the nearest half-foot.

INTERNATIONAL CODE COUNCIL®
Copyright © 2019 ICC & NYSDOS. ALL RIGHTS RESERVED. Accessed by Lauren Gualdino (lgualdino@briarcliffmanor.org), (-) Order Number #100880972 on May 08, 2020 07:05 AM (PDT) pursuant to License Agreement with ICC & NYSDOS. No further reproduction, no

100880972

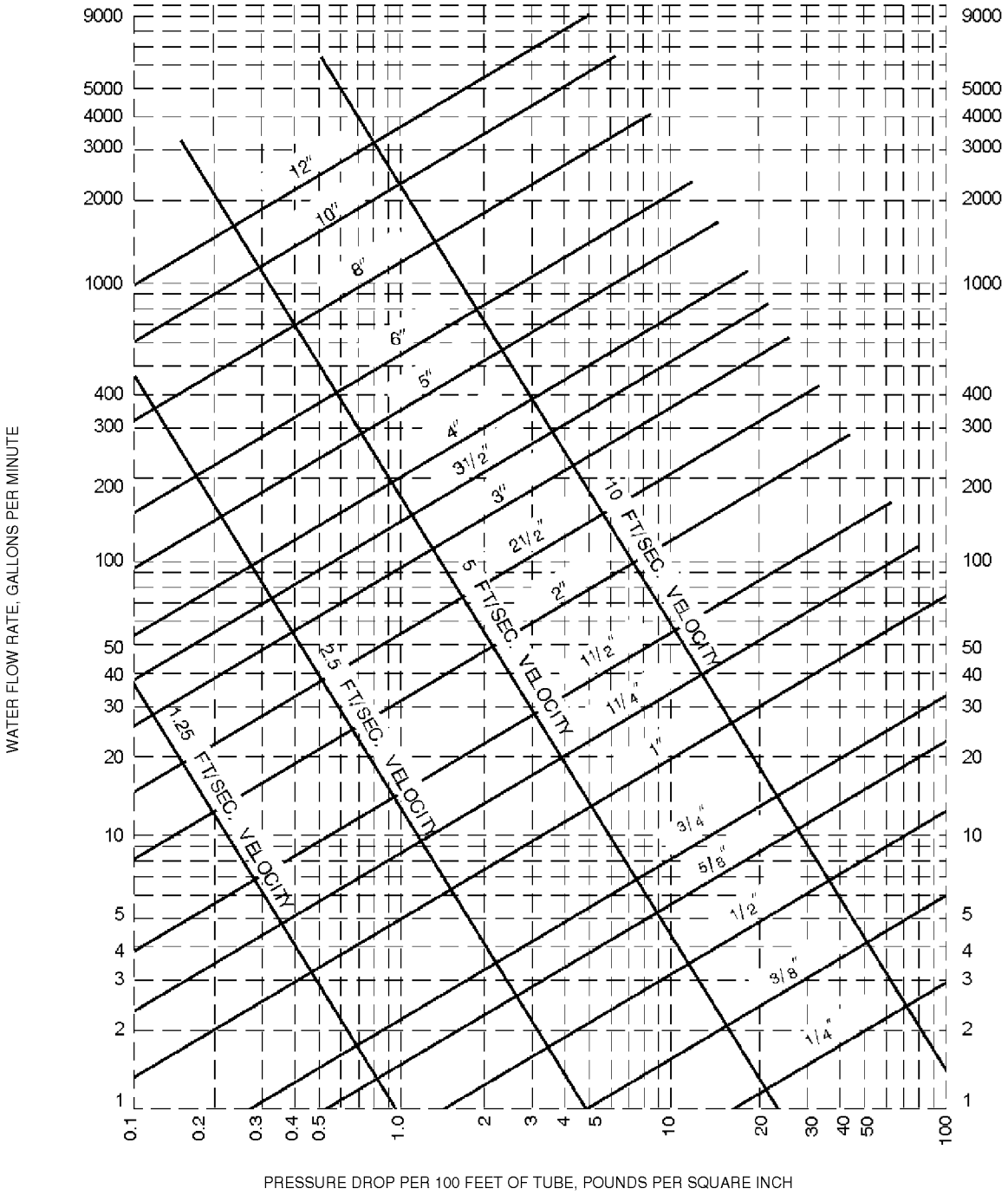

Note: Fluid velocities in excess of 5 to 8 feet/second are not usually recommended.

For SI:1 inch = 25.4 mm, 1 foot = 304.8 mm, 1 gpm = 3.785 L/m, 1 psi = 6.895 kPa, 1 foot per second = 0.305 m/s.

a. This chart applies to smooth new copper tubing with recessed (streamline) soldered joints and to the actual sizes of types indicated on the diagram.

FIGURE E103.3(2)
FRICTION LOSS IN SMOOTH PIPE[a] (TYPE K, ASTM B88 COPPER TUBING)

INTERNATIONAL CODE COUNCIL®
Copyright © 2019 ICC & NYSDOS. ALL RIGHTS RESERVED. Accessed by Lauren Gualdino (lgualdino@briarcliffmanor.org), (-) Order Number #100880972 on May 08, 2020 07:05 AM (PDT) pursuant to License Agreement with ICC & NYSDOS. No further reproduction, no

100880972

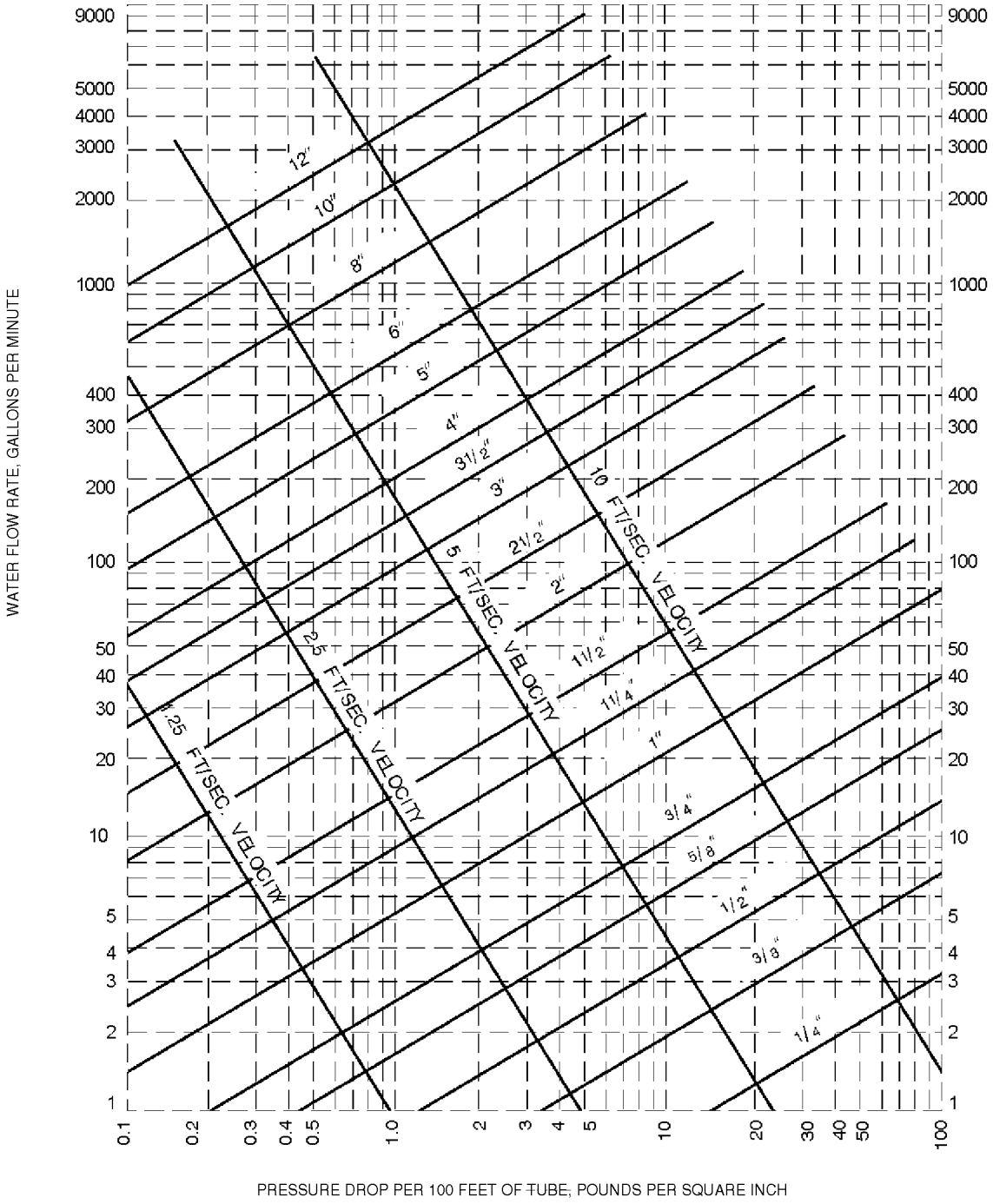

Note: Fluid velocities in excess of 5 to 8 feet/second are not usually recommended.

For SI:1 inch = 25.4 mm, 1 foot = 304.8 mm, 1 gpm = 3.785 L/m, 1 psi = 6.895 kPa, 1 foot per second = 0.305 m/s.

a. This chart applies to smooth new copper tubing with recessed (streamline) soldered joints and to the actual sizes of types indicated on the diagram.

FIGURE E103.3(3)
FRICTION LOSS IN SMOOTH PIPE[a] (TYPE L, ASTM B88 COPPER TUBING)

INTERNATIONAL CODE COUNCIL®
Copyright © 2019 ICC & NYSDOS. ALL RIGHTS RESERVED. Accessed by Lauren Gualdino (lgualdino@briarcliffmanor.org), (-) Order Number #100880972 on May 08, 2020 07:05 AM (PDT) pursuant to License Agreement with ICC & NYSDOS. No further reproduction, no

100880972

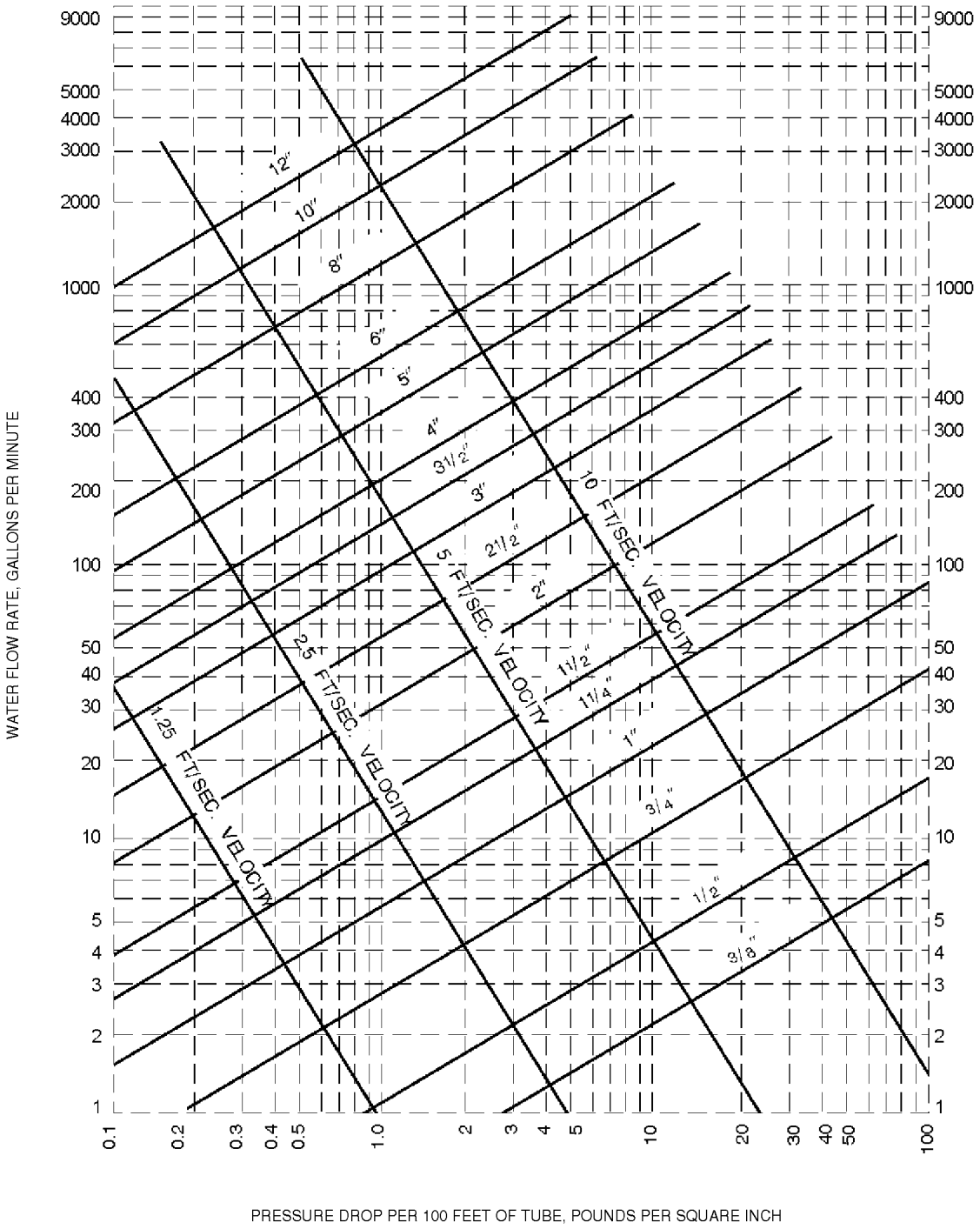

Note: Fluid velocities in excess of 5 to 8 feet/second are not usually recommended.

For SI:1 inch = 25.4 mm, 1 foot = 304.8 mm, 1 gpm = 3.785 L/m, 1 psi = 6.895 kPa, 1 foot per second = 0.305 m/s.

a. This chart applies to smooth new copper tubing with recessed (streamline) soldered joints and to the actual sizes of types indicated on the diagram.

FIGURE E103.3(4)
FRICTION LOSS IN SMOOTH PIPE[a] (TYPE M, ASTM B88 COPPER TUBING)

INTERNATIONAL CODE COUNCIL®
Copyright © 2019 ICC & NYSDOS. ALL RIGHTS RESERVED. Accessed by Lauren Gualdino (lgualdino@briarcliffmanor.org), (-) Order Number #100880972 on May 08, 2020 07:05 AM (PDT) pursuant to License Agreement with ICC & NYSDOS. No further reproduction, no

100880972

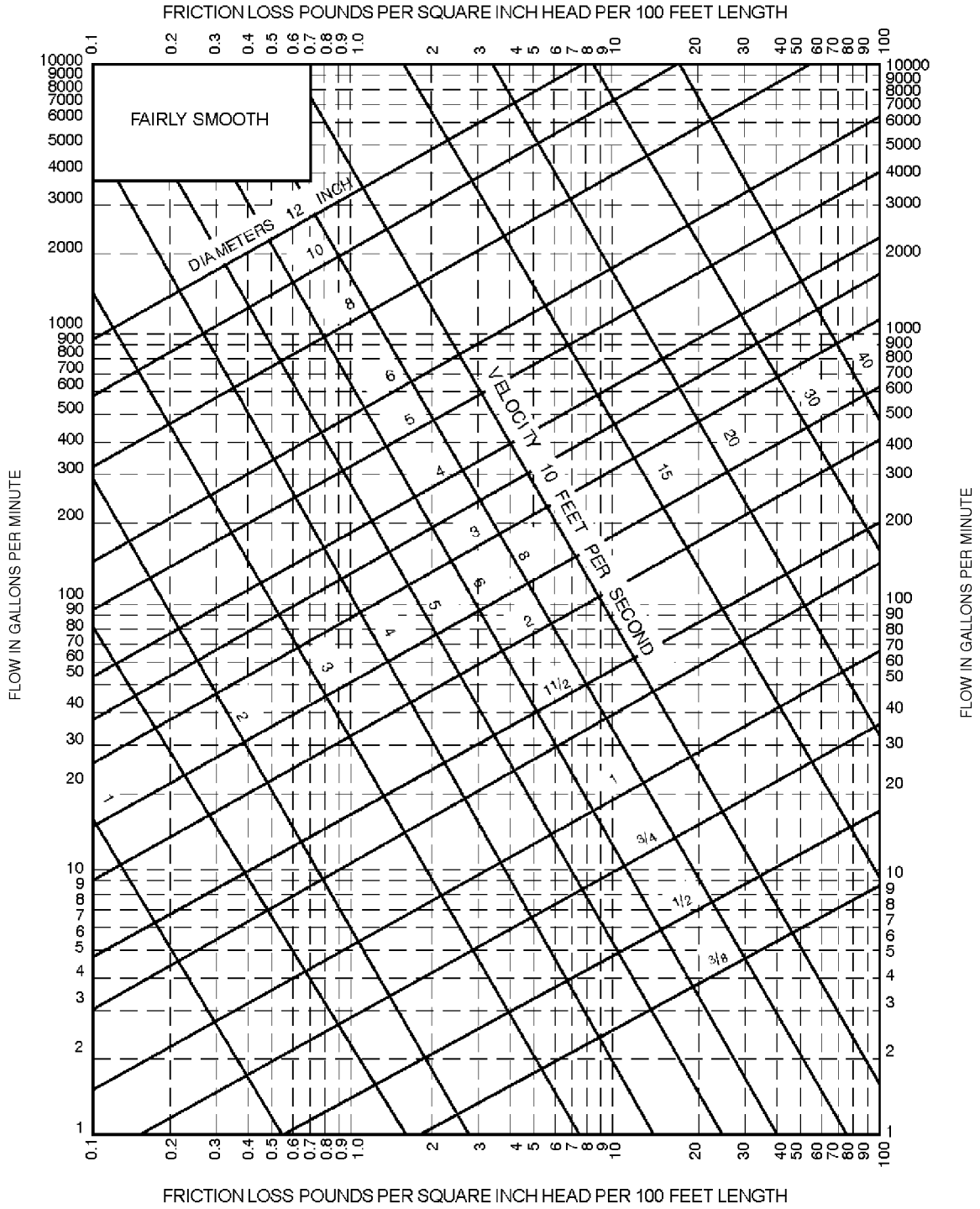

For SI:1 inch = 25.4 mm, 1 foot = 304.8 mm, 1 gpm = 3.785 L/m, 1 psi = 6.895 kPa, 1 foot per second = 0.305 m/s.

a. This chart applies to smooth new steel (fairly smooth) pipe and to actual diameters of standard-weight pipe.

FIGURE E103.3(5)
FRICTION LOSS IN FAIRLY SMOOTH PIPE[a]

INTERNATIONAL CODE COUNCIL®
Copyright © 2019 ICC & NYSDOS. ALL RIGHTS RESERVED. Accessed by Lauren Gualdino (lgualdino@briarcliffmanor.org), (-) Order Number #100880972 on May 08, 2020 07:05 AM (PDT) pursuant to License Agreement with ICC & NYSDOS. No further reproduction, no

100880972

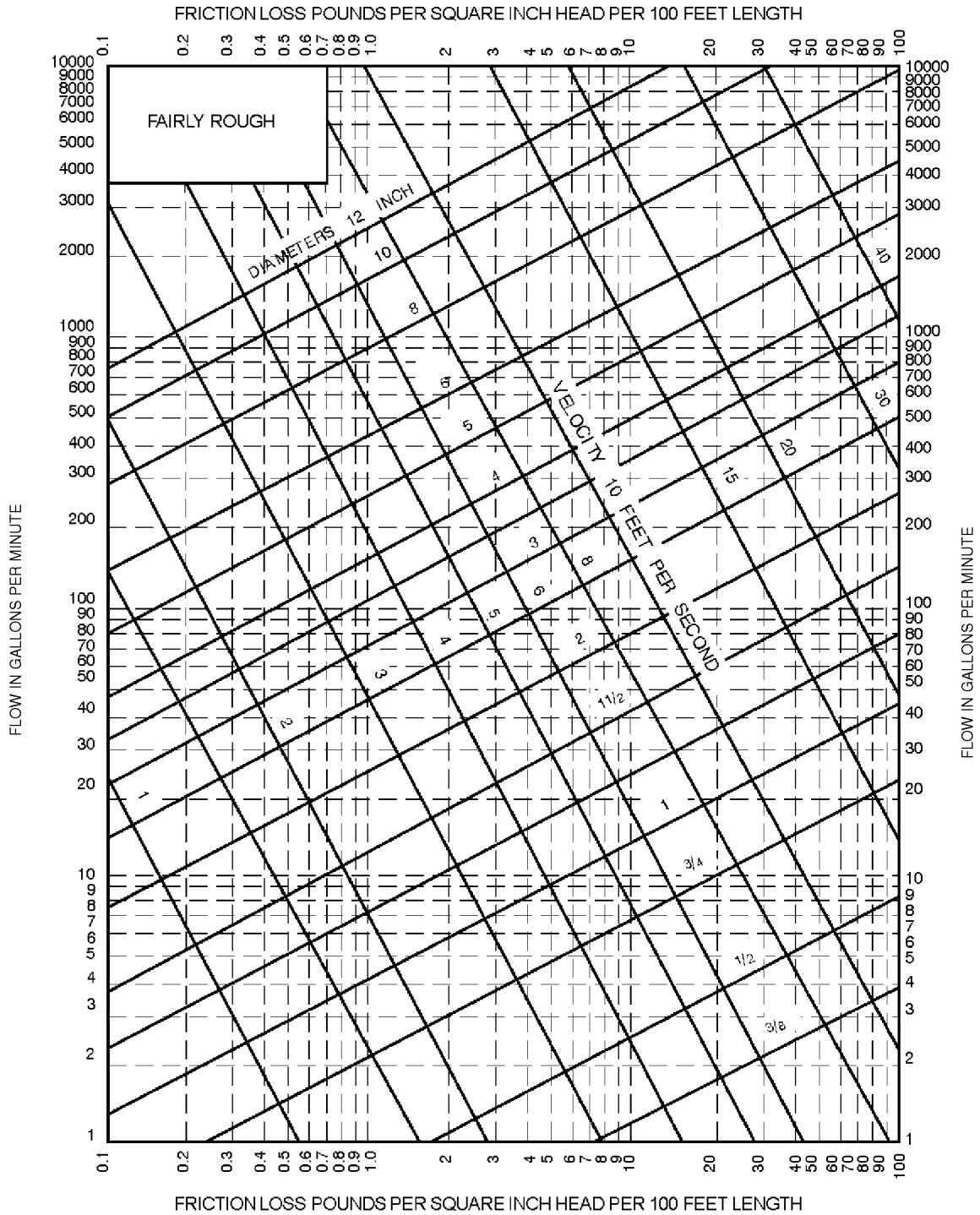

For SI:1 inch = 25.4 mm, 1 foot = 304.8 mm, 1 gpm = 3.785 L/m, 1 psi = 6.895 kPa, 1 foot per second = 0.305 m/s.

a. This chart applies to fairly rough pipe and to actual diameters, which in general will be less than the actual diameters of the new pipe of the same kind.

FIGURE E103.3(6)
FRICTION LOSS IN FAIRLY ROUGH PIPE[a]

INTERNATIONAL CODE COUNCIL®
Copyright © 2019 ICC & NYSDOS. ALL RIGHTS RESERVED. Accessed by Lauren Gualdino (lgualdino@briarcliffmanor.org), (-) Order Number #100880972 on May 08, 2020 07:05 AM (PDT) pursuant to License Agreement with ICC & NYSDOS. No further reproduction, no

100880972

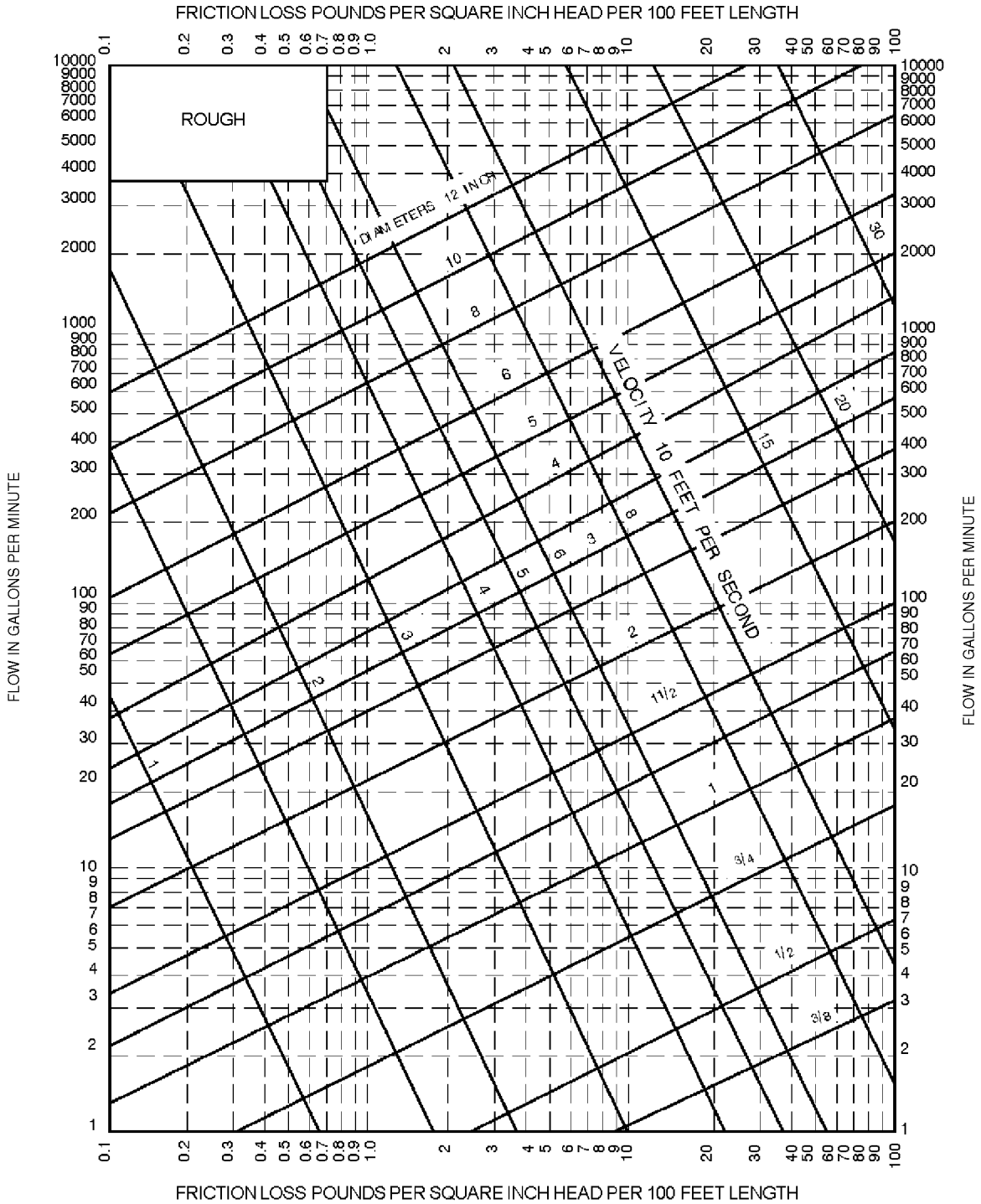

For SI: 1 inch = 25.4 mm, 1 foot = 304.8 mm, 1 gpm = 3.785 L/m, 1 psi = 6.895 kPa, 1 foot per second = 0.305 m/s.
a. This chart applies to very rough pipe and existing pipe and to their actual diameters.

FIGURE E103.3(7)
FRICTION LOSS IN ROUGH PIPE[a]

INTERNATIONAL CODE COUNCIL®
Copyright © 2019 ICC & NYSDOS. ALL RIGHTS RESERVED. Accessed by Lauren Gualdino (lgualdino@briarcliffmanor.org), (-) Order Number #100880972 on May 08, 2020 07:05 AM (PDT) pursuant to License Agreement with ICC & NYSDOS. No further reproduction, no

100880972

SECTION E201
SELECTION OF PIPE SIZE

E201.1 Size of water service mains, branch mains and risers. The minimum size water service pipe shall be $^3/_4$ inch (19.1 mm). The size of water service mains, *branch* mains and risers shall be determined according to water supply demand [gpm (L/m)], available water pressure [psi (kPa)] and friction loss due to the water meter and *developed length* of pipe [feet (m)], including equivalent length of fittings. The size of each water distribution system shall be determined according to the procedure outlined in this section or by other design methods conforming to acceptable engineering practice and *approved* by the *building official*:

1. Supply load in the building water distribution system shall be determined by total load on the pipe being sized, in terms of water-supply fixture units (w.s.f.u.), as shown in Table E103.3(2). For fixtures not listed, choose a w.s.f.u. value of a fixture with similar flow characteristics.
2. Obtain the minimum daily static service pressure [psi (kPa)] available (as determined by the local water authority) at the water meter or other source of supply at the installation location. Adjust this minimum daily static pressure [psi (kPa)] for the following conditions:
   - 2.1. Determine the difference in elevation between the source of supply and the highest water supply outlet. Where the highest water supply outlet is located above the source of supply, deduct 0.5 psi (3.4 kPa) for each foot (0.3 m) of difference in elevation. Where the highest water supply outlet is located below the source of supply, add 0.5 psi (3.4 kPa) for each foot (0.3 m) of difference in elevation.
   - 2.2. Where a water pressure-reducing valve is installed in the water distribution system, the minimum daily static water pressure available is 80 percent of the minimum daily static water pressure at the source of supply or the set pressure downstream of the pressure-reducing valve, whichever is smaller.
   - 2.3. Deduct all pressure losses due to special equipment such as a backflow preventer, water filter and water softener. Pressure loss data for each piece of equipment shall be obtained through the manufacturer of such devices.
   - 2.4. Deduct the pressure in excess of 8 psi (55 kPa) due to installation of the special plumbing fixture, such as temperature controlled shower and flushometer tank water closet. Using the resulting minimum available pressure, find the corresponding pressure range in Table E201.1.
3. The maximum *developed length* for water piping is the actual length of pipe between the source of supply and the most remote fixture, including either hot (through the water heater) or cold water branches multiplied by a factor of 1.2 to compensate for pressure loss through fittings. Select the appropriate column in Table E201.1 equal to or greater than the calculated maximum *developed length*.
4. To determine the size of water service pipe, meter and main distribution pipe to the building using the appropriate table, follow down the selected "maximum *developed length*" column to a fixture unit equal to, or greater than the total installation demand calculated by using the "combined" water supply fixture unit column of Table E103.3(2). Read the water service pipe and meter sizes in the first left-hand column and the main distribution pipe to the building in the second left-hand column on the same row.
5. To determine the size of each water distribution pipe, start at the most remote outlet on each *branch* (either hot or cold *branch*) and, working back toward the main distribution pipe to the building, add up the water supply fixture unit demand passing through each segment of the distribution system using the related hot or cold column of Table E103.3(2). Knowing demand, the size of each segment shall be read from the second left-hand column of the same table and maximum *developed length* column selected in Steps 1 and 2, under the same or next smaller size meter row. The size of any *branch* or main does not need to be larger than the size of the main distribution pipe to the building established in Step 4.

SECTION E202
DETERMINATION OF PIPE VOLUMES

E202.1 Determining volume of piping systems. Where required for engineering design purposes, Table E202.1 shall be used to determine the approximate internal volume of water distribution piping.

INTERNATIONAL CODE COUNCIL®
Copyright © 2019 ICC & NYSDOS. ALL RIGHTS RESERVED. Accessed by Lauren Gualdino (lgualdino@briarcliffmanor.org), (-) Order Number #100880972 on May 08, 2020 07:05 AM (PDT) pursuant to License Agreement with ICC & NYSDOS. No further reproduction, no

100880972

TABLE E201.1
MINIMUM SIZE OF WATER METERS, MAINS AND DISTRIBUTION PIPING
BASED ON WATER SUPPLY FIXTURE UNIT VALUES (w.s.f.u.)

METER AND SERVICE PIPE (inches)	DISTRIBUTION PIPE (inches)	MAXIMUM DEVELOPMENT LENGTH (feet)									
Pressure Range 30 to 39 psi		40	60	80	100	150	200	250	300	400	500
3/4	1/2[a]	2.5	2	1.5	1.5	1	1	0.5	0.5	0	0
3/4	3/4	9.5	7.5	6	5.5	4	3.5	3	2.5	2	1.5
3/4	1	32	25	20	16.5	11	9	7.8	6.5	5.5	4.5
1	1	32	32	27	21	13.5	10	8	7	5.5	5
3/4	1 1/4	32	32	32	32	30	24	20	17	13	10.5
1	1 1/4	80	80	70	61	45	34	27	22	16	12
1 1/2	1 1/4	80	80	80	75	54	40	31	25	17.5	13
1	1 1/2	87	87	87	87	84	73	64	56	45	36
1 1/2	1 1/2	151	151	151	151	117	92	79	69	54	43
2	1 1/2	151	151	151	151	128	99	83	72	56	45
1	2	87	87	87	87	87	87	87	87	87	86
1 1/2	2	275	275	275	275	258	223	196	174	144	122
2	2	365	365	365	365	318	266	229	201	160	134
2	2 1/2	533	533	533	533	533	495	448	409	353	311

METER AND SERVICE PIPE (inches)	DISTRIBUTION PIPE (inches)	MAXIMUM DEVELOPMENT LENGTH (feet)									
Pressure Range 40 to 49 psi		40	60	80	100	150	200	250	300	400	500
3/4	1/2[a]	3	2.5	2	1.5	1.5	1	1	0.5	0.5	0.5
3/4	3/4	9.5	9.5	8.5	7	5.5	4.5	3.5	3	2.5	2
3/4	1	32	32	32	26	18	13.5	10.5	9	7.5	6
1	1	32	32	32	32	21	15	11.5	9.5	7.5	6.5
3/4	1 1/4	32	32	32	32	32	32	32	27	21	16.5
1	1 1/4	80	80	80	80	65	52	42	35	26	20
1 1/2	1 1/4	80	80	80	80	75	59	48	39	28	21
1	1 1/2	87	87	87	87	87	87	87	78	65	55
1 1/2	1 1/2	151	151	151	151	151	130	109	93	75	63
2	1 1/2	151	151	151	151	151	139	115	98	77	64
1	2	87	87	87	87	87	87	87	87	87	87
1 1/2	2	275	275	275	275	275	275	264	238	198	169
2	2	365	365	365	365	365	349	304	270	220	185
2	2 1/2	533	533	533	533	533	533	533	528	456	403

(continued)

INTERNATIONAL CODE COUNCIL®
Copyright © 2019 ICC & NYSDOS. ALL RIGHTS RESERVED. Accessed by Lauren Gualdino (lgualdino@briarcliffmanor.org), (-) Order Number #100880972 on May 08, 2020 07:05 AM (PDT) pursuant to License Agreement with ICC & NYSDOS. No further reproduction, no

100880972

TABLE E201.1—continued
MINIMUM SIZE OF WATER METERS, MAINS AND DISTRIBUTION PIPING BASED ON WATER SUPPLY FIXTURE UNIT VALUES (w.s.f.u.)

METER AND SERVICE PIPE (inches)	DISTRIBUTION PIPE (inches)	MAXIMUM DEVELOPMENT LENGTH (feet)									
Pressure Range 50 to 60 psi		40	60	80	100	150	200	250	300	400	500
3/4	1/2 [a]	3	3	2.5	2	1.5	1	1	1	0.5	0.5
3/4	3/4	9.5	9.5	9.5	8.5	6.5	5	4.5	4	3	2.5
3/4	1	32	32	32	32	25	18.5	14.5	12	9.5	8
1	1	32	32	32	32	30	22	16.5	13	10	8
3/4	1 1/4	32	32	32	32	32	32	32	32	29	24
1	1 1/4	80	80	80	80	80	68	57	48	35	28
1 1/2	1 1/4	80	80	80	80	80	75	63	53	39	29
1	1 1/2	87	87	87	87	87	87	87	87	82	70
1 1/2	1 1/2	151	151	151	151	151	151	139	120	94	79
2	1 1/2	151	151	151	151	151	151	146	126	97	81
1	2	87	87	87	87	87	87	87	87	87	87
1 1/2	2	275	275	275	275	275	275	275	275	247	213
2	2	365	365	365	365	365	365	365	329	272	232
2	2 1/2	533	533	533	533	533	533	533	533	533	486

METER AND SERVICE PIPE (inches)	DISTRIBUTION PIPE (inches)	MAXIMUM DEVELOPMENT LENGTH (feet)									
Pressure Range Over 60		40	60	80	100	150	200	250	300	400	500
3/4	1/2 [a]	3	3	3	2.5	2	1.5	1.5	1	1	0.5
3/4	3/4	9.5	9.5	9.5	9.5	7.5	6	5	4.5	3.5	3
3/4	1	32	32	32	32	32	24	19.5	15.5	11.5	9.5
1	1	32	32	32	32	32	28	28	17	12	9.5
3/4	1 1/4	32	32	32	32	32	32	32	32	32	30
1	1 1/4	80	80	80	80	80	80	69	60	46	36
1 1/2	1 1/4	80	80	80	80	80	80	76	65	50	38
1	1 1/2	87	87	87	87	87	87	87	87	87	84
1 1/2	1 1/2	151	151	151	151	151	151	151	144	114	94
2	1 1/2	151	151	151	151	151	151	151	151	118	97
1	2	87	87	87	87	87	87	87	87	87	87
1 1/2	2	275	275	275	275	275	275	275	275	275	252
2	2	365	368	368	368	368	368	368	368	318	273
2	2 1/2	533	533	533	533	533	533	533	533	533	533

For SI: 1 inch = 25.4, 1 foot = 304.8 mm.
a. Minimum size for building supply is 3/4-inch pipe.

INTERNATIONAL CODE COUNCIL®
Copyright © 2019 ICC & NYSDOS. ALL RIGHTS RESERVED. Accessed by Lauren Gualdino (lgualdino@briarcliffmanor.org), (-) Order Number #100880972 on May 08, 2020 07:05 AM (PDT) pursuant to License Agreement with ICC & NYSDOS. No further reproduction, no

100880972

TABLE E202.1
INTERNAL VOLUME OF VARIOUS WATER DISTRIBUTION TUBING

OUNCES OF WATER PER FOOT OF TUBE									
Size Nominal, Inch	Copper Type M	Copper Type L	Copper Type K	CPVC CTS SDR 11	CPVC SCH 40	CPVC SCH 80	PE-RT SDR 9	Composite ASTM F 1281	PEX CTS SDR 9
3/8	1.06	0.97	0.84	N/A	1.17	—	0.64	0.63	0.64
1/2	1.69	1.55	1.45	1.25	1.89	1.46	1.18	1.31	1.18
3/4	3.43	3.22	2.90	2.67	3.38	2.74	2.35	3.39	2.35
1	5.81	5.49	5.17	4.43	5.53	4.57	3.91	5.56	3.91
1 1/4	8.70	8.36	8.09	6.61	9.66	8.24	5.81	8.49	5.81
1 1/2	12.18	11.83	11.45	9.22	13.20	11.38	8.09	13.88	8.09
2	21.08	20.58	20.04	15.79	21.88	19.11	13.86	21.48	13.86

For SI: 1 ounce = 0.030 liter.

INTERNATIONAL CODE COUNCIL®
Copyright © 2019 ICC & NYSDOS. ALL RIGHTS RESERVED. Accessed by Lauren Gualdino (lgualdino@briarcliffmanor.org), (-) Order Number #100880972 on May 08, 2020 07:05 AM (PDT) pursuant to License Agreement with ICC & NYSDOS. No further reproduction, no

100880972

INTERNATIONAL CODE COUNCIL®
Copyright © 2019 ICC & NYSDOS. ALL RIGHTS RESERVED. Accessed by Lauren Gualdino (lgualdino@briarcliffmanor.org), (-) Order Number #100880972 on May 08, 2020 07:05 AM (PDT) pursuant to License Agreement with ICC & NYSDOS. No further reproduction, no

100880972

INDEX

A

ABS PIPE
Approved standards . . . . . Table 605.3, Table 605.5, Table 702.1, Table 702.2, Table 702.3, Table 702.4, Table 1102.4, Table 1102.7
Support . . . . . .Table 308.5
ACCESS TO
Air admittance valve 918.5
Appliances 502.5
Backflow preventers 608.14
Backwater valve 714.3
Cleanouts 708.1.10, 1103.4
Filters 1302.5, 1302.9, 1303.8, 1303.12
First-flush diverter 1303.4
Fixtures 405.2
Flexible water connectors 605.6
Floor drain 413.2
Flush tank components 415.3.4
Grease removal devices 1003.3.6
Interceptors and separators 1003.5, 1003.10
Manifolds 604.10.3
Pumps 602.3.5, 1302.9
Reservoir or interior 1301.9.6
Shower compartment 421.4.2
Slip joints 405.9
Standpipes 802.4.3
Sump 712.3.2
Vacuum breakers 415.2
Vacuum station 713.4
Valves 503.1, 604.11, 606.3, 712.2, 715.5, 918.5, 1302.8.1, 1302.9, 1303.12
Waste receptors 802.4
Water heaters 502.3, 502.5
Whirlpool pump 426.5
ACCESSIBLE 202
ACCESSIBLE PLUMBING FACILITIES
Clearances 404.2, 405.3.1
Protection required 404.3
Route 403.5
Signs 403.4
Where required 404.1
ADMINISTRATION
Applicability 102
Inspections 105.3
Maintenance 102.3
Scope 101.2
Validity 105.2.4
Violations 105.7
AIR ADMITTANCE VALVE
Chemical waste 901.3
Definition 202
Where permitted 905.1, 917.6, 918
AIR BREAK
Definition 202
Method of providing 802.1.5, 802.1.6, 802.1.7
Where required 406.2, 802.1.2, 802.1.5, 802.3.2
AIR GAP
Annual inspection of 312.10.1
Application of . . . . . Table 608.1
Bidet 408.2
Clothes washer 406.1
Definition 202
Dishwasher 409.2
Method of providing 608.16.1, 802.3.1
Required 416.4, 417.1, 504.6, 606.5.6, 608.3.1, 608.4, 608.10, 608.14.1, 608.14.2, 608.14.2.1, 608.14.3, 608.14.8, 608.15.2.1, 608.17.1.1, 608.17.1.2, 608.17.2, 608.17.3, 608.17.4.1, 608.17.10, 609.7, 611.2, 802.1.1, 802.1.2, 802.1.3, 802.1.4, 802.1.5, 802.1.6, 802.1.7, 802.3, 802.3.1
AIR TEST 312.3, 312.5, 312.8
ALTERATIONS AND REPAIRS 102.5, 307.4, 612.1
ALTERNATE ON-SITE NONPOTABLE WATER
Definition 202
Systems 1302
ALTERNATIVE ENGINEERED DESIGN
Definition 202
Requirements for 316
Special inspections of 105.3
ALTERNATIVE MATERIALS AND EQUIPMENT 104.3, 605.1
APPROVED
Definition 202
ATMOSPHERIC VACUUM BREAKER . . . . . 412.8, Table 608.1, 608.3.1, 608.14.4, 608.14.6, 608.16.4, 608.16.4.1, 608.16.4.2, 608.17.4.1, 608.17.5
AREA DRAIN (See STORM DRAIN)
AUTOMATIC CLOTHES WASHER . . . . . 301.3, Table 403.1, 406, 413.4, 608.16.4.2, Table 709.1, 802.4.3.1, 1003.6, 1302.2, 1402

INTERNATIONAL CODE COUNCIL®
Copyright © 2019 ICC & NYSDOS. ALL RIGHTS RESERVED. Accessed by Lauren Gualdino (lgualdino@briarcliffmanor.org), (-) Order Number #100880972 on May 08, 2020 07:05 AM (PDT) pursuant to License Agreement with ICC & NYSDOS. No further reproduction, no

100880972

B

BACKFILLING 306, 1403.1.5
BACKFLOW PREVENTER
Access to 608.15
Boiler 608.17.2
Carbonated beverage dispenser 608.17.1.1
Coffee and noncarbonated beverage dispenser 608.17.1.2
Definition 202
Effect of installation 607.3
Fire sprinkler system 608.17.4
Humidifier. 608.17.10
Lawn irrigation 608.17.5, 1301.11, 1302.11, 1303.14. 1304.3.1
Location of 608.15
Relief port piping from 608.15.2.1
Required . . 406.1, 408.2, 409.2, 416.4, 417.1, 608.1
Standards . . . . . Table 608.1, 608.14.2, 608.14.3. 608.14.9
Testing . . . 312.10.2, 1302.12.4, 1303.15.6. 1304.4.2
BACKFLOW PROTECTION. 608.1
BACKWATER VALVE
Where required 714, 802.1.2, 1101.8, 1101.9, 1111.1, 1302.8.1, 1302.8.2, 1303.11.1
BAROMETRIC LOOP. . . . . Table 608.1, 608.14.4
BATHING ROOM 403.1.2
BATHTUB
Discharge from 301.3, 1302.2
Doors in 407.4
Drainage fixture unit. 709.1
Faucet for. 412
Foot (pedicure bathtub) 423.3
Glazing nearby. 407.3
Outlet and overflow for. 407.2
Recessed area for trap below slab 1002.8
Required . . . . . Table 403.1
Standards 407.1
Walls around built-in type 421.4.1
Water temperature supplied to 412.5, 412.7
Whirlpool 202, 426
BEVERAGE DISPENSER 608.17.1
BIDET
Backflow protection 408.2
Standards 408.1
Water temperature supplied to 408.3
BOOSTER SYSTEM. 604.7, 606.5, 606.5.1. 606.5.5
BOTTLING ESTABLISHMENT 1003.7
BRACING, SWAY. 308.6
BRASS PIPE
(See COPPER OR COPPER ALLOY PIPE)
BUILDING DRAIN
Branches of . . . . . Table 710.1(2)
Cleanouts for 708.1.1, 708.1.3, 708.1.4
Connection to building sewer. 705.16.4
Definition 202
Existing. 703.4
Material, above-ground . . . . . Table 702.1
Material, below ground. . . . . Table 702.2
Sizing . . . . . Table 710.1(1)
BUILDING DRAINAGE SYSTEM
Below sewer level 712.1
Definition (See DRAINAGE SYSTEM). 202
Excluding detrimental materials from. 302.1
Oil Separators for. 1003.4
BUILDING OFFICIAL
Application for permit 105.2.2
Definition 202
Inspections. 105.3
BUILDING SEWER
Cleanouts. 708.1.2, 708.1.4
Definition 202
In same trench as nonpotable water piping 1301.11
In same trench as storm sewer 703.3
Connection to building drain 708.1.3
Material . . . . . Table 702.3
Reuse of existing 703.4
Separation from water service 603.2
Sizing . . . . . Table 710.1(1)
Testing 312
BUILDING TRAP
Definition 202
Prohibition of 1002.6
BUNDLED WATER PIPING 606.7

C

CAST-IRON PIPE
Approved standards. . . . . Table 702.1, Table 702.2, Table 702.3, Table 702.4, Table 1102.4, Table 1102.5, Table 1102.7
Joints 705.3. 705.16.1. 705.16.3
Support of. . . . . Table 308.5

CAULKING FERRULES. 705.18
CHANGE IN DIRECTION OF DRAINAGE
Anchorage for. 308.7
Cleanouts for 708.1.4
Support against sway. 308.6

INTERNATIONAL CODE COUNCIL®
Copyright © 2019 ICC & NYSDOS. ALL RIGHTS RESERVED. Accessed by Lauren Gualdino (lgualdino@briarcliffmanor.org), (-) Order Number #100880972 on May 08, 2020 07:05 AM (PDT) pursuant to License Agreement with ICC & NYSDOS. No further reproduction, no

100880972

CHEMICAL WASTE
Exclusion from the sewer 803.1
Neutralizing. 803.1
Requirements 702.6
System venting 901.3
CIRCUIT VENT
Connection of 905.1
Definition. 202
Requirements for system 914
Sizing 906.2
CIRCULATING HOT WATER SYSTEM
Definition. 202
Required 607.2
CLAY PIPE
Approved standards . . . . . Table 702.3, Table 1102.4, Table 1102.5
Joints 705.11
CLEANOUT
Building drain 708.1.1
Change of direction 708.1.4
Clearances 708.1.9
Condensate drain 314.2.5
Definition. 202
Direction of flow 708.1.8
Floor accessed 708.1.10.2
Horizontal drains. 708.1.1
Location of 708.1.10
Manholes 708.1.1, 708.1.2, 708.1.7
On stacks 708.1.5
Plugs, materials for. 708.1.6
Prohibited use of. 708.1.11
Sewers 708.1.2
Size. 708.1.5
Trim covers for plugs 708.1.10.1
Where required. 708.1, 708.2, 708.3, 708.4
CLEARANCES 404.2, 405.3.1, 502.5, 918.8
CLEAR WATER WASTE . . . 802.1.5, 803.1.3, 803.1.4
CLOTHES WASHER (See AUTOMATIC CLOTHES WASHER)
COFFEE MACHINE. 608.16.1.2
COLLECTION PIPE
Definition. 202
On-site nonpotable water reuse system 1302.4
Testing of 1302.12.1, 1303.15.3
COMBINATION WASTE AND VENT SYSTEM
Definition. 202
Requirements 915
COMBINED BUILDING DRAIN. 202
COMMON VENT 202, 911
COMPARTMENT, WATER CLOSET 405.3.1, 405.3.4
CONCRETE PIPE
Approved standards . . . . . Table 702.3, Table 1102.4
CONDENSATE DRAIN
Configured for clearing blockages 314.2.5
Piping material 314.2.2
Mini-split systems 314.2.4.1
Traps. 314.2.4
CONDUCTOR
Definition. 202
CONFLICTS. 301.7
CONNECTION TO PUBLIC SEWER 701.2
CONNECTIONS TO SUMPS AND EJECTORS
Below sewer level 712.1
CONSERVATION, WATER AND ENERGY
Fixtures 604.4
Flow rates . . . . . Table 604.3
Insulation. 505, 607.2.1, 607.5
CONSTRUCTION DOCUMENTS 106.3.1
CONTROLLED FLOW STORM DRAINAGE 1110
COPPER OR COPPER-ALLOY PIPE OR TUBING
Approved standards . . . . . Table 605.3, Table 605.4, Table 702.1, Table 702.2, Table 702.3
COPPER SHEET (See SHEET COPPER)
CORROSION PROTECTION OF PIPING 305.1, 605.1
CPVC PIPE OR TUBING
Approved standards . . . . . Table 605.3, Table 605.4
CROSS CONNECTIONS. 608
CUTTING OR NOTCHING, STRUCTURAL MEMBERS . . . . . 307.2, 307.4, Appendix C

D

DEMAND RECIRCULATION WATER SYSTEM
Controls. 607.2.1.2
Definition. 202
DESIGN PROFESSIONAL 106.2.9, 307.4, 316.1
DETRIMENTAL WASTES. 302, 1003.1
DISHWASHING MACHINE 409, 802.1.6
DISINFECTION OF POTABLE WATER SYSTEM. 610
DISTANCE OF TRAP FROM VENT . . . . . Table 909.1
DISTRIBUTION SYSTEM (See WATER)
DRAIN
Roof 1105
Storm 1106
DRAINAGE FIXTURE UNITS
Definition. 202
Values for continuous flow 709.3
Values for fixtures . . . . . Table 709.1

INTERNATIONAL CODE COUNCIL®
Copyright © 2019 ICC & NYSDOS. ALL RIGHTS RESERVED. Accessed by Lauren Gualdino (lgualdino@briarcliffmanor.org), (-) Order Number #100880972 on May 08, 2020 07:05 AM (PDT) pursuant to License Agreement with ICC & NYSDOS. No further reproduction, no

100880972

DRAINAGE SYSTEM
Connection to sewer or private disposal system 701.2
Determining size 710.1
Fixture units . . . . . Table 709.1, 709.3
Indirect waste 802
Joints 705
Material detrimental to 302
Materials 702
Obstructions 706.2
Offset sizing 711
Provisions for future fixtures 710.2
Sizing . . . . . Table 710.1(1), Table 710.1(2)
Slope of piping . . . . . Table 704.1
Sumps and ejectors 712
Testing 312
DRINKING FOUNTAIN
Accessibility requirements 410.3
Approvals 410.1
Definition 202
Location 403.5
Number required . . . . . Table 403.1, 410.1
Prohibited location 410.5
Small occupancies 410.2
Substitution for 410.4
DRINKING WATER TREATMENT UNIT 611

E

EJECTOR, SEWAGE 712
EJECTOR CONNECTION 712.3.5
ELEVATOR SHAFT 301.6
EMERGENCY SHOWER 411
EMPLOYEE TOILET FACILITIES 403.3
ENGINEERED DESIGN, ALTERNATIVE 316
EXCAVATION 306
EXISTING BUILDING 102.3.1
EXISTING BUILDING PLUMBING SYSTEMS 102.3, 102.3.1
EYEWASH STATION 411

F

FACILITIES, TOILET 403
FAMILY AND ASSISTED USE 403.1.2, 403.2.1
FAUCETS 412
FERRULES (See CAULKING FERRULES)
FILL VALVE 415.3.1
FITTINGS
Approved standards . . . . . Table 605.5, Table 702.4
Drainage system 706
FIXTURE CALCULATIONS 403.1.1
FIXTURE FITTINGS 412
FIXTURE LOCATION 405.3.1
FIXTURE TRAPS 1002
Acid-resisting 1002.9
Building 1002.6
Design of 1002.2
For each fixture 1002.1
Prohibited 1002.3
Seals 1002.4
Seal protection 1002.4.1
Setting and protection 1002.7
Size 1002.5
FIXTURE UNITS, DRAINAGE
Definition 202
Values for continuous flow 709.3
Values for fixtures . . . . . 709.1, Table 709.1
FIXTURES (See PLUMBING FIXTURES)
FLOOD LEVEL RIM 202
FLOOD-RESISTANT CONSTRUCTION
Design flood elevation 202
Flood hazard area 202
Flood hazard resistance 309
FLOOR DRAINS . . . . . 412, Table 709.1
FLOOR DRAINS, EMERGENCY . . . . 202, Table 709.1
FLOOR FLANGES 405.4.1, 405.4.2
FLOW RATES . . . . . 604.3, Table 604.3, Table 604.4, 604.10
FLUSHING DEVICES
Dual 425.1
Flush tanks . . . . . 415.2, Table 604.3, Table 604.5
Flushometer tanks 415.2, 604.3, 604.5
Flushometer valves . . . . . 415.2, Table 604.3, Table 604.5
Required 415
FOOD HANDLING DRAINAGE 802.1.1, 802.1.7
FOOD WASTE DISPOSER 416
FOOTBATHS (PEDICURE BATHS) 423.3
FOOTINGS, PROTECTION OF 307.5
FREEZING, PROTECTION OF BACKFLOW DEVICES 608.15.2
FREEZING, PROTECTION OF PIPES 305.4
FROST CLOSURE 903.2
FULL OPEN VALVE
Definition 202
Required 605.3
FUTURE FIXTURES 704.4

G

GALVANIZED STEEL PIPE . . . . . Table 605.3, Table 605.4, 605.17

INTERNATIONAL CODE COUNCIL®
Copyright © 2019 ICC & NYSDOS. ALL RIGHTS RESERVED. Accessed by Lauren Gualdino (lgualdino@briarcliffmanor.org), (-) Order Number #100880972 on May 08, 2020 07:05 AM (PDT) pursuant to License Agreement with ICC & NYSDOS. No further reproduction, no

100880972

GARBAGE CAN WASHERS 417
GARBAGE DISPOSALS
(See FOOD WASTE DISPOSER)
GENERAL REGULATIONS 301
Conflicts 301.7
Connection to plumbing system 301.3
Connection to public water and sewer . . 301.3, 301.4
Elevator machinery rooms 301.6
Materials detrimental 302, 302.1, 302.2
Piping sizes indicated 301.5
Protection of pipes 305
Rodentproofing 304, 304.1, 304.2, 304.3, 304.4
Sleeves 305.3
Strains and stresses in pipe 305.2
Toilet facilities for workers 311
Trenching, excavation and backfill 306
Washroom requirements 310
GRAYWATER (See also ALTERNATE ON-SITE NONPOTABLE WATER)
Color of distribution piping 608.9.2.1
Definition 202
Flushing 1302.6.1
Subsurface irrigation 1402.1
Trap priming 1002.2.4.1
GREASE INTERCEPTORS 202, 1003
Additives to 1003.3.3
Approved standards 1003.3.5, 1003.3.7
Capacity . . . . . Table 1003.3.5.1, 1003.4.2.1, 1003.4.2.2
Discharge 1003.3.8
Food waste disposers to 1003.3.2
Gravity-type 1003.3.7
Hydromechanical-type 1003.3.5
Not required 1003.3.4
Piping leading to 704.1
Required 1003.3.1
GUTTERS . . . . . 1106.6, Table 1106.6

H

HANGERS AND SUPPORTS
Attachment to buildings 308.4
Definitions 202
Material 308.3
Seismic 308.2
Spacing . . . . . .Table 308.5
HEALTH AND SAFETY 101.3
HEALTH CARE PLUMBING 609
HEAT EXCHANGERS 608.17.3
HORIZONTAL PIPE
Definition 202
Slope for drainage 704.1
HOT WATER
Circulating system 202, 607.2.1
Definition 202
Demand recirculation water system 607.2.1.2
Flow of hot water from fixtures 607.4
Heaters and tanks . . . . . Chapter 5
Pipe insulation 607.5
Pumps for water heaters 607.2.1
Recirculating systems with thermostatic mixing valves 607.2.2
Supply system 607
Temperature maintenance (Heat trace) 607.2.1
HOUSE TRAP (See BUILDING TRAP)
HUMIDIFIER 608.17.10

I

IDENTIFICATION OF BUNDLED WATER PIPING 606.7
INDIRECT WASTE 802
Air gap or break 802.3.1, 802.3.2
Food handling establishment 802.1.1
Receptors 802.4
Special wastes 803
Wastewater temperature 702.5
Where required 802.1
INDIVIDUAL VENT 910
INSPECTION 105.3
INSPECTOR (See BUILDING OFFICIAL)
INSULATION 505, 607.5
INTERCEPTORS AND SEPARATORS 1003
Access to 1003.10
Additives to 1003.3.3
Approved standards 1003.3.5, 1003.3.7
Bottling establishments 1003.7
Capacity of grease interceptors . . . Table 1003.3.4.1
Clothes washers 1003.6
Connection of discharge 1003.3.8
Definitions 202
Fats, oils and greases systems 1003.3.7
Not required 1003.3.4
Oil and flammable liquids separators 1003.4
Rate of flow control for grease interceptors 1003.3.5.2
Required 1003.1
Slaughterhouses 1003.8
Venting 905.4, 1003.9
IRRIGATION, LAWN 608.17.5
ISLAND FIXTURE VENT 916

J

JOINTS AND CONNECTIONS 605, 705

INTERNATIONAL CODE COUNCIL®
Copyright © 2019 ICC & NYSDOS. ALL RIGHTS RESERVED. Accessed by Lauren Gualdino (lgualdino@briarcliffmanor.org), (-) Order Number #100880972 on May 08, 2020 07:05 AM (PDT) pursuant to License Agreement with ICC & NYSDOS. No further reproduction, no

100880972

ABS plastic pipe 605.10, 705.2
Between different materials 605.23, 705.16
Brazed joints 605.12.1, 605.13.1, 705.5.1, 705.6.1
Building drain to building sewer (ABS/PVC) 705.16.4
Cast-iron pipe 705.3
Caulked joint 705.3.1, 705.7.1
Concrete pipe 705.4
Copper or copper-alloy pipe 605.12, 705.5
Copper or copper-alloy tubing 605.13, 705.6
CPVC plastic pipe 605.14, 605.15
Expansion joints 308.8
Flared 605.13.2, 605.16.1, 605.18.1
Galvanized steel pipe 605.17
Grooved and shouldered 605.13.3, 605.17.3, 605.21.2, 605.22.3
Heat fusion 605.18.2, 605.19.1, 705.12.1, 705.13.1, 705.14.1
Mechanical joints 605, 705
Polyethylene of raised temperature (PE-RT) 605.24
Polyethylene plastic pipe or tubing (PE) 605.18
Polypropylene plastic pipe or tubing (PP) 605.19
Press-connect 202, 605.13.5
Prohibited 605.9, 707
Push-fit 605.13.7, 605.14.4, 605.16.3
PVC plastic pipe 605.21, 705.10
Screwed together 605.23.1, 705.16.2
Slip joints 405.9, 1002.2
Soldered joints 605.12.3, 605.13.6, 705.5.3, 705.6.3
Solvent cemented 605.10.2, 605.14.2, 605.15.2, 605.21.2, 705.2.2, 705.10.2, 705.16.4
Stainless steel 605.22
Threaded 605.10.3, 605.12.4, 605.14.3, 605.17.1, 605.21.4, 705.2.3, 705.5.4, 705.8.1, 705.10.3, 705.16.2, 705.16.3
Vitrified clay pipe 705.11
Welded 605.12.5, 605.22.2, 705.5.5

K

KITCHEN
Grease interceptor 1003.3.1
Hot water for 609.3
Island sink 916.1
Passage through 403.3.1
Sink drainage fixture unit . . . . . Table 709.1
Sink requirement . . . . . Table 403.1
Sink standards 422

L

LABELS FOR BUNDLED WATER PIPING 606.7
LAUNDRIES (See CLOTHES WASHERS)
LAUNDRY TRAY 418
LAUNDRY TUB (See LAUNDRY TRAY)
LAVATORY 403.1.3, 419
LEADER
Connecting to combined sewer 1103
Definition 202
For rainwater collection systems 1303.3
Sizing . . . . . 1106.1, 1106.3, Table 1106.3
Slope 1303.5.1
LIGHT AND VENTILATION REQUIREMENT . . . 310.1
LOADING, SANITARY DRAINAGE SYSTEM 709
LOCATION
Anchorage for drain piping 308.7.1
Drinking fountain 403.5, 410.5
Fixture 405.3
Fixtures, obstruction 405.3.3
Potable water supply tank 606.5.8
Prohibited, drinking fountain 410.5
Secondary roof drain discharge 1108.2
Storage tank . . . . . 1302.7.1, 1303.10.1, Table 1303.10.1
Subsoil irrigation site 1402.3
Toilet facilities, malls 403.3.4
Toilet facilities, other than in malls 403.3.3
Toilet room and kitchen 403.3.2
Trench 307.5
Valve 606.1, 606.2
Vent terminal 903.5
Water heater 501.4
Wells . . . . . Table 1302.7.1

M

MANHOLE 708.1.1, 708.1.2, 708.1.7, 714.1, 1301.9.6
MANIFOLD . . . . . Table 604.5, 604.10
MATERIAL
Above-ground drainage and vent pipe . . . . . Table 702.1
Alternative 104.3
Approved 104.3, 308.3, 316, 402.1, 504.7, 702.6. 708.1.6, 712.3.2, 1002.2, 1002.3, 1113.1.2, 1303.2
Building sewer pipe 702.3
Building storm sewer pipe 1102.4
Chemical waste system 702.6
Fittings . . . . . Table 605.5, Table 702.4, Table 1102.7

INTERNATIONAL CODE COUNCIL®
Copyright © 2019 ICC & NYSDOS. ALL RIGHTS RESERVED. Accessed by Lauren Gualdino (lgualdino@briarcliffmanor.org), (-) Order Number #100880972 on May 08, 2020 07:05 AM (PDT) pursuant to License Agreement with ICC & NYSDOS. No further reproduction, no

100880972

Identification 303.1
Joint 605, 705
Roof drain 1102.6
Sewer pipe 702.3
Standards for . . . . . Chapter 15
Storm sewer pipe . . . . . .Table 1102.4
Subsoil drain pipe 1102.5
Underground building drainage and vent pipe 702.2
Vent pipe 702.1, 702.2
Water distribution pipe . . . . . .Table 605.4
Water service pipe . . . . . .Table 605.3

MATERIAL, FIXTURE
Quality 402.1
Special use 402.2

MATERIAL, SPECIAL
Caulking ferrules 705.18
Cleanout plugs 708.1.6
Sheet copper 402.3
Sheet lead 402.4
Soldering bushings 705.19

MECHANICAL JOINTS 605, 705

MEDICAL GAS, NONFLAMMABLE 1202.1

N

NONPOTABLE WATER REUSE SYSTEMS 1302

NONPOTABLE WATER SYSTEMS
Identification 608.9
Disinfection 1301.2.1
Distribution piping color 608.9.2.1
Filtration 1301.2.2, 1302.5, 1303.8
Protection of potable water from 608.1, 1301.5
Requirements for . . . . . Chapter 13
Signage 1301.3
Tanks 1301.9

O

OFFSET
Closet flange 704.2
Definition, piping 202
Drainage 704.3, 710.1.1, 710.1.2, 711
Venting 907, 917.7

OPENINGS
Through walls or roofs 304.4, 305.5, 315

OVERFLOW 405.8, 407.2, 415.3.1, 415.3.2, 606.5.4, 1101.7, 1108.1

OXYGEN SYSTEMS 1203.1

P

PARKING GARAGE 305.7, 403.3, 1002.1, 1003.4.2.2

PAN
Auxiliary (condensate) 314.2.3
Water heater 504.7

PARTITION
Fixture 405.3.1, 405.3.4, 405.3.5
Trap 1002.2, 1002.3

PEDICURE BATHS 423.3

PERMIT
Application for 105.2
Suspension of 105.2.5

PENETRATIONS 307.3, 315

PIPE BURSTING 716

PIPING
Construction documents 106.2, 106.2.1
Drainage, horizontal slope 704.1
Drainage piping installation 704
Drainage piping offset, size 710.1.1, 710.1.2, 711.2
Joints 605, 705
Rehabilitation of the inside of 601.5

PIPING PROTECTION
Backfilling 306.3
Bedding 306.1, 306.2
Corrosion 305.1
Expansion and contraction 305.2
Exposed locations 305.6
Foundation wall 305.3
Freezing 305.4
Impact by vehicles 305.7
Installation 305.2
Penetration by fasteners 305.6
Slabs 305.1
Structural settlement 305.2
Tunneling 306.4

PLUMBING FACILITIES 403

PLUMBING FIXTURES
Accessible 404
Automatic clothes washers 406
Bidet 408
Clearances 404.2, 405.3.1, 405.3.5
Definition 202
Dishwashing machine 409
Drainage fixture unit values . . . . . Table 709.1
Drinking fountain 410
Emergency showers 411
Eyewash stations 411

INTERNATIONAL CODE COUNCIL®
Copyright © 2019 ICC & NYSDOS. ALL RIGHTS RESERVED. Accessed by Lauren Gualdino (lgualdino@briarcliffmanor.org), (-) Order Number #100880972 on May 08, 2020 07:05 AM (PDT) pursuant to License Agreement with ICC & NYSDOS. No further reproduction, no

100880972

Floor and trench drains 413
Floor sinks 414
Food waste disposer 416
Future fixtures 704.4
Garbage can washer 414.7
Installation of 405
Joints at wall or floor 405.6
Kitchen sink 422
Laundry tray 418
Laundry tub (See Laundry tray)
Lavatories 419
Materials 402.1
Minimum number of 403.1
Ornamental pools 423.1
Quality of 402.1
Separate facilities for 403.2
Setting 405.3
Showers 421
Sinks 422
Urinals 424
Water closets 425
Water coolers 202, 410
Water supply protection 608.2

PLUMBING INSPECTOR (See BUILDING OFFICIAL)

PNEUMATIC (SEWAGE) EJECTORS 712

POLYETHYLENE PIPE OR TUBING

PE approved standards . . . . . Table 702.2, Table 1102.4, Table 1102.5
PE-AL-PE approved standards . . . . . Table 605.3, Table 605.4
PEX approved standards . . . . . Table 605.3, Table 605.4
PEX-AL-PEX approved standards . . . . . Table 605.3, Table 605.4
(PE-RT) approved standards . . . . . Table 605.3, Table 605.4

POLYPROPYLENE (PP) PIPE OR TUBING

Approved standards . . . . . Table 605.3, Table 605.4, Table 702.3

POTABLE WATER, PROTECTION OF 608

POTABLE WATER HANDLING EQUIPMENT 608.4

PRESSURE OF WATER DISTRIBUTION SYSTEM 604.6, 604.7, 604.8

PROHIBITED

Air admittance valve use 918.3.2, 918.8
Bends in tubing 605.18.4
Building traps 1002.6
Cleanout opening use 708.1.11
Conductor use 1104
Cross connections 608.7
Discharge to water reuse system 1302.2.1
Drinking fountain location 410.5
Fixture design 401.2
Joints and connections 605.9, 707
Offset in waste stack 913.2
Piping reutilization 608.10
Plumbing systems location 301.6
Stack connections 917.8
Storm water into sanitary sewer 1101.3
Tank location 606.5.8
Toilet facility location 403.3.2
Trap design 1002.3
Valve location 608.8
Vent terminal use 903.4
Water cooler location 410.5
Water dispenser locations 410.5
Well pits 602.3.5.1
Yard hydrant 608.8

PROTECTION OF POTABLE WATER 603.2, 608

PUBLIC SWIMMIMG POOL . . . . . 202, Table 403.1

PUMPED WASTE FIXTURE 405.5

PUMPING EQUIPMENT 608.17.9, 712, 1113, 1303.12

PUSH-FIT JOINT (See CONNECTIONS AND JOINTS)

PVC PIPE . . . . . 314.2.2, Table 605.3, Table 605.4, Table 702.1, Table 702.2, Table 702.3, 703.2, 712.3.3.1, Table 1102.4, Table 1102.5, Table 1102.7,Table 1403.2

Q

QUALITY OF WATER

General 602.3.3, 608.1, 1002.4.1.2, 1301.2, 1301.9.2, 1302.6, 1302.12.6, 1303.5, 1303.9, 1303.15.8, 1303.15.9

QUICK CLOSING VALVE

Causing water hammer 604.9
Definition 202

R

RAINWATER COLLECTION AND DISTRIBUTION SYSTEMS 1303

RAINWATER (STORM WATER) DRAINAGE . . . . . Chapter 11

RAINWATER QUAILITY 1303.15.9

RECLAIMED WATER SYSTEMS 1304

REDUCED PRESSURE PRINCIPLE BACKFLOW PREVENTER

Boiler potable water supply 608.17.2
Definition 202
Freeze protection of 608.15.2
Installation of 608.14.2
Outdoor enclosures for 606.15.1
Periodic inspections 312.10

INTERNATIONAL CODE COUNCIL®
Copyright © 2019 ICC & NYSDOS. ALL RIGHTS RESERVED. Accessed by Lauren Gualdino (lgualdino@briarcliffmanor.org), (-) Order Number #100880972 on May 08, 2020 07:05 AM (PDT) pursuant to License Agreement with ICC & NYSDOS. No further reproduction, no

100880972

Relief port piping from 608.15.2.1
Standards . . . . . .Table 608.1
Where required 608.17.2, 608.17.4, 608.17.4.1, 608.17.5, 608.17.6

REGISTERED DESIGN PROFESSIONAL (See DESIGN PROFESSIONAL)
REFERENCED STANDARDS . . . . . Chapter 15
RELIEF VALVE, PRESSURE 504.4, 504.5
Definition 202
RELIEF VALVE DISCHARGE PIPING 504.6
RELIEF VALVE, VACUUM (See VACUUM)
RELIEF VENT 905.5, 906.2, 906.3, 908, 914.4, 914.4.2, 918.3.1
Definition 202
ROOF DRAIN
Definition 202
Flow rating for water height above . . . 1101.7, 1105.2
Installation of 1105.1
Standards for 1106.2

S

SANITARY SEWER (See BUILDING SEWER)
SANITARY TEE . . . . . .706.3, Table 706.3, 917.3
SCREWED JOINTS (See JOINTS AND CONNECTIONS)
SCUPPERS 1106.5, 1108.1
SEPARATE (TOILET) FACILITIES 403.2
SERVICE SINKS . . . . . Table 403.1, 422, 604.4, Table 709.1
SEWER (See BUILDING SEWER)
SHEET COPPER 305.5, 402.3, 415.3, 421.5.2.4, 902.2
SHEET LEAD 402.4, 421.5.2.3, 902.3
SHAMPOO SINKS 412.10
SHOWER LINER
Material 421.5.2
Testing 312.9
SHOWERS
Approvals for prefabricated types 421.1
Compartment size 421.4
Emergency 411
Required number 403.1
Wall protection for 421.4.1
Water supply riser for 421.2
SILL COCK . . . . . 412.6, Table 604.3, 604.8, 606.2, 608.16.4.2, 1301.12
SINGLE-STACK VENT SYSTEM 917
SINKS . . . . . .Table 403.1, 414, 422
SIPHONIC ROOF DRAINAGE SYSTEMS 1107
SIZING
Drainage system 710
Fixture drain 709
Fixture water supply 604.5
Vent system 906
Water distribution system 604
Water service 603.1
SLAUGHTERHOUSES 1003.8
SLEEVES IN FOUNDATION WALLS 305.3
SLIP JOINTS (See JOINTS AND CONNECTIONS)
SLOPE, PIPING . . . . . Table 709.1
SOLAR HEATING SYSTEM 502.1
SOLDERING BUSHINGS 705.19
SOLVENT CEMENTING (See JOINTS AND CONNECTIONS)
SPECIALTY PLUMBING FIXTURES 423
SPECIAL WASTES 803
STAINLESS STEEL DRAINAGE SYSTEMS
Approved standards for drainage systems . . . . . Table 702.1, Table 702.2, Table 702.3, Table 702.4, Table 1102.4, Table 1102.5, Table 1102.7
Joints for drainage systems 705.16.7, 705.20
STAINLESS STEEL PIPE
Approved standards for water systems . . . . . Table 605.3, Table 605.4
Joints for 605.22, 605.23
STANDARDS (See REFERENCED STANDARDS)
STANDPIPE (FIXTURE) 802.4
STEEL PIPE (See also MATERIAL)
Galvanized, approved standards . . . . . Table 605.4
Stainless, approved standards . . . . . Table 605.3, Table 605.4
STORM DRAIN
Area drain definition 202
Building size 1106.1
Building subdrains 1112.1
Building subsoil drains 1111.1
Conductors and connections 1104
Definition 202
General 1101
Inspection of 105.3
Prohibited drainage 1101.3
Roof drains 1102.6, 1105
Secondary roof drains 1108
Sizing of conductors, leaders and storm drains 1106
Sizing of roof gutters 1106.6
Sizing of vertical conductors and leaders 1106.2
Traps 1103
Where required 1101.2

INTERNATIONAL CODE COUNCIL®
Copyright © 2019 ICC & NYSDOS. ALL RIGHTS RESERVED. Accessed by Lauren Gualdino (lgualdino@briarcliffmanor.org), (-) Order Number #100880972 on May 08, 2020 07:05 AM (PDT) pursuant to License Agreement with ICC & NYSDOS. No further reproduction, no

100880972

STRAPS (See HANGERS AND SUPPORTS)
STRUCTURAL SAFETY . . . . . 307, Appendix C
SUBDRAIN BUILDING. 1112.1
SUBSOIL DRAIN PIPE. 1111.1
SUBSOIL LANDSCAPE IRRIGATION SYSTEMS . . . . . .Chapter 14
SUMP VENT 906.5
SUMP PUMP DISCHARGE PIPE. 301.6, 712.3.3
SUMPS 1113
SUPPORTS (See also PIPING PROTECTION). . . 308
SWIMMING POOL
Definition 202
Public . . . . . 202, Table 403.1
Solar heating of 612.1
Waste connections 801
Water connections to 423.1
SWIMMING POOL DRAINAGE 802.1.4

T

TEMPERATURE-ACTUATED FLOW REDUCTION VALVE. 412.7
TEMPERATURE AND PRESSURE RELIEF VALVE 504
TEMPERATURE CONTROL
Mixing valves . . . . . 411.3, 412.3, 412.4, 412.5, Table 604.3, 607.2.2, 607.4, 613.1
TEMPERATURE OF WASTEWATER 702.5
TEMPERED WATER 202, 419.5, 607.1.1, 607.1.2
TEST
Drainage and vent air test 312.3
Drainage and vent final test 312.4
Drainage and vent water test. 312.2
Forced sewer test 312.7
Gravity sewer test 312.6
Percolation test 1402.2
Required tests 312.1
Shower liner. 312.9
Test gauges 312.1.1
Test of backflow prevention devices 312.10
Test of conductors 312.8
THERMAL EXPANSION CONTROL 607.3
THERMAL EXPANSION TANK, SUPPORT . . . 308.10
THIRD-PARTY CERTIFICATION. 202, 303.3, 303.4, 303.5, 501.5, 605.3, 605.15.2, 705.10.2
THREADED JOINTS (See JOINTS AND CONNECTIONS)
TOILET FACILITIES
Definition 202
Required 403
Signs 403.4
Single-user. 403.1.2
Travel distance. 403.3.3, 403.3.4
Workers 311
TOILET ROOM DOOR LOCKING 403.3.6
TOILETS (See WATER CLOSETS)
TRAP SEAL PROTECTION 1002.4.1
TRAPS
Acid-resisting 1002.9
Building 1002.6
Design 1002.2
Prohibited types 1002.3
Seal 1002.4
Separate for each fixture 1002.1
Size . . . . . Table 709.1, Table 709.2
TRENCH DRAINS. 413
TRENCHING, EXCAVATION AND BACKFILL . . . 306
TUNNELING 306.4

U

UNDERGROUND DRAINAGE AND VENT PIPE 702.2
URINAL PARTITIONS 405.3.5
URINALS . . . . . Table 403.1, 424

V

VACUUM BREAKER . . . . . 202, 312.10.2, 412.8, 415.2, Table 608.1, 608.3.1, 608.14.5, 608.14.6, 608.16.4, 608.16.4.1, 608.16.4.2, 609.4
VACUUM RELIEF VALVE 504.1, 504.2
VACUUM DRAINAGE SYSTEMS 715
VACUUM SYSTEM, MEDICAL 1202.1
VALVE
Air admittance 202, 918
Approved standards. . . . . Table 605.7, 714.2
Backwater 202, 714
Full-open 202, 605.3
Pressure reducing 604.8
Relief 202, 504.4
Stop and waste 608.8
Temperature-actuated flow reduction. 412.7
Transfer valves. 412.8
VENT
Individual 910
Sizing 906
VENT, RELIEF 908
VENT STACK
Definition 202
Required. 904.2
VENTS AND VENTING
Branch vents 906.4

INTERNATIONAL CODE COUNCIL®
Copyright © 2019 ICC & NYSDOS. ALL RIGHTS RESERVED. Accessed by Lauren Gualdino (lgualdino@briarcliffmanor.org), (-) Order Number #100880972 on May 08, 2020 07:05 AM (PDT) pursuant to License Agreement with ICC & NYSDOS. No further reproduction, no

100880972

Circuit 914
Combination waste 915
Common 911
Definition 202
Distance from trap . . . . . Table 909.1, 909.2
Engineered systems 919
Island fixture 916
Required vent 904.1
Single stack 917
Vent stack 904.2
Vent terminal 903
Waste stack 913
Wet vent 912

W

WALL-HUNG WATER CLOSET 425
WASHING MACHINE
(See AUTOMATIC CLOTHES WASHER and DISHWASHER)
WASTE
Indirect 802
Special 803
WASTE RECEPTORS
Definition 202
WASTE STACK 913
WASTEWATER TEMPERATURE 702.5
WATER
Cross connection 608.7
Distribution system design 604
Distribution piping material . . . . . Table 605.4
Excessive pressure 604.8
Hammer 604.9
Pressure booster 606.5
Rain 202
Reclaimed 202
Service 603
Service piping material . . . . . Table 605.3
Storm 202
WATER CLOSETS 425
WATER CLOSET COMPARTMENTS 405.3.4
WATER CLOSET PERSONAL HYGIENE DEVICE 412.9
WATER CONSERVATION
Fixtures 604.4
Flow rates . . . . . Table 604.4
WATER COOLER
Approvals 410.1
Definition 202
Prohibited location 410.5
WATER DISPENSER
Definition 202
Prohibited location 410.5
Substitution for drinking fountain 410.4
WATER HAMMER 604.9
WATER HEATER
Definition 202
Requirements for . . . . . Chapter 5
WATER HEATER PAN 504.7
WATER TREATMENT
Drinking water systems 611
Softeners 608.4
WELL WATER 602.3.1
WET VENT 912
WIPED JOINTS 705.9.2
WORKERS' TOILET FACILITIES 311

INTERNATIONAL CODE COUNCIL®
Copyright © 2019 ICC & NYSDOS. ALL RIGHTS RESERVED. Accessed by Lauren Gualdino (lgualdino@briarcliffmanor.org), (-) Order Number #100880972 on May 08, 2020 07:05 AM (PDT) pursuant to License Agreement with ICC & NYSDOS. No further reproduction, no

100880972

INTERNATIONAL CODE COUNCIL®
Copyright © 2019 ICC & NYSDOS. ALL RIGHTS RESERVED. Accessed by Lauren Gualdino (lgualdino@briarcliffmanor.org), (-) Order Number #100880972 on May 08, 2020 07:05 AM (PDT) pursuant to License Agreement with ICC & NYSDOS. No further reproduction, no

100880972

ICC INTERNATIONAL CODE COUNCIL®

People Helping People Build a Safer World®



Helpful Tools for Learning and Applying your Plumbing Code

a. Plumbing Code Essentials: Based on the 2018 International Plumbing Code®

Explains those code provisions essential to understanding the application of the 2018 IPC® to the most commonly encountered plumbing practices. It also includes the IRC plumbing provisions and a chapter on fuel gas piping, making it a complete plumbing code reference for both commercial and residential buildings. The information is presented in a user-friendly manner with an emphasis on technical accuracy and clear, easy-to-apply language.

Features:
- Full-color illustrations
- Examples and simplified tables to assist the reader in visualizing and better understanding the code requirements.
- A straightforward, easy-to-read approach

An ideal resource for new and veteran code users as well as other plumbing professionals such as contractors and designers.

SOFT COVER #4231S18
PDF DOWNLOAD #8950P862

b. 2018 IPC Code and Commentary

This valuable resource explains the intent of the code provisions to help code users learn how to apply them effectively.

Contains:
- The full text of 2018 IPC
- All tables and figures in the 2018 IPC
- Corresponding commentary at the end of each section

SOFT COVER #3210S18
PDF DOWNLOAD #872P18
SOFT + PDF COMBO #3210SP18
premiumACCESS 1-year, single user subscription #872A18

c. 2018 International Plumbing Code, Spanish Edition

A complete translation of the 2018 IPC into Spanish.

SOFT COVER #3200SS18
PDF DOWNLOAD #8720SP18
SOFT + PDF COMBO #3200SSP18

d. 2018 International Plumbing Code® Study Companion

The ideal way to master the code for everyday application or prepare for exams. The Study Companion is organized into study sessions that include learning objectives, key points for review, code text, hundreds of illustrations and commentary applicable to the specific topic. Addresses numerous topics of the 2018 IPC including general regulations, fixtures, water supply and distribution, sanitary drainage, and vents.

Features:
- 15 study sessions
- A quiz at the end of each study session
- 375 total study questions with answer key

A great resource for the Commercial Plumbing Inspector or Plumbing Plans Examiner certification exam.

SOFT COVER #4217S18
PDF DOWNLOAD #8950P837

e. 2018 IPC Flashcards

Classic study tools that provide code users, students and exam candidates with an effective, time-tested method for study and information retention. This set of easy-to-use FlashCards is prepared and reviewed by code experts to ensure accuracy and quality.

#1221S18

BUY THE STUDY COMPANION AND FLASHCARDS TOGETHER AND SAVE!

STUDY COMPANION/FLASH CARDS COMBO #4217BN18

19-17881

Order Your Code Tools Today! 1-800-786-4452 | www.iccsafe.org/books

This insert is not part of the official text of the New York State Uniform Fire Prevention and Building Code or New York State Energy Conservation Construction Code.

INTERNATIONAL CODE COUNCIL®

Copyright © 2019 ICC & NYSDOS. ALL RIGHTS RESERVED. Accessed by Lauren Gualdino (lgualdino@briarcliffmanor.org), (-) Order Number #100880972 on May 08, 2020 07:05 AM (PDT) pursuant to License Agreement with ICC & NYSDOS. No further reproduction, no

ICC Membership

An Essential Tool to advance your Building Safety Career!

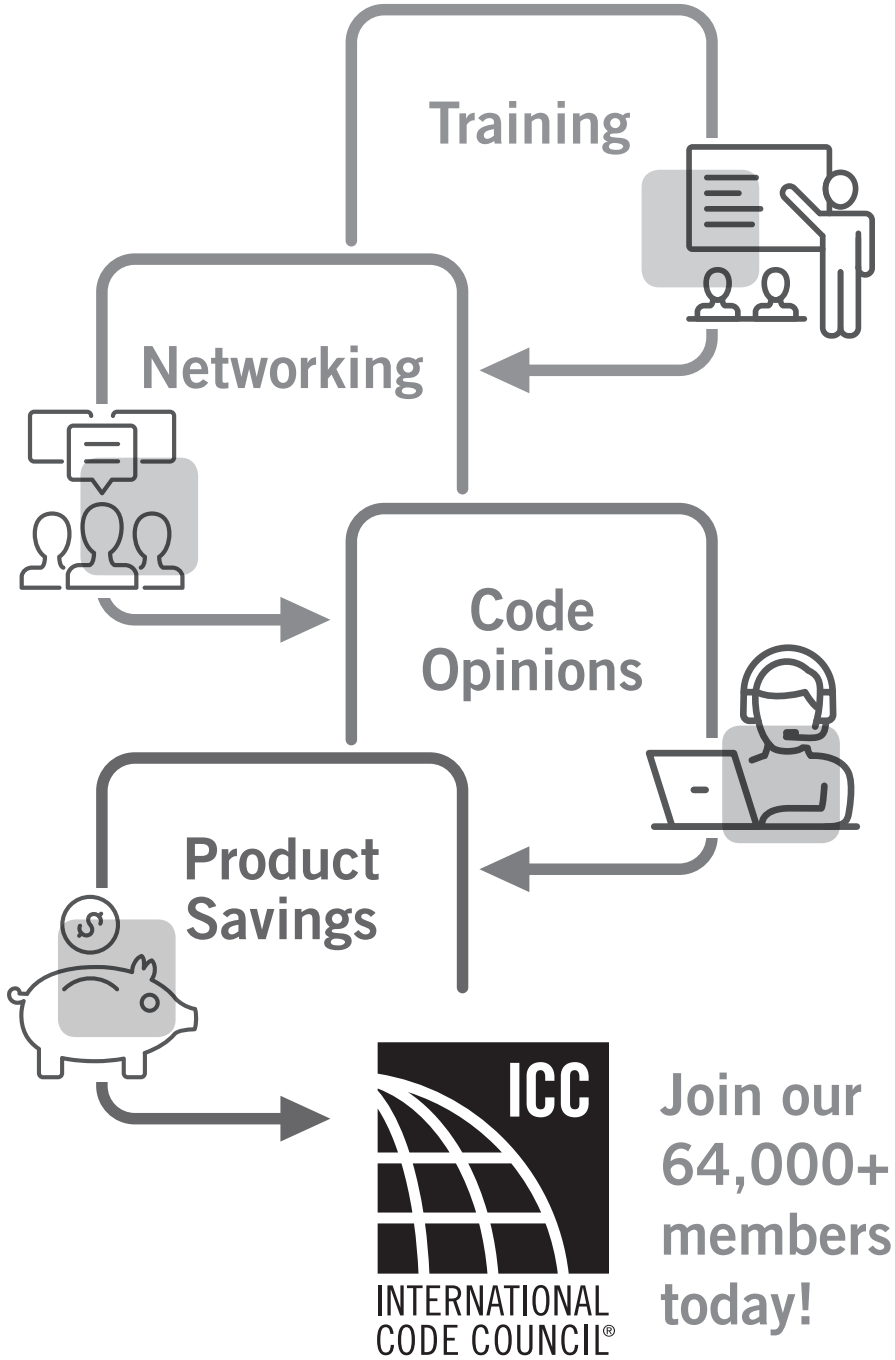

Put the benefits of ICC Membership to work for you and your career!

Visit **www.iccsafe.org/memnow** or
call **1-888-ICC-SAFE (422-7233), ext. 33804** to learn more.

19-17662

INTERNATIONAL CODE COUNCIL®

Copyright © 2016 ICC & NYSDOS. ALL RIGHTS RESERVED. Accessed by Lauren Gualdino (gualdino@brianchimanor.org) ( ) Order Number 4100880972 on May 08, 2020 06:05 AM (PDT) pursuant to License Agreement with ICC & NYSDOS. No further reproduction, no



The ICC Assessment Center (formerly known as ICC Certification & Testing) provides nationally recognized credentials that demonstrate a confirmed commitment to protect public health, safety, and welfare. Raise the professionalism of your department and further your career by pursuing an ICC Certification.

ICC Certifications offer:

- Nationwide recognition
- Increased earning potential
- Career advancement
- Superior knowledge
- Validation of your expertise
- Personal and professional satisfaction

Exams are developed and maintained to the highest standards, which includes continuous peer review by national committees of experienced, practicing professionals. ICC is continually evolving exam offerings, testing options, and technology to ensure that all building and fire safety officials have access to the tools and resources needed to advance in today's fast-paced and rapidly-changing world.

Enhancing Exam Options

Effective July 2018, the Assessment Center enhanced and streamlined exam options and now offers only computer based testing (CBT) at a test site and PRONTO. We no longer offer paper/pencil exams.

Proctored Remote Online Testing Option (PRONTO)

Taking your next ICC certification exam is more convenient, more comfortable and more efficient than ever before with PRONTO.

PRONTO provides a convenient testing experience that is accessible 24 hours a day, 7 days a week, 365 days a year. Required hardware/software is minimal – you will need a webcam and microphone, as well as a reasonably recent operating system.

pronto
ICC ONLINE EXAMS

Whether testing in your office or in the comfort of your home, your ICC exam will continue to maintain its credibility while offering more convenience, allowing you to focus on achieving your professional goals. The Assessment Center continues to add exams to the PRONTO exam catalog regularly.

18-15617

Checkout all the ICC Assessment Center has to offer at iccsafe.org/certification

This insert is not part of the official text of the New York State Uniform Fire Prevention and Building Code or New York State Energy Conservation Construction Code.

INTERNATIONAL CODE COUNCIL®

Copyright © 2019 ICC & NYSDOS. ALL RIGHTS RESERVED. Accessed by Lauren Gualdino (lgualdino@briarcliffmanor.org), (-) Order Number #100880972 on May 08, 2020 07:05 AM (PDT) pursuant to License Agreement with ICC & NYSDOS. No further reproduction, no

100880972

ICC EVALUATION SERVICE

In Cooperation with Innovation RESEARCH LABS

Look no further than ICC-ES PMG® The Leading provider of product evaluations in plumbing, mechanical and fuel gas, with excellent customer service and the highest acceptability by code officials at the price you're looking for.



We certify:

- Faucets
- Showerheads
- Bathtubs
- Sink products
- Toilets & Urinals
- Ceramic Fixtures
- Resins and Linear Drain products

and many more!

Benefits of having an ICC-ES PMG Listing

- ICC-ES PMG offers a lower cost for certification than competitors
- Expedited certification for all client listings
- ICC-ES PMG does not conduct warehouse inspections
- ICC-ES PMG does not charge for additional company listings
- ICC-ES will accept test reports from other entities
- No fee for EPA WaterSense listings and lead law listings
- No separate file for NSF 61 listings
- A2LA, ANSI, SCC and EMA

ICC INTERNATIONAL CODE COUNCIL®

www.icc-es-pmg.org
800-423-6587 x7643

ICC ES PMG Complies to UPC

EPA WaterSense LICENSED CERTIFYING BODY

19-17625

This insert is not part of the official text of the New York State Uniform Fire Prevention and Building Code or New York State Energy Conservation Construction Code.

INTERNATIONAL CODE COUNCIL®

Copyright © 2019 ICC & NYSDOS. ALL RIGHTS RESERVED. Accessed by Lauren Gualdino (lgualdino@briarcliffmanor.org), (-) Order Number #100880972 on May 08, 2020 07:05 AM (PDT) pursuant to License Agreement with ICC & NYSDOS. No further reproduction, no

100880972

ANDREW M. CUOMO GOVERNOR
ROSSANA ROSADO SECRETARY OF STATE



2020 MECHANICAL CODE of NEW YORK STATE

NEW YORK STATE OF OPPORTUNITY.

Building Standards and Codes

ICC INTERNATIONAL CODE COUNCIL®

INTERNATIONAL CODE COUNCIL®

Copyright © 2019 ICC & NYSDOS. ALL RIGHTS RESERVED. Accessed by Lauren Gualdino (lgualdino@briarcliffmanor.org), (-) Order Number #100880972 on May 08, 2020 07:05 AM (PDT) pursuant to License Agreement with ICC & NYSDOS. No further reproduction, no

100880972

ANDREW M. CUOMO GOVERNOR
ROSSANA ROSADO SECRETARY OF STATE

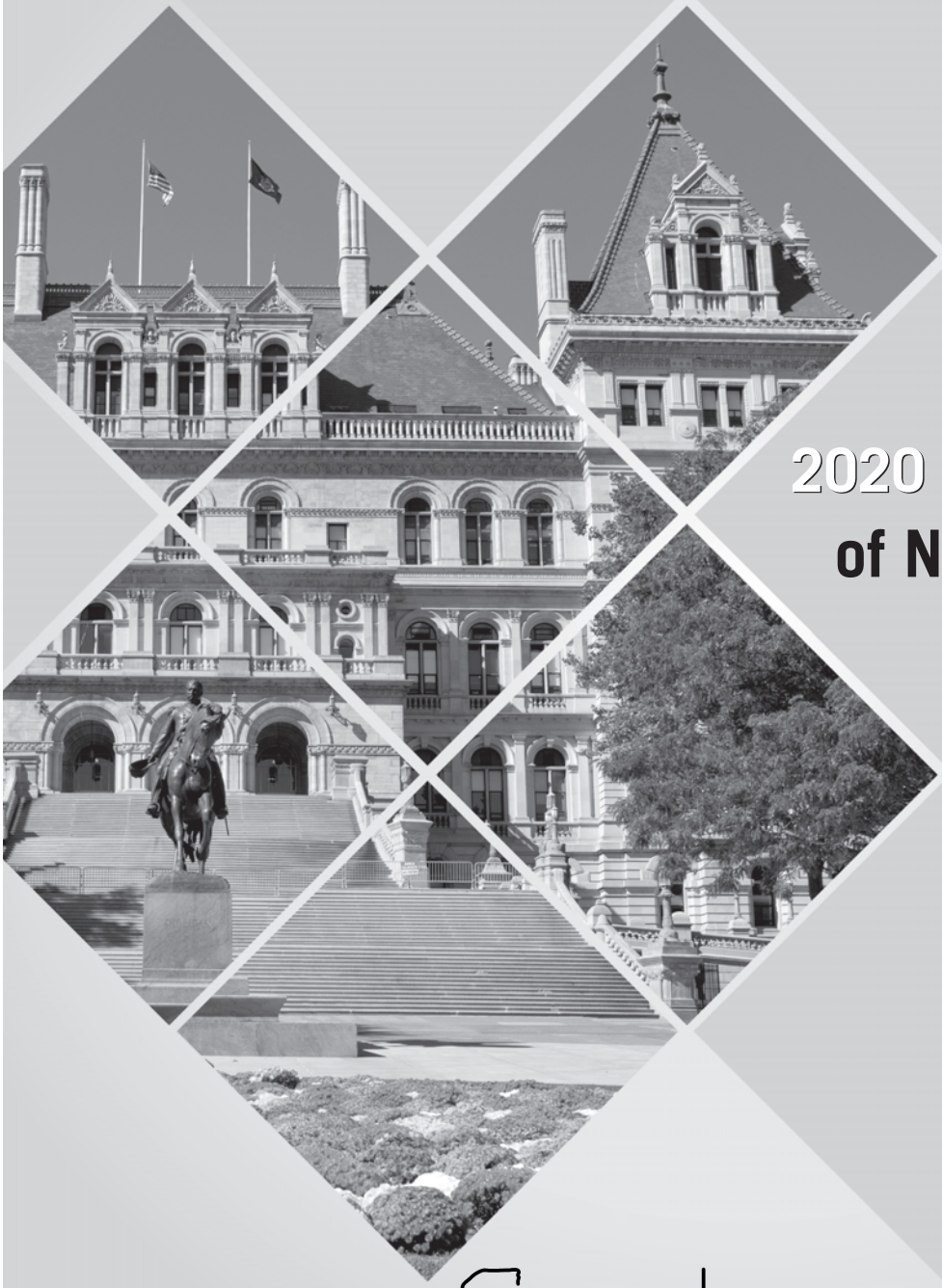

2020 MECHANICAL CODE of NEW YORK STATE

NEW YORK STATE OF OPPORTUNITY.

Building Standards and Codes

ICC INTERNATIONAL CODE COUNCIL®

INTERNATIONAL CODE COUNCIL®

Copyright © 2019 ICC & NYSDOS. ALL RIGHTS RESERVED. Accessed by Lauren Gualdino (lgualdino@briarcliffmanor.org), (-) Order Number #100880972 on May 08, 2020 07:05 AM (PDT) pursuant to License Agreement with ICC & NYSDOS. No further reproduction, no

100880972

2020 Mechanical Code of New York State

Publication Date: November 2019

ISBN: 978-1-60983-916-1

COPYRIGHT © 2019
by
INTERNATIONAL CODE COUNCIL, INC.
and
NEW YORK STATE DEPARTMENT OF STATE

ALL RIGHTS RESERVED. This 2020 *Mechanical Code of New York State* is a copyrighted work owned by the International Code Council, Inc. ("ICC"). This work contains: (1) portions of the ICC International Codes® (I-Codes®); (2) material that is a derivative of the I-Codes; and (3) wholly original materials prepared by the New York State Department of State (NYSDOS) or by the New York State Fire Prevention and Building Code Council (the "Code Council"). The International Code Council, Inc., has copyright ownership of the I-Codes. The International Code Council and the New York State Department of State have joint copyright ownership of the material that is a derivative of the I-Codes. The New York State Department of State has copyright ownership of the wholly original materials prepared by the New York State Department of State and/or by the Code Council. As to the ICC International Codes, all rights, including the right of reproduction in whole or in part in any form, are reserved to the International Code Council. As to the material that is derivative of the I-Codes, all rights, including the right of reproduction in whole or in part in any form, are reserved to the International Code Council and the New York State Department of State, jointly. As to the wholly original materials prepared by the New York State Department of State or by the Code Council, all rights, including the right of reproduction in whole or in part in any form, are reserved to the New York State Department of State. Without advance written permission from the copyright owner, no part of this book may be reproduced, distributed or transmitted in any form or by any means, including, without limitation, electronic, optical or mechanical means (by way of example, and not limitation, photocopying or recording by or in an information storage retrieval system). For information on use rights and permissions, please contact: ICC Publications, 4051 Flossmoor Road, Country Club Hills, IL 60478. Phone 1-888-ICC-SAFE (422-7233).

Trademarks: "International Code Council," the "International Code Council" logo, "ICC," the "ICC" logo, "International Mechanical Code," "IMC" and other names and trademarks appearing in this book are registered trademarks of the International Code Council, Inc., and/or its licensors (as applicable), and may not be used without permission.

T024584

PRINTED IN THE USA

INTERNATIONAL CODE COUNCIL®

Copyright © 2019 ICC & NYSDOS. ALL RIGHTS RESERVED. Accessed by Lauren Gualdino (lgualdino@briarcliffmanor.org), (-) Order Number #100880972 on May 08, 2020 07:05 AM (PDT) pursuant to License Agreement with ICC & NYSDOS. No further reproduction, no

100880972

ACKNOWLEDGMENTS

With gratitude, the Department of State acknowledges the contributions of the following individuals in the creation of the 2020 Codes of New York State:

STATE FIRE PREVENTION AND BUILDING CODE COUNCIL

Rossana Rosado	Chair – Secretary of State, New York State Department of State
	Designee - Matthew W. Tebo, Esq.
Francis J. Nerney, Jr.	State Fire Administrator, Office of Fire Prevention and Control
	Designee - Paul Martin
RuthAnne Visnauskas	Commissioner, Division of Housing and Community Renewal
	Designee - Michael Weber
	Designee - Joseph Palozzola
Roberta Reardon	Commissioner, New York State Department of Labor
	Designee - Vincent R. Rapacciuolo
Honorable Bill de Blasio	Mayor, City of New York
	Designee - Keith Wen, NYC Department of Buildings
Honorable Michael R. Sabatino, Jr.	Councilmember, City of Yonkers
Claudia K. Braymer, Esq.	County Board of Supervisors, Warren County
David A. Seeley	Supervisor, Town of Irondequoit
Timothy DeRuyscher, P.E. FSFPE	Professional Engineer Representative
Patrick Dolan	Trade Union Representative, Steamfitters Union, 638
Shawn Hamlin, R.A.	Registered Architect Representative, Hamlin Design Group
Robert Hughes	Code Enforcement Representative, Village of Pleasantville
Dominic Marinelli	Persons with Disabilities Representative, United Spinal Association
Joseph J. Toomey	Fire Service Representative, Albany Fire Department
William W. Tuyn	Builders Representative, Forbes Capretto Homes

DEPARTMENT OF STATE

Rossana Rosado	Secretary of State
Brendan Hughes	Executive Deputy Secretary of State
James W. Leary, Esq.	Assistant Executive Deputy Secretary of State
Mark P. Pattison	Deputy Secretary of State for Local Government
Matthew W. Tebo, Esq.	Deputy Secretary of State for Agency Transformation and External Affairs
John R. Addario, P.E.	Director of the Division of Building Standards and Codes
Brian Tollisen, P.E.	Deputy Director of the Division of Building Standards and Codes
Gerard A. Hathaway, R.A.	Assistant Director for Code Development
Kevin Duerr-Clark, P.E.	Assistant Director for Technical Support
Francis “Nick” McAndrew, P.E.	Assistant Director for Educational Services
Joseph Hill, R.A.	Assistant Director for Code Administration
Jeffrey M. Hinderliter, P.E.	Professional Engineer
Emma Gonzalez-Laders, R.A., LEED AP	Senior Architect
Daniel Carroll	Code Compliance Specialist I
Janet Miller	Program Aide
Joseph P. Ball, Esq.	Supervising Attorney
Panagiota K. Hyde, Esq.	Senior Attorney

IN MEMORIAM

John H. Flanagan	Code Enforcement Representative, Code Council Member (2003–2017)
Honorable Judith Kennedy	Mayor, City of Newburgh, Code Council Member (2013–2018)
Brendan Fitzgerald	Executive Deputy Secretary of State (2016–2018)

INTERNATIONAL CODE COUNCIL®
Copyright © 2019 ICC & NYSDOS. ALL RIGHTS RESERVED. Accessed by Lauren Gualdino (lgualdino@briarcliffmanor.org), (-) Order Number #100880972 on May 08, 2020 07:05 AM (PDT) pursuant to License Agreement with ICC & NYSDOS. No further reproduction, no

100880972

INTERNATIONAL CODE COUNCIL®
Copyright © 2019 ICC & NYSDOS. ALL RIGHTS RESERVED. Accessed by Lauren Gualdino (lgualdino@briarcliffmanor.org), (-) Order Number #100880972 on May 08, 2020 07:05 AM (PDT) pursuant to License Agreement with ICC & NYSDOS. No further reproduction, no

PREFACE

Introduction

The 2020 *Mechanical Code of New York State* (MCNYS) establishes minimum requirements for mechanical systems using prescriptive and performance-related provisions. It is founded on broad-based principles that make possible the use of new materials and new mechanical designs. This 2020 edition was developed as a derivative work of the 2018 edition of the *International Mechanical Code*® (IMC®) published by the International Code Council® (ICC®).

Intention

This code is founded on principles intended to establish provisions consistent with the scope of a mechanical code that adequately protects public health, safety and welfare; provisions that do not unnecessarily increase construction costs; prov isions that do not restrict the use of new materials, products or methods of construction; and provisions that do not give preferential treatment to particular types or classes of materials, products or methods of construction.

Letter Designations in Front of Section Numbers

The bracketed letter designations for the party responsible for portions of this code are as follows:

ICC Code Development Committee

[A] = Administrative Code Development Committee;

[BE] = IBC—Means of Egress Code Development Committee;

[BF] = IBC—Fire Safety Code Development Committee;

[BG] = IBC—General Code Development Committee;

[BS] = IBC—Structural Code Development Committee;

[E] = International Energy Conservation Code Development Committee

[EB] = International Existing Building Code Development Committee;

[F] = International Fire Code Development Committee;

[FG] = International Fuel Gas Code Development Committee;

[M] = International Mechanical Code Development Committee;

[P] = International Plumbing Code Development Committee; and

New York State Code Development

[NY] = New York Department of State

INTERNATIONAL CODE COUNCIL®
Copyright © 2019 ICC & NYSDOS. ALL RIGHTS RESERVED. Accessed by Lauren Gualdino (lgualdino@briarcliffmanor.org), (-) Order Number #100880972 on May 08, 2020 07:05 AM (PDT) pursuant to License Agreement with ICC & NYSDOS. No further reproduction, no

100880972

Marginal Markings

Solid vertical lines in the margins within the body of the code indicate a technical change from the requirements of the 2015 edition of the I-Codes® . Deletion indicators in the form of an arrow (➡) are provided in the margin where an entire section, paragraph, exception or table has been deleted or an item in a list of items or a table has been deleted.

Italicized Terms

Word and terms defined in Chapter 2, Definitions, are italicized where they appear in code text and the Chapter 2 definitions applies. Where such words and terms are not italicized, common-use definitions apply. The words and terms selected have code-specific definitions that the user should read carefully to facilitate better understanding of the code.

INTERNATIONAL CODE COUNCIL®
Copyright © 2019 ICC & NYSDOS. ALL RIGHTS RESERVED. Accessed by Lauren Gualdino (lgualdino@briarcliffmanor.org), (-) Order Number #100880972 on May 08, 2020 07:05 AM (PDT) pursuant to License Agreement with ICC & NYSDOS. No further reproduction, no

100880972

EFFECTIVE USE OF THE MECHANICAL CODE OF NEW YORK STATE

The *Mechanical Code of New York State* (MCNYS) is a code that regulates the design and installation of mechanical systems, appliances, appliance venting, duct and ventilation systems, combustion air provisions, hydronic systems and solar systems. The purpose of the code is to establish the minimum acceptable level of safety and to protect life and property from the potential dangers associated with the installation and operation of mechanical systems. The code also protects the personnel that install, maintain, service and replace the systems and appliances addressed by this code.

The MCNYS is primarily a prescriptive code with some performance text. The code relies heavily on product specifications and listings to provide much of the appliance and equipment installation requirements.

Arrangement and Format of the 2020 MCNYS

The format of the 2020 MCNYS allows each chapter to be devoted to a particular subject with the exception of Chapter 3, which contains general subject matters that are not extensive enough to warrant their own independent chapter.

Chapter 1 Scope and Administration. Chapter 1 establishes the limits of applicability of the code and describes how the code is to be applied and enforced. A mechanical code, like any other code, is intended to be adopted as a legally enforceable document and it cannot be effective without adequate provisions for its administration and enforcement.

Chapter 2 Definitions. Chapter 2 is the repository of the definitions of terms used in the body of the code. Codes are technical documents and every word and term can impact the meaning of the code text and the intended results. The code often uses terms that have a unique meaning in the code and the code meaning can differ substantially from the ordinarily understood meaning of the term as used outside of the code.

The terms defined in Chapter 2 are deemed to be of prime importance in establishing the meaning and intent of the code text that uses the terms. The user of the code should be familiar with and consult this chapter because the definitions are essential to the correct interpretation of the code and because the user may not be aware that a term is defined.

Chapter 3 General Regulations. Chapter 3 contains broadly applicable requirements related to appliance location and installation, appliance and systems access, protection of structural elements, condensate disposal and clearances to combustibles, among others.

Chapter 4 Ventilation. Chapter 4 includes means for protecting building occupant health by controlling the quality of indoor air and protecting property from the effects of inadequate ventilation. In some cases, ventilation is required to prevent or reduce a health hazard by removing contaminants at their source.

Ventilation is both necessary and desirable for the control of air contaminants, moisture and temperature. Habitable and occupiable spaces are ventilated to promote a healthy and comfortable environment for the occupants. Uninhabited and unoccupied spaces are ventilated to protect the building structure from the harmful effects of excessive humidity and heat. Ventilation of specific occupancies is necessary to minimize the potential for toxic or otherwise harmful substances to reach dangerously high concentrations in air.

Chapter 5 Exhaust Systems. Chapter 5 provides guidelines for reasonable protection of life, property and health from the hazards associated with exhaust systems, air contaminants and smoke development in the event of a fire. In most cases, these hazards involve materials and gases that are flammable, explosive, toxic or otherwise hazardous. Where contaminants are known to be present in quantities that are irritating or harmful to the occupants' health or are hazardous in a fire, both

INTERNATIONAL CODE COUNCIL®
Copyright © 2019 ICC & NYSDOS. ALL RIGHTS RESERVED. Accessed by Lauren Gualdino (lgualdino@briarcliffmanor.org), (-) Order Number #100880972 on May 08, 2020 07:05 AM (PDT) pursuant to License Agreement with ICC & NYSDOS. No further reproduction, no

100880972

naturally and mechanically ventilated spaces must be equipped with mechanical exhaust systems capable of collecting and removing the contaminants.

This chapter contains requirements for the installation of exhaust systems, with an emphasis on the structural integrity of the systems and equipment involved and the overall impact of the systems on the fire safety performance of the building. It includes requirements for the exhaust of commercial kitchen grease- and smoke-laden air, hazardous fumes and toxic gases, clothes dryer moisture and heat and dust, stock and refuse materials.

Chapter 6 Duct Systems. Chapter 6 of the code regulates the materials and methods used for constructing and installing ducts, plenums, system controls, exhaust systems, fire protection systems and related components that affect the overall performance of a building's air distribution system and the reasonable protection of life and property from the hazards associated with air-moving equipment and systems. This chapter contains requirements for the installation of supply, return and exhaust air systems. Specific exhaust systems are also addressed in Chapter 5. Information on the design of duct systems is limited to that in Section 603.2. The code is very much concerned with the structural integrity of the systems and the overall impact of the systems on the fire safety and life safety performance of the building. Design considerations such as duct sizing, maximum efficiency, cost effectiveness, occupant comfort and convenience are the responsibility of the design professional. The provisions for the protection of duct penetrations of wall, floor, ceiling and roof assemblies are extracted from the *Building Code of New York State*.

Chapter 7 Combustion Air. Complete combustion of solid and liquid fuel is essential for the proper operation of appliances, for control of harmful emissions and for achieving maximum fuel efficiency.

The specific combustion air requirements provided in previous editions of the code have been deleted in favor of a single section that directs the user to NFPA 31 for oil-fired appliance combustion air requirements and the manufacturer's installation instructions for solid fuel-burning appliances. For gas-fired appliances, the provisions of the *Fuel Gas Code of New York State* are applicable.

Chapter 8 Chimneys and Vents. Chapter 8 is intended to regulate the design, construction, installation, maintenance, repair and approval of chimneys, vents and their connections to solid and liquid fuel-burning appliances. The requirements of this chapter are intended to achieve the complete removal of the products of combustion from fuel-burning appliances and equipment. This chapter includes regulations for the proper selection, design, construction and installation of a chimney or vent, along with appropriate measures to minimize the related potential fire hazards. A chimney or vent must be designed for the type of appliance or equipment it serves. Chimneys and vents are designed for specific applications depending on the flue gas temperatures and the type of fuel being burned in the appliance. Chimneys and vents for gas-fired appliances are covered in the *Fuel Gas Code of New York State*.

Chapter 9 Specific Appliances, Fireplaces and Solid Fuel-burning Equipment. Chapter 9 sets minimum construction and performance criteria for fireplaces, appliances and equipment and provides for the safe installation of these items. It reflects the code's intent to specifically address all of the types of appliances that the code intends to regulate. Other regulations affecting the installation of solid fuel-burning fireplaces, appliances and accessory appliances are found in Chapters 3, 6, 7, 8, 10, 11, 12, 13 and 14.

Chapter 10 Boilers, Water Heaters and Pressure Vessels. Chapter 10 presents regulations for the proper installation of boilers, water heaters and pressure vessels to protect life and property from the hazards associated with those appliances and vessels. It applies to all types of boilers and pressure vessels, regardless of size, heat input, operating pressure or operating temperature.

INTERNATIONAL CODE COUNCIL®
Copyright © 2019 ICC & NYSDOS. ALL RIGHTS RESERVED. Accessed by Lauren Gualdino (lgualdino@briarcliffmanor.org), (-) Order Number #100880972 on May 08, 2020 07:05 AM (PDT) pursuant to License Agreement with ICC & NYSDOS. No further reproduction, no

100880972

Because pressure vessels are closed containers designed to contain liquids, gases or both under pressure, they must be designed and installed to prevent structural failures that can result in extremely hazardous situations. Certain safety features are therefore provided in Chapter 10 to reduce the potential for explosion hazards.

Chapter 11 Refrigeration. Chapter 11 contains regulations pertaining to the life safety of building occupants. These regulations establish minimum requirements to achieve the proper design, construction, installation and operation of refrigeration systems. Refrigeration systems are a combination of interconnected components and piping assembled to form a closed circuit in which a refrigerant is circulated. The system's function is to extract heat from a location or medium, and to reject that heat to a different location or medium. This chapter establishes reasonable safeguards for the occupants by defining and mandating practices that are consistent with the practices and experience of the industry.

Chapter 12 Hydronic Piping. Hydronic piping includes piping, fittings and valves used in building space conditioning systems. Applications include hot water, chilled water, steam, steam condensate, brines and water/antifreeze mixtures. Chapter 12 contains the provisions that govern the construction, installation, alteration and repair of all hydronic piping systems that affect reliability, serviceability, energy efficiency and safety.

Chapter 13 Fuel Oil Piping and Storage. Chapter 13 regulates the design and installation of fuel oil storage and piping systems. The regulations include reference to construction standards for above-ground and underground storage tanks, material standards for piping systems (both above-ground and underground) and extensive requirements for the proper assembly of system piping and components. The *Fire Code of New York State* (FCNYS) covers subjects not addressed in detail here. The provisions in this chapter are intended to prevent fires, leaks and spills involving fuel oil storage and piping systems.

Chapter 14 Solar Thermal Systems. Chapter 14 establishes provisions for the safe installation, operation and repair of solar energy systems used for space heating or cooling, domestic hot water heating or processing. Although such systems use components similar to those of conventional mechanical equipment, many of these provisions are unique to solar energy systems.

Chapter 15 Referenced Standards. Chapter 15 lists all of the product and installation standards and codes that are referenced throughout Chapters 1 through 14. The standards are part of the code to the extent of the reference to the standard. Chapter 15 provides the full title and edition year of the standards and codes in addition to the address of the promulgators and the section numbers in which the standards and codes are referenced.

Appendix A Chimney Connector Pass-throughs. This appendix is informative and not part of the code. Appendix A provides figures that illustrate various requirements in the body of the code. Figure A-1 illustrates the chimney connector clearance requirements of Table 803.10.4.

INTERNATIONAL CODE COUNCIL®
Copyright © 2019 ICC & NYSDOS. ALL RIGHTS RESERVED. Accessed by Lauren Gualdino (lgualdino@briarcliffmanor.org), (-) Order Number #100880972 on May 08, 2020 07:05 AM (PDT) pursuant to License Agreement with ICC & NYSDOS. No further reproduction, no

100880972

INTERNATIONAL CODE COUNCIL®
Copyright © 2019 ICC & NYSDOS. ALL RIGHTS RESERVED. Accessed by Lauren Gualdino (lgualdino@briarcliffmanor.org), (-) Order Number #100880972 on May 08, 2020 07:05 AM (PDT) pursuant to License Agreement with ICC & NYSDOS. No further reproduction, no

100880972

TABLE OF CONTENTS

CHAPTER 1 SCOPE AND ADMINISTRATION 1

Section

101 Title, Scope and Purpose 1
102 Applicability 1
103 Administration and Enforcement 3
104 Materials, Equipment and Methods of Construction 4
105 Building Permits, Construction Inspections, Stop Work Orders and Certificates of Occupancy 4
106 Submittal Documents 6
107 Service Utilities 7

CHAPTER 2 DEFINITIONS 9

Section

201 General 9
202 General Definitions 9

CHAPTER 3 GENERAL REGULATIONS 21

Section

301 General 21
302 Protection of Structure 22
303 Equipment and Appliance Location 23
304 Installation 23
305 Piping Support 25
306 Access and Service Space 25
307 Condensate Disposal 27
308 Clearance Reduction 28
309 Temperature Control 28
310 Explosion Control 29
311 Smoke and Heat Vents 29
312 Heating and Cooling Load Calculations 29

CHAPTER 4 VENTILATION 31

Section

401 General 31
402 Natural Ventilation 31
403 Mechanical Ventilation 32
404 Enclosed Parking Garages 35
405 Systems Control 35
406 Ventilation of Uninhabited Spaces 35
407 Ambulatory Care Facilities and Group I-2 Occupancies 35

CHAPTER 5 EXHAUST SYSTEMS 41

Section

501 General 41
502 Required Systems 42
503 Motors and Fans 49
504 Clothes Dryer Exhaust 49
505 Domestic Cooking Exhaust Equipment 51
506 Commercial Kitchen Hood Ventilation System Ducts and Exhaust Equipment 51
507 Commercial Kitchen Hoods 56
508 Commercial Kitchen Makeup Air 59
509 Fire Suppression Systems 60
510 Hazardous Exhaust Systems 60
511 Dust, Stock and Refuse Conveying Systems 62
512 Subslab Soil Exhaust Systems 63
513 Smoke Control Systems 63
514 Energy Recovery Ventilation Systems 67

CHAPTER 6 DUCT SYSTEMS 69

Section

601 General 69
602 Plenums 70
603 Duct Construction and Installation 72
604 Insulation 74
605 Air Filters 75
606 Smoke Detection Systems Control 75
607 Duct and Transfer Openings 76

CHAPTER 7 COMBUSTION AIR 81

Section

701 General 81

CHAPTER 8 CHIMNEYS AND VENTS 83

Section

801 General 83
802 Vents 84
803 Connectors 85
804 Direct-vent, Integral Vent and Mechanical Draft Systems 86
805 Factory-built Chimneys 87
806 Metal Chimneys 88

INTERNATIONAL CODE COUNCIL®
Copyright © 2019 ICC & NYSDOS. ALL RIGHTS RESERVED. Accessed by Lauren Gualdino (lgualdino@briarcliffmanor.org), (-) Order Number #100880972 on May 08, 2020 07:05 AM (PDT) pursuant to License Agreement with ICC & NYSDOS. No further reproduction, no

100880972

CHAPTER 9 SPECIFIC APPLIANCES, FIREPLACES AND SOLID FUEL-BURNING EQUIPMENT 89

Section

901 General 89
902 Masonry Fireplaces 89
903 Factory-built Fireplaces 89
904 Pellet Fuel-burning Appliances 89
905 Fireplace Stoves and Room Heaters. 89
906 Factory-built Barbecue Appliances 89
907 Incinerators and Crematories 89
908 Cooling Towers, Evaporative Condensers and Fluid Coolers 90
909 Vented Wall Furnaces 90
910 Floor Furnaces 90
911 Duct Furnaces. 91
912 Infrared Radiant Heaters 91
913 Clothes Dryers 91
914 Sauna Heaters. 91
915 Engine and Gas Turbine-powered Equipment and Appliances. 91
916 Pool and Spa Heaters 91
917 Cooking Appliances 92
918 Forced-air Warm-air Furnaces 92
919 Conversion Burners 92
920 Unit Heaters 92
921 Vented Room Heaters 92
922 Kerosene and Oil-fired Stoves and Heaters 92
923 Small Ceramic Kilns 92
924 Stationary Fuel Cell Power Systems 92
925 Masonry Heaters. 93
926 Gaseous Hydrogen Systems 93
927 Radiant Heating Systems 93
928 Evaporative Cooling Equipment 93
929 High-volume Large-diameter Fans 93

CHAPTER 10 BOILERS, WATER HEATERS AND PRESSURE VESSELS 95

Section

1001 General 95
1002 Water Heaters 95
1003 Pressure Vessels 95
1004 Boilers 95
1005 Boiler Connections 96
1006 Safety and Pressure Relief Valves and Controls 96
1007 Boiler Low-water Cutoff 97
1008 Bottom Blowoff Valve 97
1009 Hot Water Boiler Expansion Tank 97
1010 Gauges 98
1011 Tests 98

CHAPTER 11 REFRIGERATION 99

Section

1101 General 99
1102 System Requirements 99
1103 Refrigeration System Classification 100
1104 System Application Requirements 100
1105 Machinery Room, General Requirements. 107
1106 Machinery Room, Special Requirements 108
1107 Refrigerant Piping. 109
1108 Field Test 110
1109 Periodic Testing 111

CHAPTER 12 HYDRONIC PIPING 113

Section

1201 General 113
1202 Material. 113
1203 Joints and Connections 114
1204 Pipe Insulation 115
1205 Valves 116
1206 Piping Installation. 116
1207 Transfer Fluid 116
1208 Tests 116
1209 Embedded Piping 117
1210 Plastic Pipe Ground-source Heat Pump Loop Systems 117

CHAPTER 13 FUEL OIL PIPING AND STORAGE 121

Section

1301 General 121
1302 Material. 121
1303 Joints and Connections 121
1304 Piping Support 122
1305 Fuel Oil System Installation 122
1306 Oil Gauging. 122
1307 Fuel Oil Valves. 123
1308 Testing 123

INTERNATIONAL CODE COUNCIL®
Copyright © 2019 ICC & NYSDOS. ALL RIGHTS RESERVED. Accessed by Lauren Gualdino (lgualdino@briarcliffmanor.org), (-) Order Number #100880972 on May 08, 2020 07:05 AM (PDT) pursuant to License Agreement with ICC & NYSDOS. No further reproduction, no

100880972

CHAPTER 14 SOLAR THERMAL SYSTEMS 125

Section

1401 General 125

1402 Design and Installation 125

1403 Heat Transfer Fluids 127

1404 Labeling. 127

CHAPTER 15 REFERENCED STANDARDS 129

APPENDIX A CHIMNEY CONNECTOR PASS-THROUGHS. 143

APPENDIX B RESERVED 145

INDEX 147

INTERNATIONAL CODE COUNCIL®

Copyright © 2019 ICC & NYSDOS. ALL RIGHTS RESERVED. Accessed by Lauren Gualdino (lgualdino@briarcliffmanor.org), (-) Order Number #100880972 on May 08, 2020 07:05 AM (PDT) pursuant to License Agreement with ICC & NYSDOS. No further reproduction, no

INTERNATIONAL CODE COUNCIL®
Copyright © 2019 ICC & NYSDOS. ALL RIGHTS RESERVED. Accessed by Lauren Gualdino (lgualdino@briarcliffmanor.org), (-) Order Number #100880972 on May 08, 2020 07:05 AM (PDT) pursuant to License Agreement with ICC & NYSDOS. No further reproduction, no

100880972

[NY] CHAPTER 1
SCOPE AND ADMINISTRATION

[NY] SECTION 101
TITLE, SCOPE AND PURPOSE

[NY] 101.1 Title. This publication shall be known as the 2020 edition of the *Mechanical Code of New York State* (MCNYS) hereinafter referred to as "this code." This code is part of the New York State Uniform Fire Prevention and Building Code (the "Uniform Code").

[NY] 101.1.1 Amendments of New York State code books. In Chapter 1, the term "New York State code books" shall include the *Residential Code of New York State*, the *Building Code of New York State*, the *Plumbing Code of New York State*, the *Mechanical Code of New York State* (i.e., this publication), the *Fuel Gas Code of New York State,* the *Fire Code of New York State*, the *Property Maintenance Code of New York State*, the *Existing Building Code of New York State*, and the *Energy Conservation Construction Code of New York State*. Provisions in any one or more of the New York State code books may be amended from time to time by provisions in 19 NYCRR Parts 1220 to 1227 or 19 NYCRR Part 1240, as currently in effect and as hereafter amended from time to time. If this publication is now or hereafter so amended, references in this publication to "this code" shall be deemed to be references to this publication as so amended. If any other New York State code book is now or hereafter so amended, references in this code to such other New York State code book shall be deemed to be references to such New York State code book as so amended.

[NY] 101.2 Scope. This code shall regulate the design, installation, maintenance, alteration and inspection of mechanical systems that are permanently installed and utilized to provide control of environmental conditions and related processes within buildings. This code shall also regulate those mechanical systems, system components, *equipment* and appliances specifically addressed herein. The installation of fuel gas distribution piping and *equipment*, fuel gas-fired appliances and fuel gas-fired *appliance* venting systems shall be regulated by the *Fuel Gas Code of New York State*.

Exceptions:

1. The provisions of the *Residential Code of New York State* shall apply to the construction, *alteration*, movement, enlargement, replacement, *repair*, *equipment*, use and occupancy, location, removal and demolition of the following *buildings* and structures, provided that such *building* or structure is not more than three stories above grade plane in height, and their accessory structures not more than three stories above grade plane in height:

   1.1 Detached one-family dwellings;

   1.2. Detached two-family dwellings in which each dwelling unit has a separate means of egress;

   1.3. Townhouses;

   1.4. Bed and breakfast dwellings;

   1.5. Live/work units that (1) are located in townhouses and (2) comply with the requirements of Section 419 of the *Building Code of New York State*; and

   1.6. Owner-occupied lodging houses that (1) have five or fewer guestrooms and (2) are provided with a residential fire sprinkler system complying with Section P2904 of the *Residential Code of New York State.*

2. *Agricultural buildings*, including barns, sheds, poultry houses and other buildings and equipment on the premises that are used directly and solely for agricultural purposes, shall not be subject to the construction-related provisions of this code.

3. *Mechanical systems* in existing buildings that are undergoing repairs, *alterations*, changes in occupancy or construction of additions shall be permitted to comply with the provisions of the *Existing Building Code of New York State*.

[NY] 101.2.1 Facilities regulated by State Departments and Agencies. Where a building or premises under the custody, licensure, supervision or jurisdiction of a department or agency of the State of New York is regulated as a one- or two-family dwelling or multiple single-family dwelling (*townhouse*), in accordance with established laws or regulations of that department or agency, said *buildings* or premises, such as a community residence or hospice residence, and their *accessory structures* shall comply with the *Residential Code of New York State*.

[NY] 101.2.2 Appendices. Provisions in the following appendix is included for informational purposes:

Appendix A Chimney Connector Pass-Throughs

[NY] 101.3 Purpose. The purpose of this code is to provide minimum requirements to safeguard life or limb, health, property, and public welfare by regulating and controlling the design, construction, installation, quality of materials, location, operation and maintenance or use of mechanical systems.

[NY] SECTION 102
APPLICABILITY

[NY] 102.1 General. Where there is a conflict between a general requirement and a specific requirement, the specific requirement shall be applicable. Where, in any specific case, different sections of this code specify different materials, methods of construction or other requirements, the most restrictive shall govern.

[NY] 102.2 Other laws and regulations. This code is part of the New York State Uniform Fire Prevention and Building

INTERNATIONAL CODE COUNCIL®
Copyright © 2019 ICC & NYSDOS. ALL RIGHTS RESERVED. Accessed by Lauren Gualdino (lgualdino@briarcliffmanor.org), (-) Order Number #100880972 on May 08, 2020 07:05 AM (PDT) pursuant to License Agreement with ICC & NYSDOS. No further reproduction, no

100880972

Code (the *Uniform Code*) promulgated pursuant to Article 18 of the New York State Executive Law. The provisions of this code shall not be deemed to nullify any federal, state or local law, ordinance, administrative code, rule or regulation relating to any matter as to which the *Uniform Code* does not provide.

However:

1. Pursuant to Section 383(1) of the Executive Law, and except as otherwise provided in paragraphs a, b, and c of Section 383(1) of the Executive Law, the provisions of the *Uniform Code* supersede any other provision of a general, special or local law, ordinance, administrative code, rule or regulation inconsistent or in conflict with the *Uniform Code*;
2. Pursuant to Section 379(3) of the Executive Law, no city, town, village, county or other municipality shall have the power to supersede, void, repeal, or make less restrictive any provision of the *Uniform Code*; and
3. The ability of any city, town, or village, or the County of Nassau, to enact or adopt, and to enforce, a local law or ordinance imposing higher or more restrictive standards for construction within the jurisdiction of such city, town, village, or county that are applicable generally to such city, town, village, or county in the *Uniform Code* is subject to the provisions and requirements of Section 379 of the Executive Law.

Nothing in Section 102.2 shall be construed as:

1. Affecting the authority of the State Labor Department to enforce a safety or health standard issued under provisions of Sections 27 and 27-a of the Labor Law;
2. Relieving a person from complying with a stricter standard issued pursuant to the Occupational Safety and Health Act of 1970, as amended; or
3. Superseding, limiting, impairing or otherwise affecting any provision of the *Uniform Code*, as now in effect and as hereafter amended from time to time.

[NY] 102.2.1 Other New York Codes, Rules and Regulations (NYCRR). Additional New York Codes, Rules and Regulations exist that may affect new and existing buildings, *structures*, systems and equipment. Such regulations include, but are not limited to:

1. 19 NYCRR Part 300 (Universal Symbol of Access),
2. 19 NYCRR Part 1261 (Recordkeeping—Smoke Detectors in Multiple Dwellings),
3. 19 NYCRR Part 1264 (Identification of Buildings Utilizing Truss Type Construction), and
4. 19 NYCRR Part 1265 (Residential Structures with Truss Type Construction, Pre-Engineered Wood Construction and/or Timber Construction).

[NY] 102.3 Existing installations. Except as otherwise provided for in this chapter, a provision in this code shall not require the removal, *alteration* or abandonment of, nor prevent the continued utilization and maintenance of, a mechanical system lawfully in existence at the time of the adoption of this code.

[NY] 102.3.1 Existing buildings. Additions, *alterations*, renovations or repairs related to *building* or structural issues shall be regulated by the *Existing Building Code of New York State*.

[NY] 102.4 Maintenance. Mechanical systems, both existing and new, and parts thereof shall be maintained in proper operating condition in accordance with the original design and in a safe and sanitary condition. Devices or safeguards that are required by this code shall be maintained in compliance with the edition of the code under which they were installed. The owner or the owner's authorized agent shall be responsible for maintenance of mechanical systems. To determine compliance with this provision, the *building official* shall have the authority to require a mechanical system to be reinspected.

The inspection for maintenance of HVAC systems shall be performed in accordance with ASHRAE/ACCA/ANSI Standard 180.

[NY] 102.5 Additions, alterations or repairs. Additions, *alteration*s, renovations or repairs to a mechanical system shall conform to that required for a new mechanical system without requiring the existing mechanical system to comply with all of the requirements of this code. Additions, *alteration*s or repairs shall not cause an existing mechanical system to become unsafe, hazardous or overloaded.

Minor additions, *alteration*s, renovations and repairs to existing mechanical systems shall meet the provisions for new construction, unless such work is done in the same manner and arrangement as was in the existing system, is not hazardous and is *approved*.

[NY] 102.6 Change in occupancy. No change shall be made in the use or occupancy of any *building* or *structure* unless such *building* or *structure* is made to comply with the requirements of the *Uniform Code* and *Energy Code*.

[NY] 102.7 Moved buildings. Except as determined by Section 102.3, mechanical systems that are a part of *buildings* or *structures* moved into or within the jurisdiction shall comply with the provisions of this code for new installations.

[NY] 102.8 Referenced codes and standards. The codes and standards referenced herein shall be considered as part of the requirements of this code to the prescribed extent of each such reference and as further regulated in Sections 102.8.1 and 102.8.2.

[NY] 102.8.1 Conflicts. Where conflicts occur between provisions of this code and the referenced standards, the provisions of this code shall apply.

[NY] 102.8.2 Provisions in referenced codes and standards. Where the extent of the reference to a referenced code or standard includes subject matter that is within the scope of this code, the provisions of this code, as applicable, shall take precedence over the provisions in the referenced code or standard.

[NY] 102.9 Requirements not covered by this code. Requirements necessary for the strength, stability or proper operation of an existing or proposed mechanical system, or for the public safety, health and general welfare, not specifi-

INTERNATIONAL CODE COUNCIL®
Copyright © 2019 ICC & NYSDOS. ALL RIGHTS RESERVED. Accessed by Lauren Gualdino (lgualdino@briarcliffmanor.org), (-) Order Number #100880972 on May 08, 2020 07:05 AM (PDT) pursuant to License Agreement with ICC & NYSDOS. No further reproduction, no

100880972

cally covered by this code, shall be determined by the *building official*.

[NY] 102.10 Application of references. Reference to chapter section numbers, or to provisions not specifically identified by number, shall be construed to refer to such chapter, section or provision of this code.

[NY] 102.11 Partial invalidity. If a section, subsection, sentence, clause or phrase of this code is, for any reason, held by a court of competent jurisdiction to be unconstitutional, such decision shall not affect the validity of the remaining portions of this code.

[NY] SECTION 103 ADMINISTRATION AND ENFORCEMENT

[NY] 103.1 Administration and enforcement. The *Uniform Code* shall be administered and enforced by the *authority having jurisdiction*. The identity of the *authority having jurisdiction* in a given situation is determined in accordance with Article 18 of the Executive Law and the regulations promulgated by the Secretary of State pursuant to Executive Law Section 381(1). In general, the *authority having jurisdiction* is the local government (city, town or village) in which the *building* or *structure* is located. In certain situations, the *authority having jurisdiction* may be the county in which the *building* or *structure* is located. In certain other cases, the State, the Secretary of State (acting through the Department of State) or some other State agency may be the *authority having jurisdiction*. The *authority having jurisdiction* responsible for administration and enforcement of the *Uniform Code* is also responsible for administration and enforcement of the *Energy Code*.

Administration and enforcement of the *Uniform Code* and *Energy Code* shall be in accordance with the following, as applicable:

1. Where a city, town, village or county is the *authority having jurisdiction*:
   - 1.1. Such city, town, village or county shall provide for administration and enforcement of the *Uniform Code* and *Energy Code* by local law, ordinance, other appropriate regulation, or combination thereof.
   - 1.2. The *Code Enforcement Program* established by such local law, ordinance or other appropriate regulation, or combination thereof, must include, at a minimum, the features described in *Part 1203* and must satisfy all other requirements of *Part 1203*.
   - 1.3. Such city, town, village or county shall administer and enforce the *Uniform Code* in accordance with the *Code Enforcement Program* established by such local law, ordinance or other appropriate regulation, or combination thereof.
2. Where the State is the *authority having jurisdiction* pursuant to 19 NYCRR Section 1201.2(d):
   - 2.1. The *Code Enforcement Program* shall be as established by *Part 1204*.
   - 2.2. The State, acting through one or more State agencies, shall administer and enforce the *Uniform Code* and *Energy Code* in accordance with *Part 1204*.
3. Where the Department of State is the *authority having jurisdiction*:
   - 3.1. The *Code Enforcement Program* shall be as established by *Part 1202*.
   - 3.2. The Department of State shall administer and enforce the *Uniform Code* and *Energy Code* in accordance with *Part 1202*.
4. Where any governmental unit or agency not included in Items 1, 2, and 3 is the *authority having jurisdiction*:
   - 4.1. Such governmental unit or agency shall provide for administration and enforcement of the *Uniform Code* and *Energy Code* by regulation.
   - 4.2. The *Code Enforcement Program* established by such regulation must include, at a minimum, the features described in *Part 1203* and must satisfy all other requirements of *Part 1203*.
   - 4.3. Such governmental unit or agency shall administer and enforce the *Uniform Code* and *Energy Code* in accordance with the *Code Enforcement Program* established by such regulation.

Every governmental unit or agency thereof charged with administration and enforcement of the *Uniform Code* shall exercise its powers in due and proper manner so as to extend to the public protection from the hazards of fire and inadequate building construction.

Any person or entity constructing or renovating a *building* or *structure*, changing the use or occupancy of a *building* or *structure*, or engaging in any other activity that is subject to the provisions of the *Code Enforcement Program* of the *authority having jurisdiction* responsible for administration and enforcement of the *Uniform Code* with respect to such *building* shall comply with all applicable provisions of such *Code Enforcement Program.*

In addition, persons and entities who construct, renovate, use and occupy *buildings* and *structures* shall comply with all applicable provisions of Section 105 of this code.

[NY] 103.2 Due process. Nothing in Chapter 1, or elsewhere in this code, or elsewhere in the *Uniform Code*, or in any regulation promulgated pursuant to Executive Law Section 381(1), shall be construed as authorizing any *authority having jurisdiction* to administer and enforce the *Uniform Code* in a manner that deprives any person or entity of due process of law. In particular, but not by way of limitation, nothing in Chapter 1, or elsewhere in this code or elsewhere in the *Uniform Code*, or in any regulation promulgated pursuant to Executive Law Section 381(1), relating to posting, placarding and/or condemnation of *buildings* or *structures* that are unsafe, unfit for human occupancy or unlawful shall be construed as authorizing any *authority having jurisdiction* to post, placard or condemn any such *building* or *structure* and/or to remove any *owner* or occupant or cause any *owner* or occupant to be removed from any such *building* or *structure* without providing such notice and opportunity to be heard

INTERNATIONAL CODE COUNCIL®
Copyright © 2019 ICC & NYSDOS. ALL RIGHTS RESERVED. Accessed by Lauren Gualdino (lgualdino@briarcliffmanor.org), (-) Order Number #100880972 on May 08, 2020 07:05 AM (PDT) pursuant to License Agreement with ICC & NYSDOS. No further reproduction, no

100880972

(and, if applicable, right of appeal) as may be required under the applicable circumstances by applicable Constitutional provisions.

[NY] 103.2.1 Imminent danger. In cases of imminent danger, posting, placarding, and condemning a *building* or *structure* and removing *owners* and occupants or causing *owners* and occupants to be removed without first providing an opportunity to be heard shall be permitted to the extent consistent with applicable Constitutional provisions, provided that the affected persons and entities are afforded the opportunity for a post-action hearing to the extent required by applicable Constitutional provisions.

[NY] 103.3 Application for variance or appeal. An application for a variance or modification of any provision or requirement of *Uniform Code* shall be in accordance with the provisions of *Part 1205*. An appeal of any order or determination, or the failure within a reasonable time to make an order or determination, of an administrative official charged to enforce or purporting to enforce the *Uniform Code* may be made in accordance with the provisions of *Part 1205*.

[NY] SECTION 104
MATERIALS, EQUIPMENT AND METHODS OF CONSTRUCTION

[NY]104.1 Approved materials and equipment. Materials, equipment, and devices *approved* by the *building official* shall be constructed and installed in accordance with such approval. Materials, equipment and devices tested by an *approved* testing laboratory shall be permitted to be constructed and installed in accordance with such approval.

[NY] 104.1.1 Used materials and equipment. Used materials, equipment, and devices shall not be reused unless they meet the requirements of this code for new materials.

[NY] 104.2 Waivers, variances, and modifications. Nothing in this code shall be construed as permitting any *building official* or any *authority having jurisdiction* to waive, vary, modify, or otherwise alter any provision or requirement of this code or any other provision or requirement of the *Uniform Code*. Provisions or requirements of the *Uniform Code* may be varied or modified only in accordance with procedures established by *Part 1205* or by such other regulations as may hereafter be promulgated by the Secretary of State pursuant to Section 381(1)(f) of the Executive Law.

[NY] 104.3 Alternative materials, equipment, appliances, designs, and methods of construction. The provisions of this code are not intended to prevent the installation of any materials, *equipment*, or *appliances* not specifically prescribed by this code, or to prohibit any designs or methods of construction not specifically prescribed by this code, provided that such alternative materials, *equipment*, *appliances*, designs, or methods of construction (1) are not specifically prohibited by any provision of this code, by any other provision of the *Uniform Code*, or by the *Energy Code* and (2) shall have been *approved*, in writing, by the *building official*. Alternative materials, *equipment*, *appliances*, designs, or methods of construction may be *approved* only when the *building official* shall have determined, in writing, that such alternative is:

1. Satisfactory and complies with the intent of the provisions and requirements of the *Uniform Code*.
2. Not less than the equivalent of that prescribed in the *Uniform Code* in quality, strength, effectiveness, fire resistance, durability, and safety.

Nothing in Section 104.3 shall be construed as permitting any *building official* or any *authority having jurisdiction* to waive, vary, modify or otherwise alter any provision or requirement of this code or any other provision or requirement of the *Uniform Code*. Provisions or requirements of the *Uniform* Code may be varied or modified only pursuant to procedures established in Part 1205 or by such other regulations as may hereafter be promulgated by the Secretary of State pursuant to Section 381(1)(f) of the Executive Law.

[NY] 104.4 Workmanship. Repairs, maintenance work, alterations or installations which are caused directly or indirectly by the enforcement of the Uniform Code shall be executed and installed in a *workmanlike* manner and in accordance with *Uniform Code* and the manufacturer's installation instructions.

[NY] SECTION 105
BUILDING PERMITS, CONSTRUCTION INSPECTIONS, STOP WORK ORDERS AND CERTIFICATES OF OCCUPANCY

[NY] 105.1 Purpose. The purpose of Section 105 is to include in the *Uniform Code* provisions requiring persons and entities who construct, renovate, use and occupy *buildings* and *structures* to apply for and obtain *building permits*, to facilitate construction inspections, to obey stop work orders, to obtain *certificates of occupancy*, and to obtain *operating permits*. The provisions in Section 105 are considered to be integral parts of the *Uniform Code's* standards for construction, maintenance, and fire protection equipment and systems.

[NY] 105.1.1 Definition. For the purpose of Section 105, the term "other applicable law" shall include the *authority having jurisdiction's Code Enforcement Program*; any local law, ordinance, or regulation establishing the *authority having jurisdiction's Code Enforcement Program*; and any other applicable statute, regulation, rule, local law, or ordinance.

[NY] 105.2 Building permits. No person or entity shall commence, perform, or continue any work that must conform with the *Uniform Code* and/or *Energy Code* unless:

1. Such person or entity has applied to the *authority having jurisdiction* for a *building permit*,
2. The *authority having jurisdiction* has issued a *building permit* authorizing such work,
3. Such *building permit* has not been revoked or suspended, and
4. Such *building permit* has not expired.

[NY] 105.2.1 Work exempt from building permit requirement. A *building permit* shall not be required for

INTERNATIONAL CODE COUNCIL®
Copyright © 2019 ICC & NYSDOS. ALL RIGHTS RESERVED. Accessed by Lauren Gualdino (lgualdino@briarcliffmanor.org), (-) Order Number #100880972 on May 08, 2020 07:05 AM (PDT) pursuant to License Agreement with ICC & NYSDOS. No further reproduction, no

100880972

work in any category that is excluded from the *building permit* requirement by the *authority having jurisdiction's Code Enforcement Program*, provided that *Part 1203* allows an *authority having jurisdiction* to exclude such category of work from the *building permit* requirement. Exemptions from *building permit* requirements shall not be deemed to grant authorization for any work to be done in any manner in violation of any provision of the *Uniform Code*, any provision of the *Energy Code*, or any provision of any other applicable law.

[NY] 105.2.2 Applications for building permits. A person or entity applying for a *building permit* shall submit an application to the *authority having jurisdiction.* An application for a *building permit* shall include:

1. *Construction documents* that satisfy the requirements of Section 106.2;
2. Any and all other submittal documents required by Section 106;
3. Any and all other information and documentation that may be required by the stricter of the *authority having jurisdiction's Code Enforcement Program* or a *Part 1203—Compliant Code Enforcement Program*; and
4. Such other information and documentation as the *authority having jurisdiction* may determine to be necessary to allow the *authority having jurisdiction* to determine whether the proposed work conforms with the *Uniform Code*, the *Energy Code*, and other applicable laws.

[NY] 105.2.3 Approval of construction documents. When the *authority having jurisdiction* issues a *building permit*, the *authority having jurisdiction* shall *approve* the *construction documents* in writing. Work shall be installed in accordance with the *approved construction documents* and the terms and conditions, if any, of the *building permit*.

[NY] 105.2.4 Validity of building permit. The issuance or granting of a *building permit* shall not be construed to be a *permit* for, or an approval of, any violation of any provision of the *Uniform Code*, the *Energy Code*, or of any other applicable law. A *building permit* purporting to give authority to violate or cancel any provision of the *Uniform Code*, the *Energy Code*, or any other applicable law shall not be valid. The issuance of a *building permit* based on *construction documents* and other data shall not prevent the *building official* from requiring the correction of errors in the *construction documents* and other data.

[NY] 105.2.5 Suspension or revocation of building permit. The *authority having jurisdiction* is authorized to suspend or revoke a *building permit* wherever the *building permit* is issued in error; or on the basis of incorrect, inaccurate or incomplete information; or in violation of any provision of the *Uniform Code*, the *Energy Code*, or any other applicable law. Any such suspension or revocation shall be in writing, signed by an authorized agent of the *authority having jurisdiction*.

[NY] 105.2.6 Placement of building permit and approved construction documents. The *building permit,* or a copy thereof, and at least one set of *approved construction documents* shall be kept on the site of the work until the completion of the project. The *approved construction documents* shall be open to inspection by any authorized representative of the *authority having jurisdiction.*

[NY] 105.3 Construction inspections. Any person or entity performing work for which a *building permit* has been issued shall keep work accessible and exposed until the work has been inspected and accepted by the *authority having jurisdiction*, or its authorized agent, at each element of the construction process that is applicable to the work and specified in the stricter of the *authority having jurisdiction's Code Enforcement Program* or a *Part 1203—Compliant Code Enforcement Program.*

[NY] 105.3.1 Inspection requests. It shall be the duty of the holder of the *building permit* or their duly authorized agent to notify the *building official* when work is ready for inspection. It shall be the duty of the *building permit* holder to provide access to and means for inspections of such work that are required by this code.

[NY] 105.4 Stop work orders. The *authority having jurisdiction* is authorized to issue a stop work order to halt work that is being performed without a required *building permit*; work that is being performed after a required *building permit* has been revoked or suspended or has expired*;* work that is being conducted in a dangerous or unsafe manner; or work that is contrary to provisions of the *Uniform Code*, the *Energy Code*, the *approved construction documents*, or the terms and conditions (if any) of the *building permit*. No person or entity shall commence, perform or continue any work if the *authority having jurisdiction* has issued a stop work order with respect to such work.

[NY] 105.5 Certificates of occupancy. Where the stricter of the *authority having jurisdiction's Code Enforcement Program* or a *Part 1203—Compliant Code Enforcement Program* requires a *certificate of occupancy* for permission to use or occupy a *building* or *structure*, or any portion thereof, no person or entity shall use or occupy such *building* or *structure*, or such portion thereof, unless:

1. The *authority having jurisdiction* has issued such *certificate of occupancy*,
2. Such *certificate of occupancy* has not been revoked or suspended, and
3. In the case of a temporary *certificate of occupancy*, such temporary *certificate of occupancy* has not expired.

[NY] 105.5.1 Authorized uses and occupancies. Where a *certificate of occupancy* has been issued for a *building* or *structure*, or any portion thereof, no person or entity shall use or occupy such *building* or *structure*, or such portion thereof, for any use or occupancy other than that authorized by such *certificate of occupancy*.

[NY] 105.5.2 Change in use or occupancy. Without regard to whether a *certificate of occupancy* shall have been issued, no person or entity shall convert the use or occupancy of a *building* or *structure*, or any portion thereof, from one use or occupancy to another without first

INTERNATIONAL CODE COUNCIL®
Copyright © 2019 ICC & NYSDOS. ALL RIGHTS RESERVED. Accessed by Lauren Gualdino (lgualdino@briarcliffmanor.org), (-) Order Number #100880972 on May 08, 2020 07:05 AM (PDT) pursuant to License Agreement with ICC & NYSDOS. No further reproduction, no

100880972

obtaining a *building permit* to perform the work, if any, required for such conversion; performing such work, if any; and obtaining a *certificate of occupancy* from the *authority having jurisdiction.*

[NY] 105.6 Operating permits. Where the stricter of the *authority having jurisdiction's Code Enforcement Program* or a *Part 1203—Compliant Code Enforcement Program* requires an *operating permit* to conduct an activity or to use a category of *building*, no person or entity shall conduct such activity or use such category of *building* without obtaining an *operating permit* from the *authority having jurisdiction*. The procedures for applying for, issuing, revoking, and suspending *operating permits* shall be as set forth in the stricter of the *authority having jurisdiction's Code Enforcement Program* or a *Part 1203—Compliant Code Enforcement Program*.

[NY] 105.7 Violations. Any violation of any provision set forth in Sections 105.2 through 105.6 shall be a violation of the *Uniform Code*, and any person or entity violating any such provision shall be subject to the penalties prescribed in Executive Law Section 382(2). In addition, to the extent that any act or omission that violates any provision set forth in Sections 105.2 through 105.6 is also a violation of any other applicable law, any person or entity guilty of such act or omission shall also be subject to the penalties prescribed in or otherwise applicable to a violation of such other applicable law.

[NY] SECTION 106
SUBMITTAL DOCUMENTS

[NY] 106.1 General. Submittal documents consisting of *construction documents*, statements of *special inspections*, geotechnical reports, and other data shall be submitted with each application for a *building permit*.

[NY] 106.2 Construction documents. *Construction documents* shall be in accordance with Sections 106.2.1 through 106.2.9.

[NY] 106.2.1 Information on construction documents. *Construction documents* (1) shall define the scope of the proposed work; (2) shall be of sufficient clarity to indicate the location, nature and extent of the proposed work; (3) shall show in detail that the proposed work will conform to the provisions of the *Uniform Code*, the *Energy Code*, and other applicable codes, laws, ordinances, and regulations; (4) shall include all information required by any provision of this code (including but not limited to the information described in Sections 106.2.2 through 106.2.8), all information required by any other applicable provision of the *Uniform Code*, and all information required by any applicable provision of the *Energy Code*; and (5) shall include any and all additional information and documentation that may be required by the stricter of the *Code Enforcement Program* of the *authority having jurisdiction* or a *Part 1203—Compliant Code Enforcement Program.*

[NY] 106.2.1.1 Manufacturer's installation instructions. Manufacturer's installation instructions, as required by any applicable provision of the *Uniform Code* or by any applicable provision of the *Energy Code*, shall be available on the job site at the time of inspection.

[NY] 106.2.2 Fire protection system shop drawings. Shop drawings for the *fire protection system(s)* shall be submitted to indicate conformance to Chapter 9 of the *Building Code of New York State*, any other applicable provision of the *Uniform Code*, and the *construction documents.* Such shop drawings shall be *approved* prior to the start of system installation. Shop drawings shall contain all information as required by the installation standards referenced in Chapter 9 of the *Building Code of New York State* or in any other applicable provision of the *Uniform Code*.

[NY] 106.2.3 Means of egress. The *construction documents* shall show in sufficient detail the location, construction, size and character of all portions of the *means of egress,* including the path of the *exit discharge* to the *public way,* in compliance with the provisions of the *Uniform Code*. In other than occupancies in Groups R-2, R-3, and I-1, the *construction documents* shall designate the number of occupants to be accommodated on every floor, and in all rooms and spaces.

[NY] 106.2.4 Exterior wall envelope. *Construction documents* for all *buildings* shall describe the *exterior wall envelope* in sufficient detail to determine compliance with the *Uniform Code* and the *Energy Code*. The *construction documents* shall provide details of the *exterior wall envelope* as required, including flashing, intersections with dissimilar materials, corners, end details, control joints, intersections at roof, eaves or parapets, means of drainage, water-resistive membrane and details around openings.

The *construction documents* shall include manufacturer's installation instructions that provide supporting documentation that the proposed penetration and opening details described in the *construction documents* maintain the weather resistance of the *exterior wall envelope*. The supporting documentation shall fully describe the *exterior wall* system that was tested, where applicable, as well as the test procedure used.

[NY]106.2.5 Exterior balconies and elevated walking surfaces. Where balconies or other elevated walking surfaces are exposed to water from direct or blowing rain, snow, or irrigation, and the structural framing is protected by an impervious moisture barrier, the *construction documents* shall include details for all elements of the impervious moisture barrier system. The *construction documents* shall include manufacturer's installation instructions.

[NY] 106.2.6 Site plan. The *construction documents* submitted with the application for a *building permit* shall be accompanied by a site plan showing to scale the size and location of new construction and existing *structures* on the site, distances from *lot lines*, the established street grades and the proposed finished grades and, as applicable, *flood hazard areas*, *floodways*, and *design flood elevations*. The site shall be drawn in accordance with an accurate boundary line survey. In the case of demolition, the site plan shall show construction to be demolished and the location and size of existing structures and construction that are to remain on the site or plot. The *building official* is authorized to waive or modify the requirement for a site plan

INTERNATIONAL CODE COUNCIL®
Copyright © 2019 ICC & NYSDOS. ALL RIGHTS RESERVED. Accessed by Lauren Gualdino (lgualdino@briarcliffmanor.org), (-) Order Number #100880972 on May 08, 2020 07:05 AM (PDT) pursuant to License Agreement with ICC & NYSDOS. No further reproduction, no

100880972

where the application for a *building permit* is for an *alteration* or *repair* or where otherwise warranted.

[NY] 106.2.6.1 Design flood elevations. Where *design flood elevations* are not specified, they shall be established in accordance with Section 1612.3.1 of the *Building Code of New York State.*

[**NY] 106.2.6.2 Flood hazard documentation.** If located in a *flood hazard area*, documentation of the elevation of the lowest floor as required in Section 1612.4 of the *Building Code of New York State* shall be submitted to the *building official* prior to the final inspection.

[NY] 106.2.7 Structural information. The *construction documents* shall provide the information specified in Section 1603 of the *Building Code of New York State*.

[NY] 106.2.8 Relocatable buildings. *Construction documents* for relocatable buildings shall comply with Section 3112 of the *Building Code of New York State*.

[NY] 106.2.9 Design professional. *Construction documents* shall be prepared by a registered *design professional* where required by Article 145 or Article 147 of the New York State Education Law, by the stricter of the *Code Enforcement Program* of the *authority having jurisdiction* or a *Part 1203—Compliant Code Enforcement Program*, or by any other applicable statute, regulation, or local law or ordinance.

[NY] SECTION 107
SERVICE UTILITIES

[NY] 107.1 Connection of service utilities. Connections from a utility, source of energy, fuel or power to any *building* or system that is regulated by the *Uniform Code* shall be made in accordance with the requirements of the *Uniform Code;* the regulations of the public utility providing such utility, source of energy, fuel or power; and the regulations of any governmental unit or agency having jurisdiction over such utility, source of energy, fuel or power.

[NY] 107.1.1 Temporary connection. Where *approved* by the *building official,* temporary connections from a utility, source of energy, fuel or power to a *building* or system may be made. Temporary connections shall be made in accordance with Section 107.1.

[NY] 107.2 Notice of disconnection of service utilities. The *owner* or the *owner's* authorized agent shall notify the *building official* of the disconnection of any utility service to the *building*, *structure*, or system regulated by the *Uniform Code*.

INTERNATIONAL CODE COUNCIL®
Copyright © 2019 ICC & NYSDOS. ALL RIGHTS RESERVED. Accessed by Lauren Gualdino (lgualdino@briarcliffmanor.org), (-) Order Number #100880972 on May 08, 2020 07:05 AM (PDT) pursuant to License Agreement with ICC & NYSDOS. No further reproduction, no

INTERNATIONAL CODE COUNCIL®
Copyright © 2019 ICC & NYSDOS. ALL RIGHTS RESERVED. Accessed by Lauren Gualdino (lgualdino@briarcliffmanor.org), (-) Order Number #100880972 on May 08, 2020 07:05 AM (PDT) pursuant to License Agreement with ICC & NYSDOS. No further reproduction, no

100880972

CHAPTER 2
DEFINITIONS

SECTION 201
GENERAL

201.1 Scope. Unless otherwise expressly stated, the following words and terms shall, for the purposes of this code, have the meanings indicated in this chapter.

201.2 Interchangeability. Words used in the present tense include the future; words in the masculine gender include the feminine and neuter; the singular number includes the plural and the plural, the singular.

201.3 Terms defined in other codes. Where terms are not defined in this code and are defined in the *Building Code of New York State*, *Fire Code of New York State*, *Fuel Gas Code of New York State* or the *Plumbing Code of New York State*, such terms shall have meanings ascribed to them as in those codes.

201.4 Terms not defined. Where terms are not defined through the methods authorized by this section, such terms shall have ordinarily accepted meanings such as the context implies.

SECTION 202
GENERAL DEFINITIONS

ABRASIVE MATERIALS. Moderately abrasive particulate in high concentrations, and highly abrasive particulate in moderate and high concentrations, such as alumina, bauxite, iron silicate, sand and slag.

ABSORPTION SYSTEM. A refrigerating system in which refrigerant is pressurized by pumping a chemical solution of refrigerant in absorbent, and then separated by the addition of heat in a generator, condensed (to reject heat), expanded, evaporated (to provide refrigeration), and reabsorbed in an absorber to repeat the cycle; the system can be single or multiple effect, the latter using multiple stages or internally cascaded use of heat to improve efficiency.

ACCESS (TO). That which enables a device, *appliance* or *equipment* to be reached by ready access or by a means that first requires the removal or movement of a panel or similar obstruction [see also "Ready access (to)"].

AIR. Air supplied to mechanical *equipment* and appliances for *combustion*, ventilation, cooling and similar purposes. Standard air is air at standard temperature and pressure, namely, 70ºF (21ºC) and 29.92 inches of mercury (101.3 kPa).

AIR CONDITIONING. The treatment of air so as to control simultaneously the temperature, humidity, cleanness and distribution of the air to meet the requirements of a conditioned space.

AIR-CONDITIONING SYSTEM. A system that consists of heat exchangers, blowers, filters, supply, exhaust and return ducts, and shall include any apparatus installed in connection therewith.

AIR DISPERSION SYSTEM. Any diffuser system designed to both convey air within a room, space or area and diffuse air into that space while operating under positive pressure. Systems are commonly constructed of, but not limited to, fabric or plastic film.

AIR DISTRIBUTION SYSTEM. Any system of ducts, plenums and air-handling *equipment* that circulates air within a space or spaces and includes systems made up of one or more air-handling units.

AIR, EXHAUST. Air being removed from any space, *appliance* or piece of *equipment* and conveyed directly to the atmosphere by means of openings or ducts.

AIR-HANDLING UNIT. A blower or fan used for the purpose of distributing supply air to a room, space or area.

AIR, MAKEUP. Any combination of outdoor and transfer air intended to replace exhaust air and exfiltration.

AIR, OUTDOOR. Ambient air that enters a building through a ventilation system, through intentional openings for natural ventilation, or by infiltration.

AIR, TRANSFER. Air moved from one indoor space to another.

[A] ALTERATION. A change in a mechanical system that involves an extension, addition or change to the arrangement, type or purpose of the original installation.

APPLIANCE. A device or apparatus that is manufactured and designed to utilize energy and for which this code provides specific requirements.

APPLIANCE, EXISTING. Any *appliance* regulated by this code that was legally installed prior to the effective date of this code, or for which a permit to install has been issued.

APPLIANCE TYPE.

High-heat appliance. Any *appliance* in which the products of *combustion* at the point of entrance to the flue under normal operating conditions have a temperature greater than 2,000ºF (1093ºC).

Low-heat appliance (residential appliance). Any *appliance* in which the products of *combustion* at the point of entrance to the flue under normal operating conditions have a temperature of 1,000ºF (538ºC) or less.

Medium-heat appliance. Any *appliance* in which the products of *combustion* at the point of entrance to the flue under normal operating conditions have a temperature of more than 1,000ºF (538ºC), but not greater than 2,000ºF (1093ºC).

APPLIANCE, VENTED. An *appliance* designed and installed in such a manner that all of the products of *combustion* are conveyed directly from the *appliance* to the outdoor atmosphere through an *approved chimney* or vent system.

[A] APPROVED. Acceptable to the *building official*.

[A] APPROVED AGENCY. An established and recognized agency that is regularly engaged in conducting tests, furnish-

INTERNATIONAL CODE COUNCIL®
Copyright © 2019 ICC & NYSDOS. ALL RIGHTS RESERVED. Accessed by Lauren Gualdino (lgualdino@briarcliffmanor.org), (-) Order Number #100880972 on May 08, 2020 07:05 AM (PDT) pursuant to License Agreement with ICC & NYSDOS. No further reproduction, no

100880972

ing inspection services or furnishing product certification where such agency has been approved by the *building official*.

[NY] AUTHORITY HAVING JURISDICTION. The governmental unit or agency responsible for administration and enforcement of this code.

AUTOMATIC BOILER. Any class of boiler that is equipped with the controls and limit devices specified in Chapter 10.

BATHROOM. A room containing a bathtub, shower, spa or similar bathing fixture.

BOILER. A closed heating *appliance* intended to supply hot water or steam for space heating, processing or power purposes. Low-pressure boilers operate at pressures less than or equal to 15 pounds per square inch (psi) (103 kPa) for steam and 160 psi (1103 kPa) for water. High-pressure boilers operate at pressures exceeding those pressures.

BOILER ROOM. A room primarily utilized for the installation of a boiler.

BRAZED JOINT. A gas-tight joint obtained by the joining of metal parts with metallic mixtures or alloys that melt at a temperature above 1,000ºF (538ºC), but lower than the melting temperature of the parts to be joined.

BRAZING. A metal joining process wherein coalescence is produced by the use of a nonferrous filler metal having a melting point above 1,000ºF (538ºC), but lower than that of the base metal being joined. The filler material is distributed between the closely fitted surfaces of the joint by capillary attraction.

BREATHING ZONE. The region within an occupied space between planes 3 and 72 inches (76 and 1829 mm) above the floor and more than 2 feet (610 mm) from the walls of the space or from fixed air-conditioning *equipment*.

BTU. Abbreviation for British thermal unit, which is the quantity of heat required to raise the temperature of 1 pound (454 g) of water 1ºF (0.56ºC) (1 Btu = 1055 J).

[A] BUILDING. Any structure utilized or intended for supporting or sheltering any *occupancy*.

[NY] BUILDING CODE OF NEW YORK STATE. The 2020 edition of the publication entitled "Building Code of New York State," published by the International Code Council, Inc. (publication date November 2019).

[NY] BUILDING OFFICIAL. The officer or other designated authority charged with the administration and enforcement of this code, or a duly authorized representative.

[BF] CEILING RADIATION DAMPER. A *listed* device installed in a ceiling membrane of a fire-resistance-rated floor/ceiling or roof/ceiling assembly to limit automatically the radiative heat transfer through an air inlet/outlet opening.

CHIMNEY. A primarily vertical structure containing one or more flues, for the purpose of carrying gaseous products of *combustion* and air from a fuel-burning *appliance* to the outdoor atmosphere.

Factory-built chimney. A *listed* and *labeled chimney* composed of factory-made components, assembled in the field in accordance with manufacturer's instructions and the conditions of the listing.

Masonry chimney. A field-constructed *chimney* composed of solid masonry units, bricks, stones or concrete.

Metal chimney. A field-constructed *chimney* of metal.

CHIMNEY CONNECTOR. A pipe that connects a fuel-burning *appliance* to a *chimney*.

CLEARANCE. The minimum distance through air measured between the heat-producing surface of the mechanical *appliance*, device or *equipment* and the surface of the combustible material or assembly.

CLOSED COMBUSTION SOLID-FUEL-BURNING APPLIANCE. A heat-producing *appliance* that employs a *combustion* chamber that does not have openings other than the flue collar, fuel charging door and adjustable openings provided to control the amount of *combustion air* that enters the *combustion* chamber.

CLOTHES DRYER. An *appliance* used to dry wet laundry by means of heat.

[A] CODE. These regulations, subsequent amendments thereto, or any emergency rule or regulation that the administrative authority having jurisdiction has lawfully adopted.

[NY] CODE ENFORCEMENT PROGRAM. The program under which an *authority having jurisdiction* administers and enforces this code, as such program is currently in effect and as such program may hereafter be amended from time to time.

[BF] COMBINATION FIRE/SMOKE DAMPER. A *listed* device installed in ducts and air transfer openings designed to close automatically upon the detection of heat and resist the passage of flame and smoke. The device is installed to operate automatically, be controlled by a smoke detection system, and where required, is capable of being positioned from a fire command center.

COMBUSTIBLE ASSEMBLY. Wall, floor, ceiling or other assembly constructed of one or more component materials that are not defined as noncombustible.

[F] COMBUSTIBLE LIQUID. A liquid having a closed cup flash point at or above 100ºF (38ºC). Combustible liquids shall be subdivided as follows:

Class II. Liquids having a closed cup flash point at or above 100ºF (38ºC) and below 140ºF (60ºC).

Class IIIA. Liquids having a closed cup flash point at or above 140ºF (60ºC) and below 200ºF (93ºC).

Class IIIB. Liquids having a closed cup flash point at or above 200ºF (93ºC).

The category of combustible liquids does not include compressed gases or cryogenic fluids.

COMBUSTIBLE MATERIAL. Any material not defined as noncombustible.

COMBUSTION. In the context of this code, refers to the rapid oxidation of fuel accompanied by the production of heat or heat and light.

INTERNATIONAL CODE COUNCIL®
Copyright © 2019 ICC & NYSDOS. ALL RIGHTS RESERVED. Accessed by Lauren Gualdino (lgualdino@briarcliffmanor.org), (-) Order Number #100880972 on May 08, 2020 07:05 AM (PDT) pursuant to License Agreement with ICC & NYSDOS. No further reproduction, no

100880972

COMBUSTION AIR. Air necessary for complete *combustion* of a fuel, including *theoretical air* and excess air.

COMBUSTION CHAMBER. The portion of an *appliance* within which *combustion* occurs.

COMBUSTION PRODUCTS. Constituents resulting from the *combustion* of a fuel with the oxygen of the air, including the inert gases, but excluding excess air.

COMMERCIAL COOKING APPLIANCES. Appliances used in a commercial food service establishment for heating or cooking food. For the purpose of this definition, a commercial food service establishment is where food is prepared for sale or is prepared on a scale that is by volume and frequency not representative of domestic household cooking.

COMMERCIAL COOKING RECIRCULATING SYSTEM. Self-contained system consisting of the exhaust hood, the cooking *equipment*, the filters and the fire suppression system. The system is designed to capture cooking vapors and residues generated from commercial cooking *equipment*. The system removes contaminants from the *exhaust air* and recirculates the air to the space from which it was withdrawn.

COMMERCIAL KITCHEN HOODS.

Backshelf hood. A backshelf hood is also referred to as a low-proximity hood, or as a sidewall hood where wall mounted. Its front lower lip is low over the *appliance*(s) and is "set back" from the front of the appliance(s). It is always closed to the rear of the appliances by a panel where free-standing, or by a panel or wall where wall mounted, and its height above the cooking surface varies. (This style of hood can be constructed with partial end panels to increase its effectiveness in capturing the effluent generated by the cooking operation).

Double island canopy hood. A double island canopy hood is placed over back-to-back appliances or *appliance* lines. It is open on all sides and overhangs both fronts and the sides of the *appliance*(s). It could have a wall panel between the backs of the appliances. (The fact that *exhaust air* is drawn from both sides of the double canopy to meet in the center causes each side of this hood to emulate a wall canopy hood, and thus it functions much the same with or without an actual wall panel between the backs of the appliances).

Eyebrow hood. An eyebrow hood is mounted directly to the face of an *appliance*, such as an oven and dishwasher, above the opening(s) or door(s) from which effluent is emitted, extending past the sides and overhanging the front of the opening to capture the effluent.

Pass-over hood. A pass-over hood is a free-standing form of a backshelf hood constructed low enough to pass food over the top.

Single island canopy hood. A single island canopy hood is placed over a single *appliance* or *appliance* line. It is open on all sides and overhangs the front, rear and sides of the *appliance*(s). A single island canopy is more susceptible to cross drafts and requires a greater *exhaust air* flow than an equivalent sized wall-mounted canopy to capture and contain effluent generated by the cooking operation(s).

Wall canopy hood. A wall canopy exhaust hood is mounted against a wall above a single *appliance* or line of *appliance*(s), or it could be free-standing with a back panel from the rear of the appliances to the hood. It overhangs the front and sides of the *appliance*(s) on all open sides.

The wall acts as a back panel, forcing the *makeup air* to be drawn across the front of the cooking *equipment*, thus increasing the effectiveness of the hood to capture and contain effluent generated by the cooking operation(s).

COMPENSATING HOODS. *Compensating hoods* are those having integral (built-in) *makeup air* supply. The *makeup air* supply for such hoods is generally supplied from: short-circuit flow from inside the hood, air curtain flow from the bottom of the front face, and front face discharge from the outside front wall of the hood. The compensating makeup airflow can also be supplied from the rear or side of the hood, or the rear, front or sides of the cooking *equipment*. The makeup airflow can be one or a combination of methods.

COMPRESSOR. A specific machine, with or without accessories, for compressing a gas.

COMPRESSOR, POSITIVE DISPLACEMENT. A compressor in which increase in pressure is attained by changing the internal volume of the compression chamber.

COMPRESSOR UNIT. A compressor with its prime mover and accessories.

CONCEALED LOCATION. A location that cannot be accessed without damaging permanent parts of the building structure or finish surface. Spaces above, below or behind readily removable panels or doors shall not be considered as concealed.

CONDENSATE. The liquid that condenses from a gas (including flue gas) caused by a reduction in temperature.

CONDENSER. A heat exchanger designed to liquefy refrigerant vapor by removal of heat.

CONDENSING UNIT. A specific refrigerating machine combination for a given refrigerant, consisting of one or more power-driven compressors, condensers and, where required, liquid receivers, and the regularly furnished accessories.

CONDITIONED SPACE. An area, room or space that is enclosed within the building thermal envelope and that is directly heated or cooled or that is indirectly heated or cooled. Spaces are indirectly heated or cooled where they communicate through openings with conditioned spaces, where they are separated from conditioned spaces by uninsulated walls, floors or ceilings, or where they contain uninsulated ducts, piping or other sources of heating or cooling.

[A] CONSTRUCTION DOCUMENTS. The written, graphic and pictorial documents prepared or assembled for describing the design, location and physical characteristics of the elements of the project necessary for obtaining a building permit. The construction drawings shall be drawn to an appropriate scale.

CONTROL. A manual or automatic device designed to regulate the gas, air, water or electrical supply to, or operation of, a mechanical system.

INTERNATIONAL CODE COUNCIL®
Copyright © 2019 ICC & NYSDOS. ALL RIGHTS RESERVED. Accessed by Lauren Gualdino (lgualdino@briarcliffmanor.org), (-) Order Number #100880972 on May 08, 2020 07:05 AM (PDT) pursuant to License Agreement with ICC & NYSDOS. No further reproduction, no

100880972

CONVERSION BURNER. A burner designed to supply gaseous fuel to an *appliance* originally designed to utilize another fuel.

COOKING APPLIANCE. See "*Commercial cooking appliances*."

DAMPER. A manually or automatically controlled device to regulate draft or the rate of flow of air or *combustion* gases.

Volume damper. A device that, where installed, will restrict, retard or direct the flow of air in a duct, or the products of *combustion* in a heat-producing *appliance*, its vent connector, vent or *chimney* therefrom.

[BS] DESIGN FLOOD ELEVATION. The elevation of the "design flood," including wave height, relative to the datum specified on the community's legally designated flood hazard area map. In areas designated as Zone AO, the *design flood elevation* shall be the elevation of the highest existing grade of the building's perimeter plus the depth number, in feet, specified on the flood hazard map. In areas designated as Zone AO where a depth number is not specified on the map, the depth number shall be taken as being equal to 2 feet (610 mm).

DESIGN WORKING PRESSURE. The maximum allowable working pressure for which a specific part of a system is designed.

DIRECT REFRIGERATION SYSTEM. A system in which the evaporator or condenser of the refrigerating system is in direct contact with the air or other substances to be cooled or heated.

DIRECT SOLAR SYSTEM. A solar thermal system in which the gas or liquid in the solar collector loop is not separated from the load.

[FG] DIRECT-VENT APPLIANCES. Appliances that are constructed and installed so that all air for *combustion* is derived from the outdoor atmosphere and all flue gases are discharged to the outdoor atmosphere.

DISCRETE PRODUCT. Products that are noncontinuous, individual, distinct pieces such as, but not limited to, electrical, plumbing and mechanical products and duct straps, duct fittings, duct registers and pipe hangers.

DRAFT. The pressure difference existing between the *appliance* or any component part and the atmosphere, that causes a continuous flow of air and products of *combustion* through the gas passages of the *appliance* to the atmosphere.

Induced draft. The pressure difference created by the action of a fan, blower or ejector, that is located between the *appliance* and the *chimney* or vent termination.

Natural draft. The pressure difference created by a vent or *chimney* because of its height, and the temperature difference between the flue gases and the atmosphere.

DRAIN-BACK SYSTEM. A solar thermal system in which the fluid in the solar collector loop is gravity drained from the collector into a holding tank under prescribed circumstances.

DRIP. The container placed at a low point in a system of piping to collect condensate and from which the condensate is removable.

DRY CLEANING SYSTEMS. Dry cleaning plants or systems are classified as follows:

Type I. Those systems using Class I flammable liquid solvents having a flash point below 100ºF (38ºC).

Type II. Those systems using Class II combustible liquid solvents having a flash point at or above 100ºF (38ºC) and below 140ºF (60ºC).

Type III. Those systems using Class III combustible liquid solvents having a flash point at or above 140ºF (60ºC).

Types IV and V. Those systems using Class IV nonflammable liquid solvents.

DUCT. A tube or conduit utilized for conveying air. The air passages of self-contained systems are not to be construed as air ducts.

DUCT FURNACE. A warm-air furnace normally installed in an air distribution duct to supply warm air for heating. This definition shall apply only to a warm-air heating *appliance* that, for air circulation, depends on a blower not furnished as part of the furnace.

DUCT SYSTEM. A continuous passageway for the transmission of air that, in addition to ducts, includes duct fittings, dampers, plenums, fans and accessory air-handling *equipment* and appliances.

DUCTLESS MINI-SPLIT SYSTEM. A heating and cooling system that is comprised of one or multiple indoor evaporator/air-handling units and an outdoor condensing unit that is connected by refrigerant piping and electrical wiring. A ductless mini-split system is capable of cooling or heating one or more rooms without the use of a traditional ductwork system.

[BG] DWELLING. A building or portion thereof that contains not more than two *dwelling* units.

[A] DWELLING UNIT. A single unit providing complete, independent living facilities for one or more persons, including permanent provisions for living, sleeping, eating, cooking and sanitation.

ELECTRIC HEATING APPLIANCE. An *appliance* that produces heat energy to create a warm environment by the application of electric power to resistance elements, refrigerant compressors or dissimilar material junctions.

[NY] ENERGY CODE. The New York State Energy Conservation Construction Code, adopted pursuant to Article 11 of the New York State Energy Law.

ENERGY RECOVERY VENTILATION SYSTEM. Systems that employ air-to-air heat exchangers to recover energy from or reject energy to *exhaust air* for the purpose of preheating, precooling, humidifying or dehumidifying outdoor *ventilation air* prior to supplying such air to a space, either directly or as part of an HVAC system.

ENVIRONMENTAL AIR. Air that is conveyed to or from occupied areas through ducts that are not part of the heating or air-conditioning system, such as ventilation for human usage, domestic kitchen range exhaust, bathroom exhaust, domestic clothes dryer exhaust and parking garage exhaust.

EQUIPMENT. Piping, ducts, vents, control devices and other components of systems other than appliances that are permanently installed and integrated to provide control of environmental conditions for buildings. This definition shall also include other systems specifically regulated in this code.

INTERNATIONAL CODE COUNCIL®
Copyright © 2019 ICC & NYSDOS. ALL RIGHTS RESERVED. Accessed by Lauren Gualdino (lgualdino@briarcliffmanor.org), (-) Order Number #100880972 on May 08, 2020 07:05 AM (PDT) pursuant to License Agreement with ICC & NYSDOS. No further reproduction, no

100880972

EQUIPMENT, EXISTING. Any *equipment* regulated by this code which was legally installed prior to the effective date of this code, or for which a permit to install has been issued.

EVAPORATIVE COOLER. A device used for reducing the sensible heat of air for cooling by the process of evaporation of water into an airstream.

EVAPORATIVE COOLING SYSTEM. The *equipment* and appliances intended or installed for the purpose of environmental cooling by an evaporative cooler from which the conditioned air is distributed through ducts or plenums to the conditioned area.

EVAPORATOR. That part of the system in which liquid refrigerant is vaporized to produce refrigeration.

EXCESS AIR. The amount of air provided in addition to *theoretical air* to achieve complete *combustion* of a fuel, thereby preventing the formation of dangerous products of *combustion*.

EXFILTRATION. Uncontrolled outward air leakage from conditioned spaces through unintentional openings in ceilings, floors and walls to unconditioned spaces or the outdoors caused by pressure differences across these openings resulting from wind, the stack effect created by temperature differences between indoors and outdoors, and imbalances between supply and exhaust airflow rates.

EXHAUST SYSTEM. An assembly of connected ducts, plenums, fittings, registers, grilles and hoods through which air is conducted from the space or spaces and exhausted to the outdoor atmosphere.

[NY] EXISTING BUILDING CODE OF NEW YORK STATE. The 2020 edition of the publication entitled "Existing Building Code of New York State," published by the International Code Council, Inc. (publication date November 2019).

EXTRA-HEAVY-DUTY COOKING APPLIANCE. Extra-heavy-duty cooking appliances are those utilizing open flame combustion of solid fuel at any time.

[NY] FIRE CODE OF NEW YORK STATE. The 2020 edition of the publication entitled "Fire Code of New York State," published by the International Code Council, Inc. (publication date November 2019).

[BF] FIRE DAMPER. A *listed* device installed in ducts and air transfer openings designed to close automatically upon detection of heat and to restrict the passage of flame. Fire dampers are classified for use in either static systems that will automatically shut down in the event of a fire, or in dynamic systems that continue to operate during a fire. A dynamic fire damper is tested and rated for closure under elevated temperature airflow.

FIREPLACE. An assembly consisting of a hearth and fire chamber of noncombustible material and provided with a *chimney*, for use with solid fuels.

Factory-built fireplace. A *listed* and *labeled* fireplace and *chimney* system composed of factory-made components, and assembled in the field in accordance with manufacturer's instructions and the conditions of the listing.

Masonry fireplace. A field-constructed fireplace composed of solid masonry units, bricks, stones or concrete.

FIREPLACE STOVE. A free-standing chimney-connected solid-fuel-burning heater, designed to be operated with the fire chamber doors in either the open or closed position.

[FG] FLAME SAFEGUARD. A device that will automatically shut off the fuel supply to a main burner or group of burners when the means of ignition of such burners becomes inoperative, and when flame failure occurs on the burner or group of burners.

[BF] FLAME SPREAD INDEX. The numerical value assigned to a material tested in accordance with ASTM E84 or UL 723.

FLAMMABILITY CLASSIFICATION. Refrigerants shall be assigned to one of the three classes—1, 2 or 3—in accordance with ASHRAE 34. For Classes 2 and 3, the heat of *combustion* shall be calculated assuming that *combustion* products are in the gas phase and in their most stable state.

Class 1. Refrigerants that do not show flame propagation when tested in air at 14.7 psia (101 kPa) and 140ºF (60ºC).

Class 2. Refrigerants having a lower flammability limit (LFL) of more than 0.00625 pound per cubic foot (0.10 kg/m^3) at 140ºF (60ºC) and 14.7 psia (101 kPa) and a heat of combustion of less than 8169 Btu/lb (19 000 kJ/kg).

Class 3. Refrigerants that are highly flammable, having a LFL of less than or equal to 0.00625 pound per cubic foot (0.10 kg/m^3) at140ºF (60ºC) and 14.7 psia (101 kPa) or a heat of combustion greater than or equal to 8169 Btu/lb (19 000 kJ/kg).

[F] FLAMMABLE LIQUIDS. Any liquid that has a flash point below 100ºF (38ºC), and has a vapor pressure not exceeding 40 psia (276 kPa) at 100ºF (38ºC). Flammable liquids shall be known as Class I liquids and shall be divided into the following classifications:

Class IA. Liquids having a flash point below 73ºF (23ºC) and a boiling point below 100ºF (38ºC).

Class IB. Liquids having a flash point below 73ºF (23ºC) and a boiling point at or above 100ºF (38ºC).

Class IC. Liquids having a flash point at or above 73ºF (23ºC) and below 100ºF (38ºC).

[F] FLAMMABLE VAPOR OR FUMES. Mixtures of gases in air at concentrations equal to or greater than the LFL and less than or equal to the upper flammability limit (UFL).

[F] FLASH POINT. The minimum temperature corrected to a pressure of 14.7 psia (101 kPa) at which the application of a test flame causes the vapors of a portion of the sample to ignite under the conditions specified by the test procedures and apparatus. The flash point of a liquid shall be determined in accordance with ASTM D56, ASTM D93 or ASTM D3278.

FLEXIBLE AIR CONNECTOR. A conduit for transferring air between an air duct or plenum and an air terminal unit or between an air duct or plenum and an air inlet or air outlet. Such conduit is limited in its use, length and location.

FLOOR AREA, NET. The actual occupied area, not including unoccupied accessory areas or thicknesses of walls.

INTERNATIONAL CODE COUNCIL®
Copyright © 2019 ICC & NYSDOS. ALL RIGHTS RESERVED. Accessed by Lauren Gualdino (lgualdino@briarcliffmanor.org), (-) Order Number #100880972 on May 08, 2020 07:05 AM (PDT) pursuant to License Agreement with ICC & NYSDOS. No further reproduction, no

100880972

[FG] FLOOR FURNACE. A completely self-contained furnace suspended from the floor of the space being heated, taking air for *combustion* from outside such space and with means for observing flames and lighting the *appliance* from such space.

FLUE. A passageway within a *chimney* or vent through which gaseous *combustion* products pass.

FLUE CONNECTION (BREECHING). A passage for conducting the products of *combustion* from a fuel-fired *appliance* to the vent or *chimney* (see also "*Chimney* connector" and "Vent connector").

[FG] FLUE GASES. Products of *combustion* and excess air.

FLUE LINER (LINING). A system or material used to form the inside surface of a flue in a *chimney* or vent, for the purpose of protecting the surrounding structure from the effects of *combustion* products and conveying *combustion* products without leakage to the atmosphere.

FOOD-GRADE FLUID. Potable water or a fluid containing additives listed in accordance with the Code of Federal Regulations, Title 21, Food and Drugs, Chapter 1, Food and Drug Administration, Parts 174-186.

[FG] FUEL GAS. A natural gas, manufactured gas, liquefied petroleum gas or a mixture of these.

[NY] FUEL GAS CODE OF NEW YORK STATE. The 2020 edition of the publication entitled "Fuel Gas Code of New York State," published by the International Code Council, Inc. (publication date November 2019).

FUEL OIL. Kerosene or any hydrocarbon oil having a flash point not less than 100ºF (38ºC).

FUEL-OIL PIPING SYSTEM. A closed piping system that connects a combustible liquid from a source of supply to a fuel-oil-burning *appliance*.

FURNACE. A completely self-contained heating unit that is designed to supply heated air to spaces remote from or adjacent to the *appliance* location.

FURNACE ROOM. A room primarily utilized for the installation of fuel-burning, space-heating and water-heating appliances other than boilers (see also "Boiler room").

FUSIBLE PLUG. A device arranged to relieve pressure by operation of a fusible member at a predetermined temperature.

GROUND SOURCE HEAT PUMP LOOP SYSTEM. Piping buried in horizontal or vertical excavations or placed in a body of water for the purpose of transporting heat transfer liquid to and from a heat pump. Included in this definition are closed loop systems in which the liquid is recirculated and open loop systems in which the liquid is drawn from a well or other source.

HAZARDOUS LOCATION. Any location considered to be a fire hazard for flammable vapors, dust, combustible fibers or other highly combustible substances. The location is not necessarily categorized in the *Building Code of New York* as a high-hazard use group classification.

HEAT EXCHANGER. A device that transfers heat from one medium to another.

HEAT PUMP. A refrigeration system that extracts heat from one substance and transfers it to another portion of the same substance or to a second substance at a higher temperature for a beneficial purpose.

HEAT TRANSFER LIQUID. The operating or thermal storage liquid in a mechanical system, including water or other liquid base, and additives at the concentration present under operating conditions used to move heat from one location to another. Refrigerants are not included as heat transfer liquids.

HEAVY-DUTY COOKING APPLIANCE. Heavy-duty cooking *appliances* include electric under-fired broilers, electric chain (conveyor) broilers, gas under-fired broilers, gas chain (conveyor) broilers, gas open-burner ranges (with or without oven), electric and gas wok ranges, smokers, smoker ovens, and electric and gas over-fired (upright) broilers and salamanders.

HIGH-PROBABILITY SYSTEMS. A refrigeration system in which the basic design or the location of components is such that a leakage of refrigerant from a failed connection, seal or component will enter an *occupancy* classified area, other than the *machinery room*.

HIGH-SIDE PRESSURE. The parts of a refrigerating system subject to condenser pressure.

HIGH-VOLUME, LARGE-DIAMETER FAN. A low-speed ceiling fan that circulates large volumes of air and that is greater than 7 feet (2134 mm) in diameter.

HOOD. An air intake device used to capture by entrapment, impingement, adhesion or similar means, grease, moisture, heat and similar contaminants before they enter a duct system.

Type I. A kitchen hood for collecting and removing grease vapors and smoke. Such hoods are equipped with a fire suppression system.

Type II. A general kitchen hood for collecting and removing steam, vapor, heat, odors and products of *combustion*.

[FG] HYDROGEN GENERATING APPLIANCE. A self-contained package or factory-matched packages of integrated systems for generating gaseous hydrogen. Hydrogen generating appliances utilize electrolysis, reformation, chemical, or other processes to generate hydrogen.

IGNITION SOURCE. A flame, spark or hot surface capable of igniting flammable vapors or fumes. Such sources include *appliance* burners, burner ignitors and electrical switching devices.

[F] IMMEDIATELY DANGEROUS TO LIFE OR HEALTH (IDLH). The concentration of airborne contaminants that poses a threat of death, immediate or delayed permanent adverse health effects, or effects that could prevent escape from such an environment. This contaminant concentration level is established by the National Institute of Occupational Safety and Health (NIOSH) based on both toxicity and flammability. It is generally expressed in parts per million by volume (ppm v/v) or milligrams per cubic meter (mg/m^3).

INDIRECT REFRIGERATION SYSTEM. A system in which a secondary coolant cooled or heated by the refrigerat-

INTERNATIONAL CODE COUNCIL®
Copyright © 2019 ICC & NYSDOS. ALL RIGHTS RESERVED. Accessed by Lauren Gualdino (lgualdino@briarcliffmanor.org), (-) Order Number #100880972 on May 08, 2020 07:05 AM (PDT) pursuant to License Agreement with ICC & NYSDOS. No further reproduction, no

100880972

ing system is circulated to the air or other substance to be cooled or heated. Indirect systems are distinguished by the following methods of application:

Closed system. A system in which a secondary fluid is either cooled or heated by the refrigerating system and then circulated within a closed circuit in indirect contact with the air or other substance to be cooled or heated.

Double-indirect open-spray system. A system in which the secondary substance for an indirect open-spray system is heated or cooled by an intermediate coolant circulated from a second enclosure.

Open-spray system. A system in which a secondary coolant is cooled or heated by the refrigerating system and then circulated in direct contact with the air or other substance to be cooled or heated.

Vented closed system. A system in which a secondary coolant is cooled or heated by the refrigerating system and then passed through a closed circuit in the air or other substance to be cooled or heated, except that the evaporator or condenser is placed in an open or appropriately vented tank.

INDIRECT SOLAR SYSTEM. A solar thermal system in which the gas or liquid in the solar collector loop circulates between the solar collector and a heat exchanger and such gas or liquid is not drained from the system or supplied to the load during normal operation.

INFILTRATION. Uncontrolled inward air leakage to conditioned spaces through unintentional openings in ceilings, floors and walls from unconditioned spaces or the outdoors caused by pressure differences across these openings resulting from wind, the stack effect created by temperature differences between indoors and outdoors, and imbalances between supply and exhaust airflow rates.

INTERLOCK. A device actuated by another device with which it is directly associated, to govern succeeding operations of the same or allied devices. A circuit in which a given action cannot occur until after one or more other actions have taken place.

JOINT, FLANGED. A joint made by bolting together a pair of flanged ends.

JOINT, FLARED. A metal-to-metal compression joint in which a conical spread is made on the end of a tube that is compressed by a flare nut against a mating flare.

JOINT, PLASTIC ADHESIVE. A joint made in thermoset plastic piping by the use of an adhesive substance that forms a continuous bond between the mating surfaces without dissolving either one of them.

JOINT, PLASTIC HEAT FUSION. A joint made in thermoplastic piping by heating the parts sufficiently to permit fusion of the materials when the parts are pressed together.

JOINT, PLASTIC SOLVENT CEMENT. A joint made in thermoplastic piping by the use of a solvent or solvent cement that forms a continuous bond between the mating surfaces.

JOINT, SOLDERED. A gas-tight joint obtained by the joining of metal parts with metallic mixtures of alloys that melt at temperatures between 400ºF (204ºC) and 1,000ºF (538ºC).

JOINT, WELDED. A gas-tight joint obtained by the joining of metal parts in molten state.

[A] LABELED. *Equipment*, materials or products to which have been affixed a label, seal, symbol or other identifying mark of a nationally recognized testing laboratory, approved agency or other organization concerned with product evaluation that maintains periodic inspection of the production of the labeled items and whose labeling indicates either that the *equipment*, material or product meets identified standards or has been tested and found suitable for a specified purpose.

LIGHT-DUTY COOKING APPLIANCE. Light-duty cooking *appliances* include gas and electric ovens (including standard, bake, roasting, revolving, retherm, convection, combination convection/steamer, countertop conveyorized baking/finishing, deck and pastry), electric and gas steam-jacketed kettles, electric and gas pasta cookers, electric and gas compartment steamers (both pressure and atmospheric) and electric and gas cheesemelters.

[FG] LIMIT CONTROL. A device responsive to changes in pressure, temperature or level for turning on, shutting off or throttling the gas supply to an *appliance*.

LIMITED CHARGE SYSTEM. A system in which, with the compressor idle, the design pressure will not be exceeded when the refrigerant charge has completely evaporated.

[A] LISTED. *Equipment,* materials, products or services included in a list published by an organization acceptable to the *building official* and concerned with evaluation of products or services that maintains periodic inspection of production of *listed equipment* or materials or periodic evaluation of services and whose listing states either that the *equipment*, material, product or service meets identified standards or has been tested and found suitable for a specified purpose.

LIVING SPACE. Space within a *dwelling unit* utilized for living, sleeping, eating, cooking, bathing, washing and sanitation purposes.

LOWER EXPLOSIVE LIMIT (LEL). See "LFL."

LOWER FLAMMABLE LIMIT (REFRIGERANT) (LFL). The minimum concentration of refrigerant that is capable of propagating a flame through a homogeneous mixture of refrigerant and air.

[F] LOWER FLAMMABLE LIMIT (LFL). The minimum concentration of vapor in air at which propagation of flame will occur in the presence of an ignition source. The LFL is sometimes referred to as LEL or lower explosive limit.

LOW-PRESSURE HOT-WATER-HEATING BOILER. A boiler furnishing hot water at pressures not exceeding 160 psi (1103 kPa) and at temperatures not exceeding 250ºF (121ºC).

LOW-PRESSURE STEAM-HEATING BOILER. A boiler furnishing steam at pressures not exceeding 15 psi (103 kPa).

LOW-PROBABILITY PUMP. A pump that is designed to prevent atmospheric release of the pumped fluid by one of the

INTERNATIONAL CODE COUNCIL®
Copyright © 2019 ICC & NYSDOS. ALL RIGHTS RESERVED. Accessed by Lauren Gualdino (lgualdino@briarcliffmanor.org), (-) Order Number #100880972 on May 08, 2020 07:05 AM (PDT) pursuant to License Agreement with ICC & NYSDOS. No further reproduction, no

100880972

following methods: 1. The pump is permanently sealed; 2. The pump incorporates a static seal; 3. The pump incorporates not less than two sequential dynamic shaft seals to isolate the pumped fluid from atmosphere at shaft penetrations and automatically shuts down upon failure of any seal.

LOW-PROBABILITY SYSTEMS. A refrigeration system in which the basic design or the location of components is such that a leakage of refrigerant from a failed connection, seal or component will not enter an occupancy-classified area, other than the *machinery room.*

LOW-SIDE PRESSURE. The parts of a refrigerating system subject to evaporator pressure.

MACHINERY ROOM. An enclosed space that is required by Chapter 11 to contain refrigeration equipment and to comply with Sections 1105 and 1106.

MECHANICAL DRAFT SYSTEM. A venting system designed to remove flue or vent gases by mechanical means, that consists of an induced-draft portion under nonpositive static pressure or a forced-draft portion under positive static pressure.

Forced-draft venting system. A portion of a venting system using a fan or other mechanical means to cause the removal of flue or vent gases under positive static pressure.

Induced-draft venting system. A portion of a venting system using a fan or other mechanical means to cause the removal of flue or vent gases under nonpositive static vent pressure.

Power venting system. A portion of a venting system using a fan or other mechanical means to cause the removal of flue or vent gases under positive static vent pressure.

MECHANICAL EQUIPMENT/APPLIANCE ROOM. A room or space in which nonfuel-fired mechanical *equipment* and *appliances* are located.

MECHANICAL EXHAUST SYSTEM. A system for removing air from a room or space by mechanical means.

MECHANICAL JOINT.

1. A connection between pipes, fittings, or pipes and fittings that is not welded, brazed, caulked, soldered, solvent cemented or heat fused.
2. A general form of gas or liquid-tight connections obtained by the joining of parts through a positive holding mechanical construction such as, but not limited to, flanged, screwed, clamped or flared connections.

MECHANICAL SYSTEM. A system specifically addressed and regulated in this code and composed of components, devices, *appliances* and *equipment*.

MEDIUM-DUTY COOKING APPLIANCE. Medium-duty cooking *appliances* include electric discrete element ranges (with or without oven), electric and gas hot-top ranges, electric and gas griddles, electric and gas double-sided griddles, electric and gas fryers (including open deep fat fryers, donut fryers, kettle fryers and pressure fryers), electric and gas conveyor pizza ovens, electric and gas tilting skillets (braising pans) and electric and gas rotisseries.

MODULAR BOILER. A steam or hot-water-heating assembly consisting of a group of individual boilers called modules intended to be installed as a unit without intervening stop valves. Modules are under one jacket or are individually jacketed. The individual modules shall be limited to a maximum input rating of 400,000 Btu/h (117 228 W) gas, 3 gallons per hour (gph) (11.4 L/h) oil, or 115 kW (electric).

NATURAL DRAFT SYSTEM. A venting system designed to remove flue or vent gases under nonpositive static vent pressure entirely by natural draft.

NATURAL VENTILATION. The movement of air into and out of a space through intentionally provided openings, such as windows and doors, or through nonpowered ventilators.

NET OCCUPIABLE FLOOR AREA. The floor area of an *occupiable space* defined by the inside surfaces of its walls but excluding shafts, column enclosures and other permanently enclosed, inaccessible and unoccupiable areas. Obstructions in the space such as furnishings, display or storage racks and other obstructions, whether temporary or permanent, shall not be deducted from the space area.

NO-FLOW CONDITION (SOLAR). A condition where thermal energy is not transferred from a solar thermal collector by means of flow of a heat transfer fluid.

NONFOOD-GRADE FLUID. Any fluid that is not designated as a food-grade fluid.

NONABRASIVE/ABRASIVE MATERIALS. Nonabrasive particulate in high concentrations, moderately abrasive particulate in low and moderate concentrations, and highly abrasive particulate in low concentrations, such as alfalfa, asphalt, plaster, gypsum and salt.

NONCOMBUSTIBLE MATERIALS. Materials that, when tested in accordance with ASTM E136, have not fewer than three of four specimens tested meeting all of the following criteria:

1. The recorded temperature of the surface and interior thermocouples shall not at any time during the test rise more than 54ºF (30ºC) above the furnace temperature at the beginning of the test.
2. There shall not be flaming from the specimen after the first 30 seconds.
3. If the weight loss of the specimen during testing exceeds 50 percent, the recorded temperature of the surface and interior thermocouples shall not at any time during the test rise above the furnace air temperature at the beginning of the test, and there shall not be flaming of the specimen.

[A] OCCUPANCY. The purpose for which a building, or portion thereof, is utilized or occupied.

OCCUPATIONAL EXPOSURE LIMIT (OEL). The time-weighted average (TWA) concentration for a normal 8-hour workday and a 40-hour workweek to which nearly all workers can be repeatedly exposed without adverse effect, based on the OSHA PEL, ACGIH TLV-TWA, TERA OARS WEEL, or consistent value.

OCCUPIABLE SPACE. An enclosed space intended for human activities, excluding those spaces intended primarily for other purposes, such as storage rooms and *equipment*

INTERNATIONAL CODE COUNCIL®
Copyright © 2019 ICC & NYSDOS. ALL RIGHTS RESERVED. Accessed by Lauren Gualdino (lgualdino@briarcliffmanor.org), (-) Order Number #100880972 on May 08, 2020 07:05 AM (PDT) pursuant to License Agreement with ICC & NYSDOS. No further reproduction, no

100880972

rooms, that are only intended to be occupied occasionally and for short periods of time.

OFFSET (VENT). A combination of *approved* bends that make two changes in direction bringing one section of the vent out of line but into a line parallel with the other section.

OUTDOOR AIR. Air taken from the outdoors, and therefore not previously circulated through the system.

OUTDOOR OPENING. A door, window, louver or skylight openable to the outdoor atmosphere.

OUTLET. A threaded connection or bolted flange in a piping system to which a gas-burning *appliance* is attached.

PANEL HEATING. A method of radiant space heating in which heat is supplied by large heated areas of room surfaces. The heating element usually consists of warm water piping, warm air ducts, or electrical resistance elements embedded in or located behind ceiling, wall or floor surfaces.

[NY] PART 1202. The regulations set forth in 19 NYCRR Part 1202 ("Uniform Code: Administration and Enforcement in Certain Local Governments"), as currently in effect and as hereafter amended from time to time.

[NY] PART 1203. The regulations set forth in 19 NYCRR Part 1203 ("Uniform Code: Minimum Standards for Administration and Enforcement"), as currently in effect and as hereafter amended from time to time.

[NY] PART 1203—COMPLIANT CODE ENFORCEMENT PROGRAM. A code enforcement program that includes the features required by Part 1203 and satisfies the requirements of Part 1203.

[NY] PART 1204. The regulations set forth in 19 NYCRR Part 1204 ("Uniform Code: Administration and Enforcement by State Agencies"), as currently in effect and as hereafter amended from time to time.

[NY] PART 1205. The regulations set forth in 19 NYCRR Part 1205 ("Uniform Code: Variance Procedures"), as currently in effect and as hereafter amended from time to time.

PELLET FUEL-BURNING APPLIANCE. A closed-combustion, vented *appliance* equipped with a fuel-feed mechanism for burning processed pellets of solid fuel of a specified size and composition.

PIPING. Where used in this code, "piping" refers to either pipe or tubing, or both.

Pipe. A rigid conduit of iron, steel, copper, copper-alloy, or plastic.

Tubing. Semirigid conduit of copper, copper-alloy, aluminum, plastic or steel.

PLASTIC, THERMOPLASTIC. A plastic that is capable of being repeatedly softened by increase of temperature and hardened by decrease of temperature.

PLASTIC, THERMOSETTING. A plastic that is capable of being changed into a substantially infusible or insoluble product when cured under application of heat or chemical means.

PLENUM. An enclosed portion of the building structure, other than an *occupiable space* being conditioned, that is designed to allow air movement, and thereby serve as part of an air distribution system.

[NY] PLUMBING CODE OF NEW YORK STATE. The 2020 edition of the publication entitled "Plumbing Code of New York State," published by the International Code Council, Inc. (publication date November 2019).

POLLUTION-CONTROL UNIT (PCU). Manufactured equipment that is installed in a grease exhaust duct system for the purpose of extracting smoke, grease particles and odors from the exhaust flow by means of a series of filters.

PORTABLE FUEL CELL APPLIANCE. A fuel cell generator of electricity that is not fixed in place. A portable fuel cell *appliance* utilizes a cord and plug connection to a grid-isolated load and has an integral fuel supply.

POWER BOILER. See "Boiler."

[A] PREMISES. A lot, plot or parcel of land, including any structure thereon.

PRESS-CONNECT JOINT. A permanent mechanical joint incorporating an elastomeric seal or an elastomeric seal and corrosion-resistant grip ring. The joint is made with a pressing tool and jaw or ring approved by the fitting manufacturer.

PRESSURE, FIELD TEST. A test performed in the field to prove system tightness.

PRESSURE-LIMITING DEVICE. A pressure-responsive mechanism designed to stop automatically the operation of the pressure-imposing element at a predetermined pressure.

PRESSURE RELIEF DEVICE. A pressure-actuated valve or rupture member designed to relieve excessive pressure automatically.

PRESSURE RELIEF VALVE. A pressure-actuated valve held closed by a spring or other means and designed to relieve pressure automatically in excess of the device's setting.

PRESSURE VESSELS. Closed containers, tanks or vessels that are designed to contain liquids or gases, or both, under pressure.

PRESSURE VESSELS—REFRIGERANT. Any refrigerant-containing receptacle in a refrigerating system. This does not include evaporators where each separate section does not exceed 0.5 cubic foot (0.014 m^3) of refrigerant-containing volume, regardless of the maximum inside dimensions, evaporator coils, controls, headers, pumps and piping.

PROTECTIVE ASSEMBLY (REDUCED CLEARANCE). Any noncombustible assembly that is *labeled* or constructed in accordance with Table 308.4.2 and is placed between combustible materials or assemblies and mechanical appliances, devices or *equipment*, for the purpose of reducing required airspace clearances. Protective assemblies attached directly to a combustible assembly shall not be considered as part of that combustible assembly.

PURGE. To clear of air, water or other foreign substances.

PUSH-FIT JOINTS. A type of mechanical joint consisting of elastomeric seals and corrosion-resistant tube grippers. Such joints are permanent or removable depending on the design.

INTERNATIONAL CODE COUNCIL®
Copyright © 2019 ICC & NYSDOS. ALL RIGHTS RESERVED. Accessed by Lauren Gualdino (lgualdino@briarcliffmanor.org), (-) Order Number #100880972 on May 08, 2020 07:05 AM (PDT) pursuant to License Agreement with ICC & NYSDOS. No further reproduction, no

100880972

QUICK-OPENING VALVE. A valve that opens completely by fast action, either manually or automatically controlled. A valve requiring one-quarter round turn or less is considered to be quick opening.

RADIANT HEATER. A heater designed to transfer heat primarily by direct radiation.

READY ACCESS (TO). That which enables a device, *appliance* or *equipment* to be directly reached, without requiring the removal or movement of any panel or similar obstruction [see "Access (to)"].

RECEIVER, LIQUID. A vessel permanently connected to a refrigeration system by inlet and outlet pipes for storage of liquid refrigerant.

RECIRCULATED AIR. Air removed from a conditioned space and intended for reuse as supply air.

RECLAIMED REFRIGERANTS. Refrigerants reprocessed to the same specifications as for new refrigerants by means including distillation. Such refrigerants have been chemically analyzed to verify that the specifications have been met. Reclaiming usually implies the use of processes or procedures that are available only at a reprocessing or manufacturing facility.

RECOVERED REFRIGERANTS. Refrigerants removed from a system in any condition without necessarily testing or processing them.

RECYCLED REFRIGERANTS. Refrigerants from which contaminants have been reduced by oil separation, removal of noncondensable gases, and single or multiple passes through devices that reduce moisture, acidity and particulate matter, such as replaceable core filter driers. These procedures usually are performed at the field job site or in a local service shop.

REFRIGERANT. A substance utilized to produce refrigeration by its expansion or vaporization.

REFRIGERANT SAFETY CLASSIFICATIONS. Groupings that indicate the toxicity and flammability classes in accordance with Section 1103.1. The classification group is made up of a letter (A or B) that indicates the toxicity class, followed by a number (1, 2 or 3) that indicates the flammability class. Refrigerant blends are similarly classified, based on the compositions at their worst cases of fractionation, as separately determined for toxicity and flammability. In some cases, the worst case of fractionation is the original formulation.

Flammability. See "Flammability classification."

Toxicity. See "Toxicity classification."

REFRIGERATING SYSTEM. A combination of interconnected refrigerant-containing parts constituting one closed refrigerant circuit in which a refrigerant is circulated for the purpose of extracting heat.

REFRIGERATION CAPACITY RATING. Expressed as 1 horsepower (0.75 kW), 1 ton or 12,000 Btu/h (3.5 kW), shall all mean the same quantity.

REFRIGERATION MACHINERY ROOM. See "*Machinery room*."

REFRIGERATION SYSTEM, ABSORPTION. A heat-operated, closed-refrigeration cycle in which a secondary fluid (the absorbent) absorbs a primary fluid (the refrigerant) that has been vaporized in the evaporator.

Direct system. A system in which the evaporator is in direct contact with the material or space refrigerated, or is located in air-circulating passages communicating with such spaces.

Indirect system. A system in which a brine coil cooled by the refrigerant is circulated to the material or space refrigerated, or is utilized to cool the air so circulated. Indirect systems are distinguished by the type or method of application.

REFRIGERATION SYSTEM CLASSIFICATION. Refrigeration systems are classified according to the degree of probability that leaked refrigerant from a failed connection, seal or component will enter an occupied area. The distinction is based on the basic design or location of the components.

REFRIGERATION SYSTEM, MECHANICAL. A combination of interconnected refrigeration-containing parts constituting one closed refrigerant circuit in which a refrigerant is circulated for the purpose of extracting heat and in which a compressor is used for compressing the refrigerant vapor.

REFRIGERATION SYSTEM, SELF-CONTAINED. A complete factory-assembled and tested system that is shipped in one or more sections and that does not have refrigerant-containing parts that are joined in the field by other than companion or block valves.

[A] REGISTERED DESIGN PROFESSIONAL. An individual who is registered or licensed to practice their respective design profession as defined by the statutory requirements of the professional registration laws of the state or jurisdiction in which the project is to be constructed.

[NY] RESIDENTIAL CODE OF NEW YORK STATE. The 2020 edition of the publication entitled "Residential Code of New York State," published by the International Code Council, Inc. (publication date November 2019).

RETURN AIR. Air removed from an *approved* conditioned space or location and recirculated or exhausted.

RETURN AIR SYSTEM. An assembly of connected ducts, plenums, fittings, registers and grilles through which air from the space or spaces to be heated or cooled is conducted back to the supply unit (see also "Supply air system").

[FG] ROOM HEATER VENTED. A free-standing heating unit burning solid or liquid fuel for direct heating of the space in and adjacent to that in which the unit is located.

SAFETY VALVE. A valve that relieves pressure in a steam boiler by opening fully at the rated discharge pressure. The valve is of the spring-pop type.

SELF-CONTAINED EQUIPMENT. Complete, factory-assembled and tested, heating, air-conditioning or refrigeration *equipment* installed as a single unit, and having all working parts, complete with motive power, in an enclosed unit of said machinery.

INTERNATIONAL CODE COUNCIL®
Copyright © 2019 ICC & NYSDOS. ALL RIGHTS RESERVED. Accessed by Lauren Gualdino (lgualdino@briarcliffmanor.org), (-) Order Number #100880972 on May 08, 2020 07:05 AM (PDT) pursuant to License Agreement with ICC & NYSDOS. No further reproduction, no

100880972

[BF] SHAFT. An enclosed space extending through one or more stories of a building, connecting vertical openings in successive floors, or floors and the roof.

[BF] SHAFT ENCLOSURE. The walls or construction forming the boundaries of a shaft.

[A] SLEEPING UNIT. A room or space in which people sleep, which can also include permanent provisions for living, eating, and either sanitation or kitchen facilities but not both. Such rooms and spaces that are also part of a *dwelling unit* are not sleeping units.

[BF] SMOKE DAMPER. A *listed* device installed in ducts and air transfer openings designed to resist the passage of smoke. The device is installed to operate automatically, controlled by a smoke detection system, and where required, is capable of being positioned from a fire command center.

[BF] SMOKE-DEVELOPED INDEX. A numerical value assigned to a material tested in accordance with ASTM E84.

SOLAR THERMAL SYSTEM. A system that converts solar radiation to thermal energy for use in heating or cooling.

SOLID FUEL (COOKING APPLICATIONS). Applicable to commercial food service operations only, solid fuel is any bulk material such as hardwood, mesquite, charcoal or briquettes that is combusted to produce heat for cooking operations.

SOURCE CAPTURE SYSTEM. A mechanical exhaust system designed and constructed to capture air contaminants at their source and to exhaust such contaminants to the outdoor atmosphere.

[FG] STATIONARY FUEL CELL POWER PLANT. A self-contained package or factory-matched packages that constitute an automatically operated assembly of integrated systems for generating useful electrical energy and recoverable thermal energy that is permanently connected and fixed in place.

STEAM-HEATING BOILER. A boiler operated at pressures not exceeding 15 psi (103 kPa) for steam.

STOP VALVE. A shutoff valve for controlling the flow of liquid or gases.

[BG] STORY. That portion of a building included between the upper surface of a floor and the upper surface of the floor next above, except that the topmost story shall be that portion of a building included between the upper surface of the topmost floor and the ceiling or roof above.

STRENGTH, ULTIMATE. The highest stress level that the component will tolerate without rupture.

SUPPLY AIR. That air delivered to each or any space supplied by the air distribution system or the total air delivered to all spaces supplied by the air distribution system, which is provided for ventilating, heating, cooling, humidification, dehumidification and other similar purposes.

SUPPLY AIR SYSTEM. An assembly of connected ducts, plenums, fittings, registers and grilles through which air, heated or cooled, is conducted from the supply unit to the space or spaces to be heated or cooled (see also "Return air system").

THEORETICAL AIR. The exact amount of air required to supply oxygen for complete *combustion* of a given quantity of a specific fuel.

THERMAL RESISTANCE (*R*). A measure of the ability to retard the flow of heat. The *R*-value is the reciprocal of thermal conductance.

[P] THIRD-PARTY CERTIFICATION AGENCY. An approved agency operating a product or material certification system that incorporates initial product testing, assessment and surveillance of a manufacturer's quality control system.

[P] THIRD-PARTY CERTIFIED. Certification obtained by the manufacturer indicating that the function and performance characteristics of a product or material have been determined by testing and ongoing surveillance by an approved third-party certification agency. Assertion of certification is in the form of identification in accordance with the requirements of the third-party certification agency.

[P] THIRD-PARTY TESTED. Procedure by which an approved testing laboratory provides documentation that a product, material or system conforms to specified requirements.

TLV-TWA (THRESHOLD LIMIT VALUE-TIME-WEIGHTED AVERAGE). The time-weighted average concentration of a refrigerant or other chemical in air for a normal 8-hour workday and a 40-hour workweek, to which nearly all workers are repeatedly exposed, day after day, without adverse effects, as adopted by the American Conference of Government Industrial Hygienists (ACGIH).

TOILET ROOM. A room containing a water closet and, frequently, a lavatory, but not a bathtub, shower, spa or similar bathing fixture.

TOXICITY CLASSIFICATION. Refrigerants shall be classified for toxicity in one of two classes in accordance with ASHRAE 34:

Class A. Refrigerants that have an occupational exposure limit (OEL) of 400 parts per million (ppm) or greater.

Class B. Refrigerants that have an OEL of less than 400 ppm.

TRANSITION FITTINGS, PLASTIC TO STEEL. An adapter for joining plastic pipe to steel pipe. The purpose of this fitting is to provide a permanent, pressure-tight connection between two materials that cannot be joined directly one to another.

[NY] UNIFORM CODE. The New York State Uniform Fire Prevention and Building Code, adopted pursuant to Article 18 of the New York State Executive Law, as currently in effect and as hereafter amended from time to time.

[FG] UNIT HEATER. A self-contained *appliance* of the fan type, designed for the delivery of warm air directly into the space in which the *appliance* is located.

VENT. A pipe or other conduit composed of factory-made components, containing a passageway for conveying *combustion* products and air to the atmosphere, *listed* and *labeled* for use with a specific type or class of *appliance*.

Pellet vent. A vent *listed* and *labeled* for use with *listed* pellet-fuel-burning appliances.

INTERNATIONAL CODE COUNCIL®
Copyright © 2019 ICC & NYSDOS. ALL RIGHTS RESERVED. Accessed by Lauren Gualdino (lgualdino@briarcliffmanor.org), (-) Order Number #100880972 on May 08, 2020 07:05 AM (PDT) pursuant to License Agreement with ICC & NYSDOS. No further reproduction, no

100880972

Type L vent. A vent *listed* and *labeled* for use with the following:

1. Oil-burning appliances that are *listed* for use with Type L vents.
2. Gas-fired appliances that are *listed* for use with Type B vents.

VENT CONNECTOR. The pipe that connects an *approved* fuel-fired *appliance* to a vent.

VENT DAMPER DEVICE, AUTOMATIC. A device intended for installation in the venting system, in the outlet of an individual automatically operated fuel-burning *appliance* that is designed to open the venting system automatically when the *appliance* is in operation and to close off the venting system automatically when the *appliance* is in a standby or shutdown condition.

VENTILATION. The natural or mechanical process of supplying conditioned or unconditioned air to, or removing such air from, any space.

VENTILATION AIR. That portion of supply air that comes from the outside (outdoors), plus any recirculated air that has been treated to maintain the desired quality of air within a designated space.

[FG] VENTING SYSTEM. A continuous open passageway from the flue collar of an *appliance* to the outdoor atmosphere for the purpose of removing flue or vent gases. A venting system is usually composed of a vent or a *chimney* and vent connector, if used, assembled to form the open passageway.

WATER HEATER. Any heating *appliance* or *equipment* that heats potable water and supplies such water to the potable hot water distribution system.

ZONE. One *occupiable space* or several occupiable spaces with similar *occupancy* classification (see Table 403.3.1.1), occupant density, zone air distribution effectiveness and zone primary airflow rate per unit area.

INTERNATIONAL CODE COUNCIL®
Copyright © 2019 ICC & NYSDOS. ALL RIGHTS RESERVED. Accessed by Lauren Gualdino (lgualdino@briarcliffmanor.org), (-) Order Number #100880972 on May 08, 2020 07:05 AM (PDT) pursuant to License Agreement with ICC & NYSDOS. No further reproduction, no

100880972

CHAPTER 3
GENERAL REGULATIONS

SECTION 301
GENERAL

301.1 Scope. This chapter shall govern the approval and installation of all *equipment* and appliances that comprise parts of the building mechanical systems regulated by this code in accordance with Section 101.2.

301.2 Energy utilization. Heating, ventilating and air-conditioning systems of all structures shall be designed and installed for efficient utilization of energy in accordance with the *Energy Conservation Construction Code of New York State*.

301.3 Identification. Each length of pipe and tubing and each pipe fitting utilized in a mechanical system shall bear the identification of the manufacturer.

301.4 Plastic pipe, fittings and components. Plastic pipe, fittings and components shall be *third-party certified* as conforming to NSF 14.

301.5 Third-party testing and certification. Piping, tubing and fittings shall comply with the applicable referenced standards, specifications and performance criteria of this code and shall be identified in accordance with Section 301.3. Piping, tubing and fittings shall either be tested by an approved third-party testing agency or certified by an approved *third-party certification agency*.

301.6 Fuel gas appliances and equipment. The approval and installation of fuel gas distribution piping and *equipment*, fuel gas-fired appliances and fuel gas-fired *appliance* venting systems shall be in accordance with the *Fuel Gas Code of New York State*.

301.7 Listed and labeled. Appliances regulated by this code shall be *listed* and *labeled* for the application in which they are installed and used, unless otherwise *approved* in accordance with Section 105.

Exception: Listing and labeling of *equipment* and appliances used for refrigeration shall be in accordance with Section 1101.2.

301.8 Labeling. Labeling shall be in accordance with the procedures set forth in Sections 301.8.1 through 301.8.2.3.

301.8.1 Testing. An *approved* agency shall test a representative sample of the mechanical *equipment* and appliances being *labeled* to the relevant standard or standards. The *approved* agency shall maintain a record of all of the tests performed. The record shall provide sufficient detail to verify compliance with the test standard.

301.8.2 Inspection and identification. The *approved* agency shall periodically perform an inspection, which shall be in-plant if necessary, of the mechanical *equipment* and appliances to be *labeled*. The inspection shall verify that the *labeled* mechanical *equipment* and appliances are representative of the mechanical *equipment* and appliances tested.

301.8.2.1 Independent. The agency to be *approved* shall be objective and competent. To confirm its objectivity, the agency shall disclose all possible conflicts of interest.

301.8.2.2 Equipment. An *approved* agency shall have adequate *equipment* to perform all required tests. The *equipment* shall be periodically calibrated.

301.8.2.3 Personnel. An *approved* agency shall employ experienced personnel educated in conducting, supervising and evaluating tests.

301.9 Label information. A permanent factory-applied nameplate(s) shall be affixed to appliances on which shall appear in legible lettering, the manufacturer's name or trademark, the model number, serial number and the seal or mark of the *approved* agency. A label shall include the following:

1. Electrical *equipment* and appliances: Electrical rating in volts, amperes and motor phase; identification of individual electrical components in volts, amperes or watts, motor phase; Btu/h (W) output; and required clearances.
2. Absorption units: Hourly rating in Btu/h (W); minimum hourly rating for units having step or automatic modulating controls; type of fuel; type of refrigerant; cooling capacity in Btu/h (W); and required clearances.
3. Fuel-burning units: Hourly rating in Btu/h (W); type of fuel *approved* for use with the *appliance*; and required clearances.
4. Electric comfort heating appliances: electric rating in volts, amperes and phase; Btu/h (W) output rating; individual marking for each electrical component in amperes or watts, volts and phase; and required clearances from combustibles.

301.10 Electrical. Electrical wiring, controls and connections to *equipment* and appliances regulated by this code shall be in accordance with NFPA 70.

301.11 Plumbing connections. Potable water supply and building drainage system connections to *equipment* and appliances regulated by this code shall be in accordance with the *Plumbing Code of New York State*.

301.12 Fuel types. Fuel-fired appliances shall be designed for use with the type of fuel to which they will be connected and the altitude at which they are installed. Appliances that comprise parts of the building mechanical system shall not be converted for the usage of a different fuel, except where *approved* and converted in accordance with the manufacturer's instructions. The fuel input rate shall not be increased or decreased beyond the limit rating for the altitude at which the *appliance* is installed.

301.13 Vibration isolation. Where vibration isolation of *equipment* and appliances is employed, an *approved* means of supplemental restraint shall be used to accomplish the support and restraint.

INTERNATIONAL CODE COUNCIL®
Copyright © 2019 ICC & NYSDOS. ALL RIGHTS RESERVED. Accessed by Lauren Gualdino (lgualdino@briarcliffmanor.org), (-) Order Number #100880972 on May 08, 2020 07:05 AM (PDT) pursuant to License Agreement with ICC & NYSDOS. No further reproduction, no

100880972

301.14 Repair. Defective material or parts shall be replaced or repaired in such a manner so as to preserve the original approval or listing.

301.15 Wind resistance. Mechanical *equipment*, appliances and supports that are exposed to wind shall be designed and installed to resist the wind pressures determined in accordance with the *Building Code of New York State*.

301.16 Flood hazard. For structures located in flood hazard areas, mechanical systems, equipment and appliances shall be located at or above the elevation required by Section 1612 of the *Building Code of New York State* for utilities and attendant equipment.

Exception: Mechanical systems, equipment and appliances are permitted to be located below the elevation required by Section 1612 of the of the *Building Code of New York State* for utilities and attendant equipment provided that they are designed and installed to prevent water from entering or accumulating within the components and to resist hydrostatic and hydrodynamic loads and stresses, including the effects of buoyancy, during the occurrence of flooding up to such elevation.

[BS] 301.16.1 Coastal high-hazard areas and coastal A zones. In coastal high-hazard areas and coastal A zones, mechanical systems and *equipment* shall not be mounted on or penetrate walls intended to break away under flood loads.

301.17 Rodentproofing. Buildings or structures and the walls enclosing habitable or occupiable rooms and spaces in which persons live, sleep or work, or in which feed, food or foodstuffs are stored, prepared, processed, served or sold, shall be constructed to protect against the entrance of rodents in accordance with the *Building Code of New York State*.

301.18 Seismic resistance. Where earthquake loads are applicable in accordance with the *Building Code of New York State*, mechanical system supports shall be designed and installed for the seismic forces in accordance with the *Building Code of New York State*.

SECTION 302
PROTECTION OF STRUCTURE

302.1 Structural safety. The building or structure shall not be weakened by the installation of mechanical systems. Where floors, walls, ceilings or any other portion of the building or structure are required to be altered or replaced in the process of installing or repairing any system, the building or structure shall be left in a safe structural condition in accordance with the *Building Code of New York State*.

302.2 Penetrations of floor/ceiling assemblies and fire-resistance-rated assemblies. Penetrations of floor/ceiling assemblies and assemblies required to have a fire-resistance rating shall be protected in accordance with Chapter 7 of the *Building Code of New York State*.

[BS] 302.3 Cutting, notching and boring in wood framing. The cutting, notching and boring of wood framing members shall comply with Sections 302.3.1 through 302.3.4.

[BS] 302.3.1 Joist notching. Notches on the ends of joists shall not exceed one-fourth the joist depth. Holes bored in joists shall not be within 2 inches (51 mm) of the top or bottom of the joist, and the diameter of any such hole shall not exceed one-third the depth of the joist. Notches in the top or bottom of joists shall not exceed one-sixth the depth and shall not be located in the middle third of the span.

[BS] 302.3.2 Stud cutting and notching. In exterior walls and bearing partitions, a wood stud shall not be cut or notched in excess of 25 percent of its depth. In nonbearing partitions that do not support loads other than the weight of the partition, a stud shall not be cut or notched in excess of 40 percent of its depth.

[BS] 302.3.3 Bored holes. The diameter of bored holes in wood studs shall not exceed 40 percent of the stud depth. The diameter of bored holes in wood studs shall not exceed 60 percent of the stud depth in nonbearing partitions. The diameter of bored holes in wood studs shall not exceed 60 percent of the stud depth in any wall where each stud is doubled, provided that not more than two such successive doubled studs are so bored. The edge of the bored hole shall be not closer than $^5/_8$ inch (15.9 mm) to the edge of the stud. Bored holes shall be not located at the same section of stud as a cut or notch.

[BS] 302.3.4 Engineered wood products. Cuts, notches and holes bored in trusses, structural composite lumber, structural glue-laminated members and I-joists are prohibited except where permitted by the manufacturer's recommendations or where the effects of such alterations are specifically considered in the design of the member by a registered design professional.

[BS] 302.4 Alterations to trusses. Truss members and components shall not be cut, drilled, notched, spliced or otherwise altered in any way without written concurrence and approval of a *registered design professional*. Alterations resulting in the addition of loads to any member, such as HVAC *equipment* and water heaters, shall not be permitted without verification that the truss is capable of supporting such additional loading.

[BS] 302.5 Cutting, notching and boring in steel framing. The cutting, notching and boring of steel framing members shall comply with Sections 302.5.1 through 302.5.3.

[BS] 302.5.1 Cutting, notching and boring holes in structural steel framing. The cutting, notching and boring of holes in structural steel framing members shall be as prescribed by the *registered design professional*.

[BS] 302.5.2 Cutting, notching and boring holes in cold-formed steel framing. Flanges and lips of load-bearing cold-formed steel framing members shall not be cut or notched. Holes in webs of load-bearing cold-formed steel framing members shall be permitted along the centerline of the web of the framing member and shall not exceed the dimensional limitations, penetration spacing or minimum hole edge distance as prescribed by the *registered design professional*. Cutting, notching and boring holes of steel floor/roof decking shall be as prescribed by the *registered design professional*.

[BS] 302.5.3 Cutting, notching and boring holes in nonstructural cold-formed steel wall framing. Flanges and lips of nonstructural cold-formed steel wall studs shall not

INTERNATIONAL CODE COUNCIL®
Copyright © 2019 ICC & NYSDOS. ALL RIGHTS RESERVED. Accessed by Lauren Gualdino (lgualdino@briarcliffmanor.org), (-) Order Number #100880972 on May 08, 2020 07:05 AM (PDT) pursuant to License Agreement with ICC & NYSDOS. No further reproduction, no

100880972

be cut or notched. Holes in webs of nonstructural cold-formed steel wall studs shall be permitted along the centerline of the web of the framing member, shall not exceed $1^1/_2$ inches (38 mm) in width or 4 inches (102 mm) in length, and shall not be spaced less than 24 inches (610 mm) center to center from another hole or less than 10 inches (254 mm) from the bearing end.

SECTION 303
EQUIPMENT AND APPLIANCE LOCATION

303.1 General. *Equipment* and appliances shall be located as required by this section, specific requirements elsewhere in this code and the conditions of the *equipment* and *appliance* listing.

303.2 Hazardous locations. Appliances shall not be located in a *hazardous location* unless *listed* and *approved* for the specific installation.

303.3 Prohibited locations. Fuel-fired appliances shall not be located in, or obtain *combustion* air from, any of the following rooms or spaces:

1. Sleeping rooms.
2. Bathrooms.
3. Toilet rooms.
4. Storage closets.
5. Surgical rooms.

Exception: This section shall not apply to the following appliances:

1. *Direct-vent* appliances that obtain all *combustion* air directly from the outdoors.
2. Solid fuel-fired appliances, provided that combustion air is provided in accordance with the manufacturers' instructions.
3. Appliances installed in a dedicated enclosure in which all *combustion* air is taken directly from the outdoors, in accordance with Chapter 7. *Access* to such enclosure shall be through a solid door, weather-stripped in accordance with the exterior door air leakage requirements of the *Energy Conservation Construction Code of New York State* and equipped with an *approved* self-closing device.

303.4 Protection from damage. Appliances shall not be installed in a location where subject to mechanical damage unless protected by *approved* barriers.

303.5 Indoor locations. Furnaces and boilers installed in closets and alcoves shall be listed for such installation.

303.6 Outdoor locations. Appliances installed in other than indoor locations shall be *listed* and *labeled* for outdoor installation.

303.7 Pit locations. Appliances installed in pits or excavations shall not come in direct contact with the surrounding soil and shall be installed not less than 3 inches (76 mm) above the pit floor. The sides of the pit or excavation shall be held back not less than 12 inches (305 mm) from the *appliance*. Where the depth exceeds 12 inches (305 mm) below adjoining grade, the walls of the pit or excavation shall be lined with concrete or masonry. Such concrete or masonry shall extend not less than 4 inches (102 mm) above adjoining grade and shall have sufficient lateral load-bearing capacity to resist collapse. Excavation on the control side of the appliance shall extend not less than 30 inches (762 mm) horizontally. The *appliance* shall be protected from flooding in an *approved* manner.

[BF] 303.8 Elevator shafts. Mechanical systems shall not be located in an elevator shaft.

303.9 Fireplaces in Group I-2, Condition 2 occupancies. Fuel-burning appliances and fireplaces in Group I-2, Condition 2 occupancies shall be in accordance with Section 901.4.

SECTION 304
INSTALLATION

304.1 General. *Equipment* and appliances shall be installed as required by the terms of their approval, in accordance with the conditions of the listing, the manufacturer's installation instructions and this code. Manufacturer's installation instructions shall be available on the job site at the time of inspection.

304.2 Conflicts. Where conflicts between this code and the conditions of listing or the manufacturer's installation instructions occur, the provisions of this code shall apply.

Exception: Where a code provision is less restrictive than the conditions of the listing of the *equipment* or *appliance* or the manufacturer's installation instructions, the conditions of the listing and the manufacturer's installation instructions shall apply.

304.3 Elevation of ignition source. Equipment and appliances having an *ignition source* and located in hazardous locations and public garages, private garages, repair garages, automotive motor fuel-dispensing facilities and parking garages shall be elevated such that the source of ignition is not less than 18 inches (457 mm) above the floor surface on which the *equipment* or *appliance* rests. For the purpose of this section, rooms or spaces that are not part of the living space of a *dwelling unit* and that communicate directly with a private garage through openings shall be considered to be part of the private garage.

Exception: Elevation of the ignition source is not required for appliances that are listed as flammable vapor ignition resistant.

304.3.1 Parking garages. Connection of a parking garage with any room in which there is a fuel-fired *appliance* shall be by means of a vestibule providing a two-doorway separation, except that a single door is permitted where the sources of ignition in the *appliance* are elevated in accordance with Section 304.3.

Exception: This section shall not apply to *appliance* installations complying with Section 304.6.

304.4 Prohibited equipment and appliance location. Equipment and appliances having an *ignition source* shall not be installed in Group H occupancies or control areas where open use, handling or dispensing of combustible, flammable or explosive materials occurs.

[FG] 304.5 Hydrogen-generating and refueling operations. Hydrogen-generating and refueling appliances shall be

INTERNATIONAL CODE COUNCIL®
Copyright © 2019 ICC & NYSDOS. ALL RIGHTS RESERVED. Accessed by Lauren Gualdino (lgualdino@briarcliffmanor.org), (-) Order Number #100880972 on May 08, 2020 07:05 AM (PDT) pursuant to License Agreement with ICC & NYSDOS. No further reproduction, no

100880972

installed and located in accordance with their listing and the manufacturer's instructions. Ventilation shall be required in accordance with Section 304.5.1, 304.5.2 or 304.5.3 in public garages, private garages, repair garages, automotive motor fuel-dispensing facilities and parking garages that contain hydrogen-generating appliances or refueling systems. For the purpose of this section, rooms or spaces that are not part of the living space of a *dwelling unit* and that communicate directly with a private garage through openings shall be considered to be part of the private garage.

[FG] 304.5.1 Natural ventilation. Indoor locations intended for hydrogen-generating or refueling operations shall be limited to a maximum floor area of 850 square feet (79 m^2) and shall communicate with the outdoors in accordance with Sections 304.5.1.1 and 304.5.1.2. The maximum rated output capacity of hydrogen-generating appliances shall not exceed 4 standard cubic feet per minute (0.00189 m^3/s) of hydrogen for each 250 square feet (23 m^2) of floor area in such spaces. The minimum cross-sectional dimension of air openings shall be 3 inches (76 mm). Where ducts are used, they shall be of the same cross-sectional area as the free area of the openings to which they connect. In such locations, *equipment* and appliances having an *ignition source* shall be located such that the source of ignition is not within 12 inches (305 mm) of the ceiling.

[FG] 304.5.1.1 Two openings. Two permanent openings shall be provided within the garage. The upper opening shall be located entirely within 12 inches (305 mm) of the ceiling of the garage. The lower opening shall be located entirely within 12 inches (305 mm) of the floor of the garage. Both openings shall be provided in the same exterior wall. The openings shall communicate directly with the outdoors and shall have a minimum free area of $^1/_2$ square foot per 1,000 cubic feet (1 m^2/610 m^3) of garage volume.

[FG] 304.5.1.2 Louvers and grilles. In calculating free area required by Section 304.5.1, the required size of openings shall be based on the net free area of each opening. If the free area through a design of louver or grille is known, it shall be used in calculating the size opening required to provide the free area specified. If the design and free area are not known, it shall be assumed that wood louvers will have 25-percent free area and metal louvers and grilles will have 75-percent free area. Louvers and grilles shall be fixed in the open position.

[FG] 304.5.2 Mechanical ventilation. Indoor locations intended for hydrogen-generating or refueling operations shall be ventilated in accordance with Section 502.16. In such locations, *equipment* and appliances having an *ignition source* shall be located such that the source of ignition is below the mechanical ventilation outlet(s).

[FG] 304.5.3 Specially engineered installations. As an alternative to the provisions of Sections 304.5.1 and 304.5.2, the necessary supply of air for ventilation and dilution of flammable gases shall be provided by an *approved* engineered system.

304.6 Public garages. Appliances located in public garages, motor fueling-dispensing facilities, repair garages or other areas frequented by motor vehicles, shall be installed not less than 8 feet (2438 mm) above the floor. Where motor vehicles are capable of passing under an *appliance*, the *appliance* shall be installed at the clearances required by the *appliance* manufacturer and not less than 1 foot (305 mm) higher than the tallest vehicle garage door opening.

Exception: The requirements of this section shall not apply where the appliances are protected from motor vehicle impact and installed in accordance with Section 304.3 and NFPA 30A.

304.7 Private garages. Appliances located in private garages and carports shall be installed with a minimum clearance of 6 feet (1829 mm) above the floor.

Exception: The requirements of this section shall not apply where the appliances are protected from motor vehicle impact and installed in accordance with Section 304.3.

304.8 Construction and protection. Boiler rooms and furnace rooms shall be protected as required by the *Building Code of New York State.*

304.9 Clearances to combustible construction. Heat-producing *equipment* and *appliances* shall be installed to maintain the required *clearances* to combustible construction as specified in the listing and manufacturer's instructions. Such clearances shall be reduced only in accordance with Section 308. *Clearances* to combustibles shall include such considerations as door swing, drawer pull, overhead projections or shelving and window swing, shutters, coverings and drapes. Devices such as doorstops or limits, closers, drapery ties or guards shall not be used to provide the required *clearances*.

304.10 Clearances from grade. Equipment and *appliances* installed at grade level shall be supported on a level concrete slab or other *approved* material extending not less than 3 inches (76 mm) above adjoining grade or shall be suspended not less than 6 inches (152 mm) above adjoining grade. Such support shall be in accordance with the manufacturer's installation instructions.

[BE] 304.11 Guards. Guards shall be provided where various components that require service and roof hatch openings are located within 10 feet (3048 mm) of a roof edge or open side of a walking surface and such edge or open side is located more than 30 inches (762 mm) above the floor, roof, or grade below. The guard shall extend not less than 30 inches (762 mm) beyond each end of components that require service. The top of the guard shall be located not less than 42 inches (1067 mm) above the elevated surface adjacent to the guard. The guard shall be constructed so as to prevent the passage of a 21-inch-diameter (533 mm) sphere and shall comply with the loading requirements for guards specified in the *Building Code of New York State*.

Exception: Guards are not required where fall arrest/restraint anchorage connector devices that comply with ANSI/ASSE Z 359.1 are installed.

304.12 Area served. Appliances serving different areas of a building other than where they are installed shall be perma-

INTERNATIONAL CODE COUNCIL®
Copyright © 2019 ICC & NYSDOS. ALL RIGHTS RESERVED. Accessed by Lauren Gualdino (lgualdino@briarcliffmanor.org), (-) Order Number #100880972 on May 08, 2020 07:05 AM (PDT) pursuant to License Agreement with ICC & NYSDOS. No further reproduction, no

100880972

nently marked in an *approved* manner that uniquely identifies the *appliance* and the area it serves.

SECTION 305
PIPING SUPPORT

305.1 General. Mechanical system piping shall be supported in accordance with this section.

305.2 Materials. Pipe hangers and supports shall have sufficient strength to withstand all anticipated static and specified dynamic loading conditions associated with the intended use. Pipe hangers and supports that are in direct contact with piping shall be of *approved* materials that are compatible with the piping and that will not promote galvanic action.

305.3 Structural attachment. Hangers and anchors shall be attached to the building construction in an *approved* manner.

305.4 Interval of support. Piping shall be supported at distances not exceeding the spacing specified in Table 305.4, or in accordance with ANSI/MSS SP-58.

305.5 Protection against physical damage. In concealed locations where piping, other than cast-iron or steel, is installed through holes or notches in studs, joists, rafters or similar members less than $1^1/_2$ inches (38 mm) from the nearest edge of the member, the pipe shall be protected by shield plates. Protective steel shield plates having a minimum thickness of 0.0575 inch (1.463 mm) (No. 16 gage) shall cover the area of the pipe where the member is notched or bored, and shall extend not less than 2 inches (51 mm) above sole plates and below top plates.

SECTION 306
ACCESS AND SERVICE SPACE

306.1 Access. Appliances, controls devices, heat exchangers and HVAC system components that utilize energy shall be accessible for inspection, service, repair and replacement without disabling the function of a fire-resistance-rated assembly or removing permanent construction, other appliances, venting systems or any other piping or ducts not connected to the *appliance* being inspected, serviced, repaired or replaced. A level working space not less than 30 inches deep and 30 inches wide (762 mm by 762 mm) shall be provided in front of the control side to service an *appliance*.

306.2 Appliances in rooms. Rooms containing appliances shall be provided with a door and an unobstructed passageway measuring not less than 36 inches (914 mm) wide and 80 inches (2032 mm) high.

Exception: Within a *dwelling unit*, appliances installed in a compartment, alcove, basement or similar space shall be accessed by an opening or door and an unobstructed passageway measuring not less than 24 inches (610 mm) wide and large enough to allow removal of the largest *appliance* in the space, provided that a level service space of not less than 30 inches (762 mm) deep and the height of the *appliance*, but not less than 30 inches (762 mm), is present at the front or service side of the *appliance* with the door open.

306.3 Appliances in attics. Attics containing appliances shall be provided with an opening and unobstructed passageway large enough to allow removal of the largest *appliance*. The passageway shall be not less than 30 inches (762 mm) high and 22 inches (559 mm) wide and not more than 20 feet (6096 mm) in length measured along the centerline of the passageway from the opening to the *appliance*. The passageway shall have continuous solid flooring not less than 24 inches (610 mm) wide. A level service space not less than 30 inches (762 mm) deep and 30 inches (762 mm) wide shall be present at the front or service side of the *appliance*. The clear access opening dimensions shall be not less than 20 inches by

TABLE 305.4
PIPING SUPPORT SPACING[a]

PIPING MATERIAL	MAXIMUM HORIZONTAL SPACING (feet)	MAXIMUM VERTICAL SPACING (feet)
ABS pipe	4	10[c]
Aluminum pipe and tubing	10	15
Cast-iron pipe[b]	5	15
Copper or copper-alloy pipe	12	10
Copper or copper-alloy tubing	8	10
CPVC pipe or tubing, 1 inch and smaller	3	10[c]
CPVC pipe or tubing, $1^1/_4$ inches and larger	4	10[c]
Lead pipe	Continuous	4
PB pipe or tubing	$2^2/_3$ (32 inches)	4
PE-RT 1 inch and smaller	$2^2/_3$ (32 inches)	10[c]
PE-RT $1^1/_4$ inches and larger	4	10[c]
PEX tubing 1 inch and smaller	$2^2/_3$ (32 inches)	10[c]
PEX tubing $1^1/_4$ inches and larger	4	10[c]
Polypropylene (PP) pipe or tubing, 1 inch and smaller	$2^2/_3$ (32 inches)	10[c]
Polypropylene (PP) pipe or tubing, $1^1/_4$ inches and larger	4	10[c]
PVC pipe	4	10[c]
Steel tubing	8	10
Steel pipe	12	15

For SI: 1 inch = 25.4 mm, 1 foot = 304.8 mm.

a. See Section 301.18.

b. The maximum horizontal spacing of cast-iron pipe hangers shall be increased to 10 feet where 10-foot lengths of pipe are installed.

c. Mid-story guide.

INTERNATIONAL CODE COUNCIL®
Copyright © 2019 ICC & NYSDOS. ALL RIGHTS RESERVED. Accessed by Lauren Gualdino (lgualdino@briarcliffmanor.org), (-) Order Number #100880972 on May 08, 2020 07:05 AM (PDT) pursuant to License Agreement with ICC & NYSDOS. No further reproduction, no

100880972

30 inches (508 mm by 762 mm), and large enough to allow removal of the largest *appliance*.

Exceptions:

1. The passageway and level service space are not required where the *appliance* is capable of being serviced and removed through the required opening.
2. Where the passageway is unobstructed and not less than 6 feet (1829 mm) high and 22 inches (559 mm) wide for its entire length, the passageway shall be not greater than 50 feet (15 250 mm) in length.

306.3.1 Electrical requirements. A luminaire controlled by a switch located at the required passageway opening and a receptacle outlet shall be provided at or near the *appliance* location in accordance with NFPA 70.

306.4 Appliances under floors. Underfloor spaces containing appliances shall be provided with an access opening and unobstructed passageway large enough to remove the largest *appliance*. The passageway shall be not less than 30 inches (762 mm) high and 22 inches (559 mm) wide, nor more than 20 feet (6096 mm) in length measured along the centerline of the passageway from the opening to the *appliance*. A level service space not less than 30 inches (762 mm) deep and 30 inches (762 mm) wide shall be present at the front or service side of the *appliance*. If the depth of the passageway or the service space exceeds 12 inches (305 mm) below the adjoining grade, the walls of the passageway shall be lined with concrete or masonry. Such concrete or masonry shall extend not less than 4 inches (102 mm) above the adjoining grade and shall have sufficient lateral-bearing capacity to resist collapse. The clear access opening dimensions shall be not less than 22 inches by 30 inches (559 mm by 762 mm), and large enough to allow removal of the largest *appliance*.

Exceptions:

1. The passageway is not required where the level service space is present when the access is open and the *appliance* is capable of being serviced and removed through the required opening.
2. Where the passageway is unobstructed and not less than 6 feet high (1929 mm) and 22 inches (559 mm) wide for its entire length, the passageway shall not be limited in length.

306.4.1 Electrical requirements. A luminaire controlled by a switch located at the required passageway opening and a receptacle outlet shall be provided at or near the *appliance* location in accordance with NFPA 70.

306.5 Equipment and appliances on roofs or elevated structures. Where *equipment* requiring access or appliances are located on an elevated structure or the roof of a building such that personnel will have to climb higher than 16 feet (4877 mm) above grade to access such equipment or appliances, an interior or exterior means of access shall be provided. Such access shall not require climbing over obstructions greater than 30 inches (762 mm) in height or walking on roofs having a slope greater than four units vertical in 12 units horizontal (33-percent slope). Such access shall not require the use of portable ladders. Where access involves climbing over parapet walls, the height shall be measured to the top of the parapet wall.

Permanent ladders installed to provide the required access shall comply with the following minimum design criteria:

1. The side railing shall extend above the parapet or roof edge not less than 30 inches (762 mm).
2. Ladders shall have rung spacing not to exceed 14 inches (356 mm) on center. The uppermost rung shall be not greater than 24 inches (610 mm) below the upper edge of the roof hatch, roof or parapet, as applicable.
3. Ladders shall have a toe spacing not less than 6 inches (152 mm) deep.
4. There shall be not less than 18 inches (457 mm) between rails.
5. Rungs shall have a diameter not less than 0.75-inch (19.1 mm) and be capable of withstanding a 300-pound (136 kg) load.
6. Ladders over 30 feet (9144 mm) in height shall be provided with offset sections and landings capable of withstanding 100 pounds per square foot (488 kg/m^2). Landing dimensions shall be not less than 18 inches (457 mm) and not less than the width of the ladder served. A guard rail shall be provided on all open sides of the landing.
7. Climbing clearance. The distance from the centerline of the rungs to the nearest permanent object on the climbing side of the ladder shall be not less than 30 inches (762 mm) measured perpendicular to the rungs. This distance shall be maintained from the point of ladder access to the bottom of the roof hatch. A minimum clear width of 15 inches (381 mm) shall be provided on both sides of the ladder measured from the midpoint of and parallel with the rungs except where cages or wells are installed.
8. Landing required. The ladder shall be provided with a clear and unobstructed bottom landing area having a minimum dimension of 30 inches (762 mm) by 30 inches (762 mm) centered in front of the ladder.
9. Ladders shall be protected against corrosion by *approved* means.
10. Access to ladders shall be provided at all times.

Catwalks installed to provide the required access shall be not less than 24 inches (610 mm) wide and shall have railings as required for service platforms.

Exception: This section shall not apply to Group R-3 occupancies.

306.5.1 Sloped roofs. Where appliances, *equipment*, fans or other components that require service are installed on a roof having a slope of three units vertical in 12 units horizontal (25-percent slope) or greater and having an edge more than 30 inches (762 mm) above grade at such edge, a level platform shall be provided on each side of the *appliance* or *equipment* to which access is required for service, repair or maintenance. The platform shall be not less than

INTERNATIONAL CODE COUNCIL®
Copyright © 2019 ICC & NYSDOS. ALL RIGHTS RESERVED. Accessed by Lauren Gualdino (lgualdino@briarcliffmanor.org), (-) Order Number #100880972 on May 08, 2020 07:05 AM (PDT) pursuant to License Agreement with ICC & NYSDOS. No further reproduction, no

100880972

30 inches (762 mm) in any dimension and shall be provided with guards. The guards shall extend not less than 42 inches (1067 mm) above the platform, shall be constructed so as to prevent the passage of a 21-inch-diameter (533 mm) sphere and shall comply with the loading requirements for guards specified in the *Building Code of New York State*. Access shall not require walking on roofs having a slope greater than four units vertical in 12 units horizontal (33-percent slope). Where access involves obstructions greater than 30 inches (762 mm) in height, such obstructions shall be provided with ladders installed in accordance with Section 306.5 or stairways installed in accordance with the requirements specified in the *Building Code of New York State* in the path of travel to and from appliances, fans or *equipment* requiring service.

306.5.2 Electrical requirements. A receptacle outlet shall be provided at or near the *equipment* location in accordance with NFPA 70.

SECTION 307
CONDENSATE DISPOSAL

307.1 Fuel-burning appliances. Liquid *combustion* by-products of condensing appliances shall be collected and discharged to an *approved* plumbing fixture or disposal area in accordance with the manufacturer's installation instructions. Condensate piping shall be of *approved* corrosion-resistant material and shall not be smaller than the drain connection on the appliance. Such piping shall maintain a minimum horizontal slope in the direction of discharge of not less than one-eighth unit vertical in 12 units horizontal (1-percent slope).

307.2 Evaporators and cooling coils. Condensate drain systems shall be provided for *equipment* and appliances containing evaporators or cooling coils. Condensate drain systems shall be designed, constructed and installed in accordance with Sections 307.2.1 through 307.2.5.

Exception: Evaporators and cooling coils that are designed to operate in sensible cooling only and not support condensation shall not be required to meet the requirements of this section.

307.2.1 Condensate disposal. Condensate from all cooling coils and evaporators shall be conveyed from the drain pan outlet to an *approved* place of disposal. Such piping shall maintain a minimum horizontal slope in the direction of discharge of not less than one-eighth unit vertical in 12 units horizontal (1-percent slope). Condensate shall not discharge into a street, alley or other areas so as to cause a nuisance.

307.2.2 Drain pipe materials and sizes. Components of the condensate disposal system shall be cast iron, galvanized steel, copper, copper alloy, cross-linked polyethylene, polyethylene, ABS, CPVC, PVC, or polypropylene pipe or tubing. Components shall be selected for the pressure and temperature rating of the installation. Joints and connections shall be made in accordance with the applicable provisions of Chapter 7 of the *Plumbing Code of New York State* relative to the material type. Condensate waste and drain line size shall be not less than $^3/_4$-inch internal diameter and shall not decrease in size from the drain pan connection to the place of condensate disposal. Where the drain pipes from more than one unit are manifolded together for condensate drainage, the pipe or tubing shall be sized in accordance with Table 307.2.2.

TABLE 307.2.2
CONDENSATE DRAIN SIZING

EQUIPMENT CAPACITY	MINIMUM CONDENSATE PIPE DIAMETER
Up to 20 tons of refrigeration	$^3/_4$ inch
Over 20 tons to 40 tons of refrigeration	1 inch
Over 40 tons to 90 tons of refrigeration	$1^1/_4$ inch
Over 90 tons to 125 tons of refrigeration	$1^1/_2$ inch
Over 125 tons to 250 tons of refrigeration	2 inch

1 inch = 25.4 mm, 1 ton = 3.517 kW.

307.2.3 Auxiliary and secondary drain systems. In addition to the requirements of Section 307.2.1, where damage to any building components could occur as a result of overflow from the *equipment* primary condensate removal system, one of the following auxiliary protection methods shall be provided for each cooling coil or fuel-fired *appliance* that produces condensate:

1. An auxiliary drain pan with a separate drain shall be provided under the coils on which condensation will occur. The auxiliary pan drain shall discharge to a conspicuous point of disposal to alert occupants in the event of a stoppage of the primary drain. The pan shall have a minimum depth of $1^1/_2$ inches (38 mm), shall be not less than 3 inches (76 mm) larger than the unit, or the coil dimensions in width and length and shall be constructed of corrosion-resistant material. Galvanized sheet steel pans shall have a minimum thickness of not less than 0.0236 inch (0.6010 mm) (No. 24 gage). Nonmetallic pans shall have a minimum thickness of not less than 0.0625 inch (1.6 mm).
2. A separate overflow drain line shall be connected to the drain pan provided with the *equipment*. Such overflow drain shall discharge to a conspicuous point of disposal to alert occupants in the event of a stoppage of the primary drain. The overflow drain line shall connect to the drain pan at a higher level than the primary drain connection.
3. An auxiliary drain pan without a separate drain line shall be provided under the coils on which condensate will occur. Such pan shall be equipped with a water-level detection device conforming to UL 508 that will shut off the *equipment* served prior to overflow of the pan. The auxiliary drain pan shall be constructed in accordance with Item 1 of this section.
4. A water-level detection device conforming to UL 508 shall be provided that will shut off the *equipment* served in the event that the primary drain is blocked. The device shall be installed in the primary drain line, the overflow drain line, or in the equipment-supplied drain pan, located at a point higher than the primary drain line connection and below the overflow rim of such pan.

INTERNATIONAL CODE COUNCIL®
Copyright © 2019 ICC & NYSDOS. ALL RIGHTS RESERVED. Accessed by Lauren Gualdino (lgualdino@briarcliffmanor.org), (-) Order Number #100880972 on May 08, 2020 07:05 AM (PDT) pursuant to License Agreement with ICC & NYSDOS. No further reproduction, no

100880972

Exception: Fuel-fired appliances that automatically shut down operation in the event of a stoppage in the condensate drainage system.

307.2.3.1 Water-level monitoring devices. On downflow units and all other coils that do not have a secondary drain or provisions to install a secondary or auxiliary drain pan, a water-level monitoring device shall be installed inside the primary drain pan. This device shall shut off the *equipment* served in the event that the primary drain becomes restricted. Devices installed in the drain line shall not be permitted.

307.2.3.2 Appliance, equipment and insulation in pans. Where appliances, *equipment* or insulation are subject to water damage when auxiliary drain pans fill, that portion of the *appliance*, *equipment* and insulation shall be installed above the rim of the pan. Supports located inside of the pan to support the *appliance* or *equipment* shall be water resistant and *approved*.

307.2.4 Traps. Condensate drains shall be trapped as required by the *equipment* or *appliance* manufacturer.

307.2.4.1 Ductless mini-split system traps. Ductless mini-split equipment that produces condensate shall be provided with an inline check valve located in the drain line, or a trap.

307.2.5 Drain line maintenance. Condensate drain lines shall be configured to permit the clearing of blockages and performance of maintenance without requiring the drain line to be cut.

307.3 Condensate pumps. Condensate pumps located in uninhabitable spaces, such as attics and crawl spaces, shall be connected to the appliance or equipment served such that when the pump fails, the appliance or equipment will be prevented from operating. Pumps shall be installed in accordance with the manufacturers' instructions.

SECTION 308
CLEARANCE REDUCTION

308.1 Scope. This section shall govern the reduction in required *clearances* to combustible materials and combustible assemblies for *chimneys,* vents, kitchen exhaust equipment, mechanical appliances, and mechanical devices and *equipment*.

308.2 Listed appliances and equipment. The reduction of the required *clearances* to combustibles for *listed* and *labeled* appliances and *equipment* shall be in accordance with the requirements of this section except that such clearances shall not be reduced where reduction is specifically prohibited by the terms of the *appliance* or *equipment* listing.

308.3 Protective assembly construction and installation. Reduced *clearance* protective assemblies, including structural and support elements, shall be constructed of noncombustible materials. Spacers utilized to maintain an airspace between the protective assembly and the protected material or assembly shall be noncombustible. Where a space between the protective assembly and protected combustible material or assembly is specified, the same space shall be provided around the edges of the protective assembly and the spacers shall be placed so as to allow air circulation by convection in such space. Protective assemblies shall not be placed less than 1 inch (25 mm) from the mechanical appliances, devices or *equipment*, regardless of the allowable reduced *clearance*.

308.4 Allowable reduction. The reduction of required *clearances* to combustible assemblies or combustible materials shall be based on the utilization of a reduced *clearance* protective assembly in accordance with Section 308.4.1 or 308.4.2.

308.4.1 Labeled assemblies. The allowable clearance reduction shall be based on an approved reduced clearance protective assembly that is listed and labeled in accordance with UL 1618.

308.4.2 Reduction table. The allowable *clearance* reduction shall be based on one of the methods specified in Table 308.4.2. Where required *clearances* are not listed in Table 308.4.2, the reduced *clearances* shall be determined by linear interpolation between the distances listed in the table. Reduced *clearances* shall not be derived by extrapolation below the range of the table.

308.4.2.1 Solid fuel-burning appliances. The *clearance* reduction methods specified in Table 308.4.2 shall not be utilized to reduce the *clearance* required for solid fuel-burning appliances that are *labeled* for installation with clearances of 12 inches (305 mm) or less. Where appliances are *labeled* for installation with *clearances* of greater than 12 inches (305 mm), the *clearance* reduction methods of Table 308.4.2 shall not reduce the *clearance* to less than 12 inches (305 mm).

308.4.2.2 Masonry chimneys. The *clearance* reduction methods specified in Table 308.4.2 shall not be utilized to reduce the *clearances* required for masonry *chimneys* as specified in Chapter 8 and the *Building Code of New York State*.

308.4.2.3 Chimney connector pass-throughs. The *clearance* reduction methods specified in Table 308.4.2 shall not be utilized to reduce the clearances required for *chimney* connector pass-throughs as specified in Section 803.10.4.

308.4.2.4 Masonry fireplaces. The *clearance* reduction methods specified in Table 308.4.2 shall not be utilized to reduce the clearances required for masonry fireplaces as specified in Chapter 8 and the *Building Code of New York State*.

308.4.2.5 Kitchen exhaust ducts. The *clearance* reduction methods specified in Table 308.4.2 shall not be utilized to reduce the minimum *clearances* required by Section 506.3.11.1 for kitchen exhaust ducts enclosed in a shaft.

SECTION 309
TEMPERATURE CONTROL

[BG] 309.1 Space-heating systems. Interior spaces intended for human occupancy shall be provided with active or passive space-heating systems capable of maintaining an indoor tem-

INTERNATIONAL CODE COUNCIL®
Copyright © 2019 ICC & NYSDOS. ALL RIGHTS RESERVED. Accessed by Lauren Gualdino (lgualdino@briarcliffmanor.org), (-) Order Number #100880972 on May 08, 2020 07:05 AM (PDT) pursuant to License Agreement with ICC & NYSDOS. No further reproduction, no

100880972

perature of not less than 68°F (20°C) at a point 3 feet (914 mm) above floor on the design heating day. The installation of portable space heaters shall not be used to achieve compliance with this section.

Exceptions:

1. Interior spaces where the primary purpose is not associated with human comfort.
2. Group F, H, S and U occupancies.

SECTION 310
EXPLOSION CONTROL

[F] 310.1 Required. Structures occupied for purposes involving explosion hazards shall be provided with explosion control where required by the *Fire Code of New York State*. Explosion control systems shall be designed and installed in accordance with Section 911 of the *Fire Code of New York State*.

SECTION 311
SMOKE AND HEAT VENTS

[F] 311.1 Required. *Approved* smoke and heat vents shall be installed in the roofs of one-story buildings where required by the *Fire Code of New York State*. Smoke and heat vents shall be designed and installed in accordance with the *Fire Code of New York State*.

SECTION 312
HEATING AND COOLING LOAD CALCULATIONS

312.1 Load calculations. Heating and cooling system design loads for the purpose of sizing systems, appliances and *equipment* shall be determined in accordance with the procedures described in the ASHRAE/ACCA Standard 183. Alternatively, design loads shall be determined by an *approved* equivalent computation procedure, using the design parameters specified in Chapter 3 [CE] of the *Energy Conservation Construction Code of New York State*.

TABLE 308.4.2
CLEARANCE REDUCTION METHODS[b]

TYPE OF PROTECTIVE ASSEMBLY[a]	REDUCED CLEARANCE WITH PROTECTION (inches)[a]							
	Horizontal combustible assemblies located above the heat source				Horizontal combustible assemblies located beneath the heat source and all vertical combustible assemblies			
	Required clearance to combustibles without protection (inches)[a]				Required clearance to combustibles without protection (inches)			
	36	18	9	6	36	18	9	6
Galvanized sheet steel, having a minimum thickness of 0.0236 inch (No. 24 gage), mounted on 1-inch glass fiber or mineral wool batt reinforced with wire on the back, 1 inch off the combustible assembly	18	9	5	3	12	6	3	3
Galvanized sheet steel, having a minimum thickness of 0.0236 inch (No. 24 gage), spaced 1 inch off the combustible assembly	18	9	5	3	12	6	3	2
Two layers of galvanized sheet steel, having a minimum thickness of 0.0236 inch (No. 24 gage), having a 1-inch airspace between layers, spaced 1 inch off the combustible assembly	18	9	5	3	12	6	3	3
Two layers of galvanized sheet steel, having a minimum thickness of 0.0236 inch (No. 24 gage), having 1 inch of fiberglass insulation between layers, spaced 1 inch off the combustible assembly	18	9	5	3	12	6	3	3
0.5-inch inorganic insulating board, over 1 inch of fiberglass or mineral wool batt, against the combustible assembly	24	12	6	4	18	9	5	3
$3^1/_2$-inch brick wall, spaced 1 inch off the combustible wall	—	—	—	—	12	6	6	6
$3^1/_2$-inch brick wall, against the combustible wall	—	—	—	—	24	12	6	5

For SI: 1 inch = 25.4 mm, °C = [(°F) - 32]/1.8, 1 pound per cubic foot = 16.02 kg/m^3, 1.0 Btu • in/(ft^2 • h • °F) = 0.144 W/m^2 • K.

a. Mineral wool and glass fiber batts (blanket or board) shall have a minimum density of 8 pounds per cubic foot and a minimum melting point of 1,500°F. Insulation material utilized as part of a clearance reduction system shall have a thermal conductivity of 1.0 Btu • in/(ft^2 • h • °F) or less. Insulation board shall be formed of noncombustible material.

b. For limitations on clearance reduction for solid fuel-burning appliances, masonry chimneys, connector pass-throughs, masonry fire places and kitchen ducts, see Sections 308.4.2.1 through 308.4.2.5.

INTERNATIONAL CODE COUNCIL®
Copyright © 2019 ICC & NYSDOS. ALL RIGHTS RESERVED. Accessed by Lauren Gualdino (lgualdino@briarcliffmanor.org), (-) Order Number #100880972 on May 08, 2020 07:05 AM (PDT) pursuant to License Agreement with ICC & NYSDOS. No further reproduction, no

100880972

INTERNATIONAL CODE COUNCIL®
Copyright © 2019 ICC & NYSDOS. ALL RIGHTS RESERVED. Accessed by Lauren Gualdino (lgualdino@briarcliffmanor.org), (-) Order Number #100880972 on May 08, 2020 07:05 AM (PDT) pursuant to License Agreement with ICC & NYSDOS. No further reproduction, no

100880972

CHAPTER 4
VENTILATION

SECTION 401
GENERAL

401.1 Scope. This chapter shall govern the ventilation of spaces within a building intended to be occupied. Mechanical exhaust systems, including exhaust systems serving clothes dryers and cooking appliances; hazardous exhaust systems; dust, stock and refuse conveyor systems; subslab soil exhaust systems; smoke control systems; energy recovery ventilation systems and other systems specified in Section 502 shall comply with Chapter 5.

[NY] 401.2 Ventilation required. Every occupied space shall be ventilated by natural means in accordance with Section 402 or by mechanical means in accordance with Section 403. All dwelling units, where natural ventilation is proposed, shall be tested in accordance with Section R402.4.1.2 of the *Energy Conservation Construction Code of New York State*. Where the air infiltration rate is less than 5 air changes per hour when tested with a blower door at a pressure of 0.2-inch water column (50 Pa), the dwelling unit shall be ventilated by mechanical means in accordance with Section 403. Ambulatory care facilities and Group I-2 occupancies shall be ventilated by mechanical means in accordance with Section 407.

401.3 When required. Ventilation shall be provided during the periods that the room or space is occupied.

401.4 Intake opening location. Air intake openings shall comply with all of the following:

1. Intake openings shall be located not less than 10 feet (3048 mm) from lot lines or buildings on the same lot.
2. Mechanical and gravity outdoor air intake openings shall be located not less than 10 feet (3048 mm) horizontally from any hazardous or noxious contaminant source, such as vents, streets, alleys, parking lots and loading docks, except as specified in Item 3 or Section 501.3.1. Outdoor air intake openings shall be permitted to be located less than 10 feet (3048 mm) horizontally from streets, alleys, parking lots and loading docks provided that the openings are located not less than 25 feet (7620 mm) vertically above such locations. Where openings front on a street or public way, the distance shall be measured from the closest edge of the street or public way.
3. Intake openings shall be located not less than 3 feet (914 mm) below contaminant sources where such sources are located within 10 feet (3048 mm) of the opening.
4. Intake openings on structures in flood hazard areas shall be at or above the elevation required by Section 1612 of the *Building Code of New York State* for utilities and attendant equipment.

401.5 Intake opening protection. Air intake openings that terminate outdoors shall be protected with corrosion-resistant screens, louvers or grilles. Openings in louvers, grilles and screens shall be sized in accordance with Table 401.5, and shall be protected against local weather conditions. Louvers that protect air intake openings in structures located in hurricane-prone regions, as defined in the *Building Code of New York State*, shall comply with AMCA 550. Outdoor air intake openings located in exterior walls shall meet the provisions for exterior wall opening protectives in accordance with the *Building Code of New York State.*

TABLE 401.5
OPENING SIZES IN LOUVERS, GRILLES AND SCREENS PROTECTING AIR INTAKE OPENINGS

OUTDOOR OPENING TYPE	MINIMUM AND MAXIMUM OPENING SIZES IN LOUVERS, GRILLES AND SCREENS[a]
Intake openings in residential occupancies	Not < $^1/_4$ inch and not > $^1/_2$ inch
Intake openings in other than residential occupancies	> $^1/_4$ inch and not > 1 inch

For SI: 1 inch = 25.4 mm.

a. For rectangular openings, the table requirements apply to the shortest side. For round openings, the table requirements apply to the diameter. For square openings, the table requirements apply to any side.

401.6 Contaminant sources. Stationary local sources producing airborne particulates, heat, odors, fumes, spray, vapors, smoke or gases in such quantities as to be irritating or injurious to health shall be provided with an exhaust system in accordance with Chapter 5 or a means of collection and removal of the contaminants. Such exhaust shall discharge directly to an *approved* location at the exterior of the building.

SECTION 402
NATURAL VENTILATION

[BG] 402.1 Natural ventilation. *Natural ventilation* of an occupied space shall be through windows, doors, louvers or other openings to the outdoors. The operating mechanism for such openings shall be provided with ready access so that the openings are readily controllable by the building occupants.

[BG] 402.2 Ventilation area required. The minimum openable area to the outdoors shall be 4 percent of the floor area being ventilated.

[BG] 402.3 Adjoining spaces. Where rooms and spaces without openings to the outdoors are ventilated through an adjoining room, the opening to the adjoining rooms shall be unobstructed and shall have an area not less than 8 percent of the floor area of the interior room or space, but not less than 25 square feet (2.3 m^2). The minimum openable area to the outdoors shall be based on the total floor area being ventilated.

Exception: Exterior openings required for ventilation shall be permitted to open into a thermally isolated sunroom addition or patio cover, provided that the openable area between the sunroom addition or patio cover and the interior room has an area of not less than 8 percent of the floor area of the interior room or space, but not less than

INTERNATIONAL CODE COUNCIL®
Copyright © 2019 ICC & NYSDOS. ALL RIGHTS RESERVED. Accessed by Lauren Gualdino (lgualdino@briarcliffmanor.org), (-) Order Number #100880972 on May 08, 2020 07:05 AM (PDT) pursuant to License Agreement with ICC & NYSDOS. No further reproduction, no

100880972

20 square feet (1.86 m^2). The minimum openable area to the outdoors shall be based on the total floor area being ventilated.

[BG] 402.4 Openings below grade. Where openings below grade provide required *natural ventilation*, the outdoor horizontal clear space measured perpendicular to the opening shall be one and one-half times the depth of the opening. The depth of the opening shall be measured from the average adjoining ground level to the bottom of the opening.

SECTION 403
MECHANICAL VENTILATION

403.1 Ventilation system. Mechanical ventilation shall be provided by a method of supply air and return or *exhaust air* except that mechanical ventilation air requirements for Group R-2, R-3 and R-4 occupancies three stories and less in height above grade plane shall be provided by an exhaust system, supply system or combination thereof. The amount of supply air shall be approximately equal to the amount of return and *exhaust air*. The system shall not be prohibited from producing negative or positive pressure. The system to convey *ventilation air* shall be designed and installed in accordance with Chapter 6.

403.2 Outdoor air required. The minimum outdoor airflow rate shall be determined in accordance with Section 403.3.

Exception: Where the *registered design professional* demonstrates that an engineered ventilation system design will prevent the maximum concentration of contaminants from exceeding that obtainable by the rate of outdoor air ventilation determined in accordance with Section 403.3, the minimum required rate of outdoor air shall be reduced in accordance with such engineered system design.

403.2.1 Recirculation of air. The outdoor air required by Section 403.3 shall not be recirculated. Air in excess of that required by Section 403.3 shall not be prohibited from being recirculated as a component of supply air to building spaces, except that:

1. Ventilation air shall not be recirculated from one *dwelling* to another or to dissimilar occupancies.
2. Supply air to a swimming pool and associated deck areas shall not be recirculated unless such air is dehumidified to maintain the relative humidity of the area at 60 percent or less. Air from this area shall not be recirculated to other spaces where more than 10 percent of the resulting supply airstream consists of air recirculated from these spaces.
3. Where mechanical exhaust is required by Note b in Table 403.3.1.1, recirculation of air from such spaces shall be prohibited. Recirculation of air that is contained completely within such spaces shall not be prohibited. Where recirculation of air is prohibited, all air supplied to such spaces shall be exhausted, including any air in excess of that required by Table 403.3.1.1.
4. Where mechanical exhaust is required by Note g in Table 403.3.1.1, mechanical exhaust is required and recirculation from such spaces is prohibited where more than 10 percent of the resulting supply airstream consists of air recirculated from these spaces. Recirculation of air that is contained completely within such spaces shall not be prohibited.

403.2.2 Transfer air. Except where recirculation from such spaces is prohibited by Table 403.3.1.1, air transferred from occupiable spaces is not prohibited from serving as *makeup air* for required exhaust systems in such spaces as kitchens, baths, toilet rooms, elevators and smoking lounges. The amount of transfer air and *exhaust air* shall be sufficient to provide the flow rates as specified in Section 403.3.1.1. The required outdoor airflow rates specified in Table 403.3.1.1 shall be introduced directly into such spaces or into the occupied spaces from which air is transferred or a combination of both.

403.3 Outdoor air and local exhaust airflow rates. Group R-2, R-3 and R-4 occupancies three stories and less in height above grade plane shall be provided with outdoor air and local exhaust in accordance with Section 403.3.2. Other buildings intended to be occupied shall be provided with outdoor air and local exhaust in accordance with Section 403.3.1.

403.3.1 Other buildings intended to be occupied. The design of local exhaust systems and ventilation systems for outdoor air for occupancies other than Group R-2, R-3 and R-4 three stories and less above grade plane shall comply with Sections 403.3.1.1 through 403.3.1.5.

403.3.1.1 Outdoor airflow rate. Ventilation systems shall be designed to have the capacity to supply the minimum outdoor airflow rate, determined in accordance with this section. In each occupiable space, the ventilation system shall be designed to deliver the required rate of outdoor airflow to the *breathing zone*. The occupant load utilized for design of the ventilation system shall be not less than the number determined from the estimated maximum occupant load rate indicated in Table 403.3.1.1. Ventilation rates for occupancies not represented in Table 403.3.1.1 shall be those for a listed *occupancy* classification that is most similar in terms of occupant density, activities and building construction; or shall be determined by an *approved* engineering analysis. The ventilation system shall be designed to supply the required rate of *ventilation air* continuously during the period the building is occupied, except as otherwise stated in other provisions of the code.

With the exception of smoking lounges, the ventilation rates in Table 403.3.1.1 are based on the absence of smoking in occupiable spaces. Where smoking is anticipated in a space other than a smoking lounge, the ventilation system serving the space shall be designed to provide ventilation over and above that required by Table 403.3.1.1 in accordance with accepted engineering practice.

Exception: The occupant load is not required to be determined based on the estimated maximum occupant load rate indicated in Table 403.3.1.1 where *approved* statistical data document the accuracy of an alternate anticipated occupant density.

INTERNATIONAL CODE COUNCIL®
Copyright © 2019 ICC & NYSDOS. ALL RIGHTS RESERVED. Accessed by Lauren Gualdino (lgualdino@briarcliffmanor.org), (-) Order Number #100880972 on May 08, 2020 07:05 AM (PDT) pursuant to License Agreement with ICC & NYSDOS. No further reproduction, no

100880972

403.3.1.1.1 Zone outdoor airflow. The minimum outdoor airflow required to be supplied to each zone shall be determined as a function of *occupancy* classification and space air distribution effectiveness in accordance with Sections 403.3.1.1.1.1 through 403.3.1.1.1.3.

403.3.1.1.1.1 Breathing zone outdoor airflow. The outdoor airflow rate required in the *breathing zone* (V_{bz}) of the *occupiable space* or spaces in a zone shall be determined in accordance with Equation 4-1.

$$V_{bz} = R_p P_z + R_a A_z \quad \textbf{(Equation 4-1)}$$

where:

A_z = Zone floor area: the *net occupiable floor area* of the space or spaces in the zone.

P_z = Zone population: the number of people in the space or spaces in the zone.

R_p = People outdoor air rate: the outdoor airflow rate required per person from Table 403.3.1.1.

R_a = Area outdoor air rate: the outdoor airflow rate required per unit area from Table 403.3.1.1.

403.3.1.1.1.2 Zone air distribution effectiveness. The zone air distribution effectiveness (E_z) shall be determined using Table 403.3.1.1.1.2.

TABLE 403.3.1.1.1.2
ZONE AIR DISTRIBUTION EFFECTIVENESS[a,b,c,d]

AIR DISTRIBUTION CONFIGURATION	E_z
Ceiling or floor supply of cool air	1.0[e]
Ceiling or floor supply of warm air and floor return	1.0
Ceiling supply of warm air and ceiling return	0.8[f]
Floor supply of warm air and ceiling return	0.7
Makeup air drawn in on the opposite side of the room from the exhaust or return	0.8
Makeup air drawn in near to the exhaust or return location	0.5

For SI: 1 foot = 304.8 mm, 1 foot per minute = 0.00506 m/s,
°C = [(°F) – 32]/1.8.

a. "Cool air" is air cooler than space temperature.

b. "Warm air" is air warmer than space temperature.

c. "Ceiling" includes any point above the breathing zone.

d. "Floor" includes any point below the breathing zone.

e. Zone air distribution effectiveness of 1.2 shall be permitted for systems with a floor supply of cool air and ceiling return, provided that low-velocity displacement ventilation achieves unidirectional flow and thermal stratification.

f. Zone air distribution effectiveness of 1.0 shall be permitted for systems with a ceiling supply of warm air, provided that supply air temperature is less than 15°F above space temperature and provided that the 150-foot-per-minute supply air jet reaches to within $4^1/_2$ feet of floor level.

403.3.1.1.1.3 Zone outdoor airflow. The zone outdoor airflow rate (V_{oz}), shall be determined in accordance with Equation 4-2.

$$V_{oz} = \frac{V_{bz}}{E_z} \quad \textbf{(Equation 4-2)}$$

403.3.1.1.2 System outdoor airflow. The outdoor air required to be supplied by each ventilation system shall be determined in accordance with Sections 403.3.1.1.2.1 through 403.3.1.1.2.3.4 as a function of system type and zone outdoor airflow rates.

403.3.1.1.2.1 Single zone systems. Where one air handler supplies a mixture of outdoor air and recirculated return air to only one zone, the system outdoor air intake flow rate (V_{ot}) shall be determined in accordance with Equation 4-3.

$$V_{ot} = V_{oz} \quad \textbf{(Equation 4-3)}$$

403.3.1.1.2.2 100-percent outdoor air systems. Where one air handler supplies only outdoor air to one or more zones, the system outdoor air intake flow rate (V_{ot}) shall be determined using Equation 4-4.

$$V_{ot} = \Sigma_{all\ zones} V_{oz} \quad \textbf{(Equation 4-4)}$$

403.3.1.1.2.3 Multiple zone recirculating systems. Where one air handler supplies a mixture of outdoor air and recirculated return air to more than one zone, the system outdoor air intake flow rate (V_{ot}) shall be determined in accordance with Sections 403.3.1.1.2.3.1 through 403.3.1.1.2.3.4.

403.3.1.1.2.3.1 Primary outdoor air fraction. The primary outdoor air fraction (Z_p) shall be determined for each zone in accordance with Equation 4-5.

$$Z_p = \frac{V_{oz}}{V_{pz}} \quad \textbf{(Equation 4-5)}$$

where:

V_{pz} = Primary airflow: The airflow rate supplied to the zone from the air-handling unit at which the outdoor air intake is located. It includes outdoor intake air and recirculated air from that air-handling unit but does not include air transferred or air recirculated to the zone by other means. For design purposes, V_{pz} shall be the zone design primary airflow rate, except for zones with variable air volume supply and V_{pz} shall be the lowest expected primary airflow rate to the zone when it is fully occupied.

403.3.1.1.2.3.2 System ventilation efficiency. The system ventilation efficiency (E_v) shall be determined using Table 403.3.1.1.2.3.2 or Appendix A of ASHRAE 62.1.

INTERNATIONAL CODE COUNCIL®
Copyright © 2019 ICC & NYSDOS. ALL RIGHTS RESERVED. Accessed by Lauren Gualdino (lgualdino@briarcliffmanor.org), (-) Order Number #100880972 on May 08, 2020 07:05 AM (PDT) pursuant to License Agreement with ICC & NYSDOS. No further reproduction, no

100880972

TABLE 403.3.1.1.2.3.2
SYSTEM VENTILATION EFFICIENCY[a,b]

Max (Z_p)	E_v
≤ 0.15	1
≤ 0.25	0.9
≤ 0.35	0.8
≤ 0.45	0.7
≤ 0.55	0.6
≤ 0.65	0.5
≤ 0.75	0.4
> 0.75	0.3

a. *Max* (Z_p) is the largest value of Z_p calculated using Equation 4-5 among all the zones served by the system.

b. Interpolating between table values shall be permitted.

403.3.1.1.2.3.3 Uncorrected outdoor air intake. The uncorrected outdoor air intake flow rate (V_{ou}) shall be determined in accordance with Equation 4-6.

$$V_{ou} = D\Sigma_{all\ zones}R_pP_z + \Sigma_{all\ zones}R_aA_z$$

(Equation 4-6)

where:

D = Occupant diversity: the ratio of the system population to the sum of the zone populations, determined in accordance with Equation 4-7.

$$D = \frac{P_s}{\Sigma_{all\ zones}P_z}$$

(Equation 4-7)

where:

P_s = System population: The total number of occupants in the area served by the system. For design purposes, P_s shall be the maximum number of occupants expected to be concurrently in all zones served by the system.

403.3.1.1.2.3.4 Outdoor air intake flow rate. The outdoor air intake flow rate (V_{ot}) shall be determined in accordance with Equation 4-8.

$$V_{ot} = \frac{V_{ou}}{E_v}$$

(Equation 4-8)

403.3.1.2 Exhaust ventilation. Exhaust airflow rate shall be provided in accordance with the requirements of Table 403.3.1.1. Outdoor air introduced into a space by an exhaust system shall be considered as contributing to the outdoor airflow required by Table 403.3.1.1.

403.3.1.3 System operation. The minimum flow rate of outdoor air that the ventilation system must be capable of supplying during its operation shall be permitted to be based on the rate per person indicated in Table 403.3.1.1 and the actual number of occupants present.

403.3.1.4 Variable air volume system control. Variable air volume air distribution systems, other than those designed to supply only 100-percent outdoor air, shall be provided with controls to regulate the flow of outdoor air. Such control system shall be designed to maintain the flow rate of outdoor air at a rate of not less than that required by Section 403.3 over the entire range of supply air operating rates.

403.3.1.5 Balancing. The *ventilation* air distribution system shall be provided with means to adjust the system to achieve not less than the minimum ventilation airflow rate as required by Sections 403.3 and 403.3.1.2. Ventilation systems shall be balanced by an *approved* method. Such balancing shall verify that the ventilation system is capable of supplying and exhausting the airflow rates required by Sections 403.3 and 403.3.1.2.

403.3.2 Group R-2, R-3 and R-4 occupancies, three stories and less. The design of local exhaust systems and ventilation systems for outdoor air in Group R-2, R-3 and R-4 occupancies three stories and less in height above grade plane shall comply with Sections 403.3.2.1 through 403.3.2.5.

403.3.2.1 Outdoor air for dwelling units. An outdoor air ventilation system consisting of a mechanical exhaust system, supply system or combination thereof shall be installed for each dwelling unit. Local exhaust or supply systems, including outdoor air ducts connected to the return side of an air handler, are permitted to serve as such a system. The outdoor air ventilation system shall be designed to provide the required rate of outdoor air continuously during the period that the building is occupied. The minimum continuous outdoor airflow rate shall be determined in accordance with Equation 4-9.

$$Q_{OA} = 0.01A_{floor} + 7.5(N_{br} + 1)$$

(Equation 4-9)

where:

Q_{OA} = outdoor airflow rate, cfm

A_{floor} = floor area, ft^2

N_{br} = number of bedrooms; not to be less than one

Exception: The outdoor air ventilation system is not required to operate continuously where the system has controls that enable operation for not less than 1 hour of each 4-hour period. The average outdoor airflow rate over the 4-hour period shall be not less than that prescribed by Equation 4-9.

403.3.2.2 Outdoor air for other spaces. Corridors and other common areas within the conditioned space shall be provided with outdoor air at a rate of not less than 0.06 cfm per square foot of floor area.

403.3.2.3 Local exhaust. Local exhaust systems shall be provided in kitchens, bathrooms and toilet rooms and shall have the capacity to exhaust the minimum airflow rate determined in accordance with Table 403.3.2.3.

INTERNATIONAL CODE COUNCIL®
Copyright © 2019 ICC & NYSDOS. ALL RIGHTS RESERVED. Accessed by Lauren Gualdino (lgualdino@briarcliffmanor.org), (-) Order Number #100880972 on May 08, 2020 07:05 AM (PDT) pursuant to License Agreement with ICC & NYSDOS. No further reproduction, no

100880972

TABLE 403.3.2.3
MINIMUM REQUIRED LOCAL EXHAUST RATES FOR GROUP R-2, R-3, AND R-4 OCCUPANCIES

AREA TO BE EXHAUSTED	EXHAUST RATE CAPACITY
Kitchens	100 cfm intermittent or 25 cfm continuous
Bathrooms and toilet rooms	50 cfm intermittent or 20 cfm continuous

For SI: 1 cubic foot per minute = 0.0004719 m^3/s.

403.3.2.4 System controls. Where provided within a dwelling unit, controls for outdoor air ventilation systems shall include text or a symbol indicating the system's function.

403.3.2.5 Ventilating equipment. Exhaust equipment serving single dwelling units shall be listed and labeled to provide the minimum required air flow in accordance with ANSI/AMCA 210-ANSI/ASHRAE 51.

SECTION 404
ENCLOSED PARKING GARAGES

404.1 Enclosed parking garages. Mechanical ventilation systems for enclosed parking garages shall operate continuously or shall be automatically operated by means of carbon monoxide detectors applied in conjunction with nitrogen dioxide detectors. Such detectors shall be listed in accordance with UL 2075 and installed in accordance with their listing and the manufacturers' instructions. Automatic operation shall cycle the ventilation system between the following two modes of operation:

1. Full-on at an airflow rate of not less than 0.75 cfm per square foot [0.0038 $m^3/(s \cdot m^2)$] of the floor area served.
2. Standby at an airflow rate of not less than 0.05 cfm per square foot [0.00025 $m^3/(s \cdot m^2)$] of the floor area served.

404.2 Occupied spaces accessory to public garages. Connecting offices, waiting rooms, ticket booths and similar uses that are accessory to a public garage shall be maintained at a positive pressure and shall be provided with ventilation in accordance with Section 403.3.1.

SECTION 405
SYSTEMS CONTROL

405.1 General. Mechanical ventilation systems shall be provided with manual or automatic controls that will operate such systems whenever the spaces are occupied. Air-conditioning systems that supply required *ventilation air* shall be provided with controls designed to automatically maintain the required outdoor air supply rate during occupancy.

SECTION 406
VENTILATION OF UNINHABITED SPACES

406.1 General. Uninhabited spaces, such as crawl spaces and attics, shall be provided with *natural ventilation* openings as required by the *Building Code of New York State* or shall be provided with a mechanical exhaust and supply air system. The mechanical exhaust rate shall be not less than 0.02 cfm per square foot (0.00001 $m^3/s \cdot m^2$) of horizontal area and shall be automatically controlled to operate when the relative humidity in the space served exceeds 60 percent.

SECTION 407
AMBULATORY CARE FACILITIES AND GROUP I-2 OCCUPANCIES

407.1 General. Mechanical ventilation for ambulatory care facilities and Group I-2 occupancies shall be designed and installed in accordance with this code and ASHRAE 170.

INTERNATIONAL CODE COUNCIL®
Copyright © 2019 ICC & NYSDOS. ALL RIGHTS RESERVED. Accessed by Lauren Gualdino (lgualdino@briarcliffmanor.org), (-) Order Number #100880972 on May 08, 2020 07:05 AM (PDT) pursuant to License Agreement with ICC & NYSDOS. No further reproduction, no

100880972

TABLE 403.3.1.1
MINIMUM VENTILATION RATES

OCCUPANCY CLASSIFICATION	OCCUPANT DENSITY #/1000 FT^2 [a]	PEOPLE OUTDOOR AIRFLOW RATE IN BREATHING ZONE, R_p CFM/PERSON	AREA OUTDOOR AIRFLOW RATE IN BREATHING ZONE, R_a CFM/FT^2 [a]	EXHAUST AIRFLOW RATE CFM/FT^2 [a]
Correctional facilities				
Booking/waiting	50	7.5	0.06	—
Cells				
without plumbing fixtures	25	5	0.12	—
with plumbing fixtures[g]	25	5	0.12	1.0
Day room	30	5	0.06	—
Dining halls (see "Food and beverage service")	—	—	—	—
Guard stations	15	5	0.06	—
Dry cleaners, laundries				
Coin-operated dry cleaner	20	15	—	—
Coin-operated laundries	20	7.5	0.12	—
Commercial dry cleaner	30	30	—	—
Commercial laundry	10	25	—	—
Storage, pick up	30	7.5	0.12	—
Education				
Art classroom[g]	20	10	0.18	0.7
Auditoriums	150	5	0.06	—
Classrooms (ages 5-8)	25	10	0.12	—
Classrooms (age 9 plus)	35	10	0.12	—
Computer lab	25	10	0.12	—
Corridors (see "Public spaces")	—	—	—	—
Day care (through age 4)	25	10	0.18	—
Lecture classroom	65	7.5	0.06	—
Lecture hall (fixed seats)	150	7.5	0.06	—
Locker/dressing rooms[g]	—	—	—	0.25
Media center	25	10	0.12	—
Multiuse assembly	100	7.5	0.06	—
Music/theater/dance	35	10	0.06	—
Science laboratories[g]	25	10	0.18	1.0
Smoking lounges[b]	70	60	—	—
Sports locker rooms[g]	—	—	—	0.5
Wood/metal shops[g]	20	10	0.18	0.5
Food and beverage service				
Bars, cocktail lounges	100	7.5	0.18	—
Cafeteria, fast food	100	7.5	0.18	—
Dining rooms	70	7.5	0.18	—
Kitchens (cooking)[b]	20	7.5	0.12	0.7

(continued)

INTERNATIONAL CODE COUNCIL®
Copyright © 2019 ICC & NYSDOS. ALL RIGHTS RESERVED. Accessed by Lauren Gualdino (lgualdino@briarcliffmanor.org), (-) Order Number #100880972 on May 08, 2020 07:05 AM (PDT) pursuant to License Agreement with ICC & NYSDOS. No further reproduction, no

100880972

TABLE 403.3.1.1—continued
MINIMUM VENTILATION RATES

OCCUPANCY CLASSIFICATION	OCCUPANT DENSITY #/1000 FT^{2} [a]	PEOPLE OUTDOOR AIRFLOW RATE IN BREATHING ZONE, R_p CFM/PERSON	AREA OUTDOOR AIRFLOW RATE IN BREATHING ZONE, R_a CFM/FT^{2} [a]	EXHAUST AIRFLOW RATE CFM/FT^{2} [a]
Hotels, motels, resorts and dormitories				
Bathrooms/toilet—private[g]	—	—	—	25/50[f]
Bedroom/living room	10	5	0.06	—
Conference/meeting	50	5	0.06	—
Dormitory sleeping areas	20	5	0.06	—
Gambling casinos	120	7.5	0.18	—
Lobbies/prefunction	30	7.5	0.06	—
Multipurpose assembly	120	5	0.06	—
Offices				
Conference rooms	50	5	0.06	—
Main entry lobbies	10	5	0.06	—
Office spaces	5	5	0.06	—
Reception areas	30	5	0.06	—
Telephone/data entry	60	5	0.06	—
Private dwellings, single and multiple				
Garages, common for multiple units[b]	—	—	—	0.75
Kitchens[b]	—	—	—	25/100[f]
Living areas[c]	Based on number of bedrooms. First bedroom, 2; each additional bedroom, 1	0.35 ACH but not less than 15 cfm/person	—	—
Toilet rooms and bathrooms[g]	—	—	—	20/50[f]
Public spaces				
Corridors	—	—	0.06	—
Courtrooms	70	5	0.06	—
Elevator car	—	—	—	1.0
Legislative chambers	50	5	0.06	—
Libraries	10	5	0.12	—
Museums (children's)	40	7.5	0.12	—
Museums/galleries	40	7.5	0.06	—
Places of religious worship	120	5	0.06	—
Shower room (per shower head)[g]	—	—	—	50/20[f]
Smoking lounges[b]	70	60	—	—
Toilet rooms — public[g]	—	—	—	50/70[e]
Retail stores, sales floors and showroom floors				
Dressing rooms	—	—	—	0.25
Mall common areas	40	7.5	0.06	—
Sales	15	7.5	0.12	—
Shipping and receiving	2	10	0.12	—
Smoking lounges[b]	70	60	—	—
Storage rooms	—	—	0.12	—
Warehouses (see "Storage")	—	10	0.06	—

(continued)

INTERNATIONAL CODE COUNCIL®
Copyright © 2019 ICC & NYSDOS. ALL RIGHTS RESERVED. Accessed by Lauren Gualdino (lgualdino@briarcliffmanor.org), (-) Order Number #100880972 on May 08, 2020 07:05 AM (PDT) pursuant to License Agreement with ICC & NYSDOS. No further reproduction, no

100880972

TABLE 403.3.1.1—continued
MINIMUM VENTILATION RATES

OCCUPANCY CLASSIFICATION	OCCUPANT DENSITY #/1000 FT^{2} [a]	PEOPLE OUTDOOR AIRFLOW RATE IN BREATHING ZONE, R_p CFM/PERSON	AREA OUTDOOR AIRFLOW RATE IN BREATHING ZONE, R_a CFM/FT^{2} [a]	EXHAUST AIRFLOW RATE CFM/FT^{2} [a]
Specialty shops				
Automotive motor-fuel dispensing stations[b]	—	—	—	1.5
Barber	25	7.5	0.06	0.5
Beauty salons[b]	25	20	0.12	0.6
Nail salons [b, h]	25	20	0.12	0.6
Embalming room[b]	—	—	—	2.0
Pet shops (animal areas)[b]	10	7.5	0.18	0.9
Supermarkets	8	7.5	0.06	—
Sports and amusement				
Bowling alleys (seating areas)	40	10	0.12	—
Disco/dance floors	100	20	0.06	—
Game arcades	20	7.5	0.18	—
Gym, stadium, arena (play area)	7	20	0.18	—
Health club/aerobics room	40	20	0.06	—
Health club/weight room	10	20	0.06	—
Ice arenas without combustion engines	—	—	0.30	0.5
Spectator areas	150	7.5	0.06	—
Swimming pools (pool and deck area)	—	—	0.48	—
Storage				
Repair garages, enclosed parking garages[b,d]	—	—	—	0.75
Refrigerated warehouses/freezers	—	10	—	—
Warehouses	—	10	0.06	—
Theaters				
Auditoriums (see “Education”)	—	—	—	—
Lobbies	150	5	0.06	—
Stages, studios	70	10	0.06	—
Ticket booths	60	5	0.06	—
Transportation				
Platforms	100	7.5	0.06	—
Transportation waiting	100	7.5	0.06	—

(continued)

INTERNATIONAL CODE COUNCIL®
Copyright © 2019 ICC & NYSDOS. ALL RIGHTS RESERVED. Accessed by Lauren Gualdino (lgualdino@briarcliffmanor.org), (-) Order Number #100880972 on May 08, 2020 07:05 AM (PDT) pursuant to License Agreement with ICC & NYSDOS. No further reproduction, no

100880972

TABLE 403.3.1.1—continued
MINIMUM VENTILATION RATES

OCCUPANCY CLASSIFICATION	OCCUPANT DENSITY #/1000 FT^2 [a]	PEOPLE OUTDOOR AIRFLOW RATE IN BREATHING ZONE, R_p CFM/PERSON	AREA OUTDOOR AIRFLOW RATE IN BREATHING ZONE, R_a CFM/FT^2 [a]	EXHAUST AIRFLOW RATE CFM/FT^2 [a]
Workrooms				
Bank vaults/safe deposit	5	5	0.06	—
Computer (without printing)	4	5	0.06	—
Copy, printing rooms	4	5	0.06	0.5
Darkrooms	—	—	—	1.0
Meat processing[c]	10	15	—	—
Pharmacy (prep. area)	10	5	0.18	—
Photo studios	10	5	0.12	—

For SI: 1 cubic foot per minute = 0.0004719 m^3/s, 1 ton = 908 kg, 1 cubic foot per minute per square foot = 0.00508 $m^3/(s \cdot m^2)$, °C = [(°F) - 32]/1.8, 1 square foot = 0.0929 m^2.

a. Based on net occupiable floor area.

b. Mechanical exhaust required and the recirculation of air from such spaces is prohibited. Recirculation of air that is contained completely within such spaces shall not be prohibited (see Section 403.2.1, Item 3).

c. Spaces unheated or maintained below 50°F are not covered by these requirements unless the occupancy is continuous.

d. Ventilation systems in enclosed parking garages shall comply with Section 404.

e. Rates are per water closet or urinal. The higher rate shall be provided where the exhaust system is designed to operate intermittently. The lower rate shall be permitted only where the exhaust system is designed to operate continuously while occupied.

f. Rates are per room unless otherwise indicated. The higher rate shall be provided where the exhaust system is designed to operate intermittently. The lower rate shall be permitted only where the exhaust system is designed to operate continuously while occupied.

g. Mechanical exhaust is required and recirculation from such spaces is prohibited except that recirculation shall be permitted where the resulting supply airstream consists of not more than 10 percent air recirculated from these spaces. Recirculation of air that is contained completely within such spaces shall not be prohibited (see Section 403.2.1, Items 2 and 4).

h. For nail salons, each manicure and pedicure station shall be provided with a source capture system capable of exhausting not less than 50 cfm per station. Exhaust inlets shall be located in accordance with Section 502.20. Where one or more required source capture systems operate continuously during occupancy, the exhaust rate from such systems shall be permitted to be applied to the exhaust flow rate required by Table 403.3.1.1 for the nail salon.

INTERNATIONAL CODE COUNCIL®
Copyright © 2019 ICC & NYSDOS. ALL RIGHTS RESERVED. Accessed by Lauren Gualdino (lgualdino@briarcliffmanor.org), (-) Order Number #100880972 on May 08, 2020 07:05 AM (PDT) pursuant to License Agreement with ICC & NYSDOS. No further reproduction, no

100880972

INTERNATIONAL CODE COUNCIL®
Copyright © 2019 ICC & NYSDOS. ALL RIGHTS RESERVED. Accessed by Lauren Gualdino (lgualdino@briarcliffmanor.org), (-) Order Number #100880972 on May 08, 2020 07:05 AM (PDT) pursuant to License Agreement with ICC & NYSDOS. No further reproduction, no

100880972

CHAPTER 5
EXHAUST SYSTEMS

SECTION 501
GENERAL

501.1 Scope. This chapter shall govern the design, construction and installation of mechanical exhaust systems, including exhaust systems serving clothes dryers and cooking appliances; hazardous exhaust systems; dust, stock and refuse conveyor systems; subslab soil exhaust systems; smoke control systems; energy recovery ventilation systems and other systems specified in Section 502.

501.2 Independent system required. Single or combined mechanical exhaust systems for environmental air shall be independent of all other exhaust systems. Dryer exhaust shall be independent of all other systems. Type I exhaust systems shall be independent of all other exhaust systems except as provided in Section 506.3.5. Single or combined Type II exhaust systems for food-processing operations shall be independent of all other exhaust systems. Kitchen exhaust systems shall be constructed in accordance with Section 505 for domestic cooking operations and Sections 506 through 509 for commercial cooking operations.

501.3 Exhaust discharge. The air removed by every mechanical exhaust system shall be discharged outdoors at a point where it will not cause a public nuisance and not less than the distances specified in Section 501.3.1. The air shall be discharged to a location from which it cannot again be readily drawn in by a ventilating system. Air shall not be exhausted into an attic, crawl space, or be directed onto walkways.

Exceptions:

1. Whole-house ventilation-type attic fans shall be permitted to discharge into the attic space of *dwelling units* having private attics.
2. Commercial cooking recirculating systems.
3. Where installed in accordance with the manufacturer's instructions and where mechanical or *natural ventilation* is otherwise provided in accordance with Chapter 4, *listed* and *labeled* domestic ductless range hoods shall not be required to discharge to the outdoors.

501.3.1 Location of exhaust outlets. The termination point of exhaust outlets and ducts discharging to the outdoors shall be located with the following minimum distances:

1. For ducts conveying explosive or flammable vapors, fumes or dusts: 30 feet (9144 mm) from property lines; 10 feet (3048 mm) from operable openings into buildings; 6 feet (1829 mm) from exterior walls and roofs; 30 feet (9144 mm) from combustible walls and operable openings into buildings that are in the direction of the exhaust discharge; 10 feet (3048 mm) above adjoining grade.
2. For other product-conveying outlets: 10 feet (3048 mm) from the property lines; 3 feet (914 mm) from exterior walls and roofs; 10 feet (3048 mm) from operable openings into buildings; 10 feet (3048 mm) above adjoining grade.
3. For all *environmental air* exhaust: 3 feet (914 mm) from property lines; 3 feet (914 mm) from operable openings into buildings for all occupancies other than Group U, and 10 feet (3048 mm) from mechanical air intakes. Such exhaust shall not be considered hazardous or noxious.
4. Exhaust outlets serving structures in flood hazard areas shall be installed at or above the elevation required by Section 1612 of the *Building Code of New York State* for utilities and attendant equipment.
5. For specific systems, see the following sections:
   - 5.1. Clothes dryer exhaust, Section 504.4.
   - 5.2. Kitchen hoods and other kitchen exhaust *equipment*, Sections 506.3.13, 506.4 and 506.5.
   - 5.3. Dust, stock and refuse conveying systems, Section 511.2.
   - 5.4. Subslab soil exhaust systems, Section 512.4.
   - 5.5. Smoke control systems, Section 513.10.3.
   - 5.6. Refrigerant discharge, Section 1105.7.
   - 5.7. Machinery room discharge, Section 1105.6.1.

501.3.2 Exhaust opening protection. Exhaust openings that terminate outdoors shall be protected with corrosion-resistant screens, louvers or grilles. Openings in screens, louvers and grilles shall be sized not less than $^1/_4$ inch (6.4 mm) and not larger than $^1/_2$ inch (12.7 mm). Openings shall be protected against local weather conditions. Louvers that protect exhaust openings in structures located in hurricane-prone regions, as defined in the *Building Code of New York State*, shall comply with AMCA Standard 550. Outdoor openings located in exterior walls shall meet the provisions for exterior wall opening protectives in accordance with the *Building Code of New York State*.

501.4 Pressure equalization. Mechanical exhaust systems shall be sized to remove the quantity of air required by this chapter to be exhausted. The system shall operate when air is required to be exhausted. Where mechanical exhaust is required in a room or space in other than occupancies in Group R-3 and *dwelling units* in Group R-2, such space shall be maintained with a neutral or negative pressure. If a greater quantity of air is supplied by a mechanical ventilating supply system than is removed by a mechanical exhaust for a room, adequate means shall be provided for the natural or mechanical exhaust of the excess air supplied. If only a mechanical exhaust system is installed for a room or if a greater quantity of air is removed by a mechanical exhaust system than is supplied by a mechanical ventilating supply system for a room,

INTERNATIONAL CODE COUNCIL®
Copyright © 2019 ICC & NYSDOS. ALL RIGHTS RESERVED. Accessed by Lauren Gualdino (lgualdino@briarcliffmanor.org), (-) Order Number #100880972 on May 08, 2020 07:05 AM (PDT) pursuant to License Agreement with ICC & NYSDOS. No further reproduction, no

100880972

adequate *makeup air* shall be provided to satisfy the deficiency.

501.5 Ducts. Where exhaust duct construction is not specified in this chapter, such construction shall comply with Chapter 6.

SECTION 502
REQUIRED SYSTEMS

502.1 General. An exhaust system shall be provided, maintained and operated as specifically required by this section and for all occupied areas where machines, vats, tanks, furnaces, forges, salamanders and other *appliances, equipment* and processes in such areas produce or throw off dust or particles sufficiently light to float in the air, or emit heat, odors, fumes, spray, gas or smoke in such quantities so as to be irritating or injurious to health or safety.

502.1.1 Exhaust location. The inlet to an exhaust system shall be located in the area of heaviest concentration of contaminants.

[F] 502.1.2 Fuel-dispensing areas. The bottom of an air inlet or exhaust opening in fuel-dispensing areas shall be located not more than 18 inches (457 mm) above the floor.

502.1.3 Equipment, appliance and service rooms. *Equipment*, *appliance* and system service rooms that house sources of odors, fumes, noxious gases, smoke, steam, dust, spray or other contaminants shall be designed and constructed so as to prevent spreading of such contaminants to other occupied parts of the building.

[F] 502.1.4 Hazardous exhaust. The mechanical exhaust of high concentrations of dust or hazardous vapors shall conform to the requirements of Section 510.

[F] 502.2 Aircraft fueling and defueling. Compartments housing piping, pumps, air eliminators, water separators, hose reels and similar *equipment* used in aircraft fueling and defueling operations shall be adequately ventilated at floor level or within the floor itself.

[F] 502.3 Battery-charging areas for powered industrial trucks and equipment. Ventilation shall be provided in an *approved* manner in battery-charging areas for powered industrial trucks and *equipment* to prevent a dangerous accumulation of flammable gases.

[NY] 502.4 Energy storage systems. Energy storage systems shall be regulated and ventilated in accordance with Section 1206.13.1 of the *Fire Code of New York State* and the general requirements of this chapter.

[NY] 502.5 Reserved.

➡

[F] 502.6 Dry cleaning plants. Ventilation in dry cleaning plants shall be adequate to protect employees and the public in accordance with this section and DOL 29 CFR Part 1910.1000, where applicable.

[F] 502.6.1 Type II systems. Type II dry cleaning systems shall be provided with a mechanical ventilation system that is designed to exhaust 1 cubic foot of air per minute for each square foot of floor area (1 cfm/ft^2) [0.00508 m^3/(s • m^2)] in dry cleaning rooms and in drying rooms. The ventilation system shall operate automatically when the dry cleaning *equipment* is in operation and shall have manual controls at an *approved* location.

[F] 502.6.2 Type IV and V systems. Type IV and V dry cleaning systems shall be provided with an automatically activated exhaust ventilation system to maintain an air velocity of not less than 100 feet per minute (0.51 m/s) through the loading door when the door is opened.

Exception: Dry cleaning units are not required to be provided with exhaust ventilation where an exhaust hood is installed immediately outside of and above the loading door and operates at an airflow rate as follows:

$$Q = 100 \times A_{LD} \qquad \textbf{(Equation 5-1)}$$

where:

Q = Flow rate exhausted through the hood, cubic feet per minute.

A_{LD} = Area of the loading door, square feet.

[F] 502.6.3 Spotting and pretreating. Scrubbing tubs, scouring, brushing or spotting operations shall be located such that solvent vapors are captured and exhausted by the ventilating system.

[F] 502.7 Application of flammable finishes. Mechanical exhaust as required by this section shall be provided for operations involving the application of flammable finishes.

[F] 502.7.1 During construction. Ventilation shall be provided for operations involving the application of materials containing flammable solvents in the course of construction, *alteration* or demolition of a structure.

502.7.2 Limited spraying spaces. Positive mechanical ventilation that provides not less than six complete air changes per hour shall be installed in limited spraying spaces. Such system shall meet the requirements of the *Fire Code of New York State* for handling flammable vapors. Explosion venting is not required.

[F] 502.7.3 Flammable vapor areas. Mechanical ventilation of flammable vapor areas shall be provided in accordance with Sections 502.7.3.1 through 502.7.3.6.

[F] 502.7.3.1 Operation. Mechanical ventilation shall be kept in operation at all times while spraying operations are being conducted and for a sufficient time thereafter to allow vapors from drying coated articles and finishing material residue to be exhausted. Spraying *equipment* shall be interlocked with the ventilation of the flammable vapor area such that spraying operations cannot be conducted unless the ventilation system is in operation.

INTERNATIONAL CODE COUNCIL®
Copyright © 2019 ICC & NYSDOS. ALL RIGHTS RESERVED. Accessed by Lauren Gualdino (lgualdino@briarcliffmanor.org), (-) Order Number #100880972 on May 08, 2020 07:05 AM (PDT) pursuant to License Agreement with ICC & NYSDOS. No further reproduction, no

100880972

[F] 502.7.3.2 Recirculation. Air exhausted from spraying operations shall not be recirculated.

Exceptions:

1. Air exhausted from spraying operations shall be permitted to be recirculated as *makeup air* for unmanned spray operations provided that:
   1.1. The solid particulate has been removed.
   1.2. The vapor concentration is less than 25 percent of the lower flammable limit (LFL).
   1.3. *Approved equipment* is used to monitor the vapor concentration.
   1.4. An alarm is sounded and spray operations are automatically shut down if the vapor concentration exceeds 25 percent of the LFL.
   1.5. In the event of shutdown of the vapor concentration monitor, 100 percent of the air volume specified in Section 510 is automatically exhausted.
2. Air exhausted from spraying operations is allowed to be recirculated as *makeup air* to manned spraying operations where all of the conditions provided in Exception 1 are included in the installation and documents have been prepared to show that the installation does not pose a life safety hazard to personnel inside the spray booth, spraying space or spray room.

[F] 502.7.3.3 Air velocity. The ventilation system shall be designed, installed and maintained so that the flammable contaminants are diluted in noncontaminated air to maintain concentrations in the exhaust air flow below 25 percent of the contaminant's lower flammable limit (LFL). In addition, the spray booth shall be provided with mechanical ventilation so that the average air velocity through openings is in accordance with Sections 502.7.3.3.1 and 502.7.3.3.2.

[F] 502.7.3.3.1 Open face or open front spray booth. For spray application operations conducted in an open face or open front spray booth, the ventilation system shall be designed, installed and maintained so that the average air velocity into the spray booth through all openings is not less than 100 feet per minute (0.51 m/s).

Exception: For fixed or automated electrostatic spray application equipment, the average air velocity into the spray booth through all openings shall be not less than 50 feet per minute (0.25 m/s).

[F] 502.7.3.3.2 Enclosed spray booth or spray room with openings for product conveyance. For spray application operations conducted in an enclosed spray booth or spray room with openings for product conveyance, the ventilation system shall be designed, installed and maintained so that the average air velocity into the spray booth through openings is not less than 100 feet per minute (0.51 m/s).

Exceptions:

1. For fixed or automated electrostatic spray application equipment, the average air velocity into the spray booth through all openings shall be not less than 50 feet per minute (0.25 m/s).
2. Where methods are used to reduce cross drafts that can draw vapors and overspray through openings from the spray booth or spray room, the average air velocity into the spray booth or spray room shall be that necessary to capture and confine vapors and overspray to the spray booth or spray room.

[F] 502.7.3.4 Ventilation obstruction. Articles being sprayed shall be positioned in a manner that does not obstruct collection of overspray.

[F] 502.7.3.5 Independent ducts. Each spray booth and spray room shall have an independent exhaust duct system discharging to the outdoors.

Exceptions:

1. Multiple spray booths having a combined frontal area of 18 square feet (1.67 m^2) or less are allowed to have a common exhaust where identical spray-finishing material is used in each booth. If more than one fan serves one booth, such fans shall be interconnected so that all fans operate simultaneously.
2. Where treatment of exhaust is necessary for air pollution control or energy conservation, ducts shall be allowed to be manifolded if all of the following conditions are met:
   2.1. The sprayed materials used are compatible and will not react or cause ignition of the residue in the ducts.
   2.2. Nitrocellulose-based finishing material shall not be used.
   2.3. A filtering system shall be provided to reduce the amount of overspray carried into the duct manifold.
   2.4. Automatic sprinkler protection shall be provided at the junction of each booth exhaust with the manifold, in addition to the protection required by this chapter.

[F] 502.7.3.6 Fan motors and belts. Electric motors driving exhaust fans shall not be placed inside booths

INTERNATIONAL CODE COUNCIL®
Copyright © 2019 ICC & NYSDOS. ALL RIGHTS RESERVED. Accessed by Lauren Gualdino (lgualdino@briarcliffmanor.org), (-) Order Number #100880972 on May 08, 2020 07:05 AM (PDT) pursuant to License Agreement with ICC & NYSDOS. No further reproduction, no

100880972

or ducts. Fan rotating elements shall be nonferrous or nonsparking or the casing shall consist of, or be lined with, such material. Belts shall not enter the duct or booth unless the belt and pulley within the duct are tightly enclosed.

[F] 502.7.4 Dipping operations. Flammable vapor areas of dip tank operations shall be provided with mechanical ventilation adequate to prevent the dangerous accumulation of vapors. Required ventilation systems shall be so arranged that the failure of any ventilating fan will automatically stop the dipping conveyor system.

[F] 502.7.5 Electrostatic apparatus. The flammable vapor area in spray-finishing operations involving electrostatic apparatus and devices shall be ventilated in accordance with Section 502.7.3.

[F] 502.7.6 Powder coating. Exhaust ventilation for powder-coating operations shall be sufficient to maintain the atmosphere below one-half of the minimum explosive concentration for the material being applied. Nondeposited, air-suspended powders shall be removed through exhaust ducts to the powder recovery system.

[F] 502.7.7 Floor resurfacing operations. To prevent the accumulation of flammable vapors during floor resurfacing operations, mechanical ventilation at a minimum rate of 1 cfm/ft^2 [0.00508 m^3/(s • m^2)] of area being finished shall be provided. Such exhaust shall be by *approved* temporary or portable means. Vapors shall be exhausted to the outdoors.

[F] 502.8 Hazardous materials—general requirements. Exhaust ventilation systems for structures containing hazardous materials shall be provided as required in Sections 502.8.1 through 502.8.5.

[F] 502.8.1 Storage in excess of the maximum allowable quantities. Indoor storage areas and storage buildings for hazardous materials in amounts exceeding the maximum allowable quantity per control area shall be provided with mechanical exhaust ventilation or *natural ventilation* where *natural ventilation* can be shown to be acceptable for the materials as stored.

Exceptions:

1. Storage areas for flammable solids complying with Section 5904 of the *Fire Code of New York State*.
2. Storage areas and storage buildings for fireworks and explosives complying with Chapter 56 of the *Fire Code of New York State*.

[F] 502.8.1.1 System requirements. Exhaust ventilation systems shall comply with all of the following:

1. The installation shall be in accordance with this code.
2. Mechanical ventilation shall be provided at a rate of not less than 1 cfm per square foot [0.00508 m^3/(s • m^2)] of floor area over the storage area.
3. The systems shall operate continuously unless alternate designs are *approved*.
4. A manual shutoff control shall be provided outside of the room in a position adjacent to the access door to the room or in another *approved* location. The switch shall be a break-glass or other *approved* type and shall be *labeled*: VENTILATION SYSTEM EMERGENCY SHUTOFF.
5. The exhaust ventilation shall be designed to consider the density of the potential fumes or vapors released. For fumes or vapors that are heavier than air, exhaust shall be taken from a point within 12 inches (305 mm) of the floor. For fumes or vapors that are lighter than air, exhaust shall be taken from a point within 12 inches (305 mm) of the highest point of the room.
6. The location of both the exhaust and inlet air openings shall be designed to provide air movement across all portions of the floor or room to prevent the accumulation of vapors.
7. The *exhaust air* shall not be recirculated to occupied areas if the materials stored are capable of emitting hazardous vapors and contaminants have not been removed. Air contaminated with explosive or flammable vapors, fumes or dusts; flammable, highly toxic or toxic gases; or radioactive materials shall not be recirculated.

[F] 502.8.2 Gas rooms, exhausted enclosures and gas cabinets. The ventilation system for gas rooms, exhausted enclosures and gas cabinets for any quantity of hazardous material shall be designed to operate at a negative pressure in relation to the surrounding area. Highly toxic and toxic gases shall comply with Sections 502.9.7.1, 502.9.7.2 and 502.9.8.4.

[F] 502.8.3 Indoor dispensing and use. Indoor dispensing and use areas for hazardous materials in amounts exceeding the maximum allowable quantity per control area shall be provided with exhaust ventilation in accordance with Section 502.8.1.

Exception: Ventilation is not required for dispensing and use of flammable solids other than finely divided particles.

[F] 502.8.4 Indoor dispensing and use—point sources. Where gases, liquids or solids in amounts exceeding the maximum allowable quantity per control area and having a hazard ranking of 3 or 4 in accordance with NFPA 704 are dispensed or used, mechanical exhaust ventilation shall be provided to capture gases, fumes, mists or vapors at the point of generation.

Exception: Where it can be demonstrated that the gases, liquids or solids do not create harmful gases, fumes, mists or vapors.

INTERNATIONAL CODE COUNCIL®
Copyright © 2019 ICC & NYSDOS. ALL RIGHTS RESERVED. Accessed by Lauren Gualdino (lgualdino@briarcliffmanor.org), (-) Order Number #100880972 on May 08, 2020 07:05 AM (PDT) pursuant to License Agreement with ICC & NYSDOS. No further reproduction, no

100880972

[F] 502.8.5 Closed systems. Where closed systems for the use of hazardous materials in amounts exceeding the maximum allowable quantity per control area are designed to be opened as part of normal operations, ventilation shall be provided in accordance with Section 502.8.4.

[F] 502.9 Hazardous materials—requirements for specific materials. Exhaust ventilation systems for specific hazardous materials shall be provided as required in Section 502.8 and Sections 502.9.1 through 502.9.11.

[F] 502.9.1 Compressed gases—medical gas systems. Rooms for the storage of compressed medical gases in amounts exceeding the permit amounts for compressed gases in the *Fire Code of New York State*, and that do not have an exterior wall, shall be exhausted through a duct to the exterior of the building. Both separate airstreams shall be enclosed in a 1-hour-rated shaft enclosure from the room to the exterior. *Approved* mechanical ventilation shall be provided at a minimum rate of 1 cfm/ft^2 [0.00508 m^3/(s • m^2)] of the area of the room.

Gas cabinets for the storage of compressed medical gases in amounts exceeding the permit amounts for compressed gases in the *Fire Code of New York State* shall be connected to an exhaust system. The average velocity of ventilation at the face of access ports or windows shall be not less than 200 feet per minute (1.02 m/s) with a minimum velocity of 150 feet per minute (0.76 m/s) at any point at the access port or window.

[F] 502.9.2 Corrosives. Where corrosive materials in amounts exceeding the maximum allowable quantity per control area are dispensed or used, mechanical exhaust ventilation in accordance with Section 502.8.4 shall be provided.

[F] 502.9.3 Cryogenics. Storage areas for stationary or portable containers of cryogenic fluids in any quantity shall be ventilated in accordance with Section 502.8. Indoor areas where cryogenic fluids in any quantity are dispensed shall be ventilated in accordance with the requirements of Section 502.8.4 in a manner that captures any vapor at the point of generation.

Exception: Ventilation for indoor dispensing areas is not required where it can be demonstrated that the cryogenic fluids do not create harmful vapors.

[F] 502.9.4 Explosives. Squirrel cage blowers shall not be used for exhausting hazardous fumes, vapors or gases in operating buildings and rooms for the manufacture, assembly or testing of explosives. Only nonferrous fan blades shall be used for fans located within the ductwork and through which hazardous materials are exhausted. Motors shall be located outside the duct.

[F] 502.9.5 Flammable and combustible liquids. Exhaust ventilation systems shall be provided as required by Sections 502.9.5.1 through 502.9.5.5 for the storage, use, dispensing, mixing and handling of flammable and combustible liquids. Unless otherwise specified, this section shall apply to any quantity of flammable and combustible liquids.

Exception: This section shall not apply to flammable and combustible liquids that are exempt from the *Fire Code of New York State*.

[F] 502.9.5.1 Vaults. Vaults that contain tanks of Class I liquids shall be provided with continuous ventilation at a rate of not less than 1 cfm/ft^2 of floor area [0.00508 m^3/(s • m^2)], but not less than 150 cfm (4.25 m^3/min). Failure of the exhaust airflow shall automatically shut down the dispensing system. The exhaust system shall be designed to provide air movement across all parts of the vault floor. Supply and exhaust ducts shall extend to a point not greater than 12 inches (305 mm) and not less than 3 inches (76 mm) above the floor. The exhaust system shall be installed in accordance with the provisions of NFPA 91. Means shall be provided to automatically detect any flammable vapors and to automatically shut down the dispensing system upon detection of such flammable vapors in the exhaust duct at a concentration of 25 percent of the LFL.

[F] 502.9.5.2 Storage rooms and warehouses. Liquid storage rooms and liquid storage warehouses for quantities of liquids exceeding those specified in the *Fire Code of New York State* shall be ventilated in accordance with Section 502.8.1.

[F] 502.9.5.3 Cleaning machines. Areas containing machines used for parts cleaning in accordance with the *Fire Code of New York State* shall be adequately ventilated to prevent accumulation of vapors.

[F] 502.9.5.4 Use, dispensing and mixing. Continuous mechanical ventilation shall be provided for the use, dispensing and mixing of flammable and combustible liquids in open or closed systems in amounts exceeding the maximum allowable quantity per control area and for bulk transfer and process transfer operations. The ventilation rate shall be not less than 1 cfm/ft^2 [0.00508 m^3/(s • m^2)] of floor area over the design area. Provisions shall be made for the introduction of *makeup air* in a manner that will include all floor areas or pits where vapors can collect. Local or spot ventilation shall be provided where needed to prevent the accumulation of hazardous vapors.

Exception: Where *natural ventilation* can be shown to be effective for the materials used, dispensed or mixed.

[F] 502.9.5.5 Bulk plants or terminals. Ventilation shall be provided for portions of properties where flammable and combustible liquids are received by tank vessels, pipelines, tank cars or tank vehicles and are stored or blended in bulk for the purpose of distributing such liquids by tank vessels, pipelines, tank cars, tank vehicles or containers as required by Sections 502.9.5.5.1 through 502.9.5.5.3.

INTERNATIONAL CODE COUNCIL®
Copyright © 2019 ICC & NYSDOS. ALL RIGHTS RESERVED. Accessed by Lauren Gualdino (lgualdino@briarcliffmanor.org), (-) Order Number #100880972 on May 08, 2020 07:05 AM (PDT) pursuant to License Agreement with ICC & NYSDOS. No further reproduction, no

100880972

[F] 502.9.5.5.1 General. Ventilation shall be provided for rooms, buildings and enclosures in which Class I liquids are pumped, used or transferred. Design of ventilation systems shall consider the relatively high specific gravity of the vapors. Where *natural ventilation* is used, adequate openings in outside walls at floor level, unobstructed except by louvers or coarse screens, shall be provided. Where *natural ventilation* is inadequate, mechanical ventilation shall be provided.

[F] 502.9.5.5.2 Basements and pits. Class I liquids shall not be stored or used within a building having a basement or pit into which flammable vapors can travel, unless such area is provided with ventilation designed to prevent the accumulation of flammable vapors therein.

[F] 502.9.5.5.3 Dispensing of Class I liquids. Containers of Class I liquids shall not be drawn from or filled within buildings unless a provision is made to prevent the accumulation of flammable vapors in hazardous concentrations. Where mechanical ventilation is required, it shall be kept in operation while flammable vapors could be present.

[F] 502.9.6 Highly toxic and toxic liquids. Ventilation exhaust shall be provided for highly toxic and toxic liquids as required by Sections 502.9.6.1 and 502.9.6.2.

[F] 502.9.6.1 Treatment system. This provision shall apply to indoor and outdoor storage and use of highly toxic and toxic liquids in amounts exceeding the maximum allowable quantities per control area. Exhaust scrubbers or other systems for processing vapors of highly toxic liquids shall be provided where a spill or accidental release of such liquids can be expected to release highly toxic vapors at normal temperature and pressure.

[F] 502.9.6.2 Open and closed systems. Mechanical exhaust ventilation shall be provided for highly toxic and toxic liquids used in open systems in accordance with Section 502.8.4. Mechanical exhaust ventilation shall be provided for highly toxic and toxic liquids used in closed systems in accordance with Section 502.8.5.

Exception: Liquids or solids that do not generate highly toxic or toxic fumes, mists or vapors.

[F] 502.9.7 Highly toxic and toxic compressed gases—any quantity. Ventilation exhaust shall be provided for highly toxic and toxic compressed gases in any quantity as required by Sections 502.9.7.1 and 502.9.7.2.

[F] 502.9.7.1 Gas cabinets. Gas cabinets containing highly toxic or toxic compressed gases in any quantity shall comply with Section 502.8.2 and the following requirements:

1. The average ventilation velocity at the face of gas cabinet access ports or windows shall be not less than 200 feet per minute (1.02 m/s) with a minimum velocity of 150 feet per minute (0.76 m/s) at any point at the access port or window.
2. Gas cabinets shall be connected to an exhaust system.
3. Gas cabinets shall not be used as the sole means of exhaust for any room or area.

[F] 502.9.7.2 Exhausted enclosures. Exhausted enclosures containing highly toxic or toxic compressed gases in any quantity shall comply with Section 502.8.2 and the following requirements:

1. The average ventilation velocity at the face of the enclosure shall be not less than 200 feet per minute (1.02 m/s) with a minimum velocity of 150 feet per minute (0.76 m/s).
2. Exhausted enclosures shall be connected to an exhaust system.
3. Exhausted enclosures shall not be used as the sole means of exhaust for any room or area.

[F] 502.9.8 Highly toxic and toxic compressed gases—quantities exceeding the maximum allowable quantity per control area. Ventilation exhaust shall be provided for highly toxic and toxic compressed gases in amounts exceeding the maximum allowable quantities per control area as required by Sections 502.9.8.1 through 502.9.8.6.

[F] 502.9.8.1 Ventilated areas. The room or area in which indoor gas cabinets or exhausted enclosures are located shall be provided with exhaust ventilation. Gas cabinets or exhausted enclosures shall not be used as the sole means of exhaust for any room or area.

[F] 502.9.8.2 Local exhaust for portable tanks. A means of local exhaust shall be provided to capture leakage from indoor and outdoor portable tanks. The local exhaust shall consist of portable ducts or collection systems designed to be applied to the site of a leak in a valve or fitting on the tank. The local exhaust system shall be located in a gas room. Exhaust shall be directed to a treatment system where required by the *Fire Code of New York State*.

[F] 502.9.8.3 Piping and controls—stationary tanks. Filling or dispensing connections on indoor stationary tanks shall be provided with a means of local exhaust. Such exhaust shall be designed to capture fumes and vapors. The exhaust shall be directed to a treatment system where required by the *Fire Code of New York State*.

[F] 502.9.8.4 Gas rooms. The ventilation system for gas rooms shall be designed to operate at a negative pressure in relation to the surrounding area. The exhaust ventilation from gas rooms shall be directed to an exhaust system.

[F] 502.9.8.5 Treatment system. The exhaust ventilation from gas cabinets, exhausted enclosures and gas rooms, and local exhaust systems required in Sections 502.9.8.2 and 502.9.8.3 shall be directed to a treatment system where required by the *Fire Code of New York State*.

[F] 502.9.8.6 Process equipment. Effluent from indoor and outdoor process *equipment* containing highly toxic or toxic compressed gases which could be

INTERNATIONAL CODE COUNCIL®
Copyright © 2019 ICC & NYSDOS. ALL RIGHTS RESERVED. Accessed by Lauren Gualdino (lgualdino@briarcliffmanor.org), (-) Order Number #100880972 on May 08, 2020 07:05 AM (PDT) pursuant to License Agreement with ICC & NYSDOS. No further reproduction, no

100880972

discharged to the atmosphere shall be processed through an exhaust scrubber or other processing system. Such systems shall be in accordance with the *Fire Code of New York State*.

[F] 502.9.9 Ozone gas generators. Ozone cabinets and ozone gas-generator rooms for systems having a maximum ozone-generating capacity of $^1/_2$ pound (0.23 kg) or more over a 24-hour period shall be mechanically ventilated at a rate of not less than six air changes per hour. For cabinets, the average velocity of ventilation at *makeup air* openings with cabinet doors closed shall be not less than 200 feet per minute (1.02 m/s).

[F] 502.9.10 LP-gas distribution facilities. LP-gas distribution facilities shall be ventilated in accordance with NFPA 58.

[F] 502.9.10.1 Portable container use. Above-grade underfloor spaces or basements in which portable LP-gas containers are used or are stored awaiting use or resale shall be provided with an *approved* means of ventilation.

Exception: Department of Transportation (DOT) specification cylinders with a maximum water capacity of 2.7 pounds (1.2 kg) for use in completely self-contained hand torches and similar applications. The quantity of LP-gas shall not exceed 20 pounds (9 kg).

[F] 502.9.11 Silane gas. Exhausted enclosures and gas cabinets for the indoor storage of silane gas in amounts exceeding the maximum allowable quantities per control area shall comply with Chapter 64 of the *Fire Code of New York State*.

[F] 502.10 Hazardous production materials (HPM). Exhaust ventilation systems and materials for ducts utilized for the exhaust of HPM shall comply with this section, other applicable provisions of this code, the *Building Code of New York State* and the *Fire Code of New York State*.

[F] 502.10.1 Where required. Exhaust ventilation systems shall be provided in the following locations in accordance with the requirements of this section and the *Building Code of New York State*.

1. Fabrication areas: Exhaust ventilation for fabrication areas shall comply with the *Building Code of New York State*. Additional manual control switches shall be provided where required by the *building official*.
2. Workstations: A ventilation system shall be provided to capture and exhaust gases, fumes and vapors at workstations.
3. Liquid storage rooms: Exhaust ventilation for liquid storage rooms shall comply with Section 502.8.1.1 and the *Building Code of New York State.*
4. HPM rooms: Exhaust ventilation for HPM rooms shall comply with Section 502.8.1.1 and the *Building Code of New York State.*
5. Gas cabinets: Exhaust ventilation for gas cabinets shall comply with Section 502.8.2. The gas cabinet ventilation system is allowed to connect to a workstation ventilation system. Exhaust ventilation for gas cabinets containing highly toxic or toxic gases shall also comply with Sections 502.9.7 and 502.9.8.
6. Exhausted enclosures: Exhaust ventilation for exhausted enclosures shall comply with Section 502.8.2. Exhaust ventilation for exhausted enclosures containing highly toxic or toxic gases shall also comply with Sections 502.9.7 and 502.9.8.
7. Gas rooms: Exhaust ventilation for gas rooms shall comply with Section 502.8.2. Exhaust ventilation for gas rooms containing highly toxic or toxic gases shall also comply with Sections 502.9.7 and 502.9.8.
8. Cabinets containing pyrophoric liquids or Class 3 water-reactive liquids: Exhaust ventilation for cabinets in fabrication areas containing pyrophoric liquids shall be as required in Section 2705.2.3.4 of the *Fire Code of New York State.*

[F] 502.10.2 Penetrations. Exhaust ducts penetrating fire barriers constructed in accordance with Section 707 of the *Building Code of New York State* or horizontal assemblies constructed in accordance with Section 711 of the *Building Code of New York State* shall be contained in a shaft of equivalent fire-resistance-rated construction. Exhaust ducts shall not penetrate fire walls. Fire dampers shall not be installed in exhaust ducts.

[F] 502.10.3 Treatment systems. Treatment systems for highly toxic and toxic gases shall comply with the *Fire Code of New York State.*

502.11 Motion picture projectors. Motion picture projectors shall be exhausted in accordance with Section 502.11.1 or 502.11.2.

502.11.1 Projectors with an exhaust discharge. Projectors equipped with an exhaust discharge shall be directly connected to a mechanical exhaust system. The exhaust system shall operate at an exhaust rate as indicated by the manufacturer's installation instructions.

502.11.2 Projectors without exhaust connection. Projectors without an exhaust connection shall have contaminants exhausted through a mechanical exhaust system. The exhaust rate for electric arc projectors shall be not less than 200 cubic feet per minute (cfm) (0.09 m^3/s) per lamp. The exhaust rate for xenon projectors shall be not less than 300 cfm (0.14 m^3/s) per lamp. Xenon projector exhaust shall be at a rate such that the exterior temperature of the lamp housing does not exceed 130°F (54°C). The lamp and projection room exhaust systems, whether combined or independent, shall not be interconnected with any other exhaust or return system within the building.

[F] 502.12 Organic coating processes. Enclosed structures involving organic coating processes in which Class I liquids are processed or handled shall be ventilated at a rate of not less than 1 cfm/ft^2 [0.00508 $m^3/(s \cdot m^2)$] of solid floor area. Ventilation shall be accomplished by exhaust fans that intake at floor levels and discharge to a safe location outside the structure. Noncontaminated intake air shall be introduced in

INTERNATIONAL CODE COUNCIL®
Copyright © 2019 ICC & NYSDOS. ALL RIGHTS RESERVED. Accessed by Lauren Gualdino (lgualdino@briarcliffmanor.org), (-) Order Number #100880972 on May 08, 2020 07:05 AM (PDT) pursuant to License Agreement with ICC & NYSDOS. No further reproduction, no

100880972

such a manner that all portions of solid floor areas are provided with continuous uniformly distributed air movement.

502.13 Public garages. Mechanical exhaust systems for public garages, as required in Chapter 4, shall operate continuously or in accordance with Section 404.

502.14 Motor vehicle operation. In areas where motor vehicles operate, mechanical ventilation shall be provided in accordance with Section 403. Additionally, areas in which stationary motor vehicles are operated shall be provided with a *source capture system* that connects directly to the motor vehicle exhaust systems. Such system shall be engineered by a registered design professional or shall be factory-built equipment designed and sized for the purpose.

Exceptions:

1. This section shall not apply where the motor vehicles being operated or repaired are electrically powered.
2. This section shall not apply to one- and two-family dwellings.
3. This section shall not apply to motor vehicle service areas where engines are operated inside the building only for the duration necessary to move the motor vehicles in and out of the building.

[F] 502.15 Repair garages. Where Class I liquids or LP-gas are stored or used within a building having a basement or pit wherein flammable vapors could accumulate, the basement or pit shall be provided with ventilation designed to prevent the accumulation of flammable vapors therein.

[F] 502.16 Repair garages for vehicles fueled by lighter-than-air fuels. Repair garages used for the conversion and repair of vehicles that use compressed natural gas, liquefied natural gas, hydrogen or other lighter-than-air motor fuels shall be provided with an *approved* mechanical exhaust ventilation system. The mechanical exhaust ventilation system shall be in accordance with Section 502.16.1 or 502.16.2 as applicable.

Exceptions:

1. Repair garages where work is not performed on the fuel system and is limited to exchange of parts and maintenance not requiring open flame or welding on the compressed natural gas, liquefied natural gas, hydrogen or other lighter-than-air-fueled motor vehicle.
2. Repair garages for hydrogen-fueled vehicles where work is not performed on the hydrogen storage tank and is limited to the exchange of parts and maintenance not requiring open flame or welding on the hydrogen-fueled vehicle. During the work, the entire hydrogen fuel system shall contain a quantity of hydrogen that is less than 200 cubic feet (5.6 m^3).

[F] 502.16.1 Repair garages for hydrogen-fueled vehicles. Repair garages used for the repair of hydrogen-fueled vehicles shall be provided with an approved exhaust ventilation system in accordance with this code and Chapter 6 of NFPA 2.

[F] 502.16.2 Exhaust ventilation system. Repair garages used for the repair of compressed natural gas, liquefied natural gas or other lighter-than-air motor fuel, other than hydrogen, shall be provided with an approved mechanical exhaust ventilation system. The mechanical exhaust ventilation system shall be in accordance with this code and Sections 502.16.2.1 and 502.16.2.2.

Exception: Where approved, natural ventilation shall be an alternative to mechanical exhaust ventilation.

[F] 502.16.2.1 Design. For indoor locations, air supply inlets and exhaust outlets for mechanical ventilation shall be arranged to provide uniformly distributed air movement with inlets uniformly arranged on walls near floor level and outlets located at the high point of the room in walls or the roof.

Failure of the exhaust ventilation system shall cause the fueling system to shut down.

The exhaust ventilation rate shall be not less than 1 cubic foot per minute (0.03 m^3/min) per 12 cubic feet (0.34 m^3) of room volume.

[F] 502.16.2.2 Operation. The mechanical exhaust ventilation system shall operate continuously.

Exceptions:

1. Mechanical exhaust ventilation systems that are interlocked with a gas detection system designed in accordance with the *Fire Code of New York State*.
2. Mechanical exhaust ventilation systems in garages that are used only for the repair of vehicles fueled by liquid fuels or odorized gases, such as compressed natural gas, where the exhaust ventilation system is electrically interlocked with the lighting circuit.

502.17 Tire rebuilding or recapping. Each room where rubber cement is used or mixed, or where flammable or combustible solvents are applied, shall be ventilated in accordance with the applicable provisions of NFPA 91.

502.17.1 Buffing machines. Each buffing machine shall be connected to a dust-collecting system that prevents the accumulation of the dust produced by the buffing process.

502.18 Specific rooms. Specific rooms, including bathrooms, locker rooms, smoking lounges and toilet rooms, shall be exhausted in accordance with the ventilation requirements of Chapter 4.

502.19 Indoor firing ranges. Ventilation shall be provided in an *approved* manner in areas utilized as indoor firing ranges. Ventilation shall be designed to protect employees and the public in accordance with DOL 29 CFR 1910.1025 where applicable.

502.20 Manicure and pedicure stations. Manicure and pedicure stations shall be provided with an exhaust system in accordance with Table 403.3.1.1, Note h. Manicure tables and pedicure stations not provided with factory-installed exhaust inlets shall be provided with exhaust inlets located not more than 12 inches (305 mm) horizontally and vertically from the point of chemical application.

INTERNATIONAL CODE COUNCIL®
Copyright © 2019 ICC & NYSDOS. ALL RIGHTS RESERVED. Accessed by Lauren Gualdino (lgualdino@briarcliffmanor.org), (-) Order Number #100880972 on May 08, 2020 07:05 AM (PDT) pursuant to License Agreement with ICC & NYSDOS. No further reproduction, no

100880972

SECTION 503
MOTORS AND FANS

503.1 General. Motors and fans shall be sized to provide the required air movement. Motors in areas that contain flammable vapors or dusts shall be of a type *approved* for such environments. A manually operated remote control installed at an *approved* location shall be provided to shut off fans or blowers in flammable vapor or dust systems. Electrical *equipment* and appliances used in operations that generate explosive or flammable vapors, fumes or dusts shall be interlocked with the ventilation system so that the *equipment* and appliances cannot be operated unless the ventilation fans are in operation. Motors for fans used to convey flammable vapors or dusts shall be located outside the duct or shall be protected with *approved* shields and dustproofing. Motors and fans shall be provided with a means of access for servicing and maintenance.

503.2 Fans. Parts of fans in contact with explosive or flammable vapors, fumes or dusts shall be of nonferrous or nonsparking materials, or their casing shall be lined or constructed of such material. Where the size and hardness of materials passing through a fan are capable of producing a spark, both the fan and the casing shall be of nonsparking materials. Where fans are required to be spark resistant, their bearings shall not be within the airstream, and all parts of the fan shall be grounded. Fans in systems-handling materials that are capable of clogging the blades, and fans in buffing or woodworking exhaust systems, shall be of the radial-blade or tube-axial type.

503.3 Equipment and appliance identification plate. *Equipment* and appliances used to exhaust explosive or flammable vapors, fumes or dusts shall bear an identification plate stating the ventilation rate for which the system was designed.

503.4 Corrosion-resistant fans. Fans located in systems conveying corrosives shall be of materials that are resistant to the corrosive or shall be coated with corrosion-resistant materials.

SECTION 504
CLOTHES DRYER EXHAUST

504.1 Installation. Clothes dryers shall be exhausted in accordance with the manufacturer's instructions. Dryer exhaust systems shall be independent of all other systems and shall convey the moisture and any products of *combustion* to the outside of the building.

> **Exception:** This section shall not apply to *listed* and *labeled* condensing (ductless) clothes dryers.

504.2 Exhaust penetrations. Where a clothes dryer exhaust duct penetrates a wall or ceiling membrane, the annular space shall be sealed with noncombustible material, *approved* fire caulking or a noncombustible dryer exhaust duct wall receptacle. Ducts that exhaust clothes dryers shall not penetrate or be located within any fireblocking, draftstopping or any wall, floor/ceiling or other assembly required by the *Building Code of New York State* to be fire-resistance rated, unless such duct is constructed of galvanized steel or aluminum of the thickness specified in Section 603.4 and the fire-resistance rating is maintained in accordance with the *Building Code of New York State*. Fire dampers, combination fire/smoke dampers and any similar devices that will obstruct the exhaust flow shall be prohibited in clothes dryer exhaust ducts.

504.3 Cleanout. Each vertical riser shall be provided with a means for cleanout.

504.4 Exhaust installation. Dryer exhaust ducts for clothes dryers shall terminate on the outside of the building and shall be equipped with a backdraft damper. Screens shall not be installed at the duct termination. Ducts shall not be connected or installed with sheet metal screws or other fasteners that will obstruct the exhaust flow. Clothes dryer exhaust ducts shall not be connected to a vent connector, vent or *chimney*. Clothes dryer exhaust ducts shall not extend into or through ducts or plenums. Clothes dryer exhaust ducts shall be sealed in accordance with Section 603.9.

> **504.4.1 Exhaust termination outlet and passageway size.** The passageway of dryer exhaust duct terminals shall be undiminished in size and shall provide an open area of not less than 12.5 square inches (8065 mm^2).

504.5 Dryer exhaust duct power ventilators. Domestic dryer exhaust duct power ventilators shall be listed and labeled to UL 705 for use in dryer exhaust duct systems. The dryer exhaust duct power ventilator shall be installed in accordance with the manufacturer's instructions.

504.6 Makeup air. Installations exhausting more than 200 cfm (0.09 m^3/s) shall be provided with *makeup air*. Where a closet is designed for the installation of a clothes dryer, an opening having an area of not less than 100 square inches (0.0645 m^2) shall be provided in the closet enclosure or *makeup air* shall be provided by other *approved* means.

504.7 Protection required. Protective shield plates shall be placed where nails or screws from finish or other work are likely to penetrate the clothes dryer exhaust duct. Shield plates shall be placed on the finished face of all framing members where there is less than $1^1/_4$ inches (32 mm) between the duct and the finished face of the framing member. Protective shield plates shall be constructed of steel, have a thickness of 0.062 inch (1.6 mm) and extend not less than 2 inches (51 mm) above sole plates and below top plates.

504.8 Domestic clothes dryer ducts. Exhaust ducts for domestic clothes dryers shall conform to the requirements of Sections 504.8.1 through 504.8.6.

> **504.8.1 Material and size.** Exhaust ducts shall have a smooth interior finish and shall be constructed of metal not less than 0.016 inch (0.4 mm) in thickness. The exhaust duct size shall be 4 inches (102 mm) nominal in diameter.
>
> **504.8.2 Duct installation.** Exhaust ducts shall be supported at 4-foot (1219 mm) intervals and secured in place. The insert end of the duct shall extend into the adjoining duct or fitting in the direction of airflow. Ducts shall not be joined with screws or similar fasteners that protrude more than $^1/_8$ inch (3.2 mm) into the inside of the duct.

INTERNATIONAL CODE COUNCIL®
Copyright © 2019 ICC & NYSDOS. ALL RIGHTS RESERVED. Accessed by Lauren Gualdino (lgualdino@briarcliffmanor.org), (-) Order Number #100880972 on May 08, 2020 07:05 AM (PDT) pursuant to License Agreement with ICC & NYSDOS. No further reproduction, no

100880972

Where dryer exhaust ducts are enclosed in wall or ceiling cavities, such cavities shall allow the installation of the duct without deformation.

504.8.3 Transition ducts. Transition ducts used to connect the dryer to the exhaust duct system shall be a single length that is *listed* and *labeled* in accordance with UL 2158A. Transition ducts shall be not greater than 8 feet (2438 mm) in length and shall not be concealed within construction.

504.8.4 Duct length. The maximum allowable exhaust duct length shall be determined by one of the methods specified in Sections 504.8.4.1 through 504.8.4.3.

504.8.4.1 Specified length. The maximum length of the exhaust duct shall be 35 feet (10 668 mm) from the connection to the transition duct from the dryer to the outlet terminal. Where fittings are used, the maximum length of the exhaust duct shall be reduced in accordance with Table 504.8.4.1.

504.8.4.2 Manufacturer's instructions. The maximum length of the exhaust duct shall be determined by the dryer manufacturer's installation instructions. The *building official* shall be provided with a copy of the installation instructions for the make and model of the dryer. Where the exhaust duct is to be concealed, the installation instructions shall be provided to the *building official* prior to the concealment inspection. In the absence of fitting equivalent length calculations from the clothes dryer manufacturer, Table 504.8.4.1 shall be used.

504.8.4.3 Dryer exhaust duct power ventilator length. The maximum length of the exhaust duct shall be determined by the dryer exhaust duct power ventilator manufacturer's installation instructions.

504.8.5 Length identification. Where the exhaust duct equivalent length exceeds 35 feet (10 668 mm), the equivalent length of the exhaust duct shall be identified on a permanent label or tag. The label or tag shall be located within 6 feet (1829 mm) of the exhaust duct connection.

504.8.6 Exhaust duct required. Where space for a clothes dryer is provided, an exhaust duct system shall be installed. Where the clothes dryer is not installed at the time of occupancy, the exhaust duct shall be capped at the location of the future dryer.

Exception: Where a *listed* condensing clothes dryer is installed prior to occupancy of structure.

504.9 Commercial clothes dryers. The installation of dryer exhaust ducts serving commercial clothes dryers shall comply with the *appliance* manufacturer's installation instructions. Exhaust fan motors installed in exhaust systems shall be located outside of the airstream. In multiple installations, the fan shall operate continuously or be interlocked to operate when any individual unit is operating. Ducts shall have a minimum *clearance* of 6 inches (152 mm) to combustible materials. Clothes dryer transition ducts used to connect the *appliance* to the exhaust duct system shall be limited to single lengths not to exceed 8 feet (2438 mm) in length and shall be *listed* and *labeled* for the application. Transition ducts shall not be concealed within construction.

504.10 Common exhaust systems for clothes dryers located in multistory structures. Where a common multistory duct system is designed and installed to convey exhaust from multiple clothes dryers, the construction of the system shall be in accordance with all of the following:

1. The shaft in which the duct is installed shall be constructed and fire-resistance rated as required by the *Building Code of New York State.*
2. Dampers shall be prohibited in the exhaust duct. Penetrations of the shaft and ductwork shall be protected in accordance with Section 607.5.5, Exception 2.
3. Rigid metal ductwork shall be installed within the shaft to convey the exhaust. The ductwork shall be constructed of sheet steel having a minimum thickness of 0.0187 inch (0.4712 mm) (No. 26 gage) and in accordance with SMACNA *Duct Construction Standards.*
4. The ductwork within the shaft shall be designed and installed without offsets.
5. The exhaust fan motor design shall be in accordance with Section 503.2.
6. The exhaust fan motor shall be located outside of the airstream.
7. The exhaust fan shall run continuously, and shall be connected to a standby power source.
8. Exhaust fan operation shall be monitored in an *approved* location and shall initiate an audible or visual signal when the fan is not in operation.
9. Makeup air shall be provided for the exhaust system.
10. A cleanout opening shall be located at the base of the shaft to provide *access* to the duct to allow for cleaning and inspection. The finished opening shall be not less than 12 inches by 12 inches (305 mm by 305 mm).
11. Screens shall not be installed at the termination.
12. The common multistory duct system shall serve only clothes dryers and shall be independent of other exhaust systems.

TABLE 504.8.4.1
DRYER EXHAUST DUCT FITTING EQUIVALENT LENGTH

DRYER EXHAUST DUCT FITTING TYPE	EQUIVALENT LENGTH
4" radius mitered 45-degree elbow	2 feet 6 inches
4" radius mitered 90-degree elbow	5 feet
6" radius smooth 45-degree elbow	1 foot
6" radius smooth 90-degree elbow	1 foot 9 inches
8" radius smooth 45-degree elbow	1 foot
8" radius smooth 90-degree elbow	1 foot 7 inches
10" radius smooth 45-degree elbow	9 inches
10" radius smooth 90-degree elbow	1 foot 6 inches

For SI: 1 inch = 25.4 mm, 1 foot = 304.8 mm, 1 degree = 0.0175 rad.

INTERNATIONAL CODE COUNCIL®
Copyright © 2019 ICC & NYSDOS. ALL RIGHTS RESERVED. Accessed by Lauren Gualdino (lgualdino@briarcliffmanor.org), (-) Order Number #100880972 on May 08, 2020 07:05 AM (PDT) pursuant to License Agreement with ICC & NYSDOS. No further reproduction, no

100880972

SECTION 505
DOMESTIC COOKING EXHAUST EQUIPMENT

505.1 General. Domestic cooking exhaust equipment shall comply with the requirements of this section.

505.2 Domestic cooking exhaust. Where domestic cooking exhaust equipment is provided, it shall comply with the following as applicable:

1. The fan for overhead range hoods and downdraft exhaust equipment not integral with the cooking appliance shall be listed and labeled in accordance with UL 507.
2. Overhead range hoods and downdraft exhaust equipment with integral fans shall comply with UL 507.
3. Domestic cooking appliances with integral downdraft exhaust equipment shall be listed and labeled in accordance with UL 858 or ANSI Z21.1.
4. Microwave ovens with integral exhaust for installation over the cooking surface shall be listed and labeled in accordance with UL 923.

505.3 Exhaust ducts. Domestic cooking exhaust equipment shall discharge to the outdoors through sheet metal ducts constructed of galvanized steel, stainless steel, aluminum or copper. Such ducts shall have smooth inner walls, shall be air tight, shall be equipped with a backdraft damper, and shall be independent of all other exhaust systems. Installations in Group I-1 and I-2 occupancies shall be in accordance with the *Building Code of New York State* and Section 904.13 of the *Fire Code of New York State*.

Exceptions:

1. In other than Groups I-1 and I-2, where installed in accordance with the manufacturer's instructions and where mechanical or natural ventilation is otherwise provided in accordance with Chapter 4, listed and labeled ductless range hoods shall not be required to discharge to the outdoors.
2. Ducts for domestic kitchen cooking appliances equipped with downdraft exhaust systems shall be permitted to be constructed of Schedule 40 PVC pipe and fittings provided that the installation complies with all of the following:
   - 2.1. The duct shall be installed under a concrete slab poured on grade.
   - 2.2. The underfloor trench in which the duct is installed shall be completely backfilled with sand or gravel.
   - 2.3. The PVC duct shall extend not more than 1 inch (25 mm) above the indoor concrete floor surface.
   - 2.4. The PVC duct shall extend not more than 1 inch (25 mm) above grade outside of the building.
   - 2.5. The PVC ducts shall be solvent cemented.

505.4 Makeup air required. Exhaust hood systems capable of exhausting in excess of 400 cfm (0.19 m^3/s) shall be provided with *makeup air* at a rate approximately equal to the *exhaust air* rate. Such *makeup air* systems shall be equipped with a means of closure and shall be automatically controlled to start and operate simultaneously with the exhaust system.

505.5 Common exhaust systems for domestic kitchens located in multistory structures. Where a common multistory duct system is designed and installed to convey exhaust from multiple domestic kitchen exhaust systems, the construction of the system shall be in accordance with all of the following:

1. The shaft in which the duct is installed shall be constructed and fire-resistance rated as required by the *Building Code of New York State*.
2. Dampers shall be prohibited in the exhaust duct, except as specified in Section 505.3. Penetrations of the shaft and ductwork shall be protected in accordance with Section 607.5.5, Exception 2.
3. Rigid metal ductwork shall be installed within the shaft to convey the exhaust. The ductwork shall be constructed of sheet steel having a minimum thickness of 0.0187 inch (0.4712 mm) (No. 26 gage) and in accordance with SMACNA *Duct Construction Standards*.
4. The ductwork within the shaft shall be designed and installed without offsets.
5. The exhaust fan motor design shall be in accordance with Section 503.2.
6. The exhaust fan motor shall be located outside of the airstream.
7. The exhaust fan shall run continuously, and shall be connected to a standby power source.
8. Exhaust fan operation shall be monitored in an approved location and shall initiate an audible or visual signal when the fan is not in operation.
9. Where the exhaust rate for an individual kitchen exceeds 400 cfm (0.19 m^3/s) makeup air shall be provided in accordance with Section 505.4.
10. A cleanout opening shall be located at the base of the shaft to provide access to the duct to allow for cleanout and inspection. The finished openings shall be not less than 12 inches by 12 inches (305 mm by 305 mm).
11. Screens shall not be installed at the termination.
12. The common multistory duct system shall serve only kitchen exhaust and shall be independent of other exhaust systems.

505.6 Other than Group R. In other than Group R occupancies, where domestic cooktops, ranges, and open-top broilers are used for domestic purposes, domestic cooking exhaust systems shall be provided.

SECTION 506
COMMERCIAL KITCHEN HOOD VENTILATION SYSTEM DUCTS AND EXHAUST EQUIPMENT

506.1 General. Commercial kitchen hood ventilation ducts and exhaust *equipment* shall comply with the requirements of

INTERNATIONAL CODE COUNCIL®
Copyright © 2019 ICC & NYSDOS. ALL RIGHTS RESERVED. Accessed by Lauren Gualdino (lgualdino@briarcliffmanor.org), (-) Order Number #100880972 on May 08, 2020 07:05 AM (PDT) pursuant to License Agreement with ICC & NYSDOS. No further reproduction, no

100880972

this section. Commercial kitchen grease ducts shall be designed for the type of cooking *appliance* and hood served.

506.2 Corrosion protection. Ducts exposed to the outside atmosphere or subject to a corrosive environment shall be protected against corrosion in an *approved* manner.

506.3 Ducts serving Type I hoods. Type I exhaust ducts shall be independent of all other exhaust systems except as provided in Section 506.3.5. Commercial kitchen duct systems serving Type I hoods shall be designed, constructed and installed in accordance with Sections 506.3.1 through 506.3.13.3.

506.3.1 Duct materials. Ducts serving Type I hoods shall be constructed of materials in accordance with Sections 506.3.1.1 and 506.3.1.2.

506.3.1.1 Grease duct materials. Grease ducts serving Type I hoods shall be constructed of steel having a minimum thickness of 0.0575 inch (1.463 mm) (No. 16 gage) or stainless steel not less than 0.0450 inch (1.14 mm) (No. 18 gage) in thickness.

Exception: Factory-built commercial kitchen grease ducts *listed* and *labeled* in accordance with UL 1978 and installed in accordance with Section 304.1.

506.3.1.2 Makeup air ducts. Makeup air ducts connecting to or within 18 inches (457 mm) of a Type I hood shall be constructed and installed in accordance with Sections 603.1, 603.3, 603.4, 603.9, 603.10 and 603.12. Duct insulation installed within 18 inches (457 mm) of a Type I hood shall be noncombustible or shall be *listed* for the application.

506.3.2 Joints, seams and penetrations of grease ducts. Joints, seams and penetrations of grease ducts shall be made with a continuous liquid-tight weld or braze made on the external surface of the duct system.

Exceptions:

1. Penetrations shall not be required to be welded or brazed where sealed by devices that are *listed* for the application.
2. Internal welding or brazing shall not be prohibited provided that the joint is formed or ground smooth and is provided with ready access for inspection.
3. Factory-built commercial kitchen grease ducts *listed* and *labeled* in accordance with UL 1978 and installed in accordance with Section 304.1.

506.3.2.1 Duct joint types. Duct joints shall be butt joints, welded flange joints with a maximum flange depth of $^1/_2$ inch (12.7 mm) or overlapping duct joints of either the telescoping or bell type. Overlapping joints shall be installed to prevent ledges and obstructions from collecting grease or interfering with gravity drainage to the intended collection point. The difference between the inside cross-sectional dimensions of overlapping sections of duct shall not exceed $^1/_4$ inch (6.4 mm). The length of overlap for overlapping duct joints shall not exceed 2 inches (51 mm).

506.3.2.2 Duct-to-hood joints. Duct-to-hood joints shall be made with continuous internal or external liquid-tight welded or brazed joints. Such joints shall be smooth, accessible for inspection, and without grease traps.

Exceptions: This section shall not apply to:

1. A vertical duct-to-hood collar connection made in the top plane of the hood in accordance with all of the following:
   1.1. The hood duct opening shall have a 1-inch-deep (25 mm), full perimeter, welded flange turned down into the hood interior at an angle of 90 degrees (1.57 rad) from the plane of the opening.
   1.2. The duct shall have a 1-inch-deep (25 mm) flange made by a 1-inch by 1-inch (25 mm by 25 mm) angle iron welded to the full perimeter of the duct not less than 1 inch (25 mm) above the bottom end of the duct.
   1.3. A gasket rated for use at not less than 1500ºF (816ºC) is installed between the duct flange and the top of the hood.
   1.4. The duct-to-hood joint shall be secured by stud bolts not less than $^1/_4$ inch (6.4 mm) in diameter welded to the hood with a spacing not greater than 4 inches (102 mm) on center for the full perimeter of the opening. The bolts and nuts shall be secured with lockwashers.
2. *Listed* and *labeled* duct-to-hood collar connections installed in accordance with Section 304.1.

506.3.2.3 Duct-to-exhaust fan connections. Duct-to-exhaust fan connections shall be flanged and gasketed at the base of the fan for vertical discharge fans; shall be flanged, gasketed and bolted to the inlet of the fan for side-inlet utility fans; and shall be flanged, gasketed and bolted to the inlet and outlet of the fan for in-line fans. Gasket and sealing materials shall be rated for continuous duty at a temperature of not less than 1500ºF (816ºC).

506.3.2.4 Vibration isolation. A vibration isolation connector for connecting a duct to a fan shall consist of noncombustible packing in a metal sleeve joint of *approved* design or shall be a coated-fabric flexible duct connector *listed* and *labeled* for the application. Vibration isolation connectors shall be installed only at the connection of a duct to a fan inlet or outlet.

506.3.2.5 Grease duct test. Prior to the use or concealment of any portion of a grease duct system, a leakage test shall be performed. Ducts shall be considered to be concealed where installed in shafts or covered by coatings or wraps that prevent the ductwork from being visually inspected on all sides. The permit holder shall

INTERNATIONAL CODE COUNCIL®
Copyright © 2019 ICC & NYSDOS. ALL RIGHTS RESERVED. Accessed by Lauren Gualdino (lgualdino@briarcliffmanor.org), (-) Order Number #100880972 on May 08, 2020 07:05 AM (PDT) pursuant to License Agreement with ICC & NYSDOS. No further reproduction, no

100880972

be responsible to provide the necessary *equipment* and perform the grease duct leakage test. A light test shall be performed to determine that all welded and brazed joints are liquid tight.

A light test shall be performed by passing a lamp having a power rating of not less than 100 watts through the entire section of ductwork to be tested. The lamp shall be open so as to emit light equally in all directions perpendicular to the duct walls. A test shall be performed for the entire duct system, including the hood-to-duct connection. The duct work shall be permitted to be tested in sections, provided that every joint is tested. For *listed* factory-built grease ducts, this test shall be limited to duct joints assembled in the field and shall exclude factory welds.

506.3.3 Grease duct supports. Grease duct bracing and supports shall be of noncombustible material securely attached to the structure and designed to carry gravity and seismic loads within the stress limitations of the *Building Code of New York State*. Bolts, screws, rivets and other mechanical fasteners shall not penetrate duct walls.

506.3.4 Air velocity. Grease duct systems serving a Type I hood shall be designed and installed to provide an air velocity within the duct system of not less than 500 feet per minute (2.5 m/s).

Exception: The velocity limitations shall not apply within duct transitions utilized to connect ducts to differently sized or shaped openings in hoods and fans, provided that such transitions do not exceed 3 feet (914 mm) in length and are designed to prevent the trapping of grease.

506.3.5 Separation of grease duct system. A separate grease duct system shall be provided for each Type I hood. A separate grease duct system is not required where all of the following conditions are met:

1. All interconnected hoods are located within the same story.
2. All interconnected hoods are located within the same room or in adjoining rooms.
3. Interconnecting ducts do not penetrate assemblies required to be fire-resistance rated.
4. The grease duct system does not serve solid-fuel-fired appliances.

506.3.6 Grease duct clearances. Where enclosures are not required, grease duct systems and exhaust *equipment* serving a Type I hood shall have a *clearance* to combustible construction of not less than 18 inches (457 mm), and shall have a *clearance* to noncombustible construction and gypsum wallboard attached to noncombustible structures of not less than 3 inches (76 mm).

Exceptions:

1. Factory-built commercial kitchen grease ducts *listed* and *labeled* in accordance with UL 1978.
2. *Listed* and *labeled* exhaust *equipment* installed in accordance with Section 304.1.
3. Where commercial kitchen grease ducts are continuously covered on all sides with a *listed* and *labeled* field-applied grease duct enclosure material, system, product or method of construction specifically evaluated for such purpose in accordance with ASTM E2336, the required *clearance* shall be in accordance with the listing of such material, system, product or method.

506.3.7 Prevention of grease accumulation in grease ducts. Duct systems serving a Type I hood shall be constructed and installed so that grease cannot collect in any portion thereof, and the system shall slope not less than one-fourth unit vertical in 12 units horizontal (2-percent slope) toward the hood or toward a grease reservoir designed and installed in accordance with Section 506.3.7.1. Where horizontal ducts exceed 75 feet (22 860 mm) in length, the slope shall be not less than one unit vertical in 12 units horizontal (8.3-percent slope).

506.3.7.1 Grease duct reservoirs. Grease duct reservoirs shall:

1. Be constructed as required for the grease duct they serve.
2. Be located on the bottom of the horizontal duct or the bottommost section of the duct riser.
3. Extend across the full width of the duct and have a length of not less than 12 inches (305 mm).
4. Have a depth of not less than 1 inch (25 mm).
5. Have a bottom that slopes to a drain.
6. Be provided with a cleanout opening constructed in accordance with Section 506.3.8 and installed to provide direct access to the reservoir. The cleanout opening shall be located on a side or on top of the duct so as to permit cleaning of the reservoir.
7. Be installed in accordance with the manufacturer's instructions where manufactured devices are utilized.

506.3.8 Grease duct cleanouts and openings. Grease duct cleanouts and openings shall comply with all of the following:

1. Grease ducts shall not have openings except where required for the operation and maintenance of the system.
2. Sections of grease ducts that are inaccessible from the hood or discharge openings shall be provided with cleanout openings spaced not more than 20 feet (6096 mm) apart and not more than 10 feet (3048 mm) from changes in direction greater than 45 degrees (0.79 rad).
3. Cleanouts and openings shall be equipped with tight-fitting doors constructed of steel having a thickness not less than that required for the duct.
4. Cleanout doors shall be installed liquid tight.
5. Door assemblies including any frames and gaskets shall be approved for the application and shall not have fasteners that penetrate the duct.

INTERNATIONAL CODE COUNCIL®
Copyright © 2019 ICC & NYSDOS. ALL RIGHTS RESERVED. Accessed by Lauren Gualdino (lgualdino@briarcliffmanor.org), (-) Order Number #100880972 on May 08, 2020 07:05 AM (PDT) pursuant to License Agreement with ICC & NYSDOS. No further reproduction, no

100880972

6. Gasket and sealing materials shall be rated for not less than 1500ºF (816ºC).
7. Listed door assemblies shall be installed in accordance with the manufacturer's instructions.

506.3.8.1 Personnel entry. Where ductwork is large enough to allow entry of personnel, not less than one *approved* or *listed* opening having dimensions not less than 22 inches by 20 inches (559 mm by 508 mm) shall be provided in the horizontal sections, and in the top of vertical risers. Where such entry is provided, the duct and its supports shall be capable of supporting the additional load, and the cleanouts specified in Section 506.3.8 are not required.

506.3.8.2 Cleanouts serving in-line fans. A cleanout shall be provided for both the inlet side and outlet side of an in-line fan except where a duct does not connect to the fan. Such cleanouts shall be located within 3 feet (914 mm) of the fan duct connections.

506.3.9 Grease duct horizontal cleanouts. Cleanouts serving horizontal sections of grease ducts shall:

1. Be spaced not more than 20 feet (6096 mm) apart.
2. Be located not more than 10 feet (3048 mm) from changes in direction that are greater than 45 degrees (0.79 rad).
3. Be located on the bottom only where other locations are not available and shall be provided with internal damming of the opening such that grease will flow past the opening without pooling. Bottom cleanouts and openings shall be approved for the application and installed liquid-tight.
4. Not be closer than 1 inch (25 mm) from the edges of the duct.
5. Have opening dimensions of not less than 12 inches by 12 inches (305 mm by 305 mm). Where such dimensions preclude installation, the opening shall be not less than 12 inches (305 mm) on one side and shall be large enough to provide access for cleaning and maintenance.
6. Shall be located at grease reservoirs.

506.3.10 Underground grease duct installation. Underground grease duct installations shall comply with all of the following:

1. Underground grease ducts shall be constructed of steel having a minimum thickness of 0.0575 inch (1.463 mm) (No. 16 gage) and shall be coated to provide protection from corrosion or shall be constructed of stainless steel having a minimum thickness of 0.0450 inch (1.140 mm) (No. 18 gage).
2. The underground duct system shall be tested and approved in accordance with Section 506.3.2.5 prior to coating or placement in the ground.
3. The underground duct system shall be completely encased in concrete with a minimum thickness of 4 inches (102 mm).
4. Ducts shall slope toward grease reservoirs.
5. A grease reservoir with a cleanout to allow cleaning of the reservoir shall be provided at the base of each vertical duct riser.
6. Cleanouts shall be provided with access to permit cleaning and inspection of the duct in accordance with Section 506.3.
7. Cleanouts in horizontal ducts shall be installed on the topside of the duct.
8. Cleanout locations shall be legibly identified at the point of access from the interior space.

506.3.11 Grease duct enclosures. A commercial kitchen grease duct serving a Type I hood that penetrates a ceiling, wall, floor or any concealed space shall be enclosed from the point of penetration to the outlet terminal. In-line exhaust fans not located outdoors shall be enclosed as required for grease ducts. A duct shall penetrate exterior walls only at locations where unprotected openings are permitted by the *Building Code of New York State*. The duct enclosure shall serve a single grease duct and shall not contain other ducts, piping or wiring systems. Duct enclosures shall be a shaft enclosure in accordance with Section 506.3.11.1, a field-applied enclosure assembly in accordance with Section 506.3.11.2 or a factory-built enclosure assembly in accordance with Section 506.3.11.3. Duct enclosures shall have a fire-resistance rating of not less than that of the assembly penetrated and not less than 1 hour. Fire dampers and smoke dampers shall not be installed in grease ducts.

Exception: A duct enclosure shall not be required for a grease duct that penetrates only a nonfire-resistance-rated roof/ceiling assembly.

506.3.11.1 Shaft enclosure. Grease ducts constructed in accordance with Section 506.3.1 shall be permitted to be enclosed in accordance with the *Building Code of New York State* requirements for shaft construction. Such grease duct systems and exhaust *equipment* shall have a *clearance* to combustible construction of not less than 18 inches (457 mm), and shall have a *clearance* to noncombustible construction and gypsum wallboard attached to noncombustible structures of not less than 6 inches (152 mm). Duct enclosures shall be sealed around the duct at the point of penetration and vented to the outside of the building through the use of weather-protected openings.

506.3.11.2 Field-applied grease duct enclosure. Grease ducts constructed in accordance with Section 506.3.1 shall be enclosed by a *listed* and *labeled* field-applied grease duct enclosure material, systems, product, or method of construction specifically evaluated for such purpose in accordance with ASTM E2336. The surface of the duct shall be continuously covered on all sides from the point at which the duct originates to the outlet terminal. Duct penetrations shall be protected with a through-penetration firestop system tested and *listed* in accordance with ASTM E814 or UL 1479 and having an "F" and "T" rating equal to the fire-resistance rating of the assembly being penetrated. The grease

INTERNATIONAL CODE COUNCIL®
Copyright © 2019 ICC & NYSDOS. ALL RIGHTS RESERVED. Accessed by Lauren Gualdino (lgualdino@briarcliffmanor.org), (-) Order Number #100880972 on May 08, 2020 07:05 AM (PDT) pursuant to License Agreement with ICC & NYSDOS. No further reproduction, no

100880972

duct enclosure and firestop system shall be installed in accordance with the listing and the manufacturer's instructions. Partial application of a field-applied grease duct enclosure shall not be installed for the sole purpose of reducing clearances to combustibles at isolated sections of grease duct. Exposed duct-wrap systems shall be protected where subject to physical damage.

506.3.11.3 Factory-built grease duct enclosure assemblies. Factory-built grease ducts incorporating integral enclosure materials shall be *listed* and *labeled* for use as grease duct enclosure assemblies specifically evaluated for such purpose in accordance with UL 2221. Duct penetrations shall be protected with a through-penetration firestop system tested and *listed* in accordance with ASTM E814 or UL 1479 and having an "F" and "T" rating equal to the fire-resistance rating of the assembly being penetrated. The grease duct enclosure assembly and firestop system shall be installed in accordance with the listing and the manufacturer's instructions.

506.3.12 Grease duct fire-resistive access opening. Where cleanout openings are located in ducts within a fire-resistance-rated enclosure, access openings shall be provided in the enclosure at each cleanout point. Access openings shall be equipped with tight-fitting sliding or hinged doors that are equal in fire-resistive protection to that of the shaft or enclosure. An *approved* sign shall be placed on access opening panels with wording as follows: "ACCESS PANEL. DO NOT OBSTRUCT."

506.3.13 Exhaust outlets serving Type I hoods. Exhaust outlets for grease ducts serving Type I hoods shall conform to the requirements of Sections 506.3.13.1 through 506.3.13.3.

506.3.13.1 Termination above the roof. Exhaust outlets that terminate above the roof shall have the discharge opening located not less than 40 inches (1016 mm) above the roof surface.

506.3.13.2 Termination through an exterior wall. Exhaust outlets shall be permitted to terminate through exterior walls where the smoke, grease, gases, vapors and odors in the discharge from such terminations do not create a public nuisance or a fire hazard. Such terminations shall not be located where protected openings are required by the *Building Code of New York State*. Such terminations shall be located in accordance with Section 506.3.13.3 and shall not be located within 3 feet (914 mm) of any opening in the exterior wall.

506.3.13.3 Termination location. Exhaust outlets shall be located not less than 10 feet (3048 mm) horizontally from parts of the same or contiguous buildings, adjacent buildings and adjacent property lines and shall be located not less than 10 feet (3048 mm) above the adjoining grade level. Exhaust outlets shall be located not less than 10 feet (3048 mm) horizontally from or not less than 3 feet (914 mm) above air intake openings into any building.

Exception: Exhaust outlets shall terminate not less than 5 feet (1524 mm) horizontally from parts of the same or contiguous building, an adjacent building, adjacent property line and air intake openings into a building where air from the exhaust outlet discharges away from such locations.

506.4 Ducts serving Type II hoods. Commercial kitchen exhaust systems serving Type II hoods shall comply with Sections 506.4.1 and 506.4.2.

506.4.1 Ducts. Ducts and plenums serving Type II hoods shall be constructed of rigid metallic materials. Duct construction, installation, bracing and supports shall comply with Chapter 6. Ducts subject to positive pressure and ducts conveying moisture-laden or waste-heat-laden air shall be constructed, joined and sealed in an *approved* manner.

506.4.2 Type II terminations. Exhaust outlets serving Type II hoods shall terminate in accordance with the hood manufacturer's installation instructions and shall comply with all of the following:

1. Exhaust outlets shall terminate not less than 3 feet (914 mm) in any direction from openings into the building.
2. Outlets shall terminate not less than 10 feet (3048 mm) from property lines or buildings on the same lot.
3. Outlets shall terminate not less than 10 feet (3048 mm) above grade.
4. Outlets that terminate above a roof shall terminate not less than 30 inches (762 mm) above the roof surface.
5. Outlets shall terminate not less than 30 inches (762 mm) from exterior vertical walls.
6. Outlets shall be protected against local weather conditions.
7. Outlets shall not be directed onto walkways.
8. Outlets shall meet the provisions for exterior wall opening protectives in accordance with the *Building Code of New York State.*

506.5 Exhaust equipment. Exhaust *equipment*, including fans and grease reservoirs, shall comply with Sections 506.5.1 through 506.5.6 and shall be of an *approved* design or shall be *listed* for the application.

506.5.1 Exhaust fans. Exhaust fan housings serving a Type I hood shall be constructed as required for grease ducts in accordance with Section 506.3.1.1.

Exception: Fans *listed* and *labeled* in accordance with UL 762.

506.5.1.1 Fan motor. Exhaust fan motors shall be located outside of the exhaust airstream.

506.5.1.2 In-line fan location. Where enclosed duct systems are connected to in-line fans not located outdoors, the fan shall be located in a room or space having the same fire-resistance rating as the duct enclosure. Access shall be provided for servicing and cleaning of

INTERNATIONAL CODE COUNCIL®
Copyright © 2019 ICC & NYSDOS. ALL RIGHTS RESERVED. Accessed by Lauren Gualdino (lgualdino@briarcliffmanor.org), (-) Order Number #100880972 on May 08, 2020 07:05 AM (PDT) pursuant to License Agreement with ICC & NYSDOS. No further reproduction, no

100880972

fan components. Such rooms or spaces shall be ventilated in accordance with the fan manufacturer's installation instructions.

506.5.2 Pollution-control units. The installation of pollution-control units shall be in accordance with the manufacturer's installation instructions and all of the following:

1. Pollution-control units shall be listed and labeled in accordance with UL 1978.
2. Fans serving pollution-control units shall be listed and labeled in accordance with UL 762.
3. Pollution-control units shall be mounted and secured in accordance with the manufacturer's installation instructions and the *Building Code of New York State*.
4. Pollution-control units located indoors shall be listed and labeled for such use. Where enclosed duct systems, as required by Section 506.3.11, are connected to a pollution control unit, such unit shall be located in a room or space having the same fire-resistance rating as the duct enclosure. Access shall be provided for servicing and cleaning of the unit. The space or enclosure shall be ventilated in accordance with the manufacturer's installation instructions.
5. A clearance of not less than 18 inches (457 mm) shall be maintained between the pollution-control unit and combustible material.
6. Roof-mounted pollution-control units shall be listed for outdoor installation and shall be mounted not less than 18 inches (457 mm) above the roof.
7. Exhaust outlets for pollution-control units shall be in accordance with Section 506.3.13.
8. An airflow differential pressure control shall be provided to monitor the pressure drop across the filter sections of a pollution-control unit. When the airflow is reduced below the design velocity, the airflow differential pressure control shall activate a visual alarm located in the area where cooking operations occur.
9. Pollution-control units shall be provided with a factory-installed fire suppression system.
10. Service space shall be provided in accordance with the manufacturer's instructions for the pollution-control unit and the requirements of Section 306.
11. Wash-down drains shall discharge through a grease interceptor and shall be sized for the flow. Drains, shall be sealed with a trap or other approved means to prevent air bypass. Where a trap is utilized it shall have a seal depth that accounts for the system pressurization and evaporation between cleanings.
12. Protection from freezing shall be provided for the water supply and fire suppression systems where such systems are subject to freezing.
13. Duct connections to pollution-control units shall be in accordance with Section 506.3.2.3. Where water splash or carryover can occur in the transition duct as a result of a washing operation, the transition duct shall slope downward toward the cabinet drain pan for a length not less than 18 inches (457 mm). Ducts shall transition to the full size of the unit's inlet and outlet openings.
14. Extra-heavy-duty appliance exhaust systems shall not be connected to pollution-control units except where such units are specifically designed and listed for use with solid fuels.
15. Pollution-control units shall be maintained in accordance with the manufacturer's instructions.

506.5.3 Exhaust fan discharge. Exhaust fans shall be positioned so that the discharge will not impinge on the roof, other *equipment* or appliances or parts of the structure. A vertical discharge fan shall be manufactured with an *approved* drain outlet at the lowest point of the housing to permit drainage of grease to an *approved* grease reservoir.

506.5.4 Exhaust fan mounting. Up-blast fans serving Type I hoods and installed in a vertical or horizontal position shall be hinged, supplied with a flexible weatherproof electrical cable to permit inspection and cleaning and shall be equipped with a means of restraint to limit the swing of the fan on its hinge. The ductwork shall extend not less than 18 inches (457 mm) above the roof surface.

506.5.5 Clearances. Exhaust *equipment* serving a Type I hood shall have a *clearance* to combustible construction of not less than 18 inches (457 mm).

Exception: Factory-built exhaust *equipment* installed in accordance with Section 304.1 and *listed* for a lesser *clearance*.

506.5.6 Termination location. The outlet of exhaust *equipment* serving Type I hoods shall be in accordance with Section 506.3.13.

Exception: The minimum horizontal distance between vertical discharge fans and parapet-type building structures shall be 2 feet (610 mm) provided that such structures are not higher than the top of the fan discharge opening.

SECTION 507
COMMERCIAL KITCHEN HOODS

507.1 General. Commercial kitchen exhaust hoods shall comply with the requirements of this section. Hoods shall be Type I or II and shall be designed to capture and confine cooking vapors and residues. A Type I or Type II hood shall be installed at or above *appliances* in accordance with Sections 507.2 and 507.3. Where any cooking *appliance* under a single hood requires a Type I hood, a Type I hood shall be installed. Where a Type II hood is required, a Type I or Type II hood shall be installed. Where a Type I hood is installed, the installation of the entire system, including the hood, ducts, exhaust equipment and makeup air system shall comply with the requirements of Sections 506, 507, 508 and 509.

Exceptions:

1. Factory-built commercial exhaust hoods that are listed and labeled in accordance with UL 710, and

INTERNATIONAL CODE COUNCIL®
Copyright © 2019 ICC & NYSDOS. ALL RIGHTS RESERVED. Accessed by Lauren Gualdino (lgualdino@briarcliffmanor.org), (-) Order Number #100880972 on May 08, 2020 07:05 AM (PDT) pursuant to License Agreement with ICC & NYSDOS. No further reproduction, no

100880972

installed in accordance with Section 304.1, shall not be required to comply with Sections 507.1.5, 507.2.3, 507.2.5, 507.2.8, 507.3.1, 507.3.3, 507.4 and 507.5.

2. Factory-built commercial cooking recirculating systems that are listed and labeled in accordance with UL 710B, and installed in accordance with Section 304.1, shall not be required to comply with Sections 507.1.5, 507.2.3, 507.2.5, 507.2.8, 507.3.1, 507.3.3, 507.4 and 507.5. Spaces in which such systems are located shall be considered to be kitchens and shall be ventilated in accordance with Table 403.3.1.1. For the purpose of determining the floor area required to be ventilated, each individual *appliance* shall be considered as occupying not less than 100 square feet (9.3 m^2).
3. Where cooking appliances are equipped with integral down-draft exhaust systems and such appliances and exhaust systems are listed and labeled for the application in accordance with NFPA 96, a hood shall not be required at or above them.

507.1.1 Operation. Commercial kitchen exhaust hood systems shall operate during the cooking operation. The hood exhaust rate shall comply with the listing of the hood or shall comply with Section 507.5. The exhaust fan serving a Type I hood shall have automatic controls that will activate the fan when any appliance that requires such Type I Hood is turned on, or a means of interlock shall be provided that will prevent operation of such appliances when the exhaust fan is not turned on. Where one or more temperature or radiant energy sensors are used to activate a Type I hood exhaust fan, the fan shall activate not more than 15 minutes after the first appliance served by that hood has been turned on. A method of interlock between an exhaust hood system and appliances equipped with standing pilot burners shall not cause the pilot burners to be extinguished. A method of interlock between an exhaust hood system and cooking appliances shall not involve or depend on any component of a fire-extinguishing system.

The net exhaust volumes for hoods shall be permitted to be reduced during part-load cooking conditions, where engineered or *listed* multispeed or variable speed controls automatically operate the exhaust system to maintain capture and removal of cooking effluents as required by this section. Reduced volumes shall not be below that required to maintain capture and removal of effluents from the idle cooking appliances that are operating in a standby mode.

507.1.1.1 Multiple hoods utilizing a single exhaust system. Where heat or radiant energy sensors are utilized in hood systems consisting of multiple hoods served by a single exhaust system, such sensors shall be provided in each hood. Sensors shall be capable of being accessed from the hood outlet or from a cleanout location.

507.1.2 Domestic cooking appliances used for commercial purposes. Domestic cooking appliances utilized for commercial purposes shall be provided with Type I or Type II hoods as required for the type of appliances and processes in accordance with Sections 507.2 and 507.3. Domestic cooking appliances utilized for domestic cooking shall comply with Section 505.

507.1.3 Fuel-burning appliances. Where vented fuel-burning appliances are located in the same room or space as the hood, provisions shall be made to prevent the hood system from interfering with normal operation of the *appliance* vents.

507.1.4 Cleaning. A hood shall be designed to provide for thorough cleaning of the entire hood.

507.1.5 Exhaust outlets. Exhaust outlets located within the hood shall be located so as to optimize the capture of particulate matter. Each outlet shall serve not more than a 12-foot (3658 mm) section of hood.

507.2 Type I hoods. Type I hoods shall be installed where cooking *appliances* produce grease or smoke as a result of the cooking process. Type I hoods shall be installed over *medium-duty*, *heavy-duty* and *extra-heavy-duty cooking appliances*.

Exception: A Type I hood shall not be required for an electric cooking appliance where an approved testing agency provides documentation that the appliance effluent contains 5 mg/m^3 or less of grease when tested at an exhaust flow rate of 500 cfm (0.236 m^3/s) in accordance with UL 710B.

507.2.1 Type I exhaust flow rate label. Type I hoods shall bear a label indicating the minimum exhaust flow rate in cfm per linear foot (1.55 L/s per linear meter) of hood that provides for capture and containment of the exhaust effluent for the cooking appliances served by the hood, based on the cooking appliance duty classifications defined in this code.

507.2.2 Type I extra-heavy-duty. Type I hoods for use over *extra-heavy-duty cooking appliances* shall not cover *heavy-*, *medium-* or *light-duty appliances*. Such hoods shall discharge to an exhaust system that is independent of other exhaust systems.

507.2.3 Type I materials. Type I hoods shall be constructed of steel having a minimum thickness of 0.0466 inch (1.181 mm) (No. 18 gage) or stainless steel not less than 0.0335 inch [0.8525 mm (No. 20 MSG)] in thickness.

507.2.4 Type I supports. Type I hoods shall be secured in place by noncombustible supports. Type I hood supports shall be adequate for the applied load of the hood, the unsupported ductwork, the effluent loading and the possible weight of personnel working in or on the hood.

507.2.5 Type I hoods. External hood joints, seams and penetrations for Type I hoods shall be made with a continuous external liquid-tight weld or braze to the lowest outermost perimeter of the hood. Internal hood joints, seams, penetrations, filter support frames and other appendages attached inside the hood shall not be required to be welded or brazed but shall be otherwise sealed to be grease tight.

Exceptions:

1. Penetrations shall not be required to be welded or brazed where sealed by devices that are *listed* for the application.

INTERNATIONAL CODE COUNCIL®
Copyright © 2019 ICC & NYSDOS. ALL RIGHTS RESERVED. Accessed by Lauren Gualdino (lgualdino@briarcliffmanor.org), (-) Order Number #100880972 on May 08, 2020 07:05 AM (PDT) pursuant to License Agreement with ICC & NYSDOS. No further reproduction, no

100880972

2. Internal welding or brazing of seams, joints and penetrations of the hood shall not be prohibited provided that the joint is formed smooth or ground so as to not trap grease, and is readily cleanable.

507.2.6 Clearances for Type I hood. A Type I hood shall be installed with a *clearance* to combustibles of not less than 18 inches (457 mm).

Exceptions:

1. *Clearance* shall not be required from gypsum wallboard or $^1/_2$-inch (12.7 mm) or thicker cementitious wallboard attached to noncombustible structures provided that a smooth, cleanable, nonabsorbent and noncombustible material is installed between the hood and the gypsum or cementitious wallboard over an area extending not less than 18 inches (457 mm) in all directions from the hood.
2. Type I hoods listed and labeled for clearances less than 18 inches in accordance with UL 710 shall be installed with the clearances specified by such listings.

507.2.7 Type I hoods penetrating a ceiling. Type I hoods or portions thereof penetrating a ceiling, wall or furred space shall comply with Section 506.3.11. Field-applied grease duct enclosure systems, as addressed in Section 506.3.11.2, shall not be utilized to satisfy the requirements of this section.

507.2.8 Type I grease filters. Type I hoods shall be equipped with grease filters listed and labeled in accordance with UL 1046. Grease filters shall be provided with access for cleaning or replacement. The lowest edge of a grease filter located above the cooking surface shall be not less than the height specified in Table 507.2.8.

TABLE 507.2.8
MINIMUM DISTANCE BETWEEN THE LOWEST EDGE OF A GREASE FILTER AND THE COOKING SURFACE OR THE HEATING SURFACE

TYPE OF COOKING APPLIANCES	HEIGHT ABOVE COOKING SURFACE (feet)
Without exposed flame	0.5
Exposed flame and burners	2
Exposed charcoal and charbroil type	3.5

For SI: 1 foot = 304.8 mm.

507.2.8.1 Criteria. Filters shall be of such size, type and arrangement as will permit the required quantity of air to pass through such units at rates not exceeding those for which the filter or unit was designed or *approved*. Filter units shall be installed in frames or holders so as to be readily removable without the use of separate tools, unless designed and installed to be cleaned in place and the system is equipped for such cleaning in place. Where filters are designed and required to be cleaned, removable filter units shall be of a size that will allow them to be cleaned in a dishwashing machine or pot sink. Filter units shall be arranged in place or provided with drip-intercepting devices to prevent grease or other condensate from dripping into food or on food preparation surfaces.

507.2.8.2 Mounting position of grease filters. Filters shall be installed at an angle of not less than 45 degrees (0.79 rad) from the horizontal and shall be equipped with a drip tray beneath the lower edge of the filters.

507.2.9 Grease gutters for Type I hood. Grease gutters shall drain to an *approved* collection receptacle that is fabricated, designed and installed to allow access for cleaning.

507.3 Type II hoods. Type II hoods shall be installed above dishwashers and appliances that produce heat or moisture and do not produce grease or smoke as a result of the cooking process, except where the heat and moisture loads from such appliances are incorporated into the HVAC system design or into the design of a separate removal system. Type II hoods shall be installed above all appliances that produce products of combustion and do not produce grease or smoke as a result of the cooking process. Spaces containing cooking appliances that do not require Type II hoods shall be provided with exhaust at a rate of 0.70 cfm per square foot (0.00033 m^3/s). For the purpose of determining the floor area required to be exhausted, each individual appliance that is not required to be installed under a Type II hood shall be considered as occupying not less than 100 square feet (9.3 m^2). Such additional square footage shall be provided with exhaust at a rate of 0.70 cfm per square foot [.00356 $m^3/(s \cdot m^2)$].

507.3.1 Type II hood materials. Type II hoods shall be constructed of steel having a minimum thickness of 0.0296 inch (0.7534 mm) (No. 22 gage) or stainless steel not less than 0.0220 inch (0.5550 mm) (No. 24 gage) in thickness, copper sheets weighing not less than 24 ounces per square foot (7.3 kg/m^2) or of other *approved* material and gage.

507.3.2 Type II supports. Type II hood supports shall be adequate for the applied load of the hood, the unsupported ductwork, the effluent loading and the possible weight of personnel working in or on the hood.

507.3.3 Type II hoods joint, seams and penetrations. Joints, seams and penetrations for Type II hoods shall be constructed as set forth in Chapter 6, shall be sealed on the interior of the hood and shall provide a smooth surface that is readily cleanable and water tight.

507.4 Hood size and location. Hoods shall comply with the overhang, setback and height requirements in accordance with Sections 507.4.1 and 507.4.2, based on the type of hood.

507.4.1 Canopy size and location. The inside lower edge of canopy-type Type I and II commercial hoods shall overhang or extend a horizontal distance of not less than 6 inches (152 mm) beyond the edge of the top horizontal surface of the *appliance* on all open sides. The vertical distance between the front lower lip of the hood and such surface shall not exceed 4 feet (1219 mm).

Exception: The hood shall be permitted to be flush with the outer edge of the cooking surface where the hood is closed to the *appliance* side by a noncombustible wall or panel.

INTERNATIONAL CODE COUNCIL®
Copyright © 2019 ICC & NYSDOS. ALL RIGHTS RESERVED. Accessed by Lauren Gualdino (lgualdino@briarcliffmanor.org), (-) Order Number #100880972 on May 08, 2020 07:05 AM (PDT) pursuant to License Agreement with ICC & NYSDOS. No further reproduction, no

100880972

507.4.2 Noncanopy size and location. Noncanopy-type hoods shall be located not greater than 3 feet (914 mm) above the cooking surface. The edge of the hood shall be set back not greater than 1 foot (305 mm) from the edge of the cooking surface.

507.5 Capacity of hoods. Commercial food service hoods shall exhaust a minimum net quantity of air determined in accordance with this section and Sections 507.5.1 through 507.5.5. The net quantity of *exhaust air* shall be calculated by subtracting any airflow supplied directly to a hood cavity from the total exhaust flow rate of a hood. Where any combination of *heavy-duty*, *medium-duty* and *light-duty cooking appliances* are utilized under a single hood, the exhaust rate required by this section for the heaviest duty *appliance* covered by the hood shall be used for the entire hood.

507.5.1 Extra-heavy-duty cooking appliances. The minimum net airflow for hoods, as determined by Section 507.1, used for *extra-heavy-duty cooking appliances* shall be determined as follows:

Type of Hood	CFM per linear foot of hood
Backshelf/pass-over	Not allowed
Double island canopy (per side)	550
Eyebrow	Not allowed
Single island canopy	700
Wall-mounted canopy	550

For SI: 1 cfm per linear foot = 1.55 L/s per linear meter.

507.5.2 Heavy-duty cooking appliances. The minimum net airflow for hoods, as determined by Section 507.1, used for *heavy-duty cooking appliances* shall be determined as follows:

Type of Hood	CFM per linear foot of hood
Backshelf/pass-over	400
Double island canopy (per side)	400
Eyebrow	Not allowed
Single island canopy	600
Wall-mounted canopy	400

For SI: 1 cfm per linear foot = 1.55 L/s per linear meter.

507.5.3 Medium-duty cooking appliances. The minimum net airflow for hoods, as determined by Section 507.1, used for *medium-duty cooking appliances* shall be determined as follows:

Type of Hood	CFM per linear foot of hood
Backshelf/pass-over	300
Double island canopy (per side)	300
Eyebrow	250
Single island canopy	500
Wall-mounted canopy	300

For SI: 1 cfm per linear foot = 1.55 L/s per linear meter.

507.5.4 Light-duty cooking appliances. The minimum net airflow for hoods, as determined by Section 507.1, used for *light-duty* cooking appliances and food service preparation shall be determined as follows:

Type of Hood	CFM per linear foot of hood
Backshelf/pass-over	250
Double island canopy (per side)	250
Eyebrow	250
Single island canopy	400
Wall-mounted canopy	200

For SI: 1 cfm per linear foot = 1.55 L/s per linear meter.

507.5.5 Dishwashing appliances. The minimum net airflow for Type II hoods used for dishwashing appliances shall be 100 cfm per linear foot (155 L/s per linear meter) of hood length.

Exception: Dishwashing appliances and *equipment* installed in accordance with Section 507.3.

507.6 Performance test. A performance test shall be conducted upon completion and before final approval of the installation of a ventilation system serving *commercial cooking appliances*. The test shall verify the rate of exhaust airflow required by Section 507.5, makeup airflow required by Section 508 and proper operation as specified in this chapter. The permit holder shall furnish the necessary test *equipment* and devices required to perform the tests.

507.6.1 Capture and containment test. The permit holder shall verify capture and containment performance of the exhaust system. This field test shall be conducted with all appliances under the hood at operating temperatures, with all sources of outdoor air providing *makeup air* for the hood operating and with all sources of recirculated air providing conditioning for the space in which the hood is located operating. Capture and containment shall be verified visually by observing smoke or steam produced by actual or simulated cooking, such as that provided by smoke candles and smoke puffers. Smoke bombs shall not be used.

SECTION 508
COMMERCIAL KITCHEN MAKEUP AIR

508.1 Makeup air. *Makeup air* shall be supplied during the operation of commercial kitchen exhaust systems that are provided for *commercial cooking appliances*. The amount of *makeup air* supplied to the building from all sources shall be approximately equal to the amount of *exhaust air* for all exhaust systems for the building. The *makeup air* shall not reduce the effectiveness of the exhaust system. *Makeup air* shall be provided by gravity or mechanical means or both. Mechanical *makeup air* systems shall be automatically controlled to start and operate simultaneously with the exhaust system. *Makeup air* intake opening locations shall comply with Section 401.4.

INTERNATIONAL CODE COUNCIL®
Copyright © 2019 ICC & NYSDOS. ALL RIGHTS RESERVED. Accessed by Lauren Gualdino (lgualdino@briarcliffmanor.org), (-) Order Number #100880972 on May 08, 2020 07:05 AM (PDT) pursuant to License Agreement with ICC & NYSDOS. No further reproduction, no

100880972

508.1.1 Makeup air temperature. The temperature differential between *makeup air* and the air in the conditioned space shall not exceed 10ºF (6ºC) except where the added heating and cooling loads of the *makeup air* do not exceed the capacity of the HVAC system.

508.1.2 Air balance. Design plans for a facility with a commercial kitchen ventilation system shall include a schedule or diagram indicating the design outdoor air balance. The design outdoor air balance shall indicate all exhaust and replacement air for the facility, plus the net exfiltration if applicable. The total replacement air airflow rate shall equal the total exhaust airflow rate plus the net exfiltration.

508.2 Compensating hoods. Manufacturers of compensating hoods shall provide a label indicating the minimum exhaust flow, the maximum makeup airflow or both that provides capture and containment of the exhaust effluent.

Exception: Compensating hoods with *makeup air* supplied only from the front face discharge and side face discharge openings shall not be required to be labeled with the maximum makeup airflow.

SECTION 509
FIRE SUPPRESSION SYSTEMS

509.1 Where required. *Cooking appliances* required by Section 507.2 to have a Type I hood shall be provided with an *approved* automatic fire suppression system complying with the *Building Code of New York State* and the *Fire Code of New York State*.

SECTION 510
HAZARDOUS EXHAUST SYSTEMS

510.1 General. This section shall govern the design and construction of duct systems for hazardous exhaust and shall determine where such systems are required. Hazardous exhaust systems are systems designed to capture and control hazardous emissions generated from product handling or processes, and convey those emissions to the outdoors. Hazardous emissions include flammable vapors, gases, fumes, mists or dusts, and volatile or airborne materials posing a health hazard, such as toxic or corrosive materials. For the purposes of this section, the health-hazard rating of materials shall be as specified in NFPA 704.

For the purposes of the provisions of Section 510, a laboratory shall be defined as a facility where the use of chemicals is related to testing, analysis, teaching, research or developmental activities. Chemicals are used or synthesized on a nonproduction basis, rather than in a manufacturing process.

510.2 Where required. A hazardous exhaust system shall be required wherever operations involving the handling or processing of hazardous materials, in the absence of such exhaust systems and under normal operating conditions, have the potential to create one of the following conditions:

1. A flammable vapor, gas, fume, mist or dust is present in concentrations exceeding 25 percent of the lower flammability limit of the substance for the expected room temperature.
2. A vapor, gas, fume, mist or dust with a health-hazard rating of 4 is present in any concentration.
3. A vapor, gas, fume, mist or dust with a health-hazard rating of 1, 2 or 3 is present in concentrations exceeding 1 percent of the median lethal concentration of the substance for acute inhalation toxicity.

Exception: Laboratories, as defined in Section 510.1, except where the concentrations listed in Item 1 are exceeded or a vapor, gas, fume, mist or dust with a health-hazard rating of 1, 2, 3 or 4 is present in concentrations exceeding 1 percent of the median lethal concentration of the substance for acute inhalation toxicity.

[F] 510.2.1 Lumber yards and woodworking facilities. *Equipment* or machinery located inside buildings at lumber yards and woodworking facilities that generates or emits combustible dust shall be provided with an *approved* dust-collection and exhaust system installed in accordance with this section and the *Fire Code of New York State*. *Equipment* and systems that are used to collect, process or convey combustible dusts shall be provided with an *approved* explosion-control system.

[F] 510.2.2 Combustible fibers. *Equipment* or machinery within a building that generates or emits combustible fibers shall be provided with an *approved* dust-collecting and exhaust system. Such systems shall comply with this code and the *Fire Code of New York State*.

510.3 Design and operation. The design and operation of the exhaust system shall be such that flammable contaminants are diluted in noncontaminated air to maintain concentrations in the exhaust flow below 25 percent of the contaminant's lower flammability limit.

510.4 Independent system. Hazardous exhaust systems shall be independent of other types of exhaust systems.

510.5 Incompatible materials and common shafts. Incompatible materials, as defined in the *Fire Code of New York State*, shall not be exhausted through the same hazardous exhaust system. Hazardous exhaust systems shall not share common shafts with other duct systems, except where such systems are hazardous exhaust systems originating in the same fire area.

Exception: The provisions of this section shall not apply to laboratory exhaust systems where all of the following conditions apply:

1. All of the hazardous exhaust ductwork and other laboratory exhaust within both the occupied space and the shafts are under negative pressure while in operation.
2. The hazardous exhaust ductwork manifolded together within the occupied space must originate within the same fire area.
3. Hazardous exhaust ductwork originating in different fire areas and manifolded together in a common shaft shall meet the provisions of Section 717.5.3, Exception 1, Item 1.1 of the *Building Code of New York State*.

INTERNATIONAL CODE COUNCIL®
Copyright © 2019 ICC & NYSDOS. ALL RIGHTS RESERVED. Accessed by Lauren Gualdino (lgualdino@briarcliffmanor.org), (-) Order Number #100880972 on May 08, 2020 07:05 AM (PDT) pursuant to License Agreement with ICC & NYSDOS. No further reproduction, no

100880972

4. Each control branch has a flow regulating device.
5. Perchloric acid hoods and connected exhaust shall be prohibited from manifolding.
6. Radioisotope hoods are equipped with filtration, carbon beds or both where required by the *registered design professional*.
7. Biological safety cabinets are filtered.
8. Each hazardous exhaust duct system shall be served by redundant exhaust fans that comply with either of the following:
    8.1. The fans shall operate simultaneously in parallel and each fan shall be individually capable of providing the required exhaust rate.
    8.2. Each of the redundant fans is controlled so as to operate when the other fan has failed or is shut down for servicing.

510.6 Design. Systems for removal of vapors, gases and smoke shall be designed by the constant velocity or equal friction methods. Systems conveying particulate matter shall be designed employing the constant velocity method.

510.6.1 Balancing. Systems conveying explosive or radioactive materials shall be prebalanced by duct sizing. Other systems shall be balanced by duct sizing with balancing devices, such as dampers. Dampers provided to balance airflow shall have securely fixed minimum-position blocking devices to prevent restricting the flow below the required volume or velocity.

510.6.2 Emission control. The design of the system shall be such that the emissions are confined to the area in which they are generated by air currents, hoods or enclosures and shall be exhausted by a duct system to a safe location or treated by removing contaminants.

510.6.3 Hoods required. Hoods or enclosures shall be used where contaminants originate in a limited area of a space. The design of the hood or enclosure shall be such that air currents created by the exhaust systems will capture the contaminants and transport them directly to the exhaust duct.

510.6.4 Contaminant capture and dilution. The velocity and circulation of air in work areas shall be such that contaminants are captured by an airstream at the area where the emissions are generated and conveyed into a product-conveying duct system. Contaminated air from work areas where hazardous contaminants are generated shall be diluted below the thresholds specified in Section 510.2 with air that does not contain other hazardous contaminants.

510.6.5 Makeup air. *Makeup* air shall be provided at a rate approximately equal to the rate that air is exhausted by the hazardous exhaust system. Makeup air intakes shall be located in accordance with Section 401.4.

510.6.6 Clearances. The minimum *clearance* between hoods and combustible construction shall be the *clearance* required by the duct system.

510.6.7 Ducts. Hazardous exhaust duct systems shall extend directly to the exterior of the building and shall not extend into or through ducts and plenums.

510.7 Penetrations. Penetrations of structural elements by a hazardous exhaust system shall conform to Sections 510.7.1 through 510.7.4.

Exception: Duct penetrations within Group H-5 occupancies as allowed by the *Building Code of New York State*.

510.7.1 Fire dampers and smoke dampers. Fire dampers and smoke dampers are prohibited in hazardous exhaust ducts.

510.7.1.1 Shaft penetrations. Hazardous exhaust ducts that penetrate fire-resistance-rated shafts shall comply with Section 714.4.1 or 714.4.1.2 of the *Building Code of New York State*.

510.7.2 Floors. Hazardous exhaust systems that penetrate a floor/ceiling assembly shall be enclosed in a fire-resistance-rated shaft constructed in accordance with the *Building Code of New York State.*

510.7.3 Wall assemblies. Hazardous exhaust duct systems that penetrate fire-resistance-rated wall assemblies shall be enclosed in fire-resistance-rated construction from the point of penetration to the outlet terminal, except where the interior of the duct is equipped with an approved automatic fire suppression system. Ducts shall be enclosed in accordance with the *Building Code of New York State* requirements for shaft construction and such enclosure shall have a minimum fire-resistance rating of not less than the highest fire-resistance-rated wall assembly penetrated.

510.7.4 Fire walls. Ducts shall not penetrate a fire wall.

510.8 Suppression required. Ducts shall be protected with an *approved* automatic fire suppression system installed in accordance with the *Building Code of New York State*.

Exceptions:

1. An approved automatic fire suppression system shall not be required in ducts conveying materials, fumes, mists and vapors that are nonflammable and noncombustible under all conditions and at any concentrations.
2. Automatic fire suppression systems shall not be required in metallic and noncombustible, nonmetallic exhaust ducts in semiconductor fabrication facilities.
3. An *approved* automatic fire suppression system shall not be required in ducts where the largest cross-sectional diameter of the duct is less than 10 inches (254 mm).
4. For laboratories, as defined in Section 510.1, automatic fire protection systems shall not be required in laboratory hoods or exhaust systems.

510.8.1 Duct cleanout. Ducts conveying combustible dust as part of a dust collection system shall be equipped with cleanouts that are provided with approved access, predesigned to be disassembled for cleaning, or engineered for automatic cleanouts. Where provided, cleanouts shall be

INTERNATIONAL CODE COUNCIL®
Copyright © 2019 ICC & NYSDOS. ALL RIGHTS RESERVED. Accessed by Lauren Gualdino (lgualdino@briarcliffmanor.org), (-) Order Number #100880972 on May 08, 2020 07:05 AM (PDT) pursuant to License Agreement with ICC & NYSDOS. No further reproduction, no

100880972

located at the base of each vertical duct riser and at intervals not exceeding 20 feet (6096 mm) in horizontal sections of duct.

510.9 Duct construction. Ducts used to convey hazardous exhaust shall be constructed of materials *approved* for installation in such an exhaust system and shall comply with one of the following:

1. Ducts shall be constructed of *approved* G90 galvanized sheet steel, with a minimum nominal thickness as specified in Table 510.9.
2. Ducts used in systems exhausting nonflammable corrosive fumes or vapors shall be constructed of nonmetallic materials that exhibit a flame spread index of 25 or less and a smoke-developed index of 50 or less when tested in accordance with ASTM E84 or UL 723 and that are *listed* and *labeled* for the application.

Where the products being exhausted are detrimental to the duct material, the ducts shall be constructed of alternative materials that are compatible with the exhaust.

TABLE 510.9
MINIMUM DUCT THICKNESS

DIAMETER OF DUCT OR MAXIMUM SIDE DIMENSION	MINIMUM NOMINAL THICKNESS		
	Nonabrasive materials	Nonabrasive/ abrasive materials	Abrasive materials
0–8 inches	0.028 inch (No. 24 gage)	0.034 inch (No. 22 gage)	0.040 inch (No. 20 gage)
9–18 inches	0.034 inch (No. 22 gage)	0.040 inch (No. 20 gage)	0.052 inch (No. 18 gage)
19–30 inches	0.040 inch (No. 20 gage)	0.052 inch (No. 18 gage)	0.064 inch (No. 16 gage)
Over 30 inches	0.052 inch (No. 18 gage)	0.064 inch (No. 16 gage)	0.079 inch (No. 14 gage)

For SI: 1 inch = 25.4 mm.

510.9.1 Duct joints. Ducts shall be made tight with lap joints having a minimum lap of 1 inch (25 mm). Joints used in ANSI/SMACNA Round Industrial Duct Construction Standards and ANSI/SMACNA Rectangular Industrial Duct Construction Standards are also acceptable.

510.9.2 Clearance to combustibles. Ducts shall have a *clearance* to combustibles in accordance with Table 510.9.2. Exhaust gases having temperatures in excess of 600ºF (316ºC) shall be exhausted to a *chimney* in accordance with Section 511.2.

TABLE 510.9.2
CLEARANCE TO COMBUSTIBLES

TYPE OF EXHAUST OR TEMPERATURE OF EXHAUST (ºF)	CLEARANCE TO COMBUSTIBLES (inches)
Less than 100	1
100–600	12
Flammable vapors	6

For SI: 1 inch = 25.4 mm, ºC = [(ºF) - 32]/1.8.

510.9.3 Explosion relief. Systems exhausting potentially explosive mixtures shall be protected with an *approved* explosion relief system or by an *approved* explosion prevention system designed and installed in accordance with NFPA 69. An explosion relief system shall be designed to minimize the structural and mechanical damage resulting from an explosion or deflagration within the exhaust system. An explosion prevention system shall be designed to prevent an explosion or deflagration from occurring.

510.10 Supports. Ducts shall be supported at intervals not exceeding 10 feet (3048 mm). Supports shall be constructed of noncombustible material.

SECTION 511
DUST, STOCK AND REFUSE CONVEYING SYSTEMS

511.1 Dust, stock and refuse conveying systems. Dust, stock and refuse conveying systems shall comply with the provisions of Section 510 and Sections 511.1.1 through 511.2.

511.1.1 Collectors and separators. Collectors and separators involving such systems as centrifugal separators, bag filter systems and similar devices, and associated supports shall be constructed of noncombustible materials and shall be located on the exterior of the building or structure. A collector or separator shall not be located nearer than 10 feet (3048 mm) to combustible construction or to an unprotected wall or floor opening, unless the collector is provided with a metal vent pipe that extends above the highest part of any roof with a distance of 30 feet (9144 mm).

Exceptions:

1. Collectors such as “Point of Use” collectors, close extraction weld fume collectors, spray finishing booths, stationary grinding tables, sanding booths, and integrated or machine-mounted collectors shall be permitted to be installed indoors provided that the installation is in accordance with the *Fire Code of New York State* and NFPA 70.
2. Collectors in independent exhaust systems handling combustible dusts shall be permitted to be installed indoors provided that such collectors are installed in compliance with the *Fire Code of New York State* and NFPA 70.

511.1.2 Discharge pipe. Discharge piping shall conform to the requirements for ducts, including clearances required for high-heat appliances, as contained in this code. A delivery pipe from a cyclone collector shall not convey refuse directly into the firebox of a boiler, furnace, Dutch oven, refuse burner, incinerator or other *appliance*.

511.1.3 Conveying systems exhaust discharge. An exhaust system shall discharge to the outside of the building either directly by flue or indirectly through the bin or vault into which the system discharges except where the contaminants have been removed. Exhaust system discharge shall be permitted to be recirculated provided that the solid particulate has been removed at a minimum efficiency of 99.9 percent at 10 microns (10.01 mm), vapor concentrations are less than 25 percent of the LFL, and *approved equipment* is used to monitor the vapor concentration.

INTERNATIONAL CODE COUNCIL®
Copyright © 2019 ICC & NYSDOS. ALL RIGHTS RESERVED. Accessed by Lauren Gualdino (lgualdino@briarcliffmanor.org), (-) Order Number #100880972 on May 08, 2020 07:05 AM (PDT) pursuant to License Agreement with ICC & NYSDOS. No further reproduction, no

100880972

511.1.4 Spark protection. The outlet of an open-air exhaust terminal shall be protected with an *approved* metal or other noncombustible screen to prevent the entry of sparks.

511.1.5 Explosion relief vents. A safety or explosion relief vent shall be provided on all systems that convey combustible refuse or stock of an explosive nature, in accordance with the requirements of the *Building Code of New York State*.

511.1.5.1 Screens. Where a screen is installed in a safety relief vent, the screen shall be attached so as to permit ready release under the explosion pressure.

511.1.5.2 Hoods. The relief vent shall be provided with an *approved* noncombustible cowl or hood, or with a counterbalanced relief valve or cover arranged to prevent the escape of hazardous materials, gases or liquids.

511.2 Exhaust outlets. Outlets for exhaust that exceed 600ºF (315ºC) shall be designed as a *chimney* in accordance with Table 511.2.

SECTION 512
SUBSLAB SOIL EXHAUST SYSTEMS

512.1 General. Where a subslab soil exhaust system is provided, the duct shall conform to the requirements of this section.

512.2 Materials. Subslab soil exhaust system duct material shall be air duct material *listed* and *labeled* to the requirements of UL 181 for Class 0 air ducts, or any of the following piping materials that comply with the *Plumbing Code of New York State* as building sanitary drainage and vent pipe: cast iron; galvanized steel; copper or copper-alloy pipe and tube of a weight not less than type DWV; and plastic piping.

512.3 Grade. Exhaust system ducts shall not be trapped and shall have a minimum slope of one-eighth unit vertical in 12 units horizontal (1-percent slope).

512.4 Termination. Subslab soil exhaust system ducts shall extend through the roof and terminate not less than 6 inches (152 mm) above the roof and not less than 10 feet (3048 mm) from any operable openings or air intake.

512.5 Identification. Subslab soil exhaust ducts shall be permanently identified within each floor level by means of a tag, stencil or other *approved* marking.

SECTION 513
SMOKE CONTROL SYSTEMS

[F] 513.1 Scope and purpose. This section applies to mechanical and passive smoke control systems that are required by the *Building Code of New York State* or the *Fire Code of New York State*. The purpose of this section is to establish minimum requirements for the design, installation and acceptance testing of smoke control systems that are intended to provide a tenable environment for the evacuation or relocation of occupants. These provisions are not intended for the preservation of contents, the timely restoration of operations, or for assistance in fire suppression or overhaul activities. Smoke control systems regulated by this section serve a different purpose than the smoke and heat removal provisions found in Section 910 of the *Building Code of New York State* or the *Fire Code of New York State*.

[F] 513.2 General design requirements. Buildings, structures, or parts thereof required by the *Building Code of New York State* or the *Fire Code of New York State* to have a smoke control system or systems shall have such systems designed in accordance with the applicable requirements of Section 909 of the *Building Code of New York State* and the generally accepted and well-established principles of engineering relevant to the design. The *construction documents* shall include sufficient information and detail to describe adequately the elements of the design necessary for the proper implementation of the smoke control systems. These documents shall be accompanied with sufficient information

TABLE 511.2
CONSTRUCTION, CLEARANCE AND TERMINATION REQUIREMENTS FOR SINGLE-WALL METAL CHIMNEYS

CHIMNEYS SERVING	MINIMUM THICKNESS		TERMINATION				CLEARANCE			
	Walls (inch)	Lining	Above roof opening (feet)	Above any part of building within (feet)			Combustible construction (inches)		Noncombustible construction	
				10	25	50	Interior inst.	Exterior inst.	Interior inst.	Exterior inst.
High-heat appliances (Over 2,000ºF)[a]	0.127 (No. 10 MSG)	$4^1/_2$" laid on $4^1/_2$" bed	20	—	—	20	See Note c			
Low-heat appliances (1,000ºF normal operation)	0.127 (No. 10 MSG)	none	3	2	—	—	18	6	Up to 18" diameter, 2" Over 18" diameter, 4"	
Medium-heat appliances (2,000ºF maximum)[b]	0.127 (No. 10 MSG)	Up to 18" dia.—$2^1/_2$" Over 18"—$4^1/_2$" On $4^1/_2$" bed	10	—	10	—	36	24		

For SI: 1 inch = 25.4 mm, 1 foot = 304.8 mm, ºC = [(ºF) - 32]/1.8.

a. Lining shall extend from bottom to top of outlet.

b. Lining shall extend from 24 inches below connector to 24 feet above.

c. Clearance shall be as specified by the design engineer and shall have sufficient clearance from buildings and structures to avoid overheating combustible materials (maximum 160ºF).

INTERNATIONAL CODE COUNCIL®
Copyright © 2019 ICC & NYSDOS. ALL RIGHTS RESERVED. Accessed by Lauren Gualdino (lgualdino@briarcliffmanor.org), (-) Order Number #100880972 on May 08, 2020 07:05 AM (PDT) pursuant to License Agreement with ICC & NYSDOS. No further reproduction, no

100880972

and analysis to demonstrate compliance with these provisions.

[F] 513.3 Special inspection and test requirements. In addition to the ordinary inspection and test requirements that buildings, structures and parts thereof are required to undergo, smoke control systems subject to the provisions of Section 909 of the *Building Code of New York State* shall undergo special inspections and tests sufficient to verify the proper commissioning of the smoke control design in its final installed condition. The design submission accompanying the *construction documents* shall clearly detail procedures and methods to be used and the items subject to such inspections and tests. Such commissioning shall be in accordance with generally accepted engineering practice and, where possible, based on published standards for the particular testing involved. The special inspections and tests required by this section shall be conducted under the same terms as found in Section 1704 of the *Building Code of New York State*.

[F] 513.4 Analysis. A rational analysis supporting the types of smoke control systems to be employed, their methods of operation, the systems supporting them and the methods of construction to be utilized shall accompany the submitted *construction documents* and shall include, but not be limited to, the items indicated in Sections 513.4.1 through 513.4.7.

[F] 513.4.1 Stack effect. The system shall be designed such that the maximum probable normal or reverse stack effects will not adversely interfere with the system's capabilities. In determining the maximum probable stack effects, altitude, elevation, weather history and interior temperatures shall be used.

[F] 513.4.2 Temperature effect of fire. Buoyancy and expansion caused by the design fire in accordance with Section 513.9 shall be analyzed. The system shall be designed such that these effects do not adversely interfere with its capabilities.

[F] 513.4.3 Wind effect. The design shall consider the adverse effects of wind. Such consideration shall be consistent with the wind-loading provisions of the *Building Code of New York State*.

[F] 513.4.4 HVAC systems. The design shall consider the effects of the heating, ventilating and air-conditioning (HVAC) systems on both smoke and fire transport. The analysis shall include all permutations of systems' status. The design shall consider the effects of fire on the HVAC systems.

[F] 513.4.5 Climate. The design shall consider the effects of low temperatures on systems, property and occupants. Air inlets and exhausts shall be located so as to prevent snow or ice blockage.

[F] 513.4.6 Duration of operation. All portions of active or engineered smoke control systems shall be capable of continued operation after detection of the fire event for a period of not less than either 20 minutes or 1.5 times the calculated egress time, whichever is greater.

513.4.7 Smoke control system interaction. The design shall consider the interaction effects of the operation of multiple smoke control systems for all design scenarios.

[F] 513.5 Smoke barrier construction. Smoke barriers required for passive smoke control and a smoke control system using the pressurization method shall comply with Section 709 of the *Building Code of New York State*. The maximum allowable leakage area shall be the aggregate area calculated using the following leakage area ratios:

1. Walls: $A/A_w = 0.00100$
2. Interior exit stairways and ramps and exit passageways: $A/A_w = 0.00035$
3. Enclosed exit access stairways and ramps and all other shafts: $A/A_w = 0.00150$
4. Floors and roofs: $A/A_F = 0.00050$

where:

A = Total leakage area, square feet (m^2).

A_F = Unit floor or roof area of barrier, square feet (m^2).

A_w = Unit wall area of barrier, square feet (m^2).

The leakage area ratios shown do not include openings created by gaps around doors and operable windows. The total leakage area of the smoke barrier shall be determined in accordance with Section 513.5.1 and tested in accordance with Section 513.5.2.

[F] 513.5.1 Total leakage area. Total leakage area of the barrier is the product of the smoke barrier gross area times the allowable leakage area ratio, plus the area of other openings such as gaps around doors and operable windows.

[F] 513.5.2 Testing of leakage area. Compliance with the maximum total leakage area shall be determined by achieving the minimum air pressure difference across the barrier with the system in the smoke control mode for mechanical smoke control systems utilizing the pressurization method. Compliance with the maximum total leakage area of passive smoke control systems shall be verified through methods such as door fan testing or other methods, as *approved* by the fire code official.

[F] 513.5.3 Opening protection. Openings in smoke barriers shall be protected by automatic-closing devices actuated by the required controls for the mechanical smoke control system. Door openings shall be protected by door assemblies complying with the requirements of the *Building Code of New York State* for doors in smoke barriers.

Exceptions:

1. Passive smoke control systems with automatic-closing devices actuated by spot-type smoke detectors *listed* for releasing service installed in accordance with the *Building Code of New York State*.
2. Fixed openings between smoke zones that are protected utilizing the airflow method.
3. In Group I-1, Condition 2, Group I-2 and ambulatory care facilities, where a pair of opposite-swinging doors are installed across a corridor in accordance with Section 513.5.3.1, the doors shall not be required to be protected in accordance with Section 716 of the *Building Code of New York State*. The doors shall be close-fitting within operational tolerances and shall not have a

INTERNATIONAL CODE COUNCIL®
Copyright © 2019 ICC & NYSDOS. ALL RIGHTS RESERVED. Accessed by Lauren Gualdino (lgualdino@briarcliffmanor.org), (-) Order Number #100880972 on May 08, 2020 07:05 AM (PDT) pursuant to License Agreement with ICC & NYSDOS. No further reproduction, no

100880972

center mullion or undercuts in excess of $^3/_4$ inch (19.1 mm), louvers or grilles. The doors shall have head and jamb stops and astragals or rabbets at meeting edges and, where permitted by the door manufacturer's listing, positive-latching devices are not required.

4. In Group I-2 and ambulatory care facilities, where such doors are special-purpose horizontal sliding, accordion or folding door assemblies installed in accordance with Section 1010.1.4.3 of the *Building Code of New York State* and are automatic closing by smoke detection in accordance with Section 716.2.6.5 of the *Building Code of New York State*.
5. Group I-3.
6. Openings between smoke zones with clear ceiling heights of 14 feet (4267 mm) or greater and bank down capacity of greater than 20 minutes as determined by the design fire size.

[F] 513.5.3.1 Group I-1 Condition 2; Group I-2 and ambulatory care facilities. In Group I-1 Condition 2; Group I-2 and *ambulatory care facilities*, where doors are installed across a *corridor*, the doors shall be automatic closing by smoke detection in accordance with Section 716.2.6.5 of the *Building Code of New York State* and shall have a vision panel with fire-protection-rated glazing materials in fire-protection-rated frames, the area of which shall not exceed that tested.

[F] 513.5.3.2 Ducts and air transfer openings. Ducts and air transfer openings are required to be protected with a minimum Class II, 250ºF (121ºC) smoke damper complying with the *Building Code of New York State*.

[F] 513.6 Pressurization method. The primary mechanical means of controlling smoke shall be by pressure differences across smoke barriers. Maintenance of a tenable environment is not required in the smoke control zone of fire origin.

[F] 513.6.1 Minimum pressure difference. The pressure difference across a smoke barrier used to separate smoke zones shall be not less than 0.05-inch water gage (12.4 Pa) in fully sprinklered buildings.

In buildings permitted to be other than fully sprinklered, the smoke control system shall be designed to achieve pressure differences not less than two times the maximum calculated pressure difference produced by the design fire.

[F] 513.6.2 Maximum pressure difference. The maximum air pressure difference across a smoke barrier shall be determined by required door-opening or closing forces. The actual force required to open exit doors when the system is in the smoke control mode shall be in accordance with the *Building Code of New York State*. Opening and closing forces for other doors shall be determined by standard engineering methods for the resolution of forces and reactions. The calculated force to set a side-hinged, swinging door in motion shall be determined by:

$$F = F_{dc} + K(WA\Delta P)/2(W - d) \qquad \textbf{(Equation 5-2)}$$

where:

A = Door area, square feet (m^2).

d = Distance from door handle to latch edge of door, feet (m).

F = Total door opening force, pounds (N).

F_{dc} = Force required to overcome closing device, pounds (*N).*

K = Coefficient 5.2 (1.0).

W = Door width, feet (m).

ΔP = Design pressure difference, inches (Pa) water gage.

[F] 513.6.3 Pressurized stairways and elevator hoistways. Where stairways or elevator hoistways are pressurized, such pressurization systems shall comply with Section 513 as smoke control systems, in addition to the requirements of Sections 909.20 of the *Building Code of New York State* and 909.21 of the *Fire Code of New York State*.

[F] 513.7 Airflow design method. Where *approved* by the *building official*, smoke migration through openings fixed in a permanently open position, which are located between smoke control zones by the use of the airflow method, shall be permitted. The design airflows shall be in accordance with this section. Airflow shall be directed to limit smoke migration from the fire zone. The geometry of openings shall be considered to prevent flow reversal from turbulent effects. Smoke control systems using the airflow method shall be designed in accordance with NFPA 92.

[F] 513.7.1 Prohibited conditions. This method shall not be employed where either the quantity of air or the velocity of the airflow will adversely affect other portions of the smoke control system, unduly intensify the fire, disrupt plume dynamics or interfere with exiting. Airflow toward the fire shall not exceed 200 feet per minute (1.02 m/s). Where the calculated airflow exceeds this limit, the airflow method shall not be used.

[F] 513.8 Exhaust method. Where *approved* by the building official, mechanical smoke control for large enclosed volumes, such as in atriums or malls, shall be permitted to utilize the exhaust method. Smoke control systems using the exhaust method shall be designed in accordance with NFPA 92.

[F] 513.8.1 Exhaust rate. The height of the lowest horizontal surface of the accumulating smoke layer shall be maintained not less than 6 feet (1829 mm) above any walking surface that forms a portion of a required egress system within the smoke zone.

[F] 513.9 Design fire. The design fire shall be based on a rational analysis performed by the *registered design professional* and *approved* by the *building official*. The design fire shall be based on the analysis in accordance with Section 513.4 and this section.

[F] 513.9.1 Factors considered. The engineering analysis shall include the characteristics of the fuel, fuel load, effects included by the fire and whether the fire is likely to be steady or unsteady.

INTERNATIONAL CODE COUNCIL®
Copyright © 2019 ICC & NYSDOS. ALL RIGHTS RESERVED. Accessed by Lauren Gualdino (lgualdino@briarcliffmanor.org), (-) Order Number #100880972 on May 08, 2020 07:05 AM (PDT) pursuant to License Agreement with ICC & NYSDOS. No further reproduction, no

100880972

[F] 513.9.2 Design fire fuel. Determination of the design fire shall include consideration of the type of fuel, fuel spacing and configuration.

[F] 513.9.3 Heat-release assumptions. The analysis shall make use of the best available data from *approved* sources and shall not be based on excessively stringent limitations of combustible material.

[F] 513.9.4 Sprinkler effectiveness assumptions. A documented engineering analysis shall be provided for conditions that assume fire growth is halted at the time of sprinkler activation.

[F] 513.10 Equipment. *Equipment* such as, but not limited to, fans, ducts, automatic dampers and balance dampers shall be suitable for their intended use, suitable for the probable exposure temperatures that the rational analysis indicates, and as *approved* by the *building official*.

[F] 513.10.1 Exhaust fans. Components of exhaust fans shall be rated and certified by the manufacturer for the probable temperature rise to which the components will be exposed. This temperature rise shall be computed by:

$$T_s = (Q_c/mc) + (T_a) \qquad \textbf{(Equation 5-3)}$$

where:

c = Specific heat of smoke at smoke-layer temperature, Btu/lb°F (kJ/kg • K).

m = Exhaust rate, pounds per second (kg/s).

Q_c = Convective heat output of fire, Btu/s (kW).

T_a = Ambient temperature, °F (K).

T_s = Smoke temperature, °F (K).

Exception: Reduced T_s as calculated based on the assurance of adequate dilution air.

[F] 513.10.2 Ducts. Duct materials and joints shall be capable of withstanding the probable temperatures and pressures to which they are exposed as determined in accordance with Section 513.10.1. Ducts shall be constructed and supported in accordance with Chapter 6. Ducts shall be leak tested to 1.5 times the maximum design pressure in accordance with nationally accepted practices. Measured leakage shall not exceed 5 percent of design flow. Results of such testing shall be a part of the documentation procedure. Ducts shall be supported directly from fire-resistance-rated structural elements of the building by substantial, noncombustible supports.

Exception: Flexible connections, for the purpose of vibration isolation, that are constructed of *approved* fire-resistance-rated materials.

[F] 513.10.3 Equipment, inlets and outlets. *Equipment* shall be located so as to not expose uninvolved portions of the building to an additional fire hazard. Outdoor air inlets shall be located so as to minimize the potential for introducing smoke or flame into the building. Exhaust outlets shall be so located as to minimize reintroduction of smoke into the building and to limit exposure of the building or adjacent buildings to an additional fire hazard.

[F] 513.10.4 Automatic dampers. Automatic dampers, regardless of the purpose for which they are installed within the smoke control system, shall be *listed* and conform to the requirements of *approved* recognized standards.

[F] 513.10.5 Fans. In addition to other requirements, belt-driven fans shall have 1.5 times the number of belts required for the design duty with the minimum number of belts being two. Fans shall be selected for stable performance based on normal temperature and, where applicable, elevated temperature. Calculations and manufacturer's fan curves shall be part of the documentation procedures. Fans shall be supported and restrained by noncombustible devices in accordance with the structural design requirements of the *Building Code of New York State*. Motors driving fans shall not be operating beyond their nameplate horsepower (kilowatts) as determined from measurement of actual current draw. Motors driving fans shall have a minimum service factor of 1.15.

[F] 513.11 Standby power. The smoke control system shall be supplied with standby power in accordance with Section 2702 of the *Building Code of New York State*.

[F] 513.11.1 Equipment room. The standby power source and its transfer switches shall be in a room separate from the normal power transformers and switch gear and ventilated directly to and from the exterior. The room shall be enclosed with not less than 1-hour fire-resistance-rated fire barriers constructed in accordance with Section 707 of the *Building Code of New York State* or horizontal assemblies constructed in accordance with Section 711 of the *Building Code of New York State*, or both.

[F] 513.11.2 Power sources and power surges. Elements of the smoke management system relying on volatile memories or the like shall be supplied with uninterruptible power sources of sufficient duration to span 15-minute primary power interruption. Elements of the smoke management system susceptible to power surges shall be suitably protected by conditioners, suppressors or other *approved* means.

[F] 513.12 Detection and control systems. Fire detection systems providing control input or output signals to mechanical smoke control systems or elements thereof shall comply with the requirements of Section 907 of the *Building Code of New York State*. Such systems shall be equipped with a control unit complying with UL 864 and listed as smoke control *equipment*.

[F] 513.12.1 Verification. Control systems for mechanical smoke control systems shall include provisions for verification. Verification shall include positive confirmation of actuation, testing, manual override and the presence of power downstream of all disconnects. A preprogrammed weekly test sequence shall report abnormal conditions audibly, visually and by printed report. The preprogrammed weekly test shall operate all devices, equipment and components used for smoke control.

Exception: Where verification of individual components tested through the preprogrammed weekly testing sequence will interfere with, and produce unwanted effects to, normal building operation, such individual components are permitted to be bypassed from the pre-

INTERNATIONAL CODE COUNCIL®
Copyright © 2019 ICC & NYSDOS. ALL RIGHTS RESERVED. Accessed by Lauren Gualdino (lgualdino@briarcliffmanor.org), (-) Order Number #100880972 on May 08, 2020 07:05 AM (PDT) pursuant to License Agreement with ICC & NYSDOS. No further reproduction, no

100880972

programmed weekly testing, where *approved* by the building official and in accordance with both of the following:

1. Where the operation of components is bypassed from the preprogrammed weekly test, presence of power downstream of all disconnects shall be verified weekly by a listed control unit.
2. Testing of all components bypassed from the preprogrammed weekly test shall be in accordance with Section 909.20.6 of the *Fire Code of New York State*.

[F] 513.12.2 Wiring. In addition to meeting the requirements of NFPA 70, all wiring, regardless of voltage, shall be fully enclosed within continuous raceways.

[F] 513.12.3 Activation. Smoke control systems shall be activated in accordance with the *Building Code of New York State* or the *Fire Code of New York State*.

[F] 513.12.4 Automatic control. Where complete automatic control is required or used, the automatic control sequences shall be initiated from an appropriately zoned automatic sprinkler system complying with Section 903.3.1.1 of the *Fire Code of New York State*, from manual controls provided with *ready access* for the fire department, and any smoke detectors required by engineering analysis.

[F] 513.13 Control-air tubing. Control-air tubing shall be of sufficient size to meet the required response times. Tubing shall be flushed clean and dry prior to final connections. Tubing shall be adequately supported and protected from damage. Tubing passing through concrete or masonry shall be sleeved and protected from abrasion and electrolytic action.

[F] 513.13.1 Materials. Control-air tubing shall be hard-drawn copper, Type L, ACR in accordance with ASTM B42, ASTM B43, ASTM B68, ASTM B88, ASTM B251 and ASTM B280. Fittings shall be wrought copper or copper alloy, solder type in accordance with ASME B16.18 or ASME B16.22. Changes in direction shall be made with appropriate tool bends. Copper alloy compression-type fittings shall be used at final connection to devices; other joints shall be brazed using a BCuP5 brazing alloy with solidus above 1,100ºF (593ºC) and liquids below 1,500ºF (816ºC). Brazing flux shall be used on copper-to-copper alloy joints only.

Exception: Nonmetallic tubing used within control panels and at the final connection to devices provided that all of the following conditions are met:

1. Tubing shall comply with the requirements of Section 602.2.1.3.
2. Tubing and connected device shall be completely enclosed within a galvanized or paint-grade steel enclosure having a minimum thickness of 0.0296 inch (0.7534 mm) (No. 22 gage). Entry to the enclosure shall be by copper tubing with a protective grommet of Neoprene or Teflon or by suitable brass compression to male barbed adapter.
3. Tubing shall be identified by appropriately documented coding.
4. Tubing shall be neatly tied and supported within the enclosure. Tubing bridging cabinets and doors or movable devices shall be of sufficient length to avoid tension and excessive stress. Tubing shall be protected against abrasion. Tubing connected to devices on doors shall be fastened along hinges.

[F] 513.13.2 Isolation from other functions. Control tubing serving other than smoke control functions shall be isolated by automatic isolation valves or shall be an independent system.

[F] 513.13.3 Testing. Control-air tubing shall be tested at three times the operating pressure for not less than 30 minutes without any noticeable loss in gauge pressure prior to final connection to devices.

[F] 513.14 Marking and identification. The detection and control systems shall be clearly marked at all junctions, accesses and terminations.

[F] 513.15 Control diagrams. Identical control diagrams shall be provided and maintained as required by the *Fire Code of New York State*.

[F] 513.16 Fire fighter's smoke control panel. A fire fighter's smoke control panel for fire department emergency response purposes only shall be provided in accordance with the *Fire Code of New York State*.

[F] 513.17 System response time. Smoke control system activation shall comply with the *Fire Code of New York State*.

[F] 513.18 Acceptance testing. Devices, *equipment*, components and sequences shall be tested in accordance with the *Fire Code of New York State.*

[F] 513.19 System acceptance. Acceptance of the smoke control system shall be in accordance with the *Fire Code of New York State.*

SECTION 514
ENERGY RECOVERY VENTILATION SYSTEMS

514.1 General. Energy recovery ventilation systems shall be installed in accordance with this section. Where required for purposes of energy conservation, energy recovery ventilation systems shall comply with the *Energy Conservation Construction Code of New York State*. Ducted heat recovery ventilators shall be listed and labeled in accordance with UL 1812. Nonducted heat recovery ventilators shall be listed and labeled in accordance with UL 1815.

514.2 Prohibited applications. Energy recovery ventilation systems shall not be used in the following systems:

1. Hazardous exhaust systems covered in Section 510.
2. Dust, stock and refuse systems that convey explosive or flammable vapors, fumes or dust.
3. Smoke control systems covered in Section 513.
4. Commercial kitchen exhaust systems serving Type I or Type II hoods.
5. Clothes dryer exhaust systems covered in Section 504.

Exception: The application of ERV equipment that recovers sensible heat only utilizing coil-type heat exchangers shall not be limited by this section.

INTERNATIONAL CODE COUNCIL®
Copyright © 2019 ICC & NYSDOS. ALL RIGHTS RESERVED. Accessed by Lauren Gualdino (lgualdino@briarcliffmanor.org), (-) Order Number #100880972 on May 08, 2020 07:05 AM (PDT) pursuant to License Agreement with ICC & NYSDOS. No further reproduction, no

100880972

514.3 Access. A means of access shall be provided to the heat exchanger and other components of the system as required for service, maintenance, repair or replacement.

514.4 Recirculated air. Air conveyed within energy recovery systems shall not be considered as recirculated air where the energy recovery ventilation system is constructed to limit cross-leakage between air streams to less than 10 percent of the total airflow design capacity.

INTERNATIONAL CODE COUNCIL®
Copyright © 2019 ICC & NYSDOS. ALL RIGHTS RESERVED. Accessed by Lauren Gualdino (lgualdino@briarcliffmanor.org), (-) Order Number #100880972 on May 08, 2020 07:05 AM (PDT) pursuant to License Agreement with ICC & NYSDOS. No further reproduction, no

100880972

CHAPTER 6
DUCT SYSTEMS

SECTION 601
GENERAL

601.1 Scope. Duct systems used for the movement of air in air-conditioning, heating, ventilating and exhaust systems shall conform to the provisions of this chapter except as otherwise specified in Chapters 5 and 7.

Exception: Ducts discharging combustible material directly into any *combustion* chamber shall conform to the requirements of NFPA 82.

[BE] 601.2 Air movement in egress elements. Corridors shall not serve as supply, return, exhaust, relief or *ventilation air* ducts.

Exceptions:

1. Use of a corridor as a source of *makeup air* for exhaust systems in rooms that open directly onto such corridors, including toilet rooms, bathrooms, dressing rooms, smoking lounges and janitor closets, shall be permitted, provided that each such corridor is directly supplied with outdoor air at a rate greater than the rate of *makeup air* taken from the corridor.
2. Where located within a *dwelling unit*, the use of corridors for conveying return air shall not be prohibited.
3. Where located within tenant spaces of 1,000 square feet (93 m^2) or less in area, use of corridors for conveying return air is permitted.
4. Incidental air movement from pressurized rooms within health care facilities, provided that the corridor is not the primary source of supply or return to the room.

[BE] 601.2.1 Corridor ceiling. Use of the space between the corridor ceiling and the floor or roof structure above as a return air *plenum* is permitted for one or more of the following conditions:

1. The corridor is not required to be of fire-resistance-rated construction.
2. The corridor is separated from the *plenum* by fire-resistance-rated construction.
3. The air-handling system serving the corridor is shut down upon activation of the air-handling unit smoke detectors required by this code.
4. The air-handling system serving the corridor is shut down upon detection of sprinkler waterflow where the building is equipped throughout with an automatic sprinkler system.
5. The space between the corridor ceiling and the floor or roof structure above the corridor is used as a component of an *approved* engineered smoke control system.

[BE] 601.3 Exits. *Equipment* and ductwork for exit enclosure ventilation shall comply with one of the following items:

1. Such *equipment* and ductwork shall be located exterior to the building and shall be directly connected to the exit enclosure by ductwork enclosed in construction as required by the *Building Code of New York State* for shafts.
2. Where such *equipment* and ductwork is located within the exit enclosure, the intake air shall be taken directly from the outdoors and the *exhaust air* shall be discharged directly to the outdoors, or such air shall be conveyed through ducts enclosed in construction as required by the *Building Code of New York State* for shafts.
3. Where located within the building, such *equipment* and ductwork shall be separated from the remainder of the building, including other mechanical *equipment*, with construction as required by the *Building Code of New York State* for shafts.

In each case, openings into fire-resistance-rated construction shall be limited to those needed for maintenance and operation and shall be protected by self-closing fire-resistance-rated devices in accordance with the *Building Code of New York State* for enclosure wall opening protectives. Exit enclosure ventilation systems shall be independent of other building ventilation systems.

601.4 Contamination prevention. Exhaust ducts under positive pressure, chimneys and vents shall not extend into or pass through ducts or plenums.

Exceptions:

1. Exhaust systems located in ceiling return air plenums over spaces that are permitted to have 10 percent recirculation in accordance with Section 403.2.1, Item 4. The exhaust duct joints, seams and connections shall comply with Section 603.9.
2. This section shall not apply to chimneys and vents that pass through plenums where such venting systems comply with one of the following requirements:
   - 2.1. The venting system shall be listed for positive pressure applications and shall be sealed in accordance with the vent manufacturer's instructions.
   - 2.2. The venting system shall be installed such that fittings and joints between sections are not installed in the above-ceiling space.
   - 2.3. The venting system shall be installed in a conduit or enclosure with sealed joints separating the interior of the conduit or enclosure from the ceiling space.

INTERNATIONAL CODE COUNCIL®
Copyright © 2019 ICC & NYSDOS. ALL RIGHTS RESERVED. Accessed by Lauren Gualdino (lgualdino@briarcliffmanor.org), (-) Order Number #100880972 on May 08, 2020 07:05 AM (PDT) pursuant to License Agreement with ICC & NYSDOS. No further reproduction, no

100880972

601.5 Return air openings. Return air openings for heating, ventilation and air-conditioning systems shall comply with all of the following:

1. Openings shall not be located less than 10 feet (3048 mm) measured in any direction from an open combustion chamber or draft hood of another appliance located in the same room or space.
2. Return air shall not be taken from a hazardous or insanitary location or a refrigeration room as defined in this code.
3. The amount of return air taken from any room or space shall be not greater than the flow rate of supply air delivered to such room or space.
4. Return and transfer openings shall be sized in accordance with the appliance or equipment manufacturer's installation instructions, ACCA Manual D or the design of the registered design professional.
5. Return air taken from one dwelling unit shall not be discharged into another dwelling unit.
6. Taking return air from a crawl space shall not be accomplished through a direct connection to the return side of a forced air furnace. Transfer openings in the crawl space enclosure shall not be prohibited.
7. Return air shall not be taken from a closet, bathroom, toilet room, kitchen, garage, boiler room, furnace room or unconditioned attic.
8. Return air shall not be taken from indoor swimming pool enclosures and associated deck areas.

Exceptions:

1. Where the air from such spaces is dehumidified in accordance with Section 403.2.1, Item 2.
2. Dedicated HVAC systems serving only such spaces.

Exceptions:

1. Taking return air from a kitchen is not prohibited where such return air openings serve the kitchen and are located not less than 10 feet (3048 mm) from the cooking appliances.
2. Dedicated forced air systems serving only the garage shall not be prohibited from obtaining return air from the garage.

SECTION 602
PLENUMS

602.1 General. Supply, return, exhaust, relief and ventilation air plenums shall be limited to uninhabited crawl spaces, areas above a ceiling or below the floor, attic spaces, mechanical equipment rooms and the framing cavities addressed in Section 602.3. Plenums shall be limited to one fire area. Air systems shall be ducted from the boundary of the fire area served directly to the air-handling equipment. Fuel-fired appliances shall not be installed within a plenum.

602.2 Construction. *Plenum* enclosure construction materials that are exposed to the airflow shall comply with the requirements of Section 703.5 of the *Building Code of New York State* or such materials shall have a flame spread index of not more than 25 and a smoke-developed index of not more than 50 when tested in accordance with ASTM E84 or UL 723.

The use of gypsum boards to form plenums shall be limited to systems where the air temperatures do not exceed 125ºF (52ºC) and the building and mechanical system design conditions are such that the gypsum board surface temperature will be maintained above the airstream dew-point temperature. Air plenums formed by gypsum boards shall not be incorporated in air-handling systems utilizing evaporative coolers.

602.2.1 Materials within plenums. Except as required by Sections 602.2.1.1 through 602.2.1.8, materials within plenums shall be noncombustible or shall be listed and labeled as having a flame spread index of not more than 25 and a smoke-developed index of not more than 50 when tested in accordance with ASTM E84 or UL 723.

Exceptions:

1. Rigid and flexible ducts and connectors shall conform to Section 603.
2. Duct coverings, linings, tape and connectors shall conform to Sections 603 and 604.
3. This section shall not apply to materials exposed within plenums in one- and two-family dwellings.
4. This section shall not apply to smoke detectors.
5. Combustible materials fully enclosed within one of the following:
   5.1. Continuous noncombustible raceways or enclosures.
   5.2. Approved gypsum board assemblies.
   5.3. Materials listed and labeled for installation within a plenum and listed for the application.
6. Materials in Group H, Division 5 fabrication areas and the areas above and below the fabrication area that share a common air recirculation path with the fabrication area.

602.2.1.1 Wiring. Combustible electrical wires and cables and optical fiber cables exposed within a plenum shall be listed and labeled as having a peak optical density not greater than 0.50, an average optical density not greater than 0.15, and a flame spread distance not greater than 5 feet (1524 mm) when tested in accordance with NFPA 262, or shall be installed in metal raceways or metal sheathed cable. Combustible optical fiber and communication raceways exposed within a

INTERNATIONAL CODE COUNCIL®
Copyright © 2019 ICC & NYSDOS. ALL RIGHTS RESERVED. Accessed by Lauren Gualdino (lgualdino@briarcliffmanor.org), (-) Order Number #100880972 on May 08, 2020 07:05 AM (PDT) pursuant to License Agreement with ICC & NYSDOS. No further reproduction, no

100880972

plenum shall be listed and labeled as having a peak optical density not greater than 0.5, an average optical density not greater than 0.15, and a flame spread distance not greater than 5 feet (1524 mm) when tested in accordance with UL 2024. Only plenum-rated wires and cables shall be installed in plenum-rated raceways.

602.2.1.2 Fire sprinkler piping. Plastic fire sprinkler piping exposed within a *plenum* shall be used only in wet pipe systems and shall be listed and labeled as having a peak optical density not greater than 0.50, an average optical density not greater than 0.15, and a flame spread distance not greater than 5 feet (1524 mm) when tested in accordance with UL 1887.

602.2.1.3 Pneumatic tubing. Combustible pneumatic tubing exposed within a *plenum* shall be listed and labeled as having a peak optical density not greater than 0.50, an average optical density not greater than 0.15, and a flame spread distance not greater than 5 feet (1524 mm) when tested in accordance with UL 1820.

602.2.1.4 Electrical equipment in plenums. Electrical *equipment* exposed within a *plenum* shall comply with Sections 602.2.1.4.1 and 602.2.1.4.2.

602.2.1.4.1 Equipment in metallic enclosures. Electrical *equipment* with metallic enclosures exposed within a *plenum* shall be permitted.

602.2.1.4.2 Equipment in combustible enclosures. Electrical *equipment* with combustible enclosures exposed within a *plenum* shall be *listed* and *labeled* for such use in accordance with UL 2043.

602.2.1.5 Discrete plumbing and mechanical products in plenums. Where discrete plumbing and mechanical products and appurtenances are located in a plenum and have exposed combustible material, they shall be listed and labeled for such use in accordance with UL 2043.

602.2.1.6 Foam plastic in plenums as interior finish or interior trim. Foam plastic in plenums used as interior wall or ceiling finish or interior trim shall exhibit a flame spread index of 25 or less and a smoke-developed index of 50 or less when tested in accordance with ASTM E84 or UL 723 at the maximum thickness and density intended for use, and shall be tested in accordance with NFPA 286 and meet the acceptance criteria of Section 803.1.2 of the *Building Code of New York State*. As an alternative to testing to NFPA 286, the foam plastic shall be approved based on tests conducted in accordance with Section 2603.9 of the *Building Code of New York State*.

Exceptions:

1. Foam plastic in plenums used as interior wall or ceiling finish or interior trim shall exhibit a flame spread index of 75 or less and a smoke-developed index of 450 or less when tested in accordance with ASTM E84 or UL 723 at the maximum thickness and density intended for use, where it is separated from the airflow in the plenum by a thermal barrier complying with Section 2603.4 of the *Building Code of New York State*.
2. Foam plastic in plenums used as interior wall or ceiling finish or interior trim, shall exhibit a flame spread index of 75 or less and a smoke-developed index of 450 or less when tested in accordance with ASTM E84 or UL 723 at the maximum thickness and density intended for use, where it is separated from the airflow in the plenum by corrosion-resistant steel having a base metal thickness of not less than 0.0160 inch (0.4 mm).
3. Foam plastic in plenums used as interior wall or ceiling finish or interior trim, shall exhibit a flame spread index of 75 or less and a smoke-developed index of 450 or less when tested in accordance with ASTM E84 or UL 723 at the maximum thickness and density intended for use, where it is separated from the airflow in the plenum by not less than a 1-inch (25 mm) thickness of masonry or concrete.

602.2.1.7 Plastic plumbing piping and tubing. Plastic piping and tubing used in plumbing systems shall be listed and labeled as having a flame spread index not greater than 25 and a smoke-developed index not greater than 50 when tested in accordance with ASTM E84 or UL 723.

Exception: Plastic water distribution piping and tubing listed and labeled in accordance with UL 2846 as having a peak optical density not greater than 0.50, an average optical density not greater than 0.15, and a flame spread distance not greater than 5 feet (1524 mm), and installed in accordance with its listing.

602.2.1.8 Pipe and duct insulation within plenums. Pipe and duct insulation contained within plenums, including insulation adhesives, shall have a flame spread index of not more than 25 and a smoke developed index of not more than 50 when tested in accordance with ASTM E84 or UL 723, using the specimen preparation and mounting procedures of ASTM E2231. Pipe and duct insulation shall not flame, glow, smolder or smoke when tested in accordance with ASTM C411 at the temperature to which they are exposed in service. The test temperature shall not fall below 250ºF (121ºC). Pipe and duct insulation shall be listed and labeled.

602.3 Stud cavity and joist space plenums. Stud wall cavities and the spaces between solid floor joists to be utilized as air plenums shall comply with the following conditions:

1. Such cavities or spaces shall not be utilized as a *plenum* for supply air.
2. Such cavities or spaces shall not be part of a required fire-resistance-rated assembly.
3. Stud wall cavities shall not convey air from more than one floor level.

INTERNATIONAL CODE COUNCIL®
Copyright © 2019 ICC & NYSDOS. ALL RIGHTS RESERVED. Accessed by Lauren Gualdino (lgualdino@briarcliffmanor.org), (-) Order Number #100880972 on May 08, 2020 07:05 AM (PDT) pursuant to License Agreement with ICC & NYSDOS. No further reproduction, no

100880972

4. Stud wall cavities and joist space plenums shall comply with the floor penetration protection requirements of the *Building Code of New York State*.
5. Stud wall cavities and joist space plenums shall be isolated from adjacent concealed spaces by *approved* fireblocking as required in the *Building Code of New York State*.
6. Stud wall cavities in the outside walls of building envelope assemblies shall not be utilized as air plenums.

[BS] 602.4 Flood hazard. For structures located in flood hazard areas, plenum spaces shall be located above the elevation required by Section 1612 of the *Building Code of New York State* for utilities and attendant equipment or shall be designed and constructed to prevent water from entering or accumulating within the plenum spaces during floods up to such elevation. If the plenum spaces are located below the elevation required by Section 1612 of the *Building Code of New York State* for utilities and attendant equipment, they shall be capable of resisting hydrostatic and hydrodynamic loads and stresses, including the effects of buoyancy, during the occurrence of flooding up to such elevation.

SECTION 603
DUCT CONSTRUCTION AND INSTALLATION

603.1 General. An air distribution system shall be designed and installed to supply the required distribution of air. The installation of an air distribution system shall not affect the fire protection requirements specified in the *Building Code of New York State*. Ducts shall be constructed, braced, reinforced and installed to provide structural strength and durability.

603.2 Duct sizing. Ducts installed within a single dwelling unit shall be sized in accordance with ACCA Manual D, the appliance manufacturer's installation instructions or other approved methods. Ducts installed within all other buildings shall be sized in accordance with the ASHRAE *Handbook of Fundamentals* or other equivalent computation procedure.

603.3 Duct classification. Ducts shall be classified based on the maximum operating pressure of the duct at pressures of positive or negative 0.5, 1.0, 2.0, 3.0, 4.0, 6.0 or 10.0 inches (1 inch w.c. = 248.7 Pa) of water column. The pressure classification of ducts shall equal or exceed the design pressure of the air distribution in which the ducts are utilized.

603.4 Metallic ducts. Metallic ducts shall be constructed as specified in the SMACNA *HVAC Duct Construction Standards—Metal and Flexible*.

Exception: Ducts installed within single *dwelling units* shall have a minimum thickness as specified in Table 603.4.

603.4.1 Minimum fasteners. Round metallic ducts shall be mechanically fastened by means of not less than three sheet metal screws or rivets spaced equally around the joint.

Exception: Where a duct connection is made that is partially inaccessible, three screws or rivets shall be equally spaced on the exposed portion so as to prevent a hinge effect.

603.4.2 Duct lap. Crimp joints for round and oval metal ducts shall be lapped not less than 1 inch (25 mm) and the male end of the duct shall extend into the adjoining duct in the direction of airflow.

603.5 Nonmetallic ducts. Nonmetallic ducts shall be constructed with Class 0 or Class 1 duct material and shall com-

TABLE 603.4
DUCT CONSTRUCTION MINIMUM SHEET METAL THICKNESS FOR SINGLE DWELLING UNITS[a]

ROUND DUCT DIAMETER (inches)	STATIC PRESSURE			
	1/2-inch water gauge		1-inch water gauge	
	Thickness (inches)		Thickness (inches)	
	Galvanized	Aluminum	Galvanized	Aluminum
< 12	0.013	0.018	0.013	0.018
12 to14	0.013	0.018	0.016	0.023
15 to 17	0.016	0.023	0.019	0.027
18	0.016	0.023	0.024	0.034
19 to 20	0.019	0.027	0.024	0.034
RECTANGULAR DUCT DIMENSION (inches)	**STATIC PRESSURE**			
	1/2-inch water gauge		1-inch water gauge	
	Thickness (inches)		Thickness (inches)	
	Galvanized	Aluminum	Galvanized	Aluminum
≤ 8	0.013	0.018	0.013	0.018
9 to10	0.013	0.018	0.016	0.023
11 to 12	0.016	0.023	0.019	0.027
13 to 16	0.019	0.027	0.019	0.027
17 to 18	0.019	0.027	0.024	0.034
19 to 20	0.024	0.034	0.024	0.034

For SI: 1 inch = 25.4 mm, 1-inch water gauge = 249 Pa.

a. Ductwork that exceeds 20 inches by dimension or exceeds a pressure of 1-inch water gauge shall be constructed in accordance with SMACNA *HVAC Duct Construction Standards—Metal and Flexible*.

INTERNATIONAL CODE COUNCIL®
Copyright © 2019 ICC & NYSDOS. ALL RIGHTS RESERVED. Accessed by Lauren Gualdino (lgualdino@briarcliffmanor.org), (-) Order Number #100880972 on May 08, 2020 07:05 AM (PDT) pursuant to License Agreement with ICC & NYSDOS. No further reproduction, no

100880972

ply with UL 181. Fibrous duct construction shall conform to the SMACNA *Fibrous Glass Duct Construction Standards* or NAIMA *Fibrous Glass Duct Construction Standards.* The air temperature within nonmetallic ducts shall not exceed 250ºF (121ºC).

603.5.1 Gypsum ducts. The use of gypsum boards to form air shafts (ducts) shall be limited to return air systems where the air temperatures do not exceed 125ºF (52ºC) and the gypsum board surface temperature is maintained above the airstream dew-point temperature. Air ducts formed by gypsum boards shall not be incorporated in air-handling systems utilizing evaporative coolers.

603.5.2 Phenolic ducts. Nonmetallic phenolic ducts shall be constructed and installed in accordance with the SMACNA *Phenolic Duct Construction Standards*.

603.6 Flexible air ducts and flexible air connectors. Flexible air ducts, both metallic and nonmetallic, shall comply with Sections 603.6.1, 603.6.1.1, 603.6.3 and 603.6.4. Flexible air connectors, both metallic and nonmetallic, shall comply with Sections 603.6.2 through 603.6.4.

603.6.1 Flexible air ducts. Flexible air ducts, both metallic and nonmetallic, shall be tested in accordance with UL 181. Such ducts shall be *listed* and *labeled* as Class 0 or Class 1 flexible air ducts and shall be installed in accordance with Section 304.1.

603.6.1.1 Duct length. Flexible air ducts shall not be limited in length.

603.6.2 Flexible air connectors. Flexible air connectors, both metallic and nonmetallic, shall be tested in accordance with UL 181. Such connectors shall be *listed* and *labeled* as Class 0 or Class 1 flexible air connectors and shall be installed in accordance with Section 304.1.

603.6.2.1 Connector length. Flexible air connectors shall be limited in length to 14 feet (4267 mm).

603.6.2.2 Connector penetration limitations. Flexible air connectors shall not pass through any wall, floor or ceiling.

603.6.3 Air temperature. The design temperature of air to be conveyed in flexible air ducts and flexible air connectors shall be less than 250ºF (121ºC).

603.6.4 Flexible air duct and air connector clearance. Flexible air ducts and air connectors shall be installed with a minimum *clearance* to an *appliance* as specified in the *appliance* manufacturer's installation instructions.

603.7 Rigid duct penetrations. Duct system penetrations of walls, floors, ceilings and roofs and air transfer openings in such building components shall be protected as required by Section 607. Ducts in a private garage that penetrate a wall or ceiling that separates a dwelling from a private garage shall be continuous, shall be constructed of sheet steel having a thickness of not less than 0.0187 inch (0.4712 mm) (No. 26 gage) and shall not have openings into the garage. Fire and smoke dampers are not required in such ducts passing through the wall or ceiling separating a dwelling from a private garage except where required by Chapter 7 of the *Building Code of New York State*.

603.8 Underground ducts. Ducts shall be *approved* for underground installation. Metallic ducts not having an *approved* protective coating shall be completely encased in not less than 2 inches (51 mm) of concrete.

603.8.1 Slope. Ducts shall have a minimum slope of $^1/_8$ inch per foot (10.4 mm/m) to allow drainage to a point provided with access.

603.8.2 Sealing. Ducts shall be sealed, secured and tested prior to concrete encasement or direct burial. Ducts shall be leak tested as required by Section C403 of the *Energy Conservation Construction Code of New York State*.

603.8.3 Plastic ducts and fittings. Plastic ducts shall be constructed of PVC having a minimum pipe stiffness of 8 psi (55 kPa) at 5-percent deflection when tested in accordance with ASTM D2412. Plastic duct fittings shall be constructed of either PVC or high-density polyethylene. Plastic duct and fittings shall be utilized in underground installations only. The maximum design temperature for systems utilizing plastic duct and fittings shall be 150°F (66°C).

603.9 Joints, seams and connections. Longitudinal and transverse joints, seams and connections in metallic and nonmetallic ducts shall be constructed as specified in SMACNA *HVAC Duct Construction Standards—Metal and Flexible* and NAIMA *Fibrous Glass Duct Construction Standards*. Joints, longitudinal and transverse seams and connections in ductwork shall be securely fastened and sealed with welds, gaskets, mastics (adhesives), mastic-plus-embedded-fabric systems, liquid sealants or tapes. Tapes and mastics used to seal fibrous glass ductwork shall be listed and labeled in accordance with UL 181A and shall be marked "181 A-P" for pressure-sensitive tape, "181 A-M" for mastic or "181 A-H" for heat-sensitive tape. Tapes and mastics used to seal metallic and flexible air ducts and flexible air connectors shall comply with UL 181B and shall be marked "181 B-FX" for pressure-sensitive tape or "181 B-M" for mastic. Duct connections to flanges of air distribution system equipment shall be sealed and mechanically fastened. Mechanical fasteners for use with flexible nonmetallic air ducts shall comply with UL 181B and shall be marked "181 B-C." Closure systems used to seal all ductwork shall be installed in accordance with the manufacturer's instructions.

Exception: For ducts having a static pressure classification of less than 2 inches of water column (500 Pa), additional closure systems shall not be required for continuously welded joints and seams and locking-type joints and seams. This exception shall not apply to snap-lock and button-lock type joints and seams located outside of conditioned spaces.

603.10 Supports. Ducts shall be supported in accordance with SMACNA *HVAC Duct Construction Standards—Metal and Flexible*. Flexible and other factory-made ducts shall be supported in accordance with the manufacturer's instructions.

603.11 Furnace connections. Ducts connecting to a furnace shall have a *clearance* to combustibles in accordance with the furnace manufacturer's installation instructions.

INTERNATIONAL CODE COUNCIL®
Copyright © 2019 ICC & NYSDOS. ALL RIGHTS RESERVED. Accessed by Lauren Gualdino (lgualdino@briarcliffmanor.org), (-) Order Number #100880972 on May 08, 2020 07:05 AM (PDT) pursuant to License Agreement with ICC & NYSDOS. No further reproduction, no

100880972

603.12 Condensation. Provisions shall be made to prevent the formation of condensation on the exterior of any duct.

[BS] 603.13 Flood hazard areas. For structures in flood hazard areas, ducts shall be located above the elevation required by Section 1612 of the *Building Code of New York State* for utilities and attendant equipment or shall be designed and constructed to prevent water from entering or accumulating within the ducts during floods up to such elevation. If the ducts are located below the elevation required by Section 1612 of the *Building Code of New York State* for utilities and attendant equipment, the ducts shall be capable of resisting hydrostatic and hydrodynamic loads and stresses, including the effects of buoyancy, during the occurrence of flooding up to such elevation.

603.14 Location. Ducts shall not be installed in or within 4 inches (102 mm) of the earth, except where such ducts comply with Section 603.8.

603.15 Mechanical protection. Ducts installed in locations where they are exposed to mechanical damage by vehicles or from other causes shall be protected by *approved* barriers.

603.16 Weather protection. Ducts including linings, coverings and vibration isolation connectors installed on the exterior of the building shall be protected against the elements.

603.17 Air dispersion systems. Air dispersion systems shall:

1. Be installed entirely in exposed locations.
2. Be utilized in systems under positive pressure.
3. Not pass through or penetrate fire-resistant-rated construction.
4. Be listed and labeled in compliance with UL 2518.

603.18 Registers, grilles and diffusers. Duct registers, grilles and diffusers shall be installed in accordance with the manufacturer's instructions. Volume dampers or other means of supply air adjustment shall be provided in the branch ducts or at each individual duct register, grille or diffuser. Each volume damper or other means of supply air adjustment used in balancing shall be provided with access.

603.18.1 Floor registers. Floor registers shall resist, without structural failure, a 200-pound (90.8 kg) concentrated load on a 2-inch-diameter (51 mm) disc applied to the most critical area of the exposed face.

603.18.2 Prohibited locations. Diffusers, registers and grilles shall be prohibited in the floor or its upward extension within toilet and bathing rooms required by the *Building Code of New York State* to have smooth, hard, nonabsorbent surfaces.

Exception: *Dwelling units.*

SECTION 604
INSULATION

604.1 General. Duct insulation shall conform to the requirements of Sections 604.2 through 604.13 and the *Energy Conservation Construction Code of New York State*.

604.2 Surface temperature. Ducts that operate at temperatures exceeding 120°F (49°C) shall have sufficient thermal insulation to limit the exposed surface temperature to 120°F (49°C).

604.3 Coverings and linings. Coverings and linings, including adhesives where used, shall have a flame spread index not more than 25 and a smoke-developed index not more than 50, when tested in accordance with ASTM E84 or UL 723, using the specimen preparation and mounting procedures of ASTM E2231. Duct coverings and linings shall not flame, glow, smolder or smoke when tested in accordance with ASTM C411 at the temperature to which they are exposed in service. The test temperature shall not fall below 250°F (121°C). Coverings and linings shall be listed and labeled.

604.4 Foam plastic insulation. Foam plastic used as duct coverings and linings shall conform to the requirements of Section 604.

604.5 Appliance insulation. *Listed* and *labeled* appliances that are internally insulated shall be considered as conforming to the requirements of Section 604.

604.6 Penetration of assemblies. Duct coverings shall not penetrate a wall or floor required to have a fire-resistance rating or required to be fireblocked.

604.7 Identification. External duct insulation, except spray polyurethane foam, and factory-insulated flexible duct shall be legibly printed or identified at intervals not greater than 36 inches (914 mm) with the name of the manufacturer, the thermal resistance *R*-value at the specified installed thickness and the flame spread and smoke-developed indices of the composite materials. Duct insulation product *R*-values shall be based on insulation only, excluding air films, vapor retarders or other duct components, and shall be based on tested *C*-values at 75ºF (24ºC) mean temperature at the installed thickness, in accordance with recognized industry procedures. The installed thickness of duct insulation used to determine its *R*-value shall be determined as follows:

1. For duct board, duct liner and factory-made rigid ducts not normally subjected to compression, the nominal insulation thickness shall be used.
2. For duct wrap, the installed thickness shall be assumed to be 75 percent (25 percent compression) of nominal thickness.
3. For factory-made flexible air ducts, the installed thickness shall be determined by dividing the difference between the actual outside diameter and nominal inside diameter by two.
4. For spray polyurethane foam, the aged *R*-value per inch, measured in accordance with recognized industry standards, shall be provided to the customer in writing at the time of foam application.

604.8 Lining installation. Linings shall be interrupted at the area of operation of a fire damper and at not less than 6 inches (152 mm) upstream of and 6 inches (152 mm) downstream of electric-resistance and fuel-burning heaters in a duct system. Metal nosings or sleeves shall be installed over exposed duct liner edges that face opposite the direction of airflow.

604.9 Thermal continuity. Where a duct liner has been interrupted, a duct covering of equal thermal performance shall be installed.

INTERNATIONAL CODE COUNCIL®
Copyright © 2019 ICC & NYSDOS. ALL RIGHTS RESERVED. Accessed by Lauren Gualdino (lgualdino@briarcliffmanor.org), (-) Order Number #100880972 on May 08, 2020 07:05 AM (PDT) pursuant to License Agreement with ICC & NYSDOS. No further reproduction, no

100880972

604.10 Service openings. Service openings shall not be concealed by duct coverings unless the exact location of the opening is properly identified.

604.11 Vapor retarders. Where ducts used for cooling are externally insulated, the insulation shall be covered with a vapor retarder having a maximum permeance of 0.05 perm [2.87 ng/(Pa • s • m^2)] or aluminum foil having a minimum thickness of 2 mils (0.051 mm). Insulations having a permeance of 0.05 perm [2.87 ng/(Pa • s • m^2)] or less shall not be required to be covered. Joints and seams shall be sealed to maintain the continuity of the vapor retarder.

Exception: A vapor retarder is not required for spray polyurethane foam insulation having a water vapor permeance of not greater than 3 perms per inch [1722 ng/(s • m^2 • Pa)] at the installed thickness.

604.12 Weatherproof barriers. Insulated exterior ducts shall be protected with an *approved* weatherproof barrier.

604.13 Internal insulation. Materials used as internal insulation and exposed to the airstream in ducts shall be shown to be durable when tested in accordance with UL 181. Exposed internal insulation that is not impermeable to water shall not be used to line ducts or plenums from the exit of a cooling coil to the downstream end of the drain pan.

SECTION 605
AIR FILTERS

605.1 General. Heating and air-conditioning systems shall be provided with *approved* air filters. Filters shall be installed such that all return air, outdoor air and makeup air is filtered upstream from any heat exchanger or coil. Filters shall be installed in an *approved* convenient location. Liquid adhesive coatings used on filters shall have a flash point not lower than 325ºF (163ºC).

605.2 Approval. Media-type and electrostatic-type air filters shall be *listed* and *labeled*. Media-type air filters shall comply with UL 900. High-efficiency particulate air filters shall comply with UL 586. Electrostatic-type air filters shall comply with UL 867. Air filters utilized within *dwelling units* shall be designed for the intended application and shall not be required to be *listed* and *labeled*.

605.3 Airflow over the filter. Ducts shall be constructed to allow an even distribution of air over the entire filter.

SECTION 606
SMOKE DETECTION SYSTEMS CONTROL

606.1 Controls required. Air distribution systems shall be equipped with smoke detectors *listed* and *labeled* for installation in air distribution systems, as required by this section. Duct smoke detectors shall comply with UL 268A. Other smoke detectors shall comply with UL 268.

606.2 Where required. Smoke detectors shall be installed where indicated in Sections 606.2.1 through 606.2.3.

Exception: Smoke detectors shall not be required where air distribution systems are incapable of spreading smoke beyond the enclosing walls, floors and ceilings of the room or space in which the smoke is generated.

606.2.1 Return air systems. Smoke detectors shall be installed in return air systems with a design capacity greater than 2,000 cfm (0.9 m^3/s), in the return air duct or *plenum* upstream of any filters, *exhaust air* connections, outdoor air connections, or decontamination *equipment* and appliances.

Exception: Smoke detectors are not required in the return air system where all portions of the building served by the air distribution system are protected by area smoke detectors connected to a fire alarm system in accordance with the *Fire Code of New York State*. The area smoke detection system shall comply with Section 606.4.

606.2.2 Common supply and return air systems. Where multiple air-handling systems share common supply or return air ducts or plenums with a combined design capacity greater than 2,000 cfm (0.9 m^3/s), the return air system shall be provided with smoke detectors in accordance with Section 606.2.1.

Exception: Individual smoke detectors shall not be required for each fan-powered terminal unit, provided that such units do not have an individual design capacity greater than 2,000 cfm (0.9 m^3/s) and will be shut down by activation of one of the following:

1. Smoke detectors required by Sections 606.2.1 and 606.2.3.
2. An *approved* area smoke detector system located in the return air *plenum* serving such units.
3. An area smoke detector system as prescribed in the exception to Section 606.2.1.

In all cases, the smoke detectors shall comply with Sections 606.4 and 606.4.1.

606.2.3 Return air risers. Where return air risers serve two or more stories and serve any portion of a return air system having a design capacity greater than 15,000 cfm (7.1 m^3/s), smoke detectors shall be installed at each story. Such smoke detectors shall be located upstream of the connection between the return air riser and any air ducts or plenums.

[F] 606.3 Installation. Smoke detectors required by this section shall be installed in accordance with NFPA 72. The required smoke detectors shall be installed to monitor the entire airflow conveyed by the system including return air and exhaust or relief air. Access shall be provided to smoke detectors for inspection and maintenance.

[F] 606.4 Controls operation. Upon activation, the smoke detectors shall shut down all operational capabilities of the air distribution system in accordance with the listing and labeling of appliances used in the system. Air distribution systems that are part of a smoke control system shall switch to the smoke control mode upon activation of a detector.

INTERNATIONAL CODE COUNCIL®
Copyright © 2019 ICC & NYSDOS. ALL RIGHTS RESERVED. Accessed by Lauren Gualdino (lgualdino@briarcliffmanor.org), (-) Order Number #100880972 on May 08, 2020 07:05 AM (PDT) pursuant to License Agreement with ICC & NYSDOS. No further reproduction, no

100880972

[F] 606.4.1 Supervision. The duct smoke detectors shall be connected to a fire alarm system where a fire alarm system is required by Section 907.2 of the *Fire Code of New York State*. The actuation of a duct smoke detector shall activate a visible and audible supervisory signal at a constantly attended location. In facilities that are required to be monitored by a supervising station, duct smoke detectors shall report only as a supervisory signal, not as a fire alarm.

Exceptions:

1. The supervisory signal at a constantly attended location is not required where the duct smoke detector activates the building's alarm-indicating appliances.
2. In occupancies not required to be equipped with a fire alarm system, actuation of a smoke detector shall activate a visible and audible signal in an *approved* location. Duct smoke detector trouble conditions shall activate a visible or audible signal in an *approved* location and shall be identified as air duct detector trouble.

SECTION 607
DUCT AND TRANSFER OPENINGS

[BF] 607.1 General. The provisions of this section shall govern the protection of duct penetrations and air transfer openings in assemblies required to be protected.

[BF] 607.1.1 Ducts between shafts. Ducts transitioning horizontally between shafts shall not require a shaft enclosure provided that the duct penetration into each associated shaft is protected with dampers complying with this section.

[BF] 607.1.2 Ducts that penetrate fire-resistance-rated assemblies without dampers. Ducts that penetrate fire-resistance-rated walls and are not required by this section to have fire dampers shall comply with the requirements of Sections 714.3 through 714.4.3 of the *Building Code of New York State*. Ducts that penetrate horizontal assemblies not required to be contained within a shaft and not required by this section to have fire dampers shall comply with the requirements of Section 714.5 of the *Building Code of New York State.*

[BF] 607.1.2.1 Ducts that penetrate nonfire-resistance-rated assemblies. The space around a duct penetrating a nonfire-resistance-rated floor assembly shall comply with Section 717.6.3 of the *Building Code of New York State*.

[BF] 607.2 Installation. Fire dampers, smoke dampers, combination fire/smoke dampers and ceiling radiation dampers located within air distribution and smoke control systems shall be installed in accordance with the requirements of this section, and the manufacturer's instructions and listing.

[BF] 607.2.1 Smoke control system. Where the installation of a fire damper will interfere with the operation of a required smoke control system in accordance with Section 909 of the *Building Code of New York State*, *approved* alternative protection shall be used. Where mechanical systems including ducts and dampers used for normal building ventilation serve as part of the smoke control system, the expected performance of these systems in smoke control mode shall be addressed in the rational analysis required by Section 909.4 of the *Building Code of New York State*.

607.2.2 Hazardous exhaust ducts. Fire dampers for hazardous exhaust duct systems shall comply with Section 510.

[BF] 607.3 Damper testing, ratings and actuation. Damper testing, ratings and actuation shall be in accordance with Sections 607.3.1 through 607.3.3.5.

[BF] 607.3.1 Damper testing. *Dampers* shall be listed and labeled in accordance with the standards in this section. *Fire dampers* shall comply with the requirements of UL 555. Only *fire* dampers labeled for use in dynamic systems shall be installed in heating, ventilating and air-conditioning systems designed to operate with fans on during a fire. *Smoke dampers* shall comply with the requirements of UL 555S. *Combination fire/smoke dampers* shall comply with the requirements of both UL 555 and UL 555S. *Ceiling radiation dampers* shall comply with the requirements of UL 555C or shall be tested as part of a fire-resistance-rated floor/ceiling or roof/ceiling assembly in accordance with ASTM E119 or UL 263. Only ceiling radiation dampers labeled for use in dynamic systems shall be installed in heating, ventilation and air-conditioning systems designed to operate with fans on during a fire. Corridor dampers shall comply with requirements of both UL 555 and UL 555S. Corridor dampers shall demonstrate acceptable closure performance when subjected to 150 feet per minute (0.76 mps) velocity across the face of the damper using the UL 555 fire exposure test.

[BF] 607.3.2 Damper rating. Damper ratings shall be in accordance with Sections 607.3.2.1 through 607.3.2.4.

[BF] 607.3.2.1 Fire damper ratings. Fire dampers shall have the minimum rating specified in Table 607.3.2.1.

[BF] TABLE 607.3.2.1
FIRE DAMPER RATING

TYPE OF PENETRATION	MINIMUM DAMPER RATING (hour)
Less than 3-hour fire-resistance-rated assemblies	$1^1/_2$
3-hour or greater fire-resistance-rated assemblies	3

[BF] 607.3.2.2 Smoke damper ratings. Smoke damper leakage ratings shall be Class I or II. Elevated temperature ratings shall be not less than 250°F (121°C).

[BF] 607.3.2.3 Combination fire/smoke damper ratings. Combination fire/smoke dampers shall have the minimum rating specified for fire dampers in Table 607.3.2.1 and shall have the minimum rating specified for smoke dampers in Section 607.3.2.2.

[BF] 607.3.2.4 Corridor damper ratings. Corridor dampers shall have the following minimum ratings.

1. One-hour fire-resistance rating.
2. Class I or II leakage rating as specified in Section 607.3.2.2.

INTERNATIONAL CODE COUNCIL®
Copyright © 2019 ICC & NYSDOS. ALL RIGHTS RESERVED. Accessed by Lauren Gualdino (lgualdino@briarcliffmanor.org), (-) Order Number #100880972 on May 08, 2020 07:05 AM (PDT) pursuant to License Agreement with ICC & NYSDOS. No further reproduction, no

100880972

[BF] 607.3.3 Damper actuation. Damper actuation shall be in accordance with Sections 607.3.3.1 through 607.3.3.5 as applicable.

[BF] 607.3.3.1 Fire damper actuation device. The fire damper actuation device shall meet one of the following requirements:

1. The operating temperature shall be approximately 50°F (28°C) above the normal temperature within the duct system, but not less than 160°F (71°C).
2. The operating temperature shall be not more than 350°F (177°C) where located in a smoke control system complying with Section 909 of the *Building Code of New York State*.

[BF] 607.3.3.2 Smoke damper actuation. The smoke damper shall close upon actuation of a *listed* smoke detector or detectors installed in accordance with Section 907.3 of the *Building Code of New York State* and one of the following methods, as applicable:

1. Where a smoke damper is installed within a duct, a smoke detector shall be installed inside the duct or outside the duct with sampling tubes protruding into the duct. The detector or tubes within the duct shall be within 5 feet (1524 mm) of the damper. Air outlets and inlets shall not be located between the detector or tubes and the damper. The detector shall be *listed* for the air velocity, temperature and humidity anticipated at the point where it is installed. Other than in mechanical smoke control systems, dampers shall be closed upon fan shutdown where local smoke detectors require a minimum velocity to operate.
2. Where a smoke damper is installed above smoke barrier doors in a smoke barrier, a spot-type detector shall be installed on either side of the smoke barrier door opening. The detector shall be listed for releasing service if used for direct interface with the damper.
3. Where a smoke damper is installed within an unducted opening in a wall, a spot-type detector shall be installed within 5 feet (1524 mm) horizontally of the damper. The detector shall be listed for releasing service if used for direct interface with the damper.
4. Where a smoke damper is installed in a corridor wall or ceiling, the damper shall be permitted to be controlled by a smoke detection system installed in the corridor.
5. Where a smoke detection system is installed in all areas served by the duct in which the damper will be located, the smoke dampers shall be permitted to be controlled by the smoke detection system.

[BF] 607.3.3.3 Combination fire/smoke damper actuation. Combination fire/smoke damper actuation shall be in accordance with Sections 607.3.3.1 and 607.3.3.2. Combination fire/smoke dampers installed in smoke control system shaft penetrations shall not be activated by local area smoke detection unless it is secondary to the smoke management system controls.

[BF] 607.3.3.4 Ceiling radiation damper actuation. The operating temperature of a ceiling radiation damper actuation device shall be 50°F (28°C) above the normal temperature within the duct system, but not less than 160°F (71°C).

[BF] 607.3.3.5 Corridor damper actuation. Corridor damper actuation shall be in accordance with Sections 607.3.3.1 and 607.3.3.2.

[BF] 607.4 Access and identification. Fire and smoke dampers shall be provided with an *approved* means of access, large enough to permit inspection and maintenance of the damper and its operating parts. The access shall not affect the integrity of fire-resistance-rated assemblies. The access openings shall not reduce the fire-resistance rating of the assembly. Access points shall be permanently identified on the exterior by a label having letters not less than 0.5 inch (12.7 mm) in height reading: FIRE/SMOKE DAMPER, SMOKE DAMPER or FIRE DAMPER. Access doors in ducts shall be tight fitting and suitable for the required duct construction.

[BF] 607.5 Where required. Fire dampers, smoke dampers, combination fire/smoke dampers, ceiling radiation dampers and corridor dampers shall be provided at the locations prescribed in Sections 607.5.1 through 607.5.7. Where an assembly is required to have both fire dampers and smoke dampers, combination fire/smoke dampers or a fire damper and smoke damper shall be provided.

[BF] 607.5.1 Fire walls. Ducts and air transfer openings permitted in fire walls in accordance with Section 706.11 of the *Building Code of New York State* shall be protected with *listed* fire dampers installed in accordance with their listing.

[BF] 607.5.1.1 Horizontal exits. A *listed smoke damper* designed to resist the passage of smoke shall be provided at each point that a duct or air transfer opening penetrates a *fire wall* that serves as a horizontal *exit*.

[BF] 607.5.2 Fire barriers. Ducts and air transfer openings that penetrate fire barriers shall be protected with *listed* fire dampers installed in accordance with their listing. Ducts and air transfer openings shall not penetrate enclosures for interior exit stairways and ramps and exit passageways except as permitted by Sections 1023.5 and 1024.6, respectively, of the *Building Code of New York State*.

Exception: Fire dampers are not required at penetrations of fire barriers where any of the following apply:

1. Penetrations are tested in accordance with ASTM E119 or UL 263 as part of the fire-resistance-rated assembly.
2. Ducts are used as part of an *approved* smoke control system in accordance with Section 513 and where the fire damper would interfere with the operation of the smoke control system.
3. Such walls are penetrated by ducted HVAC systems, have a required fire-resistance rating of 1 hour or less, are in areas of other than Group H

INTERNATIONAL CODE COUNCIL®
Copyright © 2019 ICC & NYSDOS. ALL RIGHTS RESERVED. Accessed by Lauren Gualdino (lgualdino@briarcliffmanor.org), (-) Order Number #100880972 on May 08, 2020 07:05 AM (PDT) pursuant to License Agreement with ICC & NYSDOS. No further reproduction, no

100880972

and are in buildings equipped throughout with an automatic sprinkler system in accordance with Section 903.3.1.1 or 903.3.1.2 of the *Building Code of New York State*. For the purposes of this exception, a ducted HVAC system shall be a duct system for the structure's HVAC system. Such a duct system shall be constructed of sheet steel not less than 26 gage [0.0217 inch (0.55 mm)] thickness and shall be continuous from the air-handling *appliance* or *equipment* to the air outlet and inlet terminals.

[BF] 607.5.2.1 Horizontal exits. A *listed smoke damper* designed to resist the passage of smoke shall be provided at each point that a duct or air transfer opening penetrates a *fire barrier* that serves as a horizontal *exit*.

[BF] 607.5.3 Fire partitions. Ducts and air transfer openings that penetrate fire partitions shall be protected with *listed* fire dampers installed in accordance with their listing.

Exception: In occupancies other than Group H, fire dampers are not required where any of the following apply:

1. Corridor walls in buildings equipped throughout with an automatic sprinkler system in accordance with Section 903.3.1.1 or 903.3.1.2 of the *Building Code of New York State* and the duct is protected as a through penetration in accordance with Section 714 of the *Building Code of New York State*.
2. The partitions are tenant partitions in covered and open mall buildings where the walls are not required by provisions elsewhere in the *Building Code of New York State* to extend to the underside of the floor or roof sheathing, slab or deck above.
3. The duct system is constructed of *approved* materials in accordance with Section 603 and the duct penetrating the wall complies with all of the following requirements:
   3.1. The duct shall not exceed 100 square inches (0.06 m^2).
   3.2. The duct shall be constructed of steel not less than 0.0217 inch (0.55 mm) in thickness.
   3.3. The duct shall not have openings that communicate the corridor with adjacent spaces or rooms.
   3.4. The duct shall be installed above a ceiling.
   3.5. The duct shall not terminate at a wall register in the fire-resistance-rated wall.
   3.6. A minimum 12-inch-long (305 mm) by 0.060-inch-thick (1.52 mm) steel sleeve shall be centered in each duct opening. The sleeve shall be secured to both sides of the wall and all four sides of the sleeve with minimum $1^1/_2$-inch by $1^1/_2$-inch by 0.060-inch (38 mm by 38 mm by 1.52 mm) steel retaining angles. The retaining angles shall be secured to the sleeve and the wall with No. 10 (M5) screws. The annular space between the steel sleeve and the wall opening shall be filled with rock (mineral) wool batting on all sides.
4. Such walls are penetrated by ducted HVAC systems, have a required fire-resistance rating of 1 hour or less, and are in areas of other than Group H and are in buildings equipped throughout with an automatic sprinkler system in accordance with Section 903.3.1.1 or 903.3.1.2 of the *Building Code of New York State*. For the purposes of this exception, a ducted HVAC system shall be a duct system for conveying supply, return or exhaust air as part of the structure's HVAC system. Such a duct system shall be constructed of sheet steel not less than 26 gage in thickness and shall be continuous from the air-handling appliance or equipment to the air outlet and inlet terminals.

[BF] 607.5.4 Corridors/smoke barriers. A *listed* smoke damper designed to resist the passage of smoke shall be provided at each point a duct or air transfer opening penetrates a smoke barrier wall or a corridor enclosure required to have smoke and draft control doors in accordance with the *Building Code of New York State*.

A corridor damper shall be provided where corridor ceilings, constructed as required for the corridor walls as permitted in Section 708.4, Exception 3, of the *Building Code of New York State*, are penetrated.

A ceiling radiation damper shall be provided where the ceiling membrane of a fire-resistance-rated floor/ceiling or roof/ceiling assembly, constructed as permitted in Section 708.4, Exception 2, of the *Building Code of New York State*, is penetrated.

Smoke dampers and smoke damper actuation methods shall comply with Section 607.5.4.1.

Exceptions:

1. Smoke dampers are not required in corridor penetrations where the building is equipped throughout with an *approved* smoke control system in accordance with Section 513 and smoke dampers are not necessary for the operation and control of the system.
2. Smoke dampers are not required in smoke barrier penetrations where the openings in ducts are limited to a single smoke compartment and the ducts are constructed of steel.
3. Smoke dampers are not required in corridor penetrations where the duct is constructed of steel not less than 0.019 inch (0.48 mm) in thickness and there are no openings serving the corridor.

INTERNATIONAL CODE COUNCIL®
Copyright © 2019 ICC & NYSDOS. ALL RIGHTS RESERVED. Accessed by Lauren Gualdino (lgualdino@briarcliffmanor.org), (-) Order Number #100880972 on May 08, 2020 07:05 AM (PDT) pursuant to License Agreement with ICC & NYSDOS. No further reproduction, no

100880972

4. Smoke dampers are not required in smoke barriers required by Section 407.5 of the *Building Code of New York State* for Group I-2, Condition 2 where the HVAC system is fully ducted in accordance with Section 603 and where buildings are equipped throughout with an automatic sprinkler system in accordance with Section 903.3.1.1 of the *Building Code of New York State* and equipped with quick-response sprinklers in accordance with Section 903.3.2 of the *Building Code of New York State*.

[BF] 607.5.4.1 Smoke damper. Smoke dampers shall close as required by Section 607.3.3.2.

[BF] 607.5.5 Shaft enclosures. Shaft enclosures that are permitted to be penetrated by ducts and air transfer openings shall be protected with listed fire and smoke dampers installed in accordance with their listing.

Exceptions:

1. Fire dampers are not required at penetrations of shafts where any of the following apply:
   1.1. Steel exhaust subducts extend not less than 22 inches (559 mm) vertically in exhaust shafts provided that there is a continuous airflow upward to the outdoors.
   1.2. Penetrations are tested in accordance with ASTM E119 or UL 263 as part of the fire-resistance-rated assembly.
   1.3. Ducts are used as part of an *approved* smoke control system in accordance with Section 909 of the *Building Code of New York State*, and where the fire damper will interfere with the operation of the smoke control system.
   1.4. The penetrations are in parking garage exhaust or supply shafts that are separated from other building shafts by not less than 2-hour fire-resistance-rated construction.
2. In Group B and R occupancies equipped throughout with an automatic sprinkler system in accordance with Section 903.3.1.1 of the *Building Code of New York State*, smoke dampers are not required at penetrations of shafts where kitchen, clothes dryer, bathroom and toilet room exhaust openings with steel exhaust subducts, having a minimum thickness of 0.0187 inch (0.4712 mm) (No. 26 gage), extend not less than 22 inches (559 mm) vertically and the exhaust fan at the upper terminus is powered continuously in accordance with the provisions of Section 909.11 of the *Building Code of New York State*, and maintains airflow upward to the outdoors.
3. Smoke dampers are not required at penetrations of exhaust or supply shafts in parking garages that are separated from other building shafts by not less than 2-hour fire-resistance-rated construction.
4. Smoke dampers are not required at penetrations of shafts where ducts are used as part of an *approved* mechanical smoke control system designed in accordance with Section 909 of the *Building Code of New York State* and where the smoke damper will interfere with the operation of the smoke control system.
5. Fire dampers and combination fire/smoke dampers are not required in kitchen and clothes dryer exhaust systems where dampers are prohibited by this code.

[BF] 607.5.5.1 Enclosure at the bottom. Shaft enclosures that do not extend to the bottom of the building or structure shall be protected in accordance with Section 713.11 of the *Building Code of New York State*.

[BF] 607.5.6 Exterior walls. Ducts and air transfer openings in fire-resistance-rated exterior walls required to have protected openings in accordance with Section 705.10 of the *Building Code of New York State* shall be protected with *listed* fire dampers installed in accordance with their listing.

[BF] 607.5.7 Smoke partitions. A *listed* smoke damper designed to resist the passage of smoke shall be provided at each point where an air transfer opening penetrates a smoke partition. Smoke dampers and smoke damper actuation methods shall comply with Section 607.3.3.2.

Exception: Where the installation of a smoke damper will interfere with the operation of a required smoke control system in accordance with Section 513, *approved* alternate protection shall be used.

[BF] 607.6 Horizontal assemblies. Penetrations by air ducts of a floor, floor/ceiling assembly or the ceiling membrane of a roof/ceiling assembly shall be protected by a shaft enclosure that complies with Section 713 and Sections 717.6.1 through 717.6.3 of the *Building Code of New York State* or shall comply with Sections 607.6.1 through 607.6.3.

[BF] 607.6.1 Through penetrations. In occupancies other than Groups I-2 and I-3, a duct constructed of *approved* materials in accordance with Section 603 that penetrates a fire-resistance-rated floor/ceiling assembly that connects not more than two stories is permitted without shaft enclosure protection provided that a *listed* fire damper is installed at the floor line or the duct is protected in accordance with Section 714.5 of the *Building Code of New York State.* For air transfer openings, see Item 6, Section 712.1.9 of the *Building Code of New York State*.

Exception: A duct is permitted to penetrate three floors or less without a fire damper at each floor provided that it meets all of the following requirements.

1. The duct shall be contained and located within the cavity of a wall and shall be constructed of steel having a minimum thickness of 0.0187 inch (0.4712 mm) (No. 26 gage).
2. The duct shall open into only one *dwelling unit* or *sleeping unit* and the duct system shall be continuous from the unit to the exterior of the building.

INTERNATIONAL CODE COUNCIL®
Copyright © 2019 ICC & NYSDOS. ALL RIGHTS RESERVED. Accessed by Lauren Gualdino (lgualdino@briarcliffmanor.org), (-) Order Number #100880972 on May 08, 2020 07:05 AM (PDT) pursuant to License Agreement with ICC & NYSDOS. No further reproduction, no

100880972

3. The duct shall not exceed a 4-inch (102 mm) nominal diameter and the total area of such ducts shall not exceed 100 square inches for any 100 square feet (64 516 mm^2 per 9.3 m^2) of the floor area.
4. The annular space around the duct is protected with materials that prevent the passage of flame and hot gases sufficient to ignite cotton waste when subjected to ASTM E119 or UL 263 time-temperature conditions under a minimum positive pressure differential of 0.01 inch (2.49 Pa) of water at the location of the penetration for the time period equivalent to the fire-resistance rating of the construction penetrated.
5. Grille openings located in a ceiling of a fire-resistance-rated floor/ceiling or roof/ceiling assembly shall be protected with a *listed* ceiling radiation damper installed in accordance with Section 607.6.2.1.

[BF] 607.6.2 Membrane penetrations. Ducts and air transfer openings constructed of *approved* materials, in accordance with Section 603, that penetrate the ceiling membrane of a fire-resistance-rated floor/ceiling or roof/ceiling assembly shall be protected with one of the following:

1. A shaft enclosure in accordance with Section 713 of the *Building Code of New York State*.
2. A *listed* ceiling radiation damper installed at the ceiling line where a duct penetrates the ceiling of a fire-resistance-rated floor/ceiling or roof/ceiling assembly.

   Exceptions:

   1. A fire-resistance-rated assembly tested in accordance with ASTM E119 or UL 263 showing that ceiling radiation dampers are not required in order to maintain the fire-resistance rating of the assembly.
   2. Where exhaust duct or outdoor air duct penetrations are protected in accordance with Section 714.5.1.2 of the *Building Code of New York State,* are located within the cavity of a wall and do not pass through another dwelling unit or tenant space.
   3. Where duct and air transfer openings are protected with a duct outlet penetration system tested as part of a fire-resistance-rated assembly in accordance with ASTM E119 or UL 263.
3. A *listed* ceiling radiation damper installed at the ceiling line where a diffuser with no duct attached penetrates the ceiling of a fire-resistance-rated floor/ceiling or roof/ceiling assembly.

   Exceptions:

   1. A fire-resistance-rated assembly tested in accordance with ASTM E119 or UL 263 showing that ceiling radiation dampers are not required in order to maintain the fire-resistance rating of the assembly.
   2. Where duct and air transfer openings are protected with a duct outlet penetration system tested as part of a fire-resistance-rated assembly in accordance with ASTM E119 or UL 263.

[BF] 607.6.2.1 Ceiling radiation dampers testing and installation. *Ceiling radiation dampers* shall be tested in accordance with Section 607.3.1. *Ceiling radiation dampers* shall be installed in accordance with the details listed in the fire-resistance-rated assembly and the manufacturer's installation instructions and the listing.

[BF] 607.6.3 Nonfire-resistance-rated floor assemblies. Duct systems constructed of approved materials in accordance with Section 603 that penetrate nonfire-resistance-rated floor assemblies shall be protected by any of the following methods:

1. A shaft enclosure in accordance with Section 713 of the *Building Code of New York State*.
2. The duct connects not more than two stories, and the annular space around the penetrating duct is protected with an *approved* noncombustible material that resists the free passage of flame and the products of *combustion*.
3. In floor assemblies composed of noncombustible materials, a shaft shall not be required where the duct connects not more than three stories, and the annular space around the penetrating duct is protected with an approved noncombustible material that resists the free passage of flame and the products of combustion and a fire damper is installed at each floor line.

Exception: Fire dampers are not required in ducts within individual residential *dwelling units*.

[BF] 607.7 Flexible ducts and air connectors. Flexible ducts and air connectors shall not pass through any fire-resistance-rated assembly.

INTERNATIONAL CODE COUNCIL®
Copyright © 2019 ICC & NYSDOS. ALL RIGHTS RESERVED. Accessed by Lauren Gualdino (lgualdino@briarcliffmanor.org), (-) Order Number #100880972 on May 08, 2020 07:05 AM (PDT) pursuant to License Agreement with ICC & NYSDOS. No further reproduction, no

100880972

CHAPTER 7
COMBUSTION AIR

SECTION 701
GENERAL

701.1 Scope. Solid fuel-burning *appliances* shall be provided with *combustion air* in accordance with the appliance manufacturer's installation instructions. Oil-fired *appliances* shall be provided with *combustion air* in accordance with NFPA 31. The methods of providing *combustion air* in this chapter do not apply to fireplaces, fireplace stoves and direct-vent *appliances*. The requirements for combustion and dilution air for gas-fired *appliances* shall be in accordance with the *Fuel Gas Code of New York State*.

701.2 Dampered openings. Where combustion air openings are provided with volume, smoke or fire dampers, the dampers shall be interlocked with the firing cycle of the appliances served, so as to prevent operation of any appliance that draws combustion air from the room or space when any of the dampers are closed. Manual dampers shall not be installed in combustion air ducts. Ducts not provided with dampers and that pass through rated construction shall be enclosed in a shaft in accordance with the *Building Code of New York State*.

INTERNATIONAL CODE COUNCIL®
Copyright © 2019 ICC & NYSDOS. ALL RIGHTS RESERVED. Accessed by Lauren Gualdino (lgualdino@briarcliffmanor.org), (-) Order Number #100880972 on May 08, 2020 07:05 AM (PDT) pursuant to License Agreement with ICC & NYSDOS. No further reproduction, no

100880972

INTERNATIONAL CODE COUNCIL®
Copyright © 2019 ICC & NYSDOS. ALL RIGHTS RESERVED. Accessed by Lauren Gualdino (lgualdino@briarcliffmanor.org), (-) Order Number #100880972 on May 08, 2020 07:05 AM (PDT) pursuant to License Agreement with ICC & NYSDOS. No further reproduction, no

100880972

CHAPTER 8
CHIMNEYS AND VENTS

SECTION 801
GENERAL

801.1 Scope. This chapter shall govern the installation, maintenance, repair and approval of factory-built chimneys, *chimney* liners, vents and connectors. This chapter shall govern the utilization of masonry chimneys. Gas-fired *appliances* shall be vented in accordance with the *Fuel Gas Code of New York State.*

801.2 General. Every fuel-burning *appliance* shall discharge the products of *combustion* to a vent, factory-built *chimney* or masonry *chimney*, except for *appliances* vented in accordance with Section 804. The *chimney* or vent shall be designed for the type of *appliance* being vented.

Exception: Commercial cooking *appliances* vented by a Type I hood installed in accordance with Section 507.

801.2.1 Oil-fired appliances. Oil-fired *appliances* shall be vented in accordance with this code and NFPA 31.

801.3 Masonry chimneys. Masonry *chimneys* shall be constructed in accordance with the *Building Code of New York State*.

801.4 Positive flow. Venting systems shall be designed and constructed so as to develop a positive flow adequate to convey all *combustion* products to the outside atmosphere.

801.5 Design. Venting systems shall be designed in accordance with this chapter or shall be *approved* engineered systems.

801.6 Minimum size of chimney or vent. Except as otherwise provided for in this chapter, the size of the *chimney* or vent, serving a single *appliance*, except engineered systems, shall have a minimum area equal to the area of the *appliance* connection.

801.7 Solid fuel appliance flues. The cross-sectional area of a flue serving a solid-fuel-burning *appliance* shall be not greater than three times the cross-sectional area of the *appliance* flue collar or flue outlet.

801.8 Abandoned inlet openings. Abandoned inlet openings in chimneys and vents shall be closed by an *approved* method.

801.9 Positive pressure. Where an *appliance* equipped with a forced or induced draft system creates a positive pressure in the venting system, the venting system shall be designed and *listed* for positive pressure applications.

801.10 Connection to fireplace. Connection of *appliances* to *chimney* flues serving fireplaces shall be in accordance with Sections 801.10.1 through 801.10.3.

801.10.1 Closure and access. A noncombustible seal shall be provided below the point of connection to prevent entry of room air into the flue. Means shall be provided for *access* to the flue for inspection and cleaning.

801.10.2 Connection to factory-built fireplace flue. An *appliance* shall not be connected to a flue serving a factory-built fireplace unless the *appliance* is specifically *listed* for such installation. The connection shall be made in accordance with the *appliance* manufacturer's installation instructions.

801.10.3 Connection to masonry fireplace flue. A connector shall extend from the *appliance* to the flue serving a masonry fireplace such that the flue gases are exhausted directly into the flue. The connector shall be provided with access or shall be removable for inspection and cleaning of both the connector and the flue. *Listed* direct connection devices shall be installed in accordance with their listing.

801.11 Multiple solid fuel prohibited. A solid fuel-burning *appliance* or fireplace shall not connect to a *chimney* passageway venting another *appliance*.

801.12 Chimney entrance. Connectors shall connect to a *chimney* flue at a point not less than 12 inches (305 mm) above the lowest portion of the interior of the *chimney* flue.

801.13 Cleanouts. Masonry *chimney* flues shall be provided with a cleanout opening having a minimum height of 6 inches (152 mm). The upper edge of the opening shall be located not less than 6 inches (152 mm) below the lowest *chimney* inlet opening. The cleanout shall be provided with a tight-fitting, noncombustible cover.

Exception: Cleanouts shall not be required for *chimney* flues serving masonry fireplaces, if such flues are provided with access through the fireplace opening.

801.14 Connections to exhauster. *Appliance* connections to a *chimney* or vent equipped with a power exhauster shall be made on the inlet side of the exhauster. Joints and piping on the positive pressure side of the exhauster shall be *listed* for positive pressure applications as specified by the manufacturer's installation instructions for the exhauster.

801.15 Fuel-fired appliances. Masonry chimneys utilized to vent fuel-fired *appliances* shall be located, constructed and sized as specified in the manufacturer's installation instructions for the *appliances* being vented.

801.16 Flue lining. Masonry chimneys shall be lined. The lining material shall be compatible with the type of *appliance* connected, in accordance with the *appliance* listing and manufacturer's installation instructions. *Listed* materials used as flue linings shall be installed in accordance with their listings and the manufacturer's instructions.

801.16.1 Residential and low-heat appliances (general). Flue lining systems for use with residential-type and low-heat appliances shall be limited to the following:

1. Clay flue lining complying with the requirements of ASTM C315 or equivalent. Clay flue lining shall be installed in accordance with the *Building Code of New York State.*
2. *Listed* and *labeled* chimney lining systems complying with UL 1777.

INTERNATIONAL CODE COUNCIL®
Copyright © 2019 ICC & NYSDOS. ALL RIGHTS RESERVED. Accessed by Lauren Gualdino (lgualdino@briarcliffmanor.org), (-) Order Number #100880972 on May 08, 2020 07:05 AM (PDT) pursuant to License Agreement with ICC & NYSDOS. No further reproduction, no

100880972

3. Other *approved* materials that will resist, without cracking, softening or corrosion, flue gases and condensate at temperatures up to 1,800°F (982°C).

801.17 Space around lining. The space surrounding a flue lining system or other vent installed within a masonry *chimney* shall not be used to vent any other *appliance*. This shall not prevent the installation of a separate flue lining in accordance with the manufacturer's installation instructions and this code.

801.18 Existing chimneys and vents. Where an *appliance* is permanently disconnected from an existing *chimney* or vent, or where an *appliance* is connected to an existing *chimney* or vent during the process of a new installation, the *chimney* or vent shall comply with Sections 801.18.1 through 801.18.4.

801.18.1 Size. The *chimney* or vent shall be resized as necessary to control flue gas condensation in the interior of the *chimney* or vent and to provide the *appliance* or *appliances* served with the required draft. For the venting of oil-fired *appliances* to masonry chimneys, the resizing shall be in accordance with NFPA 31.

801.18.2 Flue passageways. The flue gas passageway shall be free of obstructions and combustible deposits and shall be cleaned if previously used for venting a solid or liquid fuel-burning *appliance* or fireplace. The flue liner, *chimney* inner wall or vent inner wall shall be continuous and shall be free of cracks, gaps, perforations or other damage or deterioration that would allow the escape of *combustion* products, including gases, moisture and creosote. Where an oil-fired *appliance* is connected to an existing masonry *chimney*, such *chimney* flue shall be repaired or relined in accordance with NFPA 31.

801.18.3 Cleanout. Masonry chimneys shall be provided with a cleanout opening complying with Section 801.13.

801.18.4 Clearances. Chimneys and vents shall have airspace *clearance* to combustibles in accordance with the *Building Code of New York State* and the *chimney* or vent manufacturer's installation instructions.

Exception: Masonry chimneys without the required airspace *clearances* shall be permitted to be used if lined or relined with a *chimney* lining system *listed* for use in chimneys with reduced *clearances* in accordance with UL 1777. The *chimney clearance* shall be not less than permitted by the terms of the *chimney* liner listing and the manufacturer's instructions.

801.18.4.1 Fireblocking. Noncombustible fireblocking shall be provided in accordance with the *Building Code of New York State*.

801.19 Multistory prohibited. Common venting systems for appliances located on more than one floor level shall be prohibited, except where all of the appliances served by the common vent are located in rooms or spaces that are accessed only from the outdoors. The *appliance* enclosures shall not communicate with the occupiable areas of the building.

801.20 Plastic vent joints. Plastic pipe and fittings used to vent appliances shall be installed in accordance with the *appliance* manufacturer's installation instructions.

SECTION 802
VENTS

802.1 General. Vent systems shall be *listed* and *labeled*. Type L vents and pellet vents shall be tested in accordance with UL 641.

802.2 Vent application. The application of vents shall be in accordance with Table 802.2.

TABLE 802.2
VENT APPLICATION

VENT TYPES	APPLIANCE TYPES
Type L oil vents	Oil-burning appliances listed and labeled for venting with Type L vents; gas appliances listed and labeled for venting with Type B vents.
Pellet vents	Pellet fuel-burning appliances listed and labeled for venting with pellet vents.

802.3 Installation. Vent systems shall be sized, installed and terminated in accordance with the vent and *appliance* manufacturer's installation instructions.

802.4 Vent termination caps required. Type L vents shall terminate with a *listed* and *labeled* cap in accordance with the vent manufacturer's installation instructions.

802.5 Type L vent terminations. Type L vents shall terminate not less than 2 feet (610 mm) above the highest point of the roof penetration and not less than 2 feet (610 mm) higher than any portion of a building within 10 feet (3048 mm).

802.6 Minimum vent heights. Vents shall terminate not less than 5 feet (1524 mm) in vertical height above the highest connected *appliance* flue collar.

Exceptions:

1. Venting systems of direct vent *appliances* shall be installed in accordance with the *appliance* and the vent manufacturer's instructions.
2. Appliances *listed* for outdoor installations incorporating integral venting means shall be installed in accordance with their listings and the manufacturer's installation instructions.
3. Pellet vents shall be installed in accordance with the *appliance* and the vent manufacturer's installation instructions.

802.7 Support of vents. All portions of vents shall be adequately supported for the design and weight of the materials employed.

802.8 Insulation shield. Where vents pass through insulated assemblies, an insulation shield constructed of not less than No. 26 gage sheet metal shall be installed to provide *clearance* between the vent and the insulation material. The *clearance* shall be not less than the *clearance* to combustibles specified by the vent manufacturer's installation instructions. Where vents pass through attic space, the shield shall terminate not less than 2 inches (51 mm) above the insulation materials and shall be secured in place to prevent displacement. Insulation shields provided as part of a *listed* vent system shall be installed in accordance with the manufacturer's installation instructions.

802.9 Door swing. Appliance and equipment vent terminals shall be located such that doors cannot swing within 12

INTERNATIONAL CODE COUNCIL®
Copyright © 2019 ICC & NYSDOS. ALL RIGHTS RESERVED. Accessed by Lauren Gualdino (lgualdino@briarcliffmanor.org), (-) Order Number #100880972 on May 08, 2020 07:05 AM (PDT) pursuant to License Agreement with ICC & NYSDOS. No further reproduction, no

100880972

inches (305 mm) horizontally of the vent terminals. Doorstops or closers shall not be installed to obtain this clearance.

SECTION 803
CONNECTORS

803.1 Connectors required. Connectors shall be used to connect *appliances* to the vertical *chimney* or vent, except where the *chimney* or vent is attached directly to the *appliance*.

803.2 Location. Connectors shall be located entirely within the room in which the connecting *appliance* is located, except as provided for in Section 803.10.4. Where passing through an unheated space, a connector shall not be constructed of single-wall pipe.

803.3 Size. The connector shall not be smaller than the size of the flue collar supplied by the manufacturer of the *appliance*. Where the *appliance* has more than one flue outlet, and in the absence of the manufacturer's specific instructions, the connector area shall be not less than the combined area of the flue outlets for which it acts as a common connector.

803.4 Branch connections. Branch connections to the vent connector shall be made in accordance with the vent manufacturer's instructions.

803.5 Manual dampers. Manual dampers shall not be installed in connectors except in *chimney* connectors serving solid fuel-burning *appliances*.

803.6 Automatic dampers. Automatic dampers shall be *listed* and *labeled* in accordance with UL 17 for oil-fired heating appliances. The dampers shall be installed in accordance with the manufacturer's instructions. An automatic vent damper device shall not be installed on an existing *appliance* unless the *appliance* is *listed* and *labeled* and the device is installed in accordance with the terms of its listing. The name of the installer and date of installation shall be marked on a label affixed to the damper device.

803.7 Connectors serving two or more appliances. Where two or more connectors enter a common vent or *chimney*, the smaller connector shall enter at the highest level consistent with available headroom or *clearance* to combustible material.

803.8 Vent connector construction. Vent connectors shall be constructed of metal. The minimum thickness of the connector shall be 0.0136 inch (0.345 mm) (No. 28 gage) for galvanized steel, 0.022 inch (0.6 mm) (No. 26 B & S gage) for copper, and 0.020 inch (0.5 mm) (No. 24 B & S gage) for aluminum.

803.9 Chimney connector construction. *Chimney* connectors for low-heat *appliances* shall be of sheet steel pipe having resistance to corrosion and heat not less than that of galvanized steel specified in Table 803.9(1). Connectors for medium-heat *appliances* and high-heat appliances shall be of sheet steel not less than the thickness specified in Table 803.9(2).

803.10 Installation. Connectors shall be installed in accordance with Sections 803.10.1 through 803.10.6.

TABLE 803.9(1)
MINIMUM CHIMNEY CONNECTOR THICKNESS FOR LOW-HEAT APPLIANCES

DIAMETER OF CONNECTOR (inches)	MINIMUM NOMINAL THICKNESS (galvanized) (inches)
5 and smaller	0.022 (No. 26 gage)
Larger than 5 and up to 10	0.028 (No. 24 gage)
Larger than 10 and up to 16	0.034 (No. 22 gage)
Larger than 16	0.064 (No. 16 gage)

For SI: 1 inch = 25.4 mm.

TABLE 803.9(2)
MINIMUM CHIMNEY CONNECTOR THICKNESS FOR MEDIUM- AND HIGH-HEAT APPLIANCES

AREA (square inches)	EQUIVALENT ROUND DIAMETER (inches)	MINIMUM THICKNESS (inches)
0–154	0–14	0.0575 (No. 16 gage)
155–201	15–16	0.075 (No. 14 gage)
202–254	17–18	0.0994 (No. 12 gage)
Greater than 254	Greater than 18	0.1292 (No. 10 gage)

For SI: 1 inch = 25.4 mm, 1 square inch = 645.16 mm^2.

803.10.1 Supports and joints. Connectors shall be supported in an *approved* manner, and joints shall be fastened with sheet metal screws, rivets or other *approved* means.

803.10.2 Length. The maximum horizontal length of a single-wall connector shall be 75 percent of the height of the *chimney* or vent.

803.10.3 Connection. The connector shall extend to the inner face of the *chimney* or vent liner, but not beyond. A connector entering a masonry *chimney* shall be cemented to masonry in an *approved* manner. Where thimbles are installed to facilitate removal of the connector from the masonry *chimney*, the thimble shall be permanently cemented in place with high-temperature cement.

803.10.4 Connector pass-through. *Chimney* connectors shall not pass through any floor or ceiling, nor through a fire-resistance-rated wall assembly. *Chimney* connectors for domestic-type *appliances* shall not pass through walls or partitions constructed of combustible material to reach a masonry *chimney* except where one of the following apply:

1. The connector is *labeled* for wall pass-through and is installed in accordance with the manufacturer's instructions.
2. The connector is put through a device *labeled* for wall pass-through.
3. The connector has a diameter not larger than 10 inches (254 mm) and is installed in accordance with one of the methods in Table 803.10.4. Concealed metal parts of the pass-through system in contact with flue gases shall be of stainless steel or equiva-

INTERNATIONAL CODE COUNCIL®
Copyright © 2019 ICC & NYSDOS. ALL RIGHTS RESERVED. Accessed by Lauren Gualdino (lgualdino@briarcliffmanor.org), (-) Order Number #100880972 on May 08, 2020 07:05 AM (PDT) pursuant to License Agreement with ICC & NYSDOS. No further reproduction, no

100880972

lent material that resists corrosion, softening or cracking up to 1,800ºF (980ºC).

803.10.5 Pitch. Connectors shall rise vertically to the *chimney* or vent with a minimum pitch equal to one-fourth unit vertical in 12 units horizontal (2-percent slope).

803.10.6 Clearances. Connectors shall have a minimum *clearance* to combustibles in accordance with Table 803.10.6. The clearances specified in Table 803.10.6 apply, except where the listing and labeling of an *appliance* specifies a different *clearance*, in which case the *labeled clearance* shall apply. The *clearance* to combustibles for connectors shall be reduced only in accordance with Section 308.

TABLE 803.10.4
CHIMNEY CONNECTOR SYSTEMS AND CLEARANCES TO COMBUSTIBLE WALL MATERIALS FOR DOMESTIC HEATING APPLIANCES[a, b, c, d]

System A (12-inch clearance)	A 3.5-inch-thick brick wall shall be framed into the combustible wall. An 0.625-inch-thick fire-clay liner (ASTM C315 or equivalent)[e] shall be firmly cemented in the center of the brick wall maintaining a 12-inch clearance to combustibles. The clay liner shall run from the outer surface of the bricks to the inner surface of the chimney liner.
System B (9-inch clearance)	A labeled solid-insulated factory-built chimney section (1-inch insulation) the same inside diameter as the connector shall be utilized. Sheet steel supports cut to maintain a 9-inch clearance to combustibles shall be fastened to the wall surface and to the chimney section. Fasteners shall not penetrate the chimney flue liner. The chimney length shall be flush with the masonry chimney liner and sealed to the masonry with water-insoluble refractory cement. Chimney manufacturers' parts shall be utilized to securely fasten the chimney connector to the chimney section.
System C (6-inch clearance)	A steel ventilated thimble having a minimum thickness of 0.0236 inch (No. 24 gage) having two 1-inch air channels shall be installed with a steel chimney connector. Steel supports shall be cut to maintain a 6-inch clearance between the thimble and combustibles. The chimney connector and steel supports shall have a minimum thickness of 0.0236 inch (No. 24 gage). One side of the support shall be fastened to the wall on all sides. Glass-fiber insulation shall fill the 6-inch space between the thimble and the supports.
System D (2-inch clearance)	A labeled solid-insulated factory-built chimney section (1-inch insulation) with a diameter 2 inches larger than the chimney connector shall be installed with a steel chimney connector having a minimum thickness of 0.0236 inch (24 gage). Sheet steel supports shall be positioned to maintain a 2-inch clearance to combustibles and to hold the chimney connector to ensure that a 1-inch airspace surrounds the chimney connector through the chimney section. The steel support shall be fastened to the wall on all sides and the chimney section shall be fastened to the supports. Fasteners shall not penetrate the liner of the chimney section.

For SI: 1 inch = 25.4 mm, 1.0 Btu • in/ft^2 • h • ºF = 0.144 W/m^2 • K.

a. Insulation material that is part of the wall pass-through system shall be noncombustible and shall have a thermal conductivity of 1.0 Btu • in/ft^2 • h • ºF or less.

b. All clearances and thicknesses are minimums.

c. Materials utilized to seal penetrations for the connector shall be noncombustible.

d. Connectors for all systems except System B shall extend through the wall pass-through system to the inner face of the flue liner.

e. ASTM C315.

TABLE 803.10.6
CONNECTOR CLEARANCES TO COMBUSTIBLES

TYPE OF APPLIANCE	MINIMUM CLEARANCE (inches)
Domestic-type appliances	
Chimney and vent connectors	
Electric and oil incinerators	18
Oil and solid-fuel appliances	18
Oil appliances labeled for venting with Type L vents	9
Commercial, industrial-type appliances	
Low-heat appliances	
Chimney connectors	
Oil and solid-fuel boilers, furnace and water heaters	18
Oil unit heaters	18
Other low-heat industrial appliances	18
Medium-heat appliances	
Chimney connectors	
All oil and solid-fuel appliances	36
High-heat appliances	
Masonry or metal connectors	(As determined by the *building official*)
All oil and solid-fuel appliances	

For SI: 1 inch = 25.4 mm.

SECTION 804
DIRECT-VENT, INTEGRAL VENT AND MECHANICAL DRAFT SYSTEMS

804.1 Direct-vent terminations. Vent terminals for *direct-vent appliances* shall be installed in accordance with the manufacturer's instructions.

804.2 Appliances with integral vents. *Appliances* incorporating integral venting means shall be installed in accordance with their listings and the manufacturer's installation instructions.

804.2.1 Terminal clearances. *Appliances* designed for natural draft venting and incorporating integral venting means shall be located so that a minimum *clearance* of 9 inches (229 mm) is maintained between vent terminals and from any openings through which *combustion* products enter the building. *Appliances* using forced draft venting shall be located so that a minimum clearance of 12 inches (305 mm) is maintained between vent terminals and from any openings through which *combustion* products enter the building.

804.3 Mechanical draft systems. Mechanical draft systems of either forced or induced draft design shall be listed and labeled in accordance with UL 378 and shall comply with Sections 804.3.1 through 804.3.8.

INTERNATIONAL CODE COUNCIL®
Copyright © 2019 ICC & NYSDOS. ALL RIGHTS RESERVED. Accessed by Lauren Gualdino (lgualdino@briarcliffmanor.org), (-) Order Number #100880972 on May 08, 2020 07:05 AM (PDT) pursuant to License Agreement with ICC & NYSDOS. No further reproduction, no

100880972

804.3.1 Forced draft systems. Forced draft systems and all portions of induced draft systems under positive pressure during operation shall be designed and installed so as to be gas tight to prevent leakage of *combustion* products into a building.

804.3.2 Automatic shutoff. Power exhausters serving automatically fired *appliances* shall be electrically connected to each *appliance* to prevent operation of the *appliance* when the power exhauster is not in operation.

804.3.3 Termination. The termination of *chimneys* or vents equipped with power exhausters shall be located not less than 10 feet (3048 mm) from the lot line or from adjacent buildings. The exhaust shall be directed away from the building.

804.3.4 Horizontal terminations. Horizontal terminations shall comply with the following requirements:

1. Where located adjacent to walkways, the termination of mechanical draft systems shall be not less than 7 feet (2134 mm) above the level of the walkway.
2. Vents shall terminate not less than 3 feet (914 mm) above any forced air inlet located within 10 feet (3048 mm).
3. The vent system shall terminate not less than 4 feet (1219 mm) below, 4 feet (1219 mm) horizontally from or 1 foot (305 mm) above any door, window or gravity air inlet into the building.
4. The vent termination point shall not be located closer than 3 feet (914 mm) to an interior corner formed by two walls perpendicular to each other.
5. The vent termination shall not be mounted directly above or within 3 feet (914 mm) horizontally from an oil tank vent or gas meter.
6. The bottom of the vent termination shall be located not less than 12 inches (305 mm) above finished grade.

804.3.5 Vertical terminations. Vertical terminations shall comply with the following requirements:

1. Where located adjacent to walkways, the termination of mechanical draft systems shall be not less than 7 feet (2134 mm) above the level of the walkway.
2. Vents shall terminate not less than 3 feet (914 mm) above any forced air inlet located within 10 feet (3048 mm) horizontally.
3. Where the vent termination is located below an adjacent roof structure, the termination point shall be located not less than 3 feet (914 mm) from such structure.
4. The vent shall terminate not less than 4 feet (1219 mm) below, 4 feet (1219 mm) horizontally from or 1 foot (305 mm) above any door, window or gravity air inlet for the building.
5. A vent cap shall be installed to prevent rain from entering the vent system.
6. The vent termination shall be located not less than 3 feet (914 mm) horizontally from any portion of the roof structure.

804.3.6 Exhauster connections. An *appliance* vented by natural draft shall not be connected into a vent, *chimney* or vent connector on the discharge side of a mechanical flue exhauster.

804.3.7 Exhauster sizing. Mechanical flue exhausters and the vent system served shall be sized and installed in accordance with the manufacturer's installation instructions.

804.3.8 Mechanical draft systems for manually fired appliances and fireplaces. A mechanical draft system shall be permitted to be used with manually fired appliances and fireplaces where such system complies with all of the following requirements:

1. The mechanical draft device shall be listed and labeled in accordance with UL 378, and shall be installed in accordance with the manufacturer's instructions.
2. A device shall be installed that produces visible and audible warning upon failure of the mechanical draft device or loss of electrical power, at any time that the mechanical draft device is turned on. This device shall be equipped with a battery backup if it receives power from the building wiring.
3. A smoke detector shall be installed in the room with the *appliance* or fireplace. This device shall be equipped with a battery backup if it receives power from the building wiring.

SECTION 805
FACTORY-BUILT CHIMNEYS

805.1 Listing. Factory-built *chimneys* shall be *listed* and *labeled* and shall be installed and terminated in accordance with the manufacturer's installation instructions.

805.2 Solid fuel appliances. Factory-built *chimneys* installed in *dwelling units* with solid fuel-burning appliances shall comply with the Type HT requirements of UL 103 and shall be marked "Type HT" and "Residential Type and Building Heating *Appliance Chimney."*

Exception: *Chimneys* for use with open *combustion* chamber fireplaces shall comply with the requirements of UL 103 and shall be marked "Residential Type and Building Heating *Appliance Chimney."*

Chimneys for use with open *combustion* chamber appliances installed in buildings other than *dwelling units* shall comply with the requirements of UL 103 and shall be marked "Building Heating *Appliance Chimney"* or "Residential Type and Building Heating *Appliance Chimney."*

805.3 Factory-built fireplaces. Chimneys for use with factory-built fireplaces shall comply with the requirements of UL 127.

805.4 Factory-built chimney offsets. Where a factory-built chimney assembly incorporates offsets, no part of the chimney shall be at an angle of more than 30 degrees (0.52 rad)

INTERNATIONAL CODE COUNCIL®
Copyright © 2019 ICC & NYSDOS. ALL RIGHTS RESERVED. Accessed by Lauren Gualdino (lgualdino@briarcliffmanor.org), (-) Order Number #100880972 on May 08, 2020 07:05 AM (PDT) pursuant to License Agreement with ICC & NYSDOS. No further reproduction, no

100880972

from vertical at any point in the assembly and the chimney assembly shall not include more than four elbows.

805.5 Support. Where factory-built *chimneys* are supported by structural members, such as joists and rafters, such members shall be designed to support the additional load.

805.6 Medium-heat appliances. Factory-built *chimneys* for medium-heat appliances producing flue gases having a temperature above 1,000ºF (538ºC) measured at the entrance to the *chimney* shall comply with UL 959.

805.7 Decorative shrouds. Decorative shrouds shall not be installed at the termination of factory-built *chimneys* except where such shrouds are *listed* and *labeled* for use with the specific factory-built *chimney* system and are installed in accordance with Section 304.1.

805.8 Insulation shield. Where factory-built chimneys pass through insulated assemblies, an insulation shield constructed of steel having a thickness of not less than 0.0187 inch (0.4712 mm) (No. 26 gage) shall be installed to provide clearance between the chimney and the insulation material. The clearance shall be not less than the clearance to combustibles specified by the chimney manufacturer's installation instructions. Where chimneys pass through attic space, the shield shall terminate not less than 2 inches (51 mm) above the insulation materials and shall be secured in place to prevent displacement. Insulation shields provided as part of a listed chimney system shall be installed in accordance with the manufacturer's instructions.

SECTION 806
METAL CHIMNEYS

806.1 General. Metal *chimneys* shall be constructed and installed in accordance with NFPA 211.

INTERNATIONAL CODE COUNCIL®
Copyright © 2019 ICC & NYSDOS. ALL RIGHTS RESERVED. Accessed by Lauren Gualdino (lgualdino@briarcliffmanor.org), (-) Order Number #100880972 on May 08, 2020 07:05 AM (PDT) pursuant to License Agreement with ICC & NYSDOS. No further reproduction, no

100880972

CHAPTER 9

SPECIFIC APPLIANCES, FIREPLACES AND SOLID FUEL-BURNING EQUIPMENT

SECTION 901 GENERAL

901.1 Scope. This chapter shall govern the approval, design, installation, construction, maintenance, *alteration* and repair of the appliances and *equipment* specifically identified herein and factory-built fireplaces. The approval, design, installation, construction, maintenance, *alteration* and repair of gas-fired appliances shall be regulated by the *Fuel Gas Code of New York State*.

901.2 General. The requirements of this chapter shall apply to the mechanical *equipment* and appliances regulated by this chapter, in addition to the other requirements of this code.

901.3 Hazardous locations. Fireplaces and solid fuel-burning appliances shall not be installed in hazardous locations.

901.4 Solid fuel-burning fireplaces and appliances in Group I-2, Condition 2. In Group I-2, Condition 2 occupancies, solid fuel-burning fireplaces and appliances are prohibited.

[NY] 901.5 Solid fuel-burning heating appliances, chimneys and flues. Building permits, inspection requirements, and compliance certificates for the installation, inspection, and subsequent use of solid fuel-burning heating appliances, chimneys and flues shall be in accordance with Chapter 1.

SECTION 902 MASONRY FIREPLACES

902.1 General. Masonry fireplaces shall be constructed in accordance with the *Building Code of New York State*.

902.2 Fireplace accessories. Listed and labeled fireplace accessories shall be installed in accordance with the conditions of the listing and the manufacturer's instructions. Fireplace accessories shall comply with UL 907.

SECTION 903 FACTORY-BUILT FIREPLACES

903.1 General. Factory-built fireplaces shall be *listed* and *labeled* and shall be installed in accordance with the conditions of the listing. Factory-built fireplaces shall be tested in accordance with UL 127.

903.2 Hearth extensions. Hearth extensions of approved factory-built fireplaces shall be installed in accordance with the listing of the fireplace. The hearth extension shall be readily distinguishable from the surrounding floor area. Listed and labeled hearth extensions shall comply with UL 1618.

903.3 Unvented gas log heaters. An unvented gas log heater shall not be installed in a factory-built fireplace unless the fireplace system has been specifically tested, *listed* and *labeled* for such use in accordance with UL 127.

903.4 Gasketed fireplace doors. A gasketed fireplace door shall not be installed on a factory-built fireplace except where the fireplace system has been specifically tested, listed and labeled for such use in accordance with UL 127.

SECTION 904 PELLET FUEL-BURNING APPLIANCES

904.1 General. Pellet fuel-burning appliances shall be *listed* and *labeled* in accordance with ASTM E1509 and shall be installed in accordance with the terms of the listing.

SECTION 905 FIREPLACE STOVES AND ROOM HEATERS

905.1 General. Fireplace stoves and solid-fuel-type room heaters shall be *listed* and *labeled* and shall be installed in accordance with the conditions of the listing. Fireplace stoves shall be tested in accordance with UL 737. Solid-fuel-type room heaters shall be tested in accordance with UL 1482. Fireplace inserts intended for installation in fireplaces shall be *listed* and *labeled* in accordance with the requirements of UL 1482 and shall be installed in accordance with the manufacturer's instructions.

905.2 Connection to fireplace. The connection of solid fuel appliances to *chimney* flues serving fireplaces shall comply with Sections 801.7 and 801.10.

905.3 Hearth extensions. Hearth extensions for fireplace stoves shall be installed in accordance with the listing of the fireplace stove. The hearth extension shall be readily distinguishable from the surrounding floor area. Listed and labeled hearth extensions shall comply with UL 1618.

SECTION 906 FACTORY-BUILT BARBECUE APPLIANCES

906.1 General. Factory-built barbecue appliances shall be of an *approved* type and shall be installed in accordance with the manufacturer's instructions, this chapter and Chapters 3, 5, 7 and 8, and the *Fuel Gas Code of New York State*.

SECTION 907 INCINERATORS AND CREMATORIES

907.1 General. Incinerators and crematories shall be *listed* and *labeled* in accordance with UL 791 and shall be installed in accordance with the manufacturer's instructions.

INTERNATIONAL CODE COUNCIL®
Copyright © 2019 ICC & NYSDOS. ALL RIGHTS RESERVED. Accessed by Lauren Gualdino (lgualdino@briarcliffmanor.org), (-) Order Number #100880972 on May 08, 2020 07:05 AM (PDT) pursuant to License Agreement with ICC & NYSDOS. No further reproduction, no

100880972

SECTION 908
COOLING TOWERS, EVAPORATIVE CONDENSERS AND FLUID COOLERS

908.1 General. A cooling tower used in conjunction with an air-conditioning *appliance* shall be installed in accordance with the manufacturer's instructions. Factory-built cooling towers shall be listed in accordance with UL 1995.

908.2 Access. Cooling towers, evaporative condensers and fluid coolers shall be provided with ready access.

908.3 Location. Cooling towers, evaporative condensers and fluid coolers shall be located to prevent the discharge vapor plumes from entering occupied spaces. Plume discharges shall be not less than 5 feet (1524 mm) above or 20 feet (6096 mm) away from any ventilation inlet to a building. Location on the property shall be as required for buildings in accordance with the *Building Code of New York State*.

908.4 Support and anchorage. Supports for cooling towers, evaporative condensers and fluid coolers shall be designed in accordance with the *Building Code of New York State*. Seismic restraints shall be as required by the *Building Code of New York State*.

908.5 Water supply. Cooling towers, evaporative coolers and fluid coolers shall be provided with an approved water supply, sized for peak demand. The quality of water shall be provided in accordance with the equipment manufacturer's recommendations. The piping system and protection of the potable water supply system shall be installed as required by the *Plumbing Code of New York State*.

908.6 Drainage. Drains, overflows and blowdown provisions shall be indirectly connected to an *approved* disposal location. Discharge of chemical waste shall be *approved* by the appropriate regulatory authority.

908.7 Refrigerants and hazardous fluids. Heat exchange *equipment* that contains a refrigerant and that is part of a closed refrigeration system shall comply with Chapter 11. Heat exchange *equipment* containing heat transfer fluids which are flammable, combustible or hazardous shall comply with the *Fire Code of New York State*.

908.8 Cooling towers. Cooling towers, both open circuit and closed circuit type, and evaporative condensers shall comply with Sections 908.8.1 and 908.8.2.

908.8.1 Conductivity or flow-based control of cycles of concentration. Cooling towers and evaporative condensers shall include controls that automate system bleed based on conductivity, fraction of metered makeup volume, metered bleed volume, recirculating pump run time or bleed time.

908.8.2 Drift eliminators. Cooling towers and evaporative condensers shall be equipped with drift eliminators that have a maximum drift rate of 0.005 percent of the circulated water flow rate as established in the equipment's design specifications.

SECTION 909
VENTED WALL FURNACES

909.1 General. Vented wall furnaces shall be installed in accordance with their listing and the manufacturer's instructions. Oil-fired furnaces shall be tested in accordance with UL 730.

909.2 Location. Vented wall furnaces shall be located so as not to cause a fire hazard to walls, floors, combustible furnishings or doors. Vented wall furnaces installed between bathrooms and adjoining rooms shall not circulate air from bathrooms to other parts of the building.

909.3 Door swing. Vented wall furnaces shall be located so that a door cannot swing within 12 inches (305 mm) of an air inlet or air outlet of such furnace measured at right angles to the opening. Doorstops or door closers shall not be installed to obtain this *clearance*.

909.4 Ducts prohibited. Ducts shall not be attached to wall furnaces. Casing extension boots shall not be installed unless *listed* as part of the *appliance*.

909.5 Manual shutoff valve. A manual shutoff valve shall be installed ahead of all controls.

909.6 Access. Vented wall furnaces shall be provided with access for cleaning of heating surfaces, removal of burners, replacement of sections, motors, controls, filters and other working parts, and for adjustments and lubrication of parts requiring such attention. Panels, grilles and access doors that must be removed for normal servicing operations shall not be attached to the building construction.

SECTION 910
FLOOR FURNACES

910.1 General. Floor furnaces shall be installed in accordance with their listing and the manufacturer's instructions. Oil-fired furnaces shall be tested in accordance with UL 729.

910.2 Placement. Floor furnaces shall not be installed in the floor of any aisle or passageway of any auditorium, public hall, place of assembly, or in any egress element from any such room or space.

With the exception of wall register models, a floor furnace shall not be placed closer than 6 inches (152 mm) to the nearest wall, and wall register models shall not be placed closer than 6 inches (152 mm) to a corner.

The furnace shall be placed such that a drapery or similar combustible object will not be nearer than 12 inches (305 mm) to any portion of the register of the furnace. Floor furnaces shall not be installed in concrete floor construction built on grade. The controlling thermostat for a floor furnace shall be located within the same room or space as the floor furnace or shall be located in an adjacent room or space that is permanently open to the room or space containing the floor furnace.

910.3 Bracing. The floor around the furnace shall be braced and headed with a support framework design in accordance with the *Building Code of New York State*.

910.4 Clearance. The lowest portion of the floor furnace shall have not less than a 6-inch (152 mm) clearance from the grade level; except where the lower 6-inch (152 mm) portion of the floor furnace is sealed by the manufacturer to prevent entrance of water, the minimum clearance shall be reduced to not less than 2 inches (51 mm). Where these clearances are not present, the ground below and to the sides shall be exca-

INTERNATIONAL CODE COUNCIL®
Copyright © 2019 ICC & NYSDOS. ALL RIGHTS RESERVED. Accessed by Lauren Gualdino (lgualdino@briarcliffmanor.org), (-) Order Number #100880972 on May 08, 2020 07:05 AM (PDT) pursuant to License Agreement with ICC & NYSDOS. No further reproduction, no

100880972

vated to form a pit under the furnace so that the required clearance is provided beneath the lowest portion of the furnace. A 12-inch (305 mm) minimum clearance shall be provided on all sides except the control side, which shall have an 18-inch (457 mm) minimum clearance.

SECTION 911
DUCT FURNACES

911.1 General. Duct furnaces shall be installed in accordance with the manufacturer's instructions. Electric duct furnaces shall comply with UL 1996.

SECTION 912
INFRARED RADIANT HEATERS

912.1 General. Electric infrared radiant heaters shall comply with UL 499.

912.2 Support. Infrared radiant heaters shall be fixed in a position independent of fuel and electric supply lines. Hangers and brackets shall be noncombustible material.

912.3 Clearances. Heaters shall be installed with clearances from combustible material in accordance with the manufacturer's installation instructions.

SECTION 913
CLOTHES DRYERS

913.1 General. Clothes dryers shall be installed in accordance with the manufacturer's instructions. Electric residential clothes dryers shall be tested in accordance with UL 2158. Electric coin-operated clothes dryers shall be tested in accordance with UL 2158. Electric commercial clothes dryers shall be tested in accordance with UL 1240.

913.2 Exhaust required. Clothes dryers shall be exhausted in accordance with Section 504.

913.3 Clearances. Clothes dryers shall be installed with *clearance* to combustibles in accordance with the manufacturer's instructions.

SECTION 914
SAUNA HEATERS

914.1 Location and protection. Sauna heaters shall be located so as to minimize the possibility of accidental contact by a person in the room.

914.1.1 Guards. Sauna heaters shall be protected from accidental contact by an *approved* guard or barrier of material having a low coefficient of thermal conductivity. The guard shall not substantially affect the transfer of heat from the heater to the room.

914.2 Installation. Sauna heaters shall be *listed* and *labeled* in accordance with UL 875 and shall be installed in accordance with their listing and the manufacturer's instructions.

914.3 Access. Panels, grilles and access doors that are required to be removed for normal servicing operations shall not be attached to the building.

914.4 Heat and time controls. Sauna heaters shall be equipped with a thermostat that will limit room temperature to 194ºF (90ºC). If the thermostat is not an integral part of the sauna heater, the heat-sensing element shall be located within 6 inches (152 mm) of the ceiling. If the heat-sensing element is a capillary tube and bulb, the assembly shall be attached to the wall or other support, and shall be protected against physical damage.

914.4.1 Timers. A timer, if provided to control main burner operation, shall have a maximum operating time of 1 hour. The control for the timer shall be located outside the sauna room.

914.5 Sauna room. A ventilation opening into the sauna room shall be provided. The opening shall be not less than 4 inches by 8 inches (102 mm by 203 mm) located near the top of the door into the sauna room.

914.5.1 Warning notice. The following permanent notice, constructed of *approved* material, shall be mechanically attached to the sauna room on the outside:

WARNING: DO NOT EXCEED 30 MINUTES IN SAUNA. EXCESSIVE EXPOSURE CAN BE HARMFUL TO HEALTH. ANY PERSON WITH POOR HEALTH SHOULD CONSULT A PHYSICIAN BEFORE USING SAUNA.

The words shall contrast with the background and the wording shall be in letters not less than $^1/_4$-inch (6.4 mm) high.

Exception: This section shall not apply to one- and two-family dwellings.

SECTION 915
ENGINE AND GAS TURBINE-POWERED EQUIPMENT AND APPLIANCES

915.1 General. The installation of liquid-fueled stationary internal *combustion* engines and gas turbines, including exhaust, fuel storage and piping, shall meet the requirements of NFPA 37. Stationary engine generator assemblies shall meet the requirements of UL 2200.

915.2 Powered equipment and appliances. Permanently installed *equipment* and appliances powered by internal *combustion* engines and turbines shall be installed in accordance with the manufacturer's instructions and NFPA 37.

SECTION 916
POOL AND SPA HEATERS

916.1 General. Pool and spa heaters shall be installed in accordance with the manufacturer's instructions. Oil-fired pool and spa heaters shall be tested in accordance with UL 726. Electric pool and spa heaters shall be tested in accordance with UL 1261. Pool and spa heat pump water heaters shall comply with UL 1995 or CSA C22.2 No. 236.

Exception: Portable residential spas and portable residential exercise spas shall comply with UL 1563 or CSA C22.2 No. 218.1.

INTERNATIONAL CODE COUNCIL®
Copyright © 2019 ICC & NYSDOS. ALL RIGHTS RESERVED. Accessed by Lauren Gualdino (lgualdino@briarcliffmanor.org), (-) Order Number #100880972 on May 08, 2020 07:05 AM (PDT) pursuant to License Agreement with ICC & NYSDOS. No further reproduction, no

100880972

SECTION 917
COOKING APPLIANCES

917.1 Cooking appliances. Cooking appliances that are designed for permanent installation, including ranges, ovens, stoves, broilers, grills, fryers, griddles and barbecues, shall be *listed*, *labeled* and installed in accordance with the manufacturer's instructions. Commercial electric cooking appliances shall be *listed* and *labeled* in accordance with UL 197. Household electric ranges shall be *listed* and *labeled* in accordance with UL 858. Microwave cooking appliances shall be *listed* and *labeled* in accordance with UL 923. Oil-burning stoves shall be *listed* and *labeled* in accordance with UL 896. Solid-fuel-fired ovens shall be *listed* and *labeled* in accordance with UL 2162.

917.2 Domestic appliances. Cooking appliances installed within *dwelling units* and within areas where domestic cooking operations occur shall be *listed* and *labeled* as household-type appliances for domestic use.

SECTION 918
FORCED-AIR WARM-AIR FURNACES

918.1 Forced-air furnaces. Oil-fired furnaces shall be tested in accordance with UL 727. Electric furnaces shall be tested in accordance with UL 1995. Solid fuel furnaces shall be tested in accordance with UL 391. Forced-air furnaces shall be installed in accordance with the listings and the manufacturer's instructions.

918.2 Heat pumps. Electric heat pumps shall be tested in accordance with UL 1995.

918.3 Dampers. Volume dampers shall not be placed in the air inlet to a furnace in a manner that will reduce the required air to the furnace.

918.4 Circulating air ducts for forced-air warm-air furnaces. Circulating air for fuel-burning, forced-air-type, warm-air furnaces shall be conducted into the blower housing from outside the furnace enclosure by continuous air-tight ducts.

918.5 Outdoor and return air openings. Outdoor intake openings shall be located in accordance with Section 401.4. Return air openings shall be located in accordance with Section 601.5.

918.6 Outdoor opening protection. Outdoor air intake openings shall be protected in accordance with Section 401.5.

SECTION 919
CONVERSION BURNERS

919.1 Conversion burners. The installation of conversion burners shall conform to ANSI Z21.8.

SECTION 920
UNIT HEATERS

920.1 General. Unit heaters shall be installed in accordance with the listing and the manufacturer's instructions. Oil-fired unit heaters shall be tested in accordance with UL 731.

920.2 Support. Suspended-type unit heaters shall be supported by elements that are designed and constructed to accommodate the weight and dynamic loads. Hangers and brackets shall be of noncombustible material. Suspended-type oil-fired unit heaters shall be installed in accordance with NFPA 31.

920.3 Ductwork. A unit heater shall not be attached to a warm-air duct system unless *listed* for such installation.

SECTION 921
VENTED ROOM HEATERS

921.1 General. Vented room heaters shall be *listed* and *labeled* and shall be installed in accordance with the conditions of the listing and the manufacturer's instructions.

[NY] SECTION 922
KEROSENE AND OIL-FIRED STOVES AND HEATERS

922.1 General. Kerosene and oil-fired stoves shall be listed and labeled and shall be installed in accordance with the conditions of the listing and the manufacturer's instructions. Kerosene and oil-fired stoves shall comply with NFPA 31 and UL 896.

[NY] 922.2 Approved portable kerosene heater. Unvented portable kerosene-fired heaters tested and *listed* in accordance with UL 647 are approved by the Secretary of State for use in New York State if packaged for sale with all provisions required in New York State Real Property Law Article 7A Section 239-a(7). Unvented portable kerosene-fired heaters shall not be located in, or obtain combustion air from, any of the following rooms or spaces: sleeping rooms, bathrooms, toilet rooms, or storage closets. Portable kerosene heaters shall be prohibited in buildings of occupancy groups A, E, I, R-1, R-2, R-3 and R-4 (except for one- and two-family homes and townhouses). The use of unvented portable kerosene-fired heaters is further regulated by New York State Real Property Law Article 7A.

SECTION 923
SMALL CERAMIC KILNS

923.1 General. Kilns shall be listed and labeled unless otherwise approved in accordance with Section 105.2. Electric kilns shall comply with UL 499. The approval of unlisted appliances in accordance with Section 105.2 shall be based on approved engineering evaluation.

923.1.1 Installation. Kilns shall be installed in accordance with the manufacturer's instructions and the provisions of this code.

SECTION 924
STATIONARY FUEL CELL POWER SYSTEMS

924.1 General. Stationary fuel cell power systems having a power output not exceeding 10 MW shall be tested in accordance with ANSI/CSA America FC 1 and shall be installed in

INTERNATIONAL CODE COUNCIL®
Copyright © 2019 ICC & NYSDOS. ALL RIGHTS RESERVED. Accessed by Lauren Gualdino (lgualdino@briarcliffmanor.org), (-) Order Number #100880972 on May 08, 2020 07:05 AM (PDT) pursuant to License Agreement with ICC & NYSDOS. No further reproduction, no

100880972

accordance with the manufacturer's instructions, NFPA 853, the *Building Code of New York State* and the *Fire Code of New York State*.

SECTION 925
MASONRY HEATERS

925.1 General. Masonry heaters shall be constructed in accordance with the *Building Code of New York State.*

SECTION 926
GASEOUS HYDROGEN SYSTEMS

926.1 Installation. The installation of gaseous hydrogen systems shall be in accordance with the applicable requirements of this code, the *Fire Code of New York State*, the *Fuel Gas Code of New York State* and the *Building Code of New York State*.

SECTION 927
RADIANT HEATING SYSTEMS

927.1 General. Electric radiant heating systems shall be installed in accordance with the manufacturer's instructions and shall be listed for the application.

927.2 Clearances. Clearances for radiant heating panels or elements to any wiring, outlet boxes and junction boxes used for installing electrical devices or mounting luminaires shall be in accordance with the *Building Code of New York State* and NFPA 70.

927.3 Installation on wood or steel framing. Radiant panels installed on wood or steel framing shall conform to the following requirements:

1. Heating panels shall be installed parallel to framing members and secured to the surface of framing members or shall be mounted between framing members.
2. Mechanical fasteners shall penetrate only the unheated portions provided for this purpose. Panels shall not be fastened at any point closer than $^1/_4$ inch (6.4 mm) to an element. Other methods of attachment of the panels shall be in accordance with the panel installation instructions.
3. Unless listed and labeled for field cutting, heating panels shall be installed as complete units.

927.4 Installation in concrete or masonry. Radiant heating systems installed in concrete or masonry shall conform to the following requirements:

1. Radiant heating systems shall be identified as being suitable for the installation, and shall be secured in place as specified in the manufacturer's instructions.
2. Radiant heating panels and radiant heating panel sets shall not be installed where they bridge expansion joints unless they are protected from expansion and contraction.

927.5 Finish surfaces. Finish materials installed over radiant heating panels and systems shall be installed in accordance with the manufacturer's instructions. Surfaces shall be secured so that fasteners do not pierce the radiant heating elements.

SECTION 928
EVAPORATIVE COOLING EQUIPMENT

928.1 General. Evaporative cooling equipment shall:

1. Be installed in accordance with the manufacturer's instructions.
2. Be installed on level platforms in accordance with Section 304.10.
3. Have openings in exterior walls or roofs flashed in accordance with the *Building Code of New York State*.
4. Be provided with an approved water supply, sized for peak demand. The quality of water shall be provided in accordance with the equipment manufacturer's recommendations. The piping system and protection of the potable water supply system shall be installed as required by the *Plumbing Code of New York State*.
5. Have air intake opening locations in accordance with Section 401.4.

SECTION 929
HIGH-VOLUME LARGE-DIAMETER FANS

929.1 General. Where provided, high-volume large-diameter fans shall be tested and labeled in accordance with AMCA 230, listed and labeled in accordance with UL 507, and installed in accordance with the manufacturer's instructions.

INTERNATIONAL CODE COUNCIL®
Copyright © 2019 ICC & NYSDOS. ALL RIGHTS RESERVED. Accessed by Lauren Gualdino (lgualdino@briarcliffmanor.org), (-) Order Number #100880972 on May 08, 2020 07:05 AM (PDT) pursuant to License Agreement with ICC & NYSDOS. No further reproduction, no

100880972

INTERNATIONAL CODE COUNCIL®
Copyright © 2019 ICC & NYSDOS. ALL RIGHTS RESERVED. Accessed by Lauren Gualdino (lgualdino@briarcliffmanor.org), (-) Order Number #100880972 on May 08, 2020 07:05 AM (PDT) pursuant to License Agreement with ICC & NYSDOS. No further reproduction, no

100880972

CHAPTER 10

BOILERS, WATER HEATERS AND PRESSURE VESSELS

SECTION 1001 GENERAL

1001.1 Scope. This chapter shall govern the installation, *alteration* and repair of boilers, water heaters and pressure vessels.

Exceptions:

1. Pressure vessels used for unheated water supply.
2. Portable unfired pressure vessels and Interstate Commerce Commission containers.
3. Containers for bulk oxygen and medical gas.
4. Unfired pressure vessels having a volume of 5 cubic feet (0.14 m^3) or less operating at pressures not exceeding 250 pounds per square inch (psi) (1724 kPa) and located within occupancies of Groups B, F, H, M, R, S and U.
5. Pressure vessels used in refrigeration systems that are regulated by Chapter 11 of this code.
6. Pressure tanks used in conjunction with coaxial cables, telephone cables, power cables and other similar humidity control systems.
7. Any boiler or pressure vessel subject to inspection by federal or state inspectors.

SECTION 1002 WATER HEATERS

1002.1 General. Potable water heaters and hot water storage tanks shall be listed and labeled and installed in accordance with the manufacturer's instructions, the *Plumbing Code of New York State* and this code. Water heaters shall be capable of being removed without first removing a permanent portion of the building structure. The potable water connections and relief valves for all water heaters shall conform to the requirements of the *Plumbing Code of New York State*. Domestic electric water heaters shall comply with UL 174 or UL 1453. Commercial electric water heaters shall comply with UL 1453. Oil-fired water heaters shall comply with UL 732. Solid-fuel-fired water heaters shall comply with UL 2523. Solar thermal water heating systems shall comply with Chapter 14 and ICC 900/SRCC 300.

1002.2 Water heaters utilized for space heating. Water heaters utilized both to supply potable hot water and provide hot water for space-heating applications shall be *listed* and *labeled* for such applications by the manufacturer and shall be installed in accordance with the manufacturer's instructions and the *Plumbing Code of New York State*.

1002.2.1 Sizing. Water heaters utilized for both potable water heating and space-heating applications shall be sized to prevent the space-heating load from diminishing the required potable water-heating capacity.

1002.2.2 Temperature limitation. Where a combination potable water-heating and space-heating system requires water for space heating at temperatures higher than 140ºF (60ºC), a temperature-actuated mixing valve that conforms to ASSE 1017 shall be provided to temper the water supplied to the potable hot water distribution system to a temperature of 140ºF (60ºC) or less.

1002.3 Supplemental water-heating devices. Potable water-heating devices that utilize refrigerant-to-water heat exchangers shall be *approved* and installed in accordance with the *Plumbing Code of New York State* and the manufacturer's instructions.

SECTION 1003 PRESSURE VESSELS

1003.1 General. All pressure vessels, unless otherwise approved, shall be constructed and certified in accordance with the ASME *Boiler and Pressure Vessel Code*, and shall be installed in accordance with the manufacturer's instructions and nationally recognized standards. Directly fired pressure vessels shall meet the requirements of Section 1004.

1003.2 Piping. All piping materials, fittings, joints, connections and devices associated with systems utilized in conjunction with pressure vessels shall be designed for the specific application and shall be *approved*.

1003.3 Welding. Welding on pressure vessels shall be performed by an R-Stamp holder in accordance with the *National Board Inspection Code, Part 3* or in accordance with an *approved* standard.

SECTION 1004 BOILERS

1004.1 Standards. Boilers shall be designed, constructed and certified in accordance with the ASME *Boiler and Pressure Vessel Code*, Section I or IV. Controls and safety devices for boilers with fuel input ratings of 12,500,000 Btu/hr (3,662,500 W) or less shall meet the requirements of ASME CSD-1. Controls and safety devices for boilers with inputs greater than 12,500,000 Btu/hr (3,662,500 W) shall meet the requirements of NFPA 85. Packaged oil-fired boilers shall be listed and labeled in accordance with UL 726. Packaged electric boilers shall be listed and labeled in accordance with UL 834. Solid-fuel-fired boilers shall be listed and labeled in accordance with UL 2523.

[NY] 1004.1.1 Other standards. Low pressure boilers are also regulated by the New York State Department of Labor, 12 NYCRR, Industrial Code Rule 4 and high-pressure boilers are also regulated by the New York State Department of Labor, 12 NYCRR, Industrial Code Rule 14.

1004.2 Installation. In addition to the requirements of this code, the installation of boilers shall conform to the manufacturer's instructions. Operating instructions of a permanent type shall be attached to the boiler. Boilers shall have all con-

INTERNATIONAL CODE COUNCIL®
Copyright © 2019 ICC & NYSDOS. ALL RIGHTS RESERVED. Accessed by Lauren Gualdino (lgualdino@briarcliffmanor.org), (-) Order Number #100880972 on May 08, 2020 07:05 AM (PDT) pursuant to License Agreement with ICC & NYSDOS. No further reproduction, no

100880972

trols set, adjusted and tested by the installer. The manufacturer's rating data and the nameplate shall be attached to the boiler.

1004.3 Working clearance. Clearances shall be maintained around boilers, generators, heaters, tanks and related *equipment* and appliances so as to permit inspection, servicing, repair, replacement and visibility of all gauges. Where boilers are installed or replaced, clearance shall be provided to allow access for inspection, maintenance and repair. Passageways around all sides of boilers shall have an unobstructed width of not less than 18 inches (457 mm), unless otherwise *approved*.

1004.3.1 Top clearance. Clearances from the tops of boilers to the ceiling or other overhead obstruction shall be in accordance with Table 1004.3.1.

TABLE 1004.3.1
BOILER TOP CLEARANCES

BOILER TYPE	MINIMUM CLEARANCES FROM TOP OF BOILER TO CEILING OR OTHER OVERHEAD OBSTRUCTION (feet)
All boilers with manholes on top of the boiler except where a greater clearance is required in this table.	3
All boilers without manholes on top of the boiler except high-pressure steam boilers and where a greater clearance is required in this table.	2
High-pressure steam boilers with steam generating capacity not exceeding 5,000 pounds per hour.	3
High-pressure steam boilers with steam generating capacity exceeding 5,000 pounds per hour.	7
High-pressure steam boilers having heating surface not exceeding 1,000 square feet.	3
High-pressure steam boilers having heating surface in excess of 1,000 square feet.	7
High-pressure steam boilers with input not exceeding 5,000,000 Btu/h.	3
High-pressure steam boilers with input in excess of 5,000,000 Btu/h.	7
Steam-heating boilers and hot water-heating boilers with input exceeding 5,000,000 Btu/h.	3
Steam-heating boilers exceeding 5,000 pounds of steam per hour.	3
Steam-heating boilers and hot water-heating boilers having heating surface exceeding 1,000 square feet.	3

For SI: 1 foot = 304.8 mm, 1 square foot = 0.0929 m^2, 1 pound per hour = 0.4536 kg/h, 1 Btu/hr = 0.293 W.

1004.4 Mounting. *Equipment* shall be set or mounted on a level base capable of supporting and distributing the weight contained thereon. Boilers, tanks and *equipment* shall be secured in accordance with the manufacturer's installation instructions.

1004.5 Floors. Boilers shall be mounted on floors of noncombustible construction, unless *listed* for mounting on combustible flooring.

1004.6 Boiler rooms and enclosures. Boiler rooms and enclosures and access thereto shall comply with the *Building Code of New York State* and Chapter 3 of this code. Boiler rooms shall be equipped with a floor drain or other *approved* means for disposing of liquid waste.

1004.7 Operating adjustments and instructions. Hot water and steam boilers shall have all operating and safety controls set and operationally tested by the installing contractor. A complete control diagram and boiler operating instructions shall be furnished by the installer for each installation.

SECTION 1005
BOILER CONNECTIONS

1005.1 Valves. Every boiler or modular boiler shall have a shutoff valve in the supply and return piping. For multiple boiler or multiple modular boiler installations, each boiler or modular boiler shall have individual shutoff valves in the supply and return piping.

Exception: Shutoff valves are not required in a system having a single low-pressure steam boiler.

1005.2 Potable water supply. The water supply to all boilers shall be connected in accordance with the *Plumbing Code of New York State*.

SECTION 1006
SAFETY AND PRESSURE RELIEF VALVES AND CONTROLS

1006.1 Safety valves for steam boilers. Steam boilers shall be protected with a safety valve.

1006.2 Safety relief valves for hot water boilers. Hot water boilers shall be protected with a safety relief valve.

1006.3 Pressure relief for pressure vessels. Pressure vessels shall be protected with a pressure relief valve or pressure-limiting device as required by the manufacturer's installation instructions for the pressure vessel.

1006.4 Approval of safety and safety relief valves. Safety and safety relief valves shall be *listed* and *labeled*, and shall have a minimum rated capacity for the *equipment* or appliances served. Safety and safety relief valves shall be set at not greater than the nameplate pressure rating of the boiler or pressure vessel.

1006.5 Installation. Safety or relief valves shall be installed directly into the safety or relief valve opening on the boiler or pressure vessel. Valves shall not be located on either side of a safety or relief valve connection. The relief valve shall discharge by gravity.

1006.6 Safety and relief valve discharge. Safety and relief valve discharge pipes shall be of rigid pipe that is approved for the temperature of the system. High-pressure-steam safety valves shall be vented to the outside of the structure. The discharge piping serving pressure relief valves, temperature relief valves and combinations of such valves shall:

1. Not be directly connected to the drainage system.
2. Discharge through an air break located in the same room as the appliance.

INTERNATIONAL CODE COUNCIL®
Copyright © 2019 ICC & NYSDOS. ALL RIGHTS RESERVED. Accessed by Lauren Gualdino (lgualdino@briarcliffmanor.org), (-) Order Number #100880972 on May 08, 2020 07:05 AM (PDT) pursuant to License Agreement with ICC & NYSDOS. No further reproduction, no

100880972

3. Not be smaller than the diameter of the outlet of the valve served and shall discharge full size to the air break.
4. Serve a single relief device and shall not connect to piping serving any other relief device or equipment.
5. Discharge to the floor, to the pan serving the boiler or storage tank, to a waste receptor or to the outdoors.
6. Discharge in a manner that does not cause personal injury or structural damage.
7. Discharge to a termination point that is readily observable by the building occupants.
8. Not be trapped.
9. Be installed so as to flow by gravity.
10. Not terminate more than 6 inches (152 mm) above the floor or waste receptor.
11. Not have a threaded connection at the end of such piping.
12. Not have valves or tee fittings.
13. Be constructed of those materials listed in Section 605.4 of the *Plumbing Code of New York State* or materials tested, rated and approved for such use in accordance with ASME A112.4.1.

1006.7 Boiler safety devices. Boilers shall be equipped with controls and limit devices as required by the manufacturer's installation instructions and the conditions of the listing.

1006.8 Electrical requirements. The power supply to the electrical control system shall be from a two-wire branch circuit that has a grounded conductor, or from an isolation transformer with a two-wire secondary. Where an isolation transformer is provided, one conductor of the secondary winding shall be grounded. Control voltage shall not exceed 150 volts nominal, line to line. Control and limit devices shall interrupt the ungrounded side of the circuit. A means of manually disconnecting the control circuit shall be provided and controls shall be arranged so that when deenergized, the burner shall be inoperative. Such disconnecting means shall be capable of being locked in the off position and shall be provided with ready access.

SECTION 1007
BOILER LOW-WATER CUTOFF

1007.1 General. Steam and hot water boilers shall be protected with a low-water cutoff control.

Exception: A low-water cutoff is not required for coil-type and water-tube-type boilers that require forced circulation of water through the boiler and that are protected with a flow sensing control.

1007.2 Operation. Low-water cutoff controls and flow sensing controls required by Section 1007.1 shall automatically stop the *combustion* operation of the *appliance* when the water level drops below the lowest safe water level as established by the manufacturer or when water circulation stops, respectively.

SECTION 1008
BOTTOM BLOWOFF VALVE

1008.1 General. Steam boilers shall be equipped with bottom blowoff valve(s). The valve(s) shall be installed in the opening provided on the boiler. The minimum size of the valve(s) and associated piping shall be the size specified by the boiler manufacturer or the size of the boiler blowoff-valve opening. Where the maximum allowable working pressure of the boiler exceeds 100 psig (689 kPa), two bottom blowoff valves shall be provided consisting of either two slow-opening valves in series or one quick-opening valve and one slow-opening valve in series, with the quick-opening valve installed closest to the boiler.

1008.2 Discharge. Blowoff valves shall discharge to a safe place of disposal. Where discharging to the drainage system, the installation shall conform to the *Plumbing Code of New York State*.

SECTION 1009
HOT WATER BOILER EXPANSION TANK

1009.1 Where required. An expansion tank shall be installed in every hot water system. For multiple boiler installations, not less than one expansion tank is required. Expansion tanks shall be of the closed or open type. Tanks shall be rated for the pressure of the hot water system.

Exception: Expansion tanks shall not be required in the collector loop of drain-back systems.

1009.2 Closed-type expansion tanks. Closed-type expansion tanks shall be installed in accordance with the manufacturer's instructions. Expansion tanks for systems designed to have an operating pressure in excess of 30 psi (207 kPa) shall be constructed and certified in accordance with the ASME *Boiler and Pressure Vessel Code*. The size of the tank shall be based on the capacity of the hot-water-heating system. The minimum size of the tank shall be determined in accordance with the following equation where all necessary information is known:

$$V_t = \frac{(0.00041T - 0.0466)V_s}{\left(\frac{P_a}{P_f}\right) - \left(\frac{P_a}{P_o}\right)} \qquad \textbf{(Equation 10-1)}$$

For SI:

$$V_t = \frac{(0.000738T - 0.03348)V_s}{\left(\frac{P_a}{P_f}\right) - \left(\frac{P_a}{P_o}\right)}$$

where:

V_t = Minimum volume of tanks (gallons) (L).
V_s = Volume of system, not including expansion tanks (gallons) (L).
T = Average operating temperature (ºF) (ºC).
P_a = Atmospheric pressure (psi) (kPa).
P_f = Fill pressure (psi) (kPa).
P_o = Maximum operating pressure (psi) (kPa).

INTERNATIONAL CODE COUNCIL®
Copyright © 2019 ICC & NYSDOS. ALL RIGHTS RESERVED. Accessed by Lauren Gualdino (lgualdino@briarcliffmanor.org), (-) Order Number #100880972 on May 08, 2020 07:05 AM (PDT) pursuant to License Agreement with ICC & NYSDOS. No further reproduction, no

100880972

Where all necessary information is not known, the minimum size of the tank shall be determined from Table 1009.2.

TABLE 1009.2
CLOSED-TYPE EXPANSION TANK SIZING

SYSTEM VOLUME IN GALLONS	TANK CAPACITIES IN GALLONS	
	Pressurized Diaphragm Type	Nonpressurized Type
100	9	15
200	17	30
300	25	45
400	33	60
500	42	75
1,000	83	150
2,000	165	300

For SI: 1 gallon = 3.795 L.

1009.3 Open-type expansion tanks. Open-type expansion tanks shall be located not less than 4 feet (1219 mm) above the highest heating element. The tank shall be adequately sized for the hot water system. An overflow with a minimum diameter of 1 inch (25 mm) shall be installed at the top of the tank. The overflow shall discharge to the drainage system in accordance with the *Plumbing Code of New York State*.

SECTION 1010
GAUGES

1010.1 Hot water boiler gauges. Every hot water boiler shall have a pressure gauge and a temperature gauge, or a combination pressure and temperature gauge. The gauges shall indicate the temperature and pressure within the normal range of the system's operation.

1010.2 Steam boiler gauges. Every steam boiler shall have a water-gauge glass and a pressure gauge. The pressure gauge shall indicate the pressure within the normal range of the system's operation.

1010.2.1 Water-gauge glass. The gauge glass shall be installed so that the midpoint is at the normal boiler water level.

SECTION 1011
TESTS

1011.1 Tests. Upon completion of the assembly and installation of boilers and pressure vessels, acceptance tests shall be conducted in accordance with the requirements of the ASME *Boiler and Pressure Vessel Code* or the manufacturer's requirements, and such tests shall be approved. A copy of all test documents along with all manufacturer's data reports required by the ASME *Boiler and Pressure Vessel Code* shall be submitted to the *building official*.

1011.2 Test gauges. An indicating test gauge shall be connected directly to the boiler or pressure vessel where it is visible to the operator throughout the duration of the test. The pressure gauge scale shall be graduated over a range of not less than one and one-half times and not greater than four times the maximum test pressure. Gauges utilized for testing shall be calibrated and certified by the test operator.

INTERNATIONAL CODE COUNCIL®
Copyright © 2019 ICC & NYSDOS. ALL RIGHTS RESERVED. Accessed by Lauren Gualdino (lgualdino@briarcliffmanor.org), (-) Order Number #100880972 on May 08, 2020 07:05 AM (PDT) pursuant to License Agreement with ICC & NYSDOS. No further reproduction, no

100880972

CHAPTER 11
REFRIGERATION

SECTION 1101
GENERAL

1101.1 Scope. This chapter shall govern the design, installation, construction and repair of refrigeration systems that vaporize and liquefy a fluid during the refrigerating cycle. Refrigerant piping design and installation, including pressure vessels and pressure relief devices, shall conform to this code. Permanently installed refrigerant storage systems and other components shall be considered as part of the refrigeration system to which they are attached.

1101.2 Factory-built equipment and appliances. *Listed* and *labeled* self-contained, factory-built *equipment* and appliances shall be tested in accordance with UL 207, 412, 471 or 1995. Such *equipment* and appliances are deemed to meet the design, manufacture and factory test requirements of this code if installed in accordance with their listing and the manufacturer's instructions.

1101.3 Protection. Any portion of a refrigeration system that is subject to physical damage shall be protected in an *approved* manner.

1101.4 Water connection. Water supply and discharge connections associated with refrigeration systems shall be made in accordance with this code and the *Plumbing Code of New York State*.

1101.5 Fuel gas connection. Fuel gas devices, *equipment* and appliances used with refrigeration systems shall be installed in accordance with the *Fuel Gas Code of New York State.*

1101.6 General. Refrigeration systems shall comply with the requirements of this code and, except as modified by this code, ASHRAE 15. Ammonia-refrigerating systems shall comply with this code and, except as modified by this code, ASHRAE 15, IIAR 2, IIAR 3, IIAR 4 and IIAR 5.

1101.7 Maintenance. Mechanical refrigeration systems shall be maintained in proper operating condition, free from accumulations of oil, dirt, waste, excessive corrosion, other debris and leaks.

1101.8 Change in refrigerant type. The type of refrigerant in refrigeration systems having a refrigerant circuit containing more than 220 pounds (99.8 kg) of Group A1 or 30 pounds (13.6 kg) of any other group refrigerant shall not be changed without prior notification to the *building official* and compliance with the applicable code provisions for the new refrigerant type.

[F] 1101.9 Refrigerant discharge. Notification of refrigerant discharge shall be provided in accordance with the *Fire Code of New York State*.

1101.10 Locking access port caps. Refrigerant circuit access ports located outdoors shall be fitted with locking-type tamper-resistant caps or shall be otherwise secured to prevent unauthorized access.

Exception: This section shall not apply to refrigerant circuit access ports on equipment installed in controlled areas such as on roofs with locked access hatches or doors.

SECTION 1102
SYSTEM REQUIREMENTS

1102.1 General. The system classification, allowable refrigerants, maximum quantity, enclosure requirements, location limitations, and field pressure test requirements shall be determined as follows:

1. Determine the refrigeration system's classification, in accordance with Section 1103.3.
2. Determine the refrigerant classification in accordance with Section 1103.1.
3. Determine the maximum allowable quantity of refrigerant in accordance with Section 1104, based on type of refrigerant, system classification and *occupancy*.
4. Determine the system enclosure requirements in accordance with Section 1104.
5. Refrigeration *equipment* and *appliance* location and installation shall be subject to the limitations of Chapter 3.
6. Nonfactory-tested, field-erected *equipment* and appliances shall be pressure tested in accordance with Section 1108.

1102.2 Refrigerants. The refrigerant shall be that which the *equipment* or *appliance* was designed to utilize or converted to utilize. Refrigerants not identified in Table 1103.1 shall be *approved* before use.

1102.2.1 Mixing. Refrigerants, including refrigerant blends, with different designations in ASHRAE 34 shall not be mixed in a system.

Exception: Addition of a second refrigerant is allowed where permitted by the *equipment* or *appliance* manufacturer to improve oil return at low temperatures. The refrigerant and amount added shall be in accordance with the manufacturer's instructions.

1102.2.2 Purity. Refrigerants used in refrigeration systems shall be new, recovered or *reclaimed refrigerants* in accordance with Section 1102.2.2.1, 1102.2.2.2 or 1102.2.2.3. Where required by the *equipment* or *appliance* owner or the *building official*, the installer shall furnish a signed declaration that the refrigerant used meets the requirements of Section 1102.2.2.1, 1102.2.2.2 or 1102.2.2.3.

Exception: The refrigerant used shall meet the purity specifications set by the manufacturer of the *equipment*

INTERNATIONAL CODE COUNCIL®
Copyright © 2019 ICC & NYSDOS. ALL RIGHTS RESERVED. Accessed by Lauren Gualdino (lgualdino@briarcliffmanor.org), (-) Order Number #100880972 on May 08, 2020 07:05 AM (PDT) pursuant to License Agreement with ICC & NYSDOS. No further reproduction, no

100880972

or *appliance* in which such refrigerant is used where such specifications are different from that specified in Sections 1102.2.2.1, 1102.2.2.2 and 1102.2.2.3.

1102.2.2.1 New refrigerants. Refrigerants shall be of a purity level specified by the *equipment* or *appliance* manufacturer.

1102.2.2.2 Recovered refrigerants. Refrigerants that are recovered from refrigeration and air-conditioning systems shall not be reused in other than the system from which they were recovered and in other systems of the same owner. *Recovered refrigerants* shall be filtered and dried before reuse. *Recovered refrigerants* that show clear signs of contamination shall not be reused unless reclaimed in accordance with Section 1102.2.2.3.

1102.2.2.3 Reclaimed refrigerants. Used refrigerants shall not be reused in a different owner's *equipment* or appliances unless tested and found to meet the purity requirements of AHRI 700. Contaminated refrigerants shall not be used unless reclaimed and found to meet the purity requirements of AHRI 700.

1102.3 Access port protection. Refrigerant access ports shall be protected in accordance with Section 1101.10 whenever refrigerant is added to or recovered from refrigeration or air-conditioning systems.

SECTION 1103
REFRIGERATION SYSTEM CLASSIFICATION

1103.1 Refrigerant classification. Refrigerants shall be classified in accordance with ASHRAE 34 as listed in Table 1103.1.

1103.2 Occupancy classification. Locations of refrigerating systems are described by *occupancy* classifications that consider the ability of people to respond to potential exposure to refrigerants. Where *equipment* or appliances, other than piping, are located outside a building and within 20 feet (6096 mm) of any building opening, such *equipment* or appliances shall be governed by the *occupancy* classification of the building. *Occupancy* classifications shall be defined as follows:

1. Institutional *occupancy* is that portion of premises from which occupants cannot readily leave without the assistance of others because they are disabled, debilitated or confined. Institutional occupancies include, among others, hospitals, nursing homes, asylums and spaces containing locked cells.
2. Public assembly *occupancy* is that portion of premises where large numbers of people congregate and from which occupants cannot quickly vacate the space. Public assembly occupancies include, among others, auditoriums, ballrooms, classrooms, passenger depots, restaurants and theaters.
3. Residential *occupancy* is that portion of premises that provides the occupants with complete independent living facilities, including permanent provisions for living, sleeping, eating, cooking and sanitation. Residential occupancies include, among others, dormitories, hotels, multiunit apartments and private residences.
4. Commercial *occupancy* is that portion of premises where people transact business, receive personal service or purchase food and other goods. Commercial occupancies include, among others, office and professional buildings, markets (but not large mercantile occupancies) and work or storage areas that do not qualify as industrial occupancies.
5. Large mercantile *occupancy* is that portion of premises where more than 100 persons congregate on levels above or below street level to purchase personal merchandise.
6. Industrial *occupancy* is that portion of premises that is not open to the public, where access by authorized persons is controlled, and that is used to manufacture, process or store goods such as chemicals, food, ice, meat or petroleum.
7. Mixed *occupancy* occurs where two or more occupancies are located within the same building. Where each *occupancy* is isolated from the rest of the building by tight walls, floors and ceilings and by self-closing doors, the requirements for each *occupancy* shall apply to its portion of the building. Where the various occupancies are not so isolated, the *occupancy* having the most stringent requirements shall be the governing *occupancy*.

1103.3 System classification. Refrigeration systems shall be classified according to the degree of probability that refrigerant leaked from a failed connection, seal or component could enter an occupied area. The distinction is based on the basic design or location of the components.

1103.3.1 Low-probability systems. Double-indirect open-spray systems, indirect closed systems and indirect-vented closed systems shall be classified as low-probability systems, provided that all refrigerant-containing piping and fittings are isolated where the quantities in Table 1103.1 are exceeded.

1103.3.2 High-probability systems. Direct systems and indirect open-spray systems shall be classified as high-probability systems.

Exception: An indirect open-spray system shall not be required to be classified as a high-probability system if the pressure of the secondary coolant is at all times (operating and standby) greater than the pressure of the refrigerant.

SECTION 1104
SYSTEM APPLICATION REQUIREMENTS

1104.1 General. The refrigerant, occupancy and system classification cited in this section shall be determined in accordance with Sections 1103.1, 1103.2 and 1103.3, respectively.

INTERNATIONAL CODE COUNCIL®
Copyright © 2019 ICC & NYSDOS. ALL RIGHTS RESERVED. Accessed by Lauren Gualdino (lgualdino@briarcliffmanor.org), (-) Order Number #100880972 on May 08, 2020 07:05 AM (PDT) pursuant to License Agreement with ICC & NYSDOS. No further reproduction, no

INTERNATIONAL CODE COUNCIL®

Copyright © 2019 ICC & NYSDOS. ALL RIGHTS RESERVED. Accessed by Lauren Gualdino (lgualdino@briarcliffmanor.org) (-) Order Number #100880972 on May 08, 2020 07:05 AM (PDT) pursuant to License Agreement with ICC & NYSDOS. No further reproduction, no

TABLE 1103.1
REFRIGERANT CLASSIFICATION, AMOUNT AND OEL

CHEMICAL REFRIGERANT	FORMULA	CHEMICAL NAME OF BLEND	REFRIGERANT CLASSIFICATION	AMOUNT OF REFRIGERANT PER OCCUPIED SPACE				[F] DEGREES OF HAZARD[a]
				Pounds per 1,000 cubic feet	ppm	g/m^3	OEL[e]	
R-11[d]	CCl_3F	trichlorofluoromethane	A1	0.39	1,100	6.2	C1,000	2-0-0[b]
R-12[d]	CCl_2F_2	dichlorodifluoromethane	A1	5.6	18,000	90	1,000	2-0-0[b]
R-13[d]	$CClF_3$	chlorotrifluoromethane	A1	—	—	—	1,000	2-0-0[b]
R-13B1[d]	$CBrF_3$	bromotrifluoromethane	A1	—	—	—	1,000	2-0-0[b]
R-14	CF_4	tetrafluoromethane (carbon tetrafluoride)	A1	25	110,000	400	1,000	2-0-0[b]
R-22	$CHClF_2$	chlorodifluoromethane	A1	13	59,000	210	1,000	2-0-0[b]
R-23	CHF_3	trifluoromethane (fluoroform)	A1	7.3	41,000	120	1,000	2-0-0[b]
R-30	CH_2Cl_2	dichloromethane (methylene chloride)	B1	—	—	—	—	—
R-32	CH_2F_2	difluoromethane (methylene fluoride)	A2[f]	4.8	36,000	77	1,000	1-4-0
R-40	CH_3Cl	chloromethane (methyl chloride)	B2	—	—	—	—	—
R-50	CH_4	methane	A3	—	—	—	1,000	—
R-113[d]	CCl_2FCClF_2	1,1,2-trichloro-1,2,2-trifluoroethane	A1	1.2	2,600	20	1,000	2-0-0[b]
R-114[d]	$CClF_2CClF_2$	1,2-dichloro-1,1,2,2-tetrafluoroethane	A1	8.7	20,000	140	1,000	2-0-0[b]
R-115	$CClF_2CF_3$	chloropentafluoroethane	A1	47	120,000	760	1,000	—
R-116	CF_3CF_3	hexafluoroethane	A1	34	97,000	550	1,000	1-0-0
R-123	$CHCl_2CF_3$	2,2-dichloro-1,1,1-trifluoroethane	B1	3.5	9,100	57	50	2-0-0[b]
R-124	$CHClFCF_3$	2-chloro-1,1,1,2-tetrafluoroethane	A1	3.5	10,000	56	1,000	2-0-0[b]
R-125	CHF_2CF_3	pentafluoroethane	A1	23	75,000	370	1,000	2-0-0[b]
R-134a	CH_2FCF_3	1,1,1,2-tetrafluoroethane	A1	13	50,000	210	1,000	2-0-0[b]
R-141b	CH_3CCl_2F	1,1-dichloro-1-fluoroethane	—	0.78	2,600	12	500	2-1-0
R-142b	CH_3CClF_2	1-chloro-1,1-difluoroethane	A2	5.1	20,000	83	1,000	2-4-0
R-143a	CH_3CF_3	1,1,1-trifluoroethane	A2[f]	4.5	21,000	70	1,000	2-0-0[b]
R-152a	CH_3CHF_2	1,1-difluoroethane	A2	2.0	12,000	32	1,000	1-4-0
R-170	CH_3CH_3	ethane	A3	0.54	7,000	8.7	1,000	2-4-0
R-E170	CH_3OCH_3	Methoxymethane (dimethyl ether)	A3	1.0	8,500	16	1,000	—
R-218	$CF_3CF_2CF_3$	octafluoropropane	A1	43	90,000	690	1,000	2-0-0[b]
R-227ea	CF_3CHFCF_3	1,1,1,2,3,3,3-heptafluoropropane	A1	36	84,000	580	1,000	—
R-236fa	$CF_3CH_2CF_3$	1,1,1,3,3,3-hexafluoropropane	A1	21	55,000	340	1,000	2-0-0[b]
R-245fa	$CHF_2CH_2CF_3$	1,1,1,3,3-pentafluoropropane	B1	12	34,000	190	300	2-0-0[b]
R-290	$CH_3CH_2CH_3$	propane	A3	0.56	5,300	9.5	1,000	2-4-0
R-C318	$-(CF_2)_4-$	octafluorocyclobutane	A1	41	80,000	660	1,000	—
R-400[d]	zeotrope	R-12/114 (50.0/50.0)	A1	10	28,000	160	1,000	2-0-0[b]

(continued)

100880972

TABLE 1103.1—continued
REFRIGERANT CLASSIFICATION, AMOUNT AND OEL

CHEMICAL REFRIGERANT	FORMULA	CHEMICAL NAME OF BLEND	REFRIGERANT CLASSIFICATION	AMOUNT OF REFRIGERANT PER OCCUPIED SPACE				[F] DEGREES OF HAZARD[a]
				Pounds per 1,000 cubic feet	ppm	g/m³	OEL[e]	
R-400[d]	zeotrope	R-12/114 (60.0/40.0)	A1	11	30,000	170	1,000	—
R-401A	zeotrope	R-22/152a/124 (53.0/13.0/34.0)	A1	6.6	27,000	110	1,000	2-0-0[b]
R-401B	zeotrope	R-22/152a/124 (61.0/11.0/28.0)	A1	7.2	30,000	120	1,000	2-0-0[b]
R-401C	zeotrope	R-22/152a/124 (33.0/15.0/52.0)	A1	5.2	20,000	84	1,000	2-0-0[b]
R-402A	zeotrope	R-125/290/22 (60.0/2.0/38.0)	A1	17	66,000	270	1,000	2-0-0[b]
R-402B	zeotrope	R-125/290/22 (38.0/2.0/60.0)	A1	15	63,000	240	1,000	2-0-0[b]
R-403A	zeotrope	R-290/22/218 (5.0/75.0/20.0)	A2	7.6	33,000	120	1,000	2-0-0[b]
R-403B	zeotrope	R-290/22/218 (5.0/56.0/39.0)	A1	18	70,000	290	1,000	2-0-0[b]
R-404A	zeotrope	R-125/143a/134a (44.0/52.0/4.0)	A1	31	130,000	500	1,000	2-0-0[b]
R-405A	zeotrope	R-22/152a/142b/C318 (45.0/7.0/5.5/2.5)	—	16	57,000	260	1,000	—
R-406A	zeotrope	R-22/600a/142b (55.0/4.0/41.0)	A2	4.7	21,000	25	1,000	—
R-407A	zeotrope	R-32/125/134a (20.0/40.0/40.0)	A1	19	83,000	300	1,000	2-0-0[b]
R-407B	zeotrope	R-32/125/134a (10.0/70.0/20.0)	A1	21	79,000	330	1,000	2-0-0[b]
R-407C	zeotrope	R-32/125/134a (23.0/25.0/52.0)	A1	18	81,000	290	1,000	2-0-0[b]
R-407D	zeotrope	R-32/125/134a (15.0/15.0/70.0)	A1	16	68,000	250	1,000	2-0-0[b]
R-407E	zeotrope	R-32/125/134a (25.0/15.0/60.0)	A1	17	80,000	280	1,000	2-0-0[b]
R-407F	zeotrope	R-32/125/134a (30.0/30.0/40.0)	A1	20	95,000	320	1,000	—
R-408A	zeotrope	R-125/143a/22 (7.0/46.0/47.0)	A1	21	95,000	340	1,000	2-0-0[b]
R-409A	zeotrope	R-22/124/142b (60.0/25.0/15.0)	A1	7.1	29,000	110	1,000	2-0-0[b]
R-409B	zeotrope	R-22/124/142b (65.0/25.0/10.0)	A1	7.3	30,000	120	1,000	2-0-0[b]
R-410A	zeotrope	R-32/125 (50.0/50.0)	A1	26	140,000	420	1,000	2-0-0[b]
R-410B	zeotrope	R-32/125 (45.0/55.0)	A1	27	140,000	430	1,000	2-0-0[b]
R-411A	zeotrope	R-127/22/152a (1.5/87.5/11.0)	A2	2.9	14,000	46	990	—
R-411B	zeotrope	R-1270/22/152a (3.0/94.0/3.0)	A2	2.8	13,000	45	980	—
R-412A	zeotrope	R-22/218/142b (70.0/5.0/25.0)	A2	5.1	22,000	82	1,000	—
R-413A	zeotrope	R-218/134a/600a (9.0/88.0/3.0)	A2	5.8	22,000	94	1,000	—
R-414A	zeotrope	R-22/124/600a/142b (51.0/28.5/4.0/16.5)	A1	6.4	26,000	100	1,000	—
R-414B	zeotrope	R-22/124/600a/142b (50.0/39.0/1.5/9.5)	A1	6.0	23,000	95	1,000	—
R-415A	zeotrope	R-22/152a (82.0/18.0)	A2	2.9	14,000	47	1,000	—
R-415B	zeotrope	R-22/152a (25.0/75.0)	A2	2.1	12,000	34	1,000	—
R-416A	zeotrope	R-134a/124/600 (59.0/39.5/1.5)	A1	3.9	14,000	62	1,000	2-0-0[b]
R-417A	zeotrope	R-125/134a/600 (46.6/50.0/3.4)	A1	3.5	13,000	56	1,000	2-0-0[b]
R-417B	zeotrope	R-125/134a/600 (79.0/18.3/2.7)	A1	4.3	15,000	70	1,000	—
R-417C	zeotrope	R-125/134a/600 (19.5/78.8/1.7)	A1	5.4	21,000	87	1,000	—

(continued)

Copyright © 2019 ICC & NYSDOS. ALL RIGHTS RESERVED. Accessed by Lauren Gualdino (lgualdino@briarcliffmanor.org). (-) Order Number #100880972 on May 08, 2020 07:05 AM (PDT) pursuant to License Agreement with ICC & NYSDOS. No further reproduction, no

100880972

INTERNATIONAL CODE COUNCIL®

Copyright © 2019 ICC & NYSDOS. ALL RIGHTS RESERVED. Accessed by Lauren Gualdino (lgualdino@briarcliffmanor.org) (-) Order Number #100880972 on May 08, 2020 07:05 AM (PDT) pursuant to License Agreement with ICC & NYSDOS. No further reproduction, no

TABLE 1103.1—continued
REFRIGERANT CLASSIFICATION, AMOUNT AND OEL

CHEMICAL REFRIGERANT	FORMULA	CHEMICAL NAME OF BLEND	REFRIGERANT CLASSIFICATION	AMOUNT OF REFRIGERANT PER OCCUPIED SPACE				[F] DEGREES OF HAZARD[a]
				Pounds per 1,000 cubic feet	ppm	g/m³	OEL[e]	
R-418A	zeotrope	R-290/22/152a (1.5/96.0/2.5)	A2	4.8	22,000	77	1,000	—
R-419A	zeotrope	R-125/134a/E170 (77.0/19.0/4.0)	A2	4.2	15,000	67	1,000	—
R-419B	zeotrope	R-125/134a/E170 (48.5/48.0/3.5)	A2	4.6	17,000	74	1,000	—
R-420A	zeotrope	R-134a/142b (88.0/12.0)	A1	12	45,000	190	1,000	2-0-0[b]
R-421A	zeotrope	R-125/134a (58.0/42.0)	A1	17	61,000	280	1,000	2-0-0[b]
R-421B	zeotrope	R-125/134a (85.0/15.0)	A1	21	69,000	330	1,000	2-0-0[b]
R-422A	zeotrope	R-125/134a/600a (85.1/11.5/3.4)	A1	18	63,000	290	1,000	2-0-0[b]
R-422B	zeotrope	R-125/134a/600a (55.0/42.0/3.0)	A1	16	56,000	250	1,000	2-0-0[b]
R-422C	zeotrope	R-125/134a/600a (82.0/15.0/3.0)	A1	18	62,000	290	1,000	2-0-0[b]
R-422D	zeotrope	R-125/134a/600a (65.1/31.5/3.4)	A1	16	58,000	260	1,000	2-0-0[b]
R-422E	zeotrope	R-125/134a/600a (58.0/39.3/2.7)	A1	16	57,000	260	1,000	—
R-423A	zeotrope	R-134a/227ea (52.5/47.5)	A1	19	59,000	310	1,000	2-0-0[b]
R-424A	zeotrope	R-125/134a/600a/600/601a (50.5/47.0/0.9/1.0/0.6)	A1	6.2	23,000	100	970	2-0-0[b]
R-425A	zoetrope	R-32/134a/227ea (18.5/69.5/12.0)	A1	16	72,000	260	1,000	2-0-0[b]
R-426A	zeotrope	R-125/134a/600a/601a (5.1/93.0/1.3/0.6)	A1	5.2	20,000	83	990	—
R-427A	zeotrope	R-32/125/143a/134a (15.0/25.0/10.0/50.0)	A1	18	79,000	290	1,000	2-1-0
R-428A	zeotrope	R-125/143a/290/600a (77.5/20.0/0.6/1.9)	A1	23	83,000	370	1,000	—
R-429A	zeotrope	R-E170/152a/600a (60.0/10.0/30.0)	A3	0.81	6,300	13	1,000	—
R-430A	zeotrope	R-152a/600a (76.0/24.0)	A3	1.3	8,000	21	1,000	—
R-431A	zeotrope	R-290/152a (71.0/29.0)	A3	0.69	5,500	11	1,000	—
R-432A	zeotrope	R-1270/E170 (80.0/20.0)	A3	0.13	1,200	2.1	700	—
R-433A	zeotrope	R-1270/290 (30.0/70.0)	A3	0.34	3,100	5.5	880	—
R-433B	zeotrope	R-1270/290 (5.0-95.0)	A3	0.51	4,500	8.1	950	—
R-433C	zeotrope	R-1270/290 (25.0-75.0)	A3	0.41	3,600	6.6	790	—
R-434A	zeotrope	R-125/143a/600a (63.2/18.0/16.0/2.8)	A1	20	73,000	320	1,000	—
R-435A	zeotrope	R-E170/152a (80.0/20.0)	A3	1.1	8,500	17	1,000	—
R-436A	zeotrope	R-290/600a (56.0/44.0)	A3	0.50	4,000	8.1	1,000	—
R-436B	zeotrope	R-290/600a (52.0/48.0)	A3	0.51	4,000	8.1	1,000	—
R-437A	zeotrope	R-125/134a/600/601 (19.5/78.5/1.4/0.6)	A1	5.0	19,000	82	990	—
R-438A	zeotrope	R-32/125/134a/600/601a (8.5/45.0/44.2/1.7/0.6)	A1	4.9	20,000	79	990	—
R-439A	zeotrope	R-32/125/600a (50.0/47.0/3.0)	A2	4.7	26,000	76	990	—
R-440A	zeotrope	R-290/134a/152a (0.6/1.6/97.8)	A2	1.9	12,000	31	1,000	—
R-441A	zeotrope	R-170/290/600a/600 (3.1/54.8/6.0/36.1)	A3	0.39	3,200	6.3	1,000	—
R-442A	zeotrope	R-32/125/134a/152a/227ea (31.0/31.0/30.0/3.0/5.0)	A1	21	100,000	330	1,000	—

(continued)

100880972

TABLE 1103.1—continued
REFRIGERANT CLASSIFICATION, AMOUNT AND OEL

CHEMICAL REFRIGERANT	FORMULA	CHEMICAL NAME OF BLEND	REFRIGERANT CLASSIFICATION	AMOUNT OF REFRIGERANT PER OCCUPIED SPACE				[F] DEGREES OF HAZARD[a]
				Pounds per 1,000 cubic feet	ppm	g/m^3	OEL[e]	
R-443A	zeotrope	R-1270/290/600a (55.0/40.0/5.0)	A3	0.19	1,700	3.1	580	—
R-444A	zeotrope	R-32/152a/1234ze(E) (12.0/5.0/83.0)	A2[f]	5.1	21,000	81	850	—
R-444B	zeotrope	R-32/152a/1234ze(E) (41.5/10.0/48.5)	A2[f]	4.3	23,000	69	890	—
R-445A	zeotrope	R-744/134a/1234ze(E) (6.0/9.0/85.0)	A2[f]	4.2	16,000	67	930	—
R-446A	zeotrope	R-32/1234ze(E)/600 (68.0/29.0/3.0)	A2[f]	2.5	16,000	39	960	—
R-447A	zoetrope	R-32/125/1234ze(E) (68.0/3.5/28.5)	A2[f]	2.6	16,000	42	900	—
R-448A	zeotrope	R-32/125/1234yf/134a/1234ze(E) (26.0/26.0/20.0/21.0/7.0)	A1	24	110,000	390	890	—
R-449A	zeotrope	R-32/125/1234yf/134a (24.3/24.7/25.3/25.7)	A1	23	100,000	370	830	—
R-450A	zeotrope	R-134a/1234ze(E) (42.0/58.0)	A1	20	72,000	320	880	—
R-451A	zeotrope	R-1234yf/134a (89.8/10.2)	A2[f]	5.3	18,000	81	520	—
R-451B	zeotrope	R-1234yf/134a (88.8/11.2)	A2[f]	5.3	18,000	81	530	—
R-452A	zeotrope	R-32/125/1234yf (11.0/59.0/30.0)	A1	27	100,000	440	780	—
R-500[c]	azeotrope	R-12/152a (73.8/26.2)	A1	7.6	30,000	120	1,000	2-0-0[b]
R-501[d]	azeotrope	R-22/12 (75.0/25.0)	A1	13	54,000	210	1,000	—
R-502[c]	azeotrope	R-22/115 (48.8/51.2)	A1	21	73,000	330	1,000	2-0-0[b]
R-503[c]	azeotrope	R-23/13 (40.1/59.9)	—	—	—	—	1,000	2-0-0[b]
R-504[d]	azeotrope	R-32/115 (48.2/51.8)	—	28	140,000	450	1,000	—
R-507A	azeotrope	R-125/143a (50.0/50.0)	A1	32	130,000	520	1,000	2-0-0[b]
R-508A	azeotrope	R-23/116 (39.0/61.0)	A1	14	55,000	220	1,000	2-0-0[b]
R-508B	azeotrope	R-23/116 (46.0/54.0)	A1	13	52,000	200	1,000	2-0-0[b]
R-509A	azeotrope	R-22/218 (44.0/56.0)	A1	24	75,000	390	1,000	2-0-0[b]

(continued)

Copyright © 2019 ICC & NYSDOS. ALL RIGHTS RESERVED. Accessed by Lauren Gualdino (lgualdino@briarcliffmanor.org). (-) Order Number #100880972 on May 08, 2020 07:05 AM (PDT) pursuant to License Agreement with ICC & NYSDOS. No further reproduction, no

100880972

TABLE 1103.1—continued
REFRIGERANT CLASSIFICATION, AMOUNT AND OEL

CHEMICAL REFRIGERANT	FORMULA	CHEMICAL NAME OF BLEND	REFRIGERANT CLASSIFICATION	AMOUNT OF REFRIGERANT PER OCCUPIED SPACE				[F] DEGREES OF HAZARD[a]
				Pounds per 1,000 cubic feet	ppm	g/m^3	OEL[e]	
R-510A	azeotrope	R-E170/600a (88.0/12.0)	A3	0.87	7,300	14	1,000	—
R-511A	azeotrope	R-290/E170 (95.0/5.0)	A3	0.59	5,300	9.5	1,000	—
R-512A	azeotrope	R-134a/152a (5.0/95.0)	A2	1.9	11,000	31	1,000	—
R-513A	azeotrope	R-1234yf/134a (56.0/44.0)	A1	20	72,000	320	650	—
R-600	$CH_3CH_2CH_2CH_3$	butane	A3	0.15	1,000	2.4	1,000	1-4-0
R-600a	$CH(CH_3)_2CH_3$	2-methylpropane (isobutane)	A3	0.59	4,000	9.6	1,000	2-4-0
R-601	$CH_3CH_2CH_2\ CH_2\ CH_3$	pentane	A3	0.18	1,000	2.9	600	—
R-601a	$(CH_3)_2CHCH_2CH_3$	2-methylbutane (isopentane)	A3	0.18	1,000	2.9	600	—
R-610	ethoxyethane (ethyl ether)	$CH_3CH_2OCH_2CH_3$	—	—	—	—	400	—
R-611	methyl formate	$HCOOCH_3$	B2	—	—	—	100	—
R-717	NH_3	ammonia	B2[f]	0.014	320	0.22	25	3-3-0[c]
R-718	H_2O	water	A1	—	—	—	—	0-0-0
R-744	CO_2	carbon dioxide	A1	4.5	40,000	72	5,000	2-0-0[b]
R-1150	$CH_2=CH_2$	ethene (ethylene)	A3	—	—	—	200	1-4-2
R-1233zd(E)	CF_3 $CH=CHCl$	trans-1-chloro-3,3,3-trifluoro-1-propene	A1	5.3	16,000	85	800	—
R-1234yf	$CF_3CF=CH_2$	2,3,3,3-tetrafluoro-1 propene	A2[f]	4.7	16,000	75	500	—
R-1234ze(E)	$CF_3CH=CHF$	trans-1,3,3,3-tetrafluoro-1-propene	A2[f]	4.7	16,000	75	800	—
R-1270	$CH_3CH=CH_2$	Propene (propylene)	A3	0.1	1,000	1.7	500	1-4-1

For SI: 1 pound = 0.454 kg, 1 cubic foot = 0.0283m^3

a. Degrees of hazard are for health, fire, and reactivity, respectively, in accordance with NFPA 704.

b. Reduction to 1-0-0 is allowed if analysis satisfactory to the *building official* shows that the maximum concentration for a rupture or full loss of refrigerant charge would not exceed the IDLH, considering both the refrigerant quantity and room volume.

c. For installations that are entirely outdoors, use 3-1-0.

d. Class I ozone depleting substance; prohibited for new installations.

e. Occupational Exposure Limit based on the OSHA PEL, ACGIH TLV-TWA, the TERA WEEL or consistent value on a time-weighed average (TWA) basis (unless noted C for ceiling) for an 8 hr/d and 40 hr/wk.

f. The ASHRAE Standard 34 flammability classification for this refrigerant is 2L, which is a subclass of Class 2.

INTERNATIONAL CODE COUNCIL®
Copyright © 2019 ICC & NYSDOS. ALL RIGHTS RESERVED. Accessed by Lauren Gualdino (lgualdino@briarcliffmanor.org). (-) Order Number #100880972 on May 08, 2020 07:05 AM (PDT) pursuant to License Agreement with ICC & NYSDOS. No further reproduction, no
100880972

100880972

1104.2 Machinery room. Except as provided in Sections 1104.2.1 and 1104.2.2, all components containing the refrigerant shall be located either outdoors or in a *machinery room* where the quantity of refrigerant in an independent circuit of a system exceeds the amounts shown in Table 1103.1. For refrigerant blends not listed in Table 1103.1, the same requirement shall apply where the amount for any blend component exceeds that indicated in Table 1103.1 for that component. This requirement shall also apply where the combined amount of the blend components exceeds a limit of 69,100 parts per million (ppm) by volume. Machinery rooms required by this section shall be constructed and maintained in accordance with Section 1105 for Group A1 and B1 refrigerants and in accordance with Sections 1105 and 1106 for Group A2, B2, A3 and B3 refrigerants.

Exceptions:

1. Machinery rooms are not required for *listed equipment* and appliances containing not more than 6.6 pounds (3 kg) of refrigerant, regardless of the refrigerant's safety classification, where installed in accordance with the equipment's or appliance's listing and the *equipment* or *appliance* manufacturer's installation instructions.
2. Piping in conformance with Section 1107 is allowed in other locations to connect components installed in a *machinery room* with those installed outdoors.

1104.2.1 Institutional occupancies. The amounts shown in Table 1103.1 shall be reduced by 50 percent for all areas of institutional occupancies except kitchens, laboratories and mortuaries. The total of all Group A2, B2, A3 and B3 refrigerants shall not exceed 550 pounds (250 kg) in occupied areas or machinery rooms.

1104.2.2 Industrial occupancies and refrigerated rooms. This section applies only to rooms and spaces that: are within industrial occupancies; contain a refrigerant evaporator; are maintained at temperatures below 68°F (20°C); and are used for manufacturing, food and beverage preparation, meat cutting, other processes and storage. Where a machinery room would otherwise be required by Section 1104.2, a machinery room shall not be required where all of the following conditions are met:

1. The space containing the machinery is separated from other occupancies by tight construction with tight-fitting doors.
2. Access is restricted to authorized personnel.
3. Refrigerant detectors are installed as required for machinery rooms in accordance with Section 1105.3.

   Exceptions:

   1. Refrigerant detectors are not required in unoccupied areas that contain only continuous piping that does not include valves, valve assemblies, equipment, or equipment connections.
   2. Where approved alternatives are provided, refrigerant detectors for ammonia refrigeration are not required for rooms or areas that are always occupied, and for rooms or areas that have high humidity or other harsh environmental conditions that are incompatible with detection devices.
4. Surfaces having temperatures exceeding 800°F (427°C) and open flames are not present where any Group A2, B2, A3 or B3 refrigerant is used (see Section 1104.3.4).
5. All electrical *equipment* and appliances conform to Class 1, Division 2, hazardous location classification requirements of NFPA 70 where the quantity of any Group A2, B2, A3 or B3 refrigerant, other than ammonia, in a single independent circuit would exceed 25 percent of the lower flammability limit (LFL) upon release to the space.
6. All refrigerant-containing parts in systems with a total connected compressor power exceeding 100 horsepower (hp) (74.6 kW)—except evaporators used for refrigeration or dehumidification, condensers used for heating, control and pressure relief valves for either, low-probability pumps and connecting piping—are located either outdoors or in a *machinery room*.

1104.3 Refrigerant restrictions. Refrigerant applications, maximum quantities and use shall be restricted in accordance with Sections 1104.3.1 through 1104.3.4.

1104.3.1 Air-conditioning for human comfort. In other than industrial occupancies where the quantity in a single independent circuit does not exceed the amount in Table 1103.1, Group B1, B2 and B3 refrigerants shall not be used in high-probability systems for air-conditioning for human comfort.

1104.3.2 Nonindustrial occupancies. Group A2 and B2 refrigerants shall not be used in high-probability systems where the quantity of refrigerant in any independent refrigerant circuit exceeds the amount shown in Table 1104.3.2. Group A3 and B3 refrigerants shall not be used except where *approved*.

Exception: This section does not apply to laboratories where the floor area per occupant is not less than 100 square feet (9.3 m^2).

1104.3.3 All occupancies. The total of all Group A2, B2, A3 and B3 refrigerants other than R-717, ammonia, shall not exceed 1,100 pounds (499 kg) except where *approved*.

1104.3.4 Protection from refrigerant decomposition. Where any device having an open flame or surface temperature greater than 800°F (427°C) is used in a room containing more than 6.6 pounds (3 kg) of refrigerant in a single independent circuit, a hood and exhaust system shall be provided in accordance with Section 510. Such exhaust system shall exhaust *combustion* products to the outdoors.

Exception: A hood and exhaust system shall not be required where any of the following apply:

1. The refrigerant is R-717, R-718 or R-744.

INTERNATIONAL CODE COUNCIL®
Copyright © 2019 ICC & NYSDOS. ALL RIGHTS RESERVED. Accessed by Lauren Gualdino (lgualdino@briarcliffmanor.org), (-) Order Number #100880972 on May 08, 2020 07:05 AM (PDT) pursuant to License Agreement with ICC & NYSDOS. No further reproduction, no

100880972

2. The *combustion* air is ducted from the outdoors in a manner that prevents leaked refrigerant from being combusted.
3. A refrigerant detector is used to stop the *combustion* in the event of a refrigerant leak (see Sections 1105.3 and 1105.5).

1104.4 Volume calculations. Volume calculations shall be in accordance with Sections 1104.4.1 through 1104.4.3.

1104.4.1 Noncommunicating spaces. Where the refrigerant-containing parts of a system are located in one or more spaces that do not communicate through permanent openings or HVAC ducts, the volume of the smallest, enclosed occupied space shall be used to determine the permissible quantity of refrigerant in the system.

1104.4.2 Communicating spaces. Where an evaporator or condenser is located in an air duct system, the volume of the smallest, enclosed occupied space served by the duct system shall be used to determine the maximum allowable quantity of refrigerant in the system.

Exception: If airflow to any enclosed space cannot be reduced below one-quarter of its maximum, the entire space served by the air duct system shall be used to determine the maximum allowable quantity of refrigerant in the system.

1104.4.3 Plenums. Where the space above a suspended ceiling is continuous and part of the supply or return air *plenum* system, this space shall be included in calculating the volume of the enclosed space.

SECTION 1105
MACHINERY ROOM, GENERAL REQUIREMENTS

[BF] 1105.1 Design and construction. Machinery rooms shall be designed and constructed in accordance with the *Building Code of New York State* and this section.

1105.2 Openings. Ducts and air handlers in the *machinery room* that operate at a lower pressure than the room shall be sealed to prevent any refrigerant leakage from entering the airstream.

[F] 1105.3 Refrigerant detector. Refrigerant detectors in machinery rooms shall be provided as required by Sections 605.8 and 605.17 of the *Fire Code of New York State*.

1105.4 Tests. Periodic tests of the mechanical ventilating system shall be performed in accordance with manufacturer's specifications and as required by the *building official*.

1105.5 Fuel-burning appliances. Fuel-burning appliances and *equipment* having open flames and that use *combustion* air from the *machinery room* shall not be installed in a *machinery room*.

Exceptions:

1. Where the refrigerant is carbon dioxide or water.
2. Fuel-burning appliances shall not be prohibited in the same *machinery room* with refrigerant-containing *equipment* or appliances where *combustion* air is ducted from outside the *machinery room* and sealed in such a manner as to prevent any refrigerant leakage from entering the *combustion* chamber, or where a refrigerant vapor detector is employed to automatically shut off the *combustion* process in the event of refrigerant leakage.

1105.6 Ventilation. Machinery rooms shall be mechanically ventilated to the outdoors.

Exception: Where a refrigerating system is located outdoors more than 20 feet (6096 mm) from any building opening and is enclosed by a penthouse, lean-to or other open structure, natural or mechanical ventilation shall be provided. Location of the openings shall be based on the relative density of the refrigerant to air. The free-aperture cross section for the ventilation of the *machinery room* shall be not less than:

$$F = \sqrt{G} \qquad \textbf{(Equation 11-1)}$$

For SI: $F = 0.138\sqrt{G}$

where:

F = The free opening area in square feet (m^2).

G = The mass of refrigerant in pounds (kg) in the largest system, any part of which is located in the *machinery room*.

1105.6.1 Discharge location. The discharge of the air shall be to the outdoors in accordance with Chapter 5. Exhaust from mechanical ventilation systems shall be discharged not less than 20 feet (6096 mm) from a property line or openings into buildings.

1105.6.1.1 Indoor exhaust opening location. Indoor mechanical exhaust intake openings shall be located where refrigerant leakage is likely to concentrate based on the refrigerant's relative density to air, and the locations of the air current paths and refrigerating machinery.

TABLE 1104.3.2
MAXIMUM PERMISSIBLE QUANTITIES OF REFRIGERANTS

TYPE OF REFRIGERATION SYSTEM	MAXIMUM POUNDS FOR VARIOUS OCCUPANCIES			
	Institutional	Assembly	Residential	All other occupancies
Sealed absorption system				
In exit access	0	0	3.3	3.3
In adjacent outdoor locations	0	0	22	22
In other than exit access	0	6.6	6.6	6.6
Unit systems				
In other than exit access	0	0	6.6	6.6

For SI: 1 pound = 0.454 kg.

INTERNATIONAL CODE COUNCIL®
Copyright © 2019 ICC & NYSDOS. ALL RIGHTS RESERVED. Accessed by Lauren Gualdino (lgualdino@briarcliffmanor.org), (-) Order Number #100880972 on May 08, 2020 07:05 AM (PDT) pursuant to License Agreement with ICC & NYSDOS. No further reproduction, no

100880972

1105.6.2 Makeup air. Provisions shall be made for *makeup air* to replace that being exhausted. Openings for *makeup air* shall be located to avoid intake of *exhaust air*. Supply and exhaust ducts to the *machinery room* shall not serve any other area, shall be constructed in accordance with Chapter 5 and shall be covered with corrosion-resistant screen of not less than $^1/_4$-inch (6.4 mm) mesh.

1105.6.3 Ventilation rate. For other than ammonia systems, the mechanical ventilation systems shall be capable of exhausting the minimum quantity of air both at normal operating and emergency conditions, as required by Sections 1105.6.3.1 and 1105.6.3.2. The minimum required emergency ventilation rate for ammonia shall be 30 air changes per hour in accordance with IIAR2. Multiple fans or multispeed fans shall be allowed to produce the emergency ventilation rate and to obtain a reduced airflow for normal ventilation.

1105.6.3.1 Quantity—normal ventilation. During occupied conditions, the mechanical ventilation system shall exhaust the larger of the following:

1. Not less than 0.5 cfm per square foot (0.0025 $m^3/s \cdot m^2$) of *machinery room* area or 20 cfm (0.009 m^3/s) per person.
2. A volume required to limit the room temperature rise to 18°F (10°C) taking into account the ambient heating effect of all machinery in the room.

1105.6.3.2 Quantity—emergency conditions. Upon actuation of the refrigerant detector required in Section 1105.3, the mechanical ventilation system shall *exhaust air* from the *machinery room* in the following quantity:

$$Q = 100 \times \sqrt{G} \qquad \textbf{(Equation 11-2)}$$

For SI: $Q = 0.07 \times \sqrt{G}$

where:

Q = The airflow in cubic feet per minute (m^3/s).

G = The design mass of refrigerant in pounds (kg) in the largest system, any part of which is located in the *machinery room.*

1105.7 Termination of relief devices. Pressure relief devices, fusible plugs and purge systems located within the *machinery room* shall terminate outside of the structure at a location not less than 15 feet (4572 mm) above the adjoining grade level and not less than 20 feet (6096 mm) from any window, ventilation opening or exit.

1105.8 Ammonia discharge. Pressure relief valves for ammonia systems shall discharge in accordance with ASHRAE 15.

[F] 1105.9 Emergency pressure control system. Permanently installed refrigeration systems containing more than 6.6 pounds (3 kg) of flammable, toxic or highly toxic refrigerant or ammonia shall be provided with an emergency pressure control system in accordance with Section 605.10 of the *Fire Code of New York State.*

SECTION 1106
MACHINERY ROOM, SPECIAL REQUIREMENTS

1106.1 General. Where required by Section 1104.2, the *machinery room* shall meet the requirements of this section in addition to the requirements of Section 1105.

1106.2 Elevated temperature. There shall not be an open flame-producing device or continuously operating hot surface over 800°F (427°C) permanently installed in the room.

1106.3 Ammonia room ventilation. Ventilation systems in ammonia machinery rooms shall be operated continuously at the ventilation rate specified in Section 1105.6.3.

Exceptions:

1. Machinery rooms equipped with a vapor detector that will automatically start the ventilation system at the ventilation rate specified in Section 1105.6.3, and that will actuate an alarm at a detection level not to exceed 1,000 ppm.
2. Machinery rooms conforming to the Class 1, Division 2, *hazardous location* classification requirements of NFPA 70.

1106.4 Flammable refrigerants. Where refrigerants of Groups A2, A3, B2 and B3 are used, the *machinery room* shall conform to the Class 1, Division 2, *hazardous location* classification requirements of NFPA 70.

Exceptions:

1. Ammonia *machinery rooms* that are provided with *ventilation* in accordance with Section 1106.3.
2. *Machinery rooms* for systems containing Group A2L *refrigerants* that are in accordance with Section 1106.5.

1106.5 Special requirements for Group A2L refrigerant machinery rooms. *Machinery rooms* for systems containing Group A2L *refrigerants* shall comply with Sections 1106.5.1 through 1106.5.3.

Exception: *Machinery rooms* conforming to the Class I, Division 2, hazardous location classification requirements of NFPA 70 are not required to comply with Sections 1106.5.1 and 1106.5.2.

[F] 1106.5.1 Refrigerant detection system. The *machinery room* shall be provided with a *refrigerant* detection system. The *refrigerant* detection system shall be in accordance with Section 605.8 of the *Fire Code of New York State* and all of the following:

1. The detectors shall activate at or below a *refrigerant* concentration of 25% of the *LFL.*
2. Upon activation, the detection system shall activate the emergency ventilation system required by Section 1106.5.2.
3. The detection, signaling and control circuits shall be supervised.

1106.5.2 Emergency ventilation system. An emergency ventilation system shall be provided at the minimum exhaust rate specified in ASHRAE 15 or Table 1106.5.2. Shutdown of the emergency ventilation system shall be by manual means.

INTERNATIONAL CODE COUNCIL®
Copyright © 2019 ICC & NYSDOS. ALL RIGHTS RESERVED. Accessed by Lauren Gualdino (lgualdino@briarcliffmanor.org), (-) Order Number #100880972 on May 08, 2020 07:05 AM (PDT) pursuant to License Agreement with ICC & NYSDOS. No further reproduction, no

100880972

TABLE 1106.5.2
MINIMUM EXHAUST RATES

REFRIGERANT	Q(m/sec)	Q(cfm)
R32	15.4	32,600
R143	13.6	28,700
R444A	6.46	13,700
R444B	10.6	22,400
R445A	7.83	16,600
R446A	23.9	50,700
R447A	23.8	50,400
R451A	7.04	15,000
R451B	7.05	15,000
R1234yf	7.80	16,600
R1234ze(E)	5.92	12,600

1106.5.3 Emergency ventilation system discharge. The emergency ventilation system point of discharge to the atmosphere shall be located outside of the structure at not less than 15 feet (4572 mm) above the adjoining grade level and not less than 20 feet (6096 mm) from any window, *ventilation* opening or *exit.*

[F] 1106.6 Remote controls. Remote control of the mechanical equipment and appliances located in the machinery room shall comply with Sections 1106.6.1 and 1106.6.2.

[F] 1106.6.1 Refrigeration system emergency shutoff. A clearly identified switch of the break-glass type or with an approved tamper-resistant cover shall provide off-only control of refrigerant compressors, refrigerant pumps, and normally closed, automatic refrigerant valves located in the machinery room. Additionally, this equipment shall be automatically shut off whenever the refrigerant vapor concentration in the machinery room exceeds the vapor detector's upper detection limit or 25 percent of the LEL, whichever is lower.

[F] 1106.6.2 Ventilation system. A clearly identified switch of the break-glass type or with an approved tamper-resistant cover shall provide on-only control of the *machinery room* ventilation fans.

[F] 1106.7 Emergency signs and labels. Refrigeration units and systems shall be provided with *approved* emergency signs, charts, and labels in accordance with the *Fire Code of New York State*.

SECTION 1107
REFRIGERANT PIPING

1107.1 General. The design of refrigerant piping shall be in accordance with ASME B31.5. Refrigerant piping shall be installed, tested and placed in operation in accordance with this chapter.

1107.2 Piping location. Refrigerant piping that crosses an open space that affords passageway in any building shall be not less than 7 feet 3 inches (2210 mm) above the floor unless the piping is located against the ceiling of such space. Refrigerant piping shall not be placed in any of the following:

1. A fire-resistance-rated exit access corridor.
2. An interior exit stairway.
3. An interior exit ramp.
4. An exit passageway.
5. An elevator, dumbwaiter or other shaft containing a moving object.
6. A shaft that has one or more openings into a fire-resistance-rated exit access corridor, interior exit stairway or ramp or exit passageway.

1107.2.1 Piping in concrete floors. Refrigerant piping installed in concrete floors shall be encased in pipe ducts. The piping shall be isolated and supported to prevent damaging vibration, stress and corrosion.

1107.2.2 Refrigerant penetrations. Refrigerant piping shall not penetrate floors, ceilings or roofs.

Exceptions:

1. Penetrations connecting the basement and the first floor.
2. Penetrations connecting the top floor and a machinery penthouse or roof installation.
3. Penetrations connecting adjacent floors served by the refrigeration system.
4. Penetrations by piping in a direct system where the refrigerant quantity does not exceed Table 1103.1 for the smallest occupied space through which the piping passes.
5. In other than industrial occupancies and where the refrigerant quantity exceeds Table 1103.1 for the smallest space, penetrations for piping that connects separate pieces of *equipment* that are either:
   - 5.1. Enclosed by an *approved* gas-tight, fire-resistive duct or shaft with openings to those floors served by the refrigeration system.
   - 5.2. Located on the exterior of the building where vented to the outdoors or to the space served by the system and not used as an air shaft, closed court or similar space.

1107.3 Pipe enclosures. Rigid or flexible metal enclosures or pipe ducts shall be provided for soft, annealed copper tubing and used for refrigerant piping erected on the premises and containing other than Group A1 or B1 refrigerants. Enclosures shall not be required for connections between condensing units and the nearest riser box(es), provided such connections do not exceed 6 feet (1829 mm) in length.

1107.4 Condensation. Refrigerating piping and fittings, brine piping and fittings that, during normal operation, will reach a surface temperature below the dew point of the surrounding air, and are located in spaces or areas where condensation will cause a safety hazard to the building occupants, structure, electrical *equipment* or any other *equipment* or appliances, shall be protected in an *approved* manner to prevent such damage.

INTERNATIONAL CODE COUNCIL®
Copyright © 2019 ICC & NYSDOS. ALL RIGHTS RESERVED. Accessed by Lauren Gualdino (lgualdino@briarcliffmanor.org), (-) Order Number #100880972 on May 08, 2020 07:05 AM (PDT) pursuant to License Agreement with ICC & NYSDOS. No further reproduction, no

100880972

1107.5 Materials for refrigerant pipe and tubing. Piping materials shall be as set forth in Sections 1107.5.1 through 1107.5.5.

1107.5.1 Steel pipe. Carbon steel pipe with a wall thickness not less than Schedule 80 shall be used for Group A2, A3, B2 or B3 refrigerant liquid lines for sizes 1.5 inches (38 mm) and smaller. Carbon steel pipe with a wall thickness not less than Schedule 40 shall be used for Group A1 or B1 refrigerant liquid lines 6 inches (152 mm) and smaller, Group A2, A3, B2 or B3 refrigerant liquid lines sizes 2 inches (51 mm) through 6 inches (152 mm) and all refrigerant suction and discharge lines 6 inches (152 mm) and smaller. Type F steel pipe shall not be used for refrigerant lines having an operating temperature less than -20°F (-29°C).

1107.5.2 Copper and copper-alloy pipe. Standard iron-pipe size, copper and copper-alloy (not less than 80-percent copper) pipe shall conform to ASTM B42 and ASTM B43.

1107.5.3 Copper tube. Copper tube used for refrigerant piping erected on the premises shall be seamless copper tube of Type ACR (hard or annealed) complying with ASTM B280 or ASTM B819. Annealed temper copper tube shall not be used in sizes larger than a 2-inch (51 mm) nominal size. Mechanical joints other than press-connect joints listed for refrigerant piping shall not be used on annealed temper copper tube in sizes larger than $^{7}/_{8}$-inch (22.2 mm) OD size.

1107.5.4 Copper tubing joints. Copper tubing joints used in refrigerating systems containing Group A2, A3, B2 or B3 refrigerants shall be brazed. Soldered joints shall not be used in such refrigerating systems.

1107.5.5 Aluminum tube. Type 3003-0 aluminum tubing with high-pressure fittings shall not be used with methyl chloride and other refrigerants known to attack aluminum.

1107.6 Joints and refrigerant-containing parts in air ducts. Joints and all refrigerant-containing parts of a refrigerating system located in an air duct of an air-conditioning system carrying conditioned air to and from human-occupied space shall be constructed to withstand, without leakage, a pressure of 150 percent of the higher of the design pressure or pressure relief device setting.

1107.7 Exposure of refrigerant pipe joints. Refrigerant pipe joints erected on the premises shall be exposed for visual inspection prior to being covered or enclosed.

1107.8 Stop valves. Systems containing more than 6.6 pounds (3 kg) of a refrigerant in systems using positive-displacement compressors shall have stop valves installed as follows:

1. At the inlet of each compressor, compressor unit or condensing unit.
2. At the discharge outlet of each compressor, compressor unit or condensing unit and of each liquid receiver.

   Exceptions:

   1. Systems that have a refrigerant pumpout function capable of storing the entire refrigerant charge in a receiver or heat exchanger.
   2. Systems that are equipped with provisions for pumpout of the refrigerant using either portable or permanently installed recovery *equipment*.
   3. Self-contained systems.

1107.8.1 Liquid receivers. Systems containing 100 pounds (45 kg) or more of a refrigerant, other than systems utilizing nonpositive displacement compressors, shall have stop valves, in addition to those required by Section 1107.8, on each inlet of each liquid receiver. Stop valves shall not be required on the inlet of a receiver in a condensing unit, nor on the inlet of a receiver that is an integral part of the condenser.

1107.8.2 Copper tubing. Stop valves used with soft annealed copper tubing or hard-drawn copper tubing $^{7}/_{8}$-inch (22.2 mm) OD standard size or smaller shall be securely mounted, independent of tubing fastenings or supports.

1107.8.3 Identification. Stop valves shall be identified where their intended purpose is not obvious. Numbers shall not be used to label the valves, unless a key to the numbers is located near the valves.

SECTION 1108
FIELD TEST

1108.1 General. Every refrigerant-containing part of every system that is erected on the premises, except compressors, condensers, vessels, evaporators, safety devices, pressure gauges and control mechanisms that are *listed* and factory tested, shall be tested and proved tight after complete installation, and before operation. Tests shall include both the high- and low-pressure sides of each system at not less than the lower of the design pressures or the setting of the pressure relief device(s). The design pressures for testing shall be those listed on the condensing unit, compressor or compressor unit nameplate, as required by ASHRAE 15.

Exceptions:

1. Gas bulk storage tanks that are not permanently connected to a refrigeration system.
2. Systems erected on the premises with copper tubing not exceeding $^{5}/_{8}$-inch (15.8 mm) OD, with wall thickness as required by ASHRAE 15, shall be tested in accordance with Section 1108.1, or by means of refrigerant charged into the system at the saturated vapor pressure of the refrigerant at 70°F (21°C) or higher.
3. Limited-charge systems equipped with a pressure relief device, erected on the premises, shall be tested at a pressure not less than one and one-half times the pressure setting of the relief device. If the *equipment* or *appliance* has been tested by the manufacturer at one and one-half times the design pressure, the test after erection on the premises shall be conducted at the design pressure.

1108.1.1 Booster compressor. Where a compressor is used as a booster to obtain an intermediate pressure and discharges into the suction side of another compressor, the booster compressor shall be considered to be a part of the

INTERNATIONAL CODE COUNCIL®
Copyright © 2019 ICC & NYSDOS. ALL RIGHTS RESERVED. Accessed by Lauren Gualdino (lgualdino@briarcliffmanor.org), (-) Order Number #100880972 on May 08, 2020 07:05 AM (PDT) pursuant to License Agreement with ICC & NYSDOS. No further reproduction, no

100880972

low side, provided that it is protected by a pressure relief device.

1108.1.2 Centrifugal/nonpositive displacement compressors. In field-testing systems using centrifugal or other nonpositive displacement compressors, the entire system shall be considered as the low-side pressure for field test purposes.

1108.2 Test gases. Tests shall be performed with an inert dried gas including, but not limited to, nitrogen and carbon dioxide. Oxygen, air, combustible gases and mixtures containing such gases shall not be used.

Exception: The use of air is allowed to test R-717, ammonia, systems provided that they are subsequently evacuated before charging with refrigerant.

1108.3 Test apparatus. The means used to build up the test pressure shall have either a pressure-limiting device or a pressure-reducing device and a gauge on the outlet side.

1108.4 Declaration. A certificate of test shall be provided for all systems containing 55 pounds (25 kg) or more of refrigerant. The certificate shall give the name of the refrigerant and the field test pressure applied to the high side and the low side of the system. The certification of test shall be signed by the installer and shall be made part of the public record.

[F] SECTION 1109
PERIODIC TESTING

[F] 1109.1 Testing required. The following emergency devices and systems shall be periodically tested in accordance with the manufacturer's instructions and as required by the *building official*:

1. Treatment and flaring systems.
2. Valves and appurtenances necessary to the operation of emergency refrigeration control boxes.
3. Fans and associated *equipment* intended to operate emergency ventilation systems.
4. Detection and alarm systems.

INTERNATIONAL CODE COUNCIL®
Copyright © 2019 ICC & NYSDOS. ALL RIGHTS RESERVED. Accessed by Lauren Gualdino (lgualdino@briarcliffmanor.org), (-) Order Number #100880972 on May 08, 2020 07:05 AM (PDT) pursuant to License Agreement with ICC & NYSDOS. No further reproduction, no

100880972

INTERNATIONAL CODE COUNCIL®
Copyright © 2019 ICC & NYSDOS. ALL RIGHTS RESERVED. Accessed by Lauren Gualdino (lgualdino@briarcliffmanor.org), (-) Order Number #100880972 on May 08, 2020 07:05 AM (PDT) pursuant to License Agreement with ICC & NYSDOS. No further reproduction, no

100880972

CHAPTER 12

HYDRONIC PIPING

SECTION 1201
GENERAL

1201.1 Scope. The provisions of this chapter shall govern the construction, installation, *alteration* and repair of hydronic piping systems. This chapter shall apply to hydronic piping systems that are part of heating, ventilation and air-conditioning systems. Such piping systems shall include steam, hot water, chilled water, steam condensate and ground source heat pump loop systems. Potable cold and hot water distribution systems shall be installed in accordance with the *Plumbing Code of New York State*.

1201.2 Sizing. Piping and piping system components for hydronic systems shall be sized for the demand of the system.

1201.3 Standards. As an alternative to the provisions of Sections 1202 and 1203, piping shall be designed, installed, inspected and tested in accordance with ASME B31.9.

TABLE 1202.4
HYDRONIC PIPE

MATERIAL	STANDARD (see Chapter 15)
Acrylonitrile butadiene styrene (ABS) plastic pipe	ASTM D1527; ASTM F2806
Chlorinated polyvinyl chloride (CPVC) plastic pipe	ASTM D2846; ASTM F441; ASTM F442
Copper or copper-alloy pipe	ASTM B42; ASTM B43; ASTM B302
Copper or copper-alloy tube (Type K, L or M)	ASTM B75; ASTM B88; ASTM B135; ASTM B251
Cross-linked polyethylene/ aluminum/cross-linked polyethylene (PEX-AL-PEX) pressure pipe	ASTM F1281; CSA CAN/CSA-B-137.10
Cross-linked polyethylene (PEX) tubing	ASTM F876
Ductile iron pipe	AWWA C115/A21.15; AWWA C151/A21.51
Lead pipe	FS WW-P-325B
Polyethylene/aluminum/polyethylene (PE-AL-PE) pressure pipe	ASTM F1282; CSA B137.9
Polypropylene (PP) plastic pipe	ASTM F2389
Polyvinyl chloride (PVC) plastic pipe	ASTM D1785; ASTM D2241
Raised temperature polyethylene (PE-RT)	ASTM F2623; ASTM F2769; CSA B137.18
Steel pipe	ASTM A53; ASTM A106
Steel tubing	ASTM A254

SECTION 1202
MATERIAL

1202.1 Piping. Piping material shall conform to the standards cited in this section.

Exception: Embedded piping regulated by Section 1209.

1202.2 Used materials. Reused pipe, fittings, valves or other materials shall be clean and free of foreign materials and shall be *approved* by the *building official* for reuse.

1202.3 Material rating. Materials shall be rated for the operating temperature and pressure of the hydronic system. Materials shall be suitable for the type of fluid in the hydronic system.

1202.4 Piping materials standards. Hydronic pipe shall conform to the standards listed in Table 1202.4. The exterior of the pipe shall be protected from corrosion and degradation.

1202.5 Pipe fittings. Hydronic pipe fittings shall be *approved* for installation with the piping materials to be installed, and shall conform to the respective pipe standards or to the standards listed in Table 1202.5.

TABLE 1202.5
HYDRONIC PIPE FITTINGS

MATERIAL	STANDARD (see Chapter 15)
Copper and copper alloys	ASME B16.15; ASME B16.18; ASME B16.22; ASME B16.26; ASME B16.24; ASME B16.51; ASSE 1061; ASTM F1974
Ductile iron and gray iron	ANSI/AWWA C110/A21.10; AWWA C153/A21.53; ASTM A395; ASTM A536; ASTM F1476; ASTM F1548
Ductile iron	ANSI/AWWA C153/A21.53
Gray iron	ASTM A126
Malleable iron	ASME B16.3
PE-RT fittings	ASSE 1061; ASTM D3261; ASTM F1807; ASTM F2098; ASTM F2159; ASTM F2735; ASTM F2769; CSA B137.1; CSA B137.18
PEX fittings	ASSE 1061; ASTM F877; ASTM F1807; ASTM F1960; ASTM F2080; ASTM F2159
Plastic	ASTM D2466; ASTM D2467; ASTM F438; ASTM F439; ASTM F877; ASTM F2389; ASTM F2735
Steel	ASME B16.5; ASME B16.9; ASME B16.11; ASME B16.28; ASTM A53; ASTM A106; ASTM A234; ASTM A395; ASTM A420; ASTM A536; ASTM F1476; ASTM F1548

INTERNATIONAL CODE COUNCIL®
Copyright © 2019 ICC & NYSDOS. ALL RIGHTS RESERVED. Accessed by Lauren Gualdino (lgualdino@briarcliffmanor.org), (-) Order Number #100880972 on May 08, 2020 07:05 AM (PDT) pursuant to License Agreement with ICC & NYSDOS. No further reproduction, no

100880972

1202.6 Valves. Valves shall be constructed of materials that are compatible with the type of piping material and fluids in the system. Valves shall be rated for the temperatures and pressures of the systems in which the valves are installed.

1202.7 Flexible connectors, expansion and vibration compensators. Flexible connectors, expansion and vibration control devices and fittings shall be of an *approved* type.

SECTION 1203
JOINTS AND CONNECTIONS

1203.1 Approval. Joints and connections shall be of an *approved* type. Joints and connections shall be tight for the pressure of the hydronic system.

1203.1.1 Joints between different piping materials. Joints between different piping materials shall be made with *approved* adapter fittings.

1203.2 Preparation of pipe ends. Pipe shall be cut square, reamed and chamfered, and shall be free of burrs and obstructions. Pipe ends shall have full-bore openings and shall not be undercut.

1203.3 Joint preparation and installation. Where required by Sections 1203.4 through 1203.12, the preparation and installation of brazed, mechanical, soldered, solvent-cemented, threaded and welded joints shall comply with Sections 1203.3.1 through 1203.3.8.2.

1203.3.1 Brazed joints. Joint surfaces shall be cleaned. An *approved* flux shall be applied where required. The joint shall be brazed with a filler metal conforming to AWS A5.8.

1203.3.2 Mechanical joints. Mechanical joints shall be installed in accordance with the manufacturer's instructions.

1203.3.3 Soldered joints. Solder joints shall be made in accordance with ASTM B828. Cut tube ends shall be reamed to the full inside diameter of the tube end. A flux conforming to ASTM B813 shall be applied. The joint shall be soldered with a solder conforming to ASTM B32.

1203.3.4 Solvent-cemented joints. Joint surfaces shall be clean and free of moisture. An *approved* primer shall be applied to CPVC and PVC pipe-joint surfaces. Joints shall be made while the cement is wet. Solvent cement conforming to the following standards shall be applied to all joint surfaces:

1. ASTM D2235 for ABS joints.
2. ASTM F493 for CPVC joints.
3. ASTM D2564 for PVC joints.

CPVC joints shall be made in accordance with ASTM D2846.

Exception: For CPVC pipe joint connections, a primer is not required where all of the following conditions apply:

1. The solvent cement used is third-party certified as conforming to ASTM F493.
2. The solvent cement is yellow in color.
3. The solvent cement is used only for joining $^1/_2$-inch (12.7 mm) through 2-inch (51 mm) diameter CPVC pipe and fittings.
4. The CPVC pipe and fittings are manufactured in accordance with ASTM D2846.

1203.3.5 Threaded joints. Threads shall conform to ASME B1.20.1. Schedule 80 or heavier plastic pipe shall be threaded with dies specifically designed for plastic pipe. Thread lubricant, pipe-joint compound or tape shall be applied on the male threads only and shall be *approved* for application on the piping material.

1203.3.6 Welded joints. Joint surfaces shall be cleaned by an *approved* procedure. Joints shall be welded with an *approved* filler metal.

1203.3.7 Grooved and shouldered mechanical joints. Grooved and shouldered mechanical joints shall conform to the requirements of ASTM F1476 and shall be installed in accordance with the manufacturer's instructions.

1203.3.8 Mechanically formed tee fittings. Mechanically extracted outlets shall have a height not less than three times the thickness of the branch tube wall.

1203.3.8.1 Full flow assurance. Branch tubes shall not restrict the flow in the run tube. A dimple/depth stop shall be formed in the branch tube to ensure that penetration into the outlet is of the correct depth. For inspection purposes, a second dimple shall be placed $^1/_4$ inch (6.4 mm) above the first dimple. Dimples shall be aligned with the tube run.

1203.3.8.2 Brazed joints. Mechanically formed tee fittings shall be brazed in accordance with Section 1203.3.1.

1203.4 ABS plastic pipe. Joints between ABS plastic pipe or fittings shall be solvent-cemented or threaded joints conforming to Section 1203.3.

1203.5 Copper or copper-alloy pipe. Joints between copper or copper-alloy pipe or fittings shall be brazed, mechanical, soldered, threaded or welded joints conforming to Section 1203.3.

1203.6 Copper or copper-alloy tubing. Joints between copper or copper-alloy tubing or fittings shall be brazed, mechanical or soldered joints conforming to Section 1203.3, flared joints conforming to Section 1203.6.1, push-fit joints conforming to Section 1203.6.2 or *press-connect* joints conforming to Section 1203.6.3.

1203.6.1 Flared joints. Flared joints shall be made by a tool designed for that operation.

1203.6.2 Push-fit joints. Push-fit joints shall be installed in accordance with the manufacturer's instructions.

1203.6.3 Press-connect joints. *Press-connect joints* shall be installed in accordance with the manufacturer's instructions.

1203.7 CPVC plastic pipe. Joints between CPVC plastic pipe or fittings shall be solvent-cemented or threaded joints conforming to Section 1203.3.

INTERNATIONAL CODE COUNCIL®
Copyright © 2019 ICC & NYSDOS. ALL RIGHTS RESERVED. Accessed by Lauren Gualdino (lgualdino@briarcliffmanor.org), (-) Order Number #100880972 on May 08, 2020 07:05 AM (PDT) pursuant to License Agreement with ICC & NYSDOS. No further reproduction, no

100880972

1203.8 Polybutylene plastic pipe and tubing. Joints between polybutylene plastic pipe and tubing or fittings shall be mechanical joints conforming to Section 1203.3 or heat-fusion joints conforming to Section 1203.8.1.

1203.8.1 Heat-fusion joints. Joints shall be of the socket-fusion or butt-fusion type. Joint surfaces shall be clean and free of moisture. Joint surfaces shall be heated to melt temperatures and joined. The joint shall be undisturbed until cool. Joints shall be made in accordance with ASTM D3309.

1203.9 Cross-linked polyethylene (PEX) plastic tubing. Joints between cross-linked polyethylene plastic tubing and fittings shall conform to Sections 1203.9.1 through 1203.9.3. Mechanical joints shall conform to Section 1203.3.

1203.9.1 Compression-type fittings. Where compression-type fittings include inserts and ferrules or O-rings, the fittings shall be installed without omitting the inserts and ferrules or O-rings.

1203.9.2 Plastic-to-metal connections. Soldering on the metal portion of the system shall be performed not less than 18 inches (457 mm) from a plastic-to-metal adapter in the same water line.

1203.9.3 Push-fit joints. Push-fit joints that create a seal on the outside diameter of the tubing shall not be used with tubing that has an ethylene vinyl alcohol copolymer (EVOH) oxygen barrier layer.

1203.10 PVC plastic pipe. Joints between PVC plastic pipe and fittings shall be solvent-cemented or threaded joints conforming to Section 1203.3.

1203.11 Steel pipe. Joints between steel pipe or fittings shall be mechanical joints that are made with an *approved* elastomeric seal, or shall be threaded or welded joints conforming to Section 1203.3.

1203.12 Steel tubing. Joints between steel tubing or fittings shall be mechanical or welded joints conforming to Section 1203.3.

1203.13 Polypropylene (PP) plastic. Joints between PP plastic pipe and fittings shall comply with Sections 1203.13.1 and 1203.13.2.

1203.13.1 Heat-fusion joints. Heat-fusion joints for polypropylene (PP) pipe and tubing joints shall be installed with socket-type heat-fused polypropylene fittings, electro-fusion polypropylene fittings or by butt fusion. Joint surfaces shall be clean and free from moisture. The joint shall be undisturbed until cool. Joints shall be made in accordance with ASTM F2389.

1203.13.2 Mechanical and compression sleeve joints. Mechanical and compression sleeve joints shall be installed in accordance with the manufacturer's instructions.

1203.14 Raised temperature polyethylene (PE-RT) plastic tubing. Joints between raised temperature polyethylene tubing and fittings shall conform to Sections 1203.14.1 through 1203.14.3. Mechanical joints shall conform to Section 1203.3.

1203.14.1 Compression-type fittings. Where compression-type fittings include inserts and ferrules or O-rings, the fittings shall be installed without omitting the inserts and ferrules or O-rings.

1203.14.2 PE-RT-to-metal connections. Solder joints in a metal pipe shall not occur within 18 inches (457 mm) of a transition from such metal pipe to PE-RT pipe.

1203.14.3 Push-fit joints. Push-fit joints that create a seal on the outside diameter of the tubing shall not be used with tubing that has an ethylene vinyl alcohol copolymer (EVOH) oxygen barrier layer.

1203.15 Polyethylene/aluminum/polyethylene (PE-AL-PE) pressure pipe. Joints between polyethylene/aluminum/polyethylene pressure pipe and fittings shall conform to Sections 1203.15.1 and 1203.15.2. Mechanical joints shall comply with Section 1203.3.

1203.15.1 Compression-type fittings. Where compression-type fittings include inserts and ferrules or O-rings, the fittings shall be installed without omitting the inserts and ferrules or O-rings.

1203.15.2 PE-AL-PE-to-metal connections. Solder joints in a metal pipe shall not occur within 18 inches (457 mm) of a transition from such metal pipe to PE-AL-PE pipe.

1203.16 Cross-linked polyethylene/aluminum/cross-linked polyethylene (PEX-AL-PEX) pressure pipe. Joints between cross-linked polyethylene/aluminum/cross-linked polyethylene pressure pipe and fittings shall conform to Sections 1203.16.1 and 1203.16.2. Mechanical joints shall comply with Section 1203.3.

1203.16.1 Compression-type fittings. Where compression-type fittings include inserts and ferrules or O-rings, the fittings shall be installed without omitting the inserts and ferrules or O-rings.

1203.16.2 PEX-AL-PEX-to-metal connections. Solder joints in a metal pipe shall not occur within 18 inches (457 mm) of a transition from such metal pipe to PEX-AL-PEX pipe.

SECTION 1204
PIPE INSULATION

1204.1 Insulation characteristics. Pipe insulation installed in buildings shall conform to the requirements of the *Energy Conservation Construction Code of New York State*; shall be tested in accordance with ASTM E84 or UL 723, using the specimen preparation and mounting procedures of ASTM E2231; and shall have a maximum flame spread index of 25 and a smoke-developed index not exceeding 450. Insulation installed in an air *plenum* shall comply with Section 602.2.1.

Exception: The maximum flame spread index and smoke-developed index shall not apply to one- and two-family dwellings.

1204.2 Required thickness. Hydronic piping shall be insulated to the thickness required by the *Energy Conservation Construction Code of New York State.*

INTERNATIONAL CODE COUNCIL®
Copyright © 2019 ICC & NYSDOS. ALL RIGHTS RESERVED. Accessed by Lauren Gualdino (lgualdino@briarcliffmanor.org), (-) Order Number #100880972 on May 08, 2020 07:05 AM (PDT) pursuant to License Agreement with ICC & NYSDOS. No further reproduction, no

100880972

SECTION 1205
VALVES

1205.1 Where required. Shutoff valves shall be installed in hydronic piping systems in the locations indicated in Sections 1205.1.1 through 1205.1.6.

1205.1.1 Heat exchangers. Shutoff valves shall be installed on the supply and return side of a heat exchanger.

Exception: Shutoff valves shall not be required where heat exchangers are integral with a boiler; or are a component of a manufacturer's boiler and heat exchanger packaged unit and are capable of being isolated from the hydronic system by the supply and return valves required by Section 1005.1.

1205.1.2 Central systems. Shutoff valves shall be installed on the building supply and return of a central utility system.

1205.1.3 Pressure vessels. Shutoff valves shall be installed on the connection to any pressure vessel.

1205.1.4 Pressure-reducing valves. Shutoff valves shall be installed on both sides of a pressure-reducing valve.

1205.1.5 Equipment and appliances. Shutoff valves shall be installed on connections to mechanical *equipment* and appliances. This requirement does not apply to components of a hydronic system such as pumps, air separators, metering devices and similar *equipment*.

1205.1.6 Expansion tanks. Shutoff valves shall be installed at connections to nondiaphragm-type expansion tanks.

1205.2 Reduced pressure. A pressure relief valve shall be installed on the low-pressure side of a hydronic piping system that has been reduced in pressure. The relief valve shall be set at the maximum pressure of the system design. The valve shall be installed in accordance with Section 1006.

SECTION 1206
PIPING INSTALLATION

1206.1 General. Piping, valves, fittings and connections shall be installed in accordance with the conditions of approval.

1206.2 System drain down. Hydronic piping systems shall be designed and installed to permit the system to be drained. Where the system drains to the plumbing drainage system, the installation shall conform to the requirements of the *Plumbing Code of New York State*.

Exception: The buried portions of systems embedded underground or under floors.

1206.3 Protection of potable water. The potable water system shall be protected from backflow in accordance with the *Plumbing Code of New York State*.

1206.4 Pipe penetrations. Openings for pipe penetrations in walls, floors or ceilings shall be larger than the penetrating pipe. Openings through concrete or masonry building elements shall be sleeved. The annular space surrounding pipe penetrations shall be protected in accordance with the *Building Code of New York State*.

1206.5 Clearance to combustibles. A pipe in a hydronic piping system in which the exterior temperature exceeds 250°F (121°C) shall have a minimum *clearance* of 1 inch (25 mm) to combustible materials.

1206.6 Contact with building material. A hydronic piping system shall not be in direct contact with building materials that cause the piping material to degrade or corrode, or that interfere with the operation of the system.

1206.7 Water hammer. The flow velocity of the hydronic piping system shall be controlled to reduce the possibility of water hammer. Where a quick-closing valve creates water hammer, an *approved* water-hammer arrestor shall be installed. The arrestor shall be located within a range as specified by the manufacturer of the quick-closing valve.

1206.8 Steam piping pitch. Steam piping shall be installed to drain to the boiler or the steam trap. Steam systems shall not have drip pockets that reduce the capacity of the steam piping.

1206.9 Strains and stresses. Piping shall be installed so as to prevent detrimental strains and stresses in the pipe. Provisions shall be made to protect piping from damage resulting from expansion, contraction and structural settlement. Piping shall be installed so as to avoid structural stresses or strains within building components.

1206.9.1 Flood hazard. Piping located in a flood hazard area shall be capable of resisting hydrostatic and hydrodynamic loads and stresses, including the effects of buoyancy, during the occurrence of flooding to the *design flood elevation*.

1206.10 Pipe support. Pipe shall be supported in accordance with Section 305.

1206.11 Condensation. Provisions shall be made to prevent the formation of condensation on the exterior of piping.

SECTION 1207
TRANSFER FLUID

1207.1 Flash point. The flash point of transfer fluid in a hydronic piping system shall be not less than 50°F (28°C) above the maximum system operating temperature.

1207.2 Makeup water. The transfer fluid shall be compatible with the makeup water supplied to the system.

SECTION 1208
TESTS

1208.1 General. Hydronic piping systems shall be tested hydrostatically at one and one-half times the maximum system design pressure, but not less than 100 psi (689 kPa). The duration of each test shall be not less than 15 minutes.

Exception: For PEX piping systems, testing with a compressed gas shall be an alternative to hydrostatic testing where compressed air or other gas pressure testing is specifically authorized by all of the manufacturers' instructions for the PEX pipe and fitting products installed at the time the system is being tested, and compressed air or other gas testing is not otherwise prohibited by applicable codes, laws or regulations outside of this code.

INTERNATIONAL CODE COUNCIL®
Copyright © 2019 ICC & NYSDOS. ALL RIGHTS RESERVED. Accessed by Lauren Gualdino (lgualdino@briarcliffmanor.org), (-) Order Number #100880972 on May 08, 2020 07:05 AM (PDT) pursuant to License Agreement with ICC & NYSDOS. No further reproduction, no

100880972

SECTION 1209
EMBEDDED PIPING

1209.1 Materials. Piping for heating panels shall be standard-weight steel pipe, Type L copper tubing, polybutylene or other *approved* plastic pipe or tubing rated at 100 psi (689 kPa) at 180°F (82°C).

1209.2 Pressurizing during installation. Piping to be embedded in concrete shall be pressure tested prior to pouring concrete. During pouring, the pipe shall be maintained at the proposed operating pressure.

1209.3 Embedded joints. Joints of pipe or tubing that are embedded in a portion of the building, such as concrete or plaster, shall be in accordance with the requirements of Sections 1209.3.1 through 1209.3.5.

1209.3.1 Steel pipe joints. Steel pipe shall be welded by electrical arc or oxygen/acetylene method.

1209.3.2 Copper tubing joints. Copper tubing shall be joined by brazing complying with Section 1203.3.1.

1209.3.3 Polybutylene joints. Polybutylene pipe and tubing shall be installed in continuous lengths or shall be joined by heat fusion in accordance with Section 1203.8.1.

1209.3.4 Polyethylene of raised temperature (PE-RT) joints. PE-RT tubing shall be installed in continuous lengths or shall be joined by hydronic fittings listed in Table 1202.5.

1209.3.5 Cross-linked polyethylene (PEX) joints. PEX tubing shall be installed in continuous lengths or shall be joined by hydronic fittings listed in Table 1202.5.

1209.4 Not embedded related piping. Joints of other piping in cavities or running exposed shall be joined by *approved* methods in accordance with manufacturer's installation instructions and related sections of this code.

1209.5 Thermal barrier required. Radiant floor heating systems shall be provided with a thermal barrier in accordance with Sections 1209.5.1 and 1209.5.2. Insulation *R*-values for slab-on-grade and suspended floor installation shall be in accordance with the *Energy Conservation Construction Code of New York State*.

Exception: Insulation shall not be required in engineered systems where it can be demonstrated that the insulation will decrease the efficiency or have a negative effect on the installation.

➡

1209.5.1 Thermal break required. A thermal break shall be provided consisting of asphalt expansion joint materials or similar insulating materials at a point where a heated slab meets a foundation wall or other conductive slab.

1209.5.2 Thermal barrier material marking. Insulating materials utilized in thermal barriers shall be installed such that the manufacturer's *R*-value mark is readily observable upon inspection.

SECTION 1210
PLASTIC PIPE GROUND-SOURCE HEAT PUMP LOOP SYSTEMS

1210.1 Ground-source heat pump-loop water piping. Ground-source heat pump ground-loop piping and tubing material for water-based systems shall conform to the standards cited in this section.

1210.2 Used materials. Reused pipe, fittings, valves, and other materials shall not be permitted in ground-source heat pump loop systems.

1210.3 Material rating. Pipe and tubing shall be rated for the operating temperature and pressure of the ground-source heat pump loop system. Fittings shall be suitable for the pressure applications and recommended by the manufacturer for installation with the pipe and tubing material installed. Where used underground, materials shall be suitable for burial.

1210.4 Piping and tubing materials standards. Ground-source heat pump ground-loop pipe and tubing shall conform to the standards listed in Table 1210.4.

1210.5 Fittings. Ground-source heat pump pipe fittings shall be approved for installation with the piping materials to be installed, shall conform to the standards listed in Table 1210.5 and, if installed underground, shall be suitable for burial.

1210.6 Joints. Joints and connections shall be of an approved type. Joints and connections shall be tight for the pressure of the ground-source loop system. Joints used underground shall be approved for buried applications.

1210.6.1 Joints between different piping materials. Joints between different piping materials shall be made with approved transition fittings.

1210.6.2 Preparation of pipe ends. Pipe shall be cut square, be reamed, and be free of burrs and obstructions. CPVC, PE, and PVC pipe shall be chamfered. Pipe ends shall have full-bore openings and shall not be undercut.

1210.6.3 Joint preparation and installation. Where required by Sections 1210.6.4 through 1210.6.8, the preparation and installation of mechanical and thermoplastic-welded joints shall comply with Sections 1210.6.3.1 and 1210.6.3.2.

1210.6.3.1 Mechanical joints. Mechanical joints shall be installed in accordance with the manufacturer's instructions.

1210.6.3.2 Thermoplastic-welded joints. Joint surfaces for thermoplastic-welded joints shall be cleaned by an approved procedure. Joints shall be welded in accordance with the manufacturer's instructions.

1210.6.4 CPVC plastic pipe. Joints between CPVC plastic pipe or fittings shall be solvent-cemented or threaded joints complying with Section 1203.3.

1210.6.5 Cross-linked polyethylene (PEX) plastic tubing. Joints between cross-linked polyethylene plastic tubing and fittings shall comply with Sections 1210.6.5.1 and 1210.6.5.2. Mechanical joints shall comply with Section 1210.6.3.

1210.6.5.1 Compression-type fittings. Where compression-type fittings include inserts and ferrules or O-

INTERNATIONAL CODE COUNCIL®
Copyright © 2019 ICC & NYSDOS. ALL RIGHTS RESERVED. Accessed by Lauren Gualdino (lgualdino@briarcliffmanor.org), (-) Order Number #100880972 on May 08, 2020 07:05 AM (PDT) pursuant to License Agreement with ICC & NYSDOS. No further reproduction, no

100880972

rings, the fittings shall be installed without omitting the inserts and ferrules or O-rings.

1210.6.5.2 Plastic-to-metal connections. Soldering on the metal portion of the system shall be performed not less than 18 inches (457 mm) from a plastic-to-metal adapter in the same water line.

1210.6.6 Polyethylene plastic pipe and tubing for ground-source heat pump loop systems. Joints between polyethylene plastic pipe and tubing or fittings for ground-source heat pump loop systems shall be heat-fusion joints complying with Section 1210.6.6.1, electrofusion joints complying with Section 1210.6.6.2, or stab-type insertion joints complying with Section 1210.6.6.3.

1210.6.6.1 Heat-fusion joints. Joints shall be of the socket-fusion, saddle-fusion or butt-fusion type, joined in accordance with ASTM D2657. Joint surfaces shall be clean and free from moisture. Joint surfaces shall be heated to melt temperatures and joined. The joint shall be undisturbed until cool. Fittings shall be manufactured in accordance with ASTM D2683 or ASTM D3261.

1210.6.6.2 Electrofusion joints. Joints shall be of the electrofusion type. Joint surfaces shall be clean and free from moisture, and scoured to expose virgin resin. Joint surfaces shall be heated to melt temperatures for the period of time specified by the manufacturer. The joint shall be undisturbed until cool. Fittings shall be manufactured in accordance with ASTM F1055.

1210.6.6.3 Stab-type insert fittings. Joint surfaces shall be clean and free from moisture. Pipe ends shall be chamfered and inserted into the fittings to full depth. Fittings shall be manufactured in accordance with ASTM F1924.

1210.6.7 Polypropylene (PP) plastic. Joints between PP plastic pipe and fittings shall comply with Sections 1210.6.7.1 and 1210.6.7.2.

1210.6.7.1 Heat-fusion joints. Heat-fusion joints for polypropylene (PP) pipe and tubing joints shall be installed with socket-type heat-fused polypropylene fittings, electrofusion polypropylene fittings or by butt fusion. Joint surfaces shall be clean and free from moisture. The joint shall be undisturbed until cool. Joints shall be made in accordance with ASTM F2389.

1210.6.7.2 Mechanical and compression sleeve joints. Mechanical and compression sleeve joints shall be installed in accordance with the manufacturer's instructions.

1210.6.8 Raised temperature polyethylene (PE-RT) plastic tubing. Joints between raised temperature polyethylene tubing and fittings shall comply with Sections 1210.6.8.1 and 1210.6.8.2. Mechanical joints shall comply with Section 1210.6.3.

1210.6.8.1 Compression-type fittings. Where compression-type fittings include inserts and ferrules or O-rings, the fittings shall be installed without omitting the inserts and ferrules or O-rings.

TABLE 1210.4
GROUND-SOURCE LOOP PIPE

MATERIAL	STANDARD (see Chapter 15)
Chlorinated polyvinyl chloride (CPVC)	ASTM D2846; ASTM F441; ASTM F442
Cross-linked polyethylene (PEX)	ASTM F876; CSA B137.5
Polyethylene/aluminum/polyethylene (PE-AL-PE) pressure pipe	ASTM F1282; CSA B137.9
High-density polyethylene (HDPE)	ASTM D2737; ASTM D3035; ASTM F714; AWWA C901; CSA B137.1; CSA C448; NSF 358-1
Polypropylene (PP-R)	ASTM F2389; CSA B137.11; NSF 358-2
Polyvinyl chloride (PVC)	ASTM D1785; ASTM D2241
Raised temperature polyethylene (PE-RT)	ASTM F2623; ASTM F2769; CSA B137.18

TABLE 1210.5
GROUND-SOURCE LOOP PIPE FITTINGS

PIPE MATERIAL	STANDARD (see Chapter 15)
Chlorinated polyvinyl chloride (CPVC)	ASTM D2846; ASTM F437; ASTM F438; ASTM F439; CSA B137.6
Cross-linked polyethylene (PEX)	ASTM F877; ASTM F1807; ASTM F1960; ASTM F2080; ASTM F2159; ASTM F2434; CSA B137.5
Polyethylene/aluminum/polyethylene (PE-AL-PE)	ASTM F1282; ASTM F2434; CSA B137.9
High Density Polyethylene (HDPE)	ASTM D2683; ASTM D3261; ASTM F1055; CSA B137.1; CSA C448; NSF 358-1
Polypropylene (PP-R)	ASTM F2389; CSA B137.11; NSF 358-2
Polyvinyl chloride (PVC)	ASTM D2464; ASTM D2466; ASTM D2467; CSA B137.2; CSA B137.3
Raised temperature polyethylene (PE-RT)	ASTM D3261; ASTM F1807; ASTM F2098; ASTM F2159; ASTM F2735; ASTM F2769; CSA B137.1; CSA B137.18

INTERNATIONAL CODE COUNCIL®
Copyright © 2019 ICC & NYSDOS. ALL RIGHTS RESERVED. Accessed by Lauren Gualdino (lgualdino@briarcliffmanor.org), (-) Order Number #100880972 on May 08, 2020 07:05 AM (PDT) pursuant to License Agreement with ICC & NYSDOS. No further reproduction, no

100880972

1210.6.8.2 PE-RT-to-metal connections. Solder joints in a metal pipe shall not occur within 18 inches (457 mm) of a transition from such metal pipe to PE-RT pipe.

1210.6.9 PVC plastic pipe. Joints between PVC plastic pipe and fittings shall be solvent-cemented or threaded joints comply with Section 1203.3.

1210.7 Shutoff valves. Shutoff valves shall be installed in ground-source loop piping systems in the locations indicated in Sections 1210.7.1 through 1210.7.7.

1210.7.1 Heat exchangers. Shutoff valves shall be installed on the supply and return side of a heat exchanger.

Exception: Shutoff valves shall not be required where heat exchangers are integral with a boiler or are a component of a manufacturer's boiler and heat exchanger packaged unit and are capable of being isolated from the hydronic system by the supply and return valves required by Section 1005.1.

1210.7.2 Central systems. Shutoff valves shall be installed on the building supply and return of a central utility system.

1210.7.3 Pressure vessels. Shutoff valves shall be installed on the connection to any pressure vessel.

1210.7.4 Pressure-reducing valves. Shutoff valves shall be installed on both sides of a pressure-reducing valve.

1210.7.5 Equipment and appliances. Shutoff valves shall be installed on connections to mechanical *equipment* and appliances. This requirement does not apply to components of a ground-source loop system such as pumps, air separators, metering devices, and similar *equipment*.

1210.7.6 Expansion tanks. Shutoff valves shall be installed at connections to nondiaphragm-type expansion tanks.

1210.7.7 Reduced pressure. A pressure relief valve shall be installed on the low-pressure side of a hydronic piping system that has been reduced in pressure. The relief valve shall be set at the maximum pressure of the system design. The valve shall be installed in accordance with Section 1006.

1210.8 Installation. Piping, valves, fittings, and connections shall be installed in accordance with the conditions of approval.

1210.8.1 Protection of potable water. Where ground-source heat pump ground-loop systems have a connection to a potable water supply, the potable water system shall be protected from backflow in accordance with the *Plumbing Code of New York State*.

1210.8.2 Pipe penetrations. Openings for pipe penetrations in walls, floors and ceilings shall be larger than the penetrating pipe. Openings through concrete or masonry building elements shall be sleeved. The annular space surrounding pipe penetrations shall be protected in accordance with the *Building Code of New York State*.

1210.8.3 Clearance from combustibles. A pipe in a ground-source heat pump piping system having an exterior surface temperature exceeding 250°F (121°C) shall have a minimum *clearance* of 1 inch (25 mm) from combustible materials.

1210.8.4 Contact with building material. A ground-source heat pump ground-loop piping system shall not be in direct contact with building materials that cause the piping or fitting material to degrade or corrode, or that interfere with the operation of the system.

1210.8.5 Strains and stresses. Piping shall be installed so as to prevent detrimental strains and stresses in the pipe. Provisions shall be made to protect piping from damage resulting from expansion, contraction and structural settlement. Piping shall be installed so as to avoid structural stresses or strains within building components.

1210.8.6 Flood hazard. Piping located in a flood hazard area shall be capable of resisting hydrostatic and hydrodynamic loads and stresses, including the effects of buoyancy, during the occurrence of flooding to the *design flood elevation*.

1210.8.7 Pipe support. Pipe shall be supported in accordance with Section 305.

1210.8.8 Velocities. Ground-source heat pump ground-loop systems shall be designed so that the flow velocities do not exceed the maximum flow velocity recommended by the pipe and fittings manufacturer and shall be controlled to reduce the possibility of water hammer.

1210.8.9 Labeling and marking. Ground-source heat pump ground-loop system piping shall be marked with tape, metal tags or other method where it enters a building indicating "GROUND-SOURCE HEAT PUMP LOOP SYSTEM." The marking shall indicate any antifreeze used in the system by name and concentration.

1210.8.10 Chemical compatibility. Antifreeze and other materials used in the system shall be chemically compatible with the pipe, tubing, fittings, and mechanical systems.

1210.9 Makeup water. The transfer fluid shall be compatible with the makeup water supplied to the system.

1210.10 Tests. Before connection header trenches are backfilled, the assembled loop system shall be pressure tested with water at 100 psi (689 kPa) for 15 minutes, in which time there shall not be observed leaks. Flow and pressure loss testing shall be performed and the actual flow rates and pressure drops shall be compared to the calculated design values. If actual flow rate or pressure drop values differ from calculated design values by more than 10 percent, the cause shall be identified and corrective action taken.

1210.11 Embedded piping. Ground-source heat pump ground-loop piping to be embedded in concrete shall be pressure tested prior to pouring concrete. During pouring, the pipe shall be maintained at the proposed operating pressure.

INTERNATIONAL CODE COUNCIL®
Copyright © 2019 ICC & NYSDOS. ALL RIGHTS RESERVED. Accessed by Lauren Gualdino (lgualdino@briarcliffmanor.org), (-) Order Number #100880972 on May 08, 2020 07:05 AM (PDT) pursuant to License Agreement with ICC & NYSDOS. No further reproduction, no

100880972

INTERNATIONAL CODE COUNCIL®
Copyright © 2019 ICC & NYSDOS. ALL RIGHTS RESERVED. Accessed by Lauren Gualdino (lgualdino@briarcliffmanor.org), (-) Order Number #100880972 on May 08, 2020 07:05 AM (PDT) pursuant to License Agreement with ICC & NYSDOS. No further reproduction, no

100880972

CHAPTER 13
FUEL OIL PIPING AND STORAGE

SECTION 1301
GENERAL

1301.1 Scope. This chapter shall govern the design, installation, construction and repair of fuel-oil storage and piping systems. The storage of fuel oil and flammable and combustible liquids shall be in accordance with Chapters 6 and 57 of the *Fire Code of New York State*.

1301.2 Storage and piping systems. Fuel-oil storage systems shall comply with Section 603.3 of the *Fire Code of New York State*. Fuel-oil piping systems shall comply with the requirements of this code.

1301.3 Fuel type. An *appliance* shall be designed for use with the type of fuel to which it will be connected. Such *appliance* shall not be converted from the fuel specified on the rating plate for use with a different fuel without securing reapproval from the *building official*.

1301.4 Fuel tanks, piping and valves. The tank, piping and valves for appliances burning oil shall be installed in accordance with the requirements of this chapter. Where an oil burner is served by a tank, any part of which is above the level of the burner inlet connection and where the fuel supply line is taken from the top of the tank, an *approved* antisiphon valve or other siphon-breaking device shall be installed in lieu of the shutoff valve.

1301.5 Tanks abandoned or removed. All exterior above-grade fill piping shall be removed when tanks are abandoned or removed. Tank abandonment and removal shall be in accordance with Section 5704.2.13 of the *Fire Code of New York State.*

SECTION 1302
MATERIAL

1302.1 General. Piping materials shall conform to the standards cited in this section.

1302.2 Rated for system. All materials shall be rated for the operating temperatures and pressures of the system, and shall be compatible with the type of liquid.

1302.3 Pipe standards. Fuel oil pipe shall comply with one of the standards listed in Table 1302.3.

1302.4 Nonmetallic pipe. Nonmetallic pipe shall be *listed* and *labeled* as being acceptable for the intended application for flammable and combustible liquids. Nonmetallic pipe shall be installed only outdoors, underground.

1302.5 Fittings and valves. Fittings and valves shall be *approved* for the piping systems, and shall be compatible with, or shall be of the same material as, the pipe or tubing.

1302.6 Bending of pipe. Pipe shall be *approved* for bending. Pipe bends shall be made with *approved equipment*. The bend shall not exceed the structural limitations of the pipe.

TABLE 1302.3
FUEL OIL PIPING

MATERIAL	STANDARD (see Chapter 15)
Copper or copper-alloy pipe	ASTM B42; ASTM B43; ASTM B302
Copper or copper-alloy tubing (Type K, L or M)	ASTM B75; ASTM B88; ASTM B280; ASME B16.51
Labeled pipe	(See Section 1302.4)
Nonmetallic pipe	ASTM D2996
Steel pipe	ASTM A53; ASTM A106
Steel tubing	ASTM A254; ASTM A539

1302.7 Pumps. Pumps that are not part of an *appliance* shall be of a positive-displacement type. The pump shall automatically shut off the supply when not in operation. Pumps shall be *listed* and *labeled* in accordance with UL 343.

1302.8 Flexible connectors and hoses. Flexible connectors and hoses shall be *listed* and *labeled* in accordance with UL 536.

SECTION 1303
JOINTS AND CONNECTIONS

1303.1 Approval. Joints and connections shall be *approved* and of a type *approved* for fuel-oil piping systems. Threaded joints and connections shall be made tight with suitable lubricant or pipe compound. Unions requiring gaskets or packings, right or left couplings, and sweat fittings employing solder having a melting point of less than 1,000°F (538°C) shall not be used in oil lines. Cast-iron fittings shall not be used. Joints and connections shall be tight for the pressure required by test.

1303.1.1 Joints between different piping materials. Joints between different piping materials shall be made with *approved* adapter fittings. Joints between different metallic piping materials shall be made with *approved* dielectric fittings or copper-alloy converter fittings.

1303.2 Preparation of pipe ends. Pipe shall be cut square, reamed and chamfered and be free from all burrs and obstructions. Pipe ends shall have full-bore openings and shall not be undercut.

1303.3 Joint preparation and installation. Where required by Sections 1303.4 through 1303.9, the preparation and installation of brazed, mechanical, threaded and welded joints shall comply with Sections 1303.3.1 through 1303.3.4.

1303.3.1 Brazed joints. All joint surfaces shall be cleaned. An *approved* flux shall be applied where required. The joints shall be brazed with a filler metal conforming to AWS A5.8.

1303.3.2 Mechanical joints. Mechanical joints shall be installed in accordance with the manufacturer's instruc-

INTERNATIONAL CODE COUNCIL®
Copyright © 2019 ICC & NYSDOS. ALL RIGHTS RESERVED. Accessed by Lauren Gualdino (lgualdino@briarcliffmanor.org), (-) Order Number #100880972 on May 08, 2020 07:05 AM (PDT) pursuant to License Agreement with ICC & NYSDOS. No further reproduction, no

100880972

tions. Press-connect joints shall conform to one of the standards listed in Table 1302.3.

1303.3.3 Threaded joints. Threads shall conform to ASME B1.20.1. Pipe-joint compound or tape shall be applied on the male threads only.

1303.3.4 Welded joints. All joint surfaces shall be cleaned by an *approved* procedure. The joint shall be welded with an *approved* filler metal.

➡ **1303.4 Copper or copper-alloy pipe.** Joints between copper or copper-alloy pipe or fittings shall be brazed, mechanical, threaded or welded joints complying with Section 1303.3.

1303.5 Copper or copper-alloy tubing. Joints between copper or copper-alloy tubing or fittings shall be brazed, mechanical joints complying with Section 1303.3, press-connect joints that conform to one of the standards in Table 1302.3 or flared joints. Flared joints shall be made by a tool designed for that operation.

1303.6 Nonmetallic pipe. Joints between nonmetallic pipe or fittings shall be installed in accordance with the manufacturer's instructions for the *labeled* pipe and fittings.

1303.7 Steel pipe. Joints between steel pipe or fittings shall be threaded or welded joints complying with Section 1303.3 or mechanical joints complying with Section 1303.7.1.

1303.7.1 Mechanical joints. Joints shall be made with an *approved* elastomeric seal. Mechanical joints shall be installed in accordance with the manufacturer's instructions. Mechanical joints shall be installed outdoors, underground, unless otherwise *approved*.

1303.8 Steel tubing. Joints between steel tubing or fittings shall be mechanical or welded joints complying with Section 1303.3.

1303.9 Piping protection. Proper allowance shall be made for expansion, contraction, jarring and vibration. Piping other than tubing, connected to underground tanks, except straight fill lines and test wells, shall be provided with flexible connectors, or otherwise arranged to permit the tanks to settle without impairing the tightness of the piping connections.

SECTION 1304
PIPING SUPPORT

1304.1 General. Pipe supports shall be in accordance with Section 305.

SECTION 1305
FUEL OIL SYSTEM INSTALLATION

1305.1 Size. The fuel oil system shall be sized for the maximum capacity of fuel oil required. The minimum size of a supply line shall be $^3/_8$-inch (9.5 mm) inside diameter nominal pipe or $^3/_8$-inch (9.5 mm) outside diameter tubing. The minimum size of a return line shall be $^1/_4$-inch (6.4 mm) inside diameter nominal pipe or $^5/_{16}$-inch (7.9 mm) outside diameter tubing. Copper tubing shall have 0.035-inch (0.9 mm) nominal and 0.032-inch (0.8 mm) minimum wall thickness.

1305.2 Protection of pipe, equipment and appliances. Fuel oil pipe, *equipment* and appliances shall be protected from physical damage.

1305.2.1 Flood hazard. Fuel oil pipe, equipment and appliances located in flood hazard areas shall be located above the elevation required by Section 1612 of the *Building Code of New York State* for utilities and attendant equipment or shall be capable of resisting hydrostatic and hydrodynamic loads and stresses, including the effects of buoyancy, during the occurrence of flooding up to such elevation.

1305.3 Supply piping. Supply piping shall connect to the top of the fuel oil tank. Fuel oil shall be supplied by a transfer pump or automatic pump or by other *approved* means.

Exception: This section shall not apply to inside or aboveground fuel oil tanks.

1305.4 Return piping. Return piping shall connect to the top of the fuel oil tank. Valves shall not be installed on return piping.

1305.5 System pressure. The system shall be designed for the maximum pressure required by the fuel-oil-burning *appliance*. Air or other gases shall not be used to pressurize tanks.

1305.6 Fill piping. A fill pipe shall terminate outside of a building at a point not less than 2 feet (610 mm) from any building opening at the same or lower level. A fill pipe shall terminate in a manner designed to minimize spilling when the filling hose is disconnected. Fill opening shall be equipped with a tight metal cover designed to discourage tampering.

1305.7 Vent piping. Liquid fuel vent pipes shall terminate outside of buildings at a point not less than 2 feet (610 mm) measured vertically or horizontally from any building opening. Outer ends of vent pipes shall terminate in a weatherproof vent cap or fitting or be provided with a weatherproof hood. Vent caps shall have a minimum free open area equal to the cross-sectional area of the vent pipe and shall not employ screens finer than No. 4 mesh. Vent pipes shall terminate sufficiently above the ground to avoid being obstructed with snow or ice. Vent pipes from tanks containing heaters shall be extended to a location where oil vapors discharging from the vent will be readily diffused. If the static head with a vent pipe filled with oil exceeds 10 pounds per square inch (psi) (69 kPa), the tank shall be designed for the maximum static head that will be imposed.

Liquid fuel vent pipes shall not be cross connected with fill pipes, lines from burners or overflow lines from auxiliary tanks.

SECTION 1306
OIL GAUGING

1306.1 Level indication. Tanks in which a constant oil level is not maintained by an automatic pump shall be equipped with a method of determining the oil level.

1306.2 Test wells. Test wells shall not be installed inside buildings. For outdoor service, test wells shall be equipped with a tight metal cover designed to discourage tampering.

INTERNATIONAL CODE COUNCIL®
Copyright © 2019 ICC & NYSDOS. ALL RIGHTS RESERVED. Accessed by Lauren Gualdino (lgualdino@briarcliffmanor.org), (-) Order Number #100880972 on May 08, 2020 07:05 AM (PDT) pursuant to License Agreement with ICC & NYSDOS. No further reproduction, no

100880972

1306.3 Inside tanks. The gauging of inside tanks by means of measuring sticks shall not be permitted. An inside tank provided with fill and vent pipes shall be provided with a device to indicate either visually or audibly at the fill point when the oil in the tank has reached a predetermined safe level.

1306.4 Gauging devices. Gauging devices such as liquid level indicators or signals shall be designed and installed so that oil vapor will not be discharged into a building from the liquid fuel supply system. Liquid-level indicating gauges shall comply with UL 180.

1306.5 Gauge glass. A tank used in connection with any oil burner shall not be equipped with a glass gauge or any gauge that, when broken, will permit the escape of oil from the tank.

SECTION 1307
FUEL OIL VALVES

1307.1 Building shutoff. A shutoff valve shall be installed on the fuel-oil supply line at the entrance to the building. Inside or above-ground tanks are permitted to have valves installed at the tank. The valve shall be capable of stopping the flow of fuel oil to the building or to the *appliance* served where the valve is installed at a tank inside the building. Valves shall comply with UL 842.

1307.2 Appliance shutoff. A shutoff valve shall be installed at the connection to each *appliance* where more than one fuel-oil-burning *appliance* is installed.

1307.3 Pump relief valve. A relief valve shall be installed on the pump discharge line where a valve is located downstream of the pump and the pump is capable of exceeding the pressure limitations of the fuel oil system.

1307.4 Fuel-oil heater relief valve. A relief valve shall be installed on the discharge line of fuel-oil-heating appliances.

1307.5 Relief valve operation. The relief valve shall discharge fuel oil when the pressure exceeds the limitations of the system. The discharge line shall connect to the fuel oil tank.

SECTION 1308
TESTING

1308.1 Testing required. Fuel oil piping shall be tested in accordance with NFPA 31.

INTERNATIONAL CODE COUNCIL®
Copyright © 2019 ICC & NYSDOS. ALL RIGHTS RESERVED. Accessed by Lauren Gualdino (lgualdino@briarcliffmanor.org), (-) Order Number #100880972 on May 08, 2020 07:05 AM (PDT) pursuant to License Agreement with ICC & NYSDOS. No further reproduction, no

100880972

INTERNATIONAL CODE COUNCIL®
Copyright © 2019 ICC & NYSDOS. ALL RIGHTS RESERVED. Accessed by Lauren Gualdino (lgualdino@briarcliffmanor.org), (-) Order Number #100880972 on May 08, 2020 07:05 AM (PDT) pursuant to License Agreement with ICC & NYSDOS. No further reproduction, no

100880972

CHAPTER 14
SOLAR THERMAL SYSTEMS

SECTION 1401
GENERAL

1401.1 Scope. This chapter shall govern the design, construction, installation, *alteration* and repair of solar thermal systems, *equipment* and appliances intended to utilize solar energy for space heating or cooling, domestic hot water heating, swimming pool heating or process heating.

1401.2 Potable water supply. Potable water supplies to solar systems shall be protected against contamination in accordance with the *Plumbing Code of New York State*.

Exception: Where all solar system piping is a part of the potable water distribution system, in accordance with the requirements of the *Plumbing Code of New York State*, and all components of the piping system are *listed* for potable water use, cross-connection protection measures shall not be required.

1401.3 Heat exchangers. Heat exchangers used in domestic water-heating systems shall be *approved* for the intended use. The system shall have adequate protection to ensure that the potability of the water supply and distribution system is properly safeguarded.

1401.4 Solar thermal equipment and appliances. Solar thermal *equipment* and appliances shall conform to the requirements of this chapter and ICC 900/SRCC 300. Solar thermal systems shall be listed and labeled in accordance with ICC 900/SRCC 300 and shall be installed in accordance with the manufacturer's instructions and ICC 900/SRCC 300.

1401.4.1 Collectors and panels. Solar thermal collectors and panels shall be listed and labeled in accordance with ICC 901/SRCC 100.

SECTION 1402
DESIGN AND INSTALLATION

1402.1 General. The design and installation of solar thermal systems shall comply with Sections 1402.1 through 1402.8. Solar thermal systems shall be listed and labeled in accordance with ICC 900/SRCC 300 and shall be installed in accordance with the manufacturer's instructions and ICC 900/SRCC 300.

1402.2 Access. Access shall be provided to solar thermal equipment for maintenance. Solar thermal systems and appurtenances shall not obstruct or interfere with the operation of any doors, windows or other building components requiring operation or access. Roof-mounted solar thermal equipment shall not obstruct or interfere with the operation of roof-mounted equipment, appliances, chimneys, roof hatches, smoke vents, skylights and other roof penetrations and openings.

1402.3 Pressure and temperature. Solar thermal system components containing pressurized fluids shall be protected against pressures and temperatures exceeding design limitations with pressure and temperature relief valves or pressure relief valves. System components shall have a working pressure rating of not less than the setting of the pressure relief device.

1402.3.1 Relief device. Each section of the system in which excessive pressures are capable of developing shall have a relief device located so that a section cannot be valved off or otherwise isolated from a relief device. Relief valves shall comply with the requirements of Section 1006.6. For indirect solar systems, pressure relief valves in solar loops shall also comply with ICC 900/SRCC 300.

1402.3.2 Vacuum. System components that might be subjected to a vacuum while in operation or during shutdown shall be designed to withstand such vacuum or shall be protected with vacuum relief valves.

1402.4 Protection from freezing. System components shall be protected from damage by freezing of heat transfer liquids at the lowest ambient temperatures that will be encountered during the operation of the system. Freeze protection shall be provided in accordance with ICC 900/SRCC 300. Drain-back systems shall be installed in compliance with Section 1402.4.1 and systems utilizing freeze-protection valves shall comply with Section 1402.4.2.

1402.4.1 Drain-back systems. Drain-back systems shall be designed and installed to allow for manual gravity draining of fluids from areas subject to freezing to locations not subject to freezing, and air filling of the components and piping. Such piping and components shall maintain a horizontal slope in the direction of flow of not less than one-fourth unit vertical in 12 units horizontal (2-percent slope). Piping and components subject to manual gravity draining shall permit subsequent air filling upon drainage and air storage or venting upon refilling.

1402.4.2 Freeze-protection valves. Freeze-protection valves shall discharge in a manner that does not create a hazard or structural damage.

1402.5 Protection of potable water. Where a solar thermal system heats potable water to supply a potable hot water distribution or any other type of heating system, the solar thermal system shall be in accordance with Sections 1402.5.1 through 1402.5.3 as applicable.

1402.5.1 Indirect systems. Water supplies of any type shall not be connected to the solar heating loop of an indirect solar thermal hot water heating system. This requirement shall not prohibit the presence of inlets or outlets on the solar heating loop for the purposes of servicing the fluid in the solar heating loop.

1402.5.2 Direct systems for potable water distribution systems. Where a solar thermal system directly heats potable water for a potable water distribution system, the pipe,

INTERNATIONAL CODE COUNCIL®
Copyright © 2019 ICC & NYSDOS. ALL RIGHTS RESERVED. Accessed by Lauren Gualdino (lgualdino@briarcliffmanor.org), (-) Order Number #100880972 on May 08, 2020 07:05 AM (PDT) pursuant to License Agreement with ICC & NYSDOS. No further reproduction, no

100880972

fittings, valves and other components that are in contact with the potable water in the system shall comply with the requirements of the *Plumbing Code of New York State*.

1402.5.3 Direct systems for other than potable water distribution systems. Where a solar thermal system directly heats water for a system other than a potable water distribution system, a potable water supply connected to such system shall be protected against backflow in accordance with the *Plumbing Code of New York State.*

1402.6 Protection of equipment. Solar thermal *equipment* exposed to vehicular traffic shall be installed not less than 6 feet (1829 mm) above the finished floor.

Exception: This section shall not apply where the *equipment* is protected from motor vehicle impact.

1402.7 Protection of structure. In the process of installing or repairing any part of a solar thermal system, the building or structure shall be left in a safe structural condition in accordance with Sections 302, 1402.7.1 and 1402.7.2.

1402.7.1 Controlling condensation. Where attics or structural spaces are part of a passive solar system, ventilation of such spaces, as required by Section 406, is not required where other *approved* means of controlling condensation are provided.

1402.7.2 Penetrations. Roof and wall penetrations shall be flashed and sealed to prevent entry of water, rodents and insects in accordance with Section 302.

1402.8 Equipment. The solar thermal system shall be equipped in accordance with the requirements of Sections 1402.8.1 through 1402.8.5.3.

1402.8.1 Collectors and panels. Solar collectors and panels shall comply with Sections 1402.8.1.1 through 1402.8.1.4.

1402.8.1.1 Design. Solar thermal collectors and panels shall be listed and labeled in accordance with ICC 901/SRCC 100.

1402.8.1.2 Rooftop-mounted solar thermal collectors and systems. The roof shall be constructed to support the loads imposed by roof-mounted solar collectors. Where mounted on or above the roof covering, the collector array and supporting construction shall be constructed of noncombustible materials or fire-retardant-treated wood conforming to the *Building Code of New York State* to the extent required for the type of roof construction of the building to which the collectors are accessory.

1402.8.1.3 Collectors as roof covering. Roof-mounted solar collectors that also serve as a roof covering shall conform to the requirements for roof coverings in accordance with the *Building Code of New York State*.

Exception: The use of plastic solar collector covers shall be limited to those *approved* light-transmitting plastics meeting the requirements for plastic roof panels in Section 2609 of the *Building Code of New York State.*

1402.8.1.4 Collector sensors. Collector sensor installation, sensor location and the protection of exposed sensor wires from degradation shall be in accordance with ICC 900/SRCC 300, NFPA 70 and the collector manufacturer's instructions.

1402.8.2 Ducts. Ducts utilized in solar heating and cooling systems shall be constructed and installed in accordance with Chapter 6.

1402.8.2.1 Filtering. Air transported to occupied spaces through dust-producing materials by means other than natural convection shall be filtered before entering the occupied space in accordance with Section 605.

1402.8.3 Piping. Potable piping shall be installed in accordance with the *Plumbing Code of New York State*. Hydronic piping shall be installed in accordance with Chapter 12 of this code. Mechanical system piping shall be supported in accordance with Section 305.

1402.8.3.1 Piping insulation. Piping shall be insulated in accordance with the requirements of the *Energy Conservation Construction Code of New York State*. Exterior insulation shall be protected from degradation. The entire solar loop shall be insulated. Where split-style insulation is used, the seam shall be sealed. Fittings shall be fully insulated. Insulation shall comply with Section 1204.1.

Exceptions:

1. Those portions of the piping that are used to help prevent the system from overheating shall not be required to be insulated.
2. Those portions of piping that are exposed to solar radiation, made of the same material as the solar collector absorber plate and covered in the same manner as the solar collector absorber, or that are used to collect additional solar energy, shall not be required to be insulated.
3. Piping in solar thermal systems using unglazed solar collectors to heat a swimming pool shall not be required to be insulated.

1402.8.4 Heat exchangers. Heat exchangers used in domestic water-heating systems shall be approved for the intended use. The system shall have adequate protection to ensure that the potability of the water supply and distribution system is properly safeguarded.

1402.8.4.1 Double-wall heat exchangers. Heat exchangers utilizing a non-food-grade fluid shall be separated from the potable water by double-wall construction. An air gap open to the atmosphere shall be provided between the two walls. The discharge location from the double-wall heat exchanger shall be visible.

1402.8.4.2 Single-wall heat exchangers. Food-grade fluids shall be used as the heat transfer fluid in single-wall heat exchangers.

1402.8.5 Water heaters and hot water storage tanks. Auxiliary water heaters, boilers and water storage tanks associated with solar thermal systems shall comply with Chapter 10 and ICC 900/SRCC 300.

INTERNATIONAL CODE COUNCIL®
Copyright © 2019 ICC & NYSDOS. ALL RIGHTS RESERVED. Accessed by Lauren Gualdino (lgualdino@briarcliffmanor.org), (-) Order Number #100880972 on May 08, 2020 07:05 AM (PDT) pursuant to License Agreement with ICC & NYSDOS. No further reproduction, no

100880972

1402.8.5.1 Hot water storage tank insulation. Hot water storage tanks shall be insulated and such insulation shall have an *R*-value of not less than R-12.5.

1402.8.5.2 Outdoor locations. Storage tanks and heating equipment installed in outdoor locations shall be designed for outdoor installation.

1402.8.5.3 Storage tank sensors. Storage tank sensors shall comply with ICC 900/SRCC 300.

1402.8.6 Solar loop. Solar loops shall be in accordance with Sections 1402.8.6.1 and 1402.8.6.2.

1402.8.6.1 Solar loop isolation. Valves shall be installed to allow the solar loop to be isolated from the remainder of the system.

1402.8.6.2 Drain and fill valve caps. Drain caps shall be installed on drain and fill valves.

1402.8.7 Expansion tanks. Liquid single-phase solar energy systems shall be equipped with expansion tanks sized in accordance with Section 1009, except that additional expansion tank acceptance volume equal to the total volume of liquid contained in the installed solar collectors and piping above the collectors shall be included.

SECTION 1403
HEAT TRANSFER FLUIDS

1403.1 Flash point. The flash point of the heat transfer fluid utilized in a solar system shall be not less than 50°F (28°C) above the design maximum nonoperating (no-flow) temperature of the fluid attained in the collector.

1403.2 Heat transfer fluids. Heat transfer gases and liquids shall be rated to withstand the system's maximum design temperature under operating conditions without degradation. Heat transfer fluids shall be in accordance with ICC 900/SRCC 300.

1403.3 Food-grade additives. Any food-grade fluid used as a heat transfer fluid containing additives shall be third-party listed by an approved agency to the appropriate section of the Code of Federal Regulations, Title 21, Food and Drugs, Chapter 1, Food and Drug Administration, Parts 174–186.

1403.4 Toxicity. The use of toxic fluids shall comply with Title 15 of the Federal Hazardous Substances Act and Chapter 60 of the *Fire Code of New York State*.

1403.5 Flammable gases and liquids. A flammable liquid or gas shall not be utilized as a heat transfer fluid. The flash point of liquids used in occupancies classified in Group H or F shall not be lower unless *approved*.

SECTION 1404
LABELING

1404.1 Collectors. Factory-built collectors shall bear a label showing the manufacturer's name and address, model number and serial number.

1404.2 Water storage tanks. Pressurized water storage tanks shall bear a label showing the manufacturer's name and address, model number, serial number, storage unit maximum and minimum allowable operating temperatures, and storage unit maximum and minimum allowable operating pressures. The label shall clarify that these specifications apply only to the water storage tanks.

1404.3 Fluid safety labeling. Drain and fill valves shall be labeled with a description and warning that identifies the fluid in that loop as "Potable Water," "Food-Grade Fluid," "Non-Food-Grade Fluid" or "Toxic." Labeling shall also be provided that reads as follows: "Fluid could be discharged at high temperature or pressure or both. Unauthorized alterations to this system could result in a health hazard or a hazardous condition."

1404.4 Heat exchangers. Heat exchangers shall be labeled to indicate the heat exchanger type with one of the following:

1. "Single-wall without leak protection."
2. "Double-wall without leak protection."
3. "Double-wall with leak protection."

INTERNATIONAL CODE COUNCIL®
Copyright © 2019 ICC & NYSDOS. ALL RIGHTS RESERVED. Accessed by Lauren Gualdino (lgualdino@briarcliffmanor.org), (-) Order Number #100880972 on May 08, 2020 07:05 AM (PDT) pursuant to License Agreement with ICC & NYSDOS. No further reproduction, no

100880972

INTERNATIONAL CODE COUNCIL®
Copyright © 2019 ICC & NYSDOS. ALL RIGHTS RESERVED. Accessed by Lauren Gualdino (lgualdino@briarcliffmanor.org), (-) Order Number #100880972 on May 08, 2020 07:05 AM (PDT) pursuant to License Agreement with ICC & NYSDOS. No further reproduction, no

100880972

CHAPTER 15
REFERENCED STANDARDS

User note:

The standards are listed herein by the promulgating agency of the standard, the standard identification, the effective date and title, and the section or sections of this document that reference the standard. The application of the referenced standards shall be as specified in Section 102.4.

**Denotes standards that have been incorporated by reference into 19 NYCRR Part 1223.*

ACCA

Air Conditioning Contractors of America
2800 Shirlington Road, Suite 300
Arlington, VA 22206

***ANSI/ACCA 1 Manual D—2014: Residential Duct Systems**
601.4, 603.2

***ANSI/ASHRAE/ACCA 183—2007 (reaffirmed 2014): Peak Cooling and Heating Load Calculations in Buildings Except Low-rise Residential Buildings**
312.1

AHRI

Air-Conditioning, Heating & Refrigeration Institute
2111 Wilson Blvd., Suite 500
Arlington, VA 22201

700—2015 with Addendum 1: Specifications for Refrigerants
1102.2.2.3

AMCA

Air Movement and Control Association International
30 West University Drive
Arlington Heights, IL 60004

230-15: Laboratory Methods of Testing Air Circulating Fans for Rating and Certification
929.1

550—09: Test Method for High Velocity Wind Driven Rain Resistant Louvers
401.5, 501.3.2

ANSI/AMCA 210–ANSI/ASHRAE 51—07: Laboratory Methods of Testing Fans for Aerodynamic Performance Rating
403.3.2.4

ANSI

American National Standards Institute
25 West 43rd Street, 4th Floor
New York, NY 10036

Z21.1—2010: Household Cooking Gas Appliances
505.2

***Z21.8—1994 (R2002): Installation of Domestic Gas Conversion Burners**
919.1

INTERNATIONAL CODE COUNCIL®
Copyright © 2019 ICC & NYSDOS. ALL RIGHTS RESERVED. Accessed by Lauren Gualdino (lgualdino@briarcliffmanor.org), (-) Order Number #100880972 on May 08, 2020 07:05 AM (PDT) pursuant to License Agreement with ICC & NYSDOS. No further reproduction, no

100880972

ASHRAE

ASHRAE
1791 Tullie Circle NE
Atlanta, GA 30329

ANSI/AMCA 210–ANSI/ASHRAE 51—07: Laboratory Methods of Testing Fans for Aerodynamic Performance Rating
403.3.2.4

***ASHRAE—2017: 2017 ASHRAE Fundamentals Handbook**
603.2

***15—2016: Safety Standard for Refrigeration Systems**
1101.6, 1105.8, 1108.1

***34—2016: Designation and Safety Classification of Refrigerants**
202, 1102.2.1, 1103.1

***62.1—2013: Ventilation for Acceptable Indoor Air Quality**
403.3.1.1.2.3.2

***170—2008: Ventilation of Health Care Facilities**
407

180—2012: Standard Practice for Inspection and Maintenance of Commercial Building HVAC Systems
102.3

ASME

American Society of Mechanical Engineers
Two Park Avenue
New York, NY 10016-5990

A112.4.1—2009: Water Heater Relief Valve Drain Tubes
1006.6

B1.20.1—2013: Pipe Threads, General Purpose (Inch)
1203.3.5, 1303.3.3

B16.3—2016: Malleable Iron Threaded Fittings, Classes 150 & 300
Table 1202.5

B16.5—2015: Pipe Flanges and Flanged Fittings NPS $^{1}/_{2}$ through NPS 24
Table 1202.5

B16.9—2012: Factory Made Wrought Steel Buttwelding Fittings
Table 1202.5

B16.11—2016: Forged Fittings, Socket-welding and Threaded
Table 1202.5

B16.15—2013: Cast Alloy Threaded Fittings: Classes 125 and 250
Table 1202.5

B16.18—2012: Cast Copper Alloy Solder Joint Pressure Fittings
513.13.1, Table 1202.5

B16.22—2013: Wrought Copper and Copper Alloy Solder Joint Pressure Fittings
513.13.1, Table 1202.5

B16.24—2016: Cast Copper Alloy Pipe Flanges and Flanged Fittings: Class 150, 300, 400, 600, 900, 1500 and 2500
Table 1202.5

B16.26—2016: Cast Copper Alloy Fittings for Flared Copper Tubes
Table 1202.5

B16.28—1994: Wrought Steel Buttwelding Short Radius Elbows and Returns
Table 1202.5

B16.51—2013: Copper and Copper Alloy Press-connect Pressure Fittings
Table 1202.5

B31.5—2016: Refrigeration Piping and Heat Transfer Components
1107.1

***B31.9—2011: Building Services Piping**
1201.3

INTERNATIONAL CODE COUNCIL®
Copyright © 2019 ICC & NYSDOS. ALL RIGHTS RESERVED. Accessed by Lauren Gualdino (lgualdino@briarcliffmanor.org), (-) Order Number #100880972 on May 08, 2020 07:05 AM (PDT) pursuant to License Agreement with ICC & NYSDOS. No further reproduction, no

100880972

ASME—continued

BPVC—2015: ASME Boiler & Pressure Vessel Code–07 Edition
1009.2, 1003.1, 1004.1, 1011.1

CSD-1—2016: Controls and Safety Devices for Automatically Fired Boilers
1004.1

ASSE

American Society of Safety Engineers
520 N. Northwest Highway
Park Ridge, IL 60068

***ANSI/ASSE Z359.1—2007: Requirements for ANSI/ASSE Z359 Fall Protection Code**
304.11

ASSE

ASSE International
18927 Hickory Creek Drive, Suite 220
Mokena, IL 60448

1017—2010: Performance Requirements for Temperature Actuated Mixing Values for Hot Water Distribution Systems
1002.2.2

1061—2015: Performance Requirements for Push Fit Fittings
Table 1202.5

ASTM

ASTM International
100 Barr Harbor Drive, P.O. Box C700
West Conshohocken, PA 19428

A53/A53M—12: Specification for Pipe, Steel, Black and Hot-dipped, Zinc-coated, Welded and Seamless
Table 1202.4, Table 1202.5, Table 1302.3

A106/A106M—14: Specification for Seamless Carbon Steel Pipe for High-temperature Service
Table 1302.3, Table 1202.5, Table 1202.4 Table 1302.3

A126—04(2014): Specification for Gray Iron Castings for Valves, Flanges and Pipe Fittings
Table 1202.5

A234/A234M—15: Standard Specification for Piping Fittings of Wrought Carbon Steel and Alloy Steel for Moderate and High Temperature Service
Table 1202.5

A254—12: Specification for Copper Brazed Steel Tubing
Table 1202.4, Table 1302.3

A395/A395M—99(2014): Standard Specification for Ferritic Ductile Iron Pressure-retaining Castings for Use at Elevated Temperatures
Table 1202.5, Table 1302.3

A420/A420M—14: Specification for Piping Fittings of Wrought Carbon Steel and Alloy Steel for Low-temperature Service
Table 1202.5

A536—84(2014): Standard Specification for Ductile Iron Castings
Table 1202.5

A539—99: Specification for Electric-resistance-welded Coiled Steel Tubing for Gas and Fuel Oil Lines
Table 1302.3

B32—08(2014): Specification for Solder Metal
1203.3.3

B42—15a: Specification for Seamless Copper Pipe, Standard Sizes
513.13.1, 1107.5.2, Table 1202.4, Table 1302.3

B43—15: Specification for Seamless Red Brass Pipe, Standard Sizes
513.13.1, 1107.5.2, Table 1202.4, Table 1302.3

B68/B58M—11: Specification for Seamless Copper Tube, Bright Annealed
513.13.1

B75/B75M—11: Specification for Seamless Copper Tube
Table 1302.3

INTERNATIONAL CODE COUNCIL®
Copyright © 2019 ICC & NYSDOS. ALL RIGHTS RESERVED. Accessed by Lauren Gualdino (lgualdino@briarcliffmanor.org), (-) Order Number #100880972 on May 08, 2020 07:05 AM (PDT) pursuant to License Agreement with ICC & NYSDOS. No further reproduction, no

100880972

ASTM—continued

B88—14: Specification for Seamless Copper Water Tube
513.13.1, 1107.5.3, Table 1202.4, Table 1302.3

B135—10: Specification for Seamless Brass Tube
Table 1202.4

B251—10: Specification for General Requirements for Wrought Seamless Copper and Copper-alloy Tube
513.13.1, Table 1202.4

B280—13: Specification for Seamless Copper Tube for Air Conditioning and Refrigeration Field Service
513.13.1, 1107.5.3, Table 1302.3

B302—12: Specification for Threadless Copper Pipe, Standard Sizes
Table 1202.4, Table 1302.3

B813—10: Specification for Liquid and Paste Fluxes for Soldering of Copper and Copper Alloy Tube
1203.3.3

B819—00(R2011): Standard Specification for Seamless Copper Tube for Medical Gas Systems
1107.5.3

*** B828—02(2010): Practice for Making Capillary Joints by Soldering of Copper and Copper Alloy Tube and Fittings**
1203.3.3

C315—07(2011): Specification for Clay Flue Liners and Chimney Pots
801.16.1, Table 803.10.4

C411—11: Test Method for Hot-surface Performance of High-temperature Thermal Insulation
604.3

D56—05(2010): Test Method for Flash Point by Tag Closed Cup Tester
202

D93—15: Test Method for Flash Point of Pensky-Martens Closed Cup Tester
202

D1527—99(2005): Specification for Acrylonitrile-Butadiene-Styrene (ABS) Plastic Pipe, Schedules 40 and 80
Table 1202.4

D1693—15: Test Method for Environmental Stress-cracking of Ethylene Plastics
Table 1202.4

D1785—15: Specification for Poly (Vinyl Chloride) (PVC) Plastic Pipe, Schedules 40, 80 and 120
Table 1202.4, Table 1210.4

D2235—04(2011): Specifications for Solvent Cement for Acrylonitrile-Butadiene-Styrene (ABS) Plastic Pipe and Fittings
1203.3.4

D2241—15: Specification for Poly (Vinyl Chloride) (PVC) Pressure-rated Pipe (SDR-Series)
Table 1202.4, Table 1210.4

D2282—99(2005): Specification for Acrylonitrile-Butadiene-Styrene (ABS) Plastic Pipe (SDR-PR)
Table 1202.4

D2412—11: Test Method for Determination of External Loading Characteristics of Plastic Pipe by Parallel-plate Loading
603.8.3

D2464—15: Standard Specification for Threaded Poly (Vinyl Chloride) (PVC) Plastic Pipe Fittings, Schedule 80
Table 1210.5

D2466—15: Specification for Poly (Vinyl Chloride) (PVC) Plastic Pipe Fittings, Schedule 40
Table 1202.5, Table 1210.5

D2467—15: Specification for Poly (Vinyl Chloride) (PVC) Plastic Pipe Fittings, Schedule 80
Table 1202.5, Table 1210.5

D2564—12: Specification for Solvent Cements for Poly (Vinyl Chloride) (PVC) Plastic Piping Systems
1203.3.4

***D2657—07: Standard Practice for Heat Fusion Joining of Polyolefin Pipe and Fittings**
Table 1210.5

D2683—14: Specification for Socket-type Polyethylene Fittings for Outside Diameter-controlled Polyethylene Pipe and Tubing
Table 1210.5, 1210.6.6.1

D2737—12a: Standard Specification for Polyethylene (PE) Plastic Tubing
Table 1210.4

INTERNATIONAL CODE COUNCIL®
Copyright © 2019 ICC & NYSDOS. ALL RIGHTS RESERVED. Accessed by Lauren Gualdino (lgualdino@briarcliffmanor.org), (-) Order Number #100880972 on May 08, 2020 07:05 AM (PDT) pursuant to License Agreement with ICC & NYSDOS. No further reproduction, no

100880972

ASTM—continued

D2846/D2846M—14: Specification for Chlorinated Poly (Vinyl Chloride) (CPVC) Plastic Hot- and Cold-water Distribution Systems
Table 1202.4, 1203.3.4, Table 1210.4

D2996—01(2007)e01: Specification for Filament-wound Fiberglass (Glass Fiber Reinforced Thermosetting Resin) Pipe
Table 1302.3

D3035—15: Specification for Polyethylene (PE) Plastic Pipe (DR-PR) Based on Controlled Outside Diameter
Table 1210.4

D3261—12e1: Specification for Butt Heat Fusion Polyethylene (PE) Plastic Fittings for Polyethylene (PE) Plastic Pipe and Tubing
Table 1210.5, 1210.6.6.1

D3278—96(2011): Test Methods for Flash Point of Liquids by Small Scale Closed-cup Apparatus
202

D3309—96a(2002): Specification for Polybutylene (PB) Plastic Hot- and Cold-water Distribution Systems
Table 1202.4, 1203.10.1

E84—2016: Standard Test Method for Surface Burning Characteristics of Building Materials
202, 510.9, 602.2, 602.2.1, 602.2.1.6, 602.2.1.6.1, 602.2.1.6.2, 602.2.1.6.3, 602.2.1.7, 604.3, 1204.1

E119—2016: Test Method for Fire Tests of Building Construction and Materials
607.5.2, 607.5.5, 607.6.1, 607.2.1

E136—16: Standard Test Method for Behavior of Materials in a Vertical Tube Furnace at 750 Degrees C
202

E814—13a: Standard Test Method for Fire Tests of Penetration Firestop Systems
506.3.11.2, 506.3.11.3

E1509—12: Specification for Room Heaters, Pellet Fuel-burning Type
904.1

E2231—15: Standard Practice for Specimen Preparation and Mounting of Pipe and Duct Insulation Materials to Assess Surface Burning Characteristics
604.3, 1204.1

E2336—16: Standard Test Methods for Fire Resistive Grease Duct Enclosure Systems
506.3.6, 506.3.11.2

F437—15: Specification for Threaded Chlorinated Poly (Vinyl Chloride) (CPVC) Plastic Pipe Fittings, Schedule 80
Table 1210.5

F438—15: Specification for Socket Type Chlorinated Poly (Vinyl Chloride) (CPVC) Plastic Pipe Fittings, Schedule 40
Table 1202.5, Table 1210.5

F439—13: Specification for Socket Type Chlorinated Poly (Vinyl Chloride) (CPVC) Plastic Pipe Fittings, Schedule 80
Table 1202.5, Table 1210.5

F441/F441M—15: Specification for Chlorinated Poly (Vinyl Chloride) (CPVC) Plastic Pipe, Schedules 40 and 80
Table 1202.4, Table 1210.4

F442/F442M—13e1: Specification for Chlorinated Poly (Vinyl Chloride) (CPVC) Plastic Pipe (SDR-PR)
Table 1202.4, Table 1210.4

F493—14: Specification for Solvent Cements for Chlorinated Poly (Vinyl Chloride) (CPVC) Plastic Pipe and Fittings
1203.3.4

F714—13: Standard Specification for Polyethylene (PE) Plastic Pipe (SDR-PR) Based on Outside Diameter
Table 1210.4

F876—15A: Specification for Cross-linked Polyethylene (PEX) Tubing
Table 1202.4, Table 1210.4

F877—11a: Specification for Cross-linked Polyethylene (PEX) Plastic Hot- and Cold-water Distribution Systems
Table 1202.4, Table 1202.5, Table 1210.4

F1055—13: Specification for Electrofusion Type Polyethylene Fittings for Outside Diameter Controlled Polyethylene and Cross-linked Polyethylene (PEX) Pipe and Tubing
Table 1210.5, 1210.6.6.2

F1281—11: Specification for Cross-linked Polyethylene/Aluminum/Crosslinked Polyethylene (PEX-AL-PEX) Pressure Pipe
Table 1202.4

F1282—10: Standard Specification for Polyethylene/Aluminum/Polyethylene (PE-AL-PE) Composite Pressure Pipe
Table 1202.4. Table 1210.4, Table 1210.5

INTERNATIONAL CODE COUNCIL®
Copyright © 2019 ICC & NYSDOS. ALL RIGHTS RESERVED. Accessed by Lauren Gualdino (lgualdino@briarcliffmanor.org), (-) Order Number #100880972 on May 08, 2020 07:05 AM (PDT) pursuant to License Agreement with ICC & NYSDOS. No further reproduction, no

100880972

ASTM—continued

F1476—07(2013): Specification for Performance of Gasketed Mechanical Couplings for Use in Piping Applications
Table 1202.5, 1203.3.7

F1548—01(2012): Standard Specification for the Performance of Fittings for Use with Gasketed Mechanical Couplings Used in Piping Applications
Table 1202.5

F1807—15: Standard Specification for Metal Insert Fittings Utilizing a Copper Crimp Ring for SDR9 Cross-linked Polyethylene (PEX) Tubing and SDR9 Polethylene of Raised Temperature (PE-RT) Tubing
Table 1202.5, Table 1210.5

F1924—12: Standard Specification for Plastic Mechanical Fittings for Use on Outside Diameter Controlled Polyethylene Gas Distribution Pipe and Tubing
1210.6.6.3

F1960—15: Specification for Cold-expansion Fittings with PEX Reinforcing Rings for Use with Cross-linked Polyethylene (PEX) Tubing
Table 1202.5

F1974—09(2005): Standard Specification for Metal Insert Fittings for Polyethylene/Aluminum/Polyethylene and Cross-linked Polyethylene/Aluminum/Cross-linked Polyethylene Composite Pressure Pipe
Table 1202.5

F2080—15: Specification for Cold-expansion Fittings with Metal Compression-sleeves for Cross-linked Polyethylene (PEX) Pipe
Table 1202.5

F2098—08: Standard Specification for Stainless Steel Clamps for Securing SDR9 Cross-linked Polyethylene (PEX) Tubing to Metal Insert and Plastic Insert Fittings
Table 1202.5

F2159—14: Standard Specification for Plastic Insert Fittings Utilizing a Copper Crimp Ring for SDR9 Cross-linked Polyethylene (PEX) Tubing and SDR9 Polyethylene of Raised Temperature (PE-RT) Tubing
Table 1202.5, Table 1210.5

F2389—15: Specification for Pressure-rated Polypropylene Piping Systems
Table 1202.4, Table 1202.5, 1203.15.1, Table 1210.4, Table 1210.5, 1210.6.7.1

F2434—14: Standard Specification for Metal Insert Fittings Utilizing a Copper Crimp Ring for SDR9 Cross-linked Polyethylene (PEX) Tubing and SDR9 Cross-linked Polyethylene/Aluminum/Cross-linked Polyethylene (PEX-AL-PEX) Tubing
Table 1210.5

F2623—14: Standard Specification for Polyethylene of Raised Temperature (PE-RT) SDR9 Tubing
Table 1202.4, Table 1210.4

F2735—09: Standard Specification for Plastic Insert Fittings for SDR9 Cross-linked Polyethylene (PEX) and Polyethylene of Raised Temperature (PE-RT) Tubing
Table 1202.5

F2769—14: Polyethylene of Raised Temperature (PE-RT) Plastic Hot- and Cold-water Tubing and Distribution Systems
Table 1202.4, Table 1210.5

F2806—10(2015): Standard Specification for Acrylonitrile-Butadiene-Styrene (ABS) Plastic Pipe (Metric SDR-PR)
Table 1202.4

AWS

American Welding Society
8669 NW 36 Street, #130
Miami, FL 33166

A5.8M/A5.8—2011: Specifications for Filler Metals for Brazing and Braze Welding
1203.3.1, 1303.3.1

INTERNATIONAL CODE COUNCIL®
Copyright © 2019 ICC & NYSDOS. ALL RIGHTS RESERVED. Accessed by Lauren Gualdino (lgualdino@briarcliffmanor.org), (-) Order Number #100880972 on May 08, 2020 07:05 AM (PDT) pursuant to License Agreement with ICC & NYSDOS. No further reproduction, no

100880972

AWWA

American Water Work Association
6666 West Quincy Avenue
Denver, CO 80235

C901—16: Polyethylene (PE) Pressure Pipe and Tubing, $^{3}/_{4}$ in. (19 mm) through 3 in. (76 mm) for Water Service
Table 1210.4

C110/A21.10—12: Standard for Ductile Iron & Gray Iron Fittings
Table 1202.5

C115/A21.15—11: Standard for Flanged Ductile-iron Pipe with Ductile Iron or Grey-iron Threaded Flanges
Table 1202.4

C151/A21.51—09: Standard for Ductile-iron Pipe, Centrifugally Cast for Water
Table 1202.4

C153/A21.53—11: Standard for Ductile-iron Compact Fittings for Water Service
Table 1202.5

CPSC

Consumer Product Safety Commission
4330 East West Highway
Bethesda, MD 20814

CPSC August 2011. Title 15 of the Federal Hazardous Substance Act
202, 1009.1

CSA

CSA Group
8501 East Pleasant Valley Road
Cleveland, OH 44131-5516

B137.2—16: Polyvinylchloride (PVC) Injection-moulded Gasketed Fittings for Pressure Applications
Table 1210.5

B137.3—16: Rigid Poly (Vinyl Chloride) (PVC) Pipe for Pressure Applications
Table 1210.5

B137.6—16: Chlorinated Polyvinylchloride (CPVC) Pipe, Tubing and Fittings for Hot- and Cold-water Distribution Systems
Table 1210.5

B137.9—16: Polyethylene/Aluminum/Polyethylene (PE-AL-PE) Composite Pressure-pipe Systems
Table 1202.4, Table 1210.4, Table 1210.5

B137.10—16: Cross-linked Polyethylene/Aluminum/Cross-linked Polyethylene (PEX-AL-PEX) Composite Pressure-pipe Systems
Table 1202.4

CSA C448 Series—16: Design and Installation of Earth Energy Systems
Table 1210.5

CSA C22.2 No. 218.1–M89(R2011): Spas, Hot Tubs and Associated Equipment
916.1

CSA C22.2 No. 236—11: Heating and Cooling Equipment
916.1

CSA B137.1—16: Polyethylene (PE) Pipe, Tubing and Fittings for Cold-water Pressure Services
Table 1210.4, Table 1210.5

CSA B137.5—16: Cross-linked Polyethylene (PEX) Tubing Systems for Pressure Applications
Table 1210.4, Table 1210.5

CSA B137.11—16: Polypropylene (PP-R) Pipe and Fittings for Pressure Applications
Table 1210.4, Table 1210.5

CSA B137.18—13: Polyethylene of Raised Temperature Resistance (PE-RT) Tubing Systems for Pressure Applications
Table 1202.4, Table 1202.5, Table 1210.5

America FC1—2012: Stationary Fuel Cell Power Systems
924.1

INTERNATIONAL CODE COUNCIL®
Copyright © 2019 ICC & NYSDOS. ALL RIGHTS RESERVED. Accessed by Lauren Gualdino (lgualdino@briarcliffmanor.org), (-) Order Number #100880972 on May 08, 2020 07:05 AM (PDT) pursuant to License Agreement with ICC & NYSDOS. No further reproduction, no

100880972

DOL

U.S. Department of Labor
Occupational Safety and Health Administration
c/o Superintendent of Documents
U.S. Government Printing Office
Washington, DC 20402-9325

29 CFR Part 1910.1000 (2015): Air Contaminants
502.6

29 CFR Part 1910.1025 (2015): Toxic and Hazardous Substances
502.19

FDA

U.S. Food and Drug Administration
10903 New Hampshire Avenue
Silver Springs, MD 20993

FDA Title 15: Federal Hazardous Substances Act
1403.4

FDA Title 21: Code of Federal Regulations, Title 21, Food and Drugs, Chapter 1, Food and Drug Administration, Parts 174–186 (revised as of April 1, 2015)
1403.3

FS

Federal Specifications*
General Services Administration
7th & D Streets
Specification Section, Room 6039
Washington, DC 20407

WW-P-325B (1976): Pipe, Bends, Traps, Caps and Plugs; Lead (for Industrial Pressure and Soil and Waste Applications)
Table 1202.4
*Standards are available from the Supt. of Documents, U.S. Government Printing Office, Washington, DC 20402-9325

ICC

International Code Council, Inc.
500 New Jersey Ave NW
6th Floor
Washington, DC 20001

BCNYS—20: *Building Code of New York State
201.3, 202, 301.15, 301.16, 301.17, 301.18, 302.1, 302.2, 304.8, 304.11, 308.4.2.2, 308.4.2.4, 401.4, 401.5, 406.1, 501.3.1, 501.3.2, 501.10.2, 502.10, 502.10.1, 504.2, 504.10, 505.3, 506.3.3, 506.3.10, 506.3.12.2, 506.4.1, 509.1, 510.6, 510.6.3, 510.6.2, 510.7, 510.7.1.1, 510.7.2, 510.7.3, 510.8, 511.1.5, 513.1, 513.2, 513.3, 513.4.3, 513.5, 513.5.2, 513.5.2.1, 513.5.3, 513.5.3.2, 513.6.2, 513.10.5, 513.11.1, 513.12, 513.12.2, 513.20, 601.3, 602.2, 602.2.1.5.1, 602.2.1.5.2, 602.2.1.6.1, 602.2.1.6.2, 602.3, 602.4, 603.1, 603.10, 603.13, 603.18.2, 604.5.4, 607.1.1, 607.1.2, 607.3.2.1, 607.5.1, 607.5.2, 607.5.3, 607.5.4, 607.5.4.1, 607.5.5, 607.5.5.1, 607.5.6, 607.6, 607.6.1, 607.6.2, 607.6.2.1, 607.6.3, 701.2, 701.4.1, 701.4.2, 801.3, 801.16.1, 801.18.4, 801.18.4.1, 902.1, 908.3, 908.4, 910.3, 924.1, 925.1, 926.1, 927.2, 928.1, 1004.6, 1105.1, 1206.4, 1210.8.2, 1305.2.1, 1402.4, 1402.4.1

ECCCNYS—20: *Energy Conservation Construction Code of New York State
301.2, 303.3, 312.1, 401.2, 514.1, 604.1, 1204.1, 1204.2

FCNYS—20: *Fire Code of New York State
201.3, 310.1, 311.1, 502.4, 502.7.2, 502.8.1, 502.9.1, 502.9.5, 502.9.5.2, 502.9.5.3, 502.9.8.2, 502.9.8.3, 502.9.8.5, 502.9.8.6, 502.9.11, 502.10, 502.10.3, 502.16.2, 509.1, 510.2.1, 510.2.2, 510.5, 511.1.1, 513.1, 513.2, 513.6.3, 513.12.1, 513.12.3, 513.12.4, 513.15, 513.16, 513.17, 513.18, 513.19, 606.2.1, 606.4.1, 908.7, 924.1, 926.1, 1101.9, 1105.3, 1105.9, 1106.5, 1106.6, 1301.1, 1301.2, 1301.5

FGCNYS—20: *Fuel Gas Code of New York State
101.2, 201.3, 301.6, 701.1, 801.1, 901.1, 906.1, 926.1, 1101.5

ICC 900/SRCC Standard 300—15: Solar Thermal System Standard
1002.1, 1401.4, 1401.4.1, 1402.1, 1402.3.1, 1402.4, 1402.8.1.1, 1402.8.1.4, 1402.8.5, 1402.8.5.3, 1403.2

INTERNATIONAL CODE COUNCIL®
Copyright © 2019 ICC & NYSDOS. ALL RIGHTS RESERVED. Accessed by Lauren Gualdino (lgualdino@briarcliffmanor.org), (-) Order Number #100880972 on May 08, 2020 07:05 AM (PDT) pursuant to License Agreement with ICC & NYSDOS. No further reproduction, no

100880972

ICC—continued

ICC 901/SRCC Standard 100—15: Solar Thermal Collector Standard
1401.4.1, 1402.8.1.1

PCNYS—20: *Plumbing Code of New York State
201.3, 301.11, 307.2.2, 512.2, 908.5, 928.1, 1002.1, 1002.2, 1002.3, 1005.2, 1006.6, 1008.2, 1009.3, 1101.4, 1201.1, 1206.2, 1206.3, 1210.8.1, 1401.2

RCNYS—20: *Residential Code of New York State
101.2

IIAR

International Institute of Ammonia Refrigeration
1001 N. Fairfax Street, Suite 503
Arlington, VA 22314

IIAR 2—2014: Safe Design of Closed-circuit Ammonia Refrigerating Systems
1101.6, 1105.6.3

ANSI/IIAR 3—2012: Ammonia Refrigeration Valves
1101.6

ANSI/IIAR 4—2015: Installation of Closed-circuit Ammonia Mechanical Refrigerating Systems
1101.6

ANSI/IIAR 5—2013: Start-up and Commissioning of Closed-circuit Ammonia Refrigeration Systems
1101.6

MSS

Manufacturers Standardization Society of the Valve and Fittings Industry, Inc.
127 Park Street, NE
Vienna, VA 22180

***SP 58—2009: Pipe Hangers and Supports—Materials Design and Manufacture, Selection, Application and Installation**
305.4

NAIMA

North American Insulation Manufacturers Association
11 Canal Center Plaza, Suite 103
Alexandria, VA 22314

AH116—09: Fibrous Glass Duct Construction Standards
603.5, 603.9

NBBI

National Board of Boiler and Pressure Vessel Inspectors
1055 Crupper Avenue
Columbus, OH 43229-1183

NBIC—2011: National Board Inspection Code, Part 3
1003.3

NFPA

National Fire Protection Association
1 Batterymarch Park
Quincy, MA 02169-7471

***2—16: Hydrogen Technologies Code**
502.16.1

***30A—18: Code for Motor Fuel-dispensing Facilities and Repair Garages**
304.6

***31—16: Standard for the Installation of Oil-burning Equipment**
701.1, 801.2.1, 801.18.1, 801.18.2, 920.2, 922.1, 1308.1

INTERNATIONAL CODE COUNCIL®
Copyright © 2019 ICC & NYSDOS. ALL RIGHTS RESERVED. Accessed by Lauren Gualdino (lgualdino@briarcliffmanor.org), (-) Order Number #100880972 on May 08, 2020 07:05 AM (PDT) pursuant to License Agreement with ICC & NYSDOS. No further reproduction, no

100880972

NFPA—continued

***37—18: Standard for the Installation and Use of Stationary Combustion Engines and Gas Turbines**
915.1, 915.2

***58—17: Liquefied Petroleum Gas Code**
502.9.10

***69—14: Standard on Explosion Prevention Systems**
510.9.3

***70—17: National Electrical Code**
301.7, 306.3.1, 306.4.1, 511.1.1, 513.11, 513.12.2, 602.2.1.1, 927.2, 1104.2.2, 1106.3, 1106.4, 1402.8.1.4

***72—16: National Fire Alarm and Signaling Code**
606.3

***82—14: Standard on Incinerators and Waste and Linen Handling Systems and Equipment**
601.1

***85—15: Boiler and Combustion Systems Hazards Code**
1004.1

***91—15: Standard for Exhaust Systems for Air Conveying of Vapors, Gases, Mists and Noncombustible Particulate Solids**
502.9.5.1, 502.17

***92—15: Standard for Smoke Control Systems**
513.7, 513.8

***96—17: Standard for Ventilation Control and Fire Protection of Commercial Cooking Operations**
507.1

***211—16: Standard for Chimneys, Fireplaces, Vents and Solid Fuel-burning Appliances**
806.1

***262—15: Standard Method of Test for Flame Travel and Smoke of Wires and Cables for Use in Air-handling Spaces**
602.2.1.1

***286—15: Standard Methods of Fire Tests for Evaluating Contribution of Wall and Ceiling Interior Finish to Room Fire Growth**
602.2.1.6.2

***704—17: Standard System for Identification of the Hazards of Materials for Emergency Response**
502.8.4, 510.1, Table 1103.1

***853—15: Standard on Installation of Stationary Fuel Power Plants**
924.1

NSF

NSF International
789 N. Dixboro Road
P.O. Box 130140
Ann Arbor, MI 48105

NSF 358-1—2014: Polyethylene Pipe and Fittings for Water-based Ground-source "Geothermal" Heat Pump Systems
Table 1210.4, Table 1210.5

NSF 358-2—2012: Polypropylene Pipe and Fittings for Water-based Ground-source "Geothermal" Heat Pump Systems
Table 1210.4, Table 1210.5

SMACNA

Sheet Metal and Air Conditioning Contractors' National Association, Inc.
4201 Lafayette Center Drive
Chantilly, VA 20151-1219

SMACNA 2015: Phenolic Duct Construction Standard
603.5.2

***SMACNA/ANSI—2005: HVAC Duct Construction Standards—Metal and Flexible 3rd Edition (ANSI) 2005**
603.4, Table 603.4, 603.9, 603.10

***SMACNA—03: Fibrous Glass Duct Construction Standards**
603.5, 603.9

INTERNATIONAL CODE COUNCIL®
Copyright © 2019 ICC & NYSDOS. ALL RIGHTS RESERVED. Accessed by Lauren Gualdino (lgualdino@briarcliffmanor.org), (-) Order Number #100880972 on May 08, 2020 07:05 AM (PDT) pursuant to License Agreement with ICC & NYSDOS. No further reproduction, no

100880972

UL

UL LLC
333 Pfingsten Road
Northbrook, IL 60062-2096

17—2008: Vent or Chimney Connector Dampers for Oil-fired Appliances—with revisions through September 2013
803.6

103—2010: Factory-built Chimneys, Residential Type and Building Heating Appliance—with revisions through July 2012
805.2

127—2011: Factory-built Fireplaces—with revisions through May 2015
903.1, 903.3, 903.4

174—04: Household Electric Storage Tank Water Heaters—with revisions through April 2015
1002.1

180—2012: Liquid-level Indicating Gauges for Oil Burner Fuels and Other Combustible Liquids
1306.4

181—05: Factory-made Air Ducts and Air Connectors—with revisions through October 2008
512.2, 603.5, 603.6.1, 603.6.2, 603.9, 604.13

181A—2013: Closure Systems for Use with Rigid Air Ducts and Air Connectors
603.9

181B—2013: Closure Systems for Use with Flexible Air Ducts and Air Connectors
603.9

197—10: Commercial Electric Cooking Appliances—with revisions through September 2014
917.1

207—2009: Refrigerant-containing Components and Accessories, Nonelectrical—with revisions through June 2014
1101.2

263—2011: Standard for Fire Test of Building Construction and Materials—with revisions through June 2015
607.5.2, 607.5.5, 607.6.1, 607.6.2.1

268—2009: Smoke Detectors for Fire Alarm Systems
606.1

268A—2008: Smoke Detectors for Duct Application—with revisions through October 2014
606.1

343—2008: Pumps for Oil-burning Appliances—with revisions through June 2013
1302.7

378—06: Draft Equipment—with revisions through June 12, 2014
804.3, 804.3.8

391—2010: Solid-fuel and Combination-fuel Central and Supplementary Furnaces—with revisions through June 2014
918.1

412—2011: Refrigeration Unit Coolers—with revisions through September 2013
1101.2

471—2010: Commercial Refrigerators and Freezers—with revisions through December 2012
1101.2

499—05: Electric Heating Appliances—with revisions through November 2014
912.1, 923.1

507—2014: Standard for Electric Fans
505.2

508—99: Industrial Control Equipment—with revisions through October 2013
307.2.3

536—97: Flexible Metallic Hose—with revisions through December 2014
1302.8

555—06: Fire Dampers—with revisions through May 2014
607.3.1

555C—06: Ceiling Dampers—with revisions through December 2014
607.3.1

555S—99: Smoke Dampers—with revisions through February 2014
607.3.1

INTERNATIONAL CODE COUNCIL®
Copyright © 2019 ICC & NYSDOS. ALL RIGHTS RESERVED. Accessed by Lauren Gualdino (lgualdino@briarcliffmanor.org), (-) Order Number #100880972 on May 08, 2020 07:05 AM (PDT) pursuant to License Agreement with ICC & NYSDOS. No further reproduction, no

100880972

UL—continued

586—2009: High-efficiency, Particulate, Air Filter Units—with revisions through September 2014
605.2

641—2010: Type L Low-temperature Venting Systems—with revisions through June 2013
802.1

705—2004: Standard for Power Ventilators—with revisions through December 2013
504.5

710—2012: Exhaust Hoods for Commercial Cooking Equipment—with revisions through November 2013
507.1

710B—2011: Recirculating Systems—with revisions through August 2014
507.1, 507.2

723—2008: Standard for Test for Surface Burning Characteristics of Building Materials—with revisions through August 2013
510.9, 602.2, 602.2.1, 602.2.1.6, 602.2.1.6.2, 602.2.1.6.3, 602.2.1.7, 604.3, 1204.1

726—95: Oil-fired Boiler Assemblies—with revisions through October 2013
916.1, 1004.1

727—06: Oil-fired Central Furnace—with revisions through October 2013
918.1

729—03: Oil-fired Floor Furnaces—with revisions through October 2013
910.1

730—03: Oil-fired Wall Furnaces—with revisions through October 2013
909.1

731—95: Oil-fired Unit Heaters—with revisions through October 2013
920.1

732—95: Oil-fired Storage Tank Water Heaters—with revisions through October 2013
1002.1

737—2011: Fireplace Stoves—with revisions through August 2015
905.1

762—2010: Outline of Investigation for Power Ventilators for Restaurant Exhaust Appliances—with revisions through October 2013
506.5.1

791—06: Residential Incinerators—with revisions through November 2014
907.1

834—04: Heating, Water Supply and Power Boilers Electric—with revisions through December 2013
1004.1

842—07: Valves for Flammable Fluids—with revisions through May 2015
1307.1

858—05: Household Electric Ranges—with revisions through June 2015
917.1

867—2011: Electrostatic Air Cleaners—with revisions through August 2013
605.2

875—09: Electric Dry Bath Heater—with revisions through December 2013
914.2

896—93: Oil-burning Stoves—with revisions through November 2013
917.1, 922.1

900—04: Air Filter Units—with revisions through April 2015
605.2

907—94: Fireplace Accessories—with revisions through June 2014
902.2

923—2013: Microwave Cooking Appliances—with revisions through June 2015
917.1

959—2010: Medium Heat Appliance Factory-built Chimneys—with revisions through June 2014
805.5

1046—2010: Grease Filters for Exhaust Ducts—with revisions through January 2012
507.2.8

INTERNATIONAL CODE COUNCIL®
Copyright © 2019 ICC & NYSDOS. ALL RIGHTS RESERVED. Accessed by Lauren Gualdino (lgualdino@briarcliffmanor.org), (-) Order Number #100880972 on May 08, 2020 07:05 AM (PDT) pursuant to License Agreement with ICC & NYSDOS. No further reproduction, no

100880972

UL—continued

1240—2012: Electric Commercial Clothes—Drying Equipment—with revisions through October 2012
913.1

1261—01: Electric Water Heaters for Pools and Tubs—with revisions through July 2012
916.1

1453—04: Electric Booster and Commercial Storage Tank Water Heaters—with revisions through July 2011
1002.1

1479—03 : Fire Tests of Through-penetration Firestops—with revisions through June 2015
506.3.11.2, 506.3.11.3

1482—2011: Solid-fuel Type Room Heaters—with revisions through August 2015
905.1

1563—2009: Standard for Electric Spas, Hot Tubs and Associated Equipment—with revisions through March 2015
916.1

1618—09: Wall Protectors, Floor Protectors and Hearth Extensions—with revisions through October 2015
308.4.1, 903.2, 905.3

1777—2007: Chimney Liners—with revisions through October 2015
801.16.1, 801.18.4

1812—2013: Standard for Ducted Heat Recovery Ventilators—with revisions through April 2014
514.1

1815—2012: Standard for Nonducted Heat Recovery—with revisions through April 2014
514.1

1820—04: Fire Test of Pneumatic Tubing for Flame and Smoke Characteristics—with revisions through May 2013
602.2.1.3

1887—04: Fire Tests of Plastic Sprinkler Pipe for Visible Flame and Smoke Characteristics—with revisions through May 2013
602.2.1.2

1978—2010: Grease Ducts—with revisions through September 2013
506.3.2, 506.3.6

1995—2011: Heating and Cooling Equipment—with revisions through July 2015
908.1, 911.1, 918.1, 918.2, 1101.2

1996—2009: Electric Duct Heaters—with revisions through June 2014
911.1

2024—2011: Standard for Safety Optical-fiber and Communications Cable Raceway—with revisions through August 2015
602.2.1.1

2043—2008: Fire Test for Heat and Visible Smoke Release for Discrete Products and Their Accessories Installed in Air-handling Spaces—with revisions through October 2013
602.2.1.4.2

2075—2013: Standard for Gas and Vapor Detectors and Sensors
404.1

2158—97: Electric Clothes Dryers—with revisions through March 2009
913.1

2158A—2010: Outline of Investigation for Clothes Dryer Transition Duct
504.8.3

2162—01: Outline of Investigation for Commercial Wood-fired Baking Ovens-Refractory Type
917.1

2200—2012: Stationary Engine Generator Assemblies—with revisions through July 2015
915.1

2221—2010: Tests of Fire Resistive Grease Duct Enclosure Assemblies
506.3.11.3

2518—05: Air Dispersion System Materials
603.17

2523—09: Solid Fuel-fired Hydronic Heating Appliances—with revisions through February 2013
1002.1, 1004.1

2846—14: Fire Test of Plastic Water Distribution Plumbing Pipe for Visible Flame and Smoke Characteristics
602.2.1.7

INTERNATIONAL CODE COUNCIL®
Copyright © 2019 ICC & NYSDOS. ALL RIGHTS RESERVED. Accessed by Lauren Gualdino (lgualdino@briarcliffmanor.org), (-) Order Number #100880972 on May 08, 2020 07:05 AM (PDT) pursuant to License Agreement with ICC & NYSDOS. No further reproduction, no

100880972

INTERNATIONAL CODE COUNCIL®
Copyright © 2019 ICC & NYSDOS. ALL RIGHTS RESERVED. Accessed by Lauren Gualdino (lgualdino@briarcliffmanor.org), (-) Order Number #100880972 on May 08, 2020 07:05 AM (PDT) pursuant to License Agreement with ICC & NYSDOS. No further reproduction, no

100880972

Appendix A
Chimney Connector Pass-Throughs

This appendix is informative and is not part of the code.

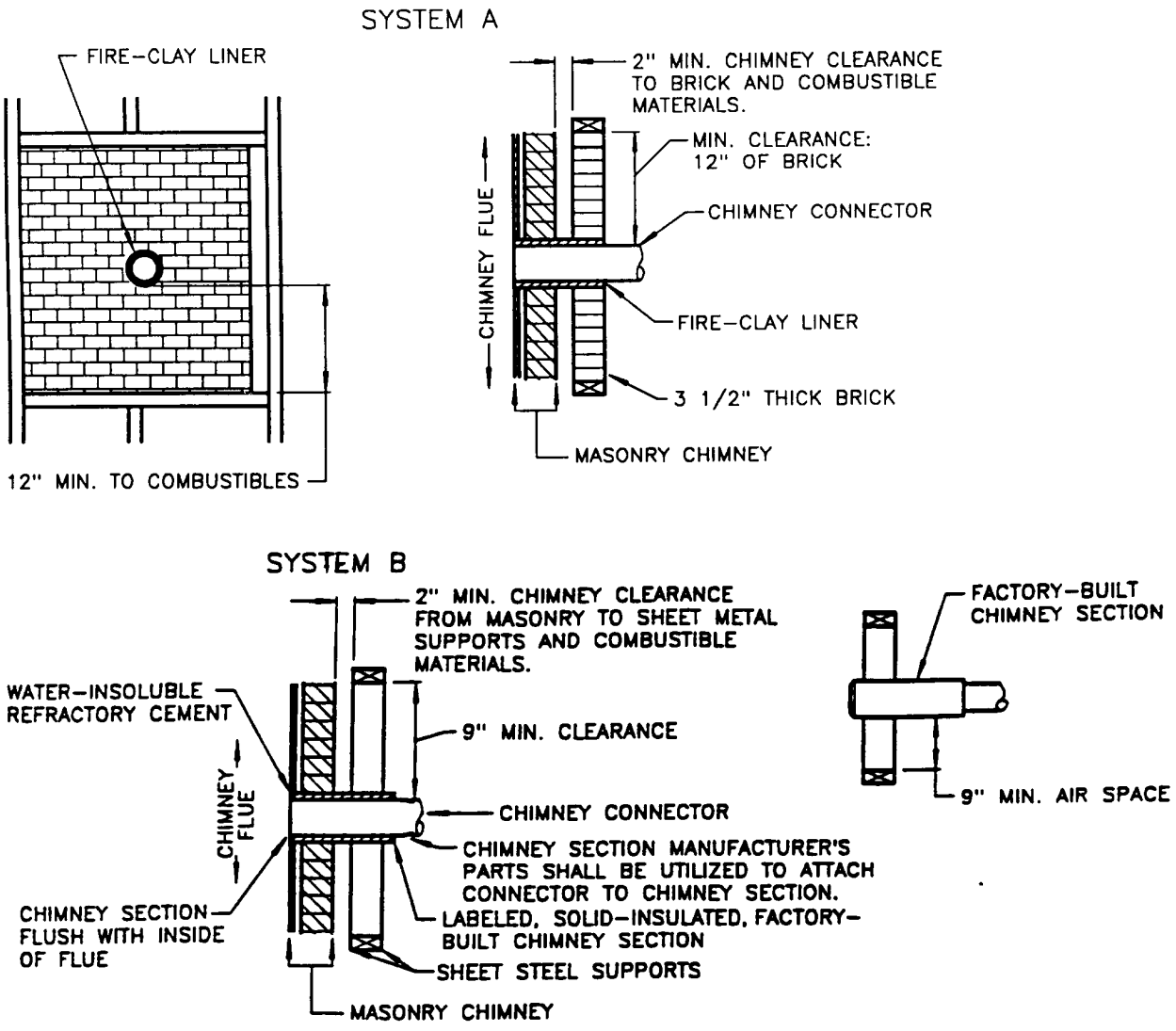

For SI: 1 inch = 25.4 mm.

FIGURE A-1
CHIMNEY CONNECTOR SYSTEMS

(continued)

INTERNATIONAL CODE COUNCIL®
Copyright © 2019 ICC & NYSDOS. ALL RIGHTS RESERVED. Accessed by Lauren Gualdino (lgualdino@briarcliffmanor.org), (-) Order Number #100880972 on May 08, 2020 07:05 AM (PDT) pursuant to License Agreement with ICC & NYSDOS. No further reproduction, no

100880972

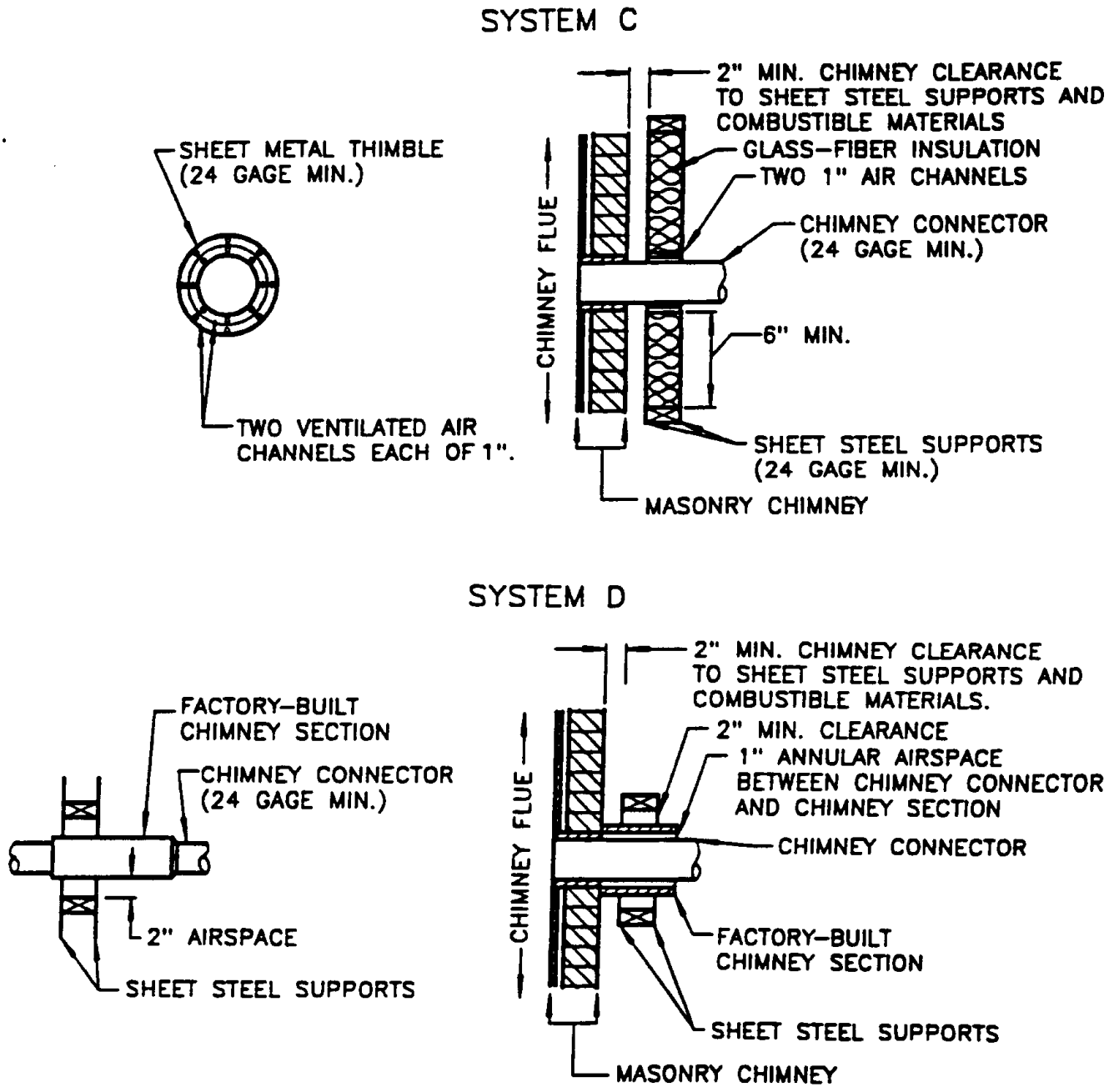

For SI: 1 inch = 25.4 mm.

FIGURE A-1—continued
CHIMNEY CONNECTOR SYSTEMS

INTERNATIONAL CODE COUNCIL®
Copyright © 2019 ICC & NYSDOS. ALL RIGHTS RESERVED. Accessed by Lauren Gualdino (lgualdino@briarcliffmanor.org), (-) Order Number #100880972 on May 08, 2020 07:05 AM (PDT) pursuant to License Agreement with ICC & NYSDOS. No further reproduction, no

[NY] Appendix B
Reserved

INTERNATIONAL CODE COUNCIL®
Copyright © 2019 ICC & NYSDOS. ALL RIGHTS RESERVED. Accessed by Lauren Gualdino (lgualdino@briarcliffmanor.org), (-) Order Number #100880972 on May 08, 2020 07:05 AM (PDT) pursuant to License Agreement with ICC & NYSDOS. No further reproduction, no

100880972

INTERNATIONAL CODE COUNCIL®
Copyright © 2019 ICC & NYSDOS. ALL RIGHTS RESERVED. Accessed by Lauren Gualdino (lgualdino@briarcliffmanor.org), (-) Order Number #100880972 on May 08, 2020 07:05 AM (PDT) pursuant to License Agreement with ICC & NYSDOS. No further reproduction, no

100880972

INDEX

A

ADMINISTRATION AND ENFORCEMENT . . . . . Chapter 1
AIR
Combustion . . . . . Chapter 7
Dispersion systems 603.17
Distribution systems . . . . . Chapter 6
Filters 605
Recirculation 403.2.1
Supply . . . . . Chapter 4
Transfer 403.2.2
Ventilation . . . . . Chapter 4
ALTERNATIVE MATERIALS AND METHODS 105.2
AMMONIA 1105.8, 1106.3, 1106.4
APPEAL 103.3
APPLIANCES
Access 306
Cooking 917
Hazardous location 303.2
Installation . . . . . Chapters 3, 9
Outdoors 303.6
Prohibited locations 303.3
APPLICABILITY OF CODE 102
APPROVAL 104.1
ATTIC VENTILATION 406
AUTOMATIC FIRE SUPPRESSION, KITCHEN EXHAUST 509
AUTOMATIC VENT DAMPERS 803.6

B

BALANCING, VENTILATION SYSTEM 403.7
BARBECUE APPLIANCES 906
BATHROOM VENTILATION 402, 403
BLOWOFF VALVE, STEAM 1008
BOILERS
Approval 1004.1
Controls 1006
Gauges 1010
General 1001
Low-water cutoff 1007
Rooms 304.7, 1004.6
Tests 1011
BUILDING OFFICIAL 202
BURNER, CONVERSION 919

C

CANOPY HOODS 507.12, 507.13
CEILING DAMPERS 607
CHILLED WATER PIPING . . . . . Chapter 12
CHIMNEYS AND VENTS
Connectors 803
Dampers 803.5, 803.6
Direct vents 804.1
Exhausters 804.3
Existing 801.18
Factory built 802, 805
General 801
Insulation shield 805.7
Liners 801.16, 801.17, 801.18
Masonry, general 801
Offsets 805.3
Vents 802
CLEANOUTS
Clothes dryer exhaust 504.3
Kitchen exhaust 506.3.8, 506.3.9, 506.3.12
Masonry chimneys 801.13
CLEARANCES
Appliance in garages 304.3, 304.6, 304.7
Chimney and vent 801.18.4
Connectors 803.10.6
Kitchen exhaust 506.3.6, 507.9
Reduction 308
Specific appliances . . . . . Chapter 9
CLOTHES DRYER
Appliance 913
Exhaust 504
COAL-BURNING APPLIANCES . . . . . Chapter 9
COLLECTORS, SOLAR 1402.8.1, 1404.1
COMBUSTIBLE LIQUID STORAGE TANK 1301
COMBUSTIBLES, REDUCED CLEARANCE 308
COMBUSTION AIR . . . . . Chapter 7
COMMERCIAL KITCHEN EXHAUST 506
Hoods 507
CONDENSATE DISPOSAL 307
CONDENSATION
Ducts 603.12
Piping 1107.4
CONFLICTS 102.8.1, 102.8.2
CONNECTORS, CHIMNEY OR VENT 803
CONTAMINANTS, VENTILATION AIR 401.4, 401.6
CONVERSION BURNERS 919

INTERNATIONAL CODE COUNCIL®
Copyright © 2019 ICC & NYSDOS. ALL RIGHTS RESERVED. Accessed by Lauren Gualdino (lgualdino@briarcliffmanor.org), (-) Order Number #100880972 on May 08, 2020 07:05 AM (PDT) pursuant to License Agreement with ICC & NYSDOS. No further reproduction, no

100880972

CONVEYOR SYSTEMS 511
COOKING APPLIANCES 917
COOLING TOWERS 908
COOLING WATER PIPING . . . . . Chapter 12
COVERING, DUCT 604.3
CRAWL SPACE PLENUMS 602
CRAWL SPACE, VENTILATION 406
CREMATORIES 907
CUTTING, NOTCHING, BORING 302

D

DAMPERS
Chimney or vent 803.5, 803.6
Fire 607
Smoke 607
DEFINITIONS . . . . . Chapter 2
DETECTORS, DUCT SMOKE 606
DOCUMENTS 106.3.1
DRYER, CLOTHES
Exhaust 504
General 913
DUCT
Clothes dryer exhaust 504
Construction 603
Covering 604.3
Detectors, smoke 606
Diffusers 603.18
Enclosure 506.3.11, 510.4
Exhaust 501.5
Fire damper 607
Flexible 603.6
Furnace 918.2
Hangers and supports 603.10
Hazardous exhaust 510
Installation 603
Insulation 604
Joints, seams and connections 603.9
Kitchen exhaust 506
Lining 604.3
Penetrations 607
Phenolic 603.5.2
Plastic 603.8.3
Private garage 603.7
Sealing 603.8.2, 603.9
Sizing 603.2
Smoke damper 607
Systems . . . . . Chapter 6
Underground 603.8
Underground grease 506.3.10
DUST, STOCK AND REFUSE CONVEYOR SYSTEMS 511

E

ELECTRIC INSTALLATION 301.10
ENERGY EFFICIENCY 301.2
ENERGY RECOVERY SYSTEMS 514
ENGINE/TURBINE EQUIPMENT 915
EQUIPMENT ACCESS 306
EQUIPMENT IDENTIFICATION 304.12, 504.6.5
EVAPORATIVE COOLING 928
EXHAUST, DOMESTIC COOKING 505
EXHAUST, DOWNDRAFT 507.2
EXHAUST, REQUIRED SYSTEMS 502
Clothes dryer 504
Discharge 501.3
Ducts 501.4
Independence 501.2
Outlets 501.3, 501.3.1
Kitchen 506, 507
Machinery room 1105, 1106
Mechanical . . . . . 403, Chapter 5
System, hazardous 510
Ventilator openings 401.4, 401.5
EXHAUSTER, MECHANICAL FLUE 804
EXISTING SYSTEMS 102.2
EXPLOSION VENTING 310

F

FACTORY BUILT
Barbecue appliance 906
Chimneys 805
Commercial exhaust hoods 507.1
Ducts (kitchen exhaust) 506.3.1.1, 506.3.2, 506.3.2.5, 506.3.6, 506.3.11.3
Fireplaces 903
FANS, EXHAUST 503, 506.5.1
FANS, HIGH-VOLUME LARGE DIAMETER 929
FILTERS, AIR 605
FILTERS, GREASE 507.11
FIRE DAMPERS 607
FIRE SUPPRESSION
Hazardous exhaust 510.7
Kitchen exhaust 509
FIREPLACE STOVE 905
FIREPLACES
Accessories 902.2
Factory built 903
Masonry 902.1
FLEXIBLE CONNECTORS (DUCT) 603.6, 607.7
FLEXIBLE CONNECTORS, HYDRONIC 1202.7
FLEXIBLE DUCTS 603.6, 607.7
FLOOD HAZARD 301.16, 401.4, 501.3.2, 602.4, 603.13

INTERNATIONAL CODE COUNCIL®
Copyright © 2019 ICC & NYSDOS. ALL RIGHTS RESERVED. Accessed by Lauren Gualdino (lgualdino@briarcliffmanor.org), (-) Order Number #100880972 on May 08, 2020 07:05 AM (PDT) pursuant to License Agreement with ICC & NYSDOS. No further reproduction, no

100880972

FLOOR FURNACE 910
FLUE LINERS 801.16, 801.18.2
FUEL, CONVERSION 301.12
FUEL CELLS 924
FUEL OIL
Piping . . . . . Chapter 13
Piping installation 1305
Piping material 1302
FURNACE, FORCED-AIR 918
FURNACE ROOM 304.8

G

GAUGES, BOILERS 1010
GREASE 506, 507
GREASE FILTERS 507.11
GREASE RESERVOIRS 506.3.7.1
GRILLES 603.18
GUARDS 304.11, 306.5.1

H

HANGERS, DUCT 603.10
HANGERS, PIPE 305
HAZARDOUS EXHAUST SYSTEM 510
HAZARDOUS LOCATION, EQUIPMENT 304.3, 901.3
HAZARDOUS LOCATION, INSTALLATION . . . 304.3
HEARTH EXTENSIONS 905.3
HEATER . . . . . Chapter 9
HEAT PUMP 918.3
HOOD, EXHAUST 505, 506, 507, 510.5.3
HOOD DESIGN (KITCHEN) 507
HOOD LABEL 507.2.1.2
HOT WATER BOILERS . . . . . Chapter 10
HOT WATER PIPING . . . . . Chapter 12
HYDROGEN GENERATION AND REFUELING 304.5, 926
HYDRONIC PIPING . . . . . Chapter 12

I

IGNITION SOURCE 202, 304.3
INCINERATORS 907
INFRARED HEATERS 912
INSPECTION 105.3
INSULATION
Duct 604
Pipe 1204
INTAKE OPENINGS 401.4

J

JOINTS
Connectors 803.10.1
Duct 506.3.2, 510.8.1, 603.9
Piping 1003.2, 1107.6, 1107.7, 1203, 1303

K

KEROSENE STOVE 922
KILNS 923
KITCHEN EXHAUST EQUIPMENT . . . . . Chapter 5

L

LABELING
Criteria for 301.4, 301.5, 301.6
LINER, FLUE 801.16
LINING, DUCT 604.3
LISTING 301.7
LOAD CALCULATIONS, HEATING AND COOLING 312
LOCATION, EQUIPMENT AND APPLIANCE 303
LOW-WATER CUTOFF, BOILER 1007

M

MACHINERY ROOMS 1104.2, 1105, 1106
MAINTENANCE 102.3
MAKEUP AIR, EXHAUST 508, 510.5.5
MAKEUP WATER 908.5, 1005.2, 1206.3, 1207.2, 1401.2
MASONRY CHIMNEYS . . . . . Chapter 8
MASONRY FIREPLACE 902
MECHANICAL EXHAUST/DRAFT 804
MECHANICAL OFFICIAL (see BUILDING OFFICIAL)
MECHANICAL REFRIGERATION . . . . . Chapter 11
MECHANICAL VENTILATION 304.5.2, 403
MOTORS, FAN 503, 506.5.1.1
MOVED STRUCTURE 102.8

N

NATURAL VENTILATION 304.4.1, 402
NONCANOPY HOODS 507.14

O

OIL, FUEL PIPING . . . . . Chapter 13
OPENINGS
Outside 401.4, 401.5, 501.3.2
Transfer 607

INTERNATIONAL CODE COUNCIL®
Copyright © 2019 ICC & NYSDOS. ALL RIGHTS RESERVED. Accessed by Lauren Gualdino (lgualdino@briarcliffmanor.org), (-) Order Number #100880972 on May 08, 2020 07:05 AM (PDT) pursuant to License Agreement with ICC & NYSDOS. No further reproduction, no

100880972

OUTDOOR APPLIANCE INSTALLATION. 303.6
OUTSIDE AIR, MINIMUM. 403

P

PELLET FUEL-BURNING APPLIANCES 904
PENETRATIONS 302.2, 607
PERMITS 105.2
PIPE
Insulation 1107.3, 1204
Support 305
PIPING
Fuel oil . . . . . Chapter 13
Material, fuel oil 1302
Material, hydronic 1202
Refrigerant 1107
Support 305
PLENUMS. 602
PLUMBING CONNECTIONS 301.8
POLLUTION-CONTROL UNITS. 506.5.2
POOL/SPA HEATER 916
POWER EXHAUSTER 804
PRESSURE GAUGE 1010
PRESSURE VESSEL 1003

R

RADIANT HEATER 912
RADIANT HEATING SYSTEMS. 927
RANGE HOODS. . . . . Chapter 5
REDUCED, CLEARANCE 308
REFRIGERANT . . . . . Chapter 11
Locking access caps 1101.10
Piping. 1107
Quantity 1104
REFRIGERANT PIPING. 1107
REGISTERS 603.18
RELIEF VALVES, FUEL OIL 1307
RELIEF VALVES, PRESSURE VESSELS. 1006
RELIEF VALVES, SOLAR 1402.3
REPAIRS 102.5
ROOM HEATERS, SOLID FUEL 904, 905, 921

S

SAFETY VALVE. 1006
SAUNA HEATER 914
SCOPE OF CODE 101.2
SEISMIC 301.15
SIGHT GLASS 1010
SMOKE AND HEAT VENTS 311
SMOKE CONTROL 513
SMOKE DAMPERS 607
SMOKE DETECTORS 606
SOLAR THERMAL . . . . . Chapter 14
SOLID FUEL-BURNING APPLIANCES . . . . . Chapter 9
STANDARDS, REFERENCED . . . . . 102.9, Chapter 15
STEAM
Blowoff 1008
Boilers . . . . . Chapter 10
Gauge 1010
Piping . . . . . Chapters 10, 12
SUBSLAB SOIL EXHAUST SYSTEM 512
SUPPORTS, DUCT. 603.10
SUPPORTS, PIPING 305
SUPPRESSION
Hazardous exhaust 510.7
Kitchen exhaust 509

T

TANKS, EXPANSION. 1009, 1402.8.7
TANKS, FLAMMABLE AND COMBUSTIBLE LIQUIDS . . . . . Chapter 13
TEMPERATURE CONTROL 309.1
TEMPERATURE GAUGE. 1010
TEMPERATURE RELIEF, SOLAR. 1402.4
TESTS
Boiler/pressure vessel 1011
Ducts 603.8.2
Fuel oil piping 1308
Hydronic piping 1208, 1209.2
Kitchen exhaust 507.16
Refrigeration. 1108, 1109
THERMAL STORAGE, SOLAR 1404.2
THIRD-PARTY CERTIFICATION 301.4, 301.5
TOILET ROOM VENTILATION . . . . . 402.1, Table 403.3.1.1
TRANSFER FLUID
Hydronic piping 1207
Solar. 1403

U

UNDERGROUND STORAGE TANKS . . . . Chapter 13
UNIT HEATER 920
UNVENTED GAS LOG HEATERS. 903.3

V

VALVES
Boilers 1005, 1008
Fuel oil 1307
Hydronic. 1205
Safety and relief 1006
Stop 1107.7
VAPOR RETARDER. 604.11

INTERNATIONAL CODE COUNCIL®
Copyright © 2019 ICC & NYSDOS. ALL RIGHTS RESERVED. Accessed by Lauren Gualdino (lgualdino@briarcliffmanor.org), (-) Order Number #100880972 on May 08, 2020 07:05 AM (PDT) pursuant to License Agreement with ICC & NYSDOS. No further reproduction, no

100880972

VENTILATION
Air . . . . . Chapter 4
Enclosed parking garages 404
Energy recovery systems 514
Machinery room 1105, 1106
Mechanical 304.5.2, 403
Natural 304.4.1, 402
Openings 401.4, 401.5
Rate 403.3
Recirculation 403.2.1
Transfer 403.2.2
Uninhabited spaces 406
VENTILATORS, HEAT RECOVERY 514
VENTS
Connectors 803
Direct 804
Explosion 310
General . . . . . 802, Chapter 8
Height 802.6
Smoke and Heat 311
Termination 802
VIBRATION CONTROL DEVICES 301.13
VIOLATIONS 108

W

WALL FURNACE 909
WATER HEATERS 916, 1002
WATER PIPING . . . . . Chapter 12
WIND RESISTANCE 301.15
WOOD-BURNING APPLIANCES . . . . . Chapter 9

INTERNATIONAL CODE COUNCIL®
Copyright © 2019 ICC & NYSDOS. ALL RIGHTS RESERVED. Accessed by Lauren Gualdino (lgualdino@briarcliffmanor.org), (-) Order Number #100880972 on May 08, 2020 07:05 AM (PDT) pursuant to License Agreement with ICC & NYSDOS. No further reproduction, no

100880972

INTERNATIONAL CODE COUNCIL®
Copyright © 2019 ICC & NYSDOS. ALL RIGHTS RESERVED. Accessed by Lauren Gualdino (lgualdino@briarcliffmanor.org), (-) Order Number #100880972 on May 08, 2020 07:05 AM (PDT) pursuant to License Agreement with ICC & NYSDOS. No further reproduction, no

100880972

ICC INTERNATIONAL CODE COUNCIL®

People Helping People Build a Safer World®

Valuable Guides to Changes in the 2018 I-Codes®

NEW!

FULL COLOR! HUNDREDS OF PHOTOS AND ILLUSTRATIONS!

SIGNIFICANT CHANGES TO THE 2018 INTERNATIONAL CODES®

Practical resources that offer a comprehensive analysis of the critical changes made between the 2015 and 2018 editions of the codes. Authored by ICC code experts, these useful tools are "must-have" guides to the many important changes in the 2018 International Codes.

Key changes are identified then followed by in-depth, expert discussion of how the change affects real world application. A full-color photo, table or illustration is included for each change to further clarify application.

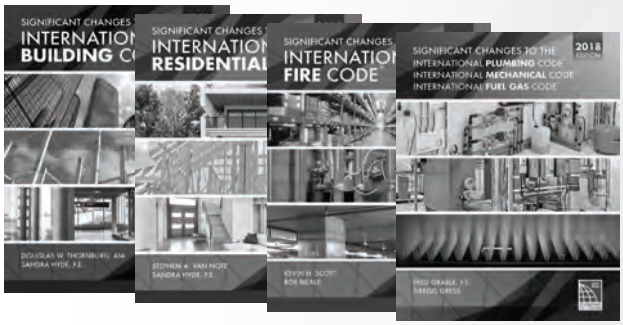

SIGNIFICANT CHANGES TO THE IBC, 2018 EDITION
#7024S18

SIGNIFICANT CHANGES TO THE IRC, 2018 EDITION
#7101S18

SIGNIFICANT CHANGES TO THE IFC, 2018 EDITION
#7404S18

SIGNIFICANT CHANGES TO THE IPC/IMC/IFGC, 2018 EDITION
#7202S18

ORDER YOUR HELPFUL GUIDES TODAY!
1-800-786-4452 | www.iccsafe.org/books

HIRE ICC TO TEACH

Want your group to learn the Significant Changes to the I-Codes from an ICC expert instructor? Schedule a seminar today!

email: **ICCTraining@iccsafe.org** | phone: **1-888-422-7233 ext. 33818**

17-14098

This insert is not part of the official text of the New York State Uniform Fire Prevention and Building Code or New York State Energy Conservation Construction Code.

INTERNATIONAL CODE COUNCIL®

Copyright © 2019 ICC & NYSDOS. ALL RIGHTS RESERVED. Accessed by Lauren Gualdino (lgualdino@briarcliffmanor.org), (-) Order Number #100880972 on May 08, 2020 07:05 AM (PDT) pursuant to License Agreement with ICC & NYSDOS. No further reproduction, no

ICC Membership

An Essential Tool to advance your Building Safety Career!

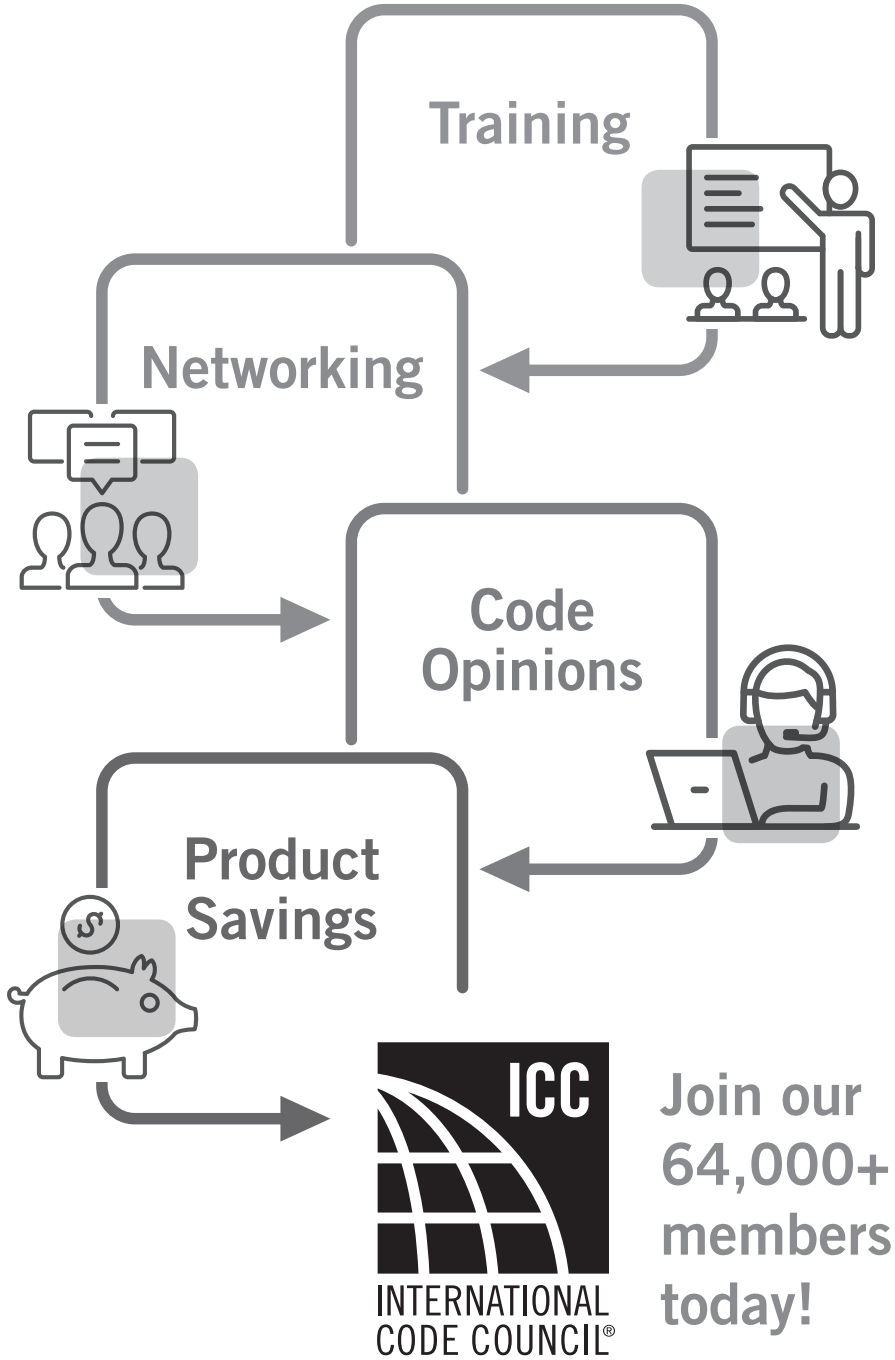

Put the benefits of ICC Membership to work for you and your career!

Visit **www.iccsafe.org/memnow** or
call **1-888-ICC-SAFE (422-7233), ext. 33804** to learn more.

19-17662

INTERNATIONAL CODE COUNCIL®

Copyright © 2016 ICC & NYSDOS. ALL RIGHTS RESERVED. Accessed by Lauren Gualdino (gualdino@brianchimanor.org), ( ) Order Number 41008 3/2 on May 08, 2020 06:05 AM (PDT) pursuant to License Agreement with ICC & NYSDOS. No further reproduction, no



The ICC Assessment Center (formerly known as ICC Certification & Testing) provides nationally recognized credentials that demonstrate a confirmed commitment to protect public health, safety, and welfare. Raise the professionalism of your department and further your career by pursuing an ICC Certification.

ICC Certifications offer:

- Nationwide recognition
- Increased earning potential
- Career advancement
- Superior knowledge
- Validation of your expertise
- Personal and professional satisfaction

Exams are developed and maintained to the highest standards, which includes continuous peer review by national committees of experienced, practicing professionals. ICC is continually evolving exam offerings, testing options, and technology to ensure that all building and fire safety officials have access to the tools and resources needed to advance in today's fast-paced and rapidly-changing world.

Enhancing Exam Options

Effective July 2018, the Assessment Center enhanced and streamlined exam options and now offers only computer based testing (CBT) at a test site and PRONTO. We no longer offer paper/pencil exams.

Proctored Remote Online Testing Option (PRONTO)

Taking your next ICC certification exam is more convenient, more comfortable and more efficient than ever before with PRONTO.

PRONTO provides a convenient testing experience that is accessible 24 hours a day, 7 days a week, 365 days a year. Required hardware/software is minimal – you will need a webcam and microphone, as well as a reasonably recent operating system.

pronto
ICC ONLINE EXAMS

Whether testing in your office or in the comfort of your home, your ICC exam will continue to maintain its credibility while offering more convenience, allowing you to focus on achieving your professional goals. The Assessment Center continues to add exams to the PRONTO exam catalog regularly.

18-15617

Checkout all the ICC Assessment Center has to offer at iccsafe.org/certification

This insert is not part of the official text of the New York State Uniform Fire Prevention and Building Code or New York State Energy Conservation Construction Code.

INTERNATIONAL CODE COUNCIL®

Copyright © 2019 ICC & NYSDOS. ALL RIGHTS RESERVED. Accessed by Lauren Gualdino (lgualdino@briarcliffmanor.org), (-) Order Number #100880972 on May 08, 2020 07:05 AM (PDT) pursuant to License Agreement with ICC & NYSDOS. No further reproduction, no

100880972

ICC EVALUATION SERVICE

In Cooperation with Innovation RESEARCH LABS

Look no further than ICC-ES PMG® The Leading provider of product evaluations in plumbing, mechanical and fuel gas, with excellent customer service and the highest acceptability by code officials at the price you're looking for.



We certify:

- Faucets
- Showerheads
- Bathtubs
- Sink products
- Toilets & Urinals
- Ceramic Fixtures
- Resins and Linear Drain products

and many more!

Benefits of having an ICC-ES PMG Listing

- ICC-ES PMG offers a lower cost for certification than competitors
- Expedited certification for all client listings
- ICC-ES PMG does not conduct warehouse inspections
- ICC-ES PMG does not charge for additional company listings
- ICC-ES will accept test reports from other entities
- No fee for EPA WaterSense listings and lead law listings
- No separate file for NSF 61 listings
- A2LA, ANSI, SCC and EMA

ICC INTERNATIONAL CODE COUNCIL®

www.icc-es-pmg.org
800-423-6587 x7643

ICC ES PMG Complies to UPC

EPA WaterSense LICENSED CERTIFYING BODY

19-17625

This insert is not part of the official text of the New York State Uniform Fire Prevention and Building Code or New York State Energy Conservation Construction Code.

INTERNATIONAL CODE COUNCIL®

Copyright © 2019 ICC & NYSDOS. ALL RIGHTS RESERVED. Accessed by Lauren Gualdino (lgualdino@briarcliffmanor.org), (-) Order Number #100880972 on May 08, 2020 07:05 AM (PDT) pursuant to License Agreement with ICC & NYSDOS. No further reproduction, no

100880972

ANDREW M. CUOMO GOVERNOR
ROSSANA ROSADO SECRETARY OF STATE



2020 FUEL GAS CODE of NEW YORK STATE

NEW YORK STATE OF OPPORTUNITY.

Building Standards and Codes

ICC INTERNATIONAL CODE COUNCIL®

INTERNATIONAL CODE COUNCIL®

Copyright © 2019 ICC & NYSDOS. ALL RIGHTS RESERVED. Accessed by Lauren Gualdino (lgualdino@briarcliffmanor.org), (-) Order Number #100880972 on May 08, 2020 07:05 AM (PDT) pursuant to License Agreement with ICC & NYSDOS. No further reproduction, no

100880972

ANDREW M. CUOMO GOVERNOR
ROSSANA ROSADO SECRETARY OF STATE

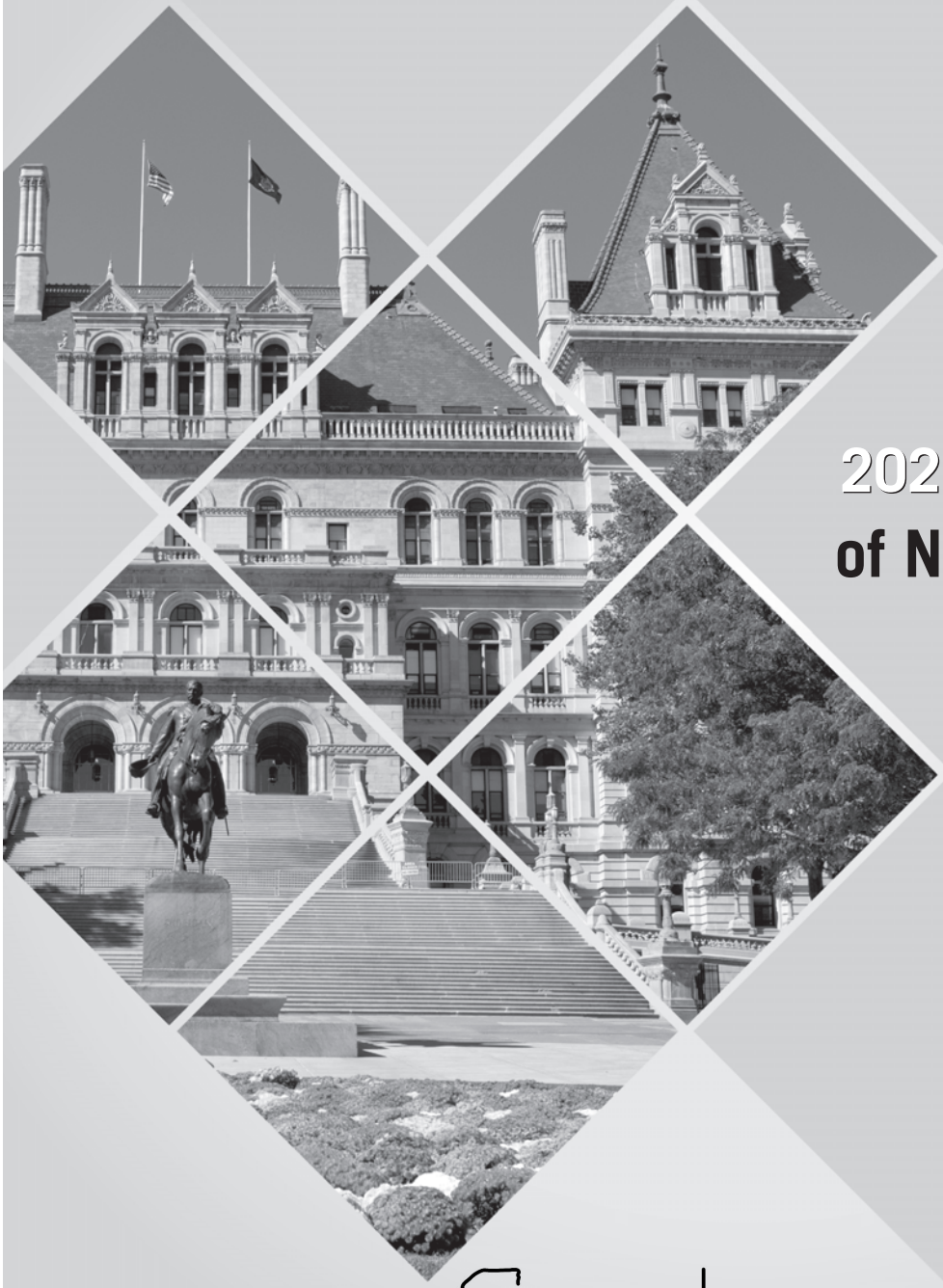

2020 FUEL GAS CODE of NEW YORK STATE

NEW YORK STATE OF OPPORTUNITY.

Building Standards and Codes

ICC INTERNATIONAL CODE COUNCIL®

INTERNATIONAL CODE COUNCIL®

Copyright © 2019 ICC & NYSDOS. ALL RIGHTS RESERVED. Accessed by Lauren Gualdino (lgualdino@briarcliffmanor.org), (-) Order Number #100880972 on May 08, 2020 07:05 AM (PDT) pursuant to License Agreement with ICC & NYSDOS. No further reproduction, no

100880972

2020 Fuel Gas Code of New York State

Publication Date: November 2019

ISBN: 978-1-60983-915-4

COPYRIGHT © 2019
by
INTERNATIONAL CODE COUNCIL, INC.
and
NEW YORK STATE DEPARTMENT OF STATE

ALL RIGHTS RESERVED. This 2020 *Fuel Gas Code of New York State* is a copyrighted work owned by the International Code Council, Inc. ("ICC"). This work contains: (1) portions of the ICC International Codes® (I-Codes®); (2) material that is a derivative of the I-Codes; and (3) wholly original materials prepared by the New York State Department of State (NYSDOS) or by the New York State Fire Prevention and Building Code Council (the "Code Council"). The International Code Council, Inc., has copyright ownership of the I-Codes. The International Code Council and the New York State Department of State have joint copyright ownership of the material that is a derivative of the I-Codes. The New York State Department of State has copyright ownership of the wholly original materials prepared by the New York State Department of State and/or by the Code Council. As to the ICC International Codes, all rights, including the right of reproduction in whole or in part in any form, are reserved to the International Code Council. As to the material that is derivative of the I-Codes, all rights, including the right of reproduction in whole or in part in any form, are reserved to the International Code Council and the New York State Department of State, jointly. As to the wholly original materials prepared by the New York State Department of State or by the Code Council, all rights, including the right of reproduction in whole or in part in any form, are reserved to the New York State Department of State. Without advance written permission from the copyright owner, no part of this book may be reproduced, distributed or transmitted in any form or by any means, including, without limitation, electronic, optical or mechanical means (by way of example, and not limitation, photocopying or recording by or in an information storage retrieval system). For information on use rights and permissions, please contact: ICC Publications, 4051 Flossmoor Road, Country Club Hills, IL 60478. Phone 1-888-ICC-SAFE (422-7233).

Trademarks: "International Code Council," the "International Code Council" logo, "ICC," the "ICC" logo, "International Fuel Gas Code," "IFGC" and other names and trademarks appearing in this book are trademarks of the International Code Council, Inc., and/or its licensors (as applicable), and may not be used without permission.

Material designated IFGS
by
AMERICAN GAS ASSOCIATION
400 N. Capitol Street, N.W. · Washington, DC 20001
(202) 824-7000
Copyright © American Gas Association, 2017. All rights reserved.

T024583

PRINTED IN THE USA

INTERNATIONAL CODE COUNCIL®

Copyright © 2019 ICC & NYSDOS. ALL RIGHTS RESERVED. Accessed by Lauren Gualdino (lgualdino@briarcliffmanor.org), (-) Order Number #100880972 on May 08, 2020 07:05 AM (PDT) pursuant to License Agreement with ICC & NYSDOS. No further reproduction, no

ACKNOWLEDGMENTS

With gratitude, the Department of State acknowledges the contributions of the following individuals in the creation of the 2020 Codes of New York State:

STATE FIRE PREVENTION AND BUILDING CODE COUNCIL

Rossana Rosado	Chair – Secretary of State, New York State Department of State
	Designee - Matthew W. Tebo, Esq.
Francis J. Nerney, Jr.	State Fire Administrator, Office of Fire Prevention and Control
	Designee - Paul Martin
RuthAnne Visnauskas	Commissioner, Division of Housing and Community Renewal
	Designee - Michael Weber
	Designee - Joseph Palozzola
Roberta Reardon	Commissioner, New York State Department of Labor
	Designee - Vincent R. Rapacciuolo
Honorable Bill de Blasio	Mayor, City of New York
	Designee - Keith Wen, NYC Department of Buildings
Honorable Michael R. Sabatino, Jr.	Councilmember, City of Yonkers
Claudia K. Braymer, Esq.	County Board of Supervisors, Warren County
David A. Seeley	Supervisor, Town of Irondequoit
Timothy DeRuyscher, P.E. FSFPE	Professional Engineer Representative
Patrick Dolan	Trade Union Representative, Steamfitters Union, 638
Shawn Hamlin, R.A.	Registered Architect Representative, Hamlin Design Group
Robert Hughes	Code Enforcement Representative, Village of Pleasantville
Dominic Marinelli	Persons with Disabilities Representative, United Spinal Association
Joseph J. Toomey	Fire Service Representative, Albany Fire Department
William W. Tuyn	Builders Representative, Forbes Capretto Homes

DEPARTMENT OF STATE

Rossana Rosado	Secretary of State
Brendan Hughes	Executive Deputy Secretary of State
James W. Leary, Esq.	Assistant Executive Deputy Secretary of State
Mark P. Pattison	Deputy Secretary of State for Local Government
Matthew W. Tebo, Esq.	Deputy Secretary of State for Agency Transformation and External Affairs
John R. Addario, P.E.	Director of the Division of Building Standards and Codes
Brian Tollisen, P.E.	Deputy Director of the Division of Building Standards and Codes
Gerard A. Hathaway, R.A.	Assistant Director for Code Development
Kevin Duerr-Clark, P.E.	Assistant Director for Technical Support
Francis “Nick” McAndrew, P.E.	Assistant Director for Educational Services
Joseph Hill, R.A.	Assistant Director for Code Administration
Jeffrey M. Hinderliter, P.E.	Professional Engineer
Emma Gonzalez-Laders, R.A., LEED AP	Senior Architect
Daniel Carroll	Code Compliance Specialist I
Janet Miller	Program Aide
Joseph P. Ball, Esq.	Supervising Attorney
Panagiota K. Hyde, Esq.	Senior Attorney

IN MEMORIAM

John H. Flanagan	Code Enforcement Representative, Code Council Member (2003–2017)
Honorable Judith Kennedy	Mayor, City of Newburgh, Code Council Member (2013–2018)
Brendan Fitzgerald	Executive Deputy Secretary of State (2016–2018)

INTERNATIONAL CODE COUNCIL®
Copyright © 2019 ICC & NYSDOS. ALL RIGHTS RESERVED. Accessed by Lauren Gualdino (lgualdino@briarcliffmanor.org), (-) Order Number #100880972 on May 08, 2020 07:05 AM (PDT) pursuant to License Agreement with ICC & NYSDOS. No further reproduction, no

100880972

INTERNATIONAL CODE COUNCIL®
Copyright © 2019 ICC & NYSDOS. ALL RIGHTS RESERVED. Accessed by Lauren Gualdino (lgualdino@briarcliffmanor.org), (-) Order Number #100880972 on May 08, 2020 07:05 AM (PDT) pursuant to License Agreement with ICC & NYSDOS. No further reproduction, no

PREFACE

Introduction

The *Fuel Gas Code of New York State* (FGCNYS) establishes minimum requirements for fuel gas systems and gas-fired appliances using prescriptive and performance-related provisions. It is founded on broad-based principles that make possible the use of new materials and new fuel gas system and appliance designs. This 2020 edition was developed as a derivative work of the 2018 edition of the *International Fuel Gas Code*® (IFGC®) published by the International Code Council® (ICC®).

Intention

This code is founded on principles intended to establish provisions consistent with the scope of a fuel gas code that adequately protects public health, safety and welfare; provisions that do not unnecessarily increase construction costs; provisions that do not restrict the use of new materials, products or methods of construction; and provisions that do not give preferential treatment to particular types or classes of materials, products or methods of construction.

Letter Designations in Front of Section Numbers

The bracketed letter designations for the party responsible for portions of this code are as follows:

ICC Code Development Committee

[A] = Administrative Code Development Committee;

[BF] = IBC—Fire Safety Code Development Committee;

[BG] = IBC—General Code Development Committee;

[BS] = IBC—Structural Code Development Committee;

[E] = International Energy Conservation Code Development Committee;

[F] = International Fire Code Development Committee;

[M] = International Mechanical Code Development Committee; and

[P] = International Plumbing Code Development Committee

New York State Code Development

[NY] = New York State Department of State

The *International Fuel Gas Code* segregates section numbers into two categories—"code" and "standard." These are designated by the acronyms "IFGC" and "IFGS." The 2020 *Fuel Gas Code of New York State* does not retain these designations.

INTERNATIONAL CODE COUNCIL®
Copyright © 2019 ICC & NYSDOS. ALL RIGHTS RESERVED. Accessed by Lauren Gualdino (lgualdino@briarcliffmanor.org), (-) Order Number #100880972 on May 08, 2020 07:05 AM (PDT) pursuant to License Agreement with ICC & NYSDOS. No further reproduction, no

100880972

Marginal Markings

Solid vertical lines in the margins within the body of the code indicate a technical change from the requirements of the 2015 edition. Deletion indicators in the form of an arrow (➡) are provided in the margin where an entire section, paragraph, exception or table has been deleted or an item in a list of items or a table has been deleted.

Italicized Terms

Words and terms defined in Chapter 2, Definitions, are italicized where they appear in code text and the Chapter 2 definition applies. Where such words and terms are not italicized, common-use definitions apply. The words and terms selected have code-specific definitions that the user should read carefully to facilitate better understanding of the code.

INTERNATIONAL CODE COUNCIL®
Copyright © 2019 ICC & NYSDOS. ALL RIGHTS RESERVED. Accessed by Lauren Gualdino (lgualdino@briarcliffmanor.org), (-) Order Number #100880972 on May 08, 2020 07:05 AM (PDT) pursuant to License Agreement with ICC & NYSDOS. No further reproduction, no

100880972

EFFECTIVE USE OF THE FUEL GAS CODE OF NEW YORK STATE

The *Fuel Gas Code of New York State* (FGCNYS) is a code that regulates the design and installation of fuel gas distribution piping and systems, appliances, appliance venting systems, combustion air provisions, gaseous hydrogen systems and motor vehicle gaseous-fuel-dispensing stations. The definition of fuel gas includes natural, liquefied petroleum and manufactured gases and mixtures of these gases.

The purpose of the code is to establish the minimum acceptable level of safety and to protect life and property from the potential dangers associated with the storage, distribution and usage of fuel gases and the byproducts of combustion of such fuels. The code also protects the personnel that install, maintain, service and replace the systems and appliances addressed by this code.

With the exception of Section 401.1.1, the FGCNYS does not address utility-owned piping and equipment (i.e., anything upstream of the point of delivery). See the definition of "Point of delivery" and Section 501.8 for other code coverage exemptions.

The FGCNYS is primarily a specification-oriented (prescriptive) code with some performance-oriented text. For example, Section 503.3.1 is a performance statement, but Chapter 5 contains prescriptive requirements that will cause Section 503.3.1 to be satisfied.

The FGCNYS applies to all occupancies including one- and two-family dwellings and townhouses. The RCNYS is referenced for coverage of one- and two-family dwellings and townhouses; however, in effect, the FGCNYS provisions are still applicable because the fuel gas chapter in the RCNYS (Chapter 24) is composed entirely of text extracted from the FGCNYS. Therefore, whether using the FGCNYS or the RCNYS, the fuel gas provisions will be identical. The FGCNYS does not apply to piping systems that operate at pressures in excess of 125 psig for natural gas and 20 psig for LP-gas (note exception in Section 402.7).

The general Section 104.3 and the specific Sections 304.8, 402.3, 503.5.5 and 503.6.10 allow combustion air provisions, pipe sizing and chimney and vent sizing to be performed by approved engineering methods as alternatives to the prescriptive methods in the code.

Arrangement and Format of the 2020 FGCNYS

The format of the FGCNYS allows each chapter to be devoted to a particular subject, with the exception of Chapter 3, which contains general subject matters that are not extensive enough to warrant their own independent chapter.

Chapter 1 Scope and Administration. Chapter 1 establishes the limits of applicability of the code and describes how the code is to be applied and enforced. A fuel gas code, like any other code, is intended to be adopted as a legally enforceable document, and it cannot be effective without adequate provisions for its administration and enforcement.

Chapter 2 Definitions. Chapter 2 is the repository of the definitions of terms used in the body of the code. Codes are technical documents and every word, term and punctuation mark can impact the meaning of the code text and the intended results. The code often uses terms that have a unique meaning in the code and the code meaning can differ substantially from the ordinarily understood meaning of the term as used outside of the code.

The terms defined in Chapter 2 are deemed to be of prime importance in establishing the meaning and intent of the code text that uses the terms. The user of the code should be familiar with and consult this chapter because the definitions are essential to the correct interpretation of the code and because the user may not be aware that a term is defined.

Chapter 3 General Regulations. Chapter 3 contains broadly applicable requirements related to appliance location and installation, appliance and systems access, protection of structural elements and clearances to combustibles, among others. This chapter also covers combustion air provisions for gas-fired appliances.

INTERNATIONAL CODE COUNCIL®
Copyright © 2019 ICC & NYSDOS. ALL RIGHTS RESERVED. Accessed by Lauren Gualdino (lgualdino@briarcliffmanor.org), (-) Order Number #100880972 on May 08, 2020 07:05 AM (PDT) pursuant to License Agreement with ICC & NYSDOS. No further reproduction, no

100880972

Chapter 4 Gas Piping Installations. Chapter 4 covers the allowable materials for gas piping systems and the sizing and installation of such systems. It also covers pressure regulators, appliance connections and overpressure protection devices. Gas piping systems are sized to supply the maximum demand while maintaining the supply pressure necessary for safe operation of the appliances served.

Chapter 5 Chimneys and Vents. Chapter 5 regulates the design, construction, installation, maintenance, repair and approval of chimneys, vents, venting systems and their connections to gas-fired appliances. Properly designed chimneys, vents and venting systems are necessary to conduct to the outdoors the flue gases produced by the combustion of fuels in appliances. The provisions of this chapter are intended to minimize the hazards associated with high temperatures and potentially toxic and corrosive combustion gases. This chapter addresses all of the factory-built and site-built chimneys, vents and venting systems used to vent all types and categories of appliances. It also addresses direct-vent appliances, integral vent appliances, side-wall mechanically vented appliances and exhaust hoods that convey the combustion byproducts from cooking and other process appliances.

Chapter 6 Specific Appliances. Chapter 6 addresses specific appliances that the code intends to regulate. Each main section applies to a unique type of gas-fired appliance and specifies the product standards to which the appliance must be listed. The general requirements found in the previous Chapters 1 through 5 also apply and the sections in Chapter 6 add the special requirements that are specific to each type of appliance.

Chapter 7 Gaseous Hydrogen Systems. Chapter 7 is specific to gaseous hydrogen generation, storage, distribution and utilization systems, appliances and equipment. Note that hydrogen is not within the definition of "Fuel gas," but it is, nonetheless, commonly used as a fuel for fuel-cell power generation and fuel-cell powered motor vehicles. The scope of Chapter 7 is not limited to any particular use of hydrogen (see Sections 633 and 635). Hydrogen systems have unique potential hazards because of the specific gravity of the gas, its chemical effect on materials and the fact that it is not odorized.

Chapter 8 Referenced Standards. Chapter 8 lists all of the product and installation standards and codes that are referenced throughout Chapters 1 through 7. The standards are part of the code to the extent of the reference to the standard. Chapter 8 provides the full title and edition year of the standards and codes in addition to the address of the promulgators and the section numbers in which the standards and codes are referenced.

Appendix A Sizing and Capacities of Gas Piping. This appendix is informative and not part of the code. It provides design guidance, useful facts and data and multiple examples of how to apply the sizing tables and sizing methodologies of Chapter 4.

Appendix B Sizing of Venting Systems Serving Appliances Equipped with Draft Hoods, Category I Appliances and Appliances Listed for Use with Type B Vents. This appendix is informative and not part of the code. It contains multiple examples of how to apply the vent and chimney tables and methodologies of Chapter 5.

Appendix C Exit Terminals of Mechanical Draft and Direct-vent Venting Systems. This appendix is informative and not part of the code. It consists of a figure and notes that visually depict code requirements from Chapter 5 for vent terminals with respect to the openings found in building exterior walls.

Appendix D Recommended Procedure for Safety Inspection of an Existing Appliance Installation. This appendix is informative and not part of the code. It provides recommended procedures for testing and inspecting an appliance installation to determine if the installation is operating safely and if the appliance is in a safe condition.

INTERNATIONAL CODE COUNCIL®
Copyright © 2019 ICC & NYSDOS. ALL RIGHTS RESERVED. Accessed by Lauren Gualdino (lgualdino@briarcliffmanor.org), (-) Order Number #100880972 on May 08, 2020 07:05 AM (PDT) pursuant to License Agreement with ICC & NYSDOS. No further reproduction, no

100880972

TABLE OF CONTENTS

CHAPTER 1 SCOPE AND ADMINISTRATION 1

Section

101 Title, Scope and Purpose 1
102 Applicability 2
103 Administration and Enforcement 3
104 Materials, Equipment and Methods of Construction 4
105 Building Permits, Construction Inspections, Stop Work Orders, and Certificates of Occupancy 5
106 Submittal Documents 6
107 Service Utilities 7

CHAPTER 2 DEFINITIONS 9

Section

201 General 9
202 General Definitions 9

CHAPTER 3 GENERAL REGULATIONS 17

Section

301 General 17
302 Structural Safety 18
303 Appliance Location 18
304 Combustion, Ventilation and Dilution Air 19
305 Installation 22
306 Access and Service Space 23
307 Condensate Disposal 25
308 Clearance Reduction 25
309 Electrical 26
310 Electrical Bonding 26

CHAPTER 4 GAS PIPING INSTALLATIONS 29

Section

401 General 29
402 Pipe Sizing 29
403 Piping Materials 30
404 Piping System Installation 69
405 Piping Bends and Changes in Direction 71
406 Inspection, Testing and Purging 72
407 Piping Support 74
408 Drips and Sloped Piping 74
409 Shutoff Valves 75
410 Flow Controls 75
411 Appliance and Manufactured Home Connections 76
412 Liquefied Petroleum Gas Motor Vehicle Fuel-dispensing Facilities 77
413 Compressed Natural Gas Motor Vehicle Fuel-dispensing Facilities 79
414 Supplemental and Standby Gas Supply 80
415 Piping Support Intervals 80
416 Overpressure Protection Devices 81

CHAPTER 5 CHIMNEYS AND VENTS 83

Section

501 General 83
502 Vents 84
503 Venting of Appliances 85
504 Sizing of Category I Appliance Venting Systems 94
505 Direct-vent, Integral Vent, Mechanical Vent and Ventilation/Exhaust Hood Venting 98
506 Factory-built Chimneys 99

CHAPTER 6 SPECIFIC APPLIANCES 121

Section

601 General 121
602 Decorative Appliances for Installation in Fireplaces 121
603 Log Lighters 121
604 Vented Gas Fireplaces (Decorative Appliances) 121
605 Vented Gas Fireplace Heaters 121
606 Incinerators and Crematories 121
607 Commercial-industrial Incinerators 121
608 Vented Wall Furnaces 121
609 Floor Furnaces 121
610 Duct Furnaces 122
611 Nonrecirculating Direct-fired Industrial Air Heaters 122
612 Recirculating Direct-fired Industrial Air Heaters 123
613 Clothes Dryers 123

INTERNATIONAL CODE COUNCIL®
Copyright © 2019 ICC & NYSDOS. ALL RIGHTS RESERVED. Accessed by Lauren Gualdino (lgualdino@briarcliffmanor.org), (-) Order Number #100880972 on May 08, 2020 07:05 AM (PDT) pursuant to License Agreement with ICC & NYSDOS. No further reproduction, no

100880972

614 Clothes Dryer Exhaust 123
615 Sauna Heaters 125
616 Engine and Gas Turbine-powered Equipment 125
617 Pool and Spa Heaters 126
618 Forced-air Warm-air Furnaces 126
619 Conversion Burners 126
620 Unit Heaters 127
621 Unvented Room Heaters 127
622 Vented Room Heaters 127
623 Cooking Appliances 127
624 Water Heaters 128
625 Refrigerators 128
626 Gas-fired Toilets 128
627 Air-conditioning Appliances 128
628 Illuminating Appliances 129
629 Small Ceramic Kilns 129
630 Infrared Radiant Heaters 129
631 Boilers 130
632 Equipment Installed in Existing Unlisted Boilers 130
633 Stationary Fuel-cell Power Systems 130
634 Chimney Damper Opening Area 130
635 Gaseous Hydrogen Systems 130
636 Outdoor Decorative Appliances 130

CHAPTER 7 GASEOUS HYDROGEN SYSTEMS 131

Section
701 General 131
702 General Definitions 131
703 General Requirements 131
704 Piping, Use and Handling 132
705 Testing of Hydrogen Piping Systems 133
706 Location of Gaseous Hydrogen Systems 134
707 Operation and Maintenance of Gaseous Hydrogen Systems 134
708 Design of Liquefied Hydrogen Systems Associated with Hydrogen Vaporization Operations 134

CHAPTER 8 REFERENCED STANDARDS 135

APPENDIX A SIZING AND CAPACITIES OF GAS PIPING 141

APPENDIX B SIZING OF VENTING SYSTEMS SERVING APPLIANCES EQUIPPED WITH DRAFT HOODS, CATEGORY I APPLIANCES AND APPLIANCES LISTED FOR USE WITH TYPE B VENTS 151

APPENDIX C EXIT TERMINALS OF MECHANICAL DRAFT AND DIRECT-VENT VENTING SYSTEMS 161

APPENDIX D RECOMMENDED PROCEDURE FOR SAFETY INSPECTION OF AN EXISTING APPLIANCE INSTALLATION 163

INDEX 169

INTERNATIONAL CODE COUNCIL®
Copyright © 2019 ICC & NYSDOS. ALL RIGHTS RESERVED. Accessed by Lauren Gualdino (lgualdino@briarcliffmanor.org), (-) Order Number #100880972 on May 08, 2020 07:05 AM (PDT) pursuant to License Agreement with ICC & NYSDOS. No further reproduction, no

[NY] CHAPTER 1

SCOPE AND ADMINISTRATION

[NY] SECTION 101
TITLE, SCOPE AND PURPOSE

[NY] 101.1 Title. This publication shall be known as the 2020 edition of the *Fuel Gas Code of New York State* (FGCNYS), hereinafter referred to as "this code." This code is part of the New York State Uniform Fire Prevention and Building Code (the "Uniform Code").

[NY] 101.1.1 Amendments of New York State code books. In this Chapter 1, the term "New York State code books" shall include the *Residential Code of New York State*, the *Building Code of New York State*, the *Plumbing Code of New York State*, the *Mechanical Code of New York State*, the *Fuel Gas Code of New York State* (i.e., this publication), the *Fire Code of New York State*, the *Property Maintenance Code of New York State*, the *Existing Building Code of New York State*, and the *Energy Conservation Construction Code of New York State*. Provisions in any one or more of the New York State code books may be amended from time to time by provisions in 19 NYCRR Parts 1220 to 1227 or 19 NYCRR Part 1240, as currently in effect and as hereafter amended from time to time. If this publication is now or hereafter so amended, references in this publication to "this code" shall be deemed to be references to this publication as so amended. If any other New York State code book is now or hereafter so amended, references in this code to such other New York State code book shall be deemed to be references to such New York State code book as so amended.

[NY] 101.2 Scope. The provisions of this code shall apply to the design, installation, maintenance, alteration and inspection of fuel gas *piping and equipment*, *fuel gas-fired appliances and fuel gas-fired appliance venting* systems, that are permanently installed and specifically addressed herein. These requirements apply to *gas piping* systems extending from the point of delivery to the inlet connections of *appliances*, the installation and operation of residential and commercial gas *appliances* and related accessories, and *gaseous hydrogen systems*.

Exceptions:

1. The provisions of the *Residential Code of New York State* shall apply to the construction, *alteration*, movement, enlargement, replacement, *repair*, *equipment*, use and occupancy, location, removal and demolition of the following *buildings* and structures, provided that such *buildings* or *structures* are not more than three stories above grade plane in height, and their accessory structures not more than three stories above grade plane in height:
   1.1. Detached one-family dwellings.
   1.2. Detached two-family dwellings in which each dwelling unit has a separate means of egress.
   1.3. Townhouses.
   1.4. Bed and breakfast dwellings.
   1.5. Live/work units that (1) are located in townhouses and (2) comply with the requirements of Section 419 of the *Building Code of New York State*.
   1.6. Owner-occupied lodging houses that (1) have five or fewer guestrooms and (2) are provided with a residential fire sprinkler system complying with Section P2904 of the *Residential Code of New York State*.
2. *Agricultural buildings*, including barns, sheds, poultry houses and other buildings and equipment on the premises that are used directly and solely for agricultural purposes, shall not be subject to the construction-related provisions of this code.
3. *Fuel gas piping systems* in existing buildings that are undergoing repairs, alteration, or changes in occupancy or construction of additions shall comply with the provisions of the *Existing Building Code of New York State*.

[NY] 101.2.1 Facilities regulated by State Departments and Agencies. Where a building or premises under the custody, licensure, supervision or jurisdiction of a department or agency of the State of New York is regulated as a one- or two-family dwelling or multiple single-family dwelling (*townhouse*), in accordance with established laws or regulations of that department or agency, said *buildings* or premises, such as a community residence or hospice residence, and their *accessory structures* shall comply with the *Residential Code of New York State*.

[NY] 101.2.2 Appendices. Provisions in the following appendices are included for informational purposes:

Appendix A	Sizing and Capacities of Gas Piping
Appendix B	Sizing of Venting Systems Serving Appliances Equipped with Draft Hoods, Category I Appliances and Appliances Listed for Use with Type B Vents
Appendix C	Exit Terminals of Mechanical Draft and Direct-Vent Venting Systems
Appendix D	Recommended Procedure for Safety Inspection of an Existing Appliance Installation

[NY] 101.2.3 Gas appliances. Requirements for gas appliances and related accessories shall include installation, combustion and ventilation air and venting and connections to piping systems.

[NY] 101.2.4 Piping systems. These regulations cover piping systems for natural gas with an operating pressure of 125 pounds per square inch gauge (psig) (862 kPa gauge) or less, and for LP-gas with an operating pressure of 20 psig (140 kPa gauge) or less, except as provided in Section 402.6. Coverage shall extend from the point of

INTERNATIONAL CODE COUNCIL®
Copyright © 2019 ICC & NYSDOS. ALL RIGHTS RESERVED. Accessed by Lauren Gualdino (lgualdino@briarcliffmanor.org), (-) Order Number #100880972 on May 08, 2020 07:05 AM (PDT) pursuant to License Agreement with ICC & NYSDOS. No further reproduction, no

100880972

delivery to the outlet of the appliance shutoff valves. Piping systems requirements shall include design, materials, components, fabrication, assembly, installation, testing, inspection, operation and maintenance.

[NY] 101.2.5 Systems, appliances and equipment outside the scope. This code shall not apply to the following:

1. Portable LP-gas appliances and *equipment* of all types that are not connected to a fixed fuel *piping* system.
2. Installation of farm appliances and *equipment* such as brooders, dehydrators, dryers and irrigation *equipment*.
3. Raw material (feedstock) applications, except for *piping* to special atmosphere generators.
4. Oxygen-fuel gas cutting and welding systems.
5. Industrial gas applications using gases such as acetylene and acetylenic compounds, hydrogen, ammonia, carbon monoxide, oxygen and nitrogen.
6. Petroleum refineries, pipeline compressor or pumping stations, loading terminals, compounding plants, refinery tank farms and natural gas processing plants.
7. Integrated chemical plants or portions of such plants where flammable or combustible liquids or gases are produced by, or used in, chemical reactions.
8. LP-gas installations at utility gas plants.
9. Liquefied natural gas (LNG) installations.
10. Fuel gas *piping* in power and atomic energy plants.
11. Proprietary items of *equipment*, apparatus or instruments such as gas-generating sets, compressors and calorimeters.
12. LP-gas *equipment* for vaporization, gas mixing and gas manufacturing.
13. Temporary LP-gas *piping* for buildings under construction or renovation that is not to become part of the permanent *piping* system.
14. Installation of LP-gas systems for railroad switch heating.
15. Installation of hydrogen gas, LP-gas and compressed natural gas (CNG) systems on vehicles.
16. Except as provided in Section 401.1.1, gas *piping*, meters, gas pressure regulators and other appurtenances used by the serving gas supplier in the distribution of gas, other than undiluted LP-gas.
17. Building design and construction, except as specified herein.
18. *Piping* systems for mixtures of gas and air within the flammable range with an operating pressure greater than 10 psig (69 kPa gauge).
19. Portable fuel cell appliances that are neither connected to a fixed *piping* system nor interconnected to a power grid.

[NY] 101.2.6 Other fuels. The requirements for the design, installation, maintenance, *alteration* and inspection of mechanical systems operating with fuels other than fuel gas shall be regulated by the *Mechanical Code of New York State*.

[NY] 101.3 Purpose. The purpose of this code is to provide minimum requirements to safeguard life or limb, health, property, and public welfare by regulating and controlling the design, construction, installation, quality of materials, location, operation and maintenance or use of fuel gas systems.

[NY] SECTION 102 APPLICABILITY

[NY] 102.1 General. Where there is a conflict between a general requirement and a specific requirement, the specific requirement shall govern. Where, in a specific case, different sections of this code specify different materials, methods of construction or other requirements, the most restrictive shall govern.

[NY] 102.2 Other laws and regulations. This code is part of the New York State Uniform Fire Prevention and Building Code (the *Uniform Code*) promulgated pursuant to Article 18 of the New York State Executive Law. The provisions of this code shall not be deemed to nullify any federal, state or local law, ordinance, administrative code, rule or regulation relating to any matter as to which the *Uniform Code* does not provide.

However:

1. Pursuant to Section 383(1) of the Executive Law, and except as otherwise provided in paragraphs a, b, and c of Section 383(1) of the Executive Law, the provisions of the *Uniform Code* supersede any other provision of a general, special or local law, ordinance, administrative code, rule or regulation inconsistent or in conflict with the *Uniform Code*;
2. Pursuant to Section 379(3) of the Executive Law, no city, town, village, county or other municipality shall have the power to supersede, void, repeal, or make less restrictive any provision of the *Uniform Code*; and
3. The ability of any city, town, or village, or the County of Nassau, to enact or adopt, and to enforce, a local law or ordinance imposing higher or more restrictive standards for construction within the jurisdiction of such city, town, village, or county that are applicable generally to such city, town, village, or county in the *Uniform Code* is subject to the provisions and requirements of Section 379 of the Executive Law.

Nothing in Section 102.2 shall be construed as:

1. Affecting the authority of the State Labor Department to enforce a safety or health standard issued under provisions of Sections 27 and 27-a of the Labor Law;
2. Relieving a person from complying with a stricter standard issued pursuant to the Occupational Safety and Health Act of 1970, as amended; or
3. Superseding, limiting, impairing or otherwise affecting any provision the *Uniform Code*, as now in effect and as hereafter amended from time to time.

INTERNATIONAL CODE COUNCIL®
Copyright © 2019 ICC & NYSDOS. ALL RIGHTS RESERVED. Accessed by Lauren Gualdino (lgualdino@briarcliffmanor.org), (-) Order Number #100880972 on May 08, 2020 07:05 AM (PDT) pursuant to License Agreement with ICC & NYSDOS. No further reproduction, no

100880972

[NY] 102.2.1 Other New York Codes, Rules and Regulations (NYCRR). Additional New York Codes, Rules and Regulations exist that may affect new and *existing buildings*, *structures*, systems and equipment. Such regulations include, but are not limited to:

1. 19 NYCRR Part 300 (Universal Symbol of Access),
2. 19 NYCRR Part 1261 (Recordkeeping—Smoke Detectors in Multiple Dwellings),
3. 19 NYCRR Part 1264 (Identification of Buildings Utilizing Truss Type Construction), and
4. 19 NYCRR Part 1265 (Residential Structures with Truss Type Construction, Pre-Engineered Wood Construction and/or Timber Construction).

[NY] 102.3 Existing installations. Except as otherwise provided for in this chapter, a provision in this code shall not require the removal, *alteration* or abandonment of, nor prevent the continued utilization and maintenance of, existing installations lawfully in existence at the time of the adoption of this code.

[NY] 102.3.1 Existing buildings. Additions, alterations, renovations or repairs related to building or structural issues shall be regulated by the *Existing Building Code of New York State*.

[NY] 102.4 Maintenance. Installations, both existing and new, and parts thereof shall be maintained in proper operating condition in accordance with the original design and in a safe condition. Devices or safeguards that are required by this code shall be maintained in compliance with the edition of the code under which they were installed. The owner or the owner's authorized agent shall be responsible for maintenance of installations. To determine compliance with this provision, the code official shall have the authority to require an installation to be reinspected.

[NY] 102.5 Additions, alterations or repairs. Additions, alterations, renovations or repairs to installations shall conform to that required for new installations without requiring the existing installation to comply with all of the requirements of this code. Additions, alterations or repairs shall not cause an existing installation to become unsafe, hazardous or overloaded.

Minor additions, alterations, renovations and repairs to existing installations shall meet the provisions for new construction, unless such work is done in the same manner and arrangement as was in the existing system, is not hazardous and is *approved*.

[NY] 102.6 Change in occupancy. No change shall be made in the use or occupancy of any building or structure unless such building or structure is made to comply with the requirements of the *Uniform Code* and *Energy Code*.

[NY] 102.7 Moved buildings. Except as determined by Section 102.3, installations that are a part of buildings or structures moved into or within the jurisdiction shall comply with the provisions of this code for new installations.

[NY] 102.8 Referenced codes and standards. The codes and standards referenced in this code shall be considered to be part of the requirements of this code to the prescribed extent of each such reference and as further regulated in Sections 102.4.1 and 102.4.2.

[NY] 102.8.1 Conflicts. Where conflicts occur between provisions of this code and referenced codes and standards, the provisions of this code shall apply.

[NY] 102.8.2 Provisions in referenced codes and standards. Where the extent of the reference to a referenced code or standard includes subject matter that is within the scope of this code, the provisions of this code, as applicable, shall take precedence over the provisions in the referenced code or standard.

[NY] 102.9 Requirements not covered by code. Any requirements necessary for the strength, stability or proper operation of an existing or proposed plumbing system, or for the public safety, health and general welfare, not specifically covered by this code shall be determined by the *authority having jurisdiction*.

[NY] 102.10 Application of references. References to chapter or section numbers, or to provisions not specifically identified by number, shall be construed to refer to such chapter, section or provision of this code.

[NY] 102.11 Partial invalidity. In the event that any part or provision of this code is held by a court of competent jurisdiction to be illegal or void, this shall not have the effect of making void or illegal any of the other parts or provisions.

[NY] SECTION 103
ADMINISTRATION AND ENFORCEMENT

[NY] 103.1 Administration and enforcement. The *Uniform Code* shall be administered and enforced by the *authority having jurisdiction*. The identity of the *authority having jurisdiction* in a given situation is determined in accordance with Article 18 of the Executive Law and the regulations promulgated by the Secretary of State pursuant to Executive Law Section 381(1). In general, the *authority having jurisdiction* is the local government (city, town or village) in which the *building* or *structure* is located. In certain situations, the *authority having jurisdiction* may be the county in which the *building* or *structure* is located. In certain other cases, the State, the Secretary of State (acting through the Department of State) or some other State agency may be the *authority having jurisdiction*. The *authority having jurisdiction* responsible for administration and enforcement of the *Uniform Code* is also responsible for administration and enforcement of the *Energy Code*.

Administration and enforcement of the *Uniform Code* and *Energy Code* shall be in accordance with the following, as applicable:

1. Where a city, town, village or county is the *authority having jurisdiction*:
   1.1. Such city, town, village or county shall provide for administration and enforcement of the *Uniform Code* and *Energy Code* by local law, ordinance, other appropriate regulation, or combination thereof.

INTERNATIONAL CODE COUNCIL®
Copyright © 2019 ICC & NYSDOS. ALL RIGHTS RESERVED. Accessed by Lauren Gualdino (lgualdino@briarcliffmanor.org), (-) Order Number #100880972 on May 08, 2020 07:05 AM (PDT) pursuant to License Agreement with ICC & NYSDOS. No further reproduction, no

100880972

1.2. The *Code Enforcement Program* established by such local law, ordinance or other appropriate regulation, or combination thereof, must include, at a minimum, the features described in *Part 1203* and must satisfy all other requirements of *Part 1203*.

1.3. Such city, town, village or county shall administer and enforce the *Uniform Code* in accordance with the *Code Enforcement Program* established by such local law, ordinance or other appropriate regulation, or combination thereof.

2. Where the State is the *authority having jurisdiction* pursuant to 19 NYCRR Section 1201.2(d):

2.1. The *Code Enforcement Program* shall be as established by *Part 1204*.

2.2. The State, acting through one or more State agencies, shall administer and enforce the *Uniform Code* and *Energy Code* in accordance with *Part 1204*.

3. Where the Department of State is the *authority having jurisdiction*:

3.1. The *Code Enforcement Program* shall be as established by *Part 1202*.

3.2. The Department of State shall administer and enforce the *Uniform Code* and *Energy Code* in accordance with *Part 1202*.

4. Where any governmental unit or agency not included in Items 1, 2, and 3 above is the *authority having jurisdiction*:

4.1. Such governmental unit or agency shall provide for administration and enforcement of the *Uniform Code* and *Energy Code* by regulation.

4.2. The *Code Enforcement Program* established by such regulation must include, at a minimum, the features described *Part 1203* and must satisfy all other requirements of *Part 1203*.

4.3. Such governmental unit or agency shall administer and enforce the *Uniform Code* and *Energy Code* in accordance with the *Code Enforcement Program* established by such regulation.

Every governmental unit or agency thereof charged with administration and enforcement of the *Uniform Code* shall exercise its powers in due and proper manner so as to extend to the public protection from the hazards of fire and inadequate building construction.

Any person or entity constructing or renovating a *building* or *structure*, changing the use or occupancy of a *building* or *structure*, or engaging in any other activity that is subject to the provisions of the *Code Enforcement Program* of the *authority having jurisdiction* responsible for administration and enforcement of the *Uniform Code* with respect to such building shall comply with all applicable provisions of such *Code Enforcement Program*.

In addition, persons and entities who construct, renovate, use and occupy *buildings* and *structures* shall comply with all applicable provisions of Section 105 of this code.

[NY] 103.2 Due process. Nothing in Chapter 1, or elsewhere in the *Uniform Code*, or elsewhere in this code, or in any regulation promulgated pursuant to Executive Law Section 381(1), shall be construed as authorizing any *authority having jurisdiction* to administer and enforce the *Uniform Code* in a manner that deprives any person or entity of due process of law. In particular, but not by way of limitation, nothing in Chapter 1, or elsewhere in this code, or elsewhere in the *Uniform Code*, or in any regulation promulgated pursuant to Executive Law Section 381(1), relating to posting, placarding and/or condemnation of *buildings* or *structures* that are unsafe, unfit for human occupancy or unlawful shall be construed as authorizing any *authority having jurisdiction* to post, placard or condemn any such *building* or *structure* and/or to remove any *owner* or occupant or cause any *owner* or occupant to be removed from any such *building* or *structure* without providing such notice and opportunity to be heard (and, if applicable, right of appeal) as may be required under the applicable circumstances by applicable Constitutional provisions.

[NY] 103.2.1 Imminent danger. In cases of imminent danger, posting, placarding, and condemning a *building* or *structure* and removing *owners* and occupants or causing *owners* and occupants to be removed without first providing an opportunity to be heard shall be permitted to the extent consistent with applicable Constitutional provisions, provided that the affected persons and entities are afforded the opportunity for a post-action hearing to the extent required by applicable Constitutional provisions.

[NY] 103.3 Application for variance or appeal. An application for a variance or modification of any provision or requirement of *Uniform Code* shall be in accordance with the provisions of *Part 1205*. An appeal of any order or determination, or the failure within a reasonable time to make an order or determination, of an administrative official charged to enforce or purporting to enforce the *Uniform Code* may be made in accordance with the provisions of *Part 1205*.

[NY] SECTION 104
MATERIALS, EQUIPMENT AND METHODS OF CONSTRUCTION

[NY] 104.1 Approved materials and equipment. Materials, equipment, and devices *approved* by the *building official* shall be constructed and installed in accordance with such approval. Materials, equipment and devices tested by an *approved* testing laboratory shall be permitted to be constructed and installed in accordance with such approval.

[NY] 104.1.1 Used materials and equipment. Used materials, equipment, and devices shall not be reused unless they meet the requirements of this code for new materials.

[NY] 104.2 Waivers, variances, and modifications. Nothing in this code shall be construed as permitting any *building official* or any *authority having jurisdiction* to waive, vary, modify, or otherwise alter any provision or requirement of this code or any other provision or requirement of the *Uniform Code*. Provisions or requirements of the *Uniform Code* may be varied or modified only in accordance with procedures established by *Part 1205* or by such other regulations

INTERNATIONAL CODE COUNCIL®
Copyright © 2019 ICC & NYSDOS. ALL RIGHTS RESERVED. Accessed by Lauren Gualdino (lgualdino@briarcliffmanor.org), (-) Order Number #100880972 on May 08, 2020 07:05 AM (PDT) pursuant to License Agreement with ICC & NYSDOS. No further reproduction, no

100880972

as may hereafter be promulgated by the Secretary of State pursuant to Section 381(1)(f) of the Executive Law.

[NY] 104.3 Alternative materials, equipment, appliances, designs, and methods of construction. The provisions of this code are not intended to prevent the installation of any materials, equipment, or appliances not specifically prescribed by this code, or to prohibit any designs or methods of construction not specifically prescribed by this code, provided that such alternative materials, equipment, appliances, designs, or methods of construction (1) are not specifically prohibited by any provision of this code, by any other provision of the *Uniform Code*, or by the *Energy Code* and (2) shall have been *approved*, in writing, by the *building official*. Alternative materials, *equipment*, *appliances*, designs, or methods of construction may be *approved* only when the *building official* shall have determined, in writing, that such alternative is:

1. Satisfactory and complies with the intent of the provisions and requirements of the *Uniform Code*, and
2. Not less than the equivalent of that prescribed in the *Uniform Code* in quality, strength, effectiveness, fire resistance, durability, and safety.

Nothing in this section shall be construed as permitting any *building official* or any *authority having jurisdiction* to waive, vary, modify or otherwise alter any provision or requirement of this code or any other provision or requirement of the *Uniform Code*. Provisions or requirements of the *Uniform Code* may be varied or modified only pursuant to procedures established in *Part 1205* or by such other regulations as may hereafter be promulgated by the Secretary of State pursuant to Section 381(1)(f) of the Executive Law.

[NY] 104.4 Workmanship. Repairs, maintenance work, alterations or installations which are caused directly or indirectly by the enforcement of the *Uniform Code* shall be executed and installed in a *workmanlike* manner and in accordance with *Uniform Code* and the manufacturer's installation instructions.

[NY] SECTION 105 BUILDING PERMITS, CONSTRUCTION INSPECTIONS, STOP WORK ORDERS, AND CERTIFICATES OF OCCUPANCY

[NY] 105.1 Purpose. The purpose of Section 105 is to include in the *Uniform Code* provisions requiring persons and entities who construct, renovate, use and occupy *buildings* and *structures* to apply for and obtain *building permits,* to facilitate construction inspections, to obey *stop work orders*, to obtain *certificates of occupancy*, and to obtain operating permits. The provisions in Section 105 are considered to be integral parts of the *Uniform Code's* standards for construction, maintenance, and fire protection equipment and systems.

[NY] 105.1.1 Definition. For the purpose of Section 105, the term "other applicable law" shall include the *authority having jurisdiction's Code Enforcement Program*; any local law, ordinance, or regulation establishing the *authority having jurisdiction's Code Enforcement Program*; and any other applicable statute, regulation, rule, local law, or ordinance.

[NY] 105.2 Building permits. No person or entity shall commence, perform, or continue any work that must conform with the *Uniform Code* and/or *Energy Code* unless:

1. Such person or entity has applied to the *authority having jurisdiction* for a *building permit*,
2. The *authority having jurisdiction* has issued a *building permit* authorizing such work,
3. Such *building permit* has not been revoked or suspended, and
4. Such *building permit* has not expired.

[NY] 105.2.1 Work exempt from building permit requirement. A *building permit* shall not be required for work in any category that is excluded from the *building permit* requirement by the *authority having jurisdiction's Code Enforcement Program*, provided that *Part 1203* allows an *authority having jurisdiction* to exclude such category of work from the *building permit* requirement. Exemptions from *building permit* requirements shall not be deemed to grant authorization for any work to be done in any manner in violation of any provision of the *Uniform Code*, any provision of the *Energy Code*, or any provision of any other applicable law.

[NY] 105.2.2 Applications for building permits. A person or entity applying for a *building permit* shall submit an application to the *authority having jurisdiction*. An application for a *building permit* shall include:

1. Construction documents that satisfy the requirements of Section 106.2;
2. Any and all other submittal documents required by Section 106;
3. Any and all other information and documentation that may be required by the stricter of the *authority having jurisdiction's Code Enforcement Program* or a *Part 1203—Compliant Code Enforcement Program*; and
4. Such other information and documentation as the *authority having jurisdiction* may determine to be necessary to allow the *authority having jurisdiction* to determine whether the proposed work conforms with the *Uniform Code*, the *Energy Code*, and other applicable laws.

[NY] 105.2.3 Approval of construction documents. When the *authority having jurisdiction* issues a building permit, the *authority having jurisdiction* shall approve the construction documents in writing. Work shall be installed in accordance with the approved *construction documents* and the terms and conditions, if any, of the *building permit*.

[NY] 105.2.4 Validity of building permit. The issuance or granting of a *building permit* shall not be construed to be a permit for, or an approval of, any violation of any provisions of the *Uniform Code*, the *Energy Code*, or any other applicable law. A *building permit* purporting to give authority to violate or cancel any provision of the *Uniform Code*, the *Energy Code*, or any other applicable law shall

INTERNATIONAL CODE COUNCIL®
Copyright © 2019 ICC & NYSDOS. ALL RIGHTS RESERVED. Accessed by Lauren Gualdino (lgualdino@briarcliffmanor.org), (-) Order Number #100880972 on May 08, 2020 07:05 AM (PDT) pursuant to License Agreement with ICC & NYSDOS. No further reproduction, no

100880972

not be valid. The issuance of a *building permit* based on construction documents and other data shall not prevent the *building official* from requiring the correction of errors in the *construction documents* and other data.

[NY] 105.2.5 Suspension or revocation of a building permit. The *authority having jurisdiction* is authorized to suspend or revoke a *building permit* wherever the *building permit* is issued in error; or on the basis of incorrect, inaccurate or incomplete information; or in violation of any provision of the *Uniform Code*, the *Energy Code*, or any other applicable law. Any such suspension or revocation shall be in writing, signed by the *building official* or by his or her designated agent.

[NY] 105.2.6 Placement of building permit and approved construction documents. The *building permit,* or a copy thereof, and at least one set of *approved construction documents* shall be kept on the site of the work until the completion of the project. The *approved construction documents* shall be open to inspection by any authorized representative of the *authority having jurisdiction*.

[NY] 105.3 Construction inspections. Any person or entity performing work for which a *building permit* has been issued shall keep work accessible and exposed until the work has been inspected and accepted by the *authority having jurisdiction*, or its authorized agent, at each element of the construction process that is applicable to the work and specified in the stricter of the *authority having jurisdiction's Code Enforcement Program* or a *Part 1203—Compliant Code Enforcement Program*.

[NY] 105.3.1 Inspection requests. It shall be the duty of the holder of the *building permit* or their duly authorized agent to notify the *building official* when work is ready for inspection. It shall be the duty of the *building permit* holder to provide access to and means for inspections of such work that are required by this code.

[NY] 105.4 Stop work orders. The *authority having jurisdiction* is authorized to issue a stop work order to halt work that is being performed without a required *building permit*; work that is being performed after a required *building permit* has been revoked or suspended or has expired*;* work that is being conducted in a dangerous or unsafe manner; or work that is contrary to provisions of the *Uniform Code*, the *Energy Code*, the *approved construction documents*, or the terms and conditions (if any) of the *building permit*. No person or entity shall commence, perform or continue any work if the *authority having jurisdiction* has issued a stop work order with respect to such work.

[NY] 105.5 Certificates of occupancy. Where the stricter of the *authority having jurisdiction's Code Enforcement Program* or a *Part 1203—Compliant Code Enforcement Program* requires a *certificate of occupancy* for permission to use or occupy a *building* or *structure*, or any portion thereof, no person or entity shall use or occupy such *building* or *structure*, or such portion thereof, unless:

1. The *authority having jurisdiction* has issued such *certificate of occupancy*.
2. Such *certificate of occupancy* has not been revoked or suspended.
3. In the case of a temporary *certificate of occupancy*, such temporary *certificate of occupancy* has not expired.

[NY] 105.5.1 Authorized uses and occupancies. Where a *certificate of occupancy* has been issued for a *building* or *structure*, or any portion thereof, no person or entity shall use or occupy such *building* or *structure*, or such portion thereof, for any use or occupancy other than that authorized by such *certificate of occupancy*.

[NY] 105.5.2 Change in use or occupancy. Without regard to whether a *certificate of occupancy* shall have been issued, no person or entity shall convert the use or occupancy of a *building* or *structure*, or any portion thereof, from one use or occupancy to another without first obtaining a *building permit* to perform the work, if any, required for such conversion; performing such work, if any; and obtaining a *certificate of occupancy* from the *authority having jurisdiction*.

[NY] 105.6 Operating permits. Where the stricter of the *authority having jurisdiction's Code Enforcement Program* or a *Part 1203—Compliant Code Enforcement Program* requires an operating permit to conduct an activity or to use a category of *building*, no person or entity shall conduct such activity or use such category of *building* without obtaining an operating permit from the *authority having jurisdiction*. The procedures for applying for, issuing, revoking, and suspending operating permits shall be as set forth in the stricter of the *authority having jurisdiction's Code Enforcement Program* or a *Part 1203—Compliant Code Enforcement Program*.

[NY] 105.7 Violations. Any violation of any provision set forth in Sections 105.2 through 105.6 shall be a violation of the *Uniform Code*, and any person or entity violating any such provision shall be subject to the penalties prescribed in Executive Law Section 382(2). In addition, to the extent that any act or omission that violates any provision set forth in Sections 105.2 through 105.6 is also a violation of any other applicable law, any person or entity guilty of such act or omission shall also be subject to the penalties prescribed in or otherwise applicable to a violation of such other applicable law.

[NY] SECTION 106
SUBMITTAL DOCUMENTS

[NY] 106.1 General. Submittal documents consisting of *construction documents*, statements of *special inspections*, geotechnical reports, and other data shall be submitted with each application for a *building permit*.

[NY] 106.2 Construction documents. *Construction documents* shall be in accordance with Sections 106.2.1 through 106.2.9.

[NY] 106.2.1 Information on construction documents. *Construction documents* (1) shall define the scope of the proposed work; (2) shall be of sufficient clarity to indicate the location, nature and extent of the proposed work; (3) shall show in detail that the proposed work will conform to the provisions of the *Uniform Code*, the *Energy Code*,

INTERNATIONAL CODE COUNCIL®
Copyright © 2019 ICC & NYSDOS. ALL RIGHTS RESERVED. Accessed by Lauren Gualdino (lgualdino@briarcliffmanor.org), (-) Order Number #100880972 on May 08, 2020 07:05 AM (PDT) pursuant to License Agreement with ICC & NYSDOS. No further reproduction, no

100880972

and other applicable codes, laws, ordinances, and regulations; (4) shall include all information required by any provision of this code (including but not limited to the information described in Sections 106.2.2 through 106.2.8), all information required by any other applicable provision of the *Uniform Code*, and all information required by any applicable provision of the *Energy Code*; and (5) shall include any and all additional information and documentation that may be required by the stricter of the *Code Enforcement Program* of the *authority having jurisdiction* or a *Part 1203-Compliant Code Enforcement Program*.

[NY] 106.2.1.1 Manufacturer's installation instructions. Manufacturer's installation instructions, as required by any applicable provision of the *Uniform Code* or by any applicable provision of the *Energy Code*, shall be available on the job site at the time of inspection.

[NY] 106.2.2 Fire protection system shop drawings. Shop drawings for the *fire protection system(s)* shall be submitted to indicate conformance to Chapter 9 of the *Building Code of New York State*, any other applicable provision of the *Uniform Code*, and the *construction documents.* Such shop drawings shall be *approved* prior to the start of system installation. Shop drawings shall contain all information as required by the installation standards referenced in Chapter 9 of the *Building Code of New York State* or in any other applicable provision of the *Uniform Code*.

[NY] 106.2.3 Means of egress. The *construction documents* shall show in sufficient detail the location, construction, size and character of all portions of the *means of egress,* including the path of the *exit discharge* to the *public way,* in compliance with the provisions of the *Uniform Code*. In other than occupancies in Groups R-2, R-3, and I-1, the *construction documents* shall designate the number of occupants to be accommodated on every floor, and in all rooms and spaces.

[NY] 106.2.4 Exterior wall envelope. *Construction documents* for all buildings shall describe the *exterior wall envelope* in sufficient detail to determine compliance with the *Uniform Code* and the *Energy Code*. The *construction documents* shall provide details of the *exterior wall envelope* as required, including flashing, intersections with dissimilar materials, corners, end details, control joints, intersections at roof, eaves or parapets, means of drainage, water-resistive membrane and details around openings.

The *construction documents* shall include manufacturer's installation instructions that provide supporting documentation that the proposed penetration and opening details described in the *construction documents* maintain the weather resistance of the *exterior wall envelope*. The supporting documentation shall fully describe the *exterior wall* system that was tested, where applicable, as well as the test procedure used.

[NY]106.2.5 Exterior balconies and elevated walking surfaces. Where balconies or other elevated walking surfaces are exposed to water from direct or blowing rain, snow, or irrigation, and the structural framing is protected by an impervious moisture barrier, the *construction documents* shall include details for all elements of the impervious moisture barrier system. The *construction documents* shall include manufacturer's installation instructions.

[NY] 106.2.6 Site plan. The *construction documents* submitted with the application for a *building permit* shall be accompanied by a site plan showing to scale the size and location of new construction and existing *structures* on the site, distances from *lot lines*, the established street grades and proposed finished grades and, as applicable, *flood hazard areas*, *floodways*, and *design flood elevations*. The site plan shall be drawn in accordance with an accurate boundary line survey. In the case of demolition, the site plan shall show construction to be demolished and the location and size of existing structures and construction that are to remain on the site or plot. The *building official* is authorized to waive or modify the requirement for a site plan where the application for a *building permit* is for an *alteration* or *repair* or where otherwise warranted.

[NY] 106.2.6.1 Design flood elevations. Where *design flood elevations* are not specified, they shall be established in accordance with Section 1612.3.1 of the *Building Code of New York State*.

[NY] 106.2.6.2 Flood hazard documentation. If located in a *flood hazard area*, documentation of the elevation of the lowest floor as required in Section 1612.4 of the *Building Code of New York State* shall be submitted to the *building official* prior to the final inspection.

[NY] 106.2.7 Structural information. The *construction documents* shall provide the information specified in Section 1603 of the *Building Code of New York State*.

[NY] 106.2.8 Relocatable buildings. *Construction documents* for relocatable buildings shall comply with Section 3112 of the *Building Code of New York State*.

[NY] 106.2.9 Design professional. *Construction documents* shall be prepared by a *registered design professional* where required by Article 145 or Article 147 of the New York State Education Law, by the stricter of the *Code Enforcement Program* of the *authority having jurisdiction* or a *Part 1203—Compliant Code Enforcement Program*, or by any other applicable statute, regulation, or local law or ordinance.

[NY] SECTION 107
SERVICE UTILITIES

[NY] 107.1 Connection of service utilities. Connections from a utility, source of energy, fuel or power to any *building* or system which is regulated by *Uniform Code* shall be made in accordance with the requirements of the *Uniform Code*; the regulations of the public utility providing such utility, source of energy, fuel or power; and the regulations of any governmental unit or agency having jurisdiction over such utility, source of energy, fuel or power.

[NY] 107.1.1 Temporary connection. Where *approved* by the *building official*, temporary connections from a utility, source of energy, fuel or power to a *building* or system

INTERNATIONAL CODE COUNCIL®
Copyright © 2019 ICC & NYSDOS. ALL RIGHTS RESERVED. Accessed by Lauren Gualdino (lgualdino@briarcliffmanor.org), (-) Order Number #100880972 on May 08, 2020 07:05 AM (PDT) pursuant to License Agreement with ICC & NYSDOS. No further reproduction, no

100880972

may be made. Temporary connections shall be made in accordance with Section 107.1.

[NY] 107.2 Notice of disconnection of service utilities. The *owner* or the *owner's* authorized agent shall notify the *building official* of the disconnection of any utility service to the *building*, *structure*, or system regulated by the *Uniform Code*.

INTERNATIONAL CODE COUNCIL®
Copyright © 2019 ICC & NYSDOS. ALL RIGHTS RESERVED. Accessed by Lauren Gualdino (lgualdino@briarcliffmanor.org), (-) Order Number #100880972 on May 08, 2020 07:05 AM (PDT) pursuant to License Agreement with ICC & NYSDOS. No further reproduction, no

100880972

CHAPTER 2
DEFINITIONS

SECTION 201
GENERAL

201.1 Scope. Unless otherwise expressly stated, the following words and terms shall, for the purposes of this code and standard, have the meanings indicated in this chapter.

201.2 Interchangeability. Words used in the present tense include the future; words in the masculine gender include the feminine and neuter; the singular number includes the plural and the plural, the singular.

201.3 Terms defined in other codes. Where terms are not defined in this code and are defined in the *Building Code of New York State*, *Fire Code of New York State*, *Mechanical Code of New York State* or *Plumbing Code of New York State*, such terms shall have meanings ascribed to them as in those codes.

201.4 Terms not defined. Where terms are not defined through the methods authorized by this section, such terms shall have ordinarily accepted meanings such as the context implies.

SECTION 202
GENERAL DEFINITIONS

[M] ACCESS (TO). That which enables a device, *appliance* or *equipment* to be reached by ready *access* or by a means that first requires the removal or movement of a panel, door or similar obstruction (see also "Ready *access*").

AIR CONDITIONER, GAS-FIRED. A gas-burning, automatically operated *appliance* for supplying cooled air, dehumidified air, or both, or chilled liquid.

[M] AIR CONDITIONING. The treatment of air so as to control simultaneously the temperature, humidity, cleanness and distribution of the air to meet the requirements of a conditioned space.

[M] AIR, EXHAUST. Air being removed from any space or piece of *equipment* or *appliance* and conveyed directly to the atmosphere by means of openings or ducts.

[M] AIR-HANDLING UNIT. A blower or fan used for the purpose of distributing supply air to a room, space or area.

[M] AIR, MAKEUP. Any combination of outdoor and transfer air intended to replace exhaust air and exfiltration.

[A] ALTERATION. A change in a system that involves an extension, addition or change to the arrangement, type or purpose of the original installation.

ANODELESS RISER. A transition assembly in which plastic *piping* is installed and terminated above ground outside of a building.

[M] APPLIANCE. Any apparatus or device that utilizes a fuel or a raw material as a fuel to produce light, heat, power, refrigeration or air conditioning. Also, an apparatus that compresses fuel gases.

APPLIANCE, AUTOMATICALLY CONTROLLED. Appliances equipped with an automatic burner ignition and safety shutoff device and other automatic devices that accomplish complete turn-on and shutoff of the gas to the main burner or burners, and graduate the gas supply to the burner or burners, but do not affect complete shutoff of the gas.

APPLIANCE, FAN-ASSISTED COMBUSTION. An *appliance* equipped with an integral mechanical means to either draw or force products of combustion through the combustion chamber or heat exchanger.

APPLIANCE TYPE.

Low-heat appliance (residential appliance). Any *appliance* in which the products of combustion at the point of entrance to the flue under normal operating conditions have a temperature of 1,000°F (538°C) or less.

Medium-heat appliance. Any *appliance* in which the products of combustion at the point of entrance to the flue under normal operating conditions have a temperature of more than 1,000°F (538°C), but not greater than 2,000°F (1093°C).

APPLIANCE, UNVENTED. An *appliance* designed or installed in such a manner that the products of combustion are not conveyed by a vent or chimney directly to the outside atmosphere.

[M] APPLIANCE, VENTED. An *appliance* designed and installed in such a manner that all of the products of combustion are conveyed directly from the *appliance* to the outdoor atmosphere through an *approved* chimney or vent system.

[A] APPROVED. Acceptable to the *building official*.

[A] APPROVED AGENCY. An established and recognized agency that is regularly engaged in conducting tests, furnishing inspection services or furnishing certification, where such agency has been approved by the *building official*.

ATMOSPHERIC PRESSURE. The pressure of the weight of air and water vapor on the surface of the earth, approximately 14.7 pounds per square inch (psi) (101 kPa absolute) at sea level.

[NY] AUTHORITY HAVING JURISDICTION. The governmental unit or agency responsible for administration and enforcement of this code.

AUTOMATIC IGNITION. Ignition of gas at the burner(s) when the gas controlling device is turned on, including reignition if the flames on the burner(s) have been extinguished by means other than by the closing of the gas controlling device.

BAFFLE. An object placed in an *appliance* to change the direction of or retard the flow of air, air-gas mixtures or flue gases.

BAROMETRIC DRAFT REGULATOR. A balanced damper device attached to a chimney, vent connector, breeching or flue gas manifold to protect combustion appliances by

INTERNATIONAL CODE COUNCIL®
Copyright © 2019 ICC & NYSDOS. ALL RIGHTS RESERVED. Accessed by Lauren Gualdino (lgualdino@briarcliffmanor.org), (-) Order Number #100880972 on May 08, 2020 07:05 AM (PDT) pursuant to License Agreement with ICC & NYSDOS. No further reproduction, no

100880972

controlling chimney draft. A double-acting barometric draft regulator is one whose balancing damper is free to move in either direction to protect combustion appliances from both excessive draft and backdraft.

BOILER, LOW-PRESSURE. A self-contained *appliance* for supplying steam or hot water.

Hot water heating boiler. A boiler in which no steam is generated, from which hot water is circulated for heating purposes and then returned to the boiler, and that operates at water pressures not exceeding 160 pounds per square inch gauge (psig) (1100 kPa gauge) and at water temperatures not exceeding 250°F (121°C) at or near the boiler *outlet*.

Hot water supply boiler. A boiler, completely filled with water, which furnishes hot water to be used externally to itself, and that operates at water pressures not exceeding 160 psig (1100 kPa gauge) and at water temperatures not exceeding 250°F (121°C) at or near the boiler *outlet*.

Steam heating boiler. A boiler in which steam is generated and that operates at a steam pressure not exceeding 15 psig (100 kPa gauge).

BONDING JUMPER. A conductor installed to electrically connect metallic gas *piping* to the grounding electrode system.

[M] BRAZING. A metal-joining process wherein coalescence is produced by the use of a nonferrous filler metal having a melting point above 1,000°F (538°C), but lower than that of the base metal being joined. The filler material is distributed between the closely fitted surfaces of the joint by capillary action.

BROILER. A general term including salamanders, barbecues and other appliances cooking primarily by radiated heat, excepting toasters.

BTU. Abbreviation for British thermal unit, which is the quantity of heat required to raise the temperature of 1 pound (454 g) of water 1°F (0.56°C) (1 Btu = 1055 J).

[NY] BUILDING CODE OF NEW YORK STATE. The 2020 edition of the publication entitled "Building Code of New York State," published by the International Code Council, Inc. (publication date November 2019).

[NY] BUILDING OFFICIAL. The officer or other designated authority charged with the administration and enforcement of this code, or a duly authorized representative.

BURNER. A device for the final conveyance of the gas, or a mixture of gas and air, to the combustion zone.

Induced-draft. A burner that depends on draft induced by a fan that is an integral part of the *appliance* and is located downstream from the burner.

Power. A burner in which gas, air or both are supplied at pressures exceeding, for gas, the line pressure, and for air, atmospheric pressure, with this added pressure being applied at the burner.

[M] CHIMNEY. A primarily vertical structure containing one or more flues, for the purpose of carrying gaseous products of combustion and air from an *appliance* to the outside atmosphere.

Factory-built chimney. A *listed* and *labeled* chimney composed of factory-made components, assembled in the field in accordance with manufacturer's instructions and the conditions of the listing.

Masonry chimney. A field-constructed chimney composed of solid masonry units, bricks, stones or concrete.

Metal chimney. A field-constructed chimney of metal.

[M] CLEARANCE. The minimum distance through air measured between the heat-producing surface of the mechanical *appliance*, device or *equipment* and the surface of the *combustible material* or *assembly*.

CLOTHES DRYER. An *appliance* used to dry wet laundry by means of heated air. Dryer classifications are as follows:

Type 1. Factory-built package, multiple production. Primarily used in family living environment. Usually the smallest unit physically and in function output.

Type 2. Factory-built package, multiple production. Used in business with direct intercourse of the function with the public. Not designed for use in individual family living environment.

[A] CODE. These regulations, subsequent amendments thereto or any emergency rule or regulation that the administrative authority having jurisdiction has lawfully adopted.

[NY] CODE ENFORCEMENT PROGRAM. The program under which an *authority having jurisdiction* administers and enforces this code, as such program is currently in effect and as such program may hereafter be amended from time to time.

[M] COMBUSTIBLE ASSEMBLY. Wall, floor, ceiling or other assembly constructed of one or more component materials that are not defined as noncombustible.

[M] COMBUSTIBLE MATERIAL. Any material not defined as noncombustible.

[M] COMBUSTION. In the context of this code, refers to the rapid oxidation of fuel accompanied by the production of heat or heat and light.

[M] COMBUSTION AIR. Air necessary for complete combustion of a fuel, including theoretical air and excess air.

[M] COMBUSTION CHAMBER. The portion of an *appliance* within which combustion occurs.

[M] COMBUSTION PRODUCTS. Constituents resulting from the combustion of a fuel with the oxygen of the air, including inert gases, but excluding excess air.

[M] CONCEALED LOCATION. A location that cannot be accessed without damaging permanent parts of the building structure or finish surface. Spaces above, below or behind readily removable panels or doors shall not be considered as concealed.

CONCEALED PIPING. *Piping* that is located in a *concealed location* (see "*Concealed location*").

CONDENSATE. The liquid that condenses from a gas (including flue gas) caused by a reduction in temperature or increase in pressure.

CONNECTOR, APPLIANCE (Fuel). Rigid metallic pipe and fittings, semirigid metallic tubing and fittings or a *listed*

INTERNATIONAL CODE COUNCIL®
Copyright © 2019 ICC & NYSDOS. ALL RIGHTS RESERVED. Accessed by Lauren Gualdino (lgualdino@briarcliffmanor.org), (-) Order Number #100880972 on May 08, 2020 07:05 AM (PDT) pursuant to License Agreement with ICC & NYSDOS. No further reproduction, no

100880972

and *labeled* device that connects an *appliance* to the gas *piping* system.

CONNECTOR, CHIMNEY OR VENT. The pipe that connects an *appliance* to a chimney or vent.

[A] CONSTRUCTION DOCUMENTS. All of the written, graphic and pictorial documents prepared or assembled for describing the design, location and physical characteristics of the elements of the project necessary for obtaining a mechanical permit.

[M] CONTROL. A manual or automatic device designed to regulate the gas, air, water or electrical supply to, or operation of, a mechanical system.

CONVERSION BURNER. A unit consisting of a burner and its controls for installation in an *appliance* originally utilizing another fuel.

COUNTER APPLIANCES. Appliances such as coffee brewers and coffee urns and any appurtenant water-heating *appliance*, food and dish warmers, hot plates, griddles, waffle bakers and other appliances designed for installation on or in a counter.

[NY] CSST. Corrugated stainless steel tubing.

CUBIC FOOT. The amount of gas that occupies 1 cubic foot (0.02832 m^3) when at a temperature of 60°F (16°C), saturated with water vapor and under a pressure equivalent to that of 30 inches of mercury (101 kPa).

[M] DAMPER. A manually or automatically controlled device to regulate draft or the rate of flow of air or combustion gases.

DECORATIVE APPLIANCE, VENTED. A vented *appliance* wherein the primary function lies in the aesthetic effect of the flames.

DECORATIVE APPLIANCES FOR INSTALLATION IN VENTED FIREPLACES. A vented *appliance* designed for installation within the fire chamber of a vented *fireplace*, wherein the primary function lies in the aesthetic effect of the flames.

DEMAND. The maximum amount of gas input required per unit of time, usually expressed in cubic feet per hour, or Btu/h (1 Btu/h = 0.2931 W).

[BS] DESIGN FLOOD ELEVATION. The elevation of the "design flood," including wave height, relative to the datum specified on the community's legally designated flood hazard map. In areas designated as Zone AO, the *design flood elevation* shall be the elevation of the highest existing grade of the *building's* perimeter plus the depth number (in feet) specified on the flood hazard map. In areas designated as Zone AO where a depth number is not specified on the map, the depth number shall be taken as being equal to 2 feet (610 mm).

DILUTION AIR. Air that is introduced into a draft hood and is mixed with the flue gases.

DIRECT-VENT APPLIANCES. Appliances that are constructed and installed so that all air for combustion is derived directly from the outdoor atmosphere and all flue gases are discharged directly to the outdoor atmosphere.

[M] DRAFT. The pressure difference existing between the *appliance* or any component part and the atmosphere, that causes a continuous flow of air and products of combustion through the gas passages of the *appliance* to the atmosphere.

Mechanical or induced draft. The pressure difference created by the action of a fan, blower or ejector that is located between the *appliance* and the chimney or vent termination.

Natural draft. The pressure difference created by a vent or chimney because of its height, and the temperature difference between the flue gases and the atmosphere.

DRAFT HOOD. A nonadjustable device built into an *appliance*, or made as part of the vent connector from an *appliance*, that is designed to: provide for ready escape of the flue gases from the *appliance* in the event of no draft, backdraft or stoppage beyond the draft hood; prevent a backdraft from entering the *appliance*; and neutralize the effect of stack action of the chimney or gas vent upon operation of the *appliance*.

DRAFT REGULATOR. A device that functions to maintain a desired draft in the *appliance* by automatically reducing the draft to the desired value.

[M] DRIP. The container placed at a low point in a system of *piping* to collect condensate and from which the condensate is removable.

DRY GAS. A gas having a moisture and hydrocarbon dew point below any normal temperature to which the gas *piping* is exposed.

DUCT FURNACE. A warm-air furnace normally installed in an air distribution duct to supply warm air for heating. This definition shall apply only to a warm-air heating *appliance* that depends for air circulation on a blower not furnished as part of the furnace.

[M] DUCT SYSTEM. A continuous passageway for the transmission of air that, in addition to ducts, includes duct fittings, dampers, plenums, fans and accessory air-handling *equipment*.

[A] DWELLING UNIT. A single unit providing complete, independent living facilities for one or more persons, including permanent provisions for living, sleeping, eating, cooking and sanitation.

[NY] ENERGY CODE. The New York State Energy Conservation Construction Code, adopted pursuant to Article 11 of the New York State Energy Law.

EQUIPMENT. Apparatus and devices other than appliances.

EXCESS FLOW VALVE (EFV). A valve designed to activate when the fuel gas passing through it exceeds a prescribed flow rate.

[NY] EXISTING BUILDING CODE OF NEW YORK STATE. The 2020 edition of the publication entitled "Existing Building Code of New York State," published by the International Code Council, Inc. (publication date November 2019).

EXTERIOR MASONRY CHIMNEYS. Masonry chimneys exposed to the outdoors on one or more sides below the roof line.

[NY] FIRE CODE OF NEW YORK STATE. The 2020 edition of the publication entitled "Fire Code of New York

INTERNATIONAL CODE COUNCIL®
Copyright © 2019 ICC & NYSDOS. ALL RIGHTS RESERVED. Accessed by Lauren Gualdino (lgualdino@briarcliffmanor.org), (-) Order Number #100880972 on May 08, 2020 07:05 AM (PDT) pursuant to License Agreement with ICC & NYSDOS. No further reproduction, no

100880972

State," published by the International Code Council, Inc. (publication date November 2019).

[M] FIREPLACE. A fire chamber and hearth constructed of *noncombustible material* for use with solid fuels and provided with a chimney.

Factory-built fireplace. A *fireplace* composed of *listed* factory-built components assembled in accordance with the terms of listing to form the completed *fireplace*.

Masonry fireplace. A hearth and fire chamber of solid masonry units such as bricks, stones, *listed* masonry units or reinforced concrete, provided with a suitable chimney.

FIRING VALVE. A valve of the plug and barrel type designed for use with gas, and equipped with a lever handle for manual operation and a dial to indicate the percentage of opening.

FLAME SAFEGUARD. A device that will automatically shut off the fuel supply to a main burner or group of burners when the means of ignition of such burners becomes inoperative, and when flame failure occurs on the burner or group of burners.

FLASHBACK ARRESTOR CHECK VALVE. A device that will prevent the backflow of one gas into the supply system of another gas and prevent the passage of flame into the gas supply system.

[BS] FLOOD HAZARD AREA. The greater of the following two areas:

1. The area within a floodplain subject to a 1 percent or greater chance of flooding in any given year.
2. This area designated as a *flood hazard area* on a community's flood hazard map, or otherwise legally designated.

FLOOR FURNACE. A completely self-contained furnace suspended from the floor of the space being heated, taking air for combustion from outside such space and with means for observing flames and lighting the *appliance* from such space.

Fan type. A floor furnace equipped with a fan that provides the primary means for circulating air.

Gravity type. A floor furnace depending primarily on circulation of air by gravity. This classification shall also include floor furnaces equipped with booster-type fans that do not materially restrict free circulation of air by gravity flow when such fans are not in operation.

FLUE, APPLIANCE. The passage(s) within an *appliance* through which combustion products pass from the combustion chamber of the *appliance* to the draft hood inlet opening on an *appliance* equipped with a draft hood or to the *outlet* of the *appliance* on an *appliance* not equipped with a draft hood.

FLUE COLLAR. That portion of an *appliance* designed for the attachment of a draft hood, vent connector or venting system.

FLUE GASES. Products of combustion plus excess air in *appliance* flues or heat exchangers.

[M] FLUE LINER (LINING). A system or material used to form the inside surface of a flue in a chimney or vent, for the purpose of protecting the surrounding structure from the effects of combustion products and for conveying combustion products without leakage to the atmosphere.

FUEL GAS. A natural gas, manufactured gas, liquefied petroleum gas or mixtures of these gases.

[M] FURNACE. A completely self-contained heating unit that is designed to supply heated air to spaces remote from or adjacent to the *appliance* location.

FURNACE, CENTRAL. A self-contained *appliance* for heating air by transfer of heat of combustion through metal to the air, and designed to supply heated air through ducts to spaces remote from or adjacent to the *appliance* location.

FURNACE, ENCLOSED. A specific heating, or heating and ventilating, furnace incorporating an integral total enclosure and using only outside air for combustion.

FURNACE PLENUM. An air compartment or chamber to which one or more ducts are connected and that forms part of an air distribution system.

GAS CONVENIENCE OUTLET. A permanently mounted, manually operated device that provides the means for connecting an *appliance* to, and disconnecting an *appliance* from, the supply *piping*. The device includes an integral, manually operated valve with a nondisplaceable valve member and is designed so that disconnection of an *appliance* only occurs when the manually operated valve is in the closed position.

GAS PIPING. An installation of pipe, valves or fittings installed on a premises or in a building and utilized to convey fuel gas.

[F] GASEOUS HYDROGEN SYSTEM. See Section 702.1.

[M] HAZARDOUS LOCATION. Any location considered to be a fire hazard for flammable vapors, dust, combustible fibers or other highly combustible substances. The location is not necessarily categorized in the building code as a high-hazard group classification.

HOUSE PIPING. See "*Piping* system."

[F] HYDROGEN FUEL-GAS ROOM. See Section 702.1.

HYDROGEN-GENERATING APPLIANCE. See Section 702.1.

IGNITION PILOT. A pilot that operates during the lighting cycle and discontinues during main burner operation.

[M] IGNITION SOURCE. A flame, spark or hot surface capable of igniting flammable vapors or fumes. Such sources include *appliance* burners, burner ignitors and electrical switching devices.

INCINERATOR. An *appliance* used to reduce combustible refuse material to ashes and that is manufactured, sold and installed as a complete unit.

INDUSTRIAL AIR HEATERS, DIRECT-FIRED NON-RECIRCULATING. A heater in which all the products of combustion generated by the burners are released into the air stream being heated. The purpose of the heater is to offset building heat loss by heating only outdoor air.

INDUSTRIAL AIR HEATERS, DIRECT-FIRED RECIRCULATING. A heater in which all the products of combustion generated by the burners are released into the air stream being heated. The purpose of the heater is to offset

INTERNATIONAL CODE COUNCIL®
Copyright © 2019 ICC & NYSDOS. ALL RIGHTS RESERVED. Accessed by Lauren Gualdino (lgualdino@briarcliffmanor.org), (-) Order Number #100880972 on May 08, 2020 07:05 AM (PDT) pursuant to License Agreement with ICC & NYSDOS. No further reproduction, no

100880972

building heat loss by heating outdoor air, and, if applicable, indoor air.

INFRARED RADIANT HEATER. A heater that directs a substantial amount of its energy output in the form of infrared radiant energy into the area to be heated. Such heaters are of either the vented or unvented type.

[M] JOINT, FLANGED. A joint made by bolting together a pair of flanged ends.

[M] JOINT, FLARED. A metal-to-metal compression joint in which a conical spread is made on the end of a tube that is compressed by a flare nut against a mating flare.

JOINT, MECHANICAL. A general form of gas-tight joints obtained by the joining of metal parts through a positive-holding mechanical construction, such as a press-connect joint, flanged joint, threaded joint, flared joint or compression joint.

[M] JOINT, PLASTIC ADHESIVE. A joint made in thermoset plastic *piping* by the use of an adhesive substance that forms a continuous bond between the mating surfaces without dissolving either one of them.

[M] JOINT, PLASTIC HEAT FUSION. A joint made in thermoplastic *piping* by heating the parts sufficiently to permit fusion of the materials when the parts are pressed together.

[M] JOINT, WELDED. A gas-tight joint obtained by the joining of metal parts in molten state.

[A] LABELED. Equipment, materials or products to which have been affixed a label, seal, symbol or other identifying mark of a nationally recognized testing laboratory, approved agency or other organization concerned with product evaluation that maintains periodic inspection of the production of the above-labeled items and whose labeling indicates either that the *equipment*, material or product meets identified standards or has been tested and found suitable for a specified purpose.

LEAK CHECK. An operation performed on a gas *piping* system to verify that the system does not leak.

LIMIT CONTROL. A device responsive to changes in pressure, temperature or level for turning on, shutting off or throttling the gas supply to an *appliance*.

LIQUEFIED PETROLEUM GAS or LPG (LP-GAS). Liquefied petroleum gas composed predominately of propane, propylene, butanes or butylenes, or mixtures thereof that is gaseous under normal atmospheric conditions, but is capable of being liquefied under moderate pressure at normal temperatures.

[A] LISTED. Equipment, materials, products or services included in a list published by an organization acceptable to the *building official* and concerned with evaluation of products or services that maintains periodic inspection of production of *listed equipment* or materials or periodic evaluation of services and whose listing states either that the *equipment*, material, product or service meets identified standards or has been tested and found suitable for a specified purpose.

[NY] LISTED ARC-RESISTANT CSST (or LISTED ARCSST). CSST that is all of the following:

1. Encased in a conductive jacket.
2. Listed in a currently effective evaluation report issued by a nationally recognized building product evaluation service as having been:
   - 2.1 Tested in accordance with the published National Standard ANSI LC 1—2018, including the performance criteria of Section 5.16.
   - 2.2 Shown by such testing to satisfy such published performance criteria and to provide, without additional bonding, protection against damage from indirect lightning strikes that is at least equivalent to that provided by direct bonding as prescribed in Section 310 of this code.

[M] LIVING SPACE. Space within a *dwelling unit* utilized for living, sleeping, eating, cooking, bathing, washing and sanitation purposes.

LOG LIGHTER. A manually operated solid fuel ignition *appliance* for installation in a vented solid fuel-burning *fireplace*.

LUBRICATED PLUG-TYPE VALVE. A valve of the plug and barrel type provided with means for maintaining a lubricant between the bearing surfaces.

MAIN BURNER. A device or group of devices essentially forming an integral unit for the final conveyance of gas or a mixture of gas and air to the combustion zone, and on which combustion takes place to accomplish the function for which the *appliance* is designed.

[NY] MECHANICAL CODE OF NEW YORK STATE. The 2020 edition of the publication entitled "Mechanical Code of New York State," published by the International Code Council, Inc. (publication date November 2019).

METER. The instrument installed to measure the volume of gas delivered through it.

MODULATING. Modulating or throttling is the action of a control from its maximum to minimum position in either predetermined steps or increments of movement as caused by its actuating medium.

[M] NONCOMBUSTIBLE MATERIALS. Materials that, where tested in accordance with ASTM E136, have not fewer than three of four specimens tested meeting all of the following criteria:

1. The recorded temperature of the surface and interior thermocouples shall not at any time during the test rise more than 54ºF (30ºC) above the furnace temperature at the beginning of the test.
2. There shall not be flaming from the specimen after the first 30 seconds.
3. If the weight loss of the specimen during testing exceeds 50 percent, the recorded temperature of the surface and interior thermocouples shall not at any time during the test rise above the furnace air temperature at the beginning of the test, and there shall not be flaming of the specimen.

[A] OCCUPANCY. The purpose for which a building, or portion thereof, is utilized or occupied.

[M] OFFSET (VENT). A combination of *approved* bends that makes two changes in direction bringing one section of the vent out of line but into a line parallel with the other section.

INTERNATIONAL CODE COUNCIL®
Copyright © 2019 ICC & NYSDOS. ALL RIGHTS RESERVED. Accessed by Lauren Gualdino (lgualdino@briarcliffmanor.org), (-) Order Number #100880972 on May 08, 2020 07:05 AM (PDT) pursuant to License Agreement with ICC & NYSDOS. No further reproduction, no

100880972

ORIFICE. The opening in a cap, spud or other device whereby the flow of gas is limited and through which the gas is discharged to the burner.

OUTLET. The point at which a gas-fired *appliance* connects to the gas *piping* system.

OXYGEN DEPLETION SAFETY SHUTOFF SYSTEM (ODS). A system designed to act to shut off the gas supply to the main and pilot burners if the oxygen in the surrounding atmosphere is reduced below a predetermined level.

[NY] PART 1202. The regulations set forth in 19 NYCRR Part 1202 ("Uniform Code: Administration and Enforcement in Certain Local Governments"), as currently in effect and as hereafter amended from time to time.

[NY] PART 1203. The regulations set forth in 19 NYCRR Part 1203 ("Uniform Code: Minimum Standards for Administration and Enforcement"), as currently in effect and as hereafter amended from time to time.

[NY] PART 1203—COMPLIANT CODE ENFORCEMENT PROGRAM. A code enforcement program that includes the features required by Part 1203 and satisfies the requirements of Part 1203.

[NY] PART 1204. The regulations set forth in 19 NYCRR Part 1204 ("Uniform Code: Administration and Enforcement by State Agencies"), as currently in effect and as hereafter amended from time to time.

[NY] PART 1205. The regulations set forth in 19 NYCRR Part 1205 ("Uniform Code: Variance Procedures"), as currently in effect and as hereafter amended from time to time.

PILOT. A small flame that is utilized to ignite the gas at the main burner or burners.

[M] PIPING. Where used in this code, "*piping*" refers to either pipe or tubing, or both.

Pipe. A rigid conduit of iron, steel, copper, copper-alloy or plastic.

Tubing. Semirigid conduit of copper, copper-alloy aluminum, plastic or steel.

PIPING SYSTEM. The fuel *piping*, valves and fittings from the outlet of the *point of delivery* to the outlets of the *appliance* shutoff valves.

[M] PLASTIC, THERMOPLASTIC. A plastic that is capable of being repeatedly softened by increase of temperature and hardened by decrease of temperature.

[NY] PLUMBING CODE OF NEW YORK STATE. The 2020 edition of the publication entitled "Plumbing Code of New York State," published by the International Code Council, Inc. (publication date November 2019).

POINT OF DELIVERY. For natural gas systems, the *point of delivery* is the outlet of the service meter assembly or the outlet of the service regulator or service shutoff valve where a meter is not provided. Where a valve is provided at the outlet of the service meter assembly, such valve shall be considered to be downstream of the *point of delivery*. For undiluted liquefied petroleum gas systems, the point of delivery shall be considered to be the outlet of the service pressure regulator, exclusive of line gas regulators, in the system.

PORTABLE FUEL CELL APPLIANCE. A fuel cell generator of electricity, which is not fixed in place. A portable fuel cell *appliance* utilizes a cord and plug connection to a grid-isolated load and has an integral fuel supply.

PRESSURE DROP. The loss in pressure due to friction or obstruction in pipes, valves, fittings, regulators and burners.

PRESSURE TEST. An operation performed to verify the gas-tight integrity of gas *piping* following its installation or modification.

PURGE. To free a gas conduit of air or gas, or a mixture of gas and air.

QUICK-DISCONNECT DEVICE. A hand-operated device that provides a means for connecting and disconnecting an *appliance* or an *appliance* connector to a gas supply and that is equipped with an automatic means to shut off the gas supply when the device is disconnected.

[M] READY ACCESS (TO). That which enables a device, *appliance* or *equipment* to be directly reached, without requiring the removal or movement of any panel, door or similar obstruction (see "*Access*").

[A] REGISTERED DESIGN PROFESSIONAL. An individual who is registered or licensed to practice their respective design profession as defined by the statutory requirements of the professional registration laws of the state or jurisdiction in which the project is to be constructed.

REGULATOR. A device for controlling and maintaining a uniform supply pressure, either pounds-to-inches water column (MP regulator) or inches-to-inches water column (*appliance* regulator).

REGULATOR, GAS APPLIANCE. A pressure regulator for controlling pressure to the manifold of the *appliance*.

REGULATOR, LINE GAS PRESSURE. A device placed in a gas line between the service pressure regulator and the *appliance* for controlling, maintaining or reducing the pressure in that portion of the *piping* system downstream of the device.

REGULATOR, MEDIUM-PRESSURE (MP Regulator). A line pressure regulator that reduces gas pressure from the range of greater than 0.5 psig (3.4 kPa) and less than or equal to 5 psig (34.5 kPa) to a lower pressure.

REGULATOR, MONITORING. A pressure regulator set in series with another pressure regulator for the purpose of automatically taking control of the pressure downstream of the monitored regulator when that pressure exceeds a set minimum.

REGULATOR, PRESSURE. A device placed in a gas line for reducing, controlling and maintaining the pressure in that portion of the *piping* system downstream of the device.

REGULATOR, SERIES. A pressure regulator in series with one or more other pressure regulators.

REGULATOR, SERVICE PRESSURE. For natural gas systems, a device installed by the serving gas supplier to reduce and limit the service line pressure to delivery pressure. For undiluted liquefied petroleum gas systems, the regulator located upstream from all line gas pressure regulators, where installed, and downstream from any first stage or a high pressure regulator in the system.

RELIEF OPENING. The opening provided in a draft hood to permit the ready escape to the atmosphere of the flue products from the draft hood in the event of no draft, back draft or

INTERNATIONAL CODE COUNCIL®
Copyright © 2019 ICC & NYSDOS. ALL RIGHTS RESERVED. Accessed by Lauren Gualdino (lgualdino@briarcliffmanor.org), (-) Order Number #100880972 on May 08, 2020 07:05 AM (PDT) pursuant to License Agreement with ICC & NYSDOS. No further reproduction, no

100880972

stoppage beyond the draft hood, and to permit air into the draft hood in the event of a strong chimney updraft.

RELIEF VALVE (DEVICE). A safety valve designed to forestall the development of a dangerous condition by relieving either pressure, temperature or vacuum in the hot water supply system.

RELIEF VALVE, PRESSURE. An automatic valve that opens and closes a relief vent, depending on whether the pressure is above or below a predetermined value.

RELIEF VALVE, TEMPERATURE.

Manual reset type. A valve that automatically opens a relief vent at a predetermined temperature and that must be manually returned to the closed position.

Reseating or self-closing type. An automatic valve that opens and closes a relief vent, depending on whether the temperature is above or below a predetermined value.

RELIEF VALVE, VACUUM. A valve that automatically opens and closes a vent for relieving a vacuum within the hot water supply system, depending on whether the vacuum is above or below a predetermined value.

[NY] RESIDENTIAL CODE OF NEW YORK STATE. The 2020 edition of the publication entitled "Residential Code of New York State," published by the International Code Council, Inc. (publication date November 2019).

RISER, GAS. A vertical pipe supplying fuel gas.

ROOM HEATER, UNVENTED. See "Unvented room heater."

ROOM HEATER, VENTED. A free-standing heating unit used for direct heating of the space in and adjacent to that in which the unit is located (see "Vented room heater").

SAFETY SHUTOFF DEVICE. See "Flame safeguard."

[BF] SHAFT. An enclosed space extending through one or more stories of a building, connecting vertical openings in successive floors, or floors and the roof.

[A] SLEEPING UNIT. A room or space in which people sleep, which can also include permanent provisions for living, eating and either sanitation or kitchen facilities, but not both. Such rooms and spaces that are also part of a *dwelling unit* are not sleeping units.

SPECIFIC GRAVITY. As applied to gas, specific gravity is the ratio of the weight of a given volume to that of the same volume of air, both measured under the same condition.

STATIONARY FUEL CELL POWER PLANT. A self-contained package or factory-matched packages that constitute an automatically operated assembly of integrated systems for generating electrical energy and recoverable thermal energy that is permanently connected and fixed in place.

THERMOSTAT.

Electric switch type. A device that senses changes in temperature and controls electrically, by means of separate components, the flow of gas to the burner(s) to maintain selected temperatures.

Integral gas valve type. An automatic device, actuated by temperature changes, designed to control the gas supply to the burner(s) in order to maintain temperatures between predetermined limits, and in which the thermal actuating element is an integral part of the device.

1. Graduating thermostat. A thermostat in which the motion of the valve is approximately in direct proportion to the effective motion of the thermal element induced by temperature change.
2. Snap-acting thermostat. A thermostat in which the thermostatic valve travels instantly from the closed to the open position, and vice versa.

[P] THIRD-PARTY CERTIFICATION AGENCY. An approved agency operating a product or material certification system that incorporates initial product testing, assessment and surveillance of a manufacturer's quality control system.

[P] THIRD-PARTY CERTIFIED. Certification obtained by the manufacturer indicating that the function and performance characteristics of a product or material have been determined by testing and ongoing surveillance by an approved third-party certification agency. Assertion of certification is in the form of identification in accordance with the requirements of the third-party certification agency.

[P] THIRD-PARTY TESTED. Procedure by which an approved testing laboratory provides documentation that a product, material or system conforms to specified requirements.

TOILET, GAS-FIRED. A packaged and completely assembled appliance containing a toilet that incinerates refuse instead of flushing it away with water.

[M] TRANSITION FITTINGS, PLASTIC TO STEEL. An adapter for joining plastic pipe to steel pipe. The purpose of this fitting is to provide a permanent, pressure-tight connection between two materials that cannot be joined directly one to another.

[NY] UNIFORM CODE. The New York State Uniform Fire Prevention and Building Code, adopted pursuant to Article 18 of the New York State Executive Law, as currently in effect and as hereafter amended from time to time.

UNIT HEATER. A self-contained, automatically controlled, vented, fuel-gas-burning, space-heating appliance, intended for installation in the space to be heated without the use of ducts, and having integral means for circulation of air.

UNLISTED BOILER. A boiler not *listed* by a nationally recognized testing agency.

[NY] UNVENTED ROOM HEATER. An unvented heating appliance designed for stationary installation and utilized to provide comfort heating. Such appliances provide radiant heat or convection heat by gravity or fan circulation directly from the heater and do not utilize ducts. A wall-mounted unvented room heater would be of the type designed for insertion in or attachment to a wall or partition. A wall-mounted unvented room heater does not incorporate concealed venting arrangements in its construction and discharges all products of combustion through the front into the room being heated.

VALVE. A device used in *piping* to control the gas supply to any section of a system of *piping* or to an *appliance*.

Appliance shutoff. A valve located in the *piping* system, used to isolate individual appliances for purposes such as service or replacement.

INTERNATIONAL CODE COUNCIL®
Copyright © 2019 ICC & NYSDOS. ALL RIGHTS RESERVED. Accessed by Lauren Gualdino (lgualdino@briarcliffmanor.org), (-) Order Number #100880972 on May 08, 2020 07:05 AM (PDT) pursuant to License Agreement with ICC & NYSDOS. No further reproduction, no

100880972

Automatic. An automatic or semiautomatic device consisting essentially of a valve and operator that control the gas supply to the burner(s) during operation of an *appliance*. The operator shall be actuated by application of gas pressure on a flexible diaphragm, by electrical means, by mechanical means, or by other *approved* means.

Automatic gas shutoff. A valve used in conjunction with an automatic gas shutoff device to shut off the gas supply to a water-heating system. It shall be constructed integrally with the gas shutoff device or shall be a separate assembly.

Individual main burner. A valve that controls the gas supply to an individual main burner.

Main burner control. A valve that controls the gas supply to the main burner manifold.

Manual main gas-control. A manually operated valve in the gas line for the purpose of completely turning on or shutting off the gas supply to the *appliance*, except to pilot or pilots that are provided with independent shutoff.

Manual reset. An automatic shutoff valve installed in the gas supply *piping* and set to shut off when unsafe conditions occur. The device remains closed until manually reopened.

Service shutoff. A valve, installed by the serving gas supplier between the service meter or source of supply and the customer *piping* system, to shut off the entire *piping* system.

VENT. A pipe or other conduit composed of factory-made components, containing a passageway for conveying combustion products and air to the atmosphere, *listed* and *labeled* for use with a specific type or class of *appliance*.

Special gas vent. A vent *listed* and *labeled* for use with *listed* Category II, III and IV appliances.

Type B vent. A vent *listed* and *labeled* for use with appliances with draft hoods and other Category I appliances that are *listed* for use with Type B vents.

Type BW vent. A vent *listed* and *labeled* for use with wall furnaces.

Type L vent. A vent *listed* and *labeled* for use with appliances that are *listed* for use with Type L or Type B vents.

VENT CONNECTOR. See "Connector."

VENT GASES. Products of combustion from appliances plus excess air plus dilution air in the vent connector, gas vent or chimney above the draft hood or draft regulator.

VENT PIPING.

Breather. *Piping* run from a pressure-regulating device to the outdoors, designed to provide a reference to atmospheric pressure. If the device incorporates an integral pressure relief mechanism, a breather vent can also serve as a relief vent.

Relief. *Piping* run from a pressure-regulating or pressure-limiting device to the outdoors, designed to provide for the safe venting of gas in the event of excessive pressure in the gas *piping* system.

VENTED APPLIANCE CATEGORIES. Appliances that are categorized for the purpose of vent selection are classified into the following four categories:

Category I. An *appliance* that operates with a nonpositive vent static pressure and with a vent gas temperature that avoids excessive condensate production in the vent.

Category II. An *appliance* that operates with a nonpositive vent static pressure and with a vent gas temperature that is capable of causing excessive condensate production in the vent.

Category III. An *appliance* that operates with a positive vent static pressure and with a vent gas temperature that avoids excessive condensate production in the vent.

Category IV. An *appliance* that operates with a positive vent static pressure and with a vent gas temperature that is capable of causing excessive condensate production in the vent.

VENTED ROOM HEATER. A vented self-contained, freestanding, nonrecessed *appliance* for furnishing warm air to the space in which it is installed, directly from the heater without duct connections.

VENTED WALL FURNACE. A self-contained vented *appliance* complete with grilles or equivalent, designed for incorporation in or permanent attachment to the structure of a building, mobile home or travel trailer, and furnishing heated air circulated by gravity or by a fan directly into the space to be heated through openings in the casing. This definition shall exclude floor furnaces, unit heaters and central furnaces as herein defined.

VENTING SYSTEM. A continuous open passageway from the flue collar or draft hood of an *appliance* to the outdoor atmosphere for the purpose of removing flue or vent gases. A venting system is usually composed of a vent or a chimney and vent connector, if used, assembled to form the open passageway.

Forced-draft venting system. A portion of a venting system using a fan or other mechanical means to cause the removal of flue or vent gases under positive static vent pressure.

Induced draft venting system. A portion of a venting system using a fan or other mechanical means to cause the removal of flue or vent gases under nonpositive static vent pressure.

Mechanical draft venting system. A venting system designed to remove flue or vent gases by mechanical means, that consists of an induced draft portion under nonpositive static pressure or a forced draft portion under positive static pressure.

Natural draft venting system. A venting system designed to remove flue or vent gases under nonpositive static vent pressure entirely by natural draft.

WALL HEATER, UNVENTED-TYPE. A room heater of the type designed for insertion in or attachment to a wall or partition. Such heater does not incorporate concealed venting arrangements in its construction and discharges all products of combustion through the front into the room being heated.

[M] WATER HEATER. Any heating *appliance* or *equipment* that heats potable water and supplies such water to the potable hot water distribution system.

INTERNATIONAL CODE COUNCIL®
Copyright © 2019 ICC & NYSDOS. ALL RIGHTS RESERVED. Accessed by Lauren Gualdino (lgualdino@briarcliffmanor.org), (-) Order Number #100880972 on May 08, 2020 07:05 AM (PDT) pursuant to License Agreement with ICC & NYSDOS. No further reproduction, no

100880972

CHAPTER 3
GENERAL REGULATIONS

SECTION 301
GENERAL

301.1 Scope. This chapter shall govern the approval and installation of all *equipment* and appliances that comprise parts of the installations regulated by this code in accordance with Section 101.2.

301.1.1 Other fuels. The requirements for combustion and dilution air for gas-fired appliances shall be governed by Section 304. The requirements for combustion and dilution air for appliances operating with fuels other than fuel gas shall be regulated by the *Mechanical Code of New York State*.

301.2 Energy utilization. Heating, ventilating and air-conditioning systems of all structures shall be designed and installed for efficient utilization of energy in accordance with the *Energy Conservation Construction Code of New York State*.

301.3 Listed and labeled. Appliances regulated by this code shall be *listed* and *labeled* for the application in which they are used unless otherwise *approved* in accordance with Section 104. The approval of unlisted appliances in accordance with Section 104 shall be based on *approved* engineering evaluation.

301.4 Labeling. Labeling shall be in accordance with the procedures set forth in Sections 301.4.1 through 301.4.2.3.

301.4.1 Testing. An *approved* agency shall test a representative sample of the appliances being *labeled* to the relevant standard or standards. The *approved* agency shall maintain a record of all of the tests performed. The record shall provide sufficient detail to verify compliance with the test standard.

301.4.2 Inspection and identification. The *approved* agency shall periodically perform an inspection, which shall be in-plant if necessary, of the appliances to be *labeled*. The inspection shall verify that the *labeled* appliances are representative of the appliances tested.

301.4.2.1 Independent. The agency to be *approved* shall be objective and competent. To confirm its objectivity, the agency shall disclose all possible conflicts of interest.

301.4.2.2 Equipment. An *approved* agency shall have adequate *equipment* to perform all required tests. The *equipment* shall be periodically calibrated.

301.4.2.3 Personnel. An *approved* agency shall employ experienced personnel educated in conducting, supervising and evaluating tests.

301.5 Label information. A permanent factory-applied nameplate(s) shall be affixed to appliances on which shall appear in legible lettering, the manufacturer's name or trademark, the model number, serial number and, for *listed* appliances, the seal or mark of the testing agency. A label shall include the hourly rating in British thermal units per hour (Btu/h) (W); the type of fuel *approved* for use with the *appliance*; and the minimum *clearance* requirements.

301.6 Plumbing connections. Potable water supply and building drainage system connections to appliances regulated by this code shall be in accordance with the *Plumbing Code of New York State*.

301.7 Fuel types. Appliances shall be designed for use with the type of fuel gas that will be supplied to them.

301.7.1 Appliance fuel conversion. Appliances shall not be converted to utilize a different fuel gas except where complete instructions for such conversion are provided in the installation instructions, by the serving gas supplier or by the *appliance* manufacturer.

301.8 Vibration isolation. Where means for isolation of vibration of an *appliance* is installed, an *approved* means for support and restraint of that *appliance* shall be provided.

301.9 Repair. Defective material or parts shall be replaced or repaired in such a manner so as to preserve the original approval or listing.

301.10 Wind resistance. Appliances and supports that are exposed to wind shall be designed and installed to resist the wind pressures determined in accordance with the *Building Code of New York State*.

[BS] 301.11 Flood hazard. For structures located in flood hazard areas, the appliance, equipment and system installations regulated by this code shall be located at or above the elevation required by Section 1612 of the *Building Code of New York State* for utilities and attendant equipment.

Exception: The appliance, equipment and system installations regulated by this code are permitted to be located below the elevation required by Section 1612 of the *Building Code of New York State* for utilities and attendant equipment provided that they are designed and installed to prevent water from entering or accumulating within the components and to resist hydrostatic and hydrodynamic loads and stresses, including the effects of buoyancy, during the occurrence of flooding to such elevation.

301.12 Seismic resistance. Where earthquake loads are applicable in accordance with the *Building Code of New York State*, the supports shall be designed and installed for the seismic forces in accordance with that code.

301.13 Ducts. Ducts required for the installation of systems regulated by this code shall be designed and installed in accordance with the *Mechanical Code of New York State*.

301.14 Rodentproofing. Buildings or structures and the walls enclosing habitable or occupiable rooms and spaces in which persons live, sleep or work, or in which feed, food or foodstuffs are stored, prepared, processed, served or sold, shall be constructed to protect against rodents in accordance with the *Building Code of New York State*.

301.15 Prohibited location. The appliances, *equipment* and systems regulated by this code shall not be located in an elevator shaft.

INTERNATIONAL CODE COUNCIL®
Copyright © 2019 ICC & NYSDOS. ALL RIGHTS RESERVED. Accessed by Lauren Gualdino (lgualdino@briarcliffmanor.org), (-) Order Number #100880972 on May 08, 2020 07:05 AM (PDT) pursuant to License Agreement with ICC & NYSDOS. No further reproduction, no

100880972

SECTION 302
STRUCTURAL SAFETY

[BS] 302.1 Structural safety. The building shall not be weakened by the installation of any gas *piping*. In the process of installing or repairing any gas *piping*, the finished floors, walls, ceilings, tile work or any other part of the building or premises that is required to be changed or replaced shall be left in a safe structural condition in accordance with the requirements of the *Building Code of New York State*.

[BF] 302.2 Penetrations of floor/ceiling assemblies and fire-resistance-rated assemblies. Penetrations of floor/ceiling assemblies and assemblies required to have a fire-resistance rating shall be protected in accordance with the *Building Code of New York State*.

[BS] 302.3 Cutting, notching and boring in wood members. The cutting, notching and boring of wood members shall comply with Sections 302.3.1 through 302.3.4.

[BS] 302.3.1 Engineered wood products. Cuts, notches and holes bored in trusses, structural composite lumber, structural glued-laminated members and I-joists are prohibited except where permitted by the manufacturer's recommendations or where the effects of such alterations are specifically considered in the design of the member by a registered design professional.

[BS] 302.3.2 Joist notching and boring. Notching at the ends of joists shall not exceed one-fourth the joist depth. Holes bored in joists shall not be within 2 inches (51 mm) of the top and bottom of the joist and their diameters shall not exceed one-third the depth of the member. Notches in the top or bottom of the joist shall not exceed one-sixth the depth and shall not be located in the middle one-third of the span.

[BS] 302.3.3 Stud cutting and notching. In exterior walls and bearing partitions, any wood stud is permitted to be cut or notched to a depth not exceeding 25 percent of its width. Cutting or notching of studs to a depth not greater than 40 percent of the width of the stud is permitted in nonload-bearing partitions supporting no loads other than the weight of the partition.

[BS] 302.3.4 Bored holes. The diameter of bored holes in wood studs shall not exceed 40 percent of the stud depth. The diameter of bored holes in wood studs shall not exceed 60 percent of the stud depth in nonbearing partitions. The diameter of bored holes in wood studs shall not exceed 60 percent of the stud depth in any wall where each stud is doubled, provided that not more than two such successive doubled studs are so bored. The edge of the bored hole shall be not closer than $^5/_8$ inch (15.9 mm) to the edge of the stud. Bored holes shall not be located at the same section of stud as a cut or notch.

[BS] 302.4 Alterations to trusses. Truss members and components shall not be cut, drilled, notched, spliced or otherwise altered in any way without the written concurrence and approval of a registered design professional. Alterations resulting in the addition of loads to any member, such as HVAC *equipment* and water heaters, shall not be permitted without verification that the truss is capable of supporting such additional loading.

[BS] 302.5 Cutting, notching and boring holes in structural steel framing. The cutting, notching and boring of holes in structural steel framing members shall be as prescribed by the registered design professional.

[BS] 302.6 Cutting, notching and boring holes in cold-formed steel framing. Flanges and lips of load-bearing, cold-formed steel framing members shall not be cut or notched. Holes in webs of load-bearing, cold-formed steel framing members shall be permitted along the centerline of the web of the framing member and shall not exceed the dimensional limitations, penetration spacing or minimum hole edge distance as prescribed by the registered design professional. Cutting, notching and boring holes of steel floor/roof decking shall be as prescribed by the registered design professional.

[BS] 302.7 Cutting, notching and boring holes in nonstructural cold-formed steel wall framing. Flanges and lips of nonstructural cold-formed steel wall studs shall be permitted along the centerline of the web of the framing member, shall not exceed $1^1/_2$ inches (38 mm) in width or 4 inches (102 mm) in length, and the holes shall not be spaced less than 24 inches (610 mm) center to center from another hole or less than 10 inches (254 mm) from the bearing end.

SECTION 303
APPLIANCE LOCATION

303.1 General. Appliances shall be located as required by this section, specific requirements elsewhere in this code and the conditions of the *equipment* and *appliance* listing.

303.2 Hazardous locations. Appliances shall not be located in a *hazardous location* unless *listed* and *approved* for the specific installation.

303.3 Prohibited locations. Appliances shall not be located in sleeping rooms, bathrooms, toilet rooms, storage closets or surgical rooms, or in a space that opens only into such rooms or spaces, except where the installation complies with one of the following:

1. The *appliance* is a direct-vent *appliance* installed in accordance with the conditions of the listing and the manufacturer's instructions.
2. Vented room heaters, wall furnaces, vented decorative appliances, vented gas fireplaces, vented gas fireplace heaters and decorative appliances for installation in vented solid fuel-burning fireplaces are installed in rooms that meet the required volume criteria of Section 304.5.
3. A single wall-mounted unvented room heater is installed in a bathroom and such unvented room heater is equipped as specified in Section 621.6 and has an input rating not greater than 6,000 Btu/h (1.76 kW). The bathroom shall meet the required volume criteria of Section 304.5.
4. A single wall-mounted unvented room heater is installed in a bedroom and such unvented room heater is equipped as specified in Section 621.6 and has an input rating not greater than 10,000 Btu/h (2.93 kW). The bedroom shall meet the required volume criteria of Section 304.5.
5. The *appliance* is installed in a room or space that opens only into a bedroom or bathroom, and such room or space is used for no other purpose and is provided with a solid weather-stripped door equipped with an

INTERNATIONAL CODE COUNCIL®
Copyright © 2019 ICC & NYSDOS. ALL RIGHTS RESERVED. Accessed by Lauren Gualdino (lgualdino@briarcliffmanor.org), (-) Order Number #100880972 on May 08, 2020 07:05 AM (PDT) pursuant to License Agreement with ICC & NYSDOS. No further reproduction, no

100880972

approved self-closing device. *Combustion air* shall be taken directly from the outdoors in accordance with Section 304.6.

6. A clothes dryer is installed in a residential bathroom or toilet room having a permanent opening with an area of not less than 100 square inches (0.06 m^2) that communicates with a space outside of a sleeping room, bathroom, toilet room or storage closet.

303.3.1 Fireplaces and decorative appliances in Group I-2, Condition 2 occupancies. Gas fireplace appliances and decorative gas appliances shall be prohibited in Group I-2, Condition 2 occupancies except where such appliances are direct-vent appliances installed in public lobby and waiting areas that are not within smoke compartments containing patient sleeping areas. The appliance controls shall be located where they can be accessed only by facility staff. Such fireplaces shall comply with Sections 501.2 and 604.1 and Section 915 of the *Fire Code of New York State*.

303.4 Protection from vehicle impact damage. Appliances shall not be installed in a location subject to vehicle impact damage except where protected by an *approved* means.

303.5 Indoor locations. Furnaces and boilers installed in closets and alcoves shall be *listed* for such installation.

303.6 Outdoor locations. Appliances installed in outdoor locations shall be either *listed* for outdoor installation or provided with protection from outdoor environmental factors that influence the operability, durability and safety of the appliances.

303.7 Pit locations. Appliances installed in pits or excavations shall not come in direct contact with the surrounding soil. The sides of the pit or excavation shall be held back not less than 12 inches (305 mm) from the *appliance*. Where the depth exceeds 12 inches (305 mm) below adjoining grade, the walls of the pit or excavation shall be lined with concrete or masonry, such concrete or masonry shall extend not less than 4 inches (102 mm) above adjoining grade and shall have sufficient lateral load-bearing capacity to resist collapse. The *appliance* shall be protected from flooding in an *approved* manner.

SECTION 304
COMBUSTION, VENTILATION AND DILUTION AIR

304.1 General. Air for combustion, ventilation and dilution of flue gases for appliances installed in buildings shall be provided by application of one of the methods prescribed in Sections 304.5 through 304.9. Where the requirements of Section 304.5 are not met, outdoor air shall be introduced in accordance with one of the methods prescribed in Sections 304.6 through 304.9. *Direct-vent appliances*, gas appliances of other than natural draft design, vented gas appliances not designated as Category I and appliances equipped with power burners shall be provided with combustion, ventilation and dilution air in accordance with the *appliance* manufacturer's instructions.

Exception: Type 1 clothes dryers that are provided with makeup air in accordance with Section 614.6.

304.2 Appliance location. Appliances shall be located so as not to interfere with proper circulation of combustion, ventilation and dilution air.

304.3 Draft hood/regulator location. Where used, a draft hood or a barometric draft regulator shall be installed in the same room or enclosure as the *appliance* served to prevent any difference in pressure between the hood or regulator and the *combustion air* supply.

304.4 Makeup air provisions. Where exhaust fans, clothes dryers and kitchen ventilation systems interfere with the operation of appliances, makeup air shall be provided.

304.5 Indoor combustion air. The required volume of indoor air shall be determined in accordance with Section 304.5.1 or 304.5.2, except that where the air infiltration rate is known to be less than 0.40 air changes per hour (ACH), Section 304.5.2 shall be used. The total required volume shall be the sum of the required volume calculated for all appliances located within the space. Rooms communicating directly with the space in which the appliances are installed through openings not furnished with doors, and through *combustion air* openings sized and located in accordance with Section 304.5.3, are considered to be part of the required volume.

304.5.1 Standard method. The minimum required volume shall be 50 cubic feet per 1,000 Btu/h (4.8 m^3/kW) of the *appliance* input rating.

304.5.2 Known air-infiltration-rate method. Where the air infiltration rate of a structure is known, the minimum required volume shall be determined as follows:

For appliances other than fan-assisted, calculate volume using Equation 3-1.

$$Required\ Volume_{other} \geq \frac{21\ \text{ft}^3}{ACH}\left(\frac{I_{other}}{1{,}000\ \text{Btu/h}}\right)$$

(Equation 3-1)

For fan-assisted appliances, calculate volume using Equation 3-2.

$$Required\ Volume_{fan} \geq \frac{15\ \text{ft}^3}{ACH}\left(\frac{I_{fan}}{1{,}000\ \text{Btu/h}}\right)$$

(Equation 3-2)

where:

I_{other} = All appliances other than fan assisted (input in Btu/h).

I_{fan} = Fan-assisted *appliance* (input in Btu/h).

ACH = Air change per hour (percent of volume of space exchanged per hour, expressed as a decimal).

For purposes of this calculation, an infiltration rate greater than 0.60 *ACH* shall not be used in Equations 3-1 and 3-2.

304.5.3 Indoor opening size and location. Openings used to connect indoor spaces shall be sized and located in accordance with Sections 304.5.3.1 and 304.5.3.2 (see Figure 304.5.3).

304.5.3.1 Combining spaces on the same story. Where combining spaces on the same story, each open-

INTERNATIONAL CODE COUNCIL®
Copyright © 2019 ICC & NYSDOS. ALL RIGHTS RESERVED. Accessed by Lauren Gualdino (lgualdino@briarcliffmanor.org), (-) Order Number #100880972 on May 08, 2020 07:05 AM (PDT) pursuant to License Agreement with ICC & NYSDOS. No further reproduction, no

100880972

ing shall have a minimum free area of 1 square inch per 1,000 Btu/h (2200 mm^2/kW) of the total input rating of all appliances in the space, but not less than 100 square inches (0.06 m^2). One permanent opening shall commence within 12 inches (305 mm) of the top and one permanent opening shall commence within 12 inches (305 mm) of the bottom of the enclosure. The minimum dimension of air openings shall be not less than 3 inches (76 mm).

304.5.3.2 Combining spaces in different stories. The volumes of spaces in different stories shall be considered to be communicating spaces where such spaces are connected by one or more permanent openings in doors or floors having a total minimum free area of 2 square inches per 1,000 Btu/h (4402 mm^2/kW) of total input rating of all appliances.

304.6 Outdoor combustion air. Outdoor *combustion air* shall be provided through opening(s) to the outdoors in accordance with Section 304.6.1 or 304.6.2. The minimum dimension of air openings shall be not less than 3 inches (76 mm).

304.6.1 Two-permanent-openings method. Two permanent openings, one commencing within 12 inches (305 mm) of the top and one commencing within 12 inches (305 mm) of the bottom of the enclosure, shall be provided. The openings shall communicate directly or by ducts with the outdoors or spaces that freely communicate with the outdoors.

Where directly communicating with the outdoors, or where communicating with the outdoors through vertical ducts, each opening shall have a minimum free area of 1 square inch per 4,000 Btu/h (550 mm^2/kW) of total input rating of all appliances in the enclosure [see Figures 304.6.1(1) and 304.6.1(2)].

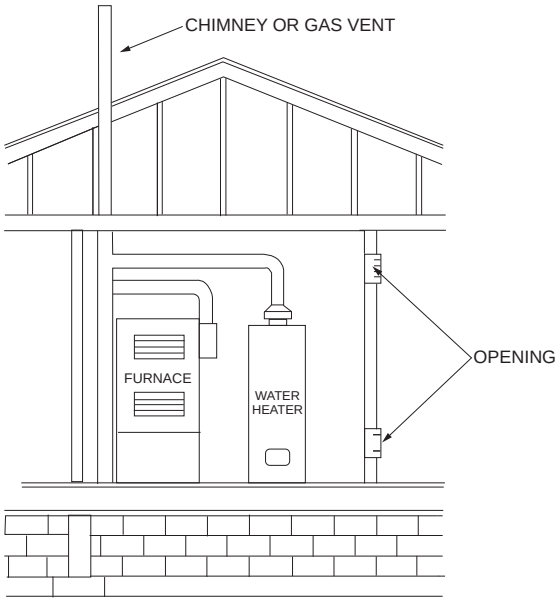

FIGURE 304.5.3
ALL AIR FROM INSIDE THE BUILDING
(see Section 304.5.3)

Where communicating with the outdoors through horizontal ducts, each opening shall have a minimum free area of not less than 1 square inch per 2,000 Btu/h (1100 mm^2/kW) of total input rating of all appliances in the enclosure [see Figure 304.6.1(3)].

304.6.2 One-permanent-opening method. One permanent opening, commencing within 12 inches (305 mm) of the top of the enclosure, shall be provided. The *appliance*

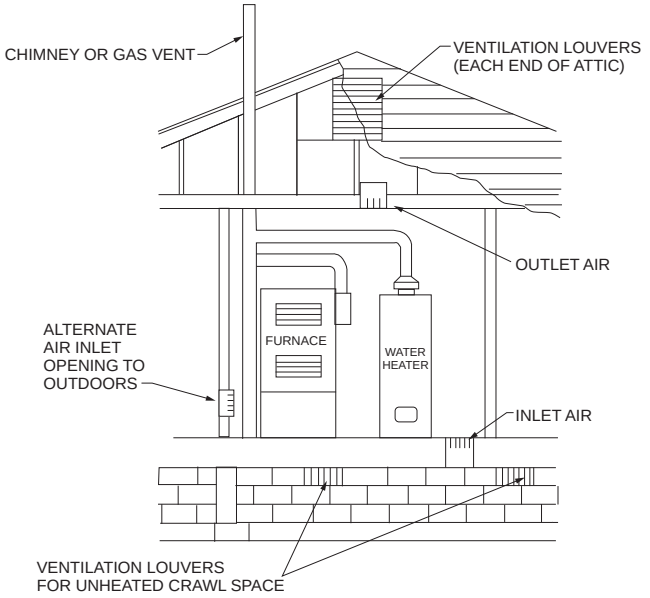

FIGURE 304.6.1(1)
ALL AIR FROM OUTDOORS—INLET AIR FROM VENTILATED CRAWL SPACE AND OUTLET AIR TO VENTILATED ATTIC
(see Section 304.6.1)

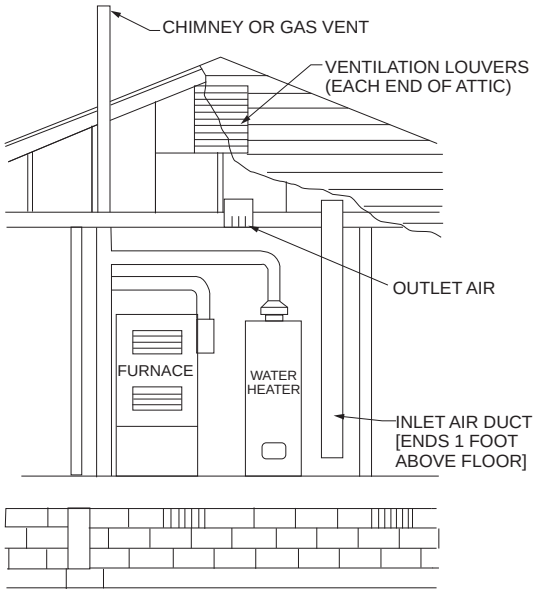

For SI: 1 foot = 304.8 mm.

FIGURE 304.6.1(2)
ALL AIR FROM OUTDOORS THROUGH VENTILATED ATTIC
(see Section 304.6.1)

INTERNATIONAL CODE COUNCIL®
Copyright © 2019 ICC & NYSDOS. ALL RIGHTS RESERVED. Accessed by Lauren Gualdino (lgualdino@briarcliffmanor.org), (-) Order Number #100880972 on May 08, 2020 07:05 AM (PDT) pursuant to License Agreement with ICC & NYSDOS. No further reproduction, no

100880972

shall have clearances of not less than 1 inch (25 mm) from the sides and back and 6 inches (152 mm) from the front of the *appliance*. The opening shall directly communicate with the outdoors, or through a vertical or horizontal duct, to the outdoors or spaces that freely communicate with the outdoors (see Figure 304.6.2) and shall have a minimum free area of 1 square inch per 3,000 Btu/h (734 mm^2/kW) of the total input rating of all appliances located in the enclosure and not less than the sum of the areas of all vent connectors in the space.

304.7 Combination indoor and outdoor combustion air. The use of a combination of indoor and outdoor *combustion air* shall be in accordance with Sections 304.7.1 through 304.7.3.

304.7.1 Indoor openings. Where used, openings connecting the interior spaces shall comply with Section 304.5.3.

304.7.2 Outdoor opening location. Outdoor opening(s) shall be located in accordance with Section 304.6.

304.7.3 Outdoor opening(s) size. The outdoor opening(s) size shall be calculated in accordance with the following:

1. The ratio of interior spaces shall be the available volume of all communicating spaces divided by the required volume.
2. The outdoor size reduction factor shall be one minus the ratio of interior spaces.
3. The minimum size of outdoor opening(s) shall be the full size of outdoor opening(s) calculated in accordance with Section 304.6, multiplied by the reduction factor. The minimum dimension of air openings shall be not less than 3 inches (76 mm).

304.8 Engineered installations. Engineered *combustion air* installations shall provide an adequate supply of combustion, ventilation and dilution air and shall be *approved*.

304.9 Mechanical combustion air supply. Where all *combustion air* is provided by a mechanical air supply system, the *combustion air* shall be supplied from the outdoors at a rate not less than 0.35 cubic feet per minute per 1,000 Btu/h (0.034 m^3/min per kW) of total input rating of all appliances located within the space.

304.9.1 Makeup air. Where exhaust fans are installed, makeup air shall be provided to replace the exhausted air.

304.9.2 Appliance interlock. Each of the appliances served shall be interlocked with the mechanical air supply system to prevent main burner operation when the mechanical air supply system is not in operation.

304.9.3 Combined combustion air and ventilation air system. Where *combustion air* is provided by the building's mechanical ventilation system, the system shall provide the specified *combustion air* rate in addition to the required ventilation air.

304.10 Louvers and grilles. The required size of openings for combustion, ventilation and dilution air shall be based on the net free area of each opening. Where the free area through a design of louver, grille or screen is known, it shall be used in calculating the size opening required to provide the free area specified. Where the design and free area of louvers and grilles are not known, it shall be assumed that wood louvers will have 25-percent free area and metal louvers and grilles will have 75-percent free area. Screens shall have a mesh size not smaller than $^1/_4$ inch (6.4 mm). Nonmotorized louvers and grilles shall be fixed in the open position. Motorized louvers shall be interlocked with the *appliance* so that they are proven to be in the full open position prior to main burner ignition and during main burner operation. Means shall be provided to prevent the main burner from igniting if the louvers fail to open during burner start-up and to shut down the main burner if the louvers close during operation.

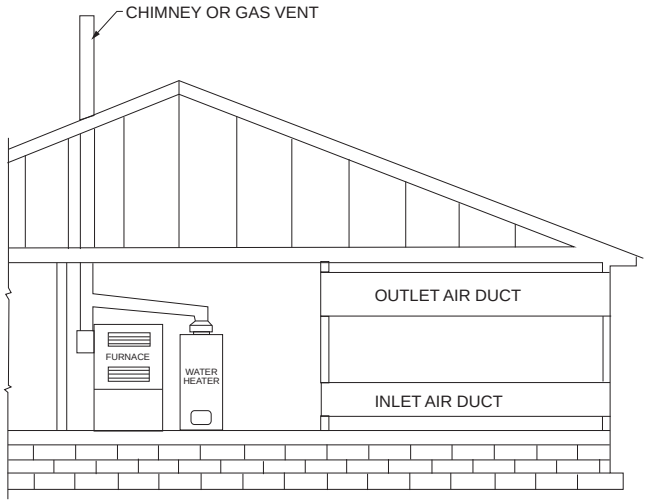

FIGURE 304.6.1(3)
ALL AIR FROM OUTDOORS
(see Section 304.6.1)

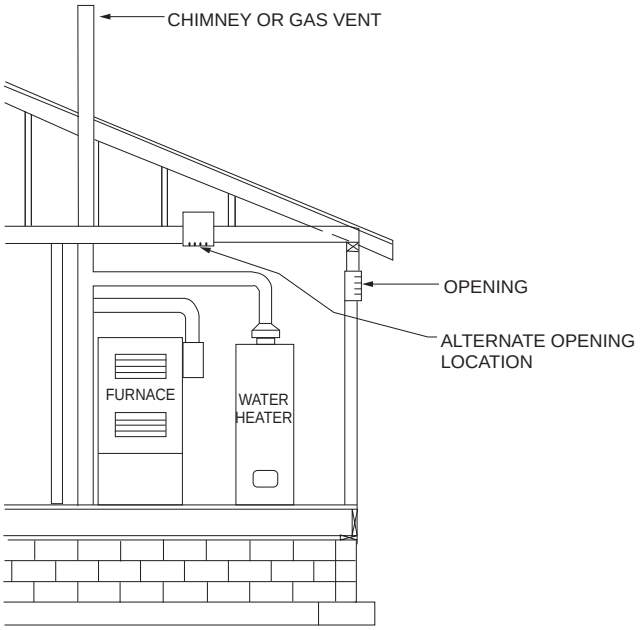

FIGURE 304.6.2
SINGLE COMBUSTION AIR OPENING, ALL AIR FROM THE OUTDOORS
(see Section 304.6.2)

INTERNATIONAL CODE COUNCIL®
Copyright © 2019 ICC & NYSDOS. ALL RIGHTS RESERVED. Accessed by Lauren Gualdino (lgualdino@briarcliffmanor.org), (-) Order Number #100880972 on May 08, 2020 07:05 AM (PDT) pursuant to License Agreement with ICC & NYSDOS. No further reproduction, no

100880972

304.11 Combustion air ducts. *Combustion air* ducts shall comply with all of the following:

1. Ducts shall be constructed of galvanized steel complying with Chapter 6 of the *Mechanical Code of New York State* or of a material having equivalent corrosion resistance, strength and rigidity.

   Exception: Within dwellings units, unobstructed stud and joist spaces shall not be prohibited from conveying *combustion air*, provided that not more than one required fireblock is removed.

2. Ducts shall terminate in an unobstructed space allowing free movement of *combustion air* to the appliances.
3. Ducts shall serve a single enclosure.
4. Ducts shall not serve both upper and lower *combustion air* openings where both such openings are used. The separation between ducts serving upper and lower *combustion air* openings shall be maintained to the source of *combustion air*.
5. Ducts shall not be screened where terminating in an attic space.
6. Horizontal upper *combustion air* ducts shall not slope downward toward the source of *combustion air*.
7. The remaining space surrounding a chimney liner, gas vent, special gas vent or plastic *piping* installed within a masonry, metal or factory-built chimney shall not be used to supply *combustion air*.

   Exception: Direct-vent gas-fired appliances designed for installation in a solid fuel-burning *fireplace* where installed in accordance with the manufacturer's instructions.

8. *Combustion air* intake openings located on the exterior of a building shall have the lowest side of such openings located not less than 12 inches (305 mm) vertically from the adjoining finished ground level.

304.12 Protection from fumes and gases. Where corrosive or flammable process fumes or gases, other than products of combustion, are present, means for the disposal of such fumes or gases shall be provided. Such fumes or gases include carbon monoxide, hydrogen sulfide, ammonia, chlorine and halogenated hydrocarbons.

In barbershops, beauty shops and other facilities where chemicals that generate corrosive or flammable products, such as aerosol sprays, are routinely used, nondirect vent-type appliances shall be located in a mechanical room separated or partitioned off from other areas with provisions for *combustion air* and dilution air from the outdoors. *Direct-vent appliances* shall be installed in accordance with the *appliance* manufacturer's instructions.

SECTION 305
INSTALLATION

305.1 General. *Equipment* and appliances shall be installed as required by the terms of their approval, in accordance with the conditions of listing, the manufacturer's instructions and this code. Manufacturers' installation instructions shall be available on the job site at the time of inspection. Where a code provision is less restrictive than the conditions of the listing of the *equipment* or *appliance* or the manufacturer's installation instructions, the conditions of the listing and the manufacturer's installation instructions shall apply.

Unlisted appliances *approved* in accordance with Section 301.3 shall be limited to uses recommended by the manufacturer and shall be installed in accordance with the manufacturer's instructions, the provisions of this code and the requirements determined by the *building official*.

305.2 Hazardous area. *Equipment* and appliances having an *ignition source* shall not be installed in Group H occupancies or control areas where open use, handling or dispensing of combustible, flammable or explosive materials occurs.

305.3 Elevation of ignition source. *Equipment* and appliances having an *ignition source* shall be elevated such that the source of ignition is not less than 18 inches (457 mm) above the floor in hazardous locations and public garages, private garages, repair garages, motor fuel-dispensing facilities and parking garages. For the purpose of this section, rooms or spaces that are not part of the *living space* of a *dwelling unit* and that communicate directly with a private garage through openings shall be considered to be part of the private garage.

Exception: Elevation of the *ignition source* is not required for appliances that are *listed* as flammable vapor ignition resistant.

305.3.1 Installation in residential garages. In residential garages where appliances are installed in a separate, enclosed space having *access* only from outside of the garage, such appliances shall be permitted to be installed at floor level, provided that the required *combustion air* is taken from the exterior of the garage.

305.3.2 Parking garages. Connection of a parking garage with any room in which there is a fuel-fired *appliance* shall be by means of a vestibule providing a two-doorway separation, except that a single door is permitted where the sources of ignition in the *appliance* are elevated in accordance with Section 305.3.

Exception: This section shall not apply to *appliance* installations complying with Section 305.4.

305.4 Public garages. Appliances located in public garages, motor fuel-dispensing facilities, repair garages or other areas frequented by motor vehicles shall be installed not less than 8 feet (2438 mm) above the floor. Where motor vehicles are capable of passing under an appliance, the appliance shall be installed at the clearances required by the appliance manufacturer and not less than 1 foot (305 mm) higher than the tallest vehicle garage door opening.

Exception: The requirements of this section shall not apply where the appliances are protected from motor vehicle impact and installed in accordance with Section 305.3 and NFPA 30A.

INTERNATIONAL CODE COUNCIL®
Copyright © 2019 ICC & NYSDOS. ALL RIGHTS RESERVED. Accessed by Lauren Gualdino (lgualdino@briarcliffmanor.org), (-) Order Number #100880972 on May 08, 2020 07:05 AM (PDT) pursuant to License Agreement with ICC & NYSDOS. No further reproduction, no

100880972

305.5 Private garages. Appliances located in private garages shall be installed with a minimum *clearance* of 6 feet (1829 mm) above the floor.

Exception: The requirements of this section shall not apply where the appliances are protected from motor vehicle impact and installed in accordance with Section 305.3.

305.6 Construction and protection. Boiler rooms and furnace rooms shall be protected as required by the *Building Code of New York State*.

305.7 Clearances from grade. *Equipment* and appliances installed at grade level shall be supported on a level concrete slab or other *approved* material extending not less than 3 inches (76 mm) above adjoining grade or shall be suspended not less than 6 inches (152 mm) above adjoining grade. Such supports shall be installed in accordance with the manufacturer's instructions.

305.8 Clearances to combustible construction. Heat-producing *equipment* and appliances shall be installed to maintain the required clearances to combustible construction as specified in the listing and manufacturer's instructions. Such clearances shall be reduced only in accordance with Section 308. Clearances to combustibles shall include such considerations as door swing, drawer pull, overhead projections or shelving and window swing. Devices, such as door stops or limits and closers, shall not be used to provide the required clearances.

305.9 Parking structures. Appliances installed in enclosed, basement and underground parking structures shall be installed in accordance with NFPA 88A.

305.10 Repair garages. Appliances installed in repair garages shall be installed in accordance with NFPA 30A.

305.11 Installation in aircraft hangars. Heaters in aircraft hangars shall be installed in accordance with NFPA 409.

305.12 Avoid strain on gas piping. Appliances shall be supported and connected to the *piping* so as not to exert undue strain on the connections.

SECTION 306
ACCESS AND SERVICE SPACE

[M] 306.1 Access for maintenance and replacement. Appliances, control devices, heat exchangers and HVAC components that utilize energy shall be accessible for inspection, service, repair and replacement without disabling the function of a fire-resistance-rated assembly or removing permanent construction, other appliances, or any other *piping* or ducts not connected to the *appliance* being inspected, serviced, repaired or replaced. A level working space not less than 30 inches (762 mm) deep and 30 inches (762 mm) wide shall be provided in front of the control side to service an *appliance*.

[M] 306.2 Appliances in rooms. Rooms containing appliances shall be provided with a door and an unobstructed passageway measuring not less than 36 inches (914 mm) wide and 80 inches (2032 mm) high.

Exception: Within a *dwelling unit*, appliances installed in a compartment, alcove, basement or similar space shall be provided with *access* by an opening or door and an unobstructed passageway measuring not less than 24 inches (610 mm) wide and large enough to allow removal of the largest *appliance* in the space, provided that a level service space of not less than 30 inches (762 mm) deep and the height of the *appliance*, but not less than 30 inches (762 mm), is present at the front or service side of the *appliance* with the door open.

[M] 306.3 Appliances in attics. Attics containing appliances shall be provided with an opening and unobstructed passageway large enough to allow removal of the largest *appliance*. The passageway shall be not less than 30 inches (762 mm) high and 22 inches (559 mm) wide and not more than 20 feet (6096 mm) in length measured along the centerline of the passageway from the opening to the *appliance*. The passageway shall have continuous solid flooring not less than 24 inches (610 mm) wide. A level service space not less than 30 inches (762 mm) deep and 30 inches (762 mm) wide shall be present at the front or service side of the *appliance*. The clear *access* opening dimensions shall be not less than 20 inches by 30 inches (508 mm by 762 mm) and large enough to allow removal of the largest *appliance*.

Exceptions:

1. The passageway and level service space are not required where the *appliance* is capable of being serviced and removed through the required opening.
2. Where the passageway is not less than 6 feet (1829 mm) high for its entire length, the passageway shall be not greater than 50 feet (15 250 mm) in length.

[M] 306.3.1 Electrical requirements. A luminaire controlled by a switch located at the required passageway opening and a receptacle outlet shall be provided at or near the *appliance* location in accordance with NFPA 70.

[M] 306.4 Appliances under floors. Under-floor spaces containing appliances shall be provided with an *access* opening and unobstructed passageway large enough to remove the largest *appliance*. The passageway shall be not less than 30 inches (762 mm) high and 22 inches (559 mm) wide, nor more than 20 feet (6096 mm) in length measured along the centerline of the passageway from the opening to the *appliance*. A level service space not less than 30 inches (762 mm) deep and 30 inches (762 mm) wide shall be present at the front or service side of the *appliance*. If the depth of the passageway or the service space exceeds 12 inches (305 mm) below the adjoining grade, the walls of the passageway shall be lined with concrete or masonry extending 4 inches (102 mm) above the adjoining grade and having sufficient lateral-bearing capacity to resist collapse. The clear *access* opening dimensions shall be not less than 22 inches by 30 inches (559 mm by 762 mm), and large enough to allow removal of the largest *appliance*.

Exceptions:

1. The passageway is not required where the level service space is present when the *access* is open and the *appliance* is capable of being serviced and removed through the required opening.

INTERNATIONAL CODE COUNCIL®
Copyright © 2019 ICC & NYSDOS. ALL RIGHTS RESERVED. Accessed by Lauren Gualdino (lgualdino@briarcliffmanor.org), (-) Order Number #100880972 on May 08, 2020 07:05 AM (PDT) pursuant to License Agreement with ICC & NYSDOS. No further reproduction, no

100880972

2. Where the passageway is not less than 6 feet high (1829 mm) for its entire length, the passageway shall not be limited in length.

[M] 306.4.1 Electrical requirements. A luminaire controlled by a switch located at the required passageway opening and a receptacle outlet shall be provided at or near the *appliance* location in accordance with NFPA 70.

[M] 306.5 Equipment and appliances on roofs or elevated structures. Where equipment requiring access or appliances are located on an elevated structure or the roof of a building such that personnel will have to climb higher than 16 feet (4877 mm) above grade to access such equipment or appliances, an interior or exterior means of access shall be provided. Such access shall not require climbing over obstructions greater than 30 inches (762 mm) in height or walking on roofs having a slope greater than 4 units vertical in 12 units horizontal (33-percent slope). Such access shall not require the use of portable ladders.

Permanent ladders installed to provide the required *access* shall comply with the following minimum design criteria:

1. The side railing shall extend above the parapet or roof edge not less than 30 inches (762 mm).
2. Ladders shall have rung spacing not to exceed 14 inches (356 mm) on center. The upper-most rung shall be not more than 24 inches (610 mm) below the upper edge of the roof hatch, roof or parapet, as applicable.
3. Ladders shall have a toe spacing not less than 6 inches (152 mm) deep.
4. There shall be not less than 18 inches (457 mm) between rails.
5. Rungs shall have a diameter not less than 0.75-inch (19 mm) and be capable of withstanding a 300-pound (136.1 kg) load.
6. Ladders over 30 feet (9144 mm) in height shall be provided with offset sections and landings capable of withstanding 100 pounds per square foot (488.2 kg/m^2). Landing dimensions shall be not less than 18 inches (457 mm) and not less than the width of the ladder served. A guard rail shall be provided on all open sides of the landing.
7. Climbing clearance. The distance from the centerline of the rungs to the nearest permanent object on the climbing side of the ladder shall be not less than 30 inches (762 mm) measured perpendicular to the rungs. This distance shall be maintained from the point of ladder access to the bottom of the roof hatch. A minimum clear width of 15 inches (381 mm) shall be provided on both sides of the ladder measured from the midpoint of and parallel with the rungs, except where cages or wells are installed.
8. Landing required. The ladder shall be provided with a clear and unobstructed bottom landing area having a minimum dimension of 30 inches by 30 inches (762 mm by 762 mm) centered in front of the ladder.
9. Ladders shall be protected against corrosion by *approved* means.
10. Access to ladders shall be provided at all times.

Catwalks installed to provide the required *access* shall be not less than 24 inches (610 mm) wide and shall have railings as required for service platforms.

Exception: This section shall not apply to Group R-3 occupancies.

[M] 306.5.1 Sloped roofs. Where appliances, *equipment*, fans or other components that require service are installed on a roof having a slope of 3 units vertical in 12 units horizontal (25-percent slope) or greater and having an edge more than 30 inches (762 mm) above grade at such edge, a level platform shall be provided on each side of the *appliance* or *equipment* to which *access* is required for service, repair or maintenance. The platform shall be not less than 30 inches (762 mm) in any dimension and shall be provided with guards. The guards shall extend not less than 42 inches (1067 mm) above the platform, shall be constructed so as to prevent the passage of a 21-inch-diameter (533 mm) sphere and shall comply with the loading requirements for guards specified in the *Building Code of New York State*. *Access* shall not require walking on roofs having a slope greater than 4 units vertical in 12 units horizontal (33-percent slope). Where *access* involves obstructions greater than 30 inches (762 mm) in height, such obstructions shall be provided with ladders installed in accordance with Section 306.5 or stairways installed in accordance with the requirements specified in the *Building Code of New York State* in the path of travel to and from appliances, fans or *equipment* requiring service.

[M] 306.5.2 Electrical requirements. A receptacle outlet shall be provided at or near the *appliance* location in accordance with NFPA 70.

[M] 306.6 Guards. Guards shall be provided where various components that require service and roof hatch openings are located within 10 feet (3048 mm) of a roof edge or open side of a walking surface and such edge or open side is located more than 30 inches (762 mm) above the floor, roof, or grade below. The guard shall extend not less than 30 inches (762 mm) beyond each end of components that require service. The top of the guard shall be located not less than 42 inches (1067 mm) above the elevated surface adjacent to the guard. The guard shall be constructed so as to prevent the passage of a 21-inch-diameter (533 mm) sphere and shall comply with the loading requirements for guards specified in the *Building Code of New York State*.

Exception: Guards are not required where permanent fall arrest/restraint anchorage connector devices that comply with ANSI/ASSE Z 359.1 are affixed for use during the entire lifetime of the roof covering. The devices shall be reevaluated for possible replacement when the entire roof covering is replaced. The devices shall be placed not more than 10 feet (3048 mm) on center along hip and ridge lines and placed not less than 10 feet (3048 mm) from roof edges and the open sides of walking surfaces.

INTERNATIONAL CODE COUNCIL®
Copyright © 2019 ICC & NYSDOS. ALL RIGHTS RESERVED. Accessed by Lauren Gualdino (lgualdino@briarcliffmanor.org), (-) Order Number #100880972 on May 08, 2020 07:05 AM (PDT) pursuant to License Agreement with ICC & NYSDOS. No further reproduction, no

100880972

SECTION 307
CONDENSATE DISPOSAL

307.1 Evaporators and cooling coils. Condensate drainage systems shall be provided for *equipment* and appliances containing evaporators and cooling coils in accordance with the *Mechanical Code of New York State.*

307.2 Fuel-burning appliances. Liquid combustion byproducts of condensing appliances shall be collected and discharged to an *approved* plumbing fixture or disposal area in accordance with the manufacturer's instructions. Condensate *piping* shall be of *approved* corrosion-resistant material and shall be not smaller than the drain connection on the *appliance*. Such *piping* shall maintain a minimum slope in the direction of discharge of not less than one-eighth unit vertical in 12 units horizontal (1-percent slope).

[M] 307.3 Drain pipe materials and sizes. Components of the condensate disposal system shall be cast iron, galvanized steel, copper, cross-linked polyethylene, polyethylene, ABS, CPVC PVC or polypropylene pipe or tubing. Components shall be selected for the pressure and temperature rating of the installation. Joints and connections shall be made in accordance with the applicable provisions of Chapter 7 of the *Plumbing Code of New York State* relative to the material type. Condensate waste and drain line size shall be not less than $^{3}/_{4}$-inch (19 mm) internal diameter and shall not decrease in size from the drain pan connection to the place of condensate disposal. Where the drain pipes from more than one unit are manifolded together for condensate drainage, the pipe or tubing shall be sized in accordance with an *approved* method.

307.4 Traps. Condensate drains shall be trapped as required by the *equipment* or *appliance* manufacturer.

307.5 Auxiliary drain pan. Category IV condensing appliances shall be provided with an auxiliary drain pan where damage to any building component will occur as a result of stoppage in the condensate drainage system. Such pan shall be installed in accordance with the applicable provisions of Section 307 of the *Mechanical Code of New York State.*

> **Exception:** An auxiliary drain pan shall not be required for appliances that automatically shut down operation in the event of a stoppage in the condensate drainage system.

307.6 Condensate pumps. Condensate pumps located in uninhabitable spaces, such as attics and crawl spaces, shall be connected to the *appliance* or *equipment* served such that when the pump fails, the *appliance* or *equipment* will be prevented from operating. Pumps shall be installed in accordance with the manufacturer's instructions.

SECTION 308
CLEARANCE REDUCTION

308.1 Scope. This section shall govern the reduction in required clearances to *combustible materials*, including gypsum board, and *combustible assemblies* for chimneys, vents, appliances, devices and equipment. Clearance requirements for air-conditioning equipment and central heating boilers and furnaces shall comply with Sections 308.3 and 308.4.

308.2 Reduction table. The allowable *clearance* reduction shall be based on one of the methods specified in Table 308.2 or shall utilize a reduced *clearance* protective assembly *listed* and *labeled* in accordance with UL 1618. Where required clearances are not listed in Table 308.2, the reduced clearances shall be determined by linear interpolation between the distances listed in the table. Reduced clearances shall not be derived by extrapolation below the range of the table. The reduction of the required clearances to combustibles for *listed* and *labeled* appliances and *equipment* shall be in accordance with the requirements of this section, except that such clearances shall not be reduced where reduction is specifically prohibited by the terms of the *appliance* or *equipment* listing [see Figures 308.2(1) through 308.2(3)].

308.3 Clearances for indoor air-conditioning appliances. *Clearance* requirements for indoor air-conditioning appliances shall comply with Sections 308.3.1 through 308.3.4.

308.3.1 Appliance clearances. Air-conditioning appliances shall be installed with clearances in accordance with the manufacturer's instructions.

308.3.2 Clearance reduction. Air-conditioning appliances shall be permitted to be installed with reduced clearances to *combustible material*, provided that the *combustible material* or *appliance* is protected as described in Table 308.2 and such reduction is allowed by the manufacturer's instructions.

308.3.3 Plenum clearances. Where the *furnace plenum* is adjacent to plaster on metal lath or *noncombustible material* attached to *combustible material*, the *clearance* shall be measured to the surface of the plaster or other noncombustible finish where the *clearance* specified is 2 inches (51 mm) or less.

308.3.4 Clearance from supply ducts. Supply air ducts connecting to listed central heating furnaces shall have the same minimum clearance to combustibles as required for the furnace supply plenum for a distance of not less than 3 feet (914 mm) from the supply plenum. Clearance is not required beyond the 3-foot (914 mm) distance.

308.4 Central-heating boilers and furnaces. *Clearance* requirements for central-heating boilers and furnaces shall comply with Sections 308.4.1 through 308.4.5. The *clearance* to these appliances shall not interfere with *combustion air*; draft hood *clearance* and relief; and accessibility for servicing.

308.4.1 Appliance clearances. Central-heating furnaces and low-pressure boilers shall be installed with clearances in accordance with the manufacturer's instructions.

308.4.2 Clearance reduction. Central-heating furnaces and low-pressure boilers shall be permitted to be installed with reduced clearances to *combustible material* provided that the *combustible material* or *appliance* is protected as described in Table 308.2 and such reduction is allowed by the manufacturer's instructions.

308.4.3 Clearance for servicing appliances. Front *clearance* shall be sufficient for servicing the burner and the furnace or boiler.

INTERNATIONAL CODE COUNCIL®
Copyright © 2019 ICC & NYSDOS. ALL RIGHTS RESERVED. Accessed by Lauren Gualdino (lgualdino@briarcliffmanor.org), (-) Order Number #100880972 on May 08, 2020 07:05 AM (PDT) pursuant to License Agreement with ICC & NYSDOS. No further reproduction, no

100880972

308.4.4 Plenum clearances. Where the *furnace plenum* is adjacent to plaster on metal lath or *noncombustible material* attached to *combustible material*, the *clearance* shall be measured to the surface of the plaster or other noncombustible finish where the *clearance* specified is 2 inches (51 mm) or less.

308.4.5 Clearance from supply ducts. Supply air ducts connecting to listed central heating furnaces shall have the same minimum clearance to combustibles as required for the furnace supply plenum for a distance of not less than 3 feet (914 mm) from the supply plenum. Clearance is not required beyond the 3-foot (914 mm) distance.

SECTION 309
ELECTRICAL

309.1 Grounding. Gas *piping* shall not be used as a grounding electrode.

309.2 Connections. Electrical connections between appliances and the building wiring, including the grounding of the appliances, shall conform to NFPA 70.

SECTION 310
ELECTRICAL BONDING

310.1 Pipe and tubing other than CSST. Each aboveground portion of a gas *piping* system other than corrugated stainless steel tubing (CSST) that is likely to become energized shall be electrically continuous and bonded to an effec-

TABLE 308.2
REDUCTION OF CLEARANCES WITH SPECIFIED FORMS OF PROTECTION[a through k]

TYPE OF PROTECTION APPLIED TO AND COVERING ALL SURFACES OF COMBUSTIBLE MATERIAL WITHIN THE DISTANCE SPECIFIED AS THE REQUIRED CLEARANCE WITH NO PROTECTION [see Figures 308.2(1), 308.2(2) and 308.2(3)]	WHERE THE REQUIRED CLEARANCE WITH NO PROTECTION FROM APPLIANCE, VENT CONNECTOR OR SINGLE-WALL METAL PIPE IS: (inches)									
	36		18		12		9		6	
	Allowable clearances with specified protection (inches)									
	Use Column 1 for clearances above appliance or horizontal connector. Use Column 2 for clearances from appliance, vertical connector and single-wall metal pipe.									
	Above Col. 1	Sides and rear Col. 2	Above Col. 1	Sides and rear Col. 2	Above Col. 1	Sides and rear Col. 2	Above Col. 1	Sides and rear Col. 2	Above Col. 1	Sides and rear Col. 2
1. $3^1/_2$-inch-thick masonry wall without ventilated airspace	—	24	—	12	—	9	—	6	—	5
2. $^1/_2$-inch insulation board over 1-inch glass fiber or mineral wool batts	24	18	12	9	9	6	6	5	4	3
3. 0.024-inch (nominal 24 gage) sheet metal over 1-inch glass fiber or mineral wool batts reinforced with wire on rear face with ventilated airspace	18	12	9	6	6	4	5	3	3	3
4. $3^1/_2$-inch-thick masonry wall with ventilated airspace	—	12	—	6	—	6	—	6	—	6
5. 0.024-inch (nominal 24 gage) sheet metal with ventilated airspace	18	12	9	6	6	4	5	3	3	2
6. $^1/_2$-inch-thick insulation board with ventilated airspace	18	12	9	6	6	4	5	3	3	3
7. 0.024-inch (nominal 24 gage) sheet metal with ventilated airspace over 0.024-inch (nominal 24 gage) sheet metal with ventilated airspace	18	12	9	6	6	4	5	3	3	3
8. 1-inch glass fiber or mineral wool batts sandwiched between two sheets 0.024-inch (nominal 24 gage) sheet metal with ventilated airspace	18	12	9	6	6	4	5	3	3	3

For SI: 1 inch = 25.4 mm, °C = [(°F) - 32]/1.8, 1 pound per cubic foot = 16.02 kg/m^3, 1 Btu per inch per square foot per hour per °F = 0.144 W/m^2 • K.

a. Reduction of clearances from combustible materials shall not interfere with combustion air, draft hood clearance and relief, and accessibility of servicing.

b. Clearances shall be measured from the outer surface of the combustible material to the nearest point on the surface of the appliance, disregarding any intervening protection applied to the combustible material.

c. Spacers and ties shall be of noncombustible material. No spacer or tie shall be used directly opposite an appliance or connector.

d. For all clearance reduction systems using a ventilated airspace, adequate provision for air circulation shall be provided as described [see Figures 308.2(2) and 308.2(3)].

e. There shall be not less than 1 inch between clearance reduction systems and combustible walls and ceilings for reduction systems using ventilated airspace.

f. Where a wall protector is mounted on a single flat wall away from corners, it shall have a minimum 1-inch air gap. To provide air circulation, the bottom and top edges, or only the side and top edges, or all edges shall be left open.

g. Mineral wool batts (blanket or board) shall have a minimum density of 8 pounds per cubic foot and a minimum melting point of 1500°F.

h. Insulation material used as part of a clearance reduction system shall have a thermal conductivity of 1.0 Btu per inch per square foot per hour per °F or less.

i. There shall be not less than 1 inch between the appliance and the protector. In no case shall the clearance between the appliance and the combustible surface be reduced below that allowed in this table.

j. Clearances and thicknesses are minimum; larger clearances and thicknesses are acceptable.

k. Listed single-wall connectors shall be installed in accordance with the manufacturer's instructions.

INTERNATIONAL CODE COUNCIL®
Copyright © 2019 ICC & NYSDOS. ALL RIGHTS RESERVED. Accessed by Lauren Gualdino (lgualdino@briarcliffmanor.org), (-) Order Number #100880972 on May 08, 2020 07:05 AM (PDT) pursuant to License Agreement with ICC & NYSDOS. No further reproduction, no

100880972

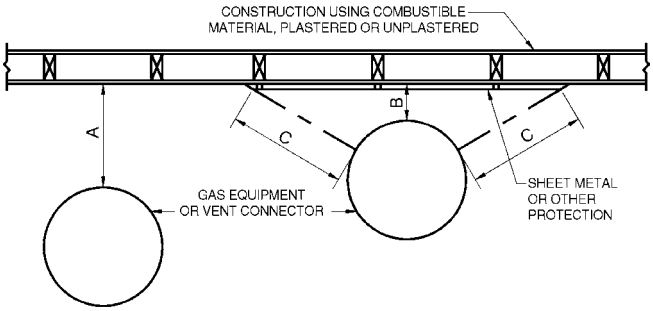

A = the clearance with no protection.

B = the reduced clearance permitted in accordance with Table 308.2. The protection applied to the construction using *combustible material* shall extend far enough in each direction to make "C" equal to "A."

FIGURE 308.2(1)
EXTENT OF PROTECTION NECESSARY TO REDUCE CLEARANCES FROM APPLIANCE OR VENT CONNECTIONS

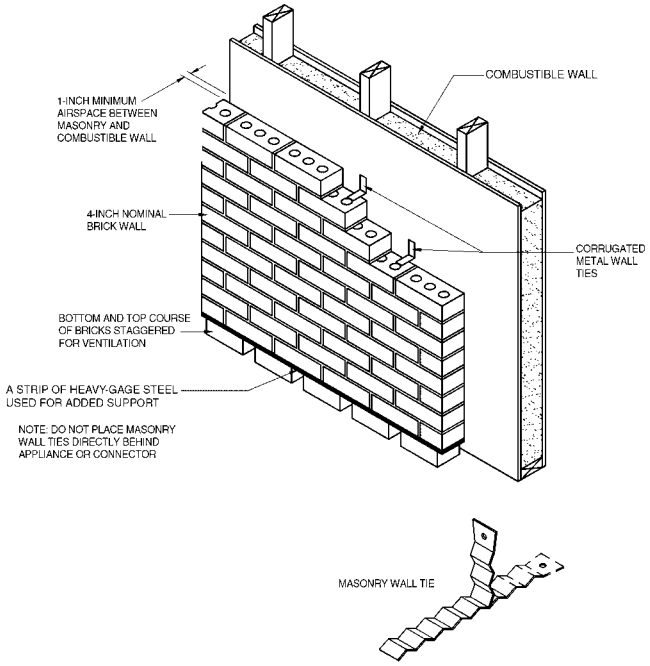

For SI: 1 inch = 25.4 mm.

FIGURE 308.2(3)
MASONRY CLEARANCE REDUCTION SYSTEM

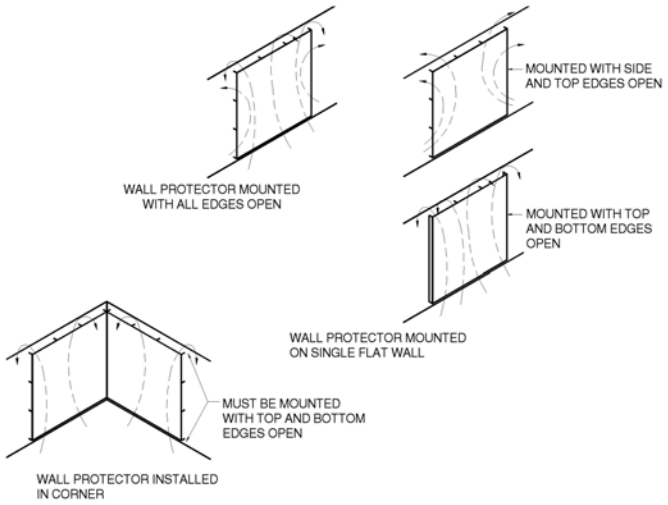

For SI: 1 inch = 25.4 mm.

FIGURE 308.2(2)
WALL PROTECTOR CLEARANCE REDUCTION SYSTEM

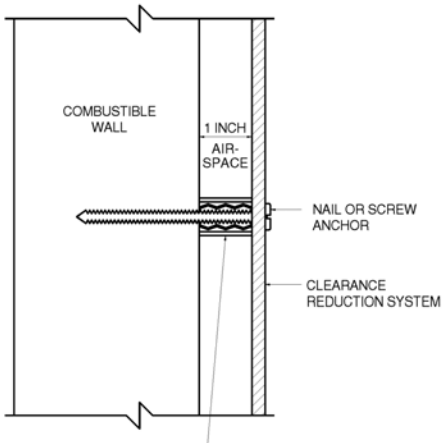

INTERNATIONAL CODE COUNCIL®
Copyright © 2019 ICC & NYSDOS. ALL RIGHTS RESERVED. Accessed by Lauren Gualdino (lgualdino@briarcliffmanor.org), (-) Order Number #100880972 on May 08, 2020 07:05 AM (PDT) pursuant to License Agreement with ICC & NYSDOS. No further reproduction, no

100880972

tive ground-fault current path. Gas *piping* other than CSST shall be considered to be bonded where it is connected to an appliance that is connected to the *equipment* grounding conductor of the circuit that supplies that *appliance*.

[NY] 310.2 Gas pipe bonding—CSST. A gas piping system that contains any CSST shall be electrically continuous and shall be directly bonded to the electrical service grounding electrode system. No portion of the gas piping system shall be used as or considered to be a grounding electrode or a grounding electrode conductor. CSST shall be installed and bonded in accordance with Section 310.2, and the stricter of:

1. The requirements set forth in the CSST manufacturer's installation instructions.
2. The requirements set forth in Sections 310.2.1, 310.2.2, 310.2.3 and 404.7 of this code.

Exception: Where all of the CSST contained in a gas piping system is listed AR-CSST and the gas piping system satisfies all of the other criteria set forth in Section 310.3 of this code, such gas piping system shall comply with Section 310.3.

[NY] 310.2.1 Bonding jumper. Where the electric service for the individual installation is 200 amperes or less, the bonding jumper shall not be smaller than 6 AWG copper wire or 4 AWG aluminum or copper-clad aluminum wire, and shall be permanently connected to the grounding electrode system. Where the electric service for the individual installation is more than 200 amperes, the bonding jumper size shall be determined in accordance with Table 250.66 and Sections 250.66(A) through 250.66(C) of NFPA 70, and shall be permanently connected to the grounding electrode system.

[NY] 310.2.2 Bonding clamp. The bonding jumper shall be connected to the gas piping system with a bonding clamp that is listed for the material of the bonding jumper and for the material of the component of the gas piping system to which the bonding clamp is attached. The bonding clamp shall be attached to the gas piping system, on the downstream side of the gas meter or regulator in an unconcealed and readily accessible space, and as close as practical to the point where the bonding jumper is connected to the electrical service grounding electrode system, and shall not exceed 75 feet (22 860 mm). Any additional grounding electrodes used shall be bonded to the electrical service grounding electrode system.

[NY] 310.2.2.1 Bonding connections. Bonding connections shall be in accordance with NFPA 70.

[NY] 310.2.2.2 Connection devices. Devices used for making the bonding connections shall be listed for the application in accordance with UL 467.

[NY] 310.2.3 Prohibited uses. CSST shall not be supported on or by other electrically conductive systems including copper water pipe, electric power cables, air-conditioning and heating ducts, communication cables and structural steel beams. Electrical wiring, including the bonding conductor, shall be supported and secured independently of the CSST so that it does not come in contact with the CSST.

[NY] 310.3 Gas pipe bonding—listed AR-CSST. Where all of the following apply:

1. All of the CSST contained in a gas piping system consists of listed AR-CSST.
2. Such gas piping system is electrically continuous.
3. At least one appliance is.
   - 3.1. Connected to such gas piping system,
   - 3.2. Connected to a grounded electrical circuit, and
   - 3.3. Connected to the equipment grounding conductor of such electrical circuit by a bonding conductor that is 14 AWG (or larger) copper.

Such gas piping system shall be installed and bonded in accordance with the stricter of the following:

1. The requirements set forth in the listed AR-CSST manufacturer's installation instructions.
2. The requirements set forth in Sections 310.3.1, 310.3.2, 310.3.3, and 404.7 of this code.

[NY] 310.3.1 Bonding. A gas piping system that contains only listed AR-CSST and satisfies all of the other criteria specified in Section 310.3 of this code shall be considered to be bonded to an effective ground-fault current path, and shall not be required to be directly bonded as prescribed by Section 310.2 of this code. However, nothing in Section 310.3.1 shall prohibit the bonding of any such gas piping system in any manner described in Section 250.104(B) of NFPA 70.

Where no equipment grounding conductor is present, AR-CSST shall be bonded in accordance with Section 310.2.

[NY] 310.3.2 Grounding electrodes. No portion of the gas piping system shall be used as or considered to be a grounding electrode or a grounding electrode conductor.

INTERNATIONAL CODE COUNCIL®
Copyright © 2019 ICC & NYSDOS. ALL RIGHTS RESERVED. Accessed by Lauren Gualdino (lgualdino@briarcliffmanor.org), (-) Order Number #100880972 on May 08, 2020 07:05 AM (PDT) pursuant to License Agreement with ICC & NYSDOS. No further reproduction, no

100880972

CHAPTER 4
GAS PIPING INSTALLATIONS

SECTION 401
GENERAL

401.1 Scope. This chapter shall govern the design, installation, modification and maintenance of *piping* systems. The applicability of this code to *piping* systems extends from the *point of delivery* to the connections with the *appliance*s and includes the design, materials, components, fabrication, assembly, installation, testing, inspection, operation and maintenance of such *piping* systems.

401.1.1 Utility piping systems located within buildings. Utility service *piping* located within buildings shall be installed in accordance with the structural safety and fire protection provisions of the *Building Code of New York State*.

401.2 Liquefied petroleum gas storage. The storage system for liquefied petroleum gas shall be designed and installed in accordance with the *Fire Code of New York State* and NFPA 58.

401.3 Modifications to existing systems. In modifying or adding to existing *piping* systems, sizes shall be maintained in accordance with this chapter.

401.4 Additional appliances. Where an additional *appliance* is to be served, the existing *piping* shall be checked to determine if it has adequate capacity for all *appliance*s served. If inadequate, the existing system shall be enlarged as required or separate *piping* of adequate capacity shall be provided.

401.5 Identification. For other than steel pipe, exposed *piping* shall be identified by a yellow label marked "Gas" in black letters. The marking shall be spaced at intervals not exceeding 5 feet (1524 mm). The marking shall not be required on pipe located in the same room as the *appliance* served.

401.6 Interconnections. Where two or more meters are installed on the same premises but supply separate consumers, the *piping* systems shall not be interconnected on the *outlet* side of the meters.

401.7 Piping meter identification. *Piping* from multiple meter installations shall be marked with an *approved* permanent identification by the installer so that the *piping* system supplied by each meter is readily identifiable.

401.8 Minimum sizes. Pipe utilized for the installation, extension and *alteration* of any *piping* system shall be sized to supply the full number of outlets for the intended purpose and shall be sized in accordance with Section 402.

401.9 Identification. Each length of pipe and tubing and each pipe fitting, utilized in a fuel gas system, shall bear the identification of the manufacturer.

Exceptions:

1. Steel pipe sections that are 2 feet (610 mm) and less in length and are cut from longer sections of pipe.
2. Steel pipe fittings 2 inches and less in size.
3. Where identification is provided on the product packaging or crating.
4. Where other approved documentation is provided.

401.10 Piping materials standards. Piping, tubing and fittings shall be manufactured to the applicable referenced standards, specifications and performance criteria listed in Section 403 and shall be identified in accordance with Section 401.9.

SECTION 402
PIPE SIZING

402.1 General considerations. Piping systems shall be of such size and so installed as to provide a supply of gas sufficient to meet the maximum demand and supply gas to each *appliance* inlet at not less than the minimum supply pressure required by the *appliance*.

402.2 Maximum gas demand. The volumetric flow rate of gas to be provided shall be the sum of the maximum input of the *appliance*s served.

The total connected hourly load shall be used as the basis for pipe sizing, assuming that all appliances could be operating at full capacity simultaneously. Where a diversity of load can be established, pipe sizing shall be permitted to be based on such loads.

The volumetric flow rate of gas to be provided shall be adjusted for altitude where the installation is above 2,000 feet (610 m) in elevation.

402.3 Sizing. Gas *piping* shall be sized in accordance with one of the following:

1. Pipe sizing tables or sizing equations in accordance with Section 402.4 or 402.5 as applicable.
2. The sizing tables included in a *listed piping* system's manufacturer's installation instructions.
3. Other *approved* engineering methods.

402.4 Sizing tables and equations. This section applies to piping materials other than noncorrugated stainless steel tubing. Where Tables 402.4(1) through 402.4(37) are used to size *piping* or tubing, the pipe length shall be determined in accordance with Section 402.4.1, 402.4.2 or 402.4.3.

Where Equations 4-1 and 4-2 are used to size *piping* or tubing, the pipe or tubing shall have smooth inside walls and the pipe length shall be determined in accordance with Section 402.4.1, 402.4.2 or 402.4.3.

1. Low-pressure gas equation [Less than $1^1/_2$ pounds per square inch (psi) (10.3 kPa)]:

$$D = \frac{Q^{0.381}}{19.17\left(\frac{\Delta H}{C_r \times L}\right)^{0.206}} \qquad \textbf{(Equation 4-1)}$$

INTERNATIONAL CODE COUNCIL®
Copyright © 2019 ICC & NYSDOS. ALL RIGHTS RESERVED. Accessed by Lauren Gualdino (lgualdino@briarcliffmanor.org), (-) Order Number #100880972 on May 08, 2020 07:05 AM (PDT) pursuant to License Agreement with ICC & NYSDOS. No further reproduction, no

100880972

2. High-pressure gas equation [$1^1/_2$ psi (10.3 kPa) and above]:

$$D = \frac{Q^{0.381}}{18.93\left[\frac{(P_1^2 - P_2^2) \times Y}{C_r \times L}\right]^{0.206}} \quad \textbf{(Equation 4-2)}$$

where:

D = Inside diameter of pipe, inches (mm).

Q = Input rate *appliance*(s), cubic feet per hour at 60°F (16°C) and 30-inch mercury column.

P_1 = Upstream pressure, psia (P_1 + 14.7).

P_2 = Downstream pressure, psia (P_2 + 14.7).

L = Equivalent length of pipe, feet.

ΔH = Pressure drop, inch water column (27.7-inch water column = 1 psi).

TABLE 402.4
C_r AND Y VALUES FOR NATURAL GAS AND UNDILUTED PROPANE AT STANDARD CONDITIONS

GAS	EQUATION FACTORS	
	C_r	Y
Natural gas	0.6094	0.9992
Undiluted propane	1.2462	0.9910

For SI: 1 cubic foot = 0.028 m^3, 1 foot = 305 mm,
1-inch water column = 0.2488 kPa,
1 pound per square inch = 6.895 kPa,
1 British thermal unit per hour = 0.293 W.

402.4.1 Longest length method. The pipe size of each section of gas *piping* shall be determined using the longest length of *piping* from the *point of delivery* to the most remote *outlet* and the load of the section.

402.4.2 Branch length method. Pipe shall be sized as follows:

1. Pipe size of each section of the longest pipe run from the *point of delivery* to the most remote *outlet* shall be determined using the longest run of *piping* and the load of the section.
2. The pipe size of each section of branch *piping* not previously sized shall be determined using the length of *piping* from the *point of delivery* to the most remote *outlet* in each branch and the load of the section.

402.4.3 Hybrid pressure. The pipe size for each section of higher pressure gas *piping* shall be determined using the longest length of *piping* from the *point of delivery* to the most remote line pressure regulator. The pipe size from the line pressure regulator to each *outlet* shall be determined using the length of *piping* from the regulator to the most remote outlet served by the regulator.

402.5 Noncorrugated stainless steel tubing. Noncorrugated stainless steel tubing shall be sized in accordance with Equations 4-1 and 4-2 of Section 402.4 in conjunction with Section 402.4.1, 402.4.2 or 402.4.3.

402.6 Allowable pressure drop. The design pressure loss in any *piping* system under maximum probable flow conditions, from the *point of delivery* to the inlet connection of the *appliance*, shall be such that the supply pressure at the *appliance* is greater than or equal to the minimum pressure required by the *appliance*.

402.7 Maximum operating pressure. The maximum operating pressure for *piping* systems located inside buildings shall not exceed 5 pounds per square inch gauge (psig) (34 kPa gauge) except where one or more of the following conditions are met:

1. The *piping* joints are welded or brazed.
2. The piping joints are flanged and pipe-to-flange connections are made by welding or brazing.
3. The *piping* is located in a ventilated chase or otherwise enclosed for protection against accidental gas accumulation.
4. The *piping* is located inside buildings or separate areas of buildings used exclusively for any of the following:
   4.1. Industrial processing or heating.
   4.2. Research.
   4.3. Warehousing.
   4.4. Boiler or mechanical rooms.
5. The *piping* is a temporary installation for buildings under construction.
6. The piping serves appliances or *equipment* used for agricultural purposes.
7. The *piping* system is an LP-gas *piping* system with an operating pressure greater than 20 psi (137.9 kPa) and complies with NFPA 58.

402.7.1 Operation below -5°F (-21°C). LP-gas systems designed to operate below -5°F (-21°C) or with butane or a propane-butane mix shall be designed to either accommodate liquid LP-gas or prevent LP-gas vapor from condensing into a liquid.

SECTION 403
PIPING MATERIALS

403.1 General. Materials used for *piping* systems shall comply with the requirements of this chapter or shall be *approved*.

403.2 Used materials. Pipe, fittings, valves and other materials shall not be used again except where they are free of foreign materials and have been ascertained to be adequate for the service intended.

403.3 Other materials. Material not covered by the standards specifications listed herein shall be investigated and tested to determine that it is safe and suitable for the proposed service, and, in addition, shall be recommended for that service by the manufacturer and shall be *approved* by the *building official*.

403.4 Metallic pipe. Metallic pipe shall comply with Sections 403.4.1 through 403.4.4.

403.4.1 Cast iron. Cast-iron pipe shall not be used.

INTERNATIONAL CODE COUNCIL®
Copyright © 2019 ICC & NYSDOS. ALL RIGHTS RESERVED. Accessed by Lauren Gualdino (lgualdino@briarcliffmanor.org), (-) Order Number #100880972 on May 08, 2020 07:05 AM (PDT) pursuant to License Agreement with ICC & NYSDOS. No further reproduction, no

100880972

TABLE 402.4(1)
SCHEDULE 40 METALLIC PIPE

Gas	Natural
Inlet Pressure	Less than 2 psi
Pressure Drop	0.3 in. w.c.
Specific Gravity	0.60

PIPE SIZE (inch)														
Nominal	**1/2**	**3/4**	**1**	**1 1/4**	**1 1/2**	**2**	**2 1/2**	**3**	**4**	**5**	**6**	**8**	**10**	**12**
Actual ID	**0.622**	**0.824**	**1.049**	**1.380**	**1.610**	**2.067**	**2.469**	**3.068**	**4.026**	**5.047**	**6.065**	**7.981**	**10.020**	**11.938**
Length (ft)	**Capacity in Cubic Feet of Gas Per Hour**													
10	131	273	514	1,060	1,580	3,050	4,860	8,580	17,500	31,700	51,300	105,000	191,000	303,000
20	90	188	353	726	1,090	2,090	3,340	5,900	12,000	21,800	35,300	72,400	132,000	208,000
30	72	151	284	583	873	1,680	2,680	4,740	9,660	17,500	28,300	58,200	106,000	167,000
40	62	129	243	499	747	1,440	2,290	4,050	8,270	15,000	24,200	49,800	90,400	143,000
50	55	114	215	442	662	1,280	2,030	3,590	7,330	13,300	21,500	44,100	80,100	127,000
60	50	104	195	400	600	1,160	1,840	3,260	6,640	12,000	19,500	40,000	72,600	115,000
70	46	95	179	368	552	1,060	1,690	3,000	6,110	11,100	17,900	36,800	66,800	106,000
80	42	89	167	343	514	989	1,580	2,790	5,680	10,300	16,700	34,200	62,100	98,400
90	40	83	157	322	482	928	1,480	2,610	5,330	9,650	15,600	32,100	58,300	92,300
100	38	79	148	304	455	877	1,400	2,470	5,040	9,110	14,800	30,300	55,100	87,200
125	33	70	131	269	403	777	1,240	2,190	4,460	8,080	13,100	26,900	48,800	77,300
150	30	63	119	244	366	704	1,120	1,980	4,050	7,320	11,900	24,300	44,200	70,000
175	28	58	109	224	336	648	1,030	1,820	3,720	6,730	10,900	22,400	40,700	64,400
200	26	54	102	209	313	602	960	1,700	3,460	6,260	10,100	20,800	37,900	59,900
250	23	48	90	185	277	534	851	1,500	3,070	5,550	8,990	18,500	33,500	53,100
300	21	43	82	168	251	484	771	1,360	2,780	5,030	8,150	16,700	30,400	48,100
350	19	40	75	154	231	445	709	1,250	2,560	4,630	7,490	15,400	28,000	44,300
400	18	37	70	143	215	414	660	1,170	2,380	4,310	6,970	14,300	26,000	41,200
450	17	35	66	135	202	389	619	1,090	2,230	4,040	6,540	13,400	24,400	38,600
500	16	33	62	127	191	367	585	1,030	2,110	3,820	6,180	12,700	23,100	36,500
550	15	31	59	121	181	349	556	982	2,000	3,620	5,870	12,100	21,900	34,700
600	14	30	56	115	173	333	530	937	1,910	3,460	5,600	11,500	20,900	33,100
650	14	29	54	110	165	318	508	897	1,830	3,310	5,360	11,000	20,000	31,700
700	13	27	52	106	159	306	488	862	1,760	3,180	5,150	10,600	19,200	30,400
750	13	26	50	102	153	295	470	830	1,690	3,060	4,960	10,200	18,500	29,300
800	12	26	48	99	148	285	454	802	1,640	2,960	4,790	9,840	17,900	28,300
850	12	25	46	95	143	275	439	776	1,580	2,860	4,640	9,530	17,300	27,400
900	11	24	45	93	139	267	426	752	1,530	2,780	4,500	9,240	16,800	26,600
950	11	23	44	90	135	259	413	731	1,490	2,700	4,370	8,970	16,300	25,800
1,000	11	23	43	87	131	252	402	711	1,450	2,620	4,250	8,720	15,800	25,100
1,100	10	21	40	83	124	240	382	675	1,380	2,490	4,030	8,290	15,100	23,800
1,200	NA	20	39	79	119	229	364	644	1,310	2,380	3,850	7,910	14,400	22,700
1,300	NA	20	37	76	114	219	349	617	1,260	2,280	3,680	7,570	13,700	21,800
1,400	NA	19	35	73	109	210	335	592	1,210	2,190	3,540	7,270	13,200	20,900
1,500	NA	18	34	70	105	203	323	571	1,160	2,110	3,410	7,010	12,700	20,100
1,600	NA	18	33	68	102	196	312	551	1,120	2,030	3,290	6,770	12,300	19,500
1,700	NA	17	32	66	98	189	302	533	1,090	1,970	3,190	6,550	11,900	18,800
1,800	NA	16	31	64	95	184	293	517	1,050	1,910	3,090	6,350	11,500	18,300
1,900	NA	16	30	62	93	178	284	502	1,020	1,850	3,000	6,170	11,200	17,700
2,000	NA	16	29	60	90	173	276	488	1,000	1,800	2,920	6,000	10,900	17,200

For SI: 1 inch = 25.4 mm, 1 foot = 304.8 mm, 1 pound per square inch = 6.895 kPa, 1-inch water column = 0.2488 kPa, 1 British thermal unit per hour = 0.2931 W, 1 cubic foot per hour = 0.0283 m^3/h, 1 degree = 0.01745 rad.

Notes:

1. NA means a flow of less than 10 cfh.
2. Table entries have been rounded to three significant digits.

INTERNATIONAL CODE COUNCIL®
Copyright © 2019 ICC & NYSDOS. ALL RIGHTS RESERVED. Accessed by Lauren Gualdino (lgualdino@briarcliffmanor.org), (-) Order Number #100880972 on May 08, 2020 07:05 AM (PDT) pursuant to License Agreement with ICC & NYSDOS. No further reproduction, no

100880972

TABLE 402.4(2)
SCHEDULE 40 METALLIC PIPE

Gas	Natural
Inlet Pressure	Less than 2 psi
Pressure Drop	0.5 in. w.c.
Specific Gravity	0.60

PIPE SIZE (inch)														
Nominal	1/2	3/4	1	1 1/4	1 1/2	2	2 1/2	3	4	5	6	8	10	12
Actual ID	**0.622**	**0.824**	**1.049**	**1.380**	**1.610**	**2.067**	**2.469**	**3.068**	**4.026**	**5.047**	**6.065**	**7.981**	**10.020**	**11.938**
Length (ft)	**Capacity in Cubic Feet of Gas Per Hour**													
10	172	360	678	1,390	2,090	4,020	6,400	11,300	23,100	41,800	67,600	139,000	252,000	399,000
20	118	247	466	957	1,430	2,760	4,400	7,780	15,900	28,700	46,500	95,500	173,000	275,000
30	95	199	374	768	1,150	2,220	3,530	6,250	12,700	23,000	37,300	76,700	139,000	220,000
40	81	170	320	657	985	1,900	3,020	5,350	10,900	19,700	31,900	65,600	119,000	189,000
50	72	151	284	583	873	1,680	2,680	4,740	9,660	17,500	28,300	58,200	106,000	167,000
60	65	137	257	528	791	1,520	2,430	4,290	8,760	15,800	25,600	52,700	95,700	152,000
70	60	126	237	486	728	1,400	2,230	3,950	8,050	14,600	23,600	48,500	88,100	139,000
80	56	117	220	452	677	1,300	2,080	3,670	7,490	13,600	22,000	45,100	81,900	130,000
90	52	110	207	424	635	1,220	1,950	3,450	7,030	12,700	20,600	42,300	76,900	122,000
100	50	104	195	400	600	1,160	1,840	3,260	6,640	12,000	19,500	40,000	72,600	115,000
125	44	92	173	355	532	1,020	1,630	2,890	5,890	10,600	17,200	35,400	64,300	102,000
150	40	83	157	322	482	928	1,480	2,610	5,330	9,650	15,600	32,100	58,300	92,300
175	37	77	144	296	443	854	1,360	2,410	4,910	8,880	14,400	29,500	53,600	84,900
200	34	71	134	275	412	794	1,270	2,240	4,560	8,260	13,400	27,500	49,900	79,000
250	30	63	119	244	366	704	1,120	1,980	4,050	7,320	11,900	24,300	44,200	70,000
300	27	57	108	221	331	638	1,020	1,800	3,670	6,630	10,700	22,100	40,100	63,400
350	25	53	99	203	305	587	935	1,650	3,370	6,100	9,880	20,300	36,900	58,400
400	23	49	92	189	283	546	870	1,540	3,140	5,680	9,190	18,900	34,300	54,300
450	22	46	86	177	266	512	816	1,440	2,940	5,330	8,620	17,700	32,200	50,900
500	21	43	82	168	251	484	771	1,360	2,780	5,030	8,150	16,700	30,400	48,100
550	20	41	78	159	239	459	732	1,290	2,640	4,780	7,740	15,900	28,900	45,700
600	19	39	74	152	228	438	699	1,240	2,520	4,560	7,380	15,200	27,500	43,600
650	18	38	71	145	218	420	669	1,180	2,410	4,360	7,070	14,500	26,400	41,800
700	17	36	68	140	209	403	643	1,140	2,320	4,190	6,790	14,000	25,300	40,100
750	17	35	66	135	202	389	619	1,090	2,230	4,040	6,540	13,400	24,400	38,600
800	16	34	63	130	195	375	598	1,060	2,160	3,900	6,320	13,000	23,600	37,300
850	16	33	61	126	189	363	579	1,020	2,090	3,780	6,110	12,600	22,800	36,100
900	15	32	59	122	183	352	561	992	2,020	3,660	5,930	12,200	22,100	35,000
950	15	31	58	118	178	342	545	963	1,960	3,550	5,760	11,800	21,500	34,000
1,000	14	30	56	115	173	333	530	937	1,910	3,460	5,600	11,500	20,900	33,100
1,100	14	28	53	109	164	316	503	890	1,810	3,280	5,320	10,900	19,800	31,400
1,200	13	27	51	104	156	301	480	849	1,730	3,130	5,070	10,400	18,900	30,000
1,300	12	26	49	100	150	289	460	813	1,660	3,000	4,860	9,980	18,100	28,700
1,400	12	25	47	96	144	277	442	781	1,590	2,880	4,670	9,590	17,400	27,600
1,500	11	24	45	93	139	267	426	752	1,530	2,780	4,500	9,240	16,800	26,600
1,600	11	23	44	89	134	258	411	727	1,480	2,680	4,340	8,920	16,200	25,600
1,700	11	22	42	86	130	250	398	703	1,430	2,590	4,200	8,630	15,700	24,800
1,800	10	22	41	84	126	242	386	682	1,390	2,520	4,070	8,370	15,200	24,100
1,900	10	21	40	81	122	235	375	662	1,350	2,440	3,960	8,130	14,800	23,400
2,000	NA	20	39	79	119	229	364	644	1,310	2,380	3,850	7,910	14,400	22,700

For SI: 1 inch = 25.4 mm, 1 foot = 304.8 mm, 1 pound per square inch = 6.895 kPa, 1-inch water column = 0.2488 kPa, 1 British thermal unit per hour = 0.2931 W, 1 cubic foot per hour = 0.0283 m^3/h, 1 degree = 0.01745 rad.

Notes:

1. NA means a flow of less than 10 cfh.
2. Table entries have been rounded to three significant digits.

INTERNATIONAL CODE COUNCIL®
Copyright © 2019 ICC & NYSDOS. ALL RIGHTS RESERVED. Accessed by Lauren Gualdino (lgualdino@briarcliffmanor.org), (-) Order Number #100880972 on May 08, 2020 07:05 AM (PDT) pursuant to License Agreement with ICC & NYSDOS. No further reproduction, no

100880972

TABLE 402.4(3)
SCHEDULE 40 METALLIC PIPE

Gas	Natural
Inlet Pressure	Less than 2 psi
Pressure Drop	3.0 in. w.c.
Specific Gravity	0.60

INTENDED USE: INITIAL SUPPLY PRESSURE OF 8.0-INCH W.C. OR GREATER									
PIPE SIZE (inch)									
Nominal	**1/2**	**3/4**	**1**	**1 1/4**	**1 1/2**	**2**	**2 1/2**	**3**	**4**
Actual ID	**0.622**	**0.824**	**1.049**	**1.380**	**1.610**	**2.067**	**2.469**	**3.068**	**4.026**
Length (ft)	**Capacity in Cubic Feet of Gas Per Hour**								
10	454	949	1,790	3,670	5,500	10,600	16,900	29,800	60,800
20	312	652	1,230	2,520	3,780	7,280	11,600	20,500	41,800
30	250	524	986	2,030	3,030	5,840	9,310	16,500	33,600
40	214	448	844	1,730	2,600	5,000	7,970	14,100	28,700
50	190	397	748	1,540	2,300	4,430	7,070	12,500	25,500
60	172	360	678	1,390	2,090	4,020	6,400	11,300	23,100
70	158	331	624	1,280	1,920	3,700	5,890	10,400	21,200
80	147	308	580	1,190	1,790	3,440	5,480	9,690	19,800
90	138	289	544	1,120	1,680	3,230	5,140	9,090	18,500
100	131	273	514	1,060	1,580	3,050	4,860	8,580	17,500
125	116	242	456	936	1,400	2,700	4,300	7,610	15,500
150	105	219	413	848	1,270	2,450	3,900	6,890	14,100
175	96	202	380	780	1,170	2,250	3,590	6,340	12,900
200	90	188	353	726	1,090	2,090	3,340	5,900	12,000
250	80	166	313	643	964	1,860	2,960	5,230	10,700
300	72	151	284	583	873	1,680	2,680	4,740	9,700
350	66	139	261	536	803	1,550	2,470	4,360	8,900
400	62	129	243	499	747	1,440	2,290	4,060	8,300
450	58	121	228	468	701	1,350	2,150	3,800	7,800
500	55	114	215	442	662	1,280	2,030	3,590	7,300
550	52	109	204	420	629	1,210	1,930	3,410	7,000
600	50	104	195	400	600	1,160	1,840	3,260	6,640
650	47	99	187	384	575	1,110	1,760	3,120	6,360
700	46	95	179	368	552	1,060	1,700	3,000	6,110
750	44	92	173	355	532	1,020	1,630	2,890	5,890
800	42	89	167	343	514	989	1,580	2,790	5,680
850	41	86	162	332	497	957	1,530	2,700	5,500
900	40	83	157	322	482	928	1,480	2,620	5,330
950	39	81	152	312	468	901	1,440	2,540	5,180
1,000	38	79	148	304	455	877	1,400	2,470	5,040
1,100	36	75	141	289	432	833	1,330	2,350	4,780
1,200	34	71	134	275	412	794	1,270	2,240	4,560
1,300	33	68	128	264	395	761	1,210	2,140	4,370
1,400	31	65	123	253	379	731	1,170	2,060	4,200
1,500	30	63	119	244	366	704	1,120	1,980	4,050
1,600	29	61	115	236	353	680	1,080	1,920	3,910
1,700	28	59	111	228	342	658	1,050	1,850	3,780
1,800	27	57	108	221	331	638	1,020	1,800	3,670
1,900	27	56	105	215	322	619	987	1,750	3,560
2,000	26	54	102	209	313	602	960	1,700	3,460

For SI: 1 inch = 25.4 mm, 1 foot = 304.8 mm, 1 pound per square inch = 6.895 kPa, 1-inch water column = 0.2488 kPa, 1 British thermal unit per hour = 0.2931 W, 1 cubic foot per hour = 0.0283 m^3/h, 1 degree = 0.01745 rad.

Note: Table entries have been rounded to three significant digits.

INTERNATIONAL CODE COUNCIL®
Copyright © 2019 ICC & NYSDOS. ALL RIGHTS RESERVED. Accessed by Lauren Gualdino (lgualdino@briarcliffmanor.org), (-) Order Number #100880972 on May 08, 2020 07:05 AM (PDT) pursuant to License Agreement with ICC & NYSDOS. No further reproduction, no

100880972

TABLE 402.4(4)
SCHEDULE 40 METALLIC PIPE

Gas	Natural
Inlet Pressure	Less than 2 psi
Pressure Drop	6.0 in. w.c.
Specific Gravity	0.60

INTENDED USE: INITIAL SUPPLY PRESSURE OF 11.0-INCH W.C. OR GREATER									
PIPE SIZE (inch)									
Nominal	**1/2**	**3/4**	**1**	**1 1/4**	**1 1/2**	**2**	**2 1/2**	**3**	**4**
Actual ID	**0.622**	**0.824**	**1.049**	**1.380**	**1.610**	**2.067**	**2.469**	**3.068**	**4.026**
Length (ft)	**Capacity in Cubic Feet of Gas Per Hour**								
10	660	1,380	2,600	5,340	8,000	15,400	24,600	43,400	88,500
20	454	949	1,790	3,670	5,500	10,600	16,900	29,900	60,800
30	364	762	1,440	2,950	4,420	8,500	13,600	24,000	48,900
40	312	652	1,230	2,520	3,780	7,280	11,600	20,500	41,800
50	276	578	1,090	2,240	3,350	6,450	10,300	18,200	37,100
60	250	524	986	2,030	3,030	5,840	9,310	16,500	33,600
70	230	482	907	1,860	2,790	5,380	8,570	15,100	30,900
80	214	448	844	1,730	2,600	5,000	7,970	14,100	28,700
90	201	420	792	1,630	2,440	4,690	7,480	13,200	27,000
100	190	397	748	1,540	2,300	4,430	7,070	12,500	25,500
125	168	352	663	1,360	2,040	3,930	6,260	11,100	22,600
150	153	319	601	1,230	1,850	3,560	5,670	10,000	20,500
175	140	293	553	1,140	1,700	3,280	5,220	9,230	18,800
200	131	273	514	1,060	1,580	3,050	4,860	8,580	17,500
250	116	242	456	936	1,400	2,700	4,300	7,610	15,500
300	105	219	413	848	1,270	2,450	3,900	6,890	14,100
350	96	202	380	780	1,170	2,250	3,590	6,340	12,900
400	90	188	353	726	1,090	2,090	3,340	5,900	12,000
450	84	176	332	681	1,020	1,970	3,130	5,540	11,300
500	80	166	313	643	964	1,860	2,960	5,230	10,700
550	76	158	297	611	915	1,760	2,810	4,970	10,100
600	72	151	284	583	873	1,680	2,680	4,740	9,660
650	69	144	272	558	836	1,610	2,570	4,540	9,250
700	66	139	261	536	803	1,550	2,470	4,360	8,890
750	64	134	252	516	774	1,490	2,380	4,200	8,560
800	62	129	243	499	747	1,440	2,290	4,060	8,270
850	60	125	235	483	723	1,390	2,220	3,920	8,000
900	58	121	228	468	701	1,350	2,150	3,800	7,760
950	56	118	221	454	681	1,310	2,090	3,700	7,540
1,000	55	114	215	442	662	1,280	2,030	3,590	7,330
1,100	52	109	204	420	629	1,210	1,930	3,410	6,960
1,200	50	104	195	400	600	1,160	1,840	3,260	6,640
1,300	47	99	187	384	575	1,100	1,760	3,120	6,360
1,400	46	95	179	368	552	1,060	1,700	3,000	6,110
1,500	44	92	173	355	532	1,020	1,630	2,890	5,890
1,600	42	89	167	343	514	989	1,580	2,790	5,680
1,700	41	86	162	332	497	957	1,530	2,700	5,500
1,800	40	83	157	322	482	928	1,480	2,620	5,330
1,900	39	81	152	312	468	901	1,440	2,540	5,180
2,000	38	79	148	304	455	877	1,400	2,470	5,040

For SI: 1 inch = 25.4 mm, 1 foot = 304.8 mm, 1 pound per square inch = 6.895 kPa, 1-inch water column = 0.2488 kPa, 1 British thermal unit per hour = 0.2931 W, 1 cubic foot per hour = 0.0283 m^3/h, 1 degree = 0.01745 rad.

Note: Table entries have been rounded to three significant digits.

INTERNATIONAL CODE COUNCIL®
Copyright © 2019 ICC & NYSDOS. ALL RIGHTS RESERVED. Accessed by Lauren Gualdino (lgualdino@briarcliffmanor.org), (-) Order Number #100880972 on May 08, 2020 07:05 AM (PDT) pursuant to License Agreement with ICC & NYSDOS. No further reproduction, no

100880972

TABLE 402.4(5)
SCHEDULE 40 METALLIC PIPE

Gas	Natural
Inlet Pressure	2.0 psi
Pressure Drop	1.0 psi
Specific Gravity	0.60

PIPE SIZE (inch)									
Nominal	**1/2**	**3/4**	**1**	**1 1/4**	**1 1/2**	**2**	**2 1/2**	**3**	**4**
Actual ID	**0.622**	**0.824**	**1.049**	**1.380**	**1.610**	**2.067**	**2.469**	**3.068**	**4.026**
Length (ft)	**Capacity in Cubic Feet of Gas Per Hour**								
10	1,510	3,040	5,560	11,400	17,100	32,900	52,500	92,800	189,000
20	1,070	2,150	3,930	8,070	12,100	23,300	37,100	65,600	134,000
30	869	1,760	3,210	6,590	9,880	19,000	30,300	53,600	109,000
40	753	1,520	2,780	5,710	8,550	16,500	26,300	46,400	94,700
50	673	1,360	2,490	5,110	7,650	14,700	23,500	41,500	84,700
60	615	1,240	2,270	4,660	6,980	13,500	21,400	37,900	77,300
70	569	1,150	2,100	4,320	6,470	12,500	19,900	35,100	71,600
80	532	1,080	1,970	4,040	6,050	11,700	18,600	32,800	67,000
90	502	1,010	1,850	3,810	5,700	11,000	17,500	30,900	63,100
100	462	934	1,710	3,510	5,260	10,100	16,100	28,500	58,200
125	414	836	1,530	3,140	4,700	9,060	14,400	25,500	52,100
150	372	751	1,370	2,820	4,220	8,130	13,000	22,900	46,700
175	344	695	1,270	2,601	3,910	7,530	12,000	21,200	43,300
200	318	642	1,170	2,410	3,610	6,960	11,100	19,600	40,000
250	279	583	1,040	2,140	3,210	6,180	9,850	17,400	35,500
300	253	528	945	1,940	2,910	5,600	8,920	15,800	32,200
350	232	486	869	1,790	2,670	5,150	8,210	14,500	29,600
400	216	452	809	1,660	2,490	4,790	7,640	13,500	27,500
450	203	424	759	1,560	2,330	4,500	7,170	12,700	25,800
500	192	401	717	1,470	2,210	4,250	6,770	12,000	24,400
550	182	381	681	1,400	2,090	4,030	6,430	11,400	23,200
600	174	363	650	1,330	2,000	3,850	6,130	10,800	22,100
650	166	348	622	1,280	1,910	3,680	5,870	10,400	21,200
700	160	334	598	1,230	1,840	3,540	5,640	9,970	20,300
750	154	322	576	1,180	1,770	3,410	5,440	9,610	19,600
800	149	311	556	1,140	1,710	3,290	5,250	9,280	18,900
850	144	301	538	1,100	1,650	3,190	5,080	8,980	18,300
900	139	292	522	1,070	1,600	3,090	4,930	8,710	17,800
950	135	283	507	1,040	1,560	3,000	4,780	8,460	17,200
1,000	132	275	493	1,010	1,520	2,920	4,650	8,220	16,800
1,100	125	262	468	960	1,440	2,770	4,420	7,810	15,900
1,200	119	250	446	917	1,370	2,640	4,220	7,450	15,200
1,300	114	239	427	878	1,320	2,530	4,040	7,140	14,600
1,400	110	230	411	843	1,260	2,430	3,880	6,860	14,000
1,500	106	221	396	812	1,220	2,340	3,740	6,600	13,500
1,600	102	214	382	784	1,180	2,260	3,610	6,380	13,000
1,700	99	207	370	759	1,140	2,190	3,490	6,170	12,600
1,800	96	200	358	736	1,100	2,120	3,390	5,980	12,200
1,900	93	195	348	715	1,070	2,060	3,290	5,810	11,900
2,000	91	189	339	695	1,040	2,010	3,200	5,650	11,500

For SI: 1 inch = 25.4 mm, 1 foot = 304.8 mm, 1 pound per square inch = 6.895 kPa, 1-inch water column = 0.2488 kPa, 1 British thermal unit per hour = 0.2931 W, 1 cubic foot per hour = 0.0283 m^3/h, 1 degree = 0.01745 rad.

Note: Table entries have been rounded to three significant digits.

INTERNATIONAL CODE COUNCIL®
Copyright © 2019 ICC & NYSDOS. ALL RIGHTS RESERVED. Accessed by Lauren Gualdino (lgualdino@briarcliffmanor.org), (-) Order Number #100880972 on May 08, 2020 07:05 AM (PDT) pursuant to License Agreement with ICC & NYSDOS. No further reproduction, no

TABLE 402.4(6)
SCHEDULE 40 METALLIC PIPE

Gas	Natural
Inlet Pressure	3.0 psi
Pressure Drop	2.0 psi
Specific Gravity	0.60

PIPE SIZE (inch)									
Nominal	**1/2**	**3/4**	**1**	**1 1/4**	**1 1/2**	**2**	**2 1/2**	**3**	**4**
Actual ID	**0.622**	**0.824**	**1.049**	**1.380**	**1.610**	**2.067**	**2.469**	**3.068**	**4.026**
Length (ft)	**Capacity in Cubic Feet of Gas Per Hour**								
10	2,350	4,920	9,270	19,000	28,500	54,900	87,500	155,000	316,000
20	1,620	3,380	6,370	13,100	19,600	37,700	60,100	106,000	217,000
30	1,300	2,720	5,110	10,500	15,700	30,300	48,300	85,400	174,000
40	1,110	2,320	4,380	8,990	13,500	25,900	41,300	73,100	149,000
50	985	2,060	3,880	7,970	11,900	23,000	36,600	64,800	132,000
60	892	1,870	3,520	7,220	10,800	20,800	33,200	58,700	120,000
70	821	1,720	3,230	6,640	9,950	19,200	30,500	54,000	110,000
80	764	1,600	3,010	6,180	9,260	17,800	28,400	50,200	102,000
90	717	1,500	2,820	5,800	8,680	16,700	26,700	47,100	96,100
100	677	1,420	2,670	5,470	8,200	15,800	25,200	44,500	90,800
125	600	1,250	2,360	4,850	7,270	14,000	22,300	39,500	80,500
150	544	1,140	2,140	4,400	6,590	12,700	20,200	35,700	72,900
175	500	1,050	1,970	4,040	6,060	11,700	18,600	32,900	67,100
200	465	973	1,830	3,760	5,640	10,900	17,300	30,600	62,400
250	412	862	1,620	3,330	5,000	9,620	15,300	27,100	55,300
300	374	781	1,470	3,020	4,530	8,720	13,900	24,600	50,100
350	344	719	1,350	2,780	4,170	8,020	12,800	22,600	46,100
400	320	669	1,260	2,590	3,870	7,460	11,900	21,000	42,900
450	300	627	1,180	2,430	3,640	7,000	11,200	19,700	40,200
500	283	593	1,120	2,290	3,430	6,610	10,500	18,600	38,000
550	269	563	1,060	2,180	3,260	6,280	10,000	17,700	36,100
600	257	537	1,010	2,080	3,110	5,990	9,550	16,900	34,400
650	246	514	969	1,990	2,980	5,740	9,150	16,200	33,000
700	236	494	931	1,910	2,860	5,510	8,790	15,500	31,700
750	228	476	897	1,840	2,760	5,310	8,470	15,000	30,500
800	220	460	866	1,780	2,660	5,130	8,180	14,500	29,500
850	213	445	838	1,720	2,580	4,960	7,910	14,000	28,500
900	206	431	812	1,670	2,500	4,810	7,670	13,600	27,700
950	200	419	789	1,620	2,430	4,670	7,450	13,200	26,900
1,000	195	407	767	1,580	2,360	4,550	7,240	12,800	26,100
1,100	185	387	729	1,500	2,240	4,320	6,890	12,200	24,800
1,200	177	369	695	1,430	2,140	4,120	6,570	11,600	23,700
1,300	169	353	666	1,370	2,050	3,940	6,290	11,100	22,700
1,400	162	340	640	1,310	1,970	3,790	6,040	10,700	21,800
1,500	156	327	616	1,270	1,900	3,650	5,820	10,300	21,000
1,600	151	316	595	1,220	1,830	3,530	5,620	10,000	20,300
1,700	146	306	576	1,180	1,770	3,410	5,440	9,610	19,600
1,800	142	296	558	1,150	1,720	3,310	5,270	9,320	19,000
1,900	138	288	542	1,110	1,670	3,210	5,120	9,050	18,400
2,000	134	280	527	1,080	1,620	3,120	4,980	8,800	18,000

For SI: 1 inch = 25.4 mm, 1 foot = 304.8 mm, 1 pound per square inch = 6.895 kPa, 1-inch water column = 0.2488 kPa, 1 British thermal unit per hour = 0.2931 W, 1 cubic foot per hour = 0.0283 m^3/h, 1 degree = 0.01745 rad.

Note: Table entries have been rounded to three significant digits.

INTERNATIONAL CODE COUNCIL®
Copyright © 2019 ICC & NYSDOS. ALL RIGHTS RESERVED. Accessed by Lauren Gualdino (lgualdino@briarcliffmanor.org), (-) Order Number #100880972 on May 08, 2020 07:05 AM (PDT) pursuant to License Agreement with ICC & NYSDOS. No further reproduction, no

100880972

TABLE 402.4(7)
SCHEDULE 40 METALLIC PIPE

Gas	Natural
Inlet Pressure	5.0 psi
Pressure Drop	3.5 psi
Specific Gravity	0.60

PIPE SIZE (inch)									
Nominal	**1/2**	**3/4**	**1**	**1 1/4**	**1 1/2**	**2**	**2 1/2**	**3**	**4**
Actual ID	**0.622**	**0.824**	**1.049**	**1.380**	**1.610**	**2.067**	**2.469**	**3.068**	**4.026**
Length (ft)	**Capacity in Cubic Feet of Gas Per Hour**								
10	3,190	6,430	11,800	24,200	36,200	69,700	111,000	196,000	401,000
20	2,250	4,550	8,320	17,100	25,600	49,300	78,600	139,000	283,000
30	1,840	3,720	6,790	14,000	20,900	40,300	64,200	113,000	231,000
40	1,590	3,220	5,880	12,100	18,100	34,900	55,600	98,200	200,000
50	1,430	2,880	5,260	10,800	16,200	31,200	49,700	87,900	179,000
60	1,300	2,630	4,800	9,860	14,800	28,500	45,400	80,200	164,000
70	1,200	2,430	4,450	9,130	13,700	26,400	42,000	74,300	151,000
80	1,150	2,330	4,260	8,540	12,800	24,700	39,300	69,500	142,000
90	1,060	2,150	3,920	8,050	12,100	23,200	37,000	65,500	134,000
100	979	1,980	3,620	7,430	11,100	21,400	34,200	60,400	123,000
125	876	1,770	3,240	6,640	9,950	19,200	30,600	54,000	110,000
150	786	1,590	2,910	5,960	8,940	17,200	27,400	48,500	98,900
175	728	1,470	2,690	5,520	8,270	15,900	25,400	44,900	91,600
200	673	1,360	2,490	5,100	7,650	14,700	23,500	41,500	84,700
250	558	1,170	2,200	4,510	6,760	13,000	20,800	36,700	74,900
300	506	1,060	1,990	4,090	6,130	11,800	18,800	33,300	67,800
350	465	973	1,830	3,760	5,640	10,900	17,300	30,600	62,400
400	433	905	1,710	3,500	5,250	10,100	16,100	28,500	58,100
450	406	849	1,600	3,290	4,920	9,480	15,100	26,700	54,500
500	384	802	1,510	3,100	4,650	8,950	14,300	25,200	51,500
550	364	762	1,440	2,950	4,420	8,500	13,600	24,000	48,900
600	348	727	1,370	2,810	4,210	8,110	12,900	22,900	46,600
650	333	696	1,310	2,690	4,030	7,770	12,400	21,900	44,600
700	320	669	1,260	2,590	3,880	7,460	11,900	21,000	42,900
750	308	644	1,210	2,490	3,730	7,190	11,500	20,300	41,300
800	298	622	1,170	2,410	3,610	6,940	11,100	19,600	39,900
850	288	602	1,130	2,330	3,490	6,720	10,700	18,900	38,600
900	279	584	1,100	2,260	3,380	6,520	10,400	18,400	37,400
950	271	567	1,070	2,190	3,290	6,330	10,100	17,800	36,400
1,000	264	551	1,040	2,130	3,200	6,150	9,810	17,300	35,400
1,100	250	524	987	2,030	3,030	5,840	9,320	16,500	33,600
1,200	239	500	941	1,930	2,900	5,580	8,890	15,700	32,000
1,300	229	478	901	1,850	2,770	5,340	8,510	15,000	30,700
1,400	220	460	866	1,780	2,660	5,130	8,180	14,500	29,500
1,500	212	443	834	1,710	2,570	4,940	7,880	13,900	28,400
1,600	205	428	806	1,650	2,480	4,770	7,610	13,400	27,400
1,700	198	414	780	1,600	2,400	4,620	7,360	13,000	26,500
1,800	192	401	756	1,550	2,330	4,480	7,140	12,600	25,700
1,900	186	390	734	1,510	2,260	4,350	6,930	12,300	25,000
2,000	181	379	714	1,470	2,200	4,230	6,740	11,900	24,300

For SI: 1 inch = 25.4 mm, 1 foot = 304.8 mm, 1 pound per square inch = 6.895 kPa, 1-inch water column = 0.2488 kPa, 1 British thermal unit per hour = 0.2931 W, 1 cubic foot per hour = 0.0283 m^3/h, 1 degree = 0.01745 rad.

Note: Table entries have been rounded to three significant digits.

INTERNATIONAL CODE COUNCIL®
Copyright © 2019 ICC & NYSDOS. ALL RIGHTS RESERVED. Accessed by Lauren Gualdino (lgualdino@briarcliffmanor.org), (-) Order Number #100880972 on May 08, 2020 07:05 AM (PDT) pursuant to License Agreement with ICC & NYSDOS. No further reproduction, no

100880972

TABLE 402.4(8)
SEMIRIGID COPPER TUBING

Gas	Natural
Inlet Pressure	Less than 2 psi
Pressure Drop	0.3 in. w.c.
Specific Gravity	0.60

TUBE SIZE (inch)										
Nominal	**K & L**	**1/4**	**3/8**	**1/2**	**5/8**	**3/4**	**1**	**1 1/4**	**1 1/2**	**2**
	ACR	**3/8**	**1/2**	**5/8**	**3/4**	**7/8**	**1 1/8**	**1 3/8**	**—**	**—**
Outside		**0.375**	**0.500**	**0.625**	**0.750**	**0.875**	**1.125**	**1.375**	**1.625**	**2.125**
Inside		**0.305**	**0.402**	**0.527**	**0.652**	**0.745**	**0.995**	**1.245**	**1.481**	**1.959**
Length (ft)		**Capacity in Cubic Feet of Gas Per Hour**								
10		20	42	85	148	210	448	806	1,270	2,650
20		14	29	58	102	144	308	554	873	1,820
30		11	23	47	82	116	247	445	701	1,460
40		10	20	40	70	99	211	381	600	1,250
50		NA	17	35	62	88	187	337	532	1,110
60		NA	16	32	56	79	170	306	482	1,000
70		NA	14	29	52	73	156	281	443	924
80		NA	13	27	48	68	145	262	413	859
90		NA	13	26	45	64	136	245	387	806
100		NA	12	24	43	60	129	232	366	761
125		NA	11	22	38	53	114	206	324	675
150		NA	10	20	34	48	103	186	294	612
175		NA	NA	18	31	45	95	171	270	563
200		NA	NA	17	29	41	89	159	251	523
250		NA	NA	15	26	37	78	141	223	464
300		NA	NA	13	23	33	71	128	202	420
350		NA	NA	12	22	31	65	118	186	387
400		NA	NA	11	20	28	61	110	173	360
450		NA	NA	11	19	27	57	103	162	338
500		NA	NA	10	18	25	54	97	153	319
550		NA	NA	NA	17	24	51	92	145	303
600		NA	NA	NA	16	23	49	88	139	289
650		NA	NA	NA	15	22	47	84	133	277
700		NA	NA	NA	15	21	45	81	128	266
750		NA	NA	NA	14	20	43	78	123	256
800		NA	NA	NA	14	20	42	75	119	247
850		NA	NA	NA	13	19	40	73	115	239
900		NA	NA	NA	13	18	39	71	111	232
950		NA	NA	NA	13	18	38	69	108	225
1,000		NA	NA	NA	12	17	37	67	105	219
1,100		NA	NA	NA	12	16	35	63	100	208
1,200		NA	NA	NA	11	16	34	60	95	199
1,300		NA	NA	NA	11	15	32	58	91	190
1,400		NA	NA	NA	10	14	31	56	88	183
1,500		NA	NA	NA	NA	14	30	54	84	176
1,600		NA	NA	NA	NA	13	29	52	82	170
1,700		NA	NA	NA	NA	13	28	50	79	164
1,800		NA	NA	NA	NA	13	27	49	77	159
1,900		NA	NA	NA	NA	12	26	47	74	155
2,000		NA	NA	NA	NA	12	25	46	72	151

For SI: 1 inch = 25.4 mm, 1 foot = 304.8 mm, 1 pound per square inch = 6.895 kPa, 1-inch water column = 0.2488 kPa, 1 British thermal unit per hour = 0.2931 W, 1 cubic foot per hour = 0.0283 m^3/h, 1 degree = 0.01745 rad.

Notes:

1. Table capacities are based on Type K copper tubing inside diameter (shown), which has the smallest inside diameter of the copper tubing products.
2. NA means a flow of less than 10 cfh.
3. Table entries have been rounded to three significant digits.

INTERNATIONAL CODE COUNCIL®
Copyright © 2019 ICC & NYSDOS. ALL RIGHTS RESERVED. Accessed by Lauren Gualdino (lgualdino@briarcliffmanor.org), (-) Order Number #100880972 on May 08, 2020 07:05 AM (PDT) pursuant to License Agreement with ICC & NYSDOS. No further reproduction, no

100880972

TABLE 402.4(9)
SEMIRIGID COPPER TUBING

Gas	Natural
Inlet Pressure	Less than 2 psi
Pressure Drop	0.5 in. w.c.
Specific Gravity	0.60

TUBE SIZE (inch)										
Nominal	**K & L**	1/4	3/8	1/2	5/8	3/4	1	1 1/4	1 1/2	2
	ACR	3/8	1/2	5/8	3/4	7/8	1 1/8	1 3/8	—	—
Outside		**0.375**	**0.500**	**0.625**	**0.750**	**0.875**	**1.125**	**1.375**	**1.625**	**2.125**
Inside		**0.305**	**0.402**	**0.527**	**0.652**	**0.745**	**0.995**	**1.245**	**1.481**	**1.959**
Length (ft)		**Capacity in Cubic Feet of Gas Per Hour**								
10		27	55	111	195	276	590	1,060	1,680	3,490
20		18	38	77	134	190	406	730	1,150	2,400
30		15	30	61	107	152	326	586	925	1,930
40		13	26	53	92	131	279	502	791	1,650
50		11	23	47	82	116	247	445	701	1,460
60		10	21	42	74	105	224	403	635	1,320
70		NA	19	39	68	96	206	371	585	1,220
80		NA	18	36	63	90	192	345	544	1,130
90		NA	17	34	59	84	180	324	510	1,060
100		NA	16	32	56	79	170	306	482	1,000
125		NA	14	28	50	70	151	271	427	890
150		NA	13	26	45	64	136	245	387	806
175		NA	12	24	41	59	125	226	356	742
200		NA	11	22	39	55	117	210	331	690
250		NA	NA	20	34	48	103	186	294	612
300		NA	NA	18	31	44	94	169	266	554
350		NA	NA	16	28	40	86	155	245	510
400		NA	NA	15	26	38	80	144	228	474
450		NA	NA	14	25	35	75	135	214	445
500		NA	NA	13	23	33	71	128	202	420
550		NA	NA	13	22	32	68	122	192	399
600		NA	NA	12	21	30	64	116	183	381
650		NA	NA	12	20	29	62	111	175	365
700		NA	NA	11	20	28	59	107	168	350
750		NA	NA	11	19	27	57	103	162	338
800		NA	NA	10	18	26	55	99	156	326
850		NA	NA	10	18	25	53	96	151	315
900		NA	NA	NA	17	24	52	93	147	306
950		NA	NA	NA	17	24	50	90	143	297
1,000		NA	NA	NA	16	23	49	88	139	289
1,100		NA	NA	NA	15	22	46	84	132	274
1,200		NA	NA	NA	15	21	44	80	126	262
1,300		NA	NA	NA	14	20	42	76	120	251
1,400		NA	NA	NA	13	19	41	73	116	241
1,500		NA	NA	NA	13	18	39	71	111	232
1,600		NA	NA	NA	13	18	38	68	108	224
1,700		NA	NA	NA	12	17	37	66	104	217
1,800		NA	NA	NA	12	17	36	64	101	210
1,900		NA	NA	NA	11	16	35	62	98	204
2,000		NA	NA	NA	11	16	34	60	95	199

For SI: 1 inch = 25.4 mm, 1 foot = 304.8 mm, 1 pound per square inch = 6.895 kPa, 1-inch water column = 0.2488 kPa, 1 British thermal unit per hour = 0.2931 W, 1 cubic foot per hour = 0.0283 m^3/h, 1 degree = 0.01745 rad.

Notes:

1. Table capacities are based on Type K copper tubing inside diameter (shown), which has the smallest inside diameter of the copper tubing products.
2. NA means a flow of less than 10 cfh.
3. Table entries have been rounded to three significant digits.

INTERNATIONAL CODE COUNCIL®
Copyright © 2019 ICC & NYSDOS. ALL RIGHTS RESERVED. Accessed by Lauren Gualdino (lgualdino@briarcliffmanor.org), (-) Order Number #100880972 on May 08, 2020 07:05 AM (PDT) pursuant to License Agreement with ICC & NYSDOS. No further reproduction, no

100880972

TABLE 402.4(10)
SEMIRIGID COPPER TUBING

Gas	Natural
Inlet Pressure	Less than 2 psi
Pressure Drop	1.0 in. w.c.
Specific Gravity	0.60

INTENDED USE: SIZING BETWEEN HOUSE LINE REGULATOR AND THE APPLIANCE										
TUBE SIZE (inch)										
Nominal	**K & L**	**1/4**	**3/8**	**1/2**	**5/8**	**3/4**	**1**	**1 1/4**	**1 1/2**	**2**
	ACR	**3/8**	**1/2**	**5/8**	**3/4**	**7/8**	**1 1/8**	**1 3/8**	**—**	**—**
Outside		**0.375**	**0.500**	**0.625**	**0.750**	**0.875**	**1.125**	**1.375**	**1.625**	**2.125**
Inside		**0.305**	**0.402**	**0.527**	**0.652**	**0.745**	**0.995**	**1.245**	**1.481**	**1.959**
Length (ft)		**Capacity in Cubic Feet of Gas Per Hour**								
10		39	80	162	283	402	859	1,550	2,440	5,080
20		27	55	111	195	276	590	1,060	1,680	3,490
30		21	44	89	156	222	474	853	1,350	2,800
40		18	38	77	134	190	406	730	1,150	2,400
50		16	33	68	119	168	359	647	1,020	2,130
60		15	30	61	107	152	326	586	925	1,930
70		13	28	57	99	140	300	539	851	1,770
80		13	26	53	92	131	279	502	791	1,650
90		12	24	49	86	122	262	471	742	1,550
100		11	23	47	82	116	247	445	701	1,460
125		NA	20	41	72	103	219	394	622	1,290
150		NA	18	37	65	93	198	357	563	1,170
175		NA	17	34	60	85	183	329	518	1,080
200		NA	16	32	56	79	170	306	482	1,000
250		NA	14	28	50	70	151	271	427	890
300		NA	13	26	45	64	136	245	387	806
350		NA	12	24	41	59	125	226	356	742
400		NA	11	22	39	55	117	210	331	690
450		NA	10	21	36	51	110	197	311	647
500		NA	NA	20	34	48	103	186	294	612
550		NA	NA	19	32	46	98	177	279	581
600		NA	NA	18	31	44	94	169	266	554
650		NA	NA	17	30	42	90	162	255	531
700		NA	NA	16	28	40	86	155	245	510
750		NA	NA	16	27	39	83	150	236	491
800		NA	NA	15	26	38	80	144	228	474
850		NA	NA	15	26	36	78	140	220	459
900		NA	NA	14	25	35	75	135	214	445
950		NA	NA	14	24	34	73	132	207	432
1,000		NA	NA	13	23	33	71	128	202	420
1,100		NA	NA	13	22	32	68	122	192	399
1,200		NA	NA	12	21	30	64	116	183	381
1,300		NA	NA	12	20	29	62	111	175	365
1,400		NA	NA	11	20	28	59	107	168	350
1,500		NA	NA	11	19	27	57	103	162	338
1,600		NA	NA	10	18	26	55	99	156	326
1,700		NA	NA	10	18	25	53	96	151	315
1,800		NA	NA	NA	17	24	52	93	147	306
1,900		NA	NA	NA	17	24	50	90	143	297
2,000		NA	NA	NA	16	23	49	88	139	289

For SI: 1 inch = 25.4 mm, 1 foot = 304.8 mm, 1 pound per square inch = 6.895 kPa, 1-inch water column = 0.2488 kPa, 1 British thermal unit per hour = 0.2931 W, 1 cubic foot per hour = 0.0283 m^3/h, 1 degree = 0.01745 rad.

Notes:

1. Table capacities are based on Type K copper tubing inside diameter (shown), which has the smallest inside diameter of the copper tubing products.
2. NA means a flow of less than 10 cfh.
3. Table entries have been rounded to three significant digits.

INTERNATIONAL CODE COUNCIL®
Copyright © 2019 ICC & NYSDOS. ALL RIGHTS RESERVED. Accessed by Lauren Gualdino (lgualdino@briarcliffmanor.org), (-) Order Number #100880972 on May 08, 2020 07:05 AM (PDT) pursuant to License Agreement with ICC & NYSDOS. No further reproduction, no

TABLE 402.4(11)
SEMIRIGID COPPER TUBING

Gas	Natural
Inlet Pressure	Less than 2 psi
Pressure Drop	17.0 in. w.c.
Specific Gravity	0.60

TUBE SIZE (inch)										
Nominal	**K & L**	1/4	3/8	1/2	5/8	3/4	1	1 1/4	1 1/2	2
	ACR	3/8	1/2	5/8	3/4	7/8	1 1/8	1 3/8	—	—
Outside		**0.375**	**0.500**	**0.625**	**0.750**	**0.875**	**1.125**	**1.375**	**1.625**	**2.125**
Inside		**0.305**	**0.402**	**0.527**	**0.652**	**0.745**	**0.995**	**1.245**	**1.481**	**1.959**
Length (ft)		**Capacity in Cubic Feet of Gas Per Hour**								
10		190	391	796	1,390	1,970	4,220	7,590	12,000	24,900
20		130	269	547	956	1,360	2,900	5,220	8,230	17,100
30		105	216	439	768	1,090	2,330	4,190	6,610	13,800
40		90	185	376	657	932	1,990	3,590	5,650	11,800
50		79	164	333	582	826	1,770	3,180	5,010	10,400
60		72	148	302	528	749	1,600	2,880	4,540	9,460
70		66	137	278	486	689	1,470	2,650	4,180	8,700
80		62	127	258	452	641	1,370	2,460	3,890	8,090
90		58	119	243	424	601	1,280	2,310	3,650	7,590
100		55	113	229	400	568	1,210	2,180	3,440	7,170
125		48	100	203	355	503	1,080	1,940	3,050	6,360
150		44	90	184	321	456	974	1,750	2,770	5,760
175		40	83	169	296	420	896	1,610	2,540	5,300
200		38	77	157	275	390	834	1,500	2,370	4,930
250		33	69	140	244	346	739	1,330	2,100	4,370
300		30	62	126	221	313	670	1,210	1,900	3,960
350		28	57	116	203	288	616	1,110	1,750	3,640
400		26	53	108	189	268	573	1,030	1,630	3,390
450		24	50	102	177	252	538	968	1,530	3,180
500		23	47	96	168	238	508	914	1,440	3,000
550		22	45	91	159	226	482	868	1,370	2,850
600		21	43	87	152	215	460	829	1,310	2,720
650		20	41	83	145	206	441	793	1,250	2,610
700		19	39	80	140	198	423	762	1,200	2,500
750		18	38	77	135	191	408	734	1,160	2,410
800		18	37	74	130	184	394	709	1,120	2,330
850		17	35	72	126	178	381	686	1,080	2,250
900		17	34	70	122	173	370	665	1,050	2,180
950		16	33	68	118	168	359	646	1,020	2,120
1,000		16	32	66	115	163	349	628	991	2,060
1,100		15	31	63	109	155	332	597	941	1,960
1,200		14	29	60	104	148	316	569	898	1,870
1,300		14	28	57	100	142	303	545	860	1,790
1,400		13	27	55	96	136	291	524	826	1,720
1,500		13	26	53	93	131	280	505	796	1,660
1,600		12	25	51	89	127	271	487	768	1,600
1,700		12	24	49	86	123	262	472	744	1,550
1,800		11	24	48	84	119	254	457	721	1,500
1,900		11	23	47	81	115	247	444	700	1,460
2,000		11	22	45	79	112	240	432	681	1,420

For SI: 1 inch = 25.4 mm, 1 foot = 304.8 mm, 1 pound per square inch = 6.895 kPa, 1-inch water column = 0.2488 kPa, 1 British thermal unit per hour = 0.2931 W, 1 cubic foot per hour = 0.0283 m^3/h, 1 degree = 0.01745 rad.

Notes:

1. Table capacities are based on Type K copper tubing inside diameter (shown), which has the smallest inside diameter of the copper tubing products.
2. Table entries have been rounded to three significant digits.

INTERNATIONAL CODE COUNCIL®

Copyright © 2019 ICC & NYSDOS. ALL RIGHTS RESERVED. Accessed by Lauren Gualdino (lgualdino@briarcliffmanor.org), (-) Order Number #100880972 on May 08, 2020 07:05 AM (PDT) pursuant to License Agreement with ICC & NYSDOS. No further reproduction, no

TABLE 402.4(12)
SEMIRIGID COPPER TUBING

Gas	Natural
Inlet Pressure	2.0 psi
Pressure Drop	1.0 psi
Specific Gravity	0.60

TUBE SIZE (inch)										
Nominal	**K & L**	**1/4**	**3/8**	**1/2**	**5/8**	**3/4**	**1**	**1 1/4**	**1 1/2**	**2**
	ACR	**3/8**	**1/2**	**5/8**	**3/4**	**7/8**	**1 1/8**	**1 3/8**	—	—
Outside		**0.375**	**0.500**	**0.625**	**0.750**	**0.875**	**1.125**	**1.375**	**1.625**	**2.125**
Inside		**0.305**	**0.402**	**0.527**	**0.652**	**0.745**	**0.995**	**1.245**	**1.481**	**1.959**
Length (ft)		**Capacity in Cubic Feet of Gas Per Hour**								
10		245	506	1,030	1,800	2,550	5,450	9,820	15,500	32,200
20		169	348	708	1,240	1,760	3,750	6,750	10,600	22,200
30		135	279	568	993	1,410	3,010	5,420	8,550	17,800
40		116	239	486	850	1,210	2,580	4,640	7,310	15,200
50		103	212	431	754	1,070	2,280	4,110	6,480	13,500
60		93	192	391	683	969	2,070	3,730	5,870	12,200
70		86	177	359	628	891	1,900	3,430	5,400	11,300
80		80	164	334	584	829	1,770	3,190	5,030	10,500
90		75	154	314	548	778	1,660	2,990	4,720	9,820
100		71	146	296	518	735	1,570	2,830	4,450	9,280
125		63	129	263	459	651	1,390	2,500	3,950	8,220
150		57	117	238	416	590	1,260	2,270	3,580	7,450
175		52	108	219	383	543	1,160	2,090	3,290	6,850
200		49	100	204	356	505	1,080	1,940	3,060	6,380
250		43	89	181	315	448	956	1,720	2,710	5,650
300		39	80	164	286	406	866	1,560	2,460	5,120
350		36	74	150	263	373	797	1,430	2,260	4,710
400		33	69	140	245	347	741	1,330	2,100	4,380
450		31	65	131	230	326	696	1,250	1,970	4,110
500		30	61	124	217	308	657	1,180	1,870	3,880
550		28	58	118	206	292	624	1,120	1,770	3,690
600		27	55	112	196	279	595	1,070	1,690	3,520
650		26	53	108	188	267	570	1,030	1,620	3,370
700		25	51	103	181	256	548	986	1,550	3,240
750		24	49	100	174	247	528	950	1,500	3,120
800		23	47	96	168	239	510	917	1,450	3,010
850		22	46	93	163	231	493	888	1,400	2,920
900		22	44	90	158	224	478	861	1,360	2,830
950		21	43	88	153	217	464	836	1,320	2,740
1,000		20	42	85	149	211	452	813	1,280	2,670
1,100		19	40	81	142	201	429	772	1,220	2,540
1,200		18	38	77	135	192	409	737	1,160	2,420
1,300		18	36	74	129	183	392	705	1,110	2,320
1,400		17	35	71	124	176	376	678	1,070	2,230
1,500		16	34	68	120	170	363	653	1,030	2,140
1,600		16	33	66	116	164	350	630	994	2,070
1,700		15	31	64	112	159	339	610	962	2,000
1,800		15	30	62	108	154	329	592	933	1,940
1,900		14	30	60	105	149	319	575	906	1,890
2,000		14	29	59	102	145	310	559	881	1,830

For SI: 1 inch = 25.4 mm, 1 foot = 304.8 mm, 1 pound per square inch = 6.895 kPa, 1-inch water column = 0.2488 kPa, 1 British thermal unit per hour = 0.2931 W, 1 cubic foot per hour = 0.0283 m^3/h, 1 degree = 0.01745 rad.

Notes:

1. Table capacities are based on Type K copper tubing inside diameter (shown), which has the smallest inside diameter of the copper tubing products.
2. Table entries have been rounded to three significant digits.

INTERNATIONAL CODE COUNCIL®
Copyright © 2019 ICC & NYSDOS. ALL RIGHTS RESERVED. Accessed by Lauren Gualdino (lgualdino@briarcliffmanor.org), (-) Order Number #100880972 on May 08, 2020 07:05 AM (PDT) pursuant to License Agreement with ICC & NYSDOS. No further reproduction, no

100880972

TABLE 402.4(13)
SEMIRIGID COPPER TUBING

Gas	Natural
Inlet Pressure	2.0 psi
Pressure Drop	1.5 psi
Specific Gravity	0.60

INTENDED USE		**Pipe sizing between point of delivery and the house line regulator. Total load supplied by a single house line regulator not exceeding 150 cubic feet per hour.**								
TUBE SIZE (inch)										
Nominal	**K & L**	1/4	3/8	1/2	5/8	3/4	1	1 1/4	1 1/2	2
	ACR	3/8	1/2	5/8	3/4	7/8	1 1/8	1 3/8	—	—
Outside		**0.375**	**0.500**	**0.625**	**0.750**	**0.875**	**1.125**	**1.375**	**1.625**	**2.125**
Inside		**0.305**	**0.402**	**0.527**	**0.652**	**0.745**	**0.995**	**1.245**	**1.481**	**1.959**
Length (ft)		**Capacity in Cubic Feet of Gas Per Hour**								
10		303	625	1,270	2,220	3,150	6,740	12,100	19,100	39,800
20		208	430	874	1,530	2,170	4,630	8,330	13,100	27,400
30		167	345	702	1,230	1,740	3,720	6,690	10,600	22,000
40		143	295	601	1,050	1,490	3,180	5,730	9,030	18,800
50		127	262	532	931	1,320	2,820	5,080	8,000	16,700
60		115	237	482	843	1,200	2,560	4,600	7,250	15,100
70		106	218	444	776	1,100	2,350	4,230	6,670	13,900
80		98	203	413	722	1,020	2,190	3,940	6,210	12,900
90		92	190	387	677	961	2,050	3,690	5,820	12,100
100		87	180	366	640	907	1,940	3,490	5,500	11,500
125		77	159	324	567	804	1,720	3,090	4,880	10,200
150		70	144	294	514	729	1,560	2,800	4,420	9,200
175		64	133	270	472	670	1,430	2,580	4,060	8,460
200		60	124	252	440	624	1,330	2,400	3,780	7,870
250		53	110	223	390	553	1,180	2,130	3,350	6,980
300		48	99	202	353	501	1,070	1,930	3,040	6,320
350		44	91	186	325	461	984	1,770	2,790	5,820
400		41	85	173	302	429	916	1,650	2,600	5,410
450		39	80	162	283	402	859	1,550	2,440	5,080
500		36	75	153	268	380	811	1,460	2,300	4,800
550		35	72	146	254	361	771	1,390	2,190	4,560
600		33	68	139	243	344	735	1,320	2,090	4,350
650		32	65	133	232	330	704	1,270	2,000	4,160
700		30	63	128	223	317	676	1,220	1,920	4,000
750		29	60	123	215	305	652	1,170	1,850	3,850
800		28	58	119	208	295	629	1,130	1,790	3,720
850		27	57	115	201	285	609	1,100	1,730	3,600
900		27	55	111	195	276	590	1,060	1,680	3,490
950		26	53	108	189	268	573	1,030	1,630	3,390
1,000		25	52	105	184	261	558	1,000	1,580	3,300
1,100		24	49	100	175	248	530	954	1,500	3,130
1,200		23	47	95	167	237	505	910	1,430	2,990
1,300		22	45	91	160	227	484	871	1,370	2,860
1,400		21	43	88	153	218	465	837	1,320	2,750
1,500		20	42	85	148	210	448	806	1,270	2,650
1,600		19	40	82	143	202	432	779	1,230	2,560
1,700		19	39	79	138	196	419	753	1,190	2,470
1,800		18	38	77	134	190	406	731	1,150	2,400
1,900		18	37	74	130	184	394	709	1,120	2,330
2,000		17	36	72	126	179	383	690	1,090	2,270

For SI: 1 inch = 25.4 mm, 1 foot = 304.8 mm, 1 pound per square inch = 6.895 kPa, 1-inch water column = 0.2488 kPa, 1 British thermal unit per hour = 0.2931 W, 1 cubic foot per hour = 0.0283 m^3/h, 1 degree = 0.01745 rad.

Notes:

1. Table capacities are based on Type K copper tubing inside diameter (shown), which has the smallest inside diameter of the copper tubing products.
2. Where this table is used to size the tubing upstream of a line pressure regulator, the pipe or tubing downstream of the line pressure regulator shall be sized using a pressure drop not greater than 1 inch w.c.
3. Table entries have been rounded to three significant digits.

INTERNATIONAL CODE COUNCIL®
Copyright © 2019 ICC & NYSDOS. ALL RIGHTS RESERVED. Accessed by Lauren Gualdino (lgualdino@briarcliffmanor.org), (-) Order Number #100880972 on May 08, 2020 07:05 AM (PDT) pursuant to License Agreement with ICC & NYSDOS. No further reproduction, no

100880972

TABLE 402.4(14)
SEMIRIGID COPPER TUBING

Gas	Natural
Inlet Pressure	5.0 psi
Pressure Drop	3.5 psi
Specific Gravity	0.60

TUBE SIZE (inch)										
Nominal	**K & L**	1/4	3/8	1/2	5/8	3/4	1	1 1/4	1 1/2	2
	ACR	3/8	1/2	5/8	3/4	7/8	1 1/8	1 3/8	—	—
Outside		**0.375**	**0.500**	**0.625**	**0.750**	**0.875**	**1.125**	**1.375**	**1.625**	**2.125**
Inside		**0.305**	**0.402**	**0.527**	**0.652**	**0.745**	**0.995**	**1.245**	**1.481**	**1.959**
Length (ft)		**Capacity in Cubic Feet of Gas Per Hour**								
10		511	1,050	2,140	3,750	5,320	11,400	20,400	32,200	67,100
20		351	724	1,470	2,580	3,650	7,800	14,000	22,200	46,100
30		282	582	1,180	2,070	2,930	6,270	11,300	17,800	37,000
40		241	498	1,010	1,770	2,510	5,360	9,660	15,200	31,700
50		214	441	898	1,570	2,230	4,750	8,560	13,500	28,100
60		194	400	813	1,420	2,020	4,310	7,750	12,200	25,500
70		178	368	748	1,310	1,860	3,960	7,130	11,200	23,400
80		166	342	696	1,220	1,730	3,690	6,640	10,500	21,800
90		156	321	653	1,140	1,620	3,460	6,230	9,820	20,400
100		147	303	617	1,080	1,530	3,270	5,880	9,270	19,300
125		130	269	547	955	1,360	2,900	5,210	8,220	17,100
150		118	243	495	866	1,230	2,620	4,720	7,450	15,500
175		109	224	456	796	1,130	2,410	4,350	6,850	14,300
200		101	208	424	741	1,050	2,250	4,040	6,370	13,300
250		90	185	376	657	932	1,990	3,580	5,650	11,800
300		81	167	340	595	844	1,800	3,250	5,120	10,700
350		75	154	313	547	777	1,660	2,990	4,710	9,810
400		69	143	291	509	722	1,540	2,780	4,380	9,120
450		65	134	273	478	678	1,450	2,610	4,110	8,560
500		62	127	258	451	640	1,370	2,460	3,880	8,090
550		58	121	245	429	608	1,300	2,340	3,690	7,680
600		56	115	234	409	580	1,240	2,230	3,520	7,330
650		53	110	224	392	556	1,190	2,140	3,370	7,020
700		51	106	215	376	534	1,140	2,050	3,240	6,740
750		49	102	207	362	514	1,100	1,980	3,120	6,490
800		48	98	200	350	497	1,060	1,910	3,010	6,270
850		46	95	194	339	481	1,030	1,850	2,910	6,070
900		45	92	188	328	466	1,000	1,790	2,820	5,880
950		43	90	182	319	452	967	1,740	2,740	5,710
1,000		42	87	177	310	440	940	1,690	2,670	5,560
1,100		40	83	169	295	418	893	1,610	2,530	5,280
1,200		38	79	161	281	399	852	1,530	2,420	5,040
1,300		37	76	154	269	382	816	1,470	2,320	4,820
1,400		35	73	148	259	367	784	1,410	2,220	4,630
1,500		34	70	143	249	353	755	1,360	2,140	4,460
1,600		33	68	138	241	341	729	1,310	2,070	4,310
1,700		32	65	133	233	330	705	1,270	2,000	4,170
1,800		31	63	129	226	320	684	1,230	1,940	4,040
1,900		30	62	125	219	311	664	1,200	1,890	3,930
2,000		29	60	122	213	302	646	1,160	1,830	3,820

For SI: 1 inch = 25.4 mm, 1 foot = 304.8 mm, 1 pound per square inch = 6.895 kPa, 1-inch water column = 0.2488 kPa, 1 British thermal unit per hour = 0.2931 W, 1 cubic foot per hour = 0.0283 m^3/h, 1 degree = 0.01745 rad.

Notes:

1. Table capacities are based on Type K copper tubing inside diameter (shown), which has the smallest inside diameter of the copper tubing products.
2. Table entries have been rounded to three significant digits.

INTERNATIONAL CODE COUNCIL®
Copyright © 2019 ICC & NYSDOS. ALL RIGHTS RESERVED. Accessed by Lauren Gualdino (lgualdino@briarcliffmanor.org), (-) Order Number #100880972 on May 08, 2020 07:05 AM (PDT) pursuant to License Agreement with ICC & NYSDOS. No further reproduction, no

100880972

TABLE 402.4(15)
CORRUGATED STAINLESS STEEL TUBING (CSST)

Gas	Natural
Inlet Pressure	Less than 2 psi
Pressure Drop	0.5 in. w.c.
Specific Gravity	0.60

	TUBE SIZE (EHD)													
Flow Designation	**13**	**15**	**18**	**19**	**23**	**25**	**30**	**31**	**37**	**39**	**46**	**48**	**60**	**62**
Length (ft)	**Capacity in Cubic Feet of Gas Per Hour**													
5	46	63	115	134	225	270	471	546	895	1,037	1,790	2,070	3,660	4,140
10	32	44	82	95	161	192	330	383	639	746	1,260	1,470	2,600	2,930
15	25	35	66	77	132	157	267	310	524	615	1,030	1,200	2,140	2,400
20	22	31	58	67	116	137	231	269	456	536	888	1,050	1,850	2,080
25	19	27	52	60	104	122	206	240	409	482	793	936	1,660	1,860
30	18	25	47	55	96	112	188	218	374	442	723	856	1,520	1,700
40	15	21	41	47	83	97	162	188	325	386	625	742	1,320	1,470
50	13	19	37	42	75	87	144	168	292	347	559	665	1,180	1,320
60	12	17	34	38	68	80	131	153	267	318	509	608	1,080	1,200
70	11	16	31	36	63	74	121	141	248	295	471	563	1,000	1,110
80	10	15	29	33	60	69	113	132	232	277	440	527	940	1,040
90	10	14	28	32	57	65	107	125	219	262	415	498	887	983
100	9	13	26	30	54	62	101	118	208	249	393	472	843	933
150	7	10	20	23	42	48	78	91	171	205	320	387	691	762
200	6	9	18	21	38	44	71	82	148	179	277	336	600	661
250	5	8	16	19	34	39	63	74	133	161	247	301	538	591
300	5	7	15	17	32	36	57	67	95	148	226	275	492	540

For SI: 1 inch = 25.4 mm, 1 foot = 304.8 mm, 1 pound per square inch = 6.895 kPa, 1-inch water column = 0.2488 kPa, 1 British thermal unit per hour = 0.2931 W, 1 cubic foot per hour = 0.0283 m^3/h, 1 degree = 0.01745 rad.

Notes:

1. Table includes losses for four 90-degree bends and two end fittings. Tubing runs with larger numbers of bends or fittings shall be increased by an equivalent length of tubing to the following equation: $L = 1.3n$, where L is additional length (feet) of tubing and n is the number of additional fittings or bends.
2. EHD—Equivalent Hydraulic Diameter, which is a measure of the relative hydraulic efficiency between different tubing sizes. The greater the value of EHD, the greater the gas capacity of the tubing.
3. Table entries have been rounded to three significant digits.

INTERNATIONAL CODE COUNCIL®
Copyright © 2019 ICC & NYSDOS. ALL RIGHTS RESERVED. Accessed by Lauren Gualdino (lgualdino@briarcliffmanor.org), (-) Order Number #100880972 on May 08, 2020 07:05 AM (PDT) pursuant to License Agreement with ICC & NYSDOS. No further reproduction, no

TABLE 402.4(16)
CORRUGATED STAINLESS STEEL TUBING (CSST)

Gas	Natural
Inlet Pressure	Less than 2 psi
Pressure Drop	3.0 in. w.c.
Specific Gravity	0.60

INTENDED USE: INITIAL SUPPLY PRESSURE OF 8.0-INCH W.C. OR GREATER														
	TUBE SIZE (EHD)													
Flow Designation	**13**	**15**	**18**	**19**	**23**	**25**	**30**	**31**	**37**	**39**	**46**	**48**	**60**	**62**
Length (ft)	**Capacity in Cubic Feet of Gas Per Hour**													
5	120	160	277	327	529	649	1,180	1,370	2,140	2,423	4,430	5,010	8,800	10,100
10	83	112	197	231	380	462	828	958	1,530	1,740	3,200	3,560	6,270	7,160
15	67	90	161	189	313	379	673	778	1,250	1,433	2,540	2,910	5,140	5,850
20	57	78	140	164	273	329	580	672	1,090	1,249	2,200	2,530	4,460	5,070
25	51	69	125	147	245	295	518	599	978	1,123	1,960	2,270	4,000	4,540
30	46	63	115	134	225	270	471	546	895	1,029	1,790	2,070	3,660	4,140
40	39	54	100	116	196	234	407	471	778	897	1,550	1,800	3,180	3,590
50	35	48	89	104	176	210	363	421	698	806	1,380	1,610	2,850	3,210
60	32	44	82	95	161	192	330	383	639	739	1,260	1,470	2,600	2,930
70	29	41	76	88	150	178	306	355	593	686	1,170	1,360	2,420	2,720
80	27	38	71	82	141	167	285	331	555	644	1,090	1,280	2,260	2,540
90	26	36	67	77	133	157	268	311	524	609	1,030	1,200	2,140	2,400
100	24	34	63	73	126	149	254	295	498	579	974	1,140	2,030	2,280
150	19	27	52	60	104	122	206	240	409	477	793	936	1,660	1,860
200	17	23	45	52	91	106	178	207	355	415	686	812	1,440	1,610
250	15	21	40	46	82	95	159	184	319	373	613	728	1,290	1,440
300	13	19	37	42	75	87	144	168	234	342	559	665	1,180	1,320

For SI: 1 inch = 25.4 mm, 1 foot = 304.8 mm, 1 pound per square inch = 6.895 kPa, 1-inch water column = 0.2488 kPa, 1 British thermal unit per hour = 0.2931 W, 1 cubic foot per hour = 0.0283 m^3/h, 1 degree = 0.01745 rad.

Notes:

1. Table includes losses for four 90-degree bends and two end fittings. Tubing runs with larger numbers of bends or fittings shall be increased by an equivalent length of tubing to the following equation: $L = 1.3n$ where L is additional length (feet) of tubing and n is the number of additional fittings or bends.
2. EHD—Equivalent Hydraulic Diameter, which is a measure of the relative hydraulic efficiency between different tubing sizes. The greater the value of EHD, the greater the gas capacity of the tubing.
3. Table entries have been rounded to three significant digits.

INTERNATIONAL CODE COUNCIL®
Copyright © 2019 ICC & NYSDOS. ALL RIGHTS RESERVED. Accessed by Lauren Gualdino (lgualdino@briarcliffmanor.org). (-) Order Number #100880972 on May 08, 2020 07:05 AM (PDT) pursuant to License Agreement with ICC & NYSDOS. No further reproduction, no
100880972

Copyright © 2019 ICC & NYSDOS. ALL RIGHTS RESERVED. Accessed by Lauren Gualdino (lgualdino@briarcliffmanor.org). (-) Order Number #100880972 on May 08, 2020 07:05 AM (PDT) pursuant to License Agreement with ICC & NYSDOS. No further reproduction, no

TABLE 402.4(17)
CORRUGATED STAINLESS STEEL TUBING (CSST)

Gas	Natural
Inlet Pressure	Less than 2 psi
Pressure Drop	6.0 in. w.c.
Specific Gravity	0.60

INTENDED USE: INITIAL SUPPLY PRESSURE OF 11.0-INCH W.C. OR GREATER														
	TUBE SIZE (EHD)													
Flow Designation	**13**	**15**	**18**	**19**	**23**	**25**	**30**	**31**	**37**	**39**	**46**	**48**	**60**	**62**
Length (ft)	**Capacity in Cubic Feet of Gas Per Hour**													
5	173	229	389	461	737	911	1,690	1,950	3,000	3,375	6,280	7,050	12,400	14,260
10	120	160	277	327	529	649	1,180	1,370	2,140	2,423	4,430	5,010	8,800	10,100
15	96	130	227	267	436	532	960	1,110	1,760	1,996	3,610	4,100	7,210	8,260
20	83	112	197	231	380	462	828	958	1,530	1,740	3,120	3,560	6,270	7,160
25	74	99	176	207	342	414	739	855	1,370	1,564	2,790	3,190	5,620	6,400
30	67	90	161	189	313	379	673	778	1,250	1,433	2,540	2,910	5,140	5,850
40	57	78	140	164	273	329	580	672	1,090	1,249	2,200	2,530	4,460	5,070
50	51	69	125	147	245	295	518	599	978	1,123	1,960	2,270	4,000	4,540
60	46	63	115	134	225	270	471	546	895	1,029	1,790	2,070	3,660	4,140
70	42	58	106	124	209	250	435	505	830	956	1,660	1,920	3,390	3,840
80	39	54	100	116	196	234	407	471	778	897	1,550	1,800	3,180	3,590
90	37	51	94	109	185	221	383	444	735	848	1,460	1,700	3,000	3,390
100	35	48	89	104	176	210	363	421	698	806	1,380	1,610	2,850	3,210
150	28	39	73	85	145	172	294	342	573	664	1,130	1,320	2,340	2,630
200	24	34	63	73	126	149	254	295	498	579	974	1,140	2,030	2,280
250	21	30	57	66	114	134	226	263	447	520	870	1,020	1,820	2,040
300	19	27	52	60	104	122	206	240	409	477	793	936	1,660	1,860

For SI: 1 inch = 25.4 mm, 1 foot = 304.8 mm, 1 pound per square inch = 6.895 kPa, 1-inch water column = 0.2488 kPa, 1 British thermal unit per hour = 0.2931 W, 1 cubic foot per hour = 0.0283 m^3/h, 1 degree = 0.01745 rad.

Notes:

1. Table includes losses for four 90-degree bends and two end fittings. Tubing runs with larger numbers of bends or fittings shall be increased by an equivalent length of tubing to the following equation: $L = 1.3n$ where L is additional length (feet) of tubing and n is the number of additional fittings or bends.
2. EHD—Equivalent Hydraulic Diameter, which is a measure of the relative hydraulic efficiency between different tubing sizes. The greater the value of EHD, the greater the gas capacity of the tubing.
3. Table entries have been rounded to three significant digits.

100880972

100880972

TABLE 402.4(18)
CORRUGATED STAINLESS STEEL TUBING (CSST)

Gas	Natural
Inlet Pressure	2 psi
Pressure Drop	1.0 psi
Specific Gravity	0.60

TUBE SIZE (EHD)														
Flow Designation	**13**	**15**	**18**	**19**	**23**	**25**	**30**	**31**	**37**	**39**	**46**	**48**	**60**	**62**
Length (ft)	**Capacity in Cubic Feet of Gas Per Hour**													
10	270	353	587	700	1,100	1,370	2,590	2,990	4,510	5,037	9,600	10,700	18,600	21,600
25	166	220	374	444	709	876	1,620	1,870	2,890	3,258	6,040	6,780	11,900	13,700
30	151	200	342	405	650	801	1,480	1,700	2,640	2,987	5,510	6,200	10,900	12,500
40	129	172	297	351	567	696	1,270	1,470	2,300	2,605	4,760	5,380	9,440	10,900
50	115	154	266	314	510	624	1,140	1,310	2,060	2,343	4,260	4,820	8,470	9,720
75	93	124	218	257	420	512	922	1,070	1,690	1,932	3,470	3,950	6,940	7,940
80	89	120	211	249	407	496	892	1,030	1,640	1,874	3,360	3,820	6,730	7,690
100	79	107	189	222	366	445	795	920	1,470	1,685	3,000	3,420	6,030	6,880
150	64	87	155	182	302	364	646	748	1,210	1,389	2,440	2,800	4,940	5,620
200	55	75	135	157	263	317	557	645	1,050	1,212	2,110	2,430	4,290	4,870
250	49	67	121	141	236	284	497	576	941	1,090	1,890	2,180	3,850	4,360
300	44	61	110	129	217	260	453	525	862	999	1,720	1,990	3,520	3,980
400	38	52	96	111	189	225	390	453	749	871	1,490	1,730	3,060	3,450
500	34	46	86	100	170	202	348	404	552	783	1,330	1,550	2,740	3,090

For SI: 1 inch = 25.4 mm, 1 foot = 304.8 mm, 1 pound per square inch = 6.895 kPa, 1-inch water column = 0.2488 kPa, 1 British thermal unit per hour = 0.2931 W, 1 cubic foot per hour = 0.0283 m^3/h, 1 degree = 0.01745 rad.

Notes:

1. Table does not include effect of pressure drop across the line regulator. Where regulator loss exceeds $^3/_4$ psi, DO NOT USE THIS TABLE. Consult with the regulator manufacturer for pressure drops and capacity factors. Pressure drops across a regulator may vary with flow rate.
2. CAUTION: Capacities shown in the table might exceed maximum capacity for a selected regulator. Consult with the regulator or tubing manufacturer for guidance.
3. Table includes losses for four 90-degree bends and two end fittings. Tubing runs with larger numbers of bends or fittings shall be increased by an equivalent length of tubing to the following equation: $L = 1.3n$ where L is additional length (feet) of tubing and n is the number of additional fittings or bends.
4. EHD—Equivalent Hydraulic Diameter, which is a measure of the relative hydraulic efficiency between different tubing sizes. The greater the value of EHD, the greater the gas capacity of the tubing.
5. Table entries have been rounded to three significant digits.

INTERNATIONAL CODE COUNCIL®
Copyright © 2019 ICC & NYSDOS. ALL RIGHTS RESERVED. Accessed by Lauren Gualdino (lgualdino@briarcliffmanor.org), (-) Order Number #100880972 on May 08, 2020 07:05 AM (PDT) pursuant to License Agreement with ICC & NYSDOS. No further reproduction, no

100880972

TABLE 402.4(19)
CORRUGATED STAINLESS STEEL TUBING (CSST)

Gas	Natural
Inlet Pressure	5.0 psi
Pressure Drop	3.5 psi
Specific Gravity	0.60

	TUBE SIZE (EHD)													
Flow Designation	**13**	**15**	**18**	**19**	**23**	**25**	**30**	**31**	**37**	**39**	**46**	**48**	**60**	**62**
Length (ft)	**Capacity in Cubic Feet of Gas Per Hour**													
10	523	674	1,080	1,300	2,000	2,530	4,920	5,660	8,300	9,140	18,100	19,800	34,400	40,400
25	322	420	691	827	1,290	1,620	3,080	3,540	5,310	5,911	11,400	12,600	22,000	25,600
30	292	382	632	755	1,180	1,480	2,800	3,230	4,860	5,420	10,400	11,500	20,100	23,400
40	251	329	549	654	1,030	1,280	2,420	2,790	4,230	4,727	8,970	10,000	17,400	20,200
50	223	293	492	586	926	1,150	2,160	2,490	3,790	4,251	8,020	8,930	15,600	18,100
75	180	238	403	479	763	944	1,750	2,020	3,110	3,506	6,530	7,320	12,800	14,800
80	174	230	391	463	740	915	1,690	1,960	3,020	3,400	6,320	7,090	12,400	14,300
100	154	205	350	415	665	820	1,510	1,740	2,710	3,057	5,650	6,350	11,100	12,800
150	124	166	287	339	548	672	1,230	1,420	2,220	2,521	4,600	5,200	9,130	10,500
200	107	143	249	294	478	584	1,060	1,220	1,930	2,199	3,980	4,510	7,930	9,090
250	95	128	223	263	430	524	945	1,090	1,730	1,977	3,550	4,040	7,110	8,140
300	86	116	204	240	394	479	860	995	1,590	1,813	3,240	3,690	6,500	7,430
400	74	100	177	208	343	416	742	858	1,380	1,581	2,800	3,210	5,650	6,440
500	66	89	159	186	309	373	662	766	1,040	1,422	2,500	2,870	5,060	5,760

For SI: 1 inch = 25.4 mm, 1 foot = 304.8 mm, 1 pound per square inch = 6.895 kPa, 1-inch water column = 0.2488 kPa, 1 British thermal unit per hour = 0.2931 W, 1 cubic foot per hour = 0.0283 m^3/h, 1 degree = 0.01745 rad.

Notes:

1. Table does not include effect of pressure drop across the line regulator. Where regulator loss exceeds $^3/_4$ psi, DO NOT USE THIS TABLE. Consult with the regulator manufacturer for pressure drops and capacity factors. Pressure drops across a regulator may vary with flow rate.
2. CAUTION: Capacities shown in the table might exceed maximum capacity for a selected regulator. Consult with the regulator or tubing manufacturer for guidance.
3. Table includes losses for four 90-degree bends and two end fittings. Tubing runs with larger numbers of bends or fittings shall be increased by an equivalent length of tubing to the following equation: $L = 1.3n$ where L is additional length (feet) of tubing and n is the number of additional fittings or bends.
4. EHD—Equivalent Hydraulic Diameter, which is a measure of the relative hydraulic efficiency between different tubing sizes. The greater the value of EHD, the greater the gas capacity of the tubing.
5. Table entries have been rounded to three significant digits.

INTERNATIONAL CODE COUNCIL®
Copyright © 2019 ICC & NYSDOS. ALL RIGHTS RESERVED. Accessed by Lauren Gualdino (lgualdino@briarcliffmanor.org), (-) Order Number #100880972 on May 08, 2020 07:05 AM (PDT) pursuant to License Agreement with ICC & NYSDOS. No further reproduction, no

100880972

TABLE 402.4(20)
POLYETHYLENE PLASTIC PIPE

Gas	Natural
Inlet Pressure	Less than 2 psi
Pressure Drop	0.3 in. w.c.
Specific Gravity	0.60

PIPE SIZE (inch)								
Nominal OD	**1/2**	**3/4**	**1**	**1 1/4**	**1 1/2**	**2**	**3**	**4**
Designation	**SDR 9**	**SDR 11**	**SDR 11**	**SDR 10**	**SDR 11**	**SDR 11**	**SDR 11**	**SDR 11**
Actual ID	**0.660**	**0.860**	**1.077**	**1.328**	**1.554**	**1.943**	**2.864**	**3.682**
Length (ft)	**Capacity in Cubic Feet of Gas per Hour**							
10	153	305	551	955	1,440	2,590	7,170	13,900
20	105	210	379	656	991	1,780	4,920	9,520
30	84	169	304	527	796	1,430	3,950	7,640
40	72	144	260	451	681	1,220	3,380	6,540
50	64	128	231	400	604	1,080	3,000	5,800
60	58	116	209	362	547	983	2,720	5,250
70	53	107	192	333	503	904	2,500	4,830
80	50	99	179	310	468	841	2,330	4,500
90	46	93	168	291	439	789	2,180	4,220
100	44	88	159	275	415	745	2,060	3,990
125	39	78	141	243	368	661	1,830	3,530
150	35	71	127	221	333	598	1,660	3,200
175	32	65	117	203	306	551	1,520	2,940
200	30	60	109	189	285	512	1,420	2,740
250	27	54	97	167	253	454	1,260	2,430
300	24	48	88	152	229	411	1,140	2,200
350	22	45	81	139	211	378	1,050	2,020
400	21	42	75	130	196	352	974	1,880
450	19	39	70	122	184	330	914	1,770
500	18	37	66	115	174	312	863	1,670

For SI: 1 inch = 25.4 mm, 1 foot = 304.8 mm, 1 pound per square inch = 6.895 kPa, 1-inch water column = 0.2488 kPa, 1 British thermal unit per hour = 0.2931 W, 1 cubic foot per hour = 0.0283 m^3/h, 1 degree = 0.01745 rad.

Note: Table entries have been rounded to three significant digits.

INTERNATIONAL CODE COUNCIL®
Copyright © 2019 ICC & NYSDOS. ALL RIGHTS RESERVED. Accessed by Lauren Gualdino (lgualdino@briarcliffmanor.org), (-) Order Number #100880972 on May 08, 2020 07:05 AM (PDT) pursuant to License Agreement with ICC & NYSDOS. No further reproduction, no

100880972

TABLE 402.4(21)
POLYETHYLENE PLASTIC PIPE

Gas	Natural
Inlet Pressure	Less than 2 psi
Pressure Drop	0.5 in. w.c.
Specific Gravity	0.60

PIPE SIZE (inch)								
Nominal OD	**1/2**	**3/4**	**1**	**1 1/4**	**1 1/2**	**2**	**3**	**4**
Designation	**SDR 9**	**SDR 11**	**SDR 11**	**SDR 10**	**SDR 11**	**SDR 11**	**SDR 11**	**SDR 11**
Actual ID	**0.660**	**0.860**	**1.077**	**1.328**	**1.554**	**1.943**	**2.864**	**3.682**
Length (ft)	**Capacity in Cubic Feet of Gas per Hour**							
10	201	403	726	1,260	1,900	3,410	9,450	18,260
20	138	277	499	865	1,310	2,350	6,490	12,550
30	111	222	401	695	1,050	1,880	5,210	10,080
40	95	190	343	594	898	1,610	4,460	8,630
50	84	169	304	527	796	1,430	3,950	7,640
60	76	153	276	477	721	1,300	3,580	6,930
70	70	140	254	439	663	1,190	3,300	6,370
80	65	131	236	409	617	1,110	3,070	5,930
90	61	123	221	383	579	1,040	2,880	5,560
100	58	116	209	362	547	983	2,720	5,250
125	51	103	185	321	485	871	2,410	4,660
150	46	93	168	291	439	789	2,180	4,220
175	43	86	154	268	404	726	2,010	3,880
200	40	80	144	249	376	675	1,870	3,610
250	35	71	127	221	333	598	1,660	3,200
300	32	64	115	200	302	542	1,500	2,900
350	29	59	106	184	278	499	1,380	2,670
400	27	55	99	171	258	464	1,280	2,480
450	26	51	93	160	242	435	1,200	2,330
500	24	48	88	152	229	411	1,140	2,200

For SI: 1 inch = 25.4 mm, 1 foot = 304.8 mm, 1 pound per square inch = 6.895 kPa, 1-inch water column = 0.2488 kPa, 1 British thermal unit per hour = 0.2931 W, 1 cubic foot per hour = 0.0283 m^3/h, 1 degree = 0.01745 rad.

Note: Table entries have been rounded to three significant digits.

INTERNATIONAL CODE COUNCIL®
Copyright © 2019 ICC & NYSDOS. ALL RIGHTS RESERVED. Accessed by Lauren Gualdino (lgualdino@briarcliffmanor.org), (-) Order Number #100880972 on May 08, 2020 07:05 AM (PDT) pursuant to License Agreement with ICC & NYSDOS. No further reproduction, no

TABLE 402.4(22)
POLYETHYLENE PLASTIC PIPE

Gas	Natural
Inlet Pressure	2.0 psi
Pressure Drop	1.0 psi
Specific Gravity	0.60

PIPE SIZE (inch)								
Nominal OD	**1/2**	**3/4**	**1**	**1 1/4**	**1 1/2**	**2**	**3**	**4**
Designation	**SDR 9**	**SDR 11**	**SDR 11**	**SDR 10**	**SDR 11**	**SDR 11**	**SDR 11**	**SDR 11**
Actual ID	**0.660**	**0.860**	**1.077**	**1.328**	**1.554**	**1.943**	**2.864**	**3.682**
Length (ft)	**Capacity in Cubic Feet of Gas per Hour**							
10	1,860	3,720	6,710	11,600	17,600	31,600	87,300	169,000
20	1,280	2,560	4,610	7,990	12,100	21,700	60,000	116,000
30	1,030	2,050	3,710	6,420	9,690	17,400	48,200	93,200
40	878	1,760	3,170	5,490	8,300	14,900	41,200	79,700
50	778	1,560	2,810	4,870	7,350	13,200	36,600	70,700
60	705	1,410	2,550	4,410	6,660	12,000	33,100	64,000
70	649	1,300	2,340	4,060	6,130	11,000	30,500	58,900
80	603	1,210	2,180	3,780	5,700	10,200	28,300	54,800
90	566	1,130	2,050	3,540	5,350	9,610	26,600	51,400
100	535	1,070	1,930	3,350	5,050	9,080	25,100	48,600
125	474	949	1,710	2,970	4,480	8,050	22,300	43,000
150	429	860	1,550	2,690	4,060	7,290	20,200	39,000
175	395	791	1,430	2,470	3,730	6,710	18,600	35,900
200	368	736	1,330	2,300	3,470	6,240	17,300	33,400
250	326	652	1,180	2,040	3,080	5,530	15,300	29,600
300	295	591	1,070	1,850	2,790	5,010	13,900	26,800
350	272	544	981	1,700	2,570	4,610	12,800	24,700
400	253	506	913	1,580	2,390	4,290	11,900	22,900
450	237	475	856	1,480	2,240	4,020	11,100	21,500
500	224	448	809	1,400	2,120	3,800	10,500	20,300
550	213	426	768	1,330	2,010	3,610	9,990	19,300
600	203	406	733	1,270	1,920	3,440	9,530	18,400
650	194	389	702	1,220	1,840	3,300	9,130	17,600
700	187	374	674	1,170	1,760	3,170	8,770	16,900
750	180	360	649	1,130	1,700	3,050	8,450	16,300
800	174	348	627	1,090	1,640	2,950	8,160	15,800
850	168	336	607	1,050	1,590	2,850	7,890	15,300
900	163	326	588	1,020	1,540	2,770	7,650	14,800
950	158	317	572	990	1,500	2,690	7,430	14,400
1,000	154	308	556	963	1,450	2,610	7,230	14,000
1,100	146	293	528	915	1,380	2,480	6,870	13,300
1,200	139	279	504	873	1,320	2,370	6,550	12,700
1,300	134	267	482	836	1,260	2,270	6,270	12,100
1,400	128	257	463	803	1,210	2,180	6,030	11,600
1,500	124	247	446	773	1,170	2,100	5,810	11,200
1,600	119	239	431	747	1,130	2,030	5,610	10,800
1,700	115	231	417	723	1,090	1,960	5,430	10,500
1,800	112	224	404	701	1,060	1,900	5,260	10,200
1,900	109	218	393	680	1,030	1,850	5,110	9,900
2,000	106	212	382	662	1,000	1,800	4,970	9,600

For SI: 1 inch = 25.4 mm, 1 foot = 304.8 mm, 1 pound per square inch = 6.895 kPa, 1-inch water column = 0.2488 kPa, 1 British thermal unit per hour = 0.2931 W, 1 cubic foot per hour = 0.0283 m^3/h, 1 degree = 0.01745 rad.

Note: Table entries have been rounded to three significant digits.

INTERNATIONAL CODE COUNCIL®
Copyright © 2019 ICC & NYSDOS. ALL RIGHTS RESERVED. Accessed by Lauren Gualdino (lgualdino@briarcliffmanor.org), (-) Order Number #100880972 on May 08, 2020 07:05 AM (PDT) pursuant to License Agreement with ICC & NYSDOS. No further reproduction, no

100880972

TABLE 402.4(23)
POLYETHYLENE PLASTIC TUBING

Gas	Natural
Inlet Pressure	Less than 2.0 psi
Pressure Drop	0.3 in. w.c.
Specific Gravity	0.60

	PLASTIC TUBING SIZE (CTS) (inch)	
Nominal OD	$^1/_2$	$^3/_4$
Designation	**SDR 7**	**SDR 11**
Actual ID	**0.445**	**0.927**
Length (ft)	**Capacity in Cubic Feet of Gas per Hour**	
10	54	372
20	37	256
30	30	205
40	26	176
50	23	156
60	21	141
70	19	130
80	18	121
90	17	113
100	16	107
125	14	95
150	13	86
175	12	79
200	11	74
225	10	69
250	NA	65
275	NA	62
300	NA	59
350	NA	54
400	NA	51
450	NA	47
500	NA	45

For SI: 1 inch = 25.4 mm, 1 foot = 304.8 mm,
1 pound per square inch = 6.895 kPa,
1-inch water column = 0.2488 kPa,
1 British thermal unit per hour = 0.2931 W,
1 cubic foot per hour = 0.0283 m^3/h, 1 degree = 0.01745 rad.

Notes:

1. NA means a flow of less than 10 cfh.
2. Table entries have been rounded to three significant digits.

TABLE 402.4(24)
POLYETHYLENE PLASTIC TUBING

Gas	Natural
Inlet Pressure	Less than 2.0 psi
Pressure Drop	0.5 in. w.c.
Specific Gravity	0.60

	PLASTIC TUBING SIZE (CTS) (inch)	
Nominal OD	$^1/_2$	$^3/_4$
Designation	**SDR 7**	**SDR 11**
Actual ID	**0.445**	**0.927**
Length (ft)	**Capacity in Cubic Feet of Gas per Hour**	
10	72	490
20	49	337
30	39	271
40	34	232
50	30	205
60	27	186
70	25	171
80	23	159
90	22	149
100	21	141
125	18	125
150	17	113
175	15	104
200	14	97
225	13	91
250	12	86
275	11	82
300	11	78
350	10	72
400	NA	67
450	NA	63
500	NA	59

For SI: 1 inch = 25.4 mm, 1 foot = 304.8 mm,
1 pound per square inch = 6.895 kPa,
1-inch water column = 0.2488 kPa,
1 British thermal unit per hour = 0.2931 W,
1 cubic foot per hour = 0.0283 m^3/h, 1 degree = 0.01745 rad.

Notes:

1. NA means a flow of less than 10 cfh.
2. Table entries have been rounded to three significant digits.

INTERNATIONAL CODE COUNCIL®
Copyright © 2019 ICC & NYSDOS. ALL RIGHTS RESERVED. Accessed by Lauren Gualdino (lgualdino@briarcliffmanor.org), (-) Order Number #100880972 on May 08, 2020 07:05 AM (PDT) pursuant to License Agreement with ICC & NYSDOS. No further reproduction, no

100880972

TABLE 402.4(25)
SCHEDULE 40 METALLIC PIPE

Gas	Undiluted Propane
Inlet Pressure	10.0 psi
Pressure Drop	1.0 psi
Specific Gravity	1.50

INTENDED USE	**Pipe sizing between first stage (high-pressure regulator) and second stage (low-pressure regulator).**								
	PIPE SIZE (inch)								
Nominal	**1/2**	**3/4**	**1**	**1 1/4**	**1 1/2**	**2**	**2 1/2**	**3**	**4**
Actual ID	**0.622**	**0.824**	**1.049**	**1.380**	**1.610**	**2.067**	**2.469**	**3.068**	**4.026**
Length (ft)	**Capacity in Thousands of Btu per Hour**								
10	3,320	6,950	13,100	26,900	40,300	77,600	124,000	219,000	446,000
20	2,280	4,780	9,000	18,500	27,700	53,300	85,000	150,000	306,000
30	1,830	3,840	7,220	14,800	22,200	42,800	68,200	121,000	246,000
40	1,570	3,280	6,180	12,700	19,000	36,600	58,400	103,000	211,000
50	1,390	2,910	5,480	11,300	16,900	32,500	51,700	91,500	187,000
60	1,260	2,640	4,970	10,200	15,300	29,400	46,900	82,900	169,000
70	1,160	2,430	4,570	9,380	14,100	27,100	43,100	76,300	156,000
80	1,080	2,260	4,250	8,730	13,100	25,200	40,100	70,900	145,000
90	1,010	2,120	3,990	8,190	12,300	23,600	37,700	66,600	136,000
100	956	2,000	3,770	7,730	11,600	22,300	35,600	62,900	128,000
125	848	1,770	3,340	6,850	10,300	19,800	31,500	55,700	114,000
150	768	1,610	3,020	6,210	9,300	17,900	28,600	50,500	103,000
175	706	1,480	2,780	5,710	8,560	16,500	26,300	46,500	94,700
200	657	1,370	2,590	5,320	7,960	15,300	24,400	43,200	88,100
250	582	1,220	2,290	4,710	7,060	13,600	21,700	38,300	78,100
300	528	1,100	2,080	4,270	6,400	12,300	19,600	34,700	70,800
350	486	1,020	1,910	3,930	5,880	11,300	18,100	31,900	65,100
400	452	945	1,780	3,650	5,470	10,500	16,800	29,700	60,600
450	424	886	1,670	3,430	5,140	9,890	15,800	27,900	56,800
500	400	837	1,580	3,240	4,850	9,340	14,900	26,300	53,700
550	380	795	1,500	3,070	4,610	8,870	14,100	25,000	51,000
600	363	759	1,430	2,930	4,400	8,460	13,500	23,900	48,600
650	347	726	1,370	2,810	4,210	8,110	12,900	22,800	46,600
700	334	698	1,310	2,700	4,040	7,790	12,400	21,900	44,800
750	321	672	1,270	2,600	3,900	7,500	12,000	21,100	43,100
800	310	649	1,220	2,510	3,760	7,240	11,500	20,400	41,600
850	300	628	1,180	2,430	3,640	7,010	11,200	19,800	40,300
900	291	609	1,150	2,360	3,530	6,800	10,800	19,200	39,100
950	283	592	1,110	2,290	3,430	6,600	10,500	18,600	37,900
1,000	275	575	1,080	2,230	3,330	6,420	10,200	18,100	36,900
1,100	261	546	1,030	2,110	3,170	6,100	9,720	17,200	35,000
1,200	249	521	982	2,020	3,020	5,820	9,270	16,400	33,400
1,300	239	499	940	1,930	2,890	5,570	8,880	15,700	32,000
1,400	229	480	903	1,850	2,780	5,350	8,530	15,100	30,800
1,500	221	462	870	1,790	2,680	5,160	8,220	14,500	29,600
1,600	213	446	840	1,730	2,590	4,980	7,940	14,000	28,600
1,700	206	432	813	1,670	2,500	4,820	7,680	13,600	27,700
1,800	200	419	789	1,620	2,430	4,670	7,450	13,200	26,900
1,900	194	407	766	1,570	2,360	4,540	7,230	12,800	26,100
2,000	189	395	745	1,530	2,290	4,410	7,030	12,400	25,400

For SI: 1 inch = 25.4 mm, 1 foot = 304.8 mm, 1 pound per square inch = 6.895 kPa, 1-inch water column = 0.2488 kPa, 1 British thermal unit per hour = 0.2931 W, 1 cubic foot per hour = 0.0283 m^3/h, 1 degree = 0.01745 rad.

Note: Table entries have been rounded to three significant digits.

INTERNATIONAL CODE COUNCIL®
Copyright © 2019 ICC & NYSDOS. ALL RIGHTS RESERVED. Accessed by Lauren Gualdino (lgualdino@briarcliffmanor.org), (-) Order Number #100880972 on May 08, 2020 07:05 AM (PDT) pursuant to License Agreement with ICC & NYSDOS. No further reproduction, no

100880972

TABLE 402.4(26)
SCHEDULE 40 METALLIC PIPE

Gas	Undiluted Propane
Inlet Pressure	10.0 psi
Pressure Drop	3.0 psi
Specific Gravity	1.50

INTENDED USE	Pipe sizing between first stage (high-pressure regulator) and second stage (low-pressure regulator).								
	PIPE SIZE (inch)								
Nominal	1/2	3/4	1	1 1/4	1 1/2	2	2 1/2	3	4
Actual ID	0.622	0.824	1.049	1.380	1.610	2.067	2.469	3.068	4.026
Length (ft)	Capacity in Thousands of Btu per Hour								
10	5,890	12,300	23,200	47,600	71,300	137,000	219,000	387,000	789,000
20	4,050	8,460	15,900	32,700	49,000	94,400	150,000	266,000	543,000
30	3,250	6,790	12,800	26,300	39,400	75,800	121,000	214,000	436,000
40	2,780	5,810	11,000	22,500	33,700	64,900	103,000	183,000	373,000
50	2,460	5,150	9,710	19,900	29,900	57,500	91,600	162,000	330,000
60	2,230	4,670	8,790	18,100	27,100	52,100	83,000	147,000	299,000
70	2,050	4,300	8,090	16,600	24,900	47,900	76,400	135,000	275,000
80	1,910	4,000	7,530	15,500	23,200	44,600	71,100	126,000	256,000
90	1,790	3,750	7,060	14,500	21,700	41,800	66,700	118,000	240,000
100	1,690	3,540	6,670	13,700	20,500	39,500	63,000	111,000	227,000
125	1,500	3,140	5,910	12,100	18,200	35,000	55,800	98,700	201,000
150	1,360	2,840	5,360	11,000	16,500	31,700	50,600	89,400	182,000
175	1,250	2,620	4,930	10,100	15,200	29,200	46,500	82,300	167,800
200	1,160	2,430	4,580	9,410	14,100	27,200	43,300	76,500	156,100
250	1,030	2,160	4,060	8,340	12,500	24,100	38,400	67,800	138,400
300	935	1,950	3,680	7,560	11,300	21,800	34,800	61,500	125,400
350	860	1,800	3,390	6,950	10,400	20,100	32,000	56,500	115,300
400	800	1,670	3,150	6,470	9,690	18,700	29,800	52,600	107,300
450	751	1,570	2,960	6,070	9,090	17,500	27,900	49,400	100,700
500	709	1,480	2,790	5,730	8,590	16,500	26,400	46,600	95,100
550	673	1,410	2,650	5,450	8,160	15,700	25,000	44,300	90,300
600	642	1,340	2,530	5,200	7,780	15,000	23,900	42,200	86,200
650	615	1,290	2,420	4,980	7,450	14,400	22,900	40,500	82,500
700	591	1,240	2,330	4,780	7,160	13,800	22,000	38,900	79,300
750	569	1,190	2,240	4,600	6,900	13,300	21,200	37,400	76,400
800	550	1,150	2,170	4,450	6,660	12,800	20,500	36,200	73,700
850	532	1,110	2,100	4,300	6,450	12,400	19,800	35,000	71,400
900	516	1,080	2,030	4,170	6,250	12,000	19,200	33,900	69,200
950	501	1,050	1,970	4,050	6,070	11,700	18,600	32,900	67,200
1,000	487	1,020	1,920	3,940	5,900	11,400	18,100	32,000	65,400
1,100	463	968	1,820	3,740	5,610	10,800	17,200	30,400	62,100
1,200	442	923	1,740	3,570	5,350	10,300	16,400	29,000	59,200
1,300	423	884	1,670	3,420	5,120	9,870	15,700	27,800	56,700
1,400	406	849	1,600	3,280	4,920	9,480	15,100	26,700	54,500
1,500	391	818	1,540	3,160	4,740	9,130	14,600	25,700	52,500
1,600	378	790	1,490	3,060	4,580	8,820	14,100	24,800	50,700
1,700	366	765	1,440	2,960	4,430	8,530	13,600	24,000	49,000
1,800	355	741	1,400	2,870	4,300	8,270	13,200	23,300	47,600
1,900	344	720	1,360	2,780	4,170	8,040	12,800	22,600	46,200
2,000	335	700	1,320	2,710	4,060	7,820	12,500	22,000	44,900

For SI: 1 inch = 25.4 mm, 1 foot = 304.8 mm, 1 pound per square inch = 6.895 kPa, 1-inch water column = 0.2488 kPa,
1 British thermal unit per hour = 0.2931 W, 1 cubic foot per hour = 0.0283 m^3/h, 1 degree = 0.01745 rad.

Note: Table entries have been rounded to three significant digits.

INTERNATIONAL CODE COUNCIL®
Copyright © 2019 ICC & NYSDOS. ALL RIGHTS RESERVED. Accessed by Lauren Gualdino (lgualdino@briarcliffmanor.org), (-) Order Number #100880972 on May 08, 2020 07:05 AM (PDT) pursuant to License Agreement with ICC & NYSDOS. No further reproduction, no

100880972

TABLE 402.4(27)
SCHEDULE 40 METALLIC PIPE

Gas	Undiluted Propane
Inlet Pressure	2.0 psi
Pressure Drop	1.0 psi
Specific Gravity	1.50

INTENDED USE	**Pipe sizing between 2 psig service and line pressure regulator.**								
	PIPE SIZE (inch)								
Nominal	**1/2**	**3/4**	**1**	**1 1/4**	**1 1/2**	**2**	**2 1/2**	**3**	**4**
Actual ID	**0.622**	**0.824**	**1.049**	**1.380**	**1.610**	**2.067**	**2.469**	**3.068**	**4.026**
Length (ft)	**Capacity in Thousands of Btu per Hour**								
10	2,680	5,590	10,500	21,600	32,400	62,400	99,500	176,000	359,000
20	1,840	3,850	7,240	14,900	22,300	42,900	68,400	121,000	247,000
30	1,480	3,090	5,820	11,900	17,900	34,500	54,900	97,100	198,000
40	1,260	2,640	4,980	10,200	15,300	29,500	47,000	83,100	170,000
50	1,120	2,340	4,410	9,060	13,600	26,100	41,700	73,700	150,000
60	1,010	2,120	4,000	8,210	12,300	23,700	37,700	66,700	136,000
70	934	1,950	3,680	7,550	11,300	21,800	34,700	61,400	125,000
80	869	1,820	3,420	7,020	10,500	20,300	32,300	57,100	116,000
90	815	1,700	3,210	6,590	9,880	19,000	30,300	53,600	109,000
100	770	1,610	3,030	6,230	9,330	18,000	28,600	50,600	103,000
125	682	1,430	2,690	5,520	8,270	15,900	25,400	44,900	91,500
150	618	1,290	2,440	5,000	7,490	14,400	23,000	40,700	82,900
175	569	1,190	2,240	4,600	6,890	13,300	21,200	37,400	76,300
200	529	1,110	2,080	4,280	6,410	12,300	19,700	34,800	71,000
250	469	981	1,850	3,790	5,680	10,900	17,400	30,800	62,900
300	425	889	1,670	3,440	5,150	9,920	15,800	27,900	57,000
350	391	817	1,540	3,160	4,740	9,120	14,500	25,700	52,400
400	364	760	1,430	2,940	4,410	8,490	13,500	23,900	48,800
450	341	714	1,340	2,760	4,130	7,960	12,700	22,400	45,800
500	322	674	1,270	2,610	3,910	7,520	12,000	21,200	43,200
550	306	640	1,210	2,480	3,710	7,140	11,400	20,100	41,100
600	292	611	1,150	2,360	3,540	6,820	10,900	19,200	39,200
650	280	585	1,100	2,260	3,390	6,530	10,400	18,400	37,500
700	269	562	1,060	2,170	3,260	6,270	9,990	17,700	36,000
750	259	541	1,020	2,090	3,140	6,040	9,630	17,000	34,700
800	250	523	985	2,020	3,030	5,830	9,300	16,400	33,500
850	242	506	953	1,960	2,930	5,640	9,000	15,900	32,400
900	235	490	924	1,900	2,840	5,470	8,720	15,400	31,500
950	228	476	897	1,840	2,760	5,310	8,470	15,000	30,500
1,000	222	463	873	1,790	2,680	5,170	8,240	14,600	29,700
1,100	210	440	829	1,700	2,550	4,910	7,830	13,800	28,200
1,200	201	420	791	1,620	2,430	4,680	7,470	13,200	26,900
1,300	192	402	757	1,550	2,330	4,490	7,150	12,600	25,800
1,400	185	386	727	1,490	2,240	4,310	6,870	12,100	24,800
1,500	178	372	701	1,440	2,160	4,150	6,620	11,700	23,900
1,600	172	359	677	1,390	2,080	4,010	6,390	11,300	23,000
1,700	166	348	655	1,340	2,010	3,880	6,180	10,900	22,300
1,800	161	337	635	1,300	1,950	3,760	6,000	10,600	21,600
1,900	157	327	617	1,270	1,900	3,650	5,820	10,300	21,000
2,000	152	318	600	1,230	1,840	3,550	5,660	10,000	20,400

For SI: 1 inch = 25.4 mm, 1 foot = 304.8 mm, 1 pound per square inch = 6.895 kPa, 1-inch water column = 0.2488 kPa, 1 British thermal unit per hour = 0.2931 W, 1 cubic foot per hour = 0.0283 m^3/h, 1 degree = 0.01745 rad.

Note: Table entries have been rounded to three significant digits.

INTERNATIONAL CODE COUNCIL®

Copyright © 2019 ICC & NYSDOS. ALL RIGHTS RESERVED. Accessed by Lauren Gualdino (lgualdino@briarcliffmanor.org), (-) Order Number #100880972 on May 08, 2020 07:05 AM (PDT) pursuant to License Agreement with ICC & NYSDOS. No further reproduction, no

100880972

TABLE 402.4(28)
SCHEDULE 40 METALLIC PIPE

Gas	Undiluted Propane
Inlet Pressure	11.0 in. w.c.
Pressure Drop	0.5 in. w.c.
Specific Gravity	1.50

INTENDED USE	**Pipe sizing between single- or second-stage (low pressure) regulator and appliance.**								
	PIPE SIZE (inch)								
Nominal	**1/2**	**3/4**	**1**	**1 1/4**	**1 1/2**	**2**	**2 1/2**	**3**	**4**
Actual ID	**0.622**	**0.824**	**1.049**	**1.380**	**1.610**	**2.067**	**2.469**	**3.068**	**4.026**
Length (ft)	**Capacity in Thousands of Btu per Hour**								
10	291	608	1,150	2,350	3,520	6,790	10,800	19,100	39,000
20	200	418	787	1,620	2,420	4,660	7,430	13,100	26,800
30	160	336	632	1,300	1,940	3,750	5,970	10,600	21,500
40	137	287	541	1,110	1,660	3,210	5,110	9,030	18,400
50	122	255	480	985	1,480	2,840	4,530	8,000	16,300
60	110	231	434	892	1,340	2,570	4,100	7,250	14,800
80	101	212	400	821	1,230	2,370	3,770	6,670	13,600
100	94	197	372	763	1,140	2,200	3,510	6,210	12,700
125	89	185	349	716	1,070	2,070	3,290	5,820	11,900
150	84	175	330	677	1,010	1,950	3,110	5,500	11,200
175	74	155	292	600	899	1,730	2,760	4,880	9,950
200	67	140	265	543	814	1,570	2,500	4,420	9,010
250	62	129	243	500	749	1,440	2,300	4,060	8,290
300	58	120	227	465	697	1,340	2,140	3,780	7,710
350	51	107	201	412	618	1,190	1,900	3,350	6,840
400	46	97	182	373	560	1,080	1,720	3,040	6,190
450	42	89	167	344	515	991	1,580	2,790	5,700
500	40	83	156	320	479	922	1,470	2,600	5,300
550	37	78	146	300	449	865	1,380	2,440	4,970
600	35	73	138	283	424	817	1,300	2,300	4,700
650	33	70	131	269	403	776	1,240	2,190	4,460
700	32	66	125	257	385	741	1,180	2,090	4,260
750	30	64	120	246	368	709	1,130	2,000	4,080
800	29	61	115	236	354	681	1,090	1,920	3,920
850	28	59	111	227	341	656	1,050	1,850	3,770
900	27	57	107	220	329	634	1,010	1,790	3,640
950	26	55	104	213	319	613	978	1,730	3,530
1,000	25	53	100	206	309	595	948	1,680	3,420
1,100	25	52	97	200	300	578	921	1,630	3,320
1,200	24	50	95	195	292	562	895	1,580	3,230
1,300	23	48	90	185	277	534	850	1,500	3,070
1,400	22	46	86	176	264	509	811	1,430	2,930
1,500	21	44	82	169	253	487	777	1,370	2,800
1,600	20	42	79	162	243	468	746	1,320	2,690
1,700	19	40	76	156	234	451	719	1,270	2,590
1,800	19	39	74	151	226	436	694	1,230	2,500
1,900	18	38	71	146	219	422	672	1,190	2,420
2,000	18	37	69	142	212	409	652	1,150	2,350

For SI: 1 inch = 25.4 mm, 1 foot = 304.8 mm, 1 pound per square inch = 6.895 kPa, 1-inch water column = 0.2488 kPa, 1 British thermal unit per hour = 0.2931 W, 1 cubic foot per hour = 0.0283 m^3/h, 1 degree = 0.01745 rad.

Note: Table entries have been rounded to three significant digits.

INTERNATIONAL CODE COUNCIL®
Copyright © 2019 ICC & NYSDOS. ALL RIGHTS RESERVED. Accessed by Lauren Gualdino (lgualdino@briarcliffmanor.org), (-) Order Number #100880972 on May 08, 2020 07:05 AM (PDT) pursuant to License Agreement with ICC & NYSDOS. No further reproduction, no

100880972

TABLE 402.4(29)
SEMIRIGID COPPER TUBING

Gas	Undiluted Propane
Inlet Pressure	10.0 psi
Pressure Drop	1.0 psi
Specific Gravity	1.50

INTENDED USE		**Sizing between first stage (high-pressure regulator) and second stage (low-pressure regulator).**								
		TUBE SIZE (in.)								
Nominal	**K & L**	**1/4**	**3/8**	**1/2**	**5/8**	**3/4**	**1**	**1 1/4**	**1 1/2**	**2**
	ACR	**3/8**	**1/2**	**5/8**	**3/4**	**7/8**	**1 1/8**	**1 3/8**	**—**	**—**
Outside		**0.375**	**0.500**	**0.625**	**0.750**	**0.875**	**1.125**	**1.375**	**1.625**	**2.125**
Inside		**0.305**	**0.402**	**0.527**	**0.652**	**0.745**	**0.995**	**1.245**	**1.481**	**1.959**
Length (ft)		**Capacity in Thousands of Btu per Hour**								
10		513	1,060	2,150	3,760	5,330	11,400	20,500	32,300	67,400
20		352	727	1,480	2,580	3,670	7,830	14,100	22,200	46,300
30		283	584	1,190	2,080	2,940	6,290	11,300	17,900	37,200
40		242	500	1,020	1,780	2,520	5,380	9,690	15,300	31,800
50		215	443	901	1,570	2,230	4,770	8,590	13,500	28,200
60		194	401	816	1,430	2,020	4,320	7,780	12,300	25,600
70		179	369	751	1,310	1,860	3,980	7,160	11,300	23,500
80		166	343	699	1,220	1,730	3,700	6,660	10,500	21,900
90		156	322	655	1,150	1,630	3,470	6,250	9,850	20,500
100		147	304	619	1,080	1,540	3,280	5,900	9,310	19,400
125		131	270	549	959	1,360	2,910	5,230	8,250	17,200
150		118	244	497	869	1,230	2,630	4,740	7,470	15,600
175		109	225	457	799	1,130	2,420	4,360	6,880	14,300
200		101	209	426	744	1,060	2,250	4,060	6,400	13,300
250		90	185	377	659	935	2,000	3,600	5,670	11,800
300		81	168	342	597	847	1,810	3,260	5,140	10,700
350		75	155	314	549	779	1,660	3,000	4,730	9,840
400		70	144	292	511	725	1,550	2,790	4,400	9,160
450		65	135	274	480	680	1,450	2,620	4,130	8,590
500		62	127	259	453	643	1,370	2,470	3,900	8,120
550		59	121	246	430	610	1,300	2,350	3,700	7,710
600		56	115	235	410	582	1,240	2,240	3,530	7,350
650		54	111	225	393	558	1,190	2,140	3,380	7,040
700		51	106	216	378	536	1,140	2,060	3,250	6,770
750		50	102	208	364	516	1,100	1,980	3,130	6,520
800		48	99	201	351	498	1,060	1,920	3,020	6,290
850		46	96	195	340	482	1,030	1,850	2,920	6,090
900		45	93	189	330	468	1,000	1,800	2,840	5,910
950		44	90	183	320	454	970	1,750	2,750	5,730
1,000		42	88	178	311	442	944	1,700	2,680	5,580
1,100		40	83	169	296	420	896	1,610	2,540	5,300
1,200		38	79	161	282	400	855	1,540	2,430	5,050
1,300		37	76	155	270	383	819	1,470	2,320	4,840
1,400		35	73	148	260	368	787	1,420	2,230	4,650
1,500		34	70	143	250	355	758	1,360	2,150	4,480
1,600		33	68	138	241	343	732	1,320	2,080	4,330
1,700		32	66	134	234	331	708	1,270	2,010	4,190
1,800		31	64	130	227	321	687	1,240	1,950	4,060
1,900		30	62	126	220	312	667	1,200	1,890	3,940
2,000		29	60	122	214	304	648	1,170	1,840	3,830

For SI: 1 inch = 25.4 mm, 1 foot = 304.8 mm, 1 pound per square inch = 6.895 kPa, 1-inch water column = 0.2488 kPa, 1 British thermal unit per hour = 0.2931 W, 1 cubic foot per hour = 0.0283 m^3/h, 1 degree = 0.01745 rad.

Notes:

1. Table capacities are based on Type K copper tubing inside diameter (shown), which has the smallest inside diameter of the copper tubing products.
2. Table entries have been rounded to three significant digits.

INTERNATIONAL CODE COUNCIL®
Copyright © 2019 ICC & NYSDOS. ALL RIGHTS RESERVED. Accessed by Lauren Gualdino (lgualdino@briarcliffmanor.org), (-) Order Number #100880972 on May 08, 2020 07:05 AM (PDT) pursuant to License Agreement with ICC & NYSDOS. No further reproduction, no

100880972

TABLE 402.4(30)
SEMIRIGID COPPER TUBING

Gas	Undiluted Propane
Inlet Pressure	11.0 in. w.c.
Pressure Drop	0.5 in. w.c.
Specific Gravity	1.50

INTENDED USE		**Sizing between single or second stage (low-pressure regulator) and appliance.**								
		TUBE SIZE (inch)								
Nominal	**K & L**	**1/4**	**3/8**	**1/2**	**5/8**	**3/4**	**1**	**1 1/4**	**1 1/2**	**2**
	ACR	**3/8**	**1/2**	**5/8**	**3/4**	**7/8**	**1 1/8**	**1 3/8**	**—**	**—**
Outside		**0.375**	**0.500**	**0.625**	**0.750**	**0.875**	**1.125**	**1.375**	**1.625**	**2.125**
Inside		**0.305**	**0.402**	**0.527**	**0.652**	**0.745**	**0.995**	**1.245**	**1.481**	**1.959**
Length (ft)		**Capacity in Thousands of Btu per Hour**								
10		45	93	188	329	467	997	1,800	2,830	5,890
20		31	64	129	226	321	685	1,230	1,950	4,050
30		25	51	104	182	258	550	991	1,560	3,250
40		21	44	89	155	220	471	848	1,340	2,780
50		19	39	79	138	195	417	752	1,180	2,470
60		17	35	71	125	177	378	681	1,070	2,240
70		16	32	66	115	163	348	626	988	2,060
80		15	30	61	107	152	324	583	919	1,910
90		14	28	57	100	142	304	547	862	1,800
100		13	27	54	95	134	287	517	814	1,700
125		11	24	48	84	119	254	458	722	1,500
150		10	21	44	76	108	230	415	654	1,360
175		NA	20	40	70	99	212	382	602	1,250
200		NA	18	37	65	92	197	355	560	1,170
250		NA	16	33	58	82	175	315	496	1,030
300		NA	15	30	52	74	158	285	449	936
350		NA	14	28	48	68	146	262	414	861
400		NA	13	26	45	63	136	244	385	801
450		NA	12	24	42	60	127	229	361	752
500		NA	11	23	40	56	120	216	341	710
550		NA	11	22	38	53	114	205	324	674
600		NA	10	21	36	51	109	196	309	643
650		NA	NA	20	34	49	104	188	296	616
700		NA	NA	19	33	47	100	180	284	592
750		NA	NA	18	32	45	96	174	274	570
800		NA	NA	18	31	44	93	168	264	551
850		NA	NA	17	30	42	90	162	256	533
900		NA	NA	17	29	41	87	157	248	517
950		NA	NA	16	28	40	85	153	241	502
1,000		NA	NA	16	27	39	83	149	234	488
1,100		NA	NA	15	26	37	78	141	223	464
1,200		NA	NA	14	25	35	75	135	212	442
1,300		NA	NA	14	24	34	72	129	203	423
1,400		NA	NA	13	23	32	69	124	195	407
1,500		NA	NA	13	22	31	66	119	188	392
1,600		NA	NA	12	21	30	64	115	182	378
1,700		NA	NA	12	20	29	62	112	176	366
1,800		NA	NA	11	20	28	60	108	170	355
1,900		NA	NA	11	19	27	58	105	166	345
2,000		NA	NA	11	19	27	57	102	161	335

For SI: 1 inch = 25.4 mm, 1 foot = 304.8 mm, 1 pound per square inch = 6.895 kPa, 1-inch water column = 0.2488 kPa, 1 British thermal unit per hour = 0.2931 W, 1 cubic foot per hour = 0.0283 m^3/h, 1 degree = 0.01745 rad.

Notes:

1. Table capacities are based on Type K copper tubing inside diameter (shown), which has the smallest inside diameter of the copper tubing products.
2. NA means a flow of less than 10,000 Btu/h.
3. Table entries have been rounded to three significant digits.

INTERNATIONAL CODE COUNCIL®
Copyright © 2019 ICC & NYSDOS. ALL RIGHTS RESERVED. Accessed by Lauren Gualdino (lgualdino@briarcliffmanor.org), (-) Order Number #100880972 on May 08, 2020 07:05 AM (PDT) pursuant to License Agreement with ICC & NYSDOS. No further reproduction, no

TABLE 402.4(31)
SEMIRIGID COPPER TUBING

Gas	Undiluted Propane
Inlet Pressure	2.0 psi
Pressure Drop	1.0 psi
Specific Gravity	1.50

INTENDED USE		**Tube sizing between 2 psig service and line pressure regulator.**								
		TUBE SIZE (inch)								
Nominal	**K & L**	**1/4**	**3/8**	**1/2**	**5/8**	**3/4**	**1**	**1 1/4**	**1 1/2**	**2**
	ACR	**3/8**	**1/2**	**5/8**	**3/4**	**7/8**	**1 1/8**	**1 3/8**	—	—
Outside		**0.375**	**0.500**	**0.625**	**0.750**	**0.875**	**1.125**	**1.375**	**1.625**	**2.125**
Inside		**0.305**	**0.402**	**0.527**	**0.652**	**0.745**	**0.995**	**1.245**	**1.481**	**1.959**
Length (ft)		**Capacity in Thousands of Btu per Hour**								
10		413	852	1,730	3,030	4,300	9,170	16,500	26,000	54,200
20		284	585	1,190	2,080	2,950	6,310	11,400	17,900	37,300
30		228	470	956	1,670	2,370	5,060	9,120	14,400	29,900
40		195	402	818	1,430	2,030	4,330	7,800	12,300	25,600
50		173	356	725	1,270	1,800	3,840	6,920	10,900	22,700
60		157	323	657	1,150	1,630	3,480	6,270	9,880	20,600
70		144	297	605	1,060	1,500	3,200	5,760	9,090	18,900
80		134	276	562	983	1,390	2,980	5,360	8,450	17,600
90		126	259	528	922	1,310	2,790	5,030	7,930	16,500
100		119	245	498	871	1,240	2,640	4,750	7,490	15,600
125		105	217	442	772	1,100	2,340	4,210	6,640	13,800
150		95	197	400	700	992	2,120	3,820	6,020	12,500
175		88	181	368	644	913	1,950	3,510	5,540	11,500
200		82	168	343	599	849	1,810	3,270	5,150	10,700
250		72	149	304	531	753	1,610	2,900	4,560	9,510
300		66	135	275	481	682	1,460	2,620	4,140	8,610
350		60	124	253	442	628	1,340	2,410	3,800	7,920
400		56	116	235	411	584	1,250	2,250	3,540	7,370
450		53	109	221	386	548	1,170	2,110	3,320	6,920
500		50	103	209	365	517	1,110	1,990	3,140	6,530
550		47	97	198	346	491	1,050	1,890	2,980	6,210
600		45	93	189	330	469	1,000	1,800	2,840	5,920
650		43	89	181	316	449	959	1,730	2,720	5,670
700		41	86	174	304	431	921	1,660	2,620	5,450
750		40	82	168	293	415	888	1,600	2,520	5,250
800		39	80	162	283	401	857	1,540	2,430	5,070
850		37	77	157	274	388	829	1,490	2,350	4,900
900		36	75	152	265	376	804	1,450	2,280	4,750
950		35	72	147	258	366	781	1,410	2,220	4,620
1,000		34	71	143	251	356	760	1,370	2,160	4,490
1,100		32	67	136	238	338	721	1,300	2,050	4,270
1,200		31	64	130	227	322	688	1,240	1,950	4,070
1,300		30	61	124	217	309	659	1,190	1,870	3,900
1,400		28	59	120	209	296	633	1,140	1,800	3,740
1,500		27	57	115	201	286	610	1,100	1,730	3,610
1,600		26	55	111	194	276	589	1,060	1,670	3,480
1,700		26	53	108	188	267	570	1,030	1,620	3,370
1,800		25	51	104	182	259	553	1,000	1,570	3,270
1,900		24	50	101	177	251	537	966	1,520	3,170
2,000		23	48	99	172	244	522	940	1,480	3,090

For SI: 1 inch = 25.4 mm, 1 foot = 304.8 mm, 1 pound per square inch = 6.895 kPa, 1-inch water column = 0.2488 kPa, 1 British thermal unit per hour = 0.2931 W, 1 cubic foot per hour = 0.0283 m^3/h, 1 degree = 0.01745 rad.

Notes:

1. Table capacities are based on Type K copper tubing inside diameter (shown), which has the smallest inside diameter of the copper tubing products.
2. Table entries have been rounded to three significant digits.

INTERNATIONAL CODE COUNCIL®
Copyright © 2019 ICC & NYSDOS. ALL RIGHTS RESERVED. Accessed by Lauren Gualdino (lgualdino@briarcliffmanor.org), (-) Order Number #100880972 on May 08, 2020 07:05 AM (PDT) pursuant to License Agreement with ICC & NYSDOS. No further reproduction, no

100880972

TABLE 402.4(32)
CORRUGATED STAINLESS STEEL TUBING (CSST)

Gas	Undiluted Propane
Inlet Pressure	11.0 in. w.c.
Pressure Drop	0.5 in. w.c.
Specific Gravity	1.50

INTENDED USE: SIZING BETWEEN SINGLE- OR SECOND-STAGE (Low-Pressure) REGULATOR AND THE APPLIANCE SHUTOFF VALVE														
	TUBE SIZE (EHD)													
Flow Designation	**13**	**15**	**18**	**19**	**23**	**25**	**30**	**31**	**37**	**39**	**46**	**48**	**60**	**62**
Length (ft)	**Capacity in Thousands of Btu per Hour**													
5	72	99	181	211	355	426	744	863	1,420	1,638	2,830	3,270	5,780	6,550
10	50	69	129	150	254	303	521	605	971	1,179	1,990	2,320	4,110	4,640
15	39	55	104	121	208	248	422	490	775	972	1,620	1,900	3,370	3,790
20	34	49	91	106	183	216	365	425	661	847	1,400	1,650	2,930	3,290
25	30	42	82	94	164	192	325	379	583	762	1,250	1,480	2,630	2,940
30	28	39	74	87	151	177	297	344	528	698	1,140	1,350	2,400	2,680
40	23	33	64	74	131	153	256	297	449	610	988	1,170	2,090	2,330
50	20	30	58	66	118	137	227	265	397	548	884	1,050	1,870	2,080
60	19	26	53	60	107	126	207	241	359	502	805	961	1,710	1,900
70	17	25	49	57	99	117	191	222	330	466	745	890	1,590	1,760
80	15	23	45	52	94	109	178	208	307	438	696	833	1,490	1,650
90	15	22	44	50	90	102	169	197	286	414	656	787	1,400	1,550
100	14	20	41	47	85	98	159	186	270	393	621	746	1,330	1,480
150	11	15	31	36	66	75	123	143	217	324	506	611	1,090	1,210
200	9	14	28	33	60	69	112	129	183	283	438	531	948	1,050
250	8	12	25	30	53	61	99	117	163	254	390	476	850	934
300	8	11	23	26	50	57	90	107	147	234	357	434	777	854

For SI: 1 inch = 25.4 mm, 1 foot = 304.8 mm, 1 pound per square inch = 6.895 kPa, 1-inch water column = 0.2488 kPa, 1 British thermal unit per hour = 0.2931 W, 1 cubic foot per hour = 0.0283 m^3/h, 1 degree = 0.01745 rad.

Notes:

1. Table includes losses for four 90-degree bends and two end fittings. Tubing runs with larger numbers of bends or fittings shall be increased by an equivalent length of tubing to the following equation: $L = 1.3n$ where L is additional length (feet) of tubing and n is the number of additional fittings or bends.
2. EHD—Equivalent Hydraulic Diameter, which is a measure of the relative hydraulic efficiency between different tubing sizes. The greater the value of EHD, the greater the gas capacity of the tubing.
3. Table entries have been rounded to three significant digits.

INTERNATIONAL CODE COUNCIL®
Copyright © 2019 ICC & NYSDOS. ALL RIGHTS RESERVED. Accessed by Lauren Gualdino (lgualdino@briarcliffmanor.org), (-) Order Number #100880972 on May 08, 2020 07:05 AM (PDT) pursuant to License Agreement with ICC & NYSDOS. No further reproduction, no

100880972

TABLE 402.4(33)
CORRUGATED STAINLESS STEEL TUBING (CSST)

Gas	Undiluted Propane
Inlet Pressure	2.0 psi
Pressure Drop	1.0 psi
Specific Gravity	1.50

INTENDED USE: SIZING BETWEEN 2 PSI SERVICE AND THE LINE PRESSURE REGULATOR														
	TUBE SIZE (EHD)													
Flow Designation	**13**	**15**	**18**	**19**	**23**	**25**	**30**	**31**	**37**	**39**	**46**	**48**	**60**	**62**
Length (ft)	**Capacity in Thousands of Btu per Hour**													
10	426	558	927	1,110	1,740	2,170	4,100	4,720	7,130	7,958	15,200	16,800	29,400	34,200
25	262	347	591	701	1,120	1,380	2,560	2,950	4,560	5,147	9,550	10,700	18,800	21,700
30	238	316	540	640	1,030	1,270	2,330	2,690	4,180	4,719	8,710	9,790	17,200	19,800
40	203	271	469	554	896	1,100	2,010	2,320	3,630	4,116	7,530	8,500	14,900	17,200
50	181	243	420	496	806	986	1,790	2,070	3,260	3,702	6,730	7,610	13,400	15,400
75	147	196	344	406	663	809	1,460	1,690	2,680	3,053	5,480	6,230	11,000	12,600
80	140	189	333	393	643	768	1,410	1,630	2,590	2,961	5,300	6,040	10,600	12,200
100	124	169	298	350	578	703	1,260	1,450	2,330	2,662	4,740	5,410	9,530	10,900
150	101	137	245	287	477	575	1,020	1,180	1,910	2,195	3,860	4,430	7,810	8,890
200	86	118	213	248	415	501	880	1,020	1,660	1,915	3,340	3,840	6,780	7,710
250	77	105	191	222	373	448	785	910	1,490	1,722	2,980	3,440	6,080	6,900
300	69	96	173	203	343	411	716	829	1,360	1,578	2,720	3,150	5,560	6,300
400	60	82	151	175	298	355	616	716	1,160	1,376	2,350	2,730	4,830	5,460
500	53	72	135	158	268	319	550	638	1,030	1,237	2,100	2,450	4,330	4,880

For SI: 1 inch = 25.4 mm, 1 foot = 304.8 mm, 1 pound per square inch = 6.895kPa, 1-inch water column = 0.2488 kPa,
1 British thermal unit per hour = 0.293 1 W, 1 cubic foot per hour = 0.0283 m^3/h, 1 degree = 0.01745 rad.

Notes:

1. Table does not include effect of pressure drop across the line regulator. Where regulator loss exceeds $^1/_2$ psi (based on 13 in. w.c. outlet pressure), DO NOT USE THIS TABLE. Consult with the regulator manufacturer for pressure drops and capacity factors. Pressure drops across a regulator may vary with flow rate.
2. CAUTION: Capacities shown in the table might exceed maximum capacity for a selected regulator. Consult with the regulator or tubing manufacturer for guidance.
3. Table includes losses for four 90-degree bends and two end fittings. Tubing runs with larger numbers of bends or fittings shall be increased by an equivalent length of tubing to the following equation: $L = 1.3n$ where L is additional length (feet) of tubing and n is the number of additional fittings or bends.
4. EHD—Equivalent Hydraulic Diameter, which is a measure of the relative hydraulic efficiency between different tubing sizes. The greater the value of EHD, the greater the gas capacity of the tubing.
5. Table entries have been rounded to three significant digits.

INTERNATIONAL CODE COUNCIL®
Copyright © 2019 ICC & NYSDOS. ALL RIGHTS RESERVED. Accessed by Lauren Gualdino (lgualdino@briarcliffmanor.org), (-) Order Number #100880972 on May 08, 2020 07:05 AM (PDT) pursuant to License Agreement with ICC & NYSDOS. No further reproduction, no

100880972

TABLE 402.4(34)
CORRUGATED STAINLESS STEEL TUBING (CSST)

Gas	Undiluted Propane
Inlet Pressure	5.0 psi
Pressure Drop	3.5 psi
Specific Gravity	1.50

	TUBE SIZE (EHD)													
Flow Designation	**13**	**15**	**18**	**19**	**23**	**25**	**30**	**31**	**37**	**39**	**46**	**48**	**60**	**62**
Length (ft)	**Capacity in Thousands of Btu per Hour**													
10	826	1,070	1,710	2,060	3,150	4,000	7,830	8,950	13,100	14,441	28,600	31,200	54,400	63,800
25	509	664	1,090	1,310	2,040	2,550	4,860	5,600	8,400	9,339	18,000	19,900	34,700	40,400
30	461	603	999	1,190	1,870	2,340	4,430	5,100	7,680	8,564	16,400	18,200	31,700	36,900
40	396	520	867	1,030	1,630	2,030	3,820	4,400	6,680	7,469	14,200	15,800	27,600	32,000
50	352	463	777	926	1,460	1,820	3,410	3,930	5,990	6,717	12,700	14,100	24,700	28,600
75	284	376	637	757	1,210	1,490	2,770	3,190	4,920	5,539	10,300	11,600	20,300	23,400
80	275	363	618	731	1,170	1,450	2,680	3,090	4,770	5,372	9,990	11,200	19,600	22,700
100	243	324	553	656	1,050	1,300	2,390	2,760	4,280	4,830	8,930	10,000	17,600	20,300
150	196	262	453	535	866	1,060	1,940	2,240	3,510	3,983	7,270	8,210	14,400	16,600
200	169	226	393	464	755	923	1,680	1,930	3,050	3,474	6,290	7,130	12,500	14,400
250	150	202	352	415	679	828	1,490	1,730	2,740	3,124	5,620	6,390	11,200	12,900
300	136	183	322	379	622	757	1,360	1,570	2,510	2,865	5,120	5,840	10,300	11,700
400	117	158	279	328	542	657	1,170	1,360	2,180	2,498	4,430	5,070	8,920	10,200
500	104	140	251	294	488	589	1,050	1,210	1,950	2,247	3,960	4,540	8,000	9,110

For SI: 1 inch = 25.4 mm, 1 foot = 304.8 mm, 1 pound per square inch = 6.895 kPa, 1-inch water column = 0.2488 kPa, 1 British thermal unit per hour = 0.2931 W, 1 cubic foot per hour = 0.0283 m^3/h, 1 degree = 0.01745 rad.

Notes:

1 Table does not include effect of pressure drop across line regulator. Where regulator loss exceeds 1 psi, DO NOT USE THIS TABLE. Consult with the regulator manufacturer for pressure drops and capacity factors. Pressure drop across regulator may vary with the flow rate.

2. CAUTION: Capacities shown in the table might exceed maximum capacity of selected regulator. Consult with the tubing manufacturer for guidance.

3. Table includes losses for four 90-degree bends and two end fittings. Tubing runs with larger numbers of bends or fittings shall be increased by an equivalent length of tubing to the following equation: $L = 1.3n$ where L is additional length (feet) of tubing and n is the number of additional fittings or bends.

4. EHD—Equivalent Hydraulic Diameter, which is a measure of the relative hydraulic efficiency between different tubing sizes. The greater the value of EHD, the greater the gas capacity of the tubing.

5. Table entries have been rounded to three significant digits.

INTERNATIONAL CODE COUNCIL®
Copyright © 2019 ICC & NYSDOS. ALL RIGHTS RESERVED. Accessed by Lauren Gualdino (lgualdino@briarcliffmanor.org), (-) Order Number #100880972 on May 08, 2020 07:05 AM (PDT) pursuant to License Agreement with ICC & NYSDOS. No further reproduction, no

100880972

TABLE 402.4(35)
POLYETHYLENE PLASTIC PIPE

Gas	Undiluted Propane
Inlet Pressure	11.0 in. w.c.
Pressure Drop	0.5 in. w.c.
Specific Gravity	1.50

INTENDED USE	**PE pipe sizing between integral two-stage regulator at tank or second stage (low-pressure regulator) and building.**							
	PIPE SIZE (inch)							
Nominal OD	**1/2**	**3/4**	**1**	**1 1/4**	**1 1/2**	**2**	**3**	**4**
Designation	**SDR 9**	**SDR 11**	**SDR 11**	**SDR 10**	**SDR 11**	**SDR 11**	**SDR 11**	**SDR 11**
Actual ID	**0.660**	**0.860**	**1.077**	**1.328**	**1.554**	**1.943**	**2.864**	**3.682**
Length (ft)	**Capacity in Thousands of Btu per Hour**							
10	340	680	1,230	2,130	3,210	5,770	16,000	30,900
20	233	468	844	1,460	2,210	3,970	11,000	21,200
30	187	375	677	1,170	1,770	3,180	8,810	17,000
40	160	321	580	1,000	1,520	2,730	7,540	14,600
50	142	285	514	890	1,340	2,420	6,680	12,900
60	129	258	466	807	1,220	2,190	6,050	11,700
70	119	237	428	742	1,120	2,010	5,570	10,800
80	110	221	398	690	1,040	1,870	5,180	10,000
90	103	207	374	648	978	1,760	4,860	9,400
100	98	196	353	612	924	1,660	4,590	8,900
125	87	173	313	542	819	1,470	4,070	7,900
150	78	157	284	491	742	1,330	3,690	7,130
175	72	145	261	452	683	1,230	3,390	6,560
200	67	135	243	420	635	1,140	3,160	6,100
250	60	119	215	373	563	1,010	2,800	5,410
300	54	108	195	338	510	916	2,530	4,900
350	50	99	179	311	469	843	2,330	4,510
400	46	92	167	289	436	784	2,170	4,190
450	43	87	157	271	409	736	2,040	3,930
500	41	82	148	256	387	695	1,920	3,720

For SI: 1 inch = 25.4 mm, 1 foot = 304.8 mm, 1 pound per square inch = 6.895 kPa, 1-inch water column = 0.2488 kPa, 1 British thermal unit per hour = 0.2931 W, 1 cubic foot per hour = 0.0283 m^3/h, 1 degree = 0.01745 rad.

Note: Table entries have been rounded to three significant digits.

INTERNATIONAL CODE COUNCIL®
Copyright © 2019 ICC & NYSDOS. ALL RIGHTS RESERVED. Accessed by Lauren Gualdino (lgualdino@briarcliffmanor.org), (-) Order Number #100880972 on May 08, 2020 07:05 AM (PDT) pursuant to License Agreement with ICC & NYSDOS. No further reproduction, no

TABLE 402.4(36)
POLYETHYLENE PLASTIC PIPE

Gas	Undiluted Propane
Inlet Pressure	2.0 psi
Pressure Drop	1.0 psi
Specific Gravity	1.50

INTENDED USE	**PE pipe sizing between 2 psig service regulator and line pressure regulator.**							
	PIPE SIZE (inch)							
Nominal OD	**1/2**	**3/4**	**1**	**1 1/4**	**1 1/2**	**2**	**3**	**4**
Designation	**SDR 9**	**SDR 11**	**SDR 11**	**SDR 10**	**SDR 11**	**SDR 11**	**SDR 11**	**SDR 11**
Actual ID	**0.660**	**0.860**	**1.077**	**1.328**	**1.554**	**1.943**	**2.864**	**3.682**
Length (ft)	**Capacity in Thousands of Btu per Hour**							
10	3,130	6,260	11,300	19,600	29,500	53,100	147,000	284,000
20	2,150	4,300	7,760	13,400	20,300	36,500	101,000	195,000
30	1,730	3,450	6,230	10,800	16,300	29,300	81,100	157,000
40	1,480	2,960	5,330	9,240	14,000	25,100	69,400	134,100
50	1,310	2,620	4,730	8,190	12,400	22,200	61,500	119,000
60	1,190	2,370	4,280	7,420	11,200	20,100	55,700	108,000
70	1,090	2,180	3,940	6,830	10,300	18,500	51,300	99,100
80	1,010	2,030	3,670	6,350	9,590	17,200	47,700	92,200
90	952	1,910	3,440	5,960	9,000	16,200	44,700	86,500
100	899	1,800	3,250	5,630	8,500	15,300	42,300	81,700
125	797	1,600	2,880	4,990	7,530	13,500	37,500	72,400
150	722	1,450	2,610	4,520	6,830	12,300	33,900	65,600
175	664	1,330	2,400	4,160	6,280	11,300	31,200	60,300
200	618	1,240	2,230	3,870	5,840	10,500	29,000	56,100
250	548	1,100	1,980	3,430	5,180	9,300	25,700	49,800
300	496	994	1,790	3,110	4,690	8,430	23,300	45,100
350	457	914	1,650	2,860	4,320	7,760	21,500	41,500
400	425	851	1,530	2,660	4,020	7,220	12,000	38,600
450	399	798	1,440	2,500	3,770	6,770	18,700	36,200
500	377	754	1,360	2,360	3,560	6,390	17,700	34,200
550	358	716	1,290	2,240	3,380	6,070	16,800	32,500
600	341	683	1,230	2,140	3,220	5,790	16,000	31,000
650	327	654	1,180	2,040	3,090	5,550	15,400	29,700
700	314	628	1,130	1,960	2,970	5,330	14,700	28,500
750	302	605	1,090	1,890	2,860	5,140	14,200	27,500
800	292	585	1,050	1,830	2,760	4,960	13,700	26,500
850	283	566	1,020	1,770	2,670	4,800	13,300	25,700
900	274	549	990	1,710	2,590	4,650	12,900	24,900
950	266	533	961	1,670	2,520	4,520	12,500	24,200
1,000	259	518	935	1,620	2,450	4,400	12,200	23,500
1,100	246	492	888	1,540	2,320	4,170	11,500	22,300
1,200	234	470	847	1,470	2,220	3,980	11,000	21,300
1,300	225	450	811	1,410	2,120	3,810	10,600	20,400
1,400	216	432	779	1,350	2,040	3,660	10,100	19,600
1,500	208	416	751	1,300	1,960	3,530	9,760	18,900
1,600	201	402	725	1,260	1,900	3,410	9,430	18,200
1,700	194	389	702	1,220	1,840	3,300	9,130	17,600
1,800	188	377	680	1,180	1,780	3,200	8,850	17,100
1,900	183	366	661	1,140	1,730	3,110	8,590	16,600
2,000	178	356	643	1,110	1,680	3,020	8,360	16,200

For SI: 1 inch = 25.4 mm, 1 foot = 304.8 mm, 1 pound per square inch = 6.895 kPa, 1-inch water column = 0.2488 kPa, 1 British thermal unit per hour = 0.2931 W, 1 cubic foot per hour = 0.0283 m^3/h, 1 degree = 0.01745 rad.

Note: Table entries have been rounded to three significant digits.

INTERNATIONAL CODE COUNCIL®

Copyright © 2019 ICC & NYSDOS. ALL RIGHTS RESERVED. Accessed by Lauren Gualdino (lgualdino@briarcliffmanor.org), (-) Order Number #100880972 on May 08, 2020 07:05 AM (PDT) pursuant to License Agreement with ICC & NYSDOS. No further reproduction, no

100880972

TABLE 402.4(37)
POLYETHYLENE PLASTIC TUBING

Gas	Undiluted Propane
Inlet Pressure	11.0 in. w.c.
Pressure Drop	0.5 in. w.c.
Specific Gravity	1.50

INTENDED USE	**PE pipe sizing between integral two-stage regulator at tank or second stage (low-pressure regulator) and building.**	
Plastic Tubing Size (CTS) (inch)		
Nominal OD	**$^1/_2$**	**1**
Designation	**SDR 7**	**SDR 11**
Actual ID	**0.445**	**0.927**
Length (ft)	**Capacity in Cubic Feet of Gas per Hour**	
10	121	828
20	83	569
30	67	457
40	57	391
50	51	347
60	46	314
70	42	289
80	39	269
90	37	252
100	35	238
125	31	211
150	28	191
175	26	176
200	24	164
225	22	154
250	21	145
275	20	138
300	19	132
350	18	121
400	16	113
450	15	106
500	15	100

For SI: 1 inch = 25.4 mm, 1 foot = 304.8 mm,
1 pound per square inch = 6.895 kPa,
1-inch water column = 0.2488 kPa,
1 British thermal unit per hour = 0.293 1 W,
1 cubic foot per hour = 0.0283 m^3/h, 1 degree = 0.0 1745 rad.

Note: Table entries have been rounded to three significant digits.

INTERNATIONAL CODE COUNCIL®
Copyright © 2019 ICC & NYSDOS. ALL RIGHTS RESERVED. Accessed by Lauren Gualdino (lgualdino@briarcliffmanor.org), (-) Order Number #100880972 on May 08, 2020 07:05 AM (PDT) pursuant to License Agreement with ICC & NYSDOS. No further reproduction, no

100880972

403.4.2 Steel. Steel, stainless steel and wrought-iron pipe shall be not lighter than Schedule 10 and shall comply with the dimensional standards of ASME B36.10M and one of the following standards:

1. ASTM A53/A53M.
2. ASTM A106.
3. ASTM A312.

403.4.3 Copper and copper alloy. Copper and copper alloy pipe shall not be used if the gas contains more than an average of 0.3 grains of hydrogen sulfide per 100 standard cubic feet of gas (0.7 milligrams per 100 liters). Threaded copper, copper alloy and aluminum-alloy pipe shall not be used with gases corrosive to such materials.

403.4.4 Aluminum. Aluminum-alloy pipe shall comply with ASTM B241 except that the use of alloy 5456 is prohibited. Aluminum-alloy pipe shall be marked at each end of each length indicating compliance. Aluminum-alloy pipe shall be coated to protect against external corrosion where it is in contact with masonry, plaster or insulation, or is subject to repeated wettings by such liquids as water, detergents or sewage. Aluminum-alloy pipe shall not be used in exterior locations or underground.

403.5 Metallic tubing. Tubing shall not be used with gases corrosive to the tubing material.

403.5.1 Steel tubing. Steel tubing shall comply with ASTM A254.

403.5.2 Stainless steel. Stainless steel tubing shall comply with ASTM A268 or ASTM A269.

403.5.3 Copper and copper alloy tubing. Copper tubing shall comply with Standard Type K or L of ASTM B88 or ASTM B280.

Copper and copper alloy tubing shall not be used if the gas contains more than an average of 0.3 grains of hydrogen sulfide per 100 standard cubic feet of gas (0.7 milligrams per 100 liters).

403.5.4 Aluminum tubing. Aluminum-alloy tubing shall comply with ASTM B210 or ASTM B241. Aluminum-alloy tubing shall be coated to protect against external corrosion where it is in contact with masonry, plaster or insulation, or is subject to repeated wettings by such liquids as water, detergent or sewage.

Aluminum-alloy tubing shall not be used in exterior locations or underground.

403.5.5 Corrugated stainless steel tubing. Corrugated stainless steel tubing shall be *listed* in accordance with ANSI LC 1/CSA 6.26.

403.6 Plastic pipe, tubing and fittings. Polyethylene plastic pipe, tubing and fittings used to supply fuel gas shall conform to ASTM D2513. Such pipe shall be marked "Gas" and "ASTM D2513."

Polyamide pipe, tubing and fittings shall be identified and conform to ASTM F2945. Such pipe shall be marked "Gas" and "ASTM F2945."

Polyvinyl chloride (PVC) and chlorinated polyvinyl chloride (CPVC) plastic pipe, tubing and fittings shall not be used to supply fuel gas.

403.6.1 Anodeless risers. Plastic pipe, tubing and anodeless risers shall comply with the following:

1. Factory-assembled anodeless risers shall be recommended by the manufacturer for the gas used and shall be leak tested by the manufacturer in accordance with written procedures.
2. Service head adapters and field-assembled anodeless risers incorporating service head adapters shall be recommended by the manufacturer for the gas used, and shall be designed and certified to meet the requirements of Category I of ASTM D2513, and U.S. Department of Transportation, Code of Federal Regulations, Title 49, Part 192.281(e). The manufacturer shall provide the user with qualified installation instructions as prescribed by the U.S. Department of Transportation, Code of Federal Regulations, Title 49, Part 192.283(b).

403.6.2 LP-gas systems. The use of plastic pipe, tubing and fittings in undiluted liquefied petroleum gas *piping* systems shall be in accordance with NFPA 58.

403.6.3 Regulator vent piping. Plastic pipe and fittings used to connect regulator vents to remote vent terminations shall be PVC conforming to ANSI/UL 651. PVC vent *piping* shall not be installed indoors.

403.7 Workmanship and defects. Pipe, tubing and fittings shall be clear and free from cutting burrs and defects in structure or threading, and shall be thoroughly brushed, and chip and scale blown.

Defects in pipe, tubing and fittings shall not be repaired. Defective pipe, tubing and fittings shall be replaced.

403.8 Protective coating. Where in contact with material or atmosphere exerting a corrosive action, metallic *piping* and fittings coated with a corrosion-resistant material shall be used. External or internal coatings or linings used on *piping* or components shall not be considered as adding strength.

403.9 Metallic pipe threads. Metallic pipe and fitting threads shall be taper pipe threads and shall comply with ASME B1.20.1.

403.9.1 Damaged threads. Pipe with threads that are stripped, chipped, corroded or otherwise damaged shall not be used. Where a weld opens during the operation of cutting or threading, that portion of the pipe shall not be used.

403.9.2 Number of threads. Field threading of metallic pipe shall be in accordance with Table 403.9.2.

INTERNATIONAL CODE COUNCIL®
Copyright © 2019 ICC & NYSDOS. ALL RIGHTS RESERVED. Accessed by Lauren Gualdino (lgualdino@briarcliffmanor.org), (-) Order Number #100880972 on May 08, 2020 07:05 AM (PDT) pursuant to License Agreement with ICC & NYSDOS. No further reproduction, no

100880972

TABLE 403.9.2
SPECIFICATIONS FOR THREADING METALLIC PIPE

IRON PIPE SIZE (inches)	APPROXIMATE LENGTH OF THREADED PORTION (inches)	APPROXIMATE NUMBER OF THREADS TO BE CUT
1/2	3/4	10
3/4	3/4	10
1	7/8	10
1 1/4	1	11
1 1/2	1	11
2	1	11
2 1/2	1 1/2	12
3	1 1/2	12
4	1 5/8	13

For SI: 1 inch = 25.4 mm.

403.9.3 Thread joint compounds. Thread joint compounds shall be resistant to the action of liquefied petroleum gas or to any other chemical constituents of the gases to be conducted through the *piping*.

403.10 Metallic piping joints and fittings. The type of *piping* joint used shall be suitable for the pressure-temperature conditions and shall be selected giving consideration to joint tightness and mechanical strength under the service conditions. The joint shall be able to sustain the maximum end force caused by the internal pressure and any additional forces caused by temperature expansion or contraction, vibration, fatigue or the weight of the pipe and its contents.

403.10.1 Pipe joints. Schedule 40 and heavier pipe joints shall be threaded, flanged, brazed, welded or assembled with press-connect fittings listed in accordance with ANSI LC4/CSA 6.32. Pipe lighter than Schedule 40 shall be connected using press-connect fittings, flanges, brazing or welding. Where nonferrous pipe is brazed, the brazing materials shall have a melting point in excess of 1,000°F (538°C). Brazing alloys shall not contain more than 0.05-percent phosphorus.

403.10.2 Copper tubing joints. Copper tubing joints shall be assembled with *approved* gas tubing fittings, shall be brazed with a material having a melting point in excess of 1,000°F (538°C) or assembled with press-connect fittings listed in accordance with ANSI LC-4/CSA 6.32. Brazing alloys shall not contain more than 0.05-percent phosphorus.

403.10.3 Stainless steel tubing joints. Stainless steel tubing joints shall be welded, assembled with approved tubing fittings, brazed with a material having a melting point in excess of 1,000°F (578°C), or assembled with press-connect fittings listed in accordance with ANSI LC4/CSA 6.32.

403.10.4 Flared joints. Flared joints shall be used only in systems constructed from nonferrous pipe and tubing where experience or tests have demonstrated that the joint is suitable for the conditions and where provisions are made in the design to prevent separation of the joints.

403.10.5 Metallic fittings. Metallic fittings shall comply with the following:

1. Threaded fittings in sizes larger than 4 inches (102 mm) shall not be used.
2. Fittings used with steel, stainless steel or wrought-iron pipe shall be steel, stainless steel, copper alloy, malleable iron or cast iron.
3. Fittings used with copper or copper alloy pipe shall be copper or copper alloy.
4. Fittings used with aluminum-alloy pipe shall be of aluminum alloy.
5. Cast-iron fittings:
   - 5.1. Flanges shall be permitted.
   - 5.2. Bushings shall not be used.
   - 5.3. Fittings shall not be used in systems containing flammable gas-air mixtures.
   - 5.4. Fittings in sizes 4 inches (102 mm) and larger shall not be used indoors except where *approved*.
   - 5.5. Fittings in sizes 6 inches (152 mm) and larger shall not be used except where *approved*.
6. Aluminum-alloy fittings. Threads shall not form the joint seal.
7. Zinc aluminum-alloy fittings. Fittings shall not be used in systems containing flammable gas-air mixtures.
8. Special fittings. Fittings such as couplings, proprietary-type joints, saddle tees, gland-type compression fittings and flared, flareless and compression-type tubing fittings shall be: used within the fitting manufacturer's pressure-temperature recommendations; used within the service conditions anticipated with respect to vibration, fatigue, thermal expansion and contraction; and shall be approved.
9. Where pipe fittings are drilled and tapped in the field, the operation shall be in accordance with all of the following:
   - 9.1. The operation shall be performed on systems having operating pressures of 5 psi (34.5 kPa) or less.
   - 9.2. The operation shall be performed by the gas supplier or the gas supplier's designated representative.
   - 9.3. The drilling and tapping operation shall be performed in accordance with written procedures prepared by the gas supplier.
   - 9.4. The fittings shall be located outdoors.
   - 9.5. The tapped fitting assembly shall be inspected and proven to be free of leakage.

403.11 Plastic pipe, joints and fittings. Plastic pipe, tubing and fittings shall be joined in accordance with the manufac-

INTERNATIONAL CODE COUNCIL®
Copyright © 2019 ICC & NYSDOS. ALL RIGHTS RESERVED. Accessed by Lauren Gualdino (lgualdino@briarcliffmanor.org), (-) Order Number #100880972 on May 08, 2020 07:05 AM (PDT) pursuant to License Agreement with ICC & NYSDOS. No further reproduction, no

100880972

turer's instructions. Such joint shall comply with the following:

1. The joint shall be designed and installed so that the longitudinal pull-out resistance of the joint will be greater than or equal to the tensile strength of the plastic *piping* material.
2. Heat-fusion joints shall be made in accordance with qualified procedures that have been established and proven by test to produce gas-tight joints as strong as or stronger than the pipe or tubing being joined. Joints shall be made with the joining method recommended by the pipe manufacturer. Heat fusion fittings shall be marked "ASTM D2513."
3. Where compression-type mechanical joints are used, the gasket material in the fitting shall be compatible with the plastic *piping* and with the gas distributed by the system. An internal tubular rigid stiffener shall be used in conjunction with the fitting. The stiffener shall be flush with the end of the pipe or tubing and shall extend to or beyond the outside end of the compression fitting when installed. The stiffener shall be free of rough or sharp edges and shall not be a force-fit in the plastic. Split tubular stiffeners shall not be used.
4. Plastic *piping* joints and fittings for use in liquefied petroleum gas *piping* systems shall be in accordance with NFPA 58.

403.12 Flanges. Flanges and flange gaskets shall comply with Sections 403.12.1 through 403.12.7.

403.12.1 Cast iron. Cast-iron flanges shall be in accordance with ASME B16.1.

403.12.2 Steel. Steel flanges shall be in accordance with ASME B16.5 or ASME B16.47.

403.12.3 Nonferrous. Nonferrous flanges shall be in accordance with ASME B16.24.

403.12.4 Ductile iron. Ductile-iron flanges shall be in accordance with ASME B16.42.

403.12.5 Raised face. Raised face flanges shall not be joined to flat faced cast-iron, ductile-iron or nonferrous material flanges.

403.12.6 Flange facings. Standard facings shall be permitted for use under this code. Where 150-pound (1034 kPa) pressure-rated steel flanges are bolted to Class 125 cast-iron flanges, the raised face on the steel flange shall be removed.

403.12.7 Lapped flanges. Lapped flanges shall be used only above ground or in exposed locations accessible for inspection.

403.13 Flange gaskets. Material for gaskets shall be capable of withstanding the design temperature and pressure of the *piping* system, and the chemical constituents of the gas being conducted, without change to its chemical and physical properties. The effects of fire exposure to the joint shall be considered in choosing material. Acceptable materials include metal (plain or corrugated), composition, aluminum "O" rings, spiral wound metal gaskets, rubber-faced phenolic and elastomeric. Where a flanged joint is opened, the gasket shall be replaced. Full-face flange gaskets shall be used with all non-steel flanges.

403.13.1 Metallic gaskets. Metallic flange gaskets shall be in accordance with ASME B16.20.

403.13.2 Nonmetallic gaskets. Nonmetallic flange gaskets shall be in accordance with ASME B16.21.

SECTION 404
PIPING SYSTEM INSTALLATION

404.1 Installation of materials. Materials used shall be installed in strict accordance with the standards under which the materials are accepted and approved. In the absence of such installation procedures, the manufacturer's instructions shall be followed. Where the requirements of referenced standards or manufacturer's instructions do not conform to minimum provisions of this code, the provisions of this code shall apply.

404.2 CSST. CSST piping systems shall be installed in accordance with the terms of their approval, the conditions of listing, the manufacturer's instructions and this code.

404.3 Prohibited locations. *Piping* shall not be installed in or through a ducted supply, return or exhaust, or a clothes chute, chimney or gas vent, dumbwaiter or elevator shaft. *Piping* installed downstream of the *point of delivery* shall not extend through any townhouse unit other than the unit served by such *piping*.

404.4 Piping in solid partitions and walls. Concealed *piping* shall not be located in solid partitions and solid walls, unless installed in a chase or casing.

404.5 Fittings in concealed locations. Fittings installed in concealed locations shall be limited to the following types:

1. Threaded elbows, tees and couplings.
2. Brazed fittings.
3. Welded fittings.
4. Fittings listed to ANSI LC-1/CSA 6.26 or ANSI LC-4/CSA 6.32.

404.6 Underground penetrations prohibited. Gas *piping* shall not penetrate building foundation walls at any point below grade. Gas *piping* shall enter and exit a building at a point above grade and the annular space between the pipe and the wall shall be sealed.

[NY] 404.7 Protection against physical damage. In concealed locations, where piping other than black or galvanized steel is installed through holes or notches in wood studs, joists, rafters or similar members less than $1^3/_4$ inches (44.45 mm) from the nearest edge of the member, the pipe shall be protected by shield plates. Such shield plates shall comply with the requirements of Section 404.7.1, shall cover the area of the pipe where the member is notched or bored, and shall extend a minimum of 4 inches (102 mm) above sole plates, below top plates and to each side of a stud, joist or rafter. The movement of piping made of CSST (including, but not limited to, piping made of listed AR-CSST) shall not be otherwise constrained by straps, clips or other support devices. In addition, where CSST (including, but not limited to, listed AR-CSST) is installed in a concealed location and parallel to

INTERNATIONAL CODE COUNCIL®
Copyright © 2019 ICC & NYSDOS. ALL RIGHTS RESERVED. Accessed by Lauren Gualdino (lgualdino@briarcliffmanor.org), (-) Order Number #100880972 on May 08, 2020 07:05 AM (PDT) pursuant to License Agreement with ICC & NYSDOS. No further reproduction, no

100880972

any joist, rafter, or similar member, the CSST shall be protected by shield plates in any area where the CSST is not:

1. Physically supported in a manner that ensures the CSST will always be at least $1^3/_4$ inches (44.45 mm) away from the nearest edge of any member, or
2. Encased in a protective metal pipe made of Schedule 40 steel or iron pipe or in a protective pipe sleeve made of a material approved by the *building official* as the equivalent of Schedule 40 steel or iron pipe.

Such shield plates shall comply with the requirements of Section 404.7.1, shall cover the area the where the CSST is located, and shall extend a minimum of 4 inches (102 mm) to each side of the CSST.

[NY] 404.7.1 Shield plates. In all cases, shield plates shall be certified or listed as complying with ANSI LC-1. In addition, in the case of piping made of CSST, shield plates shall be listed for use with the manufacturer's CSST system.

404.8 Piping in solid floors. *Piping* in solid floors shall be laid in channels in the floor and covered in a manner that will allow *access* to the *piping* with a minimum amount of damage to the building. Where such *piping* is subject to exposure to excessive moisture or corrosive substances, the *piping* shall be protected in an *approved* manner. As an alternative to installation in channels, the *piping* shall be installed in a conduit of Schedule 40 steel, wrought iron, PVC or ABS pipe in accordance with Section 404.8.1 or 404.8.2.

404.8.1 Conduit with one end terminating outdoors. The conduit shall extend into an occupiable portion of the building and, at the point where the conduit terminates in the building, the space between the conduit and the gas *piping* shall be sealed to prevent the possible entrance of any gas leakage. The conduit shall extend not less than 2 inches (51 mm) beyond the point where the pipe emerges from the floor. If the end sealing is capable of withstanding the full pressure of the gas pipe, the conduit shall be designed for the same pressure as the pipe. Such conduit shall extend not less than 4 inches (102 mm) outside the building, shall be vented above grade to the outdoors and shall be installed so as to prevent the entrance of water and insects.

404.8.2 Conduit with both ends terminating indoors. Where the conduit originates and terminates within the same building, the conduit shall originate and terminate in an accessible portion of the building and shall not be sealed. The conduit shall extend not less than 2 inches (51 mm) beyond the point where the pipe emerges from the floor.

404.9 Above-ground outdoor piping. *Piping* installed outdoors shall be elevated not less than $3^1/_2$ inches (89 mm) above ground and where installed across roof surfaces, shall be elevated not less than $3^1/_2$ inches (89 mm) above the roof surface. *Piping* installed above ground, outdoors, and installed across the surface of roofs shall be securely supported and located where it will be protected from physical damage. Where passing through an outside wall, the *piping* shall be protected against corrosion by coating or wrapping with an inert material. Where *piping* is encased in a protective pipe sleeve, the annular space between the *piping* and the sleeve shall be sealed.

404.10 Isolation. Metallic *piping* and metallic tubing that conveys fuel gas from an LP-gas storage container shall be provided with an *approved* dielectric fitting to electrically isolate the underground portion of the pipe or tube from the above-ground portion that enters a building. Such dielectric fitting shall be installed above ground, outdoors.

404.11 Protection against corrosion. Steel pipe or tubing exposed to corrosive action, such as soil conditions or moisture, shall be protected in accordance Sections 404.11.1 through 404.11.5.

404.11.1 Galvanizing. Zinc coating shall not be deemed adequate protection for underground gas piping.

404.11.2 Protection methods. Underground piping shall comply with one or more of the following:

1. The piping shall be made of corrosion-resistant material that is suitable for the environment in which it will be installed.
2. Pipe shall have a factory-applied, electrically-insulating coating. Fittings and joints between sections of coated pipe shall be coated in accordance with the coating manufacturer's instructions.
3. The piping shall have a cathodic protection system installed and the system shall be monitored and maintained in accordance with an approved program.

404.11.3 Dissimilar metals. Where dissimilar metals are joined underground, an insulating coupling or fitting shall be used.

404.11.4 Protection of risers. Steel risers connected to plastic piping shall be cathodically protected by means of a welded anode, except where such risers are anodeless risers.

404.11.5 Prohibited use. Uncoated threaded or socket-welded joints shall not be used in *piping* in contact with soil or where internal or external crevice corrosion is known to occur.

404.12 Minimum burial depth. Underground *piping* systems shall be installed a minimum depth of 12 inches (305 mm) below grade, except as provided for in Section 404.12.1.

404.12.1 Individual outdoor appliances. Individual lines to outdoor lights, grills and other *appliance*s shall be installed not less than 8 inches (203 mm) below finished grade, provided that such installation is *approved* and is installed in locations not susceptible to physical damage.

404.13 Trenches. The trench shall be graded so that the pipe has a firm, substantially continuous bearing on the bottom of the trench.

404.14 Piping underground beneath buildings. *Piping* installed underground beneath buildings is prohibited except where the *piping* is encased in a conduit of wrought iron, plastic pipe, steel pipe, a piping or encasement system listed for installation beneath buildings, or other *approved* conduit material designed to withstand the superimposed loads. The conduit shall be protected from corrosion in accordance with

INTERNATIONAL CODE COUNCIL®
Copyright © 2019 ICC & NYSDOS. ALL RIGHTS RESERVED. Accessed by Lauren Gualdino (lgualdino@briarcliffmanor.org), (-) Order Number #100880972 on May 08, 2020 07:05 AM (PDT) pursuant to License Agreement with ICC & NYSDOS. No further reproduction, no

100880972

Section 404.11 and shall be installed in accordance with Section 404.14.1 or 404.14.2.

404.14.1 Conduit with one end terminating outdoors. The conduit shall extend into an occupiable portion of the building and, at the point where the conduit terminates in the building, the space between the conduit and the gas *piping* shall be sealed to prevent the possible entrance of any gas leakage. The conduit shall extend not less than 2 inches (51 mm) beyond the point where the pipe emerges from the floor. Where the end sealing is capable of withstanding the full pressure of the gas pipe, the conduit shall be designed for the same pressure as the pipe. Such conduit shall extend not less than 4 inches (102 mm) outside of the building, shall be vented above grade to the outdoors and shall be installed so as to prevent the entrance of water and insects.

404.14.2 Conduit with both ends terminating indoors. Where the conduit originates and terminates within the same building, the conduit shall originate and terminate in an accessible portion of the building and shall not be sealed. The conduit shall extend not less than 2 inches (51 mm) beyond the point where the pipe emerges from the floor.

404.15 Outlet closures. Gas *outlets* that do not connect to *appliance*s shall be capped gas tight.

Exception: *Listed* and *labeled* flush-mounted-type quick-disconnect devices and *listed* and *labeled* gas convenience outlets shall be installed in accordance with the manufacturer's instructions.

404.16 Location of outlets. The unthreaded portion of *piping outlets* shall extend not less than l inch (25 mm) through finished ceilings and walls and where extending through floors or outdoor patios and slabs, shall be not less than 2 inches (51 mm) above them. The outlet fitting or *piping* shall be securely supported. *Outlets* shall not be placed behind doors. *Outlets* shall be located in the room or space where the *appliance* is installed.

Exception: *Listed* and *labeled* flush-mounted-type quick-disconnect devices and *listed* and *labeled* gas convenience *outlets* shall be installed in accordance with the manufacturer's instructions.

404.17 Plastic pipe. The installation of plastic pipe shall comply with Sections 404.17.1 through 404.17.3.

404.17.1 Limitations. Plastic pipe shall be installed outdoors underground only. Plastic pipe shall not be used within or under any building or slab or be operated at pressures greater than 100 psig (689 kPa) for natural gas or 30 psig (207 kPa) for LP-gas.

Exceptions:

1. Plastic pipe shall be permitted to terminate above ground outside of buildings where installed in premanufactured anodeless risers or service head adapter risers that are installed in accordance with the manufacturer's instructions.
2. Plastic pipe shall be permitted to terminate with a wall head adapter within buildings where the plastic pipe is inserted in a *piping* material for fuel gas use in buildings.
3. Plastic pipe shall be permitted under outdoor patio, walkway and driveway slabs provided that the burial depth complies with Section 404.12.

404.17.2 Connections. Connections made outdoors and underground between metallic and plastic *piping* shall be made only with transition fittings conforming to ASTM D2513 Category I or ASTM F1973.

404.17.3 Tracer. A yellow insulated copper tracer wire or other *approved* conductor, or a product specifically designed for that purpose, shall be installed adjacent to underground nonmetallic *piping*. *Access* shall be provided to the tracer wire or the tracer wire shall terminate above ground at each end of the nonmetallic *piping*. The tracer wire size shall be not less than 18 AWG and the insulation type shall be suitable for direct burial.

404.18 Pipe cleaning. The use of a flammable or combustible gas to clean or remove debris from a piping system shall be prohibited.

404.19 Prohibited devices. A device shall not be placed inside the *piping* or fittings that will reduce the cross-sectional area or otherwise obstruct the free flow of gas.

Exceptions:

1. Approved gas filters.
2. An approved fitting or device where the gas piping system has been sized to accommodate the pressure drop of the fitting or device.

404.20 Testing of piping. Before any system of *piping* is put in service or concealed, it shall be tested to ensure that it is gas tight. Testing, inspection and purging of *piping* systems shall comply with Section 406.

SECTION 405
PIPING BENDS AND CHANGES IN DIRECTION

405.1 General. Changes in direction of pipe shall be permitted to be made by the use of fittings, factory bends or field bends.

405.2 Metallic pipe. Metallic pipe bends shall comply with the following:

1. Bends shall be made only with bending tools and procedures intended for that purpose.
2. Bends shall be smooth and free from buckling, cracks or other evidence of mechanical damage.
3. The longitudinal weld of the pipe shall be near the neutral axis of the bend.
4. Pipe shall not be bent through an arc of more than 90 degrees (1.6 rad).
5. The inside radius of a bend shall be not less than six times the outside diameter of the pipe.

405.3 Plastic pipe. Plastic pipe bends shall comply with the following:

1. The pipe shall not be damaged and the internal diameter of the pipe shall not be effectively reduced.

INTERNATIONAL CODE COUNCIL®
Copyright © 2019 ICC & NYSDOS. ALL RIGHTS RESERVED. Accessed by Lauren Gualdino (lgualdino@briarcliffmanor.org), (-) Order Number #100880972 on May 08, 2020 07:05 AM (PDT) pursuant to License Agreement with ICC & NYSDOS. No further reproduction, no

100880972

2. Joints shall not be located in pipe bends.
3. The radius of the inner curve of such bends shall be not less than 25 times the inside diameter of the pipe.
4. Where the *piping* manufacturer specifies the use of special bending tools or procedures, such tools or procedures shall be used.

405.4 Elbows. Factory-made welding elbows or transverse segments cut therefrom shall have an arc length measured along the crotch of not less than 1 inch (25 mm) in pipe sizes 2 inches (51 mm) and larger.

SECTION 406
INSPECTION, TESTING AND PURGING

406.1 General. Prior to acceptance and initial operation, all *piping* installations shall be visually inspected and pressure tested to determine that the materials, design, fabrication and installation practices comply with the requirements of this code.

406.1.1 Inspections. Inspection shall consist of visual examination during or after manufacture, fabrication, assembly or pressure tests.

406.1.2 Repairs and additions. In the event repairs or additions are made after the pressure test, the affected *piping* shall be tested.

Minor repairs and additions are not required to be pressure tested provided that the work is inspected and connections are tested with a noncorrosive leak-detecting fluid or other *approved* leak-detecting methods.

406.1.3 New branches. Where new branches are installed to new *appliance*s, only the newly installed branches shall be required to be pressure tested. Connections between the new *piping* and the existing *piping* shall be tested with a noncorrosive leak-detecting fluid or other *approved* leak-detecting methods.

406.1.4 Section testing. A *piping* system shall be permitted to be tested as a complete unit or in sections. A valve in a line shall not be used as a bulkhead between gas in one section of the *piping* system and test medium in an adjacent section, except where a double block and bleed valve system is installed. A valve shall not be subjected to the test pressure unless it can be determined that the valve, including the valve-closing mechanism, is designed to safely withstand the test pressure.

406.1.5 Regulators and valve assemblies. Regulator and valve assemblies fabricated independently of the *piping* system in which they are to be installed shall be permitted to be tested with inert gas or air at the time of fabrication.

406.1.6 Pipe clearing. Prior to testing, the interior of the pipe shall be cleared of all foreign material.

406.2 Test medium. The test medium shall be air, nitrogen, carbon dioxide or an inert gas. Oxygen shall not be used as a test medium.

406.3 Test preparation. Pipe joints, including welds, shall be left exposed for examination during the test.

Exception: Covered or concealed pipe end joints that have been previously tested in accordance with this code.

406.3.1 Expansion joints. Expansion joints shall be provided with temporary restraints, if required, for the additional thrust load under test.

406.3.2 Appliance and equipment isolation. *Appliance*s and *equipment* that are not to be included in the test shall be either disconnected from the *piping* or isolated by blanks, blind flanges or caps. Flanged joints at which blinds are inserted to blank off other *equipment* during the test shall not be required to be tested.

406.3.3 Appliance and equipment disconnection. Where the *piping* system is connected to *appliance*s or *equipment* designed for operating pressures of less than the test pressure, such *appliance*s or *equipment* shall be isolated from the *piping* system by disconnecting them and capping the outlet(s).

406.3.4 Valve isolation. Where the *piping* system is connected to *appliance*s or *equipment* designed for operating pressures equal to or greater than the test pressure, such *appliance*s or *equipment* shall be isolated from the *piping* system by closing the individual *appliance* or *equipment* shutoff valve(s).

406.3.5 Testing precautions. Testing of *piping* systems shall be performed in a manner that protects the safety of employees and the public during the test.

406.4 Test pressure measurement. Test pressure shall be measured with a manometer or with a pressure-measuring device designed and calibrated to read, record or indicate a pressure loss caused by leakage during the pressure test period. The source of pressure shall be isolated before the pressure tests are made. Mechanical gauges used to measure test pressures shall have a range such that the highest end of the scale is not greater than five times the test pressure.

406.4.1 Test pressure. The test pressure to be used shall be not less than $1^1/_2$ times the proposed maximum working pressure, but not less than 3 psig (20 kPa gauge), irrespective of design pressure. Where the test pressure exceeds 125 psig (862 kPa gauge), the test pressure shall not exceed a value that produces a hoop stress in the *piping* greater than 50 percent of the specified minimum yield strength of the pipe.

406.4.2 Test duration. Test duration shall be not less than $^1/_2$ hour for each 500 cubic feet (14 m^3) of pipe volume or fraction thereof. When testing a system having a volume less than 10 cubic feet (0.28 m^3) or a system in a single-family dwelling, the test duration shall be not less than 10 minutes. The duration of the test shall not be required to exceed 24 hours.

406.5 Detection of leaks and defects. The *piping* system shall withstand the test pressure specified without showing any evidence of leakage or other defects.

Any reduction of test pressures as indicated by pressure gauges shall be deemed to indicate the presence of a leak unless such reduction can be readily attributed to some other cause.

INTERNATIONAL CODE COUNCIL®
Copyright © 2019 ICC & NYSDOS. ALL RIGHTS RESERVED. Accessed by Lauren Gualdino (lgualdino@briarcliffmanor.org), (-) Order Number #100880972 on May 08, 2020 07:05 AM (PDT) pursuant to License Agreement with ICC & NYSDOS. No further reproduction, no

100880972

406.5.1 Detection methods. The leakage shall be located by means of an *approved* gas detector, a noncorrosive leak detection fluid or other *approved* leak detection methods.

406.5.2 Corrections. Where leakage or other defects are located, the affected portion of the *piping* system shall be repaired or replaced and retested.

406.6 Piping system and equipment leakage check. Leakage checking of systems and *equipment* shall be in accordance with Sections 406.6.1 through 406.6.4.

406.6.1 Test gases. Leak checks using fuel gas shall be permitted in *piping* systems that have been pressure tested in accordance with Section 406.

406.6.2 Before turning gas on. During the process of turning gas on into a system of new gas *piping*, the entire system shall be inspected to determine that there are no open fittings or ends and that all valves at unused outlets are closed and plugged or capped.

406.6.3 Leak check. Immediately after the gas is turned on into a new system or into a system that has been initially restored after an interruption of service, the *piping* system shall be checked for leakage. Where leakage is indicated, the gas supply shall be shut off until the necessary repairs have been made.

406.6.4 Placing appliances and equipment in operation. *Appliance*s and *equipment* shall not be placed in operation until after the *piping* system has been checked for leakage in accordance with Section 406.6.3, the *piping* system has been purged in accordance with Section 406.7 and the connections to the appliances have been checked for leakage.

406.7 Purging. The purging of piping shall be in accordance with Sections 406.7.1 through 406.7.3.

406.7.1 Piping systems required to be purged outdoors. The purging of piping systems shall be in accordance with the provisions of Sections 406.7.1.1 through 406.7.1.4 where the *piping* system meets either of the following:

1. The design operating gas pressure is greater than 2 psig (13.79 kPa).
2. The piping being purged contains one or more sections of pipe or tubing meeting the size and length criteria of Table 406.7.1.1.

406.7.1.1 Removal from service. Where existing gas piping is opened, the section that is opened shall be isolated from the gas supply and the line pressure vented in accordance with Section 406.7.1.3. Where gas *piping* meeting the criteria of Table 406.7.1.1 is removed from service, the residual fuel gas in the *piping* shall be displaced with an inert gas.

TABLE 406.7.1.1
SIZE AND LENGTH OF PIPING

NOMINAL PIPE SIZE (inches)[a]	LENGTH OF PIPING (feet)
≥ $2^1/_2$ < 3	> 50
≥ 3 < 4	> 30
≥ 4 < 6	> 15
≥ 6 < 8	> 10
≥ 8	Any length

For SI: 1 inch = 25.4 mm, 1 foot = 304.8 mm.

a. CSST EHD size of 62 is equivalent to nominal 2-inch pipe or tubing size.

406.7.1.2 Placing in operation. Where gas *piping* containing air and meeting the criteria of Table 406.7.1.1 is placed in operation, the air in the *piping* shall first be displaced with an inert gas. The inert gas shall then be displaced with fuel gas in accordance with Section 406.7.1.3.

406.7.1.3 Outdoor discharge of purged gases. The open end of a *piping* system being pressure vented or purged shall discharge directly to an outdoor location. Purging operations shall comply with all of the following requirements:

1. The point of discharge shall be controlled with a shutoff valve.
2. The point of discharge shall be located not less than 10 feet (3048 mm) from sources of ignition, not less than 10 feet (3048 mm) from building openings and not less than 25 feet (7620 mm) from mechanical air intake openings.
3. During discharge, the open point of discharge shall be continuously attended and monitored with a combustible gas indicator that complies with Section 406.7.1.4.
4. Purging operations introducing fuel gas shall be stopped when 90 percent fuel gas by volume is detected within the pipe.
5. Persons not involved in the purging operations shall be evacuated from all areas within 10 feet (3048 mm) of the point of discharge.

406.7.1.4 Combustible gas indicator. Combustible gas indicators shall be listed and shall be calibrated in accordance with the manufacturer's instructions. Combustible gas indicators shall numerically display a volume scale from zero percent to 100 percent in 1-percent or smaller increments.

406.7.2 Piping systems allowed to be purged indoors or outdoors. The purging of piping systems shall be in accordance with the provisions of Section 406.7.2.1 where the piping system meets both of the following:

1. The design operating gas pressure is 2 psig (13.79 kPa) or less.
2. The piping being purged is constructed entirely from pipe or tubing not meeting the size and length criteria of Table 406.7.1.1.

INTERNATIONAL CODE COUNCIL®
Copyright © 2019 ICC & NYSDOS. ALL RIGHTS RESERVED. Accessed by Lauren Gualdino (lgualdino@briarcliffmanor.org), (-) Order Number #100880972 on May 08, 2020 07:05 AM (PDT) pursuant to License Agreement with ICC & NYSDOS. No further reproduction, no

100880972

406.7.2.1 Purging procedure. The piping system shall be purged in accordance with one or more of the following:

1. The piping shall be purged with fuel gas and shall discharge to the outdoors.
2. The piping shall be purged with fuel gas and shall discharge to the indoors or outdoors through an appliance burner not located in a combustion chamber. Such burner shall be provided with a continuous source of ignition.
3. The piping shall be purged with fuel gas and shall discharge to the indoors or outdoors through a burner that has a continuous source of ignition and that is designed for such purpose.
4. The piping shall be purged with fuel gas that is discharged to the indoors or outdoors, and the point of discharge shall be monitored with a listed combustible gas detector in accordance with Section 406.7.2.2. Purging shall be stopped when fuel gas is detected.
5. The *piping* shall be purged by the gas supplier in accordance with written procedures.

406.7.2.2 Combustible gas detector. Combustible gas detectors shall be listed and shall be calibrated or tested in accordance with the manufacturer's instructions. Combustible gas detectors shall be capable of indicating the presence of fuel gas.

406.7.3 Purging appliances and equipment. After the *piping* system has been placed in operation, appliances and *equipment* shall be purged before being placed into operation.

SECTION 407
PIPING SUPPORT

407.1 General. *Piping* shall be provided with support in accordance with Section 407.2.

407.2 Design and installation. *Piping* shall be supported with metal pipe hooks, metal pipe straps, metal bands, metal brackets, metal hangers or building structural components, suitable for the size of *piping*, of adequate strength and quality, and located at intervals so as to prevent or damp out excessive vibration. *Piping* shall be anchored to prevent undue strains on connected *appliance*s and shall not be supported by other *piping*. Pipe hangers and supports shall conform to the requirements of MSS SP-58 and shall be spaced in accordance with Section 415. Supports, hangers and anchors shall be installed so as not to interfere with the free expansion and contraction of the *piping* between anchors. The components of the supporting *equipment* shall be designed and installed so that they will not be disengaged by movement of the supported *piping*.

SECTION 408
DRIPS AND SLOPED PIPING

408.1 Slopes. *Piping* for other than dry gas conditions shall be sloped not less than $^1/_4$ inch in 15 feet (6.3 mm in 4572 mm) to prevent traps.

408.2 Drips. Where wet gas exists, a drip shall be provided at any point in the line of pipe where condensate could collect. A drip shall be provided at the outlet of the meter and shall be installed so as to constitute a trap wherein an accumulation of condensate will shut off the flow of gas before the condensate will run back into the meter.

408.3 Location of drips. Drips shall be provided with ready access to permit cleaning or emptying. A drip shall not be located where the condensate is subject to freezing.

408.4 Sediment trap. Where a sediment trap is not incorporated as part of the appliance, a sediment trap shall be installed downstream of the appliance shutoff valve as close to the inlet of the appliance as practical. The sediment trap shall be either a tee fitting having a capped nipple of any length installed vertically in the bottommost opening of the tee as illustrated in Figure 408.4 or other device approved as an effective sediment trap. Illuminating appliances, ranges, clothes dryers, decorative vented appliances for installation in vented fireplaces, gas fireplaces and outdoor grills need not be so equipped.

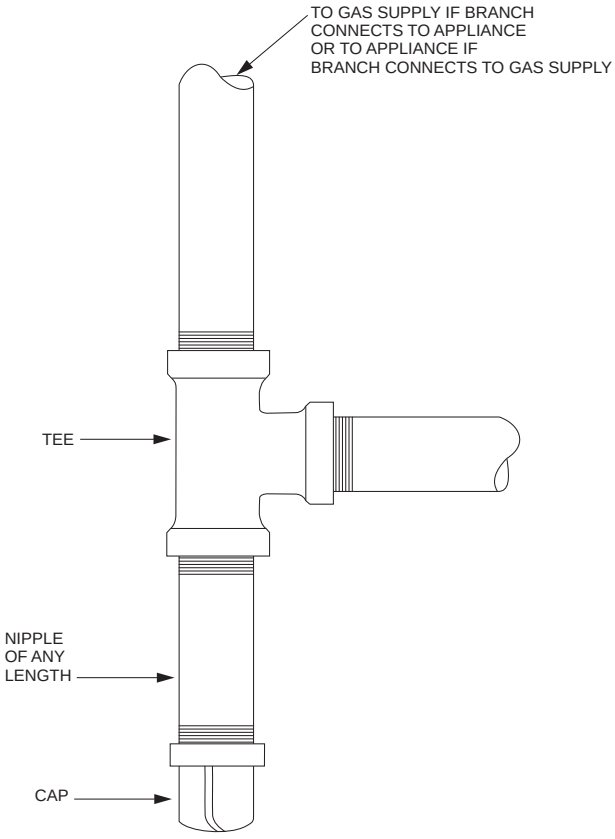

FIGURE 408.4
METHOD OF INSTALLING A TEE FITTING SEDIMENT TRAP

INTERNATIONAL CODE COUNCIL®
Copyright © 2019 ICC & NYSDOS. ALL RIGHTS RESERVED. Accessed by Lauren Gualdino (lgualdino@briarcliffmanor.org), (-) Order Number #100880972 on May 08, 2020 07:05 AM (PDT) pursuant to License Agreement with ICC & NYSDOS. No further reproduction, no

100880972

SECTION 409
SHUTOFF VALVES

409.1 General. *Piping* systems shall be provided with shutoff valves in accordance with this section.

409.1.1 Valve approval. Shutoff valves shall be of an *approved* type; shall be constructed of materials compatible with the *piping*; and shall comply with the standard that is applicable for the pressure and application, in accordance with Table 409.1.1.

409.1.2 Prohibited locations. Shutoff valves shall be prohibited in concealed locations and *furnace plenums*.

409.1.3 Access to shutoff valves. Shutoff valves shall be located in places so as to provide *access* for operation and shall be installed so as to be protected from damage.

409.2 Meter valve. Every meter shall be equipped with a shutoff valve located on the supply side of the meter.

409.3 Shutoff valves for multiple-house line systems. Where a single meter is used to supply gas to more than one building or tenant, a separate shutoff valve shall be provided for each building or tenant.

409.3.1 Multiple tenant buildings. In multiple tenant buildings, where a common *piping* system is installed to supply other than one- and two-family dwellings, shutoff valves shall be provided for each tenant. Each tenant shall have access to the shutoff valve serving that tenant's space.

409.3.2 Individual buildings. In a common system serving more than one building, shutoff valves shall be installed outdoors at each building.

409.3.3 Identification of shutoff valves. Each house line shutoff valve shall be plainly marked with an identification tag attached by the installer so that the *piping* systems supplied by such valves are readily identified.

409.4 MP regulator valves. A *listed* shutoff valve shall be installed immediately ahead of each MP regulator.

409.5 Appliance shutoff valve. Each *appliance* shall be provided with a shutoff valve in accordance with Section 409.5.1, 409.5.2 or 409.5.3.

409.5.1 Located within same room. The shutoff valve shall be located in the same room as the *appliance*. The shutoff valve shall be within 6 feet (1829 mm) of the *appliance*, and shall be installed upstream of the union, connector or quick disconnect device it serves. Such shutoff valves shall be provided with *access*. Shutoff valves serving movable appliances, such as cooking appliances and clothes dryers, shall be considered to be provided with access where installed behind such appliances. *Appliance* shutoff valves located in the firebox of a *fireplace* shall be installed in accordance with the *appliance* manufacturer's instructions.

409.5.2 Vented decorative appliances and room heaters. Shutoff valves for vented decorative appliances, room heaters and decorative appliances for installation in vented *fireplaces* shall be permitted to be installed in an area remote from the appliances where such valves are provided with ready *access*. Such valves shall be permanently identified and shall not serve another *appliance*. The *piping* from the shutoff valve to within 6 feet (1829 mm) of the *appliance* shall be designed, sized and installed in accordance with Sections 401 through 408.

409.5.3 Located at manifold. Where the *appliance* shutoff valve is installed at a manifold, such shutoff valve shall be located within 50 feet (15 240 mm) of the *appliance* served and shall be readily accessible and permanently identified. The *piping* from the manifold to within 6 feet (1829 mm) of the *appliance* shall be designed, sized and installed in accordance with Sections 401 through 408.

409.6 Shutoff valve for laboratories. Where provided with two or more fuel gas outlets, including table-, bench- and hood-mounted outlets, each laboratory space in educational, research, commercial and industrial occupancies shall be provided with a single dedicated shutoff valve through which all such gas outlets shall be supplied. The dedicated shutoff valve shall be readily accessible, located within the laboratory space served, located adjacent to the egress door from the space and shall be identified by approved signage stating "Gas Shutoff."

409.7 Shutoff valves in tubing systems. Shutoff valves installed in tubing systems shall be rigidly and securely supported independently of the tubing.

SECTION 410
FLOW CONTROLS

410.1 Pressure regulators. A line pressure regulator shall be installed where the *appliance* is designed to operate at a lower pressure than the supply pressure. Line gas pressure regulators shall be *listed* as complying with ANSI Z21.80/CSA 6.22. *Access* shall be provided to pressure regulators. Pressure regulators shall be protected from physical damage. Regulators installed on the exterior of the building shall be *approved* for outdoor installation.

TABLE 409.1.1
MANUAL GAS VALVE STANDARDS

VALVE STANDARDS	APPLIANCE SHUTOFF VALVE APPLICATION UP TO $^1/_2$ psig PRESSURE	OTHER VALVE APPLICATIONS			
		UP TO $^1/_2$ psig PRESSURE	UP TO 2 psig PRESSURE	UP TO 5 psig PRESSURE	UP TO 125 psig PRESSURE
ANSI Z21.15/CGA 9.1	X	—	—	—	—
ASME B16.44	X	X	X[a]	X[b]	—
ASME B16.33	X	X	X	X	X

For SI: 1 pound per square inch gauge = 6.895 kPa.

a. If labeled 2G.

b. If labeled 5G.

INTERNATIONAL CODE COUNCIL®
Copyright © 2019 ICC & NYSDOS. ALL RIGHTS RESERVED. Accessed by Lauren Gualdino (lgualdino@briarcliffmanor.org), (-) Order Number #100880972 on May 08, 2020 07:05 AM (PDT) pursuant to License Agreement with ICC & NYSDOS. No further reproduction, no

100880972

410.2 MP regulators. MP pressure regulators shall comply with the following:

1. The MP regulator shall be approved and shall be suitable for the inlet and outlet gas pressures for the application.
2. The MP regulator shall maintain a reduced outlet pressure under lock-up (no-flow) conditions.
3. The capacity of the MP regulator, determined by published ratings of its manufacturer, shall be adequate to supply the appliances served.
4. The MP pressure regulator shall be provided with access. Where located indoors, the regulator shall be vented to the outdoors or shall be equipped with a leak-limiting device, in either case complying with Section 410.3.
5. A tee fitting with one opening capped or plugged shall be installed between the MP regulator and its upstream shutoff valve. Such tee fitting shall be positioned to allow connection of a pressure-measuring instrument and to serve as a sediment trap.
6. A tee fitting with one opening capped or plugged shall be installed not less than 10 pipe diameters downstream of the MP regulator outlet. Such tee fitting shall be positioned to allow connection of a pressure-measuring instrument. The tee fitting is not required where the MP regulator serves an appliance that has a pressure test port on the gas control inlet side and the appliance is located in the same room as the MP regulator.
7. Where connected to rigid piping, a union shall be installed within 1 foot (304 mm) of either side of the MP regulator.

410.3 Venting of regulators. Pressure regulators that require a vent shall be vented directly to the outdoors. The vent shall be designed to prevent the entry of insects, water and foreign objects.

Exception: A vent to the outdoors is not required for regulators equipped with and *labeled* for utilization with an *approved* vent-limiting device installed in accordance with the manufacturer's instructions.

410.3.1 Vent piping. Vent *piping* for relief vents and breather vents shall be constructed of materials allowed for gas *piping* in accordance with Section 403. Vent *piping* shall be not smaller than the vent connection on the pressure-regulating device. Vent *piping* serving relief vents and combination relief and breather vents shall be run independently to the outdoors and shall serve only a single device vent. Vent *piping* serving only breather vents is permitted to be connected in a manifold arrangement where sized in accordance with an *approved* design that minimizes backpressure in the event of diaphragm rupture. Regulator vent *piping* shall not exceed the length specified in the regulator manufacturer's instructions.

410.4 Excess flow valves. Where automatic *excess flow valves* are installed, they shall be listed in accordance with ANSI Z21.93/CSA 6.30 and shall be sized and installed in accordance with the manufacturer's instructions.

410.5 Flashback arrestor check valve. Where fuel gas is used with oxygen in any hot work operation, a listed protective device that serves as a combination flashback arrestor and backflow check valve shall be installed at an approved location on both the fuel gas and oxygen supply lines. Where the pressure of the piped fuel gas supply is insufficient to ensure such safe operation, approved equipment shall be installed between the gas meter and the appliance that increases pressure to the level required for such safe operation.

SECTION 411
APPLIANCE AND MANUFACTURED HOME CONNECTIONS

411.1 Connecting appliances. Except as required by Section 411.1.1, appliances shall be connected to the piping system by one of the following:

1. Rigid metallic pipe and fittings.
2. Corrugated stainless steel tubing (CSST) where installed in accordance with the manufacturer's instructions.
3. Semirigid metallic tubing and metallic fittings. Lengths shall not exceed 6 feet (1829 mm) and shall be located entirely in the same room as the appliance. Semirigid metallic tubing shall not enter a motor-operated appliance through an unprotected knockout opening.
4. Listed and labeled appliance connectors in compliance with ANSI Z21.24/CGA 6.10 and installed in accordance with the manufacturer's instructions and located entirely in the same room as the appliance.
5. Listed and labeled quick-disconnect devices used in conjunction with listed and labeled appliance connectors.
6. Listed and labeled convenience outlets used in conjunction with listed and labeled appliance connectors.
7. Listed and labeled outdoor appliance connectors in compliance with ANSI Z21.75/CSA 6.27 and installed in accordance with the manufacturer's instructions.
8. Listed outdoor gas hose connectors in compliance with ANSI Z21.54 used to connect portable outdoor appliances. The gas hose connection shall be made only in the outdoor area where the appliance is used, and shall be to the gas piping supply at an appliance shutoff valve, a listed quick-disconnect device or listed gas convenience outlet.
9. Gas hose connectors for use in laboratories and educational facilities in accordance with Section 411.4.

411.1.1 Commercial cooking appliances. Commercial cooking appliances installed on casters and appliances that are moved for cleaning and sanitation purposes shall be connected to the piping system with an appliance connector listed as complying with ANSI Z21.69/CSA 6.16. The commercial cooking appliance connector installation shall be configured in accordance with the manufacturer's instructions. Movement of appliances with casters shall be limited by a restraining device installed in accordance with the connector and appliance manufacturer's instructions.

INTERNATIONAL CODE COUNCIL®
Copyright © 2019 ICC & NYSDOS. ALL RIGHTS RESERVED. Accessed by Lauren Gualdino (lgualdino@briarcliffmanor.org), (-) Order Number #100880972 on May 08, 2020 07:05 AM (PDT) pursuant to License Agreement with ICC & NYSDOS. No further reproduction, no

100880972

411.1.2 Protection against damage. Connectors and tubing shall be installed so as to be protected against physical damage.

411.1.3 Connector installation. *Appliance* fuel connectors shall be installed in accordance with the manufacturer's instructions and Sections 411.1.3.1 through 411.1.3.4.

411.1.3.1 Maximum length. Connectors shall have an overall length not to exceed 6 feet (1829 mm). Measurement shall be made along the centerline of the connector. Only one connector shall be used for each *appliance.*

Exception: Rigid metallic *piping* used to connect an *appliance* to the *piping* system shall be permitted to have a total length greater than 6 feet (1829 mm), provided that the connecting pipe is sized as part of the *piping* system in accordance with Section 402 and the location of the *appliance* shutoff valve complies with Section 409.5.

411.1.3.2 Minimum size. Connectors shall have the capacity for the total demand of the connected *appliance*.

411.1.3.3 Prohibited locations and penetrations. Connectors shall not be concealed within, or extended through, walls, floors, partitions, ceilings or *appliance* housings.

Exceptions:

1. Connectors constructed of materials allowed for *piping* systems in accordance with Section 403 shall be permitted to pass through walls, floors, partitions and ceilings where installed in accordance with Section 409.5.2 or 409.5.3.
2. Rigid steel pipe connectors shall be permitted to extend through openings in *appliance* housings.
3. *Fireplace* inserts that are factory equipped with grommets, sleeves or other means of protection in accordance with the listing of the *appliance*.
4. Semirigid tubing and *listed* connectors shall be permitted to extend through an opening in an *appliance* housing, cabinet or casing where the tubing or connector is protected against damage.

411.1.3.4 Shutoff valve. A shutoff valve not less than the nominal size of the connector shall be installed ahead of the connector in accordance with Section 409.5.

411.1.4 Movable appliances. Where appliances are equipped with casters or are otherwise subject to periodic movement or relocation for purposes such as routine cleaning and maintenance, such appliances shall be connected to the supply system *piping* by means of an *appliance* connector listed as complying with ANSI Z21.69/CSA 6.16 or by means of Item 1 of Section 411.1. Such flexible connectors shall be installed and protected against physical damage in accordance with the manufacturer's instructions.

411.1.5 Connection of gas engine-powered air conditioners. Internal combustion engines shall not be rigidly connected to the gas supply *piping*.

411.1.6 Unions. A union fitting shall be provided for *appliance*s connected by rigid metallic pipe. Such unions shall be accessible and located within 6 feet (1829 mm) of the *appliance*.

411.2 Manufactured home connections. Manufactured homes shall be connected to the distribution *piping* system by one of the following materials:

1. Metallic pipe in accordance with Section 403.4.
2. Metallic tubing in accordance with Section 403.5.
3. *Listed* and *labeled* connectors in compliance with ANSI Z21.75/CSA 6.27 and installed in accordance with the manufacturer's instructions.

411.3 Suspended low-intensity infrared tube heaters. Suspended low-intensity infrared tube heaters shall be connected to the building *piping* system with a connector *listed* for the application complying with ANSI Z21.24/CGA 6.10. The connector shall be installed as specified by the tube heater manufacturer's instructions.

411.4 Injection Bunsen-type burners. Injection Bunsen-type burners used in laboratories and educational facilities shall be connected to the gas supply system by either a listed or unlisted hose.

SECTION 412
LIQUEFIED PETROLEUM GAS MOTOR VEHICLE FUEL-DISPENSING FACILITIES

[F] 412.1 General. Motor fuel-dispensing facilities for LP-gas fuel shall be in accordance with this section and the *Fire Code of New York State*. The operation of LP-gas motor fuel-dispensing facilities shall be regulated by the *Fire Code of New York State.*

[F] 412.2 Storage and dispensing. Storage vessels and *equipment* used for the storage or dispensing of LP-gas shall be *approved* or *listed* in accordance with Sections 412.3 and 412.4

[F] 412.3 Approved equipment. Containers; pressure-relief devices, including pressure-relief valves; and pressure regulators and *piping* used for LP-gas shall be *approved.*

[F] 412.4 Listed equipment. Hoses, hose connections, vehicle fuel connections, dispensers, LP-gas pumps and electrical *equipment* used for LP-gas shall be listed.

[F] 412.5 Attendants. Motor vehicle fueling operations shall be conducted by qualified attendants or in accordance with Section 412.9 by persons trained in the proper handling of LP-gas.

[F] 412.6 Location. The point of transfer for LP-gas dispensing operations shall be separated from buildings and other exposures in accordance with the following:

1. Not less than 25 feet (7620 mm) from buildings where the exterior wall is not part of a fire-resistance-rated assembly having a rating of 1 hour or greater.

INTERNATIONAL CODE COUNCIL®
Copyright © 2019 ICC & NYSDOS. ALL RIGHTS RESERVED. Accessed by Lauren Gualdino (lgualdino@briarcliffmanor.org), (-) Order Number #100880972 on May 08, 2020 07:05 AM (PDT) pursuant to License Agreement with ICC & NYSDOS. No further reproduction, no

100880972

2. Not less than 25 feet (7620 mm) from combustible overhangs on buildings, measured from a vertical line dropped from the face of the overhang at a point nearest the point of transfer.
3. Not less than 25 feet (7620 mm) from the lot line of property that can be built upon.
4. Not less than 25 feet (7620 mm) from the centerline of the nearest mainline railroad track.
5. Not less than 10 feet (3048 mm) from public streets, highways, thoroughfares, sidewalks and driveways.
6. Not less than 10 feet (3048 mm) from buildings where the exterior wall is part of a fire-resistance-rated assembly having a rating of 1 hour or greater.

   Exception: The point of transfer for LP-gas dispensing operations need not be separated from canopies that are constructed in accordance with the *Building Code of New York State* and that provide weather protection for the dispensing equipment.

Liquefied petroleum gas containers shall be located in accordance with the *Fire Code of New York State*. Liquefied petroleum gas storage and dispensing *equipment* shall be located outdoors and in accordance with the *Fire Code of New York State*.

[F] 412.7 Additional requirements for LP-gas dispensers and equipment. LP-gas dispensers and related equipment shall comply with the following provisions:

1. Pumps shall be fixed in place and shall be designed to allow control of the flow and to prevent leakage and accidental discharge.
2. Dispensing devices installed within 10 feet (3048 mm) of where vehicle traffic occurs shall be protected against physical damage by mounting on a concrete island 6 inches (152 mm) or more in height, or shall be protected in accordance with Section 312 of the *Fire Code of New York State*.
3. Dispensing devices shall be securely fastened to their mounting surface in accordance with the dispenser manufacturer's instructions.

[F] 412.8 Installation of dispensing devices and equipment. The installation and operation of LP-gas dispensing systems shall be in accordance with this section and the *Fire Code of New York State*. Liquefied petroleum gas dispensers and dispensing stations shall be installed in accordance with manufacturers' specifications and their listing.

[F] 412.8.1 Product control valves. The dispenser system piping shall be protected from uncontrolled discharge in accordance with the following:

1. Where mounted on a concrete base, a means shall be provided and installed within $^1/_2$ inch (12.7 mm) of the top of the concrete base that will prevent flow from the supply piping in the event that the dispenser is displaced from its mounting.
2. A manual shutoff valve and an excess flow-control check valve shall be located in the liquid line between the pump and the dispenser inlet where the dispensing device is installed at a remote location and is not part of a complete storage and dispensing unit mounted on a common base.
3. An excess flow-control check valve or an emergency shutoff valve shall be installed in or on the dispenser at the point where the dispenser hose is connected to the liquid piping.
4. A *listed* automatic-closing-type hose nozzle valve with or without a latch-open device shall be provided on island-type dispensers.

[F] 412.8.2 Hoses. Hoses and *piping* for the dispensing of LP-gas shall be provided with hydrostatic relief valves. The hose length shall not exceed 18 feet (5486 mm). An *approved* method shall be provided to protect the hose against mechanical damage.

[F] 412.8.3 Vehicle impact protection. Where installed within 10 feet (3048 mm) of vehicle traffic, LP-gas storage containers, pumps and dispensers shall be protected in accordance with Section 2307.5, Item 2 of the *Fire Code of New York State*.

[F] 412.8.4 Breakaway protection. Dispenser hoses shall be equipped with a *listed* emergency breakaway device designed to retain liquid on both sides of the breakaway point. Where hoses are attached to hose-retrieving mechanisms, the emergency breakaway device shall be located such that the breakaway device activates to protect the dispenser from displacement.

[F] 412.9 Public fueling of motor vehicles. Self-service LP-gas dispensing systems, including key, code and card lock dispensing systems, shall be limited to the filling of permanently mounted containers providing fuel to the LP-gas-powered vehicle.

The requirements for self-service LP-gas dispensing systems shall be in accordance with the following:

1. The arrangement and operation of the transfer of product into a vehicle shall be in accordance with this section and Chapter 61 of the *Fire Code of New York State*.
2. The system shall be provided with an emergency shutoff switch located within 100 feet (30 480 mm) of, but not less than 20 feet (6096 mm) from, dispensers.
3. The *owner* of the LP-gas motor fuel-dispensing facility or the owner's designee shall provide for the safe operation of the system and the training of users.
4. The dispenser and hose-end valve shall release not more than 4 cubic centimeters of liquid to the atmosphere upon breaking of the connection with the fill valve on the vehicle.
5. Fire extinguishers shall be provided in accordance with Section 2305.5 of the *Fire Code of New York State*.
6. Warning signs shall be provided in accordance with Section 2305.6 of the *Fire Code of New York State*.
7. The area around the dispenser shall be maintained in accordance with Section 2305.7 of the *Fire Code of New York State*.

INTERNATIONAL CODE COUNCIL®
Copyright © 2019 ICC & NYSDOS. ALL RIGHTS RESERVED. Accessed by Lauren Gualdino (lgualdino@briarcliffmanor.org), (-) Order Number #100880972 on May 08, 2020 07:05 AM (PDT) pursuant to License Agreement with ICC & NYSDOS. No further reproduction, no

100880972

SECTION 413
COMPRESSED NATURAL GAS MOTOR VEHICLE FUEL-DISPENSING FACILITIES

[F] 413.1 General. Motor fuel-dispensing facilities for CNG fuel shall be in accordance with this section and the *Fire Code of New York State*. The operation of CNG motor fuel-dispensing facilities shall be regulated by the *Fire Code of New York State*.

[F] 413.2 General. Storage vessels and *equipment* used for the storage, compression or dispensing of CNG shall be *approved* or *listed* in accordance with Sections 413.2.1 through 413.2.3.

[F] 413.2.1 Approved equipment. Containers; compressors; pressure-relief devices, including pressure-relief valves; and pressure regulators and *piping* used for CNG shall be *approved*.

[F] 413.2.2 Listed equipment. Hoses, hose connections, dispensers, gas detection systems and electrical *equipment* used for CNG shall be *listed*. Vehicle fueling connections shall be *listed* and *labeled*.

[F] 413.2.3 General. Residential fueling *appliance*s shall be in accordance with Section 413.4.

[F] 413.3 Location of dispensing operations and equipment. Compression, storage and dispensing *equipment* shall be located outdoors, above ground.

Exceptions:

1. Compression, storage or dispensing *equipment* is not prohibited in buildings where such buildings are of noncombustible construction as set forth in the *Building Code of New York State* and are unenclosed for not less than three-quarters of their perimeter.
2. Compression, storage and dispensing *equipment* is allowed to be located indoors or in vaults in accordance with the *Fire Code of New York State*.

[F] 413.3.1 Location on property. In addition to the fuel-dispensing requirements of the *Fire Code of New York State*, compression, storage and dispensing *equipment* not located in vaults complying with the *Fire Code of New York State* and other than residential fueling appliances shall not be installed:

1. Beneath power lines.
2. Less than 10 feet (3048 mm) from the nearest building or property that could be built on, public street, sidewalk or source of ignition.

   Exception: Dispensing *equipment* need not be separated from canopies that provide weather protection for the dispensing *equipment* and are constructed in accordance with the *Building Code of New York State*.
3. Less than 25 feet (7620 mm) from the nearest rail of any railroad track.
4. Less than 50 feet (15 240 mm) from the nearest rail of any railroad main track or any railroad or transit line where power for train propulsion is provided by an outside electrical source, such as third rail or overhead catenary.
5. Less than 50 feet (15 240 mm) from the vertical plane below the nearest overhead wire of a trolley bus line.

[F] 413.4 Residential fueling appliance installation. Residential fueling *appliance*s shall be installed in accordance with Sections 413.4.1 through 413.4.3.

[F] 413.4.1 Listing and installation. Residential fueling appliances shall be listed in accordance with ANSI NGV 5.1. Residential fueling appliances shall be installed in accordance with the appliance manufacturer's installation instructions.

[F] 413.4.2 Gas connection. Residential fueling appliances shall not be rigidly connected to the gas supply piping.

[F] 413.4.3 Indoor installation. A residential fueling appliance installed indoors or used for indoor fueling shall comply with all of the following:

1. The capacity shall not exceed 5 cubic feet per minute (0.14 m^3/min) of natural gas.
2. Fuel gas from the pressure relief and blowdown systems shall be vented to the outdoors.
3. A methane gas detector shall be installed in the room or space containing the appliance or where fueling occurs and shall be located not lower than 6 inches (152 mm) from the highest point in the room or space. The detector shall be set to activate at one-fifth of the lower limit of flammability of natural gas and shall be interlocked with the residential fuel appliance to stop or prevent its operation upon activation. The detector shall have an audible or visible alarm.
4. The capacity of a residential fueling appliance installed outdoors for outdoor fueling shall not exceed 10 feet cubic per minute (0.28 m^3/min) of natural gas. Residential fueling appliances located outdoors shall be installed on a firm, noncombustible base.

[F] 413.5 Private fueling of motor vehicles. Self-service CNG-dispensing systems, including key, code and card lock dispensing systems, shall be limited to the filling of permanently mounted fuel containers on CNG-powered vehicles.

In addition to the requirements in the *Fire Code of New York State*, the owner of a self-service CNG-dispensing facility shall ensure the safe operation of the system and the training of users.

[F] 413.6 Pressure regulators. Pressure regulators shall be designed, installed or protected so their operation will not be affected by the elements (freezing rain, sleet, snow, ice, mud or debris). This protection is allowed to be integral with the regulator.

[F] 413.7 Valves. *Piping* to *equipment* shall be provided with a remote manual shutoff valve. Such valve shall be provided with ready access.

[F] 413.8 Emergency shutdown control. An emergency shutdown device shall be located within 75 feet (22 860 mm) of, but not less than 25 feet (7620 mm) from, dispensers and shall also be provided in the compressor area. Upon activation, the emergency shutdown system shall automatically shut off the power supply to the compressor and close valves between the main gas supply and the compressor and between the storage containers and dispensers.

[F] 413.9 Discharge of CNG from motor vehicle fuel storage containers. The discharge of CNG from motor vehicle

INTERNATIONAL CODE COUNCIL®
Copyright © 2019 ICC & NYSDOS. ALL RIGHTS RESERVED. Accessed by Lauren Gualdino (lgualdino@briarcliffmanor.org), (-) Order Number #100880972 on May 08, 2020 07:05 AM (PDT) pursuant to License Agreement with ICC & NYSDOS. No further reproduction, no

100880972

fuel cylinders for the purposes of maintenance, cylinder certification, calibration of dispensers or other activities shall be in accordance with this section. The discharge of CNG from motor vehicle fuel cylinders shall be accomplished through a closed transfer system or an *approved* method of atmospheric venting in accordance with Section 413.9.1 or 413.9.2.

[F] 413.9.1 Closed transfer system. A documented procedure that explains the logical sequence for discharging the cylinder shall be provided to the *building official* for review and approval. The procedure shall include what actions the operator will take in the event of a low-pressure or high-pressure natural gas release during the discharging activity. A drawing illustrating the arrangement of *piping*, regulators and *equipment* settings shall be provided to the *building official* for review and approval. The drawing shall illustrate the *piping* and regulator arrangement and shall be shown in spatial relation to the location of the compressor, storage vessels and emergency shutdown devices.

[F] 413.9.2 Atmospheric venting. Atmospheric venting of motor vehicle fuel cylinders shall be in accordance with Sections 413.9.2.1 through 413.9.2.6.

[F] 413.9.2.1 Plans and specifications. A drawing illustrating the location of the vessel support, *piping*, the method of grounding and bonding, and other requirements specified herein shall be provided to the *building official* for review and approval.

[F] 413.9.2.2 Cylinder stability. A method of rigidly supporting the vessel during the venting of CNG shall be provided. The selected method shall provide not less than two points of support and shall prevent horizontal and lateral movement of the vessel. The system shall be designed to prevent movement of the vessel based on the highest gas-release velocity through valve orifices at the vessel's rated pressure and volume. The structure or appurtenance shall be constructed of *noncombustible materials*.

[F] 413.9.2.3 Separation. The structure or appurtenance used for stabilizing the cylinder shall be separated from the site *equipment*, features and exposures and shall be located in accordance with Table 413.9.2.3.

[F] TABLE 413.9.2.3
SEPARATION DISTANCE FOR ATMOSPHERIC VENTING OF CNG

EQUIPMENT OR FEATURE	MINIMUM SEPARATION (feet)
Buildings	25
Building openings	25
Lot lines	15
Public ways	15
Vehicles	25
CNG compressor and storage vessels	25
CNG dispensers	25

For SI: 1 foot = 304.8 mm.

[F] 413.9.2.4 Grounding and bonding. The structure or appurtenance used for supporting the cylinder shall be grounded in accordance with NFPA 70. The cylinder valve shall be bonded prior to the commencement of venting operations.

[F] 413.9.2.5 Vent tube. A vent tube that will divert the gas flow to the atmosphere shall be installed on the cylinder prior to the commencement of the venting and purging operation. The vent tube shall be constructed of pipe or tubing materials *approved* for use with CNG in accordance with the *Fire Code of New York State*.

The vent tube shall be capable of dispersing the gas not less than 10 feet (3048 mm) above grade level. The vent tube shall not be provided with a rain cap or other feature that would limit or obstruct the gas flow.

At the connection fitting of the vent tube and the CNG cylinder, a *listed* bidirectional detonation flame arrester shall be provided.

[F] 413.9.2.6 Signage. Approved NO SMOKING signs shall be posted within 10 feet (3048 mm) of the cylinder support structure or appurtenance. *Approved* CYLINDER SHALL BE BONDED signs shall be posted on the cylinder support structure or appurtenance.

SECTION 414
SUPPLEMENTAL AND STANDBY GAS SUPPLY

414.1 Use of air or oxygen under pressure. Where air or oxygen under pressure is used in connection with the gas supply, effective means such as a backpressure regulator and relief valve shall be provided to prevent air or oxygen from passing back into the gas *piping*. Where oxygen is used, installation shall be in accordance with NFPA 51.

414.2 Interconnections for standby fuels. Where supplementary gas for standby use is connected downstream from a meter or a service regulator where a meter is not provided, a device to prevent backflow shall be installed. A three-way valve installed to admit the standby supply and at the same time shut off the regular supply shall be permitted to be used for this purpose.

SECTION 415
PIPING SUPPORT INTERVALS

415.1 Interval of support. *Piping* shall be supported at intervals not exceeding the spacing specified in Table 415.1. Spacing of supports for CSST shall be in accordance with the CSST manufacturer's instructions.

TABLE 415.1
SUPPORT OF PIPING

STEEL PIPE, NOMINAL SIZE OF PIPE (inches)	SPACING OF SUPPORTS (feet)	NOMINAL SIZE OF TUBING (SMOOTH-WALL) (inch O.D.)	SPACING OF SUPPORTS (feet)
1/2	6	1/2	4
3/4 or 1	8	5/8 or 3/4	6
1 1/4 or larger (horizontal)	10	7/8 or 1 (horizontal)	8
1 1/4 or larger (vertical)	Every floor level	1 or larger (vertical)	Every floor level

For SI: 1 inch = 25.4 mm, 1 foot = 304.8 mm.

INTERNATIONAL CODE COUNCIL®
Copyright © 2019 ICC & NYSDOS. ALL RIGHTS RESERVED. Accessed by Lauren Gualdino (lgualdino@briarcliffmanor.org), (-) Order Number #100880972 on May 08, 2020 07:05 AM (PDT) pursuant to License Agreement with ICC & NYSDOS. No further reproduction, no

100880972

SECTION 416
OVERPRESSURE PROTECTION DEVICES

416.1 Where required. Where the serving gas supplier delivers gas at a pressure greater than 2 psi for piping systems serving appliances designed to operate at a gas pressure of 14 inches w.c. or less, overpressure protection devices shall be installed. Piping systems serving equipment designed to operate at inlet pressures greater than 14 inches w.c. shall be equipped with overpressure protection devices as required by the appliance manufacturer's installation instructions.

416.2 Pressure limitation requirements. The requirements for pressure limitation shall be in accordance with Sections 416.2.1 through 416.2.5.

416.2.1 Pressure under 14 inches w.c. Where piping systems serving appliances designed to operate with a gas supply pressure of 14 inches w.c. or less are required to be equipped with overpressure protection by Section 416.1, each overpressure protection device shall be adjusted to limit the gas pressure to each connected appliance to 2 psi or less upon a failure of the line pressure regulator.

416.2.2 Pressure over 14 inches w.c. Where piping systems serving appliances designed to operate with a gas supply pressure greater than 14 inches w.c. are required to be equipped with overpressure protection by Section 416.1, each overpressure protection device shall be adjusted to limit the gas pressure to each connected appliance as required by the appliance manufacturer's installation instructions.

416.2.3 Device capability. Each overpressure protection device installed to meet the requirements of this section shall be capable of limiting the pressure to its connected appliance(s) as required by this Section 416.2.1, independently of any other pressure control equipment in the piping system.

416.2.4 Failure detection. Each gas piping system for which an overpressure protection device is required by Section 416 shall be designed and installed so that a failure of the primary pressure control device(s) is detectable.

416.2.5 Relief valve. Where a pressure relief valve is used to meet the requirements of Section 416, it shall have a flow capacity such that the pressure in the protected system is maintained at or below the limits specified in Section 416.2.1 under all of the following conditions:

1. The line pressure regulator for which the relief valve is providing overpressure protection has failed wide open.
2. The gas pressure at the inlet of the line pressure regulator for which the relief valve is providing overpressure protection is not less than the regulator's normal operating inlet pressure.

416.3 Overpressure protection devices. Overpressure protection devices shall be one of the following:

1. Pressure relief valve.
2. Monitoring regulator.
3. Series regulator installed upstream from the line regulator and set to continuously limit the pressure on the inlet of the line regulator to the maximum values specified by Section 416.2.1.
4. Automatic shutoff device installed in series with the line pressure regulator and set to shut off when the pressure on the downstream *piping* system reaches the maximum values specified by Section 416.2.1. This device shall be designed so that it will remain closed until manually reset.

The devices specified in this section shall be installed either as an integral part of the service or line pressure regulator or as separate units. Where separate overpressure protection devices are installed, they shall comply with Sections 416.3.1 through 416.3.6.

416.3.1 Construction and installation. Overpressure protection devices shall be constructed of materials so that the operation of the devices will not be impaired by corrosion of external parts by the atmosphere or of internal parts by the gas. Overpressure protection devices shall be designed and installed so that they can be operated to determine whether the valve is free. The devices shall be designed and installed so that they can be tested to determine the pressure at which they will operate and examined for leakage when in the closed position.

416.3.2 External control piping. External control *piping* shall be designed and installed so that damage to the control *piping* of one device will not render both the regulator and the overpressure protection device inoperative.

416.3.3 Setting. Each overpressure protection device shall be set so that the gas pressure supplied to the connected appliances does not exceed the limits specified in Sections 416.2.1 and 416.2.2.

416.3.4 Unauthorized operation. Where unauthorized operation of any shutoff valve could render an overpressure protection device inoperative, one of the following shall be accomplished:

1. The valve shall be locked in the open position. Authorized personnel shall be instructed in the importance of leaving the shutoff valve open and of being present while the shutoff valve is closed so that it can be locked in the open position before leaving the premises.
2. Duplicate relief valves shall be installed, each having adequate capacity to protect the system, and the isolating valves and three-way valves shall be arranged so that only one relief valve can be rendered inoperative at a time.

416.3.5 Vents. The discharge stacks, vents and outlet parts of all overpressure protection devices shall be located so that gas is safely discharged to the outdoors. Discharge stacks and vents shall be designed to prevent the entry of water, insects and other foreign material that could cause blockage. The discharge stack or vent line shall be not less than the same size as the outlet of the pressure-relieving device.

416.3.6 Size of fittings, pipe and openings. The fittings, pipe and openings located between the system to be protected and the pressure-relieving device shall be sized to prevent hammering of the valve and to prevent impairment of relief capacity.

INTERNATIONAL CODE COUNCIL®
Copyright © 2019 ICC & NYSDOS. ALL RIGHTS RESERVED. Accessed by Lauren Gualdino (lgualdino@briarcliffmanor.org), (-) Order Number #100880972 on May 08, 2020 07:05 AM (PDT) pursuant to License Agreement with ICC & NYSDOS. No further reproduction, no

100880972

INTERNATIONAL CODE COUNCIL®
Copyright © 2019 ICC & NYSDOS. ALL RIGHTS RESERVED. Accessed by Lauren Gualdino (lgualdino@briarcliffmanor.org), (-) Order Number #100880972 on May 08, 2020 07:05 AM (PDT) pursuant to License Agreement with ICC & NYSDOS. No further reproduction, no

100880972

CHAPTER 5
CHIMNEYS AND VENTS

SECTION 501
GENERAL

501.1 Scope. This chapter shall govern the installation, maintenance, repair and approval of factory-built chimneys, chimney liners, vents and connectors and the utilization of masonry chimneys serving gas-fired appliances. The requirements for the installation, maintenance, repair and approval of factory-built chimneys, chimney liners, vents and connectors serving appliances burning fuels other than fuel gas shall be regulated by the *Mechanical Code of New York State*. The construction, repair, maintenance and approval of masonry chimneys shall be regulated by the *Building Code of New York State*.

501.2 General. Every *appliance* shall discharge the products of combustion to the outdoors, except for appliances exempted by Section 501.8.

501.3 Masonry chimneys. Masonry chimneys shall be constructed in accordance with Section 503.5.3 and the *Building Code of New York State*.

501.4 Minimum size of chimney or vent. Chimneys and vents shall be sized in accordance with Sections 503 and 504.

501.5 Abandoned inlet openings. Abandoned inlet openings in chimneys and vents shall be closed by an *approved* method.

501.6 Positive pressure. Where an *appliance* equipped with a mechanical forced draft system creates a positive pressure in the venting system, the venting system shall be designed for positive pressure applications.

501.7 Connection to fireplace. Connection of appliances to chimney flues serving fireplaces shall be in accordance with Sections 501.7.1 through 501.7.3.

501.7.1 Closure and access. A noncombustible seal shall be provided below the point of connection to prevent entry of room air into the flue. Means shall be provided for *access* to the flue for inspection and cleaning.

501.7.2 Connection to factory-built fireplace flue. An *appliance* shall not be connected to a flue serving a factory-built *fireplace* unless the *appliance* is specifically *listed* for such installation. The connection shall be made in accordance with the *appliance* manufacturer's installation instructions.

501.7.3 Connection to masonry fireplace flue. A connector shall extend from the *appliance* to the flue serving a masonry *fireplace* such that the flue gases are exhausted directly into the flue. The connector shall be accessible or removable for inspection and cleaning of both the connector and the flue. *Listed* direct connection devices shall be installed in accordance with their listing.

501.8 Appliances not required to be vented. The following appliances shall not be required to be vented:

1. Ranges.
2. Built-in domestic cooking units *listed* and marked for optional venting.
3. Hot plates and laundry stoves.
4. Type 1 clothes dryers (Type 1 clothes dryers shall be exhausted in accordance with the requirements of Section 614).
5. A single booster-type automatic instantaneous water heater, where designed and used solely for the sanitizing rinse requirements of a dishwashing machine, provided that the heater is installed in a commercial kitchen having a mechanical exhaust system. Where installed in this manner, the draft hood, if required, shall be in place and unaltered and the draft hood *outlet* shall be not less than 36 inches (914 mm) vertically and 6 inches (152 mm) horizontally from any surface other than the heater.
6. Refrigerators.
7. Counter appliances.
8. Room heaters *listed* for unvented use.
9. Direct-fired makeup air heaters.
10. Other appliances *listed* for unvented use and not provided with flue collars.
11. Specialized appliances of limited input such as laboratory burners and gas lights.

Where the appliances listed in Items 5 through 11 are installed so that the aggregate input rating exceeds 20 British thermal units (Btu) per hour per cubic foot (207 watts per m^3) of volume of the room or space in which such appliances are installed, one or more shall be provided with venting systems or other approved means for conveying the vent gases to the outdoor atmosphere so that the aggregate input rating of the remaining unvented appliances does not exceed 20 Btu per hour per cubic foot (207 watts per m^3). Where the room or space in which the *appliance* is installed is directly connected to another room or space by a doorway, archway or other opening of comparable size that cannot be closed, the volume of such adjacent room or space shall be permitted to be included in the calculations.

501.9 Chimney entrance. Connectors shall connect to a masonry chimney flue at a point not less than 12 inches (305 mm) above the lowest portion of the interior of the chimney flue.

501.10 Connections to exhauster. *Appliance* connections to a chimney or vent equipped with a power exhauster shall be made on the inlet side of the exhauster. Joints on the positive pressure side of the exhauster shall be sealed to prevent flue-gas leakage as specified by the manufacturer's installation instructions for the exhauster.

501.11 Masonry chimneys. Masonry chimneys utilized to vent appliances shall be located, constructed and sized as specified in the manufacturer's installation instructions for the appliances being vented and Section 503.

INTERNATIONAL CODE COUNCIL®
Copyright © 2019 ICC & NYSDOS. ALL RIGHTS RESERVED. Accessed by Lauren Gualdino (lgualdino@briarcliffmanor.org), (-) Order Number #100880972 on May 08, 2020 07:05 AM (PDT) pursuant to License Agreement with ICC & NYSDOS. No further reproduction, no

100880972

501.12 Residential and low-heat appliances flue lining systems. Flue lining systems for use with residential-type and low-heat appliances shall be limited to the following:

1. Clay flue lining complying with the requirements of ASTM C315 or equivalent. Clay flue lining shall be installed in accordance with the *Building Code of New York State*.
2. *Listed* chimney lining systems complying with UL 1777.
3. Other *approved* materials that will resist, without cracking, softening or corrosion, flue gases and condensate at temperatures up to 1,800°F (982°C).

501.13 Category I appliance flue lining systems. Flue lining systems for use with Category I appliances shall be limited to the following:

1. Flue lining systems complying with Section 501.12.
2. Chimney lining systems *listed* and *labeled* for use with gas appliances with draft hoods and other Category I gas appliances *listed* and *labeled* for use with Type B vents.

501.14 Category II, III and IV appliance venting systems. The design, sizing and installation of vents for Category II, III and IV appliances shall be in accordance with the *appliance* manufacturer's instructions.

501.15 Existing chimneys and vents. Where an *appliance* is permanently disconnected from an existing chimney or vent, or where an *appliance* is connected to an existing chimney or vent during the process of a new installation, the chimney or vent shall comply with Sections 501.15.1 through 501.15.4.

501.15.1 Size. The chimney or vent shall be resized as necessary to control flue gas condensation in the interior of the chimney or vent and to provide the *appliance* or appliances served with the required draft. For Category I appliances, the resizing shall be in accordance with Section 502.

501.15.2 Flue passageways. The flue gas passageway shall be free of obstructions and combustible deposits and shall be cleaned if previously used for venting a solid or liquid fuel-burning *appliance* or *fireplace*. The flue liner, chimney inner wall or vent inner wall shall be continuous and shall be free of cracks, gaps, perforations or other damage or deterioration that would allow the escape of combustion products, including gases, moisture and creosote.

501.15.3 Cleanout. Masonry chimney flues shall be provided with a cleanout opening having a minimum height of 6 inches (152 mm). The upper edge of the opening shall be located not less than 6 inches (152 mm) below the lowest chimney inlet opening. The cleanout shall be provided with a tight-fitting, noncombustible cover.

501.15.4 Clearances. Chimneys and vents shall have airspace *clearance* to combustibles in accordance with the *Building Code of New York State* and the chimney or vent manufacturer's installation instructions.

Exception: Masonry chimneys without the required airspace clearances shall be permitted to be used if lined or relined with a chimney lining system *listed* for use in chimneys with reduced clearances in accordance with UL 1777. The chimney *clearance* shall be not less than permitted by the terms of the chimney liner listing and the manufacturer's instructions.

501.15.4.1 Fireblocking. Noncombustible fireblocking shall be provided in accordance with the *Building Code of New York State*.

SECTION 502
VENTS

502.1 General. Vents, except as provided in Section 503.7, shall be *listed* and *labeled*. Type B and BW vents shall be tested in accordance with UL 441. Type L vents shall be tested in accordance with UL 641. Vents for Category II and III appliances shall be tested in accordance with UL 1738. Plastic vents for Category IV appliances shall not be required to be *listed* and *labeled* where such vents are as specified by the *appliance* manufacturer and are installed in accordance with the *appliance* manufacturer's instructions.

502.2 Connectors required. Connectors shall be used to connect appliances to the vertical chimney or vent, except where the chimney or vent is attached directly to the *appliance*. Vent connector size, material, construction and installation shall be in accordance with Section 503.

502.3 Vent application. The application of vents shall be in accordance with Table 503.4.

502.4 Insulation shield. Where vents pass through insulated assemblies, an insulation shield constructed of steel having a minimum thickness of 0.0187 inch (0.4712 mm) (No. 26 gage) shall be installed to provide *clearance* between the vent and the insulation material. The *clearance* shall be not less than the *clearance* to combustibles specified by the vent manufacturer's installation instructions. Where vents pass through attic space, the shield shall terminate not less than 2 inches (51 mm) above the insulation materials and shall be secured in place to prevent displacement. Insulation shields provided as part of a *listed* vent system shall be installed in accordance with the manufacturer's instructions.

502.5 Installation. Vent systems shall be sized, installed and terminated in accordance with the vent and *appliance* manufacturer's installation instructions and Section 503.

502.6 Support of vents. All portions of vents shall be adequately supported for the design and weight of the materials employed.

502.7 Protection against physical damage. In concealed locations, where a vent is installed through holes or notches in studs, joists, rafters or similar members less than $1^1/_2$ inches (38 mm) from the nearest edge of the member, the vent shall be protected by shield plates. Protective steel shield plates having a minimum thickness of 0.0575 inch (1.463 mm) (No. 16 gage) shall cover the area of the vent where the member is notched or bored and shall extend not less than 4 inches (102 mm) above sole plates, below top plates and to each side of a stud, joist or rafter.

INTERNATIONAL CODE COUNCIL®
Copyright © 2019 ICC & NYSDOS. ALL RIGHTS RESERVED. Accessed by Lauren Gualdino (lgualdino@briarcliffmanor.org), (-) Order Number #100880972 on May 08, 2020 07:05 AM (PDT) pursuant to License Agreement with ICC & NYSDOS. No further reproduction, no

100880972

502.7.1 Door swing. Appliance and equipment vent terminals shall be located such that doors cannot swing within 12 inches (305 mm) horizontally of the vent terminal. Door stops or closers shall not be installed to obtain this clearance.

SECTION 503
VENTING OF APPLIANCES

503.1 General. The venting of appliances shall be in accordance with Sections 503.2 through 503.16.

503.2 Venting systems required. Except as permitted in Sections 501.8 and 503.2.1 through 503.2.4, all appliances shall be connected to venting systems.

503.2.1 Ventilating hoods. The use of ventilating hoods and exhaust systems to vent appliances shall be limited to industrial appliances and appliances installed in commercial applications.

503.2.2 Well-ventilated spaces. The flue gases from industrial-type appliances shall not be required to be vented to the outdoors where such gases are discharged into a large and well-ventilated industrial space.

503.2.3 Direct-vent appliances. *Listed direct-vent appliances* shall be installed in accordance with the manufacturer's instructions and Section 503.8, Item 3.

503.2.4 Appliances with integral vents. Appliances incorporating integral venting means shall be installed in accordance with the manufacturer's instructions and Section 503.8, Items 1 and 2.

503.2.5 Incinerators. Commercial-industrial-type incinerators shall be vented in accordance with NFPA 82.

503.3 Design and construction. Venting systems shall be designed and constructed so as to convey all flue and vent gases to the outdoors.

503.3.1 Appliance draft requirements. A venting system shall satisfy the draft requirements of the *appliance* in accordance with the manufacturer's instructions.

503.3.2 Design and construction. Appliances required to be vented shall be connected to a venting system designed and installed in accordance with the provisions of Sections 503.4 through 503.16.

503.3.3 Mechanical draft systems. Mechanical draft systems shall comply with the following:

1. Mechanical draft systems shall be *listed* in accordance with UL 378 and shall be installed in accordance with the manufacturer's instructions for both the *appliance* and the mechanical draft system.
2. Appliances requiring venting shall be permitted to be vented by means of mechanical draft systems of either forced or induced draft design.
3. Forced draft systems and all portions of induced draft systems under positive pressure during operation shall be designed and installed so as to prevent leakage of flue or vent gases into a building.
4. Vent connectors serving appliances vented by natural draft shall not be connected to any portion of mechanical draft systems operating under positive pressure.
5. Where a mechanical draft system is employed, provisions shall be made to prevent the flow of gas to the main burners when the draft system is not performing so as to satisfy the operating requirements of the *appliance* for safe performance.
6. The exit terminals of mechanical draft systems shall be not less than 7 feet (2134 mm) above finished ground level where located adjacent to public walkways and shall be located as specified in Section 503.8, Items 1 and 2.

503.3.4 Ventilating hoods and exhaust systems. Where automatically operated appliances, other than commercial cooking appliances, are vented through a ventilating hood or exhaust system equipped with a damper or with a power means of exhaust, provisions shall be made to allow the flow of gas to the main burners only when the damper is open to a position to properly vent the *appliance* and when the power means of exhaust is in operation.

503.3.5 Air ducts and furnace plenums. Venting systems shall not extend into or pass through any fabricated air duct or *furnace plenum.*

503.3.6 Above-ceiling air-handling spaces. Where a venting system passes through an above-ceiling air-handling space or other nonducted portion of an air-handling system, the venting system shall conform to one of the following requirements:

1. The venting system shall be a *listed* special gas vent; other venting system serving a Category III or Category IV *appliance;* or other positive pressure vent, with joints sealed in accordance with the *appliance* or vent manufacturer's instructions.
2. The venting system shall be installed such that fittings and joints between sections are not installed in the above-ceiling space.
3. The venting system shall be installed in a conduit or enclosure with sealed joints separating the interior of the conduit or enclosure from the ceiling space.

503.4 Type of venting system to be used. The type of venting system to be used shall be in accordance with Table 503.4.

503.4.1 Plastic piping. Where plastic piping is used to vent an appliance, the appliance shall be listed for use with such venting materials and the appliance manufacturer's installation instructions shall identify the specific plastic piping material. The plastic pipe venting materials shall be labeled in accordance with the product standards specified by the appliance manufacturer or shall be listed and labeled in accordance with UL 1738.

503.4.1.1 Plastic vent joints. Plastic pipe and fittings used to vent appliances shall be installed in accordance with the *appliance* manufacturer's instructions. Plastic pipe venting materials *listed* and labeled in accordance with UL 1738 shall be installed in accordance with the vent manufacturer's instructions. Where a primer is required, it shall be of a contrasting color.

INTERNATIONAL CODE COUNCIL®
Copyright © 2019 ICC & NYSDOS. ALL RIGHTS RESERVED. Accessed by Lauren Gualdino (lgualdino@briarcliffmanor.org), (-) Order Number #100880972 on May 08, 2020 07:05 AM (PDT) pursuant to License Agreement with ICC & NYSDOS. No further reproduction, no

100880972

503.4.2 Special gas vent. Special gas vent shall be *listed* and labeled in accordance with UL 1738 and installed in accordance with the special gas vent manufacturer's instructions.

503.5 Masonry, metal and factory-built chimneys. Masonry, metal and factory-built chimneys shall comply with Sections 503.5.1 through 503.5.11.

503.5.1 Factory-built chimneys. Factory-built chimneys shall be *listed* in accordance with UL 103 and installed in accordance with the manufacturer's instructions. Factory-built chimneys used to vent appliances that operate at a positive vent pressure shall be *listed* for such application.

503.5.2 Metal chimneys. Metal chimneys shall be built and installed in accordance with NFPA 211.

503.5.3 Masonry chimneys. Masonry chimneys shall be built and installed in accordance with NFPA 211 and shall be lined with an *approved* clay flue lining, a chimney lining system *listed* and labeled in accordance with UL 1777 or other *approved* material that will resist corrosion, erosion, softening or cracking from vent gases at temperatures up to 1,800°F (982°C).

Exception: Masonry chimney flues serving *listed* gas appliances with draft hoods, Category I appliances and other gas appliances *listed* for use with Type B vents shall be permitted to be lined with a chimney lining system specifically *listed* for use only with such appliances. The liner shall be installed in accordance with the liner manufacturer's instructions. A permanent identifying label shall be attached at the point where the connection is to be made to the liner. The label shall read: "This chimney liner is for appliances that burn gas only. Do not connect to solid or liquid fuel-burning appliances or incinerators."

For installation of gas vents in existing masonry chimneys, see Section 503.6.4.

503.5.4 Chimney termination. Chimneys for residential-type or low-heat appliances shall extend not less than 3 feet (914 mm) above the highest point where they pass through a roof of a building and not less than 2 feet (610 mm) higher than any portion of a building within a horizontal distance of 10 feet (3048 mm). Chimneys for medium-heat appliances shall extend not less than 10 feet (3048 mm) higher than any portion of any building within 25 feet (7620 mm). Chimneys shall extend not less than 5 feet (1524 mm) above the highest connected *appliance* draft hood outlet or flue collar. Decorative shrouds shall not be installed at the termination of factory-built chimneys except where such shrouds are *listed* and *labeled* for use with the specific factory-built chimney system and are installed in accordance with the manufacturer's instructions.

503.5.5 Size of chimneys. The effective area of a chimney venting system serving *listed* appliances with draft hoods, Category I appliances and other appliances *listed* for use with Type B vents shall be determined in accordance with one of the following methods:

1. The provisions of Section 504.
2. For sizing an individual chimney venting system for a single *appliance* with a draft hood, the effective areas of the vent connector and chimney flue shall be not less than the area of the *appliance* flue collar or draft hood outlet, nor greater than seven times the draft hood outlet area.
3. For sizing a chimney venting system connected to two appliances with draft hoods, the effective area of the chimney flue shall be not less than the area of

TABLE 503.4
TYPE OF VENTING SYSTEM TO BE USED

APPLIANCES	TYPE OF VENTING SYSTEM
Listed Category I appliances Listed appliances equipped with draft hood Appliances listed for use with Type B gas vent	Type B gas vent (Section 503.6) Chimney (Section 503.5) Single-wall metal pipe (Section 503.7) Listed chimney lining system for gas venting (Section 503.5.3) Special gas vent listed for these appliances (Section 503.4.2)
Listed vented wall furnaces	Type B-W gas vent (Sections 503.6, 608)
Category II, Category III and Category IV appliances	As specified or furnished by manufacturers of listed appliances (Sections 503.4.1, 503.4.2)
Incinerators	In accordance with NFPA 82
Appliances that can be converted for use with solid fuel	Chimney (Section 503.5)
Unlisted combination gas and oil-burning appliances	Chimney (Section 503.5)
Listed combination gas and oil-burning appliances	Type L vent (Section 503.6) or chimney (Section 503.5)
Combination gas and solid fuel-burning appliances	Chimney (Section 503.5)
Appliances listed for use with chimneys only	Chimney (Section 503.5)
Unlisted appliances	Chimney (Section 503.5)
Decorative appliances in vented fireplaces	Chimney
Gas-fired toilets	Single-wall metal pipe (Section 626)
Direct-vent appliances	See Section 503.2.3
Appliances with integral vent	See Section 503.2.4

INTERNATIONAL CODE COUNCIL®
Copyright © 2019 ICC & NYSDOS. ALL RIGHTS RESERVED. Accessed by Lauren Gualdino (lgualdino@briarcliffmanor.org), (-) Order Number #100880972 on May 08, 2020 07:05 AM (PDT) pursuant to License Agreement with ICC & NYSDOS. No further reproduction, no

100880972

the larger draft hood outlet plus 50 percent of the area of the smaller draft hood outlet, nor greater than seven times the smallest draft hood outlet area.

4. Chimney venting systems using mechanical draft shall be sized in accordance with *approved* engineering methods.
5. Other *approved* engineering methods.

503.5.6 Inspection of chimneys. Before replacing an existing *appliance* or connecting a vent connector to a chimney, the chimney passageway shall be examined to ascertain that it is clear and free of obstructions and it shall be cleaned if previously used for venting solid or liquid fuel-burning appliances or fireplaces.

503.5.6.1 Chimney lining. Chimneys shall be lined in accordance with NFPA 211.

Exception: Where an existing chimney complies with Sections 503.5.6 through 503.5.6.3 and its sizing is in accordance with Section 503.5.5, its continued use shall be allowed where the *appliance* vented by such chimney is replaced by an *appliance* of similar type, input rating and efficiency.

503.5.6.2 Cleanouts. Cleanouts shall be examined and where they do not remain tightly closed when not in use, they shall be repaired or replaced.

503.5.6.3 Unsafe chimneys. Where inspection reveals that an existing chimney is not safe for the intended application, it shall be repaired, rebuilt, lined, relined or replaced with a vent or chimney to conform to NFPA 211 and it shall be suitable for the appliances to be vented.

503.5.7 Chimneys serving appliances burning other fuels. Chimneys serving *appliances* burning other fuels shall comply with Sections 503.5.7.1 through 503.5.7.4.

503.5.7.1 Solid fuel-burning appliances. An *appliance* shall not be connected to a chimney flue serving a separate *appliance* designed to burn solid fuel.

503.5.7.2 Liquid fuel-burning appliances. Where one chimney flue serves gas appliances and liquid fuel-burning appliances, the appliances shall be connected through separate openings or shall be connected through a single opening where joined by a suitable fitting located as close as practical to the chimney. Where two or more openings are provided into one chimney flue, they shall be at different levels. Where the appliances are automatically controlled, they shall be equipped with safety shutoff devices.

503.5.7.3 Combination gas- and solid fuel-burning appliances. A combination gas- and solid fuel-burning *appliance* shall be permitted to be connected to a single chimney flue where equipped with a manual reset device to shut off gas to the main burner in the event of sustained backdraft or flue gas spillage. The chimney flue shall be sized to properly vent the *appliance*.

503.5.7.4 Combination gas- and oil fuel-burning appliances. Where a single chimney flue serves a *listed* combination gas- and oil fuel-burning *appliance,* such flue shall be sized in accordance with appliance manufacturer's instructions.

503.5.8 Support of chimneys. All portions of chimneys shall be supported for the design and weight of the materials employed. Factory-built chimneys shall be supported and spaced in accordance with the manufacturer's installation instructions.

503.5.9 Cleanouts. Where a chimney that formerly carried flue products from liquid or solid fuel-burning appliances is used with an *appliance* using fuel gas, an accessible cleanout shall be provided. The cleanout shall have a tight-fitting cover and shall be installed so its upper edge is not less than 6 inches (152 mm) below the lower edge of the lowest chimney inlet opening.

503.5.10 Space surrounding lining or vent. The remaining space surrounding a chimney liner, gas vent, special gas vent or plastic *piping* installed within a masonry chimney flue shall not be used to vent another *appliance*. The insertion of another liner or vent within the chimney as provided in this code and the liner or vent manufacturer's instructions shall not be prohibited.

The remaining space surrounding a chimney liner, gas vent, special gas vent or plastic *piping* installed within a masonry, metal or factory-built chimney shall not be used to supply *combustion air*. Such space shall not be prohibited from supplying *combustion air* to *direct-vent appliances* designed for installation in a solid fuel-burning *fireplace* and installed in accordance with the manufacturer's instructions.

503.5.11 Insulation shield. Where a factory-built chimney passes through insulated assemblies, an insulation shield constructed of steel having a thickness of not less than 0.0187 inch (0.475 mm) shall be installed to provide clearance between the chimney and the insulation material. The clearance shall be not less than the clearance to combustibles specified by the chimney manufacturer's installation instructions. Where chimneys pass through attic space, the shield shall terminate not less than 2 inches (51 mm) above the installation materials and shall be secured in place to prevent displacement. Insulation shields provided as part of a listed chimney system shall be installed in accordance with the manufacturer's installation instructions.

503.6 Gas vents. Gas vents shall comply with Sections 503.6.1 through 503.6.14 (see Section 202, General Definitions).

503.6.1 Materials. Type B and BW gas vents shall be listed in accordance with UL 441. Vents for listed combination gas- and oil-burning appliances shall be listed in accordance with UL 641.

503.6.2 Installation, general. Gas vents shall be installed in accordance with the manufacturer's instructions.

503.6.3 Type B-W vent capacity. A Type B-W gas vent shall have a *listed* capacity not less than that of the *listed* vented wall furnace to which it is connected.

503.6.4 Gas vents installed within masonry chimneys. Gas vents installed within masonry chimneys shall be installed in accordance with the manufacturer's instruc-

INTERNATIONAL CODE COUNCIL®
Copyright © 2019 ICC & NYSDOS. ALL RIGHTS RESERVED. Accessed by Lauren Gualdino (lgualdino@briarcliffmanor.org), (-) Order Number #100880972 on May 08, 2020 07:05 AM (PDT) pursuant to License Agreement with ICC & NYSDOS. No further reproduction, no

100880972

tions. Gas vents installed within masonry chimneys shall be identified with a permanent label installed at the point where the vent enters the chimney. The label shall contain the following language: "This gas vent is for appliances that burn gas. Do not connect to solid or liquid fuel-burning appliances or incinerators."

503.6.5 Gas vent terminations. A gas vent shall terminate in accordance with one of the following:

1. Gas vents that are 12 inches (305 mm) or less in size and located not less than 8 feet (2438 mm) from a vertical wall or similar obstruction shall terminate above the roof in accordance with Figure 503.6.5.
2. Gas vents that are over 12 inches (305 mm) in size or are located less than 8 feet (2438 mm) from a vertical wall or similar obstruction shall terminate not less than 2 feet (610 mm) above the highest point where they pass through the roof and not less than 2 feet (610 mm) above any portion of a building within 10 feet (3048 mm) horizontally.
3. As provided for industrial appliances in Section 503.2.2.
4. As provided for direct-vent systems in Section 503.2.3.
5. As provided for appliances with integral vents in Section 503.2.4.
6. As provided for mechanical draft systems in Section 503.3.3.
7. As provided for ventilating hoods and exhaust systems in Section 503.3.4.

503.6.5.1 Decorative shrouds. Decorative shrouds shall not be installed at the termination of gas vents except where such shrouds are *listed* for use with the specific gas venting system and are installed in accordance with manufacturer's instructions.

503.6.6 Minimum height. A Type B or L gas vent shall terminate not less than 5 feet (1524 mm) in vertical height above the highest connected *appliance* draft hood or flue collar. A Type B-W gas vent shall terminate not less than 12 feet (3658 mm) in vertical height above the bottom of the wall furnace.

503.6.7 Roof terminations. Gas vents shall extend through the roof flashing, roof jack or roof thimble and terminate with a *listed* cap or *listed* roof assembly.

503.6.8 Forced air inlets. Gas vents shall terminate not less than 3 feet (914 mm) above any forced air inlet located within 10 feet (3048 mm).

503.6.9 Exterior wall penetrations. A gas vent extending through an exterior wall shall not terminate adjacent to the wall or below eaves or parapets, except as provided in Sections 503.2.3 and 503.3.3.

503.6.10 Size of gas vents. Venting systems shall be sized and constructed in accordance with Sections 503.6.10.1 through 503.6.10.4 and the *appliance* manufacturer's installation instructions.

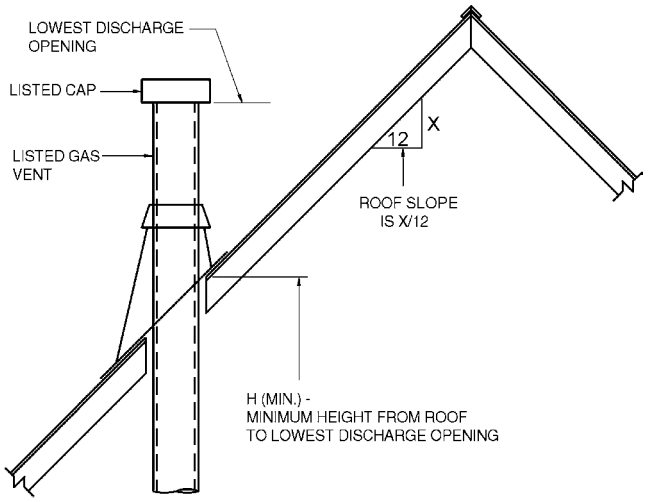

ROOF SLOPE	H (min) ft
Flat to 6/12	1.0
Over 6/12 to 7/12	1.25
Over 7/12 to 8/12	1.5
Over 8/12 to 9/12	2.0
Over 9/12 to 10/12	2.5
Over 10/12 to 11/12	3.25
Over 11/12 to 12/12	4.0
Over 12/12 to 14/12	5.0
Over 14/12 to 16/12	6.0
Over 16/12 to 18/12	7.0
Over 18/12 to 20/12	7.5
Over 20/12 to 21/12	8.0

For SI: 1 inch = 25.4 mm, 1 foot = 304.8 mm.

FIGURE 503.6.5
TERMINATION LOCATIONS FOR GAS VENTS WITH LISTED CAPS 12 INCHES OR LESS IN SIZE NOT LESS THAN 8 FEET FROM A VERTICAL WALL

503.6.10.1 Category I appliances. The sizing of natural draft venting systems serving one or more *listed* appliances equipped with a draft hood or appliances *listed* for use with Type B gas vent, installed in a single story of a building, shall be in accordance with one of the following methods:

1. The provisions of Section 504.
2. For sizing an individual gas vent for a single, draft-hood-equipped *appliance*, the effective area of the vent connector and the gas vent shall be not less than the area of the *appliance* draft hood outlet, nor greater than seven times the draft hood outlet area.

INTERNATIONAL CODE COUNCIL®
Copyright © 2019 ICC & NYSDOS. ALL RIGHTS RESERVED. Accessed by Lauren Gualdino (lgualdino@briarcliffmanor.org), (-) Order Number #100880972 on May 08, 2020 07:05 AM (PDT) pursuant to License Agreement with ICC & NYSDOS. No further reproduction, no

100880972

3. For sizing a gas vent connected to two appliances with draft hoods, the effective area of the vent shall be not less than the area of the larger draft hood outlet plus 50 percent of the area of the smaller draft hood outlet, nor greater than seven times the smaller draft hood outlet area.
4. *Approved* engineering practices.

503.6.10.2 Vent offsets. Type B and L vents sized in accordance with Item 2 or 3 of Section 503.6.10.1 shall extend in a generally vertical direction with offsets not exceeding 45 degrees (0.79 rad), except that a vent system having not more than one 60-degree (1.04 rad) *offset* shall be permitted. Any angle greater than 45 degrees (0.79 rad) from the vertical is considered horizontal. The total horizontal distance of a vent plus the horizontal vent connector serving draft-hood-equipped appliances shall be not greater than 75 percent of the vertical height of the vent.

503.6.10.3 Category II, III and IV appliances. The sizing of gas vents for Category II, III and IV appliances shall be in accordance with the *appliance* manufacturer's instructions. The sizing of plastic pipe that is specified by the appliance manufacturer as a venting material for Category II, III and IV appliances shall be in accordance with the manufacturer's instructions.

503.6.10.4 Mechanical draft. Chimney venting systems using mechanical draft shall be sized in accordance with *approved* engineering methods.

503.6.11 Gas vents serving appliances on more than one floor. A common vent shall be permitted in multistory installations to vent Category I appliances located on more than one floor level, provided that the venting system is designed and installed in accordance with *approved* engineering methods. For the purpose of this section, crawl spaces, basements and attics shall be considered to be floor levels.

503.6.11.1 Appliance separation. Appliances connected to the common vent shall be located in rooms separated from occupiable space. Each of these rooms shall have provisions for an adequate supply of combustion, ventilation and dilution air that is not supplied from an occupiable space.

503.6.11.2 Sizing. The size of the connectors and common segments of multistory venting systems for appliances *listed* for use with Type B double-wall gas vents shall be in accordance with Table 504.3(1), provided that:

1. The available total height (*H*) for each segment of a multistory venting system is the vertical distance between the level of the highest draft hood outlet or flue collar on that floor and the centerline of the next highest interconnection tee.
2. The size of the connector for a segment is determined from the *appliance* input rating and available connector rise and shall be not smaller than the draft hood outlet or flue collar size.
3. The size of the common vertical segment, and of the interconnection tee at the base of that segment, shall be based on the total *appliance* input rating entering that segment and its available total height.

503.6.12 Support of gas vents. Gas vents shall be supported and spaced in accordance with the manufacturer's installation instructions.

503.6.13 Marking. In those localities where solid and liquid fuels are used extensively, gas vents shall be permanently identified by a label attached to the wall or ceiling at a point where the vent connector enters the gas vent. The determination of where such localities exist shall be made by the *building official*. The label shall read:

"This gas vent is for appliances that burn gas. Do not connect to solid or liquid fuel-burning appliances or incinerators."

503.6.14 Fastener penetrations. Screws, rivets and other fasteners shall not penetrate the inner wall of double-wall gas vents, except at the transition from an *appliance* draft hood outlet, a flue collar or a single-wall metal connector to a double-wall vent.

503.7 Single-wall metal pipe. Single-wall metal pipe vents shall comply with Sections 503.7.1 through 503.7.13.

503.7.1 Construction. Single-wall metal pipe shall be constructed of galvanized sheet steel not less than 0.0304 inch (0.7 mm) thick, or other *approved,* noncombustible, corrosion-resistant material.

503.7.2 Cold climate. Uninsulated single-wall metal pipe shall not be used outdoors for venting appliances in regions where the 99-percent winter design temperature is below 32°F (0°C).

503.7.3 Termination. Single-wall metal pipe shall terminate not less than 5 feet (1524 mm) in vertical height above the highest connected *appliance* draft hood *outlet* or flue collar. Single-wall metal pipe shall extend not less than 2 feet (610 mm) above the highest point where it passes through a roof of a building and not less than 2 feet (610 mm) higher than any portion of a building within a horizontal distance of 10 feet (3048 mm). An *approved* cap or roof assembly shall be attached to the terminus of a single-wall metal pipe.

503.7.4 Limitations of use. Single-wall metal pipe shall be used only for runs directly from the space in which the *appliance* is located through the roof or exterior wall to the outdoor atmosphere.

503.7.5 Roof penetrations. A pipe passing through a roof shall extend without interruption through the roof flashing, roof jack or roof thimble. Where a single-wall metal pipe passes through a roof constructed of *combustible material*, a noncombustible, nonventilating thimble shall be used at the point of passage. The thimble shall extend not less than 18 inches (457 mm) above and 6 inches (152 mm) below the roof with the annular space open at the bottom and closed only at the top. The thimble shall be sized in accordance with Section 503.7.7.

INTERNATIONAL CODE COUNCIL®
Copyright © 2019 ICC & NYSDOS. ALL RIGHTS RESERVED. Accessed by Lauren Gualdino (lgualdino@briarcliffmanor.org), (-) Order Number #100880972 on May 08, 2020 07:05 AM (PDT) pursuant to License Agreement with ICC & NYSDOS. No further reproduction, no

100880972

503.7.6 Installation. Single-wall metal pipe shall not originate in any unoccupied attic or concealed space and shall not pass through any attic, inside wall, concealed space or floor. The installation of a single-wall metal pipe through an exterior combustible wall shall comply with Section 503.7.7.

503.7.7 Single-wall penetrations of combustible walls. A single-wall metal pipe shall not pass through a combustible exterior wall unless guarded at the point of passage by a ventilated metal thimble not smaller than the following:

1. For *listed* appliances with draft hoods and appliances *listed* for use with Type B gas vents, the thimble shall be not less than 4 inches (102 mm) larger in diameter than the metal pipe. Where there is a run of not less than 6 feet (1829 mm) of metal pipe in the open between the draft hood outlet and the thimble, the thimble shall be permitted to be not less than 2 inches (51 mm) larger in diameter than the metal pipe.
2. For unlisted appliances having draft hoods, the thimble shall be not less than 6 inches (152 mm) larger in diameter than the metal pipe.
3. For residential and low-heat appliances, the thimble shall be not less than 12 inches (305 mm) larger in diameter than the metal pipe.

Exception: In lieu of thimble protection, all *combustible material* in the wall shall be removed a sufficient distance from the metal pipe to provide the specified *clearance* from such metal pipe to *combustible material*. Any material used to close up such opening shall be noncombustible.

503.7.8 Clearances. Minimum clearances from single-wall metal pipe to *combustible material* shall be in accordance with Table 503.10.5. The *clearance* from single-wall metal pipe to *combustible material* shall be permitted to be reduced where the *combustible material* is protected as specified for vent connectors in Table 308.2.

503.7.9 Size of single-wall metal pipe. A venting system constructed of single-wall metal pipe shall be sized in accordance with one of the following methods and the appliance manufacturer's instructions:

1. For a draft-hood-equipped *appliance*, in accordance with Section 504.
2. For a venting system for a single *appliance* with a draft hood, the areas of the connector and the pipe each shall be not less than the area of the *appliance* flue collar or draft hood outlet, whichever is smaller. The vent area shall be not greater than seven times the draft hood outlet area.
3. Other *approved* engineering methods.

503.7.10 Pipe geometry. Any shaped single-wall metal pipe shall be permitted to be used, provided that its equivalent effective area is equal to the effective area of the round pipe for which it is substituted, and provided that the minimum internal dimension of the pipe is not less than 2 inches (51 mm).

503.7.11 Termination capacity. The vent cap or a roof assembly shall have a venting capacity of not less than that of the pipe to which it is attached.

503.7.12 Support of single-wall metal pipe. All portions of single-wall metal pipe shall be supported for the design and weight of the material employed.

503.7.13 Marking. Single-wall metal pipe shall comply with the marking provisions of Section 503.6.13.

503.8 Venting system termination location. The location of venting system terminations shall comply with the following (see Appendix C):

1. A mechanical draft venting system shall terminate not less than 3 feet (914 mm) above any forced-air inlet located within 10 feet (3048 mm).

   Exceptions:

   1. This provision shall not apply to the *combustion air* intake of a direct-vent *appliance*.
   2. This provision shall not apply to the separation of the integral outdoor air inlet and flue gas discharge of *listed* outdoor appliances.
2. A mechanical draft venting system, excluding *direct-vent appliances*, shall terminate not less than 4 feet (1219 mm) below, 4 feet (1219 mm) horizontally from, or 1 foot (305 mm) above any door, operable window or gravity air inlet into any building. The bottom of the vent terminal shall be located not less than 12 inches (305 mm) above finished ground level.
3. The clearances for through-the-wall, direct-vent terminals shall be in accordance with Table 503.8. The bottom of the vent terminal and the air intake shall be located not less than 12 inches (305 mm) above finished ground level.
4. Through-the-wall vents for Category II and IV appliances and noncategorized condensing appliances shall not terminate over public walkways or over an area where condensate or vapor could create a nuisance or hazard or could be detrimental to the operation of regulators, relief valves or other *equipment*. Where local experience indicates that condensate is a problem with Category I and III appliances, this provision shall also apply. Drains for condensate shall be installed in accordance with the appliance and vent manufacturers' instructions.
5. Vent systems for Category IV appliances that terminate through an outside wall of a building and discharge flue gases perpendicular to the adjacent wall shall be located not less than 10 feet (3048 mm) horizontally from an operable opening in an adjacent building. This requirement shall not apply to vent terminals that are 2 feet (607 mm) or more above or 25 feet (7620 mm) or more below operable openings.

INTERNATIONAL CODE COUNCIL®
Copyright © 2019 ICC & NYSDOS. ALL RIGHTS RESERVED. Accessed by Lauren Gualdino (lgualdino@briarcliffmanor.org), (-) Order Number #100880972 on May 08, 2020 07:05 AM (PDT) pursuant to License Agreement with ICC & NYSDOS. No further reproduction, no

100880972

TABLE 503.8
THROUGH-THE-WALL, DIRECT-VENT TERMINATION CLEARANCES

DIRECT-VENT APPLIANCE INPUT RATING (Btu/hr)	THROUGH-THE-WALL VENT TERMINAL CLEARANCE FROM ANY AIR OPENING INTO THE BUILDING (inches)
< 10,000	6
≥ 10,000 ≤ 50,000	9
> 50,000 ≤ 150,000	12
> 150,000	In accordance with the appliance manufacturer's instructions and not less than the clearances specified in Section 503.8, Item 2

For SI: 1 inch = 25.4 mm, 1 Btu/h = 0.2931 W.

503.9 Condensation drainage. Provisions shall be made to collect and dispose of condensate from venting systems serving Category II and IV appliances and noncategorized condensing appliances in accordance with Section 503.8, Item 4. Where local experience indicates that condensation is a problem, provisions shall be made to drain off and dispose of condensate from venting systems serving Category I and III appliances in accordance with Section 503.8, Item 4.

503.10 Vent connectors for Category I appliances. Vent connectors for Category I *appliances* shall comply with Sections 503.10.1 through 503.10.14.

503.10.1 Where required. A vent connector shall be used to connect an *appliance* to a gas vent, chimney or single-wall metal pipe, except where the gas vent, chimney or single-wall metal pipe is directly connected to the *appliance*.

503.10.2 Materials. Vent connectors shall be constructed in accordance with Sections 503.10.2.1 through 503.10.2.5.

503.10.2.1 General. A vent connector shall be made of noncombustible corrosion-resistant material capable of withstanding the vent gas temperature produced by the *appliance* and of sufficient thickness to withstand physical damage.

503.10.2.2 Vent connectors located in unconditioned areas. Where the vent connector used for an *appliance* having a draft hood or a Category I *appliance* is located in or passes through attics, crawl spaces or other unconditioned spaces, that portion of the vent connector shall be *listed* Type B, Type L or *listed* vent material having equivalent insulation properties.

Exception: Single-wall metal pipe located within the exterior walls of the building in areas having a local 99-percent winter design temperature of 5°F (-15°C) or higher shall be permitted to be used in unconditioned spaces other than attics and crawl spaces.

503.10.2.3 Residential-type appliance connectors. Where vent connectors for residential-type appliances are not installed in attics or other unconditioned spaces, connectors for *listed* appliances having draft hoods, appliances having draft hoods and equipped with *listed* conversion burners and Category I appliances shall be one of the following:

1. Type B or L vent material.
2. Galvanized sheet steel not less than 0.018 inch (0.46 mm) thick.
3. Aluminum (1100 or 3003 alloy or equivalent) sheet not less than 0.027 inch (0.69 mm) thick.
4. Stainless steel sheet not less than 0.012 inch (0.31 mm) thick.
5. Smooth interior wall metal pipe having resistance to heat and corrosion equal to or greater than that of Item 2, 3 or 4.
6. A *listed* vent connector.

Vent connectors shall not be covered with insulation.

Exception: *Listed* insulated vent connectors shall be installed in accordance with the manufacturer's instructions.

503.10.2.4 Low-heat equipment. A vent connector for a nonresidential, low-heat *appliance* shall be a factory-built chimney section or steel pipe having resistance to heat and corrosion equivalent to that for the appropriate galvanized pipe as specified in Table 503.10.2.4. Factory-built chimney sections shall be joined together in accordance with the chimney manufacturer's instructions.

TABLE 503.10.2.4
MINIMUM THICKNESS FOR GALVANIZED STEEL VENT CONNECTORS FOR LOW-HEAT APPLIANCES

DIAMETER OF CONNECTOR (inches)	MINIMUM THICKNESS (inch)
Less than 6	0.019
6 to less than 10	0.023
10 to 12 inclusive	0.029
14 to 16 inclusive	0.034
Over 16	0.056

For SI: 1 inch = 25.4 mm.

503.10.2.5 Medium-heat appliances. Vent connectors for medium-heat appliances shall be constructed of factory-built medium-heat chimney sections or steel of a thickness not less than that specified in Table 503.10.2.5 and shall comply with the following:

1. A steel vent connector for an *appliance* with a vent gas temperature in excess of 1,000°F (538°C) measured at the entrance to the connector shall be lined with medium-duty fire brick (ASTM C64, Type F), or the equivalent.
2. The lining shall be not less than $2^1/_2$ inches (64 mm) thick for a vent connector having a diameter or greatest cross-sectional dimension of 18 inches (457 mm) or less.
3. The lining shall be not less than $4^1/_2$ inches (114 mm) thick laid on the $4^1/_2$-inch (114 mm) bed for a vent connector having a diameter or greatest

INTERNATIONAL CODE COUNCIL®
Copyright © 2019 ICC & NYSDOS. ALL RIGHTS RESERVED. Accessed by Lauren Gualdino (lgualdino@briarcliffmanor.org), (-) Order Number #100880972 on May 08, 2020 07:05 AM (PDT) pursuant to License Agreement with ICC & NYSDOS. No further reproduction, no

100880972

cross-sectional dimension greater than 18 inches (457 mm).

4. Factory-built chimney sections, if employed, shall be joined together in accordance with the chimney manufacturer's instructions.

TABLE 503.10.2.5
MINIMUM THICKNESS FOR STEEL VENT CONNECTORS FOR MEDIUM-HEAT APPLIANCES

VENT CONNECTOR SIZE		
Diameter (inches)	Area (square inches)	MINIMUM THICKNESS (inch)
Up to 14	Up to 154	0.053
Over 14 to 16	154 to 201	0.067
Over 16 to 18	201 to 254	0.093
Over 18	Larger than 254	0.123

For SI: 1 inch = 25.4 mm, 1 square inch = 645.16 mm^2.

503.10.3 Size of vent connector. Vent connectors shall be sized in accordance with Sections 503.10.3.1 through 503.10.3.5.

503.10.3.1 Single draft hood and fan-assisted. A vent connector for an *appliance* with a single draft hood or for a Category I fan-assisted combustion system *appliance* shall be sized and installed in accordance with Section 504 or other *approved* engineering methods.

503.10.3.2 Multiple draft hood. For a single *appliance* having more than one draft hood outlet or flue collar, the manifold shall be constructed according to the instructions of the *appliance* manufacturer. Where there are no instructions, the manifold shall be designed and constructed in accordance with *approved* engineering practices. As an alternate method, the effective area of the manifold shall equal the combined area of the flue collars or draft hood outlets and the vent connectors shall have a minimum 1-foot (305 mm) rise.

503.10.3.3 Multiple appliances. Where two or more appliances are connected to a common vent or chimney, each vent connector shall be sized in accordance with Section 504 or other *approved* engineering methods.

As an alternative method applicable only where all of the appliances are draft hood equipped, each vent connector shall have an effective area not less than the area of the draft hood outlet of the *appliance* to which it is connected.

503.10.3.4 Common connector/manifold. Where two or more appliances are vented through a common vent connector or vent manifold, the common vent connector or vent manifold shall be located at the highest level consistent with available headroom and the required *clearance* to *combustible materials* and shall be sized in accordance with Section 504 or other *approved* engineering methods.

As an alternate method applicable only where there are two draft hood-equipped appliances, the effective area of the common vent connector or vent manifold and all junction fittings shall be not less than the area of the larger vent connector plus 50 percent of the area of the smaller flue collar outlet.

503.10.3.5 Size increase. Where the size of a vent connector is increased to overcome installation limitations and obtain connector capacity equal to the *appliance* input, the size increase shall be made at the *appliance* draft hood outlet.

503.10.4 Two or more appliances connected to a single vent or chimney. Where two or more vent connectors enter a common vent, chimney flue or single-wall metal pipe, the smaller connector shall enter at the highest level consistent with the available headroom or *clearance* to *combustible material*. Vent connectors serving Category I appliances shall not be connected to any portion of a mechanical draft system operating under positive static pressure, such as those serving Category III or IV appliances.

503.10.4.1 Two or more openings. Where two or more openings are provided into one chimney flue or vent, the openings shall be at different levels, or the connectors shall be attached to the vertical portion of the chimney or vent at an angle of 45 degrees (0.79 rad) or less relative to the vertical.

503.10.5 Clearance. Minimum clearances from vent connectors to *combustible material* shall be in accordance with Table 503.10.5.

Exception: The *clearance* between a vent connector and *combustible material* shall be permitted to be reduced where the *combustible material* is protected as specified for vent connectors in Table 308.2.

503.10.6 Joints. Joints between sections of connector *piping* and connections to flue collars and draft hood outlets shall be fastened by one of the following methods:

1. Sheet metal screws.
2. Vent connectors of *listed* vent material assembled and connected to flue collars or draft hood outlets in accordance with the manufacturers' instructions.
3. Other *approved* means.

503.10.7 Slope. A vent connector shall be installed without dips or sags and shall slope upward toward the vent or chimney not less than $^1/_4$ inch per foot (21 mm/m).

Exception: Vent connectors attached to a mechanical draft system installed in accordance with the *appliance* and draft system manufacturers' instructions.

503.10.8 Length of vent connector. The maximum horizontal length of a single-wall connector shall be 75 percent of the height of the chimney or vent except for engineered systems. The maximum horizontal length of a Type B double-wall connector shall be 100 percent of the height of the chimney or vent except for engineered systems.

503.10.9 Support. A vent connector shall be supported for the design and weight of the material employed to maintain clearances and prevent physical damage and separation of joints.

INTERNATIONAL CODE COUNCIL®
Copyright © 2019 ICC & NYSDOS. ALL RIGHTS RESERVED. Accessed by Lauren Gualdino (lgualdino@briarcliffmanor.org), (-) Order Number #100880972 on May 08, 2020 07:05 AM (PDT) pursuant to License Agreement with ICC & NYSDOS. No further reproduction, no

100880972

503.10.10 Chimney connection. Where entering a flue in a masonry or metal chimney, the vent connector shall be installed above the extreme bottom to avoid stoppage. Where a thimble or slip joint is used to facilitate removal of the connector, the connector shall be firmly attached to or inserted into the thimble or slip joint to prevent the connector from falling out. Means shall be employed to prevent the connector from entering so far as to restrict the space between its end and the opposite wall of the chimney flue (see Section 501.9).

503.10.11 Inspection. The entire length of a vent connector shall be provided with ready *access* for inspection, cleaning and replacement.

503.10.12 Fireplaces. A vent connector shall not be connected to a chimney flue serving a *fireplace* unless the *fireplace* flue opening is permanently sealed.

503.10.13 Passage through ceilings, floors or walls. Single-wall metal pipe connectors shall not pass through any wall, floor or ceiling except as permitted by Section 503.7.4.

503.10.14 Medium-heat connectors. Vent connectors for medium-heat appliances shall not pass through walls or partitions constructed of *combustible material*.

503.11 Vent connectors for Category II, III and IV appliances. Vent connectors for Category II, III and IV appliances shall be as specified for the venting systems in accordance with Section 503.4.

503.12 Draft hoods and draft controls. The installation of draft hoods and draft controls shall comply with Sections 503.12.1 through 503.12.7.

503.12.1 Appliances requiring draft hoods. Vented appliances shall be installed with draft hoods.

Exception: Dual oven-type combination ranges; *direct-vent appliances*; fan-assisted combustion system appliances; appliances requiring chimney draft for operation; single firebox boilers equipped with conversion burners with inputs greater than 400,000 Btu per hour (117 kW); appliances equipped with blast, power or pressure burners that are not *listed* for use with draft hoods; and appliances designed for forced venting.

503.12.2 Installation. A draft hood supplied with or forming a part of a *listed* vented *appliance* shall be installed without *alteration*, exactly as furnished and specified by the *appliance* manufacturer.

503.12.2.1 Draft hood required. If a draft hood is not supplied by the *appliance* manufacturer where one is required, a draft hood shall be installed, shall be of a *listed* or *approved* type and, in the absence of other instructions, shall be of the same size as the *appliance* flue collar. Where a draft hood is required with a conversion burner, it shall be of a *listed* or *approved* type.

503.12.2.2 Special design draft hood. Where it is determined that a draft hood of special design is needed or preferable for a particular installation, the installation shall be in accordance with the recommendations of the *appliance* manufacturer and shall be *approved*.

503.12.3 Draft control devices. Where a draft control device is part of the *appliance* or is supplied by the *appliance* manufacturer, it shall be installed in accordance with the manufacturer's instructions. In the absence of manufacturer's instructions, the device shall be attached to the flue collar of the *appliance* or as near to the *appliance* as practical.

503.12.4 Additional devices. Appliances requiring a controlled chimney draft shall be permitted to be equipped with a *listed* double-acting barometric-draft regulator installed and adjusted in accordance with the manufacturer's instructions.

503.12.5 Location. Draft hoods and barometric draft regulators shall be installed in the same room or enclosure as the *appliance* in such a manner as to prevent any difference in pressure between the hood or regulator and the *combustion air* supply.

503.12.6 Positioning. Draft hoods and draft regulators shall be installed in the position for which they were designed with reference to the horizontal and vertical planes and shall be located so that the relief opening is not

TABLE 503.10.5
CLEARANCES FOR CONNECTORS[a]

APPLIANCE	MINIMUM DISTANCE FROM COMBUSTIBLE MATERIAL			
	Listed Type B gas vent material	Listed Type L vent material	Single-wall metal pipe	Factory-built chimney sections
Listed appliances with draft hoods and appliances listed for use with Type B gas vents	As listed	As listed	6 inches	As listed
Residential boilers and furnaces with listed gas conversion burner and with draft hood	6 inches	6 inches	9 inches	As listed
Residential appliances listed for use with Type L vents	Not permitted	As listed	9 inches	As listed
Listed gas-fired toilets	Not permitted	As listed	As listed	As listed
Unlisted residential appliances with draft hood	Not permitted	6 inches	9 inches	As listed
Residential and low-heat appliances other than above	Not permitted	9 inches	18 inches	As listed
Medium-heat appliances	Not permitted	Not permitted	36 inches	As listed

For SI: 1 inch = 25.4 mm.

a. These clearances shall apply unless the manufacturer's installation instructions for a listed appliance or connector specify different clearances, in which case the listed clearances shall apply.

INTERNATIONAL CODE COUNCIL®
Copyright © 2019 ICC & NYSDOS. ALL RIGHTS RESERVED. Accessed by Lauren Gualdino (lgualdino@briarcliffmanor.org), (-) Order Number #100880972 on May 08, 2020 07:05 AM (PDT) pursuant to License Agreement with ICC & NYSDOS. No further reproduction, no

100880972

obstructed by any part of the *appliance* or adjacent construction. The *appliance* and its draft hood shall be located so that the relief opening is accessible for checking vent operation.

503.12.7 Clearance. A draft hood shall be located so its relief opening is not less than 6 inches (152 mm) from any surface except that of the *appliance* it serves and the venting system to which the draft hood is connected. Where a greater or lesser *clearance* is indicated on the *appliance* label, the *clearance* shall be not less than that specified on the label. Such clearances shall not be reduced.

503.13 Manually operated dampers. A manually operated damper shall not be placed in the vent connector for any *appliance*. Fixed baffles shall not be classified as manually operated dampers.

503.14 Automatically operated vent dampers. An automatically operated vent damper shall be of a *listed* type.

503.15 Obstructions. Devices that retard the flow of vent gases shall not be installed in a vent connector, chimney or vent. The following shall not be considered as obstructions:

1. Draft regulators and safety controls specifically *listed* for installation in venting systems and installed in accordance with the manufacturer's instructions.
2. *Approved* draft regulators and safety controls that are designed and installed in accordance with *approved* engineering methods.
3. *Listed* heat reclaimers and automatically operated vent dampers installed in accordance with the manufacturer's instructions.
4. *Approved* economizers, heat reclaimers and recuperators installed in venting systems of appliances not required to be equipped with draft hoods, provided that the *appliance* manufacturer's instructions cover the installation of such a device in the venting system and performance in accordance with Sections 503.3 and 503.3.1 is obtained.
5. Vent dampers serving *listed* appliances installed in accordance with Sections 504.2.1 and 504.3.1 or other *approved* engineering methods.

503.16 Outside wall penetrations. Where vents, including those for *direct-vent appliances*, penetrate outside walls of buildings, the annular spaces around such penetrations shall be permanently sealed using *approved* materials to prevent entry of combustion products into the building.

SECTION 504
SIZING OF CATEGORY I APPLIANCE VENTING SYSTEMS

504.1 Definitions. The following definitions apply to the tables in this section.

APPLIANCE CATEGORIZED VENT DIAMETER/ AREA. The minimum vent area/diameter permissible for Category I appliances to maintain a nonpositive vent static pressure when tested in accordance with nationally recognized standards.

FAN-ASSISTED COMBUSTION SYSTEM. An *appliance* equipped with an integral mechanical means to either draw or force products of combustion through the combustion chamber or heat exchanger.

FAN Min. The minimum input rating of a Category I fan-assisted appliance attached to a vent or connector.

FAN Max. The maximum input rating of a Category I fan-assisted appliance attached to a vent or connector.

FAN + FAN. The maximum combined *appliance* input rating of two or more Category I fan-assisted appliances attached to the common vent.

FAN + NAT. The maximum combined *appliance* input rating of one or more Category I fan-assisted appliances and one or more Category I draft-hood-equipped appliances attached to the common vent.

NA. Vent configuration is not allowed due to potential for condensate formation or pressurization of the venting system, or not applicable due to physical or geometric restraints.

NAT Max. The maximum input rating of a Category I draft-hood-equipped *appliance* attached to a vent or connector.

NAT + NAT. The maximum combined *appliance* input rating of two or more Category I draft-hood-equipped appliances attached to the common vent.

504.2 Application of single-appliance vent Tables 504.2(1) through 504.2(6). The application of Tables 504.2(1) through 504.2(6) shall be subject to the requirements of Sections 504.2.1 through 504.2.17.

504.2.1 Vent obstructions. These venting tables shall not be used where obstructions, as described in Section 503.15, are installed in the venting system. The installation of vents serving *listed* appliances with vent dampers shall be in accordance with the *appliance* manufacturer's instructions or in accordance with the following:

1. The maximum capacity of the vent system shall be determined using the "NAT Max" column.
2. The minimum capacity shall be determined as if the *appliance* were a fan-assisted *appliance*, using the "FAN Min" column to determine the minimum capacity of the vent system. Where the corresponding "FAN Min" is "NA," the vent configuration shall not be permitted and an alternative venting configuration shall be utilized.

504.2.2 Minimum size. Where the vent size determined from the tables is smaller than the *appliance* draft hood *outlet* or flue collar, the smaller size shall be permitted to be used provided that all of the following requirements are met:

1. The total vent height (*H*) is not less than 10 feet (3048 mm).
2. Vents for *appliance* draft hood outlets or flue collars 12 inches (305 mm) in diameter or smaller are not reduced more than one table size.
3. Vents for *appliance* draft hood outlets or flue collars larger than 12 inches (305 mm) in diameter are not reduced more than two table sizes.

INTERNATIONAL CODE COUNCIL®
Copyright © 2019 ICC & NYSDOS. ALL RIGHTS RESERVED. Accessed by Lauren Gualdino (lgualdino@briarcliffmanor.org), (-) Order Number #100880972 on May 08, 2020 07:05 AM (PDT) pursuant to License Agreement with ICC & NYSDOS. No further reproduction, no

100880972

4. The maximum capacity listed in the tables for a fan-assisted *appliance* is reduced by 10 percent (0.90 × maximum table capacity).
5. The draft hood outlet is greater than 4 inches (102 mm) in diameter. Do not connect a 3-inch-diameter (76 mm) vent to a 4-inch-diameter (102 mm) draft hood outlet. This provision shall not apply to fan-assisted appliances.

504.2.3 Vent offsets. Single-appliance venting configurations with zero (0) lateral lengths in Tables 504.2(1), 504.2(2) and 504.2(5) shall not have elbows in the venting system. Single-appliance venting configurations with lateral lengths include two 90-degree (1.57 rad) elbows. For each additional elbow up to and including 45 degrees (0.79 rad), the maximum capacity listed in the venting tables shall be reduced by 5 percent. For each additional elbow greater than 45 degrees (0.79 rad) up to and including 90 degrees (1.57 rad), the maximum capacity listed in the venting tables shall be reduced by 10 percent. Where multiple offsets occur in a vent, the total lateral length of all offsets combined shall not exceed that specified in Tables 504.2(1) through 504.2(5).

504.2.4 Zero lateral. Zero (0) lateral (*L*) shall apply only to a straight vertical vent attached to a top outlet draft hood or flue collar.

504.2.5 High-altitude installations. Sea-level input ratings shall be used when determining maximum capacity for high altitude installation. Actual input (derated for altitude) shall be used for determining minimum capacity for high altitude installation.

504.2.6 Multiple input rate appliances. For appliances with more than one input rate, the minimum vent capacity (FAN Min) determined from the tables shall be less than the lowest *appliance* input rating, and the maximum vent capacity (FAN Max/NAT Max) determined from the tables shall be greater than the highest *appliance* rating input.

504.2.7 Liner system sizing and connections. *Listed* corrugated metallic chimney liner systems in masonry chimneys shall be sized by using Table 504.2(1) or 504.2(2) for Type B vents with the maximum capacity reduced by 20 percent (0.80 × maximum capacity) and the minimum capacity as shown in Table 504.2(1) or 504.2(2). Corrugated metallic liner systems installed with bends or offsets shall have their maximum capacity further reduced in accordance with Section 504.2.3. The 20-percent reduction for corrugated metallic chimney liner systems includes an allowance for one long-radius 90-degree (1.57 rad) turn at the bottom of the liner.

Connections between chimney liners and *listed* double-wall connectors shall be made with *listed* adapters designed for such purpose.

504.2.8 Vent area and diameter. Where the vertical vent has a larger diameter than the vent connector, the vertical vent diameter shall be used to determine the minimum vent capacity, and the connector diameter shall be used to determine the maximum vent capacity. The flow area of the vertical vent shall not exceed seven times the flow area of the listed appliance categorized vent area, flue collar area or draft hood outlet area unless designed in accordance with *approved* engineering methods.

504.2.9 Chimney and vent locations. Tables 504.2(1), 504.2(2), 504.2(3), 504.2(4) and 504.2(5) shall be used only for chimneys and vents not exposed to the outdoors below the roof line. A Type B vent or listed chimney lining system passing through an unused masonry chimney flue shall not be considered to be exposed to the outdoors. Where vents extend outdoors above the roof more than 5 feet (1524 mm) higher than required by Figure 503.6.5, and where vents terminate in accordance with Section 503.6.5, Item 2, the outdoor portion of the vent shall be enclosed as required by this section for vents not considered to be exposed to the outdoors or such venting system shall be engineered. A Type B vent shall not be considered to be exposed to the outdoors where it passes through an unventilated enclosure or chase insulated to a value of not less than R8.

Table 504.2(3) in combination with Table 504.2(6) shall be used for clay-tile-lined *exterior masonry chimneys*, provided that all of the following are met:

1. Vent connector is a Type B double wall.
2. Vent connector length is limited to $1^1/_2$ feet for each inch (18 mm per mm) of vent connector diameter.
3. The appliance is draft hood equipped.
4. The input rating is less than the maximum capacity given by Table 504.2(3).
5. For a water heater, the outdoor design temperature is not less than 5°F (-15°C).
6. For a space-heating appliance, the input rating is greater than the minimum capacity given by Table 504.2(6).

504.2.10 Corrugated vent connector size. Corrugated vent connectors shall be not smaller than the listed appliance categorized vent diameter, flue collar diameter or draft hood outlet diameter.

504.2.11 Vent connector size limitation. Vent connectors shall not be increased in size more than two sizes greater than the listed appliance categorized vent diameter, flue collar diameter or draft hood outlet diameter.

504.2.12 Component commingling. In a single run of vent or vent connector, different diameters and types of vent and connector components shall be permitted to be used, provided that all such sizes and types are permitted by the tables.

504.2.13 Draft hood conversion accessories. Draft hood conversion accessories for use with masonry chimneys venting listed Category I fan-assisted appliances shall be listed and installed in accordance with the manufacturer's instructions for such listed accessories.

504.2.14 Table interpolation. Interpolation shall be permitted in calculating capacities for vent dimensions that fall between the table entries.

504.2.15 Extrapolation prohibited. Extrapolation beyond the table entries shall not be permitted.

INTERNATIONAL CODE COUNCIL®
Copyright © 2019 ICC & NYSDOS. ALL RIGHTS RESERVED. Accessed by Lauren Gualdino (lgualdino@briarcliffmanor.org), (-) Order Number #100880972 on May 08, 2020 07:05 AM (PDT) pursuant to License Agreement with ICC & NYSDOS. No further reproduction, no

100880972

504.2.16 Engineering calculations. For vent heights less than 6 feet (1829 mm) and greater than shown in the tables, engineering methods shall be used to calculate vent capacities.

504.2.17 Height entries. Where the actual height of a vent falls between entries in the height column of the applicable table in Tables 504.2(1) through 504.2(6), either interpolation shall be used or the lower appliance input rating shown in the table entries shall be used for FAN MAX and NAT MAX column values and the higher appliance input rating shall be used for the FAN MIN column values.

504.3 Application of multiple appliance vent Tables 504.3(1) through 504.3(7). The application of Tables 504.3(1) through 504.3(7b) shall be subject to the requirements of Sections 504.3.1 through 504.3.28.

504.3.1 Vent obstructions. These venting tables shall not be used where obstructions, as described in Section 503.15, are installed in the venting system. The installation of vents serving listed appliances with vent dampers shall be in accordance with the appliance manufacturer's instructions or in accordance with the following:

1. The maximum capacity of the vent connector shall be determined using the NAT Max column.
2. The maximum capacity of the vertical vent or chimney shall be determined using the FAN+NAT column where the second appliance is a fan-assisted appliance, or the NAT+NAT column where the second appliance is equipped with a draft hood.
3. The minimum capacity shall be determined as if the appliance were a fan-assisted appliance.
    3.1. The minimum capacity of the vent connector shall be determined using the FAN Min column.
    3.2. The FAN+FAN column shall be used where the second appliance is a fan-assisted appliance, and the FAN+NAT column shall be used where the second appliance is equipped with a draft hood, to determine whether the vertical vent or chimney configuration is not permitted (NA). Where the vent configuration is NA, the vent configuration shall not be permitted and an alternative venting configuration shall be utilized.

504.3.2 Connector length limit. The vent connector shall be routed to the vent utilizing the shortest possible route. Except as provided in Section 504.3.3, the maximum vent connector horizontal length shall be $1^1/_2$ feet for each inch (18 mm per mm) of connector diameter as shown in Table 504.3.2.

504.3.3 Connectors with longer lengths. Connectors with longer horizontal lengths than those listed in Section 504.3.2 are permitted under the following conditions:

1. The maximum capacity (FAN Max or NAT Max) of the vent connector shall be reduced 10 percent for each additional multiple of the length allowed by Section 504.3.2. For example, the maximum length listed in Table 504.3.2 for a 4-inch (102 mm) connector is 6 feet (1829 mm). With a connector length greater than 6 feet (1829 mm) but not exceeding 12 feet (3658 mm), the maximum capacity must be reduced by 10 percent (0.90 × maximum vent connector capacity). With a connector length greater than 12 feet (3658 mm) but not exceeding 18 feet (5486 mm), the maximum capacity must be reduced by 20 percent (0.80 × maximum vent capacity).
2. For a connector serving a fan-assisted appliance, the minimum capacity (FAN Min) of the connector shall be determined by referring to the corresponding single-appliance table. For Type B double-wall connectors, Table 504.2(1) shall be used. For single-wall connectors, Table 504.2(2) shall be used. The height (H) and lateral (L) shall be measured according to the procedures for a single-appliance vent, as if the other appliances were not present.

504.3.4 Vent connector manifold. Where the vent connectors are combined prior to entering the vertical portion of the common vent to form a common vent manifold, the size of the common vent manifold and the common vent shall be determined by applying a 10-percent reduction (0.90 × maximum common vent capacity) to the common vent capacity part of the common vent tables. The length of the common vent connector manifold (L_m) shall not exceed $1^1/_2$ feet for each inch (18 mm per mm) of common vent connector manifold diameter (D).

504.3.5 Common vertical vent offset. Where the common vertical vent is *offset*, the maximum capacity of the common vent shall be reduced in accordance with Section 504.3.6. The horizontal length of the common vent *offset* (L_o) shall not exceed $1^1/_2$ feet for each inch (18 mm per mm) of common vent diameter (D). Where multiple offsets occur in a common vent, the total horizontal length of

TABLE 504.3.2
MAXIMUM VENT CONNECTOR LENGTH

CONNECTOR DIAMETER (inches)	CONNECTOR MAXIMUM HORIZONTAL LENGTH (feet)
3	$4^1/_2$
4	6
5	$7^1/_2$
6	9
7	$10^1/_2$
8	12
9	$13^1/_2$
10	15
12	18
14	21
16	24
18	27
20	30
22	33
24	36

For SI: 1 inch = 25.4 mm, 1 foot = 304.8 mm.

INTERNATIONAL CODE COUNCIL®
Copyright © 2019 ICC & NYSDOS. ALL RIGHTS RESERVED. Accessed by Lauren Gualdino (lgualdino@briarcliffmanor.org), (-) Order Number #100880972 on May 08, 2020 07:05 AM (PDT) pursuant to License Agreement with ICC & NYSDOS. No further reproduction, no

100880972

all offsets combined shall not exceed $1^1/_2$ feet for each inch (18 mm per mm) of common vent diameter (*D*).

504.3.6 Elbows in vents. For each elbow up to and including 45 degrees (0.79 rad) in the common vent, the maximum common vent capacity listed in the venting tables shall be reduced by 5 percent. For each elbow greater than 45 degrees (0.79 rad) up to and including 90 degrees (1.57 rad), the maximum common vent capacity listed in the venting tables shall be reduced by 10 percent.

504.3.7 Elbows in connectors. The vent connector capacities listed in the common vent sizing tables include allowance for two 90-degree (1.57 rad) elbows. For each additional elbow up to and including 45 degrees (0.79 rad), the maximum vent connector capacity listed in the venting tables shall be reduced by 5 percent. For each elbow greater than 45 degrees (0.79 rad) up to and including 90 degrees (1.57 rad), the maximum vent connector capacity listed in the venting tables shall be reduced by 10 percent.

504.3.8 Common vent minimum size. The cross-sectional area of the common vent shall be equal to or greater than the cross-sectional area of the largest connector.

504.3.9 Common vent fittings. At the point where tee or wye fittings connect to a common vent, the opening size of the fitting shall be equal to the size of the common vent. Such fittings shall not be prohibited from having reduced-size openings at the point of connection of appliance vent connectors.

504.3.9.1 Tee and wye fittings. Tee and wye fittings connected to a common gas vent shall be considered to be part of the common gas vent and shall be constructed of materials consistent with that of the common gas vent.

504.3.10 High-altitude installations. Sea-level input ratings shall be used when determining maximum capacity for high-altitude installation. Actual input (derated for altitude) shall be used for determining minimum capacity for high-altitude installation.

504.3.11 Connector rise measurement. Connector rise (*R*) for each appliance connector shall be measured from the draft hood outlet or flue collar to the centerline where the vent gas streams come together.

504.3.12 Vent height measurement. For multiple appliances all located on one floor, available total height (*H*) shall be measured from the highest draft hood outlet or flue collar up to the level of the outlet of the common vent.

504.3.13 Multistory height measurement. For multistory installations, available total height (*H*) for each segment of the system shall be the vertical distance between the highest draft hood outlet or flue collar entering that segment and the centerline of the next higher interconnection tee.

504.3.14 Multistory lowest portion sizing. The size of the lowest connector and of the vertical vent leading to the lowest interconnection of a multistory system shall be in accordance with Table 504.2(1) or 504.2(2) for available total height (*H*) up to the lowest interconnection.

504.3.15 Multistory common vents. Where used in multistory systems, vertical common vents shall be Type B double wall and shall be installed with a *listed* vent cap.

504.3.16 Multistory common vent offsets. *Offsets* in multistory common vent systems shall be limited to a single *offset* in each system, and systems with an *offset* shall comply with all of the following:

1. The *offset* angle shall not exceed 45 degrees (0.79 rad) from vertical.
2. The horizontal length of the *offset* shall not exceed $1^1/_2$ feet for each inch (18 mm per mm) of common vent diameter of the segment in which the *offset* is located.
3. For the segment of the common vertical vent containing the *offset,* the common vent capacity listed in the common venting tables shall be reduced by 20 percent (0.80 × maximum common vent capacity).
4. A multistory common vent shall not be reduced in size above the *offset.*

504.3.17 Vertical vent maximum size. Where two or more appliances are connected to a vertical vent or chimney, the flow area of the largest section of vertical vent or chimney shall not exceed seven times the smallest listed appliance categorized vent areas, flue collar area or draft hood outlet area unless designed in accordance with *approved* engineering methods.

504.3.18 Multiple input rate appliances. For appliances with more than one input rate, the minimum vent connector capacity (FAN Min) determined from the tables shall be less than the lowest appliance input rating, and the maximum vent connector capacity (FAN Max or NAT Max) determined from the tables shall be greater than the highest appliance input rating.

504.3.19 Liner system sizing and connections. Listed, corrugated metallic chimney liner systems in masonry chimneys shall be sized by using Table 504.3(1) or 504.3(2) for Type B vents, with the maximum capacity reduced by 20 percent (0.80 × maximum capacity) and the minimum capacity as shown in Table 504.3(1) or 504.3(2). Corrugated metallic liner systems installed with bends or offsets shall have their maximum capacity further reduced in accordance with Sections 504.3.5 and 504.3.6. The 20-percent reduction for corrugated metallic chimney liner systems includes an allowance for one long-radius 90-degree (1.57 rad) turn at the bottom of the liner. Where double-wall connectors are required, tee and wye fittings used to connect to the common vent chimney liner shall be listed double-wall fittings. Connections between chimney liners and listed double-wall fittings shall be made with listed adapter fittings designed for such purpose.

504.3.20 Chimney and vent location. Tables 504.3(1), 504.3(2), 504.3(3), 504.3(4) and 504.3(5) shall be used only for chimneys and vents not exposed to the outdoors below the roof line. A Type B vent or *listed* chimney lining system passing through an unused masonry chimney flue shall not be considered to be exposed to the outdoors. Where vents extend outdoors above the roof more than 5 feet (1524 mm) higher than required by Figure 503.6.5 and

INTERNATIONAL CODE COUNCIL®
Copyright © 2019 ICC & NYSDOS. ALL RIGHTS RESERVED. Accessed by Lauren Gualdino (lgualdino@briarcliffmanor.org), (-) Order Number #100880972 on May 08, 2020 07:05 AM (PDT) pursuant to License Agreement with ICC & NYSDOS. No further reproduction, no

100880972

where vents terminate in accordance with Section 503.6.5, Item 2, the outdoor portion of the vent shall be enclosed as required by this section for vents not considered to be exposed to the outdoors or such venting system shall be engineered. A Type B vent shall not be considered to be exposed to the outdoors where it passes through an unventilated enclosure or chase insulated to a value of not less than R8.

Tables 504.3(6a), 504.3(6b), 504.3(7a) and 504.3(7b) shall be used for clay-tile-lined *exterior masonry chimneys,* provided that all of the following conditions are met:

1. Vent connectors are Type B double wall.
2. Not less than one appliance is draft hood equipped.
3. The combined appliance input rating is less than the maximum capacity given by Table 504.3(6a) for NAT+NAT or Table 504.3(7a) for FAN+NAT.
4. The input rating of each space-heating appliance is greater than the minimum input rating given by Table 504.3(6b) for NAT+NAT or Table 504.3(7b) for FAN+NAT.
5. The vent connector sizing is in accordance with Table 504.3(3).

504.3.21 Connector maximum and minimum size. Vent connectors shall not be increased in size more than two sizes greater than the listed appliance categorized vent diameter, flue collar diameter or draft hood outlet diameter. Vent connectors for draft hood-equipped appliances shall not be smaller than the draft hood outlet diameter. Where a vent connector size(s) determined from the tables for a fan-assisted appliance(s) is smaller than the flue collar diameter, the use of the smaller size(s) shall be permitted provided that the installation complies with all of the following conditions:

1. Vent connectors for fan-assisted appliance flue collars 12 inches (305mm) in diameter or smaller are not reduced by more than one table size [for example, 12 inches to 10 inches (305 mm to 254 mm) is a one-size reduction] and those larger than 12 inches (305 mm) in diameter are not reduced more than two table sizes [for example, 24 inches to 20 inches (610 mm to 508 mm) is a two-size reduction].
2. The fan-assisted appliance(s) is common vented with a draft-hood-equipped appliance(s).
3. The vent connector has a smooth interior wall.

504.3.22 Component commingling. Combinations of pipe sizes and combinations of single-wall and double-wall metal pipe shall be allowed within any connector run(s) or within the common vent, provided that all of the appropriate tables permit all of the desired sizes and types of pipe, as if they were used for the entire length of the subject connector or vent. Where single-wall and Type B double-wall metal pipes are used for vent connectors within the same venting system, the common vent must be sized using Table 504.3(2) or 504.3(4), as appropriate.

504.3.23 Draft hood conversion accessories. Draft hood conversion accessories for use with masonry chimneys venting listed Category I fan-assisted appliances shall be listed and installed in accordance with the manufacturer's instructions for such listed accessories.

504.3.24 Multiple sizes permitted. Where a table permits more than one diameter of pipe to be used for a connector or vent, all the permitted sizes shall be permitted to be used.

504.3.25 Table interpolation. Interpolation shall be permitted in calculating capacities for vent dimensions that fall between table entries.

504.3.26 Extrapolation prohibited. Extrapolation beyond the table entries shall not be permitted.

504.3.27 Engineering calculations. For vent heights less than 6 feet (1829 mm) and greater than shown in the tables, engineering methods shall be used to calculate vent capacities.

504.3.28 Height entries. Where the actual height of a vent falls between entries in the height column of the applicable table in Tables 504.3(1) through 504.3(7b), either interpolation shall be used or the lower appliance input rating shown in the table shall be used for FAN MAX and NAT MAX column values and the higher appliance input rating shall be used for the FAN MIN column values.

SECTION 505
DIRECT-VENT, INTEGRAL VENT, MECHANICAL VENT AND VENTILATION/EXHAUST HOOD VENTING

505.1 General. The installation of direct-vent and integral vent appliances shall be in accordance with Section 503. Mechanical venting systems and exhaust hood venting systems shall be designed and installed in accordance with Section 503.

505.1.1 Commercial cooking appliances vented by exhaust hoods. Where commercial cooking appliances are vented by means of the Type I or II kitchen exhaust hood system that serves such appliances, the exhaust system shall be fan powered and the appliances shall be interlocked with the exhaust hood system to prevent appliance operation when the exhaust hood system is not operating. The method of interlock between the exhaust hood system and the appliances equipped with standing pilot burner ignition systems shall not cause such pilots to be extinguished. Where a solenoid valve is installed in the gas *piping* as part of an interlock system, gas *piping* shall not be installed to bypass such valve. Dampers shall not be installed in the exhaust system.

Exception: An interlock between the cooking appliance(s) and the exhaust hood system shall not be required where heat sensors or other *approved* methods automatically activate the exhaust hood system when cooking operations occur.

INTERNATIONAL CODE COUNCIL®
Copyright © 2019 ICC & NYSDOS. ALL RIGHTS RESERVED. Accessed by Lauren Gualdino (lgualdino@briarcliffmanor.org), (-) Order Number #100880972 on May 08, 2020 07:05 AM (PDT) pursuant to License Agreement with ICC & NYSDOS. No further reproduction, no

100880972

SECTION 506
FACTORY-BUILT CHIMNEYS

506.1 Building heating appliances. Factory-built chimneys for building heating appliances producing flue gases having a temperature not greater than 1,000°F (538°C), measured at the entrance to the chimney, shall be listed and *labeled* in accordance with UL 103 and shall be installed and terminated in accordance with the manufacturer's instructions.

506.2 Support. Where factory-built chimneys are supported by structural members, such as joists and rafters, such members shall be designed to support the additional load.

506.3 Medium-heat appliances. Factory-built chimneys for medium-heat appliances producing flue gases having a temperature above 1,000°F (538°C), measured at the entrance to the chimney, shall be listed and *labeled* in accordance with UL 959 and shall be installed and terminated in accordance with the manufacturer's instructions.

INTERNATIONAL CODE COUNCIL®
Copyright © 2019 ICC & NYSDOS. ALL RIGHTS RESERVED. Accessed by Lauren Gualdino (lgualdino@briarcliffmanor.org), (-) Order Number #100880972 on May 08, 2020 07:05 AM (PDT) pursuant to License Agreement with ICC & NYSDOS. No further reproduction, no

Copyright © 2019 ICC & NYSDOS. ALL RIGHTS RESERVED. Accessed by Lauren Gualdino (lgualdino@briarcliffmanor.org). (-) Order Number #100880972 on May 08, 2020 07:05 AM (PDT) pursuant to License Agreement with ICC & NYSDOS. No further reproduction, no

TABLE 504.2(1)
TYPE B DOUBLE-WALL GAS VENT

Number of Appliances	Single
Appliance Type	Category I
Appliance Vent Connection	Connected directly to vent

HEIGHT *(H)* (feet)	LATERAL *(L)* (feet)	VENT DIAMETER—*(D)* inches																					
		3			4			5			6			7			8			9			
		APPLIANCE INPUT RATING IN THOUSANDS OF BTU/H																					
		FAN		NAT	FAN		NAT	FAN		NAT	FAN		NAT	FAN		NAT	FAN		NAT	FAN		NAT
		Min	Max	Max	Min	Max	Max	Min	Max	Max	Min	Max	Max	Min	Max	Max	Min	Max	Max	Min	Max	Max
6	0	0	78	46	0	152	86	0	251	141	0	375	205	0	524	285	0	698	370	0	897	470
	2	13	51	36	18	97	67	27	157	105	32	232	157	44	321	217	53	425	285	63	543	370
	4	21	49	34	30	94	64	39	153	103	50	227	153	66	316	211	79	419	279	93	536	362
	6	25	46	32	36	91	61	47	149	100	59	223	149	78	310	205	93	413	273	110	530	354
8	0	0	84	50	0	165	94	0	276	155	0	415	235	0	583	320	0	780	415	0	1,006	537
	2	12	57	40	16	109	75	25	178	120	28	263	180	42	365	247	50	483	322	60	619	418
	5	23	53	38	32	103	71	42	171	115	53	255	173	70	356	237	83	473	313	99	607	407
	8	28	49	35	39	98	66	51	164	109	64	247	165	84	347	227	99	463	303	117	596	396
10	0	0	88	53	0	175	100	0	295	166	0	447	255	0	631	345	0	847	450	0	1,096	585
	2	12	61	42	17	118	81	23	194	129	26	289	195	40	402	273	48	533	355	57	684	457
	5	23	57	40	32	113	77	41	187	124	52	280	188	68	392	263	81	522	346	95	671	446
	10	30	51	36	41	104	70	54	176	115	67	267	175	88	376	245	104	504	330	122	651	427
15	0	0	94	58	0	191	112	0	327	187	0	502	285	0	716	390	0	970	525	0	1,263	682
	2	11	69	48	15	136	93	20	226	150	22	339	225	38	475	316	45	633	414	53	815	544
	5	22	65	45	30	130	87	39	219	142	49	330	217	64	463	300	76	620	403	90	800	529
	10	29	59	41	40	121	82	51	206	135	64	315	208	84	445	288	99	600	386	116	777	507
	15	35	53	37	48	112	76	61	195	128	76	301	198	98	429	275	115	580	373	134	755	491
20	0	0	97	61	0	202	119	0	349	202	0	540	307	0	776	430	0	1,057	575	0	1,384	752
	2	10	75	51	14	149	100	18	250	166	20	377	249	33	531	346	41	711	470	50	917	612
	5	21	71	48	29	143	96	38	242	160	47	367	241	62	519	337	73	697	460	86	902	599
	10	28	64	44	38	133	89	50	229	150	62	351	228	81	499	321	95	675	443	112	877	576
	15	34	58	40	46	124	84	59	217	142	73	337	217	94	481	308	111	654	427	129	853	557
	20	48	52	35	55	116	78	69	206	134	84	322	206	107	464	295	125	634	410	145	830	537

(continued)

100880972

TABLE 504.2(1)—continued
TYPE B DOUBLE-WALL GAS VENT

Number of Appliances	Single
Appliance Type	Category I
Appliance Vent Connection	Connected directly to vent

HEIGHT *(H)* (feet)	LATERAL *(L)* (feet)	VENT DIAMETER—*(D)* inches																				
		3			4			5			6			7			8			9		
		APPLIANCE INPUT RATING IN THOUSANDS OF BTU/H																				
		FAN		NAT	FAN		NAT	FAN		NAT	FAN		NAT	FAN		NAT	FAN		NAT	FAN		NAT
		Min	Max	Max	Min	Max	Max	Min	Max	Max	Min	Max	Max	Min	Max	Max	Min	Max	Max	Min	Max	Max
30	0	0	100	64	0	213	128	0	374	220	0	587	336	0	853	475	0	1,173	650	0	1,548	855
	2	9	81	56	13	166	112	14	283	185	18	432	280	27	613	394	33	826	535	42	1,072	700
	5	21	77	54	28	160	108	36	275	176	45	421	273	58	600	385	69	811	524	82	1,055	688
	10	27	70	50	37	150	102	48	262	171	59	405	261	77	580	371	91	788	507	107	1,028	668
	15	33	64	NA	44	141	96	57	249	163	70	389	249	90	560	357	105	765	490	124	1,002	648
	20	56	58	NA	53	132	90	66	237	154	80	374	237	102	542	343	119	743	473	139	977	628
	30	NA	NA	NA	73	113	NA	88	214	NA	104	346	219	131	507	321	149	702	444	171	929	594
50	0	0	101	67	0	216	134	0	397	232	0	633	363	0	932	518	0	1,297	708	0	1,730	952
	2	8	86	61	11	183	122	14	320	206	15	497	314	22	715	445	26	975	615	33	1,276	813
	5	20	82	NA	27	177	119	35	312	200	43	487	308	55	702	438	65	960	605	77	1,259	798
	10	26	76	NA	35	168	114	45	299	190	56	471	298	73	681	426	86	935	589	101	1,230	773
	15	59	70	NA	42	158	NA	54	287	180	66	455	288	85	662	413	100	911	572	117	1,203	747
	20	NA	NA	NA	50	149	NA	63	275	169	76	440	278	97	642	401	113	888	556	131	1,176	722
	30	NA	NA	NA	69	131	NA	84	250	NA	99	410	259	123	605	376	141	844	522	161	1,125	670
100	0	NA	NA	NA	0	218	NA	0	407	NA	0	665	400	0	997	560	0	1,411	770	0	1,908	1,040
	2	NA	NA	NA	10	194	NA	12	354	NA	13	566	375	18	831	510	21	1,155	700	25	1,536	935
	5	NA	NA	NA	26	189	NA	33	347	NA	40	557	369	52	820	504	60	1,141	692	71	1,519	926
	10	NA	NA	NA	33	182	NA	43	335	NA	53	542	361	68	801	493	80	1,118	679	94	1,492	910
	15	NA	NA	NA	40	174	NA	50	321	NA	62	528	353	80	782	482	93	1,095	666	109	1,465	895
	20	NA	NA	NA	47	166	NA	59	311	NA	71	513	344	90	763	471	105	1,073	653	122	1,438	880
	30	NA	NA	NA	NA	NA	NA	78	290	NA	92	483	NA	115	726	449	131	1,029	627	149	1,387	849
	50	NA	NA	NA	NA	NA	NA	NA	NA	NA	147	428	NA	180	651	405	197	944	575	217	1,288	787

(continued)

Copyright © 2019 ICC & NYSDOS. ALL RIGHTS RESERVED. Accessed by Lauren Gualdino (lgualdino@briarcliffmanor.org). (-) Order Number #100880972 on May 08, 2020 07:05 AM (PDT) pursuant to License Agreement with ICC & NYSDOS. No further reproduction, no

100880972

TABLE 504.2(1)—continued
TYPE B DOUBLE-WALL GAS VENT

Number of Appliances	Single
Appliance Type	Category I
Appliance Vent Connection	Connected directly to vent

HEIGHT (*H*) (feet)	LATERAL (*L*) (feet)	VENT DIAMETER—(*D*) inches																							
		10			12			14			16			18			20			22			24		
		APPLIANCE INPUT RATING IN THOUSANDS OF BTU/H																							
		FAN		NAT	FAN		NAT	FAN		NAT	FAN		NAT	FAN		NAT	FAN		NAT	FAN		NAT	FAN		NAT
		Min	Max	Max	Min	Max	Max	Min	Max	Max	Min	Max	Max	Min	Max	Max	Min	Max	Max	Min	Max	Max	Min	Max	Max
6	0	0	1,121	570	0	1,645	850	0	2,267	1,170	0	2,983	1,530	0	3,802	1,960	0	4,721	2,430	0	5,737	2,950	0	6,853	3,520
	2	75	675	455	103	982	650	138	1,346	890	178	1,769	1,170	225	2,250	1,480	296	2,782	1,850	360	3,377	2,220	426	4,030	2,670
	4	110	668	445	147	975	640	191	1,338	880	242	1,761	1,160	300	2,242	1,475	390	2,774	1,835	469	3,370	2,215	555	4,023	2,660
	6	128	661	435	171	967	630	219	1,330	870	276	1,753	1,150	341	2,235	1,470	437	2,767	1,820	523	3,363	2,210	618	4,017	2,650
8	0	0	1,261	660	0	1,858	970	0	2,571	1,320	0	3,399	1,740	0	4,333	2,220	0	5,387	2,750	0	6,555	3,360	0	7,838	4,010
	2	71	770	515	98	1,124	745	130	1,543	1,020	168	2,030	1,340	212	2,584	1,700	278	3,196	2,110	336	3,882	2,560	401	4,634	3,050
	5	115	758	503	154	1,110	733	199	1,528	1,010	251	2,013	1,330	311	2,563	1,685	398	3,180	2,090	476	3,863	2,545	562	4,612	3,040
	8	137	746	490	180	1,097	720	231	1,514	1,000	289	2,000	1,320	354	2,552	1,670	450	3,163	2,070	537	3,850	2,530	630	4,602	3,030
10	0	0	1,377	720	0	2,036	1,060	0	2,825	1,450	0	3,742	1,925	0	4,782	2,450	0	5,955	3,050	0	7,254	3,710	0	8,682	4,450
	2	68	852	560	93	1,244	850	124	1,713	1,130	161	2,256	1,480	202	2,868	1,890	264	3,556	2,340	319	4,322	2,840	378	5,153	3,390
	5	112	839	547	149	1,229	829	192	1,696	1,105	243	2,238	1,461	300	2,849	1,871	382	3,536	2,318	458	4,301	2,818	540	5,132	3,371
	10	142	817	525	187	1,204	795	238	1,669	1,080	298	2,209	1,430	364	2,818	1,840	459	3,504	2,280	546	4,268	2,780	641	5,099	3,340
15	0	0	1,596	840	0	2,380	1,240	0	3,323	1,720	0	4,423	2,270	0	5,678	2,900	0	7,099	3,620	0	8,665	4,410	0	10,393	5,300
	2	63	1,019	675	86	1,495	985	114	2,062	1,350	147	2,719	1,770	186	3,467	2,260	239	4,304	2,800	290	5,232	3,410	346	6,251	4,080
	5	105	1,003	660	140	1,476	967	182	2,041	1,327	229	2,696	1,748	283	3,442	2,235	355	4,278	2,777	426	5,204	3,385	501	6,222	4,057
	10	135	977	635	177	1,446	936	227	2,009	1,289	283	2,659	1,712	346	3,402	2,193	432	4,234	2,739	510	5,159	3,343	599	6,175	4,019
	15	155	953	610	202	1,418	905	257	1,976	1,250	318	2,623	1,675	385	3,363	2,150	479	4,192	2,700	564	5,115	3,300	665	6,129	3,980
20	0	0	1,756	930	0	2,637	1,350	0	3,701	1,900	0	4,948	2,520	0	6,376	3,250	0	7,988	4,060	0	9,785	4,980	0	11,753	6,000
	2	59	1,150	755	81	1,694	1,100	107	2,343	1,520	139	3,097	2,000	175	3,955	2,570	220	4,916	3,200	269	5,983	3,910	321	7,154	4,700
	5	101	1,133	738	135	1,674	1,079	174	2,320	1,498	219	3,071	1,978	270	3,926	2,544	337	4,885	3,174	403	5,950	3,880	475	7,119	4,662
	10	130	1,105	710	172	1,641	1,045	220	2,282	1,460	273	3,029	1,940	334	3,880	2,500	413	4,835	3,130	489	5,896	3,830	573	7,063	4,600
	15	150	1,078	688	195	1,609	1,018	248	2,245	1,425	306	2,988	1,910	372	3,835	2,465	459	4,786	3,090	541	5,844	3,795	631	7,007	4,575
	20	167	1,052	665	217	1,578	990	273	2,210	1,390	335	2,948	1,880	404	3,791	2,430	495	4,737	3,050	585	5,792	3,760	689	6,953	4,550

(continued)

INTERNATIONAL CODE COUNCIL®

Copyright © 2019 ICC & NYSDOS. ALL RIGHTS RESERVED. Accessed by Lauren Gualdino (lgualdino@briarcliffmanor.org). (-) Order Number #100880972 on May 08, 2020 07:05 AM (PDT) pursuant to License Agreement with ICC & NYSDOS. No further reproduction, no

100880972

TABLE 504.2(1)—continued
TYPE B DOUBLE-WALL GAS VENT

Number of Appliances	Single
Appliance Type	Category I
Appliance Vent Connection	Connected directly to vent

HEIGHT (H) (feet)	LATERAL (L) (feet)	VENT DIAMETER—(D) inches																							
		10			12			14			16			18			20			22			24		
		APPLIANCE INPUT RATING IN THOUSANDS OF BTU/H																							
		FAN		NAT	FAN		NAT	FAN		NAT	FAN		NAT	FAN		NAT	FAN		NAT	FAN		NAT	FAN		NAT
		Min	Max	Max	Min	Max	Max	Min	Max	Max	Min	Max	Max	Min	Max	Max	Min	Max	Max	Min	Max	Max	Min	Max	Max
30	0	0	1,977	1,060	0	3,004	1,550	0	4,252	2,170	0	5,725	2,920	0	7,420	3,770	0	9,341	4,750	0	11,483	5,850	0	13,848	7,060
	2	54	1,351	865	74	2,004	1,310	98	2,786	1,800	127	3,696	2,380	159	4,734	3,050	199	5,900	3,810	241	7,194	4,650	285	8,617	5,600
	5	96	1,332	851	127	1,981	1,289	164	2,759	1,775	206	3,666	2,350	252	4,701	3,020	312	5,863	3,783	373	7,155	4,622	439	8,574	5,552
	10	125	1,301	829	164	1,944	1,254	209	2,716	1,733	259	3,617	2,300	316	4,647	2,970	386	5,803	3,739	456	7,090	4,574	535	8,505	5,471
	15	143	1,272	807	187	1,908	1,220	237	2,674	1,692	292	3,570	2,250	354	4,594	2,920	431	5,744	3,695	507	7,026	4,527	590	8,437	5,391
	20	160	1,243	784	207	1,873	1,185	260	2,633	1,650	319	3,523	2,200	384	4,542	2,870	467	5,686	3,650	548	6,964	4,480	639	8,370	5,310
	30	195	1,189	745	246	1,807	1,130	305	2,555	1,585	369	3,433	2,130	440	4,442	2,785	540	5,574	3,565	635	6,842	4,375	739	8,239	5,225
50	0	0	2,231	1,195	0	3,441	1,825	0	4,934	2,550	0	6,711	3,440	0	8,774	4,460	0	11,129	5,635	0	13,767	6,940	0	16,694	8,430
	2	41	1,620	1,010	66	2,431	1,513	86	3,409	2,125	113	4,554	2,840	141	5,864	3,670	171	7,339	4,630	209	8,980	5,695	251	10,788	6,860
	5	90	1,600	996	118	2,406	1,495	151	3,380	2,102	191	4,520	2,813	234	5,826	3,639	283	7,295	4,597	336	8,933	5,654	394	10,737	6,818
	10	118	1,567	972	154	2,366	1,466	196	3,332	2,064	243	4,464	2,767	295	5,763	3,585	355	7,224	4,542	419	8,855	5,585	491	10,652	6,749
	15	136	1,536	948	177	2,327	1,437	222	3,285	2,026	274	4,409	2,721	330	5,701	3,534	396	7,155	4,511	465	8,779	5,546	542	10,570	6,710
	20	151	1,505	924	195	2,288	1,408	244	3,239	1,987	300	4,356	2,675	361	5,641	3,481	433	7,086	4,479	506	8,704	5,506	586	10,488	6,670
	30	183	1,446	876	232	2,214	1,349	287	3,150	1,910	347	4,253	2,631	412	5,523	3,431	494	6,953	4,421	577	8,557	5,444	672	10,328	6,603
100	0	0	2,491	1,310	0	3,925	2,050	0	5,729	2,950	0	7,914	4,050	0	10,485	5,300	0	13,454	6,700	0	16,817	8,600	0	20,578	10,300
	2	30	1,975	1,170	44	3,027	1,820	72	4,313	2,550	95	5,834	3,500	120	7,591	4,600	138	9,577	5,800	169	11,803	7,200	204	14,264	8,800
	5	82	1,955	1,159	107	3,002	1,803	136	4,282	2,531	172	5,797	3,475	208	7,548	4,566	245	9,528	5,769	293	11,748	7,162	341	14,204	8,756
	10	108	1,923	1,142	142	2,961	1,775	180	4,231	2,500	223	5,737	3,434	268	7,478	4,509	318	9,447	5,717	374	11,658	7,100	436	14,105	8,683
	15	126	1,892	1,124	163	2,920	1,747	206	4,182	2,469	252	5,678	3,392	304	7,409	4,451	358	9,367	5,665	418	11,569	7,037	487	14,007	8,610
	20	141	1,861	1,107	181	2,880	1,719	226	4,133	2,438	277	5,619	3,351	330	7,341	4,394	387	9,289	5,613	452	11,482	6,975	523	13,910	8,537
	30	170	1,802	1,071	215	2,803	1,663	265	4,037	2,375	319	5,505	3,267	378	7,209	4,279	446	9,136	5,509	514	11,310	6,850	592	13,720	8,391
	50	241	1,688	1,000	292	2,657	1,550	350	3,856	2,250	415	5,289	3,100	486	6,956	4,050	572	8,841	5,300	659	10,979	6,600	752	13,354	8,100

For SI: 1 inch = 25.4 mm, 1 foot = 304.8 mm, 1 British thermal unit per hour = 0.2931 W.

Copyright © 2019 ICC & NYSDOS. ALL RIGHTS RESERVED. Accessed by Lauren Gualdino (lgualdino@briarcliffmanor.org) (-) Order Number #100880972 on May 08, 2020 07:05 AM (PDT) pursuant to License Agreement with ICC & NYSDOS. No further reproduction, no

100880972

TABLE 504.2(2)
TYPE B DOUBLE-WALL GAS VENT

Number of Appliances	Single
Appliance Type	Category I
Appliance Vent Connection	Single-wall metal connector

HEIGHT (*H*) (feet)	LATERAL (*L*) (feet)	VENT DIAMETER—(*D*) inches																											
		3			4			5			6			7			8			9			10			12				
		APPLIANCE INPUT RATING IN THOUSANDS OF BTU/H																											
		FAN		NAT	FAN		NAT	FAN		NAT	FAN		NAT	FAN		NAT	FAN		NAT	FAN		NAT	FAN		NAT	FAN		NAT		
		Min	Max	Max	Min	Max	Max	Min	Max	Max	Min	Max	Max	Min	Max	Max	Min	Max	Max	Min	Max	Max	Min	Max	Max	Min	Max	Max		
6	0	38	77	45	59	151	85	85	249	140	126	373	204	165	522	284	211	695	369	267	894	469	371	1,118	569	537	1.639	849		
	2	39	51	36	60	96	66	85	156	104	123	231	156	159	320	213	201	423	284	251	541	368	347	673	453	498	979	648		
	4	NA	NA	33	74	92	63	102	152	102	146	225	152	187	313	208	237	416	277	295	533	360	409	664	443	584	971	638		
	6	NA	NA	31	83	89	60	114	147	99	163	220	148	207	307	203	263	409	271	327	526	352	449	656	433	638	962	627		
8	0	37	83	50	58	164	93	83	273	154	123	412	234	161	580	319	206	777	414	258	1,002	536	360	1,257	658	521	1,852	967		
	2	39	56	39	59	108	75	83	176	119	121	261	179	155	363	246	197	482	321	246	617	417	339	768	513	486	1,120	743		
	5	NA	NA	37	77	102	69	107	168	114	151	252	171	193	352	235	245	470	311	305	604	404	418	754	500	598	1,104	730		
	8	NA	NA	33	90	95	64	122	161	107	175	243	163	223	342	225	280	458	300	344	591	392	470	740	486	665	1.089	715		
10	0	37	87	53	57	174	99	82	293	165	120	444	254	158	628	344	202	844	449	253	1,093	584	351	1,373	718	507	2,031	1,057		
	2	39	61	41	59	117	80	82	193	128	119	287	194	153	400	272	193	531	354	242	681	456	332	849	559	475	1,242	848		
	5	52	56	39	76	111	76	105	185	122	148	277	186	190	388	261	241	518	344	299	667	443	409	834	544	584	1,224	825		
	10	NA	NA	34	97	100	68	132	171	112	188	261	171	237	369	241	296	497	325	363	643	423	492	808	520	688	1,194	788		
15	0	36	93	57	56	190	111	80	325	186	116	499	283	153	713	388	195	966	523	244	1.259	681	336	1.591	838	488	2,374	1,237		
	2	38	69	47	57	136	93	80	225	149	115	337	224	148	473	314	187	631	413	232	812	543	319	1,015	673	457	1.491	983		
	5	51	63	44	75	128	86	102	216	140	144	326	217	182	459	298	231	616	400	287	795	526	392	997	657	562	1,469	963		
	10	NA	NA	39	95	116	79	128	201	131	182	308	203	228	438	284	284	592	381	349	768	501	470	966	628	664	1,433	928		
	15	NA	NA	NA	NA	NA	72	158	186	124	220	290	192	272	418	269	334	568	367	404	742	484	540	937	601	750	1,399	894		
20	0	35	96	60	54	200	118	78	346	201	114	537	306	149	772	428	190	1,053	573	238	1,379	750	326	1,751	927	473	2,631	1,346		
	2	37	74	50	56	148	99	78	248	165	113	375	248	144	528	344	182	708	468	227	914	611	309	1,146	754	443	1.689	1.098		
	5	50	68	47	73	140	94	100	239	158	141	363	239	178	514	334	224	692	457	279	896	596	381	1,126	734	547	1,665	1,074		
	10	NA	NA	41	93	129	86	125	223	146	177	344	224	222	491	316	277	666	437	339	866	570	457	1,092	702	646	1,626	1,037		
	15	NA	NA	NA	NA	NA	80	155	208	136	216	325	210	264	469	301	325	640	419	393	838	549	526	1,060	677	730	1,587	1,005		
	20	NA	NA	NA	NA	NA	NA	186	192	126	254	306	196	309	448	285	374	616	400	448	810	526	592	1,028	651	808	1,550	973		

(continued)

Copyright © 2019 ICC & NYSDOS. ALL RIGHTS RESERVED. Accessed by Lauren Guaidino (lguaidino@briarcliffmanor.org). (-) Order Number #100880972 on May 08, 2020 07:05 AM (PDT) pursuant to License Agreement with ICC & NYSDOS. No further reproduction, no

100880972

TABLE 504.2(2)—continued
TYPE B DOUBLE-WALL GAS VENT

Number of Appliances	Single
Appliance Type	Category I
Appliance Vent Connection	Single-wall metal connector

HEIGHT (H) (feet)	LATERAL (L) (feet)	VENT DIAMETER—(D) inches																											
		3			4			5			6			7			8			9			10			12				
		APPLIANCE INPUT RATING IN THOUSANDS OF BTU/H																											
		FAN		NAT	FAN		NAT	FAN		NAT	FAN		NAT	FAN		NAT	FAN		NAT	FAN		NAT	FAN		NAT	FAN		NAT		
		Min	Max	Max	Min	Max	Max	Min	Max	Max	Min	Max	Max	Min	Max	Max	Min	Max	Max	Min	Max	Max	Min	Max	Max	Min	Max	Max		
30	0	34	99	63	53	211	127	76	372	219	110	584	334	144	849	472	184	1,168	647	229	1,542	852	312	1.971	1,056	454	2,996	1,545		
	2	37	80	56	55	164	111	76	281	183	109	429	279	139	610	392	175	823	533	219	1,069	698	296	1,346	863	424	1,999	1,308		
	5	49	74	52	72	157	106	98	271	173	136	417	271	171	595	382	215	806	521	269	1,049	684	366	1,324	846	524	1,971	1,283		
	10	NA	NA	NA	91	144	98	122	255	168	171	397	257	213	570	367	265	777	501	327	1,017	662	440	1,287	821	620	1,927	1,234		
	15	NA	NA	NA	115	131	NA	151	239	157	208	377	242	255	547	349	312	750	481	379	985	638	507	1,251	794	702	1,884	1,205		
	20	NA	NA	NA	NA	NA	NA	181	223	NA	246	357	228	298	524	333	360	723	461	433	955	615	570	1,216	768	780	1,841	1,166		
	30	NA	NA	NA	NA	NA	NA	NA	NA	NA	NA	NA	NA	389	477	305	461	670	426	541	895	574	704	1,147	720	937	1.759	1,101		
50	0	33	99	66	51	213	133	73	394	230	105	629	361	138	928	515	176	1,292	704	220	1,724	948	295	2,223	1,189	428	3,432	1,818		
	2	36	84	61	53	181	121	73	318	205	104	495	312	133	712	443	168	971	613	209	1,273	811	280	1,615	1,007	401	2,426	1,509		
	5	48	80	NA	70	174	117	94	308	198	131	482	305	164	696	435	204	953	602	257	1,252	795	347	1,591	991	496	2,396	1,490		
	10	NA	NA	NA	89	160	NA	118	292	186	162	461	292	203	671	420	253	923	583	313	1,217	765	418	1,551	963	589	2,347	1,455		
	15	NA	NA	NA	112	148	NA	145	275	174	199	441	280	244	646	405	299	894	562	363	1,183	736	481	1,512	934	668	2,299	1,421		
	20	NA	NA	NA	NA	NA	NA	176	257	NA	236	420	267	285	622	389	345	866	543	415	1,150	708	544	1,473	906	741	2,251	1,387		
	30	NA	NA	NA	NA	NA	NA	NA	NA	NA	315	376	NA	373	573	NA	442	809	502	521	1,086	649	674	1,399	848	892	2,159	1,318		
100	0	NA	NA	NA	49	214	NA	69	403	NA	100	659	395	131	991	555	166	1,404	765	207	1,900	1,033	273	2,479	1,300	395	3,912	2,042		
	2	NA	NA	NA	51	192	NA	70	351	NA	98	563	373	125	828	508	158	1,152	698	196	1,532	933	259	1,970	1,168	371	3,021	1,817		
	5	NA	NA	NA	67	186	NA	90	342	NA	125	551	366	156	813	501	194	1,134	688	240	1,511	921	322	1,945	1,153	460	2,990	1,796		
	10	NA	NA	NA	85	175	NA	113	324	NA	153	532	354	191	789	486	238	1,104	672	293	1,477	902	389	1.905	1,133	547	2,938	1,763		
	15	NA	NA	NA	132	162	NA	138	310	NA	188	511	343	230	764	473	281	1,075	656	342	1,443	884	447	1,865	1,110	618	2,888	1,730		
	20	NA	NA	NA	NA	NA	NA	168	295	NA	224	487	NA	270	739	458	325	1,046	639	391	1,410	864	507	1,825	1,087	690	2,838	1,696		
	30	NA	NA	NA	NA	NA	NA	231	264	NA	301	448	NA	355	685	NA	418	988	NA	491	1,343	824	631	1,747	1,041	834	2,739	1,627		
	50	NA	NA	NA	NA	NA	NA	NA	NA	NA	NA	NA	NA	540	584	NA	617	866	NA	711	1,205	NA	895	1,591	NA	1,138	2,547	1,489		

For SI: 1 inch = 25.4 mm, 1 foot = 304.8 mm, 1 British thermal unit per hour = 0.2931 W.

INTERNATIONAL CODE COUNCIL®
Copyright © 2019 ICC & NYSDOS. ALL RIGHTS RESERVED. Accessed by Lauren Gualdino (lgualdino@briarcliffmanor.org) (-) Order Number #100880972 on May 08, 2020 07:05 AM (PDT) pursuant to License Agreement with ICC & NYSDOS. No further reproduction, no
100880972

TABLE 504.2(3)
MASONRY CHIMNEY

Number of Appliances	Single
Appliance Type	Category I
Appliance Vent Connection	Type B double-wall connector

HEIGHT (*H*) (feet)	LATERAL (*L*) (feet)	TYPE B DOUBLE-WALL CONNECTOR DIAMETER—(*D*) Inches to be used with chimney areas within the size limits at bottom																											
		3			4			5			6			7			8			9			10			12				
		APPLIANCE INPUT RATING IN THOUSANDS OF BTU/H																											
		FAN		NAT	FAN		NAT	FAN		NAT	FAN		NAT	FAN		NAT	FAN		NAT	FAN		NAT	FAN		NAT	FAN		NAT	FAN		NAT
		Min	Max	Max	Min	Max	Max	Min	Max	Max	Min	Max	Max	Min	Max	Max	Min	Max	Max	Min	Max	Max	Min	Max	Max	Min	Max	Max	Min	Max	Max
6	2	NA	NA	28	NA	NA	52	NA	NA	86	NA	NA	130	NA	NA	180	NA	NA	247	NA	NA	320	NA	NA	401	NA	NA	581			
	5	NA	NA	25	NA	NA	49	NA	NA	82	NA	NA	117	NA	NA	165	NA	NA	231	NA	NA	298	NA	NA	376	NA	NA	561			
8	2	NA	NA	29	NA	NA	55	NA	NA	93	NA	NA	145	NA	NA	198	NA	NA	266	84	590	350	100	728	446	139	1,024	651		
	5	NA	NA	26	NA	NA	52	NA	NA	88	NA	NA	134	NA	NA	183	NA	NA	247	NA	NA	328	149	711	423	201	1,007	640		
	8	NA	NA	24	NA	NA	48	NA	NA	83	NA	NA	127	NA	NA	175	NA	NA	239	NA	NA	318	173	695	410	231	990	623		
10	2	NA	NA	31	NA	NA	61	NA	NA	103	NA	NA	162	NA	NA	221	68	519	298	82	655	388	98	810	491	136	1,144	724		
	5	NA	NA	28	NA	NA	57	NA	NA	96	NA	NA	148	NA	NA	204	NA	NA	277	124	638	365	146	791	466	196	1,124	712		
	10	NA	NA	25	NA	NA	50	NA	NA	87	NA	NA	139	NA	NA	191	NA	NA	263	155	610	347	182	762	444	240	1,093	668		
15	2	NA	NA	35	NA	NA	67	NA	NA	114	NA	NA	179	53	475	250	64	613	336	77	779	441	92	968	562	127	1,376	841		
	5	NA	NA	35	NA	NA	62	NA	NA	107	NA	NA	164	NA	NA	231	99	594	313	118	759	416	139	946	533	186	1,352	828		
	10	NA	NA	28	NA	NA	55	NA	NA	97	NA	NA	153	NA	NA	216	126	565	296	148	727	394	173	912	567	229	1,315	777		
	15	NA	NA	NA	NA	NA	48	NA	NA	89	NA	NA	141	NA	NA	201	NA	NA	281	171	698	375	198	880	485	259	1,280	742		
20	2	NA	NA	38	NA	NA	74	NA	NA	124	NA	NA	201	51	522	274	61	678	375	73	867	491	87	1,083	627	121	1,548	953		
	5	NA	NA	36	NA	NA	68	NA	NA	116	NA	NA	184	80	503	254	95	658	350	113	845	463	133	1,059	597	179	1,523	933		
	10	NA	NA	NA	NA	NA	60	NA	NA	107	NA	NA	172	NA	NA	237	122	627	332	143	811	440	167	1,022	566	221	1,482	879		
	15	NA	NA	NA	NA	NA	NA	NA	NA	97	NA	NA	159	NA	NA	220	NA	NA	314	165	780	418	191	987	541	251	1,443	840		
	20	NA	NA	NA	NA	NA	NA	NA	NA	83	NA	NA	148	NA	NA	206	NA	NA	296	186	750	397	214	955	513	277	1,406	807		

(continued)

Copyright © 2019 ICC & NYSDOS. ALL RIGHTS RESERVED. Accessed by Lauren Gualdino (lgualdino@briarcliffmanor.org). (-) Order Number #100880972 on May 08, 2020 07:05 AM (PDT) pursuant to License Agreement with ICC & NYSDOS. No further reproduction, no

100880972

TABLE 504.2(3)—continued
MASONRY CHIMNEY

Number of Appliances	Single
Appliance Type	Category I
Appliance Vent Connection	Type B double-wall connector

HEIGHT *(H)* (feet)	LATERAL *(L)* (feet)	TYPE B DOUBLE-WALL CONNECTOR DIAMETER —*(D)* Inches to be used with chimney areas within the size limits at bottom																										
		3			4			5			6			7			8			9			10			12		
		APPLIANCE INPUT RATING IN THOUSANDS OF BTU/H																										
		FAN		NAT	FAN		NAT	FAN		NAT	FAN		NAT	FAN		NAT	FAN		NAT	FAN		NAT	FAN		NAT	FAN		NAT
		Min	Max	Max	Min	Max	Max	Min	Max	Max	Min	Max	Max	Min	Max	Max	Min	Max	Max	Min	Max	Max	Min	Max	Max	Min	Max	Max
30	2	NA	NA	41	NA	NA	82	NA	NA	137	NA	NA	216	47	581	303	57	762	421	68	985	558	81	1,240	717	111	1,793	1,112
	5	NA	NA	NA	NA	NA	76	NA	NA	128	NA	NA	198	75	561	281	90	741	393	106	962	526	125	1,216	683	169	1,766	1,094
	10	NA	NA	NA	NA	NA	67	NA	NA	115	NA	NA	184	NA	NA	263	115	709	373	135	927	500	158	1,176	648	210	1,721	1,025
	15	NA	NA	NA	NA	NA	NA	NA	NA	107	NA	NA	171	NA	NA	243	NA	NA	353	156	893	476	181	1,139	621	239	1,679	981
	20	NA	NA	NA	NA	NA	NA	NA	NA	91	NA	NA	159	NA	NA	227	NA	NA	332	176	860	450	203	1,103	592	264	1,638	940
	30	NA	NA	NA	NA	NA	NA	NA	NA	NA	NA	NA	NA	NA	NA	188	NA	NA	288	NA	NA	416	249	1,035	555	318	1,560	877
50	2	NA	NA	NA	NA	NA	92	NA	NA	161	NA	NA	251	NA	NA	351	51	840	477	61	1,106	633	72	1,413	812	99	2,080	1,243
	5	NA	NA	NA	NA	NA	NA	NA	NA	151	NA	NA	230	NA	NA	323	83	819	445	98	1,083	596	116	1,387	774	155	2,052	1,225
	10	NA	NA	NA	NA	NA	NA	NA	NA	138	NA	NA	215	NA	NA	304	NA	NA	424	126	1,047	567	147	1,347	733	195	2,006	1,147
	15	NA	NA	NA	NA	NA	NA	NA	NA	127	NA	NA	199	NA	NA	282	NA	NA	400	146	1,010	539	170	1,307	702	222	1,961	1,099
	20	NA	NA	NA	NA	NA	NA	NA	NA	NA	NA	NA	185	NA	NA	264	NA	NA	376	165	977	511	190	1,269	669	246	1,916	1,050
	30	NA	NA	NA	NA	NA	NA	NA	NA	NA	NA	NA	NA	NA	NA	NA	NA	NA	327	NA	NA	468	233	1,196	623	295	1,832	984
Minimum Internal Area of Chimney (square inches)		12			19			28			38			50			63			78			95			132		
Maximum Internal Area of Chimney (square inches)		Seven times the listed appliance categorized vent area, flue collar area or draft hood outlet area.																										

For SI: 1 inch = 25.4 mm, 1 square inch = 645.16 mm^2, 1 foot = 304.8 mm, 1 British thermal unit per hour = 0.2931 W.

Copyright © 2019 ICC & NYSDOS. ALL RIGHTS RESERVED. Accessed by Lauren Guaidino (lguaidino@briarcliffmanor.org). (-) Order Number #100880972 on May 08, 2020 07:05 AM (PDT) pursuant to License Agreement with ICC & NYSDOS. No further reproduction, no

100880972

TABLE 504.2(4)
MASONRY CHIMNEY

Number of Appliances	Single
Appliance Type	Category I
Appliance Vent Connection	Single-wall metal connector

HEIGHT (H) (feet)	LATERAL (L) (feet)	SINGLE-WALL METAL CONNECTOR DIAMETER—(D) Inches to be used with chimney areas within the size limits at bottom																											
		3			4			5			6			7			8			9			10			12				
		APPLIANCE INPUT RATING IN THOUSANDS OF BTU/H																											
		FAN		NAT	FAN		NAT	FAN		NAT	FAN		NAT	FAN		NAT	FAN		NAT	FAN		NAT	FAN		NAT	FAN		NAT		
		Min	Max	Max	Min	Max	Max	Min	Max	Max	Min	Max	Max	Min	Max	Max	Min	Max	Max	Min	Max	Max	Min	Max	Max	Min	Max	Max		
6	2	NA	NA	28	NA	NA	52	NA	NA	86	NA	NA	130	NA	NA	180	NA	NA	247	NA	NA	319	NA	NA	400	NA	NA	580		
	5	NA	NA	25	NA	NA	48	NA	NA	81	NA	NA	116	NA	NA	164	NA	NA	230	NA	NA	297	NA	NA	375	NA	NA	560		
8	2	NA	NA	29	NA	NA	55	NA	NA	93	NA	NA	145	NA	NA	197	NA	NA	265	NA	NA	349	382	725	445	549	1,021	650		
	5	NA	NA	26	NA	NA	51	NA	NA	87	NA	NA	133	NA	NA	182	NA	NA	246	NA	NA	327	NA	NA	422	673	1,003	638		
	8	NA	NA	23	NA	NA	47	NA	NA	82	NA	NA	126	NA	NA	174	NA	NA	237	NA	NA	317	NA	NA	408	747	985	621		
10	2	NA	NA	31	NA	NA	61	NA	NA	102	NA	NA	161	NA	NA	220	216	518	297	271	654	387	373	808	490	536	1,142	722		
	5	NA	NA	28	NA	NA	56	NA	NA	95	NA	NA	147	NA	NA	203	NA	NA	276	334	635	364	459	789	465	657	1,121	710		
	10	NA	NA	24	NA	NA	49	NA	NA	86	NA	NA	137	NA	NA	189	NA	NA	261	NA	NA	345	547	758	441	771	1,088	665		
15	2	NA	NA	35	NA	NA	67	NA	NA	113	NA	NA	178	166	473	249	211	611	335	264	776	440	362	965	560	520	1,373	840		
	5	NA	NA	32	NA	NA	61	NA	NA	106	NA	NA	163	NA	NA	230	261	591	312	325	775	414	444	942	531	637	1,348	825		
	10	NA	NA	27	NA	NA	54	NA	NA	96	NA	NA	151	NA	NA	214	NA	NA	294	392	722	392	531	907	504	749	1,309	774		
	15	NA	NA	NA	NA	NA	46	NA	NA	87	NA	NA	138	NA	NA	198	NA	NA	278	452	692	372	606	873	481	841	1,272	738		
20	2	NA	NA	38	NA	NA	73	NA	NA	123	NA	NA	200	163	520	273	206	675	374	258	864	490	252	1,079	625	508	1,544	950		
	5	NA	NA	35	NA	NA	67	NA	NA	115	NA	NA	183	80	NA	252	255	655	348	317	842	461	433	1,055	594	623	1,518	930		
	10	NA	NA	NA	NA	NA	59	NA	NA	105	NA	NA	170	NA	NA	235	312	622	330	382	806	437	517	1,016	562	733	1,475	875		
	15	NA	NA	NA	NA	NA	NA	NA	NA	95	NA	NA	156	NA	NA	217	NA	NA	311	442	773	414	591	979	539	823	1,434	835		
	20	NA	NA	NA	NA	NA	NA	NA	NA	80	NA	NA	144	NA	NA	202	NA	NA	292	NA	NA	392	663	944	510	911	1,394	800		

(continued)

Copyright © 2019 ICC & NYSDOS. ALL RIGHTS RESERVED. Accessed by Lauren Gualdino (lgualdino@briarcliffmanor.org). (-) Order Number #100880972 on May 08, 2020 07:05 AM (PDT) pursuant to License Agreement with ICC & NYSDOS. No further reproduction, no

TABLE 504.2(4)—continued
MASONRY CHIMNEY

Number of Appliances	Single
Appliance Type	Category I
Appliance Vent Connection	Single-wall metal connector

HEIGHT *(H)* (feet)	LATERAL *(L)* (feet)	SINGLE-WALL METAL CONNECTOR DIAMETER—*(D)* Inches to be used with chimney areas within the size limits at bottom																										
		3			4			5			6			7			8			9			10			12		
		APPLIANCE INPUT RATING IN THOUSANDS OF BTU/H																										
		FAN		NAT	FAN		NAT	FAN		NAT	FAN		NAT	FAN		NAT	FAN		NAT	FAN		NAT	FAN		NAT	FAN		NAT
		Min	Max	Max	Min	Max	Max	Min	Max	Max	Min	Max	Max	Min	Max	Max	Min	Max	Max	Min	Max	Max	Min	Max	Max	Min	Max	Max
30	2	NA	NA	41	NA	NA	81	NA	NA	136	NA	NA	215	158	578	302	200	759	420	249	982	556	340	1,237	715	489	1,789	1,110
	5	NA	NA	NA	NA	NA	75	NA	NA	127	NA	NA	196	NA	NA	279	245	737	391	306	958	524	417	1,210	680	600	1,760	1,090
	10	NA	NA	NA	NA	NA	66	NA	NA	113	NA	NA	182	NA	NA	260	300	703	370	370	920	496	500	1,168	644	708	1,713	1,020
	15	NA	NA	NA	NA	NA	NA	NA	NA	105	NA	NA	168	NA	NA	240	NA	NA	349	428	884	471	572	1,128	615	798	1,668	975
	20	NA	NA	NA	NA	NA	NA	NA	NA	88	NA	NA	155	NA	NA	223	NA	NA	327	NA	NA	445	643	1,089	585	883	1,624	932
	30	NA	NA	NA	NA	NA	NA	NA	NA	NA	NA	NA	NA	NA	NA	182	NA	NA	281	NA	NA	408	NA	NA	544	1,055	1,539	865
50	2	NA	NA	NA	NA	NA	91	NA	NA	160	NA	NA	250	NA	NA	350	191	837	475	238	1,103	631	323	1,408	810	463	2,076	1,240
	5	NA	NA	NA	NA	NA	NA	NA	NA	149	NA	NA	228	NA	NA	321	NA	NA	442	293	1,078	593	398	1,381	770	571	2,044	1,220
	10	NA	NA	NA	NA	NA	NA	NA	NA	136	NA	NA	212	NA	NA	301	NA	NA	420	355	1,038	562	447	1,337	728	674	1,994	1,140
	15	NA	NA	NA	NA	NA	NA	NA	NA	124	NA	NA	195	NA	NA	278	NA	NA	395	NA	NA	533	546	1,294	695	761	1,945	1,090
	20	NA	NA	NA	NA	NA	NA	NA	NA	NA	NA	NA	180	NA	NA	258	NA	NA	370	NA	NA	504	616	1,251	660	844	1,898	1,040
	30	NA	NA	NA	NA	NA	48	NA	NA	NA	NA	NA	NA	NA	NA	NA	NA	NA	318	NA	NA	458	NA	NA	610	1,009	1,805	970
Minimum Internal Area of Chimney (square inches)		12			19			28			38			50			63			78			95			132		
Maximum Internal Area of Chimney (square inches)		Seven times the listed appliance categorized vent area, flue collar area or draft hood outlet area.																										

For SI: 1 inch = 25.4 mm, 1 square inch = 645.16 mm^2, 1 foot = 304.8 mm, 1 British thermal unit per hour = 0.2931 W.

INTERNATIONAL CODE COUNCIL®
Copyright © 2019 ICC & NYSDOS. ALL RIGHTS RESERVED. Accessed by Lauren Gualdino (lgualdino@briarcliffmanor.org). (-) Order Number #100880972 on May 08, 2020 07:05 AM (PDT) pursuant to License Agreement with ICC & NYSDOS. No further reproduction, no

100880972

100880972

TABLE 504.2(5)
SINGLE-WALL METAL PIPE OR TYPE B ASBESTOS CEMENT VENT

Number of Appliances	Single
Appliance Type	Draft hood equipped
Appliance Vent Connection	Connected directly to pipe or vent

HEIGHT *(H)* (feet)	LATERAL *(L)* (feet)	VENT DIAMETER—*(D)* inches							
		3	4	5	6	7	8	10	12
		MAXIMUM APPLIANCE INPUT RATING IN THOUSANDS OF BTU/H							
6	0	39	70	116	170	232	312	500	750
	2	31	55	94	141	194	260	415	620
	5	28	51	88	128	177	242	390	600
8	0	42	76	126	185	252	340	542	815
	2	32	61	102	154	210	284	451	680
	5	29	56	95	141	194	264	430	648
	10	24	49	86	131	180	250	406	625
10	0	45	84	138	202	279	372	606	912
	2	35	67	111	168	233	311	505	760
	5	32	61	104	153	215	289	480	724
	10	27	54	94	143	200	274	455	700
	15	NA	46	84	130	186	258	432	666
15	0	49	91	151	223	312	420	684	1,040
	2	39	72	122	186	260	350	570	865
	5	35	67	110	170	240	325	540	825
	10	30	58	103	158	223	308	514	795
	15	NA	50	93	144	207	291	488	760
	20	NA	NA	82	132	195	273	466	726
20	0	53	101	163	252	342	470	770	1,190
	2	42	80	136	210	286	392	641	990
	5	38	74	123	192	264	364	610	945
	10	32	65	115	178	246	345	571	910
	15	NA	55	104	163	228	326	550	870
	20	NA	NA	91	149	214	306	525	832
30	0	56	108	183	276	384	529	878	1,370
	2	44	84	148	230	320	441	730	1,140
	5	NA	78	137	210	296	410	694	1,080
	10	NA	68	125	196	274	388	656	1,050
	15	NA	NA	113	177	258	366	625	1,000
	20	NA	NA	99	163	240	344	596	960
	30	NA	NA	NA	NA	192	295	540	890
50	0	NA	120	210	310	443	590	980	1,550
	2	NA	95	171	260	370	492	820	1,290
	5	NA	NA	159	234	342	474	780	1,230
	10	NA	NA	146	221	318	456	730	1,190
	15	NA	NA	NA	200	292	407	705	1,130
	20	NA	NA	NA	185	276	384	670	1,080
	30	NA	NA	NA	NA	222	330	605	1,010

For SI: 1 inch = 25.4 mm, 1 foot = 304.8 mm, 1 British thermal unit per hour = 0.2931 W.

INTERNATIONAL CODE COUNCIL®
Copyright © 2019 ICC & NYSDOS. ALL RIGHTS RESERVED. Accessed by Lauren Gualdino (lgualdino@briarcliffmanor.org), (-) Order Number #100880972 on May 08, 2020 07:05 AM (PDT) pursuant to License Agreement with ICC & NYSDOS. No further reproduction, no

100880972

TABLE 504.2(6)
EXTERIOR MASONRY CHIMNEY

Number of Appliances	Single
Appliance Type	NAT
Appliance Vent Connection	Type B double-wall connector

MINIMUM ALLOWABLE INPUT RATING OF SPACE-HEATING APPLIANCE IN THOUSANDS OF BTU PER HOUR									
VENT HEIGHT (feet)	**Internal area of chimney (square inches)**								
	12	**19**		**28**	**38**	**50**	**63**	**78**	**113**
37°F or Greater	**Local 99% Winter Design Temperature: 37°F or Greater**								
6	0	0		0	0	0	0	0	0
8	0	0		0	0	0	0	0	0
10	0	0		0	0	0	0	0	0
15	NA	0		0	0	0	0	0	0
20	NA	NA		123	190	249	184	0	0
30	NA	NA		NA	NA	NA	393	334	0
50	NA	NA		NA	NA	NA	NA	NA	579
27 to 36°F	**Local 99% Winter Design Temperature: 27 to 36°F**								
6	0	0		68	116	156	180	212	266
8	0	0		82	127	167	187	214	263
10	0	51		97	141	183	201	225	265
15	NA	NA		NA	NA	233	253	274	305
20	NA	NA		NA	NA	NA	307	330	362
30	NA	NA		NA	NA	NA	419	445	485
50	NA	NA		NA	NA	NA	NA	NA	763
17 to 26°F	**Local 99% Winter Design Temperature: 17 to 26°F**								
6	NA	NA		NA	NA	NA	215	259	349
8	NA	NA		NA	NA	197	226	264	352
10	NA	NA		NA	NA	214	245	278	358
15	NA	NA		NA	NA	NA	296	331	398
20	NA	NA		NA	NA	NA	352	387	457
30	NA	NA		NA	NA	NA	NA	507	581
50	NA	NA		NA	NA	NA	NA	NA	NA
5 to 16°F	**Local 99% Winter Design Temperature: 5 to 16°F**								
6	NA	NA		NA	NA	NA	NA	NA	416
8	NA	NA		NA	NA	NA	NA	312	423
10	NA	NA		NA	NA	NA	289	331	430
15	NA	NA		NA	NA	NA	NA	393	485
20	NA	NA		NA	NA	NA	NA	450	547
30	NA	NA		NA	NA	NA	NA	NA	682
50	NA	NA		NA	NA	NA	NA	NA	972
-10 to 4°F	**Local 99% Winter Design Temperature: -10 to 4°F**								
6	NA	NA		NA	NA	NA	NA	NA	484
8	NA	NA		NA	NA	NA	NA	NA	494
10	NA	NA		NA	NA	NA	NA	NA	513
15	NA	NA		NA	NA	NA	NA	NA	586
20	NA	NA		NA	NA	NA	NA	NA	650
30	NA	NA		NA	NA	NA	NA	NA	805
50	NA	NA		NA	NA	NA	NA	NA	1,003
-11°F or Lower	**Local 99% Winter Design Temperature: -11°F or Lower**								
	Not recommended for any vent configurations								

For SI: °C = (°F - 32)/1.8, 1 inch = 25.4 mm, 1 foot = 304.8 mm, 1 British thermal unit per hour = 0.2931 W.

Note: See Figure B-19 in Appendix B for a map showing local 99-percent winter design temperatures in the United States.

INTERNATIONAL CODE COUNCIL®
Copyright © 2019 ICC & NYSDOS. ALL RIGHTS RESERVED. Accessed by Lauren Gualdino (lgualdino@briarcliffmanor.org), (-) Order Number #100880972 on May 08, 2020 07:05 AM (PDT) pursuant to License Agreement with ICC & NYSDOS. No further reproduction, no

TABLE 504.3(1)
TYPE B DOUBLE-WALL VENT

Number of Appliances	Two or more
Appliance Type	Category I
Appliance Vent Connection	Type B double-wall connector

VENT CONNECTOR CAPACITY

VENT HEIGHT (H) (feet)	CONNECTOR RISE (R) (feet)	TYPE B DOUBLE-WALL VENT AND CONNECTOR DIAMETER—(D) inches																							
		3			4			5			6			7			8			9			10		
		APPLIANCE INPUT RATING LIMITS IN THOUSANDS OF BTU/H																							
		FAN		NAT	FAN		NAT	FAN		NAT	FAN		NAT	FAN		NAT	FAN		NAT	FAN		NAT	FAN		NAT
		Min	Max	Max	Min	Max	Max	Min	Max	Max	Min	Max	Max	Min	Max	Max	Min	Max	Max	Min	Max	Max	Min	Max	Max
6	1	22	37	26	35	66	46	46	106	72	58	164	104	77	225	142	92	296	185	109	376	237	128	466	289
	2	23	41	31	37	75	55	48	121	86	60	183	124	79	253	168	95	333	220	112	424	282	131	526	345
	3	24	44	35	38	81	62	49	132	96	62	199	139	82	275	189	97	363	248	114	463	317	134	575	386
8	1	22	40	27	35	72	48	49	114	76	64	176	109	84	243	148	100	320	194	118	408	248	138	507	303
	2	23	44	32	36	80	57	51	128	90	66	195	129	86	269	175	103	356	230	121	454	294	141	564	358
	3	24	47	36	37	87	64	53	139	101	67	210	145	88	290	198	105	384	258	123	492	330	143	612	402
10	1	22	43	28	34	78	50	49	123	78	65	189	113	89	257	154	106	341	200	125	436	257	146	542	314
	2	23	47	33	36	86	59	51	136	93	67	206	134	91	282	182	109	374	238	128	479	305	149	596	372
	3	24	50	37	37	92	67	52	146	104	69	220	150	94	303	205	111	402	268	131	515	342	152	642	417
15	1	21	50	30	33	89	53	47	142	83	64	220	120	88	298	163	110	389	214	134	493	273	162	609	333
	2	22	53	35	35	96	63	49	153	99	66	235	142	91	320	193	112	419	253	137	532	323	165	658	394
	3	24	55	40	36	102	71	51	163	111	68	248	160	93	339	218	115	445	286	140	565	365	167	700	444
20	1	21	54	31	33	99	56	46	157	87	62	246	125	86	334	171	107	436	224	131	552	285	158	681	347
	2	22	57	37	34	105	66	48	167	104	64	259	149	89	354	202	110	463	265	134	587	339	161	725	414
	3	23	60	42	35	110	74	50	176	116	66	271	168	91	371	228	113	486	300	137	618	383	164	764	466
30	1	20	62	33	31	113	59	45	181	93	60	288	134	83	391	182	103	512	238	125	649	305	151	802	372
	2	21	64	39	33	118	70	47	190	110	62	299	158	85	408	215	105	535	282	129	679	360	155	840	439
	3	22	66	44	34	123	79	48	198	124	64	309	178	88	423	242	108	555	317	132	706	405	158	874	494
50	1	19	71	36	30	133	64	43	216	101	57	349	145	78	477	197	97	627	257	120	797	330	144	984	403
	2	21	73	43	32	137	76	45	223	119	59	358	172	81	490	234	100	645	306	123	820	392	148	1,014	478
	3	22	75	48	33	141	86	46	229	134	61	366	194	83	502	263	103	661	343	126	842	441	151	1,043	538
100	1	18	82	37	28	158	66	40	262	104	53	442	150	73	611	204	91	810	266	112	1,038	341	135	1,285	417
	2	19	83	44	30	161	79	42	267	123	55	447	178	75	619	242	94	822	316	115	1,054	405	139	1,306	494
	3	20	84	50	31	163	89	44	272	138	57	452	109	78	627	272	97	834	355	118	1,069	455	142	1,327	555

COMMON VENT CAPACITY

VENT HEIGHT (H) (feet)	4			5			6			7			8			9			10		
	COMBINED APPLIANCE INPUT RATING IN THOUSANDS OF BTU/H																				
	FAN +FAN	FAN +NAT	NAT +NAT	FAN +FAN	FAN +NAT	NAT +NAT	FAN +FAN	FAN +NAT	NAT +NAT	FAN +FAN	FAN +NAT	NAT +NAT	FAN +FAN	FAN +NAT	NAT +NAT	FAN +FAN	FAN +NAT	NAT +NAT	FAN +FAN	FAN +NAT	NAT +NAT
6	92	81	65	140	116	103	204	161	147	309	248	200	404	314	260	547	434	335	672	520	410
8	101	90	73	155	129	114	224	178	163	339	275	223	444	348	290	602	480	378	740	577	465
10	110	97	79	169	141	124	243	194	178	367	299	242	477	377	315	649	522	405	800	627	495
15	125	112	91	195	164	144	283	228	206	427	352	280	556	444	365	753	612	465	924	733	565
20	136	123	102	215	183	160	314	255	229	475	394	310	621	499	405	842	688	523	1,035	826	640
30	152	138	118	244	210	185	361	297	266	547	459	360	720	585	470	979	808	605	1,209	975	740
50	167	153	134	279	244	214	421	353	310	641	547	423	854	706	550	1,164	977	705	1,451	1,188	860
100	175	163	NA	311	277	NA	489	421	NA	751	658	479	1,025	873	625	1,408	1,215	800	1,784	1,502	975

(continued)

INTERNATIONAL CODE COUNCIL®
Copyright © 2019 ICC & NYSDOS. ALL RIGHTS RESERVED. Accessed by Lauren Gualdino (lgualdino@briarcliffmanor.org), (-) Order Number #100880972 on May 08, 2020 07:05 AM (PDT) pursuant to License Agreement with ICC & NYSDOS. No further reproduction, no

100880972

TABLE 504.3(1)—continued
TYPE B DOUBLE-WALL VENT

Number of Appliances	Two or more
Appliance Type	Category I
Appliance Vent Connection	Type B double-wall connector

VENT CONNECTOR CAPACITY

VENT HEIGHT *(H)* (feet)	CONNECTOR RISE *(R)* (feet)	TYPE B DOUBLE-WALL VENT AND DIAMETER—*(D)* inches																				
		12			14			16			18			20			22			24		
		APPLIANCE INPUT RATING LIMITS IN THOUSANDS OF BTU/H																				
		FAN		NAT	FAN		NAT	FAN		NAT	FAN		NAT	FAN		NAT	FAN		NAT	FAN		NAT
		Min	Max	Max	Min	Max	Max	Min	Max	Max	Min	Max	Max	Min	Max	Max	Min	Max	Max	Min	Max	Max
6	2	174	764	496	223	1,046	653	281	1,371	853	346	1,772	1,080	NA	NA	NA	NA	NA	NA	NA	NA	NA
	4	180	897	616	230	1,231	827	287	1,617	1,081	352	2,069	1,370	NA	NA	NA	NA	NA	NA	NA	NA	NA
	6	NA	NA	NA	NA	NA	NA	NA	NA	NA	NA	NA	NA	NA	NA	NA	NA	NA	NA	NA	NA	NA
8	2	186	822	516	238	1,126	696	298	1,478	910	365	1,920	1,150	NA	NA	NA	NA	NA	NA	NA	NA	NA
	4	192	952	644	244	1,307	884	305	1,719	1,150	372	2,211	1,460	471	2,737	1,800	560	3,319	2,180	662	3,957	2,590
	6	198	1,050	772	252	1,445	1,072	313	1,902	1,390	380	2,434	1,770	478	3,018	2,180	568	3,665	2,640	669	4,373	3,130
10	2	196	870	536	249	1,195	730	311	1,570	955	379	2,049	1,205	NA	NA	NA	NA	NA	NA	NA	NA	NA
	4	201	997	664	256	1,371	924	318	1,804	1,205	387	2,332	1,535	486	2,887	1,890	581	3,502	2,280	686	4,175	2,710
	6	207	1,095	792	263	1,509	1,118	325	1,989	1,455	395	2,556	1,865	494	3,169	2,290	589	3,849	2,760	694	4,593	3,270
15	2	214	967	568	272	1,334	790	336	1,760	1,030	408	2,317	1,305	NA	NA	NA	NA	NA	NA	NA	NA	NA
	4	221	1,085	712	279	1,499	1,006	344	1,978	1,320	416	2,579	1,665	523	3,197	2,060	624	3,881	2,490	734	4,631	2,960
	6	228	1,181	856	286	1,632	1,222	351	2,157	1,610	424	2,796	2,025	533	3,470	2,510	634	4,216	3,030	743	5,035	3,600
20	2	223	1,051	596	291	1,443	840	357	1,911	1,095	430	2,533	1,385	NA	NA	NA	NA	NA	NA	NA	NA	NA
	4	230	1,162	748	298	1,597	1,064	365	2,116	1,395	438	2,778	1,765	554	3,447	2,180	661	4,190	2,630	772	5,005	3,130
	6	237	1,253	900	307	1,726	1,288	373	2,287	1,695	450	2,984	2,145	567	3,708	2,650	671	4,511	3,190	785	5,392	3,790
30	2	216	1,217	632	286	1,664	910	367	2,183	1,190	461	2,891	1,540	NA	NA	NA	NA	NA	NA	NA	NA	NA
	4	223	1,316	792	294	1,802	1,160	376	2,366	1,510	474	3,110	1,920	619	3,840	2,365	728	4,861	2,860	847	5,606	3,410
	6	231	1,400	952	303	1,920	1,410	384	2,524	1,830	485	3,299	2,340	632	4,080	2,875	741	4,976	3,480	860	5,961	4,150
50	2	206	1,479	689	273	2,023	1,007	350	2,659	1,315	435	3,548	1,665	NA	NA	NA	NA	NA	NA	NA	NA	NA
	4	213	1,561	860	281	2,139	1,291	359	2,814	1,685	447	3,730	2,135	580	4,601	2,633	709	5,569	3,185	851	6,633	3,790
	6	221	1,631	1,031	290	2,242	1,575	369	2,951	2,055	461	3,893	2,605	594	4,808	3,208	724	5,826	3,885	867	6,943	4,620
100	2	192	1,923	712	254	2,644	1,050	326	3,490	1,370	402	4,707	1,740	NA	NA	NA	NA	NA	NA	NA	NA	NA
	4	200	1,984	888	263	2,731	1,346	336	3,606	1,760	414	4,842	2,220	523	5,982	2,750	639	7,254	3,330	769	8,650	3,950
	6	208	2,035	1,064	272	2,811	1,642	346	3,714	2,150	426	4,968	2,700	539	6,143	3,350	654	7,453	4,070	786	8,892	4,810

COMMON VENT CAPACITY

VENT HEIGHT *(H)* (feet)	TYPE B DOUBLE-WALL COMMON VENT DIAMETER—*(D)* inches																				
	12			14			16			18			20			22			24		
	COMBINED APPLIANCE INPUT RATING IN THOUSANDS OF BTU/H																				
	FAN +FAN	FAN +NAT	NAT +NAT	FAN +FAN	FAN +NAT	NAT +NAT	FAN +FAN	FAN +NAT	NAT +NAT	FAN +FAN	FAN +NAT	NAT +NAT	FAN +FAN	FAN +NAT	NAT +NAT	FAN +FAN	FAN +NAT	NAT +NAT	FAN +FAN	FAN +NAT	NAT +NAT
6	900	696	588	1,284	990	815	1,735	1,336	1,065	2,253	1,732	1,345	2,838	2,180	1,660	3,488	2,677	1,970	4,206	3,226	2,390
8	994	773	652	1,423	1,103	912	1,927	1,491	1,190	2,507	1,936	1,510	3,162	2,439	1,860	3,890	2,998	2,200	4,695	3,616	2,680
10	1,076	841	712	1,542	1,200	995	2,093	1,625	1,300	2,727	2,113	1645	3,444	2,665	2,030	4,241	3,278	2,400	5,123	3,957	2,920
15	1,247	986	825	1,794	1,410	1,158	2,440	1,910	1,510	3,184	2,484	1,910	4,026	3,133	2,360	4,971	3,862	2,790	6,016	4,670	3,400
20	1,405	1,116	916	2,006	1,588	1,290	2,722	2,147	1,690	3,561	2,798	2,140	4,548	3,552	2,640	5,573	4,352	3,120	6,749	5,261	3,800
30	1,658	1,327	1,025	2,373	1,892	1,525	3,220	2,558	1,990	4,197	3,326	2,520	5,303	4,193	3,110	6,539	5,157	3,680	7,940	6,247	4,480
50	2,024	1,640	1,280	2,911	2,347	1,863	3,964	3,183	2,430	5,184	4,149	3,075	6,567	5,240	3,800	8,116	6,458	4,500	9,837	7,813	5,475
100	2,569	2,131	1,670	3,732	3,076	2,450	5,125	4,202	3,200	6,749	5,509	4,050	8,597	6,986	5,000	10,681	8,648	5,920	13,004	10,499	7,200

For SI: 1 inch = 25.4 mm, 1 foot = 304.8 mm, 1 British thermal unit per hour = 0.2931 W.

INTERNATIONAL CODE COUNCIL®
Copyright © 2019 ICC & NYSDOS. ALL RIGHTS RESERVED. Accessed by Lauren Gualdino (lgualdino@briarcliffmanor.org), (-) Order Number #100880972 on May 08, 2020 07:05 AM (PDT) pursuant to License Agreement with ICC & NYSDOS. No further reproduction, no

100880972

TABLE 504.3(2)
TYPE B DOUBLE-WALL VENT

Number of Appliances	Two or more
Appliance Type	Category I
Appliance Vent Connection	Single-wall metal connector

VENT CONNECTOR CAPACITY

VENT HEIGHT (H) (feet)	CONNECTOR RISE (R) (feet)	SINGLE-WALL METAL VENT CONNECTOR DIAMETER—(D) inches																							
		3			4			5			6			7			8			9			10		
		APPLIANCE INPUT RATING LIMITS IN THOUSANDS OF BTU/H																							
		FAN		NAT	FAN		NAT	FAN		NAT	FAN		NAT	FAN		NAT	FAN		NAT	FAN		NAT	FAN		NAT
		Min	Max	Max	Min	Max	Max	Min	Max	Max	Min	Max	Max	Min	Max	Max	Min	Max	Max	Min	Max	Max	Min	Max	Max
6	1	NA	NA	26	NA	NA	46	NA	NA	71	NA	NA	102	207	223	140	262	293	183	325	373	234	447	463	286
	2	NA	NA	31	NA	NA	55	NA	NA	85	168	182	123	215	251	167	271	331	219	334	422	281	458	524	344
	3	NA	NA	34	NA	NA	62	121	131	95	175	198	138	222	273	188	279	361	247	344	462	316	468	574	385
8	1	NA	NA	27	NA	NA	48	NA	NA	75	NA	NA	106	226	240	145	285	316	191	352	403	244	481	502	299
	2	NA	NA	32	NA	NA	57	125	126	89	184	193	127	234	266	173	293	353	228	360	450	292	492	560	355
	3	NA	NA	35	NA	NA	64	130	138	100	191	208	144	241	287	197	302	381	256	370	489	328	501	609	400
10	1	NA	NA	28	NA	NA	50	119	121	77	182	186	110	240	253	150	302	335	196	372	429	252	506	534	308
	2	NA	NA	33	84	85	59	124	134	91	189	203	132	248	278	183	311	369	235	381	473	302	517	589	368
	3	NA	NA	36	89	91	67	129	144	102	197	217	148	257	299	203	320	398	265	391	511	339	528	637	413
15	1	NA	NA	29	79	87	52	116	138	81	177	214	116	238	291	158	312	380	208	397	482	266	556	596	324
	2	NA	NA	34	83	94	62	121	150	97	185	230	138	246	314	189	321	411	248	407	522	317	568	646	387
	3	NA	NA	39	87	100	70	127	160	109	193	243	157	255	333	215	331	438	281	418	557	360	579	690	437
20	1	49	56	30	78	97	54	115	152	84	175	238	120	233	325	165	306	425	217	390	538	276	546	664	336
	2	52	59	36	82	103	64	120	163	101	182	252	144	243	346	197	317	453	259	400	574	331	558	709	403
	3	55	62	40	87	107	72	125	172	113	190	264	164	252	363	223	326	476	294	412	607	375	570	750	457
30	1	47	60	31	77	110	57	112	175	89	169	278	129	226	380	175	296	497	230	378	630	294	528	779	358
	2	51	62	37	81	115	67	117	185	106	177	290	152	236	397	208	307	521	274	389	662	349	541	819	425
	3	54	64	42	85	119	76	122	193	120	185	300	172	244	412	235	316	542	309	400	690	394	555	855	482
50	1	46	69	34	75	128	60	109	207	96	162	336	137	217	460	188	284	604	245	364	768	314	507	951	384
	2	49	71	40	79	132	72	114	215	113	170	345	164	226	473	223	294	623	293	376	793	375	520	983	458
	3	52	72	45	83	136	82	119	221	123	178	353	186	235	486	252	304	640	331	387	816	423	535	1,013	518
100	1	45	79	34	71	150	61	104	249	98	153	424	140	205	585	192	269	774	249	345	993	321	476	1,236	393
	2	48	80	41	75	153	73	110	255	115	160	428	167	212	593	228	279	788	299	358	1,011	383	490	1,259	469
	3	51	81	46	79	157	85	114	260	129	168	433	190	222	603	256	289	801	339	368	1,027	431	506	1,280	527

COMMON VENT CAPACITY

VENT HEIGHT (H) (feet)	TYPE B DOUBLE-WALL COMMON VENT DIAMETER—(D) inches																					
	4			5			6			7			8			9			10		
	COMBINED APPLIANCE INPUT RATING IN THOUSANDS OF BTU/H																				
	FAN +FAN	FAN +NAT	NAT +NAT	FAN +FAN	FAN +NAT	NAT +NAT	FAN +FAN	FAN +NAT	NAT +NAT	FAN +FAN	FAN +NAT	NAT +NAT	FAN +FAN	FAN +NAT	NAT +NAT	FAN +FAN	FAN +NAT	NAT +NAT	FAN +FAN	FAN +NAT	NAT +NAT
6	NA	78	64	NA	113	99	200	158	144	304	244	196	398	310	257	541	429	332	665	515	407
8	NA	87	71	NA	126	111	218	173	159	331	269	218	436	342	285	592	473	373	730	569	460
10	NA	94	76	163	137	120	237	189	174	357	292	236	467	369	309	638	512	398	787	617	487
15	121	108	88	189	159	140	275	221	200	416	343	274	544	434	357	738	599	456	905	718	553
20	131	118	98	208	177	156	305	247	223	463	383	302	606	487	395	824	673	512	1,013	808	626
30	145	132	113	236	202	180	350	286	257	533	446	349	703	570	459	958	790	593	1,183	952	723
50	159	145	128	268	233	208	406	337	296	622	529	410	833	686	535	1,139	954	689	1,418	1,157	838
100	166	153	NA	297	263	NA	469	398	NA	726	633	464	999	846	606	1,378	1,185	780	1,741	1,459	948

For SI: 1 inch = 25.4 mm, 1 foot = 304.8 mm, 1 British thermal unit per hour = 0.2931 W.

INTERNATIONAL CODE COUNCIL®
Copyright © 2019 ICC & NYSDOS. ALL RIGHTS RESERVED. Accessed by Lauren Gualdino (lgualdino@briarcliffmanor.org), (-) Order Number #100880972 on May 08, 2020 07:05 AM (PDT) pursuant to License Agreement with ICC & NYSDOS. No further reproduction, no

100880972

TABLE 504.3(3)
MASONRY CHIMNEY

Number of Appliances	Two or more
Appliance Type	Category I
Appliance Vent Connection	Type B double-wall connector

VENT CONNECTOR CAPACITY

VENT HEIGHT (H) (feet)	CONNECTOR RISE (R) (feet)	TYPE B DOUBLE-WALL VENT CONNECTOR DIAMETER—(D) inches																							
		3			4			5			6			7			8			9			10		
		APPLIANCE INPUT RATING LIMITS IN THOUSANDS OF BTU/H																							
		FAN		NAT	FAN		NAT	FAN		NAT	FAN		NAT	FAN		NAT	FAN		NAT	FAN		NAT	FAN		NAT
		Min	Max	Max	Min	Max	Max	Min	Max	Max	Min	Max	Max	Min	Max	Max	Min	Max	Max	Min	Max	Max	Min	Max	Max
6	1	24	33	21	39	62	40	52	106	67	65	194	101	87	274	141	104	370	201	124	479	253	145	599	319
	2	26	43	28	41	79	52	53	133	85	67	230	124	89	324	173	107	436	232	127	562	300	148	694	378
	3	27	49	34	42	92	61	55	155	97	69	262	143	91	369	203	109	491	270	129	633	349	151	795	439
8	1	24	39	22	39	72	41	55	117	69	71	213	105	94	304	148	113	414	210	134	539	267	156	682	335
	2	26	47	29	40	87	53	57	140	86	73	246	127	97	350	179	116	473	240	137	615	311	160	776	394
	3	27	52	34	42	97	62	59	159	98	75	269	145	99	383	206	119	517	276	139	672	358	163	848	452
10	1	24	42	22	38	80	42	55	130	71	74	232	108	101	324	153	120	444	216	142	582	277	165	739	348
	2	26	50	29	40	93	54	57	153	87	76	261	129	103	366	184	123	498	247	145	652	321	168	825	407
	3	27	55	35	41	105	63	58	170	100	78	284	148	106	397	209	126	540	281	147	705	366	171	893	463
15	1	24	48	23	38	93	44	54	154	74	72	277	114	100	384	164	125	511	229	153	658	297	184	824	375
	2	25	55	31	39	105	55	56	174	89	74	299	134	103	419	192	128	558	260	156	718	339	187	900	432
	3	26	59	35	41	115	64	57	189	102	76	319	153	105	448	215	131	597	292	159	760	382	190	960	486
20	1	24	52	24	37	102	46	53	172	77	71	313	119	98	437	173	123	584	239	150	752	312	180	943	397
	2	25	58	31	39	114	56	55	190	91	73	335	138	101	467	199	126	625	270	153	805	354	184	1,011	452
	3	26	63	35	40	123	65	57	204	104	75	353	157	104	493	222	129	661	301	156	851	396	187	1,067	505
30	1	24	54	25	37	111	48	52	192	82	69	357	127	96	504	187	119	680	255	145	883	337	175	1,115	432
	2	25	60	32	38	122	58	54	208	95	72	376	145	99	531	209	122	715	287	149	928	378	179	1,171	484
	3	26	64	36	40	131	66	56	221	107	74	392	163	101	554	233	125	746	317	152	968	418	182	1,220	535
50	1	23	51	25	36	116	51	51	209	89	67	405	143	92	582	213	115	798	294	140	1,049	392	168	1,334	506
	2	24	59	32	37	127	61	53	225	102	70	421	161	95	604	235	118	827	326	143	1,085	433	172	1,379	558
	3	26	64	36	39	135	69	55	237	115	72	435	80	98	624	260	121	854	357	147	1,118	474	176	1,421	611
100	1	23	46	24	35	108	50	49	208	92	65	428	155	88	640	237	109	907	334	134	1,222	454	161	1,589	596
	2	24	53	31	37	120	60	51	224	105	67	444	174	92	660	260	113	933	368	138	1,253	497	165	1,626	651
	3	25	59	35	38	130	68	53	237	118	69	458	193	94	679	285	116	956	399	141	1,282	540	169	1,661	705

COMMON VENT CAPACITY

VENT HEIGHT (H) (feet)	MINIMUM INTERNAL AREA OF MASONRY CHIMNEY FLUE (square inches)																							
	12			19			28			38			50			63			78			113		
	COMBINED APPLIANCE INPUT RATING IN THOUSANDS OF BTU/H																							
	FAN +FAN	FAN +NAT	NAT +NAT	FAN +FAN	FAN +NAT	NAT +NAT	FAN +FAN	FAN +NAT	NAT +NAT	FAN +FAN	FAN +NAT	NAT +NAT	FAN +FAN	FAN +NAT	NAT +NAT	FAN +FAN	FAN +NAT	NAT +NAT	FAN +FAN	FAN +NAT	NAT +NAT	FAN +FAN	FAN +NAT	NAT +NAT
6	NA	74	25	NA	119	46	NA	178	71	NA	257	103	NA	351	143	NA	458	188	NA	582	246	1,041	853	NA
8	NA	80	28	NA	130	53	NA	193	82	NA	279	119	NA	384	163	NA	501	218	724	636	278	1,144	937	408
10	NA	84	31	NA	138	56	NA	207	90	NA	299	131	NA	409	177	606	538	236	776	686	302	1,226	1,010	454
15	NA	NA	36	NA	152	67	NA	233	106	NA	334	152	523	467	212	682	611	283	874	781	365	1,374	1,156	546
20	NA	NA	41	NA	NA	75	NA	250	122	NA	368	172	565	508	243	742	668	325	955	858	419	1,513	1,286	648
30	NA	NA	NA	NA	NA	NA	NA	270	137	NA	404	198	615	564	278	816	747	381	1,062	969	496	1,702	1,473	749
50	NA	NA	NA	NA	NA	NA	NA	NA	NA	NA	NA	NA	NA	620	328	879	831	461	1,165	1,089	606	1,905	1,692	922
100	NA	NA	NA	NA	NA	NA	NA	NA	NA	NA	NA	NA	NA	NA	348	NA	NA	499	NA	NA	669	2,053	1,921	1,058

For SI:1 inch = 25.4 mm, 1 square inch = 645.16 mm^2, 1 foot = 304.8 mm, 1 British thermal unit per hour = 0.2931 W.

INTERNATIONAL CODE COUNCIL®
Copyright © 2019 ICC & NYSDOS. ALL RIGHTS RESERVED. Accessed by Lauren Gualdino (lgualdino@briarcliffmanor.org), (-) Order Number #100880972 on May 08, 2020 07:05 AM (PDT) pursuant to License Agreement with ICC & NYSDOS. No further reproduction, no

TABLE 504.3(4)
MASONRY CHIMNEY

Number of Appliances	Two or more
Appliance Type	Category I
Appliance Vent Connection	Single-wall metal connector

VENT CONNECTOR CAPACITY

VENT HEIGHT (H) (feet)	CONNECTOR RISE (R) (feet)	SINGLE-WALL METAL VENT CONNECTOR DIAMETER—(D) inches																							
		3			4			5			6			7			8			9			10		
		APPLIANCE INPUT RATING LIMITS IN THOUSANDS OF BTU/H																							
		FAN		NAT	FAN		NAT	FAN		NAT	FAN		NAT	FAN		NAT	FAN		NAT	FAN		NAT	FAN		NAT
		Min	Max	Max	Min	Max	Max	Min	Max	Max	Min	Max	Max	Min	Max	Max	Min	Max	Max	Min	Max	Max	Min	Max	Max
6	1	NA	NA	21	NA	NA	39	NA	NA	66	179	191	100	231	271	140	292	366	200	362	474	252	499	594	316
	2	NA	NA	28	NA	NA	52	NA	NA	84	186	227	123	239	321	172	301	432	231	373	557	299	509	696	376
	3	NA	NA	34	NA	NA	61	134	153	97	193	258	142	247	365	202	309	491	269	381	634	348	519	793	437
8	1	NA	NA	21	NA	NA	40	NA	NA	68	195	208	103	250	298	146	313	407	207	387	530	263	529	672	331
	2	NA	NA	28	NA	NA	52	137	139	85	202	240	125	258	343	177	323	465	238	397	607	309	540	766	391
	3	NA	NA	34	NA	NA	62	143	156	98	210	264	145	266	376	205	332	509	274	407	663	356	551	838	450
10	1	NA	NA	22	NA	NA	41	130	151	70	202	225	106	267	316	151	333	434	213	410	571	273	558	727	343
	2	NA	NA	29	NA	NA	53	136	150	86	210	255	128	276	358	181	343	489	244	420	640	317	569	813	403
	3	NA	NA	34	97	102	62	143	166	99	217	277	147	284	389	207	352	530	279	430	694	363	580	880	459
15	1	NA	NA	23	NA	NA	43	129	151	73	199	271	112	268	376	161	349	502	225	445	646	291	623	808	366
	2	NA	NA	30	92	103	54	135	170	88	207	295	132	277	411	189	359	548	256	456	706	334	634	884	424
	3	NA	NA	34	96	112	63	141	185	101	215	315	151	286	439	213	368	586	289	466	755	378	646	945	479
20	1	NA	NA	23	87	99	45	128	167	76	197	303	117	265	425	169	345	569	235	439	734	306	614	921	347
	2	NA	NA	30	91	111	55	134	185	90	205	325	136	274	455	195	355	610	266	450	787	348	627	986	443
	3	NA	NA	35	96	119	64	140	199	103	213	343	154	282	481	219	365	644	298	461	831	391	639	1,042	496
30	1	NA	NA	24	86	108	47	126	187	80	193	347	124	259	492	183	338	665	250	430	864	330	600	1,089	421
	2	NA	NA	31	91	119	57	132	203	93	201	366	142	269	518	205	348	699	282	442	908	372	613	1,145	473
	3	NA	NA	35	95	127	65	138	216	105	209	381	160	277	540	229	358	729	312	452	946	412	626	1,193	524
50	1	NA	NA	24	85	113	50	124	204	87	188	392	139	252	567	208	328	778	287	417	1,022	383	582	1,302	492
	2	NA	NA	31	89	123	60	130	218	100	196	408	158	262	588	230	339	806	320	429	1,058	425	596	1,346	545
	3	NA	NA	35	94	131	68	136	231	112	205	422	176	271	607	255	349	831	351	440	1,090	466	610	1,386	597
100	1	NA	NA	23	84	104	49	122	200	89	182	410	151	243	617	232	315	875	328	402	1,181	444	560	1,537	580
	2	NA	NA	30	88	115	59	127	215	102	190	425	169	253	636	254	326	899	361	415	1,210	488	575	1,570	634
	3	NA	NA	34	93	124	67	133	228	115	199	438	188	262	654	279	337	921	392	427	1,238	529	589	1,604	687

COMMON VENT CAPACITY

VENT HEIGHT (H) (feet)	MINIMUM INTERNAL AREA OF MASONRY CHIMNEY FLUE (square inches)																							
	12			19			28			38			50			63			78			113		
	COMBINED APPLIANCE INPUT RATING IN THOUSANDS OF BTU/H																							
	FAN +FAN	FAN +NAT	NAT +NAT	FAN +FAN	FAN +NAT	NAT +NAT	FAN +FAN	FAN +NAT	NAT +NAT	FAN +FAN	FAN +NAT	NAT +NAT	FAN +FAN	FAN +NAT	NAT +NAT	FAN +FAN	FAN +NAT	NAT +NAT	FAN +FAN	FAN +NAT	NAT +NAT	FAN +FAN	FAN +NAT	NAT +NAT
6	NA	NA	25	NA	118	45	NA	176	71	NA	255	102	NA	348	142	NA	455	187	NA	579	245	NA	846	NA
8	NA	NA	28	NA	128	52	NA	190	81	NA	276	118	NA	380	162	NA	497	217	NA	633	277	1,136	928	405
10	NA	NA	31	NA	136	56	NA	205	89	NA	295	129	NA	405	175	NA	532	234	171	680	300	1,216	1,000	450
15	NA	NA	36	NA	NA	66	NA	230	105	NA	335	150	NA	400	210	677	602	280	866	772	360	1,359	1,139	540
20	NA	NA	NA	NA	NA	74	NA	247	120	NA	362	170	NA	503	240	765	661	321	947	849	415	1,495	1,264	640
30	NA	NA	NA	NA	NA	NA	NA	NA	135	NA	398	195	NA	558	275	808	739	377	1,052	957	490	1,682	1,447	740
50	NA	NA	NA	NA	NA	NA	NA	NA	NA	NA	NA	NA	NA	612	325	NA	821	456	1,152	1,076	600	1,879	1,672	910
100	NA	NA	NA	NA	NA	NA	NA	NA	NA	NA	NA	NA	NA	NA	NA	NA	NA	494	NA	NA	663	2,006	1,885	1,046

For SI: 1 inch = 25.4 mm, 1 square inch = 645.16 mm^2, 1 foot = 304.8 mm, 1 British thermal unit per hour = 0.2931 W.

INTERNATIONAL CODE COUNCIL®
Copyright © 2019 ICC & NYSDOS. ALL RIGHTS RESERVED. Accessed by Lauren Gualdino (lgualdino@briarcliffmanor.org), (-) Order Number #100880972 on May 08, 2020 07:05 AM (PDT) pursuant to License Agreement with ICC & NYSDOS. No further reproduction, no

100880972

TABLE 504.3(5)
SINGLE-WALL METAL PIPE OR TYPE ASBESTOS CEMENT VENT

Number of Appliances	Two or more
Appliance Type	Draft hood-equipped
Appliance Vent Connection	Direct to pipe or vent

VENT CONNECTOR CAPACITY

TOTAL VENT HEIGHT *(H)* (feet)	CONNECTOR RISE *(R)* (feet)	VENT CONNECTOR DIAMETER—*(D)* inches					
		3	4	5	6	7	8
		MAXIMUM APPLIANCE INPUT RATING IN THOUSANDS OF BTU/H					
6-8	1	21	40	68	102	146	205
	2	28	53	86	124	178	235
	3	34	61	98	147	204	275
15	1	23	44	77	117	179	240
	2	30	56	92	134	194	265
	3	35	64	102	155	216	298
30 and up	1	25	49	84	129	190	270
	2	31	58	97	145	211	295
	3	36	68	107	164	232	321

COMMON VENT CAPACITY

TOTAL VENT HEIGHT *(H)* (feet)	COMMON VENT DIAMETER—*(D)* inches						
	4	5	6	7	8	10	12
	COMBINED APPLIANCE INPUT RATING IN THOUSANDS OF BTU/H						
6	48	78	111	155	205	320	NA
8	55	89	128	175	234	365	505
10	59	95	136	190	250	395	560
15	71	115	168	228	305	480	690
20	80	129	186	260	340	550	790
30	NA	147	215	300	400	650	940
50	NA	NA	NA	360	490	810	1,190

For SI: 1 inch = 25.4 mm, 1 foot = 304.8 mm, 1 British thermal unit per hour = 0.2931 W.

INTERNATIONAL CODE COUNCIL®
Copyright © 2019 ICC & NYSDOS. ALL RIGHTS RESERVED. Accessed by Lauren Gualdino (lgualdino@briarcliffmanor.org), (-) Order Number #100880972 on May 08, 2020 07:05 AM (PDT) pursuant to License Agreement with ICC & NYSDOS. No further reproduction, no

100880972

TABLE 504.3(6a)
EXTERIOR MASONRY CHIMNEY

Number of Appliances	Two or more
Appliance Type	NAT + NAT
Appliance Vent Connection	Type B double-wall connector

Combined Appliance Maximum Input Rating in Thousands of Btu per Hour

VENT HEIGHT (feet)	INTERNAL AREA OF CHIMNEY (square inches)							
	12	19	28	38	50	63	78	113
6	25	46	71	103	143	188	246	NA
8	28	53	82	119	163	218	278	408
10	31	56	90	131	177	236	302	454
15	NA	67	106	152	212	283	365	546
20	NA	NA	NA	NA	NA	325	419	648
30	NA	NA	NA	NA	NA	NA	496	749
50	NA	NA	NA	NA	NA	NA	NA	922
100	NA	NA	NA	NA	NA	NA	NA	NA

TABLE 504.3(6b)
EXTERIOR MASONRY CHIMNEY

Number of Appliances	Two or more
Appliance Type	NAT + NAT
Appliance Vent Connection	Type B double-wall connector

Minimum Allowable Input Rating of Space-heating Appliance in Thousands of Btu per Hour

VENT HEIGHT (feet)	INTERNAL AREA OF CHIMNEY (square inches)							
	12	19	28	38	50	63	78	113
37°F or Greater	**Local 99% Winter Design Temperature: 37°F or Greater**							
6	0	0	0	0	0	0	0	NA
8	0	0	0	0	0	0	0	0
10	0	0	0	0	0	0	0	0
15	NA	0	0	0	0	0	0	0
20	NA	NA	NA	NA	NA	184	0	0
30	NA	NA	NA	NA	NA	393	334	0
50	NA	NA	NA	NA	NA	NA	NA	579
100	NA	NA	NA	NA	NA	NA	NA	NA
27 to 36°F	**Local 99% Winter Design Temperature: 27 to 36°F**							
6	0	0	68	NA	NA	180	212	NA
8	0	0	82	NA	NA	187	214	263
10	0	51	NA	NA	NA	201	225	265
15	NA	NA	NA	NA	NA	253	274	305
20	NA	NA	NA	NA	NA	307	330	362
30	NA	NA	NA	NA	NA	NA	445	485
50	NA	NA	NA	NA	NA	NA	NA	763
100	NA	NA	NA	NA	NA	NA	NA	NA

(continued)

TABLE 504.3(6b)
EXTERIOR MASONRY CHIMNEY—continued

Minimum Allowable Input Rating of Space-heating Appliance in Thousands of Btu per Hour

VENT HEIGHT (feet)	INTERNAL AREA OF CHIMNEY (square inches)							
	12	19	28	38	50	63	78	113
17 to 26°F	**Local 99% Winter Design Temperature: 17 to 26°F**							
6	NA	NA	NA	NA	NA	NA	NA	NA
8	NA	NA	NA	NA	NA	NA	264	352
10	NA	NA	NA	NA	NA	NA	278	358
15	NA	NA	NA	NA	NA	NA	331	398
20	NA	NA	NA	NA	NA	NA	387	457
30	NA	NA	NA	NA	NA	NA	NA	581
50	NA	NA	NA	NA	NA	NA	NA	862
100	NA	NA	NA	NA	NA	NA	NA	NA
5 to 16°F	**Local 99% Winter Design Temperature: 5 to 16°F**							
6	NA	NA	NA	NA	NA	NA	NA	NA
8	NA	NA	NA	NA	NA	NA	NA	NA
10	NA	NA	NA	NA	NA	NA	NA	430
15	NA	NA	NA	NA	NA	NA	NA	485
20	NA	NA	NA	NA	NA	NA	NA	547
30	NA	NA	NA	NA	NA	NA	NA	682
50	NA	NA	NA	NA	NA	NA	NA	NA
100	NA	NA	NA	NA	NA	NA	NA	NA
4°F or Lower	**Local 99% Winter Design Temperature: 4°F or Lower**							
	Not recommended for any vent configurations							

For SI: °C = (°F - 32)/1.8, 1 inch = 25.4 mm, 1 square inch = 645.16 mm^2, 1 foot = 304.8 mm, 1 British thermal unit per hour = 0.2931 W.

Note: See Figure B-19 in Appendix B for a map showing local 99-percent winter design temperatures in the United States.

INTERNATIONAL CODE COUNCIL®
Copyright © 2019 ICC & NYSDOS. ALL RIGHTS RESERVED. Accessed by Lauren Gualdino (lgualdino@briarcliffmanor.org), (-) Order Number #100880972 on May 08, 2020 07:05 AM (PDT) pursuant to License Agreement with ICC & NYSDOS. No further reproduction, no

100880972

TABLE 504.3(7a)
EXTERIOR MASONRY CHIMNEY

Number of Appliances	Two or more
Appliance Type	FAN + NAT
Appliance Vent Connection	Type B double-wall connector

Combined Appliance Maximum Input Rating in Thousands of Btu per Hour

VENT HEIGHT (feet)	INTERNAL AREA OF CHIMNEY (square inches)							
	12	19	28	38	50	63	78	113
6	74	119	178	257	351	458	582	853
8	80	130	193	279	384	501	636	937
10	84	138	207	299	409	538	686	1,010
15	NA	152	233	334	467	611	781	1,156
20	NA	NA	250	368	508	668	858	1,286
30	NA	NA	NA	404	564	747	969	1,473
50	NA	NA	NA	NA	NA	831	1,089	1,692
100	NA	NA	NA	NA	NA	NA	NA	1,921

TABLE 504.3(7b)
EXTERIOR MASONRY CHIMNEY

Number of Appliances	Two or more
Appliance Type	FAN + NAT
Appliance Vent Connection	Type B double-wall connector

Minimum Allowable Input Rating of Space-heating Appliance in Thousands of Btu per Hour

VENT HEIGHT (feet)	INTERNAL AREA OF CHIMNEY (square inches)							
	12	19	28	38	50	63	78	113
37°F or Greater	**Local 99% Winter Design Temperature: 37°F or Greater**							
6	0	0	0	0	0	0	0	0
8	0	0	0	0	0	0	0	0
10	0	0	0	0	0	0	0	0
15	NA	0	0	0	0	0	0	0
20	NA	NA	123	190	249	184	0	0
30	NA	NA	NA	334	398	393	334	0
50	NA	NA	NA	NA	NA	714	707	579
100	NA	NA	NA	NA	NA	NA	NA	1,600
27 to 36°F	**Local 99% Winter Design Temperature: 27 to 36°F**							
6	0	0	68	116	156	180	212	266
8	0	0	82	127	167	187	214	263
10	0	51	97	141	183	201	225	265
15	NA	111	142	183	233	253	274	305
20	NA	NA	187	230	284	307	330	362
30	NA	NA	NA	330	319	419	445	485
50	NA	NA	NA	NA	NA	672	705	763
100	NA	NA	NA	NA	NA	NA	NA	1,554

(continued)

TABLE 504.3(7b)
EXTERIOR MASONRY CHIMNEY—continued

Minimum Allowable Input Rating of Space-heating Appliance in Thousands of Btu per Hour

VENT HEIGHT (feet)	INTERNAL AREA OF CHIMNEY (square inches)							
	12	19	28	38	50	63	78	113
17 to 26°F	**Local 99% Winter Design Temperature: 17 to 26°F**							
6	0	55	99	141	182	215	259	349
8	52	74	111	154	197	226	264	352
10	NA	90	125	169	214	245	278	358
15	NA	NA	167	212	263	296	331	398
20	NA	NA	212	258	316	352	387	457
30	NA	NA	NA	362	429	470	507	581
50	NA	NA	NA	NA	NA	723	766	862
100	NA	NA	NA	NA	NA	NA	NA	1,669
5 to 16°F	**Local 99% Winter Design Temperature: 5 to 16°F**							
6	NA	78	121	166	214	252	301	416
8	NA	94	135	182	230	269	312	423
10	NA	111	149	198	250	289	331	430
15	NA	NA	193	247	305	346	393	485
20	NA	NA	NA	293	360	408	450	547
30	NA	NA	NA	377	450	531	580	682
50	NA	NA	NA	NA	NA	797	853	972
100	NA	NA	NA	NA	NA	NA	NA	1,833
-10 to 4°F	**Local 99% Winter Design Temperature: -10 to 4°F**							
6	NA	NA	145	196	249	296	349	484
8	NA	NA	159	213	269	320	371	494
10	NA	NA	175	231	292	339	397	513
15	NA	NA	NA	283	351	404	457	586
20	NA	NA	NA	333	408	468	528	650
30	NA	NA	NA	NA	NA	603	667	805
50	NA	NA	NA	NA	NA	NA	955	1,003
100	NA	NA	NA	NA	NA	NA	NA	NA
-11°F or Lower	**Local 99% Winter Design Temperature: -11°F or Lower**							
	Not recommended for any vent configurations							

For SI: °C = (°F - 32)/1.8, 1 inch = 25.4 mm, 1 square inch = 645.16 mm^2, 1 foot = 304.8 mm, 1 British thermal unit per hour = 0.2931 W.

Note: See Figure B-19 in Appendix B for a map showing local 99-percent winter design temperatures in the United States.

INTERNATIONAL CODE COUNCIL®
Copyright © 2019 ICC & NYSDOS. ALL RIGHTS RESERVED. Accessed by Lauren Gualdino (lgualdino@briarcliffmanor.org), (-) Order Number #100880972 on May 08, 2020 07:05 AM (PDT) pursuant to License Agreement with ICC & NYSDOS. No further reproduction, no

100880972

INTERNATIONAL CODE COUNCIL®
Copyright © 2019 ICC & NYSDOS. ALL RIGHTS RESERVED. Accessed by Lauren Gualdino (lgualdino@briarcliffmanor.org), (-) Order Number #100880972 on May 08, 2020 07:05 AM (PDT) pursuant to License Agreement with ICC & NYSDOS. No further reproduction, no

100880972

CHAPTER 6

SPECIFIC APPLIANCES

SECTION 601
GENERAL

601.1 Scope. This chapter shall govern the approval, design, installation, construction, maintenance, *alteration* and repair of the appliances and *equipment* specifically identified herein.

SECTION 602
DECORATIVE APPLIANCES FOR INSTALLATION IN FIREPLACES

602.1 General. Decorative appliances for installation in *approved* solid fuel-burning fireplaces shall be tested in accordance with ANSI Z21.60/CSA 6.26 and shall be installed in accordance with the manufacturer's instructions. Manually lighted natural gas decorative appliances shall be tested in accordance with ANSI Z21.84.

602.2 Flame safeguard device. Decorative appliances for installation in *approved* solid fuel-burning fireplaces, with the exception of those tested in accordance with ANSI Z21.84, shall utilize a direct ignition device, an ignitor or a pilot flame to ignite the fuel at the main burner, and shall be equipped with a flame safeguard device. The flame safeguard device shall automatically shut off the fuel supply to a main burner or group of burners when the means of ignition of such burners becomes inoperative.

602.3 Prohibited installations. Decorative appliances for installation in fireplaces shall not be installed where prohibited by Section 303.3.

SECTION 603
LOG LIGHTERS

603.1 General. Log lighters shall be tested in accordance with CSA 8 and installed in accordance with the manufacturer's instructions.

SECTION 604
VENTED GAS FIREPLACES (DECORATIVE APPLIANCES)

604.1 General. Vented gas fireplaces shall be tested in accordance with ANSI Z21.50/CSA 2.22, shall be installed in accordance with the manufacturer's instructions and shall be designed and equipped as specified in Section 602.2.

604.2 Access. Panels, grilles and *access* doors that are required to be removed for normal servicing operations shall not be attached to the building.

SECTION 605
VENTED GAS FIREPLACE HEATERS

605.1 General. Vented gas fireplace heaters shall be installed in accordance with the manufacturer's instructions, shall be tested in accordance with ANSI Z21.88/CSA 2.33 and shall be designed and equipped as specified in Section 602.2.

SECTION 606
INCINERATORS AND CREMATORIES

606.1 General. Incinerators and crematories shall be installed in accordance with the manufacturer's instructions.

SECTION 607
COMMERCIAL-INDUSTRIAL INCINERATORS

607.1 Incinerators, commercial-industrial. Commercial-industrial-type incinerators shall be constructed and installed in accordance with NFPA 82.

SECTION 608
VENTED WALL FURNACES

608.1 General. Vented wall furnaces shall be tested in accordance with ANSI Z21.86/CSA 2.32 and shall be installed in accordance with the manufacturer's instructions.

608.2 Venting. Vented wall furnaces shall be vented in accordance with Section 503.

608.3 Location. Vented wall furnaces shall be located so as not to cause a fire hazard to walls, floors, combustible furnishings or doors. Vented wall furnaces installed between bathrooms and adjoining rooms shall not circulate air from bathrooms to other parts of the building.

608.4 Door swing. Vented wall furnaces shall be located so that a door cannot swing within 12 inches (305 mm) of an air inlet or air outlet of such furnace measured at right angles to the opening. Doorstops or door closers shall not be installed to obtain this *clearance*.

608.5 Ducts prohibited. Ducts shall not be attached to wall furnaces. Casing extension boots shall not be installed unless *listed* as part of the *appliance*.

608.6 Access. Vented wall furnaces shall be provided with *access* for cleaning of heating surfaces, removal of burners, replacement of sections, motors, controls, filters and other working parts, and for adjustments and lubrication of parts requiring such attention. Panels, grilles and *access* doors that are required to be removed for normal servicing operations shall not be attached to the building construction.

SECTION 609
FLOOR FURNACES

609.1 General. Floor furnaces shall be tested in accordance with ANSI Z21.86/CSA 2.32 and shall be installed in accordance with the manufacturer's instructions.

609.2 Placement. The following provisions apply to floor furnaces:

1. Floors. Floor furnaces shall not be installed in the floor of any doorway, stairway landing, aisle or passageway of any enclosure, public or private, or in an exitway from any such room or space.
2. Walls and corners. The register of a floor furnace with a horizontal warm-air outlet shall not be placed closer

INTERNATIONAL CODE COUNCIL®
Copyright © 2019 ICC & NYSDOS. ALL RIGHTS RESERVED. Accessed by Lauren Gualdino (lgualdino@briarcliffmanor.org), (-) Order Number #100880972 on May 08, 2020 07:05 AM (PDT) pursuant to License Agreement with ICC & NYSDOS. No further reproduction, no

100880972

than 6 inches (152 mm) to the nearest wall. A distance of not less than 18 inches (457 mm) from two adjoining sides of the floor furnace register to walls shall be provided to eliminate the necessity of occupants walking over the warm-air discharge. The remaining sides shall be permitted to be placed not closer than 6 inches (152 mm) to a wall. Wall-register models shall not be placed closer than 6 inches (152 mm) to a corner.

3. Draperies. The furnace shall be placed so that a door, drapery or similar object cannot be nearer than 12 inches (305 mm) to any portion of the register of the furnace.
4. Floor construction. Floor furnaces shall not be installed in concrete floor construction built on grade.
5. Thermostat. The controlling thermostat for a floor furnace shall be located within the same room or space as the floor furnace or shall be located in an adjacent room or space that is permanently open to the room or space containing the floor furnace.

609.3 Bracing. The floor around the furnace shall be braced and headed with a support framework designed in accordance with the *Building Code of New York State*.

609.4 Clearance. The lowest portion of the floor furnace shall have not less than a 6-inch (152 mm) *clearance* from the grade level; except where the lower 6-inch (152 mm) portion of the floor furnace is sealed by the manufacturer to prevent entrance of water, the minimum *clearance* shall be not less than 2 inches (51 mm). Where such clearances cannot be provided, the ground below and to the sides shall be excavated to form a pit under the furnace so that the required *clearance* is provided beneath the lowest portion of the furnace. A 12-inch (305 mm) minimum *clearance* shall be provided on all sides except the control side, which shall have an 18-inch (457 mm) minimum *clearance*.

609.5 First floor installation. Where the basement story level below the floor in which a floor furnace is installed is utilized as habitable space, such floor furnaces shall be enclosed as specified in Section 609.6 and shall project into a nonhabitable space.

609.6 Upper floor installations. Floor furnaces installed in upper stories of buildings shall project below into nonhabitable space and shall be separated from the nonhabitable space by an enclosure constructed of *noncombustible materials*. The floor furnace shall be provided with *access*, *clearance* to all sides and bottom of not less than 6 inches (152 mm) and *combustion air* in accordance with Section 304.

SECTION 610
DUCT FURNACES

610.1 General. Duct furnaces shall be tested in accordance with ANSI Z83.8/CSA 2.6 or UL 795 and shall be installed in accordance with the manufacturer's instructions.

610.2 Access panels. Ducts connected to duct furnaces shall have removable *access* panels on both the upstream and downstream sides of the furnace.

610.3 Location of draft hood and controls. The controls, *combustion air* inlets and draft hoods for duct furnaces shall be located outside of the ducts. The draft hood shall be located in the same enclosure from which *combustion air* is taken.

610.4 Circulating air. Where a duct furnace is installed so that supply ducts convey air to areas outside the space containing the furnace, the return air shall be conveyed by a duct(s) sealed to the furnace casing and terminating outside the space containing the furnace.

The duct furnace shall be installed on the positive pressure side of the circulating air blower.

SECTION 611
NONRECIRCULATING DIRECT-FIRED INDUSTRIAL AIR HEATERS

611.1 General. *Nonrecirculating direct-fired industrial air heaters* shall be *listed* to ANSI Z83.4/CSA 3.7 and shall be installed in accordance with the manufacturer's instructions.

611.2 Installation. *Nonrecirculating direct-fired industrial air heaters* shall not be used to supply any area containing sleeping quarters. *Nonrecirculating direct-fired industrial air heaters* shall be installed only in industrial or commercial occupancies. *Nonrecirculating direct-fired industrial air heaters* shall be permitted to provide ventilation air.

611.3 Clearance from *combustible materials*. *Nonrecirculating direct-fired industrial air heaters* shall be installed with a *clearance* from *combustible materials* of not less than that shown on the rating plate and in the manufacturer's instructions.

611.4 Supply air. All air handled by a *nonrecirculating direct-fired industrial air heater*, including *combustion air*, shall be ducted directly from the outdoors.

611.5 Outdoor air louvers. If outdoor air louvers of either the manual or automatic type are used, such devices shall be proven to be in the open position prior to allowing the main burners to operate.

611.6 Atmospheric vents and gas reliefs or bleeds. *Nonrecirculating direct-fired industrial air heaters* with valve train components equipped with atmospheric vents or gas reliefs or bleeds shall have their atmospheric vent lines or gas reliefs or bleeds lead to the outdoors. Means shall be employed on these lines to prevent water from entering and to prevent blockage by insects and foreign matter. An atmospheric vent line shall not be required to be provided on a valve train component equipped with a *listed* vent limiter.

611.7 Relief opening. The design of the installation shall include provisions to permit *nonrecirculating direct-fired industrial air heaters* to operate at rated capacity without overpressurizing the space served by the heaters by taking into account the structure's designed infiltration rate, providing properly designed relief openings or an interlocked power exhaust system, or a combination of these methods. The structure's designed infiltration rate and the size of relief openings shall be determined by *approved* engineering methods. Relief openings shall be permitted to be louvers or counterbalanced gravity dampers. Where motorized dampers or closable louvers are used, they shall be verified to be in their full open position prior to main burner operation.

INTERNATIONAL CODE COUNCIL®
Copyright © 2019 ICC & NYSDOS. ALL RIGHTS RESERVED. Accessed by Lauren Gualdino (lgualdino@briarcliffmanor.org), (-) Order Number #100880972 on May 08, 2020 07:05 AM (PDT) pursuant to License Agreement with ICC & NYSDOS. No further reproduction, no

100880972

611.8 Access. *Nonrecirculating direct-fired industrial air heaters* shall be provided with *access* for removal of burners; replacement of motors, controls, filters and other working parts; and for adjustment and lubrication of parts requiring maintenance.

611.9 Purging. Inlet ducting, where used, shall be purged by not less than four air changes prior to an ignition attempt.

SECTION 612
RECIRCULATING DIRECT-FIRED INDUSTRIAL AIR HEATERS

612.1 General. *Recirculating direct-fired industrial air heaters* shall be *listed* to ANSI Z83.18 and shall be installed in accordance with the manufacturer's instructions.

612.2 Location. *Recirculating direct-fired industrial air heaters* shall be installed only in industrial and commercial occupancies. *Recirculating direct-fired air heaters* shall not serve any area containing sleeping quarters. *Recirculating direct-fired industrial air heaters* shall not be installed in hazardous locations or in buildings that contain flammable solids, liquids or gases, explosive materials or substances that can become toxic when exposed to flame or heat.

612.3 Installation. Direct-fired industrial air heaters shall be permitted to be installed in accordance with their listing and the manufacturer's instructions. Direct-fired industrial air heaters shall be installed only in industrial or commercial occupancies. Direct-fired industrial air heaters shall be permitted to provide fresh air ventilation.

612.4 Clearance from *combustible materials*. Direct-fired industrial air heaters shall be installed with a *clearance* from *combustible material* of not less than that shown on the label and in the manufacturer's instructions.

612.5 Air supply. Air to direct-fired industrial air heaters shall be taken from the building, ducted directly from outdoors, or a combination of both. Direct-fired industrial air heaters shall incorporate a means to supply outside ventilation air to the space at a rate of not less than 4 cubic feet per minute per 1,000 Btu per hour (0.38 m^3 per min per kW) of rated input of the heater. If a separate means is used to supply ventilation air, an interlock shall be provided so as to lock out the main burner operation until the mechanical means is verified. Where outside air dampers or closing louvers are used, they shall be verified to be in the open position prior to main burner operation.

612.6 Atmospheric vents, gas reliefs or bleeds. Direct-fired industrial air heaters with valve train components equipped with atmospheric vents, gas reliefs or bleeds shall have their atmospheric vent lines and gas reliefs or bleeds lead to the outdoors.

Means shall be employed on these lines to prevent water from entering and to prevent blockage by insects and foreign matter. An atmospheric vent line shall not be required to be provided on a valve train component equipped with a *listed* vent limiter.

612.7 Relief opening. The design of the installation shall include adequate provision to permit direct-fired industrial air heaters to operate at rated capacity by taking into account the structure's designed infiltration rate, providing properly designed relief openings or an interlocked power exhaust system, or a combination of these methods. The structure's designed infiltration rate and the size of relief openings shall be determined by *approved* engineering methods. Relief openings shall be permitted to be louvers or counterbalanced gravity dampers. Where motorized dampers or closable louvers are used, they shall be verified to be in their full open position prior to main burner operation.

SECTION 613
CLOTHES DRYERS

613.1 General. Clothes dryers shall be tested in accordance with ANSI Z21.5.1/CSA 7.1 or ANSI Z21.5.2/CSA 7.2 and shall be installed in accordance with the manufacturer's instructions.

SECTION 614
CLOTHES DRYER EXHAUST

[M] 614.1 Installation. Clothes dryers shall be exhausted in accordance with the manufacturer's instructions. Dryer exhaust systems shall be independent of all other systems, and shall convey the moisture and any products of combustion to the outside of the building.

[M] 614.2 Duct penetrations. Ducts that exhaust clothes dryers shall not penetrate or be located within any fireblocking, draftstopping or any wall, floor/ceiling or other assembly required by the *Building Code of New York State* to be fire-resistance rated, unless such duct is constructed of galvanized steel or aluminum of the thickness specified in Table 603.4 of the *Mechanical Code of New York State* and the fire-resistance rating is maintained in accordance with the *Building Code of New York State*. Fire dampers shall not be installed in clothes dryer exhaust duct systems.

[M] 614.3 Cleaning access. Each vertical duct riser for dryers *listed* to ANSI Z21.5.2/CSA 7.2 shall be provided with a cleanout or other means for cleaning the interior of the duct.

[M] 614.4 Exhaust installation. Exhaust ducts for clothes dryers shall terminate on the outside of the building and shall be equipped with a backdraft damper. Screens shall not be installed at the duct termination. Ducts shall not be connected or installed with sheet metal screws or other fasteners that will obstruct the flow. Clothes dryer exhaust ducts shall not be connected to a vent connector, vent or chimney. Clothes dryer exhaust ducts shall not extend into or through ducts or plenums. Clothes dryer exhaust ducts shall be sealed in accordance with Section 603.9 of the *Mechanical Code of New York State*.

614.4.1 Exhaust termination outlet and passageway. The passageway of dryer exhaust duct terminals shall be undiminished in size and shall provide an open area of not less than 12.5 square inches (8065 mm^2).

[M] 614.5 Dryer exhaust duct power ventilators. Domestic dryer exhaust duct power ventilators shall be listed and labeled to UL 705 for use in dryer exhaust duct systems. The

INTERNATIONAL CODE COUNCIL®
Copyright © 2019 ICC & NYSDOS. ALL RIGHTS RESERVED. Accessed by Lauren Gualdino (lgualdino@briarcliffmanor.org), (-) Order Number #100880972 on May 08, 2020 07:05 AM (PDT) pursuant to License Agreement with ICC & NYSDOS. No further reproduction, no

100880972

dryer exhaust duct power ventilator shall be installed in accordance with the manufacturer's instructions.

[M] 614.6 Makeup air. Installations exhausting more than 200 cfm (0.09 m^3/s) shall be provided with makeup air. Where a closet is designed for the installation of a clothes dryer, an opening having an area of not less than 100 square inches (645 mm^2) for makeup air shall be provided in the closet enclosure, or makeup air shall be provided by other *approved* means.

[M] 614.7 Protection required. Protective shield plates shall be placed where nails or screws from finish or other work are likely to penetrate the clothes dryer exhaust duct. Shield plates shall be placed on the finished face of all framing members where there is less than $1^1/_4$ inches (32 mm) between the duct and the finished face of the framing member. Protective shield plates shall be constructed of steel, shall have a minimum thickness of 0.062 inch (1.6 mm) and shall extend not less than 2 inches (51 mm) above sole plates and below top plates.

[M] 614.8 Domestic clothes dryer exhaust ducts. Exhaust ducts for domestic clothes dryers shall conform to the requirements of Sections 614.8.1 through 614.8.6.

[M] 614.8.1 Material and size. Exhaust ducts shall have a smooth interior finish and shall be constructed of metal not less than 0.016 inch (0.4 mm) in thickness. The exhaust duct size shall be 4 inches (102 mm) nominal in diameter.

[M] 614.8.2 Duct installation. Exhaust ducts shall be supported at 4-foot (1219 mm) intervals and secured in place. The insert end of the duct shall extend into the adjoining duct or fitting in the direction of airflow. Ducts shall not be joined with screws or similar fasteners that protrude more than $^1/_8$ inch (3.2 mm) into the inside of the duct. Where dryer exhaust ducts are enclosed in wall or ceiling cavities, such cavities shall allow the installation of the duct without deformation.

[M] 614.8.3 Transition ducts. Transition ducts used to connect the dryer to the exhaust duct system shall be a single length that is *listed* and *labeled* in accordance with UL 2158A. Transition ducts shall be not more than 8 feet (2438 mm) in length, and shall not be concealed within construction.

[M] 614.8.4 Duct length. The maximum allowable exhaust duct length shall be determined by one of the methods specified in Sections 614.8.4.1 through 614.8.4.3.

[M] 614.8.4.1 Specified length. The maximum length of the exhaust duct shall be 35 feet (10 668 mm) from the connection to the transition duct from the dryer to the outlet terminal. Where fittings are utilized, the maximum length of the exhaust duct shall be reduced in accordance with Table 614.8.4.1.

[M] 614.8.4.2 Manufacturer's instructions. The maximum length of the exhaust duct shall be determined by the dryer manufacturer's installation instructions. The *building official* shall be provided with a copy of the installation instructions for the make and model of the dryer. Where the exhaust duct is to be concealed, the installation instructions shall be provided to the *building official* prior to the concealment inspection. In the absence of fitting equivalent length calculations from the clothes dryer manufacturer, Table 614.8.4.1 shall be utilized.

[M] 614.8.4.3 Dryer exhaust duct power ventilator length. The maximum length of the exhaust duct shall be determined by the dryer exhaust duct power ventilator manufacturer's installation instructions.

[M] 614.8.5 Length identification. Where the exhaust duct equivalent length exceeds 35 feet (10 668 mm), the equivalent length of the exhaust duct shall be identified on a permanent label or tag. The label or tag shall be located within 6 feet (1829 mm) of the exhaust duct connection.

[M] 614.8.6 Exhaust duct required. Where space for a clothes dryer is provided, an exhaust duct system shall be installed.

Where the clothes dryer is not installed at the time of occupancy, the exhaust duct shall be capped at the location of the future dryer.

Exception: Where a *listed* condensing clothes dryer is installed prior to occupancy of the structure.

[M] 614.9 Commercial clothes dryers. The installation of dryer exhaust ducts serving Type 2 clothes dryers shall comply with the *appliance* manufacturer's instructions. Exhaust fan motors installed in exhaust systems shall be located outside of the airstream. In multiple installations, the fan shall operate continuously or be interlocked to operate when any

[M] TABLE 614.8.4.1
DRYER EXHAUST DUCT FITTING EQUIVALENT LENGTH

DRYER EXHAUST DUCT FITTING TYPE	EQUIVALENT LENGTH
4 inch radius mitered 45-degree elbow	2 feet, 6 inches
4 inch radius mitered 90-degree elbow	5 feet
6 inch radius smooth 45-degree elbow	1 foot
6 inch radius smooth 90-degree elbow	1 foot, 9 inches
8 inch radius smooth 45-degree elbow	1 foot
8 inch radius smooth 90-degree elbow	1 foot, 7 inches
10 inch radius smooth 45-degree elbow	9 inches
10 inch radius smooth 90-degree elbow	1 foot, 6 inches

For SI: 1 inch = 25.4 mm, 1 foot = 304.8 mm, 1 degree = 0.01745 rad.

INTERNATIONAL CODE COUNCIL®
Copyright © 2019 ICC & NYSDOS. ALL RIGHTS RESERVED. Accessed by Lauren Gualdino (lgualdino@briarcliffmanor.org), (-) Order Number #100880972 on May 08, 2020 07:05 AM (PDT) pursuant to License Agreement with ICC & NYSDOS. No further reproduction, no

100880972

individual unit is operating. Ducts shall have a minimum *clearance* of 6 inches (152 mm) to *combustible materials*.

[M] 614.10 Common exhaust systems for clothes dryers located in multistory structures. Where a common multistory duct system is designed and installed to convey exhaust from multiple clothes dryers, the construction of such system shall be in accordance with all of the following:

1. The shaft in which the duct is installed shall be constructed and fire-resistance rated as required by the *Building Code of New York State*.
2. Dampers shall be prohibited in the exhaust duct. Penetrations of the shaft and ductwork shall be protected in accordance with Section 607.5.5, Exception 2, of the *Mechanical Code of New York State*.
3. Rigid metal ductwork shall be installed within the shaft to convey the exhaust. The ductwork shall be constructed of sheet steel having a minimum thickness of 0.0187 inch (0.471 mm) (No. 26 gage) and in accordance with SMACNA *Duct Construction Standards*.
4. The ductwork within the shaft shall be designed and installed without offsets.
5. The exhaust fan motor design shall be in accordance with Section 503.2 of the *Mechanical Code of New York State*.
6. The exhaust fan motor shall be located outside of the airstream.
7. The exhaust fan shall run continuously, and shall be connected to a standby power source.
8. The exhaust fan operation shall be monitored in an *approved* location and shall initiate an audible or visual signal when the fan is not in operation.
9. Makeup air shall be provided for the exhaust system.
10. A cleanout opening shall be located at the base of the shaft to provide *access* to the duct to allow for cleaning and inspection. The finished opening shall be not less than 12 inches by 12 inches (305 mm by 305 mm).
11. Screens shall not be installed at the termination.

SECTION 615
SAUNA HEATERS

615.1 General. Sauna heaters shall be installed in accordance with the manufacturer's instructions.

615.2 Location and protection. Sauna heaters shall be located so as to minimize the possibility of accidental contact by a person in the room.

615.2.1 Guards. Sauna heaters shall be protected from accidental contact by an *approved* guard or barrier of material having a low coefficient of thermal conductivity. The guard shall not substantially affect the transfer of heat from the heater to the room.

615.3 Access. Panels, grilles and *access* doors that are required to be removed for normal servicing operations shall not be attached to the building.

615.4 Combustion and dilution air intakes. Sauna heaters of other than the direct-vent type shall be installed with the *draft hood* and *combustion air* intake located outside the sauna room. Where the *combustion air* inlet and the draft hood are in a dressing room adjacent to the sauna room, there shall be provisions to prevent physically blocking the *combustion air* inlet and the *draft hood* inlet, and to prevent physical contact with the *draft hood* and vent assembly, or warning notices shall be posted to avoid such contact. Any warning notice shall be easily readable, shall contrast with its background and the wording shall be in letters not less than $^1/_4$ inch (6.4 mm) high.

615.5 Combustion and ventilation air. *Combustion air* shall not be taken from inside the sauna room. *Combustion* and ventilation air for a sauna heater not of the direct-vent type shall be provided to the area in which the *combustion air* inlet and *draft hood* are located in accordance with Section 304.

615.6 Heat and time controls. Sauna heaters shall be equipped with a *thermostat* that will limit room temperature to 194°F (90°C). If the *thermostat* is not an integral part of the sauna heater, the heat-sensing element shall be located within 6 inches (152 mm) of the ceiling. If the heat-sensing element is a capillary tube and bulb, the assembly shall be attached to the wall or other support, and shall be protected against physical damage.

615.6.1 Timers. A timer, if provided to control main burner operation, shall have a maximum operating time of 1 hour. The control for the timer shall be located outside the sauna room.

615.7 Sauna room. A ventilation opening into the sauna room shall be provided. The opening shall be not less than 4 inches by 8 inches (102 mm by 203 mm) located near the top of the door into the sauna room.

615.7.1 Warning notice. The following permanent notice, constructed of *approved* material, shall be mechanically attached to the sauna room on the outside:

WARNING: DO NOT EXCEED 30 MINUTES IN SAUNA. EXCESSIVE EXPOSURE CAN BE HARMFUL TO HEALTH. ANY PERSON WITH POOR HEALTH SHOULD CONSULT A PHYSICIAN BEFORE USING SAUNA.

The words shall contrast with the background and the wording shall be in letters not less than $^1/_4$ inch (6.4 mm) high.

Exception: This section shall not apply to one- and two-family dwellings.

SECTION 616
ENGINE AND GAS TURBINE-POWERED EQUIPMENT

616.1 Powered equipment. Permanently installed *equipment* powered by internal combustion engines and turbines shall be installed in accordance with the manufacturer's instructions and NFPA 37. Stationary engine generator assemblies shall meet the requirements of UL 2200.

INTERNATIONAL CODE COUNCIL®
Copyright © 2019 ICC & NYSDOS. ALL RIGHTS RESERVED. Accessed by Lauren Gualdino (lgualdino@briarcliffmanor.org), (-) Order Number #100880972 on May 08, 2020 07:05 AM (PDT) pursuant to License Agreement with ICC & NYSDOS. No further reproduction, no

100880972

616.2 Gas supply connection. *Equipment* powered by internal combustion engines and turbines shall not be rigidly connected to the gas supply *piping*.

SECTION 617
POOL AND SPA HEATERS

617.1 General. Pool and spa heaters shall be tested in accordance with ANSI Z21.56/CSA 4.7 and shall be installed in accordance with the manufacturer's instructions.

SECTION 618
FORCED-AIR WARM-AIR FURNACES

618.1 General. Forced-air warm-air furnaces shall be tested in accordance with ANSI Z21.47/CSA 2.3 or UL 795 and shall be installed in accordance with the manufacturer's instructions.

618.2 Dampers. Volume dampers shall not be placed in the air inlet to a furnace in a manner that will reduce the required air to the furnace.

618.3 Prohibited sources. Outdoor or return air for forced-air heating and cooling systems shall not be taken from the following locations:

1. Closer than 10 feet (3048 mm) from an *appliance* vent outlet, a vent opening from a plumbing drainage system or the discharge outlet of an exhaust fan, unless the outlet is 3 feet (914 mm) above the outside air inlet.
2. Where there is the presence of objectionable odors, fumes or flammable vapors; or where located less than 10 feet (3048 mm) above the surface of any abutting public way or driveway; or where located at grade level by a sidewalk, street, alley or driveway.
3. A hazardous or insanitary location or a refrigeration machinery room as defined in the *Mechanical Code of New York State*.
4. A room or space, the volume of which is less than 25 percent of the entire volume served by such system. Where connected by a permanent opening having an area sized in accordance with this code, adjoining rooms or spaces shall be considered to be a single room or space for the purpose of determining the volume of such rooms or spaces.

   Exception: The minimum volume requirement shall not apply where the amount of return air taken from a room or space is less than or equal to the amount of supply air delivered to such room or space.
5. A room or space containing an *appliance* where such a room or space serves as the sole source of return air.

   Exception: This shall not apply where:

   1. The *appliance* is a direct-vent *appliance* or an *appliance* not requiring a vent in accordance with Section 501.8.
   2. The room or space complies with the following requirements:

      2.1. The return air shall be taken from a room or space having a volume exceeding 1 cubic foot for each 10 Btu/h (9.6 L/W) of combined input rating of all fuel-burning appliances therein.

      2.2. The volume of supply air discharged back into the same space shall be approximately equal to the volume of return air taken from the space.

      2.3. Return-air inlets shall not be located within 10 feet (3048 mm) of a draft hood in the same room or space or the combustion chamber of any atmospheric burner *appliance* in the same room or space.

   3. Rooms or spaces containing solid fuel-burning appliances, provided that return-air inlets are located not less than 10 feet (3048 mm) from the firebox of such appliances.
6. A closet, bathroom, toilet room, kitchen, garage, boiler room, furnace room or unconditioned attic.

   Exceptions:

   1. Where return air intakes are located not less than 10 feet (3048 mm) from cooking appliances and serve only the kitchen area, taking return air from a kitchen area shall not be prohibited.
   2. Dedicated forced air systems serving only a garage shall not be prohibited from obtaining return air from the garage.
7. A crawl space by means of direct connection to the return side of a forced-air system. Transfer openings in the crawl space enclosure shall not be prohibited.

618.4 Screen. Required outdoor air inlets for residential portions of a building shall be covered with a screen having $^1/_4$-inch (6.4 mm) openings. Required outdoor air inlets serving a nonresidential portion of a building shall be covered with screen having openings larger than $^1/_4$ inch (6.4 mm) and not larger than 1 inch (25 mm).

618.5 Return-air limitation. Return air from one *dwelling unit* shall not be discharged into another *dwelling unit*.

618.6 Furnace plenums and air ducts. Where a furnace is installed so that supply ducts carry air circulated by the furnace to areas outside of the space containing the furnace, the return air shall be handled by a duct(s) sealed to the furnace casing and terminating outside of the space containing the furnace.

SECTION 619
CONVERSION BURNERS

619.1 Conversion burners. The installation of conversion burners shall conform to ANSI Z21.8.

INTERNATIONAL CODE COUNCIL®
Copyright © 2019 ICC & NYSDOS. ALL RIGHTS RESERVED. Accessed by Lauren Gualdino (lgualdino@briarcliffmanor.org), (-) Order Number #100880972 on May 08, 2020 07:05 AM (PDT) pursuant to License Agreement with ICC & NYSDOS. No further reproduction, no

100880972

SECTION 620
UNIT HEATERS

620.1 General. Unit heaters shall be tested in accordance with ANSI Z83.8/CSA 2.6 and shall be installed in accordance with the manufacturer's instructions.

620.2 Support. Suspended-type unit heaters shall be supported by elements that are designed and constructed to accommodate the weight and dynamic loads. Hangers and brackets shall be of *noncombustible material*.

620.3 Ductwork. Ducts shall not be connected to a unit heater unless the heater is *listed* for such installation.

620.4 Clearance. Suspended-type unit heaters shall be installed with clearances to *combustible materials* of not less than 18 inches (457 mm) at the sides, 12 inches (305 mm) at the bottom and 6 inches (152 mm) above the top where the unit heater has an internal draft hood or 1 inch (25 mm) above the top of the sloping side of the vertical draft hood.

Floor-mounted-type unit heaters shall be installed with clearances to *combustible materials* at the back and one side only of not less than 6 inches (152 mm). Where the flue gases are vented horizontally, the 6-inch (152 mm) *clearance* shall be measured from the draft hood or vent instead of the rear wall of the unit heater. Floor-mounted-type unit heaters shall not be installed on combustible floors unless *listed* for such installation.

Clearances for servicing all unit heaters shall be in accordance with the manufacturer's installation instructions.

Exception: Unit heaters *listed* for reduced *clearance* shall be permitted to be installed with such clearances in accordance with their listing and the manufacturer's instructions.

620.5 Installation in commercial garages and aircraft hangars. Unit heaters installed in garages for more than three motor vehicles or in aircraft hangars shall be installed in accordance with Sections 305.9, 305.10 and 305.11.

SECTION 621
UNVENTED ROOM HEATERS

621.1 General. Unvented room heaters shall be tested in accordance with ANSI Z21.11.2 and shall be installed in accordance with the conditions of the listing and the manufacturer's instructions. Unvented room heaters utilizing fuels other than fuel gas shall be regulated by the *Mechanical Code of New York State*.

621.2 Prohibited use. One or more unvented room heaters shall not be used as the sole source of comfort heating in a *dwelling unit*.

621.3 Input rating. Unvented room heaters shall not have an input rating in excess of 40,000 Btu/h (11.7 kW).

621.4 Prohibited locations. Unvented room heaters shall not be installed within occupancies in Groups A, E and I. The location of unvented room heaters shall comply with Section 303.3.

621.5 Room or space volume. The aggregate input rating of all unvented appliances installed in a room or space shall not exceed 20 Btu/h per cubic foot (207 W/m^3) of volume of such room or space. Where the room or space in which the appliances are installed is directly connected to another room or space by a doorway, archway or other opening of comparable size that cannot be closed, the volume of such adjacent room or space shall be permitted to be included in the calculations.

621.6 Oxygen-depletion safety system. Unvented room heaters shall be equipped with an oxygen-depletion-sensitive safety shutoff system. The system shall shut off the gas supply to the main and pilot burners when the oxygen in the surrounding atmosphere is depleted to the percent concentration specified by the manufacturer, but not lower than 18 percent. The system shall not incorporate field adjustment means capable of changing the set point at which the system acts to shut off the gas supply to the room heater.

621.7 Unvented decorative room heaters. An unvented decorative room heater shall not be installed in a factory-built *fireplace* unless the *fireplace* system has been specifically tested, *listed* and *labeled* for such use in accordance with UL 127.

621.7.1 Ventless firebox enclosures. Ventless firebox enclosures used with unvented decorative room heaters shall be *listed* as complying with ANSI Z21.91.

SECTION 622
VENTED ROOM HEATERS

622.1 General. Vented room heaters shall be tested in accordance with ANSI Z21.86/CSA 2.32, shall be designed and equipped as specified in Section 602.2 and shall be installed in accordance with the manufacturer's instructions.

SECTION 623
COOKING APPLIANCES

623.1 Cooking appliances. Cooking appliances that are designed for permanent installation, including ranges, ovens, stoves, broilers, grills, fryers, griddles, hot plates and barbecues, shall be tested in accordance with ANSI Z21.1, ANSI Z21.58/CSA 1.6 or ANSI Z83.11/CSA 1.8 and shall be installed in accordance with the manufacturer's instructions.

623.2 Prohibited location. Cooking appliances designed, tested, *listed* and *labeled* for use in commercial occupancies shall not be installed within dwelling units or within any area where domestic cooking operations occur.

Exceptions:

1. Appliances that are also listed as domestic cooking appliances.
2. Where the installation is designed by a licensed Professional Engineer, in compliance with the manufacturer's installation instructions.

623.3 Domestic appliances. Cooking appliances installed within dwelling units and within areas where domestic cooking operations occur shall be *listed* and *labeled* as household-type appliances for domestic use.

623.4 Domestic range installation. Domestic ranges installed on combustible floors shall be set on their own bases or legs and shall be installed with clearances of not less than that shown on the label.

INTERNATIONAL CODE COUNCIL®
Copyright © 2019 ICC & NYSDOS. ALL RIGHTS RESERVED. Accessed by Lauren Gualdino (lgualdino@briarcliffmanor.org), (-) Order Number #100880972 on May 08, 2020 07:05 AM (PDT) pursuant to License Agreement with ICC & NYSDOS. No further reproduction, no

100880972

623.5 Open-top broiler unit hoods. A ventilating hood shall be provided above a domestic open-top broiler unit, unless otherwise *listed* for forced down draft ventilation.

623.5.1 Clearances. A minimum *clearance* of 24 inches (610 mm) shall be maintained between the cooking top and *combustible material* above the hood. The hood shall be at least as wide as the open-top broiler unit and be centered over the unit.

623.6 Commercial cooking appliance venting. Commercial cooking appliances, other than those exempted by Section 501.8, shall be vented by connecting the *appliance* to a vent or chimney in accordance with this code and the *appliance* manufacturer's instructions or the *appliance* shall be vented in accordance with Section 505.1.1.

623.7 Vertical clearance above cooking top. Household cooking appliances shall have a vertical *clearance* above the cooking top of not less than 30 inches (760 mm) to *combustible material* and metal cabinets. A minimum *clearance* of 24 inches (610 mm) is permitted where one of the following is installed:

1. The underside of the *combustible material* or metal cabinet above the cooking top is protected with not less than $^1/_4$-inch (6.4 mm) insulating millboard covered with sheet metal not less than 0.0122 inch (0.3 mm) thick.
2. A metal ventilating hood constructed of sheet metal not less than 0.0122 inch (0.3 mm) thick is installed above the cooking top with a *clearance* of not less than $^1/_4$ inch (6.4 mm) between the hood and the underside of the *combustible material* or metal cabinet. The hood shall have a width not less than the width of the *appliance* and shall be centered over the *appliance.*
3. A *listed* cooking *appliance* or microwave oven is installed over a *listed* cooking *appliance* and in compliance with the terms of the manufacturer's installation instructions for the upper appliance.

SECTION 624
WATER HEATERS

624.1 General. Water heaters shall be tested in accordance with ANSI Z21.10.1/CSA 4.1 and ANSI Z21.10.3/CSA 4.3 and shall be installed in accordance with the manufacturer's instructions. Water heaters utilizing fuels other than fuel gas shall be regulated by the *Mechanical Code of New York State.*

624.1.1 Installation requirements. The requirements for water heaters relative to sizing, relief valves, drain pans and scald protection shall be in accordance with the *Plumbing Code of New York State.*

624.2 Water heaters utilized for space heating. Water heaters utilized both to supply potable hot water and provide hot water for space-heating applications shall be *listed* and *labeled* for such applications by the manufacturer and shall be installed in accordance with the manufacturer's instructions and the *Plumbing Code of New York State.*

SECTION 625
REFRIGERATORS

625.1 General. Refrigerators shall be tested in accordance with ANSI Z21.19/CSA 1.4 and shall be installed in accordance with the manufacturer's instructions.

Refrigerators shall be provided with adequate clearances for ventilation at the top and back, and shall be installed in accordance with the manufacturer's instructions. If such instructions are not available, not less than 2 inches (51 mm) shall be provided between the back of the refrigerator and the wall and not less than 12 inches (305 mm) above the top.

SECTION 626
GAS-FIRED TOILETS

626.1 General. Gas-fired toilets shall be tested in accordance with ANSI Z21.61 and installed in accordance with the manufacturer's instructions.

626.2 Clearance. A gas-fired toilet shall be installed in accordance with its listing and the manufacturer's instructions, provided that the *clearance* shall in any case be sufficient to afford ready *access* for use, cleanout and necessary servicing.

SECTION 627
AIR-CONDITIONING APPLIANCES

627.1 General. Gas-fired air-conditioning appliances shall be tested in accordance with ANSI Z21.40.1/CGA 2.91 or ANSI Z21.40.2/CGA 2.92 and shall be installed in accordance with the manufacturer's instructions.

627.2 Independent piping. Gas *piping* serving heating appliances shall be permitted to also serve cooling appliances where such heating and cooling appliances cannot be operated simultaneously (see Section 402).

627.3 Connection of gas engine-powered air conditioners. To protect against the effects of normal vibration in service, gas engines shall not be rigidly connected to the gas supply *piping.*

627.4 Clearances for indoor installation. Air-conditioning appliances installed in rooms other than alcoves and closets shall be installed with clearances not less than those specified in Section 308.3 except that air-conditioning appliances *listed* for installation at lesser clearances than those specified in Section 308.3 shall be permitted to be installed in accordance with such listing and the manufacturer's instructions and air-conditioning appliances *listed* for installation at greater clearances than those specified in Section 308.3 shall be installed in accordance with such listing and the manufacturer's instructions.

Air-conditioning appliances installed in rooms other than alcoves and closets shall be permitted to be installed with reduced clearances to *combustible material*, provided that the *combustible material* is protected in accordance with Table 308.2.

627.5 Alcove and closet installation. Air-conditioning appliances installed in spaces such as alcoves and closets shall be specifically *listed* for such installation and installed in accordance with the terms of such listing. The installation clear-

INTERNATIONAL CODE COUNCIL®
Copyright © 2019 ICC & NYSDOS. ALL RIGHTS RESERVED. Accessed by Lauren Gualdino (lgualdino@briarcliffmanor.org), (-) Order Number #100880972 on May 08, 2020 07:05 AM (PDT) pursuant to License Agreement with ICC & NYSDOS. No further reproduction, no

100880972

ances for air-conditioning appliances in alcoves and closets shall not be reduced by the protection methods described in Table 308.2.

627.6 Installation. Air-conditioning appliances shall be installed in accordance with the manufacturer's instructions. Unless the *appliance* is *listed* for installation on a combustible surface such as a floor or roof, or unless the surface is protected in an *approved* manner, the *appliance* shall be installed on a surface of noncombustible construction with *noncombustible material* and surface finish, and *combustible material* shall not be against the underside thereof.

627.7 Plenums and air ducts. A plenum supplied as a part of the air-conditioning *appliance* shall be installed in accordance with the *appliance* manufacturer's instructions. Where a plenum is not supplied with the *appliance*, such plenum shall be installed in accordance with the fabrication and installation instructions provided by the plenum and *appliance* manufacturer. The method of connecting supply and return ducts shall facilitate proper circulation of air.

Where the air-conditioning *appliance* is installed within a space separated from the spaces served by the *appliance*, the air circulated by the *appliance* shall be conveyed by ducts that are sealed to the casing of the *appliance* and that separate the circulating air from the combustion and ventilation air.

627.8 Refrigeration coils. A refrigeration coil shall not be installed in conjunction with a forced-air furnace where circulation of cooled air is provided by the furnace blower, unless the blower has sufficient capacity to overcome the external static resistance imposed by the duct system and cooling coil at the air throughput necessary for heating or cooling, whichever is greater. Furnaces shall not be located upstream from cooling units, unless the cooling unit is designed or equipped so as not to develop excessive temperature or pressure. Refrigeration coils shall be installed in parallel with or on the downstream side of central furnaces to avoid condensation in the heating element, unless the furnace has been specifically *listed* for downstream installation. With a parallel flow arrangement, the dampers or other means used to control flow of air shall be sufficiently tight to prevent any circulation of cooled air through the furnace.

Means shall be provided for disposal of condensate and to prevent dripping of condensate onto the heating element.

627.9 Cooling units used with heating boilers. Boilers, where used in conjunction with refrigeration systems, shall be installed so that the chilled medium is piped in parallel with the heating boiler with appropriate valves to prevent the chilled medium from entering the heating boiler. Where hot water heating boilers are connected to heating coils located in air-handling units where they might be exposed to refrigerated air circulation, such boiler *piping* systems shall be equipped with flow control valves or other automatic means to prevent gravity circulation of the boiler water during the cooling cycle.

627.10 Switches in electrical supply line. Means for interrupting the electrical supply to the air-conditioning *appliance* and to its associated cooling tower (if supplied and installed in a location remote from the air conditioner) shall be provided within sight of and not over 50 feet (15 240 mm) from the air conditioner and cooling tower.

SECTION 628
ILLUMINATING APPLIANCES

628.1 General. Illuminating appliances shall be tested in accordance with ANSI Z21.42 and shall be installed in accordance with the manufacturer's instructions.

628.2 Mounting on buildings. Illuminating appliances designed for wall or ceiling mounting shall be securely attached to substantial structures in such a manner that they are not dependent on the gas *piping* for support.

628.3 Mounting on posts. Illuminating appliances designed for post mounting shall be securely and rigidly attached to a post. Posts shall be rigidly mounted. The strength and rigidity of posts greater than 3 feet (914 mm) in height shall be at least equivalent to that of a $2^1/_2$-inch-diameter (64 mm) post constructed of 0.064-inch-thick (1.6-mm) steel or a 1-inch (25.4 mm) Schedule 40 steel pipe. Posts 3 feet (914 mm) or less in height shall not be smaller than a $^3/_4$-inch (19.1 mm) Schedule 40 steel pipe. Drain openings shall be provided near the base of posts where there is a possibility of water collecting inside them.

628.4 Appliance pressure regulators. Where an *appliance* pressure regulator is not supplied with an illuminating *appliance* and the service line is not equipped with a service pressure regulator, an *appliance* pressure regulator shall be installed in the line to the illuminating *appliance*. For multiple installations, one regulator of adequate capacity shall be permitted to serve more than one illuminating *appliance*.

SECTION 629
SMALL CERAMIC KILNS

629.1 General. Kilns shall be installed in accordance with the manufacturer's instructions and the provisions of this code. Kilns shall comply with Section 301.3.

SECTION 630
INFRARED RADIANT HEATERS

630.1 General. Infrared radiant heaters shall be tested in accordance with ANSI Z83.19 or Z83.20 and shall be installed in accordance with the manufacturer's instructions.

630.2 Support. Infrared radiant heaters shall be fixed in a position independent of gas and electric supply lines. Hangers and brackets shall be of *noncombustible material*.

630.3 Combustion and ventilation air. Where unvented infrared heaters are installed, natural or mechanical means shall provide outdoor ventilation air at a rate of not less than 4 cfm per 1,000 Btu/h (0.38 m^3/min/kW) of the aggregate input rating of all such heaters installed in the space. Exhaust openings for removing flue products shall be above the level of the heaters.

630.4 Installation in commercial garages and aircraft hangars. Overhead infrared heaters installed in garages for more than three motor vehicles or in aircraft hangars shall be installed in accordance with Sections 305.9, 305.10 and 305.11.

INTERNATIONAL CODE COUNCIL®
Copyright © 2019 ICC & NYSDOS. ALL RIGHTS RESERVED. Accessed by Lauren Gualdino (lgualdino@briarcliffmanor.org), (-) Order Number #100880972 on May 08, 2020 07:05 AM (PDT) pursuant to License Agreement with ICC & NYSDOS. No further reproduction, no

100880972

SECTION 631
BOILERS

631.1 Standards. Boilers shall be *listed* in accordance with the requirements of ANSI Z21.13/CSA 4.9 or UL 795. If applicable, the boiler shall be designed and constructed in accordance with the requirements of ASME CSD-1 and as applicable, the ASME *Boiler and Pressure Vessel Code*, Sections I, II, IV, V and IX and NFPA 85.

[NY] 631.1.1 Other standards. Low-pressure boilers are also regulated by the New York State Department of Labor, 12 NYCRR, Industrial Code Rule 4, and high-pressure boilers are also regulated by the New York State Department of Labor, 12 NYCRR, Industrial Code Rule 14.

631.2 Installation. In addition to the requirements of this code, the installation of boilers shall be in accordance with the manufacturer's instructions and the *Mechanical Code of New York State*. Operating instructions of a permanent type shall be attached to the boiler. Boilers shall have all controls set, adjusted and tested by the installer. A complete control diagram together with complete boiler operating instructions shall be furnished by the installer. The manufacturer's rating data and the nameplate shall be attached to the boiler.

631.3 Clearance to *combustible materials*. Clearances to *combustible materials* shall be in accordance with Section 308.4.

SECTION 632
EQUIPMENT INSTALLED IN EXISTING UNLISTED BOILERS

632.1 General. Gas *equipment* installed in existing unliste boilers shall comply with Section 631.1 and shall be installed in accordance with the manufacturer's instructions and the *Mechanical Code of New York State*.

SECTION 633
STATIONARY FUEL-CELL POWER SYSTEMS

633.1 General. Stationary fuel-cell power systems having a power output not exceeding 10 MW shall be tested in accordance with ANSI/CSA FC 1 and shall be installed in accordance with the manufacturer's instructions, NFPA 853, the *Building Code of New York State* and the *Fire Code of New York State*.

SECTION 634
CHIMNEY DAMPER OPENING AREA

634.1 Free opening area of chimney dampers. Where an unlisted decorative *appliance* for installation in a vented *fireplace* is installed, the *fireplace* damper shall have a permanent free opening equal to or greater than specified in Table 634.1.

SECTION 635
GASEOUS HYDROGEN SYSTEMS

635.1 Installation. The installation of gaseous hydrogen systems shall be in accordance with the applicable requirements of this code, the *Fire Code of New York State* and the *Building Code of New York State*.

SECTION 636
OUTDOOR DECORATIVE APPLIANCES

636.1 General. Permanently fixed-in-place outdoor decorative appliances shall be tested in accordance with ANSI Z21.97 and shall be installed in accordance with the manufacturer's instructions.

TABLE 634.1
FREE OPENING AREA OF CHIMNEY DAMPER FOR VENTING FLUE GASES FROM UNLISTED DECORATIVE APPLIANCES FOR INSTALLATION IN VENTED FIREPLACES

CHIMNEY HEIGHT (feet)	MINIMUM PERMANENT FREE OPENING (square inches)[a]						
	8	13	20	29	39	51	64
	Appliance input rating (Btu per hour)						
6	7,800	14,000	23,200	34,000	46,400	62,400	80,000
8	8,400	15,200	25,200	37,000	50,400	68,000	86,000
10	9,000	16,800	27,600	40,400	55,800	74,400	96,400
15	9,800	18,200	30,200	44,600	62,400	84,000	108,800
20	10,600	20,200	32,600	50,400	68,400	94,000	122,200
30	11,200	21,600	36,600	55,200	76,800	105,800	138,600

For SI: 1 inch = 25.4 mm, 1 foot = 304.8 mm, 1 square inch = 645.16 m^2, 1 British thermal unit per hour = 0.2931 W.

a. The first six minimum permanent free openings (8 to 51 square inches) correspond approximately to the cross-sectional areas of chimneys having diameters of 3 through 8 inches, respectively. The 64-square-inch opening corresponds to the cross-sectional area of standard 8-inch by 8-inch chimney tile.

INTERNATIONAL CODE COUNCIL®
Copyright © 2019 ICC & NYSDOS. ALL RIGHTS RESERVED. Accessed by Lauren Gualdino (lgualdino@briarcliffmanor.org), (-) Order Number #100880972 on May 08, 2020 07:05 AM (PDT) pursuant to License Agreement with ICC & NYSDOS. No further reproduction, no

100880972

CHAPTER 7
GASEOUS HYDROGEN SYSTEMS

SECTION 701
GENERAL

701.1 Scope. The installation of gaseous hydrogen systems shall comply with this chapter and Chapters 53 and 58 of the *Fire Code of New York State*. Compressed gases shall also comply with Chapter 50 of the *Fire Code of New York State* for general requirements.

701.2 Permits. Permits shall be required as set forth in Section 105 and as required by the *Fire Code of New York State*.

SECTION 702
GENERAL DEFINITIONS

702.1 Definitions. The following words and terms shall, for the purposes of this chapter and as used elsewhere in this code, have the meanings shown herein.

[F] GASEOUS HYDROGEN SYSTEM. An assembly of *piping*, devices and apparatus designed to generate, store, contain, distribute or transport a nontoxic, gaseous hydrogen containing mixture having at least 95-percent hydrogen gas by volume and not more than 1-percent oxygen by volume. Gaseous hydrogen systems consist of items such as compressed gas containers, reactors and appurtenances, including pressure regulators, pressure relief devices, manifolds, pumps, compressors and interconnecting *piping* and tubing and controls.

[F] HYDROGEN FUEL-GAS ROOM. A room or space that is intended exclusively to house a gaseous hydrogen system.

HYDROGEN-GENERATING APPLIANCE. A self-contained package or factory-matched packages of integrated systems for generating gaseous hydrogen. Hydrogen-generating appliances utilize electrolysis, reformation, chemical or other processes to generate hydrogen.

SECTION 703
GENERAL REQUIREMENTS

703.1 Hydrogen-generating and refueling operations. Hydrogen-generating and refueling appliances shall be installed and located in accordance with their listing and the manufacturer's instructions. Exhaust ventilation shall be required in public garages, private garages, repair garages, automotive motor fuel-dispensing facilities and parking garages that contain hydrogen-generating appliances or refueling systems in accordance with NFPA 2. For the purpose of this section, rooms or spaces that are not part of the living space of a dwelling unit and that communicate directly with a private garage through openings shall be considered to be part of the private garage.

[F] 703.2 Containers, cylinders and tanks. Compressed gas containers, cylinders and tanks shall comply with Chapters 53 and 58 of the *Fire Code of New York State*.

[F] 703.2.1 Limitations for indoor storage and use. Flammable gas cylinders in occupancies regulated by the *Residential Code of New York State* shall not exceed 250 cubic feet (7.1 m^3) at normal temperature and pressure (NTP).

[F] 703.2.2 Design and construction. Compressed gas containers, cylinders and tanks shall be designed, constructed and tested in accordance with Chapter 50 of the *Fire Code of New York State,* ASME *Boiler and Pressure Vessel Code* (Section VIII) or DOTn 49 CFR, Parts 100-180.

[F] 703.3 Pressure relief devices. Pressure relief devices shall be provided in accordance with Sections 703.3.1 through 703.3.8. Pressure relief devices shall be sized and selected in accordance with CGA S-1.1, CGA S-1.2 and CGA S-1.3.

[F] 703.3.1 Valves between pressure relief devices and containers. Valves including shutoffs, check valves and other mechanical restrictions shall not be installed between the pressure relief device and container being protected by the relief device.

> **Exception:** A locked-open shutoff valve on containers equipped with multiple pressure relief device installations where the arrangement of the valves provides the full required flow through the minimum number of required relief devices at all times.

[F] 703.3.2 Installation. Valves and other mechanical restrictions shall not be located between the pressure relief device and the point of release to the atmosphere.

[F] 703.3.3 Containers. Containers shall be provided with pressure relief devices in accordance with the ASME *Boiler and Pressure Vessel Code* (Section VIII), DOTn 49 CFR, Parts 100-180 and Section 703.3.7.

[F] 703.3.4 Vessels other than containers. Vessels other than containers shall be protected with pressure relief devices in accordance with the ASME *Boiler and Pressure Vessel Code* (Section VIII), or DOTn 49 CFR, Parts 100-180.

[F] 703.3.5 Sizing. Pressure relief devices shall be sized in accordance with the specifications to which the container was fabricated. The relief device shall be sized to prevent the maximum design pressure of the container or system from being exceeded.

[F] 703.3.6 Protection. Pressure relief devices and any associated vent *piping* shall be designed, installed and located so that their operation will not be affected by water or other debris accumulating inside the vent or obstructing the vent.

[F] 703.3.7 Access. Pressure relief devices shall be located such that they are provided with ready *access* for inspection and repair.

INTERNATIONAL CODE COUNCIL®
Copyright © 2019 ICC & NYSDOS. ALL RIGHTS RESERVED. Accessed by Lauren Gualdino (lgualdino@briarcliffmanor.org), (-) Order Number #100880972 on May 08, 2020 07:05 AM (PDT) pursuant to License Agreement with ICC & NYSDOS. No further reproduction, no

100880972

[F] 703.3.8 Configuration. Pressure relief devices shall be arranged to discharge unobstructed in accordance with Section 2309 of the *Fire Code of New York State*. Discharge shall be directed to the outdoors in such a manner as to prevent impingement of escaping gas on personnel, containers, *equipment* and adjacent structures and to prevent introduction of escaping gas into enclosed spaces. The discharge shall not terminate under eaves or canopies.

Exception: This section shall not apply to DOTn-specified containers with an internal volume of 2 cubic feet (0.057 m^3) or less.

[F] 703.4 Venting. Relief device vents shall be terminated in an *approved* location in accordance with Section 2309 of the *Fire Code of New York State*.

[F] 703.5 Security. Compressed gas containers, cylinders, tanks and systems shall be secured against accidental dislodgement in accordance with Chapter 53 of the *Fire Code of New York State*.

[F] 703.6 Electrical wiring and equipment. Electrical wiring and *equipment* shall comply with NFPA 70.

SECTION 704
PIPING, USE AND HANDLING

704.1 Applicability. Use and handling of containers, cylinders, tanks and hydrogen gas systems shall comply with this section. Gaseous hydrogen systems, *equipment* and machinery shall be *listed* or *approved*.

704.1.1 Controls. Compressed gas system controls shall be designed to prevent materials from entering or leaving process or reaction systems at other than the intended time, rate or path. Automatic controls shall be designed to be fail safe in accordance with accepted engineering practice.

704.1.2 Piping systems. *Piping*, tubing, valves and fittings conveying gaseous hydrogen shall be designed and installed in accordance with Sections 704.1.2.1 through 704.1.2.5.1, Chapter 50 of the *Fire Code of New York State*, and ASME B31.12. Cast-iron pipe, valves and fittings shall not be used.

704.1.2.1 Sizing. Gaseous hydrogen *piping* shall be sized in accordance with *approved* engineering methods.

704.1.2.2 Identification of hydrogen piping systems. Hydrogen *piping* systems shall be marked in accordance with ANSI A13.1. Markings used for *piping* systems shall consist of the name of the contents and shall include a direction-of-flow arrow. Markings shall be provided at all of the following locations:

1. At each valve.
2. At wall, floor and ceiling penetrations.
3. At each change of direction.
4. At intervals not exceeding 20 feet (6096 mm).

704.1.2.3 Piping design and construction. *Piping* and tubing materials shall be 300 series stainless steel or materials *listed* or *approved* for hydrogen service and the use intended through the full range of operating conditions to which they will be subjected. *Piping* systems shall be designed and constructed to provide allowance for expansion, contraction, vibration, settlement and fire exposure.

704.1.2.3.1 Prohibited locations. *Piping* shall not be installed in or through a circulating air duct; clothes chute; chimney or gas vent; ventilating duct; dumbwaiter; or elevator shaft. *Piping* shall not be concealed or covered by the surface of any wall, floor or ceiling.

704.1.2.3.2 Interior piping. Except for through penetrations, *piping* located inside of buildings shall be installed in exposed locations and provided with ready *access* for visual inspection.

704.1.2.3.3 Underground piping. Underground *piping*, including joints and fittings, shall be protected from corrosion and installed in accordance with *approved* engineered methods.

704.1.2.3.4 Piping through foundation wall. Underground *piping* shall not penetrate the outer foundation or basement wall of a building.

704.1.2.3.5 Protection against physical damage. Where *piping* other than stainless steel *piping*, stainless steel tubing or black steel is installed through holes or notches in wood studs, joists, rafters or similar members less than $1^1/_2$ inches (38 mm) from the nearest edge of the member, the pipe shall be protected by shield plates. Shield plates shall be a minimum of $^1/_{16}$-inch-thick (1.6 mm) steel, shall cover the area of the pipe where the member is notched or bored and shall extend a minimum of 4 inches (102 mm) above sole plates, below top plates and to each side of a stud, joist or rafter.

704.1.2.3.6 Piping outdoors. *Piping* installed above ground, outdoors, shall be securely supported and located where it will be protected from physical damage. *Piping* passing through an exterior wall of a building shall be encased in a protective pipe sleeve. The annular space between the *piping* and the sleeve shall be sealed from the inside such that the sleeve is ventilated to the outdoors. Where passing through an exterior wall of a building, the *piping* shall be protected against corrosion by coating or wrapping with an inert material. Below-ground *piping* shall be protected against corrosion.

704.1.2.3.7 Settlement. *Piping* passing through concrete or masonry walls shall be protected against differential settlement.

704.1.2.4 Joints. Joints in *piping* and tubing in hydrogen service shall be *listed* as complying with ASME B31.3 to include the use of welded, brazed, flared, socket, slip and compression fittings. Gaskets and sealants used in hydrogen service shall be *listed* as complying with ASME B31.12. Threaded and flanged connections shall not be used in areas other than hydrogen cutoff rooms and outdoors.

704.1.2.4.1 Brazed joints. Brazing alloys shall have a melting point greater than 1,000°F (538°C).

INTERNATIONAL CODE COUNCIL®
Copyright © 2019 ICC & NYSDOS. ALL RIGHTS RESERVED. Accessed by Lauren Gualdino (lgualdino@briarcliffmanor.org), (-) Order Number #100880972 on May 08, 2020 07:05 AM (PDT) pursuant to License Agreement with ICC & NYSDOS. No further reproduction, no

100880972

704.1.2.4.2 Electrical continuity. Mechanical joints shall maintain electrical continuity through the joint or a bonding jumper shall be installed around the joint.

704.1.2.5 Valves and piping components. Valves, regulators and *piping* components shall be *listed* or *approved* for hydrogen service, shall be provided with *access* and shall be designed and constructed to withstand the maximum pressure to which such components will be subjected.

704.1.2.5.1 Shutoff valves on storage containers and tanks. Shutoff valves shall be provided on all storage container and tank connections except for pressure relief devices. Shutoff valves shall be provided with ready *access*.

704.2 Upright use. Compressed gas containers, cylinders and tanks, except those with a water volume less than 1.3 gallons (5 L) and those designed for use in a horizontal position, shall be used in an upright position with the valve end up. An upright position shall include conditions where the container, cylinder or tank axis is inclined as much as 45 degrees (0.79 rad) from the vertical.

704.3 Material-specific regulations. In addition to the requirements of this section, indoor and outdoor use of hydrogen compressed gas shall comply with the material-specific provisions of Chapters 53 and 58 of the *Fire Code of New York State*.

704.4 Handling. The handling of compressed gas containers, cylinders and tanks shall comply with Chapter 50 of the *Fire Code of New York State*.

SECTION 705
TESTING OF HYDROGEN PIPING SYSTEMS

705.1 General. Prior to acceptance and initial operation, all *piping* installations shall be inspected and pressure tested to determine that the materials, design fabrication and installation practices comply with the requirements of this code.

705.2 Inspections. Inspections shall consist of a visual examination of the entire *piping* system installation and a pressure test. Hydrogen *piping* systems shall be inspected in accordance with this code. Inspection methods such as outlined in ASME B31.12 shall be permitted where specified by the design engineer and *approved* by the *building official*. Inspections shall be conducted or verified by the *building official* prior to system operation.

705.3 Pressure tests. A hydrostatic or pneumatic leak test shall be performed. Testing of hydrogen *piping* systems shall utilize testing procedures identified in ASME B31.12 or other *approved* methods, provided that the testing is performed in accordance with the minimum provisions specified in Sections 705.3.1 through 705.4.1.

705.3.1 Hydrostatic leak tests. The hydrostatic test pressure shall be not less than one-and-one-half times the maximum working pressure, and not less than 100 psig (689.5 kPa gauge).

705.3.2 Pneumatic leak tests. The pneumatic test pressure shall be not less than one-and-one-half times the maximum working pressure for systems less than 125 psig (862 kPa gauge) and not less than 5 psig (34.5 kPa gauge), whichever is greater. For working pressures at or above 125 psig (862 kPa gauge), the pneumatic test pressure shall be not less than 110 percent of the maximum working pressure.

705.3.3 Test limits. Where the test pressure exceeds 125 psig (862 kPa gauge), the test pressure shall not exceed a value that produces hoop stress in the *piping* greater than 50 percent of the specified minimum yield strength of the pipe.

705.3.4 Test medium. Deionized water shall be utilized to perform hydrostatic pressure testing and shall be obtained from a potable source. The medium utilized to perform pneumatic pressure testing shall be air, nitrogen, carbon dioxide or an inert gas; oxygen shall not be used.

705.3.5 Test duration. The minimum test duration shall be $^1/_2$ hour. The test duration shall be not less than $^1/_2$ hour for each 500 cubic feet (14.2 m^3) of pipe volume or fraction thereof. For *piping* systems having a volume of more than 24,000 cubic feet (680 m^3), the duration of the test shall not be required to exceed 24 hours. The test pressure required in Sections 705.3.1 and 705.3.2 shall be maintained for the entire duration of the test.

705.3.6 Test gauges. Gauges used for testing shall be as follows:

1. Tests requiring a pressure of 10 psig (68.95 kPa gauge) or less shall utilize a testing gauge having increments of 0.10 psi (0.6895 kPa) or less.
2. Tests requiring a pressure greater than 10 psig (68.98 kPa gauge) but less than or equal to 100 psig (689.5 kPa gauge) shall utilize a testing gauge having increments of 1 psi (6.895 kPa) or less.
3. Tests requiring a pressure greater than 100 psig (689.5 kPa gauge) shall utilize a testing gauge having increments of 2 psi (13.79 kPa) or less.

Exception: Measuring devices having an equivalent level of accuracy and resolution shall be permitted where specified by the design engineer and *approved* by the *building official*.

705.3.7 Test preparation. Pipe joints, including welds, shall be left exposed for examination during the test.

705.3.7.1 Expansion joints. Expansion joints shall be provided with temporary restraints, if required, for the additional thrust load under test.

705.3.7.2 Equipment disconnection. Where the *piping* system is connected to appliances, *equipment* or components designed for operating pressures of less than the test pressure, such appliances, *equipment* and components shall be isolated from the *piping* system by disconnecting them and capping the *outlet*(s).

705.3.7.3 Equipment isolation. Where the *piping* system is connected to appliances, *equipment* or components designed for operating pressures equal to or

INTERNATIONAL CODE COUNCIL®
Copyright © 2019 ICC & NYSDOS. ALL RIGHTS RESERVED. Accessed by Lauren Gualdino (lgualdino@briarcliffmanor.org), (-) Order Number #100880972 on May 08, 2020 07:05 AM (PDT) pursuant to License Agreement with ICC & NYSDOS. No further reproduction, no

100880972

greater than the test pressure, such appliances, *equipment* and components shall be isolated from the *piping* system by closing the individual *appliance*, *equipment* or component shutoff valve(s).

705.4 Detection of leaks and defects. The *piping* system shall withstand the test pressure specified for the test duration specified without showing any evidence of leakage or other defects. Any reduction of test pressures as indicated by pressure gauges shall indicate a leak within the system. *Piping* systems shall not be *approved* except where this reduction in pressure is attributed to some other cause.

705.4.1 Corrections. Where leakage or other defects are identified, the affected portions of the *piping* system shall be repaired and retested.

705.5 Purging of gaseous hydrogen piping systems. Purging shall comply with Sections 705.5.1 through 705.5.4.

705.5.1 Removal from service. Where *piping* is to be opened for servicing, addition or modification, the section to be worked on shall be isolated from the supply at the nearest convenient point and the line pressure vented to the outdoors. The remaining gas in this section of pipe shall be displaced with an inert gas.

705.5.2 Placing in operation. Prior to placing the system into operation, the air in the *piping* system shall be displaced with inert gas. The inert gas flow shall be continued without interruption until the vented gas is free of air. The inert gas shall then be displaced with hydrogen until the vented gas is free of inert gas. The point of discharge shall not be left unattended during purging. After purging, the vent opening shall be closed.

705.5.3 Discharge of purged gases. The open end of *piping* systems being purged shall not discharge into confined spaces or areas where there are sources of ignition except where precautions are taken to perform this operation in a safe manner by ventilation of the space, control of purging rate and elimination of all hazardous conditions.

705.5.3.1 Vent pipe outlets for purging. Vent pipe outlets for purging shall be located such that the inert gas and fuel gas is released outdoors and not less than 8 feet (2438 mm) above the adjacent ground level. Gases shall be discharged upward or horizontally away from adjacent walls to assist in dispersion. Vent outlets shall be located such that the gas will not be trapped by eaves or other obstructions and shall be at least 5 feet (1524 mm) from building openings and lot lines of properties that can be built on.

705.5.4 Placing equipment in operation. After the *piping* has been placed in operation, all *equipment* shall be purged in accordance with Section 707.2 and then placed in operation, as necessary.

SECTION 706
LOCATION OF GASEOUS HYDROGEN SYSTEMS

[F] 706.1 General. The location and installation of gaseous hydrogen systems shall be in accordance with Sections 706.2 and 706.3.

Exception: Stationary fuel-cell power plants in accordance with Section 633.

[F] 706.2 Indoor gaseous hydrogen systems. Gaseous hydrogen systems shall be located in indoor rooms or areas constructed in accordance with this code, the *Building Code of New York State*, the *Mechanical Code of New York State* or NFPA 2.

[F] 706.3 Outdoor gaseous hydrogen systems. Gaseous hydrogen systems shall be located outdoors in accordance with Section 2309.3.1.1 of the *Fire Code of New York State*.

SECTION 707
OPERATION AND MAINTENANCE OF GASEOUS HYDROGEN SYSTEMS

[F] 707.1 Maintenance. Gaseous hydrogen systems and detection devices shall be maintained in accordance with the *Fire Code of New York State* and the manufacturer's installation instructions.

[F] 707.2 Purging. Purging of gaseous hydrogen systems, other than *piping* systems purged in accordance with Section 705.5, shall be in accordance with Sections 2309.6 and 2309.6.1 of the *Fire Code of New York State* or in accordance with the system manufacturer's instructions.

SECTION 708
DESIGN OF LIQUEFIED HYDROGEN SYSTEMS ASSOCIATED WITH HYDROGEN VAPORIZATION OPERATIONS

[F] 708.1 General. The design of liquefied hydrogen systems shall comply with Chapter 55 of the *Fire Code of New York State*.

INTERNATIONAL CODE COUNCIL®
Copyright © 2019 ICC & NYSDOS. ALL RIGHTS RESERVED. Accessed by Lauren Gualdino (lgualdino@briarcliffmanor.org), (-) Order Number #100880972 on May 08, 2020 07:05 AM (PDT) pursuant to License Agreement with ICC & NYSDOS. No further reproduction, no

100880972

CHAPTER 8
REFERENCED STANDARDS

This chapter lists the standards that are referenced in various sections of this document. The standards are listed herein by the promulgating agency of the standard, the standard identification, the effective date and title, and the section or sections of this document that reference the standard. The application of the referenced standards shall be as specified in Section 102.9.

**Denotes standards that are incorporated by reference into 19 NYCRR Part 1224.*

ANSI

American National Standards Institute
25 West 43rd Street
4th Floor
New York, NY 10036

ANSI A13.1—2015: Scheme for the Identification of Piping Systems
704.1.2.2

ANSI FC 1—2012: Stationery Fuel Cell Power Systems
633.1

ANSI NGV 5.1—2015: Residential Fueling Appliances
413.4.1

***LC 1/CSA 6.26—2018: Fuel Gas Piping Systems Using Corrugated Stainless Steel Tubing (CSST)**
403.5.5

ANSI LC-4/CSA 6.32—2012: Press-connect Metallic Fittings for Use in Fuel Gas Distribution Systems
403.10.1, 403.10.2, 403.10.3

Z21.1—2010: Household Cooking Gas Appliances
623.1

Z21.5.1/CSA 7.1—2014: Gas Clothes Dryers—Volume I—Type 1 Clothes Dryers
613.1

Z21.5.2/CSA 7.2—2014: Gas Clothes Dryers—Volume II—Type 2 Clothes Dryers
613.1, 614.3

***Z21.8—94 (R2002): Installation of Domestic Gas Conversion Burners**
619.1

Z21.10.1/CSA 4.1—2012: Gas Water Heaters—Volume I—Storage, Water Heaters with Input Ratings of 75,000 Btu per Hour or Less
624.1

Z21.10.3/CSA 4.3—2011: Gas Water Heaters—Volume III—Storage, Water Heaters with Input Ratings above 75,000 Btu per Hour, Circulating and Instantaneous
624.1

Z21.11.2—2011: Gas-fired Room Heaters—Volume II—Unvented Room Heaters
621.1

Z21.13/CSA 4.9—2011: Gas-fired Low-pressure Steam and Hot Water Boilers
631.1

Z21.15/CSA 9.1—2009: Manually Operated Gas Valves for Appliances, Appliance Connector Valves and Hose End Valves
Table 409.1.1

Z21.19/CSA 1.4—02(R2007): Refrigerators Using Gas (R1999) Fuel
625.1

Z21.24/CSA 6.10—2006: Connectors for Gas Appliances
411.1, 411.3

Z21.40.1/CGA 2.91—1996 (R2011): Gas-fired Heat Activated Air Conditioning and Heat Pump Appliances
627.1

Z21.40.2/CGA 2.92—1996 (R2011): Gas-fired Work Activated Air Conditioning and Heat Pump Appliances (Internal Combustion)
627.1

Z21.42—2014: Gas-fired Illuminating Appliances
628.1

INTERNATIONAL CODE COUNCIL®
Copyright © 2019 ICC & NYSDOS. ALL RIGHTS RESERVED. Accessed by Lauren Gualdino (lgualdino@briarcliffmanor.org), (-) Order Number #100880972 on May 08, 2020 07:05 AM (PDT) pursuant to License Agreement with ICC & NYSDOS. No further reproduction, no

100880972

ANSI—continued

Z21.47/CSA 2.3—2012: Gas-fired Central Furnaces
618.1

Z21.50/CSA 2.22—2016: Vented Gas Fireplaces
604.1

Z21.54—2009: Gas Hose Connectors for Portable Outdoor Gas-fired Appliances
411.1

Z21.56/CSA 4.7—2017: Gas-fired Pool Heaters
617.1

Z21.58/CSA 1.6—2013: Outdoor Cooking Gas Appliances
623.1

Z21.60/CSA 2.26—2012: Decorative Gas Appliances for Installation in Solid-fuel Burning Fireplaces
602.1

Z21.61—1983 (R2004): Gas-fired Toilets
626.1

Z21.69/CSA 6.16—2009: Connectors for Movable Gas Appliances
411.1.1, 411.1.4

Z21.75/CSA 6.27—2007: Connectors for Outdoor Gas Appliances and Manufactured Homes
411.1, 411.2

Z21.80/CSA 6.22—2011: Line Pressure Regulators
410.1

Z21.84—2012: Manually Lighted, Natural Gas Decorative Gas Appliances for Installation in Solid Fuel Burning Fireplaces
602.1, 602.2

Z21.86/CSA 2.32—2008: Vented Gas-fired Space Heating Appliances
608.1, 609.1, 622.1

Z21.88/CSA 2.33—2016: Vented Gas Fireplace Heaters
605.1

Z21.91—2007: Ventless Firebox Enclosures for Gas-fired Unvented Decorative Room Heaters
621.7.1

Z21.93/CSA 6.30—2013: Excess Flow Valves for Natural and LP Gas with Pressures up to 5 psig
410.4

Z21.97—2012: Outdoor Decorative Appliances
636.1

Z83.4/CSA 3.7—2012: Nonrecirculating Direct-gas-fired Industrial Air Heaters
611.1

Z83.8/CSA 2.6—2009: Gas Unit Heater, Gas Packaged Heater, Gas Utility Heaters and Gas-fired Duct Furnaces
610.1, 620.1

Z83.11/CSA 1.8—2013: Gas Food Service Equipment
623.1

Z83.18—2012: Recirculating Direct Gas-fired Industrial Air Heaters
612.1

Z83.19—2001(R2009): Gas-fired High-intensity Infrared Heaters
630.1

Z83.20—2008: Gas-fired Low-intensity Infrared Heaters
630.1

ASME

American Society of Mechanical Engineers
Two Park Avenue
New York, NY 10016-5990

B1.20.1—2013: Pipe Threads, General Purpose (inch)
403.9

B16.1—2010: Gray Iron Pipe Flanges and Flanged Fittings, Class 25, 125 and 250
403.12.1

INTERNATIONAL CODE COUNCIL®
Copyright © 2019 ICC & NYSDOS. ALL RIGHTS RESERVED. Accessed by Lauren Gualdino (lgualdino@briarcliffmanor.org), (-) Order Number #100880972 on May 08, 2020 07:05 AM (PDT) pursuant to License Agreement with ICC & NYSDOS. No further reproduction, no

100880972

ASME—continued

B16.5—2015: Pipe Flanges and Flanged Fittings: NPS $^1/_2$ through NFPS 24 Metric/Inch Standard
403.12.2

B16.24—2016: Cast Copper Alloy Pipe Flanges and Flanged Fittings: Classes 150, 300, 600, 900, 1500 and 2500
403.12.3

B16.42—2016: Ductile Iron Pipe Flanges and Flanged Fittings, Classes 150 and 300
403.12.4

B16.47—2016: Large Diameter Steel Flanges: NPS 26 through NPS 60 Metric/Inch Standard
403.12.2

B16.33—2012: Manually Operated Metallic Gas Valves for Use in Gas Piping Systems up to 125 psig (Sizes $^1/_2$ through 2)
Table 409.1.1

B16.44—2012: Manually Operated Metallic Gas Valves for Use in Aboveground Piping Systems up to 5 psi
Table 409.1.1

B31.3—2016: Process Piping
704.1.2.4

B31.12—2014: Hydrogen Piping and Pipelines
704.1.2, 704.1.2.4, 705.2, 705.3

B36.10M—(R2015): Welded and Seamless Wrought-steel Pipe
403.4.2

BPVC—2015: ASME Boiler & Pressure Vessel Code (2007 Edition)
631.1, 703.2.2, 703.3.3, 703.3.4

CSD-1—2016: Controls and Safety Devices for Automatically Fired Boilers
631.1

ASTM

ASTM International
100 Barr Harbor Drive, P.O. Box C700
West Conshohocken, PA 19428-2959

A53/A53M—12: Specification for Pipe, Steel, Black and Hot Dipped Zinc-coated Welded and Seamless
403.4.2

A106/A106M—14: Specification for Seamless Carbon Steel Pipe for High-temperature Service
403.4.2

A254—12: Specification for Copper Brazed Steel Tubing
403.5.1

A268—10: Standard Specification for Seamless and Welded Ferritic and Martensitic Stainless Steel Tubing for General Service
403.5.2

A269—15: Standard Specification for Seamless and Welded Austenitic Stainless Steel Tubing for General Service
403.5.2

A312—15: Standard Specification for Seamless, Welded and Heavily Cold Worked Austenitic Stainless Steel Pipes
403.4.2

B88—14: Specification for Seamless Copper Water Tube
403.5.3

B210—12: Specification for Aluminum and Aluminum-alloy Drawn Seamless Tubes
403.5.4

B241/B241M—12e1: Specification for Aluminum and Aluminum-alloy, Seamless Pipe and Seamless Extruded Tube
403.4.4, 403.5.4

B280—13: Standard Specification for Seamless Copper Tube for Air-Conditioning and Refrigeration Field Service
403.5.3

C315—07(2011): Specification for Clay Flue Liners and Chimney Pots
501.12

D2513—14e1: Specification for Polyethylene (PE) Gas Pressure Pipe, Tubing and Fittings
403.6, 403.6.1, 403.11, 404.17.2

E136—16: Standard Test Method for Behavior of Materials in a Vertical Tube Furnace at 750°C
202

INTERNATIONAL CODE COUNCIL®
Copyright © 2019 ICC & NYSDOS. ALL RIGHTS RESERVED. Accessed by Lauren Gualdino (lgualdino@briarcliffmanor.org), (-) Order Number #100880972 on May 08, 2020 07:05 AM (PDT) pursuant to License Agreement with ICC & NYSDOS. No further reproduction, no

100880972

ASTM—continued

F1973—13e1: Standard Specification for Factory Assembled Anodeless Risers and Transition Fittings in Polyethylene (PE) and Polyamide 11 (PA11) and Polyamide 12 (PA12) Fuel Gas Distribution Systems
404.17.2

F2945—15: Standard Specification for Polyamide 11 Gas Pressure Pipe, Tubing and Fittings
403.6

CGA

Compressed Gas Association
14501 George Carter Way, Suite 103
Chantilly, VA 20151-2923

S-1.1—(2017): Pressure Relief Device Standards—Part 1—Cylinders for Compressed Gases
703.3

S-1.2—(2009): Pressure Relief Device Standards—Part 2—Cargo and Portable Tanks for Compressed Gases
703.3

S-1.3—(2016): Pressure Relief Device Standards—Part 3—Stationary Storage Containers for Compressed Gases
703.3

CSA

CSA Group
8501 East Pleasant Valley Road
Cleveland, OH 44131-5516

ANSI/CSA FC 1—2014: Fuel Cell Technologies—Part 3-100; Stationary fuel cell power systems-Safety
633.1

CSA 8—93: Requirements for Gas-fired Log Lighters for Wood Burning Fireplaces
603.1

ANSI/CSA NGV 5.1—2015: Residential Fueling Appliances
413.4.1

DOTn

U. S.Department of Transportation
400 Seventh St. SW
Washington, DC 20590

49 CFR, Parts 192.281(e) & 192.283 (b)—(2009): Transportation of Natural and Other Gas by Pipeline: Minimum Federal Safety Standards
403.6.1

49 CFR—Parts 100–180 (2015): Hazardous Materials Regulations
703.2.2, 703.3.3, 703.3.4

ICC

International Code Council, Inc.
500 Jersey Ave, NW
6th Floor
Washington, DC 20001

***BCNYS—2020 Building Code of New York State**
201.3, 301.10, 301.11, 301.12, 301.14, 302.1, 302.2, 305.6, 306.5.1, 306.6, 401.1.1, 412.6, 413.3, 413.3.1, 501.1, 501.3, 501.12, 501.15.4, 501.15.4.1, 609.3, 614.10, 633.1, 635.1, 706.2

***ECCCNYS—2020 Energy Conservation Construction Code of New York State**
301.2

***FCNYS—2020 Fire Code of New York State**
201.3, 401.2, 412.1, 412.6, 412.7, 412.7.3, 412.8, 413.1, 413.3, 413.3.1, 413.5, 413.9.2.5, 633.1, 701.1, 701.2, 703.2, 703.2.2, 703.3.8, 703.4, 703.5, 704.1.2, 704.3, 704.4, 706.2, 706.3, 707.1, 707.2, 708.1

***MCNYS—2020 Mechanical Code of New York State**
201.3, 301.1.1, 301.13, 304.11, 307.1, 307.5, 501.1, 614.2, 614.10, 618.3, 621.1, 624.1, 631.2, 632.1, 703.1.2

INTERNATIONAL CODE COUNCIL®
Copyright © 2019 ICC & NYSDOS. ALL RIGHTS RESERVED. Accessed by Lauren Gualdino (lgualdino@briarcliffmanor.org), (-) Order Number #100880972 on May 08, 2020 07:05 AM (PDT) pursuant to License Agreement with ICC & NYSDOS. No further reproduction, no

100880972

ICC—continued

***PCNYS—2020 Plumbing Code of New York State**
201.3, 301.6, 307.3, 624.1.1, 624.2

***RCNYS—2020 Residential Code of New York State**
703.2.1

MSS

Manufacturers Standardization Society of
the Valve and Fittings Industry
127 Park Street, NE
Vienna, VA 22180

ANSI SP 58—2009: Pipe Hangers and Supports—Materials, Design and Manufacture
407.2

NFPA

National Fire Protection Association
1 Batterymarch Park
Quincy, MA 02169-7471

***2—16: Hydrogen Technologies Code**
703.1, 706.2

***30A—18: Code for Motor Fuel Dispensing Facilities and Repair Garages**
305.4, 305.10

***37—18: Standard for the Installation and Use of Stationary Combustion Engines and Gas Turbines**
616.1

***51—18: Design and Installation of Oxygen-fuel Gas Systems for Welding, Cutting and Allied Processes**
414.1

***58—17: Liquefied Petroleum Gas Code**
401.2, 402.7, 403.6.2, 403.11

***70—17: National Electrical Code**
306.3.1, 306.4.1, 306.5.2, 309.2, 413.9.2.4, 703.6

***82—14: Incinerators, Waste and Linen Handling Systems and Equipment**
503.2.5, T503.4, 607.1

***85—15: Boiler and Combustion Systems Hazards Code**
631.1

***88A—15: Parking Structures**
305.9

***211—16: Standard for the Chimneys, Fireplaces, Vents and Solid Fuel-burning Appliances**
503.5.2, 503.5.3, 503.5.6.1, 503.5.6.3

***409—16: Standard for the Aircraft Hangars**
305.11

***853—15: Installation of Stationary Fuel Cell Power Systems**
633.1

UL

UL LLC
333 Pfingsten Road
Northbrook, IL 60062

103—2010: Factory-built Chimneys, Residential Type and Building Heating Appliances—with Revisions through July 2012
506.1

127—2011: Factory-built Fireplaces—with Revisions through May 2015
621.7

378—2006: Draft Equipment
503.3.3

441—2010: Gas Vents—with Revisions through June 2014
502.1

INTERNATIONAL CODE COUNCIL®
Copyright © 2019 ICC & NYSDOS. ALL RIGHTS RESERVED. Accessed by Lauren Gualdino (lgualdino@briarcliffmanor.org), (-) Order Number #100880972 on May 08, 2020 07:05 AM (PDT) pursuant to License Agreement with ICC & NYSDOS. No further reproduction, no

100880972

UL—continued

641—2010: Type L Low-temperature Venting Systems—with Revisions through June 2013
502.1

651—2011: Schedule 40 and 80 Rigid PVC Conduit and Fittings—with Revisions through May 2014
403.6.3

795—2011: Commercial-industrial Gas Heating Equipment—with Revisions through November 2013
610.1, 618.1, 631.1

959—2010: Medium Heat Appliance Factory-built Chimneys—with Revisions through June 2014
506.3

1618—09: Wall Protectors, Floor Protectors and Hearth Extensions—with Revisions through October 2015
308.2

1738—2010: Venting Systems for Gas Burning Appliances, Categories II, III and IV—with Revisions through November 2014
502.1, 503.4.1

1777—2007: Chimney Liners—with Revisions through October 2015
501.12, 501.15.4

2200—2012: Stationary Engine Generator Assemblies—with Revisions through July 2015
616.1

INTERNATIONAL CODE COUNCIL®
Copyright © 2019 ICC & NYSDOS. ALL RIGHTS RESERVED. Accessed by Lauren Gualdino (lgualdino@briarcliffmanor.org), (-) Order Number #100880972 on May 08, 2020 07:05 AM (PDT) pursuant to License Agreement with ICC & NYSDOS. No further reproduction, no

100880972

APPENDIX A
SIZING AND CAPACITIES OF GAS PIPING

This appendix is informative and is not part of the code.

A.1 General piping considerations. The first goal of determining the pipe sizing for a fuel gas *piping* system is to make sure that there is sufficient gas pressure at the inlet to each *appliance*. The majority of systems are residential and the appliances will all have the same, or nearly the same, requirement for minimum gas pressure at the *appliance* inlet. This pressure will be about 5-inch water column (w.c.) (1.25 kPa), which is enough for proper operation of the *appliance* regulator to deliver about 3.5-inches water column (w.c.) (875 kPa) to the burner itself. The pressure drop in the *piping* is subtracted from the source delivery pressure to verify that the minimum is available at the *appliance*.

There are other systems, however, where the required inlet pressure to the different appliances may be quite varied. In such cases, the greatest inlet pressure required must be satisfied, as well as the farthest *appliance*, which is almost always the critical *appliance* in small systems.

There is an additional requirement to be observed besides the capacity of the system at 100-percent flow. That requirement is that at minimum flow, the pressure at the inlet to any *appliance* does not exceed the pressure rating of the *appliance* regulator. This would seldom be of concern in small systems if the source pressure is $^1/_2$ psi (14-inch w.c.) (3.5 kPa) or less but it should be verified for systems with greater gas pressure at the point of supply.

To determine the size of *piping* used in a gas *piping* system, the following factors must be considered:

(1) Allowable loss in pressure from *point of delivery* to *appliance*.

(2) Maximum gas demand.

(3) Length of *piping* and number of fittings.

(4) Specific gravity of the gas.

(5) Diversity factor.

For any gas *piping* system, or special *appliance*, or for conditions other than those covered by the tables provided in this code, such as longer runs, greater gas demands or greater pressure drops, the size of each gas *piping* system should be determined by standard engineering practices acceptable to the *building official*.

A.2 Description of tables.

A.2.1 General. The quantity of gas to be provided at each *outlet* should be determined, whenever possible, directly from the manufacturer's gas input Btu/h rating of the *appliance* that will be installed. In case the ratings of the appliances to be installed are not known, Table 402.2 shows the approximate consumption (in Btu per hour) of certain types of typical household appliances.

To obtain the cubic feet per hour of gas required, divide the total Btu/h input of all appliances by the average Btu heating value per cubic feet of the gas. The average Btu per cubic feet of the gas in the area of the installation can be obtained from the serving gas supplier.

A.2.2 Low pressure natural gas tables. Capacities for gas at low pressure [less than 2.0 psig (13.8 kPa gauge)] in cubic feet per hour of 0.60 specific gravity gas for different sizes and lengths are shown in Tables 402.4(1) through 402.4(4) for iron pipe or equivalent rigid pipe; in Tables 402.4(8) through 402.4(11) for smooth wall semirigid tubing; in Tables 402.4(20) through 402.4(24) for polyethylene pipe and tubing; and in Tables 402.4(15) through 402.4(17) for corrugated stainless steel tubing. Tables 402.4(1), 402.4(8) and 402.4(20) are based upon a pressure drop of 0.3-inch w.c. (75 Pa), whereas Tables 402.4(2), 402.4(9), 402.4(15) and 402.4(21) are based upon a pressure drop of 0.5-inch w.c. (125 Pa). Tables 402.4(3), 402.4(4), 402.4(10), 402.4(11), 402.4(16) and 402.4(17) are special low-pressure applications based upon pressure drops greater than 0.5-inch w.c. (125 Pa). In using these tables, an allowance (in equivalent length of pipe) should be considered for any *piping* run with four or more fittings (see Table A.2.2).

A.2.3 Undiluted liquefied petroleum tables. Capacities in thousands of Btu per hour of undiluted liquefied petroleum gases based on a pressure drop of 0.5-inch w.c. (125 Pa) for different sizes and lengths are shown in Table 402.4(28) for iron pipe or equivalent rigid pipe, in Table 402.4(30) for smooth wall semi-rigid tubing, in Table 402.4(32) for corrugated stainless steel tubing, and in Tables 402.4(35) and 402.4(37) for polyethylene plastic pipe and tubing. Tables 402.4(33) and 402.4(34) for corrugated stainless steel tubing and Table 402.4(36) for polyethylene plastic pipe are based on operating pressures greater than $1^1/_2$ pounds per square inch (psi) (3.5 kPa) and pressure drops greater than 0.5-inch w.c. (125 Pa). In using these tables, an allowance (in equivalent length of pipe) should be considered for any *piping* run with four or more fittings (see Table A.2.2).

A.2.4 Natural gas specific gravity. Gas *piping* systems that are to be supplied with gas of a specific gravity of 0.70 or less can be sized directly from the tables provided in this code, unless the *building official* specifies that a gravity factor be applied. Where the specific gravity of the gas is greater than 0.70, the gravity factor should be applied.

Application of the gravity factor converts the figures given in the tables provided in this code to capacities for another gas of different specific gravity. Such application is accomplished by multiplying the capacities given in the tables by the multipliers shown in Table A.2.4. In case the exact specific gravity does not appear in the table, choose the next higher value specific gravity shown.

INTERNATIONAL CODE COUNCIL®
Copyright © 2019 ICC & NYSDOS. ALL RIGHTS RESERVED. Accessed by Lauren Gualdino (lgualdino@briarcliffmanor.org), (-) Order Number #100880972 on May 08, 2020 07:05 AM (PDT) pursuant to License Agreement with ICC & NYSDOS. No further reproduction, no

100880972

TABLE A.2.2
EQUIVALENT LENGTHS OF PIPE FITTINGS AND VALVES

		SCREWED FITTINGS[1]				90° WELDING ELBOWS AND SMOOTH BENDS[2]					
		45°/Ell	90°/Ell	180°close return bends	Tee	R/d = 1	R/d = 1 1/3	R/d = 2	R/d = 4	R/d = 6	R/d = 8
k factor =		0.42	0.90	2.00	1.80	0.48	0.36	0.27	0.21	0.27	0.36
L/d' ratio[4] *n* =		1 4	30	67	60	16	12	9	7	9	12
Nominal pipe size, inches	Inside diameter d, inches, Schedule 40[6]	L = Equivalent Length In Feet of Schedule 40 (Standard-weight) Straight Pipe[6]									
1/2	0.622	0.73	1.55	3.47	3.10	0.83	0.62	0.47	0.36	0.47	0.62
3/4	0.824	0.96	2.06	4.60	4.12	1.10	0.82	0.62	0.48	0.62	0.82
1	1.049	1.22	2.62	5.82	5.24	1.40	1.05	0.79	0.61	0.79	1.05
1 1/4	1.380	1.61	3.45	7.66	6.90	1.84	1.38	1.03	0.81	1.03	1.38
1 1/2	1.610	1.88	4.02	8.95	8.04	2.14	1.61	1.21	0.94	1.21	1.61
2	2.067	2.41	5.17	11.5	10.3	2.76	2.07	1.55	1.21	1.55	2.07
2 1/2	2.469	2.88	6.16	13.7	12.3	3.29	2.47	1.85	1.44	1.85	2.47
3	3.068	3.58	7.67	17.1	15.3	4.09	3.07	2.30	1.79	2.30	3.07
4	4.026	4.70	10.1	22.4	20.2	5.37	4.03	3.02	2.35	3.02	4.03
5	5.047	5.88	12.6	28.0	25.2	6.72	5.05	3.78	2.94	3.78	5.05
6	6.065	7.07	15.2	33.8	30.4	8.09	6.07	4.55	3.54	4.55	6.07
8	7.981	9.31	20.0	44.6	40.0	10.6	7.98	5.98	4.65	5.98	7.98
10	10.02	11.7	25.0	55.7	50.0	13.3	10.0	7.51	5.85	7.51	10.0
12	11.94	13.9	29.8	66.3	59.6	15.9	11.9	8.95	6.96	8.95	11.9
14	13.13	15.3	32.8	73.0	65.6	17.5	13.1	9.85	7.65	9.85	13.1
16	15.00	17.5	37.5	83.5	75.0	20.0	15.0	11.2	8.75	11.2	15.0
18	16.88	19.7	42.1	93.8	84.2	22.5	16.9	12.7	9.85	12.7	16.9
20	18.81	22.0	47.0	105.0	94.0	25.1	18.8	14.1	11.0	14.1	18.8
24	22.63	26.4	56.6	126.0	113.0	30.2	22.6	17.0	13.2	17.0	22.6

(continued)

INTERNATIONAL CODE COUNCIL®
Copyright © 2019 ICC & NYSDOS. ALL RIGHTS RESERVED. Accessed by Lauren Gualdino (lgualdino@briarcliffmanor.org), (-) Order Number #100880972 on May 08, 2020 07:05 AM (PDT) pursuant to License Agreement with ICC & NYSDOS. No further reproduction, no

100880972

TABLE A.2.2—continued
EQUIVALENT LENGTHS OF PIPE FITTINGS AND VALVES

		MITER ELBOWS[3] (No. of miters)					WELDING TEES		VALVES (screwed, flanged, or welded)			
		1-45°	1-60°	1-90°	2-90°[5]	3-90°[5]	Forged	Miter[3]	Gate	Globe	Angle	Swing Check
k factor =		0.45	0.90	1.80	0.60	0.45	1.35	1.80	0.21	10	5.0	2.5
L/d' ratio[4] n =		15	30	60	20	15	45	60	7	333	167	83
Nominal pipe size, inches	Inside diameter d, inches, Schedule 40[6]	L = Equivalent Length In Feet of Schedule 40 (Standard-weight) Straight Pipe[6]										
1/2	0.622	0.78	1.55	3.10	1.04	0.78	2.33	3.10	0.36	17.3	8.65	4.32
3/4	0.824	1.03	2.06	4.12	1.37	1.03	3.09	4.12	0.48	22.9	11.4	5.72
1	1.049	1.31	2.62	5.24	1.75	1.31	3.93	5.24	0.61	29.1	14.6	7.27
1 1/4	1.380	1.72	3.45	6.90	2.30	1.72	5.17	6.90	0.81	38.3	19.1	9.58
1 1/2	1.610	2.01	4.02	8.04	2.68	2.01	6.04	8.04	0.94	44.7	22.4	11.2
2	2.067	2.58	5.17	10.3	3.45	2.58	7.75	10.3	1.21	57.4	28.7	14.4
2 1/2	2.469	3.08	6.16	12.3	4.11	3.08	9.25	12.3	1.44	68.5	34.3	17.1
3	3.068	3.84	7.67	15.3	5.11	3.84	11.5	15.3	1.79	85.2	42.6	21.3
4	4.026	5.04	10.1	20.2	6.71	5.04	15.1	20.2	2.35	112.0	56.0	28.0
5	5.047	6.30	12.6	25.2	8.40	6.30	18.9	25.2	2.94	140.0	70.0	35.0
6	6.065	7.58	15.2	30.4	10.1	7.58	22.8	30.4	3.54	168.0	84.1	42.1
8	7.981	9.97	20.0	40.0	13.3	9.97	29.9	40.0	4.65	222.0	111.0	55.5
10	10.02	12.5	25.0	50.0	16.7	12.5	37.6	50.0	5.85	278.0	139.0	69.5
12	11.94	14.9	29.8	59.6	19.9	14.9	44.8	59.6	6.96	332.0	166.0	83.0
14	13.13	16.4	32.8	65.6	21.9	16.4	49.2	65.6	7.65	364.0	182.0	91.0
16	15.00	18.8	37.5	75.0	25.0	18.8	56.2	75.0	8.75	417.0	208.0	104.0
18	16.88	21.1	42.1	84.2	28.1	21.1	63.2	84.2	9.85	469.0	234.0	117.0
20	18.81	23.5	47.0	94.0	31.4	23.5	70.6	94.0	11.0	522.0	261.0	131.0
24	22.63	28.3	56.6	113.0	37.8	28.3	85.0	113.0	13.2	629.0	314.0	157.0

For SI: 1 foot = 305 mm, 1 degree = 0.01745 rad.

Note: Values for welded fittings are for conditions where bore is not obstructed by weld spatter or backing rings. If appreciably obstructed, use values for "Screwed Fittings."

1. Flanged fittings have three-fourths the resistance of screwed elbows and tees.
2. Tabular figures give the extra resistance due to curvature alone to which should be added the full length of travel.
3. Small size socket-welding fittings are equivalent to miter elbows and miter tees.
4. Equivalent resistance in number of diameters of straight pipe computed for a value of (f - 0.0075) from the *relation* (n - k/4f).
5. For condition of minimum resistance where the centerline length of each miter is between d and 2 1/2d.
6. For pipe having other inside diameters, the equivalent resistance can be computed from the above n values.

Source: Crocker, S. *Piping Handbook*, 4th ed., Table XIV, pp. 100–101. Copyright 1945 by McGraw-Hill, Inc. Used by permission of McGraw-Hill Book Company.

INTERNATIONAL CODE COUNCIL®
Copyright © 2019 ICC & NYSDOS. ALL RIGHTS RESERVED. Accessed by Lauren Gualdino (lgualdino@briarcliffmanor.org), (-) Order Number #100880972 on May 08, 2020 07:05 AM (PDT) pursuant to License Agreement with ICC & NYSDOS. No further reproduction, no

100880972

TABLE A.2.4
MULTIPLIERS TO BE USED WITH TABLES 402.4(1) THROUGH 402.4(22) WHERE THE SPECIFIC GRAVITY OF THE GAS IS OTHER THAN 0.60

SPECIFIC GRAVITY	MULTIPLIER	SPECIFIC GRAVITY	MULTIPLIER
0.35	1.31	1.00	0.78
0.40	1.23	1.10	0.74
0.45	1.16	1.20	0.71
0.50	1.10	1.30	0.68
0.55	1.04	1.40	0.66
0.60	1.00	1.50	0.63
0.65	0.96	1.60	0.61
0.70	0.93	1.70	0.59
0.75	0.90	1.80	0.58
0.80	0.87	1.90	0.56
0.85	0.84	2.00	0.55
0.90	0.82	2.10	0.54

A.2.5 Higher pressure natural gas tables. Capacities for gas at pressures 2.0 psig (13.8 kPa) or greater in cubic feet per hour of 0.60 specific gravity gas for different sizes and lengths are shown in Tables 402.4(5) through 402.4(7) for iron pipe or equivalent rigid pipe; Tables 402.4(12) to 402.4(14) for semirigid tubing; Tables 402.4(18) and 402.4(19) for corrugated stainless steel tubing; and Table 402.4(22) for polyethylene plastic pipe.

A.3 Use of capacity tables.

A.3.1 Longest length method. This sizing method is conservative in its approach by applying the maximum operating conditions in the system as the norm for the system and by setting the length of pipe used to size any given part of the *piping* system to the maximum value.

To determine the size of each section of gas *piping* in a system within the range of the capacity tables, proceed as follows (also see sample calculations included in this Appendix):

(1) Divide the *piping* system into appropriate segments consistent with the presence of tees, branch lines and main runs. For each segment, determine the gas load (assuming all appliances operate simultaneously) and its overall length. An allowance (in equivalent length of pipe) as determined from Table A.2.2 shall be considered for *piping* segments that include four or more fittings.

(2) Determine the gas demand of each *appliance* to be attached to the *piping* system. Where Tables 402.4(1) through 402.4(24) are to be used to select the *piping* size, calculate the gas demand in terms of cubic feet per hour for each *piping* system *outlet*. Where Tables 402.4(25) through 402.4(37) are to be used to select the *piping* size, calculate the gas demand in terms of thousands of Btu per hour for each *piping* system *outlet*.

(3) Where the *piping* system is for use with other than undiluted liquefied petroleum gases, determine the design system pressure, the allowable loss in pressure (pressure drop), and specific gravity of the gas to be used in the *piping* system.

(4) Determine the length of *piping* from the *point of delivery* to the most remote *outlet* in the building/*piping* system.

(5) In the appropriate capacity table, select the row showing the measured length or the next longer length if the table does not give the exact length. This is the only length used in determining the size of any section of gas *piping*. If the gravity factor is to be applied, the values in the selected row of the table are multiplied by the appropriate multiplier from Table A.2.4.

(6) Use this horizontal row to locate ALL gas demand figures for this particular system of *piping*.

(7) Starting at the most remote *outlet*, find the gas demand for that *outlet* in the horizontal row just selected. If the exact figure of demand is not shown, choose the next larger figure left in the row.

(8) Opposite this demand figure, in the first row at the top, the correct size of gas *piping* will be found.

(9) Proceed in a similar manner for each *outlet* and each section of gas *piping*. For each section of *piping*, determine the total gas demand supplied by that section.

Where a large number of *piping* components (such as elbows, tees and valves) are installed in a pipe run, additional pressure loss can be accounted for by the use of equivalent lengths. Pressure loss across any *piping* component can be equated to the pressure drop through a length of pipe. The equivalent length of a combination of only four elbows/tees can result in a jump to the next larger length row, resulting in a significant reduction in capacity. The equivalent lengths in feet shown in Table A.2.2 have been computed on a basis that the inside diameter corresponds to that of Schedule 40 (standard-weight) steel pipe, which is close enough for most purposes involving other schedules of pipe. Where a more specific solution for equivalent length is desired, this can be made by multiplying the actual inside diameter of the pipe in inches by $n/12$, or the actual inside diameter in feet by n (n can be read from the table heading). The equivalent length values can be used with reasonable accuracy for copper or copper alloy fittings and bends although the resistance per foot of copper or copper alloy pipe is less than that of steel. For copper or copper alloy valves, however, the equivalent length of pipe should be taken as 45 percent longer than the values in the table, which are for steel pipe.

A.3.2 Branch length method. This sizing method reduces the amount of conservatism built into the traditional Longest Length Method. The longest length as measured from the meter to the furthest remote *appliance* is only used to size the initial parts of the overall *piping* system. The Branch Length Method is applied in the following manner:

(1) Determine the gas load for each of the connected appliances.

(2) Starting from the meter, divide the *piping* system into a number of connected segments, and determine the length and amount of gas that each segment would carry assuming that all appliances were operated simultaneously. An allowance (in equivalent length of pipe) as determined from Table A.2.2 should be con-

INTERNATIONAL CODE COUNCIL®
Copyright © 2019 ICC & NYSDOS. ALL RIGHTS RESERVED. Accessed by Lauren Gualdino (lgualdino@briarcliffmanor.org), (-) Order Number #100880972 on May 08, 2020 07:05 AM (PDT) pursuant to License Agreement with ICC & NYSDOS. No further reproduction, no

100880972

sidered for piping segments that include four or more fittings.

(3) Determine the distance from the *outlet* of the gas meter to the *appliance* furthest removed from the meter.

(4) Using the longest distance (found in Step 3), size each *piping* segment from the meter to the most remote *appliance outlet.*

(5) For each of these *piping* segments, use the longest length and the calculated gas load for all of the connected appliances for the segment and begin the sizing process in Steps 6 through 8.

(6) Referring to the appropriate sizing table (based on operating conditions and *piping* material), find the longest length distance in the first column or the next larger distance if the exact distance is not listed. The use of alternative operating pressures or pressure drops will require the use of a different sizing table, but will not alter the sizing methodology. In many cases, the use of alternative operating pressures or pressure drops will require the approval of both the *building official* and the local gas serving utility.

(7) Trace across this row until the gas load is found or the closest larger capacity if the exact capacity is not listed.

(8) Read up the table column and select the appropriate pipe size in the top row. Repeat Steps 6, 7 and 8 for each pipe segment in the longest run.

(9) Size each remaining section of branch *piping* not previously sized by measuring the distance from the gas meter location to the most remote *outlet* in that branch, using the gas load of attached appliances and following the procedures of Steps 2 through 8.

A.3.3 Hybrid pressure method. The sizing of a 2 psi (13.8 kPa) gas *piping* system is performed using the traditional Longest Length Method but with modifications. The 2 psi (13.8 kPa) system consists of two independent pressure zones, and each zone is sized separately. The Hybrid Pressure Method is applied as follows:

The sizing of the 2 psi (13.8 kPa) section (from the meter to the line regulator) is as follows:

(1) Calculate the gas load (by adding up the name plate ratings) from all connected appliances. (In certain circumstances the installed gas load can be increased up to 50 percent to accommodate future addition of appliances.) Ensure that the line regulator capacity is adequate for the calculated gas load and that the required pressure drop (across the regulator) for that capacity does not exceed $^3/_4$ psi (5.2 kPa) for a 2 psi (13.8 kPa) system. If the pressure drop across the regulator is too high (for the connected gas load), select a larger regulator.

(2) Measure the distance from the meter to the line regulator located inside the building.

(3) If there are multiple line regulators, measure the distance from the meter to the regulator furthest removed from the meter.

(4) The maximum allowable pressure drop for the 2 psi (13.8 kPa) section is 1 psi (6.9 kPa).

(5) Referring to the appropriate sizing table (based on *piping* material) for 2 psi (13.8 kPa) systems with a 1 psi (6.9 kPa) pressure drop, find this distance in the first column, or the closest larger distance if the exact distance is not listed.

(6) Trace across this row until the gas load is found or the closest larger capacity if the exact capacity is not listed.

(7) Read up the table column to the top row and select the appropriate pipe size.

(8) If there are multiple regulators in this portion of the *piping* system, each line segment must be sized for its actual gas load, but using the longest length previously determined above.

The low pressure section (all *piping* downstream of the line regulator) is sized as follows:

(1) Determine the gas load for each of the connected appliances.

(2) Starting from the line regulator, divide the piping system into a number of connected segments or independent parallel piping segments, and determine the amount of gas that each segment would carry assuming that all appliances were operated simultaneously. An allowance (in equivalent length of pipe) as determined from Table A.2.2 should be considered for piping segments that include four or more fittings.

(3) For each piping segment, use the actual length or longest length (if there are sub-branchlines) and the calculated gas load for that segment and begin the sizing process as follows:

(a) Referring to the appropriate sizing table (based on operating pressure and piping material), find the longest length distance in the first column or the closest larger distance if the exact distance is not listed. The use of alternative operating pressures and/or pressure drops will require the use of a different sizing table, but will not alter the sizing methodology. In many cases, the use of alternative operating pressures and/or pressure drops can require the approval of the *building official*.

(b) Trace across this row until the appliance gas load is found or the closest larger capacity if the exact capacity is not listed.

(c) Read up the table column to the top row and select the appropriate pipe size.

(d) Repeat this process for each segment of the piping system.

A.3.4 Pressure drop per 100 feet method. This sizing method is less conservative than the others, but it allows the designer to immediately see where the largest pressure drop occurs in the system. With this information, modifications can be made to bring the total drop to the critical *appliance* within the limitations that are presented to the designer.

Follow the procedures described in the Longest Length Method for Steps (1) through (4) and (9).

INTERNATIONAL CODE COUNCIL®
Copyright © 2019 ICC & NYSDOS. ALL RIGHTS RESERVED. Accessed by Lauren Gualdino (lgualdino@briarcliffmanor.org), (-) Order Number #100880972 on May 08, 2020 07:05 AM (PDT) pursuant to License Agreement with ICC & NYSDOS. No further reproduction, no

100880972

For each *piping* segment, calculate the pressure drop based on pipe size, length as a percentage of 100 feet (30 480 mm) and gas flow. Table A.3.4 shows pressure drop per 100 feet (30 480 mm) for pipe sizes from $^1/_2$ inch (12.7 mm) through 2 inches (51 mm). The sum of pressure drops to the critical *appliance* is subtracted from the supply pressure to verify that sufficient pressure will be available. If not, the layout can be examined to find the high drop section(s) and sizing selections modified.

Note: Other values can be obtained by using the following equation:

$$\text{Desired Value} = MBH \times \sqrt{\frac{\text{Desired Drop}}{\text{Table Drop}}}$$

For example, if it is desired to get flow through $^3/_4$-inch (19.1 mm) pipe at 2 inches/100 feet, multiply the capacity of $^3/_4$-inch pipe at 1 inch/100 feet by the square root of the pressure ratio:

$$147\ MBH \times \sqrt{\frac{2''\ \text{w.c.}}{1''\ \text{w.c.}}} = 147 \times 1.414 = 208\ MBH$$

(MBH = 1000 Btu/h)

A.4 Use of sizing equations. Capacities of smooth wall pipe or tubing can also be determined by using the following formulae:

(1) High Pressure [1.5 psi (10.3 kPa) and above]:

$$Q = 181.6 \sqrt{\frac{D^5 \times (P_1^2 - P_2^2) \times Y}{C_r \times fba \times L}}$$

$$= 2237\ D^{2.623} \left[\frac{(P_1^2 - P_2^2) \times Y}{C_r \times L}\right]^{0.541}$$

(2) Low Pressure [Less than 1.5 psi (10.3 kPa)]:

$$Q = 187.3 \sqrt{\frac{D^5 \times \Delta H}{C_r \times fba \times L}}$$

$$= 2313 D^{2.623} \left(\frac{\Delta H}{C_r \times L}\right)^{0.541}$$

where:

Q = Rate, cubic feet per hour at 60°F and 30-inch mercury column

D = Inside diameter of pipe, in.

P_1 = Upstream pressure, psia

P_2 = Downstream pressure, psia

Y = Superexpansibility factor = 1/supercompressibility factor

C_r = Factor for viscosity, density and temperature*

$$= 0.00354\ ST\left(\frac{Z}{S}\right)^{0.152}$$

*Note: See Table 402.4 for Y and C_r for natural gas and propane.

S = Specific gravity of gas at 60°F and 30-inch mercury column (0.60 for natural gas, 1.50 for propane), or = 1488μ

T = Absolute temperature, °F or = t + 460

t = Temperature, °F

Z = Viscosity of gas, centipoise (0.012 for natural gas, 0.008 for propane), or = 1488μ

fba = Base friction factor for air at 60°F (CF = 1)

L = Length of pipe, ft

DH = Pressure drop, in. w.c. (27.7 in. H_2O = 1 psi)

(For SI, see Section 402.4)

A.5 Pipe and tube diameters. Where the internal diameter is determined by the formulas in Section 402.4, Tables A.5.1 and A.5.2 can be used to select the nominal or standard pipe size based on the calculated internal diameter.

TABLE A.5.1
SCHEDULE 40 STEEL PIPE STANDARD SIZES

NOMINAL SIZE (inch)	INTERNAL DIAMETER (inch)	NOMINAL SIZE (inch)	INTERNAL DIAMETER (inch)
$^1/_4$	0.364	$1^1/_2$	1.610
$^3/_8$	0.493	2	2.067
$^1/_2$	0.622	$2^1/_2$	2.469
$^3/_4$	0.824	3	3.068
1	1.049	$3^1/_2$	3.548
$1^1/_4$	1.380	4	4.026

For SI: 1 inch = 25.4 mm.

TABLE A.3.4
THOUSANDS OF BTU/H (MBH) OF NATURAL GAS PER 100 FEET OF PIPE AT VARIOUS PRESSURE DROPS AND PIPE DIAMETERS

PRESSURE DROP PER 100 FEET IN INCHES W.C.	PIPE SIZES (inch)					
	$^1/_2$	$^3/_4$	1	$1^1/_4$	$1^1/_2$	2
0.2	31	64	121	248	372	716
0.3	38	79	148	304	455	877
0.5	50	104	195	400	600	1160
1.0	71	147	276	566	848	1640

For SI: 1 inch = 25.4 mm, 1 foot = 304.8 mm.

INTERNATIONAL CODE COUNCIL®
Copyright © 2019 ICC & NYSDOS. ALL RIGHTS RESERVED. Accessed by Lauren Gualdino (lgualdino@briarcliffmanor.org), (-) Order Number #100880972 on May 08, 2020 07:05 AM (PDT) pursuant to License Agreement with ICC & NYSDOS. No further reproduction, no

100880972

TABLE A.5.2
COPPER TUBE STANDARD SIZES

TUBE TYPE	NOMINAL OR STANDARD SIZE (inches)	INTERNAL DIAMETER (inches)
K	1/4	0.305
L	1/4	0.315
ACR (D)	3/8	0.315
ACR (A)	3/8	0.311
K	3/8	0.402
L	3/8	0.430
ACR (D)	1/2	0.430
ACR (A)	1/2	0.436
K	1/2	0.527
L	1/2	0.545
ACR (D)	5/8	0.545
ACR (A)	5/8	0.555
K	5/8	0.652
L	5/8	0.666
ACR (D)	3/4	0.666
ACR (A)	3/4	0.680
K	3/4	0.745
L	3/4	0.785
ACR	7/8	0.785
K	1	0.995
L	1	1.025
ACR	1 1/8	1.025
K	1 1/4	1.245
L	1 1/4	1.265
ACR	1 3/8	1.265
K	1 1/2	1.481
L	1 1/2	1.505
ACR	1 5/8	1.505
K	2	1.959
L	2	1.985
ACR	2 1/8	1.985
K	2 1/2	2.435
L	2 1/2	2.465
ACR	2 5/8	2.465
K	3	2.907
L	3	2.945
ACR	3 1/8	2.945

For SI: 1 inch = 25.4 mm.

A.6 Examples of piping system design and sizing.

A.6.1 Example 1: Longest length method. Determine the required pipe size of each section and *outlet* of the *piping* system shown in Figure A.6.1, with a designated pressure drop of 0.5-inch w.c. (125 Pa) using the Longest Length Method. The gas to be used has 0.60 specific gravity and a heating value of 1,000 Btu/ft^3 (37.5 MJ/m^3).

Solution:

(1) Maximum gas demand for *Outlet* A:

$$\frac{\text{Consumption (rating plate input)}}{\text{Btu of gas}} =$$

$$\frac{\text{35,000 Btu per hour rating}}{\text{1,000 Btu per cubic foot}} = 35 \text{ cubic feet per hour} = 35 \text{ cfh}$$

Maximum gas demand for *Outlet* B:

$$\frac{\text{Consumption}}{\text{Btu of gas}} = \frac{75{,}000}{1{,}000} = 75 \text{ cfh}$$

Maximum gas demand for *Outlet* C:

$$\frac{\text{Consumption}}{\text{Btu of gas}} = \frac{35{,}000}{1{,}000} = 35 \text{ cfh}$$

Maximum gas demand for *Outlet* D:

$$\frac{\text{Consumption}}{\text{Btu of gas}} = \frac{100{,}000}{1{,}000} = 100 \text{ cfh}$$

(2) The length of pipe from the *point of delivery* to the most remote *outlet* (A) is 60 feet (18 288 mm). This is the only distance used.

(3) Using the row marked 60 feet (18 288 mm) in Table 402.4(2):

(a) *Outlet* A, supplying 35 cfh (0.99 m^3/hr), requires 1/2-inch pipe.

(b) *Outlet* B, supplying 75 cfh (2.12 m^3/hr), requires 3/4-inch pipe.

(c) Section 1, supplying *Outlets* A and B, or 110 cfh (3.11 m^3/hr), requires 3/4-inch pipe.

(d) Section 2, supplying *Outlets* C and D, or 135 cfh (3.82 m^3/hr), requires 3/4-inch pipe.

(e) Section 3, supplying *Outlets* A, B, C and D, or 245 cfh (6.94 m^3/hr), requires 1-inch pipe.

(4) If a different gravity factor is applied to this example, the values in the row marked 60 feet (18 288 mm) of Table 402.4(2) would be multiplied by the appropriate multiplier from Table A.2.4 and the resulting cubic feet per hour values would be used to size the *piping*.

INTERNATIONAL CODE COUNCIL®
Copyright © 2019 ICC & NYSDOS. ALL RIGHTS RESERVED. Accessed by Lauren Gualdino (lgualdino@briarcliffmanor.org), (-) Order Number #100880972 on May 08, 2020 07:05 AM (PDT) pursuant to License Agreement with ICC & NYSDOS. No further reproduction, no

100880972

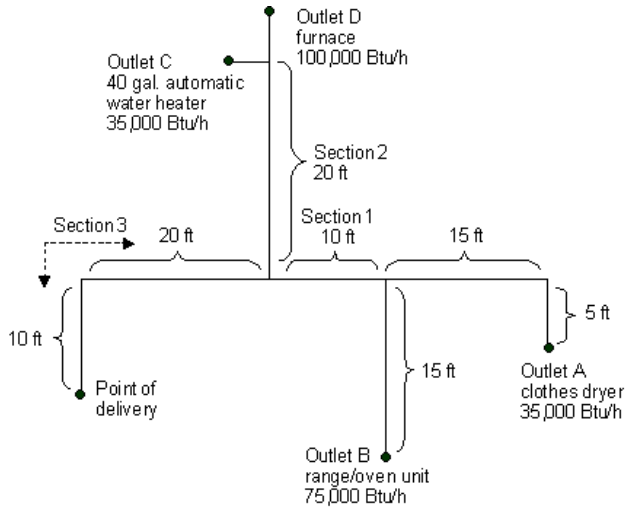

FIGURE A.6.1
PIPING PLAN SHOWING A STEEL PIPING SYSTEM

A.6.2 Example 2: Hybrid or dual pressure systems. Determine the required CSST size of each section of the *piping* system shown in Figure A.6.2, with a designated pressure drop of 1 psi (6.9 kPa) for the 2 psi (13.8 kPa) section and 3-inch w.c. (0.75 kPa) pressure drop for the 13-inch w.c. (2.49 kPa) section. The gas to be used has 0.60 specific gravity and a heating value of 1,000 Btu/ft^3 (37.5 MJ/m^3).

Solution:

(1) Size 2 psi (13.8 kPa) line using Table 402.4(18).

(2) Size 10-inch w.c. (2.5 kPa) lines using Table 402.4(16).

(3) Using the following, determine if sizing tables can be used.

(a) Total gas load shown in Figure A.6.2 equals 110 cfh (3.11 m^3/hr).

(b) Determine pressure drop across regulator [see notes in Table 402.4(18)].

(c) If pressure drop across regulator exceeds $^3/_4$ psig (5.2 kPa), Table 402.4(18) cannot be used. Note: If pressure drop exceeds $^3/_4$ psi (5.2 kPa), then a larger regulator must be selected or an alternative sizing method must be used.

(d) Pressure drop across the line regulator [for 110 cfh (3.11 m^3/hr)] is 4-inch w.c. (0.99 kPa) based on manufacturer's performance data.

(e) Assume the CSST manufacturer has tubing sizes or EHDs of 13, 18, 23 and 30.

(4) Section A [2 psi (13.8 kPa) zone]

(a) Distance from meter to regulator = 100 feet (30 480 mm).

(b) Total load supplied by A = 110 cfh (3.11 m^3/hr) (furnace + water heater + dryer).

(c) Table 402.4(18) shows that EHD size 18 should be used.

Note: It is not unusual to oversize the supply line by 25 to 50 percent of the as-installed load. EHD size 18 has a capacity of 189 cfh (5.35 m^3/hr).

(5) Section B (low pressure zone)

(a) Distance from regulator to furnace is 15 feet (4572 mm).

(b) Load is 60 cfh (1.70 m^3/hr).

(c) Table 402.4(16) shows that EHD size 13 should be used.

(6) Section C (low pressure zone)

(a) Distance from regulator to water heater is 10 feet (3048 mm).

(b) Load is 30 cfh (0.85 m^3/hr).

(c) Table 402.4(16) shows that EHD size 13 should be used.

(7) Section D (low pressure zone)

(a) Distance from regulator to dryer is 25 feet (7620 mm).

(b) Load is 20 cfh (0.57 m^3/hr).

(c) Table 402.4(16) shows that EHD size 13 should be used.

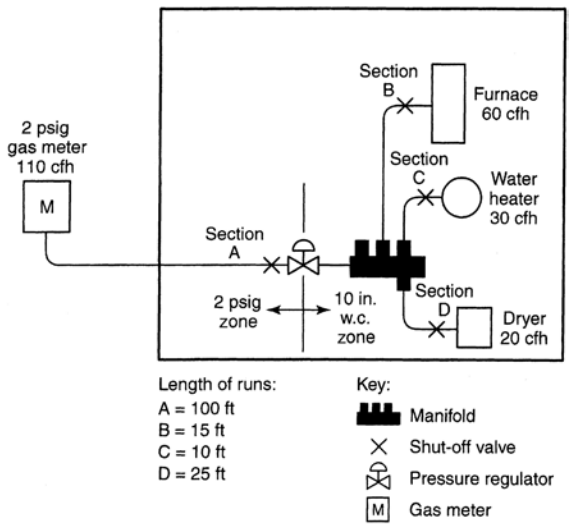

FIGURE A.6.2
PIPING PLAN SHOWING A CSST SYSTEM

INTERNATIONAL CODE COUNCIL®
Copyright © 2019 ICC & NYSDOS. ALL RIGHTS RESERVED. Accessed by Lauren Gualdino (lgualdino@briarcliffmanor.org), (-) Order Number #100880972 on May 08, 2020 07:05 AM (PDT) pursuant to License Agreement with ICC & NYSDOS. No further reproduction, no

100880972

A.6.3 Example 3: Branch length method. Determine the required semirigid copper tubing size of each section of the *piping* system shown in Figure A.6.3, with a designated pressure drop of 1-inch w.c. (250 Pa) (using the Branch Length Method). The gas to be used has 0.60 specific gravity and a heating value of 1,000 Btu/ft^3 (37.5 MJ/m^3).

Solution:

(1) Section A

(a) The length of tubing from the *point of delivery* to the most remote *appliance* is 50 feet (15 240 mm), A + C.

(b) Use this longest length to size Sections A and C.

(c) Using the row marked 50 feet (15 240 mm) in Table 402.4(10), Section A, supplying 220 cfh (6.2 m^3/hr) for four appliances requires 1-inch tubing.

(2) Section B

(a) The length of tubing from the *point of delivery* to the range/oven at the end of Section B is 30 feet (9144 mm), A + B.

(b) Use this branch length to size Section B only.

(c) Using the row marked 30 feet (9144 mm) in Table 402.4(10), Section B, supplying 75 cfh (2.12 m^3/hr) for the range/oven requires $^1/_2$-inch tubing.

(3) Section C

(a) The length of tubing from the *point of delivery* to the dryer at the end of Section C is 50 feet (15 240 mm), A + C.

(b) Use this branch length (which is also the longest length) to size Section C.

(c) Using the row marked 50 feet (15 240 mm) in Table 402.4(10), Section C, supplying 30 cfh (0.85 m^3/hr) for the dryer requires $^3/_8$-inch tubing.

(4) Section D

(a) The length of tubing from the *point of delivery* to the water heater at the end of Section D is 30 feet (9144 mm), A + D.

(b) Use this branch length to size Section D only.

(c) Using the row marked 30 feet (9144 mm) in Table 402.4(10), Section D, supplying 35 cfh (0.99 m^3/hr) for the water heater requires $^3/_8$-inch tubing.

(5) Section E

(a) The length of tubing from the *point of delivery* to the furnace at the end of Section E is 30 feet (9144 mm), A + E.

(b) Use this branch length to size Section E only.

(c) Using the row marked 30 feet (9144 mm) in Table 402.4(10), Section E, supplying 80 cfh (2.26 m^3/hr) for the furnace requires $^1/_2$-inch tubing.

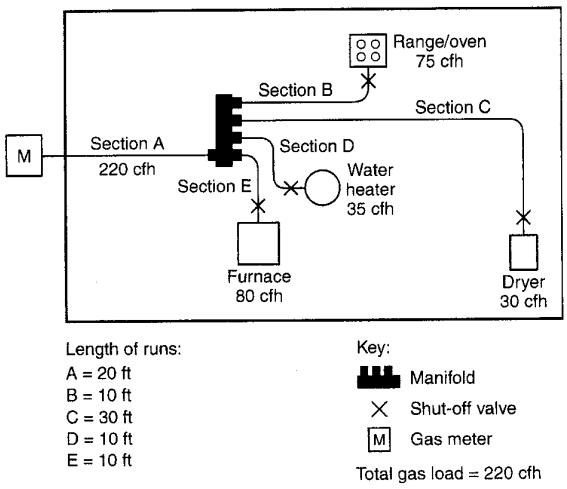

FIGURE A.6.3
PIPING PLAN SHOWING A COPPER TUBING SYSTEM

A.6.4 Example 4: Modification to existing piping system. Determine the required CSST size for Section G (retrofit application) of the *piping* system shown in Figure A.6.4, with a designated pressure drop of 0.5-inch w.c. (125 Pa) using the branch length method. The gas to be used has 0.60 specific gravity and a heating value of 1,000 Btu/ft^3 (37.5 MJ/m^3).

Solution:

(1) The length of pipe and CSST from the *point of delivery* to the retrofit *appliance* (barbecue) at the end of Section G is 40 feet (12 192 mm), A + B + G.

(2) Use this branch length to size Section G.

(3) Assume the CSST manufacturer has tubing sizes or EHDs of 13, 18, 23 and 30.

(4) Using the row marked 40 feet (12 192 mm) in Table 402.4(15), Section G, supplying 40 cfh (1.13 m^3/hr) for the barbecue requires EHD 18 CSST.

(5) The sizing of Sections A, B, F and E must be checked to ensure adequate gas carrying capacity since an *appliance* has been added to the *piping* system (see A.6.1 for details).

A.6.5 Example 5: Calculating pressure drops due to temperature changes. A test *piping* system is installed on a warm autumn afternoon when the temperature is 70°F (21°C). In accordance with local custom, the new *piping* system is subjected to an air pressure test at 20 psig (138 kPa). Overnight, the temperature drops and when the inspector shows up first thing in the morning the temperature is 40°F (4°C).

INTERNATIONAL CODE COUNCIL®
Copyright © 2019 ICC & NYSDOS. ALL RIGHTS RESERVED. Accessed by Lauren Gualdino (lgualdino@briarcliffmanor.org), (-) Order Number #100880972 on May 08, 2020 07:05 AM (PDT) pursuant to License Agreement with ICC & NYSDOS. No further reproduction, no

100880972

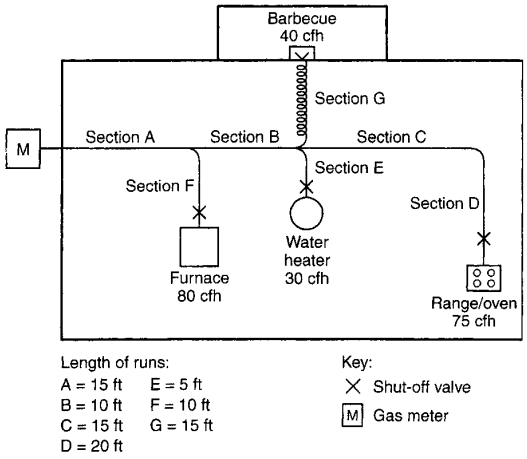

FIGURE A.6.4
PIPING PLAN SHOWING A MODIFICATION TO EXISTING PIPING SYSTEM

If the volume of the *piping* system is unchanged, then the formula based on Boyle's and Charles' law for determining the new pressure at a reduced temperature is as follows:

$$\frac{T_1}{T_2} = \frac{P_1}{P_2}$$

where:

T_1 = Initial temperature, absolute ($T_1 + 459$)

T_2 = Final temperature, absolute ($T_2 + 459$)

P_1 = Initial pressure, psia ($P_1 + 14.7$)

P_2 = Final pressure, psia ($P_2 + 14.7$)

$$\frac{(70 + 459)}{(40 + 459)} = \frac{(20 + 14.7)}{(P_2 + 14.7)}$$

$$\frac{529}{499} = \frac{34.7}{(P_2 + 14.7)}$$

$$(P_2 + 14.7) \times \frac{529}{499} = 34.7$$

$$(P_2 + 14.7) \times \frac{34.7}{1.060}$$

P_2 = 32.7 - 14.7

P_2 = 18 *psig*

Therefore, the gauge could be expected to register 18 psig (124 kPa) when the ambient temperature is 40°F (4°C).

A.6.6 Example 6: Pressure drop per 100 feet of pipe method. Using the layout shown in Figure A.6.1 and D*H* = pressure drop, in w.c. (27.7 in. H_2O = 1 psi), proceed as follows:

(1) Length to A = 20 feet, with 35,000 Btu/hr.

For $^1/_2$-inch pipe, $\Delta H = {}^{20\text{ feet}}/_{100\text{ feet}} \times 0.3$ inch w.c. = 0.06 in w.c.

(2) Length to B = 15 feet, with 75,000 Btu/hr.

For $^3/_4$-inch pipe, $\Delta H = {}^{15\text{ feet}}/_{100\text{ feet}} \times 0.3$ inch w.c. = 0.045 in w.c.

(3) Section 1 = 10 feet, with 110,000 Btu/hr. Here there is a choice:

For 1 inch pipe: $\Delta H = {}^{10\text{ feet}}/_{100\text{ feet}} \times 0.2$ inch w.c. = 0.02 in w.c.

For $^3/_4$-inch pipe: $\Delta H = {}^{10\text{ feet}}/_{100\text{ feet}} \times [0.5$ inch w.c. + ${}^{(110{,}000\text{ Btu/hr-}104{,}000\text{ Btu/hr})}/_{(147{,}000\text{ Btu/hr-}104{,}000\text{ Btu/hr})} \times (1.0$ inches w.c. - 0.5 inch w.c.)] = 0.1 × 0.57 inch w.c.≈ 0.06 inch w.c.

Note that the pressure drop between 104,000 Btu/hr and 147,000 Btu/hr has been interpolated as 110,000 Btu/hr.

(4) Section 2 = 20 feet, with 135,000 Btu/hr. Here there is a choice:

For 1-inch pipe: $\Delta H = {}^{20\text{ feet}}/_{100\text{ feet}} \times [0.2$ inch w.c. + ${}^{(14{,}000\text{ Btu/hr})}/_{(27{,}000\text{ Btu/hr})} \times 0.1$ inch w.c.] = 0.05 inch w.c.

For $^3/_4$-inch pipe: $\Delta H = {}^{20\text{ feet}}/_{100\text{ feet}} \times 1.0$ inch w.c. = 0.2 inch w.c.

Note that the pressure drop between 121,000 Btu/hr and 148,000 Btu/hr has been interpolated as 135,000 Btu/hr, but interpolation for the ¾-inch pipe (trivial for 104,000 Btu/hr to 147,000 Btu/hr) was not used.

(5) Section 3 = 30 feet, with 245,000 Btu/hr. Here there is a choice:

For 1-inch pipe: $\Delta H = {}^{30\text{ feet}}/_{100\text{ feet}} \times 1.0$ inches w.c. = 0.3 inch w.c.

For $1^1/_4$-inch pipe: $\Delta H = {}^{30\text{ feet}}/_{100\text{ feet}} \times 0.2$ inch w.c. = 0.06 inch w.c.

Note that interpolation for these options is ignored since the table values are close to the 245,000 Btu/hr carried by that section.

(6) The total pressure drop is the sum of the section approaching A, Sections 1 and 3, or either of the following, depending on whether an absolute minimum is needed or the larger drop can be accommodated.

Minimum pressure drop to farthest *appliance*:

ΔH = 0.06 inch w.c. + 0.02 inch w.c. + 0.06 inch w.c. = 0.14 inch w.c.

Larger pressure drop to the farthest *appliance*:

ΔH = 0.06 inch w.c. + 0.06 inch w.c. + 0.3 inch w.c. = 0.42 inch w.c.

Notice that Section 2 and the run to B do not enter into this calculation, provided that the appliances have similar input pressure requirements.

For SI units: 1 Btu/hr = 0.293 W, 1 cubic foot = 0.028 m^3, 1 foot = 0.305 m, 1 inch w.c. = 249 Pa.

INTERNATIONAL CODE COUNCIL®
Copyright © 2019 ICC & NYSDOS. ALL RIGHTS RESERVED. Accessed by Lauren Gualdino (lgualdino@briarcliffmanor.org), (-) Order Number #100880972 on May 08, 2020 07:05 AM (PDT) pursuant to License Agreement with ICC & NYSDOS. No further reproduction, no

100880972

APPENDIX B

SIZING OF VENTING SYSTEMS SERVING APPLIANCES EQUIPPED WITH DRAFT HOODS, CATEGORY I APPLIANCES AND APPLIANCES LISTED FOR USE WITH TYPE B VENTS

This appendix is informative and is not part of the code.

EXAMPLES USING SINGLE APPLIANCE VENTING TABLES

Example 1: Single draft-hood-equipped appliance.

An installer has a 120,000 British thermal unit (Btu) per hour input *appliance* with a 5-inch-diameter draft hood outlet that needs to be vented into a 10-foot-high Type B vent system. What size vent should be used assuming (a) a 5-foot lateral single-wall metal vent connector is used with two 90-degree elbows, or (b) a 5-foot lateral single-wall metal vent connector is used with three 90-degree elbows in the vent system?

Solution:

Table 504.2(2) should be used to solve this problem, because single-wall metal vent connectors are being used with a Type B vent.

(a) Read down the first column in Table 504.2(2) until the row associated with a 10-foot height and 5-foot lateral is found. Read across this row until a vent capacity greater than 120,000 Btu per hour is located in the shaded columns *labeled* "NAT Max" for draft-hood-equipped appliances. In this case, a 5-inch-diameter vent has a capacity of 122,000 Btu per hour and can be used for this application.

(b) If three 90-degree elbows are used in the vent system, then the maximum vent capacity listed in the tables must be reduced by 10 percent (see Section 504.2.3 for single *appliance* vents). This implies that the 5-inch-diameter vent has an adjusted capacity of only 110,000 Btu per hour. In this case, the vent system must be increased to 6 inches in diameter (see calculations below).

122,000 (.90) = 110,000 for 5-inch vent
From Table 504.2(2), Select 6-inch vent
186,000 (.90) = 167,000; This is greater than the required 120,000. Therefore, use a 6-inch vent and connector where three elbows are used.

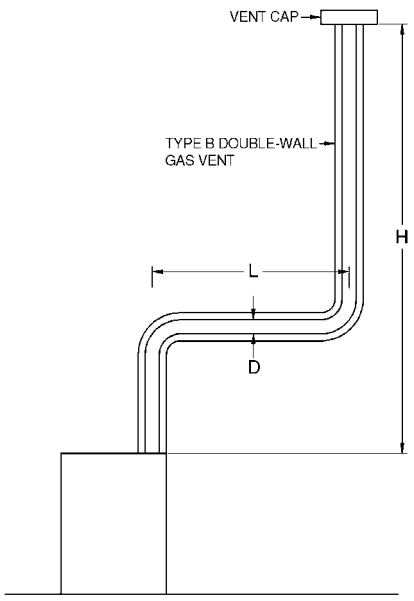

For SI: 1 foot = 304.8 mm, 1 British thermal unit per hour = 0.2931 W.

Table 504.2(1) is used where sizing Type B double-wall gas vent connected directly to the appliance.

Note: The appliance can be either Category I draft hood equipped or fan-assisted type.

FIGURE B-1
TYPE B DOUBLE-WALL VENT SYSTEM SERVING A SINGLE APPLIANCE WITH A TYPE B DOUBLE-WALL VENT

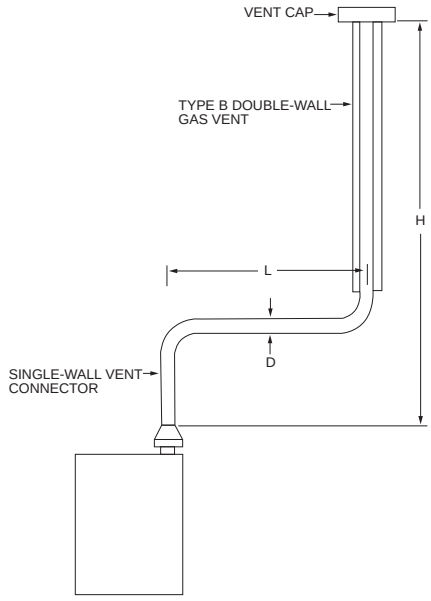

For SI: 1 foot = 304.8 mm, 1 British thermal unit per hour = 0.2931 W.

Table 504.2(2) is used where sizing a single-wall metal vent connector attached to a Type B double-wall gas vent.

Note: The appliance can be either Category I draft hood equipped or fan-assisted type.

FIGURE B-2
TYPE B DOUBLE-WALL VENT SYSTEM SERVING A SINGLE APPLIANCE WITH A SINGLE-WALL METAL VENT CONNECTOR

INTERNATIONAL CODE COUNCIL®
Copyright © 2019 ICC & NYSDOS. ALL RIGHTS RESERVED. Accessed by Lauren Gualdino (lgualdino@briarcliffmanor.org), (-) Order Number #100880972 on May 08, 2020 07:05 AM (PDT) pursuant to License Agreement with ICC & NYSDOS. No further reproduction, no

100880972

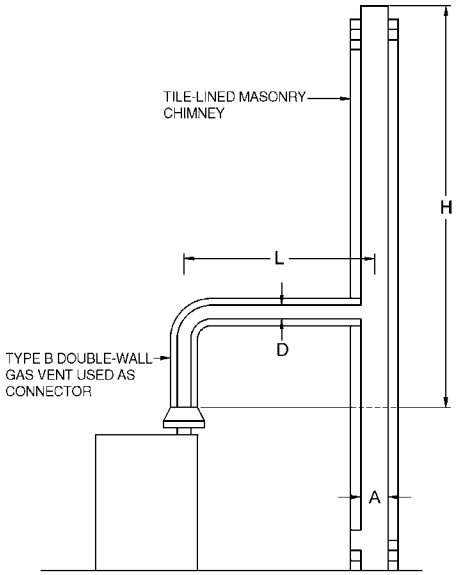

Table 504.2(3) is used where sizing a Type B double-wall gas vent connector attached to a tile-lined masonry chimney.

Note: "A" is the equivalent cross-sectional area of the tile liner.

Note: The appliance can be either Category I draft hood equipped or fan-assisted type.

FIGURE B-3
VENT SYSTEM SERVING A SINGLE APPLIANCE WITH A MASONRY CHIMNEY OF TYPE B DOUBLE-WALL VENT CONNECTOR

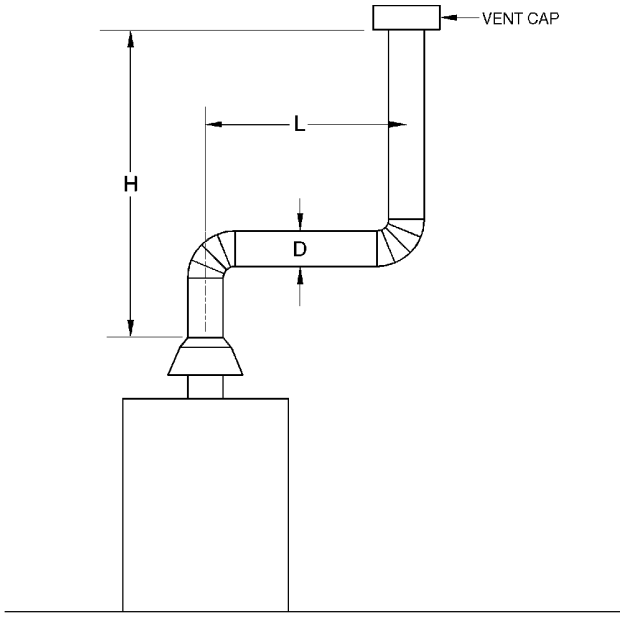

Asbestos cement Type B or single-wall metal vent serving a single draft-hood-equipped appliance [see Table 504.2(5)].

FIGURE B-5
ASBESTOS CEMENT TYPE B OR SINGLE-WALL METAL VENT SYSTEM SERVING A SINGLE DRAFT-HOOD-EQUIPPED APPLIANCE

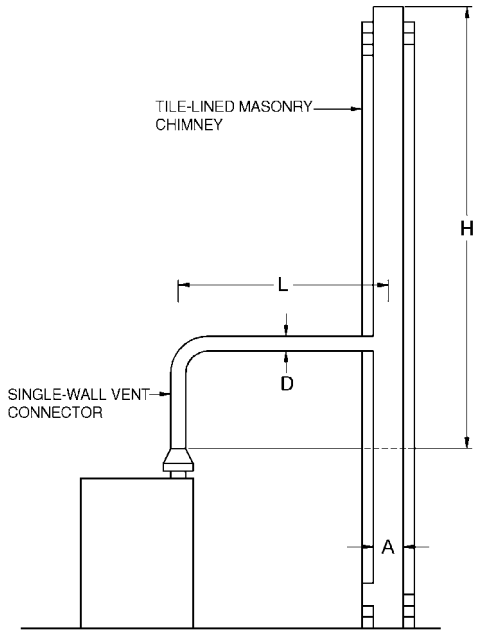

Table 504.2(4) is used where sizing a single-wall vent connector attached to a tile-lined masonry chimney.

Note: "A" is the equivalent cross-sectional area of the tile liner.

Note: The appliance can be either Category I draft hood equipped or fan-assisted type.

FIGURE B-4
VENT SYSTEM SERVING A SINGLE APPLIANCE USING A MASONRY CHIMNEY AND A SINGLE-WALL METAL VENT CONNECTOR

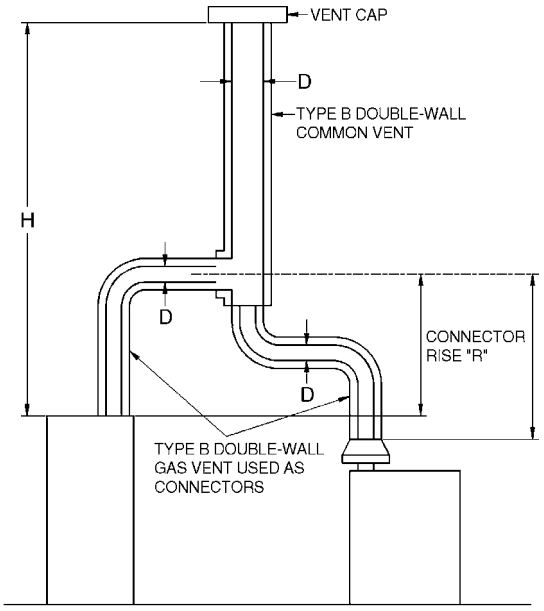

Table 504.3(1) is used where sizing Type B double-wall vent connectors attached to a Type B double-wall common vent.

Note: Each appliance can be either Category I draft hood equipped or fan-assisted type.

FIGURE B-6
VENT SYSTEM SERVING TWO OR MORE APPLIANCES WITH TYPE B DOUBLE-WALL VENT AND TYPE B DOUBLE-WALL VENT CONNECTOR

INTERNATIONAL CODE COUNCIL®
Copyright © 2019 ICC & NYSDOS. ALL RIGHTS RESERVED. Accessed by Lauren Gualdino (lgualdino@briarcliffmanor.org), (-) Order Number #100880972 on May 08, 2020 07:05 AM (PDT) pursuant to License Agreement with ICC & NYSDOS. No further reproduction, no

100880972

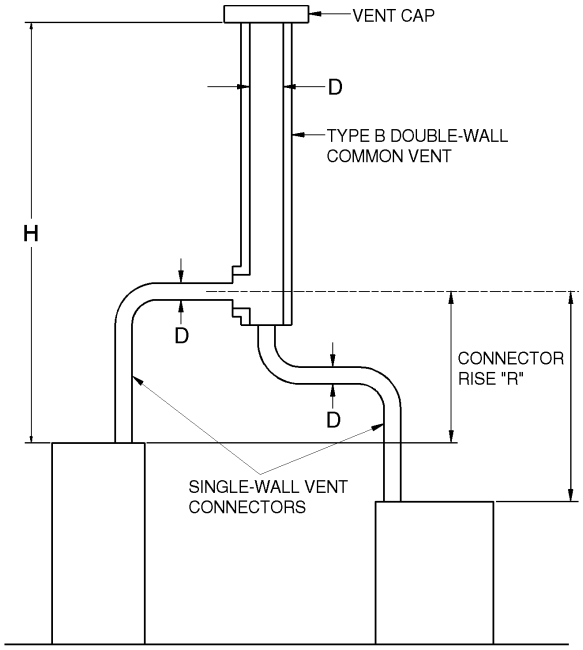

Table 504.3(2) is used where sizing single-wall vent connectors attached to a Type B double-wall common vent.

Note: Each appliance can be either Category I draft hood equipped or fan-assisted type.

FIGURE B-7
VENT SYSTEM SERVING TWO OR MORE APPLIANCES WITH TYPE B DOUBLE-WALL VENT AND SINGLE-WALL METAL VENT CONNECTORS

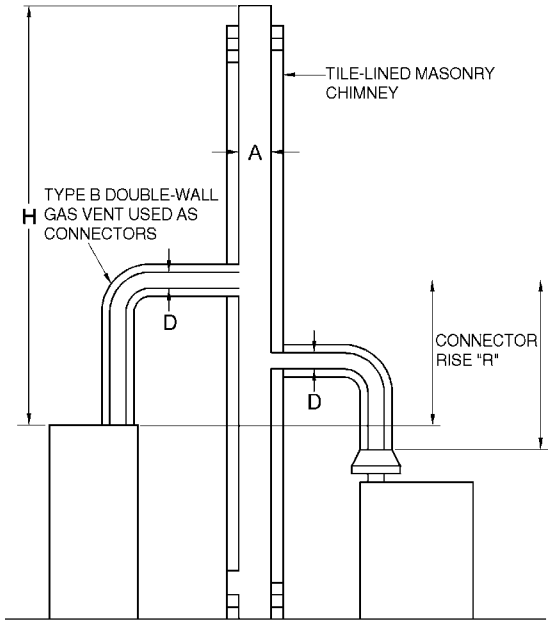

Table 504.3(3) is used where sizing Type B double-wall vent connectors attached to a tile-lined masonry chimney.

Note: "A" is the equivalent cross-sectional area of the tile liner.

Note: Each appliance can be either Category I draft hood equipped or fan-assisted type.

FIGURE B-8
MASONRY CHIMNEY SERVING TWO OR MORE APPLIANCES WITH TYPE B DOUBLE-WALL VENT CONNECTOR

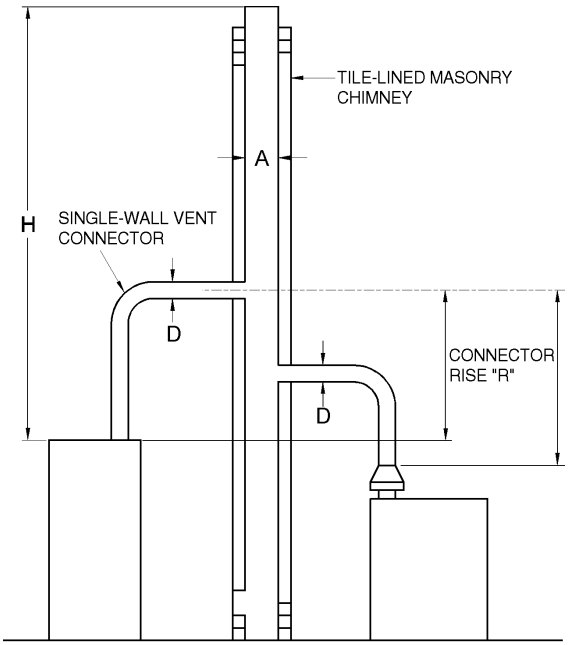

Table 504.3(4) is used where sizing single-wall metal vent connectors attached to a tile-lined masonry chimney.

Note: "A" is the equivalent cross-sectional area of the tile liner.

Note: Each appliance can be either Category I draft hood equipped or fan-assisted type.

FIGURE B-9
MASONRY CHIMNEY SERVING TWO OR MORE APPLIANCES WITH SINGLE-WALL METAL VENT CONNECTORS

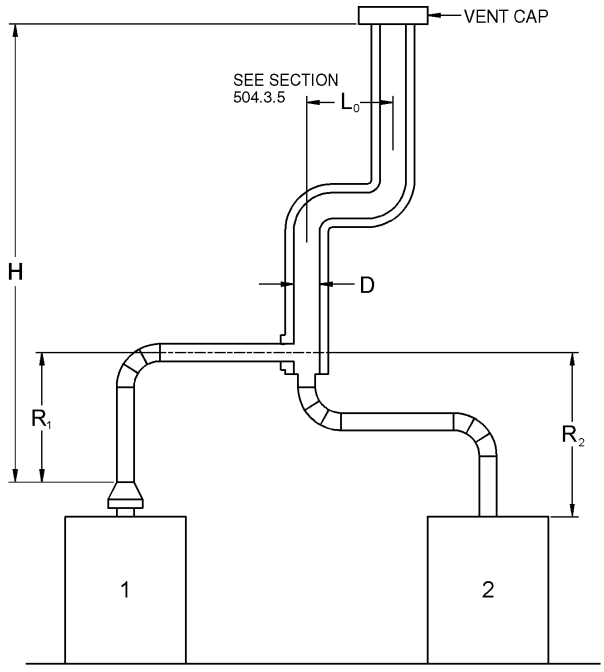

Asbestos cement Type B or single-wall metal pipe vent serving two or more draft-hood-equipped appliances [see Table 504.3(5)].

FIGURE B-10
ASBESTOS CEMENT TYPE B OR SINGLE-WALL METAL VENT SYSTEM SERVING TWO OR MORE DRAFT-HOOD-EQUIPPED APPLIANCES

INTERNATIONAL CODE COUNCIL®
Copyright © 2019 ICC & NYSDOS. ALL RIGHTS RESERVED. Accessed by Lauren Gualdino (lgualdino@briarcliffmanor.org), (-) Order Number #100880972 on May 08, 2020 07:05 AM (PDT) pursuant to License Agreement with ICC & NYSDOS. No further reproduction, no

APPENDIX B—SIZING OF VENTING SYSTEMS SERVING APPLIANCES EQUIPPED WITH DRAFT HOODS, CATEGORY I APPLIANCES AND APPLIANCES LISTED FOR USE WITH TYPE B VENTS

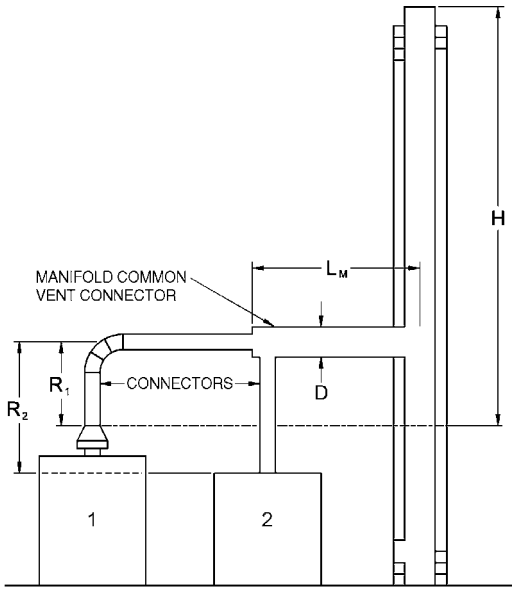

Example: Manifolded Common Vent Connector LM shall be not greater than 18 times the common vent connector manifold inside diameter; i.e., a 4-inch (102 mm) inside diameter common vent connector manifold shall not exceed 72 inches (1829 mm) in length (see Section 504.3.4).

Note: This is an illustration of a typical manifolded vent connector. Different appliance, vent connector, or common vent types are possible. Consult Section 502.3.

FIGURE B-11
USE OF MANIFOLD COMMON VENT CONNECTOR

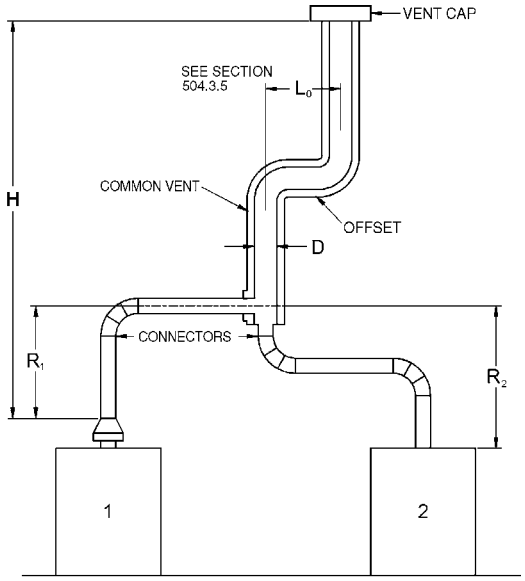

Example: Offset Common Vent

Note: This is an illustration of a typical offset vent. Different appliance, vent connector, or vent types are possible. Consult Sections 504.2 and 504.3.

FIGURE B-12
USE OF OFFSET COMMON VENT

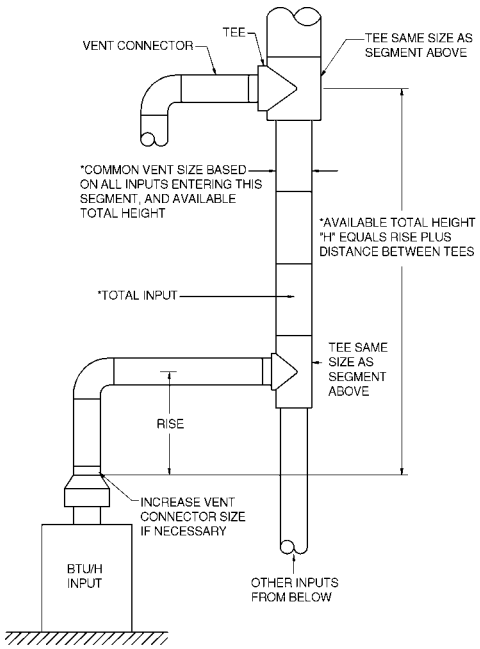

Vent connector size depends on:
- Input
- Rise
- Available total height "H"
- Table 504.3(1) connectors

Common vent size depends on:
- Combined inputs
- Available total height "H"
- Table 504.3(1) common vent

FIGURE B-13
MULTISTORY GAS VENT DESIGN PROCEDURE FOR EACH SEGMENT OF SYSTEM

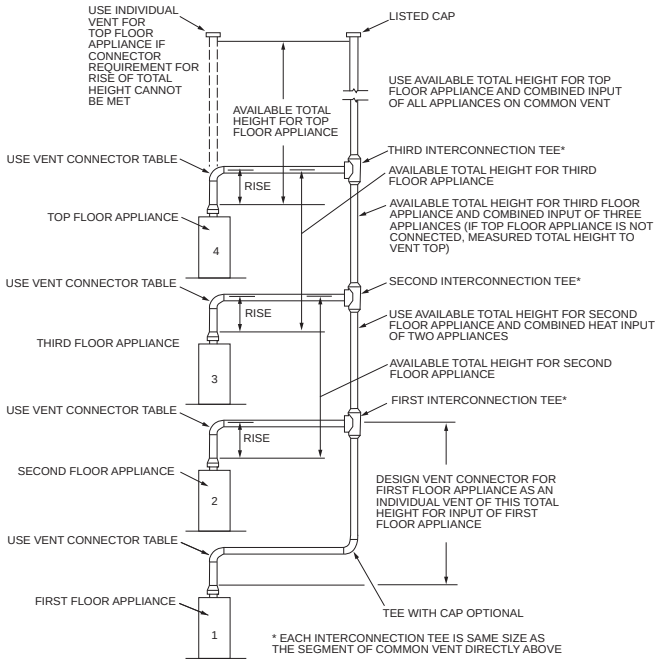

Principles of design of multistory vents using vent connector and common vent design tables (see Sections 504.3.11 through 504.3.17).

FIGURE B-14
MULTISTORY VENT SYSTEMS

INTERNATIONAL CODE COUNCIL®
Copyright © 2019 ICC & NYSDOS. ALL RIGHTS RESERVED. Accessed by Lauren Gualdino (lgualdino@briarcliffmanor.org), (-) Order Number #100880972 on May 08, 2020 07:05 AM (PDT) pursuant to License Agreement with ICC & NYSDOS. No further reproduction, no

100880972

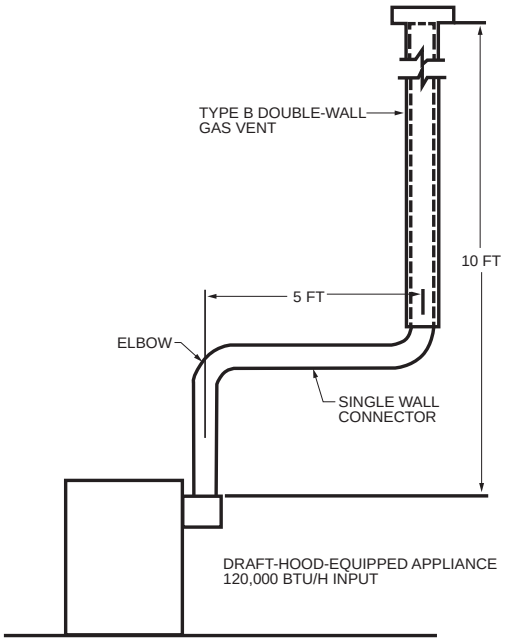

For SI: 1 foot = 304.8 mm, 1 British thermal unit per hour = 0.2931 W.

FIGURE B-15 (EXAMPLE 1)
SINGLE DRAFT-HOOD-EQUIPPED APPLIANCE

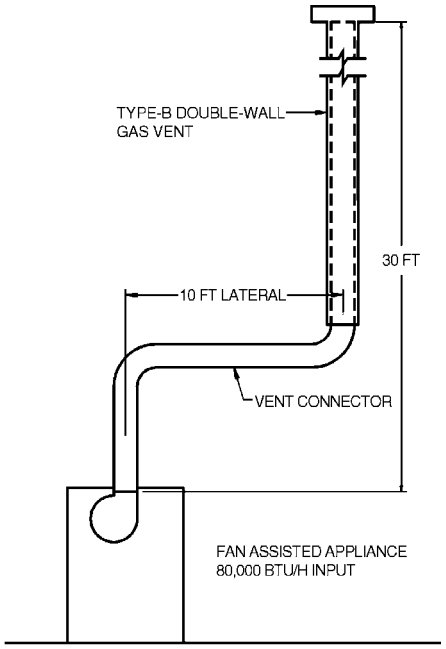

For SI: 1 foot = 304.8 mm, 1 British thermal unit per hour = 0.2931 W.

FIGURE B-16 (EXAMPLE 2)
SINGLE FAN-ASSISTED APPLIANCE

Example 2: Single fan-assisted appliance.

An installer has an 80,000 Btu per hour input fan-assisted *appliance* that must be installed using 10 feet of lateral connector attached to a 30-foot-high Type B vent. Two 90-degree elbows are needed for the installation. Can a single-wall metal vent connector be used for this application?

Solution:

Table 504.2(2) refers to the use of single-wall metal vent connectors with Type B vent. In the first column find the row associated with a 30-foot height and a 10-foot lateral. Read across this row, looking at the FAN Min and FAN Max columns, to find that a 3-inch-diameter single-wall metal vent connector is not recommended. Moving to the next larger size single wall connector (4 inches), note that a 4-inch-diameter single-wall metal connector has a recommended minimum vent capacity of 91,000 Btu per hour and a recommended maximum vent capacity of 144,000 Btu per hour. The 80,000 Btu per hour fan-assisted *appliance* is outside this range, so the conclusion is that a single-wall metal vent connector cannot be used to vent this *appliance* using 10 feet of lateral for the connector.

However, if the 80,000 Btu per hour input *appliance* could be moved to within 5 feet of the vertical vent, then a 4-inch single-wall metal connector could be used to vent the *appliance*. Table 504.2(2) shows the acceptable range of vent capacities for a 4-inch vent with 5 feet of lateral to be between 72,000 Btu per hour and 157,000 Btu per hour.

If the *appliance* cannot be moved closer to the vertical vent, then Type B vent could be used as the connector material. In this case, Table 504.2(1) shows that for a 30-foot-high vent with 10 feet of lateral, the acceptable range of vent capacities for a 4-inch-diameter vent attached to a fan-assisted *appliance* is between 37,000 Btu per hour and 150,000 Btu per hour.

Example 3: Interpolating between table values.

An installer has an 80,000 Btu per hour input *appliance* with a 4-inch-diameter draft hood outlet that needs to be vented into a 12-foot-high Type B vent. The vent connector has a 5-foot lateral length and is also Type B. Can this *appliance* be vented using a 4-inch-diameter vent?

Solution:

Table 504.2(1) is used in the case of an all Type B vent system. However, since there is no entry in Table 504.2(1) for a height of 12 feet, interpolation must be used. Read down the 4-inch diameter NAT Max column to the row associated with 10-foot height and 5-foot lateral to find the capacity value of 77,000 Btu per hour. Read further down to the 15-foot height, 5-foot lateral row to find the capacity value of 87,000 Btu per hour. The difference between the 15-foot height capacity value and the 10-foot height capacity value is 10,000 Btu per hour. The capacity for a vent system with a 12-foot height is equal to the capacity for a 10-foot height plus $^{2}/_{5}$ of the difference between the 10-foot and 15-foot height values, or $77{,}000 + {}^{2}/_{5}\ (10{,}000) = 81{,}000$ Btu per hour. Therefore, a 4-inch-diameter vent can be used in the installation.

INTERNATIONAL CODE COUNCIL®
Copyright © 2019 ICC & NYSDOS. ALL RIGHTS RESERVED. Accessed by Lauren Gualdino (lgualdino@briarcliffmanor.org), (-) Order Number #100880972 on May 08, 2020 07:05 AM (PDT) pursuant to License Agreement with ICC & NYSDOS. No further reproduction, no

100880972

EXAMPLES USING COMMON VENTING TABLES

Example 4: Common venting two draft-hood-equipped appliances.

A 35,000 Btu per hour water heater is to be common vented with a 150,000 Btu per hour furnace using a common vent with a total height of 30 feet. The connector rise is 2 feet for the water heater with a horizontal length of 4 feet. The connector rise for the furnace is 3 feet with a horizontal length of 8 feet. Assume single-wall metal connectors will be used with Type B vent. What size connectors and combined vent should be used in this installation?

Solution:

Table 504.3(2) should be used to size single-wall metal vent connectors attached to Type B vertical vents. In the vent connector capacity portion of Table 504.3(2), find the row associated with a 30-foot vent height. For a 2-foot rise on the vent connector for the water heater, read the shaded columns for draft-hood-equipped appliances to find that a 3-inch-diameter vent connector has a capacity of 37,000 Btu per hour. Therefore, a 3-inch single-wall metal vent connector can be used with the water heater. For a draft-hood-equipped furnace with a 3-foot rise, read across the appropriate row to find that a 5-inch-diameter vent connector has a maximum capacity of 120,000 Btu per hour (which is too small for the furnace) and a 6-inch-diameter vent connector has a maximum vent capacity of 172,000 Btu per hour. Therefore, a 6-inch-diameter vent connector should be used with the 150,000 Btu per hour furnace. Since both vent connector horizontal lengths are less than the maximum lengths *listed* in Section 504.3.2, the table values can be used without adjustments.

In the common vent capacity portion of Table 504.3(2), find the row associated with a 30-foot vent height and read over to the NAT + NAT portion of the 6-inch-diameter column to find a maximum combined capacity of 257,000 Btu per hour. Since the two appliances total only 185,000 Btu per hour, a 6-inch common vent can be used.

Example 5a: Common venting a draft-hood-equipped water heater with a fan-assisted furnace into a Type B vent.

In this case, a 35,000 Btu per hour input draft-hood-equipped water heater with a 4-inch-diameter draft hood *outlet*, 2 feet of connector rise, and 4 feet of horizontal length is to be common vented with a 100,000 Btu per hour fan-assisted furnace with a 4-inch-diameter flue collar, 3 feet of connector rise, and 6 feet of horizontal length. The common vent consists of a 30-foot height of Type B vent. What are the recommended vent diameters for each connector and the common vent? The installer would like to use a single-wall metal vent connector.

Solution: [Table 504.3(2)].

Water Heater Vent Connector Diameter. Since the water heater vent connector horizontal length of 4 feet is less than the maximum value listed in Section 504.3.2, the venting table values can be used without adjustments. Using the Vent Connector Capacity portion of Table 504.3(2), read down the Total Vent Height (*H*) column to 30 feet and read across the 2-foot Connector Rise (*R*) row to the first Btu per hour rating in the NAT Max column that is equal to or greater than the water heater input rating. The table shows that a 3-inch vent connector has a maximum input rating of 37,000 Btu per

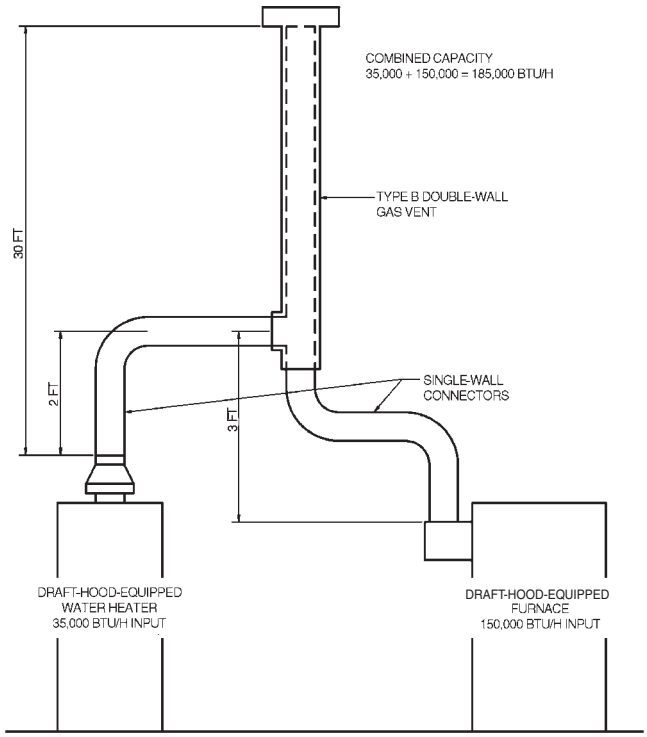

**FIGURE B-17 (EXAMPLE 4)
COMMON VENTING TWO DRAFT-HOOD-EQUIPPED APPLIANCES**

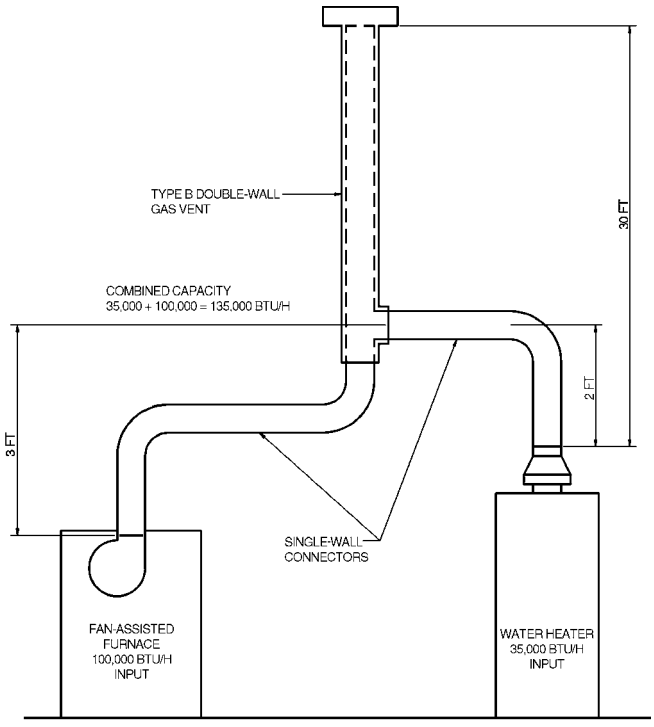

**FIGURE B-18 (EXAMPLE 5A)
COMMON VENTING A DRAFT HOOD WITH A FAN-ASSISTED FURNACE INTO A TYPE B DOUBLE-WALL COMMON VENT**

INTERNATIONAL CODE COUNCIL®
Copyright © 2019 ICC & NYSDOS. ALL RIGHTS RESERVED. Accessed by Lauren Gualdino (lgualdino@briarcliffmanor.org), (-) Order Number #100880972 on May 08, 2020 07:05 AM (PDT) pursuant to License Agreement with ICC & NYSDOS. No further reproduction, no

100880972

hour. Although this is greater than the water heater input rating, a 3-inch vent connector is prohibited by Section 504.3.21. A 4-inch vent connector has a maximum input rating of 67,000 Btu per hour and is equal to the draft hood *outlet* diameter. A 4-inch vent connector is selected. Since the water heater is equipped with a draft hood, there are no minimum input rating restrictions.

Furnace Vent Connector Diameter. Using the Vent Connector Capacity portion of Table 504.3(2), read down the Total Vent Height (*H*) column to 30 feet and across the 3-foot Connector Rise (*R*) row. Since the furnace has a fan-assisted combustion system, find the first FAN Max column with a Btu per hour rating greater than the furnace input rating. The 4-inch vent connector has a maximum input rating of 119,000 Btu per hour and a minimum input rating of 85,000 Btu per hour. The 100,000 Btu per hour furnace in this example falls within this range, so a 4-inch connector is adequate. Since the furnace vent connector horizontal length of 6 feet does not exceed the maximum value listed in Section 504.3.2, the venting table values can be used without adjustment. If the furnace had an input rating of 80,000 Btu per hour, then a Type B vent connector [see Table 504.3(1)] would be needed in order to meet the minimum capacity limit.

Common Vent Diameter. The total input to the common vent is 135,000 Btu per hour. Using the Common Vent Capacity portion of Table 504.3(2), read down the Total Vent Height (*H*) column to 30 feet and across this row to find the smallest vent diameter in the FAN + NAT column that has a Btu per hour rating equal to or greater than 135,000 Btu per hour. The 4-inch common vent has a capacity of 132,000 Btu per hour and the 5-inch common vent has a capacity of 202,000 Btu per hour. Therefore, the 5-inch common vent should be used in this example.

Summary. In this example, the installer can use a 4-inch-diameter, single-wall metal vent connector for the water heater and a 4-inch-diameter, single-wall metal vent connector for the furnace. The common vent should be a 5-inch-diameter Type B vent.

Example 5b: Common venting into a masonry chimney.

In this case, the water heater and fan-assisted furnace of Example 5a are to be common vented into a clay tile-lined masonry chimney with a 30-foot height. The chimney is not exposed to the outdoors below the roof line. The internal dimensions of the clay tile liner are nominally 8 inches by 12 inches. Assuming the same vent connector heights, laterals, and materials found in Example 5a, what are the recommended vent connector diameters, and is this an acceptable installation?

Solution:

Table 504.3(4) is used to size common venting installations involving single-wall connectors into masonry chimneys.

Water Heater Vent Connector Diameter. Using Table 504.3(4), Vent Connector Capacity, read down the Total Vent Height (*H*) column to 30 feet, and read across the 2-foot Connector Rise (*R*) row to the first Btu per hour rating in the NAT Max column that is equal to or greater than the water heater input rating. The table shows that a 3-inch vent connector has a maximum input of only 31,000 Btu per hour while a 4-inch vent connector has a maximum input of 57,000 Btu per hour. A 4-inch vent connector must therefore be used.

Furnace Vent Connector Diameter. Using the Vent Connector Capacity portion of Table 504.3(4), read down the Total Vent Height (*H*) column to 30 feet and across the 3-foot Connector Rise (*R*) row. Since the furnace has a fan-assisted combustion system, find the first FAN Max column with a Btu per hour rating greater than the furnace input rating. The 4-inch vent connector has a maximum input rating of 127,000 Btu per hour and a minimum input rating of 95,000 Btu per hour. The 100,000 Btu per hour furnace in this example falls within this range, so a 4-inch connector is adequate.

Masonry Chimney. From Table B-1, the equivalent area for a nominal liner size of 8 inches by 12 inches is 63.6 square inches. Using Table 504.3(4), Common Vent Capacity, read down the FAN + NAT column under the Minimum Internal Area of Chimney value of 63 to the row for 30-foot height to find a capacity value of 739,000 Btu per hour. The combined input rating of the furnace and water heater, 135,000 Btu per hour, is less than the table value, so this is an acceptable installation.

Section 504.3.17 requires the common vent area to be not greater than seven times the smallest *listed appliance* categorized vent area, flue collar area, or draft hood outlet area. Both appliances in this installation have 4-inch-diameter outlets. From Table B-1, the equivalent area for an inside diameter of 4 inches is 12.2 square inches. Seven times 12.2 equals 85.4, which is greater than 63.6, so this configuration is acceptable.

Example 5c: Common venting into an exterior masonry chimney.

In this case, the water heater and fan-assisted furnace of Examples 5a and 5b are to be common vented into an exterior masonry chimney. The chimney height, clay tile liner dimensions, and vent connector heights and laterals are the same as in Example 5b. This system is being installed in Charlotte, North Carolina. Does this exterior masonry chimney need to be relined? If so, what corrugated metallic liner size is recommended? What vent connector diameters are recommended?

Solution:

In accordance with Section 504.3.20, Type B vent connectors are required to be used with exterior masonry chimneys. Use Tables 504.3(7a), (7b) to size FAN+NAT common venting installations involving Type-B double wall connectors into exterior masonry chimneys.

The local 99-percent winter design temperature needed to use Table 504.3(7b) can be found in the ASHRAE *Handbook of Fundamentals.* For Charlotte, North Carolina, this design temperature is 19°F.

Chimney Liner Requirement. As in Example 5b, use the 63 square inch Internal Area columns for this size clay tile liner. Read down the 63 square inch column of Table 504.3(7a) to the 30-foot height row to find that the combined *appliance* maximum input is 747,000 Btu per hour. The combined input rating of the appliances in this installation, 135,000 Btu per hour, is less than the maximum value, so this

INTERNATIONAL CODE COUNCIL®
Copyright © 2019 ICC & NYSDOS. ALL RIGHTS RESERVED. Accessed by Lauren Gualdino (lgualdino@briarcliffmanor.org), (-) Order Number #100880972 on May 08, 2020 07:05 AM (PDT) pursuant to License Agreement with ICC & NYSDOS. No further reproduction, no

100880972

criterion is satisfied. Table 504.3(7b), at a 19°F design temperature, and at the same vent height and internal area used above, shows that the minimum allowable input rating of a space-heating appliance is 470,000 Btu per hour. The furnace input rating of 100,000 Btu per hour is less than this minimum value. So this criterion is not satisfied, and an alternative venting design needs to be used, such as a Type B vent shown in Example 5a or a *listed* chimney liner system shown in the remainder of the example.

In accordance with Section 504.3.19, Table 504.3(1) or 504.3(2) is used for sizing corrugated metallic liners in masonry chimneys, with the maximum common vent capacities reduced by 20 percent. This example will be continued assuming Type B vent connectors.

Water Heater Vent Connector Diameter. Using Table 504.3(1), Vent Connector Capacity, read down the Total Vent Height (*H*) column to 30 feet, and read across the 2-foot Connector Rise (*R*) row to the first Btu/h rating in the NAT Max column that is equal to or greater than the water heater input rating. The table shows that a 3-inch vent connector has a maximum capacity of 39,000 Btu/h. Although this rating is greater than the water heater input rating, a 3-inch vent connector is prohibited by Section 504.3.21. A 4-inch vent connector has a maximum input rating of 70,000 Btu/h and is equal to the draft hood outlet diameter. A 4-inch vent connector is selected.

Furnace Vent Connector Diameter. Using Table 504.3(1), Vent Connector Capacity, read down the Vent Height (*H*) column to 30 feet, and read across the 3-foot Connector Rise (*R*) row to the first Btu per hour rating in the FAN Max column that is equal to or greater than the furnace input rating. The 100,000 Btu per hour furnace in this example falls within this range, so a 4-inch connector is adequate.

Chimney Liner Diameter. The total input to the common vent is 135,000 Btu per hour. Using the Common Vent Capacity Portion of Table 504.3(1), read down the Vent Height (*H*) column to 30 feet and across this row to find the smallest vent diameter in the FAN+NAT column that has a Btu per hour rating greater than 135,000 Btu per hour. The 4-inch common vent has a capacity of 138,000 Btu per hour. Reducing the maximum capacity by 20 percent (Section 504.3.19) results in a maximum capacity for a 4-inch corrugated liner of 110,000 Btu per hour, less than the total input of 135,000 Btu per hour. So a larger liner is needed. The 5-inch common vent capacity *listed* in Table 504.3(1) is 210,000 Btu per hour, and after reducing by 20 percent is 168,000 Btu per hour. Therefore, a 5-inch corrugated metal liner should be used in this example.

Single-Wall Connectors. Once it has been established that relining the chimney is necessary, Type B double-wall vent connectors are not specifically required. This example could be redone using Table 504.3(2) for single-wall vent connectors. For this case, the vent connector and liner diameters would be the same as found above with Type B double-wall connectors.

TABLE B-1
MASONRY CHIMNEY LINER DIMENSIONS WITH CIRCULAR EQUIVALENTS[a]

NOMINAL LINER SIZE (inches)	INSIDE DIMENSIONS OF LINER (inches)	INSIDE DIAMETER OR EQUIVALENT DIAMETER (inches)	EQUIVALENT AREA (square inches)
4 × 8	$2^1/_2 \times 6^1/_2$	4	12.2
		5	19.6
		6	28.3
		7	38.3
8 × 8	$6^3/_4 \times 6^3/_4$	7.4	42.7
		8	50.3
8 × 12	$6^1/_2 \times 10^1/_2$	9	63.6
		10	78.5
12 × 12	$9^3/_4 \times 9^3/_4$	10.4	83.3
		11	95
12 × 16	$9^1/_2 \times 13^1/_2$	11.8	107.5
		12	113.0
		14	153.9
16 × 16	$13^1/_4 \times 13^1/_4$	14.5	162.9
		15	176.7
16 × 20	13 × 17	16.2	206.1
		18	254.4
20 × 20	$16^3/_4 \times 16^3/_4$	18.2	260.2
		20	314.1
20 × 24	$16^1/_2 \times 20^1/_2$	20.1	314.2
		22	380.1
24 × 24	$20^1/_4 \times 20^1/_4$	22.1	380.1
		24	452.3
24 × 28	$20^1/_4 \times 20^1/_4$	24.1	456.2
28 × 28	$24^1/_4 \times 24^1/_4$	26.4	543.3
		27	572.5
30 × 30	$25^1/_2 \times 25^1/_2$	27.9	607
		30	706.8
30 × 36	$25^1/_2 \times 31^1/_2$	30.9	749.9
		33	855.3
36 × 36	$31^1/_2 \times 31^1/_2$	34.4	929.4
		36	1017.9

For SI: 1 inch = 25.4 mm, 1 square inch = 645.16 m^2.

a. Where liner sizes differ dimensionally from those shown in Table B-1, equivalent diameters can be determined from published tables for square and rectangular ducts of equivalent carrying capacity or by other engineering methods.

INTERNATIONAL CODE COUNCIL®
Copyright © 2019 ICC & NYSDOS. ALL RIGHTS RESERVED. Accessed by Lauren Gualdino (lgualdino@briarcliffmanor.org), (-) Order Number #100880972 on May 08, 2020 07:05 AM (PDT) pursuant to License Agreement with ICC & NYSDOS. No further reproduction, no

100880972

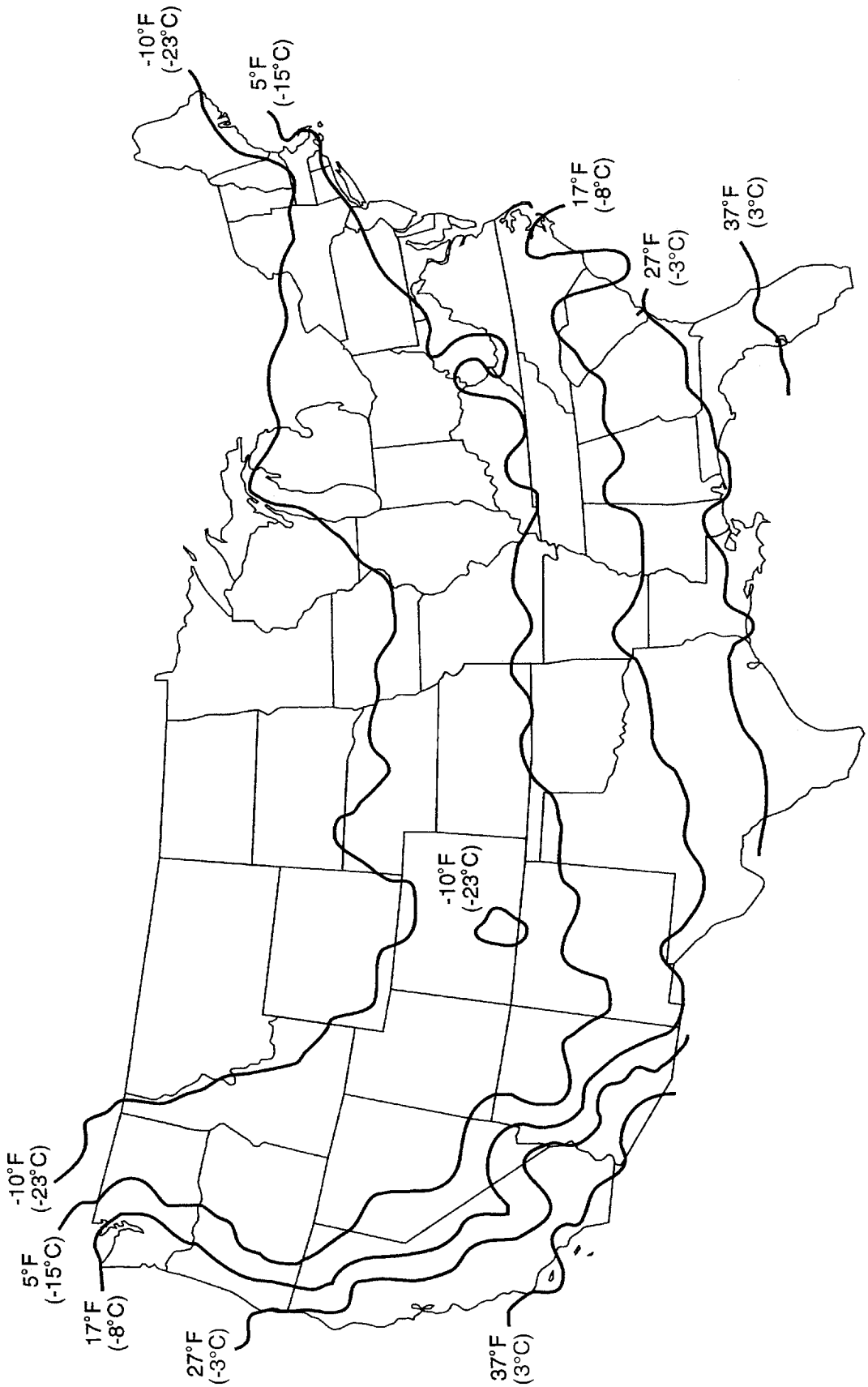

FIGURE B-19

NFGC:
99% Winter Design Temperatures for the Contiguous United States
This map is a necessarily generalized guide to temperatures in the contiguous United States. Temperatures shown for areas such as mountainous regions and large urban centers are not necessarily accurate. The climate data used to develop this map are from the *ASHRAE Handbook*—Fundamentals (Climate Conditions for the United States).
For 99% winter design temperature in Alaska, consult the *ASHRAE Handbook*—Fundamentals.
99% winter design temperatures for Hawaii are greater than 37°F.

INTERNATIONAL CODE COUNCIL®
Copyright © 2019 ICC & NYSDOS. ALL RIGHTS RESERVED. Accessed by Lauren Gualdino (lgualdino@briarcliffmanor.org), (-) Order Number #100880972 on May 08, 2020 07:05 AM (PDT) pursuant to License Agreement with ICC & NYSDOS. No further reproduction, no

100880972

INTERNATIONAL CODE COUNCIL®
Copyright © 2019 ICC & NYSDOS. ALL RIGHTS RESERVED. Accessed by Lauren Gualdino (lgualdino@briarcliffmanor.org), (-) Order Number #100880972 on May 08, 2020 07:05 AM (PDT) pursuant to License Agreement with ICC & NYSDOS. No further reproduction, no

100880972

APPENDIX C
EXIT TERMINALS OF MECHANICAL DRAFT AND DIRECT-VENT VENTING SYSTEMS

This appendix is informative and is not part of the code.

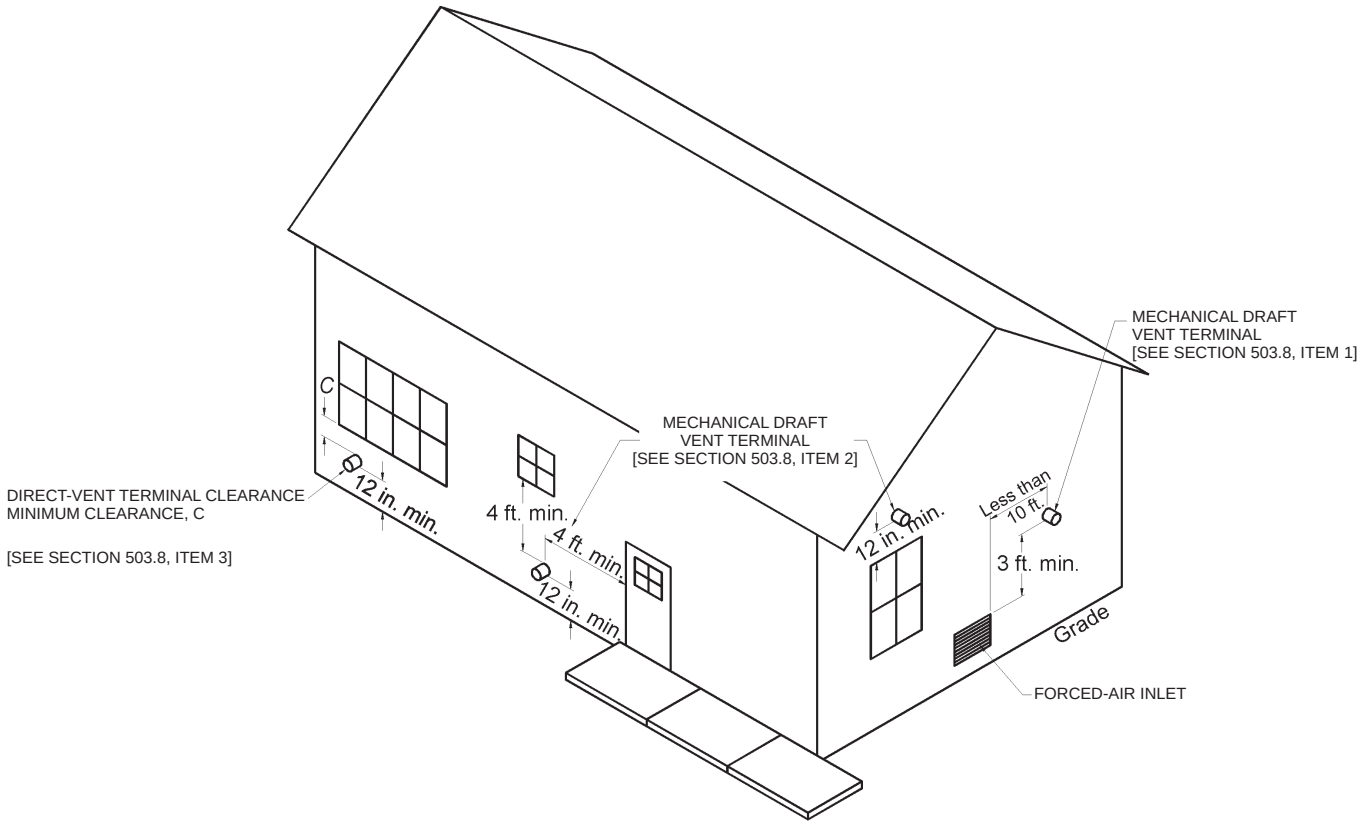

For SI: 1 inch = 25.4 mm, 1 foot = 304.8 mm, 1 British thermal unit per hour = 0.2931 W.

INTERNATIONAL CODE COUNCIL®
Copyright © 2019 ICC & NYSDOS. ALL RIGHTS RESERVED. Accessed by Lauren Gualdino (lgualdino@briarcliffmanor.org), (-) Order Number #100880972 on May 08, 2020 07:05 AM (PDT) pursuant to License Agreement with ICC & NYSDOS. No further reproduction, no

100880972

INTERNATIONAL CODE COUNCIL®
Copyright © 2019 ICC & NYSDOS. ALL RIGHTS RESERVED. Accessed by Lauren Gualdino (lgualdino@briarcliffmanor.org), (-) Order Number #100880972 on May 08, 2020 07:05 AM (PDT) pursuant to License Agreement with ICC & NYSDOS. No further reproduction, no

100880972

APPENDIX D

RECOMMENDED PROCEDURE FOR SAFETY INSPECTION OF AN EXISTING APPLIANCE INSTALLATION

This appendix is informative and is not part of this code.

D.1 General. The following procedure is intended as a guide to aid in determining that an appliance is properly installed and is in a safe condition for continued use. Where a gas supplier performs an inspection, their written procedures should be followed.

D.1.1 Application. This procedure is intended for existing residential installations of a furnace, boiler, room heater, water heater, cooking appliance, fireplace appliance and clothes dryer. This procedure should be performed prior to any attempt to modify the appliance installation or building envelope.

D.1.2 Weatherization programs. Before a building envelope is to be modified as part of a weatherization program, the existing appliance installation should be inspected in accordance with these procedures. After all unsafe conditions are repaired, and immediately after the weatherization is complete, the appliance inspections in D.5.2 are to be repeated.

D.1.3 Inspection procedure. The safety of the building occupant and inspector are to be determined as the first step as described in D.2. Only after the ambient environment is found to be safe should inspections of gas piping and appliances be undertaken. It is recommended that all inspections described in D.3, D.4, and D.6, where the appliance is in the off mode, be completed and any unsafe conditions repaired or corrected before continuing with inspections of an operating appliance described in D.5 and D.6.

D.1.4 Manufacturer instructions. Where available, the manufacturer's installation and operating instructions for the installed appliances should be used as part of these inspection procedures to determine if it is installed correctly and is operating properly.

D.1.5 Instruments. The inspection procedures include measuring for fuel gas and carbon monoxide (CO) and will require the use of a combustible gas detector (CGD) and a CO detector. It is recommended that both types of detectors be listed. Prior to any inspection, the detectors should be calibrated or tested in accordance with the manufacturer's instructions. In addition, it is recommended that the detectors have the following minimum specifications.

(1) *Gas Detector.* The CGD should be capable of indicating the presence of the type of fuel gas for which it is to be used (e.g. natural gas or propane). The combustible gas detector should be capable of the following:

a. *PPM:* Numeric display with a parts per million (ppm) scale from 1 ppm to 900 ppm in 1 ppm increments.

b. *LEL:* Numeric display with a percent lower explosive limit (% LEL) scale from 0 percent to 100 percent in 1 percent increments.

c. *Audio:* An audio sound feature to locate leaks.

(2) *CO Detector.* The CO detector should be capable of the following functions and have a numeric display scale as follows:

a. *PPM:* For measuring ambient room and appliance emissions a display scale in parts per million (ppm) from 0 to 1,000 ppm in 1 ppm increments.

b. *Alarm:* A sound alarm function where hazardous levels of ambient CO is found (see D.2 for alarm levels)

c. *Air Free:* Capable of converting CO measurements to an air free level in ppm. Where a CO detector is used without an air free conversion function, the CO air free can be calculated in accordance with footnote 3 in Table D.6.

D.2 Occupant and inspector safety. Prior to entering a building, the inspector should have both a combustible gas detector (CGD) and CO detector turned on, calibrated, and operating. Immediately upon entering the building, a sample of the ambient atmosphere should be taken. Based on CGD and CO detector readings, the inspector should take the following actions:

(1) The CO detector indicates a carbon monoxide level of 70 ppm or greater [1]. The inspector should immediately notify the occupant of the need for themselves and any building occupant to evacuate; the inspector shall immediately evacuate and call 911.

(2) Where the CO detector indicates a reading between 30 ppm and 70 ppm[1]. The inspector should advise the occupant that high CO levels have been found and recommend that all possible sources of CO should be turned off immediately and windows and doors opened. Where it appears that the source of CO is a permanently installed appliance, advise the occupant to keep the appliance off and have the appliance serviced by a qualified servicing agent.

(3) Where CO detector indicates CO below 30 ppm[1] the inspection can continue.

(4) The CGD indicates a combustible gas level of 20% LEL or greater. The inspector should immediately notify the occupant of the need for themselves and any building occupant to evacuate; the inspector shall immediately evacuate and call 911.

(5) The CGD indicates a combustible gas level below 20% LEL, the inspection can continue.

If during the inspection process it is determined a condition exists that could result in unsafe appliance operation, shut off

[1] U.S. Consumer Product Safety Commission, *Responding to Residential Carbon Monoxide Incidents, Guidelines for Fire and Other Emergency Response Personnel*, Approved 7/23/02

INTERNATIONAL CODE COUNCIL®
Copyright © 2019 ICC & NYSDOS. ALL RIGHTS RESERVED. Accessed by Lauren Gualdino (lgualdino@briarcliffmanor.org), (-) Order Number #100880972 on May 08, 2020 07:05 AM (PDT) pursuant to License Agreement with ICC & NYSDOS. No further reproduction, no

100880972

the appliance and advise the owner of the unsafe condition. Where a gas leak is found that could result in an unsafe condition, advise the owner of the unsafe condition and call the gas supplier to turn off the gas supply. The inspector should not continue a safety inspection on an operating appliance, venting system, and piping system until repairs have been made.

D.3 Gas piping and connection inspections.

(1) *Leak Checks.* Conduct a test for gas leakage using either a non-corrosive leak detection solution or a CGD confirmed with a leak detection solution.

The preferred method for leak checking is by use of gas leak detection solution applied to all joints. This method provides a reliable visual indication of significant leaks.

The use of a CGD in its audio sensing mode can quickly locate suspect leaks but can be overly sensitive indicating insignificant and false leaks. All suspect leaks found through the use of a CGD should be confirmed using a leak detection solution.

Where gas leakage is confirmed, the owner should be notified that repairs must be made. The inspection should include the following components:

a. All gas piping fittings located within the appliance space.

b. Appliance connector fittings.

c. Appliance gas valve/regulator housing and connections.

(2) *Appliance Connector*. Verify that the appliance connection type is compliant with Section 411 of the *International Fuel Gas Code*. Inspect flexible appliance connections to determine if they are free of cracks, corrosion and signs of damage. Verify that there are no uncoated brass connectors. Where connectors are determined to be unsafe or where an uncoated brass connector is found, the appliance shutoff valve should be placed in the off position and the owner notified that the connector must be replaced.

(3) *Piping Support*. Inspect piping to determine that it is adequately supported, that there is no undue stress on the piping, and if there are any improperly capped pipe openings.

(4) *Bonding*. Verify that the electrical bonding of gas piping is compliant with Section 310 of the *International Fuel Gas Code*.

D.4 Inspections to be performed with the appliance not operating. The following safety inspection procedures are performed on appliances that are not operating. These inspections are applicable to all appliance installations.

(1) *Preparing for Inspection.* Shut off all gas and electrical power to the appliances located in the same room being inspected. For gas supply, use the shutoff valve in the supply line or at the manifold serving each appliance. For electrical power, place the circuit breaker in the off position or remove the fuse that serves each appliance. A lock type device or tag should be installed on each gas shutoff valve and at the electrical panel to indicate that the service has been shut off for inspection purposes.

(2) *Vent System Size and Installation.* Verify that the existing venting system size and installation are compliant with Chapter 5 of the *International Fuel Gas Code*. The size and installation of venting systems for other than natural draft and Category I appliances should be in compliance with the manufacturer's installation instructions. Inspect the venting system to determine that it is free of blockage, restriction, leakage, corrosion, and other deficiencies that could cause an unsafe condition. Inspect masonry chimneys to determine if they are lined. Inspect plastic venting system to determine that it is free of sagging and it is sloped in an upward direction to the outdoor vent termination.

(3) *Combustion Air Supply*. Inspect provisions for combustion air as follows:

a. *No Direct-vent Appliances*. Determine that non-direct vent appliance installations are compliant with the combustion air requirements in Section 304 of the *International Fuel Gas Code*. Inspect any interior and exterior combustion air openings and any connected combustion air ducts to determine that there is no blockage, restriction, corrosion or damage. Inspect to determine that the upper horizontal combustion air duct is not sloped in a downward direction toward the air supply source.

b. *Direct Vent Appliances.* Verify that the combustion air supply ducts and pipes are securely fastened to direct vent appliance and determine that there are no separations, blockage, restriction, corrosion or other damage. Determine that the combustion air source is located in the outdoors or to areas that freely communicate to the outdoors.

c. *Unvented Appliances.* Verify that the total input of all unvented room heaters and gas-fired refrigerators installed in the same room or rooms that freely communicate with each other does not exceed 20 Btu/hr/ft^3.

(4) *Flooded Appliances*. Inspect the appliance for signs that the appliance may have been damaged by flooding. Signs of flooding include a visible water submerge line on the appliance housing, excessive surface or component rust, deposited debris on internal components, and mildew-like odor. Inform the owner that any part of the appliance control

[1] U.S. Consumer Product Safety Commission, *Responding to Residential Carbon Monoxide Incidents, Guidelines For Fire and Other Emergency Response Personnel,* Approved 7/23/02

INTERNATIONAL CODE COUNCIL®
Copyright © 2019 ICC & NYSDOS. ALL RIGHTS RESERVED. Accessed by Lauren Gualdino (lgualdino@briarcliffmanor.org), (-) Order Number #100880972 on May 08, 2020 07:05 AM (PDT) pursuant to License Agreement with ICC & NYSDOS. No further reproduction, no

100880972

system and any appliance gas control that has been under water must be replaced. All flood-damaged plumbing, heating, cooling and electrical appliances should be replaced.

(5) *Flammable Vapors.* Inspect the room/space where the appliance is installed to determine if the area is free of the storage of gasoline or any flammable products such as oil-based solvents, varnishes or adhesives. Where the appliance is installed where flammable products will be stored or used, such as a garage, verify that the appliance burner(s) is a minimum of 18" above the floor unless the appliance is listed as flammable vapor ignition resistant.

(6) *Clearances to Combustibles.* Inspect the immediate location where the appliance is installed to determine if the area is free of rags, paper or other combustibles. Verify that the appliance and venting system are compliant with clearances to combustible building components in accordance with Sections 305.8, 501.15.4, 502.5, 503.6.2, 503.10.5 and other applicable sections of Section 503.

(7) *Appliance Components.* Inspect internal components by removing access panels or other components for the following:

a. Inspect burners and crossovers for blockage and corrosion. The presence of soot, debris, and signs of excessive heating are potential indicators of incomplete combustion caused by blockage or improper burner adjustments.

b. Metallic and non-metallic hoses for signs of cracks, splitting, corrosion, and lose connections.

c. Signs of improper or incomplete repairs

d. Modifications that override controls and safety systems

e. Electrical wiring for loose connections; cracks, missing or worn electrical insulation; and indications of excessive heat or electrical shorting. Appliances requiring an external electrical supply should be inspected for proper electrical connection in accordance with the National Electric Code.

(8) *Placing Appliances Back in Operation.* Return all inspected appliances and systems to their preexisting state by reinstalling any removed access panels and components. Turn on the gas supply and electricity to each appliance found in safe condition. Proceed to the operating inspections in D.5 through D.6.

D.5 Inspections to be performed with the Appliance Operating. The following safety inspection procedures are to be performed on appliances that are operating where there are no unsafe conditions or where corrective repairs have been completed.

D.5.1 General Appliance Operation.

(1) *Initial Startup.* Adjust the thermostat or other control device to start the appliance. Verify that the appliance starts up normally and is operating properly.

Determine that the pilot(s), where provided, is burning properly and that the main burner ignition is satisfactory, by interrupting and re-establishing the electrical supply to the appliance in any convenient manner. If the appliance is equipped with a continuous pilot(s), test all pilot safety devices to determine whether they are operating properly by extinguishing the pilot(s) when the main burner(s) is off and determining, after 3 minutes, that the main burner gas does not flow upon a call for heat. If the appliance is not provided with a pilot(s), test for proper operation of the ignition system in accordance with the appliance manufacturer's lighting and operating instructions.

(2) *Flame Appearance*. Visually inspect the flame appearance for proper color and appearance. Visually determine that the main burner gas is burning properly (i.e., without floating, lifting, or flashback). Adjust the primary air shutter as required. If the appliance is equipped with high and low flame controlling or flame modulation, check for proper main burner operation at low flame.

(3) *Appliance Shutdown*. Adjust the thermostat or other control device to shut down the appliance. Verify that the appliance shuts off properly.

D.5.2 Test for Combustion Air and Vent Drafting for Natural Draft and Category I Appliances. Combustion air and vent draft procedures are for natural draft and category I appliances equipped with a draft hood and connected to a natural draft venting system.

(1) *Preparing for Inspection*. Close all exterior building doors and windows and all interior doors between the space in which the appliance is located and other spaces of the building that can be closed. Turn on any clothes dryer. Turn on any exhaust fans, such as range hoods and bathroom exhausts, so they will operate at maximum speed. Do not operate a summer exhaust fan. Close fireplace dampers and any fireplace doors.

(2) *Placing the Appliance in Operation*. Place the appliance being inspected in operation. Adjust the thermostat or control so the appliance will operate continuously.

(3) *Spillage Test*. Verify that all appliances located within the same room are in their standby mode and ready for operation. Follow lighting instructions for each appliance as necessary. Test for spillage at the draft hood relief opening as follows:

a. After 5 minutes of main burner operation, check for spillage using smoke.

b. Immediately after the first check, turn on all other fuel gas burning appliances within the same room so they will operate at their full inputs and repeat the spillage test.

c. Shut down all appliances to their standby mode and wait for 15 minutes.

d. Repeat the spillage test steps a through c on each appliance being inspected.

INTERNATIONAL CODE COUNCIL®
Copyright © 2019 ICC & NYSDOS. ALL RIGHTS RESERVED. Accessed by Lauren Gualdino (lgualdino@briarcliffmanor.org), (-) Order Number #100880972 on May 08, 2020 07:05 AM (PDT) pursuant to License Agreement with ICC & NYSDOS. No further reproduction, no

100880972

(4) *Additional Spillage Tests.* Determine if the appliance venting is impacted by other door and air handler settings by performing the following tests.

a. Set initial test condition in accordance with D.5.2 (1).

b. Place the appliance(s) being inspected in operation. Adjust the thermostat or control so the appliance(s) will operate continuously.

c. Open the door between the space in which the appliance(s) is located and the rest of the building. After 5 minutes of main burner operation, check for spillage at each appliance using smoke.

d. Turn on any other central heating or cooling air handler fan that is located outside of the area where the appliances are being inspected. After 5 minutes of main burner operation, check for spillage at each appliance using smoke. The test should be conducted with the door between the space in which the appliance(s) is located and the rest of the building in the open and in the closed position.

(5) Return doors, windows, exhaust fans, fireplace dampers, and any other fuel gas burning appliance to their previous conditions of use.

(6) If, after completing the spillage test it is believed sufficient combustion air is not available, the owner should be notified that an alternative combustion air source is needed in accordance with Section 304 of the *International Fuel Gas Code*. Where it is believed that the venting system does not provide adequate natural draft, the owner should be notified that alternative vent sizing, design or configuration is needed in accordance with Chapter 5 of the *International Fuel Gas Code*. If spillage occurs, the owner should be notified as to its cause, be instructed as to which position of the door (open or closed) would lessen its impact, and that corrective action by a HVAC professional should be taken.

D.6 Appliance-Specific Inspections. The following appliance-specific inspections are to be performed as part of a complete inspection. These inspections are performed either with the appliance in the off or standby mode (indicated by "*OFF*") or on an appliance that is operating (indicated by "*ON*"). The CO measurements are to be undertaken only after the appliance is determined to be properly venting. The CO detector should be capable of calculating CO emissions in ppm air free.

(1) Forced Air Furnaces:

a. OFF. Verify that an air filter is installed and that it is not excessively blocked with dust.

b. OFF. Inspect visible portions of the furnace combustion chamber for cracks, ruptures, holes, and corrosion. A heat exchanger leakage test should be conducted.

c. ON. Verify both the limit control and the fan control are operating properly. Limit control operation can be checked by blocking the circulating air inlet or temporarily disconnecting the electrical supply to the blower motor and determining that the limit control acts to shut off the main burner gas.

d. ON. Verify that the blower compartment door is properly installed and can be properly re-secured if opened. Verify that the blower compartment door safety switch operates properly.

e. ON. Check for flame disturbance before and after blower comes on which can indicate heat exchanger leaks.

f. ON. Measure the CO in the vent after 5 minutes of main burner operation. The CO should not exceed threshold in Table D.6.

(2) Boilers:

a. OFF and ON. Inspect for evidence of water leaks around boiler and connected piping.

b. ON. Verify that the water pumps are in operating condition. Test low water cutoffs, automatic feed controls, pressure and temperature limit controls, and relief valves in accordance with the manufacturer's recommendations to determine that they are in operating condition.

c. ON. Measure the CO in the vent after 5 minutes of main burner operation. The CO should not exceed threshold in Table D.6.

(3) Water Heaters:

a. OFF. Verify that the pressure-temperature relief valve is in operating condition. Water in the heater should be at operating temperature.

b. OFF. Verify that inspection covers, glass, and gaskets are intact and in place on a flammable vapor ignition resistant (FVIR) type water heater.

c. ON. Verify that the thermostat is set in accordance with the manufacturer's operating instructions and measure the water temperature at the closest tub or sink to verify that it is no greater than 120ºF.

d. OFF. Where required by the local building code in earthquake prone locations, inspect that the water heater is secured to the wall studs in two locations (high and low) using appropriate metal strapping and bolts.

e. ON. Measure the CO in the vent after 5 minutes of main burner operation. The CO should not exceed threshold in Table D.6.

(4) Cooking Appliances:

a. OFF. Inspect oven cavity and range-top exhaust vent for blockage with aluminum foil or other materials.

INTERNATIONAL CODE COUNCIL®
Copyright © 2019 ICC & NYSDOS. ALL RIGHTS RESERVED. Accessed by Lauren Gualdino (lgualdino@briarcliffmanor.org), (-) Order Number #100880972 on May 08, 2020 07:05 AM (PDT) pursuant to License Agreement with ICC & NYSDOS. No further reproduction, no

100880972

b. OFF. Inspect cook top to verify that it is free from a build-up of grease.

c. ON. Measure the CO above each burner and at the oven exhaust vents after 5 minutes of burner operation. The CO should not exceed threshold in Table D.6.

(5) Vented Room Heaters:

a. OFF. For built-in room heaters and wall furnaces, inspect that the burner compartment is free of lint and debris.

b. OFF. Inspect that furnishings and combustible building components are not blocking the heater.

c. ON. Measure the CO in the vent after 5 minutes of main burner operation. The CO should not exceed threshold in Table D.6.

(6) Vent-free (Unvented) Heaters:

a. OFF. Verify that the heater input is not more than 40,000 Btu input, but not more than 10,000 Btu where installed in a bedroom, and 6,000 Btu where installed in a bathroom.

b. OFF. Inspect the ceramic logs provided with gas log type vent free heaters that they are properly located and aligned.

c. OFF. Inspect the heater that it is free of excess lint build-up and debris.

d. OFF. Verify that the oxygen depletion safety shutoff system has not been altered or bypassed.

e. ON. Verify that the main burner shuts down within 3 minutes by extinguishing the pilot light. The test is meant to simulate the operation of the oxygen depletion system (ODS).

f. ON. Measure the CO after 5 minutes of main burner operation. The CO should not exceed threshold in Table D.6.

(7) Gas Log Sets and Gas Fireplaces:

a. OFF. For gas logs installed in wood burning fireplaces equipped with a damper, verify that the fireplace damper is in a fixed open position.

b. ON. Measure the CO in the firebox (log sets installed in wood burning fireplaces or in the vent (gas fireplace) after 5 minutes of main burner operation. The CO should not exceed threshold in Table D.6.

(8) Gas Clothes Dryer:

a. OFF. Where installed in a closet, verify that a source of make-up air is provided and inspect that any make-up air openings, louvers, and ducts are free of blockage.

b. OFF. Inspect for excess amounts of lint around the dryer and on dryer components. Inspect that there is a lint trap properly installed and it does not have holes or tears. Verify that it is in a clean condition.

c. OFF. Inspect visible portions of the exhaust duct and connections for loose fittings and connections, blockage, and signs of corrosion. Verify that the duct termination is not blocked and that it terminates in an outdoor location. Verify that only approved metal vent ducting material is installed (plastic and vinyl materials are not approved for gas dryers).

d. ON. Verify mechanical components including drum and blower are operating properly.

e. ON. Operate the clothes dryer and verify that exhaust system is intact and exhaust is exiting the termination.

f. ON. Measure the CO at the exhaust duct or termination after 5 minutes of main burner operation. The CO should not exceed threshold in Table D.6.

TABLE D.6
CO THRESHOLDS

Boilers (all categories)	400 ppm air free
Central Furnace (all categories)	400 ppm[1] air free[2, 3]
Floor Furnace	400 ppm air free
Gravity Furnace	400 ppm air free
Wall Furnace	200 ppm air free
Wall Furnace (Direct Vent)	400 ppm air free
Vented Room Heater	200 ppm air free
Vent-Free Room Heater	200 ppm air free
Water Heater	200 ppm air free
Oven/Broiler	225 ppm as measured
Top Burner	25 ppm as measured (per burner)
Clothes Dryer	400 ppm air free
Refrigerator	25 ppm as measured
Gas Log (gas fireplace)	25 ppm as measured in vent
Gas Log (installed in wood burning fireplace)	400 ppm air free in firebox

[1] Parts per million

[2] Air free emission levels are based on a mathematical equation (involving carbon monoxide and oxygen or carbon dioxide readings) to convert an actual diluted flue gas carbon monoxide testing sample to an undiluted air free flue gas carbon monoxide level utilized in the appliance certification standards. For natural gas or propane, using as-measured CO ppm and O_2 percentage:

$$CO_{AFppm} = \left(\frac{20.9}{20.9 - O_2}\right) \times CO_{ppm}$$

where:

CO_{AFppm} = Carbon monoxide, air-free ppm.

CO_{ppm} = As-measured combustion gas carbon monoxide ppm.

O_2 = Percentage of oxygen in combustion gas, as a percentage.

(continued)

INTERNATIONAL CODE COUNCIL®
Copyright © 2019 ICC & NYSDOS. ALL RIGHTS RESERVED. Accessed by Lauren Gualdino (lgualdino@briarcliffmanor.org), (-) Order Number #100880972 on May 08, 2020 07:05 AM (PDT) pursuant to License Agreement with ICC & NYSDOS. No further reproduction, no

100880972

TABLE D.6—continued
CO THRESHOLDS

[3] An alternate method of calculating the CO air free when access to an oxygen meter is not available:

$$CO_{AFppm} = \left(\frac{UCO_2}{CO_2}\right) \times CO$$

where:

UCO_2 = Ultimate concentration of carbon dioxide for the fuel being burned in percent for natural gas (12.2 percent) and propane (14.0 percent)

CO_2 = Measured concentration of carbon dioxide in combustion products in percent

CO = Measured concentration of carbon monoxide in combustion products in percent

INTERNATIONAL CODE COUNCIL®
Copyright © 2019 ICC & NYSDOS. ALL RIGHTS RESERVED. Accessed by Lauren Gualdino (lgualdino@briarcliffmanor.org), (-) Order Number #100880972 on May 08, 2020 07:05 AM (PDT) pursuant to License Agreement with ICC & NYSDOS. No further reproduction, no

100880972

INDEX

A

ACCESS, APPLIANCES
- General . . . 306
- Shutoff valves . . . 409.1.3, 409.3.1, 409.5
- Wall furnaces, vented . . . 608.6

AIR HEATERS, DIRECT-FIRED . . . 611, 612
- Industrial . . . 611, 612
- Venting . . . 501.8

AIR, COMBUSTION
- Defined . . . 202
- Requirements . . . 304

AIR-CONDITIONING EQUIPMENT . . . 627
- Clearances . . . 308.3

ALTERNATE MATERIALS AND METHODS . . . 104.3

APPLIANCE
- Broilers for indoor use . . . 623.5
- Connections to building piping . . . 411
- Cooking . . . 623
- Decorative . . . 602
- Decorative vented . . . 202, 303.3, Table 503.4, 604
- Domestic cooking . . . 623.3
- Electrical . . . 309
- General . . . Chapter 6
- Installation . . . Chapter 6
- Listing . . . 301.3
- Prohibited locations . . . 303.3, 623.2
- Protection from vehicle impact . . . 303.4

ARC-RESISTANT CSST . . . 310.3

B

BENDS, PIPE . . . 405

BOILERS
- Existing installations . . . Appendix D
- Listed . . . 631
- Prohibited locations . . . 303.3
- Unlisted . . . 632

BONDING . . . 310

BUILDING OFFICIAL
- Defined . . . 202
- Duties and powers . . . 104

BUSHINGS . . . 403.10.5

C

CENTRAL FURNACE
- Clearances . . . 308.4
- Defined . . . 202
- Drain pans . . . 307.5
- Existing installation . . . Appendix D

CERTIFICATES . . . 105.5

CERTIFICATION . . . 401.10

CHIMNEY . . . Chapter 5
- Alternate methods of sizing . . . 503.5.5
- Clearance reduction . . . 308
- Defined . . . 202
- Existing . . . 501.15, 503.5.6.1
- Masonry . . . 501.3

CLEARANCE REDUCTION . . . 308

CLEARANCES
- Air-conditioning appliances . . . 627.4
- Boilers . . . 308.4
- Chimney . . . 501.15.4
- Clearance reduction . . . 308
- Vent connectors . . . 503.10.5

CLOTHES DRYER
- Defined . . . 202
- Exhaust . . . 614
- General . . . 613

COMBUSTION AIR
- Combination indoor and outdoor . . . 304.7
- Defined . . . 202
- Ducts . . . 304.11
- Free area of openings . . . 304.5.3.1, 304.5.3.2, 304.6.1, 304.6.2, 304.7, 304.10
- Fumes and gases . . . 304.12
- Indoor . . . 304.5
- Makeup air . . . 304.4
- Mechanical supply . . . 304.9
- Openings connecting spaces . . . 304.5.3
- Outdoor . . . 304.6

COMPRESSED NATURAL GAS . . . 413

CONCEALED PIPING . . . 404.5

CONDENSATE DISPOSAL . . . 307

CONTROLS
- Boilers . . . 631.2
- Gas pressure regulators . . . 410, 628.4

CONVERSION BURNERS . . . 619

COOKING APPLIANCES . . . 623

CORROSION PROTECTION . . . 404.11

CREMATORIES . . . 606

CUTTING, NOTCHING AND BORED HOLES . . . 302.3

INTERNATIONAL CODE COUNCIL®
Copyright © 2019 ICC & NYSDOS. ALL RIGHTS RESERVED. Accessed by Lauren Gualdino (lgualdino@briarcliffmanor.org), (-) Order Number #100880972 on May 08, 2020 07:05 AM (PDT) pursuant to License Agreement with ICC & NYSDOS. No further reproduction, no

100880972

D

DAMPERS, VENT 503.14, 503.15, 504.2.1, 504.3.1
DECORATIVE APPLIANCES 303.3.1, 602, 604
DECORATIVE SHROUDS 503.5.4, 503.6.5.1
DEFINITIONS . . . . . Chapter 2
DIRECT-VENT APPLIANCES
Defined 202
Installation 304.1, 503.2.3
DIVERSITY FACTOR . . . . . 402.2, Appendix A
DRAFT HOOD 202, 503.12
DUCT FURNACE 202, 610

E

ELECTRICAL BONDING 310
ELECTRICAL CONNECTIONS 309.2
EXCESS FLOW VALVES 410.4
EXHAUST INTERLOCK 505.1.1
EXHAUST SYSTEMS 503.2.1, 503.3.4, 505.1.1

F

FLASHBACK ARRESTOR 410.5
FLOOD HAZARD 301.11
FLOOR FURNACES 609
FURNACES
Central heating, clearance 308.3, 308.4
Duct 610
Floor 609
Prohibited location 303.3
Vented wall 608
Warm-air 618

G

GARAGE, INSTALLATION 305.3, 305.4, 305.5, 305.9, 305.10
GASEOUS HYDROGEN SYSTEMS . . 635, Chapter 7
General requirements 703
Piping, use and handling 704
Testing 705
GROUNDING, ELECTRODE 309.1

H

HISTORIC BUILDINGS 102.7
HOT PLATES AND LAUNDRY STOVES 501.8, 623.1

I

ILLUMINATING APPLIANCES 628
INCINERATORS 503.2.5, 606, 607
INFRARED RADIANT HEATERS 411.3, 630
INSPECTIONS 105.3
INSTALLATION, APPLIANCES
Garage 305.3, 305.3.1, 305.3.2, 305.4, 305.5, 305.9, 305.10
General 305
Listed and unlisted appliances 301.3, 305.1
Specific appliances . . . . . Chapter 6

K

KILNS 629

L

LIQUEFIED PETROLEUM GAS
Defined 202
Motor vehicle fuel-dispensing stations 412
Piping material 403.6.2, 403.11
Size of pipe or tubing . . . . . Appendix A
Storage 401.2
Systems 402.7.1
Thread compounds 403.9.3
LISTED AND LABELED APPLIANCES 301.3
LOG LIGHTERS 603

M

MANUFACTURED HOME CONNECTIONS 411
MATERIALS, DEFECTIVE
Repair 301.9
Workmanship and defects 403.7
METERS
Identification 401.7
Interconnections 401.6
Multiple installations 401.7
MINIMUM SAFE PERFORMANCE, VENT SYSTEMS 503.3, 503.3.1, 503.3.2

N

NONCORRUGATED STAINLESS STEEL TUBING 402.5

O

OUTLET CLOSURES 404.15
Outlet location 404.16
OVERPRESSURE PROTECTION DEVICES 416

INTERNATIONAL CODE COUNCIL®
Copyright © 2019 ICC & NYSDOS. ALL RIGHTS RESERVED. Accessed by Lauren Gualdino (lgualdino@briarcliffmanor.org), (-) Order Number #100880972 on May 08, 2020 07:05 AM (PDT) pursuant to License Agreement with ICC & NYSDOS. No further reproduction, no

100880972

OXYGEN DEPLETION SAFETY SYSTEM
Defined 202
Unvented room heaters . . . . . 303.3(3), 303.3(4), 621.6

P

PIPE SIZING 402
PIPING
Bends 405
Bonding 310
Changes in direction 405
Concealed locations 404.5
Identification 401.5
Inspection 406
Installation 404
Materials 403
Maximum pressure 402.7
Plastic 403.6, 403.6.3, 403.11, 404.17
Prohibited penetrations and locations 404.3, 404.6
Purging 406.7
Sediment traps 408.4
Sizing 402
Support 407, 415
Testing 406
Tracer wire 404.17.3
POLYAMIDE PIPE, TUBE AND FITTINGS 403.6
POOL HEATERS 617
PRESSURE DROP 402.6
PROHIBITED INSTALLATIONS
Elevator shafts 301.15
Floor furnaces 609.2
Fuel-burning appliances 303.3
Piping in partitions 404.4
Plastic piping 404.17
Unvented room heater 621.2, 621.4
PURGING 406.7

R

RADIANT HEATERS 630
RANGES, DOMESTIC 623.3
REFRIGERATORS 501.8, 625
REGULATORS, PRESSURE 410, 628.4
RISERS, ANODELESS 403.6.1
ROOFTOP INSTALLATIONS 306.5
ROOM HEATER
Defined 202
Location 303.3
Unvented 621
Vented 622

S

SAFETY SHUTOFF DEVICES
Flame safeguard device 602.2
Unvented room heaters 621.6
SAUNA HEATERS 615
SCOPE 101.2
SCOPE AND ADMINISTRATION . . . . . Chapter 1
Alternate materials and methods 104.3
Certificates 105.5
Conflicts 102.9.1
Connection of utilities 107.1
Construction documents 106.2
Inspections 105.3
Modifications 104.2
Permits 105.2
Referenced codes and standards 102.9
Requirements not covered by code 102.10
Scope 101.2
Temporary connection 107.1.1
Title 101.1
Violations 105.7
SEDIMENT TRAP 408.4
SEISMIC RESISTANCE 301.12
SERVICE SPACE 306
SHUTOFF VALVES 409
SPA HEATERS 617
STAINLESS STEEL TUBING 403.5.2, 403.10.3
STANDARDS . . . . . Chapter 8
STRUCTURAL SAFETY 302
SUPPORTS, PIPING 407, 415

T

TEMPORARY 107.1.1
THIMBLE, VENT 503.7.7, 503.10.10
THREADS
Damaged 403.9.1
Specifications 403.9
TOILETS, GAS-FIRED 626
TUBING JOINTS 403.10.2

INTERNATIONAL CODE COUNCIL®
Copyright © 2019 ICC & NYSDOS. ALL RIGHTS RESERVED. Accessed by Lauren Gualdino (lgualdino@briarcliffmanor.org), (-) Order Number #100880972 on May 08, 2020 07:05 AM (PDT) pursuant to License Agreement with ICC & NYSDOS. No further reproduction, no

100880972

U

UNDERGROUND PENETRATIONS 404.6
UNIT HEATERS 620
UNLISTED BOILERS 632
UNSAFE CHIMNEYS 503.5.6.3
UNVENTED ROOM HEATERS 621

V

VALIDITY 105.2.4
VALVES, MULTIPLE-HOUSE LINES 409.3
VALVES, SHUTOFF
Appliances 409.5
VENTED DECORATIVE APPLIANCES 604
VENTED ROOM HEATERS 622
VENTED WALL FURNACES 608
VENTILATING HOODS 503.2.1, 503.3.4, 505.1.1
VENTS
Appliances not requiring vents 501.8
Caps 503.6.7
Direct vent 503.2.3
Exhaust hoods 505.1.1, 503.3.4
Gas vent termination 503.6.5
General . . . . . Chapter 5
Integral 505
Listed and labeled 502.1
Mechanical vent 505
Plastic pipe 503.4.1
Wall penetrations 503.16
VENT, SIZING
Category I appliances 502, 503, 504
Multiple appliance 504.3
Multistory 504.3.13, 504.3.14, 504.3.15, 504.3.16
Single appliance 504.2
VIOLATIONS 105.7

W

WALL FURNACES, VENTED 608
WARM AIR FURNACES 618
WATER HEATERS 624
WIND RESISTANCE 301.10

INTERNATIONAL CODE COUNCIL®
Copyright © 2019 ICC & NYSDOS. ALL RIGHTS RESERVED. Accessed by Lauren Gualdino (lgualdino@briarcliffmanor.org), (-) Order Number #100880972 on May 08, 2020 07:05 AM (PDT) pursuant to License Agreement with ICC & NYSDOS. No further reproduction, no

100880972

ICC INTERNATIONAL CODE COUNCIL®

People Helping People Build a Safer World®

Valuable Guides to Changes in the 2018 I-Codes®

NEW!

FULL COLOR! HUNDREDS OF PHOTOS AND ILLUSTRATIONS!

SIGNIFICANT CHANGES TO THE 2018 INTERNATIONAL CODES®

Practical resources that offer a comprehensive analysis of the critical changes made between the 2015 and 2018 editions of the codes. Authored by ICC code experts, these useful tools are "must-have" guides to the many important changes in the 2018 International Codes.

Key changes are identified then followed by in-depth, expert discussion of how the change affects real world application. A full-color photo, table or illustration is included for each change to further clarify application.

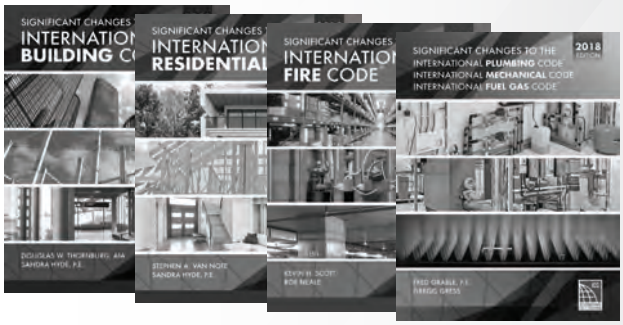

SIGNIFICANT CHANGES TO THE IBC, 2018 EDITION
#7024S18

SIGNIFICANT CHANGES TO THE IRC, 2018 EDITION
#7101S18

SIGNIFICANT CHANGES TO THE IFC, 2018 EDITION
#7404S18

SIGNIFICANT CHANGES TO THE IPC/IMC/IFGC, 2018 EDITION
#7202S18

ORDER YOUR HELPFUL GUIDES TODAY!
1-800-786-4452 | www.iccsafe.org/books

HIRE ICC TO TEACH

Want your group to learn the Significant Changes to the I-Codes from an ICC expert instructor? Schedule a seminar today!

email: **ICCTraining@iccsafe.org** | phone: **1-888-422-7233 ext. 33818**

17-14098

This insert is not part of the official text of the New York State Uniform Fire Prevention and Building Code or New York State Energy Conservation Construction Code.

INTERNATIONAL CODE COUNCIL®

Copyright © 2019 ICC & NYSDOS. ALL RIGHTS RESERVED. Accessed by Lauren Gualdino (lgualdino@briarcliffmanor.org), (-) Order Number #100880972 on May 08, 2020 07:05 AM (PDT) pursuant to License Agreement with ICC & NYSDOS. No further reproduction, no

ICC Membership

An Essential Tool to advance your Building Safety Career!

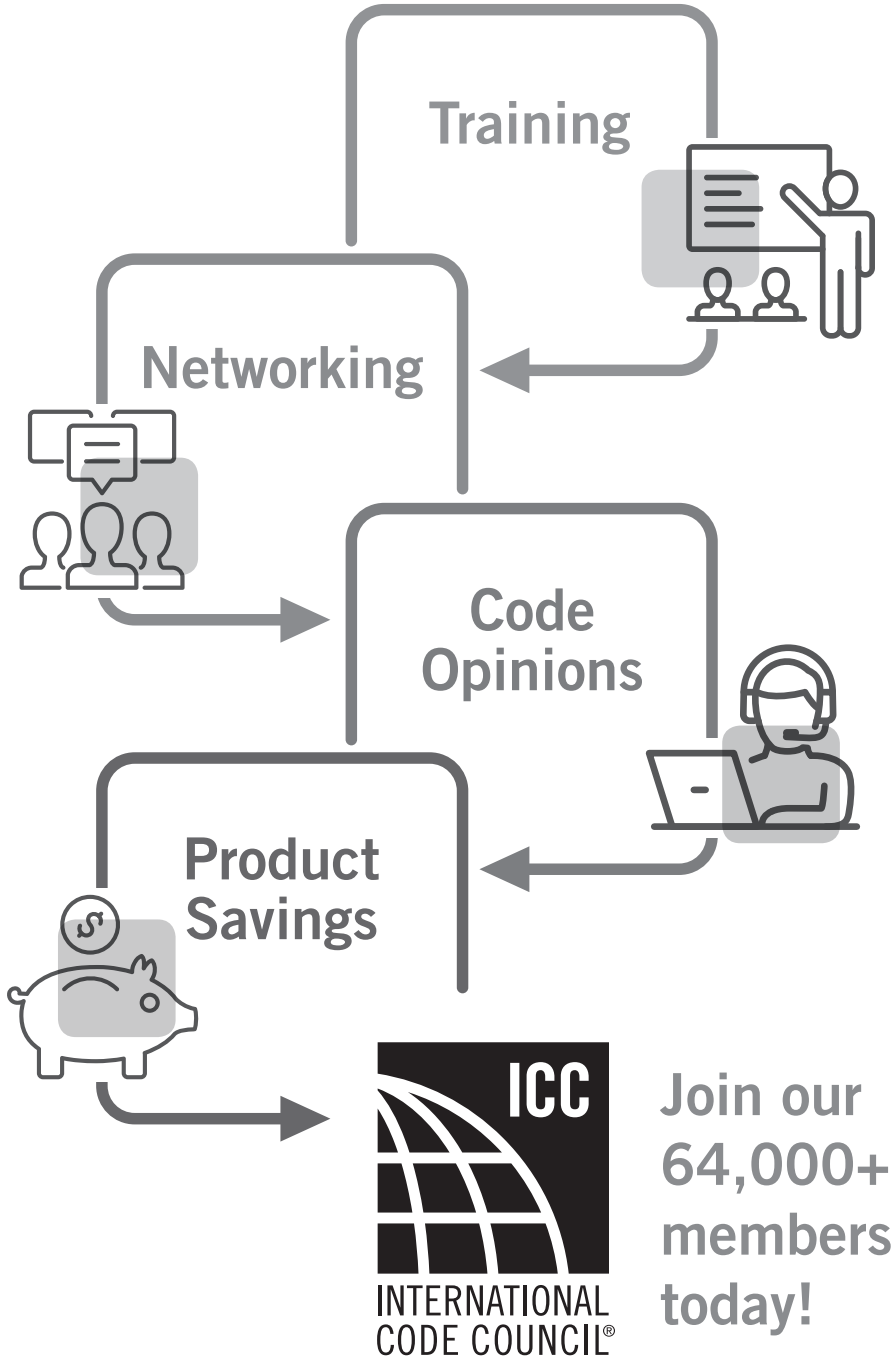

Put the benefits of ICC Membership to work for you and your career!

Visit **www.iccsafe.org/memnow** or
call **1-888-ICC-SAFE (422-7233), ext. 33804** to learn more.

19-17662

INTERNATIONAL CODE COUNCIL®

Copyright © 2016 ICC & NYSDOS. ALL RIGHTS RESERVED. Accessed by Lauren Gualdino (gualdino@brianchimanor.org), ( ) Order Number 41008 9/2/2016 May 08, 2020 06:05 AM (PDT) pursuant to License Agreement with ICC & NYSDOS. No further reproduction, no



The ICC Assessment Center (formerly known as ICC Certification & Testing) provides nationally recognized credentials that demonstrate a confirmed commitment to protect public health, safety, and welfare. Raise the professionalism of your department and further your career by pursuing an ICC Certification.

ICC Certifications offer:

- Nationwide recognition
- Increased earning potential
- Career advancement
- Superior knowledge
- Validation of your expertise
- Personal and professional satisfaction

Exams are developed and maintained to the highest standards, which includes continuous peer review by national committees of experienced, practicing professionals. ICC is continually evolving exam offerings, testing options, and technology to ensure that all building and fire safety officials have access to the tools and resources needed to advance in today's fast-paced and rapidly-changing world.

Enhancing Exam Options

Effective July 2018, the Assessment Center enhanced and streamlined exam options and now offers only computer based testing (CBT) at a test site and PRONTO. We no longer offer paper/pencil exams.

Proctored Remote Online Testing Option (PRONTO)

Taking your next ICC certification exam is more convenient, more comfortable and more efficient than ever before with PRONTO.

PRONTO provides a convenient testing experience that is accessible 24 hours a day, 7 days a week, 365 days a year. Required hardware/software is minimal – you will need a webcam and microphone, as well as a reasonably recent operating system.

pronto
ICC ONLINE EXAMS

Whether testing in your office or in the comfort of your home, your ICC exam will continue to maintain its credibility while offering more convenience, allowing you to focus on achieving your professional goals. The Assessment Center continues to add exams to the PRONTO exam catalog regularly.

18-15617

Checkout all the ICC Assessment Center has to offer at iccsafe.org/certification

This insert is not part of the official text of the New York State Uniform Fire Prevention and Building Code or New York State Energy Conservation Construction Code.

INTERNATIONAL CODE COUNCIL®

Copyright © 2019 ICC & NYSDOS. ALL RIGHTS RESERVED. Accessed by Lauren Gualdino (lgualdino@briarcliffmanor.org), (-) Order Number #100880972 on May 08, 2020 07:05 AM (PDT) pursuant to License Agreement with ICC & NYSDOS. No further reproduction, no

100880972

ICC EVALUATION SERVICE

In Cooperation with Innovation RESEARCH LABS

Look no further than ICC-ES PMG® The Leading provider of product evaluations in plumbing, mechanical and fuel gas, with excellent customer service and the highest acceptability by code officials at the price you're looking for.



We certify:

- Faucets
- Showerheads
- Bathtubs
- Sink products
- Toilets & Urinals
- Ceramic Fixtures
- Resins and Linear Drain products

and many more!

Benefits of having an ICC-ES PMG Listing

- ICC-ES PMG offers a lower cost for certification than competitors
- Expedited certification for all client listings
- ICC-ES PMG does not conduct warehouse inspections
- ICC-ES PMG does not charge for additional company listings
- ICC-ES will accept test reports from other entities
- No fee for EPA WaterSense listings and lead law listings
- No separate file for NSF 61 listings
- A2LA, ANSI, SCC and EMA

ICC INTERNATIONAL CODE COUNCIL®

www.icc-es-pmg.org
800-423-6587 x7643

ICC ES PMG Complies to UPC

EPA WaterSense LICENSED CERTIFYING BODY

19-17625

This insert is not part of the official text of the New York State Uniform Fire Prevention and Building Code or New York State Energy Conservation Construction Code.

INTERNATIONAL CODE COUNCIL®

Copyright © 2019 ICC & NYSDOS. ALL RIGHTS RESERVED. Accessed by Lauren Gualdino (lgualdino@briarcliffmanor.org), (-) Order Number #100880972 on May 08, 2020 07:05 AM (PDT) pursuant to License Agreement with ICC & NYSDOS. No further reproduction, no

100880972

ANDREW M. CUOMO GOVERNOR
ROSSANA ROSADO SECRETARY OF STATE



2020 PROPERTY MAINTENANCE CODE of NEW YORK STATE

NEW YORK STATE OF OPPORTUNITY.

Building Standards and Codes

ICC INTERNATIONAL CODE COUNCIL®

INTERNATIONAL CODE COUNCIL®

Copyright © 2019 ICC & NYSDOS. ALL RIGHTS RESERVED. Accessed by Lauren Gualdino (lgualdino@briarcliffmanor.org), (-) Order Number #100880972 on May 08, 2020 07:05 AM (PDT) pursuant to License Agreement with ICC & NYSDOS. No further reproduction, no

100880972

ANDREW M. CUOMO GOVERNOR
ROSSANA ROSADO SECRETARY OF STATE

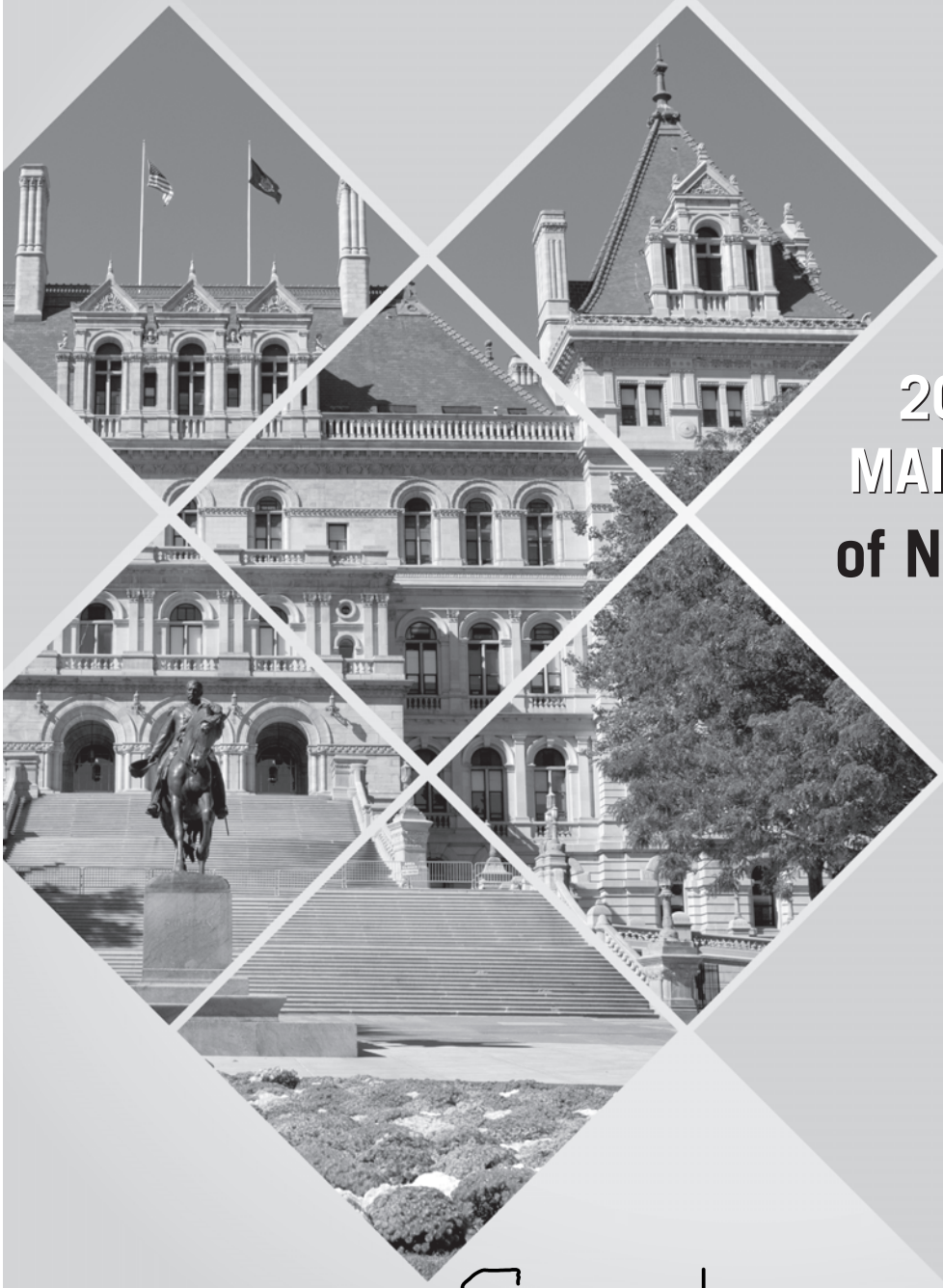

2020 PROPERTY MAINTENANCE CODE of NEW YORK STATE

NEW YORK STATE OF OPPORTUNITY.

Building Standards and Codes

ICC INTERNATIONAL CODE COUNCIL®

INTERNATIONAL CODE COUNCIL®

Copyright © 2019 ICC & NYSDOS. ALL RIGHTS RESERVED. Accessed by Lauren Gualdino (lgualdino@briarcliffmanor.org), (-) Order Number #100880972 on May 08, 2020 07:05 AM (PDT) pursuant to License Agreement with ICC & NYSDOS. No further reproduction, no

100880972

2020 Property Maintenance Code of New York State

Publication Date: November 2019

ISBN: 978-1-60983-918-5

COPYRIGHT © 2019
by
INTERNATIONAL CODE COUNCIL, INC.
and
NEW YORK STATE DEPARTMENT OF STATE

ALL RIGHTS RESERVED. This *2020 Property Maintenance Code of New York State* is a copyrighted work owned by the International Code Council, Inc. ("ICC"). This work contains: (1) portions of the ICC International Codes® (I-Codes®); (2) material that is a derivative of the I-Codes; and (3) wholly original materials prepared by the New York State Department of State (NYSDOS) or by the New York State Fire Prevention and Building Code Council (the "Code Council"). The International Code Council, Inc., has copyright ownership of the I-Codes. The International Code Council and the New York State Department of State have joint copyright ownership of the material that is a derivative of the I-Codes. The New York State Department of State has copyright ownership of the wholly original materials prepared by the New York State Department of State and/or by the Code Council. As to the ICC International Codes, all rights, including the right of reproduction in whole or in part in any form, are reserved to the International Code Council. As to the material that is derivative of the I-Codes, all rights, including the right of reproduction in whole or in part in any form, are reserved to the International Code Council and the New York State Department of State, jointly. As to the wholly original materials prepared by the New York State Department of State or by the Code Council, all rights, including the right of reproduction in whole or in part in any form, are reserved to the New York State Department of State. Without advance written permission from the copyright owner, no part of this book may be reproduced, distributed or transmitted in any form or by any means, including, without limitation, electronic, optical or mechanical means (by way of example, and not limitation, photocopying or recording by or in an information storage retrieval system). For information on use rights and permissions, please contact: ICC Publications, 4051 Flossmoor Road, Country Club Hills, IL 60478. Phone 1-888-ICC-SAFE (422-7233).

Trademarks: "International Code Council," the "International Code Council" logo, "ICC," the "ICC" logo, "International Property Maintenance Code," "IPMC" and other names and trademarks appearing in this book are registered trademarks of the International Code Council, Inc., and/or its licensors (as applicable), and may not be used without permission.

T024586

PRINTED IN THE USA

INTERNATIONAL CODE COUNCIL®

Copyright © 2019 ICC & NYSDOS. ALL RIGHTS RESERVED. Accessed by Lauren Gualdino (lgualdino@briarcliffmanor.org), (-) Order Number #100880972 on May 08, 2020 07:05 AM (PDT) pursuant to License Agreement with ICC & NYSDOS. No further reproduction, no

ACKNOWLEDGMENTS

With gratitude, the Department of State acknowledges the contributions of the following individuals in the creation of the 2020 Codes of New York State:

STATE FIRE PREVENTION AND BUILDING CODE COUNCIL

Rossana Rosado	Chair – Secretary of State, New York State Department of State
	Designee - Matthew W. Tebo, Esq.
Francis J. Nerney, Jr.	State Fire Administrator, Office of Fire Prevention and Control
	Designee - Paul Martin
RuthAnne Visnauskas	Commissioner, Division of Housing and Community Renewal
	Designee - Michael Weber
	Designee - Joseph Palozzola
Roberta Reardon	Commissioner, New York State Department of Labor
	Designee - Vincent R. Rapacciuolo
Honorable Bill de Blasio	Mayor, City of New York
	Designee - Keith Wen, NYC Department of Buildings
Honorable Michael R. Sabatino, Jr.	Councilmember, City of Yonkers
Claudia K. Braymer, Esq.	County Board of Supervisors, Warren County
David A. Seeley	Supervisor, Town of Irondequoit
Timothy DeRuyscher, P.E. FSFPE	Professional Engineer Representative
Patrick Dolan	Trade Union Representative, Steamfitters Union, 638
Shawn Hamlin, R.A.	Registered Architect Representative, Hamlin Design Group
Robert Hughes	Code Enforcement Representative, Village of Pleasantville
Dominic Marinelli	Persons with Disabilities Representative, United Spinal Association
Joseph J. Toomey	Fire Service Representative, Albany Fire Department
William W. Tuyn	Builders Representative, Forbes Capretto Homes

DEPARTMENT OF STATE

Rossana Rosado	Secretary of State
Brendan Hughes	Executive Deputy Secretary of State
James W. Leary, Esq.	Assistant Executive Deputy Secretary of State
Mark P. Pattison	Deputy Secretary of State for Local Government
Matthew W. Tebo, Esq.	Deputy Secretary of State for Agency Transformation and External Affairs
John R. Addario, P.E.	Director of the Division of Building Standards and Codes
Brian Tollisen, P.E.	Deputy Director of the Division of Building Standards and Codes
Gerard A. Hathaway, R.A.	Assistant Director for Code Development
Kevin Duerr-Clark, P.E.	Assistant Director for Technical Support
Francis “Nick” McAndrew, P.E.	Assistant Director for Educational Services
Joseph Hill, R.A.	Assistant Director for Code Administration
Jeffrey M. Hinderliter, P.E.	Professional Engineer
Emma Gonzalez-Laders, R.A., LEED AP	Senior Architect
Daniel Carroll	Code Compliance Specialist I
Janet Miller	Program Aide
Joseph P. Ball, Esq.	Supervising Attorney
Panagiota K. Hyde, Esq.	Senior Attorney

IN MEMORIAM

John H. Flanagan	Code Enforcement Representative, Code Council Member (2003–2017)
Honorable Judith Kennedy	Mayor, City of Newburgh, Code Council Member (2013–2018)
Brendan Fitzgerald	Executive Deputy Secretary of State (2016–2018)

INTERNATIONAL CODE COUNCIL®
Copyright © 2019 ICC & NYSDOS. ALL RIGHTS RESERVED. Accessed by Lauren Gualdino (lgualdino@briarcliffmanor.org), (-) Order Number #100880972 on May 08, 2020 07:05 AM (PDT) pursuant to License Agreement with ICC & NYSDOS. No further reproduction, no

100880972

INTERNATIONAL CODE COUNCIL®
Copyright © 2019 ICC & NYSDOS. ALL RIGHTS RESERVED. Accessed by Lauren Gualdino (lgualdino@briarcliffmanor.org), (-) Order Number #100880972 on May 08, 2020 07:05 AM (PDT) pursuant to License Agreement with ICC & NYSDOS. No further reproduction, no

PREFACE

Introduction

The *Property Maintenance Code of New York State* (PMCNYS) establishes minimum requirements for the maintenance of existing buildings through regulations that contain clear and specific property maintenance and property improvement provisions. This 2020 edition was developed as a derivative work of the 2018 edition of the *International Property Maintenance Code*® (IPMC®) published by the International Code Council® (ICC®).

Intention

This code is intended to establish provisions that adequately protect public health, safety and welfare; that do not unnecessarily increase construction costs; that do not restrict the use of new materials, products or methods of construction; and that do not give preferential treatment to particular types or classes of materials, products or methods of construction.

Letter Designations in Front of Section Numbers

The bracketed letter designations for the party responsible for portions of this code are as follows:

ICC Code Development Committee

[A] = Administrative Code Development Committee;

[F] = International Fire Code Development Committee;

[P] = International Plumbing Code Development Committee.

[BE] = IBC—Means of Egress Code Development Committee; and

[BG] = IBC—General Code Development Committee

New York State Code Development

[NY] = New York Department of State

Marginal Markings

Solid vertical lines in the margins within the body of the code indicate a technical change from the requirements of the 2015 edition of the I-Codes®. Deletion indicators in the form of an arrow (➡) are provided in the margin where an entire section, paragraph, exception or table has been deleted or an item in a list of items or a table has been deleted.

Italicized Terms

Words and terms defined in Chapter 2, Definitions, are italicized where they appear in code text and the Chapter 2 definition applies. Where such words and terms are not italicized, common-use definitions apply. The words and terms selected have code-specific definitions that the user should read carefully to facilitate better understanding of the code.

INTERNATIONAL CODE COUNCIL®
Copyright © 2019 ICC & NYSDOS. ALL RIGHTS RESERVED. Accessed by Lauren Gualdino (lgualdino@briarcliffmanor.org), (-) Order Number #100880972 on May 08, 2020 07:05 AM (PDT) pursuant to License Agreement with ICC & NYSDOS. No further reproduction, no

100880972

INTERNATIONAL CODE COUNCIL®
Copyright © 2019 ICC & NYSDOS. ALL RIGHTS RESERVED. Accessed by Lauren Gualdino (lgualdino@briarcliffmanor.org), (-) Order Number #100880972 on May 08, 2020 07:05 AM (PDT) pursuant to License Agreement with ICC & NYSDOS. No further reproduction, no

100880972

EFFECTIVE USE OF THE PROPERTY MAINTENANCE CODE OF NEW YORK STATE

The *Property Maintenance Code of New York State* (PMCNYS) is a code that regulates the minimum maintenance requirements for existing buildings.

The PMCNYS is a maintenance document intended to establish minimum maintenance standards for basic equipment, light, ventilation, heating, sanitation and fire safety. Responsibility is fixed among owners, operators and occupants for code compliance. The PMCNYS provides for the regulation and safe use of existing structures in the interest of the social and economic welfare of the community.

Arrangement and Format of the 2020 PMCNYS

Before applying the requirements of the PMCNYS it is beneficial to understand its arrangement and format. The PMCNYS, like other codes published by ICC, is arranged and organized to follow sequential steps that generally occur during an inspection. The PMCNYS is divided into eight different parts:

Chapters	Subjects
1	Scope and Administration
2	Definitions
3	General Requirements
4	Light, Ventilation and Occupancy Limitations
5	Plumbing Facilities and Fixture Requirements
6	Mechanical and Electrical Requirements
7	Fire Safety Requirements
8	Referenced Standards

The following is a chapter-by-chapter synopsis of the scope and intent of the provisions of the *Property Maintenance Code of New York State:*

Chapter 1 Scope and Administration. This chapter contains provisions for the application, enforcement and administration of subsequent requirements of the code. In addition to establishing the scope of the code, Chapter 1 identifies which buildings and structures come under its purview.

Chapter 2 Definitions. All terms that are defined in the code are listed alphabetically in Chapter 2. While a defined term may be used in one chapter or another, the meaning provided in Chapter 2 is applicable throughout the code.

Where understanding of a term's definition is especially key to or necessary for understanding of a particular code provision, the term is shown in italics. This is true only for those terms that have a meaning that is unique to the code. In other words, the generally understood meaning of a term or phrase might not be sufficient or consistent with the meaning prescribed by the code; therefore, it is essential that the code-defined meaning be known.

Guidance is provided regarding tense, gender and plurality of defined terms as well as terms not defined in this code.

INTERNATIONAL CODE COUNCIL®
Copyright © 2019 ICC & NYSDOS. ALL RIGHTS RESERVED. Accessed by Lauren Gualdino (lgualdino@briarcliffmanor.org), (-) Order Number #100880972 on May 08, 2020 07:05 AM (PDT) pursuant to License Agreement with ICC & NYSDOS. No further reproduction, no

100880972

Chapter 3 General Requirements. Chapter 3, "General Requirements," is broad in scope. It includes a variety of requirements for the exterior property areas as well as the interior and exterior elements of the structure. This chapter provides requirements that are intended to maintain a minimum level of safety and sanitation for both the general public and the occupants of a structure, and to maintain a building's structural and weather-resistance performance. Chapter 3 provides specific criteria for regulating the installation and maintenance of specific building components; maintenance requirements for vacant structures and land; requirements regulating the safety, sanitation and appearance of the interior and exterior of structures and all exterior property areas; accessory structures; vehicle storage regulations and establishes who is responsible for complying with the chapter's provisions. This chapter also contains the requirements for swimming pools, spas and hot tubs and the requirements for protective barriers and gates in these barriers. Chapter 3 establishes the responsible parties for exterminating insects and rodents, and maintaining sanitary conditions in all types of occupancies.

Chapter 4 Light, Ventilation and Occupancy Limitations. The purposes of Chapter 4 are to set forth these requirements in the code and to establish the minimum environment for occupiable and habitable buildings, by establishing the minimum criteria for light and ventilation and identifying occupancy limitations including minimum room width and area, minimum ceiling height and restrictions to prevent overcrowding. This chapter also provides for alternative arrangements of windows and other devices to comply with the requirements for light and ventilation and prohibits certain room arrangements and occupancy uses.

Chapter 5 Plumbing Facilities and Fixture Requirements. Chapter 5 establishes the minimum criteria for the installation, maintenance and location of plumbing systems and facilities, including the water supply system, water heating appliances, sewage disposal system and related plumbing fixtures.

Sanitary and clean conditions in occupied buildings are dependent upon certain basic plumbing principles, including providing potable water to a building, providing the basic fixtures to effectively utilize that water and properly removing waste from the building. Chapter 5 establishes the minimum criteria to verify that these principles are maintained throughout the life of a building.

Chapter 6 Mechanical and Electrical Requirements. The purpose of Chapter 6 is to establish minimum performance requirements for heating, electrical and mechanical facilities and to establish minimum standards for the safety of these facilities.

This chapter establishes minimum criteria for the installation and maintenance of the following: heating and air-conditioning equipment, appliances and their supporting systems; water heating equipment, appliances and systems; cooking equipment and appliances; ventilation and exhaust equipment; gas and liquid fuel distribution piping and components; fireplaces and solid fuel-burning appliances; chimneys and vents; electrical services; lighting fixtures; electrical receptacle outlets; electrical distribution system equipment, devices and wiring; and elevators, escalators and dumbwaiters.

Chapter 7 Fire Safety Requirements. The purpose of Chapter 7 is to address those fire hazards that arise as the result of a building's occupancy. It also provides minimum requirements for fire safety issues that are most likely to arise in older buildings.

This chapter contains requirements for means of egress in existing buildings, including path of travel, required egress width, means of egress doors and emergency escape openings.

Chapter 7 establishes the minimum requirements for fire safety facilities and fire protection systems, as these are essential fire safety systems.

Chapter 8 Referenced Standards. The code contains numerous references to standards that are used to regulate materials and methods of construction. Chapter 8 contains a comprehensive list of all standards that are referenced in the code. The standards are part of the code to the extent

INTERNATIONAL CODE COUNCIL®
Copyright © 2019 ICC & NYSDOS. ALL RIGHTS RESERVED. Accessed by Lauren Gualdino (lgualdino@briarcliffmanor.org), (-) Order Number #100880972 on May 08, 2020 07:05 AM (PDT) pursuant to License Agreement with ICC & NYSDOS. No further reproduction, no

100880972

of the reference to the standard. Compliance with the referenced standard is necessary for compliance with this code. By providing specifically adopted standards, the construction and installation requirements necessary for compliance with the code can be readily determined. The basis for code compliance is, therefore, established and available on an equal basis to the building official, contractor, designer and owner.

Chapter 8 is organized in a manner that makes it easy to locate specific standards. It lists all of the referenced standards, alphabetically, by acronym of the promulgating agency of the standard. Each agency's standards are then listed in either alphabetical or numeric order based upon the standard identification. The list also contains the title of the standard; the edition (date) of the standard referenced; any addenda included as part of the ICC adoption; and the section or sections of this code that reference the standard.

INTERNATIONAL CODE COUNCIL®
Copyright © 2019 ICC & NYSDOS. ALL RIGHTS RESERVED. Accessed by Lauren Gualdino (lgualdino@briarcliffmanor.org), (-) Order Number #100880972 on May 08, 2020 07:05 AM (PDT) pursuant to License Agreement with ICC & NYSDOS. No further reproduction, no

100880972

INTERNATIONAL CODE COUNCIL®

Copyright © 2019 ICC & NYSDOS. ALL RIGHTS RESERVED. Accessed by Lauren Gualdino (lgualdino@briarcliffmanor.org), (-) Order Number #100880972 on May 08, 2020 07:05 AM (PDT) pursuant to License Agreement with ICC & NYSDOS. No further reproduction, no

100880972

TABLE OF CONTENTS

CHAPTER 1 SCOPE AND ADMINISTRATION 1

Section

101 Title, Scope and Purpose 1
102 Applicability 1
103 Administration and Enforcement 2
104 Materials, Equipment and Methods of Construction 3
105 Building Permits, Construction Inspections, Stop Work Orders, Certificates of Occupation and Operating Permits 4
106 Maintenance of Equipment and Systems 5
107 Unsafe Structures and Equipment 6
108 Emergency Measures 6
109 Service Utilities 7
110 Inspection of Solid Fuel-burning Heating Appliances, Chimneys and Flues 7

CHAPTER 2 DEFINITIONS 9

Section

201 General 9
202 General Definitions 9

CHAPTER 3 GENERAL REQUIREMENTS 13

Section

301 General 13
302 Exterior Property Areas 13
303 Swimming Pools, Spas and Hot Tubs 13
304 Exterior Structure 14
305 Interior Structure 16
306 Component Serviceability 16
307 Handrails and Guardrails 17
308 Rubbish and Garbage 17
309 Pest Elimination 18
310 Live Fire Training Facilities 18

CHAPTER 4 LIGHT, VENTILATION AND OCCUPANCY LIMITATIONS 19

Section

401 General 19
402 Light 19
403 Ventilation 19
404 Occupancy Limitations 19

CHAPTER 5 PLUMBING FACILITIES AND FIXTURE REQUIREMENTS 23

Section

501 General 23
502 Required Facilities 23
503 Toilet Rooms 23
504 Plumbing Systems and Fixtures 23
505 Water System 24
506 Sanitary Drainage System 24
507 Storm Drainage 24

CHAPTER 6 MECHANICAL AND ELECTRICAL REQUIREMENTS 25

Section

601 General 25
602 Heating Facilities 25
603 Mechanical Equipment 25
604 Electrical Facilities 25
605 Electrical Equipment 26
606 Elevators, Escalators and Dumbwaiters 26
607 Duct Systems 27
608 Assistive Listening Systems 27

CHAPTER 7 FIRE SAFETY REQUIREMENTS . . . 29

Section

701 General 29
702 Means of Egress 29
703 Fire-resistance Ratings 29
704 Fire Protection Systems 30
705 Carbon Monoxide Alarms and Detection 33

CHAPTER 8 REFERENCED STANDARDS 35

APPENDIX A BOARDING STANDARD 37

Section

A101 General 37
A102 Materials 37
A103 Installation 37
A104 Referenced Standard 37

INDEX 39

INTERNATIONAL CODE COUNCIL®
Copyright © 2019 ICC & NYSDOS. ALL RIGHTS RESERVED. Accessed by Lauren Gualdino (lgualdino@briarcliffmanor.org), (-) Order Number #100880972 on May 08, 2020 07:05 AM (PDT) pursuant to License Agreement with ICC & NYSDOS. No further reproduction, no

100880972

INTERNATIONAL CODE COUNCIL®
Copyright © 2019 ICC & NYSDOS. ALL RIGHTS RESERVED. Accessed by Lauren Gualdino (lgualdino@briarcliffmanor.org), (-) Order Number #100880972 on May 08, 2020 07:05 AM (PDT) pursuant to License Agreement with ICC & NYSDOS. No further reproduction, no

100880972

[NY] CHAPTER 1

SCOPE AND ADMINISTRATION

[NY] SECTION 101
TITLE, SCOPE AND PURPOSE

[NY] 101.1 Title. This publication shall be known as the 2020 edition of the *Property Maintenance Code of New York State* (PMCNYS) hereinafter referred to as "this code." This code is part of the New York State Uniform Fire Prevention and Building Code (the "Uniform Code").

[NY] 101.1.1 Amendments of New York State code books. In Chapter 1, the term "New York State code books" shall include the *Residential Code of New York State*, the *Building Code of New York State*, the *Plumbing Code of New York State*, the *Mechanical Code of New York State*, the *Fuel Gas Code of New York State,* the *Fire Code of New York State*, the *Property Maintenance Code of New York State* (i.e., this publication), the *Existing Building Code of New York State*, and the *Energy Conservation Construction Code of New York State*. Provisions in any one or more of the New York State code books may be amended from time to time by provisions in 19 NYCRR Parts 1220 to 1227 or 19 NYCRR Part 1240, as currently in effect and as hereafter amended from time to time. If this publication is now or hereafter so amended, references in this publication to "this code" shall be deemed to be references to this publication as so amended. If any other New York State code book is now or hereafter so amended, references in this code to such other New York State code book shall be deemed to be references to such New York State code book as so amended.

[NY] 101.2 Scope. The provisions of this code shall apply to all existing residential and nonresidential structures and all existing *premises* and constitute minimum requirements and standards for *premises*, structures, equipment and facilities for light, *ventilation*, space, heating, sanitation, protection from the elements, a reasonable level of safety from fire and other hazards, and for a reasonable level of sanitary maintenance; the responsibility of *owners*, an owner's authorized agent, *operators* and *occupants*; the *occupancy* of existing structures and premises, and for administration, enforcement and penalties.

[NY] 101.2.1 Appendix. Provisions in the following appendix is included for informational purposes:

Appendix A Boarding Standard

[NY] 101.3 Purpose. This code shall be construed to secure its expressed intent, which is to ensure public health, safety and welfare insofar as they are affected by the continued *occupancy* and maintenance of structures and *premises*. Existing structures and *premises* that do not comply with these provisions shall be altered or repaired to provide a minimum level of health and safety as required herein.

[NY] SECTION 102
APPLICABILITY

[NY] 102.1 General. Where, in any case, different sections of this code specify different materials, methods of construction, or other requirements, the most restrictive shall be applicable. Where there is a conflict between a general requirement and a specific requirement, the specific requirement shall govern. Where differences occur between provisions of this code and the referenced standards, the provisions of this code shall apply. Where, in a specific case, different sections of this code specify different requirements, the most restrictive shall govern.

[NY] 102.2 Maintenance of equipment and systems. Equipment, systems, devices and safeguards required by this code or a previous regulation or code under which the structure or *premises* was constructed, altered or repaired shall be maintained in good working order. An *owner*, owner's authorized agent, *operator* or *occupant* shall not cause any service, facility, equipment or utility that is required under this section to be removed from, shut off from or discontinued for any occupied dwelling, except for such temporary interruption as necessary while repairs or alterations are in progress. The requirements of this code are not intended to provide the basis for removal or abrogation of fire protection and safety systems and devices in existing structures. Except as otherwise specified herein, the *owner* or the *owner's* authorized agent shall be responsible for the maintenance of buildings, structures and *premises.*

[NY] 102.3 Application of other codes. Repairs, additions or alterations to a structure, or changes of *occupancy*, shall be done in accordance with the procedures and provisions of the *Building Code of New York State, Existing Building Code of New York State, Energy Conservation Construction Code of New York State, Fire Code of New York State, Fuel Gas Code of New York State, Mechanical Code of New York State, Residential Code of New York State, Plumbing Code of New York State* and NFPA 70.

[NY] 102.4 Existing remedies. The provisions in this code shall not be construed to abolish or impair existing remedies of the *authority having jurisdiction* or its officers or agencies relating to the removal or demolition of any structure that is dangerous, unsafe and insanitary.

[NY] 102.5 Referenced codes and standards. The codes and standards referenced in this code shall be considered to be part of the requirements of this code to the prescribed extent of each such reference and as further regulated in Sections 102.6.1 and 102.6.2.

[NY] 102.5.1 Conflicts. Where conflicts occur between provisions of this code and the referenced standards, the provisions of this code shall apply.

INTERNATIONAL CODE COUNCIL®
Copyright © 2019 ICC & NYSDOS. ALL RIGHTS RESERVED. Accessed by Lauren Gualdino (lgualdino@briarcliffmanor.org), (-) Order Number #100880972 on May 08, 2020 07:05 AM (PDT) pursuant to License Agreement with ICC & NYSDOS. No further reproduction, no

100880972

[NY] 102.5.2 Provisions in referenced codes and standards. Where the extent of the reference to a referenced code or standard includes subject matter that is within the scope of this code, the provisions of this code, as applicable, shall take precedence over the provisions in the referenced code or standard.

[NY] 102.6 Requirements not covered by code. Requirements necessary for the strength, stability or proper operation of an existing fixture, structure or equipment, or for the public safety, health and general welfare, not specifically covered by this code, shall be determined by the *authority having jurisdiction.*

[NY] 102.7 Application of references. References to chapter or section numbers, or to provisions not specifically identified by number, shall be construed to refer to such chapter, section or provision of this code.

[NY] 102.8 Other laws and regulations. This code is part of the New York State Uniform Fire Prevention and Building Code (the *Uniform Code*) promulgated pursuant to Article 18 of the New York State Executive Law. The provisions of this code shall not be deemed to nullify any federal, state or local law, ordinance, administrative code, rule or regulation relating to any matter as to which the *Uniform Code* does not provide.

However:

1. Pursuant to Section 383(1) of the Executive Law, and except as otherwise provided in paragraphs a, b, and c of Section 383(1) of the Executive Law, the provisions of the *Uniform Code* supersede any other provision of a general, special or local law, ordinance, administrative code, rule or regulation inconsistent or in conflict with the *Uniform Code*;
2. Pursuant to Section 379(3) of the Executive Law, no city, town, village, county or other municipality shall have the power to supersede, void, repeal, or make less restrictive any provision of the *Uniform Code*; and
3. The ability of any city, town, or village, or the County of Nassau, to enact or adopt, and to enforce, a local law or ordinance imposing higher or more restrictive standards for construction within the jurisdiction of such city, town, village, or county that are applicable generally to such city, town, village, or county in the *Uniform Code* is subject to the provisions and requirements of Section 379 of the Executive Law.

Nothing in this Section 102.2 shall be construed as any of the following:

1. Affecting the authority of the State Labor Department to enforce a safety or health standard issued under provisions of Sections 27 and 27-a of the Labor Law;
2. Relieving a person from complying with a stricter standard issued pursuant to the Occupational Safety and Health Act of 1970, as amended; or
3. Superseding, limiting, impairing or otherwise affecting any provision the *Uniform Code*, as now in effect and as hereafter amended from time to time.

[NY] 102.8.1 Other New York Codes, Rules and Regulations (NYCRR). Additional New York Codes, Rules and Regulations exist that may affect new and *existing buildings*, *structures*, systems and equipment. Such regulations include, but are not limited to:

1. 19 NYCRR Part 300 (Universal Symbol of Access),
2. 19 NYCRR Part 1261 (Recordkeeping – Smoke Detectors in Multiple Dwellings),
3. 19 NYCRR Part 1264 (Identification of Buildings Utilizing Truss Type Construction), and
4. 19 NYCRR Part 1265 (Residential Structures with Truss Type Construction, Pre-Engineered Wood Construction and/or Timber Construction).

[NY] 102.9 Partial invalidity. In the event that any part or provision of this code is held by a court of competent jurisdiction to be illegal or void, this shall not have the effect of making void or illegal any of the other parts or provisions.

[NY] 102.10 Workmanship. Repairs, maintenance work, alterations or installations which are caused directly or indirectly by the enforcement of the *Uniform Code* shall be executed and installed in a *workmanlike* manner and in accordance with *Uniform Code* and the manufacturer's installation instructions.

[NY] SECTION 103 ADMINISTRATION AND ENFORCEMENT

[NY] 103.1 Administration and enforcement. The *Uniform Code* shall be administered and enforced by the *authority having jurisdiction*. The identity of the *authority having jurisdiction* in a given situation is determined in accordance with Article 18 of the Executive Law and the regulations promulgated by the Secretary of State pursuant to Executive Law Section 381(1). In general, the *authority having jurisdiction* is the local government (city, town or village) in which the *building* or *structure* is located. In certain situations, the *authority having jurisdiction* may be the county in which the *building* or *structure* is located. In certain other cases, the State, the Secretary of State (acting through the Department of State) or some other State agency may be the *authority having jurisdiction*. The *authority having jurisdiction* responsible for administration and enforcement of the *Uniform Code* is also responsible for administration and enforcement of the *Energy Code*.

Administration and enforcement of the *Uniform Code* and *Energy Code* shall be in accordance with the following, as applicable:

1. Where a city, town, village or county is the *authority having jurisdiction*:
   1.1. Such city, town, village or county shall provide for administration and enforcement of the *Uniform Code* and *Energy Code* by local law, ordinance, other appropriate regulation, or combination thereof.
   1.2. The *Code Enforcement Program* established by such local law, ordinance or other appropriate regulation, or combination thereof, must include, at a

INTERNATIONAL CODE COUNCIL®
Copyright © 2019 ICC & NYSDOS. ALL RIGHTS RESERVED. Accessed by Lauren Gualdino (lgualdino@briarcliffmanor.org), (-) Order Number #100880972 on May 08, 2020 07:05 AM (PDT) pursuant to License Agreement with ICC & NYSDOS. No further reproduction, no

100880972

minimum, the features described in *Part 1203* and must satisfy all other requirements of *Part 1203*.

1.3. Such city, town, village or county shall administer and enforce the *Uniform Code* in accordance with the *Code Enforcement Program* established by such local law, ordinance or other appropriate regulation, or combination thereof.

2. Where the State is the *authority having jurisdiction* pursuant to 19 NYCRR Section 1201.2(d):

2.1. The *Code Enforcement Program* shall be as established by *Part 1204*.

2.2. The State, acting through one or more State agencies, shall administer and enforce the *Uniform Code* and *Energy Code* in accordance with *Part 1204*.

3. Where the Department of State is the *authority having jurisdiction*:

3.1. The *Code Enforcement Program* shall be as established by *Part 1202*.

3.2. The Department of State shall administer and enforce the *Uniform Code* and *Energy Code* in accordance with *Part 1202*.

4. Where any governmental unit or agency not included in Items 1, 2, and 3 above is the *authority having jurisdiction*:

4.1. Such governmental unit or agency shall provide for administration and enforcement of the *Uniform Code* and *Energy Code* by regulation.

4.2. The *Code Enforcement Program* established by such regulation must include, at a minimum, the features described *Part 1203* and must satisfy all other requirements of *Part 1203*.

4.3. Such governmental unit or agency shall administer and enforce the *Uniform Code* and *Energy Code* in accordance with the *Code Enforcement Program* established by such regulation.

Every governmental unit or agency thereof charged with administration and enforcement of the *Uniform Code* shall exercise its powers in due and proper manner so as to extend to the public protection from the hazards of fire and inadequate building construction.

Any person or entity constructing or renovating a *building* or *structure*, changing the use or occupancy of a *building* or *structure*, or engaging in any other activity that is subject to the provisions of the *Code Enforcement Program* of the *authority having jurisdiction* responsible for administration and enforcement of the *Uniform Code* with respect to such *building* shall comply with all applicable provisions of such *Code Enforcement Program*.

In addition, persons and entities who construct, renovate, use and occupy *buildings* and *structures* shall comply with all applicable provisions of Section 105 of this code.

[NY] 103.2 Due process. Nothing in Chapter 1, or elsewhere in this code, or elsewhere in the *Uniform Code* or in any regulation promulgated pursuant to Executive Law Section 381(1), shall be construed as authorizing any *authority having jurisdiction* to administer and enforce the *Uniform Code* in a manner that deprives any person or entity of due process of law. In particular, but not by way of limitation, nothing in Chapter 1, or elsewhere in this code or elsewhere in the *Uniform Code*, or in any regulation promulgated pursuant to Executive Law Section 381(1), relating to posting, placarding and/or condemnation of *buildings* or *structures* that are unsafe, unfit for human occupancy or unlawful shall be construed as authorizing any *authority having jurisdiction* to post, placard or condemn any such *building* or *structure* and/or to remove any *owner* or occupant or cause any *owner* or occupant to be removed from any such *building* or *structure* without providing such notice and opportunity to be heard (and, if applicable, right of appeal) as may be required under the applicable circumstances by applicable Constitutional provisions.

[NY] 103.2.1 Imminent danger. In cases of imminent danger, posting, placarding, and condemning a *building* or *structure* and removing *owners* and occupants or causing *owners* and occupants to be removed without first providing an opportunity to be heard shall be permitted to the extent consistent with applicable Constitutional provisions, provided that the affected persons and entities are afforded the opportunity for a post-action hearing to the extent required by applicable Constitutional provisions.

[NY] 103.3 Application for variance or appeal. An application for a variance or modification of any provision or requirement of the *Uniform Code* shall be in accordance with the provisions of *Part 1205*. An appeal of any order or determination, or the failure within a reasonable time to make an order or determination, of an administrative official charged to enforce or purporting to enforce the *Uniform Code* may be made in accordance with the provisions of *Part 1205*.

[NY] SECTION 104
MATERIALS, EQUIPMENT AND METHODS OF CONSTRUCTION

[NY]104.1 Approved materials and equipment. Materials, equipment, and devices *approved* by the *building official* shall be constructed and installed in accordance with such approval. Materials, equipment and devices tested by an *approved* testing laboratory shall be permitted to be constructed and installed in accordance with such approval.

[NY] 104.1.1 Used materials and equipment. Used materials, equipment, and devices shall not be reused unless they meet the requirements of this code for new materials.

[NY] 104.2 Waivers, variances, and modifications. Nothing in this code shall be construed as permitting any *building official* or any *authority having jurisdiction* to waive, vary, modify, or otherwise alter any provision or requirement of this code or any other provision or requirement of the *Uniform Code*. Provisions or requirements of the *Uniform Code* may be varied or modified only in accordance with procedures established by *Part 1205* or by such other regulations as may hereafter be promulgated by the Secretary of State pursuant to Section 381(1)(f) of the Executive Law.

INTERNATIONAL CODE COUNCIL®
Copyright © 2019 ICC & NYSDOS. ALL RIGHTS RESERVED. Accessed by Lauren Gualdino (lgualdino@briarcliffmanor.org), (-) Order Number #100880972 on May 08, 2020 07:05 AM (PDT) pursuant to License Agreement with ICC & NYSDOS. No further reproduction, no

100880972

[NY] 104.3 Alternative materials, equipment, appliances, designs, and methods of construction. The provisions of this code are not intended to prevent the installation of any materials, *equipment*, or *appliances* not specifically prescribed by this code, or to prohibit any designs or methods of construction not specifically prescribed by this code, provided that such alternative materials, *equipment*, *appliances*, designs, or methods of construction (1) are not specifically prohibited by any provision of this code, by any other provision of the *Uniform Code*, or by the *Energy Code;* and (2) shall have been *approved*, in writing, by the *building official*. Alternative materials, *equipment*, *appliances*, designs, or methods of construction may be *approved* only when the *building official* shall have determined, in writing, that such alternative is:

1. Satisfactory and complies with the intent of the provisions and requirements of the *Uniform Code.*
2. Not less than the equivalent of that prescribed in the *Uniform Code* in quality, strength, effectiveness, fire resistance, durability, and safety.

Nothing in Section 104.3 shall be construed as permitting any *building official* or any *authority having jurisdiction* to waive, vary, modify or otherwise alter any provision or requirement of this code or any other provision or requirement of the *Uniform Code*. Provisions or requirements of the *Uniform* Code may be varied or modified only pursuant to procedures established *Part 1205* or by such other regulations as may hereafter be promulgated by the Secretary of State pursuant to Section 381(1)(f) of the Executive Law.

[NY] 104.4 Workmanship. Repairs, maintenance work, alterations or installations which are caused directly or indirectly by the enforcement of the *Uniform Code* shall be executed and installed in a *workmanlike* manner and in accordance with *Uniform Code* and the manufacturer's installation instructions.

[NY] SECTION 105 BUILDING PERMITS, CONSTRUCTION INSPECTIONS, STOP WORK ORDERS, CERTIFICATES OF OCCUPANCY, AND OPERATING PERMITS

[NY] 105.1 Purpose. The purpose of Section 105 is to include in the *Uniform Code* provisions requiring persons and entities who construct, renovate, use and occupy buildings and structures to apply for and obtain *building permits*, to facilitate construction inspections, to obey stop work orders, to obtain *certificates of occupancy*, and to obtain *operating permits*. The provisions in Section 105 are considered to be integral parts of the *Uniform Code's* standards for construction, maintenance, and fire protection equipment and systems.

[NY] 105.1.1 Definition. For the purpose of Section 105, the term "other applicable law" shall include the *authority having jurisdiction's Code Enforcement Program*; any local law, ordinance, or regulation establishing the *authority having jurisdiction's Code Enforcement Program*; and any other applicable statute, regulation, rule, local law, or ordinance.

[NY] 105.2 Building Permits. No person or entity shall commence, perform, or continue any work that must conform with the *Uniform Code* and/or *Energy Code* unless:

1. Such person or entity has applied to the *authority having jurisdiction* for a *building permit*,
2. The *authority having jurisdiction* has issued a *building permit* authorizing such work,
3. Such *building permit* has not been revoked or suspended, and
4. Such *building permit* has not expired.

[NY] 105.2.1 Work exempt from building permit requirement. A *building permit* shall not be required for work in any category that is excluded from the *building permit* requirement by the *authority having jurisdiction's Code Enforcement Program*, provided that *Part 1203* allows an *authority having jurisdiction* to exclude such category of work from the *building permit* requirement. Exemptions from *building permit* requirements shall not be deemed to grant authorization for any work to be done in any manner in violation of any provision the *Uniform Code*, any provision of the *Energy Code*, or any provision of any other applicable law.

[NY] 105.2.2 Applications for building permits. A person or entity applying for a *building permit* shall submit an application to the *authority having jurisdiction*. An application for a *building permit* shall include all of the following:

1. *Construction documents* that satisfy the requirements of Section 106.2.
2. Any and all other submittal documents required by Section 106.
3. Any and all other information and documentation that may be required by the stricter of the *authority having jurisdiction's Code* Enforcement Program or a *Part 1203—Compliant Code Enforcement Program*.
4. Such other information and documentation as the *authority having jurisdiction* may determine to be necessary to allow the *authority having jurisdiction* to determine whether the proposed work conforms with the *Uniform Code*, the *Energy Code*, and other applicable laws.

[NY] 105.2.3 Approval of construction documents. When the *authority having jurisdiction* issues a *building permit*, the *authority having jurisdiction* shall *approve* the *construction documents* in writing. Work shall be installed in accordance with the *approved construction documents* and the terms and conditions, if any, of the *building permit*.

[NY] 105.2.4 Validity of building permit. The issuance or granting of a *building permit* shall not be construed to be a *permit* for, or an approval of, any violation of any provision of the *Uniform Code*, the *Energy Code* or any other applicable law. A *building permit* purporting to give authority to violate or cancel any provision of the *Uniform Code*, the *Energy Code,* or any other applicable law shall not be valid. The issuance of a *building permit* based on

INTERNATIONAL CODE COUNCIL®
Copyright © 2019 ICC & NYSDOS. ALL RIGHTS RESERVED. Accessed by Lauren Gualdino (lgualdino@briarcliffmanor.org), (-) Order Number #100880972 on May 08, 2020 07:05 AM (PDT) pursuant to License Agreement with ICC & NYSDOS. No further reproduction, no

100880972

construction documents and other data shall not prevent the *building official* from requiring the correction of errors in the *construction documents* and other data.

[NY] 105.2.5 Suspension or revocation of building permit. The *authority having jurisdiction* is authorized to suspend or revoke a *building permit* wherever the *building permit* is issued in error; or on the basis of incorrect, inaccurate or incomplete information; or in violation of any provision of the *Uniform Code*, the *Energy Code*, or any other applicable law. Any such suspension or revocation shall be in writing, signed by the building official or by his or her designated agent.

[NY] 105.2.6 Placement of building permit and approved construction documents. The *building permit*, or copy thereof, and at least one set of *approved construction documents* shall be kept on the site of the work until the completion of the project. The *approved construction documents* shall be open to inspection by any authorized representative of the *authority having jurisdiction.*

[NY] 105.3 Construction Inspections. Any person or entity performing work for which a *building permit* has been issued shall keep work accessible and exposed until the work has been inspected and accepted by the *authority having jurisdiction*, or its authorized agent, at each element of the construction process that is applicable to the work and specified in the stricter of the *authority having jurisdiction's Code Enforcement Program* or a *Part 1203—Compliant Code Enforcement Program.*

[NY] 105.3.1 Inspection requests. It shall be the duty of the holder of the *building permit* or their duly authorized agent to notify the *building official* when work is ready for inspection. It shall be the duty of the *building permit* holder to provide access to and means for inspections of such work that are required by this code.

[NY] 105.4 Stop work orders. The *authority having jurisdiction* is authorized to issue a stop work order to halt work that is being performed without a required *building permit*; work that is being performed after a required *building permit* has been revoked or suspended or has expired*;* work that is being conducted in a dangerous or unsafe manner; or work that is contrary to provisions of the *Uniform Code*, the *Energy Code*, the *approved construction documents*, or the terms and conditions (if any) of the *building permit*. No person or entity shall commence, perform or continue any work if the *authority having jurisdiction* has issued a stop work order with respect to such work.

[NY] 105.5 Certificates of Occupancy. Where the stricter of the *authority having jurisdiction's Code Enforcement Program* or a *Part 1203—Compliant Code Enforcement Program* requires a *certificate of occupancy* for permission to use or occupy a *building* or *structure*, or any portion thereof, no person or entity shall use or occupy such *building* or *structure*, or such portion thereof, unless:

1. The *authority having jurisdiction* has issued such *certificate of occupancy*,
2. Such *certificate of occupancy* has not been revoked or suspended, and
3. In the case of a temporary *certificate of occupancy*, such temporary *certificate of occupancy* has not expired.

[NY] 105.5.1 Authorized uses and occupancies. Where a *certificate of occupancy* has been issued for a *building* or *structure*, or any portion thereof, no person or entity shall use or occupy such *building* or *structure*, or such portion thereof, for any use or occupancy other than that authorized by such *certificate of occupancy*.

[NY] 105.5.2 Change in use or occupancy. Without regard to whether a *certificate of occupancy* shall have been issued, no person or entity shall convert the use or occupancy of a *building* or *structure*, or any portion thereof, from one use or occupancy to another without first obtaining a *building permit* to perform the work, if any, required for such conversion; performing such work, if any; and obtaining a *certificate of occupancy* from the *authority having jurisdiction.*

[NY] 105.6 Operating Permits. Where the stricter of the *authority having jurisdiction's Code Enforcement Program* or a *Part 1203—Compliant Code Enforcement Program* requires an *operating permit* to conduct an activity or to use a category of *building*, no person or entity shall conduct such activity or use such category of *building* without obtaining an *operating permit* from the *authority having jurisdiction*. The procedures for applying for, issuing, revoking, and suspending *operating permits* shall be as set forth in the stricter of the *authority having jurisdiction's Code Enforcement Program* or a *Part 1203—Compliant Code Enforcement Program.*

[NY] 105.7 Violations. Any violation of any provision set forth in Sections 105.2 through 105.6 shall be a violation of the *Uniform Code*, and any person or entity violating any such provision shall be subject to the penalties prescribed in Executive Law Section 382(2). In addition, to the extent that any act or omission that violates any provision set forth in Sections 105.2 through 105.6 is also a violation of any other applicable law, any person or entity guilty of such act or omission shall also be subject to the penalties prescribed in or otherwise applicable to a violation of such other applicable law.

SECTION 106
MAINTENANCE OF EQUIPMENT AND SYSTEMS

[NY] 106.1 Maintenance. Equipment, systems, devices and safeguards required by this code or a previous code under which the structure or premises was constructed, altered or repaired shall be maintained in good working order. The requirements of this code are not intended to provide the basis for removal or abrogation of fire protection and safety systems and devices in existing structures. Except as otherwise specified herein, the *owner* or the owner's designated agent shall be responsible for the maintenance of buildings, structures and premises.

[NY] 106.2 Existing nonrequired equipment and systems. Whenever or wherever any nonrequired device, equipment, system, condition, arrangement, level of protection or any other feature is provided, such device, equipment, system, condition, arrangement, level of protection or other feature

INTERNATIONAL CODE COUNCIL®
Copyright © 2019 ICC & NYSDOS. ALL RIGHTS RESERVED. Accessed by Lauren Gualdino (lgualdino@briarcliffmanor.org), (-) Order Number #100880972 on May 08, 2020 07:05 AM (PDT) pursuant to License Agreement with ICC & NYSDOS. No further reproduction, no

100880972

shall thereafter be continuously maintained in accordance with this code and applicable referenced standards.

Exception: Nonrequired devices, equipment and systems are permitted to be removed or disabled as provided herein.

1. Nonrequired devices, equipment and systems are permitted to be removed in entirety;
2. Nonrequired devices, equipment and systems are permitted to be disabled, provided that all visible elements are removed;
3. Electrically charged devices, equipment and systems are permitted to be disabled, provided that they are disconnected from power sources and all visible elements are labeled as not being energized; and
4. Nonrequired fire protection systems are permitted to be disabled, provided that sprinkler heads, exposed valves, fire department connections, initiating and notification devices and similar equipment are removed, and any remaining visible components are labeled as not being in service.

[NY] SECTION 107
UNSAFE STRUCTURES AND EQUIPMENT

[NY] 107.1 General. If the *authority having jurisdiction* determines, during the inspection or otherwise, that a *premises*, *building* or *structure*, or any building system or equipment, in whole or in part, constitutes a clear and imminent threat to human life, safety or health, the *authority having jurisdiction* shall exercise its powers in due and proper manner so as to extend to the public protection from the hazards of threat to human life, safety, or health.

[NY] 107.1.1 Unsafe structures. An unsafe *structure* is one that is found to be dangerous to the life, health, property or safety of the public or the *occupants* of the structure by not providing minimum safeguards to protect or warn *occupants* in the event of fire, or because such *structure* contains unsafe equipment or is so damaged, decayed, dilapidated, structurally unsafe, or of such faulty construction or unstable foundation, that partial or complete collapse is possible.

[NY] 107.1.2 Unsafe equipment. Unsafe equipment includes any boiler, heating equipment, elevator, moving stairway, electrical wiring or device, flammable liquid containers or other equipment on the premises or within the structure that is in such disrepair or condition that such equipment is a hazard to life, health, property or safety of the public or occupants of the premises or structure.

[NY] 107.1.3 Structure unfit for human occupancy. A structure is unfit for human occupancy whenever such structure is unsafe, unlawful or, because of the degree to which the structure is in disrepair or lacks maintenance, is unsanitary, vermin or rat infested, contains filth and contamination, or lacks ventilation, illumination, sanitary or heating facilities or other essential equipment required by this code, or because the location of the structure constitutes a hazard to the occupants of the structure or to the public.

[NY] 107.1.4 Unlawful structure. An unlawful structure is one found in whole or in part to be occupied by more persons than permitted under this code, or was erected, altered or occupied contrary to law.

[NY] 107.2 Vacant structures. Vacant structures shall comply with this code and the *Fire Code of New York State.*

[NY] 107.3 Notice. Whenever a structure or equipment has been condemned under the provisions of this code, a notice shall be posted in a conspicuous place in or about the structure affected by such notice. If the notice pertains to equipment, it shall also be placed on the condemned equipment.

[NY] 107.4 Prohibited occupancy. No person shall occupy a placarded premises or shall operate placarded equipment.

[NY] 107.5 Placard removal. The placard shall not be removed until the defect or defects upon which the condemnation and placarding action were based have been eliminated.

[NY] 107.6 Abatement methods. The *owner*, owner's authorized agent, *operator* or *occupant* of a building, *premises* or equipment deemed unsafe by the *code official* shall abate or cause to be abated or corrected such unsafe conditions either by repair, rehabilitation, demolition or other *approved* corrective action.

[NY] 107.7 Record. The *building official* shall cause a report to be filed on an unsafe condition. The report shall state the *occupancy* of the structure and the nature of the unsafe condition.

[NY] SECTION 108
EMERGENCY MEASURES

[NY] 108.1 Imminent danger. The *authority having jurisdiction* is authorized to order and require the occupants to vacate premises when there exists:

1. Imminent danger of failure or collapse of a building or structure which endangers life;
2. A structure in which any part of the structure has fallen and life is endangered by the occupation of the structure;
3. An actual or potential danger to the building occupants or those in the proximity of any structure because of explosives, explosive fumes or vapors or the presence of toxic fumes, gases or materials; or
4. Operation of defective or dangerous equipment.

[NY] 108.2 Notice. The *authority having jurisdiction* shall require the posting at each entrance to such structure a notice reading as follows: "This Structure is Unsafe and its Occupancy Has Been Prohibited by the Code Enforcement Official." It shall be unlawful for any person to enter such structure except for the purpose of securing the structure, making the required repairs, removing the hazardous condition or of demolishing the same.

INTERNATIONAL CODE COUNCIL®
Copyright © 2019 ICC & NYSDOS. ALL RIGHTS RESERVED. Accessed by Lauren Gualdino (lgualdino@briarcliffmanor.org), (-) Order Number #100880972 on May 08, 2020 07:05 AM (PDT) pursuant to License Agreement with ICC & NYSDOS. No further reproduction, no

100880972

[NY] SECTION 109
SERVICE UTILITIES

[NY] 109.1 Notice of disconnection of service utilities. The *owner* or the *owner's* authorized agent shall notify the *building official* of the disconnection of any utility service to the *building*, *structure*, or system regulated by the *Uniform Code*.

[NY] SECTION 110
INSPECTION OF SOLID FUEL-BURNING HEATING APPLIANCES, CHIMNEYS AND FLUES

[NY] 110.1 General. Section 110 is made part of the *Uniform Code* pursuant to Executive Law Section 378(5-c).

[NY] 110.2 Permit. Prior to the installation of any *solid* fuel-burning heating appliance, *chimney* or flue in any *dwelling* used as a residence, the *owner* thereof, or his agent, shall first secure a *permit* from the *authority having jurisdiction*.

[NY] 110.3 Installation and Inspection. An appropriate and qualified inspector, as determined by the *authority having jurisdiction*, shall cause an inspection to be made of the *solid* fuel-burning heating appliance, *chimney* or flue at a time when such inspection will best determine conformity of such installation with the *Uniform Code*.

Exception: The *authority having jurisdiction* may waive such inspection for good cause shown.

[NY] 110.4 Certificate of approval. Upon approval of such installation, the *building official* or other appropriate official of the *authority having jurisdiction* shall issue a certificate evidencing compliance with the appropriate provisions of the *Uniform Code* (such certificate being hereinafter referred to as a "certificate of approval"). No *owner* of any *dwelling* used as a residence shall operate, or cause to be operated, any *solid* fuel-burning heating appliance until such installation, including *chimney* and flue, has been approved and a certificate of approval has been obtained from the *authority having jurisdiction*.

[NY] 110.4.1 Accidental fire. In the event of an accidental fire in a *solid* fuel-burning heating appliance, *chimney* or flue requiring the services of a fire department, the chief of the responding fire department may issue a temporary thirty-day certificate indicating substantial conformity with the *Uniform Code*.

The *authority having jurisdiction* shall cause an inspection to be made by an official inspector, as determined by the *Code Enforcement Program* of the *authority having jurisdiction*, and a new certificate to be issued indicating conformity of such *solid* fuel-burning heating appliance, *chimney* or flue with the *Uniform Code*.

[NY] 110.4.2 Liability. Pursuant to Executive Law Section 378(5-c)(f), the issuance of a certificate of approval shall not be deemed to give rise to any claim or cause of action for damages against the *authority having jurisdiction* or any official of the *authority having jurisdiction* for damages resulting from operation or use of such *solid* fuel-burning heating appliance, *chimney* or flue.

[NY] 110.5 Fee. The *authority having jurisdiction* may establish and collect a reasonable fee for such inspection from the *owner* of such property or such *owner's* agent.

[NY] 110.6 Violations. Pursuant to Executive Law Section 378(5-c)(h), any violation of this Section 110 shall be deemed a violation and shall be punishable by a fine not to exceed two hundred fifty dollars.

[NY] 110.7 Emergency repair. Where equipment replacements and *repairs* must be performed in an emergency situation and where a delay occasioned by the requirement of securing a *permit* could reasonably be expected to cause irreparable damage to the property or serious personal injury to the occupants or other person, the *owner* or his agent may commence such installation without first obtaining such *permit* provided application therefor is filed within three business days after such work is commenced.

INTERNATIONAL CODE COUNCIL®
Copyright © 2019 ICC & NYSDOS. ALL RIGHTS RESERVED. Accessed by Lauren Gualdino (lgualdino@briarcliffmanor.org), (-) Order Number #100880972 on May 08, 2020 07:05 AM (PDT) pursuant to License Agreement with ICC & NYSDOS. No further reproduction, no

INTERNATIONAL CODE COUNCIL®

Copyright © 2019 ICC & NYSDOS. ALL RIGHTS RESERVED. Accessed by Lauren Gualdino (lgualdino@briarcliffmanor.org), (-) Order Number #100880972 on May 08, 2020 07:05 AM (PDT) pursuant to License Agreement with ICC & NYSDOS. No further reproduction, no

100880972

CHAPTER 2
DEFINITIONS

SECTION 201
GENERAL

201.1 Scope. Unless otherwise expressly stated, the following terms shall, for the purposes of this code, have the meanings shown in this chapter.

201.2 Interchangeability. Words stated in the present tense include the future; words stated in the masculine gender include the feminine and neuter; the singular number includes the plural and the plural, the singular.

201.3 Terms defined in other codes. Where terms are not defined in this code and are defined in the *Building Code of New York State, Existing Building Code of New York State, Fire Code of New York State, Fuel Gas Code of New York State, Mechanical Code of New York State, Plumbing Code of New York State, Residential Code of New York State* or NFPA 70, such terms shall have the meanings ascribed to them as stated in those codes.

201.4 Terms not defined. Where terms are not defined through the methods authorized by this section, such terms shall have ordinarily accepted meanings such as the context implies.

201.5 Parts. Whenever the words "*dwelling unit*," "dwelling," "*premises*," "building," "*rooming house*," "*rooming unit,*" "*housekeeping unit*" or "story" are stated in this code, they shall be construed as though they were followed by the words "or any part thereof."

SECTION 202
GENERAL DEFINITIONS

ANCHORED. Secured in a manner that provides positive connection.

[A] APPROVED. Acceptable to the *building official*.

[NY] AUTHORITY HAVING JURISDICTION. The governmental unit or agency responsible for administration and enforcement of this code.

BASEMENT. That portion of a building that is partly or completely below grade.

BATHROOM. A room containing plumbing fixtures including a bathtub or shower.

BEDROOM. Any room or space used or intended to be used for sleeping purposes in either a dwelling or *sleeping unit*.

[NY] BUILDING CODE OF NEW YORK STATE. The 2020 edition of the publication entitled "Building Code of New York State," published by the International Code Council, Inc. (publication date November 2019).

[NY] BUILDING OFFICIAL. The officer who is charged with the administration and enforcement of this code, or any duly authorized representative.

[NY] CHILDREN'S OVERNIGHT CAMP. A property consisting of a tract of land and any tents, vehicles, buildings or other structures that may be pertinent to its use, any part of which may be occupied by persons under 18 years of age under general supervision for the purpose of outdoor or indoor organized activities and on which provisions are made for overnight occupancy of children. However, the term "children's overnight camp" shall not include any place or facility which has been excepted from the State Sanitary Code by the Commissioner of the New York State Department of Health pursuant to Section 1392(1) of the Public Health Law.

[NY] CODE ENFORCEMENT PROGRAM. The program under which an *authority having jurisdiction* administers and enforces this code, as such program is currently in effect and as such program may hereafter be amended from time to time.

CONDEMN. To adjudge unfit for *occupancy*.

COST OF SUCH DEMOLITION OR EMERGENCY REPAIRS. The costs shall include the actual costs of the demolition or repair of the structure less revenues obtained if salvage was conducted prior to demolition or repair. Costs shall include, but not be limited to, expenses incurred or necessitated related to demolition or emergency repairs, such as asbestos survey and abatement if necessary; costs of inspectors, testing agencies or experts retained relative to the demolition or emergency repairs; costs of testing; surveys for other materials that are controlled or regulated from being dumped in a landfill; title searches; mailing(s); postings; recording; and attorney fees expended for recovering of the cost of emergency repairs or to obtain or enforce an order of demolition made by a *building official*, the governing body or board of appeals.

DETACHED. When a structural element is physically disconnected from another and that connection is necessary to provide a positive connection.

DETERIORATION. To weaken, disintegrate, corrode, rust or decay and lose effectiveness.

[A] DWELLING UNIT. A single unit providing complete, independent living facilities for one or more persons, including permanent provisions for living, sleeping, eating, cooking and sanitation.

[Z] EASEMENT. That portion of land or property reserved for present or future use by a person or agency other than the legal fee *owner*(s) of the property. The *easement* shall be permitted to be for use under, on or above said lot or lots.

[NY] ENERGY CODE. The New York State Energy Conservation Construction Code, adopted pursuant to Article 11 of the New York State Energy Law.

EQUIPMENT SUPPORT. Those structural members or assemblies of members or manufactured elements, including braces, frames, lugs, snuggers, hangers or saddles, that transmit gravity load, lateral load and operating load between the equipment and the structure.

INTERNATIONAL CODE COUNCIL®
Copyright © 2019 ICC & NYSDOS. ALL RIGHTS RESERVED. Accessed by Lauren Gualdino (lgualdino@briarcliffmanor.org), (-) Order Number #100880972 on May 08, 2020 07:05 AM (PDT) pursuant to License Agreement with ICC & NYSDOS. No further reproduction, no

100880972

EXISTING BUILDING. A *building* or *structure* that is legally occupied and/or for which a *certificate of occupancy* authorizing its use(s) has been issued, without regard to the date on which such legal occupancy began or the date on which such certificate of occupancy was issued.

[NY] EXISTING BUILDING CODE OF NEW YORK STATE. The 2020 edition of the publication entitled "Existing Building Code of New York State," published by the International Code Council, Inc. (publication date November 2019).

EXTERIOR PROPERTY. The open space on the *premises* and on adjoining property under the control of *owners* or operators of such premises.

[NY] FIRE CODE OF NEW YORK STATE. The 2020 edition of the publication entitled "Fire Code of New York State," published by the International Code Council, Inc. (publication date November 2019).

[NY] FUEL GAS CODE OF NEW YORK STATE. The 2020 edition of the publication entitled "Fuel Gas Code of New York State," published by the International Code Council, Inc. (publication date November 2019).

GARBAGE. The animal or vegetable waste resulting from the handling, preparation, cooking and consumption of food.

[BE] GUARD. A building component or a system of building components located at or near the open sides of elevated walking surfaces that minimizes the possibility of a fall from the walking surface to a lower level.

[BG] HABITABLE SPACE. Space in a structure for living, sleeping, eating or cooking. *Bathrooms*, *toilet rooms*, closets, halls, storage or utility spaces, and similar areas are not considered *habitable spaces*.

[A] HISTORIC BUILDING. Any building or structure that is one or more of the following:

1. Listed or certified as eligible for listing, by the State Historic Preservation Officer or the Keeper of the National Register of Historic Places, in the National Register of Historic Places.
2. Designated as historic under an applicable state or local law.
3. Certified as a contributing resource within a National Register or state or locally designated historic district.

HOUSEKEEPING UNIT. A room or group of rooms forming a single *habitable space* equipped and intended to be used for living, sleeping, cooking and eating that does not contain, within such a unit, a toilet, lavatory and bathtub or shower.

IMMINENT DANGER. A condition that could cause serious or life-threatening injury or death at any time.

INFESTATION. The presence, within or contiguous to, a structure or *premises* of insects, rodents, vermin or other pests.

INOPERABLE MOTOR VEHICLE. A vehicle that cannot be driven upon the public streets for reason including but not limited to being unlicensed, wrecked, abandoned, in a state of disrepair, or incapable of being moved under its own power.

[A] LABELED. Equipment, materials or products to which have been affixed a label, seal, symbol or other identifying mark of a nationally recognized testing laboratory, *approved* agency or other organization concerned with product evaluation that maintains periodic inspection of the production of the above-*labeled* items and whose labeling indicates either that the equipment, material or product meets identified standards or has been tested and found suitable for a specified purpose.

LET FOR OCCUPANCY or LET. To permit, provide or offer possession or *occupancy* of a dwelling, *dwelling unit*, *rooming unit*, building, premise or structure by a person who is or is not the legal *owner* of record thereof, pursuant to a written or unwritten lease, agreement or license, or pursuant to a recorded or unrecorded agreement of contract for the sale of land.

[NY] LIVE FIRE TRAINING FACILITIES. As defined by NFPA 1402, fire service training centers, fire training structures and props, gas-fueled and flammable liquid-fueled live fire training systems, mobile fire training props, and associated training props.

[NY] MECHANICAL CODE OF NEW YORK STATE. The 2020 edition of the publication entitled "Mechanical Code of New York State," published by the International Code Council, Inc. (publication date November 2019).

NEGLECT. The lack of proper maintenance for a building or *structure*.

[A] OCCUPANCY. The purpose for which a building or portion thereof is utilized or occupied.

OCCUPANT. Any individual living or sleeping in a building, or having possession of a space within a building.

OPENABLE AREA. That part of a window, skylight or door which is available for unobstructed *ventilation* and which opens directly to the outdoors.

OPERATOR. Any person who has charge, care or control of a structure or *premises* that is let or offered for *occupancy*.

[A] OWNER. Any person, agent, *operator*, firm or corporation having legal or equitable interest in the property; or recorded in the official records of the state, county or municipality as holding title to the property; or otherwise having control of the property, including the guardian of the estate of any such person, and the executor or administrator of the estate of such person if ordered to take possession of real property by a court.

[NY] PART 1202. The regulations set forth in 19 NYCRR Part 1202 ("Uniform Code: Administration and Enforcement in Certain Local Governments"), as currently in effect and as hereafter amended from time to time.

[NY] PART 1203. The regulations set forth in 19 NYCRR Part 1203 ("Uniform Code: Minimum Standards for Administration and Enforcement"), as currently in effect and as hereafter amended from time to time.

[NY] PART 1203—COMPLIANT CODE ENFORCEMENT PROGRAM. A code enforcement program that includes the features required by Part 1203 and satisfies the requirements of Part 1203.

[NY] PART 1204. The regulations set forth in 19 NYCRR Part 1204 ("Uniform Code: Administration and Enforcement by State Agencies"), as currently in effect and as hereafter amended from time to time.

INTERNATIONAL CODE COUNCIL®
Copyright © 2019 ICC & NYSDOS. ALL RIGHTS RESERVED. Accessed by Lauren Gualdino (lgualdino@briarcliffmanor.org), (-) Order Number #100880972 on May 08, 2020 07:05 AM (PDT) pursuant to License Agreement with ICC & NYSDOS. No further reproduction, no

100880972

[NY] PART 1205. The regulations set forth in 19 NYCRR Part 1205 ("Uniform Code: Variance Procedures"), as currently in effect and as hereafter amended from time to time.

[A] PERSON. An individual, corporation, partnership or any other group acting as a unit.

PEST ELIMINATION. The control and elimination of insects, rodents or other pests by eliminating their harborage places; by removing or making inaccessible materials that serve as their food or water; by other *approved pest elimination* methods.

[NY] PLUMBING CODE OF NEW YORK STATE. The 2020 edition of the publication entitled "Plumbing Code of New York State," published by the International Code Council, Inc. (publication date November 2019).

[A] PREMISES. A lot, plot or parcel of land, *easement* or *public way*, including any structures thereon.

[A] PUBLIC WAY. Any street, alley or other parcel of land that: is open to the outside air; leads to a street; has been deeded, dedicated or otherwise permanently appropriated to the public for public use; and has a clear width and height of not less than 10 feet (3048 mm).

[NY] RESIDENTIAL CODE OF NEW YORK STATE. The 2020 edition of the publication entitled "Residential Code of New York State," published by the International Code Council, Inc. (publication date November 2019).

ROOMING HOUSE. A building arranged or occupied for lodging, with or without meals, for compensation and not occupied as a one- or two-family dwelling.

ROOMING UNIT. Any room or group of rooms forming a single habitable unit occupied or intended to be occupied for sleeping or living, but not for cooking purposes.

RUBBISH. Combustible and noncombustible waste materials, except garbage; the term shall include the residue from the burning of wood, coal, coke and other combustible materials, paper, rags, cartons, boxes, wood, excelsior, rubber, leather, tree branches, *yard* trimmings, tin cans, metals, mineral matter, glass, crockery and dust and other similar materials.

[A] SLEEPING UNIT. A room or space in which people sleep, which can also include permanent provisions for living, eating and either sanitation or kitchen facilities, but not both. Such rooms and spaces that are also part of a *dwelling unit* are not *sleeping units*.

STRICT LIABILITY OFFENSE. An offense in which the prosecution in a legal proceeding is not required to prove criminal intent as a part of its case. It is enough to prove that the defendant either did an act which was prohibited, or failed to do an act which the defendant was legally required to do.

[A] STRUCTURE. That which is built or constructed.

[NY] SUMMER CAMP CABIN. A sleeping quarter which:

1. Is located in a children's overnight camp.
2. Has a sleeping capacity of fewer than 25 occupants, with a total combined sleeping room floor area of 1,200 square feet (1115 m^2) or less for all sleeping rooms.
3. Is one story.
4. Is used and occupied only between June 1 and September 14.
5. Has no cooking facilities, no heating systems, and no solid fuel heating or burning systems.
6. Has only sleeping rooms (including the necessary area for storing occupant belongings) and bathrooms.
7. Has no interior corridors or separate common area rooms.
8. Has at least two exits per sleeping room which are remote from each other and which discharge directly to the building's exterior.
9. Has exit doors that open in the direction of, and are nonlocking against, egress.
10. Has smoke alarms in each sleeping room that are interconnected such that the activation of one alarm will activate all of the alarms in the cabin.

TENANT. A person, corporation, partnership or group, whether or not the legal *owner* of record, occupying a building or portion thereof as a unit.

TOILET ROOM. A room containing a water closet or urinal but not a bathtub or shower.

[NY] TOWNHOUSE. A single-family dwelling unit constructed in a group of three or more attached units in which each unit (1) extends from the foundation to roof, (2) has open space on at least two sides, and (3) has a separate *means of egress*.

ULTIMATE DEFORMATION. The deformation at which failure occurs and that shall be deemed to occur if the sustainable load reduces to 80 percent or less of the maximum strength.

[NY] UNIFORM CODE. The New York State Uniform Fire Prevention and Building Code, adopted pursuant to Article 18 of the New York State Executive Law, as currently in effect and as hereafter amended from time to time.

[M] VENTILATION. The natural or mechanical process of supplying conditioned or unconditioned air to, or removing such air from, any space.

[NY] WEEDS. Uncultivated vegetation such as grasses, brush, briars, and annual plants, excluding trees and cultivated vegetation, such as shrubs, flowers, gardens, and vegetation used for agricultural purposes.

WORKMANLIKE. Executed in a skilled manner; e.g., generally plumb, level, square, in line, undamaged and without marring adjacent work.

[Z] YARD. An open space on the same lot with a structure.

INTERNATIONAL CODE COUNCIL®
Copyright © 2019 ICC & NYSDOS. ALL RIGHTS RESERVED. Accessed by Lauren Gualdino (lgualdino@briarcliffmanor.org), (-) Order Number #100880972 on May 08, 2020 07:05 AM (PDT) pursuant to License Agreement with ICC & NYSDOS. No further reproduction, no

INTERNATIONAL CODE COUNCIL®

Copyright © 2019 ICC & NYSDOS. ALL RIGHTS RESERVED. Accessed by Lauren Gualdino (lgualdino@briarcliffmanor.org), (-) Order Number #100880972 on May 08, 2020 07:05 AM (PDT) pursuant to License Agreement with ICC & NYSDOS. No further reproduction, no

100880972

CHAPTER 3
GENERAL REQUIREMENTS

SECTION 301
GENERAL

301.1 Scope. The provisions of this chapter shall govern the minimum conditions and the responsibilities of persons for maintenance of structures, equipment and *exterior property*.

301.2 Responsibility. The *owner* of the *premises* shall maintain the structures and *exterior property* in compliance with these requirements, except as otherwise provided for in this code. A person shall not occupy as owner-occupant or permit another person to occupy *premises* that are not in a sanitary and safe condition and that do not comply with the requirements of this chapter. *Occupants* of a *dwelling unit*, *rooming unit* or *housekeeping unit* are responsible for keeping in a clean, sanitary and safe condition that part of the *dwelling unit*, *rooming unit*, *housekeeping unit* or *premises* they occupy and control.

[NY] 301.3 Vacant structures and land. Vacant premises, structures and portions thereof, or vacant land shall be maintained by the owner in a clean, safe, secure and sanitary condition as provided herein so as not to cause a blighting problem or adversely affect the public health or safety.

SECTION 302
EXTERIOR PROPERTY AREAS

302.1 Sanitation. *Exterior property* and *premises* shall be maintained in a clean, safe and sanitary condition. The *occupant* shall keep that part of the *exterior property* that such *occupant* occupies or controls in a clean and sanitary condition.

302.2 Grading and drainage. *Premises* shall be graded and maintained to prevent the erosion of soil and to prevent the accumulation of stagnant water thereon, or within any structure located thereon.

Exception: *Approved* retention areas and reservoirs.

302.3 Sidewalks and driveways. Sidewalks, walkways, stairs, driveways, parking spaces and similar areas shall be kept in a proper state of repair, and maintained free from hazardous conditions.

[NY] 302.4 Weeds. Except as provided for in statute, local law, ordinance, or other regulations, all developed areas of a premises that are intended to be used by building occupants or the public shall be maintained free from weeds in excess of 10 inches (254 mm). Noxious weeds shall be prohibited.

302.5 Rodent harborage. Structures and *exterior property* shall be kept free from rodent harborage and *infestation*. Where rodents are found, they shall be promptly exterminated by *approved* processes that will not be injurious to human health. After pest elimination, proper precautions shall be taken to eliminate rodent harborage and prevent reinfestation.

302.6 Exhaust vents. Pipes, ducts, conductors, fans or blowers shall not discharge gases, steam, vapor, hot air, grease, smoke, odors or other gaseous or particulate wastes directly on abutting or adjacent public or private property or that of another *tenant*.

302.7 Accessory structures. Accessory structures, including *detached* garages, fences and walls, shall be maintained structurally sound and in good repair.

[NY] 302.8 Motor vehicles. Except as provided for in statute, local law, ordinance or other regulations, not more than one inoperative or unlicensed motor vehicle shall be parked, kept or stored on any premises, and no vehicle shall at any time be in a state of major disassembly, disrepair, or in the process of being stripped or dismantled. Painting of vehicles is prohibited unless conducted inside an *approved* spray booth.

Exception: A vehicle of any type is permitted to undergo major overhaul, including body work, provided that such work is performed inside a structure or similarly enclosed area designed and *approved* for such purposes.

302.9 Defacement of property. A person shall not willfully or wantonly damage, mutilate or deface any exterior surface of any structure or building on any private or public property by placing thereon any marking, carving or graffiti.

It shall be the responsibility of the *owner* to restore said surface to an *approved* state of maintenance and repair.

SECTION 303
SWIMMING POOLS, SPAS AND HOT TUBS

303.1 Swimming pools. Swimming pools shall be maintained in a clean and sanitary condition, and in good repair.

[NY] 303.2 Enclosures. The provisions of this section shall control the maintenance of barriers for swimming pools, spas and hot tubs installed, constructed or substantially modified after December 14, 2006. Design controls are intended to provide protection against potential drowning and near-drowning by restricting access to swimming pools, spas and hot tubs.

[NY] 303.2.1 Compliance with other codes. Enclosures for residential swimming pools, spas and hot tubs shall be in compliance with Section R326 of the *Residential Code of New York State*. Enclosures for public swimming pools, spas and hot tubs shall be in compliance with Section 3109 of the *Building Code of New York State*.

[NY] 303.2.2 Temporary barriers. An outdoor swimming pool, including an in-ground, above-ground or on-ground pool, hot tub or spa shall be surrounded by a temporary barrier during installation or construction in compliance with Section R326.4 of the *Residential Code of*

INTERNATIONAL CODE COUNCIL®
Copyright © 2019 ICC & NYSDOS. ALL RIGHTS RESERVED. Accessed by Lauren Gualdino (lgualdino@briarcliffmanor.org), (-) Order Number #100880972 on May 08, 2020 07:05 AM (PDT) pursuant to License Agreement with ICC & NYSDOS. No further reproduction, no

100880972

New York State or Section 3109.3.2 of the *Building Code of New York State,* as applicable.

[NY] 303.3 Swimming pool and spa alarms. A swimming pool or spa installed, constructed or substantially modified after December 14, 2006, shall be equipped with an approved pool alarm in compliance with Section R326.7 of the *Residential Code of New York State* or Section R3109.5 of the *Building Code of New York State*.

Exceptions:

1. A hot tub or spa equipped with a safety cover that complies with ASTM F1346.
2. A swimming pool (other than a hot tub or spa) equipped with an automatic power safety cover that complies with ASTM F1346.

[NY] 303.4 Entrapment protection for swimming pools and spas. Swimming pools and spas shall maintain body entrapment protections for suction outlets in accordance with the *Building Code of New York State* or the *Residential Code of New York State*, as applicable.

SECTION 304
EXTERIOR STRUCTURE

304.1 General. The exterior of a structure shall be maintained in good repair, structurally sound and sanitary so as not to pose a threat to the public health, safety or welfare.

304.1.1 Unsafe conditions. The following conditions shall be determined as unsafe and shall be repaired or replaced to comply with the *Building Code of New York State* or the *Existing Building Code of New York State* as required for existing buildings:

1. The nominal strength of any structural member is exceeded by nominal loads, the load effects or the required strength.
2. The *anchorage* of the floor or roof to walls or columns, and of walls and columns to foundations is not capable of resisting all nominal loads or load effects.
3. Structures or components thereof that have reached their limit state.
4. Siding and masonry joints including joints between the building envelope and the perimeter of windows, doors and skylights are not maintained, weather resistant or water tight.
5. Structural members that have evidence of *deterioration* or that are not capable of safely supporting all nominal loads and load effects.
6. Foundation systems that are not firmly supported by footings, are not plumb and free from open cracks and breaks, are not properly *anchored* or are not capable of supporting all nominal loads and resisting all load effects.
7. Exterior walls that are not *anchored* to supporting and supported elements or are not plumb and free of holes, cracks or breaks and loose or rotting materials, are not properly *anchored* or are not capable of supporting all nominal loads and resisting all load effects.
8. Roofing or roofing components that have defects that admit rain, roof surfaces with inadequate drainage, or any portion of the roof framing that is not in good repair with signs of *deterioration*, fatigue or without proper anchorage and incapable of supporting all nominal loads and resisting all load effects.
9. Flooring and flooring components with defects that affect serviceability or flooring components that show signs of *deterioration* or fatigue, are not properly *anchored* or are incapable of supporting all nominal loads and resisting all load effects.
10. Veneer, cornices, belt courses, corbels, trim, wall facings and similar decorative features not properly anchored or that are anchored with connections not capable of supporting all nominal loads and resisting all load effects.
11. Overhang extensions or projections including, but not limited to, trash chutes, canopies, marquees, signs, awnings, fire escapes, standpipes and exhaust ducts not properly *anchored* or that are *anchored* with connections not capable of supporting all nominal loads and resisting all load effects.
12. Exterior stairs, decks, porches, balconies and all similar appurtenances attached thereto, including *guard*s and handrails, are not structurally sound, not properly *anchored* or that are *anchored* with connections not capable of supporting all nominal loads and resisting all load effects.
13. Chimneys, cooling towers, smokestacks and similar appurtenances not structurally sound or not properly *anchored,* or that are anchored with connections not capable of supporting all nominal loads and resisting all load effects.

Exceptions:

1. Where substantiated otherwise by an *approved* method.
2. Demolition of unsafe conditions shall be permitted where *approved* by the *building official*.

304.2 Protective treatment. Exterior surfaces, including but not limited to, doors, door and window frames, cornices, porches, trim, balconies, decks and fences, shall be maintained in good condition. Exterior wood surfaces, other than decay-resistant woods, shall be protected from the elements and decay by painting or other protective covering or treatment. Peeling, flaking and chipped paint shall be eliminated and surfaces repainted. Siding and masonry joints, as well as those between the building envelope and the perimeter of windows, doors and skylights, shall be maintained weather resistant and water tight. Metal surfaces subject to rust or corrosion shall be coated to inhibit such rust and corrosion, and surfaces with rust or corrosion shall be stabilized and coated to inhibit future rust and corrosion. Oxidation stains shall be removed from exterior surfaces. Surfaces designed for stabilization by oxidation are exempt from this requirement.

INTERNATIONAL CODE COUNCIL®
Copyright © 2019 ICC & NYSDOS. ALL RIGHTS RESERVED. Accessed by Lauren Gualdino (lgualdino@briarcliffmanor.org), (-) Order Number #100880972 on May 08, 2020 07:05 AM (PDT) pursuant to License Agreement with ICC & NYSDOS. No further reproduction, no

100880972

[NY] 304.2.1 Lead-based paint. In addition to requirements of this code, 40 CFR 745 (titled "Lead-based Paint Poisoning Prevention in Certain Residential Structures"), a regulation issued and enforced by the Federal Environmental Protection Agency, applies to certain activities in buildings that may contain lead-based paint, including renovations performed for compensation in "target housing" and "child-occupied facilities," "abatement" of lead-based paint hazards and other "lead-based paint activities" (as those terms are defined in 40 CFR Part 745).

[F] 304.3 Premises identification. Buildings shall have *approved* address numbers placed in a position to be plainly legible and visible from the street or road fronting the property. These numbers shall contrast with their background. Address numbers shall be Arabic numerals or alphabet letters. Numbers shall be not less than 4 inches (102 mm) in height with a minimum stroke width of 0.5 inch (12.7 mm).

304.4 Structural members. Structural members shall be maintained free from *deterioration*, and shall be capable of safely supporting the imposed dead and live loads.

304.5 Foundation walls. Foundation walls shall be maintained plumb and free from open cracks and breaks and shall be kept in such condition so as to prevent the entry of rodents and other pests.

304.6 Exterior walls. Exterior walls shall be free from holes, breaks, and loose or rotting materials; and maintained weatherproof and properly surface coated where required to prevent *deterioration*.

304.7 Roofs and drainage. The roof and flashing shall be sound, tight and not have defects that admit rain. Roof drainage shall be adequate to prevent dampness or *deterioration* in the walls or interior portion of the structure. Roof drains, gutters and downspouts shall be maintained in good repair and free from obstructions. Roof water shall not be discharged in a manner that creates a public nuisance.

304.8 Decorative features. Cornices, belt courses, corbels, terra cotta trim, wall facings and similar decorative features shall be maintained in good repair with proper anchorage and in a safe condition.

304.9 Overhang extensions. Overhang extensions including, but not limited to, canopies, marquees, signs, metal awnings, fire escapes, standpipes and exhaust ducts shall be maintained in good repair and be properly *anchored* so as to be kept in a sound condition. Where required, all exposed surfaces of metal or wood shall be protected from the elements and against decay or rust by periodic application of weather-coating materials, such as paint or similar surface treatment.

304.10 Stairways, decks, porches and balconies. Every exterior stairway, deck, porch and balcony, and all appurtenances attached thereto, shall be maintained structurally sound, in good repair, with proper anchorage and capable of supporting the imposed loads.

304.11 Chimneys and towers. Chimneys, cooling towers, smoke stacks, and similar appurtenances shall be maintained structurally safe and sound, and in good repair. Exposed surfaces of metal or wood shall be protected from the elements and against decay or rust by periodic application of weather-coating materials, such as paint or similar surface treatment.

304.12 Handrails and guards. Every handrail and *guard* shall be firmly fastened and capable of supporting normally imposed loads and shall be maintained in good condition.

304.13 Window, skylight and door frames. Every window, skylight, door and frame shall be kept in sound condition, good repair and weather tight.

304.13.1 Glazing. Glazing materials shall be maintained free from cracks and holes.

304.13.2 Openable windows. Every window, other than a fixed window, shall be easily openable and capable of being held in position by window hardware.

[NY] 304.14 Insect screens. During the period from May 15 to September 15, every door, window and other outside opening required for *ventilation* of habitable rooms, food preparation areas, food service areas or any areas where products to be included or utilized in food for human consumption are processed, manufactured, packaged or stored shall be supplied with *approved* tightly fitting screens of minimum 16 mesh per inch (16 mesh per 25 mm), and every screen door used for insect control shall have a self-closing device in good working condition.

Exception: Screens shall not be required where other *approved* means, such as air curtains or insect repellent fans, are employed.

304.15 Doors. Exterior doors, door assemblies, operator systems if provided, and hardware shall be maintained in good condition. Locks at all entrances to dwelling units and sleeping units shall tightly secure the door. Locks on means of egress doors shall be in accordance with Section 702.3.

304.16 Basement hatchways. Every *basement* hatchway shall be maintained to prevent the entrance of rodents, rain and surface drainage water.

304.17 Guards for basement windows. Every *basement* window that is openable shall be supplied with rodent shields, storm windows or other *approved* protection against the entry of rodents.

304.18 Building security. Doors, windows or hatchways for *dwelling units*, room units or *housekeeping units* shall be provided with devices designed to provide security for the *occupant*s and property within.

304.18.1 Doors. Doors providing access to a *dwelling unit*, *rooming unit* or *housekeeping unit* that is rented, leased or let shall be equipped with a deadbolt lock designed to be readily openable from the side from which egress is to be made without the need for keys, special knowledge or effort and shall have a minimum lock throw of 1 inch (25 mm). Such deadbolt locks shall be installed according to the manufacturer's specifications and maintained in good working order. For the purpose of this section, a sliding bolt shall not be considered an acceptable deadbolt lock.

304.18.2 Windows. Operable windows located in whole or in part within 6 feet (1828 mm) above ground level or a walking surface below that provide access to a *dwelling*

INTERNATIONAL CODE COUNCIL®
Copyright © 2019 ICC & NYSDOS. ALL RIGHTS RESERVED. Accessed by Lauren Gualdino (lgualdino@briarcliffmanor.org), (-) Order Number #100880972 on May 08, 2020 07:05 AM (PDT) pursuant to License Agreement with ICC & NYSDOS. No further reproduction, no

100880972

unit, *rooming unit* or *housekeeping unit* that is rented, leased or let shall be equipped with a window sash locking device.

304.18.3 Basement hatchways. *Basement* hatchways that provide access to a *dwelling unit*, *rooming unit* or *housekeeping unit* that is rented, leased or let shall be equipped with devices that secure the units from unauthorized entry.

304.19 Gates. Exterior gates, gate assemblies, operator systems if provided, and hardware shall be maintained in good condition. Latches at all entrances shall tightly secure the gates.

SECTION 305
INTERIOR STRUCTURE

305.1 General. The interior of a structure and equipment therein shall be maintained in good repair, structurally sound and in a sanitary condition. *Occupants* shall keep that part of the structure that they occupy or control in a clean and sanitary condition. Every *owner* of a structure containing a *rooming house*, *housekeeping units*, a hotel, a dormitory, two or more *dwelling unit*s or two or more nonresidential occupancies, shall maintain, in a clean and sanitary condition, the shared or public areas of the structure and *exterior property*.

305.1.1 Unsafe conditions. The following conditions shall be determined as unsafe and shall be repaired or replaced to comply with the *Building Code of New York State* or the *Existing Building Code of New York State* as required for existing buildings as required for existing buildings, or the *Residential Code of New York State* as applicable:

1. The nominal strength of any structural member is exceeded by nominal loads, the load effects or the required strength.
2. The anchorage of the floor or roof to walls or columns, and of walls and columns to foundations is not capable of resisting all nominal loads or load effects.
3. Structures or components thereof that have reached their limit state.
4. Structural members are incapable of supporting nominal loads and load effects.
5. Stairs, landings, balconies and all similar walking surfaces, including *guards* and handrails, are not structurally sound, not properly *anchored* or are *anchored* with connections not capable of supporting all nominal loads and resisting all load effects.
6. Foundation systems that are not firmly supported by footings are not plumb and free from open cracks and breaks, are not properly *anchored* or are not capable of supporting all nominal loads and resisting all load effects.

Exceptions:

1. Where substantiated otherwise by an *approved* method.
2. Demolition of unsafe conditions shall be permitted where *approved* by the *building official*.

305.2 Structural members. Structural members shall be maintained structurally sound, and be capable of supporting the imposed loads.

305.3 Interior surfaces. Interior surfaces, including windows and doors, shall be maintained in good, clean and sanitary condition. Peeling, chipping, flaking or abraded paint shall be repaired, removed or covered. Cracked or loose plaster, decayed wood and other defective surface conditions shall be corrected.

[NY] 305.3.1 Lead-based paint. In addition to requirements of this code, 40 CFR 745 (titled "Lead-based Paint Poisoning Prevention in Certain Residential Structures"), a regulation issued and enforced by the Federal Environmental Protection Agency, applies to certain activities in buildings that may contain lead-based paint, including renovations performed for compensation in "target housing" and "child-occupied facilities," "abatement" of lead-based paint hazards and other "lead-based paint activities" (as those terms are defined in 40 CFR Part 745).

305.4 Stairs and walking surfaces. Every stair, ramp, landing, balcony, porch, deck or other walking surface shall be maintained in sound condition and good repair.

305.5 Handrails and guards. Every handrail and *guard* shall be firmly fastened and capable of supporting normally imposed loads and shall be maintained in good condition.

305.6 Interior doors. Every interior door shall fit reasonably well within its frame and shall be capable of being opened and closed by being properly and securely attached to jambs, headers or tracks as intended by the manufacturer of the attachment hardware.

[NY] 305.7 Diaper changing stations. Diaper changing stations installed in any building shall be maintained in a safe, sanitary, and working condition.

SECTION 306
COMPONENT SERVICEABILITY

306.1 General. The components of a structure and equipment therein shall be maintained in good repair, structurally sound and in a sanitary condition.

306.1.1 Unsafe conditions. Where any of the following conditions cause the component or system to be beyond its limit state, the component or system shall be determined as unsafe and shall be repaired or replaced to comply with the *Building Code of New York State* or the *Existing Building Code of New York State* as required for existing buildings:

1. Soils that have been subjected to any of the following conditions:
   1.1. Collapse of footing or foundation system.
   1.2. Damage to footing, foundation, concrete or other structural element due to soil expansion.

INTERNATIONAL CODE COUNCIL®
Copyright © 2019 ICC & NYSDOS. ALL RIGHTS RESERVED. Accessed by Lauren Gualdino (lgualdino@briarcliffmanor.org), (-) Order Number #100880972 on May 08, 2020 07:05 AM (PDT) pursuant to License Agreement with ICC & NYSDOS. No further reproduction, no

100880972

1.3. Adverse effects to the design strength of footing, foundation, concrete or other structural element due to a chemical reaction from the soil.

1.4. Inadequate soil as determined by a geotechnical investigation.

1.5. Where the allowable bearing capacity of the soil is in doubt.

1.6. Adverse effects to the footing, foundation, concrete or other structural element due to the ground water table.

2. Concrete that has been subjected to any of the following conditions:

2.1. *Deterioration*.

2.2. *Ultimate deformation*.

2.3. Fractures.

2.4. Fissures.

2.5. Spalling.

2.6. Exposed reinforcement.

2.7. *Detached*, dislodged or failing connections.

3. Aluminum that has been subjected to any of the following conditions:

3.1. *Deterioration*.

3.2. Corrosion.

3.3. Elastic deformation.

3.4. *Ultimate deformation*.

3.5. Stress or strain cracks.

3.6. Joint fatigue.

3.7. *Detached*, dislodged or failing connections.

4. Masonry that has been subjected to any of the following conditions:

4.1. *Deterioration.*

4.2. *Ultimate deformation.*

4.3. Fractures in masonry or mortar joints.

4.4. Fissures in masonry or mortar joints.

4.5. Spalling.

4.6. Exposed reinforcement.

4.7. *Detached,* dislodged or failing connections.

5. Steel that has been subjected to any of the following conditions:

5.1. *Deterioration.*

5.2. Elastic deformation.

5.3. *Ultimate deformation.*

5.4. Metal fatigue.

5.5. *Detached,* dislodged or failing connections.

6. Wood that has been subjected to any of the following conditions:

6.1. Ultimate deformation.

6.2. Deterioration.

6.3. Damage from insects, rodents and other vermin.

6.4. Fire damage beyond charring.

6.5. Significant splits and checks.

6.6. Horizontal shear cracks.

6.7. Vertical shear cracks.

6.8. Inadequate support.

6.9. Detached, dislodged or failing connections.

6.10. Excessive cutting and notching.

Exceptions:

1. Where substantiated otherwise by an *approved* method.
2. Demolition of unsafe conditions shall be permitted where *approved* by the *building official.*

SECTION 307
HANDRAILS AND GUARDRAILS

307.1 General. Every exterior and interior flight of stairs having more than four risers shall have a handrail on one side of the stair and every open portion of a stair, landing, balcony, porch, deck, ramp or other walking surface that is more than 30 inches (762 mm) above the floor or grade below shall have *guards.* Handrails shall be not less than 30 inches (762 mm) in height or more than 42 inches (1067 mm) in height measured vertically above the nosing of the tread or above the finished floor of the landing or walking surfaces. *Guards* shall be not less than 30 inches (762 mm) in height above the floor of the landing, balcony, porch, deck, or ramp or other walking surface.

Exception: *Guards* shall not be required where exempted by the adopted building code.

SECTION 308
RUBBISH AND GARBAGE

308.1 Accumulation of rubbish or garbage. *Exterior property* and *premises,* and the interior of every structure, shall be free from any accumulation of *rubbish* or garbage.

308.2 Disposal of rubbish. Every *occupant* of a structure shall dispose of all *rubbish* in a clean and sanitary manner by placing such *rubbish* in *approved* containers.

308.2.1 Rubbish storage facilities. The *owner* of every occupied *premises* shall supply *approved* covered containers for *rubbish,* and the *owner* of the *premises* shall be responsible for the removal of *rubbish.*

308.2.2 Refrigerators. Refrigerators and similar equipment not in operation shall not be discarded, abandoned or stored on *premises* without first removing the doors.

308.3 Disposal of garbage. Every *occupant* of a structure shall dispose of garbage in a clean and sanitary manner by placing such garbage in an *approved* garbage disposal facility or *approved* garbage containers.

308.3.1 Garbage facilities. The *owner* of every dwelling shall supply one of the following: an *approved* mechanical

INTERNATIONAL CODE COUNCIL®
Copyright © 2019 ICC & NYSDOS. ALL RIGHTS RESERVED. Accessed by Lauren Gualdino (lgualdino@briarcliffmanor.org), (-) Order Number #100880972 on May 08, 2020 07:05 AM (PDT) pursuant to License Agreement with ICC & NYSDOS. No further reproduction, no

100880972

food waste grinder in each *dwelling unit;* an *approved* incinerator unit in the structure available to the *occupants* in each *dwelling unit;* or an *approved* leakproof, covered, outside garbage container.

308.3.2 Containers. The *operator* of every establishment producing garbage shall provide, and at all times cause to be utilized, *approved* leakproof containers provided with close-fitting covers for the storage of such materials until removed from the *premises* for disposal.

SECTION 309
PEST ELIMINATION

309.1 Infestation. Structures shall be kept free from insect and rodent *infestation.* Structures in which insects or rodents are found shall be promptly exterminated by *approved* processes that will not be injurious to human health. After pest elimination, proper precautions shall be taken to prevent reinfestation.

309.2 Owner. The *owner* of any structure shall be responsible for pest elimination within the structure prior to renting or leasing the structure.

309.3 Single occupant. The *occupant* of a one-family dwelling or of a single-*tenant* nonresidential structure shall be responsible for pest elimination on the *premises.*

309.4 Multiple occupancy. The *owner* of a structure containing two or more *dwelling unit*s, a multiple *occupancy,* a *rooming house* or a nonresidential structure shall be responsible for pest elimination in the public or shared areas of the structure and *exterior property*. If *infestation* is caused by failure of an *occupant* to prevent such *infestation* in the area occupied, the *occupant* and *owner* shall be responsible for pest elimination.

309.5 Occupant. The *occupant* of any structure shall be responsible for the continued rodent and pest-free condition of the structure.

Exception: Where the *infestations* are caused by defects in the structure, the *owner* shall be responsible for pest elimination.

[NY] SECTION 310
LIVE FIRE TRAINING FACILITES

[NY] 310.1 Live fire training facilities. Live fire training facilities shall be maintained in accordance with NFPA 1402 and NFPA 1403.

INTERNATIONAL CODE COUNCIL®
Copyright © 2019 ICC & NYSDOS. ALL RIGHTS RESERVED. Accessed by Lauren Gualdino (lgualdino@briarcliffmanor.org), (-) Order Number #100880972 on May 08, 2020 07:05 AM (PDT) pursuant to License Agreement with ICC & NYSDOS. No further reproduction, no

100880972

CHAPTER 4
LIGHT, VENTILATION AND OCCUPANCY LIMITATIONS

SECTION 401
GENERAL

401.1 Scope. The provisions of this chapter shall govern the minimum conditions and standards for light, *ventilation* and space for occupying a structure.

401.2 Responsibility. The *owner* of the structure shall provide and maintain light, *ventilation* and space conditions in compliance with these requirements. A person shall not occupy as *owner-occupant*, or permit another person to occupy, any *premises* that do not comply with the requirements of this chapter.

401.3 Alternative devices. In lieu of the means for natural light and *ventilation* herein prescribed, artificial light or mechanical *ventilation* complying with the *Building Code of New York State* shall be permitted.

SECTION 402
LIGHT

402.1 Habitable spaces. Every *habitable space* shall have not less than one window of *approved* size facing directly to the outdoors or to a court. The minimum total glazed area for every *habitable space* shall be 8 percent of the floor area of such room. Wherever walls or other portions of a structure face a window of any room and such obstructions are located less than 3 feet (914 mm) from the window and extend to a level above that of the ceiling of the room, such window shall not be deemed to face directly to the outdoors nor to a court and shall not be included as contributing to the required minimum total window area for the room.

Exception: Where natural light for rooms or spaces without exterior glazing areas is provided through an adjoining room, the unobstructed opening to the adjoining room shall be not less than 8 percent of the floor area of the interior room or space, or not less than 25 square feet (2.33 m^2), whichever is greater. The exterior glazing area shall be based on the total floor area being served.

402.2 Common halls and stairways. Every common hall and stairway in residential occupancies, other than in one- and two-family dwellings, shall be lighted at all times with not less than a 60-watt standard incandescent light bulb for each 200 square feet (19 m^2) of floor area or equivalent illumination, provided that the spacing between lights shall not be greater than 30 feet (9144 mm). In other than residential occupancies, interior and exterior means of egress, stairways shall be illuminated at all times the building space served by the means of egress is occupied with not less than 1 footcandle (11 lux) at floors, landings and treads.

402.3 Other spaces. Other spaces shall be provided with natural or artificial light sufficient to permit the maintenance of sanitary conditions, and the safe *occupancy* of the space and utilization of the appliances, equipment and fixtures.

SECTION 403
VENTILATION

403.1 Habitable spaces. Every *habitable space* shall have not less than one openable window. The total openable area of the window in every room shall be equal to not less than 45 percent of the minimum glazed area required in Section 402.1.

Exception: Where rooms and spaces without openings to the outdoors are ventilated through an adjoining room, the unobstructed opening to the adjoining room shall be not less than 8 percent of the floor area of the interior room or space, but not less than 25 square feet (2.33 m^2). The *ventilation* openings to the outdoors shall be based on a total floor area being ventilated.

403.2 Bathrooms and toilet rooms. Every *bathroom* and *toilet room* shall comply with the *ventilation* requirements for *habitable spaces* as required by Section 403.1, except that a window shall not be required in such spaces equipped with a mechanical *ventilation* system. Air exhausted by a mechanical *ventilation* system from a *bathroom* or *toilet room* shall discharge to the outdoors and shall not be recirculated.

403.3 Cooking facilities. Unless *approved* through the certificate of *occupancy*, cooking shall not be permitted in any *rooming unit* or dormitory unit, and a cooking facility or appliance shall not be permitted to be present in the *rooming unit* or dormitory unit.

Exceptions:

1. Where specifically *approved* in writing by the *building official.*
2. Devices such as coffee pots and microwave ovens shall not be considered cooking appliances.

403.4 Process ventilation. Where injurious, toxic, irritating or noxious fumes, gases, dusts or mists are generated, a local exhaust *ventilation* system shall be provided to remove the contaminating agent at the source. Air shall be exhausted to the exterior and not be recirculated to any space.

403.5 Clothes dryer exhaust. Clothes dryer exhaust systems shall be independent of all other systems and shall be exhausted outside the structure in accordance with the manufacturer's instructions.

Exception: Listed and *labeled* condensing (ductless) clothes dryers.

SECTION 404
OCCUPANCY LIMITATIONS

404.1 Privacy. *Dwelling units*, hotel units, *housekeeping units*, *rooming units* and dormitory units shall be arranged to provide privacy and be separate from other adjoining spaces.

404.2 Minimum room widths. A habitable room, other than a kitchen, shall be not less than 7 feet (2134 mm) in any plan dimension. Kitchens shall have a minimum clear passageway

INTERNATIONAL CODE COUNCIL®
Copyright © 2019 ICC & NYSDOS. ALL RIGHTS RESERVED. Accessed by Lauren Gualdino (lgualdino@briarcliffmanor.org), (-) Order Number #100880972 on May 08, 2020 07:05 AM (PDT) pursuant to License Agreement with ICC & NYSDOS. No further reproduction, no

100880972

of 3 feet (914 mm) between counterfronts and appliances or counterfronts and walls.

[NY] 404.3 Minimum ceiling heights. *Habitable spaces*, hallways, corridors, laundry areas, *bathrooms*, *toilet rooms* and habitable *basement* areas shall have a minimum clear ceiling height of 7 feet (2134 mm).

Exceptions:

1. In one- and two-family dwellings, beams or girders spaced not less than 4 feet (1219 mm) on center and projecting not greater than 6 inches (152 mm) below the required ceiling height.
2. *Basement* rooms in one- and two-family dwellings occupied exclusively for laundry, study or recreation purposes, having a minimum ceiling height of 6 feet 8 inches (2033 mm) with a minimum clear height of 6 feet 4 inches (1932 mm) under beams, girders, ducts and similar obstructions.
3. Rooms occupied exclusively for sleeping, study or similar purposes and having a sloped ceiling over all or part of the room, with a minimum clear ceiling height of 7 feet (2134 mm) over not less than one-third of the required minimum floor area. In calculating the floor area of such rooms, only those portions of the floor area with a minimum clear ceiling height of 5 feet (1524 mm) shall be included.
4. Manufactured housing regulated in the *Residential Code of New York State* shall be permitted to retain ceiling heights provided at time of manufacture.
5. Spaces legally in existence before January 1, 2003, and spaces for which a variance has been legally granted shall be allowed to be occupied.
6. Ceiling heights reduced by necessary repairs shall be no lower than 6 feet, 8 inches (2032 mm).

[NY] 404.4 Habitable room and bedroom room requirements. Every *habitable room and bedroom* shall comply with the requirements of Sections 404.4.1 through 404.4.5.

Exception: Sleeping quarters housing more than four persons in children's overnight camps shall comply with the requirements of Section 404.8.

[NY] 404.4.1 Room area. Every habitable room shall contain not less than 70 square feet (6.5 m^2) and every bedroom occupied by more than one person shall contain not less than 50 square feet (4.6 m^2) of floor area for each occupant thereof.

404.4.2 Access from bedrooms. *Bedrooms* shall not constitute the only means of access to other *bedrooms* or *habitable spaces* and shall not serve as the only means of egress from other *habitable spaces*.

Exception: Units that contain fewer than two *bedrooms*.

404.4.3 Water closet accessibility. Every *bedroom* shall have access to not less than one water closet and one lavatory without passing through another *bedroom*. Every *bedroom* in a *dwelling unit* shall have access to not less than one water closet and lavatory located in the same story as the *bedroom* or an adjacent story.

404.4.4 Prohibited occupancy. Kitchens and nonhabitable spaces shall not be used for sleeping purposes.

404.4.5 Other requirements. *Bedrooms* shall comply with the applicable provisions of this code including, but not limited to, the light, *ventilation*, room area, ceiling height and room width requirements of this chapter; the plumbing facilities and water-heating facilities requirements of Chapter 5; the heating facilities and electrical receptacle requirements of Chapter 6; and the smoke detector and emergency escape requirements of Chapter 7.

404.5 Overcrowding. Dwelling units shall not be occupied by more occupants than permitted by the minimum area requirements of Table 404.5.

[NY] TABLE 404.5
MINIMUM AREA REQUIREMENTS

SPACE	MINIMUM AREA IN SQUARE FEET		
	1-2 occupants	3-5 occupants	6 or more occupants
Living room[a, b]	70	120	150
Dining room[a, b]	No requirement	80	100
Bedrooms	Shall comply with Section 404.4.1		

For SI: 1 square foot = 0.0929 m^2.

a. See Section 404.5.2 for combined living room/dining room spaces.

b. See Section 404.5.1 for limitations on determining the minimum occupancy area for sleeping purposes.

404.5.1 Sleeping area. The minimum occupancy area required by Table 404.5 shall not be included as a sleeping area in determining the minimum occupancy area for sleeping purposes. Sleeping areas shall comply with Section 404.4.

404.5.2 Combined spaces. Combined living room and dining room spaces shall comply with the requirements of Table 404.5 if the total area is equal to that required for separate rooms and if the space is located so as to function as a combination living room/dining room.

404.6 Efficiency unit. Nothing in this section shall prohibit an efficiency living unit from meeting the following requirements:

1. A unit occupied by not more than one occupant shall have a minimum clear floor area of 120 square feet (11.2 m^2). A unit occupied by not more than two *occupants* shall have a minimum clear floor area of 220 square feet (20.4 m^2). A unit occupied by three *occupants* shall have a minimum clear floor area of 320 square feet (29.7 m^2). These required areas shall be exclusive of the areas required by Items 2 and 3.
2. The unit shall be provided with a kitchen sink, cooking appliance and refrigeration facilities, each having a minimum clear working space of 30 inches (762 mm) in front. Light and *ventilation* conforming to this code shall be provided.
3. The unit shall be provided with a separate *bathroom* containing a water closet, lavatory and bathtub or shower.
4. The maximum number of *occupants* shall be three.

INTERNATIONAL CODE COUNCIL®
Copyright © 2019 ICC & NYSDOS. ALL RIGHTS RESERVED. Accessed by Lauren Gualdino (lgualdino@briarcliffmanor.org), (-) Order Number #100880972 on May 08, 2020 07:05 AM (PDT) pursuant to License Agreement with ICC & NYSDOS. No further reproduction, no

100880972

404.7 Food preparation. Spaces to be occupied for food preparation purposes shall contain suitable space and equipment to store, prepare and serve foods in a sanitary manner. There shall be adequate facilities and services for the sanitary disposal of food wastes and refuse, including facilities for temporary storage.

[NY] 404.8 Sleeping quarters in children's overnight camps. For a sleeping quarter which houses more than four persons in a *children's overnight camp*:

1. If the building meets the definition of a *summer camp cabin*:
   1.1. If the building was constructed prior to 1975, the required minimum floor area is 36 square feet (3.3 m^2) per occupant when single beds are provided and 30 square feet (2.8 m^2) of floor area per occupant where double-deck bunk beds are provided.
   1.2. If the building was constructed on or after January 1, 1975, the required minimum floor area shall be 40 square feet (3.7 m^2) of floor area per occupant when single beds are provided and 30 square feet (2.8 m^2) of floor area per occupant where double-deck bunk beds are provided.
2. If the building does not meet the definition of a *summer camp cabin*:
   2.1. If the building was constructed prior to 1975, the required minimum floor area is 36 square feet (3.3 m^2) per occupant when single beds are provided and 30 square feet (2.8 m^2) per occupant where double-deck bunk beds are provided.
   2.2. If the building was constructed between January 1, 1975 and June 30, 2011, the required minimum floor area is 40 square feet (3.7 m^2) per occupant when single beds are provided and 30 square feet (2.8 m^2) per occupant where double-deck bunk beds are provided.
   2.3. If the building was constructed on or after July 1, 2011, the required minimum floor area is 50 square feet (4.6 m^2) per occupant in each sleeping room.

This section applies if the entire building used as a sleeping quarter in a *children's overnight camp* houses more than four persons, even if one or more individual sleeping rooms in the building house four or fewer persons. For the purposes of Section 404.8, "floor area" includes space within the occupied structure to accommodate: the bed, storage for personal belongings, aisles and exitways, and associated assembly space. Space for toilets, lavatories, and showers shall not be used to calculate a sleeping quarter's "floor area."

INTERNATIONAL CODE COUNCIL®
Copyright © 2019 ICC & NYSDOS. ALL RIGHTS RESERVED. Accessed by Lauren Gualdino (lgualdino@briarcliffmanor.org), (-) Order Number #100880972 on May 08, 2020 07:05 AM (PDT) pursuant to License Agreement with ICC & NYSDOS. No further reproduction, no

INTERNATIONAL CODE COUNCIL®
Copyright © 2019 ICC & NYSDOS. ALL RIGHTS RESERVED. Accessed by Lauren Gualdino (lgualdino@briarcliffmanor.org), (-) Order Number #100880972 on May 08, 2020 07:05 AM (PDT) pursuant to License Agreement with ICC & NYSDOS. No further reproduction, no

100880972

CHAPTER 5
PLUMBING FACILITIES AND FIXTURE REQUIREMENTS

SECTION 501
GENERAL

501.1 Scope. The provisions of this chapter shall govern the minimum plumbing systems, facilities and plumbing fixtures to be provided.

501.2 Responsibility. The *owner* of the structure shall provide and maintain such plumbing facilities and plumbing fixtures in compliance with these requirements. A person shall not occupy as *owner-occupant* or permit another person to occupy any structure or *premises* that does not comply with the requirements of this chapter.

SECTION 502
REQUIRED FACILITIES

[NY] 502.1 Dwelling units. Every *dwelling unit* shall contain its own bathtub or shower, lavatory, water closet and kitchen sink that shall be maintained in a sanitary, safe working condition. The lavatory shall be placed in the same room as the water closet or located in close proximity to the door leading directly into the room in which such water closet is located. A kitchen sink shall not be used as a substitute for the required lavatory.

Exception: Owner-occupied one-family dwellings subject to the approval of the *building official*.

[P] 502.2 Rooming houses. Not less than one water closet, lavatory and bathtub or shower shall be supplied for each four *rooming units*.

[P] 502.3 Hotels. Where private water closets, lavatories and baths are not provided, one water closet, one lavatory and one bathtub or shower having access from a public hallway shall be provided for each 10 *occupants*.

[P] 502.4 Employees' facilities. Not less than one water closet, one lavatory and one drinking facility shall be available to employees.

[P] 502.4.1 Drinking facilities. Drinking facilities shall be a drinking fountain, water cooler, bottled water cooler or disposable cups next to a sink or water dispenser. Drinking facilities shall not be located in *toilet rooms* or *bathrooms*.

[P] 502.5 Public toilet facilities. Public toilet facilities shall be maintained in a safe, sanitary and working condition in accordance with the *Plumbing Code of New York State*. Except for periodic maintenance or cleaning, public access and use shall be provided to the toilet facilities at all times during *occupancy* of the *premises*.

SECTION 503
TOILET ROOMS

[P] 503.1 Privacy. *Toilet rooms* and *bathrooms* shall provide privacy and shall not constitute the only passageway to a hall or other space, or to the exterior. A door and interior locking device shall be provided for all common or shared *bathrooms* and *toilet rooms* in a multiple dwelling.

[P] 503.2 Location. *Toilet rooms* and *bathrooms* serving hotel units, *rooming units* or dormitory units or *housekeeping units*, shall have access by traversing not more than one flight of stairs and shall have access from a common hall or passageway.

[P] 503.3 Location of employee toilet facilities. Toilet facilities shall have access from within the employees' working area. The required toilet facilities shall be located not more than one story above or below the employees' working area and the path of travel to such facilities shall not exceed a distance of 500 feet (152 m). Employee facilities shall either be separate facilities or combined employee and public facilities.

Exception: Facilities that are required for employees in storage structures or kiosks, which are located in adjacent structures under the same ownership, lease or control, shall not exceed a travel distance of 500 feet (152 m) from the employees' regular working area to the facilities.

[P] 503.4 Floor surface. In other than *dwelling units*, every *toilet room* floor shall be maintained to be a smooth, hard, nonabsorbent surface to permit such floor to be easily kept in a clean and sanitary condition.

SECTION 504
PLUMBING SYSTEMS AND FIXTURES

[P] 504.1 General. Plumbing fixtures shall be properly installed and maintained in working order, and shall be kept free from obstructions, leaks and defects and be capable of performing the function for which such plumbing fixtures are designed. Plumbing fixtures shall be maintained in a safe, sanitary and functional condition.

[P] 504.2 Fixture clearances. Plumbing fixtures shall have adequate clearances for usage and cleaning.

[P] 504.3 Plumbing system hazards. Where it is found that a plumbing system in a structure constitutes a hazard to the *occupants* or the structure by reason of inadequate service, inadequate venting, cross connection, backsiphonage, improper installation, *deterioration* or damage or for similar reasons, the *building official* shall require the defects to be corrected to eliminate the hazard.

INTERNATIONAL CODE COUNCIL®
Copyright © 2019 ICC & NYSDOS. ALL RIGHTS RESERVED. Accessed by Lauren Gualdino (lgualdino@briarcliffmanor.org), (-) Order Number #100880972 on May 08, 2020 07:05 AM (PDT) pursuant to License Agreement with ICC & NYSDOS. No further reproduction, no

100880972

SECTION 505
WATER SYSTEM

[NY] 505.1 General. Every sink, lavatory, bathtub or shower, drinking fountain, water closet or other plumbing fixture shall be properly connected to either a public water system or to an *approved* private water system. Kitchen sinks, lavatories, laundry facilities, bathtubs and showers shall be supplied with hot or tempered and cold running water in accordance with the *Plumbing Code of New York State*.

Exception: Owner-occupied one-family dwellings subject to the approval of the *building official*.

[P] 505.2 Contamination. The water supply shall be maintained free from contamination, and all water inlets for plumbing fixtures shall be located above the flood-level rim of the fixture. Shampoo basin faucets, janitor sink faucets and other hose bibs or faucets to which hoses are attached and left in place, shall be protected by an approved atmospheric-type vacuum breaker or an approved permanently attached hose connection vacuum breaker.

[P] 505.3 Supply. The water supply system shall be installed and maintained to provide a supply of water to plumbing fixtures, devices and appurtenances in sufficient volume and at pressures adequate to enable the fixtures to function properly, safely, and free from defects and leaks.

[P] 505.4 Water heating facilities. Water heating facilities shall be properly installed, maintained and capable of providing an adequate amount of water to be drawn at every required sink, lavatory, bathtub, shower and laundry facility at a temperature not less than 110°F (43°C). A gas-burning water heater shall not be located in any *bathroom*, *toilet room*, *bedroom* or other occupied room normally kept closed, unless adequate combustion air is provided. An *approved* combination temperature and pressure-relief valve and relief valve discharge pipe shall be properly installed and maintained on water heaters.

[P] 505.5 Nonpotable water reuse systems. Nonpotable water reuse systems and rainwater collection and conveyance systems shall be maintained in a safe and sanitary condition. Where such systems are not properly maintained, the systems shall be repaired to provide for safe and sanitary conditions, or the system shall be abandoned in accordance with Section 505.5.1.

[P] 505.5.1 Abandonment of systems. Where a nonpotable water reuse system or a rainwater collection and distribution system is not maintained or the owner ceases use of the system, the system shall be abandoned in accordance with Section 1301.10 of the *Plumbing Code of New York State*.

SECTION 506
SANITARY DRAINAGE SYSTEM

[NY] 506.1 General. Plumbing fixtures shall be properly connected to either a public sewer system or to an *approved* private sewage disposal system.

Exception: Owner-occupied one-family dwellings subject to the approval of the *building official*.

[P] 506.2 Maintenance. Every plumbing stack, vent, waste and sewer line shall function properly and be kept free from obstructions, leaks and defects.

[P] 506.3 Grease interceptors. Grease interceptors and automatic grease removal devices shall be maintained in accordance with this code and the manufacturer's installation instructions. Grease interceptors and automatic grease removal devices shall be regularly serviced and cleaned to prevent the discharge of oil, grease, and other substances harmful or hazardous to the building drainage system, the public sewer, the private sewage disposal system or the sewage treatment plant or processes. Records of maintenance, cleaning and repairs shall be available for inspection by the *building official*.

SECTION 507
STORM DRAINAGE

[P] 507.1 General. Drainage of roofs and paved areas, *yards* and courts, and other open areas on the *premises* shall not be discharged in a manner that creates a public nuisance.

INTERNATIONAL CODE COUNCIL®
Copyright © 2019 ICC & NYSDOS. ALL RIGHTS RESERVED. Accessed by Lauren Gualdino (lgualdino@briarcliffmanor.org), (-) Order Number #100880972 on May 08, 2020 07:05 AM (PDT) pursuant to License Agreement with ICC & NYSDOS. No further reproduction, no

100880972

CHAPTER 6
MECHANICAL AND ELECTRICAL REQUIREMENTS

SECTION 601
GENERAL

601.1 Scope. The provisions of this chapter shall govern the minimum mechanical and electrical facilities and equipment to be provided.

601.2 Responsibility. The *owner* of the structure shall provide and maintain mechanical and electrical facilities and equipment in compliance with these requirements. A person shall not occupy as *owner-occupant* or permit another person to occupy any *premises* that does not comply with the requirements of this chapter.

SECTION 602
HEATING FACILITIES

602.1 Facilities required. Heating facilities shall be provided in structures as required by this section.

[NY] 602.2 Residential occupancies. Dwellings shall be provided with heating facilities capable of maintaining a room temperature of 68°F (20°C) in all habitable rooms, *bathrooms* and *toilet rooms* based on the winter outdoor design temperature for the locality indicated in Appendix D of the *Plumbing Code of New York State*. Cooking appliances shall not be used, nor shall portable unvented fuel-burning space heaters be used, as a means to provide required heating.

Exception: Owner-occupied one-family dwellings subject to the approval of the *building official*.

[NY] 602.3 Heat supply. Every *owner* and *operator* of any building who rents, leases or lets one or more *dwelling units* rooming units, dormitory or guestrooms on terms, either expressed or implied, to furnish heat to the *occupants* thereof shall supply heat during the period from September 15th to May 31st. to maintain a minimum temperature of 68°F (20°C) in all habitable rooms, *bathrooms* and *toilet rooms*.

Exceptions:

1. When the outdoor temperature is below the winter outdoor design temperature for the locality, maintenance of the minimum room temperature shall not be required provided that the heating system is operating at its full design capacity. The winter outdoor design temperature for the locality shall be as indicated in Appendix D of the *Plumbing Code of New York State*.
2. In areas where the average monthly temperature is above 30°F (-1°C), a minimum temperature of 65°F (18°C) shall be maintained.

[NY] 602.4 Occupiable work spaces. Indoor occupiable work spaces shall be supplied with heat during the period from September 15th to May 31st to maintain a minimum temperature of 65°F (18°C) during the period the spaces are occupied.

Exceptions:

1. Processing, storage and operation areas that require cooling or special temperature conditions.
2. Areas in which persons are primarily engaged in vigorous physical activities.

602.5 Room temperature measurement. The required room temperatures shall be measured 3 feet (914 mm) above the floor near the center of the room and 2 feet (610 mm) inward from the center of each exterior wall.

SECTION 603
MECHANICAL EQUIPMENT

603.1 Mechanical equipment and appliances. Mechanical equipment, appliances, fireplaces, solid fuel-burning appliances, cooking appliances and water heating appliances shall be properly installed and maintained in a safe working condition, and shall be capable of performing the intended function.

603.2 Removal of combustion products. Fuel-burning equipment and appliances shall be connected to an *approved* chimney or vent.

Exception: Fuel-burning equipment and appliances that are *labeled* for unvented operation.

603.3 Clearances. Required clearances to combustible materials shall be maintained.

603.4 Safety controls. Safety controls for fuel-burning equipment shall be maintained in effective operation.

603.5 Combustion air. A supply of air for complete combustion of the fuel and for *ventilation* of the space containing the fuel-burning equipment shall be provided for the fuel-burning equipment.

603.6 Energy conservation devices. Devices intended to reduce fuel consumption by attachment to a fuel-burning appliance, to the fuel supply line thereto, or to the vent outlet or vent piping therefrom, shall not be installed unless *labeled* for such purpose and the installation is specifically *approved*.

SECTION 604
ELECTRICAL FACILITIES

[NY] 604.1 Facilities required. Every occupied building shall be provided with an electrical system in compliance with the requirements of this section and Section 605.

Exception: Owner-occupied one-family dwellings not supplied with electrical power, subject to the approval of the *building official*.

INTERNATIONAL CODE COUNCIL®
Copyright © 2019 ICC & NYSDOS. ALL RIGHTS RESERVED. Accessed by Lauren Gualdino (lgualdino@briarcliffmanor.org), (-) Order Number #100880972 on May 08, 2020 07:05 AM (PDT) pursuant to License Agreement with ICC & NYSDOS. No further reproduction, no

100880972

604.2 Service. The size and usage of appliances and equipment shall serve as a basis for determining the need for additional facilities in accordance with NFPA 70. *Dwelling units* shall be served by a three-wire, 120/240 volt, single-phase electrical service having a minimum rating of 60 amperes.

604.3 Electrical system hazards. Where it is found that the electrical system in a structure constitutes a hazard to the *occupants* or the structure by reason of inadequate service, improper fusing, insufficient receptacle and lighting outlets, improper wiring or installation, *deterioration* or damage, or for similar reasons, the *building official* shall require the defects to be corrected to eliminate the hazard.

604.3.1 Abatement of electrical hazards associated with water exposure. The provisions of this section shall govern the repair and replacement of electrical systems and equipment that have been exposed to water.

604.3.1.1 Electrical equipment. Electrical distribution equipment, motor circuits, power equipment, transformers, wire, cable, flexible cords, wiring devices, ground fault circuit interrupters, surge protectors, molded case circuit breakers, low-voltage fuses, luminaires, ballasts, motors and electronic control, signaling and communication equipment that have been exposed to water shall be replaced in accordance with the provisions of the *Building Code of New York State*.

Exception: The following equipment shall be allowed to be repaired where an inspection report from the equipment manufacturer or *approved* manufacturer's representative indicates that the equipment has not sustained damage that requires replacement:

1. Enclosed switches, rated not more than 600 volts or less.
2. Busway, rated not more than 600 volts.
3. Panelboards, rated not more than 600 volts.
4. Switchboards, rated not more than 600 volts.
5. Fire pump controllers, rated not more than 600 volts.
6. Manual and magnetic motor controllers.
7. Motor control centers.
8. Alternating current high-voltage circuit breakers.
9. Low-voltage power circuit breakers.
10. Protective relays, meters and current transformers.
11. Low- and medium-voltage switchgear.
12. Liquid-filled transformers.
13. Cast-resin transformers.
14. Wire or cable that is suitable for wet locations and whose ends have not been exposed to water.
15. Wire or cable, not containing fillers, that is suitable for wet locations and whose ends have not been exposed to water.
16. Luminaires that are listed as submersible.
17. Motors.
18. Electronic control, signaling and communication equipment.

604.3.2 Abatement of electrical hazards associated with fire exposure. The provisions of this section shall govern the repair and replacement of electrical systems and equipment that have been exposed to fire.

604.3.2.1 Electrical equipment. Electrical switches, receptacles and fixtures, including furnace, water heating, security system and power distribution circuits, that have been exposed to fire, shall be replaced in accordance with the provisions of the *Building Code of New York State*.

Exception: Electrical switches, receptacles and fixtures that shall be allowed to be repaired where an inspection report from the equipment manufacturer or *approved* manufacturer's representative indicates that the equipment has not sustained damage that requires replacement.

SECTION 605
ELECTRICAL EQUIPMENT

605.1 Installation. Electrical equipment, wiring and appliances shall be properly installed and maintained in a safe and *approved* manner.

605.2 Receptacles. Every *habitable space* in a dwelling shall contain not less than two separate and remote receptacle outlets. Every laundry area shall contain not less than one grounding-type receptacle or a receptacle with a ground fault circuit interrupter. Every *bathroom* shall contain not less than one receptacle. Any new *bathroom* receptacle outlet shall have ground fault circuit interrupter protection. All receptacle outlets shall have the appropriate faceplate cover for the location.

605.3 Luminaires. Every public hall, interior stairway, *toilet room*, kitchen, *bathroom*, laundry room, boiler room and furnace room shall contain not less than one electric luminaire. Pool and spa luminaires over 15 V shall have ground fault circuit interrupter protection.

605.4 Wiring. Flexible cords shall not be used for permanent wiring, or for running through doors, windows, or cabinets, or concealed within walls, floors, or ceilings.

SECTION 606
ELEVATORS, ESCALATORS AND DUMBWAITERS

606.1 General. Elevators, dumbwaiters and escalators shall be maintained in compliance with ASME A17.1. The most current certificate of inspection shall be on display at all times within the elevator or attached to the escalator or dumbwaiter, be available for public inspection in the office of the building *operator* or be posted in a publicly conspicuous

INTERNATIONAL CODE COUNCIL®
Copyright © 2019 ICC & NYSDOS. ALL RIGHTS RESERVED. Accessed by Lauren Gualdino (lgualdino@briarcliffmanor.org), (-) Order Number #100880972 on May 08, 2020 07:05 AM (PDT) pursuant to License Agreement with ICC & NYSDOS. No further reproduction, no

100880972

location *approved* by the *building official*. The inspection and tests shall be performed at not less than the periodic intervals listed in ASME A17.1, Appendix N, except where otherwise specified by the *authority having jurisdiction*.

606.2 Elevators. In buildings equipped with passenger elevators, not less than one elevator shall be maintained in operation at all times when the building is occupied.

Exception: Buildings equipped with only one elevator shall be permitted to have the elevator temporarily out of service for testing or servicing.

SECTION 607
DUCT SYSTEMS

607.1 General. Duct systems shall be maintained free of obstructions and shall be capable of performing the required function.

[NY] SECTION 608
ASSISTIVE LISTENING SYSTEMS

[NY] 608.1 General. The owner or operator of each assembly space shall have the assistive listening system and all components thereof inspected annually and shall thereupon certify to the local *authority having jurisdiction* that each such system continues to comply with the *Building Code of New York State,* Appendix O, including the minimum number of required receivers/transducers.

INTERNATIONAL CODE COUNCIL®
Copyright © 2019 ICC & NYSDOS. ALL RIGHTS RESERVED. Accessed by Lauren Gualdino (lgualdino@briarcliffmanor.org), (-) Order Number #100880972 on May 08, 2020 07:05 AM (PDT) pursuant to License Agreement with ICC & NYSDOS. No further reproduction, no

INTERNATIONAL CODE COUNCIL®
Copyright © 2019 ICC & NYSDOS. ALL RIGHTS RESERVED. Accessed by Lauren Gualdino (lgualdino@briarcliffmanor.org), (-) Order Number #100880972 on May 08, 2020 07:05 AM (PDT) pursuant to License Agreement with ICC & NYSDOS. No further reproduction, no

100880972

CHAPTER 7
FIRE SAFETY REQUIREMENTS

SECTION 701
GENERAL

701.1 Scope. The provisions of this chapter shall govern the minimum conditions and standards for fire safety relating to structures and exterior *premises*, including fire safety facilities and equipment to be provided.

701.2 Responsibility. The *owner* of the *premises* shall provide and maintain such fire safety facilities and equipment in compliance with these requirements. A person shall not occupy as *owner-occupant* or permit another person to occupy any *premises* that do not comply with the requirements of this chapter.

SECTION 702
MEANS OF EGRESS

[F] 702.1 General. A safe, continuous and unobstructed path of travel shall be provided from any point in a building or structure to the *public way*. Means of egress shall comply with the *Fire Code of New York State.*

[F] 702.2 Aisles. The required width of aisles in accordance with the *Fire Code of New York State* shall be unobstructed.

[F] 702.3 Locked doors. Means of egress doors shall be readily openable from the side from which egress is to be made without the need for keys, special knowledge or effort, except where the door hardware conforms to that permitted by the *Building Code of New York State*.

[F] 702.4 Emergency escape openings. Required emergency escape openings shall be maintained in accordance with the code in effect at the time of construction, and the following. Required emergency escape and rescue openings shall be operational from the inside of the room without the use of keys or tools. Bars, grilles, grates or similar devices are permitted to be placed over emergency escape and rescue openings provided that the minimum net clear opening size complies with the code that was in effect at the time of construction and such devices shall be releasable or removable from the inside without the use of a key, tool or force greater than that which is required for normal operation of the escape and rescue opening.

SECTION 703
FIRE-RESISTANCE RATINGS

[F] 703.1 Fire-resistance-rated assemblies. The provisions of this chapter shall govern maintenance of the materials, systems and assemblies used for structural fire resistance and fire-resistance-rated construction separation of adjacent spaces to safeguard against the spread of fire and smoke within a building and the spread of fire to or from buildings.

[F] 703.2 Unsafe conditions. Where any components are not maintained and do not function as intended or do not have the fire resistance required by the code under which the building was constructed or altered, such components or portions thereof shall be deemed unsafe conditions in accordance with Section 108 of the *Fire Code of New York State*. Components or portions thereof determined to be unsafe shall be repaired or replaced to conform to that code under which the building was constructed or altered. Where the condition of components is such that any building, structure or portion thereof presents an imminent danger to the occupants of the building, structure or portion thereof, the fire code official shall act in accordance with Section 109 of the *Fire Code of New York State.*

[F] 703.3 Maintenance. The required fire-resistance rating of fire-resistance-rated construction, including walls, firestops, shaft enclosures, partitions, smoke barriers, floors, fire-resistive coatings and sprayed fire-resistant materials applied to structural members and joint systems, shall be maintained. Such elements shall be visually inspected annually by the owner and repaired, restored or replaced where damaged, altered, breached or penetrated. Records of inspections and repairs shall be maintained. Where concealed, such elements shall not be required to be visually inspected by the owner unless the concealed space is accessible by the removal or movement of a panel, access door, ceiling tile or entry to the space. Openings made therein for the passage of pipes, electrical conduit, wires, ducts, air transfer and any other reason shall be protected with approved methods capable of resisting the passage of smoke and fire. Openings through fire-resistance-rated assemblies shall be protected by self- or automatic-closing doors of approved construction meeting the fire protection requirements for the assembly.

[F] 703.3.1 Fire blocking and draft stopping. Required fire blocking and draft stopping in combustible concealed spaces shall be maintained to provide continuity and integrity of the construction.

[F] 703.3.2 Smoke barriers and smoke partitions. Required smoke barriers and smoke partitions shall be maintained to prevent the passage of smoke. Openings protected with approved smoke barrier doors or smoke dampers shall be maintained in accordance with NFPA 105.

[F] 703.3.3 Fire walls, fire barriers, and fire partitions. Required fire walls, fire barriers and fire partitions shall be maintained to prevent the passage of fire. Openings pro-

INTERNATIONAL CODE COUNCIL®
Copyright © 2019 ICC & NYSDOS. ALL RIGHTS RESERVED. Accessed by Lauren Gualdino (lgualdino@briarcliffmanor.org), (-) Order Number #100880972 on May 08, 2020 07:05 AM (PDT) pursuant to License Agreement with ICC & NYSDOS. No further reproduction, no

100880972

tected with approved doors or fire dampers shall be maintained in accordance with NFPA 80.

[F] 703.4 Opening protectives. Opening protectives shall be maintained in an operative condition in accordance with NFPA 80. The application of field-applied labels associated with the maintenance of opening protectives shall follow the requirements of the approved third-party certification organization accredited for listing the opening protective. Fire doors and smoke barrier doors shall not be blocked or obstructed, or otherwise made inoperable. Fusible links shall be replaced whenever fused or damaged. Fire door assemblies shall not be modified.

[F] 703.4.1 Signs. Where required by the *building official*, a sign shall be permanently displayed on or near each fire door in letters not less than 1 inch (25 mm) high to read as follows:

1. For doors designed to be kept normally open: FIRE DOOR – DO NOT BLOCK.
2. For doors designed to be kept normally closed: FIRE DOOR – KEEP CLOSED.

[F] 703.4.2 Hold-open devices and closers. Hold-open devices and automatic door closers shall be maintained. During the period that such a device is out of service for repairs, the door it operates shall remain in the closed position.

[F] 703.4.3 Door operation. Swinging fire doors shall close from the full-open position and latch automatically. The door closer shall exert enough force to close and latch the door from any partially open position.

[F] 703.5 Ceilings. The hanging and displaying of salable goods and other decorative materials from acoustical ceiling systems that are part of a fire-resistance-rated horizontal assembly shall be prohibited.

[F] 703.6 Testing. Horizontal and vertical sliding and rolling fire doors shall be inspected and tested annually to confirm operation and full closure. Records of inspections and testing shall be maintained.

[F] 703.7 Vertical shafts. Interior vertical shafts, including stairways, elevator hoistways and service and utility shafts, which connect two or more stories of a building shall be enclosed or protected as required in Chapter 11 of the *Fire Code of New York State*. New floor openings in existing buildings shall comply with the *Building Code of New York State*.

[F] 703.8 Opening protective closers. Where openings are required to be protected, opening protectives shall be maintained self-closing or automatic-closing by smoke detection. Existing fusible-link-type automatic door-closing devices shall be replaced if the fusible link rating exceeds 135°F (57°C).

SECTION 704
FIRE PROTECTION SYSTEMS

[F] 704.1 Inspection, testing and maintenance. Fire detection, alarm and extinguishing systems, mechanical smoke exhaust systems, and smoke and heat vents shall be maintained in accordance with the *Fire Code of New York State* in an operative condition at all times, and shall be replaced or repaired where defective.

[F] 704.1.1 Installation. Fire protection systems shall be maintained in accordance with the original installation standards for that system. Required systems shall be extended, altered or augmented as necessary to maintain and continue protection where the building is altered or enlarged. Alterations to fire protection systems shall be done in accordance with applicable standards.

[F] 704.1.2 Required fire protection systems. Fire protection systems required by this code, the *Fire Code of New York State* or the *Building Code of New York State* shall be installed, repaired, operated, tested and maintained in accordance with this code. A fire protection system for which a design option, exception or reduction to the provisions of this code, the *Fire Code of New York State* or the *Building Code of New York State* has been granted shall be considered to be a required system.

[F] 704.1.3 Fire protection systems. Fire protection systems shall be inspected, maintained and tested in accordance with the following *Fire Code of New York State* requirements.

1. Automatic sprinkler systems, see Section 903.5.
2. Automatic fire-extinguishing systems protecting commercial cooking systems, see Section 904.12.5.
3. Automatic water mist extinguishing systems, see Section 904.11.
4. Carbon dioxide extinguishing systems, see Section 904.8.
5. Carbon monoxide alarms and carbon monoxide detection systems, see Section 915.6.
6. Clean-agent extinguishing systems, see Section 904.10.
7. Dry-chemical extinguishing systems, see Section 904.6.
8. Fire alarm and fire detection systems, see Section 907.8.
9. Fire department connections, see Sections 912.4 and 912.7.
10. Fire pumps, see Section 913.5.
11. Foam extinguishing systems, see Section 904.7.
12. Halon extinguishing systems, see Section 904.9.
13. Single- and multiple-station smoke alarms, see Section 907.10.
14. Smoke and heat vents and mechanical smoke removal systems, see Section 910.5.
15. Smoke control systems, see Section 909.20.
16. Wet-chemical extinguishing systems, see Section 904.5.

[F] 704.2 Standards. Fire protection systems shall be inspected, tested and maintained in accordance with the referenced standards listed in Table 704.2 and as required in this section.

INTERNATIONAL CODE COUNCIL®
Copyright © 2019 ICC & NYSDOS. ALL RIGHTS RESERVED. Accessed by Lauren Gualdino (lgualdino@briarcliffmanor.org), (-) Order Number #100880972 on May 08, 2020 07:05 AM (PDT) pursuant to License Agreement with ICC & NYSDOS. No further reproduction, no

100880972

TABLE 704.2
FIRE PROTECTION SYSTEM MAINTENANCE STANDARDS

SYSTEM	STANDARD
Portable fire extinguishers	NFPA 10
Carbon dioxide fire-extinguishing system	NFPA 12
Halon 1301 fire-extinguishing systems	NFPA 12A
Dry-chemical extinguishing systems	NFPA 17
Wet-chemical extinguishing systems	NFPA 17A
Water-based fire protection systems	NFPA 25
Fire alarm systems	NFPA 72
Smoke and heat vents	NFPA 204
Water-mist systems	NFPA 750
Clean-agent extinguishing systems	NFPA 2001

[F] 704.2.1 Records. Records shall be maintained of all system inspections, tests and maintenance required by the referenced standards.

[F] 704.2.2 Records information. Initial records shall include the: name of the installation contractor; type of components installed; manufacturer of the components; location and number of components installed per floor; and manufacturers' operation and maintenance instruction manuals. Such records shall be maintained for the life of the installation.

[F] 704.3 Systems out of service. Where a required fire protection system is out of service, the fire department and the fire code official shall be notified immediately and, where required by the fire code official, either the building shall be evacuated or an approved fire watch shall be provided for all occupants left unprotected by the shutdown until the fire protection system has been returned to service. Where utilized, fire watches shall be provided with not less than one approved means for notification of the fire department and shall not have duties beyond performing constant patrols of the protected premises and keeping watch for fires. Actions shall be taken in accordance with Section 901 of the *Fire Code of New York State* to bring the systems back in service.

[F] 704.3.1 Emergency impairments. Where unplanned impairments of fire protection systems occur, appropriate emergency action shall be taken to minimize potential injury and damage. The impairment coordinator shall implement the steps outlined in Section 901.7.4 of the *Fire Code of New York State*.

[F] 704.4 Removal of or tampering with equipment. It shall be unlawful for any person to remove, tamper with or otherwise disturb any fire hydrant, fire detection and alarm system, fire suppression system or other fire appliance required by this code except for the purposes of extinguishing fire, training, recharging or making necessary repairs.

[F] 704.4.1 Removal of or tampering with appurtenances. Locks, gates, doors, barricades, chains, enclosures, signs, tags and seals that have been installed by or at the direction of the fire code official shall not be removed, unlocked, destroyed or tampered with in any manner.

[F] 704.4.2 Removal of existing occupant-use hose lines. The fire code official is authorized to permit the removal of existing occupant-use hose lines where all of the following apply:

1. The installation is not required by the *Fire Code of New York State* or the *Building Code of New York State*.
2. The hose line would not be utilized by trained personnel or the fire department.
3. The remaining outlets are compatible with local fire department fittings.

[F] 704.4.3 Termination of monitoring service. For fire alarm systems required to be monitored by the *Fire Code of New York State*, notice shall be made to the fire code official whenever alarm monitoring services are terminated. Notice shall be made in writing by the provider of the monitoring service being terminated.

[F] 704.5 Fire department connection. Where the fire department connection is not visible to approaching fire apparatus, the fire department connection shall be indicated by an *approved* sign mounted on the street front or on the side of the building. Such sign shall have the letters "FDC" not less than 6 inches (152 mm) high and words in letters not less than 2 inches (51 mm) high or an arrow to indicate the location. Such signs shall be subject to the approval of the fire code official.

[F] 704.5.1 Fire department connection access. Ready access to fire department connections shall be maintained at all times and without obstruction by fences, bushes, trees, walls or any other fixed or movable object. Access to fire department connections shall be approved by the fire chief.

Exception: Fences, where provided with an access gate equipped with a sign complying with the legend requirements of Section 912.5 of the *Fire Code of New York State* and a means of emergency operation. The gate and the means of emergency operation shall be approved by the fire chief and maintained operational at all times.

[F] 704.5.2 Clear space around connections. A working space of not less than 36 inches (914 mm) in width, 36 inches (914 mm) in depth and 78 inches (1981 mm) in height shall be provided and maintained in front of and to the sides of wall-mounted fire department connections and around the circumference of free-standing fire department connections.

[NY] 704.6 Single- or multiple-station smoke alarms. Single- or multiple-station smoke alarms shall be installed and maintained in existing Group I-1 and R occupancies and in dwellings regulated by the *Residential Code of New York State* in accordance with Sections 704.6.1 through 704.6.3.

[NY] 704.6.1 Where required. Existing Group I-1 and R occupancies and dwellings regulated by the *Residential Code of New York State* shall be provided with single-station smoke alarms in accordance with Sections 704.6.1.1 through 704.6.1.4. Interconnection and power sources shall be in accordance with Sections 704.6.2 and 704.6.3.

INTERNATIONAL CODE COUNCIL®
Copyright © 2019 ICC & NYSDOS. ALL RIGHTS RESERVED. Accessed by Lauren Gualdino (lgualdino@briarcliffmanor.org), (-) Order Number #100880972 on May 08, 2020 07:05 AM (PDT) pursuant to License Agreement with ICC & NYSDOS. No further reproduction, no

100880972

Exceptions:

1. Where the code that was in effect at the time of construction required smoke alarms and smoke alarms complying with those requirements are already provided.
2. Where smoke alarms have been installed in occupancies and dwellings that were not required to have them at the time of construction, additional smoke alarms shall not be required provided that the existing smoke alarms comply with requirements that were in effect at the time of installation.
3. Where smoke detectors connected to a fire alarm system have been installed as a substitute for smoke alarms.
4. Group R-2 occupancies used as dormitories, fraternities, sororities and similar student housing and meeting the requirements of Section 907.2.9.3 of *Fire Code of New York State.*

[F] 704.6.1.1 Group R-1. Single- or multiple-station smoke alarms shall be installed in all of the following locations in Group R-1:

1. In sleeping areas.
2. In every room in the path of the *means of egress* from the sleeping area to the door leading from the *sleeping unit*.
3. In each story within the *sleeping unit*, including basements. For *sleeping units* with split levels and without an intervening door between the adjacent levels, a smoke alarm installed on the upper level shall suffice for the adjacent lower level provided that the lower level is less than one full story below the upper level.

[NY] 704.6.1.2 Groups R-2, R-3, R-4, I-1, and other dwellings. Single- or multiple-station smoke alarms shall be installed and maintained in Groups R-2, R-3, R-4, I-1, and in dwellings regulated by the *Residential Code of New York State.* regardless of *occupant load* at all of the following locations:

1. On the ceiling or wall outside of each separate sleeping area in the immediate vicinity of bedrooms.
2. In each room used for sleeping purposes.
3. In each story within a *dwelling unit*, including *basements* (excluding crawl spaces) and uninhabitable attics. In *dwellings* or *dwelling units* with split levels and without an intervening door between the adjacent levels, a smoke alarm installed on the upper level shall suffice for the adjacent lower level provided that the lower level is less than one full story below the upper level.

[F] 704.6.1.3 Installation near cooking appliances. Smoke alarms shall not be installed in the following locations unless this would prevent placement of a smoke alarm in a location required by Section 704.6.1.1 or 704.6.1.2.

1. Ionization smoke alarms shall not be installed less than 20 feet (6096 m) horizontally from a permanently installed cooking appliance.
2. Ionization smoke alarms with an alarm-silencing switch shall not be installed less than 10 feet (3048 mm) horizontally from a permanently installed cooking appliance.
3. Photoelectric smoke alarms shall not be installed less than 6 feet (1829 mm) horizontally from a permanently installed cooking appliance.

[F] 704.6.1.4 Installation near bathrooms. Smoke alarms shall be installed not less than 3 feet (914 mm) horizontally from the door or opening of a bathroom that contains a bathtub or shower unless this would prevent placement of a smoke alarm required by Section 704.6.1.1 or 704.6.1.2.

[F] 704.6.2 Interconnection. Where more than one smoke alarm is required to be installed within an individual *dwelling* or *sleeping unit*, the smoke alarms shall be interconnected in such a manner that the activation of one alarm will activate all of the alarms in the individual unit. Physical interconnection of smoke alarms shall not be required where listed wireless alarms are installed and all alarms sound upon activation of one alarm. The alarm shall be clearly audible in all bedrooms over background noise levels with all intervening doors closed.

Exceptions:

1. Interconnection is not required in buildings that are not undergoing *alterations*, repairs or construction of any kind.
2. Smoke alarms in existing areas are not required to be interconnected where *alterations* or repairs do not result in the removal of interior wall or ceiling finishes exposing the structure, unless there is an attic, crawl space or basement available that could provide access for interconnection without the removal of interior finishes.

[F] 704.6.3 Power source. Single-station smoke alarms shall receive their primary power from the building wiring provided that such wiring is served from a commercial source and shall be equipped with a battery backup. Smoke alarms with integral strobes that are not equipped with battery backup shall be connected to an emergency electrical system. Smoke alarms shall emit a signal when the batteries are low. Wiring shall be permanent and without a disconnecting switch other than as required for overcurrent protection.

Exceptions:

1. Smoke alarms are permitted to be solely battery operated in existing buildings where construction is not taking place.
2. Smoke alarms are permitted to be solely battery operated in buildings that are not served from a commercial power source.
3. Smoke alarms are permitted to be solely battery operated in existing areas of buildings undergoing *alterations* or repairs that do not result in the

INTERNATIONAL CODE COUNCIL®
Copyright © 2019 ICC & NYSDOS. ALL RIGHTS RESERVED. Accessed by Lauren Gualdino (lgualdino@briarcliffmanor.org), (-) Order Number #100880972 on May 08, 2020 07:05 AM (PDT) pursuant to License Agreement with ICC & NYSDOS. No further reproduction, no

100880972

removal of interior walls or ceiling finishes exposing the structure, unless there is an attic, crawl space or *basement* available that could provide access for building wiring without the removal of interior finishes.

[F] 704.6.4 Smoke detection system. Smoke detectors listed in accordance with UL 268 and provided as part of the building's fire alarm system shall be an acceptable alternative to single- and multiple-station smoke alarms and shall comply with the following:

1. The fire alarm system shall comply with all applicable requirements in Section 907 of the *Fire Code of New York State.*
2. Activation of a smoke detector in a dwelling or sleeping unit shall initiate alarm notification in the *dwelling* or *sleeping unit* in accordance with Section 907.5.2 of the *Fire Code of New York State.*
3. Activation of a smoke detector in a *dwelling* or *sleeping unit* shall not activate alarm notification appliances outside of the *dwelling* or *sleeping unit*, provided that a supervisory signal is generated and monitored in accordance with Section 907.6.6 of the *Fire Code of New York State.*

[F] 704.7 Single- and multiple-station smoke alarms. Single- and multiple-station smoke alarms shall be tested and maintained in accordance with the manufacturer's instructions. Smoke alarms that do not function shall be replaced. Smoke alarms installed in one- and two-family dwellings shall be replaced not more than 10 years from the date of manufacture marked on the unit, or shall be replaced if the date of manufacture cannot be determined.

SECTION 705
CARBON MONOXIDE ALARMS AND DETECTION

[NY] 705.1 Carbon monoxide alarms and detectors. Carbon monoxide alarms and carbon monoxide detection systems shall be installed and maintained in accordance with Section 915 of the *Fire Code of New York State*.

[NY] 705.2 Evacuation notices. Evacuation notices (fire-safety notices) required by the *Fire Code of New York State* or the *Residential Code of New York State* shall be affixed in such a manner and location as required by the *Fire Code of New York State* or the *Residential Code of New York State* and shall be clearly visible, legible, and unobstructed.

INTERNATIONAL CODE COUNCIL®
Copyright © 2019 ICC & NYSDOS. ALL RIGHTS RESERVED. Accessed by Lauren Gualdino (lgualdino@briarcliffmanor.org), (-) Order Number #100880972 on May 08, 2020 07:05 AM (PDT) pursuant to License Agreement with ICC & NYSDOS. No further reproduction, no

INTERNATIONAL CODE COUNCIL®
Copyright © 2019 ICC & NYSDOS. ALL RIGHTS RESERVED. Accessed by Lauren Gualdino (lgualdino@briarcliffmanor.org), (-) Order Number #100880972 on May 08, 2020 07:05 AM (PDT) pursuant to License Agreement with ICC & NYSDOS. No further reproduction, no

100880972

CHAPTER 8
REFERENCED STANDARDS

User note:

This chapter lists the standards that are referenced in various sections of this document. The standards are listed herein by the promulgating agency of the standard, the standard identification, the effective date and title and the section or sections of this document that reference the standard. The application of the referenced standards shall be as specified in Section 102.5.

**Denotes standards that are incorporated by reference into 19 NYCRR Part 1226.*

ASME

American Society of Mechanical Engineers
Two Park Avenue
New York, NY 10016-5990

***ASME A17.1—2016/CSA B44—16: Safety Code for Elevators and Escalators**
606.1

ASTM

ASTM International
100 Barr Harbor Drive, P.O. Box C700
West Conshohocken, PA 19428-2959

F1346—91 (2010): Performance Specifications for Safety Covers and Labeling Requirements for All Covers for Swimming Pools, Spas and Hot Tubs
303.2

EPA

US Environmental Protection Agency
c/o Superintendent of Documents
US Government Printing Office
Washington, DC 20402

***EPA 40 CFR Part 745—2004: Lead-Based Paint Poisoning Prevention In Certain Residential Structures**
304.2.1, 305.3.1

ICC

International Code Council, Inc.
500 New Jersey Ave NW
6th Floor
Washington, DC 20001

***BCNYS—2020: Building Code of New York State**
102.3, 201.3, 304.1.1, 305.1.1, 306.1.1, 401.3, 604.3.1.1, 604.3.2.1, 702.3, 704.4.2

***ECCCNYS—2020: Energy Conservation Construction Code of New York State**
102.3

***EBCNYS—2020: Existing Building Code of New York State**
102.3, 201.3, 304.1.1, 305.1.1, 306.1.1

***FCNYS—2020: Fire Code of New York State**
102.3, 201.3, 604.3.1.1, 702.1, 702.2, 704.1, 704.1.2, 704.1.3, 704.3, 704.3.1, 704.4.2, 704.4.3, 704.5.1, 704.6.4, 705.1

***FGCNYS—2020: Fuel Gas Code of New York State**
102.3, 201.3

IZC—18: International Zoning Code®
102.3, 201.3

INTERNATIONAL CODE COUNCIL®
Copyright © 2019 ICC & NYSDOS. ALL RIGHTS RESERVED. Accessed by Lauren Gualdino (lgualdino@briarcliffmanor.org), (-) Order Number #100880972 on May 08, 2020 07:05 AM (PDT) pursuant to License Agreement with ICC & NYSDOS. No further reproduction, no

100880972

ICC—continued

***MCNYS—2020: Mechanical Code of New York State**
102.3, 201.3

***PCNYS—2020: Plumbing Code of New York State**
102.3, 201.3, 502.5, 505.1, 505.5.1, 602.2, 602.3

***RCNYS—2020: Residential Code of New York State**
102.3, 201.3

NFPA

National Fire Protection Association
1 Batterymarch Park
Quincy, MA 02169-7471

***10—18: Standard for Portable Fire Extinguishers**
Table 704.2

***12—15: Standard on Carbon Dioxide Extinguishing Systems**
Table 704.2

***12A—15: Standard on Halon 1301 Fire Extinguishing Systems**
Table 704.2

***17—17: Standard for Dry Chemical Extinguishing Systems**
Table 704.2

***17A—17: Standard for Wet Chemical Extinguishing Systems**
Table 704.2

***25—17: Standard for the Inspection, Testing and Maintenance of Water-Based Fire Protection Systems**
Table 704.2

***70—17: National Electrical Code**
102.3, 201.3, 604.2

***72—16: National Fire Alarm and Signaling Code**
Table 704.2

***80—16: Standard for Fire Doors and Other Opening Protectives**
703.3.3, 703.4

***105—16: Standard for Smoke Door Assemblies and Other Opening Protectives**
703.3.2

***204—15: Standard for Smoke and Heat Venting**
Table 704.2

***720—15: Standard for the Installation of Carbon Monoxide (CO) Detection and Warning Equipment**
[F] 705.2

***750—15: Standard on Water Mist Fire Protection Systems**
Table 704.2

***1402—19: Guide to Building Fire Service Training Centers**
310.1

***1403—18: Standard on Live Fire Training Evolutions**
310.1

***2001—15: Standard on Clean Agent Fire Extinguishing Systems**
Table 704.2

UL

Underwriters Laboratories, LLC
333 Pfingsten Road
Northbrook, IL 60062

268—09: Smoke Detectors for Fire Alarm Systems
704.6.4

INTERNATIONAL CODE COUNCIL®
Copyright © 2019 ICC & NYSDOS. ALL RIGHTS RESERVED. Accessed by Lauren Gualdino (lgualdino@briarcliffmanor.org), (-) Order Number #100880972 on May 08, 2020 07:05 AM (PDT) pursuant to License Agreement with ICC & NYSDOS. No further reproduction, no

100880972

APPENDIX A
BOARDING STANDARD

This appendix is informative and is not part of this code.

A101
GENERAL

A101.1 General. Windows and doors shall be boarded in an *approved* manner to prevent entry by unauthorized persons and shall be painted to correspond to the color of the existing structure.

A102
MATERIALS

A102.1 Boarding sheet material. Boarding sheet material shall be minimum $^1/_2$-inch-thick (12.7 mm) wood structural panels complying with the *International Building Code*.

A102.2 Boarding framing material. Boarding framing material shall be minimum nominal 2-inch by 4-inch (51 mm by 102 mm) solid sawn lumber complying with the *International Building Code*.

A102.3 Boarding fasteners. Boarding fasteners shall be minimum $^3/_8$-inch-diameter (9.5 mm) carriage bolts of such a length as required to penetrate the assembly and as required to adequately attach the washers and nuts. Washers and nuts shall comply with the *International Building Code*.

A103
INSTALLATION

A103.1 Boarding installation. The boarding installation shall be in accordance with Figures A103.1(1) and A103.1(2) and Sections A103.2 through A103.5.

A103.2 Boarding sheet material. The boarding sheet material shall be cut to fit the door or window opening neatly or shall be cut to provide an equal overlap at the perimeter of the door or window.

A103.3 Windows. The window shall be opened to allow the carriage bolt to pass through or the window sash shall be removed and stored. The 2-inch by 4-inch (51 mm by 102 mm) strong back framing material shall be cut minimum 2 inches (51 mm) wider than the window opening and shall be placed on the inside of the window opening 6 inches (152 mm) minimum above the bottom and below the top of the window opening. The framing and boarding shall be predrilled. The assembly shall be aligned and the bolts, washers and nuts shall be installed and secured.

A103.4 Door walls. The door opening shall be framed with minimum 2-inch by 4-inch (51 mm by 102 mm) framing material secured at the entire perimeter and vertical members at a maximum of 24 inches (610 mm) on center. Blocking shall also be secured at a maximum of 48 inches (1219 mm) on center vertically. Boarding sheet material shall be secured with screws and nails alternating every 6 inches (152 mm) on center.

A103.5 Doors. Doors shall be secured by the same method as for windows or door openings. One door to the structure shall be available for authorized entry and shall be secured and locked in an *approved* manner.

A104
REFERENCED STANDARD

IBC—18	International Building Code	A102.1, A102.2, A102.3

INTERNATIONAL CODE COUNCIL®
Copyright © 2019 ICC & NYSDOS. ALL RIGHTS RESERVED. Accessed by Lauren Gualdino (lgualdino@briarcliffmanor.org), (-) Order Number #100880972 on May 08, 2020 07:05 AM (PDT) pursuant to License Agreement with ICC & NYSDOS. No further reproduction, no

100880972

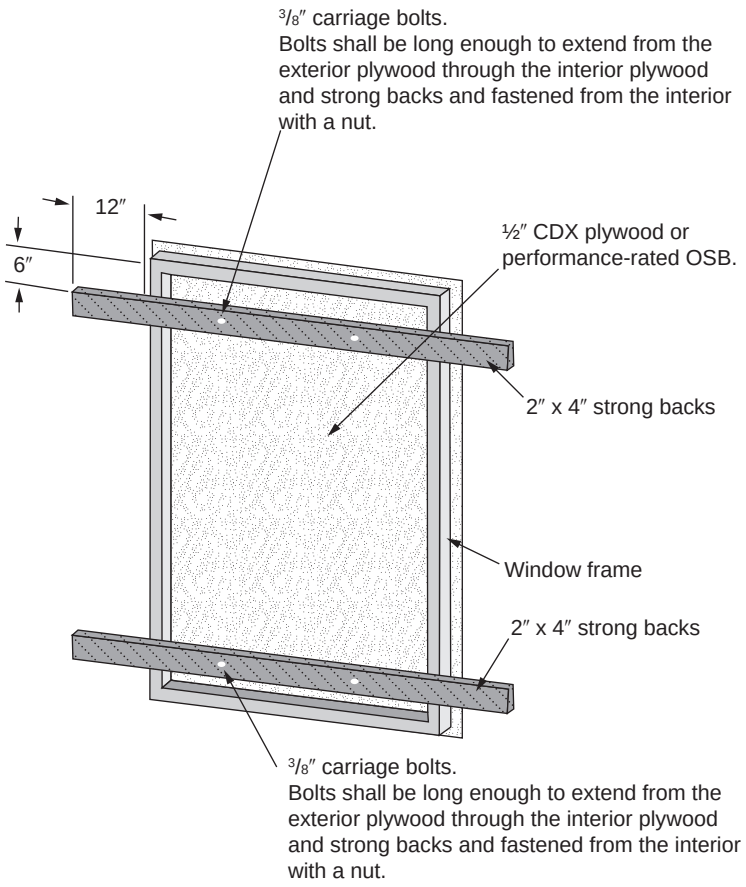

FIGURE A103.1(1)
BOARDING OF DOOR OR WINDOW

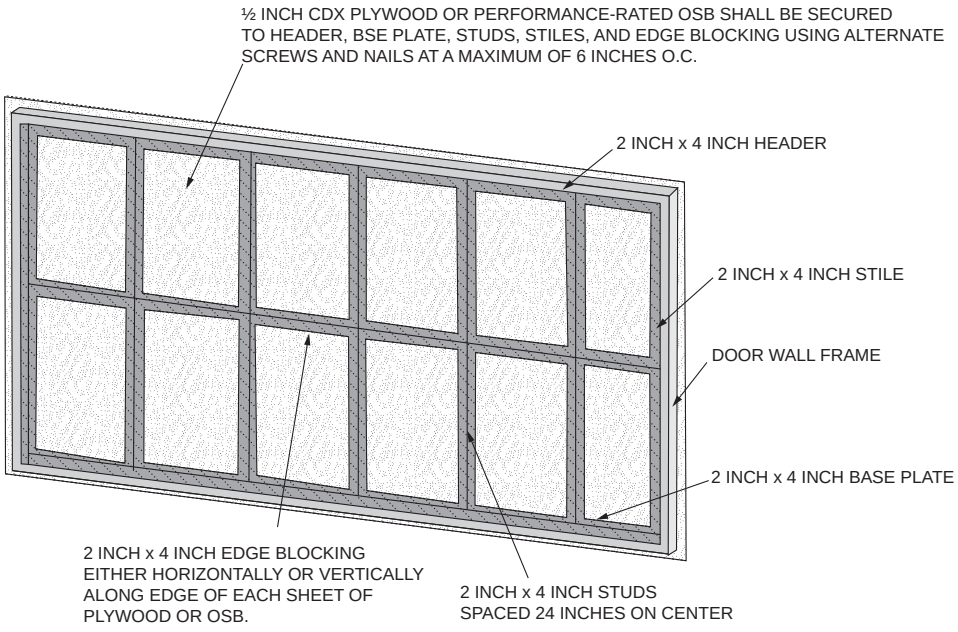

For SI: 1 inch = 25.4 mm.

FIGURE A103.1(2)
BOARDING OF DOOR WALL

INTERNATIONAL CODE COUNCIL®
Copyright © 2019 ICC & NYSDOS. ALL RIGHTS RESERVED. Accessed by Lauren Gualdino (lgualdino@briarcliffmanor.org), (-) Order Number #100880972 on May 08, 2020 07:05 AM (PDT) pursuant to License Agreement with ICC & NYSDOS. No further reproduction, no

100880972

INDEX

A

ACCESS
- Emergency egress 702
- From bedrooms 404.4.2
- Plumbing fixtures, access for cleaning 504.2
- To public way 702.1
- Toilet room as passageway 503.1
- Water closet 404.4.3

ADJACENT
- Privacy (hotel units, rooming units). 404.1

ADMINISTRATION
- Scope 101.2

AGENT (See also OPERATOR, OWNER)
- Definition. 202

AIR
- Combustion air 603.5

AISLES
- Minimum width 702.2

ALTERATION
- Applicability of other codes. 102.3

ANCHOR
- Anchored, definition 202
- Architectural trim. 304.8
- Signs, marquees and awnings 304.9
- Unsafe conditions 304.1.1

APPEAL
- Application 103.3
- Due process 103.2

APPLIANCE
- Cooking 403.3, 602.2
- Mechanical 603.1

APPLICABILITY
- Application of references 102.7
- General. 102.1
- Referenced codes and standards. 102.5

APPROVAL
- Alternatives. 104.3
- Authority 104.3
- Modifications. 104.3
- Used material and equipment. 104.1.1

APPROVED
- Alternative materials, methods and equipment 104.3
- Definition. 202
- Energy conservation devices 603.6
- Garbage storage facilities 308.3.1
- Used materials and equipment 104.1.1

ARTIFICIAL
- Lighting of habitable rooms. 401.3
- Lighting of other spaces 402.3

AUTOMOBILE
- Motor vehicles. 302.8

AWNING
- Signs, marquees and awnings 304.9

B

BALCONY
- Handrails and guardrails 304.12

BASEMENT
- Definition 202
- Hatchways 304.16
- Windows 304.17

BATHROOM
- Common bathrooms 502.3, 503.1
- Hotels 502.3
- Lighting 605.3
- Locks. 503.1
- Outlets required 605.2
- Privacy 503.1
- Ventilation 403.2

BATHTUB
- Dwelling units 502.1
- Rooming houses. 502.2
- Sewage system. 506.1
- Water-heating facilities 505.4
- Water system 505.1

BOARDING
- Boarding standard. . . . . .Appendix A

BOILER
- Unsafe equipment. 107.1.2

BUILDING OFFICIAL
- Building permits, construction inspections, stop work orders, certificates of occupancy, and operating permits 105
- Materials, equipment and methods of construction 104
- Service Utilities 109
- Inspection of solid fuel burning heating appliances 110

INTERNATIONAL CODE COUNCIL®
Copyright © 2019 ICC & NYSDOS. ALL RIGHTS RESERVED. Accessed by Lauren Gualdino (lgualdino@briarcliffmanor.org), (-) Order Number #100880972 on May 08, 2020 07:05 AM (PDT) pursuant to License Agreement with ICC & NYSDOS. No further reproduction, no

100880972

C

CAPACITY
Heating facilities 602.2, 602.3, 602.4
CAR (See AUTOMOBILE)
CARBON MONOXIDE ALARMS AND DETECTION
Installation 705.1
Maintenance 705.2
CEILING
Basement rooms 404.3
Fire-resistance ratings 703.1
Interior surfaces 305.3
Minimum height 404.3
Sleeping rooms 404.3
CHIMNEY
Exterior structure 304.11
Flue 603.2, 603.3
CLEANING
Access for cleaning 504.2
Disposal of garbage 308.3
Disposal of rubbish 308.2
Interior and exterior sanitation 308.1
Interior surfaces 305.3
Plumbing facilities, maintained 504.1
Required plumbing facilities 502
Responsibility of persons 305.1
Trash containers 308.3.2
Vacant structures and land 301.3
CLEARANCE
Heating facilities 603.3
Plumbing fixtures 504.2
CLOSING
Vacant structures 107.2
CLOTHES DRYER
Exhaust 403.5
COMBUSTION
Combustion air 603.5
COMPONENT SERVICEABILITY
Unsafe conditions 306.1.1
CONDEMNATION
General 107
Notices and orders 107.3, 108.2
Removal of placard 107.5
CONFLICT
Conflicts 102.6.1
General 102.1
CONNECTION
Sewage system 506.1
Water heating 505.4
Water system 505.1
CONSTRUCTION
Existing structures 101.2
CONTAINER
Garbage 308.3.2
Rubbish storage 308.2.1
CONTINUOUS
Unobstructed egress 702.1
CONTROL
Rodent control 302.5, 304.5
Safety controls 603.4
Weed 302.4
COOLING
Cooling towers 304.11
CORRIDOR
Accumulation of rubbish 308.1
Light 402.2
Lighting fixtures 605.3
Obstructions 702.1, 702.2
Ratings maintained 703

D

DAMP, DAMPNESS
Roofs 304.7
Window, door frames 304.13
DANGEROUS, HAZARDOUS
Electrical hazards 604.3, 604.3.1
Existing remedies 102.4
Imminent danger 202
Unsafe equipment 107.1.2
Unsafe structures or premises 107.1.1
DECKS
Handrails and guardrails 304.12
Maintenance 304.2, 304.10
DEMOLITION
Abatement methods 107.6
Existing remedies 102.4
DETECTORS
Smoke 704
DETERIORATION
Components of systems 306.1.1
Definition 202
Exterior structure 304.1.1
Exterior walls 304.6
DIRECT
Egress 702.1
DISPOSAL
Disposal of garbage 308.3
Disposal of rubbish 308.2
DOOR
Exit doors 702.3
Fire 703.2
Hardware 304.15
Insect screens 304.14

INTERNATIONAL CODE COUNCIL®
Copyright © 2019 ICC & NYSDOS. ALL RIGHTS RESERVED. Accessed by Lauren Gualdino (lgualdino@briarcliffmanor.org), (-) Order Number #100880972 on May 08, 2020 07:05 AM (PDT) pursuant to License Agreement with ICC & NYSDOS. No further reproduction, no

100880972

Interior surfaces 305.3
Locks 304.15, 702.3
Maintenance 304.13, 304.15
Weather tight 304.13
Window and door frames 304.13

DORMITORY (ROOMING HOUSE, HOTEL, MOTEL)
Locked doors 702.3
Privacy 503.1, 503.2

DRAFT STOPPING
Maintenance 703.3.1

DRAIN, DRAINAGE
Basement hatchways 304.16
Plumbing connections 506
Storm drainage 507

DUCT
Exhaust duct 304.9
Duct systems 607

DUST
Process ventilation 403.4

DWELLING
Cleanliness 305.1, 308.1
Definition 202
Electrical 604.1
Heating facilities 602
Required facilities 502

E

EGRESS
Aisles 702.2
Emergency escape 702.4
General 702.1
Lighting 402.2
Locked doors 702.3
Obstructions prohibited 702.1
Stairs, porches and railings 304.10, 305.4, 305.5, 307.1

ELECTRIC, ELECTRICAL EQUIPMENT
Abatement of hazards, fire exposure 604.3.2
Abatement of hazards, water exposure 604.3.1
Condemnation 108.1
Electrical equipment 604.3.1.1
Facilities required 604.1
Hazards 604.3
Installation 605.1
Lighting fixtures 605.3
Receptacles 604.3, 605.2
Responsibility 601.2
Service 604.2

ELEVATOR, ESCALATORS, DUMBWAITERS
Condemnation 108.1
General 606.1
Maintenance 606.1, 606.2

EMERGENCY
Emergency escape openings 702.4
Emergency measures 109
Emergency orders 109.1

ENFORCEMENT
Scope 101.2

EQUIPMENT
Alternative 104.3
Combustion air 603.5
Electrical installation 605.1
Energy conservation devices 603.6
Installation 603.1
Interior structure 305.1
Responsibility 601.2
Safety controls 603.4
Scope 101.2
Scope, mechanical and electrical 601.1
Support, definition 202
Unsafe 108.1.2
Used 104.1.1

EXHAUST
Clothes dryer 403.5
Exhaust ducts 304.9
Process ventilation 403.4

EXISTING
Remedies 102.4
Scope 101.2
Structural members 304.1.1, 304.4
Structures 101.3

EXTERIOR
Decorative features 304.8
Exterior structure 304
Exterior walls 304.6
Painting 304.2, 304.6
Rodent harborage 302.5, 304.5
Sanitation 304.1
Scope 301.1
Stair 304.10
Street numbers 304.3
Unsafe conditions 304.1.1
Weather tight 304.13

F

FAN
Exhaust vents 302.6

FENCE
Accessory 302.7
Maintenance 304.2

FIRE
Blocking Maintenance 703.3.1

FIRE DEPARTMENT
Connection access 704.5.1, 704.5.2

INTERNATIONAL CODE COUNCIL®
Copyright © 2019 ICC & NYSDOS. ALL RIGHTS RESERVED. Accessed by Lauren Gualdino (lgualdino@briarcliffmanor.org), (-) Order Number #100880972 on May 08, 2020 07:05 AM (PDT) pursuant to License Agreement with ICC & NYSDOS. No further reproduction, no

100880972

Connections 704.5
FIRE PROTECTION SYSTEMS
Emergency impairments 704.3.1
Equipment 704.4, 704.4.1, 704.4.2
Inspection 704.1, 704.1.3, 704.2
Installation 704.1.1
Maintenance 704.1, 704.1.3, 704.2
Out of service 704.3
Records of maintenance 704.2.1
Required systems 704.1.2, 704.2.2
Smoke alarms 704.6
Smoke detections systems 704.6.4
Termination of service 704.4.3
Testing 704.1, 704.1.3, 704.2
FIRE-RESISTANCE RATINGS
Ceilings 703.5
Draft stopping 703.3.1
Fire barriers 703.3.3
Fire blocking 703.3.1
Fire partitions 703.3.3
Fire walls 703.3.3
Maintenance 703.3
Opening protective 703.4
Shafts 703.7
Smoke barriers 703.3.2
Smoke partitions 703.3.2
Unsafe conditions 703.2
FLAMMABLE LIQUID
Containers 108.1.2
FLOOR, FLOORING
Area for sleeping purposes 404.4.1
Fire-resistance ratings 703.1
Interior surfaces 305.1, 305.3
Space requirements 404.4.1, 404.6
FOOD PREPARATION
Cooking equipment 403.3
Sanitary condition 305.1, 404.7
Ventilation 403.4
FOUNDATION
Foundation walls 304.5
Unsafe conditions 304.1.1, 305.1.1
FRAME
Window and door frames 304.13

G

GAS
Energy conservation devices 603.6
Exhaust vents 302.6
GLAZING
Materials 304.13.1
GRADE
Drainage 302.2, 507
GUARD
Anchorage and maintenance 304.12
Basement windows 304.18.2
Definition 202

H

HABITABLE
Definition 202
Light 402
Minimum ceiling height 404.3
Minimum room width 404.2
Required plumbing facilities 502
Residential heating facilities 602.2, 602.3
Space requirements 404.4.1
Ventilation 403
HANDRAILS AND GUARDRAILS
Handrails 304.12, 305.5, 307.1
Stairs and porches 304.10
HARDWARE
Door hardware 304.15, 702.3
Openable windows 304.13.2
HAZARDOUS (See DANGEROUS, HAZARDOUS)
HEAT, HEATING
Energy conservation devices 603.6
Fireplaces 603.1
Heating 603.1
Mechanical equipment 603.1
Required capabilities 602
Residential heating 602.2, 602.3
Supply 602.3
Water heating facilities 505.4
Water system 505
HEIGHT
Minimum ceiling height 404.3
HOT (See HEAT, HEATING)
HOTELS, ROOMING HOUSES AND DORMITORY UNITS, MOTELS
Definition 202
Locked doors 702.3
Required facilities 502
Toilet rooms 503
HOUSEKEEPING UNIT
Definition 202

I

INFESTATION
Definition 202
Insect and rodent 302.5, 304.14, 309.1

INTERNATIONAL CODE COUNCIL®
Copyright © 2019 ICC & NYSDOS. ALL RIGHTS RESERVED. Accessed by Lauren Gualdino (lgualdino@briarcliffmanor.org), (-) Order Number #100880972 on May 08, 2020 07:05 AM (PDT) pursuant to License Agreement with ICC & NYSDOS. No further reproduction, no

100880972

INSECTS
Infestation 309.1
Insect screens 304.14
Pest elimination 309
INSPECTIONS
Purpose 105.1
INTENT
Code 101.3
INTERIOR
Interior structure 305
Interior surfaces 305.3
Means of egress 702
Sanitation 305.1
Unsafe conditions 305.1.1

K

KITCHEN
Electrical outlets required 605.2
Minimum width 404.2
Prohibited use 404.4.4
Room lighting 605.3
Water heating facilities 505.4

L

LANDING
Handrails and guards 304.12, 305.5, 306.1
Maintenance 304.10, 305.4
LAUNDRY
Room lighting 605.3
Water-heating facilities 505.4
LAVATORY
Hotels 502.3
Required facilities 502
Rooming houses 502.2
Sanitary drainage system 506
Water-heating facilities 505.4
Water system 505
LEASE (SELL, RENT)
Heat supplied 602.3
LIGHT, LIGHTING
Common halls and stairways 402.2, 605.3
General 402
Habitable rooms 402.1
Kitchen 605.3
Laundry rooms 605.3
Luminaires 605.3
Other spaces 402.3
Responsibility 401.2
Scope 101.2
Toilet rooms 605.3
LIVING ROOM
Room area 404.4.1
LOAD, LOADING
Elevators, escalators and dumbwaiters 606.1
Handrails and guardrails 304.12, 305.5
Live load 304.4, 305.2
Stairs and porches 304.10, 305.2
Structural members 304.4, 305.2

M

MAINTENANCE
Required 102.2
MATERIAL
Alternative 104.3
Used 104.1.1
MEANS OF EGRESS (See EGRESS)
MECHANICAL
Installation 603.1
Responsibility 601.2
Scope 601.1
Ventilation, general 403
Ventilation, toilet rooms 403.2
MINIMUM
Ceiling height 404.3
Room area 404.4.1
Room width 404.2
MODIFICATION
Approval 104.2
MOTEL (See HOTELS)
MOTOR VEHICLES
Inoperative 302.8
Painting 302.8

N

NATURAL
Lighting 401.3, 402
Ventilation 401.3, 403
NOXIOUS
Process ventilation 403.4
Weeds 302.4
NUISANCE
Closing of vacant structures 108.2

O

OBSTRUCTION
Light 402.1

INTERNATIONAL CODE COUNCIL®
Copyright © 2019 ICC & NYSDOS. ALL RIGHTS RESERVED. Accessed by Lauren Gualdino (lgualdino@briarcliffmanor.org), (-) Order Number #100880972 on May 08, 2020 07:05 AM (PDT) pursuant to License Agreement with ICC & NYSDOS. No further reproduction, no

100880972

OCCUPANCY (See USE)
OPENABLE
Locked doors 702.3
Windows 304.13.2, 403.1
OPENING PROTECTIVES
Closers 703.8
Door operation 703.4.3
Hold-open devices 703.4.2
Maintenance 703.4
Signs 703.4.1
Testing 703.6
OPERATOR
Definition 202
ORDER (See NOTICE)
ORDINANCE, RULE
Applicability 102
Application for appeal 111.1
OUTLET
Electrical 605.2
OWNER
Closing of vacant structures 108.2
Definition 202
Demolition 110
Failure to comply 110.3
Insect and rat control 302.5, 309.2, 309.4
Notice 107.3, 108.2
Pest elimination 309.2
Placarding of structure 108.2
Responsibility 301.2
Responsibility, fire safety 701.2
Responsibility, light, ventilation 401.2
Responsibility, mechanical and electrical 601.2
Responsibility, plumbing facilities 501.2
Rubbish storage 308.2.1
Scope 101.2

P

PASSAGEWAY
Common hall and stairway 402.2
Interior surfaces 305.3
Toilet rooms, direct access 503.1
PEST ELIMINATION
Condemnation 108.1
Definition 202
Insect and rodent control 302.5, 304.5, 304.14, 309.1
Pest elimination 309.1
Responsibility of owner 301.2, 309.2
Responsibility of tenant-occupant 309.3, 309.4, 309.5
PLACARD, POST
Demolition 108
Emergency, notice 108
Notice to owner 107.3, 108.2
Placarding of structure 107.3
Prohibited use 107.4
Removal 107.5
PLUMBING
Clean and sanitary 504.1
Clearance 504.2
Connections 505.1
Contamination 505.2
Employee's facilities 503.3
Fixtures 504.1
Required facilities 502
Responsibility 501.2
Sanitary drainage system 506
Scope 501.1
Storm drainage 507
Supply 505.3
Water heating facilities 505.4
PORCH
Handrails 304.12
Structurally sound 304.10
PORTABLE (TEMPORARY)
Cooking equipment 603.1
PRESSURE
Water supply 505.3
PRIVATE, PRIVACY
Bathtub or shower 503.1
Occupancy limitations 404.1
Required plumbing facilities 502
Sewage system 506.1
Water closet and lavatory 503.1
Water system 505.1
PROPERTY, PREMISES
Cleanliness 304.1, 308.1
Definition 202
Emergency measures 108
Exterior areas 302
Grading and drainage 302.2
Pest elimination, multiple occupancy . . . 302.5, 309.4
Pest elimination, single occupancy 302.5, 309.3
Responsibility 301.2
Scope 301.1
Storm drainage 507
Vacant structures and land 301.3
PROTECTION
Basement windows 304.17
Fire protection systems 704
Signs, marquees and awnings 304.9
PUBLIC
Cleanliness 304.1, 305.1
Egress 702.1
Hallway 502.3

INTERNATIONAL CODE COUNCIL®
Copyright © 2019 ICC & NYSDOS. ALL RIGHTS RESERVED. Accessed by Lauren Gualdino (lgualdino@briarcliffmanor.org), (-) Order Number #100880972 on May 08, 2020 07:05 AM (PDT) pursuant to License Agreement with ICC & NYSDOS. No further reproduction, no

100880972

Sewage system 506.1
Toilet facilities 502.5, 503
Vacant structures and land 301.3
Water system 505
PUBLIC WAY
Definition 202

R

RAIN (PREVENTION OF ENTRY INTO BUILDING EXTERIOR ENVELOPE)
Basement hatchways 304.16
Exterior walls 304.6
Grading and drainage 302.2
Roofs 304.7
Window and door frames 304.13
REPAIR
Application of other codes 102.3
Chimneys 304.11
Demolition 110.1
Exterior surfaces 304.1
Intent 101.3
Maintenance 102.2
Signs, marquees and awnings 304.9
Stairs and porches 304.10
Weather tight 304.13
Workmanship 102.10
RESIDENTIAL
Pest elimination 309
Residential heating 602.2
Scope 101.2
RESPONSIBILITY
Pest elimination 309
Fire safety 701.2
Garbage disposal 308.3
General 301.2
Mechanical and electrical 601.2
Persons 301.1
Placarding of structure 108.4
Plumbing facilities 501.2
Rubbish storage 308.2.1
Scope 101.2, 301.1
REVOKE, REMOVE
Demolition 110
Existing remedies 102.4
Removal of placard 108.4.1
Rubbish removal 308.2.1
RODENTS
Basement hatchways 304.16
Condemnation 108
Foundations 304.5
Guards for basement windows 304.17
Harborage 302.5
Insect and rodent control 309.1
Pest elimination 302.5, 309
ROOF
Exterior structure 304.1
Roofs 304.7
Storm drainage 507
ROOM
Bedroom and living room 404.4
Cooking facilities 403.3
Direct access 503.2
Habitable 402.1
Heating facilities 602
Light 402
Minimum ceiling heights 404.3
Minimum width 404.2
Overcrowding 404.5
Prohibited use 404.4.4
Temperature 602.5
Toilet 503
Ventilation 403
ROOMING HOUSES (See DORMITORY)
RUBBISH
Accumulation 308.1
Definition 202
Disposal 308.2
Garbage facilities 308.3.1
Rubbish storage 308.2.1

S

SAFETY, SAFE
Fire safety requirements 701, 702, 703, 704
Safety controls 603.4
SANITARY
Cleanliness 304.1, 305.1
Disposal of garbage 308.3
Disposal of rubbish 308.2
Exterior property areas 302.1
Exterior structure 304.1
Food preparation 404.7
Furnished by occupant 302.1
Grease interceptors 506.3
Interior surfaces 305.3
Plumbing fixtures 504.1
Required plumbing facilities 502
Scope 101.2
SCREENS
Insect screens 304.14
SECURITY
Basement hatchways 304.18.3
Building 304.18

INTERNATIONAL CODE COUNCIL®
Copyright © 2019 ICC & NYSDOS. ALL RIGHTS RESERVED. Accessed by Lauren Gualdino (lgualdino@briarcliffmanor.org), (-) Order Number #100880972 on May 08, 2020 07:05 AM (PDT) pursuant to License Agreement with ICC & NYSDOS. No further reproduction, no

100880972

Doors 304.18.1
Vacant structures and land 301.3
Windows 304.18.2

SELF-CLOSING SCREEN DOORS
Insect screens 304.14

SEPARATION
Fire-resistance ratings 703
Privacy 404.1
Separation of units 404.1

SERVICE
Electrical 604.2

SEWER
General 506.1
Maintenance 506.2

SHOWER
Bathtub or shower 502.1
Rooming houses 502.2
Water-heating facilities 505.4
Water system 505

SIGN
Fire door signs 703.4.1
Signs, marquees and awnings 304.9

SINGLE-FAMILY DWELLING
Extermination 309

SINK
Kitchen sink 502.1
Sewage system 506
Water supply 505.3

SIZE
Efficiency unit 404.6
Habitable room, light 402
Habitable room, ventilation 403
Room area 404.4.1

SMOKE ALARMS
Group R-1 . . . . . 704.6.1.1
Groups R-2, R-3, R-4 and I-1 . . . . . 704.6.1.2
Installation near bathrooms 704.6.1.4
Installation near cooking appliances 704.6.1.3
Interconnection 704.6.2
Power source 704.6.3
Testing 704.7
Where required 704.6.1

SPACE
General, light 402
General, ventilation 403
Occupancy limitations 404
Privacy 404.1
Scope 401.1

STACK
Smoke 304.11

STAIRS
Common halls and stairways, light 402.2
Exit facilities 305.4
Exterior property areas 302.3
Handrails 304.12, 305.5
Lighting 605.3
Stairs and porches 304.10

STANDARD
Referenced 102.5

STOP WORK ORDER
Authority 105.4

STORAGE
Food preparation 404.7
Garbage storage facilities 308.3
Rubbish storage facilities 308.2.1
Sanitation 308.1

STRUCTURE
Accessory structures 302.7
Closing of vacant structures 108.2
Definition 202
Emergency measures 108
General, exterior 304.1
General, interior structure 305.1
Scope 301.1
Structural members 304.4, 305.2
Vacant structures and land 301.3

SUPPLY
Combustion air 603.5
Public water system 505.1
Water-heating facilities 505.4
Water supply 505.3
Water system 505

SURFACE
Exterior surfaces 304.2, 304.6
Interior surfaces 305.3

SWIMMING
Enclosure 303.2
Safety covers 303.2
Swimming pools 303.1

T

TEMPERATURE
Nonresidential structures 602.4
Residential buildings 602.2
Water-heating facilities 505.4

TOXIC
Process ventilation 403.4

TRASH
Rubbish and garbage 308

U

UNOBSTRUCTED
Access to public way 702.1
General, egress 702.1

INTERNATIONAL CODE COUNCIL®
Copyright © 2019 ICC & NYSDOS. ALL RIGHTS RESERVED. Accessed by Lauren Gualdino (lgualdino@briarcliffmanor.org), (-) Order Number #100880972 on May 08, 2020 07:05 AM (PDT) pursuant to License Agreement with ICC & NYSDOS. No further reproduction, no

100880972

UNSAFE STRUCTURES AND EQUIPMENT
Equipment 107.1.2
Existing remedies 102.4
General, condemnation 107
General, demolition 108
Notices and orders 107, 108.2
Structures 107.1.1
USE
Application of other codes 102.3
UTILITIES
Authority to disconnect 109.1

V

VACANT
Abatement methods 107.6
Authority to disconnect service utilities 109.1
Emergency measure 108
Notice to owner or to person responsible 107.3
Vacant structures and land 301.3
VAPOR
Exhaust vents 302.6
VEHICLES
Inoperative 302.8
Painting 302.8
VENT
Plumbing hazard 504.3
Exhaust vents 302.6
Flue 603.2
VENTILATION
Clothes dryer exhaust 403.5
Combustion air 603.5
Definition 202
General, ventilation 403
Habitable rooms 403.1
Process ventilation 403.4
Recirculation 403.2, 403.4
Toilet rooms 403.2
VERMIN
Condemnation 108
Insect and rodent control 302.5, 309
VERTICAL SHAFTS
Required enclosure 703.7
VIOLATION
General 105.7

W

WALK
Sidewalks 302.3
WALL
Accessory structures 302.7
Exterior surfaces 304.2, 304.6
Exterior walls 304.6
Foundation walls 304.5
General, fire-resistance rating 703.1
Interior surfaces 305.3
Outlets required 605.2
Temperature measurement 602.5
WASTE
Disposal of garbage 308.3
Disposal of rubbish 308.2
Garbage storage facilities 308.3.1
WATER
Basement hatchways 304.16
Connections 506.1
Contamination 505.2
General, sewage 506
General, storm drainage 507
General, water system 505
Heating 505.4
Hotels 502.3
Kitchen sink 502.1
Nonpotable water reuse 505.5, 505.5.1
Required facilities 502
Rooming houses 502.2
Supply 505.3
System 505
Toilet rooms 503
Water-heating facilities 505.4
WEATHER, CLIMATE
Heating facilities 602
WEEDS
Noxious weeds 302.4
WIDTH
Minimum room width 404.2
WINDOW
Emergency escape 702.4
Glazing 304.13.1
Guards for basement windows 304.17
Habitable rooms 402.1
Insect screens 304.14
Interior surface 305.3
Light 402
Openable windows 304.13.2
Toilet rooms 403.2
Ventilation 403
Weather tight 304.13
Window and door frames 304.13
WORKMANSHIP
General 102.10

INTERNATIONAL CODE COUNCIL®
Copyright © 2019 ICC & NYSDOS. ALL RIGHTS RESERVED. Accessed by Lauren Gualdino (lgualdino@briarcliffmanor.org), (-) Order Number #100880972 on May 08, 2020 07:05 AM (PDT) pursuant to License Agreement with ICC & NYSDOS. No further reproduction, no

INTERNATIONAL CODE COUNCIL®
Copyright © 2019 ICC & NYSDOS. ALL RIGHTS RESERVED. Accessed by Lauren Gualdino (lgualdino@briarcliffmanor.org), (-) Order Number #100880972 on May 08, 2020 07:05 AM (PDT) pursuant to License Agreement with ICC & NYSDOS. No further reproduction, no

100880972



ICC INTERNATIONAL CODE COUNCIL®

People Helping People Build a Safer World®

Get FREE access to hundreds of ICC resources and view the largest collection of code titles

ICC's Digital Codes Library (codes.iccsafe.org) conveniently provides access to the latest code text while on the go, at home or in the office, in an easy-to-navigate format.



Available anywhere 24/7

Use on any mobile or digital device

View over 800+ ICC titles

19-17447

Learn how to use this powerful tool at *codes.iccsafe.org*

This insert is not part of the official text of the New York State Uniform Fire Prevention and Building Code or New York State Energy Conservation Construction Code.

INTERNATIONAL CODE COUNCIL®

Copyright © 2019 ICC & NYSDOS. ALL RIGHTS RESERVED. Accessed by Lauren Gualdino (lgualdino@briarcliffmanor.org), (-) Order Number #100880972 on May 08, 2020 07:05 AM (PDT) pursuant to License Agreement with ICC & NYSDOS. No further reproduction, no

Easy to use. Easy to access.

Municipal content when you need it, where you need it.

General Code, LLC, the newest member of the ICC family of companies, brings the higher standard of codification services and content management solutions to over 3,000 municipal governments.



Expert Municipal Codification Services that provide:

- Accurate and enforceable municipal and Zoning Codes
- Supplementation and maintenance of updates to local ordinances and Zoning Codes
- A smarter, user-friendly experience for online Codes and other public documents
- Legal analysis and consultation

Land and Records Management Solutions that provide:

- Parcel Management and code enforcement software with Municity®
- Customized enterprise content management and eForms processing powered by Laserfiche®
- Process automation, including FOIA requests, accounts payable, contract management, compliance tracking, and asset management
- Records management automation for managing records retention and disposition

generalcode.com | 800.836.8834

GENERAL CODE

A Member of the ICC Family of Companies

19-16588

This insert is not part of the official text of the New York State Uniform Fire Prevention and Building Code or New York State Energy Conservation Construction Code.

INTERNATIONAL CODE COUNCIL®

Copyright © 2019 ICC & NYSDOS. ALL RIGHTS RESERVED. Accessed by Lauren Gualdino (lgualdino@briarcliffmanor.org), (-) Order Number #100880972 on May 08, 2020 07:05 AM (PDT) pursuant to License Agreement with ICC & NYSDOS. No further reproduction, no

100880972

ICC Membership

An Essential Tool to advance your Building Safety Career!

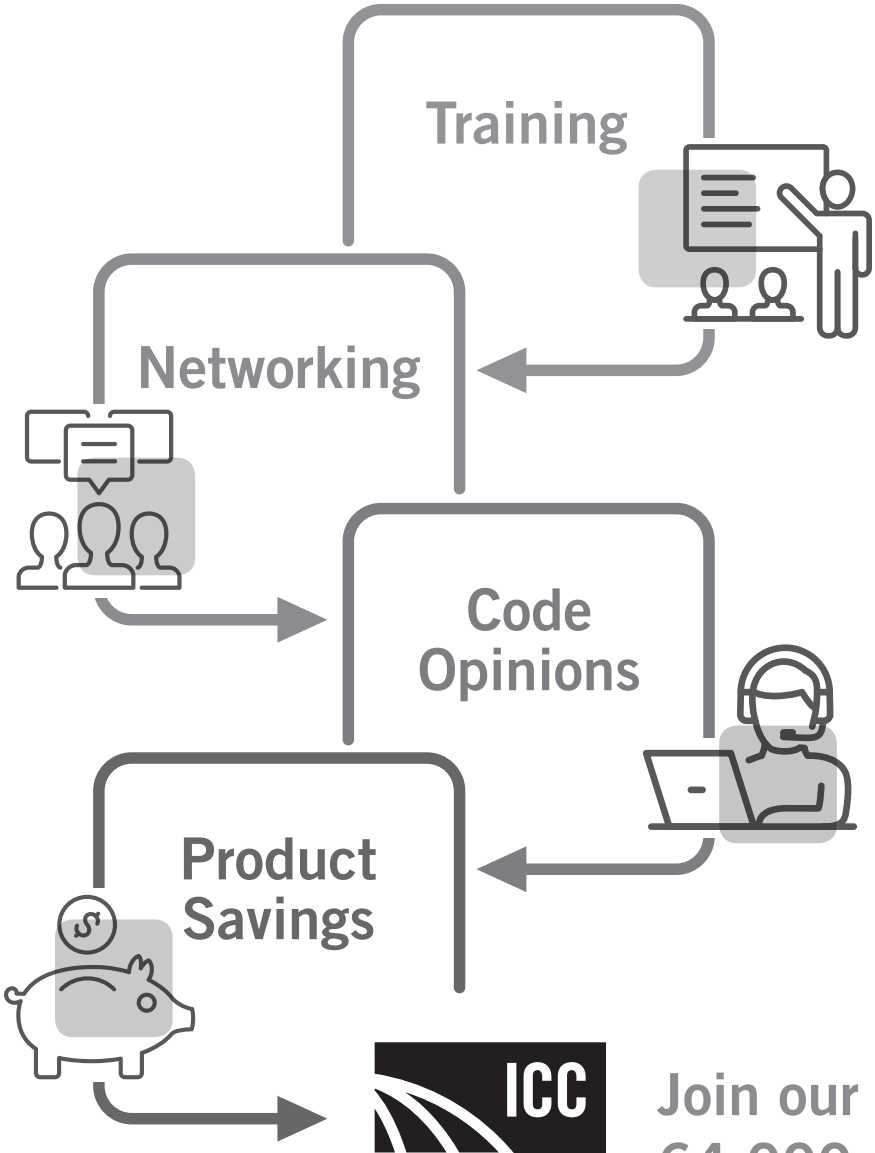

ICC
INTERNATIONAL CODE COUNCIL®

Join our 64,000+ members today!

Put the benefits of ICC Membership to work for you and your career!

Visit **www.iccsafe.org/memnow** or
call **1-888-ICC-SAFE (422-7233), ext. 33804** to learn more.

19-17662

This insert is not part of the official text of the New York State Uniform Fire Prevention and Building Code or New York State Energy Conservation Construction Code.

INTERNATIONAL CODE COUNCIL®

Copyright © 2019 ICC & NYSDOS. ALL RIGHTS RESERVED. Accessed by Lauren Gualdino (lgualdino@briarcliffmanor.org),(-) Order Number #100880972 on May 08, 2020 07:05 AM (PDT) pursuant to License Agreement with ICC & NYSDOS. No further reproduction, no



The ICC Assessment Center (formerly known as ICC Certification & Testing) provides nationally recognized credentials that demonstrate a confirmed commitment to protect public health, safety, and welfare. Raise the professionalism of your department and further your career by pursuing an ICC Certification.

ICC Certifications offer:

- Nationwide recognition
- Increased earning potential
- Career advancement
- Superior knowledge
- Validation of your expertise
- Personal and professional satisfaction

Exams are developed and maintained to the highest standards, which includes continuous peer review by national committees of experienced, practicing professionals. ICC is continually evolving exam offerings, testing options, and technology to ensure that all building and fire safety officials have access to the tools and resources needed to advance in today's fast-paced and rapidly-changing world.

Enhancing Exam Options

Effective July 2018, the Assessment Center enhanced and streamlined exam options and now offers only computer based testing (CBT) at a test site and PRONTO. We no longer offer paper/pencil exams.

Proctored Remote Online Testing Option (PRONTO)

Taking your next ICC certification exam is more convenient, more comfortable and more efficient than ever before with PRONTO.

PRONTO provides a convenient testing experience that is accessible 24 hours a day, 7 days a week, 365 days a year. Required hardware/software is minimal – you will need a webcam and microphone, as well as a reasonably recent operating system.

pronto
ICC ONLINE EXAMS

Whether testing in your office or in the comfort of your home, your ICC exam will continue to maintain its credibility while offering more convenience, allowing you to focus on achieving your professional goals. The Assessment Center continues to add exams to the PRONTO exam catalog regularly.

18-15617

Checkout all the ICC Assessment Center has to offer at iccsafe.org/certification

This insert is not part of the official text of the New York State Uniform Fire Prevention and Building Code or New York State Energy Conservation Construction Code.

INTERNATIONAL CODE COUNCIL®

Copyright © 2019 ICC & NYSDOS. ALL RIGHTS RESERVED. Accessed by Lauren Gualdino (lgualdino@briarcliffmanor.org), (-) Order Number #100880972 on May 08, 2020 07:05 AM (PDT) pursuant to License Agreement with ICC & NYSDOS. No further reproduction, no